https://truckmanualshub.com/

Operation and Maintenance Manual

R 954 C

Litronic

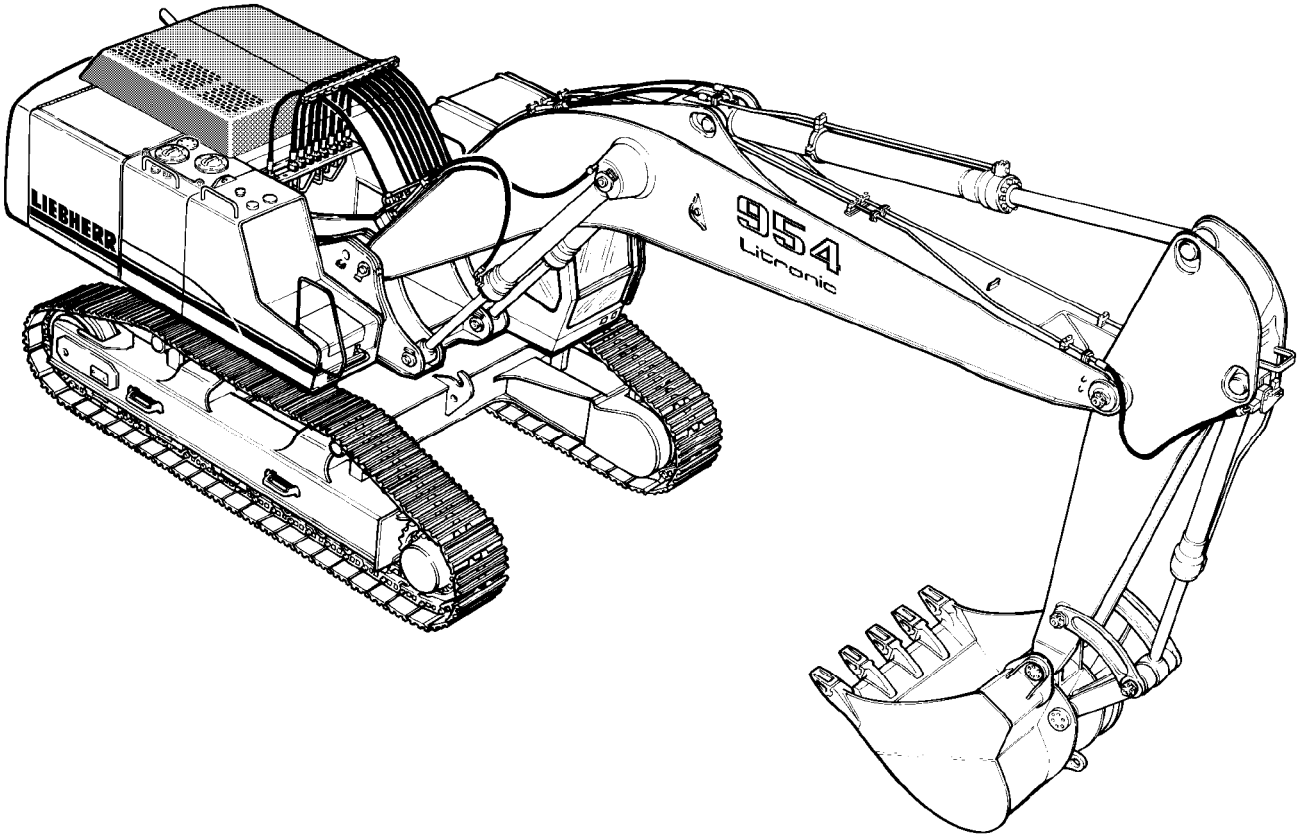

https://www.truck-manuals.net/

https://truckmanualshub.com/

FOREWORD

This manual is primarily **for the operator and the maintenance crew** and contains information which is vital to the correct and secure operation and proper maintenance **of the LIEBHERR excavator.**

It includes:
- **Accident Prevention Guidelines**
- **Operating Instructions**
- **Maintenance Instructions.**

This Operation and Maintenance manual should be given **to the OPERATOR** and any other person, who might work on the machine. It is very important that should read the manual carefully before operating or working on the **LIEBHERR** excavator and at regular intervals thereafter, for example:
- **Operation,** including installing and removing the attachments, trouble shooting during operation, removing production residue, care, disposing of operating and auxiliary fluids,
- **Maintenance work** (maintenance, inspection, repair),
- **Transportation.**

The manual will make it easier for the operator to get accustomed to the hydraulic excavator and to prevent any problems due to improper handling.

All maintenance personnel should follow the operating and maintenance instructions and your **LIEBHERR** excavator will give you constant and reliable service with excellent performance, reducing repair costs and down time.

In addition to the operating and maintenance guidelines is this manual, additional local and national accident prevention guidelines and environmental regulations might be applicable and must be observed.

The Operation and Maintenance Manual is part of the machine and should be left in the glove compartment of the operator's cab.

Please take notice that we cannot honour any claims which could arise due to careless handling, improper operation, inadequate maintenance, use of unauthorized oils or lubricants, non-observance of the safety instructions, etc.

LIEBHERR reserves the right to cancel any warranty claims, service contracts etc. without prior notice if any other than Original **LIEBHERR** parts or parts sold by **LIEBHERR** are being used for maintenance and repairs.

This Operation and Maintenance manual contains all necessary information to operate and maintain your **Litronic** track type excavator. However, should you need additional information or explanations, please contact **LIEBHERR's** Technical Documentation, Service school or Customer Service Department.

https://www.truck-manuals.net/

https://truckmanualshub.com/

INDEX

Foreword 0.1
Index....0.3
Information to the operation and maintenance manual....0.5

1/ MACHINE DESCRIPTION, TECHNICAL DATA

Machine description, technical data
Digging envelope for backhoe attachment
Lift capacities
Digging envelope for shovel attachment

2/ SAFETY INFORMATION

Destined use 2.1
General safety information 2.2
Crushing and burn prevention 2.3
Fire and explosion prevention 2.3
Machine start up safety 2.4
Engine start up and operating safety 2.5
Machine operating safety 2.5
Machine parking safety 2.7
Machine transporting safety 2.7
Machine towing safety 2.8
Machine maintenance safety 2.8
Hydraulic lines and hoses 2.10
Protection against vibration 2.11
Signs on the hydraulic excavator 2.14

3/ CONTROLS AND INSTRUMENTATION

The operator’s seat 3.1
Controls and instrumentation in the cab....3.2
Control unit 3.4
Monitoring display 3.7
Informations provided in the menus of the LCD screen 3.19
Controls and instrumentation for optional equipments.... 3.26
The heater and air conditioner 3.34
Outfit of driver's cab 3.43
Operation of the excavator in safety mode 3.44

4/ OPERATING PROCEDURES

Pre starting inspection....4.1
Machine start up safety 4.3
Diesel engine operation 4.4
Stopping the engine 4.7
External starting procedure 4.7
Hydraulic pumps safety operation....4.8
Machine operating safety 4.9
Travel functions 4.10
Location of the two joysticks 4.12
Control of the swing.... 4.12
Working position.... 4.14
Attachment control 4.14
Transporting the excavator on flatbed trailers or railway cars 4.21
Towing the excavator 4.22
Removal and installation of attachments 4.23

https://www.truck-manuals.net/

5/ LUBRICATION

General safety information 5.1
Lubricant and fuel chart 5.2
Lubricant and fuel specifications 5.4
Lubrication charts 5.10
Diesel engine 5.11
Changing the oil in the splitterbox 5.14
Changing the oil in the travel gear 5.15
Changing the oil in the swing gear 5.15
Oil in the hydraulic system 5.16
Checking the level in the reservoir of the windshield washer 5.18
The centralized lubricating system 5.19
Serially mounted semi automatic system 5.20
Optional mounted automatic system 5.20
Grapple lubrication 5.25

6/ MAINTENANCE

Machine maintenance safety 6.1
The fuel system 6.4
The diesel engine 6.6
The track components 6.8
The hydraulic system 6.10
The swing and travel brakes 6.14
Checking mounting screws for tightness 6.15
The air filter 6.16
The electrical system 6.18
The heater and air conditioner 6.20
Replacing the bucket teeth 6.22
Replacing wear and tear items 6.23
Welding 6.23
Maintenance schedule 6.25

7/

Controls on joystick handles for US - version 7.1
Guidelines for hydraulic excavators when they are used for lifting loads 7.3
The overload warning device 7.5

8/ OPTIONAL ATTACHMENT

Adjustable cab 8.1
Hydraulic quick change adapter 8.2.1
Mechanical quick change coupler 8.2.9
Hydraulic removable counterweight 8.4
Machines with mechanic adjustable track gauge 8.5.1
Hydraulic aided track gauge adjustment 8.5.5
Fully hydraulic actuated track gauge adjustment 8.5.7
Bypass oil filter for hydraulic circuit 8.6
Use of environmentally friendly hydraulic fluids 8.7
Refueling pump 8.8
Vacuum pump on hydraulic tank 8.9

https://www.truck-manuals.net/

https://truckmanualshub.com/

INFORMATION TO THE OPERATION AND MAINTENANCE MANUAL R 954 C Litronic

EDITION :..... 11 / 05

IDENT / NR : ..... 10101988 A

This **Operation and Maintenance Manual** is valid for **R 954 C Litronic** excavators from the following serial numbers :

	TYPE	Valid from Serial Number
HD	976	14968
EW	783	16155
HD – W	781	16155
SHD	784	16155
VH-HD	785	16155

We recommend that you fill in the following table as soon as you receive your excavator. This will also be helpful when you order parts

Product Id. No. (PIN No.) :

Manufacturing Date : CE 2006

Delivery Date : . . / . . / . .

This excavator meets EC Safety guidelines 98/37/EWG, 89/336/EWG, 91/368/EWG and 93/44/EWG. Noise emission data has been measured according to EC guidelines 2000/14/EG.

We reserve the right to make any technical changes compared to data and illustrations given in this manual.

Warranty and liability are subject to LIEBHERR's general business terms and conditions are not changed in any way by instructions in this manual..

**Instructions and photos or drawings in this manual may not be reproduced, used for any reason and / or distributed without written permission from the publisher.
All rights reserved.**

Manufacturer : **LIEBHERR FRANCE S.A.S.** 2 Avenue Joseph Rey, F-68005 COLMAR, France

https://www.truck-manuals.net/

https://truckmanualshub.com/

Technical Description Hydraulic Excavator

R 954 C
Litronic®

Operating Weight with Backhoe Attachment 47,3 – 54,0 t
Engine Output 240 kW (326 HP)
Bucket Capacity 1,30 – 3,00 m³

LIEBHERR

https://www.truck-manuals.net/

https://truckmanualshub.com/

Technical Data

Engine

Rating per ISO 9249	240 kW (326 HP) at 1800 RPM
Model	Liebherr D 936 L
Type	6 cylinder in-line
Bore/Stroke	122/150 mm
Displacement	10,5 l
Engine operation	4-stroke diesel unit pump system turbo-charged and after-cooled reduced emissions
Cooling	water-cooled and integrated motor oil cooler
Air cleaner	dry-type air cleaner with pre-cleaner, primary and safety elements, automatic dust discharge
Fuel tank	750 l
Standard	sensor controlled engine idling
Electrical system	
Voltage	24 V
Batteries	2 x 170 Ah/12 V
Starter	24 V/6,6 kW
Alternator	three phase current 28 V/80 A

Hydraulic System

Hydraulic pump for attachment and travel drive	two Liebherr variable flow, swash plate pumps
Max. flow	2 x 350 l/min.
Max. pressure	350 bar
Pump regulation	electro-hydraulic with electronic engine speed sensing regulation, pressure compensation, flow compensation, automatic oil flow optimizer
Hydraulic pump for swing drive	reversible, variable flow, swash plate pump, closed-loop circuit
Max. flow	211 l/min.
Max. pressure	384 bar
Hydraulic tank	440 l
Hydraulic system	790 l
Hydraulic oil filter	2 full flow filters in return line with integrated fine filter area (5 µm), 1 high pressure filter for each main pump
Hydraulic oil cooler	cooler unit, consisting of radiator for engine coolant with after-cooler core, sandwiched with cooler for hydraulic fluid with hydrostatically controlled fan drives
MODE selection	adjustment of machine performance and the hydraulics via a mode selector to match application
ECO	for especially economical and environmentally friendly operation
POWER	for maximum digging power and heavy duty jobs
LIFT	for lifting
FINE	for precision work and lifting through very sensitive movements
R.P.M. adjustment	stepless adjustment of engine output via the r.p.m. at each selected mode

Hydraulic Controls

Power distribution	via control valves in single block with integrated safety valves
Flow summation	to boom and stick
Closed-loop circuit	for uppercarriage swing drive
Servo circuit	
Attachment and swing	– proportional via joystick levers
Travel	– proportional via foot pedals or removable hand levers
Additional functions	via foot pedals or joystick toggle switch

Swing Drive

Drive by	Liebherr swash plate motor with integrated brake valves
Transmission	Liebherr compact planetary reduction gear
Swing ring	Liebherr, sealed single race ball bearing swing ring, internal teeth
Swing speed	0–6,6 RPM stepless
Swing torque	165 kNm
Holding brake	wet multi-disc (spring applied, pressure released)
Option	pedal controlled positioning brake

Operator's Cab

Cab	resiliently mounted, sound insulated, tinted windows, front window stores overhead, door with sliding window
Operator's seat	fully adjustable, shockabsorbing suspension, adjustable to operator's weight and size, 6-way adjustable Liebherr seat
Joysticks	integrated into adjustable consoles
Monitoring	menu driven query of current operating conditions via the LCD display. Automatic monitoring, display, warning (acoustical and optical signal) and saving machine data, for example, engine overheating, low engine oil pressure or low hydraulic oil level
Air conditioning	standard air conditioning, combined cooler/heater, additional dust filter in fresh air/recirculated

Undercarriage

Version HD	heavy duty
Drive	Liebherr swash plate motors with integrated brake valves on both sides
Transmission	Liebherr planetary reduction gears
Travel speed	low range –3,4 km/h high range –5,0 km/h
Drawbar pull max.	404 kN
Track components	D 7 G, maintenance-free
Track rollers/ Carrier rollers	10/2
Tracks	sealed and greased
Track pads	triple grouser
Digging locks	wet multi-discs (spring applied, pressure released)

Attachment

Type	combination of resistant steel plates and cast steel components
Hydraulic cylinders	Liebherr cylinders with special seal-system, shock absorbed
Pivots	sealed, low maintenance
Lubrication	easily accessible centralized lubrication
Hydraulic connections	pipes and hoses equipped with SAE split-flange connections
Bucket	standard equipped with 27 t lifting eye

https://www.truck-manuals.net/

https://truckmanualshub.com/

Dimensions

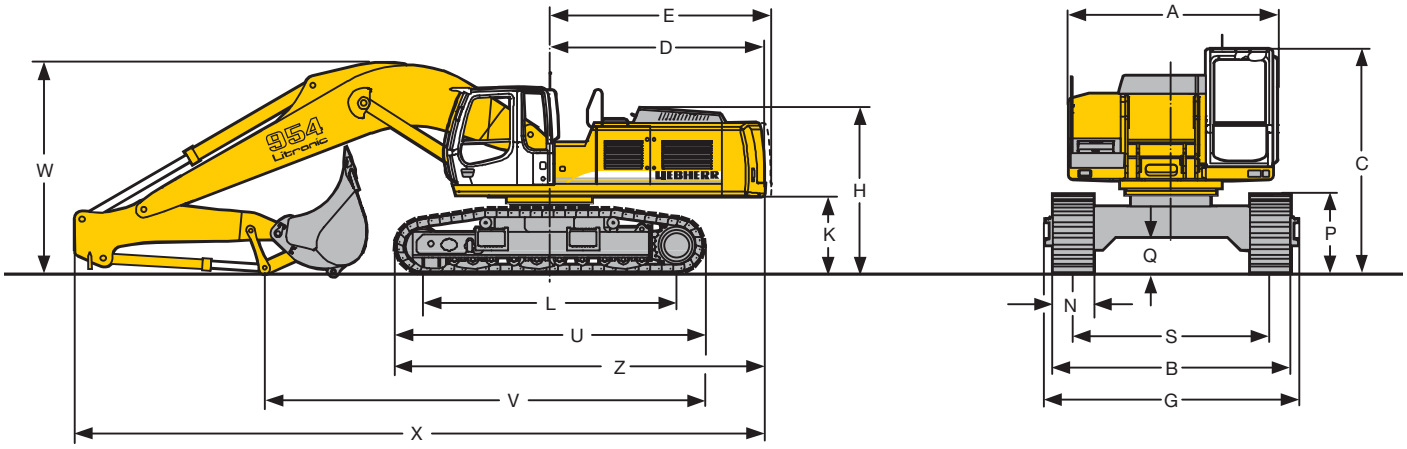

	mm		
A			3060
A*			2980
C			3285
D			3690
E			3750
H			2900
K			1350
L			4400
P			1170
Q			543
S			2900
U			5378
Z			6440
N	500	600	750
B	3524	3524	3650
G	3720	3720	3720

* without grip

	Stick Length m	**Gooseneck Boom 6,70 m** mm
V	2,35	7650
	2,90	7050
	3,80 *	5900 *
W	2,35	3800
	2,90	3800
	3,80	3800
X	2,35	12050
	2,90	12050
	3,80	12050

* without bucket

https://www.truck-manuals.net/

https://truckmanualshub.com/

Backhoe Attachment

with Gooseneck Boom 6,70 m

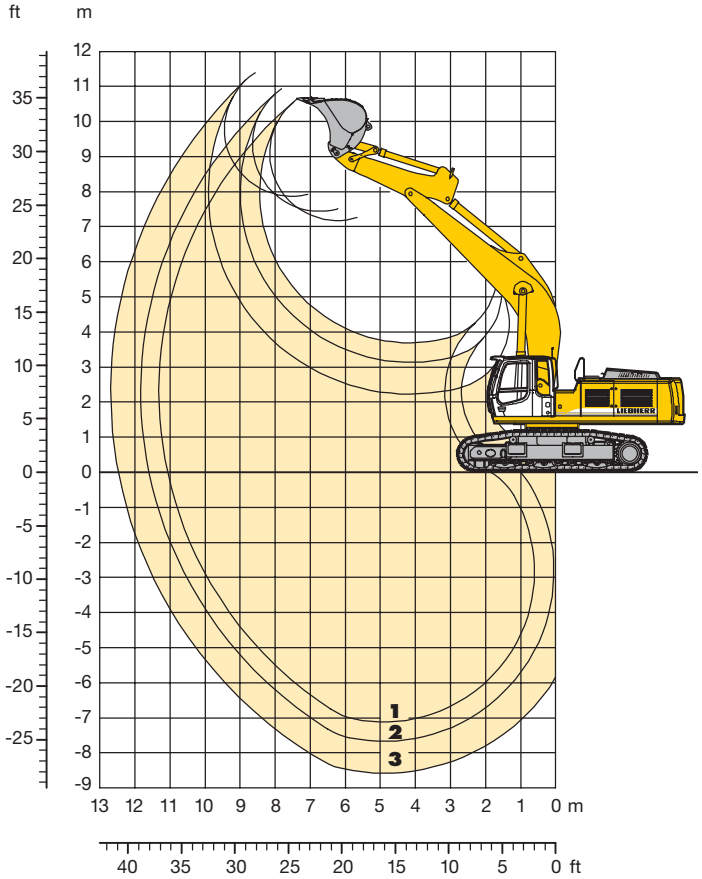

Digging Envelope

		1	2	3
Stick lengths	m	2,35	2,90	3,80
Max. digging depth	m	7,10	7,65	8,55
Max. reach at ground level	m	10,90	11,45	12,30
Max. dump height	m	7,10	7,35	7,75
Max. teeth height	m	10,50	10,80	11,25
Digging force ISO	kN	244	215	179
	t	25,1	21,9	18,3
Breakout force ISO	kN	307	307	307
	t	31,3	31,3	31,3

Operating Weight and Ground Pressure

Operating weight includes basic machine with gooseneck boom 6,70 m, stick 2,35 m and bucket 2,70 m³.

Undercarriage		HD		
Pad width	mm	500	600	750
Weight	kg	47215	47715	49050
Ground pressure	kg/cm²	1,00	0,84	0,69

Optional: heavy duty counterweight
(Heavy duty counterweight increases the operating weight by 2000 kg and ground pressure by 0,03 kg/cm²)

Buckets

Cutting width	mm	1500[1)]	1550[2)]	1700[1)]	1750[2)]	1900[1)]	1900[1)]	1950[2)]
Capacity ISO 7451	m³	2,00	2,00	2,35	2,35	2,70	3,00	2,70
Weight	kg	2250	2600	2400	2775	2550	2900	2930
Suitable for material up to a specific weight of								
with stick 2,35 m	t/m³	–	–	2,20	2,20	1,80	1,80	1,80
with stick 2,90 m	t/m³	2,20	2,20	1,80	1,80	1,50	1,50	1,50
with stick 3,80 m	t/m³	1,80	1,80	1,50	1,50	1,20	–	–

[1)] Medium-duty bucket with Liebherr teeth size 25 (appropriate for materials up to classification 5, according to VOB, Section C, DIN 18300)
[2)] Heavy-duty rock bucket with Esco teeth size 61 (appropriate for materials above classification 6, according to VOB, Section C, DIN 18300)

https://www.truck-manuals.net/

https://truckmanualshub.com/

Lift Capacities

with Gooseneck Boom 6,70 m

Stick 2,35 m

Height (m)	Under-carriage	Radius of load from centerline of machine (m) 3,0	4,5	6,0	7,5	9,0	10,5
7,5	HD				8,3# (8,3#)		
6,0	HD				8,9# (8,9#)		
4,5	HD		15,9# (15,9#)	11,8# (11,8#)	9,0 (9,0#)	6,4 (8,9#)	
3,0	HD		18,8 (20,9#)	12,1 (14,1#)	8,5 (11,1#)	6,2 (8,5#)	
1,5	HD		17,1 (19,4#)	11,2 (16,8#)	7,9 (12,2#)	5,9 (9,1)	
0	HD		16,6 (21,9#)	10,6 (17,8#)	7,6 (12,6)	5,7 (9,5)	
-1,5	HD	17,0# (17,0#)	16,3 (23,4#)	10,5 (17,0#)	7,4 (12,6)		
-3,0	HD	24,4# (24,4#)	17,8 (21,8#)	10,6 (16,1#)	7,5 (12,3#)		
-4,5	HD	25,2# (25,2#)	17,6 (18,4#)	11,0 (13,9#)			
-6,0	HD		12,2# (12,2#)				

Stick 2,90 m

Height (m)	Under-carriage	Radius of load from centerline of machine (m) 3,0	4,5	6,0	7,5	9,0	10,5
7,5	HD						
6,0	HD				8,0# (8,0#)	6,5# (6,5#)	
4,5	HD			10,7# (10,7#)	8,1# (8,1#)	6,4 (8,2#)	
3,0	HD		19,8# (19,8#)	12,3 (13,1#)	8,5 (10,4#)	6,1 (8,9#)	
1,5	HD		17,5 (22,6#)	11,3 (15,2#)	7,9 (11,6#)	5,8 (9,6#)	
0	HD	9,4# (9,4#)	16,7 (22,1#)	10,6 (16,6#)	7,5 (12,5#)	5,6 (9,4)	
-1,5	HD	15,1# (15,1#)	16,5 (23,8#)	10,3 (17,8#)	7,3 (12,4)	5,4 (9,3)	
-3,0	HD	21,1# (21,1#)	16,7 (22,5#)	10,3 (16,4#)	7,3 (12,4)		
-4,5	HD	26,3# (26,3#)	17,2 (19,8#)	10,6 (14,7#)	7,5 (10,9#)		
-6,0	HD	28,7# (28,7#)	14,5# (14,5#)				

Stick 3,80 m

Height (m)	Under-carriage	Radius of load from centerline of machine (m) 3,0	4,5	6,0	7,5	9,0	10,5
7,5	HD					4,8# (4,8#)	
6,0	HD					6,5# (6,5#)	
4,5	HD				7,8# (7,8#)	6,6 (7,1#)	4,3# (4,3#)
3,0	HD	18,5# (18,5#)	15,7# (15,7#)	11,3# (11,3#)	8,7 (9,3#)	6,2 (8,0#)	4,5 (5,8#)
1,5	HD	7,6# (7,6#)	18,4 (20,4#)	11,8 (13,8#)	8,1 (10,7#)	5,8 (8,8#)	4,3 (6,4#)
0	HD	9,5# (9,5#)	17,1 (23,1#)	10,8 (15,7#)	7,5 (11,8#)	5,5 (9,4)	4,1 (6,2#)
-1,5	HD	13,1# (13,1#)	16,5 (23,8#)	10,3 (16,8#)	7,2 (12,4)	5,3 (9,1)	
-3,0	HD	17,5# (17,5#)	16,4 (23,4#)	10,2 (16,7#)	7,1 (12,2)	5,2 (9,1)	
-4,5	HD	22,9# (22,9#)	16,7 (21,8#)	10,2 (15,7#)	7,1 (11,9#)		
-6,0	HD	28,8# (28,8#)	17,3 (18,1#)	10,6 (13,2#)			

The load values are quoted in tons (t) on the backhoe bucket's load hook, and may be swung 360° on firm and even ground. Values quoted in brackets apply to the undercarriage when in longitudinal position. Capacities are valid for 600 mm wide triple grouser pads. Indicated loads are based on ISO 10567 standard and do not exceed 75 % of tipping or 87 % of hydraulic capacity (indicated via #). Maximum load for the backhoe bucket's lifting eye is 27 t. Without bucket (2,35 m³), the lift capacities will increase by 2400 kg, without bucket cylinder, link and lever they increase by an additional 690 kg. Lifting capacity of the excavator is limited by machine stability, hydraulic capacity and maximum permissible load of the load hook.
When lifting loads, the hydraulic excavator must be equipped with automatic check valve on its hoist cylinders and overload warning device according to European Standard, EN 474-5.

https://www.truck-manuals.net/

https://truckmanualshub.com/

Lift Capacities

with Gooseneck Boom 6,70 m and Heavy Counterweight

Stick 2,35 m

Height (m)	Under-carriage	Radius of load from centerline of machine (m) 3,0	4,5	6,0	7,5	9,0	10,5
7,5	HD				8,3# | 8,3#		
6,0	HD				8,5# | 8,8#		
4,5	HD		15,9# (15,9#)	11,8# (11,8#)	9,8# | 9,9#	7,4 | 8,3#	
3,0	HD		20,9# (20,9#)	13,7 (14,1#)	8,7 (11,1#)	7,1 | 9,5#	
1,5	HD		19,4# (19,4#)	12,6 (18,8#)	9,2 (12,2#)	6,9 (10,1#)	
0	HD		19,1 (21,8#)	12,3 (17,8#)	8,8 (12,9#)	6,7 (10,5#)	
-1,5	HD	17,3# (17,3#)	19,1 (23,4#)	12,1 (17,0#)	8,7 (13,1#)		
-3,0	HD	24,4# (24,4#)	19,4 (21,8#)	12,2 (16,1#)	8,7 (13,3#)		
-4,5	HD	25,2# (25,2#)	18,4# (18,4#)	12,6 (13,8#)			
-6,0	HD		12,2# (12,2#)				

Stick 2,90 m

Height (m)	Under-carriage	Radius of load from centerline of machine (m) 3,0	4,5	6,0	7,5	9,0	10,5
7,5	HD						
6,0	HD				6,0# | 8,8#	6,5# | 8,5#	
4,5	HD			10,7# (10,7#)	8,1# | 9,1#	7,4 | 8,2#	
3,0	HD		19,0# (19,0#)	13,1# (13,1#)	9,7 (10,4#)	7,1 | 8,8#	
1,5	HD		20,0 (22,0#)	12,9 (15,2#)	9,2 (11,6#)	6,8 | 9,6#	
0	HD	9,4# | 9,4#	19,2 (22,1#)	12,3 (16,0#)	8,7 (12,5#)	6,5 (10,1#)	
-1,5	HD	15,1# (15,1#)	19,0 (23,8#)	12,0 (17,3#)	8,5 (12,9#)	6,4 (10,2#)	
-3,0	HD	21,1# (21,1#)	19,2 (22,5#)	12,0 (16,4#)	8,5 (12,5#)		
-4,5	HD	26,3# (26,3#)	19,6 (19,6#)	12,3 (13,7#)	8,7 (10,9#)		
-6,0	HD	28,7# (28,7#)	14,9# (14,9#)				

Stick 3,80 m

Height (m)	Under-carriage	Radius of load from centerline of machine (m) 3,0	4,5	6,0	7,5	9,0	10,5
7,5	HD					4,8# | 4,8#	
6,0	HD					6,5# | 6,5#	
4,5	HD				7,8# | 7,8#	7,1# | 7,1#	4,3# (4,3#)
3,0	HD	18,5# (18,5#)	15,7# (15,7#)	11,3# (11,3#)	9,2# | 9,2#	7,2 | 8,0#	5,3 (5,8#)
1,5	HD	7,6# | 7,6#	20,4# (20,4#)	13,3 (13,8#)	9,3 (10,7#)	6,8 | 8,8#	5,1 (6,4#)
0	HD	9,5# | 9,5#	19,5 (23,1#)	12,4 (15,7#)	8,8 (11,8#)	6,5 | 9,6#	4,9 (6,2#)
-1,5	HD	13,1# (13,1#)	19,0 (23,8#)	12,0 (16,6#)	8,4 (12,6#)	6,3 (10,3#)	
-3,0	HD	17,5# (17,5#)	18,9 (23,4#)	11,8 (16,7#)	8,3 (12,6#)	6,2 | 9,3#	
-4,5	HD	22,9# (22,9#)	19,2 (21,8#)	11,9 (15,7#)	8,4 (11,9#)		
-6,0	HD	26,6# (26,6#)	18,1# (18,1#)	12,3 (13,2#)			

The load values are quoted in tons (t) on the backhoe bucket's load hook, and may be swung 360° on firm and even ground. Values quoted in brackets apply to the undercarriage when in longitudinal position. Capacities are valid for 600 mm wide triple grouser pads. Indicated loads are based on ISO 10567 standard and do not exceed 75 % of tipping or 87 % of hydraulic capacity (indicated via #). Maximum load for the backhoe bucket's lifting eye is 27 t. Without bucket (2,35 m³), the lift capacities will increase by 2400 kg, without bucket cylinder, link and lever they increase by an additional 690 kg. Lifting capacity of the excavator is limited by machine stability, hydraulic capacity and maximum permissible load of the load hook.
When lifting loads, the hydraulic excavator must be equipped with automatic check valve on its hoist cylinders and overload warning device according to European Standard, EN 474-5.

https://www.truck-manuals.net/

https://truckmanualshub.com/

Equipment

Undercarriage

	s	o
Two-stage travel motors	•	
Three track guide per track	•	
Lifetime lubricated track rollers	•	
Hydraulic hose protection	•	
Idler protection	•	
Tracks sealed and greased	•	
Different undercarriage versions		•
Different track pad width		•
Four track guide		•
Renforced cover		•
Streng. bottom sheet center part		•

Uppercarriage

	s	o
Engine hood with lift help	•	
Lockable tool box	•	
Handrails, non slip surfaces	•	
Tool kit	•	
Maintenance-free swing brake lock	•	
Maintenance-free HD-batteries	•	
Sound insulation	•	
Electric fuel tank filler pump		•
Foot pedal swing positioning brake		•
Extended tool kit		•
Customized colors		•

Hydraulics

	s	o
Electronic pump regulation	•	
Stepless work mode selector	•	
Pressure storage for controlled lowering of attachments with engine turned off	•	
Hydraulic tank shut-off valve	•	
Pressure compensation	•	
Flow compensation	•	
Filter with integrated fine filter area (5 µm)	•	
Pressure test ports	•	
Additional hydraulic circuits		•
Bio-degradable hydr. oil		•
Filter for secondary circuit		•

Engine

	s	o
After-cooled	•	
Unit pump system	•	
Turbo charger	•	
Dry-type air cleaner w/pre-cleaner, main and safety element	•	
Air filter with automatic dust ejector	•	
Sensor controlled engine idling	•	
Engine cold starting aid		•

Operator's Cab

	s	o
All tinted windows	•	
Roof hatch	•	
Door with sliding window	•	
Rain hood over front window opening	•	
Wiper/washer	•	
6-way adjustable seat	•	
Seat and consoles independently adjustable	•	
Storage tray	•	
Dome light	•	
Inside rear mirror	•	
Cloth hook	•	
Cigarette lighter and ashtray	•	
Displays for engine operating condition	•	
Mechanical hour meters, readable from outside the cab	•	
Sun roller blind	•	
Removable customized foot mat	•	
Air conditioning	•	
Cab heater with defroster	•	
Auxiliary heating		•
Air pressure operator seat with heating and head-rest		•
Stereo radio		•
Preparation for radio installation		•
Electric cool box		•
Bullet proof window (fixed installation – can not be opened)		•
Beacon		•
Electronic drive away lock		•
Additional flood lights		•
Extinguisher		•

Attachment

	s	o
Cylinders with shock absorbers	•	
Sealed pivots	•	
Automatic lubrication system	•	
SAE split flanges on all high pressure lines	•	
27 t lifting eye on buckets	•	
Work light on boom	•	
O-ring sealant between bucket and stick	•	
Safety check valves for hoist cylinder		•
Overload warning device		•
Hydr. or mechanical quick change coupler		•
Liebherr line of clams and grapples		•
Quick disconnect hose couplers		•
Special application buckets		•
Hydr. lines, on stick, for clam operation		•
Two-way selector valve for bucket/clam		•
Two-way selector valves for bucket/clam use		•
Customized colors		•
Likufix		•

S = Standard, O = Option

Options and/or special attachments, supplied by vendors other than Liebherr, are only to be installed with the knowledge and approval of Liebherr to retain warranty.

https://www.truck-manuals.net/

https://truckmanualshub.com/

2.SAFETY INFORMATION

Working with an excavator can be dangerous, it could result in injury or death if proper precautions are not taken! WE URGE YOU TO READ THIS MANUAL CAREFULLY! This safety information is provided to operators and maintenance mechanics to ensure the safe operation and maintenance of the excavator. It is essential that you read and familiarize yourself with this information, which explains safety requirements and precautions and specific hazards of which you should be aware. This also applies to any personnel which might be working on the machine only occasionally, such as during set up or maintenance.
Careful adherence to these safety guidelines will permit safe operation and maintenance and potentially prevent personal injury to yourself and others, and possible damage to the excavator.
Important safety notes such as **DANGER**, **CAUTION** or **NOTE** are used throughout this manual to emphasize important or critical instructions.

In this manual, DANGER, CAUTION or NOTE are defined as follows :

DANGER

Denotes an extreme intrinsic hazard which could result in a high probability of death or serious injury if proper precautions are not taken..

CAUTION

Denotes a reminder of safety practices or directs attention to unsafe practices if proper precautions are not taken.

NOTE

NOTE describes operation and maintenance procedures which should be followed to keep your excavator operation and to insure long machine life and/ or to facilitate certain procedures.

In addition to these instructions you must follow the safety regulations applicable to your work environment and job site and any federal, state and local safety requirements (A model excavators must also follow local and federal highway regulations).

For EC countries, guidelines 89 / 655 / EWG contain the minimum safety guidelines for users.

DESTINED USE

The excavator with the standard backhoe, grapple or bucket attachment may only be used to loosen, pick up, move, load and dump soil, gravel, rock, or other material and to load trucks, barges, conveyor belts, or rock crushing systems.

Special guidelines are applicable for machines used for lifting applications and special safety devices must be installed (for the list of the necessary special safety devices, refer to the section "hydraulic excavators used for lifting loads" in this manual).

Any other use above and beyond the applications described above, such as breaking out rock or demolishing buildings, pounding in posts etc. requires special attachments and safety devices.

If the machine is exposed to the risk of falling down objects during operation, the cab of the machine must be fitted with a safety device according to the FOPS prescriptions.

Transporting personnel or loads etc. is not considered destined use and is therefore prohibited. The manufacturer / dealer is not responsible for any resulting damage. Any risk must be carried by the user himself.

Destined use is considered part of observing and adhering to all regulations and inspection and maintenance guidelines given in this Operation and Maintenance Manual.

https://www.truck-manuals.net/

https://truckmanualshub.com/

GENERAL SAFETY INFORMATION

- Study the Operation and Maintenance Manual before operating or working on the excavator.
  Make sure that you have additional information for special attachments of your machine, read it and understand it!
- Allow only authorized personnel informed about the safety rules to operate, service or repair the excavator. Make sure to observe any minimum applicable age requirement.
- Allow only properly trained personnel to operate or work on the excavator, make sure to clearly specify the person who is responsible for set up, maintenance and repairs.
- Make sure the operator knows his responsibility regarding the observance of traffic regulations and permit him to refuse any unsafe instructions given by a third person.
- Any persons still in training should only operate or work on the machine under the supervision and guidance of an experienced person.
- Check and observe any person working or operating the excavator periodically and regularly, if they observe safety instructions and guidelines given in the Operation and Maintenance Manual.
- Wear proper work clothing when operating or working on the excavator. Rings, watches, bracelets and loose clothing such as ties, scarves, unbuttoned or unzipped shirts and jackets are dangerous and could cause injury!
  Wear proper safety equipment, such as safety glasses, safety shoes, hard hats, work gloves, reflector vests and ear protection.
- Consult your employer or supervisor for specific safety equipment requirements and safety regulations on the job site.
- Always tilt up the safety lever before leaving the operator's seat.
- Do not carry tools, replacement parts or other supplies while climbing on or off the excavator. Never use the steering column, control levers or joysticks as handholds.
- Never jump off the excavator, climb on and off the excavator using only the steps, rails and handles provided.

When climbing on or off the excavator, use both hands for support and face the machine.

- If needed, use the front window as an escape hatch.
- If no other guidelines are given, perform maintenance and repairs utilizing the following precautions :
  - Park excavator on firm and level ground. Rest the attachment on the ground.
  - Align the upper with the undercarriage and so that the sprocket wheels are on the rear.
  - Place all control in neutral position and raise the safety lever.
  - Turn the engine off and remove the ignition key.
- Before working on the hydraulic circuit, move all joysticks and pedals with the ignition key in contact position and the safety lever tilted down to relieve the servo pressure and the remaining pressures in the different main circuits. In addition, relieve the pressure in the hydraulic tank as described in the Operation and Maintenance Manual.
- Secure all loose parts on the excavator.
- Never operate the excavator without a complete walk around inspection. Check if all warning decals are on the machine and if they are all legible.
- Observe all danger and safety guidelines.
- For certain special applications, the excavator must be equipped with specific safety equipment. Use the excavator only, if they are installed and functioning properly.
- Never perform any changes, additions or modifications on the machine, which could influence the safety, without obtaining the written permission from the manufacturer. This also applies to the installation and adjustment of safety devices and safety valves as well as to any welding on load carrying parts.
  It is forbidden to repair the cab.
- Do not install any equipment or attachments made by other manufacturers or any which are not specifically authorized by LIEBHERR for installation without first obtaining the written permission from LIEBHERR.
  LIEBHERR will issue any required technical documentation for approved installations.
- Should the electrical circuit be modified or additional components be installed, so the modification must be performed according to the national standards and safety regulations (such as OSHA per the USA).
  The installation must be certificated by an approved organization and a copy of the certification has to be sent to the LIEBHERR company.

https://www.truck-manuals.net/

CRUSHING AND BURN PREVENTION

- Never work underneath the excavator unless it is safely resting on the ground and / or is properly blocked and supported.
- Never use damaged or insufficient wire ropes, slings or chains. Always wear gloves when handling wire ropes.
- Never reach into bores during attachment installation or removal. Never align bores with your fingers or hands. Use proper alignment tools when installing, changing or servicing attachments by qualified mechanics
- Keep objects away from the radiator fan. Rotating fans will swirl and throw out objects, which can become very dangerous and cause severe injury to yourself and others.
- Avoid contact with any components containing coolant.
  At or near operating temperature, the engine coolant is hot and under pressure and could cause severe burns.
- Check the coolant level only after the radiator cap is cool enough to touch. Remove the radiator cap slowly to relieve pressure .
- Do not allow your skin to come into contact with hot oil or components containing hot oil. At or near operating temperature, engine and hydraulic oil is hot and can be under pressure.
- Always wear safety glasses and protective gloves when handling batteries. Keep sparks or open flames away!
- Never permit anyone to hand guide the bucket or grapple into position.
- When working in the engine area, make sure the top covers and side doors are properly secured or closed with the appropriate supports.
- Never work underneath or on the excavator unless it is properly blocked and supported.

FIRE AND EXPLOSION PREVENTION

- Always turn off the engine while refuelling the excavator.
- Never smoke or allow an open flame in refuelling areas or where batteries are being charged, or where batteries or flammable materials are stored.
- Never leave machine unattended while fuelling. During this operation, no one but the employee in charge of refuelling is allowed to stay on the excavator.
- Always start the engine as described in the Operation and Maintenance Manual.
- Check the electrical system regularly and frequently.
  All defects, such as loose connections, burnt out fuses and bulbs, burnt or damaged cables must be repaired immediately by a licensed electrician or specially trained personnel.
- Never store flammable fluids on the machine except in storage tanks intended for the excavator's operation.
- Inspect all components, lines, tubes and hoses for oil and fuel leaks and / or damage.
  Replace or repair any damaged components immediately.
  Any oil, which escapes from leaks, can easily cause a fire.
- Be certain that all clamps, guards and heat shields are installed. These components prevent vibration, rubbing, chafing and heat build-up. Install tie wraps to fasten hoses and wires, as required.
- Cold start ether is extremely flammable. Do not use together with preheat. Use ether only in ventilated areas and as directed. Never use it near heat sources or open flames, do not permit anybody to smoke.
- Know the location of the excavator's fire extinguisher and be familiar with its operation. Make sure you know your local fire regulations and fire reporting procedures.
- A fire extinguisher can be attached inside the operator's cab, using the four threaded holes provided in the rear left support of the cab.

https://www.truck-manuals.net/

MACHINE START UP SAFETY

- Before excavator start up, perform a thorough walk around inspection.
- Visually inspect the excavator, look for loose bolts, cracks, wear, any leaks and any evidence of vandalism.
- Never start or operate an unsafe excavator.
- Report all defects to your foreman or supervisor and make sure they are corrected immediately.
- Make sure all covers and doors are closed and all warning decals are on the machine.
- Make sure all windows, as well as inside and outside mirrors are clean, and secure all doors and windows to prevent any unintentional movement.
- Be certain that the area surrounding the excavator is free of other personnel, and that no one is working on or under the excavator before starting the engine.
- Covers and boxes locks have to be unlocked, to facilitate the fight against fire in case of.
- Proceed with the same precaution while climbing up and down the cab, as for the ascension of the machine
- Keep ladders, footsteps, handles and handrail in clean condition and always free them from mud, oil, grease, ice, snow or any other obstacles.
- To guarantee an easy opening of the cab door in all weather conditions, coat the rubber seals around the door with silicon oil or talcum every two months and more often if necessary. Regularly grease the hinges and lock of the cab door as well the fixing device of the door in opened position.

  During maintenance works, always wear safety glasses and proper protective clothes..
- To climb up or down the cab, the excavator must be parked on firm, flat and level ground and the uppercarriage must be swung so to align ladders and steps on upper and undercarriage.
- Face the excavator when climbing up or down and always hold on to the machine at three points, i. e. keep the contact with the access components at the same time with two hands and one foot or with one hand and the two feet.
- As soon as you can reach the handle of the door with your free hand unlock it, and keeping yourself apart from the slewing range of the door, open the door before climbing up any more. Some external influences, and especially the wind, may make the opening of the door uneasy. For this reason, keep and guide the door all the way with your hand and lock it in its opened position, making sure it is securely fixed in this position, so it can not be slammed by the wind.
- If the weather conditions are bad, increase your attention to realise climbing or descent from the cab with a maximum of precautions, and do or let do the preliminaries operations of preparation which are necessary so you can move safely.
- With those conditions be especially vigilant.
- Go on climbing up, always holding yourself by three points, enter the cab and seat down to the seat
- If applying fasten the seat belt. Unlock the door using the unlocking lever and close the door holding it by the handle designed for this purpose. Only thereafter lower the safety lever and start the machine.
- It is essential to have your seat belt fastened if you want to operate the machine with the cab door opened.
  Should the belt be missing on your machine, so you must compulsorily get one installed before you start working with opened cab door.
- After entering the cab, adjust the operator's seat and controls, the inside and outside mirror, the armrests and fasten and adjust the seat belt. Be certain that all controls can be reached comfortably.
- All noise protection devices on the machine must be functional during operation.

https://www.truck-manuals.net/

ENGINE START UP AND OPERATING SAFETY

- Before start up, check if all indicator lights and instruments are functioning properly, place all controls in neutral position and tilt the safety lever up.
- Before starting the engine, alert any nearby personnel that the excavator is being started by sounding the horn.
- Start the machine only when seated in the operator's seat, and with the seat belt fastened (if installed).
- If you have no other instructions, start the engine as outlined in the Operation and Maintenance Manual.
- Tilt the safety lever down and check all indicators, gauges, warning devices and controls for their proper indication.
- Start and operate the engine only in a well ventilated area. If necessary, open doors and windows.
  Warm up the engine and hydraulic system to operating temperatures. Low engine and hydraulic oil temperatures can cause the excavator to be unresponsive.
- Check that all attachment functions are operating properly.
- Move the excavator slowly into an open area and check all travel functions for their proper operation, check travel and swing brakes, the steering function as well as the turn signals and lights.

MACHINE OPERATING SAFETY

- Familiarize yourself with job site rules. Be informed about traffic and hand signals and safety signs. Ask who is responsible for signalling.
  Check your surrounding for any obstacles in the working and movement range, check the load carrying capacity of the terrain, and secure the job site to shield it from any public highway traffic.
  Rope off the working area of the machine and install the necessary signs to forbid any non authorized person entering the area.
- Always keep a safe distance from overhangs, walls, drop offs, and unstable ground.
- Be alert of changing weather conditions, bad or insufficient visibility and of changing ground conditions.
- Be alert for utility lines, check the location of underground cables, gas and water lines, and work especially careful in that vicinity. If necessary and/ or if required, call local authorities to mark the location, and take precaution against contact with underground utilities.
- Keep sufficient distance to electrical lines. When working in the vicinity of high voltage electrical lines, keep proper distance to assure that the attachment does not come close to the lines. DANGER! You must inform yourself about safe distances.

  Preferably have the electrical lines de-energized (and lockout / tagged out according to the regulations applicable on the job-site) each time it is possible, and in any case if the closeness of the working area make it necessary.
- In case you do touch a high voltage line by accident, proceed as follows:
  - do not leave the machine,
  - move the machine, if possible, from the danger zone until you obtain sufficient distance,
  - warn any personnel in the vicinity not to come close to the excavator and not to touch it,
  - instruct or initiate that someone turns off the voltage.
  - Do not leave the machine until you are absolutely sure that voltage in the line, which had been touched or damaged, has been turned off!
- Before moving the machine, make sure that the attachments and equipment is secured properly to avoid accidents.
- When travelling on public roads, make sure to observe traffic regulations, and make sure that the machine meets federal and local public highway standards.
- Always turn on the lights if visibility is bad or if you are still working during dusk.
- Never allow other personnel on the excavator.
- Operate the excavator only while seated and with the seat belt fastened, if installed.
- Report any problems or needed repairs to your foreman or supervisor and make sure they are corrected immediately.
- Do not move the excavator until you are certain that no one is endangered by moving the excavator.
- On machines without negative brakes check the brake system before starting to work, as outlined in the Operation and Maintenance Manual.
- Never leave the operator's seat while the machine is still moving.
- Never leave the machine unattended (within view of machine), with the engine running.
- When moving the excavator, keep the uppercarriage in lengthwise direction and keep the load as close as possible to the ground.

https://www.truck-manuals.net/

- Prevent any working movements, which could tip the machine over. If the excavator begins to tip or slip on a grade, immediately lower the attachment and load to the ground and turn the excavator facing downhill.

  If possible, always operate the excavator with the attachment positioned uphill or downhill, never sideways.
- Always travel slowly on rough or slippery ground and on slopes, and on loose soils.
- Always travel downhill at permissible speed, so you don't loose control over the machine. The engine must run at nominal speed, use only the foot pedals to brake and slow down the machine.

  Never shift during down hill travel, always shift to a lower gear before travelling downhill.
- Load an occupied truck only if all safety requirements are fulfilled, notably in order to protect the truck operator.
- For demolition work, clearing, crane operation, etc. always use the appropriate protection device designed for this specific application.
- If operating in visually obstructed terrain or whenever necessary, have another person guide you. Always have only one person signal you.
- Allow only experienced persons to attach loads or to guide operators. The guide must be visible by the operator and / or must be in voice contact with him.
- Depending on the attachment combination, it is possible for the bucket teeth to hit the cab, the cab protection or the boom cylinders. Be very careful when the bucket teeth get in this range to prevent any damage.
- In case of a thunderstorm :
  - lower the attachment to the ground and if possible anchor the digging tool into the soil.
  - leave the cab and move away from the machine before the storm breaks out. Otherwise, you must stop the excavator, turn off the radio and keep inside the closed cab until the end of the storm.
- Auxiliary control units can have various functions. Always check their functions when starting up the machine.
- Stop the swinging motion of the uppercarriage when lowering the attachment into a ditch without striking the attachment on the ditch walls.
- Inspect the machine for damage if the attachment has been swung into a wall or any other obstacles.
- Applications in which the attachment is to be used to strike the material being extracted are not permitted, even when working in a longitudinal direction.
- Repeated strikes against an object leads to damage to the steel structures and machine components.
- Please refer to your LIEBHERR dealer if special teeth for heavy-duty or special applications are required.
- Do not attach too large bucket or bucket with side cutters or that are during operations with rocky material. This would prolong the work cycles and may lead to damage to the bucket as well as further machine components.
- With the 2x45° offset articulation, the offset position may only be employed if the working tool or the attachment does not touch the material.
- Operation of the offset articulation to drill into the material is not permitted.
- Do not lift the machine during operation. Should this happen, lower the machine slowly back to the ground.
- Do not let the machine fall heavily on the ground and do not hold it back with the hydraulics. This would damage the machine.
- During operation with the attachment it is forbidden to raise the machine with the dozing blade (e.g. carving at the ceiling when tunnelling).
- The hydraulic hammer must be selected with particular care. When using a hydraulic hammer not permitted by LIEBHERR, steel structures or the other machine components can become damaged.
- Before beginning breaking tasks, position the machine on firm and level ground.
- Use a hydraulic hammer designed exclusively for breaking stone, concrete and other breakable materials.
- Only operate the hydraulic hammer in the longitudinal direction of the machine and with the windshield closed or with a front protective grid.
- Ensure during hammer operation that no cylinder is entirely extended or retracted and that the stick is not in the vertical position.
- In order to avoid damages to the machine, try not to break stone or concrete while performing retraction and extension motions of the hydraulic hammer.
- Do not apply the hydraulic hammer uninterrupted for more than 15 secs. at a time to the same place. Change the breaking point. Too long uninterrupted operation of the hydraulic hammer leads to an unnecessary overheating of the hydraulic oil.
- Do not use the drop force of the hydraulic hammer to break stone or other materials. Do not move obstacles with the hydraulic hammer. Misuse of this nature would damage both the hammer and the machine.
- Do not use the hydraulic hammer to lift objects.

https://www.truck-manuals.net/

MACHINE PARKING SAFETY

- Park the excavator only on firm and level ground.

  If it becomes necessary to park the machine on a grade, properly block and secure it with wedges.
- Before turning off the engine, swing the uppercarriage lengthwise to the undercarriage and so to have the sprocket wheels at the rear. This position ensures a secure access to all the usual maintenance points of the uppercarriage.
- Lower the attachments to the ground and anchor the bucket lightly in the ground.
- Bring all operating levers in neutral position and engage the travel and swing brakes.
- Turn the engine off as outlined in the Operation and Maintenance Manual and raise the safety lever before you leave the operator's seat.
- Proceed with the same precaution while climbing up and down the cab, as for the ascension of the machine
- Then open the cab door and lock it in opened position and make sure it is securely fixed in this position.
  Be aware of difficult weather conditions and anticipate their possible consequences. The wind for example could slam the cab door. If necessary unfasten the seat belt.
- Carefully begin climbing down, facing the machine and always holding the contact at three points, keeping the contact with the access components at the same time with two hands and one foot or with one hand and the two feet, until you reach the height where you can close the cab door in the best conditions, keeping yourself apart from its slewing range. Unlock the door using the unlocking lever designed for this purpose and close the door guiding it by the handle.
  If you want so lock the door and take away the key.
- Slowly and carefully go down to the floor.
- Lock the cab, covers and boxes, remove all keys and secure the excavator against vandalism, unauthorized use, and any attractive nuisance.

MACHINE TRANSPORTING SAFETY

- Use only suitable transporting and lifting devices with sufficient capacity.
- Park the machine on firm and level ground and block the chains or wheels.
- If necessary, remove part of the attachments during transport.
- When loading the machine on a flatbed trailer or railroad car, be sure that the loading ramp incline is less than 30° and covered with wooden planks to prevent skidding.
- Remove all mud, snow or ice from track components before moving up the ramp.
- Before loading, secure the uppercarriage with the undercarriage with the lock pin (if lock pin is installed).
- Align the machine with the loading ramp.
- Attach the manual control levers to the foot pedals for sensitive control.
- Have another person guide and signal the operator.
- Have blocks or wedges ready to block the machine, if necessary, to prevent the machine from rolling backwards. Be careful to crushing risks when handling and applying these wedges. Keep clear of wheels and do not attempt to chock or block the machine before its complete standstill.
- Retract the attachment as far as possible and lower the attachment as close as possible to the loading surface and carefully drive up the ramp and onto the flat bed trailer.
- When the excavator is on the trailer, release the uppercarriage lock pin, turn the uppercarriage back and lower the attachment.
  If the backhoe attachment is attached, tilt the stick and bucket in and relock the uppercarriage (if lock pin is installed).
- Carefully secure the uppercarriage and other parts with chains, wedges and blocks to prevent slipping.
- Release the hydraulic pressure, remove the ignition key, raise the safety lever, close and lock the cab and close and secure all other doors and leave the machine.
- Carefully check out the transport route. Make sure that width, height and weight allowances are within the permitted limits.
- Check that there is enough clearance underneath all bridges, underpasses, utility lines, and in tunnels.
- During the unloading procedure, proceed with the same care and caution as during the loading procedure. Remove all chains and wedges. Start the engine as outlined in the Operation and Maintenance Manual. Carefully drive off the loading platform. Keep the attachment as close as possible to the ground level. Have another person guide and signal you.

https://www.truck-manuals.net/

MACHINE TOWING SAFETY

- Observe the correct procedure: check the index in your Operation and Maintenance manual and refer to the appropriate section : ”Towing the Excavator“.
- Only tow the excavator if absolutely necessary, for example to remove it for repairs from a dangerous job site.
- Be sure all towing and pulling devices such as cables, hooks, and couplers are safe and adequate.
- Make sure that the cable or the towing rod are strong enough and are routed around the centre of the undercarriage or to the towing hook on the undercarriage, which is designated for this purpose. Be aware that any damage to the machine caused by towing is never covered by the manufacturer's warranty.
- Never allow anyone to stand near the cable when pulling or towing the excavator.
- Keep the cable tight and free of kinks.
- Engage travel slowly, and do not jerk. With a slack cable, the sudden impact of the load being towed could snap and break.
- Keep personnel out of area. If cable breaks while under stress, it could cause severe injury.
- During the towing procedure, keep within the required transport position, permissible speed and distance.
- After the towing procedure is completed, return the machine to its previous state.
- Proceed as outlined in the Operation and Maintenance Manual when putting the excavator back in service.

MACHINE MAINTENANCE SAFETY

- The machine may not be made unsafe when performing maintenance work. Never attempt maintenance procedures or repairs you do not understand.
- Check the Operator’s and Maintenance Manual for service and maintenance intervals. Make sure you use only appropriate tools for all maintenance work.
- Refer to your Operator’s and Maintenance Manual to see, who is authorized to perform certain repairs. The operator should only perform the daily / weekly maintenance procedures.

  The remaining work may only be performed by especially trained personnel.
- Use only replacement parts corresponding to the technical requirements specified by the manufacturer. This is assured by using only original Liebherr replacement parts.
- Always wear proper work clothing when maintaining the excavator. Certain work may only be performed with a hard hat, safety shoes, safety glasses and gloves.
- During maintenance, do not allow unauthorized personnel to enter the maintenance area.
- Secure the maintenance area, as necessary.
- Inform the operator before any special or maintenance work. Make sure he knows the person, who is in charge of the work.
- If not otherwise noted in the Operation and Maintenance Manual, always make sure the excavator is parked on firm an level ground and the engine is turned off.
- Swing the uppercarriage lengthwise to the undercarriage and with the sprocket wheels at the rear so to have a secure access to the locations for the usual maintenance works on the uppercarriage (engine compartment, tanks, …).
  On some models, all ladders and steps are aligned on upper and undercarriage only in this position.
- During maintenance and service work, make sure you always retighten any loosened screw connections!
- If it is necessary to disconnect or remove any safety devices during set up, maintenance or repair, make sure that after completion of repairs, the safety devices are reinstalled and checked for proper function.
- Before any maintenance work and especially when working under the machine, make sure a ”Do not operate’ tag is attached to the starter switch. Remove the ignition key.

  After end of maintenance works or repair, restart the machine according to the instructions "Machine start up", in this manual.
- Before any repairs or maintenance work, clean any oil, fuel and / or cleaning substances from any fittings and connections .
  Don’t use any harsh cleaners and use only lint free cloths.
- Use only non-flammable cleaning fluids to clean the machine.
- Any welding, torch or grinding work on the machine must be explicitly authorized. Written authorization is necessary for welding on carrying structures. Before any using a welder, torch or grinder, clean off any dust and dirt and remove any flammable materials from the surrounding area. Make sure the area is sufficiently ventilated. Danger of Fire and Explosion!
- Before cleaning the machine with water or steam (high pressure cleaning) or other cleaning fluids, make sure that all openings, which , for safety and/ or functioning reasons should not be exposed to water / steam/ cleaners, are covered and / or masked off. Especially sensitive are electrical motors, control boxes and plug connectors.

https://www.truck-manuals.net/

- Make sure that the temperature sensors of the fire alarm and extinguishers system do not come in contact with the hot cleaning fluids, which could trigger the fire extinguishing system.
  Remove all coverings and masking material after completing the cleaning procedure.
  Then check all fuel lines, engine oil lines and hydraulic oil lines for leaks, loose connections, chafing and / or damage.
  Fix any problems immediately.

- If you use a high pressure cleaner with steam or hot water to clean the machine, observe following recommendations :
  - the distance between the nozzle and the surface to be cleaned must be no lower than 20 inches
  - the water temperature should not exceed 60°c (140°F)
  - limit the water pressure to 80 bar maximum (11500 PSI)
  - if you employ cleaning fluid, only use neutral cleaning agents such as customary car shampoos diluted to 2 or 3 percent maximum

- Never employ high pressure cleaning apparatus during the two first months following machine delivery or repainting.

- Observe all product safety guidelines when handling oils, grease, and other chemical substances.

- Make sure service fluids and replacement parts are disposed of properly and in an environmentally sound manner.

- When using hot service fluids, be very careful. (They can cause severe burns and injury!).

- Operate combustion motors and fuel operated heaters only in well ventilated areas. Before operating these units, check ventilation. In addition, always follow applicable local regulations.

- Never try to lift heavy parts. Use appropriate lifting devices with sufficient load carrying capacity. When replacing or repairing parts or components, make sure they are mounted very carefully on lifting devices, to prevent any possible danger. Use only suitable and technically sound lifting devices, make sure that lifting tackle, wire cables, etc. has adequate load carrying capacity.
  Never position yourself, walk or work underneath suspended loads.

- Never use damaged lifting devices, or devices which are not sufficient to carry the load. Always wear gloves when handling wire cables.

- Ask only experienced personnel to attach loads and guide and signal the crane operator. The guide must be within the visibility range of the operator and / or must be in direct voice contact with the operator.

- When working overhead, use appropriate and safe ladders, scaffolding or other working platforms designated for that purpose.
  Never step on parts or components on the machine when maintaining or repairing items overhead. When working high above ground, make sure you are fitted with ropes and appropriate safety devices which will prevent a possible fall.
  Always keep handles, steps, railings, platforms and ladders free of dirt, snow and ice!

- When working on the attachments, for example when replacing the bucket teeth, makes sure the attachment is supported properly. Never use metal on metal support!

- For safety reasons, never open and remove a track chain unless having previously totally released the pretension of the chain tensioning unit.

- Never work underneath the machine if it is raised or propped up with the attachment. The undercarriage must be supported with wooden blocks and supports.

- Always support the raised machine in such a way that any shifting to the weight change will not influence the stability. Do not support the machine with metal on metal support.

- Only qualified, especially trained personnel may work on travel gear, brake and steering systems.

- If it becomes necessary that the machine must be repaired on a grade, block the chains with wedges and secure the uppercarriage to the undercarriage with the lock pin.

- Only qualified, especially trained personnel may work on the hydraulic system.

- Never check for leaks with your bare hands, always wear gloves. Fluid escaping from a small hole can have enough force to penetrate the skin.

- Never loosen or remove lines or fittings before the attachment has been lowered to the ground and the engine has been turned off. Then turn the ignition key to contact position with tilted down safety lever, move all servo controls (joysticks and foot pedals) in both direction to release pressures. Then release the tank pressure as outlined in this Operation and Maintenance Manual.

- Always disconnect the battery cable before working on the electrical system or before any arc welding on the machine. Always disconnect the negative (-) cable first and reconnect it last.

https://www.truck-manuals.net/

- Check the electrical system regularly. Make sure that any problems, such as loose connections, burnt out fuses and bulbs, scorched or chafed cables are fixed immediately by an electrician or qualified personnel.
- Use only Original fuses with the specified amperage. Never use a different size or stronger fuse than the original fuse.
- On machines with electrical medium or high voltage systems:
  - If there is any problem with the electrical energy supply, turn the machine off immediately.
  - Follow established lockout / tag out procedures where applicable.
  - Any work on the electrical system may only be performed by a qualified electrician or qualified personnel under the guidance and supervision of an electrician, according to electro - technical regulations.
- If any work is required on any parts which carry current, use a second person to turn off the main battery switch, if necessary. Rope the work area off with a safety rope or chain, and set up warning signs. Use only insulated tools.
- When working on medium and high voltage components, shut off the voltage and connect the supply cable to the ground and ground the components, such as the condenser, with a grounding rod.
- Check all disconnected parts if they are truly free of current, ground them and close them off quickly. Insulate any close-by, current carrying parts.

HYDRAULIC LINES AND HOSES

- Hydraulic lines and hoses may never be repaired!
- All hoses, lines and fittings must be checked daily, but at least every 2 weeks for leaks and any externally visible damage! Never check for leaks with your bare hands, use a sheet of paper or something else. Any damaged sections must be replaced immediately! Escaping oil can cause injuries and fires!
- Even if hoses and lines are stored and used properly, they undergo a natural aging process. For that reason, their service life is limited. Improper storage, mechanical damage and improper use are the most frequent causes of hose failures. Concerning the hoses, you must follow the safety regulations applicable to your work environment and job site and any federal, state and local safety requirements.
- Using hoses and lines close to the limit ranges of permitted use can shorten the service life (for example at high temperatures, frequent working cycles, extremely high impulse frequencies, multi shift or around the clock operations).
- Hoses and lines must be replaced if any of the following points are found during an inspection (see guidelines ISO 8331):
  - Damage on the external layer into the inner layer (such as chaffing, cuts and rips);
  - Brittleness of the outer layer (crack formation of the hose material);
  - Changes in shape, which differ from the natural shape of the hose or line, when under pressure or when not under pressure, or in bends or curves, such as separation of layers, blister or bubble formation, crushing or pliers.
  - Leaks;
  - Non observance of installation requirements;
  - Damage or deformation of hose fittings, which might reduce the strength of the fitting or the connection between hose and fitting;
  - Any movement of hose away from the fitting;
  - Corrosion on fittings, which might reduce the function or the strength of the fitting;

  When replacing hoses or lines, always use Original replacement parts.
- Route or install the hoses and lines properly. Do not mix up the connections!
- Always take care to avoid torsional strain when installing a new hose. On high pressure hydraulic hoses, the mounting screws must be first mounted on both hose ends (full flange or half clamp) and tightened only thereafter.

  On high pressure hoses having one curved end, always tighten first the screws on the curved hose end and only then the screws on the straight hose end.

  Install and tighten the hose clips that may be mounted on the hose middle only when the both hose ends are already tightened.
- Always install hoses so to avoid any friction with other hoses and parts.

  We recommend to keep a distance between hose and other parts of at least one half of the hose outer diameter. Keep a minimum gap of 1/2 inch in any case.

  After mounting a hose connecting two parts that are movable to each other, check during the return to service that the hose is not rubbing in the whole moving range.

  Check daily that all flanges and covers are fixed correctly. It will prevent vibrations and damage during operation.

https://www.truck-manuals.net/

PROTECTION AGAINST VIBRATION

- Stress caused by vibration in mobile construction machinery is predominantly a result of the way in which it is operated. The following parameters have a particularly significant influence:
  - Terrain conditions: Unevenness and potholes;
  - Operational technique: Speed, steering, braking, control of the machine's operating elements during travel and during operation.
- The machine operators themselves are largely responsible for the actual stress caused by vibration as the operators determine speed, gear transmission, manner of handling and travel routes.

  Thus, a wide range of different forms of vibrational stress are resulted for the same machine type.

  Vibrational stress of the machine operator's body can be reduced by noting the following recommendations:

  Select the correct machine, equipment and accessories for each respective application.
  - Use a machine which features a suitable seat (thus, for earthmoving machines, e.g. hydraulic excavators, a seat which complies with EN ISO 7096).
  - Ensure that the seat remains in good condition and adjust the seat as follows:
    1. Adjustment of the seat, and thus the vibrations being produced from the seat, should be carried out in relation to the weight and size of the operator
    2. Check the vibration absorption and adjustment mechanisms of the seat regularly and ensure that condition of the seat always adheres to the specifications of the seat manufacturer.
- Check the maintenance condition of the machine, in particular: tyre pressure, brakes, steering, mechanical connections, etc.
- Do not carry out steering, braking, acceleration and switching, or move or load the machine's working attachment, in jerky movements.
- Adapt the machine speed to the travel path to reduce vibrational stress:
  - Reduce the speed when negotiating rough terrain;
  - Travel around obstacles and avoid very rough terrain whenever possible.
- Ensure that the terrain over which the machine is being driven or operated is well maintained:
  - Remove large stones and obstacles;
  - Fill in ditches and holes;
  - Ensure that machines are on-hand for the preparation and upkeep of practical terrain conditions and that sufficient time for this work is allowed for.
- Travel over longer distances (e.g. on public roads) with adequate (average) speed.
- For machines which are used primarily for travelling, use special auxiliary systems for the journeys (wherever available), allowing a vibration reduction for this application type.

  Should these auxiliary systems not be available, regulate the speed so that a "vibrational build-up" of the machine is avoided.

https://www.truck-manuals.net/

https://truckmanualshub.com/

SIGNS ON THE HYDRAULIC EXCAVATOR

Your hydraulic excavator has several kinds of signs.

- **Warning Signs**: Warnings on accident risks with potentially serious or fatal injuries.
- **Notices:** Indicate specific points of control, maintenance and properties of the excavator.
- **Identification Tags**
  Contents and location are described hereafter.
  Order numbers are contained in the spare parts list

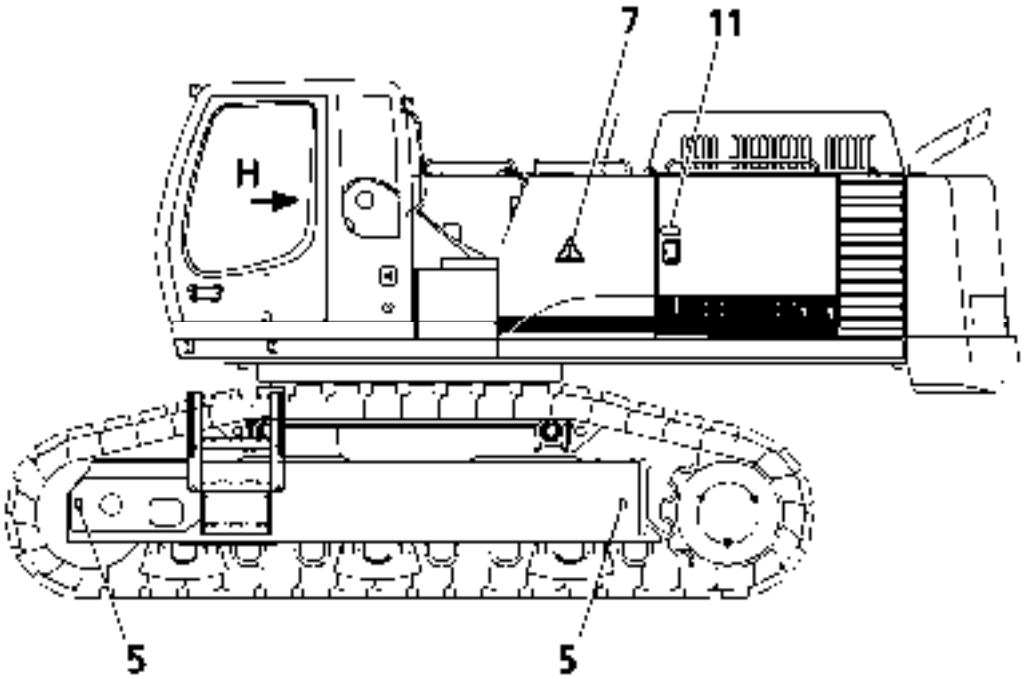

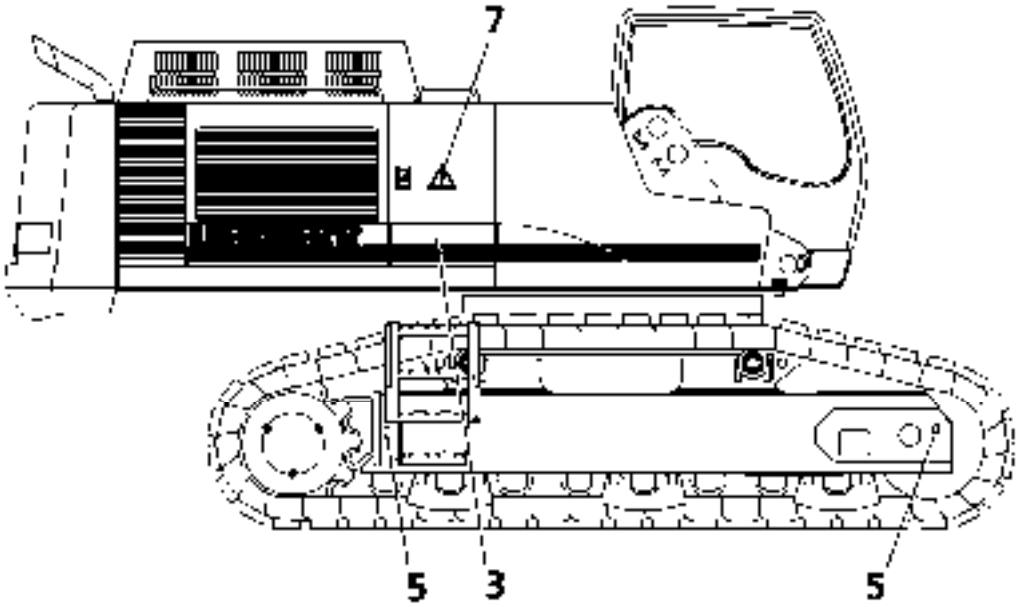

2	Notice Sound Power Level L WA	7	Warning Sign Danger Zone
3	Notice External Start	10	Prohibition Sign
5	Notice Latch Points		

https://www.truck-manuals.net/

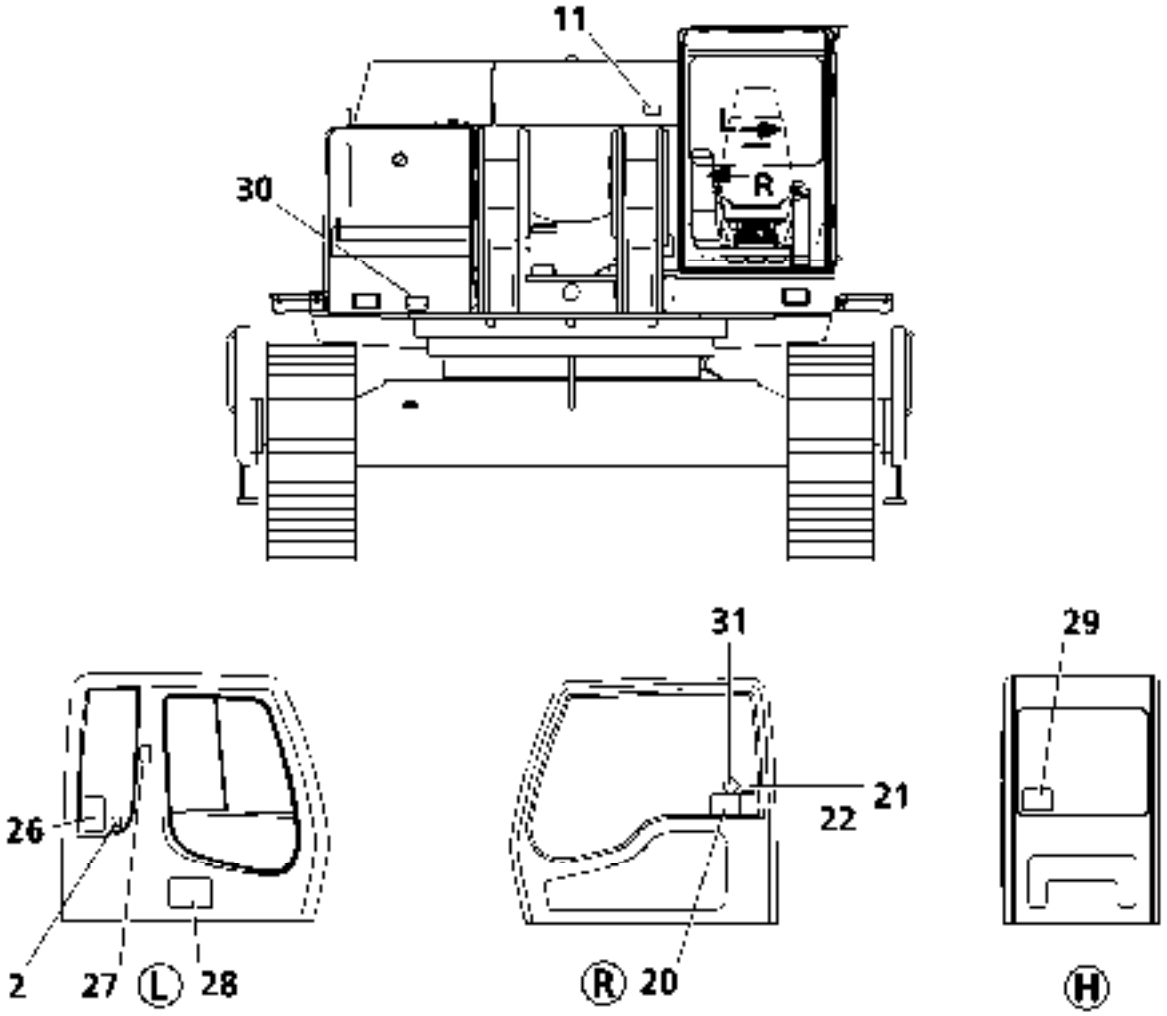

11 Warning Sign Engine Shut Down
20 Sign Control Symbols
21 Warning Sign Attachment
22 Notice Accident Prevention
26 Lifting capacity chart
27 Notice Safety Lever
28 Lubrication Chart
29 Notice Latching and Lifting Points
30 ID Tag Hydraulic Excavator
31 Notice Safety Belt

https://www.truck-manuals.net/

https://truckmanualshub.com/

Sign 2 **Sound power level L_{WA}**

. Meaning : Indicates the sound power level of the hydraulic excavator to the surrounding area in dB(A).

. (*) Value as example.

Sign 3 **External start**

. Meaning : When jump starting the hydraulic excavator, observe the notices in the operating instructions precisely.

Sign 5 **Latch points**

. Meaning : Indicates the latch points on the hydraulic excavator.

Sign 7 **Danger zone**

. Meaning : It is prohibited to be and remain in any danger zone.

Sign 10 **Prohibition sign**

. Meaning : It is prohibited to enter the area designated.

https://www.truck-manuals.net/

https://truckmanualshub.com/

Sign 11 **Engine Shut Down**

Meaning: Open only when the engine is shut off!

Sign 20 **Information about Control Symbols**

Meaning: Schematic representation of the correlation between the main controls in the cab and the induced actions for the operation of the excavator.

Sign 21 **Attachment**

Meaning: Attachment reaches up to the operator's cab!
Be aware of retracted attachments.

Sign 22 **Accident Prevention**

Meaning: When operating the hydraulic excavator, observe the printed prescriptions on accident prevention in the operating instructions precisely.

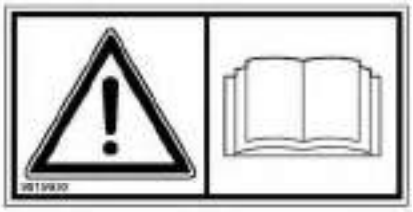

Sign 27 **Safety Lever**

Meaning: Before leaving the operator's seat, pull the safety lever all the way up.

https://www.truck-manuals.net/

https://truckmanualshub.com/

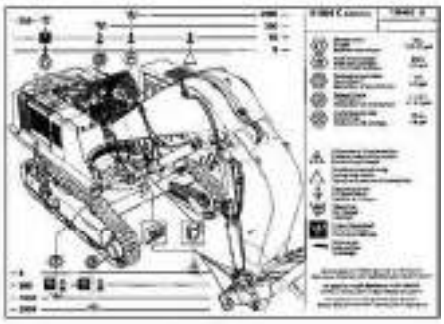

Sign 28 **Lubrication chart**

. Meaning: See the lubrication chart of the machine on page 5.11.

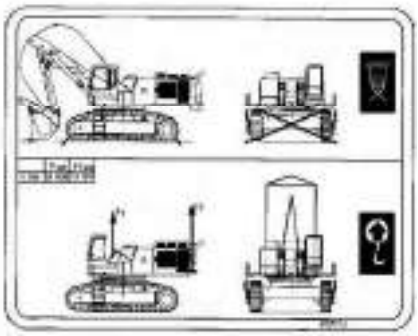

Sign 29 **Latch Points and Lifting Points**

. Meaning: Indicates the latch points and the stopping points for lifting on the hydraulic excavator.

Sign 31 **Seat Belt**

. Meaning: Before beginning to work with the machine, you must fasten the seat belt.

ID TAGS

ID Tag 30 **Hydraulic Excavator**

. The ID tag contains the following information:

- Type
- Vehicle identification number
- Authorized Total Weight
- Year of manufacture
- Authorized Axle Load front
- Authorized Axle Load rear
- Engine output
- Maximum Travel Speed

https://www.truck-manuals.net/

https://truckmanualshub.com/

3. CONTROLS AND INSTRUMENTATION

OPERATOR'S SEAT

CAUTION

Before adjusting the operator's seat and the joysticks, make sure that the safety lever (fig. 1) is in the uppermost position to avoid any unexpected movements of the hydraulic excavator.

Your hydraulic excavator comes equipped with a standard operator's seat (fig. 3) or optionally with a suspension seat (fig. 4).

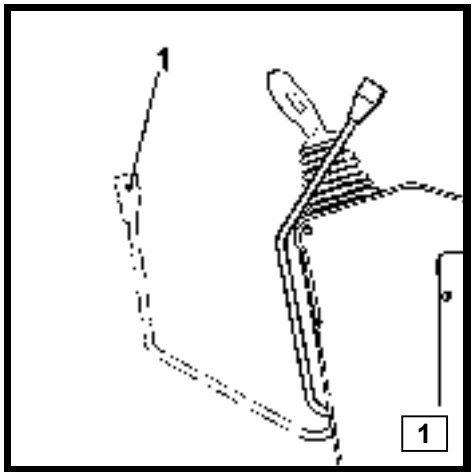

ADJUSTMENT

Adjusting the operator's seat horizontally with respect to the 2 control panels is possible after lifting lever 1 (fig. 2).

Independent of this adjustment, the entire seat including the 2 control panels can be slid horizontally after lifting lever 2.

Adjusting the seating suspension to body weight is done via the outer ring of the rotary switch 5 (fig. 3) or via key 7 (fig. 4).

Adjusting the seat cushion angle and the seat height is done via levers 4a and 4b (fig. 3 and 4).

- By lifting lever 4a the seat cushion in back can be tilted up or down.
- By lifting lever 4b the seat cushion in front can be tilted up or down.

Adjusting the angle of the back rest is done via lever 6 (fig. 3 and 4).

- Lift lever 6
- Move the back rest to the desired angle
- Release lever 6.

Adjusting the lower back support in the back rest occurs via keys 8 and 9 (fig. 4).

The angle of the right and left arm rests can be adjusted. Turn the knurled screws 3 (fig. 3) beneath the arm rests in the appropriate direction.

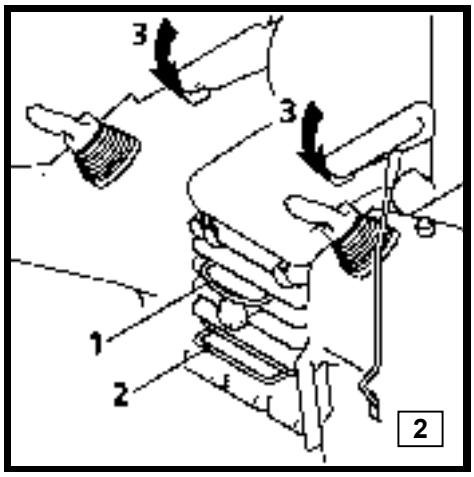

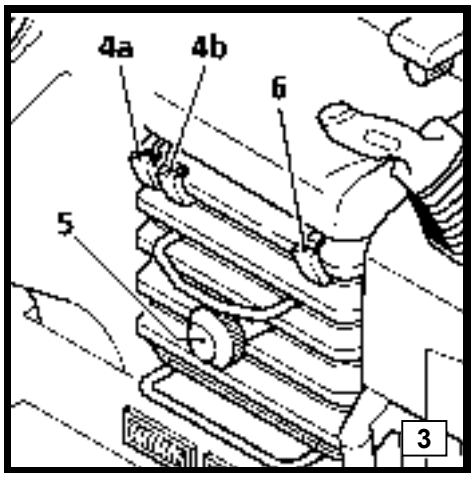

VIBRATION DAMPING

The seat mounted in the excavator corresponds to ISO 7096 standards.
When used according to the excavator's specifications, the values of the vibration load transmitted by the operator's seat are less than or equal to the test vibrations of the corresponding machine type according to ISO 7096 standards. The resulting vibration acceleration values "a_{zw}", measured according to ISO 2631, part 1, standards, meet the demands for vibration protection of the entire body according to EN 474-1 (acceleration "a_{zw}" between 0,5 and 2,5 m.s-2).

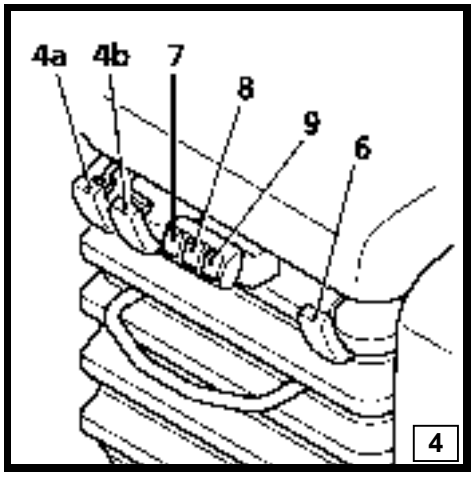

https://www.truck-manuals.net/

https://truckmanualshub.com/

CONTROLS AND INSTRUMENTATION IN THE CAB

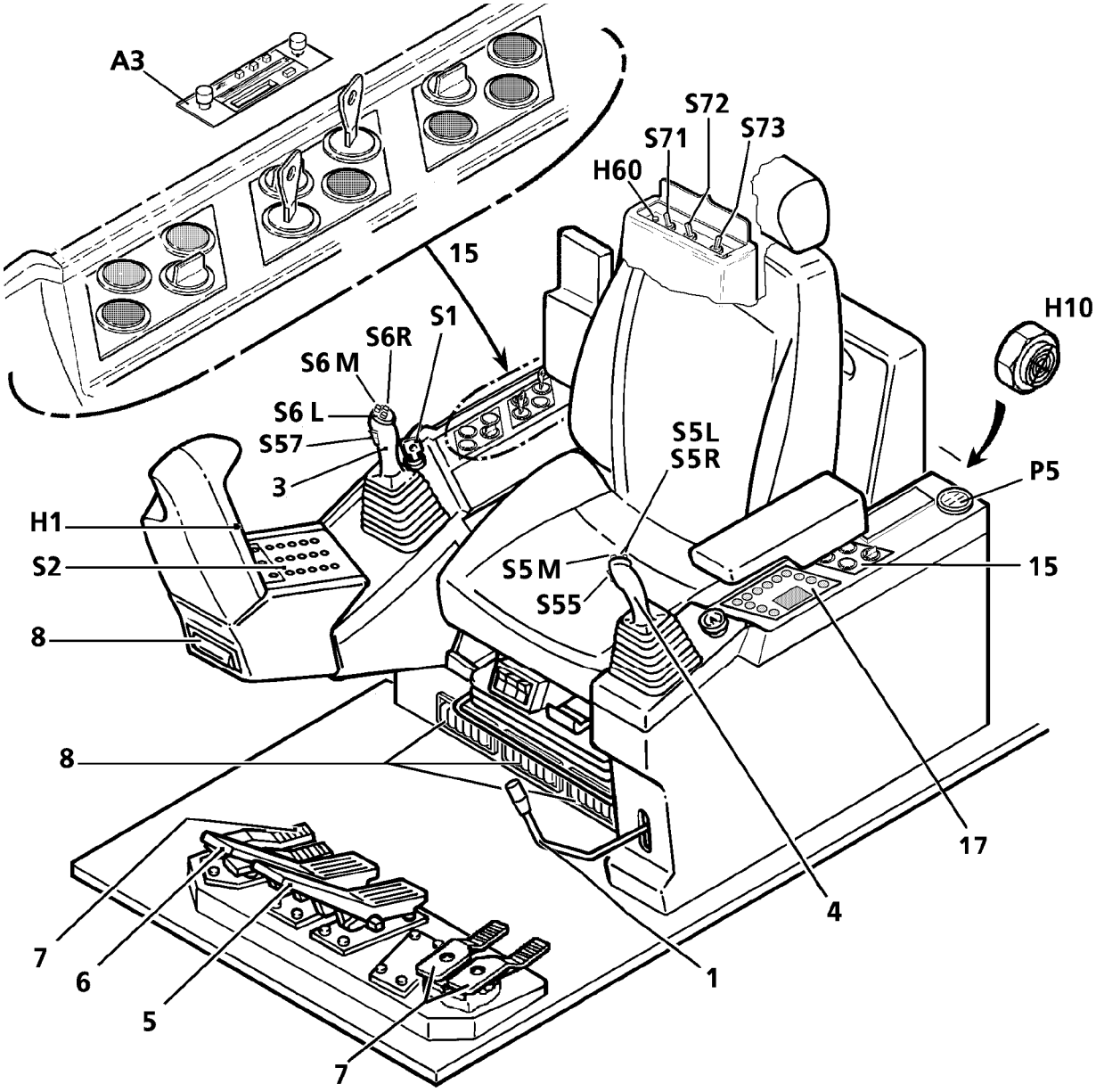

1	Safety lever- Servo control
2	Arm rests
3	Right joystick
4	Left joystick
5	Pedal for left travel gear
6	Pedal for right travel gear
7	Attachment or special attachment control *
8	Air conditioner vent
15	Control units - additional attachments * (See page 3.26)
17	Control unit - air conditioner
A3	Radio *
H1	Monitoring display
H10	Buzzer
H60	Warning light / error with Diesel engine in emergency operation
P5	Hourmeter
S1	Ignition key
S2	Switching unit
S5L	Push button for rotating device left(grapple, shear, ...), or unlocking of cylinder cut-off (NA)
S5M	Horn
S5R	Push button for rotating device right (grapple, shear, ...), or travel alarm on/off (NA)
S6L	Push button for lifting magnet or rotating device left (NA)
S6M	Push button - reserve
S6R	Push button –travel alarm on/off or rotating device right (NA)
S55	Switch – unlocking of cylinder cut-off or lifting magnet (NA)
S57	Switch for swing brake control
S71	Switch for Diesel engine emergency start
S72	RPM adjustment during emergency operation
S73	Switch / Safety mode of the servo circuits

* Optional equipment
(NA) This location only for North America

https://www.truck-manuals.net/

Safety lever - Servo control 1

For safety reasons, a safety lever is installed on the left console. The operator must move this lever up before leaving the operator's seat.

The operator may only push the lever down when he is again seated in the operator's seat, ready to work.

When the safety lever is up, the servo pressure supply is interrupted, and no working movements are possible if the joysticks are accidentally actuated.

At the same time the swing brake apply and can no longer be released via the button S17.

When pushing the safety lever down, the brakes recover the previous state (applied or released) before the lever had been pulled up.

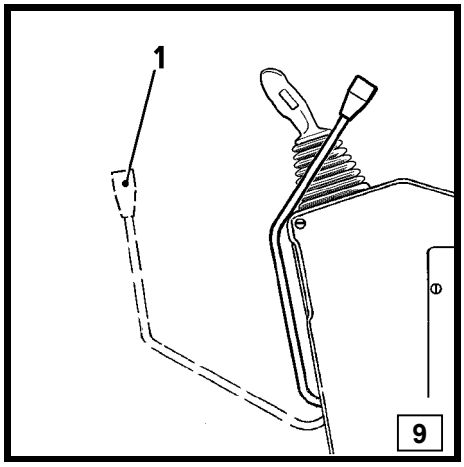

Buzzer H10

During operation, the buzzer H10 sounds to alert the operator, in case of upcoming of an operating fault as:

- a low pressure of the engine lubrication oil,
- a low level of the engine coolant,
- a low hydraulic oil level,
- a charge air overheating,
- an engine coolant overheating,

In case such an error is detected, a corresponding warning symbol will be displayed on the screen.

For the possible symbols, the results of the errors and the corrective actions to perform, see page 3.10 and following.

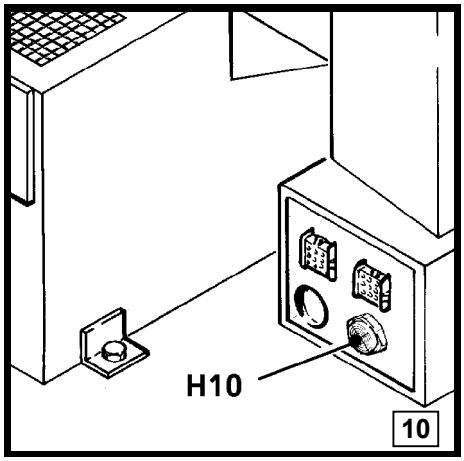

***CAUTION**

On machines with US version, the functions of the push buttons S5L, S5R, S6L, S6R and of the rocker switch S55 are different from those described below, refer to page 7.1.

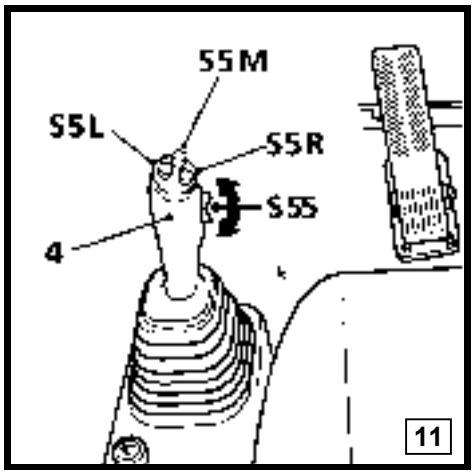

Push button S6L * See on page 4.17.

Push button S6R *

On machines fitted with a travel alarm, each time a travel pedal is pushed, the travel alarm will sound.
This sound can be silenced 10 seconds after travel start by depressing the push button S6R.

Rocker switch S55 *

This rocker switch is used to unlock a cylinder end position that has previously been pre selected via switch S54, see also switch S54 in section "control for optional equipments.

Rocker switch S57 for swing brake control

This rocker switch controls the swing brake when the brake is pre selected in semiautomatic operating mode via the push button S17 (see on page 4.12).

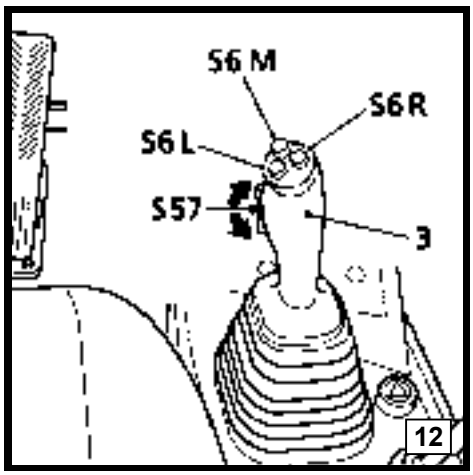

Switches S71, S72 and S73, see on page 3.24.

https://www.truck-manuals.net/

https://truckmanualshub.com/

CONTROL UNIT

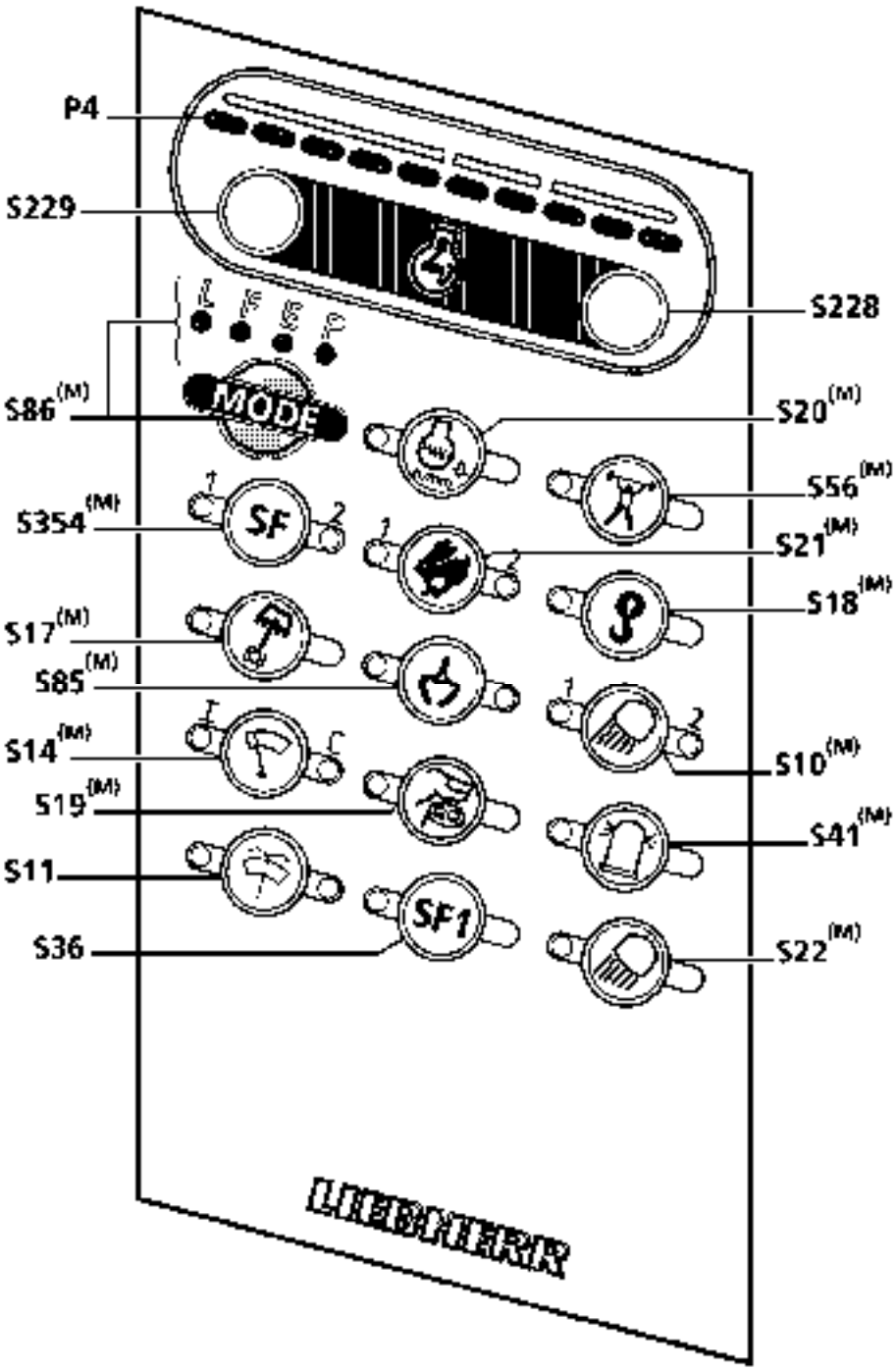

P4	LED indicator for engine RPM
S10	Lights on uppercarriage and working attachment
S11	Windshield washer
S14	Windshield wiper
S17	Swing brake
S18	Overload warning device *
S19	Rotating device*
S20	Automatic low idle
S21	Travel speed increase
S22	Auxiliary floodlights*
S36	Special function - not used -
S41	Beacon*
S56	Pressure cut-in stage boom*
S85	Grapple operation
S86	Operation mode selection
S228	Engine RPM increase
S229	Engine RPM reduce
S354	Not used

* Optional installation

(M) The function of the push buttons marked with (M) are memorized when stopping the excavator. This means that the controlled function recovers the previous state (on, off, 1/2, L/H, ...) before the machine had been turned off

https://www.truck-manuals.net/

S10 - Floodlights

Depressing the push button will successively:
- turn on the floodlights on the uppercarriage,
- turn on only the working floodlights on attachment,
- turn on all the above floodlights,
- switch off all the above floodlights.

S11 - Windshield washer

The electrical windshield washing device is activated by pushing the button S11 when the ignition is on. The detergent is sprayed and the windshield wipers operate as long as the button is pushed.

The windshield wipers are turned off about 3 seconds after releasing the button.

S14 - Windshield wiper

Depressing the switch S14 (when the ignition is on)will successively:
1 turn on the windshield wiper in intermittent mode (the lighting diode I lights up)
2 turn on the windshield wiper in continuous (the lighting diode C lights up)
3 turn off the windshield wiper (both lighting diodes are extinguished)

Adjusting the delay time for intermittent mode via switch S14:
- Select the intermittent mode and keep the switch S14 depressed until the indicator lamp I starts blinking rapidly.
- Release the switch as soon as the blinking duration has reached the desired interval time (settings from 2 - 9 seconds).

S17 - Preselection of swing brake operating mode

With this button the swing brake can be switched, either in position "brake applied" or in position "brake in semiautomatic" (see on page 4.12).
Pushing the button shifts the brake from one operating mode into the other.

With the brake applied, the red diode in the push button is on.

S18 - Overload warning device

This push button, alternately turns on and off the overload warning device. This device alerts the operator that the authorized lift capacity of the machine has been reached. It must be turned on before using the excavator for lifting operation.
Also refer to page 7.5 to turn on the overload warning device.

S19 - Rotating device

An additional hydraulic circuit for rotating device operation is necessary to drive some specific equipments (such as rotating grapple, rotating bucket, rotating stick, quick change coupling, ...).
The push button S19 turns on and off the control circuit of these specific equipments.
With the control circuit turned on, the specific equipments can be actuated using the push buttons S5 on top of the left joystick handle.
When no rotating device is operated, the button S19 must be turned off.
The button S19 is operative only if the safety lever is pushed down.

S20 - Low idle automatic (see page 4.5)

Via this push button the function "low idle automatic" is turned on, resp. off (the light diode in the button is on, resp. off).

Adjusting the time lag for low idle automatic via switch S20:
The push button S20 also serves to adjust the time lag between the return to neutral of all joysticks and pedals and the automatic reduction to low idle of the engine RPM.
The adjustment is performed similar to the one described above for the windshield wiper pause time via button S14.

https://www.truck-manuals.net/

S21 - Travel speed increase

When the travel speed increase is turned on via S21(indicator light in the button is on) a higher travel speed is reached, also see page 4.11.

The button is operative only if the safety lever is pushed down.

S22 - Auxiliary floodlights (Optional installation)

S36 - Special function (not used)

S41 - Beacon (Optional installation)

S56 - Pressure increase

When this function is turned on (light diode in the button is on), the forces on the working attachment are increased, and the movements of the machine become slow at the same time (load lifting operation,...).

S85 - Grapple operation

This button must be turned on each time when a grapple is operated.

S86 - Engine speed adjustment with mode preselection (see page 4.4 - 4.5)

The button S86 allows to preselect between four preadjusted engine RPM.
Depressing the button S86 causes to change from one mode into the next, in the order L, F, E, P, L, ... and so on.

L	(Mode LIFT)	=	RPM stage 5
F	(Mode FINE)	=	RPM stage 10
E	(Mode ECO)	=	RPM stage 8
P	(Mode POWER)	=	RPM stage 10

RPM stage 8 corresponds to the most favorable specific fuel consumption, RPM stage10 is full engine RPM.
In mode E or P, the Diesel engine is at the nominal power corresponding to the selected RPM stage.
In the opposite, for modes L and F, the engine output is reduced by about 20%.

S228 - Engine RPM increase

See page 4.4

S229 - Engine RPM reduce

See page 4.4

S354 – Special function (not used)

P4 - LED indicator for engine RPM

Via the LED bargraph indicator P4, the engine RPM is displayed.
The complete RPM range is divided into 10 stages.

https://www.truck-manuals.net/

MONITORING DISPLAY

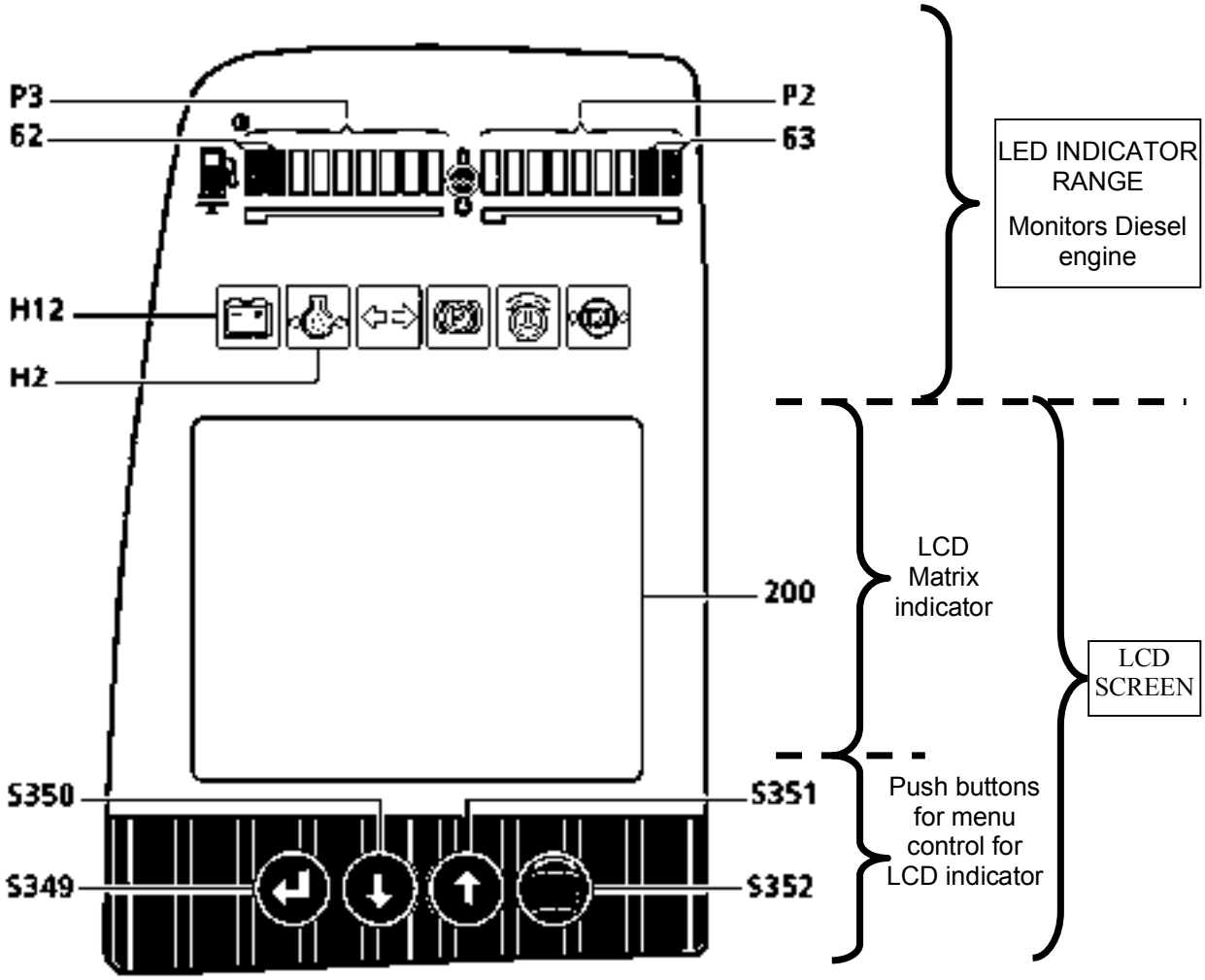

Fig. 1

LED INDICATOR RANGE

Indicator light H2 - low engine oil pressure

If the engine oil pressure drops during operation below a preset value, which depends on the momentary Diesel engine RPM, the indicator light H2 lights up after 2 seconds.
At the same time, the buzzer will sound to alert the operator that the oil pressure is too low.
Return the engine immediately to low idle. If the pressure remains too low for 5 other seconds, the engine will turn off automatically, and the warning symbol E522 is displayed on the screen.

Charge indicator light H12

Indicator light H12 lights up if the starter key is moved to contact position and turns off as soon as the engine starts. During operation, this indicator light lights up if the alternator V-belt or the electrical charge system is defective.
Turn the engine off and correct the problem.

Engine coolant temperature gauge P2

During operation, the indication must remain in the green range.
If the engine coolant overheats (coolant is above 100°C = 212°F), the red LED indicator light 63 starts to light up on the right end of the indicator.
Simultaneously, the buzzer will sound in the cab and the warning signal E503 will appear on the LCD screen
The engine power is reduced and the working pumps return automatically to minimum flow at the same time.
Stop working soon and keep the engine running at high idle.
If the default persists for over 60 seconds, lower the engine RPM to low idle and turn the engine off after 3 -5 minutes.
Locate the reason for the trouble and get it repaired.

https://www.truck-manuals.net/

https://truckmanualshub.com/

Should the coolant temperature increase some more (over 104°C i. e. over 219°F) so the warning signal E523 will appear on the display. Turn the engine off immediately in this case.

Fuel gauge P3

The LED indicator lights show the fuel level.
When the both red LED 62 light up, about 10% to 20% fuel are left in the tank as reserves.

LCD SCREEN

Adjust the contrast on the LCD screen

The contrast on the LCD monitor can be changed by simultaneously pushing the ‘ MENU ‘ key and the "UP" or "DOWN" key. The new setting will be stored in the system.
To retrieve the original contrast setting, depress the both arrow keys "UP" and "DOWN" at the same time during system start (when all the light diodes are on).

Adjust the background lighting on the LCD screen

The background lighting on the LCD monitor can be changed by simultaneously pushing the ’RETURN ‘ key and the "UP" or "DOWN" key. The new setting will be stored in the system.
A light sensor on the upper left hand side of the display controls the LCD lighting, depending on the ambient light conditions.
The follow up control by the light sensor is performed around the basic setting adjusted via the keys. If the ambient light conditions are low, the background lighting will be reduced accordingly.

LCD screen control keys

The display can be controlled via 4 keys S349 "RETURN", S350 "DOWN", S351 "UP" and S352 "MENU" (see above illustration).
These keys are used to change from the main display to the menu selection and to scroll through various other menus.

MAIN SCREEN

The main screen appears after the unit is turned on and remains in place until the "MENU" key is pressed to change to the menu selection.

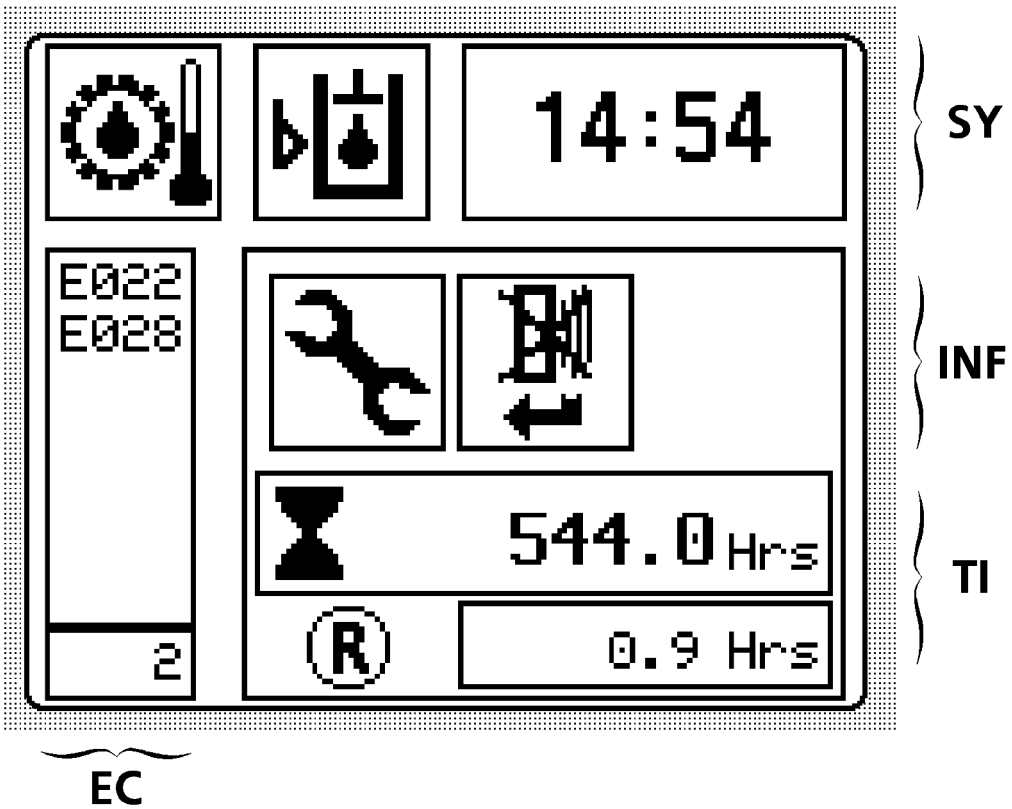

https://www.truck-manuals.net/

Main screen view

SY field : The upper field of the monitor shows operating fault symbols, and also a clock, if no more than 2 warning symbols are shown.
Should more than two symbols be shown, so the clock is no more displayed and up to four symbols can be shown at the same time in the field SY (see fig. below).
If more than 4 symbols must be shown, then every 10 seconds, the symbols move to the left by one symbol.
The list on following pages shows all operating fault symbols which can appear in this field.

Note: The error codes corresponding to the operating faults are in the shape of "E5XX". They are registered in the error statistics of the machine

EC field : The EC window displays any applicable error codes for any electrical errors in the excavator electronics, (line errors, sensor errors, ...). Max. 7 error codes can be displayed at the same time . If more than 7 errors occur, an arrow next to the error code window points to additional error codes on the list.
Press the arrow key to move the error code window in the selected direction on the error code list.
For detailed error codes list, refer next pages.

INF field:: The INF field on the right hand side of the main screen displays temporary information, also in graphic form.
If more than 3 symbols must be shown, then every 10 seconds, the symbols move to the left by one symbol.
Displays are shown as graphics or text and inform about specific operating conditions (such as actuated flow reduction, emergency operation of Diesel engine or hydraulic pumps, …)

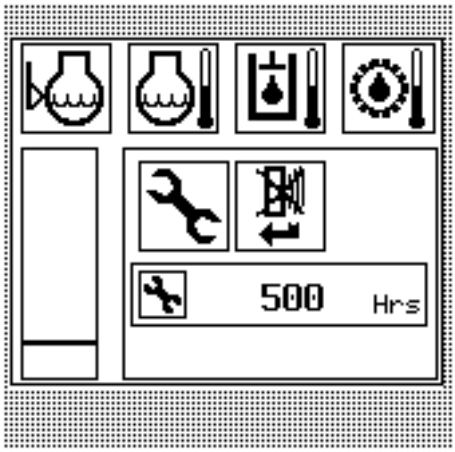

TI field This field, at the bottom right of the screen displays the main hour meter and the daily hour meter of the machine.
During the display start-up phase, the operator will be alerted about a possible upcoming service interval, by a graphic symbol. In this case the hours of this interval are displayed instead of the machine hour meter (as an example 500 hours on fig. beside).
The recalling of upcoming service interval lights up to about 8 seconds.
The symbol Ⓡ is displayed when an external flow limitation is activated for the pumps.
The symbol ● indicates that none of the external flow limitations (i.e. I1,I2, I3 and I4) is actually activated.

Control of the screen at error recognition:

In case a new error, displayed in field SY, is recognized, the presentation will return to main screen, and the corresponding symbol is displayed.
Depending on the default (urgency step), the buzzer will alert acoustically at the same time, either buzzing in continuous or emitting intermittent sounds.

The symbol signals that the buzzer of the control unit is activated. Using the key it is possible to quit the defaults indicated by a continuous buzzing.

https://www.truck-manuals.net/

Symbols und error codes for operating faults

Error code	Symbol (or indicator light)	PLD Error-code	Denomination of operating faults	Origin of error code	Sensor	Results
E 501	**(H2)**	3031	Low engine lubrication oil pressure Warning stage	PLD	**B5**	Buzzer H10 starts to sound after 2 seconds (Engine is stopped automatically after 5 other seconds)
E 502		3032	Low engine coolant level	PLD	**B3**	Buzzer H10 starts to sound. Engine is stopped automatically by the BBT after 5 seconds
E 503		3038	Engine coolant overheating – 1st Stage Also indicated by	PLD	**B2**	Buzzer H10 starts to sound. Diesel power will be reduced after 3 seconds. Working pumps return to minimal flow
E 504			Low hydraulic oil level	BST	**B14**	Buzzer H10 starts to sound. Working pumps return to minimal flow
E 505			Hydraulic oil overheating	BST	**B8**	
E 506			Pumps splitterbox overheating	BST	**B15**	
E 511			Over voltage in electrical system	BBT		
E 512			Low batteries voltage Safety stage for Diesel Control	PLD		
E 513			High batteries voltage Safety stage for Diesel Control	PLD		
E 517			Injectors default	PLD		Diesel engine stops automatically
E 518			Starting synchronisation default	PLD		Diesel engine stops automatically
E 519			Over speed Diesel engine Warning stage	PLD		
E 520		3004	Overspeed of Diesel engine Safety stage	PLD	**B12-1 B12-2**	Diesel engine stops automatically
E 521		3001 + 3002	Both RPM sensors of the Diesel engine are simultaneously defective	PLD	**B12-1 B12-2**	Diesel engine stops automatically
E 522		3041	Low engine lubrication oil pressure Safety stage	PLD	**B5**	Buzzer H10 starts to sound. Engine is stopped automatically by the BBT after 7 seconds
E 523		3048	Engine coolant overheating 2nd Stage (default ≥ 7 seconds)	PLD	**B2**	Buzzer H10 starts to sound.

https://www.truck-manuals.net/

Error code	Symbol (or indicator light)	PLD Error-code	Denomination of operating faults	Origin of error code	Sensor	Results
E 524		3049	Boost air overheating 2nd Stage (default ≥ 7 seconds)	PLD	**B98**	Buzzer H10 starts to sound.
E 525			Diesel engine in emergency control and simultaneous upcoming of engine error E501, E503, E597, E522, E523 or E524	BBT	**B2 B5 B98**	Buzzer H57 starts to sound. (Depending on occurring error also buzzer H10, power reduction, automatic engine stop, …)
E 526			High fuel temperature Warning stage	PLD		
E 527			High fuel temperature Safety stage	PLD		
E 528			High water level in fuel filter	PLD		
E 530			Upcoming simultaneous with one of the "safety stage" errors E522, E523, E524, E527, E533, E535, E537 or E539	PLD		
E 532			Low fuel pressure Warning stage	PLD		
E 533			Low fuel pressure Safety stage	PLD		
E 534			High fuel pressure Warning stage	PLD		
E 535			High fuel pressure Safety stage	PLD		
E 536			Low fuel pressure in rail 1 Warning stage	PLD		
E 537			Low fuel pressure in rail 1 Safety stage	PLD		
E 538			Low fuel pressure in rail 2 Warning stage e	PLD		
E 539			Low fuel pressure in rail 2 Safety stage	PLD		
E 597		3039	Boost air overheating 1st Stage	PLD	**B98**	Buzzer H10 starts to sound. Diesel power will be reduced after 3 seconds

Operating faults : error codes, possible causes and corrective action

Symbols & Error - codes	Detected fault	Possible causes – Checks to perform
E 501 E 522	**Low engine lubrication oil pressure- Warning Stage** The oil pressure indicated by the pressure transmitter B5 is below the programmed characteristic curve pressure / RPM for over 2 seconds. **Low engine lubrication oil pressure- Safety Stage** The oil pressure indicated by the pressure transmitter B5 is below the programmed characteristic curve pressure / RPM for over 7 seconds.	Check the Diesel engine: - Lubrication oil level - Condition of the lubrication oil pump - Viscosity of the lubrication oil Check the pressure transmitter B5 Check the connection wire to the transmitter B5 Check the programmed characteristic curve minimum engine oil pressure / engine RPM.
E 502	**Low engine coolant level** Indicated by the level transmitter B3	Check the engine coolant level Find out and correct possible leakages in the engine coolant circuit Check condition of level transmitter B3 (Function, operating level, …) Check the connection wire to the transmitter B3
E 503 E 523	**Engine coolant overheating – 1st Stage (warning)** Indicated by the temperature transmitter B2 **Engine coolant overheating – 2nd Stage (safety)** Indicated by the temperature transmitter B2	Check the cooling system of the Diesel engine : - Temperature in cooling circuit - Contamination of cooler core - Condition of the cooler fan blades Check the temperature transmitter B2 Check the connection wire to the transmitter B2 Check the programmed values for warning level and engine stop level
E 504	**Low oil level in hydraulic tank** Indicated by the level transmitter B14	Check the hydraulic oil level in the tank Find out and correct possible leakages in the hydraulic circuit Check condition of level transmitter B14 (Function, operating level, …) Check the connection wire to the transmitter B14
E 505	**Hydraulic oil overheating** Indicated by the temperature transmitter B8	Check the hydraulic circuit: - Temperature of hydraulic oil . - Contamination of hydraulic oil cooler core. - Condition of the cooler fan blades. Check the temperature transmitter B8 . Check the connection wire to the transmitter B8 . Check the programmed value for warning level.
E 506	**Overheating of the oil in the Pumps splitterbox** Indicated by the temperature switch B15	Check the cooling circuit for the splitterbox oil: - Temperature of splitterbox oil. - Contamination of cooler core. - Condition of splitterbox oil pump. Check the temperature switch B15. Check the connection wire to the switch B15.
E 511	**Overvoltage in electrical system** Indicated by the control unit S2	Check the generator for good condition.

https://www.truck-manuals.net/

Symbols & Error - codes	Detected fault	Possible causes – Checks to perform
E 520	**Overspeed of Diesel engine** The overspeed is indicated simultaneously by both RPM sensors B12-1 and B12-2	Check the programmed value for overspeed. Check the programmed value for the number of teeth of the flywheel of the Diesel engine. Check the engine RPM adjusting system. Check the connection wire to the actuator element of the injection pump. Check the correct mounting of the actuator element of the injection pump, if necessary replace the actuator.
E 521	**Both RPM sensors of the Diesel engine are simultaneously defective** (RPM sensors B12-1 and B12-2)	Check the correct mounting of both transmitters - distance between transmitter and toothing - Privileged direction of pulse transmitters. Check the RPM transmitters B12-1 and B12-2. Check the connection wires to the transmitters.
E 524 E 597	**Boost air overheating** **2te Stage (Safety)** Indicated by the temperature transmitter B98 **Boost air overheating** **1st Stage (Warning)** Indicated by the temperature transmitter B98	Check the cooling circuit for the boost air : - Boost air temperature - Condition of the boost air cooler. Check the temperature transmitter B98. Check the connection wire to the transmitter B98 . Check the programmed values for warning level and engine stop level.
E 525	**Diesel engine in emergency control and simultaneous upcoming of engine error E501, E503, E597, E522, E523 or E524** Recognize the active error code(s) which is (are) responsible for the upcoming of the codes E 525.	Successively perform the corrective actions recommended above for the corresponding error codes.

https://www.truck-manuals.net/

Indicator symbols displayed in field INF

Preheat
This symbol appears as long as the preheating of the air in the intake manifold is activated (preglow process).

End of preheat
After about 20 seconds (depending on the engine coolant temperature), the preheat action will be stopped automatically and the symbol "end of preheat" will be displayed on the LCD screen.

Overload warning device
On machines with overload warning device: when this device is turned on via the push button S18, this symbol appears when the load limit has been reached.
At the same time an audible signal alerts the operator to this fact.

No overload warning device recognized
This symbol appears when switching on the overload warning device via the push button S18 (see page 3.4) and if no overload warning device has been correctly installed and initialized on the machine.

Warm up procedure
This symbol shows that a warm up procedure is actually current. (→ page 4.6).

Upcoming service interval
This symbol appears to alert that the working hours for the next service interval have been reached.
The symbol will go out after the corresponding service works have been carried out and confirmed using the menu "set service" of the display (see thereafter).

Engine RPM in safety mode
The symbol informs the excavator's operator that the Diesel engine is actually operated in safety mode and that, by the fact, the RPM can be controlled only via the safety RPM-switch, see the section « operation in safety mode »..

Servo pressure circuit in safety mode
These symbols show that the servo pressure circuit has been turned into emergency mode, also see the section « operation in safety mode ».

https://www.truck-manuals.net/

Error codes for electrical errors of the electronic control system

Error code	Related. EDC Errorr	Defective component	Default recognized
E 002 E 003		Transmitter for engine oil pressure	Short circuit + 24 V Short to ground or Broken wire
E 004 E 005 E 006		Transmitter for engine coolant level	Short to ground Short circuit + 24 V Broken wire
E 007 E 009		Transmitter for engine coolant temperature	Short to ground Broken wire Short circuit + 24 V
E 010 E 011 E 012		Transmitter for hydraulic oil level	Short to ground Short circuit + 24 V Broken wire
E 013 E 014 E 015		Transmitter for hydraulic oil temperature	Short to ground Short circuit + 24 V Broken wire
E 016 E 017 E 018		Switch for pumps splitterbox oil temperature	Short to ground Short circuit + 24 V Broken wire
E 022 E 023 E 024		Signal for engine RPM between engine regulator and printing plate A1010	Short to ground Short circuit + 24 V Broken wire
E 027		Regulation solenoid valve -pump power control(LR)	Connection wire defective
E 033		Regulation solenoid valve – Cooler fan RPM	Connection wire defective
E 036		Regulation solenoid valve Oil flow Pump P1 (EV1)	Connection wire defective
E 039		Regulation solenoid valve Oil flow Pump P 2 (EV2)	Connection wire defective
E 042		Regulation solenoid valve – Reserve (EV3)	Connection wire defective
E 045		Reg. solenoid valve – Pressure reduction (EV6)	Connection wire defective
E 063 E 065		Transmitter for boost air temperature	Short to ground or Broken wire Short circuit + 24 V
E 070		RPM transmitter	Transmitter defective
E 072 E 073		Transmitter for boost air pressure	Short circuit + 24 V Short to ground or Broken wire
E 074 E 075		Starter of Diesel engine	Starting time too long Starter defective
E 078		Regulator for Diesel engine	Hardware default
E 079		Regulator for Diesel engine	Software default
E 081 E 082		RPM transmitters for Diesel engine	RPM transmitter B12- 1 defective RPM transmitter B12- 2 defective
E 083		Actuator of injection pump	Error in feedback of injection pump actuator
E 084 E 085 E 086		Fuel solenoid valve	Short circuit + 24 V Short to ground Broken wire
E 087		RPM transmitters for Diesel engine	Measured RPM difference B12-1/B12-2
E 088		Ambient pressure transmitter in engine - regulator	Pressure below lower fault limit Pressure above upper fault limit
E 089		Water detector in fuel filter	Connection wire defective
E 090 E 091		Fuel temperature transmitter	Short to ground Short circuit + 24 V or Broken wire

https://www.truck-manuals.net/

Error code	Related. EDC Errorr	Defective component	Default recognized
E 092 E 093		Fuel pressure transmitter	Short circuit + 24 V Short to ground or Broken wire
E 094 E 095		Fuel pressure transmitter in bank 1	Short circuit + 24 V Short to ground or Broken wire
E 096 E 097		Fuel pressure transmitter in bank 2	Short circuit + 24 V Short to ground or Broken wire
E 098		24V Generator	D+ channel of generator defective
E 099		24V Generator	Generator defective
E 100		RPM transmitter 1	Signal error
E 101		RPM transmitter 2	Signal error
E 102		Synchronisation of crankshaft	Signal error
E 103		RPM transmitter of camshaft	Transmitter defective
E 104		RPM transmitter of camshaft	Signal of transmitter not plausible
E 105		Synchronisation of camshaft	Signal error
E 106		Control of cold starting device	Function error
E 107		Control of cold starting device	Broken wire
E 108		Control of cold starting device	Short circuit + 24 V
E 109		CAN 1	Hardware error
E 110		CAN 1	Signal error
E 111 E 112		Injector A1	Injector defective BIP / FZM error
E 113 E 114		Injector A2	Injector defective BIP / FZM error
E 115 E 116		Injector A3	Injector defective BIP / FZM error
E 117 E 118		Injector A4	Injector defective BIP / FZM error
E 119 E 120		Injector B1	Injector defective BIP / FZM error
E 121 E 122		Injector B2	Injector defective BIP / FZM error
E 123 E 124		Injector B3	Injector defective BIP / FZM error
E 125 E 126		Injector B4	Injector defective BIP / FZM error
E 127		Bank 1	Parameter error
E 128		Bank 2	Parameter error
E 129 E 130		Pressure transmitter in bank 1	Short to ground or Broken wire Short circuit + 24 V
E 131		Pressure transmitter in bank 1	Signal error
E 132 E 133		Pressure transmitter in bank 2	Short to ground or Broken wire Short circuit + 24 V
E 134		Pressure transmitter in bank 2	Signal error
E 135		5 Volt circuit REF1	Defective
E 136		5 Volt circuit REF2	Defective
E 137		5 Volt circuit REF3	Defective
E 138		5 Volt circuit REF4	Defective

https://www.truck-manuals.net/

Error code	Related. EDC Errorr	Defective component		Default recognized
E 302		Coding plug	Coding plug is missing	
E 303		Printing plates and CAN - connections	No CAN 1 Connection between control unit (BBT) and BSt regulator circuit board (Error is detected also if BSt regulator is not operative, as an example no voltage supply ...)	
E 305		Printing plates and CAN - connections	No CAN 2 Connection between control unit (BBT) and circuit board ESP01 (Error is detected also if ESP01 is not operative, as an example no voltage supply ...)	
E 306		Printing plates and CAN - connections	No CAN 2 Connection between control unit (BBT) and circuit board ESP02 (Error is detected also if ESP02 is not operative, as an example no voltage supply ...)	
E 307		Printing plates and CAN - connections	No CAN 1 Connection between control unit (BBT) and engine control circuit PLD (U32) (Error is detected also if PLD is not operative, as an example no voltage supply ...)	
E 308		Printing plates and CAN - connections	Default in CAN 2 Connection between control unit (BBT) and display or control unit defective	
E 309		Printing plates and CAN - connections	No compatibility between control unit (BBT) and display or control unit defective	
E 310		Printing plates and CAN - connections	No concordance from Hardware to Software on machine with piling or drilling rig	
E 319		Printing plates and CAN - connections	Bst regulator detects a Hardware- Coding which is not compatible with excavator type	
E 321		Printing plates and CAN - connections	Bst regulator receives unknown excavator type from the control unit (BBT)	
E 322		Printing plates and CAN - connections	Hardware- Coding is not recognized by the Bst regulator	
E 442 **E 443**		Sensitive switch on joystick handle left		Short circuit + 24 V Short to ground or Broken wire
E 445 **E 446**		Sensitive switch on joystick handle right		Short circuit + 24 V Short to ground or Broken wire
E 450		Pressure transmitter in boom cylinder circuit		Transmitter defective
E 454 **E 455**		RPM Transmitter for swing gear		Short circuit + 24 V Short to ground or Broken wire
E 456 **E 458**		Transmitter for fuel tank level		Short to ground Short circuit + 24 V or Broken wire

https://www.truck-manuals.net/

https://truckmanualshub.com/

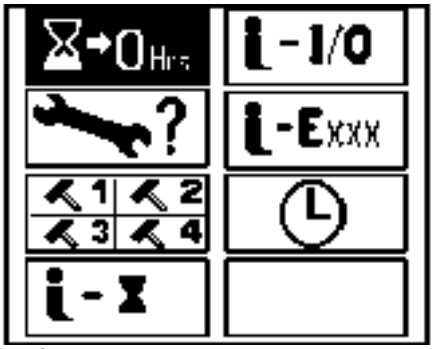

fig. 1

INFORMATIONS PROVIDED IN THE MENUS OF THE LCD SCREEN

MENU SELECTION

Depressing the "MENU" key when the main screen is displayed shows the list of the accessible menus (see fig. 1)

The current menu selection can be changed by pressing the "UP" and "DOWN" keys (the selected menu is inverse displayed, as an example in the figure beside the menu "reset hours" is selected).

When depressing the "MENU" key again, the inverse displayed function is branched out.

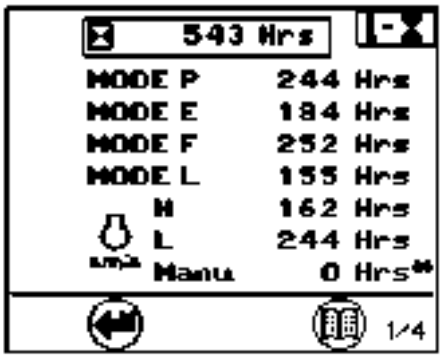

fig. 2

MENUS IN LEVEL I - (GENERALLY ACCESSIBLE)

MENU i - ⧗ ("i - hours")

INFORMATION ABOUT OPERATING HOURS FOR VARIOUS COMPONENTS AND MOVEMENTS

The Information screens 1/4 to 3/4 shows an overview about operating hours for various components, functional flows and operating modes.

As an example, the screen 1/4 indicates the operating hours for:

- Diesel engine in Mode "P"
- Diesel engine in Mode "E"
- Diesel engine in Mode "F"
- Diesel engine in Mode "L"
- Diesel engine at maximum RPM
- Diesel engine at low idle

Manual operation for Diesel engine RPM control

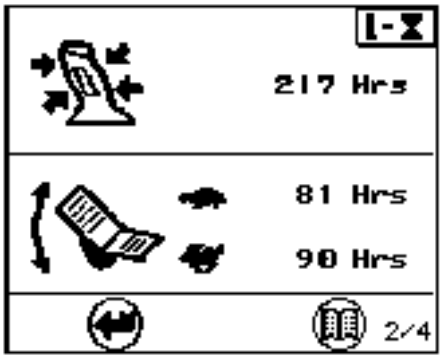

fig. 3

the screen 2 / 4 the operating hours for:

- Attachment movements
- Travel movements with normal speed
- Travel movements with increased speed

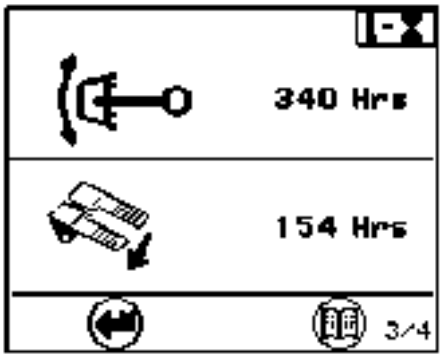

fig. 4

and the screen 3 / 4 the operating hours for:

- swing movements
- the movements of the additional attachment.

The screen 4 / 4 gives following informations:

https://www.truck-manuals.net/

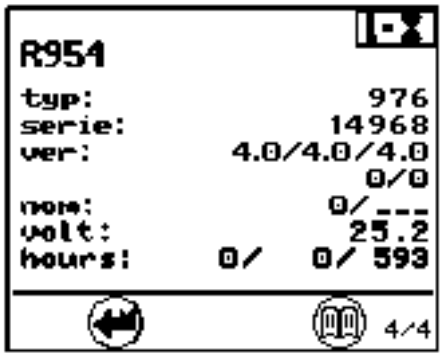

fig. 5

- The type of the excavator
- The serial number of the excavator.The installed Software-Versions for, respectively, the monitoring display, the control unit BBt, the pump regulator BSt, and, on the second line, the installed version of the Diesel engine control circuit „PLD“ and also the SPF nb. (specification number) of this circuit.
- The two indications behind " Nom" are not activated
- The penultimate line provides indication for the momentary operating voltage.
- The last line "hours" indicates the operating hours for respectively:
  - Operation with the input X2.8 activated (special equipment presently not in use),
  - Operation with the input X2.14 activated (special equipment presently not in use),
  - Operation of the Diesel engine with standard power curve (maximum power)

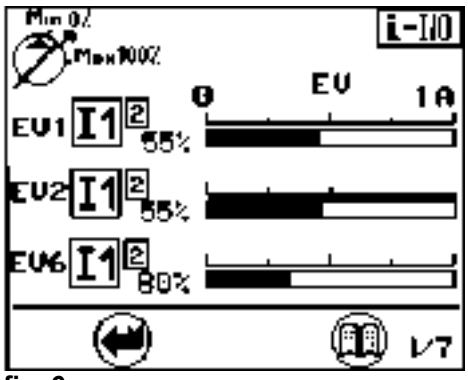

fig. 6

MENU i - I/O

a) INFORMATION ABOUT THE HYDRAULIC PUMP

information screens 1/7 and 2/7

This screen gives information about the operating position of the hydraulic pumps.

The screen 1/7 gives following indications for each working pump:

- if one (or several) flow limitation is activated for the pump. (Regulation solenoid valves EV1 and EV2 for pumps flow limitation).
- If a pressure reduction signal is activated for the hydraulic system (Regulation solenoid valve EV6).
- graphic bars indicating the momentary electric current flowing to the different regulation solenoid valves.

The fig. 6 shows an example where an external limitation (Hardwareinput I1, option 2) is activated, limiting the oil flow of the pumps P1 and P2 to 55% of nominal flow values via the solenoid valves EV1 and EV2 and at the same time reducing the system pressure to 80% of maximum pressure via the solenoid valve EV6.

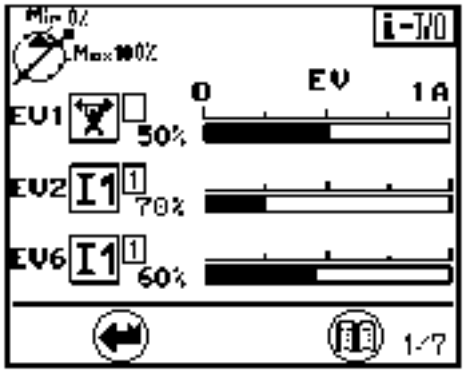

fig. 7

The fig. 7 shows an example where the internal limitation (Pressure cut in stage boom) and the external limitation (Hardware input I1, option 1) are simultaneously activated.

In this example, the limits the flow of the working pump P1 to 50%, and "I1, option1" the flow of the working pump P2 to 70% and also reduces the system pressure to 60% of nominal pressure.

If an external limitation is activated, the symbol "R" is displayed in the field TI, see description of the main screen.

If only one internal limitation is activated, the symbol "●" is displayed instead of the symbol "R".

Should several flow limitations be actuated at the same time, so the one with the smallest flow value has priority and is displayed on the screen.

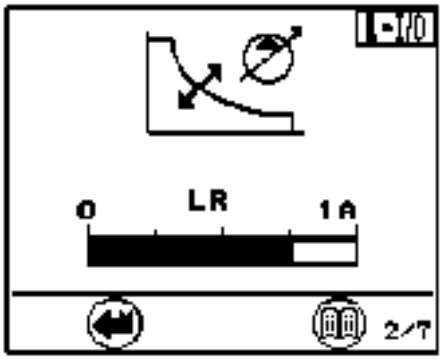

fig. 8

On screen 2/7 the present LR solenoid current is shown (current value for power control).

https://www.truck-manuals.net/

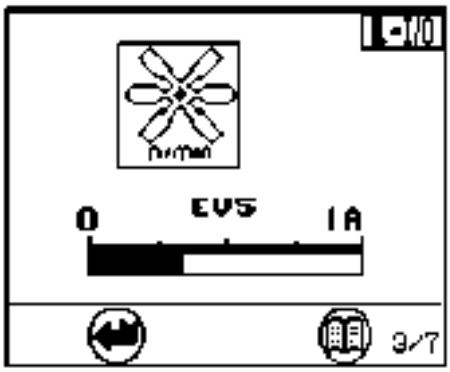

fig. 9

b) INFORMATION CONCERNING THE COOLER FAN CONTROL SYSTEM
(This function is existing since Software Version V2.4)

The screen 3/7 appears only on machines fitted with an electronically regulated cooler fan drive.
The graphic bar in the lower part of the screen gives the momentary value of the current to the regulation solenoid valve for the fan RPM..

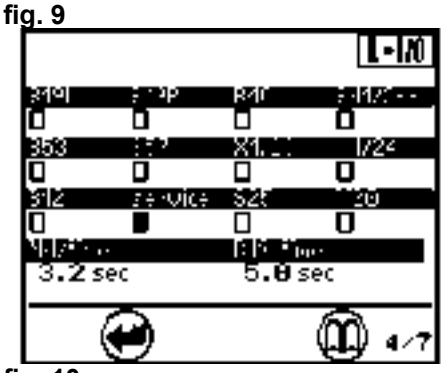

fig. 10

c) INFORMATION ABOUT THE STATUS OF INPUT TERMINALS -
Screens 4/7 up to 7/7

This screens (fig. 10 to fig. 13) show an overview about the status of different electrical inputs.

The sign "□" means "Input not active".
The sign "■" means "Input active".
The indication "NC" under the terminal description means that the corresponding input is deactivated in the software.

The status of the inputs can be changed using the menu "set data" - "set E-code".
For the frequency inputs B53 and B12, the sign "■" means that a significant frequency is recognized by the system.

The sign "■" at "service" means that a key plug is recognized on the connector X30 or X31 of print plate A1001.

The sign "■" at "MEM OFF" means that the update procedure for the data copy in the codage plug is not activated.

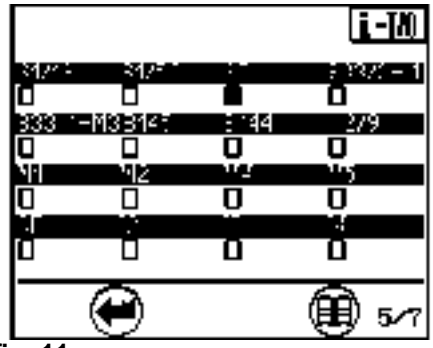

fig. 11

The durations indicated on the last line M4/Time, resp. B19/Time on the last line on the screen 4/7 correspond to the time lags for the intermittent operation of the windshield wiper, resp. for the engine idle automatic.

M1, M2, ...correspond to machine specific (internal) oil flow limitation.

Presently only M1, M2 and M3 are assigned to the flow limitation for travel motions, respectively for pressure increase and bottom dump shovel.

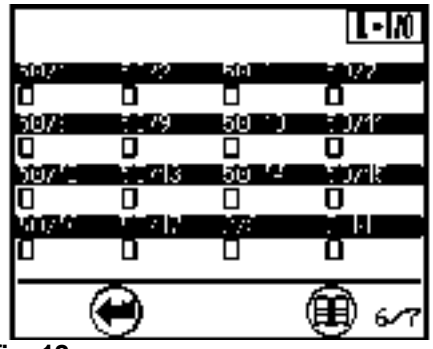

fig. 12

https://www.truck-manuals.net/

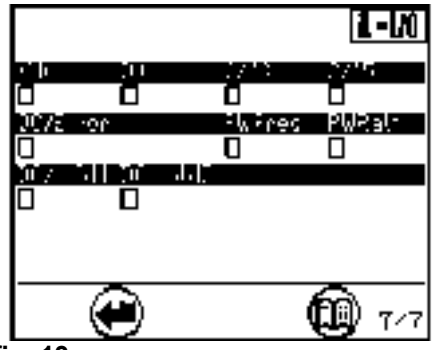

fig. 13

The screen 7/7 gives information about the components of the PLD control system of the Diesel engine:

- 2/13 Input X2/13 for operation of the Diesel engine with standard power curve
- 2/15 Input X2/15 for external commutation of hydraulic power
- PWRred Power reduction of the Diesel engine
- ……..

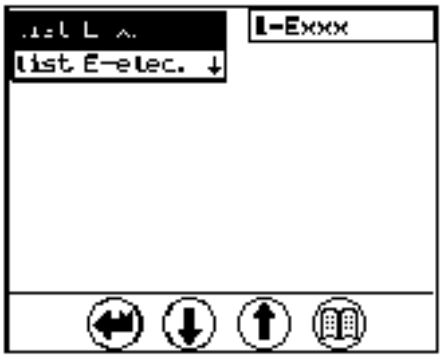

fig. 14

MENU i-Exxx

INFORMATION ABOUT DETECTED ERRORS (OPERATING AND ELECTRICAL SYSTEM ERRORS)

In this menu (fig. 14):

- select "list Exxx" to list all the operating errors detected by the switches and sensors for machine parameters monitoring (fig. 19).
- select "list S-Exxx", to show a listing of the above mentioned errors which occured during service operation,
- select "list E-elec.", to show a listing of all the electrical errors (system errors) detected during operation of the machine,

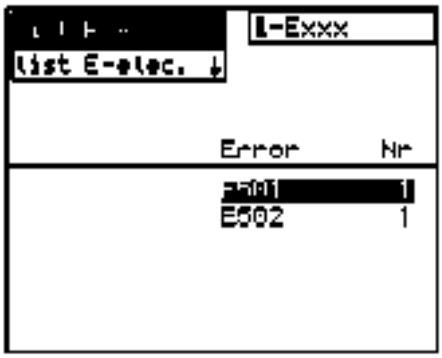

fig. 15

When selecting the operating errors "list Exxx" all the occurred operating errors are listed, with error code and number of occurence

Move the arrow keys "UP" and "DOWN" to select the desired error. (fig. 15).

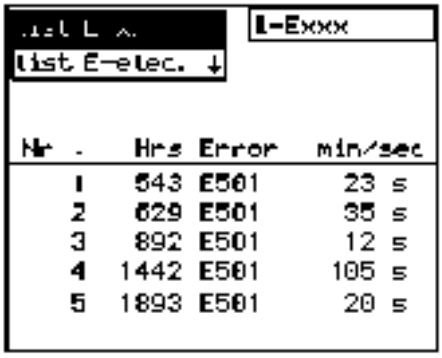

fig. 16

By pressing the "MENU" key, the overview of the selected error appears, with the indication of the operating hour and duration for the 10 first and the 10 lest occurrences of the error.

Move the arrow keys "UP" and "DOWN" to page in this overview.

https://www.truck-manuals.net/

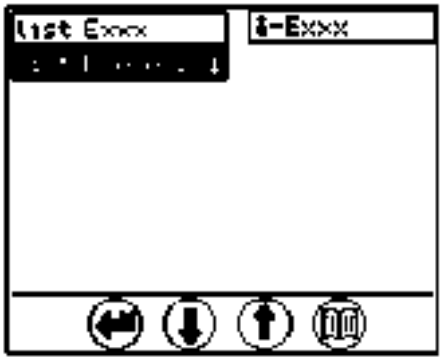

fig. 17

When selecting the electrical errors "list E-elec" all the electrical system errors according to the list on page no. 3.11 are listed, with error code and number of occurrence (fig. 17 and fig. 18).

See the list of all possible “electrical system errors “ before in this chapter.

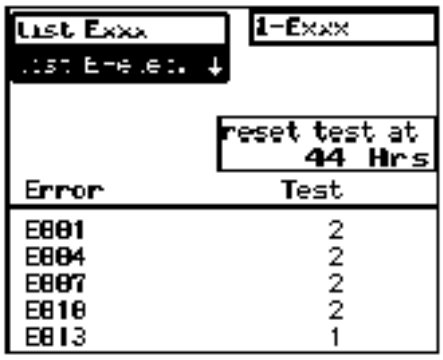

fig. 18

The column "Sum" shows the number of all errors which were ever noted.
The column "Test" shows the number of errors occurred since the last deletion of this test error memory listing.

The operating hours above the test column show the operating hour when the last test memory was deleted (reset).

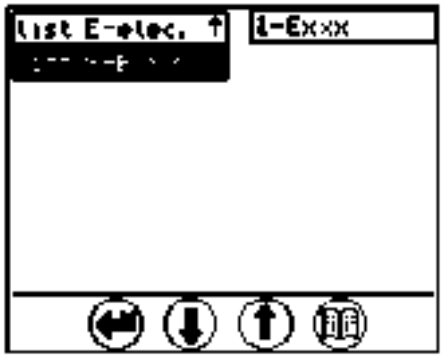

fig. 19

Selecting "list S-Exxx" also shows the operating errors (as when selecting "list S-Exxx"), but this time only the errors which occurred during "service operation".

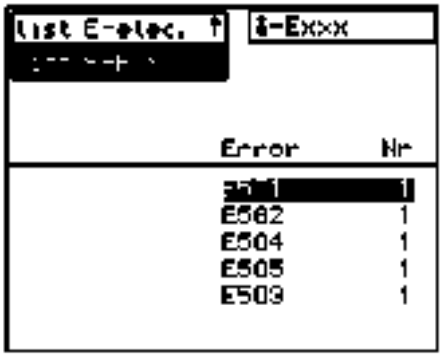

fig. 20

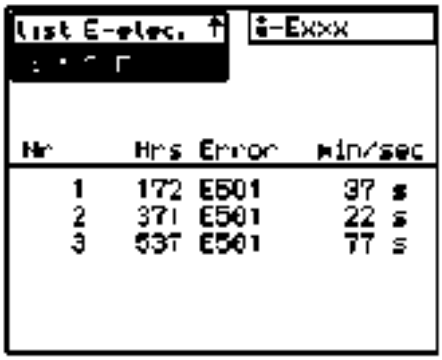

fig. 21

For each error, an overview can be shown and paged in just like for the "list Exxx" selection.(.

https://www.truck-manuals.net/

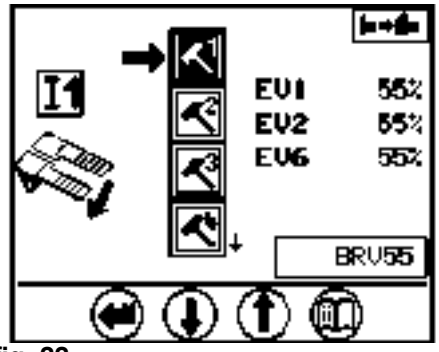

fig. 22

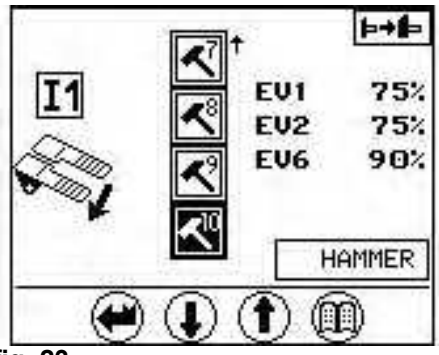

fig. 23

MENU 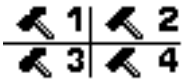 **("set option")**

ALLOCATION OF FLOW LIMIT OPTIONS TO THE EXTERNAL INPUT I1
(Special attachment input; as an example for operation of hydraulic hammer, scrap shear, …)
In this menu, pre-defined flow limitations (options) are allocated to the hardware input I1.
The arrow near the symbol gives the actual allocation. (fig. 22).

In example fig. 22, the option 1 is active for the input I1. This means, if the external hardware input I1 is activated, then the nominal pump values allocated in option 1 for the excavator control are given as maximum nominal values.
If another option must be allocated to input I1 (as an example due to a replacement of the working tool), so first select another attachment in the vertical symbol range via the key "UP" or "DOWN" (as an example in fig. 23, the option 10).

Confirm the selected option by pressing the "MENU" key, the new option must then appear in the column.

The right part of the screen provides indication for the currently set pump values corresponding to the option shown in the selection window.

The values EV1 and EV2 determine the flow limitation of the main pumps when the special attachment is actuated.

The value EV6 determines the maximum allowed pressure level for the actuation of the special attachment.

When selecting an option, a designation related to this option is displayed in the right lower area of the screen, provided that this designation has been memorized during the setting of the parameters of the option.

As an example, in fig. 22 the designation "BRV55" appears, which is the designation for the hydraulic hammer allocated to the selected option.

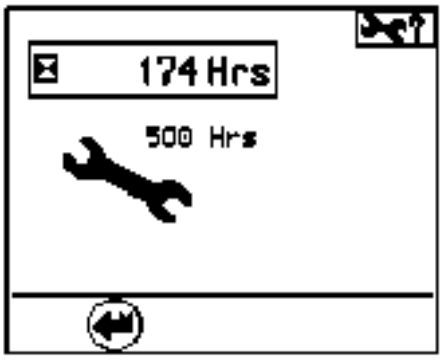

fig. 24

MENU **("set service")**

INFORMATION AND CONFIRMATION OF SERVICE INTERVAL

This screen is an information screen and can be used to confirm a completed service interval.
The screen shows the operating hour for the next service interval (in example beside ="500 hrs") and the current operating hours ("174 hrs").

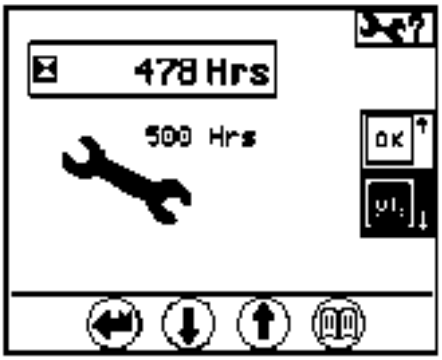

fig. 25

An upcoming service interval can be confirmed within max. 50 operating hours before the next service interval.
When this time frame is reached, the screen will display a question regarding completion of the service works for this interval.

If the question is answered with "~~OK~~" then this menu will be discontinued.
If it is answered with "OK", then the current operating hour will be stored as the last confirmed service interval.

https://www.truck-manuals.net/

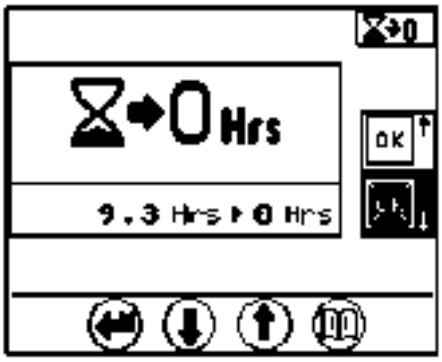

fig. 26

MENU 0 Hrs ("reset data")

DELETION OF THE DAILY HOURMETER

This menu allows to reset the daily hour meter.

To reset the daily hour meter, first select "OK" via the key "UP" or "DOWN", and then confirm this choice by pressing the "MENU" key.

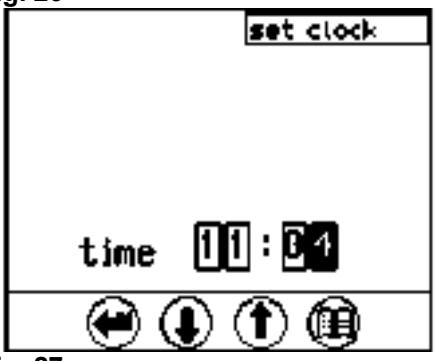

fig. 27

MENU ("set clock")

Via this menu the clock displayed in the upper right corner of the main screen can be set.
The selection of this menu is possible only on machines with Software Version 3.1 and later.
After function start, the presently set time will appear in the lower section of the screen with the first digit shown inversely (unity digit of the minutes) fig. 27.

fig. 28

Use the arrow keys to modify the inversely displayed position

Use the "MENU" key to change the inversely displayed to the next higher number (more left digit).

When the highest number has been reached, it will start over with the lowest number.

fig. 29

Once all the digits have been set, press the "RETURN" key to leave the function and to store the set time.
The confirmation message “update xx : xx” will appear momentarily on the screen fig. 29.

https://www.truck-manuals.net/

https://truckmanualshub.com/

CONTROLS AND INSTRUMENTATION FOR OPTIONAL EQUIPMENTS

Right side control desk

H40	Control light / Pre-selection hydraulic circuit
H90	Control light / Rotation in opposite direction of reversible fan
H292	Control light / Special control system
S26	Touch / Fuel preheater
S40	Touch / Frequency commutation for hydraulic hammer
S45	Touch / Priority for special equipment
S46	Touch / Lifting magnet
S47	Push button / Quick disconnecting device
S53	Touch / Special control circuit
S54	Key switch / Unlocking of hydraulic cylinder end position
S74	Code key / Start locking device
S76	Touch / Travel brakes
S77	Touch / Pressurized driver's cab
S79	Touch / Flow divider for special attachment
S84-1	Push button / Centralized lubrication
S98	Touch / Low pressure protection for boom cylinders
S104	Touch / Width adjustable undercarriage
S114	Rotating switch / Control of special attachments via switches of the joysticks
S117	Rotating switch / Pre-selection hydraulic circuit
S160	Push button / Control of reversible fan in opposite direction
S168	Key switch / Oil flow limitation when operating a super long working attachment
S218	Touch / Cab roof window wiper
S247	Key switch / Commutation of control system Normalized control / Special control
S275	Touch / Additional floodlight rear of cab roof
S276	Touch / Additional floodlight on counterweight
S358	Push button / Cab roof window washer

Left side control desk

S78	Push button / Height adjustable cab - emergency down
S80	Push button / Height adjustable cab - locking device on / off
S200	Push button / Height adjustable cab - up
S201	Push button / Height adjustable cab - down
S232	Control unit / Standstill cab heater

https://www.truck-manuals.net/

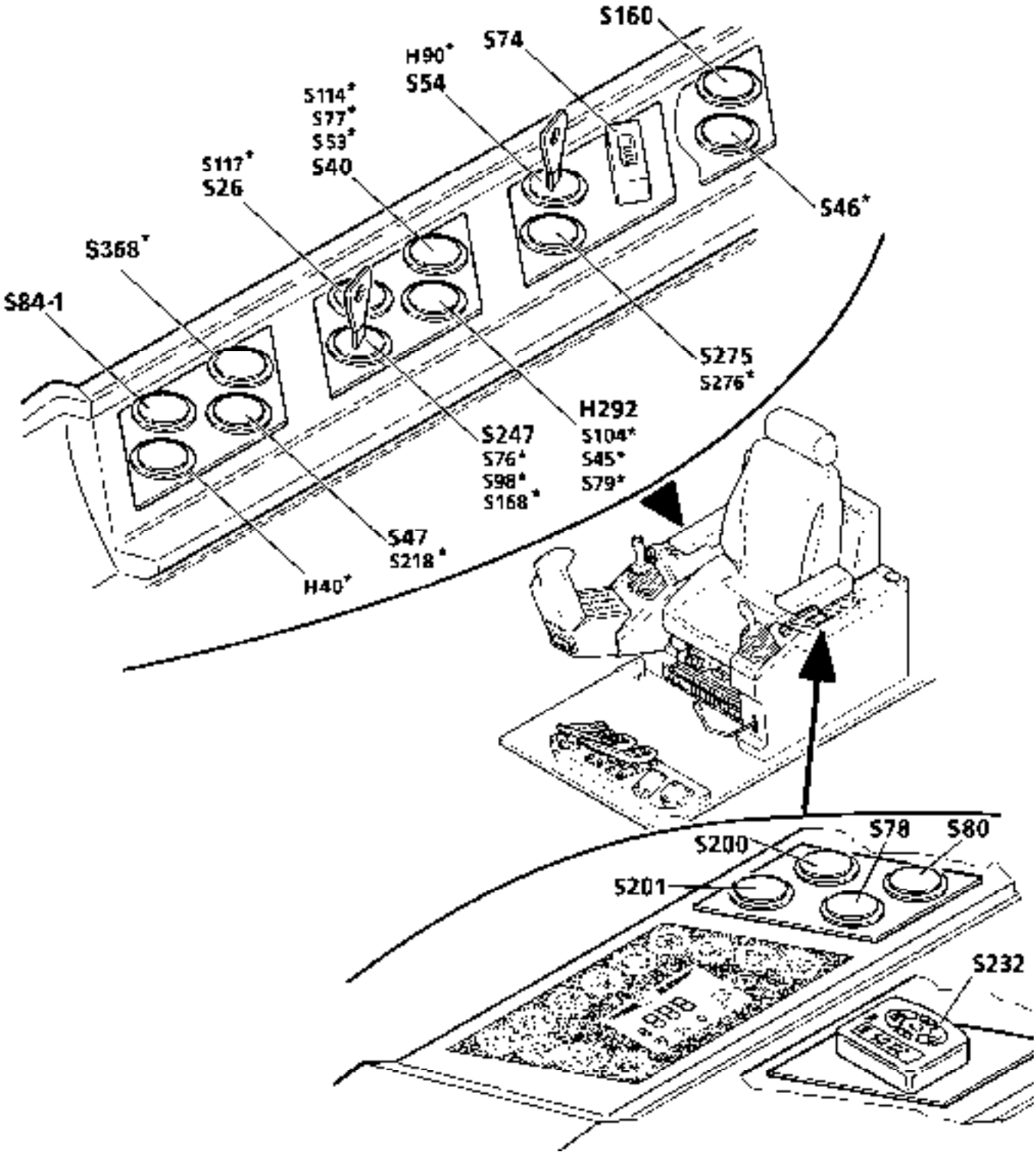

* The location of these controls may differ, depending on the type of the other installed optional equipments.

https://www.truck-manuals.net/

Control light H40 - Pre-selection hydraulic circuit

This lamp reports pre-selection of a certain consumer via rotating switch S117.

Control light H90/ Rotation in opposite direction of reversible fan

On machines fitted with the special equipment "cooler fan reversible", this control light lights up to indicate that the fan has been changed over to rotation in opposite direction via the push button S160.

Control light H292 - Spécial control system

This control light lights up to indicate that a special, non standart lever arrangement has been turned on via the key switch S247.

Touch S26 - Fuel preheater

This button turns on the installed fuel heating system (Thermoline fuel hose, or heater resistor inside the fuel filter).

The Control light inside the push button shows when the heating system is on.

Touch S40 - Frequency commutation for hydraulic hammer

This touch allows to increase the cycle frequency of an hydraulic hammer.

Touch S45 - Priority for special equipment

If an hydraulic actuator (cylinder, hydraulic motor,) of a special attachment requires a constant oil flow, the speed of the remaining attachment movements can be reduced by depressing the push button S45 (the control light inside the button must light).

The necessary oil flow for the hydraulic actuator is maintained, even by simultaneous actuation of other attachment movements.

Touch S46 - Operation with a lifting magnet

This button turns on the generator which supplies the lifting magnet, and also switches on the control circuit of the magnet (push buttons S6 at the top of the right joystick handle, see also page 4. 17).

The control light inside the touch lights up when the control circuit is on.

In this case, the engine idle automatic is deactivated; the engine RPM is automatically set to a fixed value and can not longer be set using the buttons S228, S229 and S86.

Push button S47 - Quick change adapter

The push button S47 turns on the control circuit for the quick change adapter for the working tool. When the touch S47 is depressed, the locking pins of the adapter can be retracted via the push button S5R on the top of the left joystick handle. (Also see on chapter 8.2).

Touch S53 - Special control circuit supply

When this touch is actuated, an additional control circuit for a special equipment is made alive.

The green indicator light in the touch lights up to show that the additional servo control circuit is under pressure

https://www.truck-manuals.net/

Key switch S54 - Unlocking of cylinder end position

On some special working attachments, or on attachment showing particular cinematic capacities (as example on industrial attachment), certain movement(s) may be stopped automatically by electrical end switches. The main purpose of this movement limitation is to prevent possible damages due to components frequently reaching their end stops.

With the key switch S54 turned to the left into position I, the automatic limitation can be unlocked temporarily while tilting up or down the rocker switch S55 mounted to the left joystick handle (see page 3.2).
Notice : on machines destined to the north-American market and also fitted with a lifting magnet controlled via the rocker switch S55, the both push buttons S5 at top of the left joystick handle must be used to unlock the limitation.

Should a special attachment comprise two different automatic stops of movement, so the key switch S54 must be turned to the right into position II to be able to release from the second automatic limitation.
No unlocking is possible with the switch S54 in neutral position.

Code key switch S74 - Anti-theft protection system

The Auto-Scan protection unit interrupts the current supply of the excavator about 30 seconds after shut down of the machine (ignition key in 0-position), the red LED lights up.

To restart the machine, a code key must be stuck briefly in the anti-theft system S74 to unlock the protection. The red LED will then turn off and the electrical system must be energized immediately thereafter (ignition key in contact position).

Touch S76 - Travel parking brake

This touch controls the travel parking brake on the machines fitted with a special undercarriage, or on machines mounted on a loading bridge, a wagon, ...

When the red indicator light in the touch lights up, the travel brake is applied.

On machines with a standard undercarriage, the travel brakes are controlled directly via the travel pedals and the touch S76 does not exist.

Touch S77 - Pressurized driver's cab

Depressing this button start the air fan for the pressurization of the driver's cab.

The entering of dust or no filtered air into the cab is then almost prevented.

Touch S79 - Flow divider for special attachment

Should a certain user (cylinder, hydraulic motor, ...) has to be fed with a constant oil flow during the actuation of a special attachment, so the necessary oil flow can be reserved to give priority to this user while depressing the touch S79.The indicator light in the touch is then lighting up.

The velocity of the other simultaneously actuated working movements is correspondingly reduced.

Push button S84-1 - Central lubrication system

On machines fitted with a central lubrication system, an additional lubrication cycle of the attachment bearing points and swing ring can be started by depressing the button S84 (see on pages 5.21 to 5.23).

Touch S98 - Low pressure protection for boom cylinders

If the touch S98 is actuated, the pressure protection of pressure relief valve in the circuit for retraction of the boom cylinders is reduced, so to limit the possible downward thrust exerted by the working attachment onto the materials to be dug out.

This safety device must be turned on, as an example, when unloading a boat or a barge, so to avoid damage to its bottom.

https://www.truck-manuals.net/

Touch S104 - Hydraulic width adjustment of undercarriage

This button concerns excavators fitted with an undercarriage with adjustable track gauge. The button must be actuated before moving the side frames.

- On machine type HV (excavators with fully hydraulic actuated track gauge adjustment), pushing the button commutes the high pressure circuit in the undercarriage from travel control to the width adjustment cylinders (see page 8.5.7).
- On the other machines with hydraulic aided track gauge adjustment (bolt connection between side frames and central piece), actuating this button makes alive a 24 volt connector situated on the upper carriage and which is intended to supply the control box for the hydraulic width adjustment of the undercarriage (see page 8.5.6).

Rotating switch S114 - Control of special attachments with switches of the joysticks

The purpose of this rotating switch is to commute the control over pedals for some special attachments into a control via the rocker switch S55 on the left joystick, (or, depending on execution or customer's wishes, via the two touches S6L and S6R at the top of the handle of the right joystick)

When the switch is in position "joystick", special attachments as hydraulic hammer or scrap shear are controlled via the three positions rocker switch S55 (resp. via the touches S6L and S6R).

With the switch turned to position "pedal", these attachments are controlled using the pedals 7c and 7d, as described on pages 4.15 and 4.16.

Rotating switch S117 - Pre-selection hydraulic circuit

With machines featuring several additional consumers, two different consumers can be allocated to the same hydraulic circuit (servo control circuit and consumer output on the spool valve).

Via the rotating switch S117 the hydraulic circuit can be switched over from one consumer to the other.

Should it be necessary to supply both consumers with different amounts, the necessary adaptation of flow limitation is resulted simultaneously upon pre-selection with the rotating switch.

In one position of the rotating switch (turn symbol, example for the drive of a swivel bearing), the control light H40 lights up simultaneously.

Push button S160 - Control of reversible fan in opposite direction

On machines fitted with the special equipment "cooler fan reversible", the direction of revolution of the cooler fan can be inverted while actuating the push button S160. In some particular working conditions, this inversion of the direction of the fan rotation allows an easy cleaning of the radiator core and of suction area of the fan.

Cleaning procedure:

- With running Diesel engine depress the push button S160 and keep it

depressed. During approx. 15 seconds the fan will be progressively stopped, then the control light H90 lights up and the fan will start rotating in opposite direction,

- bring the Diesel engine to high idle while keeping the push button S160 depressed,
- let the engine run at high idle for approx. one minute, (three minutes at the maximum),
- release the push button S160,

To check the condition of the cooler, the Diesel engine must be shut down. If neccessary repeat the cleaning procedure.

https://www.truck-manuals.net/

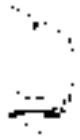

Key switch S168 - Oil flow limitation when operating a super long working attachment

This key switch allows to limit the speed of the whole working attachment.

When using a super long working attachment, the key switch S168 must be turned to position "1", so to keep the speed of all attachment movements within reasonable limits.

Notice: To limit all the excavator movements, not just the movements of the working attachment, use the push button S354 of the control unit, refer to page "control unit".

Touch S218 - Cab roof window wiper

Depressing this push button alternately causes the wiper to be turned on in continuous and to be stopped.

https://www.truck-manuals.net/

Control unit S232 - Standstill cab heater

This unit controls an eventually installed standstill heater for the cab or .other circuits on the uppercarriage. Refer to the special issued operation and maintenance manual of the maker of the additional heater.

Key switch S247 - Commutation Normalized control system / Special control system

This key switch allows to commute electrically from a Standard lever arrangement (ISO - PCSA) into a Special lever arrangement (LIEBHERR, other lever arrangement, ...).

Touch S275 - Additional floodlight on rear of cab roof

Actuating the touch will turn on and off above mentioned floodlight. At the same time, the control light inside the button will light up and go out.

Touch S276 - Additional floodlight on counterweight

Same control as for S275.

Push button S358 - Washer for cab roof window

The button turns on the electric window washer system. Washer fluid will be sprayed to the window and the cab roof window wiper will be actuated as long as the push button S358 is depressed.

https://www.truck-manuals.net/

https://truckmanualshub.com/

THE HEATER AND AIR CONDITIONER

As standard equipment the driver's cab is fitted with a heater and air conditioner unit (fig.76) which can be used for heating, cooling off and also as a fresh air ventilation for the cab.

The main functions of the control unit for this heater and air conditioner are described thereafter. For a more detailed description, refer to the pages 3.37 and followings at the end of this chapter.

THE CONTROL UNIT

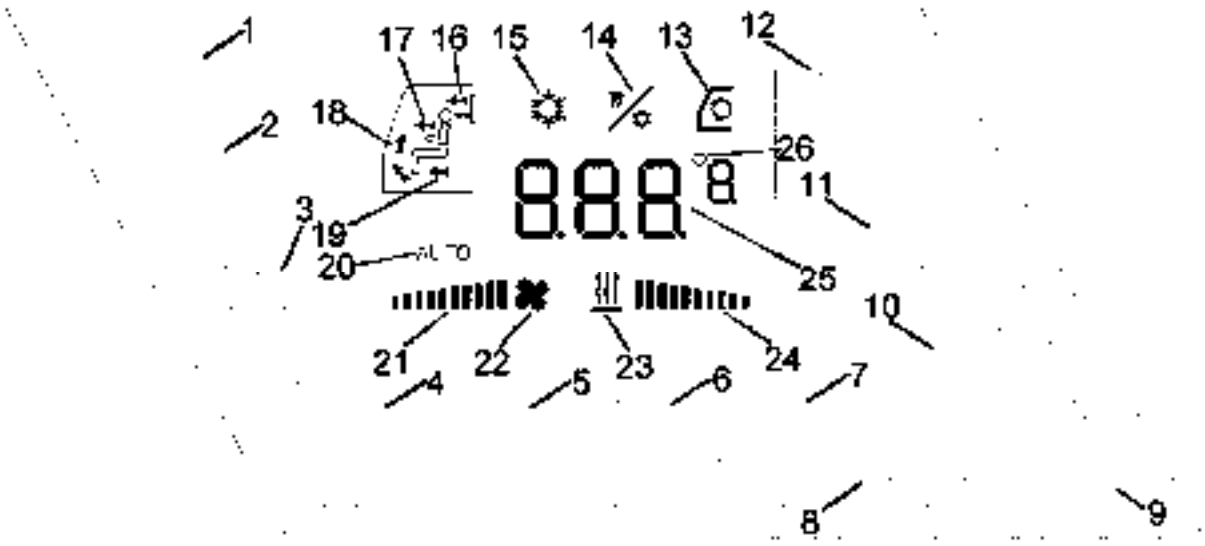

Control Touches

1 - Touch - Air conditioner On / Off
2 - Touch - Increasing the set value for cab temperature, fan RPM, ...
3 - Touch - Reducing the set value for cab temperature, fan RPM, ...
4 - Touch-Control unit heater and air conditioner On / Off
5 - Commutation Touch - manual / automatic control for evaporator fan RPM
6 - Touch - REHEAT operation On / Off
7 - Commutation - Heater control manual / automatic
8 - Touch - Fresh air admission On / Off
9 - Touch - ventilation flap to cab rear side OPEN /CLOSED
10 - Touch - ventilat. flap to control board OPEN / CLOSED
11 - Commutation Touch - Lower ventilation flap in MIDDLE position / CLOSED
12 - Commutation Touch - Lower ventilation flap OPEN / in MIDDLE position

LCD Indication

13 - Symbol indicates recirculated air operation
14 - Symbol indicates REHEAT- operation
15 - Symbol indicates air conditioner on
16 - Symbol indicates ventilation flap to cab rear side OPEN
17 - Symbol indicates ventilation flap to control board OPEN
18 - Symbol indicates lower ventilation flap in MIDDLE position
19 - Symbol indicates lower ventilation flap OPEN
20 - Symbol indicates full automatic operation is ON
21 - Bar graph shows fan RPM (if manually adjusted)
22 - Symbol indicates manual fan control is ON
23 - Symbol indicates manual heating power control is ON
24 - Bar graph shows heating power (if manually adjusted)
25 - Indicates set value for temperature or error code
26 - Indicates the employed temperature unit - (°) or (F)

TURNING THE CONTROL UNIT ON

The heater and air conditioner is turned on via the touch (4). After turning on, the control unit will perform an auto-check for approx. 12 second.

Heater and fresh air ventilation of the cab are now operative. The control unit controls in automatic the heating power and the RPM of the fan inside the heater and air conditioner.

However heating power, respec. fan RPM can also be adjusted manually while actuating the touch (7) respec. (5) and adjusting immediately after the heating power respec. the fan RPM via the touches (2) and (3)

ADJUSTMENT OF DESIRED CAB TEMPERATURE

The 4 positions indication range (25) shows the set value for cab temperature.

Use the touches (2) and (3) to increase or reduce this value.

RECIRCULATED AIR AND FRESH AIR OPERATION

The heater and air conditioner can be operated with 100% recirculated air, but also with a mixing of fresh air (F) and recirculated air (R).

https://www.truck-manuals.net/

Depressing the touch (8) alternately opens and closes the fresh air flap

The recirculated air operation is indicated by the symbol (13).

In position "fresh air" the fresh air flap 7 is open, and about 10% fresh air is admitted into the cab (depending on the contamination of the filters 5 and 6).

ADJUSTMENT OF THE AIR FLOW

The air flow enters the cab via the louvers 3 at the seat console, 4 at the front windshield, 2 at the control board and 1 at the rear wall area.

The blow out direction of the air flow can be adjusted while opening or closing the 4 following ventilation flaps:

The touch (...)	opens and closes the ventilation flap to ...	and the symbol (...) goes on and off
(9)	rear side of cab	(16)
(10)	control board area	(17)
(11)	windshield and pedals area	(18) and (19)
(12)	windshield	(18)

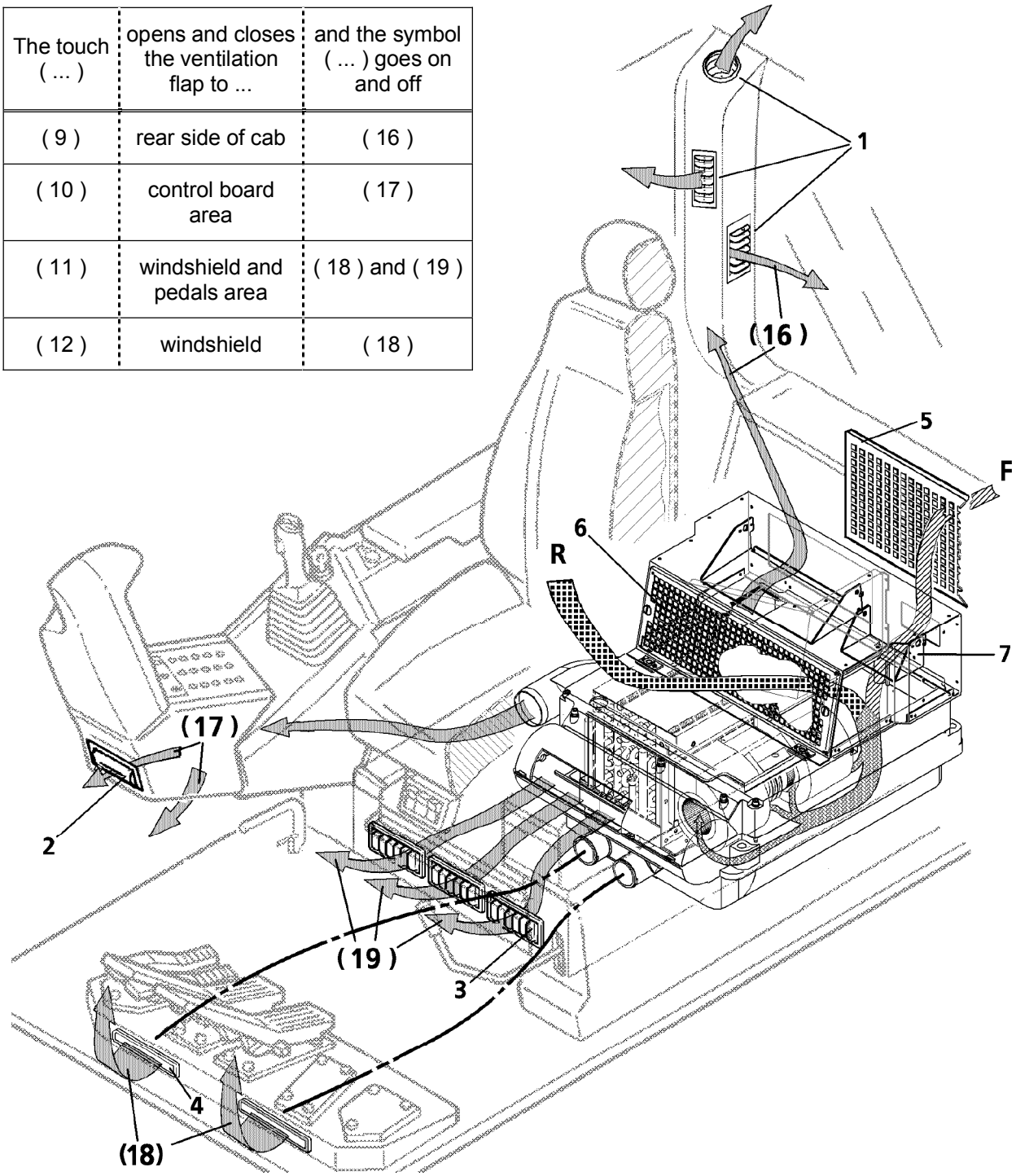

https://www.truck-manuals.net/

https://truckmanualshub.com/

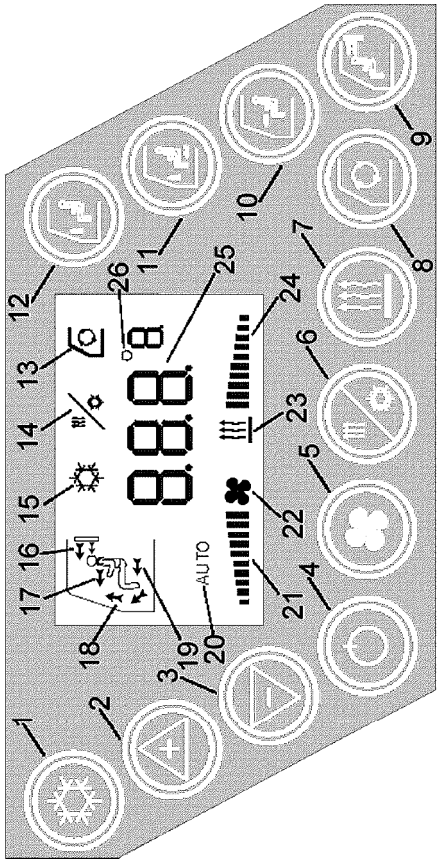

78

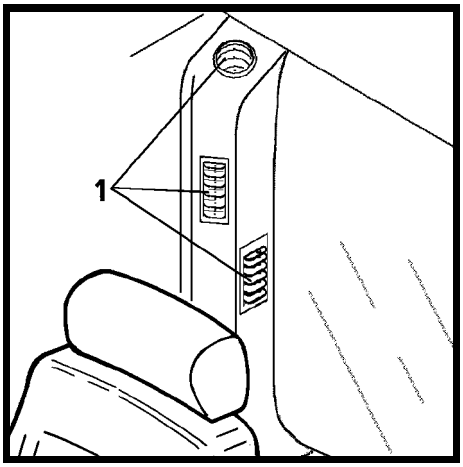

79

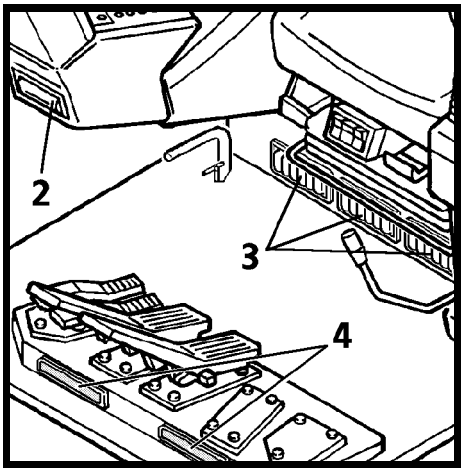

80

TURNING ON THE AIR CONDITIONER

The air conditioner operation is turned on and off via the touch (1). The symbol (15) indicates that the air conditioner is on.

The electronic control system then turns the compressor on and off according to the desired cooling effect and automatically adjusts the RPM of the evaporator fan inside the heater and air conditioner.

The air conditioner should only be turned on after the engine is running. This will prevent an overload on the starters and batteries.

The air conditioner may also be switched on temporarily in winter season to dehumidify the cab by high air moisture.

To do this actuate the "REHEAT" touch (6). The reheat operation is indicated by the symbol (14) of the control unit. The reheat operation will turn off automatically after 10 minutes.

IMPORTANT REMARKS

The air flow through the heater and air conditioner unit is controlled by adjustable and swivelling louvers.

To reach a maximal feeling of comfort we recommend:

- when heating, to blow the air out of the louvers 2 at the control console, 3 at the seat console and 4 at the windshield,
- during air conditioner operation, to blow the air out of the louvers 1 in the air ducts at the rear cab corners and 2 in the control console area.

The best heating, respectively cooling effect is reached in recirculated air operation (symbol 13 is displayed)..

To defrost or dehumidify the windshield quickly, blow the whole air flow out of only the louvers 2 in the control console area and 4 at the windshield,

In case of high outside temperature, and especially if the cab has been heated up by the sun, decrease the temperature inside the cab as far as possible before turning on the air conditioner.

Open the windows and the door for a few minutes and adjust the blower fan to maximum RPM via the touches (5) und (2).

In case of very high outside temperature, preferably close the louver 4, so to avoid an unnecessary warming up of the inside air along the windshield.

Should the machine be operated for a longer period without use of the air conditioner (winter season, ...), so it is necessary to start the compressor for about 10 minutes every second week while actuating the "REHEAT" touch (6).

https://www.truck-manuals.net/

Detailed description of the control unit for heating and air-conditioning

Fig. 1.

***Switching on the system**:*

ON/OFF key (4)

Press →

→

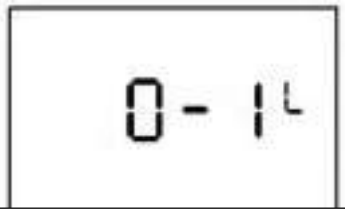

Comment:
As the control unit is carrying out a self test, the software version is displayed for approx. 12 sec.!

Fig. 2.

Setting the desired cab temperature:

Set cab temperature is displayed in °C, e.g. 26 °C.
Control unit is in automatic operation, the circulated air/fresh air-flap is open (fresh air operation).
All other vent flaps are closed!

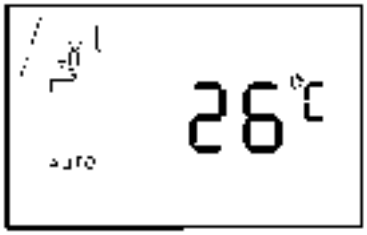

Key – (3)

Press 5 x →

Desired cab temperature 21 °C is displayed.
The evaporator fan turns at min. speed, as all air flaps are closed!

Fig. 3.

Fresh air- / circulated air operation:

Key – (8)

Press 1 x

→

The fresh air flap is closed, symbol (13) indicates circulated air operation.

Note:
By applying the key once again – (8) fresh air operation is reactivated, Symbol (13) will no longer be displayed..

https://www.truck-manuals.net/

Fig. 4.

Opening / closing the vent flap rear panel:

Key – (9)

Press 1 x

→

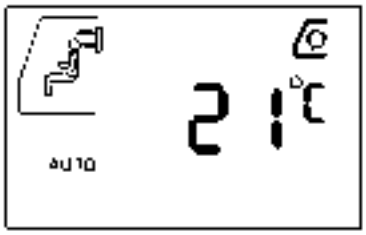

The vent flap's rear panel opens, Symbol (16) indicates that the vent flap is open.

Note:
By applying the key once again – (9) the vent flap's rear panel is closed, symbol (16) will no longer be displayed.

Fig. 5.

Opening / closing the vent flap armrest:

Key – (10)

Press 1 x

→

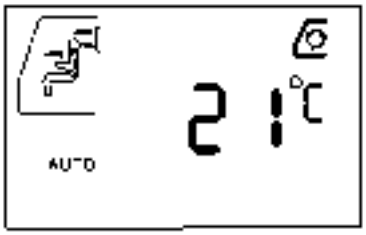

The vent flap's arm rest is opened, symbol (17) indicates that the vent flap is open.

Note:
By applying the key once again – (10) fresh air operation is reactivated, symbol (17) will no longer be displayed.

Fig. 6.

Opening / closing the vent flap front window and foot room area:

Key – (11)

Press 1 x

→

The vent flap front window and foot room area are opened, symbol (18 + 19) indicates that the vent flap front window and foot room area is open.

Note:
By applying the key once again – (11) the vent flap front window and foot room area are closed again, symbols (18+19) are no longer displayed.

Fig. 7.

Opening / closing the vent flap foot room area:

Key – (12)

Press 1 x

→

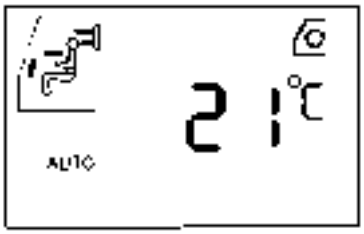

The vent flap front room area opens, symbol (18) indicates that the vent flap foot room area is open.

Note:
By applying the key once again – (12) the vent flap foot room area is closed again, symbol (18) is no longer displayed.

https://www.truck-manuals.net/

Fig. 8.

Switching air-conditioning operation on / off:

Key – (1)

Press 1 x

→

Air-conditioning operation has now been activated. Symbol (15) indicates that air-conditioning operation is on, the compressor is activated from the control unit as required.

Note:
By applying the key once again – (1) air-conditioning operation is deactivated, symbol (15) is no longer displayed.

Fig. 9.

Switching REHEAT operation on / off:

Key – (6)

Press 1 x

→

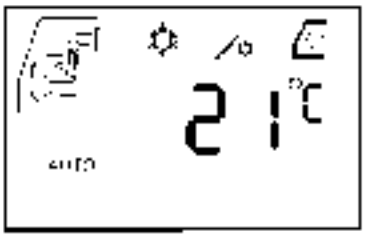

REHEAT operation has now been activated, symbol (14) indicates that REHEAT operation is on, the compressor is constantly active. The evaporator fan speed is raised to 100 %, the vent flap front window and foot room area opens in order that the front window is cleared of condensation. The control unit switches on the heating as required to retain the room temperature at a set value. REHEAT operation is limited to 10 min. automatically.

Note:
By applying the key once again – (6) REHEAT operation is deactivated, symbol (14) is no longer displayed.

Fig. 10.

Manual setting of the evaporator fan speed:

Key – (5)

Press 1 x

→

Manual fan speed is set at 100%!

Manual setting of the fan speed is now active , the symbol (21) in the bar display shows the current set fan speed, symbol (20) AUTO is no longer displayed. The fan symbol (22) flashes for 5 sec., and during this time, the fan speed can be adjusted in 10% steps via keys + (2) or (-). The lowest speed which can be set is 30% (three bars are displayed).

Note:
By applying the key twice (5) automatic operation is reactivated, symbol (20) is displayed, symbols (21+22) are no longer displayed.

Fig. 11.

Manual setting of the heating output:

Key – (7)

Press 1 x

→

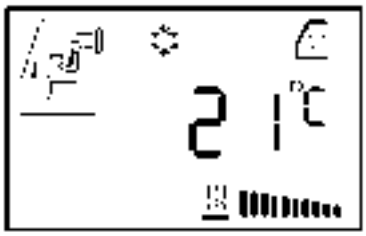

Manual heating output is set at 70%!

Manual setting of the heating output is now active, the symbol (24) in the bar display shows the current set heating output, symbol (20) AUTO is no longer displayed. The heating symbol (23) flashes for 5 sec., and during this time, the heating output can be adjusted in 10% steps via keys + (2) or (-).The lowest heating output which can be set is 0% (no bars are displayed).

Note:
By applying the key twice (7), automatic operation is reactivated, symbol (20) is displayed. Symbols (23+24) are no longer displayed.

https://www.truck-manuals.net/

Fig. 12.

Switching over the temperature display in ° Fahrenheit:

Press + hold

Set temperature is displayed at 21° Celsius!

key – (8), then

press

key – (3)

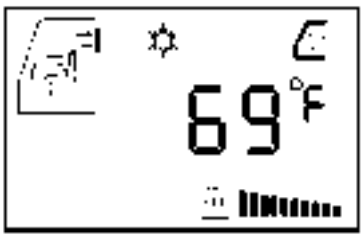

Set temperature is displayed at 69° Fahrenheit!

Note:
By applying the keys (8+3) once again, the temperature display is changed over to °Celsius again.

Fig. 13.

Operation with auxiliary heating: (optional)

1. *0*

Ignition is switched off

2. *Auxiliary heating control unit authorizes standard heating operation.*

3.

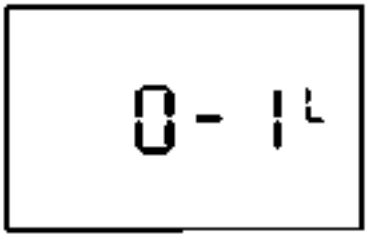

Comment:
As the control unit is carrying out a self-test, the software version is displayed for approx. 12 sec.!

Note:
It is not possible during auxiliary heating operation to carry out manual settings. The heating valve position is always 100%. The evaporator fan speed is 50%.

4.

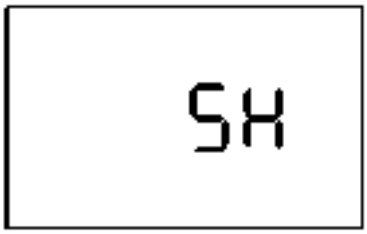

Auxiliary heating operation is indicated in the display.

5. ***Start***

Ignition key

After the diesel engine has been started, standard heating operation is switched off and normal operation is reactivated. The setting, which was last stored is active.

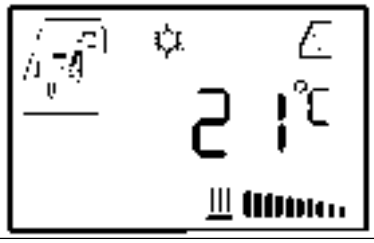

Display of faults and notes on fault remedying

Fig. 14

Error code "F0" faulty room temperature gauge:

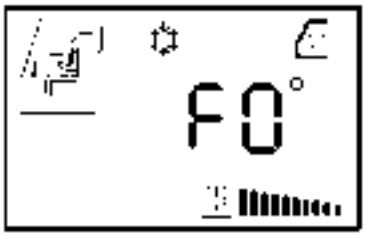

Room temperature gauge error is displayed flashing!

Note:
The control unit has recognised a faulty room temperature gauge, the regulation is no longer ready for operation.
Cause of gauge error, short-circuit or interruption of gauge power supply line, plug connection on gauge or control unit, temperature gauge faulty.
The regulator is then only ready for operation again when the fault of the gauge has been remedied, the gauge error will then no longer be displayed!

Note:
Should a gauge error occur, the regulator continues to operate to the setting which was valid before the fault was recognised!

https://www.truck-manuals.net/

Fig. 15

Error code "F1" faulty blow-out temperature gauge:

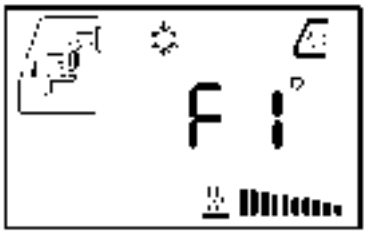

Blow-out temperature gauge error is displayed flashing!

Note:
The control unit has recognised a faulty blow-out temperature gauge, the regulation is no longer ready for operation.
Cause of gauge error, short-circuit or interruption of gauge power supply line, plug connection on gauge or control unit, temperature gauge faulty.
The regulator is then only ready for operation again when the fault of the gauge has been remedied, the gauge error will then no longer be displayed!

Note:
Should a gauge error occur, the regulator continues to operate to the setting which was valid before the fault was recognised!

Fig. 16

Error code "F2" faulty reserve temperature gauge:

Reserve temperature gauge error is displayed flashing!

Note:
The control unit has recognised a faulty reserve temperature gauge, the regulation is no longer ready for operation.
Cause of gauge error, short-circuit or interruption of gauge power supply line, plug connection on gauge or control unit, temperature gauge faulty.
The regulator is then only ready for operation again when the fault of the gauge has been remedied, the gauge error will then no longer be displayed!

Note!
Is not currently used!!!!!

Note:
Should a gauge error occur, the regulator continues to operate to the setting which was valid before the fault was recognised!

Fig. 17

Error code "F3" faulty vent flap foot room area and front window:

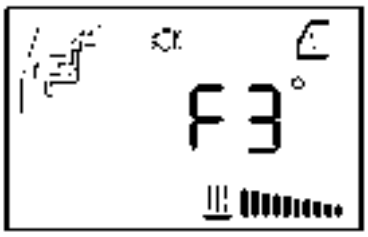

Vent flap foot room area and front window error is displayed flashing!

Note:
The control unit has recognised a faulty vent flap room area and front window, the regulation is once again ready for operation.
Cause of flap fault, short-circuit or interruption of the power supply line, plug connection on fan flap motor or control unit, flap motor faulty.
After remedying of the fault, the fault is no longer displayed!

Note:
Should a flap error occur, the regulator carries on working as usual, only the middle position of the vent flap can no longer be started!

Fig. 18

Error code "F4" pressure fault and faulty magnetic coupling:

Pressure fault and faulty magnetic coupling is displayed flashing!

Note:
The control unit has recognised a pressure fault or faulty magnetic coupling.
Cause of fault, short-circuit or interruption of the power supply line to the magnetic coupling, plug connection on the coupling or control unit, overpressure or underpressure (lacking refregerating agent) in the refregerating system of the air-conditioning unit
After remedying of the fault, the fault is no longer displayed!

Note:
Should a pressure fault or faulty magnetic coupling occur, the regulator carries on working as usual, only the magnetic coupling output is interrupted!

https://www.truck-manuals.net/

https://truckmanualshub.com/

Fig. 19

Error code "F5" faulty data transmission operating feature / control unit:

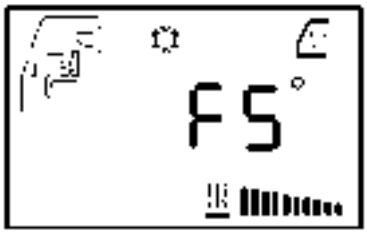

Note:
Data transmission from the operating feature to the control unit is faulty, cause of the fault, short-circuit or interruption of the data line to control unit, plug connection on operating feature or control unit.
The operating feature continues to try to establish data connection to the control unit, if the connection is once again OK, "F5" – fault will no longer be displayed.

Faulty data transmission is displayed flashing!

Note:
If the data transmission from the operating feature can not be established again, the ignition must be switched off, and RESET will be carried out following the restart!

https://www.truck-manuals.net/

https://truckmanualshub.com/

OUTFIT OF DRIVER'S CAB

ENTERING OR EXITING THE OPERATOR'S CAB

The excavator must be entered and exited at all times via the steps provided for this purpose.

CAUTION

Never jump off of the hydraulic excavator!
Never use the control elements as handles!

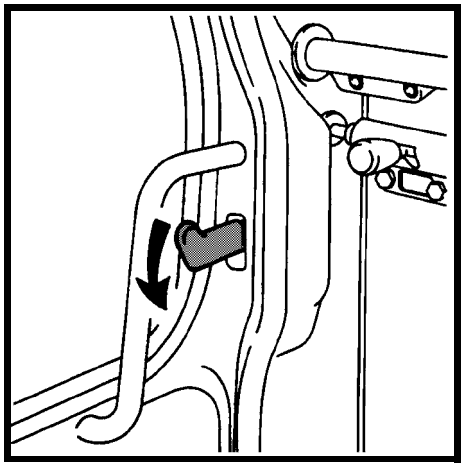

89

OPERATOR'S CAB DOOR

Opening the cab door from the inside:

- Push down the lever (fig. 89) on the door's lock.
- Open the door completely and secure it in stop position.

Unlocking the cab door after being opened completely:

- Push out the lever (fig. 90) next to the operator's cab frame.

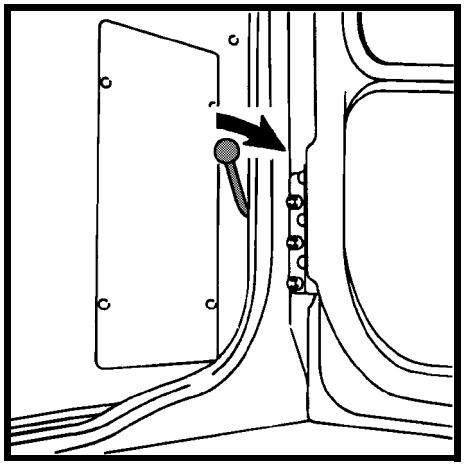

90

FIRE EXTINGUISHER / FIRST AID KIT*

Optional installation

The storage space for the fire extinguisher and the first aid kit is to be found at the bottom in the rear left corner of the operator's cab.

* Operator's prescription!

https://www.truck-manuals.net/

https://truckmanualshub.com/

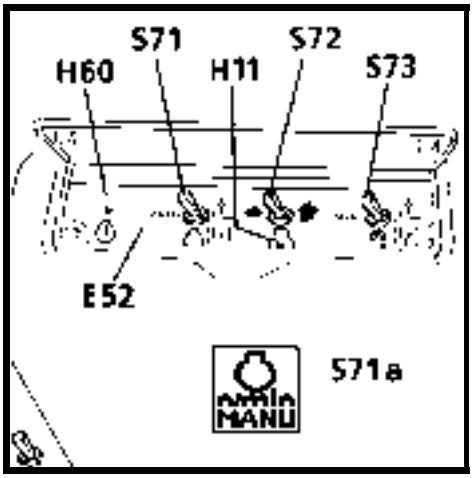

101

OPERATION OF THE EXCAVATOR IN SAFETY MODE

The printed board E52 containing all necessary switches and lights for the safety operation of the excavator is situated at the rear end of the right side control desk. Thanks to this printed board, the excavator can, in case of a trouble in the main electronic circuit, be maintained operating temporarily and with some restrictions.

Switch S71 for engine start in safety mode

In normal operation, the engine is started via the main electronic circuit when the ignition key is turned to start position.

In case the engine can no longer be started or kept running due to troubles in the main control circuit of the excavator, it can be started in safety operation via the safety mode start switch S71. To start, turn the ignition key to start position, with the switch S71 tilted to the right, until the engine is started.

The engine can also be switched into safety operation automatically, as an example consecutively to a communication default in the control system.

In safety operation, the control light H11 is lighting up at the safety control board E52 and at the same time the warning symbol S71a appears on the monitoring display.

In safety operation the stop of the Diesel engine is achieved just like in normal operation, while turning back the ignition key to the "off" position.

In safety operation, the communication between the electronic control box of the engine and the main circuit of the excavator may be no longer established.

In case of the occurrence of any operating error on the Diesel engine, the red warning light H60 lights up on the safety control board E52, at the same time a buzzer will sound inside the cab and the error code E525 is displayed on the screen.

In safety operation the followings remain guaranteed:

- the automatic engine power reduction in case of overheating of the engine coolant or of the charge air.
- the memorization of the occurring engine faults into the inner error memory of the control box of the engine.

At the opposite, the shutdown of the engine in case of low engine oil pressure and of overheating of the engine coolant or of the charge air is no longer ensured.

H11	Warning light / Diesel engine in safety mode
H60	Warning light / operating error on Diesel engine with safety mode turned on
E52	Printed board for safety operation
S71	Switch / engine start in safety mode
S72	Switch / RPM selection in safety mode
S71	Switch / servo pressure circuit in safety mode

CAUTION

In case the warning light H60 lights up, the operator must shut the engine down as soon as possible and recognize which error has occurred.
It's the operator's own responsibility to decide if the machine can be maintained operating or not.

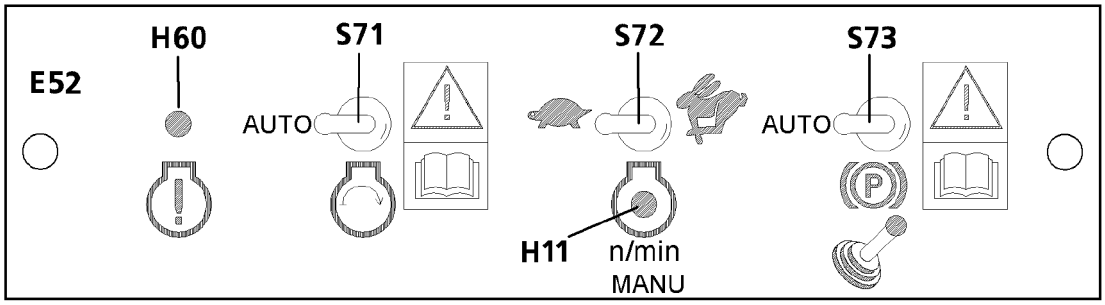

https://www.truck-manuals.net/

In safety operation, the engine works with reduced output in comparison with the normal operation.

Tilt back the rocker switch S71 from safety operation into normal operation (position AUTO) only when the excavator is turned off.

Switch S72 for safety control of the Diesel engine RPM

In normal operation, the set point for the engine RPM is entered via the buttons S86, S228 and S229 (see page 4.4), and the engine speed is controlled in consequence by the electronic system of the machine

If the engine has been started in safety mode via the rocker switch S71 so it can be operated only with two different RPM, depending on the position of the switch S72 :

- With the switch S72 tilted to the left, the engine RPM is set to lower safety RPM.
- With the switch S72 tilted to the right, the engine is running at upper safety RPM.

The values for upper and lower safety RPM of the engine are memorized in the electronic engine control box.

Immediately after starting, the engine runs at lower safety RPM.

Notice: Should the engine be switched automatically into safety operation, so the momentary set RPM will be maintained until the next shutdown of the engine.

Switch S73 for safety mode of the servo pressure circuits

During normal operation, the servo pressure supply to the swing brake and to the joysticks and pedals is controlled over the electronic circuit of the machine.

While tilting the switch S73 in safety position, this servo pressure supply can be enforced, and is maintained even in case of a trouble in the normal control circuit.

The operator is alerted that the servo circuits safety mode is turned on by the three indicator symbols S73a, S73b and S73c (fig. 103) appearing on the display of the machine.

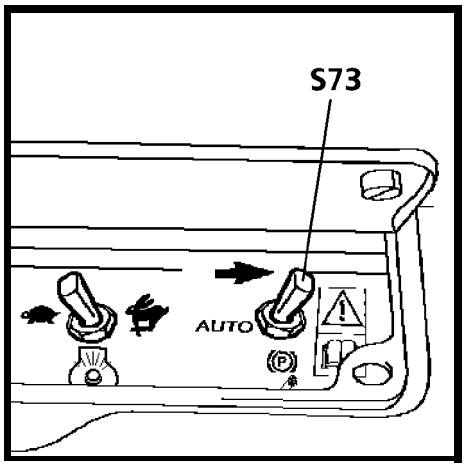

107

DANGER

The safety mode must be turned on only temporarily and in order to move the machine for emergency reasons and when, due to a trouble in the normal control circuit, releasing the swing brake or supplying the pilot controls is hindered.
In safety mode, the swing brake will be released as soon as the ignition key is turned to contact position, and the normal brake control (see page 4.12) is out of function.

However, even with the switch S73 in safety position, the interruption of the servo pressure supply to the joysticks and pedals when lifting the safety lever (see page 3.3) is maintained.

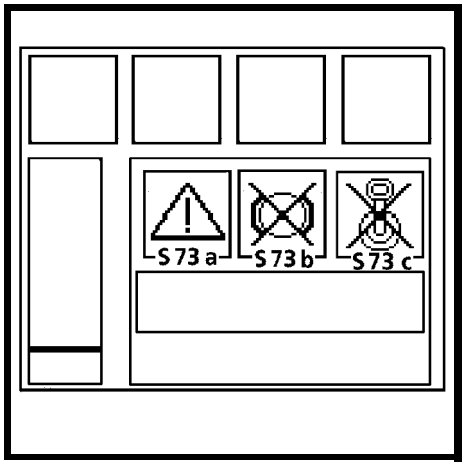

108

https://www.truck-manuals.net/

https://truckmanualshub.com/

4. OPERATING PROCEDURES

PRE-STARTING INSPECTION

CHECK AIR FILTER FOR CONTAMINATION

Check the dry air filter on side of the Diesel engine to determine the degree of contamination.

When the maximum permissible depression has been reached, a red stripe will appear in the inspection port 10 of the maintenance indicator 12 (fig. 1) and the filter must be serviced, see page 6.16.

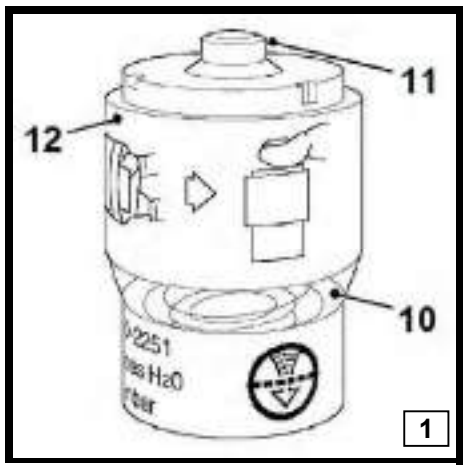

ENGINE OIL LEVEL

Check the engine oil level with the machine on level ground. After engine shut down, allow 5 minutes for the oil to drain into the oil pan.
The oil level must be between the MIN. and MAX. mark on the dipstick , see fig. 2.

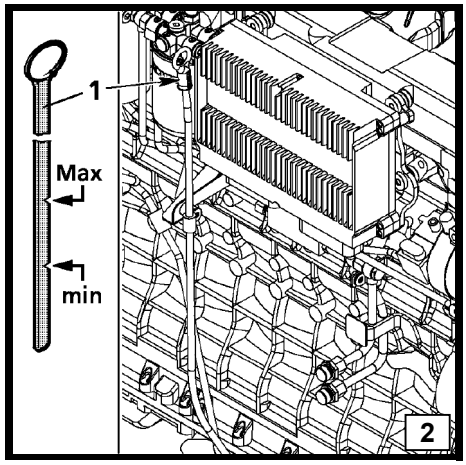

CAUTION

The engine oil is very hot at or near operating temperature. Avoid contact with hot oil and components containing oil, since it could cause severe burns.

COOLANT LEVEL

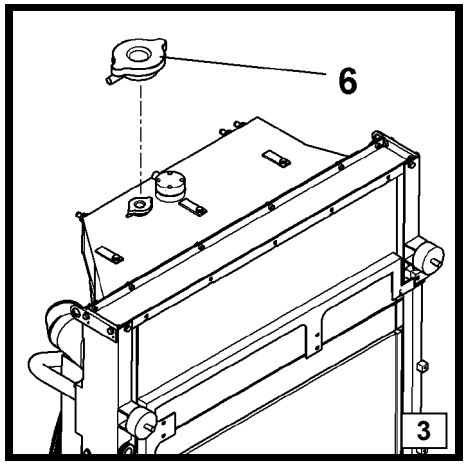

CAUTION

At or near operating temperature, the engine coolant is hot and under pressure.

Avoid contact with components containing coolant, since it could cause severe burns.

Check coolant level only after the cap 6 at the filler tube is cool enough to touch.

To check the coolant level, turn the filler cap 6 slowly to relieve pressure .

When the coolant is cold, the coolant level should reach the top of the tube under the filler cap (fig. 3, pos. 6).

The proper antifreeze concentration (about 50% antifreeze) must be maintained all year long.

The excavator is delivered from the factory with a cooling system protection to -31 °F (-35 °C).

https://www.truck-manuals.net/

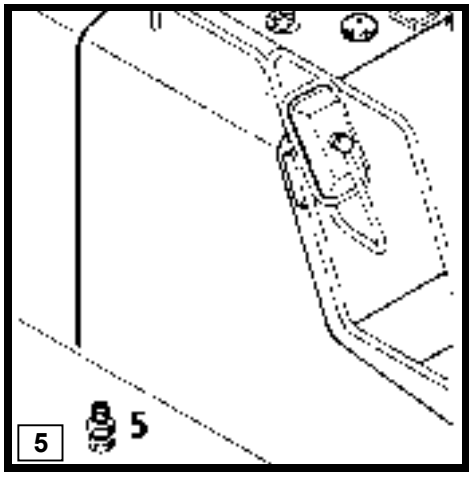

CHECK FUEL SYSTEM / FUEL LEVEL

. The condensation in the fuel system and fuel tank must daily be checked and if necessary drained.

. To drain the water of the tank, unscrew the drain plug 5 at the fuel tank bottom (fig. 5) about two turns, then retighten the plug as soon as water free fuel flows out.

. If the corresponding warning symbol appears on display (fig 8, pos b), showing that the water level is high in the water separator of the prefilter 1 (fig. 5) turn the plug 3 on the water separator and drain the condensation until fuel drains off.

. Retighten the plug.

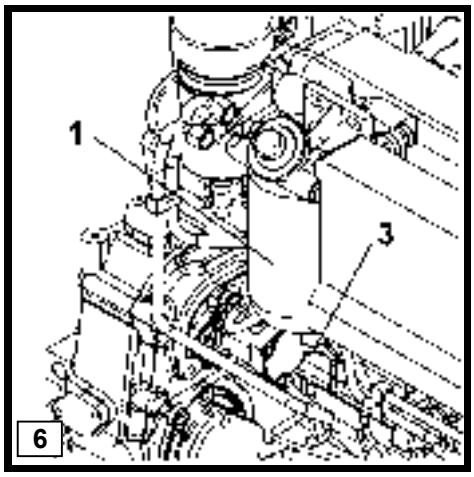

. Under ideal operating conditions, this interval may be extended to one week.

. Check the fuel gauge P3 on the monitoring display (fig. 7) before starting to work.
If the reds diodes 62 on the left of the indicator P3 lights up, only a little reserve of fuel remains in the tank.
Refill the tank, if fuel level is low.

. **Notice**: Since a high fuel level in tank reduces condensation inside the tank, the refuelling should be done preferably at the end of the working day.

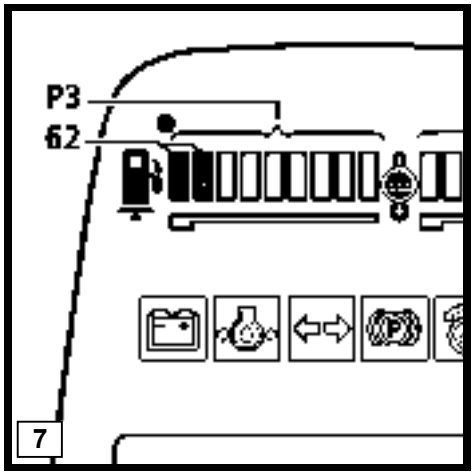

HYDRAULIC OIL

. When checking the oil level or adding oil,

- park the machine on level ground,
- rest the attachments on the ground,
- with stick and tilt cylinders fully extended
- and, if applying with bottom dump bucket closed.
- The Diesel engine must be shut down.

. **Check oil level in the hydraulic tank :**

. In this position, the oil level must not below the middle mark on the sight gauge (fig. 8),

. Otherwise oil has to be added through the return filter until the oil reaches the middle mark.

. See page 5.16 for description of procedure for adding oil.

. The upper mark (maxi) shows the maximum oil level when all cylinders are retracted.

. The lower mark (mini) shows the minimum oil level when all cylinders are extended.

. If the oil level drops below the lower mark on the sight gauge, the corresponding warning symbol appears on display (fig. 8, pos a).

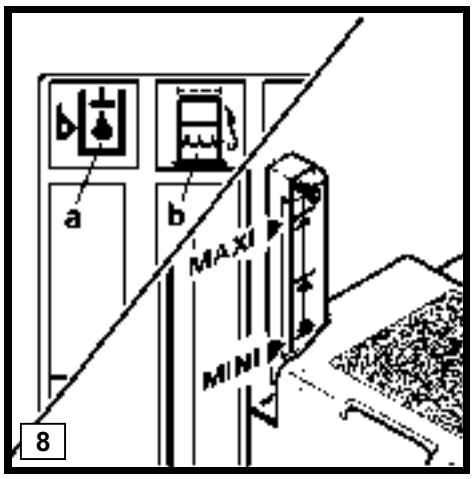

https://truckmanualshub.com/

MACHINE START UP SAFETY

- Before excavator start up, perform a thorough walk around inspection.
- Visually inspect the excavator, look for loose bolts, cracks, wear, any leaks and any evidence of vandalism.
- Never start or operate an unsafe excavator.
- Report all defects to your foreman or supervisor and make sure they are corrected immediately.
- Make sure all covers and doors are closed and all warning decals are on the machine.
- Make sure all windows, as well as inside and outside mirrors are clean, and secure all doors and windows to prevent any unintentional movement.
- Be certain that the area surrounding the excavator is free of other personnel, and that no one is working on or under the excavator before starting the engine.
- After entering the cab, adjust the operator's seat and controls, the inside and outside mirror, the armrests and fasten and adjust the seat belt. Be certain that all controls can be reached comfortably.
- All noise protection devices on the machine must be functional during operation.

https://www.truck-manuals.net/

https://truckmanualshub.com/

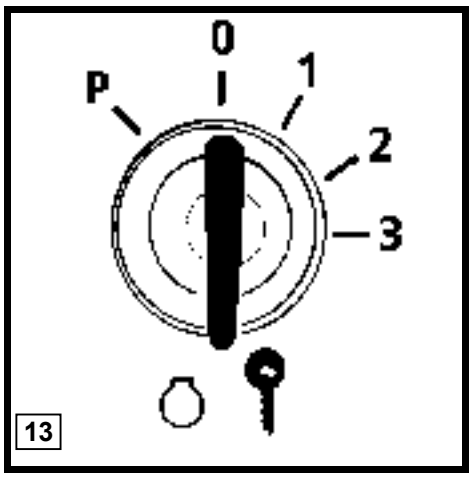

13

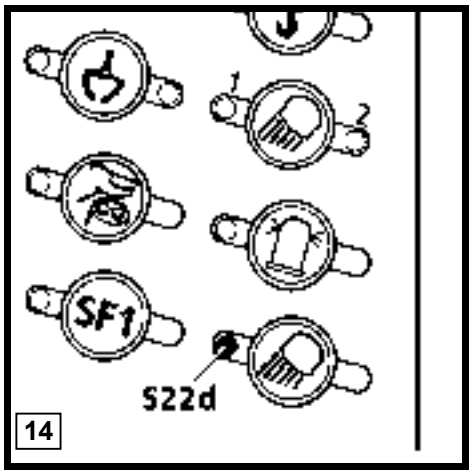

14

DIESEL ENGINE OPERATION

IGNITION KEY POSITIONS (Fig. 13).

-0- Off
-1- Contact position
-2- Position is not used
-3- Start

TURN ON THE ELECTRICAL SYSTEM

. Turn the key to contact position -1- .

. Immediately after turning the system on, the display and the control unit will run through a self test.

. Make sure all indicators function properly after turning the electrical system on, i. e. the light emitting diodes (indicator lights and gauges) turn on for a short time then the complete field of the LCD indicator 200 turns momentarily black (the matrix indicator is energized completely for a short time).

. Only the diode in the button S22 (fig. 14) turns not on at that time.

STARTING THE ENGINE AT AMBIENT TEMPERATURES TO -12° C (10° F)

. - Turn the ignition key to starting position 3.

. - As soon as the engine is running, release the key.

. The engine can not be cranked for more than approximately 10 seconds. After this time lag, the starter will be stopped automatically.

. The next starting procedure is possible only after a programmed off period is over.

. The coming up of the symbol "preheating", fig. 19, signals that an automatic preheat procedure is actually occurring, see the section "automatic preheating for cold start" thereafter.

.

ENGINE SPEED ADJUSTMENT

. The LED indicator P4 (fig. 16) displays the engine RPM. It divides the complete RPM range into 10 Stages.

. The engine RPM can be set either using the arrow keys S228 and S229, or using the MODE key S86 (fig. 16).

. **With the arrow keys**

. Depressing an arrow key causes the RPM to jump in the next higher or lower RPM stage.

. **With mode pre selection**

. Via the MODE key, different preset RPM can be selected.

. Depressing the button S86 causes to change from a pre selected mode into the next, in the following order L, F, E, P, L, ... and so on.

. Immediately after starting, the engine will run either on RPM stage 1 (low idle) or on RPM stage 3 if a warm up procedure of the engine is necessary.

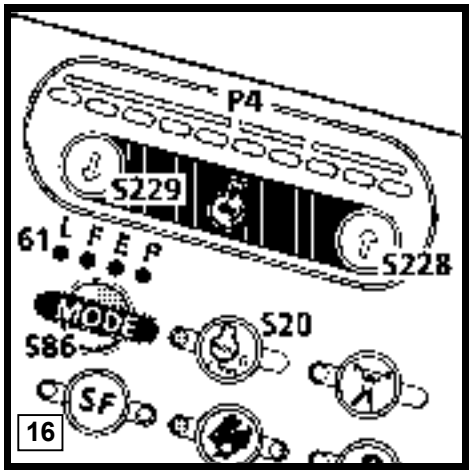

16

One of the four light emitting diodes (fig. 17, pos. 61) blinks to show which mode L, F, E or P is pre-selected (the pre-selected mode which was in use before the machine was turned off remains stored).

L	Mode LIFT	=	RPM stage 5
F	Mode FINE	=	RPM stage 10
E	Mode ECO	=	RPM stage 8
P	Mode POWER	=	RPM stage 10

By pushing the mode key S86, the initial condition is confirmed, the corresponding engine speed and power are transferred to the running Diesel engines, and the LED remains on.

If the engine speed is changed via the arrow keys to the engine speed for mode L, F, E or P, then it jumps automatically to the corresponding mode.

If the engine speed does not correspond to the pre-selected mode (either because the engine speed had been changed via the arrow keys or lowered via the low idle automatic), the LED blinks to indicate the mode selected before.

In mode E and P, the engine is running at its rated power curve (line II on fig. 18), in mode L and F it works at a power reduced by approx. 20% (line I).

The fig. 18 also show the variation for RPM stages and corresponding engine power when using the buttons S228 and S229.

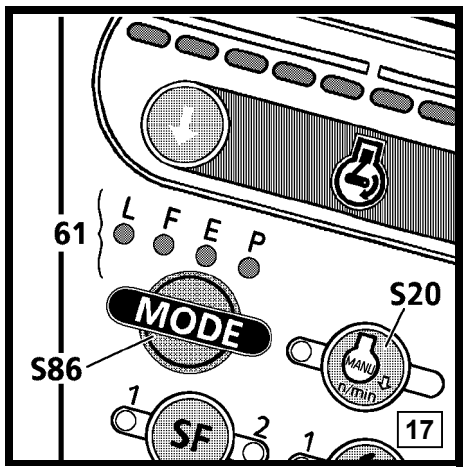

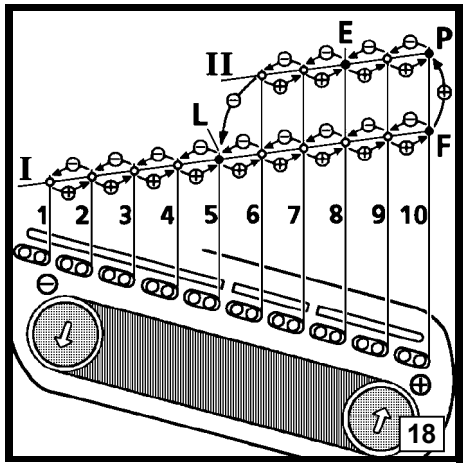

Adjustment via low idle automatic

The low idle automatic is turned on or off via the key S20 (left light emitting diode on the switch is on or off).

When the low idle automatic is turned on, the engine speed increases by itself to the preselected RPM stage as soon as any one of the pilot control units is actuated, and it is automatically reduced to low idle speed, if no pilot control unit is actuated within a given time frame.

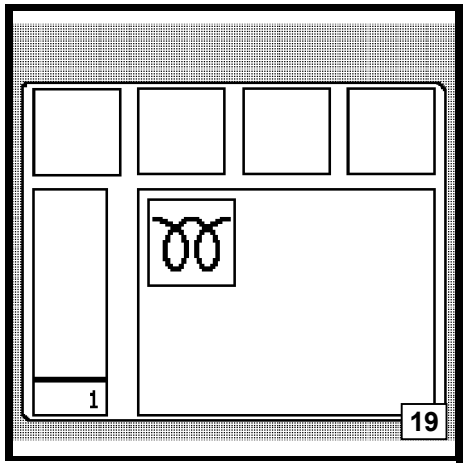

AUTOMATIC PREHEATING FOR COLD START

When the coolant temperature is low, the intake air is preheated automaticaly by flame glow plugs situated in the intake manifolds so, to improve the starting of the engine.

As long as the preglow plugs are energized, the symbol "preheating" (fig. 19) will be displayed at the screen.

After about 20 seconds (depending on the coolant temperature) the symbol "end of preheat" (fig. 20) will start blinking at the screen.

Then turn the ignition key to start position and let it go off as soon as the engine has started.

If the engine does not start, the starting procedure will be switched off automatically after completion of a preadjusted cranking time.

In this case first turn the starting key back to the off position before preheating and starting again..

Notice ! The engine can be started any time, even during a preheating procedure.

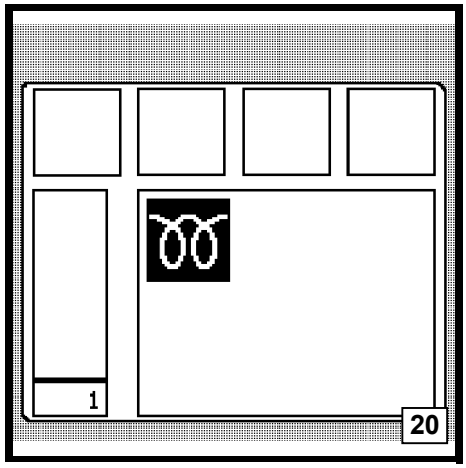

https://www.truck-manuals.net/

https://truckmanualshub.com/

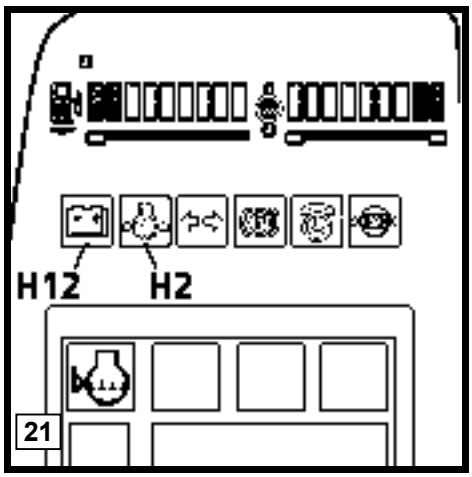

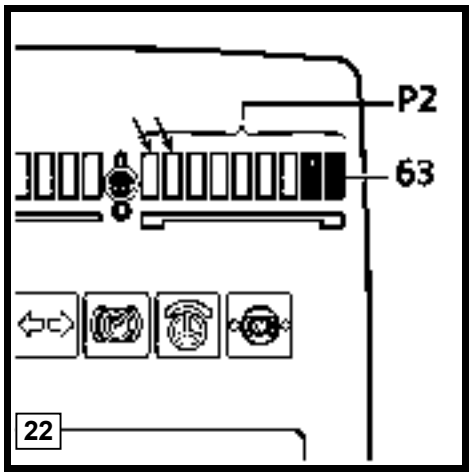

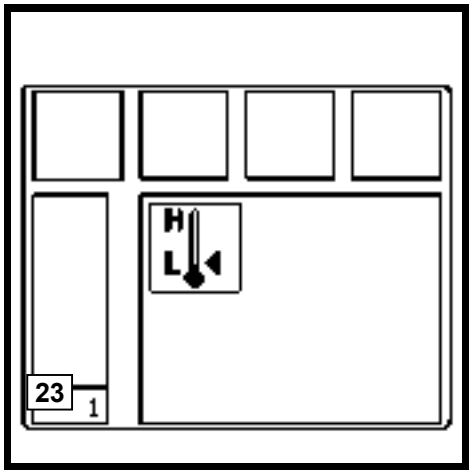

AFTER THE ENGINE IS RUNNING

. The following indicator lights must turn off after the engine is running (Fig. 22) :

. - H2- Oil pressure

. - H12- Battery charge indicator

. If an operating fault occurs as the engine is running, so a corresponding symbol or error code will be displayed at the screen to indicate this error.

. For the exhaustive list of possible operating faults on the Diesel engine, as well for their results and for the corrective actions refer to chapter 3.

. WARM UP PROCEDURE FOR ENGINE

. When the engine is cold, the RPM is increased automatically above the value which has been set for low idle, from an amount depending on the coolant temperature.

. Increase the engine load slowly, until the second green lighting diode goes on on the temperature gauge P2 (fig. 22).

. Do not run the engine for more than 10 minutes at low idle, or the engine can be damaged. Turn the engine off if the machine is not used for a longer period of time.

.

. WARM UP PROCEDURE FOR HYDRAULIC CIRCUIT

. With cold hydraulic oil (temperature below 20° C), the pump output is automatically limited (the pump output is limited to the same value as for mode F).

. As soon as the oil temperature increases above 20° C, the full power of the machine is available.

. The warm up procedure for hydraulic circuit can be activated and deactivated while programming the display.

. During a warm up procedure for Diesel engine or hydraulik oil, the symbol fig. 23 will be displayed on the screen.

DANGER

Only run the engine if good ventilation is provided. Open doors and windows, if necessary, to provide sufficient ventilation.

https://www.truck-manuals.net/

https://truckmanualshub.com/

CAUTION

- **Run the engine until the hydraulic oil is at operating temperature. Low engine and hydraulic oil temperatures cause the excavator to be sluggish and unresponsive.**
- **Carefully move the machine outside and check the function of the travel and swing brakes.**
- **Check if all attachment functions are operating properly.**

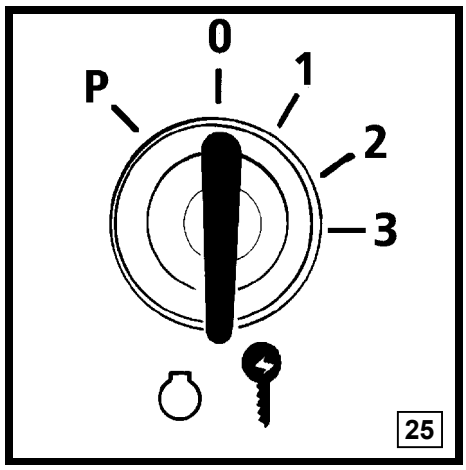

ENGINE SHUT DOWN PROCEDURE

Do not suddenly turn the engine off when the engines are running at high idle.

Reduce first the engine RPM to low idle via the arrow key S229, and continue to run the engine run for 3-5 minutes to lower the temperature.

Then turn the ignition key to the "O" position (fig. 25) to turn the engine off and remove the key.

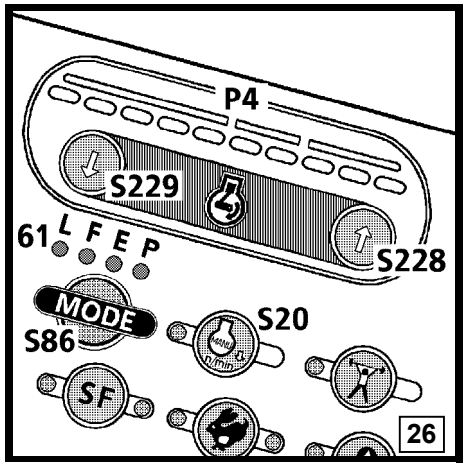

Do not turn the starter while as the engine is running, this could damage the starter and the starter gear.

EXTERNAL STARTING PROCEDURE

CAUTION

- **Connecting old batteries or batteries which have been recharged several times to charged batteries may result in increased gas formation in the discharged batteries.**
- **Always wear safety glasses and protective gloves and avoid open flame and formation of sparks in the area close to the discharged batteries.**
- **Use only battery cables with suitable diameter and proceed as follows to reduce to a minimum the formation of sparks.**

– First connect one cable to the ⊕ terminal of the discharged battery and then to the ⊕ terminal of the charged (external) battery, next connect the second cable to the ⊖ terminal of the discharged battery and then to the ⊖ terminal of the charged battery.

– Start the engine as described on previous pages .

– Before removing the external starting cables, <u>always bring to low idle the Diesel engine of the excavator and, if applying, also the Diesel engine of the external machine.</u>

– First disconnect the cable from the ⊖ terminal of the charged (external) battery and then from ⊖ terminal of the discharged battery, next disconnect the cable from the ⊕ terminal of the charged battery and then from the ⊕ terminal of the discharged battery.

https://www.truck-manuals.net/

https://truckmanualshub.com/

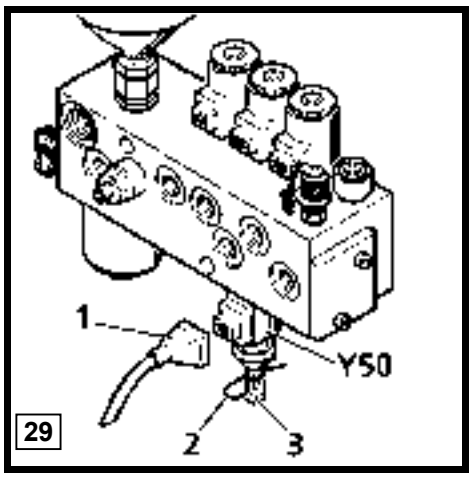

29

HYDRAULIC PUMPS SAFETY OPERATION

. During normal operation of the excavator, the electronic horsepower control continuously adjusts the pumps flow to the pressure level of the working circuits.

. If a trouble occurs in the circuit of the regulator, the pumps are swivelled back to minimal flow.

. However, it remains possible in this case to carry on the working with the machine (with somewhat reduced pump power) by changing over the lever 3 on the servo oil unit which is mounted to the rear face of the spool valve console.

. Disconnect the connector 1 from the solenoid valve, pull out the pin 2 and tilt the lever 3 in horizontal position (safety position).

https://www.truck-manuals.net/

MACHINE OPERATING SAFETY

- Familiarize yourself with job site rules. Be informed about traffic and hand signals and safety signs. Ask who is responsible for signalling.
  Check your surrounding for any obstacles in the working and movement range, check the load carrying capacity of the terrain, and secure the job site to shield it from any public highway traffic. Rope off the working area of the machine and install the necessary signs to forbid any non authorized person entering the area.
- Always keep a safe distance from overhangs, walls, drop offs, and unstable ground.
- Be alert of changing weather conditions, bad or insufficient visibility and of changing ground conditions.
- Be alert for utility lines, check the location of underground cables, gas and water lines, and work especially careful in that vicinity. If necessary and/ or if required, call local authorities to mark the location, and take precaution against contact with underground utilities.
- Keep sufficient distance to electrical lines. When working in the vicinity of high voltage electrical lines, keep proper distance to assure that the attachment does not come close to the lines. DANGER! You must inform yourself about safe distances.
  Preferably have the electrical lines de-energized (and lockout / tagged out according to the regulations applicable on the job-site) each time it is possible, and in any case if the closeness of the working area make it necessary.
- In case you do touch a high voltage line by accident, proceed as follows:
  - do not leave the machine,
  - move the machine, if possible, from the danger zone until you obtain sufficient distance,
  - warn any personnel in the vicinity not to come close to the excavator and not to touch it,
  - instruct or initiate that someone turns off the voltage.
  - Do not leave the machine until you are absolutely sure that voltage in the line, which had been touched or damaged, has been turned off!
- Before moving the machine, make sure that the attachments and equipment is secured properly to avoid accidents.
- When travelling on public roads, make sure to observe traffic regulations, and make sure that the machine meets federal and local public highway standards.
- Always turn on the lights if visibility is bad or if you are still working during dusk.
- Never allow other personnel on the excavator.
- Operate the excavator only while seated and with the seat belt fastened, if installed.
- Report any problems or needed repairs to your foreman or supervisor and make sure they are corrected immediately.
- Do not move the excavator until you are certain that no one is endangered by moving the excavator.
- On machines without negative brakes check the brake system before starting to work, as outlined in the Operation and Maintenance Manual.
- Never leave the operator’s seat while the machine is still moving.
- Never leave the machine unattended (within view of machine), with the engine running.
- When moving the excavator, keep the uppercarriage in lengthwise direction and keep the load as close as possible to the ground.
- Prevent any working movements, which could tip the machine over. If the excavator begins to tip or slip on a grade, immediately lower the attachment and load to the ground and turn the excavator facing downhill.
  If possible, always operate the excavator with the attachment positioned uphill or downhill, never sideways.
- Always travel slowly on rough or slippery ground and on slopes, and on loose soils.
- Always travel downhill at permissible speed, so you don’t loose control over the machine. The engine must run at nominal speed, use only the foot pedals to brake and slow down the machine.
  Never shift during down hill travel, always shift to a lower gear before travelling downhill.
- Load an occupied truck only if all safety requirements are fulfilled, notably in order to protect the truck operator.
- For demolition work, clearing, crane operation, etc. always use the appropriate protection device designed for this specific application.
- If operating in visually obstructed terrain or whenever necessary, have another person guide you. Always have only one person signal you.
- Allow only experienced persons to attach loads or to guide operators. The guide must be visible by the operator and / or must be in voice contact with him.
- Depending on the attachment combination, it is possible for the bucket teeth to hit the cab, the cab protection or the boom cylinders. Be very careful when the bucket teeth get in this range to prevent any damage.
- In case of a thunderstorm:
  - lower the attachment to the ground and if possible anchor the digging tool into the soil.
  - leave the cab and move away from the machine before the storm breaks out. Otherwise, you must stop the excavator, turn off the radio and keep inside the closed cab until the end of the storm.

https://www.truck-manuals.net/

https://truckmanualshub.com/

TRAVEL FUNCTIONS

When traveling, align the uppercarriage up with the undercarriage (idlers in front, sprocket wheels in the rear).

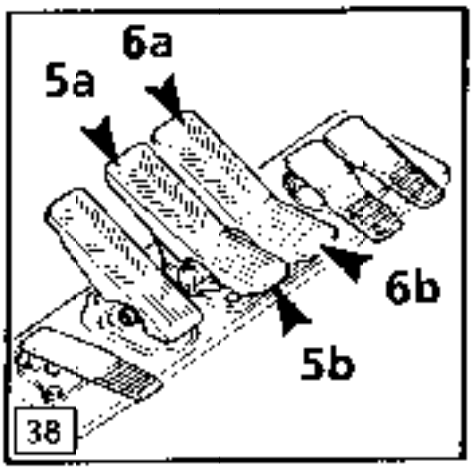

STRAIGHT TRAVEL

- **Travel forward :**
Push both foot pedals equally forward with your toes (Fig. 38, pos. 5a and 6a).

- **Travel reverse :**
Push both foot pedals equally downward with your heels (Fig. 38, pos. 5b and 6b).

DANGER

Before you travel in reverse make sure , it is clear and nobody is in your way!

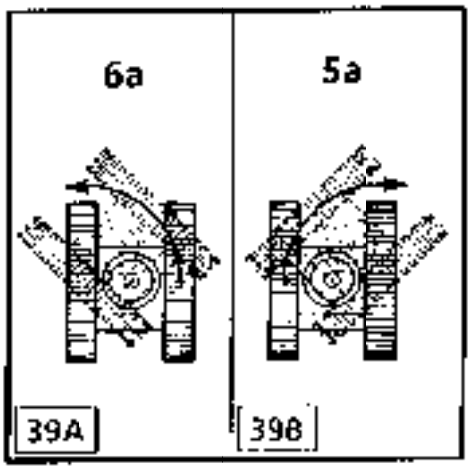

TO TURN OVER ONE TRACK

- **To turn left forward** (Fig. 39 A) :
Push the right foot pedal forward (pos. 6a).

- **To turn right forward** (Fig. 39 B) :
Push the left foot pedal forward (pos. 5a)

CAUTION

To protect the track components, reverse turns should be avoided.

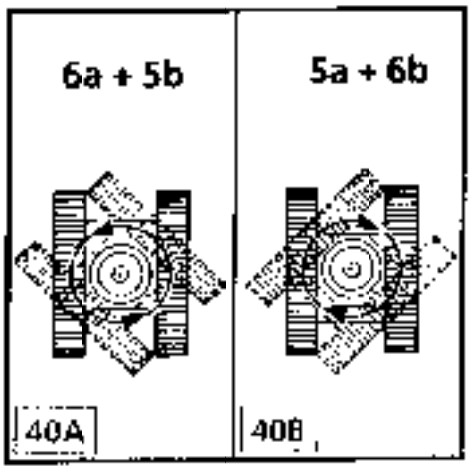

COUNTER ROTATION (Fig. 38)

- **To turn left** (Fig. 40A) :
Push the right pedal forward (pos. 6a) and at the same time push the left pedal down with your heel (pos. 5b).

- **To turn right** (Fig 40 B) :
Push the right pedal down with your heel (pos. 6b) and at the same time push the left pedal forward (pos. 5a).

DANGER

If the uppercarriage us turned by 180°, note that the direction of travel is reversed when you push the pedals!

https://www.truck-manuals.net/

https://truckmanualshub.com/

HAND LEVERS FOR TRAVEL

A more sensitive travel control can be achieved by using the two hand levers included in the tool kit (Fig. 41, pos. 1 and 2).

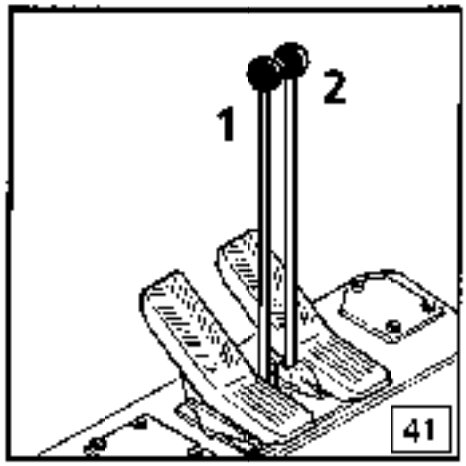

CAUTION

Attach the levers to the foot pedal and use this manual control when loading or unloading the machine from a flat bed trailer.

THE TRAVEL BRAKE

Hydraulic brake :

Releasing the foot pedals (Fig. 38, pos. 5 and 6) will automatically return them to neutral position, and a maximum hydraulic braking is achieved .

Run away of the machine traveling down a slope is prevented by the automatically acting brake valves.

The maximum travel speed cannot be exceeded.

Mechanical brake :

A negatively acting, hydraulic multi-disc brake is integrated in each travel gear.

These brakes serve as parking brake. They are released automatically at travel pedal actuation and apply again as soon as the travel pedals return to neutral position

TRAVEL SPEED INCREASE

The oil motors mounted to the travel gears can work with two different displacements:

position 1: maximum oil volume, this resulting in maximum track forces combined with moderate travel speed.

position 2: reduced oil volume, i. e reduced track forces and maximum travel speed.

When the push button for travel speed increase (fig.44, pos. S21) is turned on (left indicator light 1 of the button is on), the motors automatically shift from position 1 to position 2 each time the travel area is easy, and in the opposite, they return from position 2 to position 1 when ground conditions become difficult

With push button S21 turned off, the travel motors remain permanently in position 1.

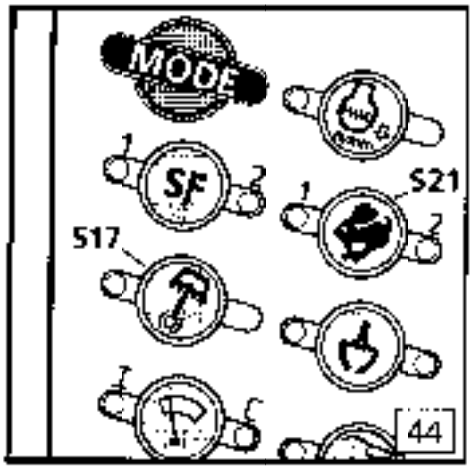

https://www.truck-manuals.net/

https://truckmanualshub.com/

LOCATION OF THE TWO JOYSTICKS

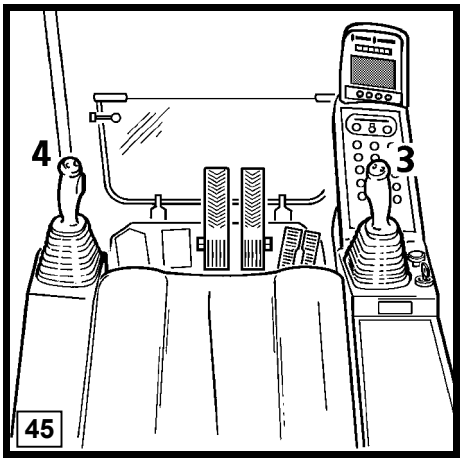

The left lever (Fig. 45, pos. 4) controls the stick and swing movements

The right lever (Fig 45, Pos. 3) controls the boom and bucket movements.

CONTROL OF THE SWING (left joystick)

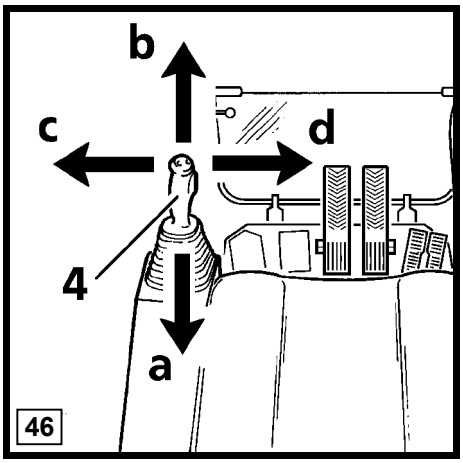

Moving the joystick (Fig. 46, pos. 4) to the left (c) causes the uppercarriage to turn to the left (Fig. 47).

Moving the joystick 4 to the right (d) causes the uppercarriage to turn to the right (Fig. 47).

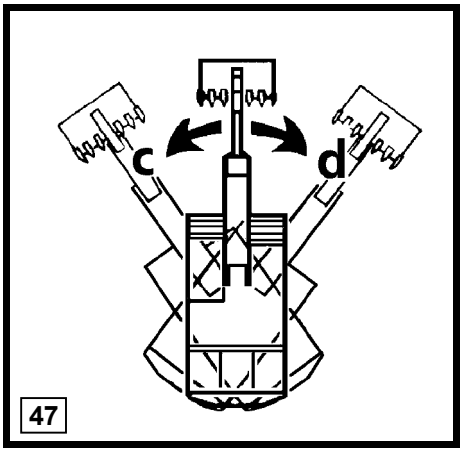

SWING BRAKE

1) **Hydraulic service brake:**
No deceleration of the uppercarriage is achieved by moving the swing joystick to neutral position.. By moving the joystick to the opposite direction, maximum hydraulic braking action is achieved..

2) **Mechanical parking brake:**
A multi disk swing brake, which is integrated in the swing gear, serves as an additional mechanical brake.
The brake is negatively acting, hydraulically actuated and serves as a holding or parking brake. .
When working, the swing can be locked in any position with this brake .
The operating mode of the mechanical brake is pre selected via the push button S17 (fig. 48)

- In one position the brake remains always applied.
- In the other position, the brake is in semiautomatic mode and is controlled via the rocker switch S57 (fig. 68) mounted to the right joystick lever:
  - with the rocker switch S57 tilted down, the brake is applied when the uppercarriage is at standstill, respectively it applies as soon as the uppercarriage speed gets lower than a limit value,
  - with the switch tilted up, the brake remains released.

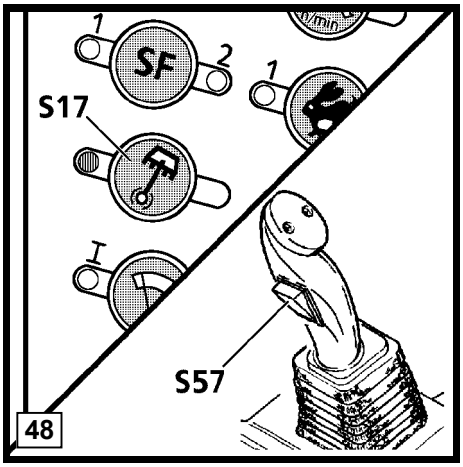

Notice:

The red control light in the button S17 lights up each time the brake is applied. If this light does not go out when the rocker switch S57 is tilted up, the button S17 must first be pushed to pre select the semiautomatic mode.

https://www.truck-manuals.net/

https://truckmanualshub.com/

CAUTION

The brake only applies when the uppercarriage is near standstill!
In order to stop the uppercarriage when working on a slope, tilt the switch S57 (fig. 48) down and reduce the uppercarriage speed by braking with joystick 4.
Move the joystick 4 back to "0" position only after the brake has applied.

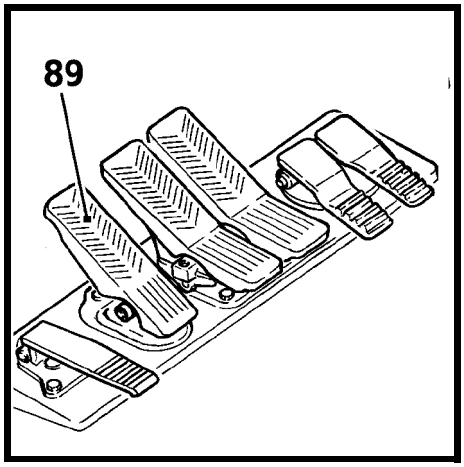

Fig. 49

Optional foot pedal for "positioning brake"

This pedal (Fig. 49, pos. 89) can be actuated progressively while working, this allowing a more sensitive deceleration or positioning of the uppercarriage (necessary as an example when working on a slope, lifting loads, …).

CAUTION

This pedal should only be used as a positioning and standstill brake, not to stop continuously the uppercarriage from maximum swing speed.

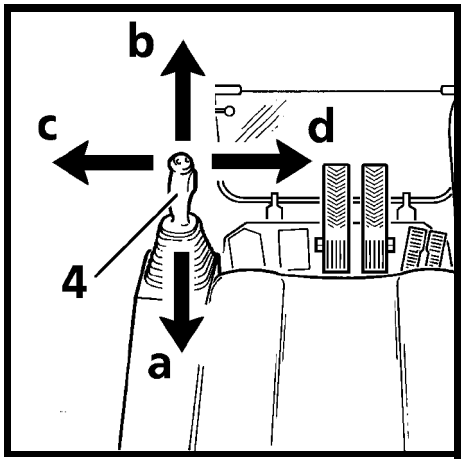

Fig. 50

Emergency Stop of the uppercarriage swing motion :

The swing brake can be applied independently of the uppercarriage RPM by pushing the button S17 (Fig. 48) in position "brake applied"

CAUTION

Perform this braking via button S17 only in emergency cases, since it causes fast abrasion of the brakes discs.

To check the swing brake :

Apply the swing brake via push button S17 (Fig. 48).

Then move the left joystick 4 (Fig. 50) to the right and then to the left to stop.

The brake is working properly if the uppercarriage does not move.

https://www.truck-manuals.net/

https://truckmanualshub.com/

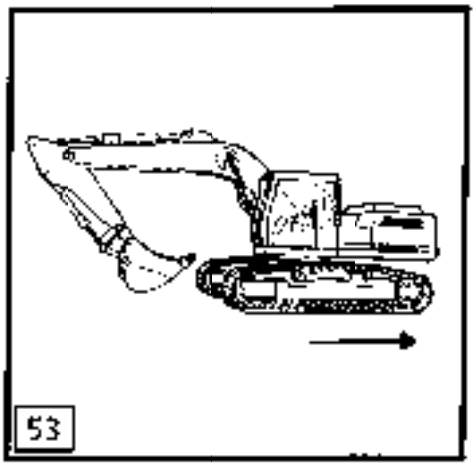

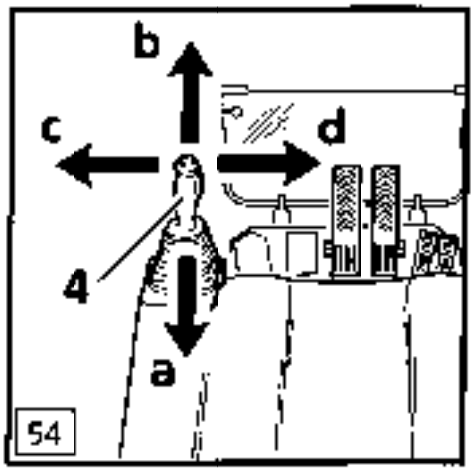

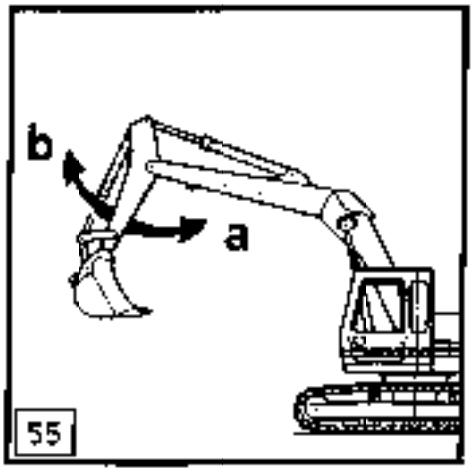

WORKING POSITION

When working in longtitudinal direction, the machine should be operated on the idlers with the sprockets behind (fig. 53).

NOTES ON MACHINE-FRIENDLY OPERATION WITH THE ATTACHMENT

Stop the swinging motion of the uppercariage when lowering the attachment into a ditch without striking the attachment on the ditch walls.

Inspect the machine for damage if the attachment has been swung into a wall or any other obstacles.

Applications in which the attachment is to be used to strike the material being extracted are not permitted, even when working in a longitudinal direction

Repeated strikes against an object leads to damage to the steel structures and machine components.

Please refer to your LIEBHERR dealer if special teeth for heavy-duty or special applications are required.

Do not attach too large bucket or bucket with side cutters or that are during operations with rocky material This would prolong the work cycles and may lead to damage to the bucket as well as further machine components.

With the 2x45° offset articulation, the offset position may only be employed if the working tool or the attachment does not touch the material.

Operation of the offset articulation to drill into the material is not permitted.

Do not lift the machine during operation. Should this happen, lower the machine slowly back to the ground

Do not let the machine fall heavily on the ground and do not hold it back with the hydraulics This would damage the machine.

ATTACHMENT CONTROL

CONTROL OF THE STICK CYLINDER
(left joystick 4 - fig. 54)

Pull joystick 4 backwards (a) to move the stick in, (fig. 55)

Push joystick 4 forward (b) to move the stick out

https://www.truck-manuals.net/

https://truckmanualshub.com/

CONTROL OF BOOM CYLINDER
(right joystick 3 - fig.57)

- Push joystick 3 forward (g) to lower the attachment (fig.58).
- Pull joystick 3 backward (h) to lift the attachment.

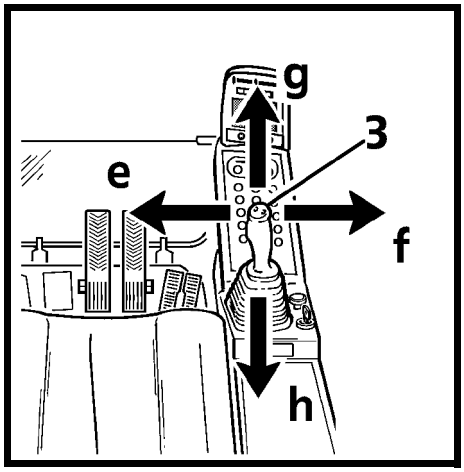

57

CONTROL OF THE BUCKET OR GRAPPLE CYLINDER
(right joystick 3 - fig. 57)

- Push joystick 3 to the left (e) to tilt the bucket in or close the grapple (fig. 58).
- Push joystick 3 to the right (f) to tilt the bucket out or open the grapple.

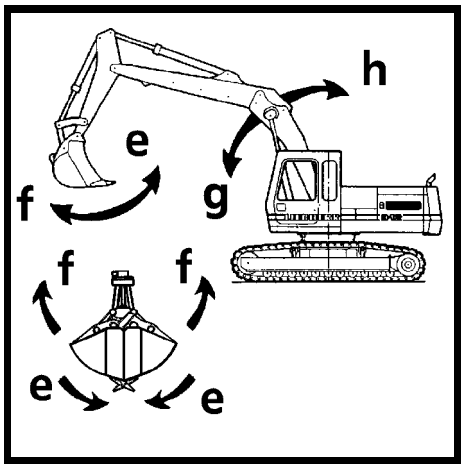

58

DANGER

Never allow anybody to guide the grapple by hand !

CONTROL OF A SPECIAL EQUIPMENT (TELESCOPIC STICK, PULLING DEVICE, ...)

The control of special equipments such as telescopic stick (fig. 59A), pulling device (fig. 59B), hydraulic adjustable boom, ... is achieved using the two pedals, 7c and 7d (fig. 61).

For special equipments with two hydraulic cylinders, the second cylinder is controlled via the pedals 7a and 7b (fig.61) of the right pilot control.

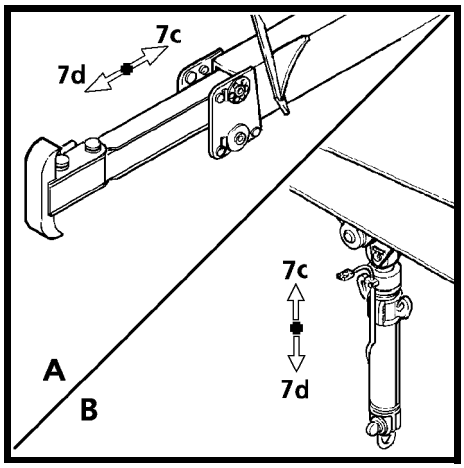

59

CAUTION

Auxiliary control units can have various functions. Always check their functions when starting up the machine..

CONTROL OF THE BOTTOM DUMP SHOVEL BUCKET
(optional equipment)

The bottom dump shovel bucket is moved via two pedals, 7 a and 7 b (fig. 61).

- Push pedal 7a to open the shovel bucket (fig. 60).
- Push pedal 7b to close the shovel bucket.

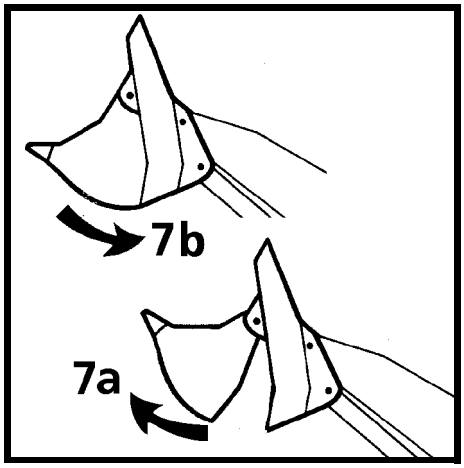

60

https://www.truck-manuals.net/

https://truckmanualshub.com/

CONTROL OF HYDRAULIC HAMMER
(optional equipment)

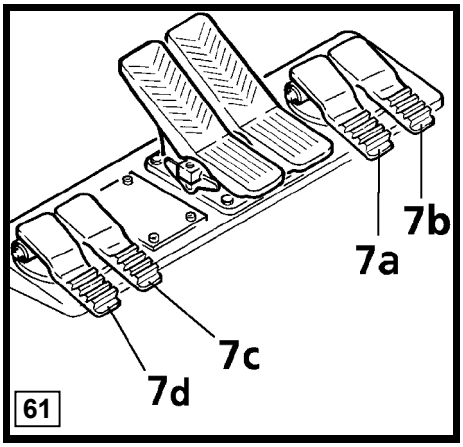

61

- The hydraulic hammer is actuated via the pedal 7d of the left pilot control (fig. 61).
- **Notice:**
  The operation of a hydraulic hammer requires the previous setting of the correct option which have been allocated to use of this hammer, using the menu "Set Option" of the display (fig. 62). Normally the designation appearing in the lower right corner of the screen must correspond to the definition of the installed hammer.
- **In case of a doubt, contact your supervisor to obtain this information.**

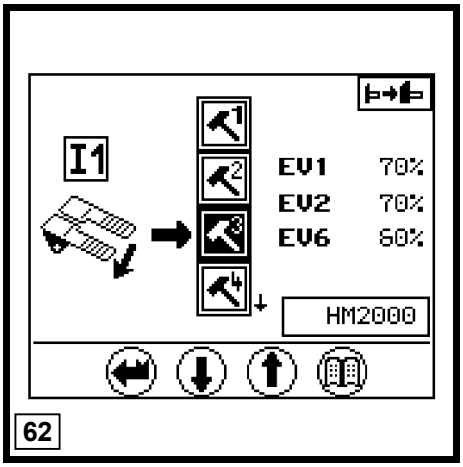

62

CAUTION

The choice of the option in the menu "set option" determines pressure and oil flow adjustment in the hydraulic circuit.

A wrong choice of the option could lead to damage or unsatisfactory operation of the additional equipment.

The choice of the option does neither have an influence upon the allocation of the pedals, nor lead, to a switching-off of the pedal function.

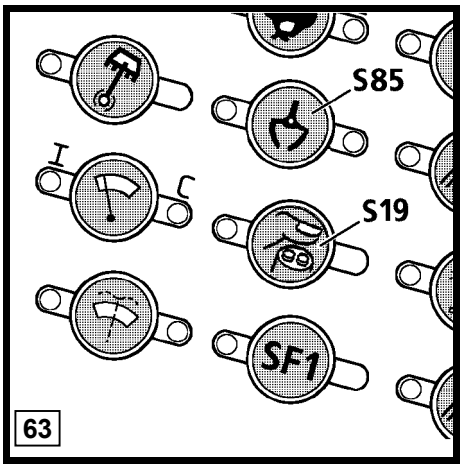

63

For operation with a hydraulic hammer:

- The hydraulic hammer must be selected with particular care. When using a hydraulic hammer not permitted by LIEBHERR, steel structures or the other machine components can become damaged.
- Before beginning breaking tasks, position the machine on firm and level ground..
- Use a hydraulic hammer designed exclusively for breaking stone, concrete and other breakable materials.
- Only operate the hydraulic hammer in the longitudinal direction of the machine and with the windshield closed or with a front protective grid.
- Ensure during hammer operation that no cylinder is entirely extended or retracted and that the stick is not in the vertical position.
- In order to avoid damages to the machine, try not to break stone or concrete while performing retraction and extension motions of the hydraulic hammer.
- Do not apply the hydraulic hammer uninterrupted for more than 15 seconds. at a time to the same place. Change the breaking point. Too long uninterrupted operation of the hydraulic hammer leads to an unnecessary overheating of the hydraulic oil.
- Do not use the drop force of the hydraulic hammer to break stone or other materials. Do not move obstacles with the hydraulic hammer. Misuse of this nature would damage both the hammer and the machine.
- Do not use the hydraulic hammer to lift objects.

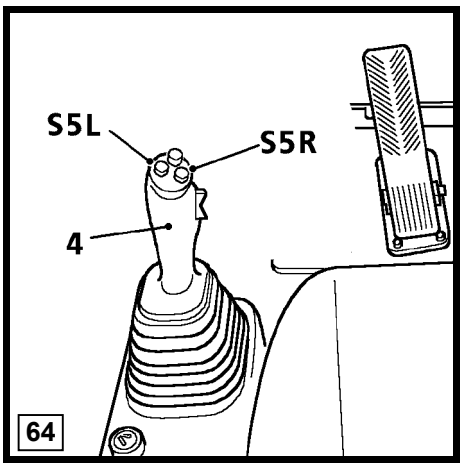

64

https://www.truck-manuals.net/

https://truckmanualshub.com/

CAUTION

SPECIAL CONTROLS ON US VERSION

On machines sold in North America, the controls for rotating device, lifting magnet and for float position differ from those described below. For US version controls, refer to page 7.01.

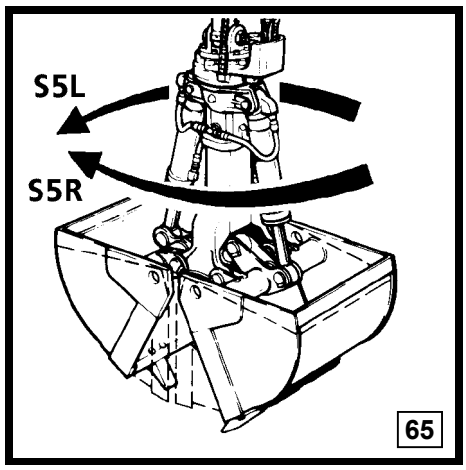

CONTROL OF A ROTATING DEVICE

An additional hydraulic circuit for rotating device operation is necessary to drive some specific equipments (such as rotating grapple, rotating bucket, rotating stick, quick change coupling, ...).

Depress the switch S19 (fig. 63) to make operative the control circuit of the added attachment.

The specific equipment with rotating device is then controlled via the both push buttons S5L and S5R in the left joystick handle 4 (fig. 64 and 65).

Example: Control of a rotating grapple

- If the right button S5R is pushed, the grapple will rotate clockwise.
- If the left button S5L is pushed, the grapple turns counter clockwise.
- The grapple rotates until the buttons are released.

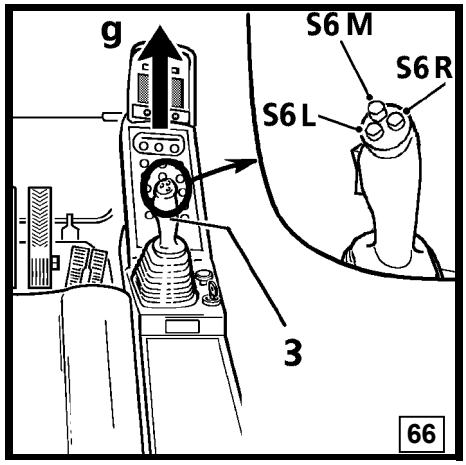

CONTROL OF A LIFTING MAGNET (optional equipment)

The control circuit for the lifting magnet as well the hydraulic driven generator are made alive while depressing the touch S46 on the rear control desk (control light in the touch S46 must be on).

The lifting magnet is energized and de-energized via the left push buttons S6L on the right joystick 3 (fig. 66).

COMBINATION OF JOYSTICK MOVEMENTS

A diagonal movement of the joystick combines the movements of the attachment functions.

This makes it possible for all attachment movements to be controlled at the same time.

The operator can do the following movements without any additional manipulations :

- When the swing movement is actuated, all working functions/movements are possible without affecting the swing movement.
- During travel, every attachment movement is possible, but the swing movement has priority. In this case, the travel movement is reduced.

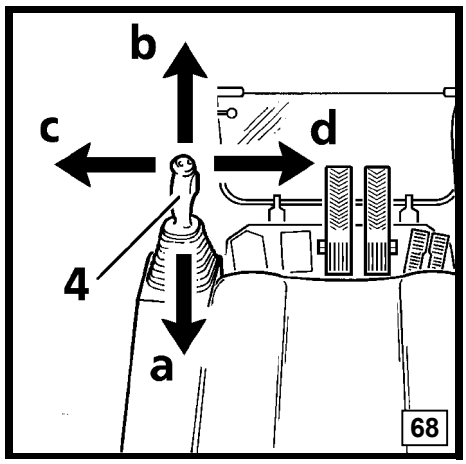

https://www.truck-manuals.net/

https://truckmanualshub.com/

TRANSPORTING THE EXCAVATOR

LOADING THE EXCAVATOR ONTO FLAT BED TRAILERS OR RAILWAY CARS

Use only suitable transporting devices and lifting tackle with sufficient load carrying capacity

Park the flat bed trailer on firm and level ground and block the cha in or wheels

If necessary. remove the attachments from the excavator for the du ration of the transport

When loading the machine on a flatbed trailer, be sure that the loading ramp incline is less than 30° and covered with wooden planksto prevent skidding.

Remove all mud, snow or ice from track components and wheels before moving up the ramp.

Before loading, secure the uppercarriage to the undercarriage with the lock pin (if lock pin is installed).

Carefully align the excavator with jhe loading ramp.

Attach the manual control lever to the foot pedals to obtain a more sensitive travel control (see page 4.11).

Have another person guide and signal you.

Have blocks or wedges ready to block the machine, if necessary. when you move the excavator up the loading rampto prevent itfrom rolling backwards.

Retract the attachment as far as possible and lower the attachment as close as possible to the loading surface and, very carefully, drive up the ramp and onto the railway car or flat bed trailer.

When the excavator is on the trailer, release the uppercarriage lock pin, turn the uppercarriage toward the rear and lower the attachment.

If the backhoe attachment is attached, tilt the stick and bucket in. Relock the uppercarriage (if lock pin is installed).

Carefully secure the uppercarriage and other parts with chains and blocks to the trailer to prevent any slippage or movement.

Relieve the pressure lines, remove the ignition key, raise the safety lever, close all doors and leave the machine.

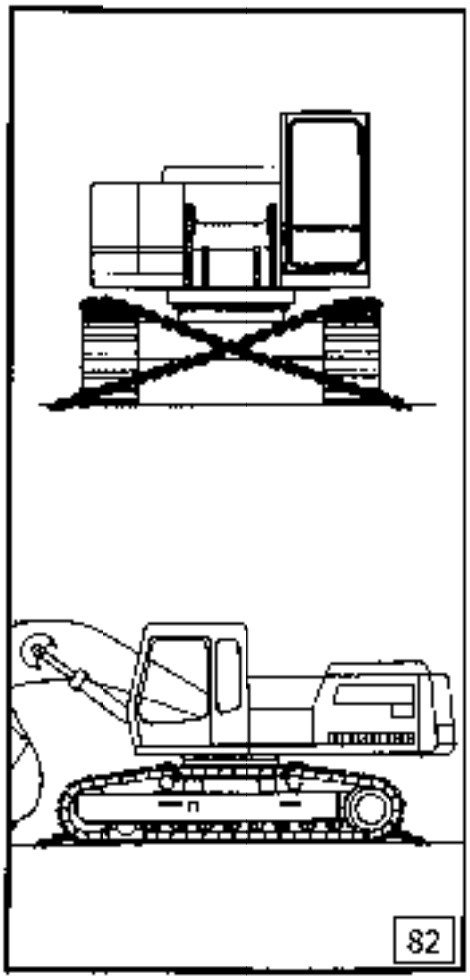

LOADING THE EXCAVATOR USING A CRANE

DANGER

Should the complete excavator be lifted with a crane (to load or discharg it from a ship or a railway car, ...) so we recommend the use of the LIEBHERR loading tools specialy worked out to perform this operation with the maximal safety (Fig. 84).

Following schedule indicates the order numbers for the loading tools, as well the necessary lifting forces (in daN) when using this tools.

	R 904	R 914	R 924	R 934	R 944	R 954
Order No	9756562	9756562	9756562	9366193	9366194	9758885
Force F1	10000	11000	11000	13500	18500	22000
Force F2	10500	14000	14000	18000	23000	28500

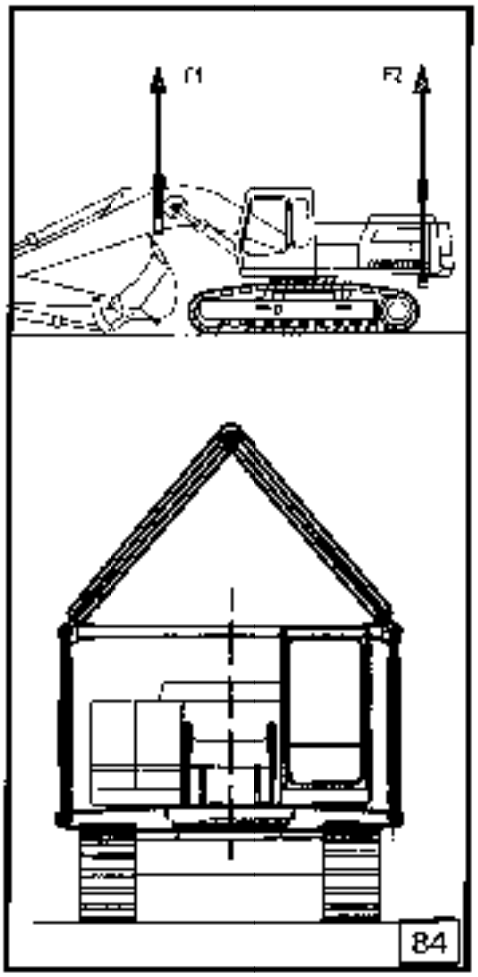

https://www.truck-manuals.net/

https://truckmanualshub.com/

Carefully check out the transport route. Make sure that width, height and weight allowances are within the limits.

Check that there is enough clearance underneath all bridges, underpasses, utility lines, and in tunnels.

During the unloading procedure, proceed with the same care and caution as during the loading procedure. Remove all chains and wedges. Start the engine as outlined in the Operation and Maintenance Manual. Carefully drive off the loading platform. Keep the attachment as close as possible to the ground level. Have another person guide and signal you.

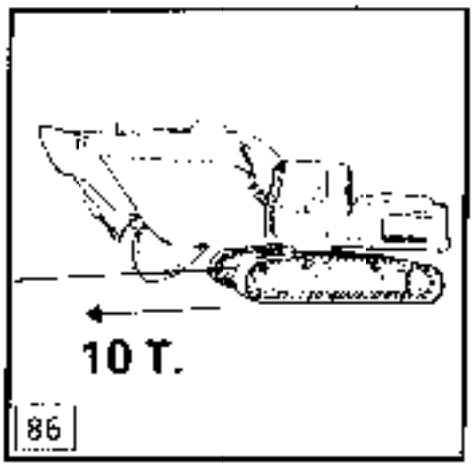

TOWING THE EXCAVATOR

The excavator should not be towed until absolutely necessary.
Towing is always the responsibility of the operator.

Be aware that any damages or accidents, which can occur when the excavator is towed, are never covered by warranty.

Tow the excavator only if absolutely necessary, for example to remove it for repairs from a dangerous job site.

Make sure that the cable or the towing rod are strong enough and are routed around center of the undercarriage or to the towing hook on the undercarriage, which is designated for this purpose (fig. 86)

This hook has a 10 ton towing capacity in direction of the center axle of the undercarriage.

CAUTION !
During towing, the disk brakes in the travel gears have to be released.

If necessary, consult a **LIEBHERR mechanic !**
After the towing procedure is completed, return the machine to its previous state.

⚠ DANGER

Never allow anyone to stand near the cable when pulling or towing the excavator.

Keep the cable tight and free of kinks.

Pull the cable slowly.

The cable could snap and break if it suddenly jerked.

https://www.truck-manuals.net/

https://truckmanualshub.com/

REMOVAL AND INSTALLATION OF ATTACHMENTS

GENERAL SAFETY GUIDELINES

- This manual does not include the description of the removal and installation of the gooseneck boom or of the shovel boom.
  The removal and installation of such parts has only to be done by qualified authorized persons.
  Removing the gooseneck boom or the shovel boom may cause a loss of stability of the machine. It must therefore always be checked if a previous removal of the counterweight (or of the additional counterweight if mounted) is necessary in order to maintain the stability with the uppercariage lenghtwise
  In case the removal of the boom is performed crosswise, or if the uppercariage must be turned after boom removal, the crosswise stability of the machine must be checked too.
- Before any repairs on the attachments, park the machine on flat and solid ground.
- Lock the uppercarriage with the locking pin before working on the attachments.
- Do not work underneath the attachments until they are safely lowered to ground level or supported by wooden supports. Never use metal on metal supports.
- Do not disconnect lines or hoses, or remove fittings, caps or covers before the attachment is lowered to the ground, the engine is turned off, the remaining pressures in the working circuits are released by actuating both joysticks, with the ignition key in contact position and with the safety lever tilted down, and the pressure in the hydraulic tank is released.
- Do not try to lift any attachments yourself. Make sure you always use an appropriate lifting device.
- Be informed about the weights of the attachment parts to be lifted before attempting to use a lifting device. The weights of the backhoe buckets are indicated in the technical data sheets at the begin of this manual. The weights of the sticks or grapples must be read on the nameplates of the concerned attachment parts.
- Never use damaged or insufficient wire ropes or slings. Always wear gloves when handling wire ropes.
- Never align bores with your fingers or hands. Use proper alignment tools when installing, changing or servicing attachments.
- During and after repairs, check and make sure that the pins are properly fastened, the hydraulic lines are properly mounted and tightened and that all fittings and connections are properly tightened.
- As soon as an attachment is removed and supported, close off any open lines to prevent contamination.
- Allow only authorized personnel in the vicinity of the excavator or supports.
- Be sure all lines and connections are reconnected and tightened after repairs are completed.

GUIDELINES TO REMOVE AND INSTALL PINS

- If possible, always use an hydraulic press to remove attachment pins.
- If you have to knock out pins with a hammer, use a mandrel and a guide, which should be held by another mechanic
- To install a pin, attach the drive screw supplied in your tool kit, to the bore hole of the pin and then hit this drive screw to drive in the pin.
- For the installation of pins, which are fastened with castle nuts and cotter pins, drive in the pin first, then screw on the castle nut by hand until it touches and then turn it only until the cotter pin can be inserted.
- The attachment pins must be checked thoroughly for good condition and reuse possibility (corrosion marks, chrome coating coming off in splinters, ..).
- Before reinstall of a pin carefully clean the bores and contact faces of the attachment parts.
  Coat the pins and the sealing rings with grease (grease Optimol white) before reinstalling.

https://www.truck-manuals.net/

https://truckmanualshub.com/

REMOVAL AND INSTALLATION OF A DIGGING TOOL TO THE STICK

NOTICE After installation of a new digging tool, the restrictor check valves 222 and 232 for stick, respect. bucket tilt cylinders must be eventually readjusted so to have the correct velocity of the working attachment (due to weight differences of the digging tools).
If necessary, consult a LIEBHERR mechanic.

In particular on machines which are delivered without digging tool or grapple, this restrictor check valves must be (if mounted) adjusted after installation of the digging tool, so to avoid uneven or jerky movements of the attachment parts

https://www.truck-manuals.net/

https://truckmanualshub.com/

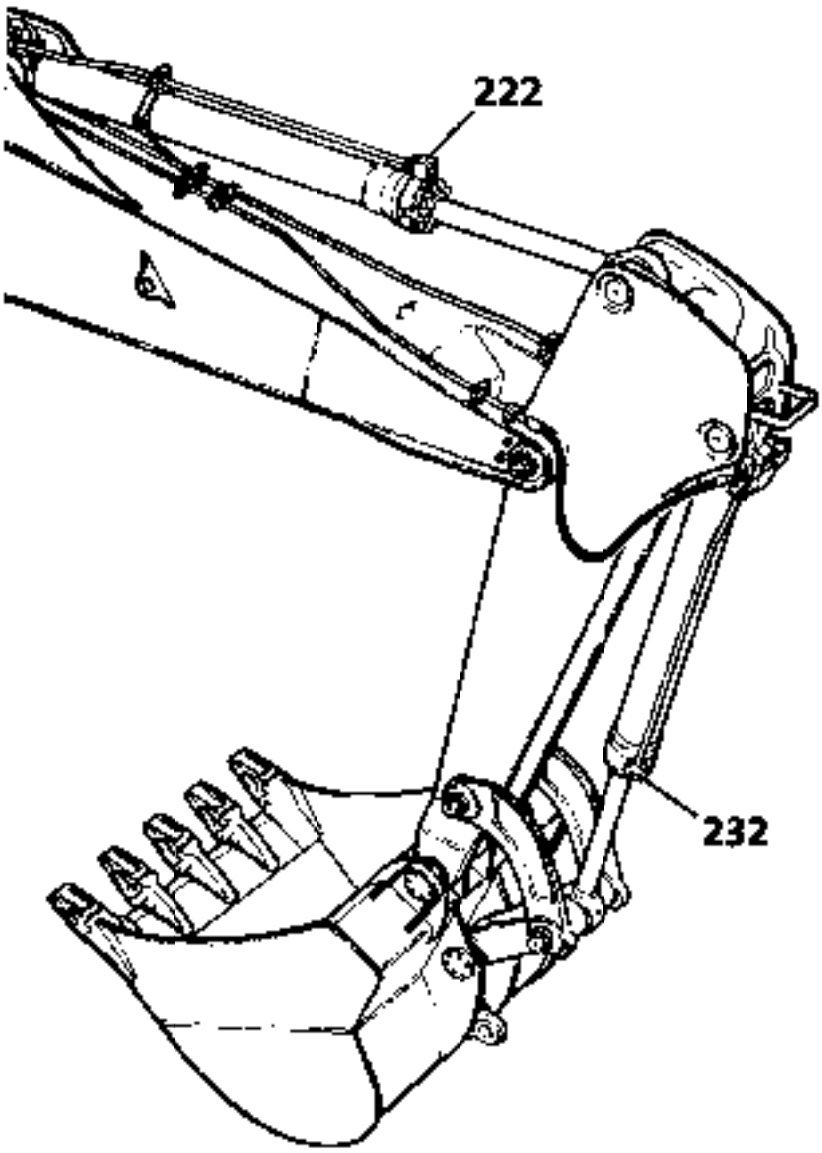

https://www.truck-manuals.net/

https://truckmanualshub.com/

REMOVAL

Lower the attachment until the flat part of the bucket rests on the ground.

Remove the covers 5 and 6.

Remove the protection rings 8 of all the bearing points and draw the O-rings 9 up onto the bushing 1.1 on the bucket side.

Drive out the pins 3 and 4.

If necessary, lift the attachment slightly to remove pin 4.

Take off the O-rings 9 and if necessary replace them

INSTALLATION

Position the bucket so the flat part of the bucket rests on the ground.

Draw the O-rings 9 up onto the bushing 1.1 of the digging bucket, as well on bearings bucket to stick as on bearings bucket to connector bracket.

Start the engine and move the attachments until the stick and bucket bore holes A align.

Insert pin 4 and reinstall the covers 6 with O-rings.

Slowly extend the stick cylinder until the bore of the connector bracket 7 is exactly between bore holes B.

Insert pin 3 and reinstall the covers 5 with O-rings.

Slip the O-rings 9 laterally until they are in the grooves between bushings 1.1 and 2.1 (see detail D) and install the two piece protection rings 8.

Lubricate all bearings of pins 3 and 4 until clean grease emerges.

https://www.truck-manuals.net/

https://truckmanualshub.com/

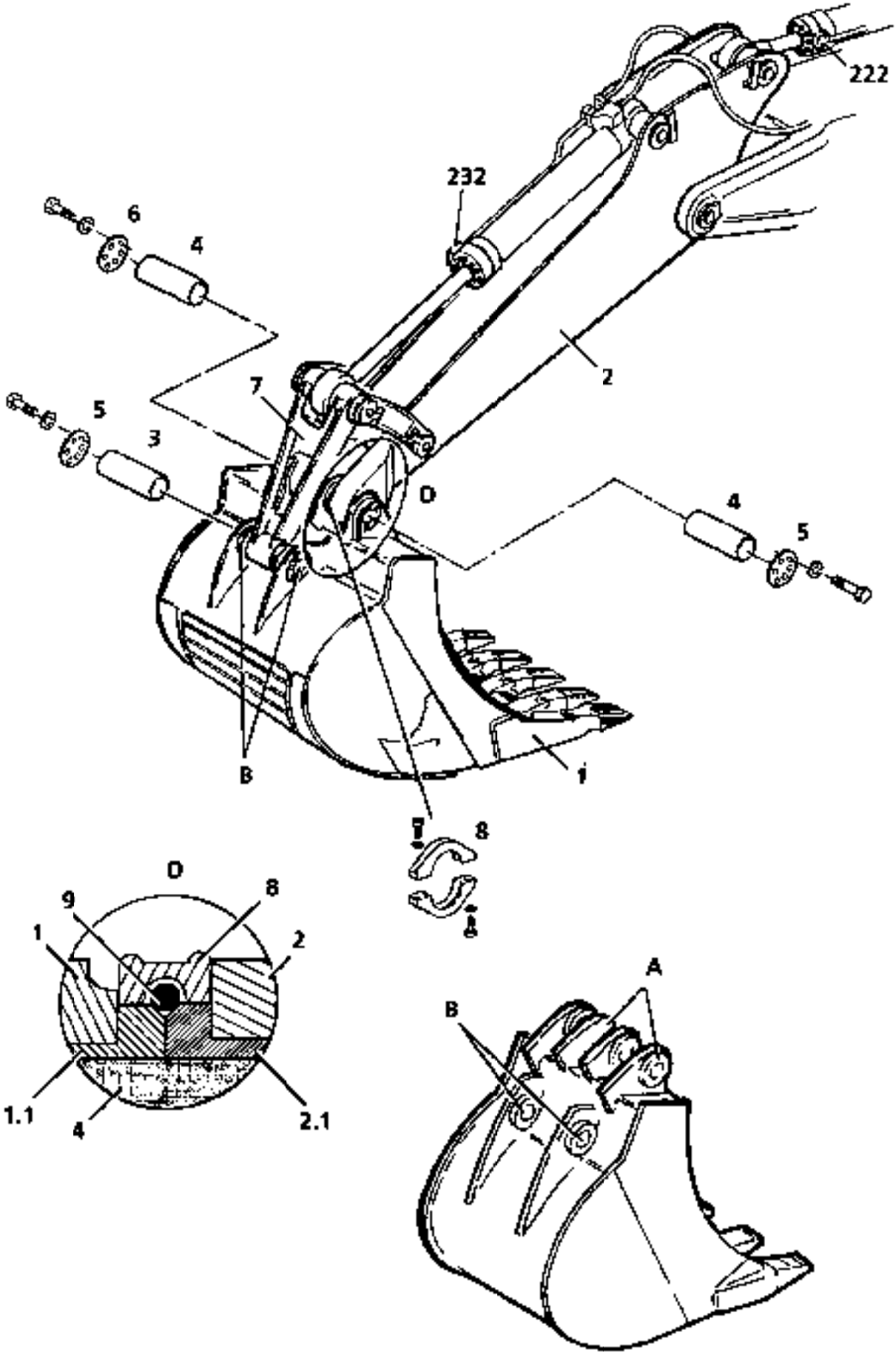

https://www.truck-manuals.net/

https://truckmanualshub.com/

INSTALLATION AND REMOVAL OF GRAPPLE TO STICK

INSTALLATION

Before installation of a two shell or multi shell grapple, make sure that all necessary hydraulic lines are installed on the stick.

If necessary, remove the bucket as described on page 4.24.

Retract the bucket cylinder all the way and turn the engine off

Push the bracket carrier 8 between connector bracket 7 and push in right lever 9, secure with cotter pin 10

Position the grapple with shells open. Draw the O-rings 9 laterally up onto the bushing 1.1 on the grapple 1.

Start the engine and move the attachment until the lower bore holes of the stick fits between the bore holes of the grapple suspension.

⚠ DANGER

If another person is used as a guide during this installation procedure, the operator must follow the signals given by this person.

Insert pin 4 and reinstall the covers 5 or the plate 6

Slip the O-rings 9 laterally until they are in the grooves between bushings 1.1 and 2.1 (see detail D) and install the two piece protection rings 8.

Connect the hydraulic hoses 11 and 12 for the shell cylinder to the hydraulic lines of the bucket cylinder circuit.

For grapple with hydraulic rotator, hoses 13 and 14 must be connected to the hydraulic lines for added functions on the stick.

Grapple operation:

Move the shut off lever on block 15 to position A to cut off the oil flow to the piston bottom side of the bucket cylinder.

Lubricate the different lube points on pin 4 and on the grapple mechanism.

Perform all attachment functions several times without load (open and close bucket, turn the grapple in both directions) to release air from the hydraulic system.

REMOVAL

Position the grapple with shells open on flat ground surface.

Turn the engine off, turn the ignition key to contact position and tilt the safety lever down, move the right joystick (for tilt cylinder) to the left and right, and release pressure in the hydraulic tank.

For grapple with hydraulic rotator, push also both buttons on the joystick to relieve the pressure in the swing circuit.

Disconnect the two hoses 11 and 12, and if present, the two hoses 13 and 14 from hydraulic lines on stick, and immediately close off open lines to prevent contamination.

Support the grapple properly

Remove the covers 5 or the plate 6.

Remove the protection rings 8 of all the bearing points and draw the O-rings 9 up onto the bushing 1.1 on the grapple.

Drive out the pin 4.

If necessary, start the engine and lift the attachment slightly to remove the pin 4.

To put the bucket cylinder back in operation, move the shut off lever in block 15 again to position B.

https://www.truck-manuals.net/

https://truckmanualshub.com/

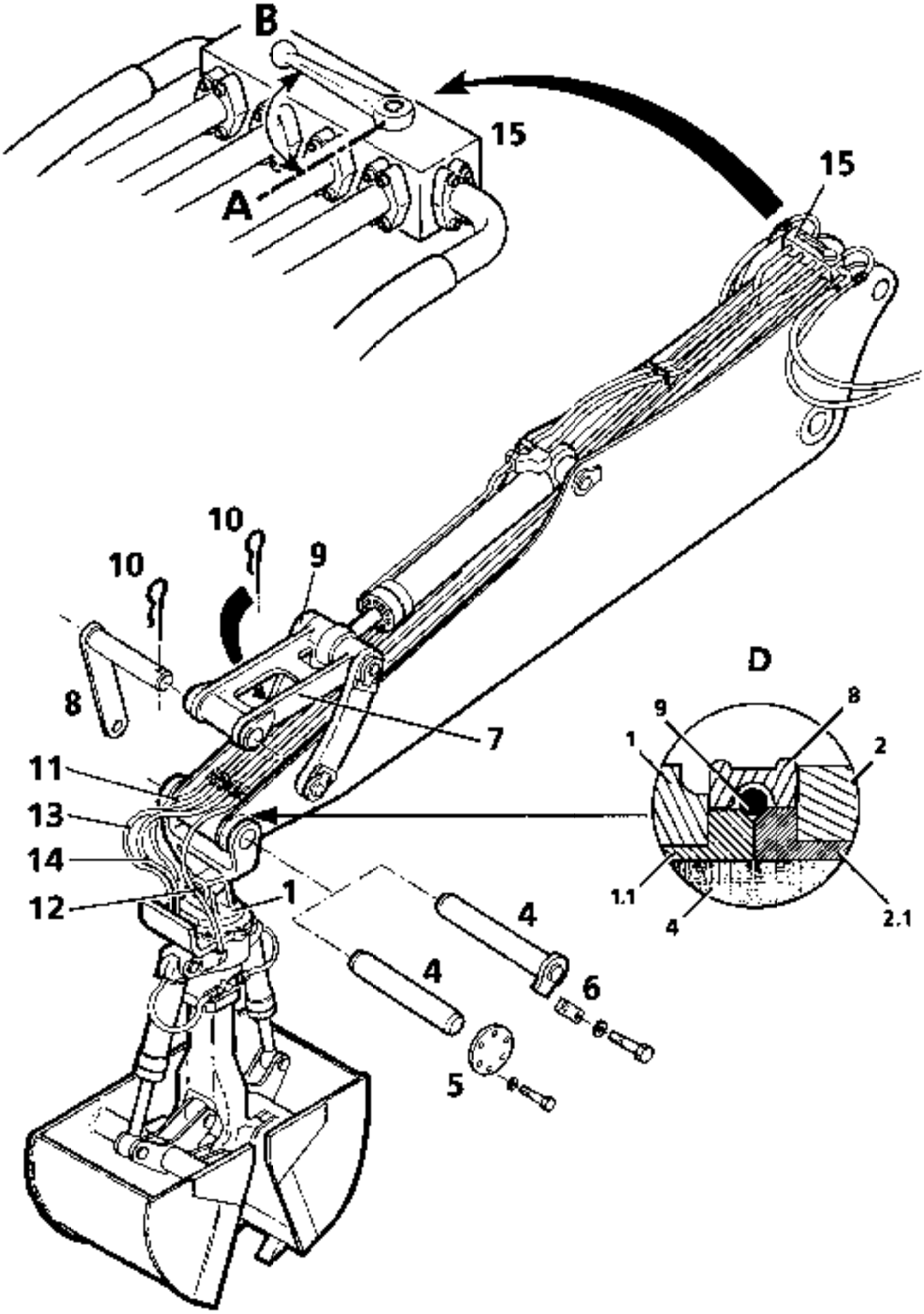

https://www.truck-manuals.net/

https://truckmanualshub.com/

REMOVAL AND INSTALLATION OF STICK TO BOOM

NOTICE: After installation of a new stick and digging bucket combination, the restrictor check valve 222 for stick cylinder must be eventually readjusted so to have the correct velocity of the working attachment (due to weight differences of the attachment parts).
If necessary, consult a LIEBHERR mechanic.

REMOVAL OF STICK (or stick with bucket)

Fig. A :

If necessary, remove the bucket as described on page 4.24.

Retract the bucket and stick cylinder all the way, position the attachment on the ground.

If necessary, tie the connector bracket 7 to the bucket cylinder so it cannot slip out.

Turn the engine off, release the pressure in bucket and stick cylinder circuit by turning the ignition key to contact position, tilting the safety lever down, and moving the right joystick to the left and right, the left joystick forward and backward.

Release the pressure in the hydraulic tank.

Attach the lower part of the stick cylinder 16 to the lift.

Position a wooden block under the stick cylinder, remove the plate of pin 17, drive the pin out and position the stick cylinder on wooden blocks

Fig. B :

Position the lifting device 19 between bearing of stick cylinder, insert pin 17 and secure it

Attach the stick to this lifting device 19 and to the top of the bucket cylinder (or to the hook of the bucket, if the stick is removed with the bucket in place), then to the lift hook

Disconnect both hoses 21 from the tilt cylinder and close them off to prevent contamination.

Remove the cotter pin and the castle nut on pin 20 and drive the pin out If necessary, start the engine and slightly lift the attachment to reduce the weight of the boom on pin 20 .

Raise the stick (or the stick with the bucket) with a lift, pull the stick from the boom and position it on the ground, supported by wooden blocks and remove the lift.

INSTALLATION OF STICK (or stick with bucket)

Fig. B :

Position the lifting device 19 between bearings of stick cylinder, insert pin 17 and secure it.

Attach the stick to this lifting device 19 and to the top of the bucket cylinder (or to the hook of the bucket, if the stick is removed with the bucket in place), then to the lift hook

Raise the stick (or the stick with the bucket) with a lift inside the bore holes of the boom so that the pin 20 can be inserted. Fix the castle nut and the cotter pin to the pin 20

Remove the lifting device 19.

Reconnect both hoses 21 to the tilt cylinder.

Fig. A :

Attach the lower part of the stick cylinder 16 to the lift.

Slightly lift the cylinder and if necessary run engine to extend or retract cylinder so that cylinder head fits between the bore holes of the stick
Insert the pin 17 and secure it with the plate.

If necessary, install the bucket as described on page 4.24.

Lubricate the different lube points of the link shafts stick to boom and bucket to stick.

Lift the attachment and tilt the bucket out and in several times to release the air from the hydraulic system.

https://www.truck-manuals.net/

https://truckmanualshub.com/

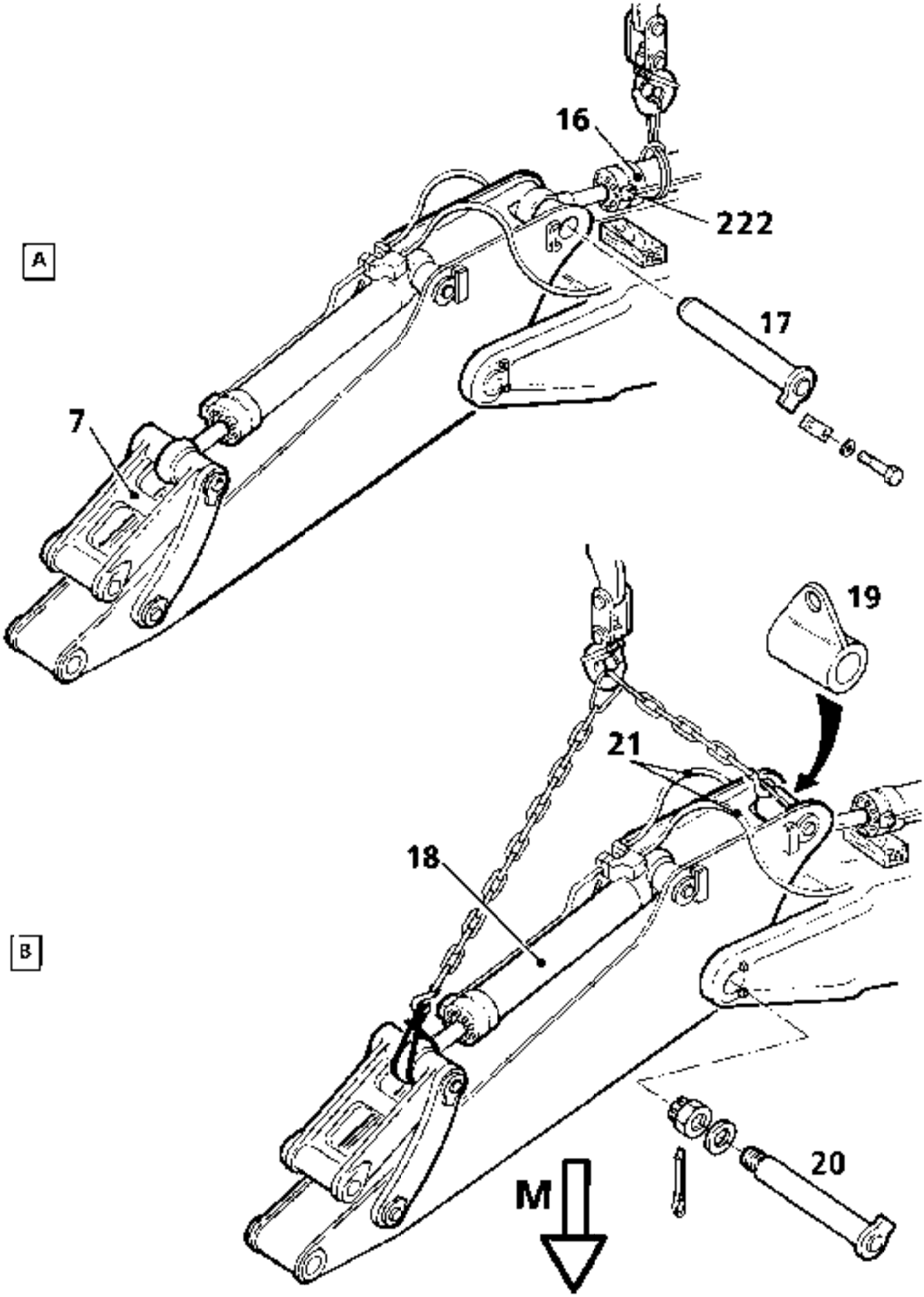

https://www.truck-manuals.net/

https://truckmanualshub.com/

5. LUBRICATION

GENERAL SAFETY INFORMATION

It is very important that all guidelines describing lubrication, checking the oil level, replacing the oil are strictly adhered to!

This maintenance increases the life of the excavator and improves its dependability.

It is especially important to change the oil regularly and in the intervals noted on the maintenance schedule! Only use specified lubricants and oils!

CAUTION

When checking or replacing the oil, observe the following :

- **Park the machine on level ground, if not otherwise stated, and turn the engine off.**
- **When working in the engine area, make sure the covers and side doors are secured.**
- **Only add fuel when the engine is turned off.**
- **Never smoke or allow an open flame in refuelling areas.**
- **Cleanliness is especially important when changing engine, gear or hydraulic oil.**

  Before removing fittings or plugs, make sure the surrounding areas are cleaned.

  When changing the oil, clean the fill or drain plugs.
- **The machine's zone of operation must always remain clear of lubricating materials to prevent the personnel working in the area from slipping. Be sure to clean excess oil or grease from the machine, especially where the various bearings are connected to the central lubrication devices.**

IMPORTANT!

Be sure to drain oil into a suitable container and dispose of oil and filter cartridges properly.

https://www.truck-manuals.net/

LUBRICANTS AND FUEL CHART R 954 C LITRONIC

COMPONENTS	SYMBOLS	VISCOSITY SAE DIN 51 512	SPECIFICATIONS	QUANTITIES
DIESEL ENGINE				
- Lubricant		SAE 15W-30 SAE 15W-40 SAE 10W-40 SAE 10W-30 SAE 5W-40 °C -30 -20 -10 0 +10 +20 +30 +40 +50 °F -22 -4 +14 +32 +50 +69 +86 +104 +122	**Below –25°C (-13°F) preheat the engine before starting** **API/: CI-4, CH-4**	43 l. 11.3 USgal.
- Fuel			**Use only Diesel fuels with a sulphur content of less than 0,5 %.**	706 l. 186 USgal.
- Coolant			**Ethylen glycol based antifreeze and anticorrosive mixture** **% of antifreeze:** 45% 50% 60% **Coolant protected to:** °C -40 -30 -20 -10 0 °F -40 -22 -4 +14 +32 See recommendations concerning engine coolant on page 5.6.	81 l. 21.3 USgal.
HYDRAULIC SYSTEM			SAE 10W SAE 20W-20 SAE 30W °C -40 -30 -20 -10 0 +10 +20 +30 +40 +50 °F -40 -22 -4 14 32 50 69 86 104 122 SAE 15W-40 SAE 10W-40 SAE 10W-30 **Warming up the hydraulic system** ■ **1. For temperatures 18°F (10°C) below the lower limits :** Run engine at half speed. Warm up the hydraulic system by fully actuating hydraulic cylinders and motors for short periods. Continue to warm up during about 10 minutes or until operating temperature is reached. **2. For temperatures below the limits listed under 1 :** Preheat hydraulic oil in the tank before starting the engine.	570 l. 150 USgal. In hydraulic tank 800 l. 211 USgal. In whole circuit

https://www.truck-manuals.net/

https://truckmanualshub.com/

LUBRICANTS AND FUEL CHART R 954 C Litronic

COMPONENTS	SYMBOLS	VISCOSITY	SPECIFICATIONS	QUANTITIES
SWING GEAR	1	1) With swing brake only used as a parking brake SAE 90 or SAE 80W90 2) With swing brake also used as a service brake (Actuated via a foot pedal) SAE 90LS	API GL-5 and MIL-L-2105 B, C or D API GL-5 and MIL-L-2104 B, C or D MIL-L-2105 B	10.5 l. 2.8 US gal
TRAVEL GEAR	2	SAE 90 or SAE 80W90	API GL-5 and MIL-L-2105 B, C or D	2 × 9.5 l. 2×2.5 US gal
SPLITTERBOX	3	SAE 90 or SAE 80W90	API GL-5 and MIL-L-2105 B, C or D	10.5 l. 2.8 Us gal
GENERAL LUBRICATIÓN POINTS Swing ring Attachment bearings, Track tensioner,,…	KP 2k	CONSISTENCY 2 NL GI N°2 Grade	MULTUPURPOSE GREASE KP2k or EP2 (Extreme pressure N°2 Grade)	
Hinges, couplings, locks			Engine oil	
Rubber seal on doors and covers			Silicon Spray or talcum	
REFRIGERATING AGENT FOR AIR CONDITIONER			R 134a	1.9 kg (4.5 lbs.)
REFRIGERATOR OIL IN AIR CONDITIONER COMPRESSOR			PAG SP 20 (ELF)	0,21 l. (5 oz.)
WINDSHIELD WASHER SYSTEM			Commercial Windshield washer fluid or denatured alcohol	5.0 l. 1.3 Us gal

https://www.truck-manuals.net/

https://truckmanualshub.com/

LUBRICANTS AND FUEL SPECIFICATIONS

NOTES ON LUBRICANT AND OPERATING MATERIALS CHART AND ON LUBRICATION SCHEDULE

The amounts indicated on the lubricant and operating materials chart and on the lubrication schedule located in the operator's cab are guidelines.

Check level in appropriate aggregate after every oil change or refill.

1) DIESEL ENGINE LUBE OIL:

Lube oil quality

The lube oil guidelines for Liebherr-Diesel engines are based on the following specifications and guidelines:

API - classification: CI-4, CH-4
(American Petroleum Institute)

ACEA - classification: E4, E5
(Association des Constructeurs Européens de l'Automobile).

Lube oil quality viscosity

The lube oil viscosity must be selected in accordance with the SAE- classification (Society of Automotive Engineers).

The ambient temperature is definitive for the correct selection of the SAE class.
The SAE class of the Diesel lube oil can be selected using the graph on page 5.2.

Notice:

- Too high a viscosity can lead to starting difficulties, and too low a viscosity could jeopardise the lubricating efficiency.
- The selection of the SAE classification gives no indication of the quality of the lube oil.

For ambient temperatures of –20 °C / 4 °F to +45 °C / 113 °F the following Diesel engine oil is recommended

LIEBHERR Diesel engine oil– **Identification Nb 8610049** (20 litre drum)
Specification ACEA 4 - SAE 10W-40

Intervals for lube oil and lube oil filter changes

- First oil and filter change at 500 operating hours if first filling with oil according to quality E4
- Further filter changes every 500 operating hours
- Further oil change depending on climate zone, sulphur content in fuel and oil quality according to the chart below.
- If indicated operating hours are not reached within one year, change engine oil and filter at least once a year.

Oil change intervals for turbocharged engines (in operating hours)

Ambient temperature	Sulphur content in fuel	Oil Quality	
		CI-4, CH-4	E4, E5
≥ - 10°C	≤ 0,5 %	250 h	500 h
	> 0,5 %	125 h	250 h
< - 10°C	≤ 0,5 %	125 h	250 h
	> 0,5 %		125 h

https://www.truck-manuals.net/

https://truckmanualshub.com/

2) DIESEL FUELS:

The Diesel fuels must comply with the minimum requirements of the fuel specifications prescribed as follows.

Authorised fuel specifications:

- **DIN EN 590**
- **ASTM D 975-(89a) 1D and 2D**

Further fuel specifications only upon consultation with the Diesel Engine Development Department of LIEBHERR Machines Bulle S.A.

Sulphur content in the Diesel fuel

In DIN EN 590, a max. 350 mg/kg = max. 0.035 weight.% sulphur content is permissible.

"Low-sulphur" Diesel fuels featuring a sulphur content of below / less than 0.05 weight% are only applicable if lubricity can be guaranteed with the admixture of additives. The Diesel fuel lubricating proficiency must be a max.460 µm in accordance with the HFRR (60) test. [lubricity corrected "wear scar diameter" (1.4) at 60°C]

For Diesel fuels featuring a sulphur content above / more than 0.5 weight.%, the oil-change intervals are to be halved.

Diesel fuels featuring a sulphur content above / more than 1 weight% are not permissible.

Note:

In accordance with the Diesel engine lube-oil quality an authorisation can be granted!

Fuel standard ASTM D 975 does not stipulate that the fuels must pass a fuel-lubricity test. A written confirmation of the fuel supplier must be requested. Any additions should be undertaken by the supplier as he is responsible for the quality of the fuel. The addition of secondary lubricity-additives by the customer is not recommended.

Cetane number

A cetane number of at least 45 is required for fuels in accordance with ASTM D975. A cetane number above 50 is preferable, especially with temperatures below 0°C or 32°F.

Diesel fuel at low temperatures (winter operation)

Diesel fuel precipitates paraffin crystals as the temperature drops. This increases flow-resistance in the fuel filter to such an extent that a sufficient supply of fuel to the diesel engine can no longer be guaranteed.

For Diesel fuels complying with the DIN EN 590, in moderate climates, the cold-flow properties are guaranteed up to:
0°C from 15.04. to 30.09.
-10°C from 01.10. to 15.11.and from 1.3. to 14.04.
-20°C from 16.11. to 29.02.

If the cold-flow properties of the Diesel fuel is insufficient, or with even lower ambient temperatures than –20°C, we recommend that a fuel filter heating be used.

CAUTION

- **The mixing, even in low quantity, of regular gasoline, of kerosene, or of other available flow improvers in order to prevent operating problems at low temperatures is not authorized.**
- **Such an admixture is not compatible with the high pressure fuel injection system of your Diesel engine and would lead to engine troubles due to insufficient lubricity of the fuel.**

Further authorised Diesel fuels:

Diesel fuel in accordance with DIN EN 590 and with up to 5 % vol. FAME are also authorised.

https://www.truck-manuals.net/

3) ENGINE COOLANT - Specifications for anticorrosion and antifreeze protection

Using a mixture of antifreeze and anticorrosion with "DCA 4" anticorrosion additive.

To assure the protection from corrosion of the cooling system, the coolant must contain at least 50% corrosion / antifreeze mixture all year round. This protects the cooling system to about - 35° C (- 33° F).

When fluid is added to the coolant mixture, it must be assured that the mixture maintains a 50% antifreeze content.

Caution : The percentage of antifreeze should not exceed 60 % . A higher concentration would lead to reduced antifreeze and cooling properties.

In addition, the cooling system must contain DCA4 (DCA = Diesel Coolant Additive) from FLEETGUARD. The prescribed concentration is from 0.3 to 0.8 DCA units per liter of coolant (1.2 to 3.0 units per US Gallon).

The coolant must be changed every 2 years. Before adding new coolant, check the circuit for cleanness and if necessary flush it with water.

Using a mixture of water and DCA4 (without antifreeze and anticorrosion)

In certain circumstances, and if ambient temperatures are constantly above the freezing point, for instances in tropical regions, and if there are no corrosion or antifreeze fluids available, then a mixture of water and DCA4 additives may be used.

To maintain sufficient anticorrosion properties however, the DCA4 concentration of the coolant must in this case be about doubled in comparison with the one prescribed when using a mixture also containing antifreeze and anticorrosion, it equals a concentration from 0.6 to 1.6 DCA units per liter of coolant (2.4 to 6.0 units per US Gallon) .

Important !
If employing a mixture consisting only of water and DCA4 additives :

- **the use of coolant refiners (corrosion protective oils) is not authorized,**
- **the coolant change interval must be reduced to once a year.**

Checking and maintaining the right DCA4 concentration in the cooling circuit

To check the DCA4 concentration, we recommend the use of the test kit CC 2602 M from FLEETGUARD (LIEBHERR order No 5608459).

The DCA concentration has to be checked every 500 working hours, after each important coolant make up, and at regular intervals if smaller coolant quantities are refilled frequently.

If the concentration is too low, or when changing the coolant in the system, the necessary DCA4 units must be added to the system in liquid form (see schedule).

The LIEBHERR order number for a 0,5 liter can containing 5 DCA4 units is 7363898..

Cooling system capacity (liter / US. Gallons)	Quantity of DCA4 liquid(1)	
	0,5 liter cans	DCA4 units
24 - 39 / 6.3-10.4	3	15
40 - 59 / 10.5-15.7	4	20
60 - 79 / 15.8-20.9	5	25
80 - 115 / 21.0-30.4	8	40

(1) For use with a mixture containing 50% antifreeze and anticorrosion

Fresh water guidelines:

To mix the coolant fluid, only clean, preferably soft water should be used. Often, but not always, regular drinking water can be used. Sea water, brackish waters, sole water or industrial waste water may not be used.

Fresh water quality

Sum of alkalies (water hardness)	0,6 to 2,7 mmol/l (3 to 15°d) *
ph value at 20° C (68° F)	6,5 to 8,0
Chloride - ion content	max. 80 mg/l
Sulfate - ion content	max. 80 mg/l

* 1° dGH (total hardness - germany)
= 1,2° (englisch hardness)
= 17.9 ppm (US hardness)

https://www.truck-manuals.net/

https://truckmanualshub.com/

The following corrosion and antifreeze fluids may be used:

Approved anti-corrosion / antifreeze fluid (concentrate, undiluted)

Brand	Manufacturer	Country
Agip Antifreeze Plus	Agip Petrol S.p.A., Rom	I
Agip Langzeit-Frostschutz	Autol-Werke GmbH, Würzburg	D
Antigel DB 486	Sotragal S.A., St. Priest	F
Aral Kühlerfrostschutz	Aral AG, Bochum	D
Avia Frostschutz APN (G48-00)	Deutsche Avia-Mineralöl GmbH, München	D
BP Antifrost X 2270 A	Deutsche BP AG, Hamburg	D
BP Napgel C 2270 / 1	BP Chemicals LTD., London	GB
Caltex Engine Coolant DB	Caltex UK Ltd, London	GB
Caltex Extended Life Coolant	Caltex UK Ltd, London	GB
Castrol Anti-Freeze O	Deutsche Castrol Vertriebs GmbH, Hamburg	D
Century F.L. Anti-Freeze	Century Oils, Hanley, Stoke-on-Tent	GB
Chevron DEX-COOL Extended Life Anti-Freeze /Coolant	Chevron Texaco	CA USA
DEUTZ Kühlschutzmittel 0101 1490	Deutz Service International GmbH, Köln	D
Esso Kühlerfrostschutz	Esso AG, Hamburg	D
Fricofin	Fuchs Mineralölwerke GmbH, Mannheim	D
Frostschutz Motorex (G48-00)	Bucher & Cie, Langenthal	CH
Frostschutz 500	Mobil Oil AG, Hamburg	D
Glacelf Auto Supra	Total Nederland N.V., Den Haag	NL
Glycoshell AF 405	Shell Deutschland GmbH, Hamburg	D
Glycoshell N	Shell Deutschland GmbH, Hamburg	D
Glysantin (G 48-00)	BASF AG, Ludwigshafen	D
Havoline XLC	Arteco, Gent	B
Havoline DEX-COOL Extended Life Anti-Freeze/ Coolant	Chevron Texaco, San Ramon,	CA USA
Igol Antigel Type DB	Igol France, Paris	F
Labo FP 100	Labo Industrie, Nanterre	F
Motul Anti-Freeze	Motul SA, Aubervilliers	F
OMV Kühlerfrostschutzmittel	OMV AG, Schwechat	A
Organifreeze	Total Deutschland GmbH, Düsseldorf	D
OZO Frostschutz S	Total Deutschland GmbH, Düsseldorf	D
Total Antigel S-MB 486	Total Deutschland GmbH, Düsseldorf	D
Total Frostfrei	Total Deutschland GmbH, Düsseldorf	D
Veedol Anti-Freeze O	Deutsche Veedol GmbH, Düsseldorf	D
Wintershall Kühlerschutz	Wintershall Mineralöl GmbH, Düsseldorf	D

Approved anti-corrosion / anti-freeze fluid / 50:50 premix

Liebherr Anti-Freeze APN Mix Ident-Nr. 8611045	Liebherr	D
Caltex Extended Life Coolant Pre-Mixed 50/50 (ready-to-use-version)	Caltex UK Ltd, London	GB
Chevron DEX-COOL Extended Life Prediluted 50/50 Anti-Freeze/Coolant	Chevron Texaco, San Ramon,	CA USA
Havoline XLC, 50/50	Arteco, Gent	B
Havoline DEX-COOL Extended Life Prediluted 50/50 Anti-Freeze/Coolant	Chevron Texaco, San Ramon,	CA USA
Organicool 50/50	Total Deutschland GmbH, Düsseldorf	D

4) HYDRAULIC OIL :

Hydraulic oil specifications

1. Mineral oils

Recommended and approved are engine oils, which conform to the following specifications

For single viscosity oils	API - CD / CCMC- D4 / ACEA - E 1
	Mercedes-Benz specifications -page No 226.0 and 227.0
For multi viscosity oil :	API - CD +SF / CCMC - D5 / ACEA - E3
	Mercedes-Benz specifications -page No 227.5, 228.1 and 228.3

2. Environmentally friendly hydraulic fluids (also called "BIO oils" -biodegradable oils-)

The "environmentally friendly hydraulic fluids" recommended by LIEBHERR are limited to synthetic ester based hydraulic fluids with a viscosity according to ISO VG 46.
Initial filling is performed ex works according to customer desires.
The use of environmentally friendly hydraulic fluids must be arranged with the LIEBHERR Co beforehand.
Organic oils should not be used due to their poor temperature consistency.

Notes: It is absolutely necessary never to mix different brands of environmentally friendly hydraulic fluids or to mix fluids with mineral oils.

For further information on operating while using environmentally friendly hydraulic fluids, see page 8.7.

https://www.truck-manuals.net/

Hydraulic oil change intervals

1. Oil changes in pre-set intervals

Note: Oil changes in pre-set intervals are only permitted for mineral oils. When using environmentally friendly hydraulic fluids, oil sample analysis reports must be used to determine the time of the oil change, see §2

a) in standard applications

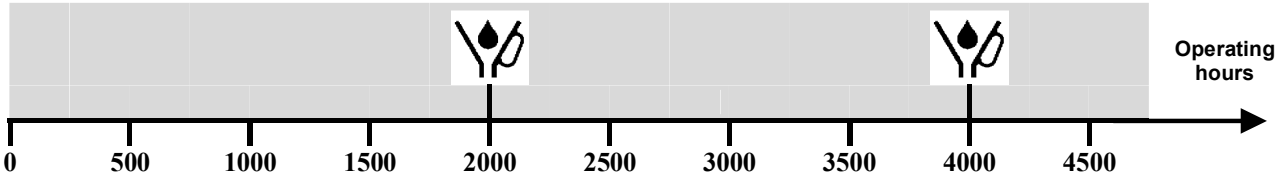

b) in dust intensive applications

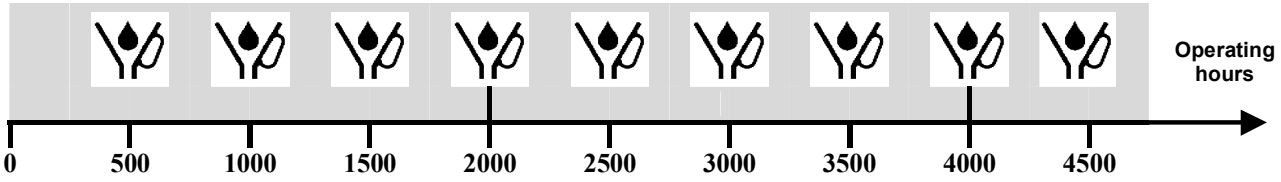

2. Optimised oil change intervals determined through oil sample analysis reports.

Use this procedure to take oil samples in pre-set intervals. The intervals may be extended between two oil changes as long as the properties of the oil are still satisfactory. The time when the oil must be changed is determined by the lab report.

LIEBHERR recommends to submit the oil samples to "WEAR- CHECK" for oil analysis. A kit for 6 complete analysis at WEAR - CHECK is available : Id. No. 7018368 (The kit contains the sample containers, documentation, shipping container and oil sample hose). A hand pump is required to take the oil sample, and should be ordered separately (Id. No. 8145666).

a) in standard applications

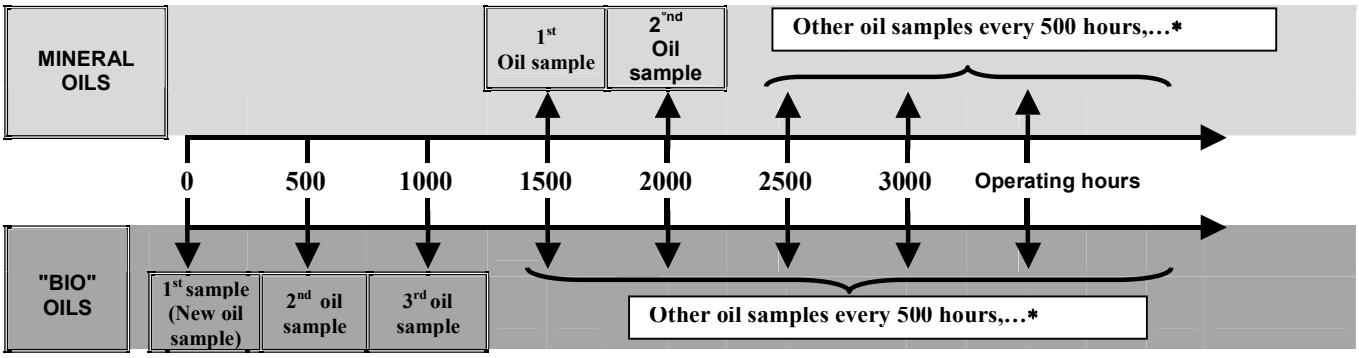

b) in dust intensive applications

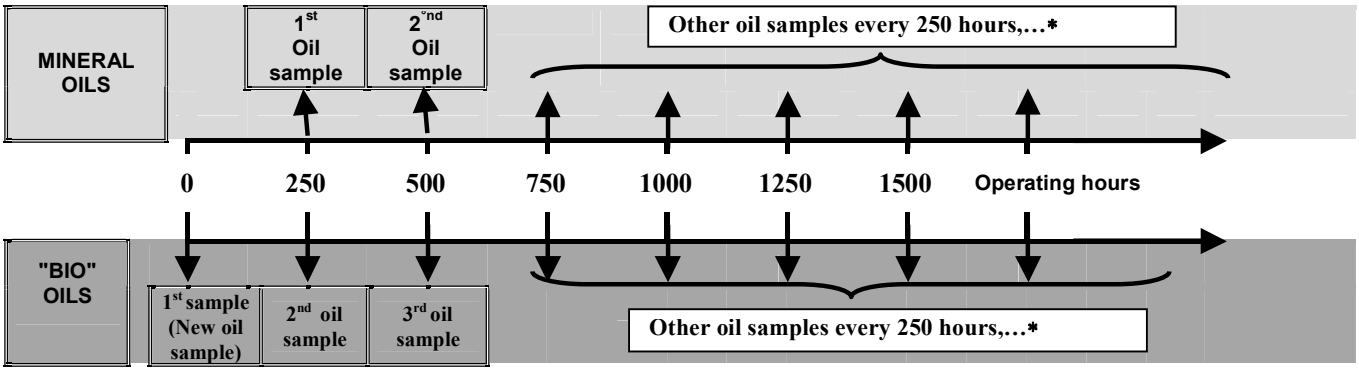

***… time for oil change determined by lab report.**

https://www.truck-manuals.net/

https://truckmanualshub.com/

To limit the hydraulic oil contamination when working under extreme dusty conditions

On excavators working under very dusty conditions or with a hydraulic hammer attachment, the contamination of the hydraulic oil may be significently increased

In order to avoid any premature wear and failure of hydraulic components in consequence of this contamination reduce the oil change intervals as described above and, in addition, observe following recommandations:

- The tank return filter element(s) must be replaced every 500 operating hours.
- The tank return filter must be fitted with lower (finer) micron filter element(s) (10 µm instead 20 µm element, serially mounted).
- The breather filter on the hydraulic tank (fineness of serially mounted filter is 10 µm) must be replaced with a 3 µm fine breather filter.
- This 3 µm breather filter must be replaced every time the hydraulic oil is changed (every 500 operating hours).

Notice: **The excavators delivered from factory with a hydraulic hammer attachment are fitted with the fine 10 µm return filter element(s) and with the 3 µm fine breather filter.**
The kit for retrofit installation of a hydraulic hammer also contains these fine element(s).

5) GEAR OILS

Gear oils for vicosity classification SAE 90 must meet the specifications API-GL-5-90 and MIL - L 2105 B, C or D.
For SAE 90 viscosity, SAE 80W90 can also be used.

6) GREASE FOR SWING RING ROLLER RACES AND GENERAL LUBRICATION POINTS :

This grease must meet specifications, consistency classification 2 in NL-GI viscosity per DIN 51 818 and DIN 51 825 or EP2 per NF-T-60 132.
The grease must be lithium-complex based, with VKA value of at least 2300 N per DIN 51350 or ASTM D 2596.

GREASE FOR AUTOMATIC LUBRICATION SYSTEM

For the temperature range +60° C to -10° C (140° F to -50° F) use a grease meeting the consistency classification 2 in NL GI viscosity.
LIEBHERR recommends the use of :
Multi-service grease RPL Liebherr order no : 8501565 / 1 pack 5 cartridges of 400 grammes

For operating in ambient temperatures that are expected to remain under -10° C, it is recommanded to make an early change of the grease type to a specific "LOW TEMPERATURE" grade, which can be recommended to you from your grease supplier and which will have the necessary pumpability and "WORKED PENETRATION" consistency between 265 - 295 at -10° C temperature.

7) GREASE FOR SWING RING TEETH

This grease must comply with following recommandations:
- be of consistency classification 2 in NL-GI viscosity per DIN 51818,
- have a VKA value of at least 4000N per DIN 51350 or ASTM D 2596,
- show a water resistance of 1-90 per DIN 51807.

We recommend the use of:
Grease CRL Liebherr order n°: 8503279
1 pack 5 cartridges of 400 Grammes each

8) REFRIGERATOR OIL IN AIR CONDITIONER COMPRESSOR :

The following refrigerator oil may be used:

Brand	Manufacturer	LIEBHERR part N° 0,25 liter (6 oz.) can of oil
Planetelf PAG SP20	ELF	8504414

PAG oils (Polyalcylen-Glycol oils) are the only oils presently authorized by the compressor manufacturer when using refrigerant R 134 a.

https://www.truck-manuals.net/

https://www.truck-manuals.net/

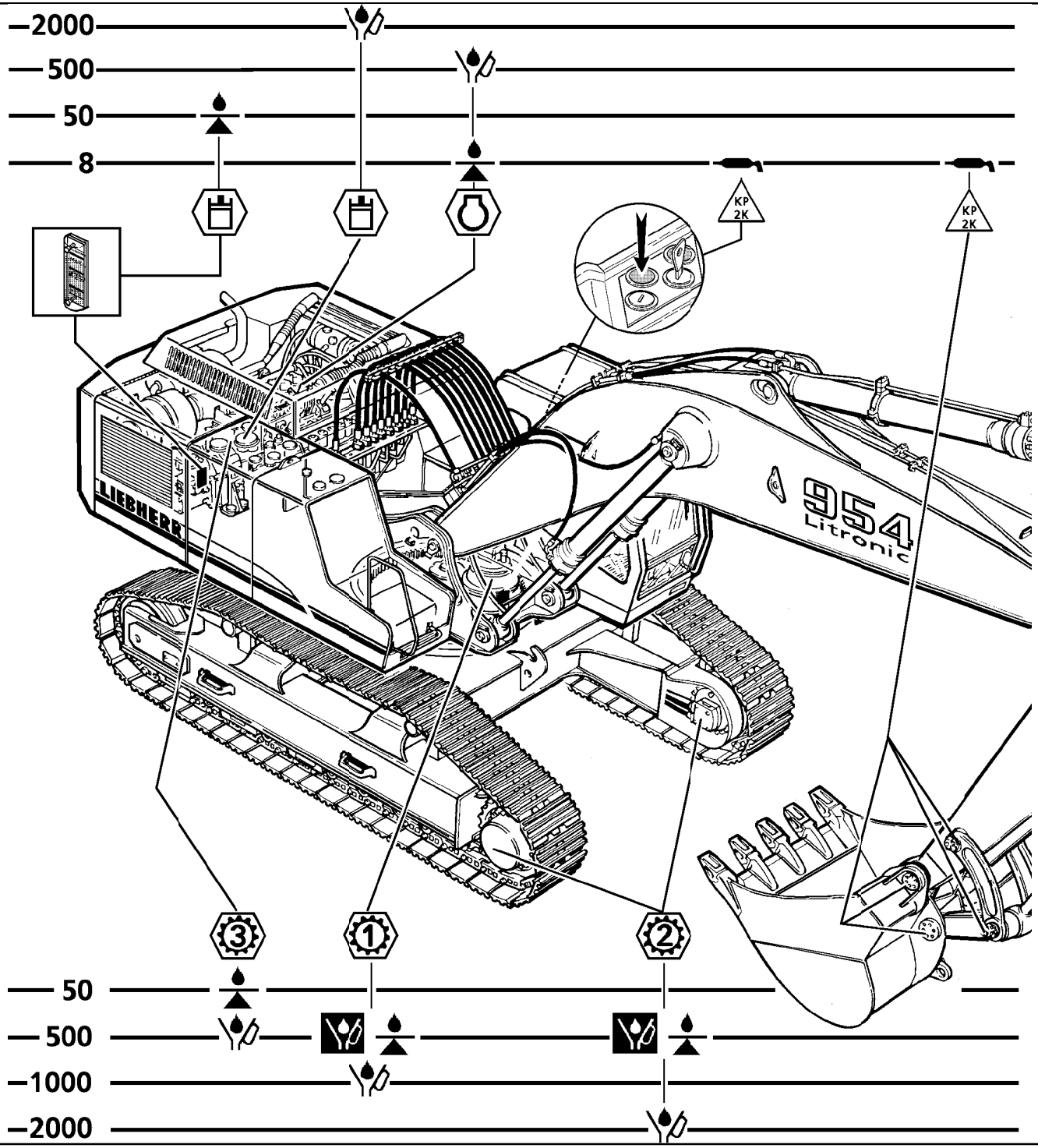

R 954 C Litronic	7372084 C
Dieselmotor Engine Moteur Diesel	43 l 11.3 US Gal
Hydraulikanlage Hydraulic system Circuit hydraulique	570 l 150 US Gal
Drehwerksgetriebe Swing gear Réducteur d'orientation	10.5 l 2.8 US Gal
Fahrwerksgetriebe Travel gear Réducteur de translation	2 x 9.5 l 2 x 2.6 US Gal
Verteilergetriebe Splitterbox Réducteur de pompes	10.5 l 2.8 US Gal

KP 2k — Allgemeine Schmierstellen
General lubrication points
Points de graissage

Ölstand prüfen
Oil level check
Vérification du niveau

Ölwechsel
Oil change
Vidange

Erster Ölwechsel
First oil change
Première vidange

Schmieren
Lubrication
Graissage

Die angegebenen Füllmengen sind nur Richtwerte.
Nach jedem Ölwechsel oder Nachfüllung den Ölstand prüfen

The capacities are only given for your guidance.
Always check the level after replacing oil or topping up.

Les capacités ne sont données qu'à titre indicatif.
Vérifiez le niveau après chaque vidange ou appoint.

https://truckmanualshub.com/

https://truckmanualshub.com/

DIESEL ENGINE

CHECKING THE ENGINE OIL LEVEL

Park the machine on firm, level ground to check the engine oil level. Turn the engine off and wait a few minutes for the oil to collect in the oil pan.

The oil level must be between the minimum and maximum mark on the dipstick 1 (fig. 1).

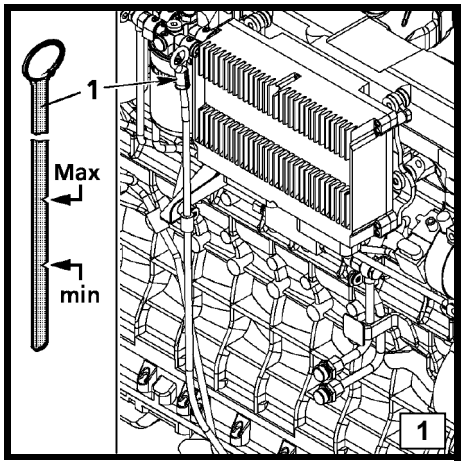

CAUTION

The engine oil is very hot at or near operating temperature. Avoid contact with hot oil and components containing oil, since it could cause severe burns.

CHANGING THE ENGINE OIL

To drain the oil :

Bring the engine to operating temperature before changing the oil.

- Open the cover on the uppercarriage below the Diesel engine.
- Attach the oil drain hose (fig. 2, pos. 6) to the drain valve 7 on the engine oil pan.
- Drain the oil into an appropriate container.

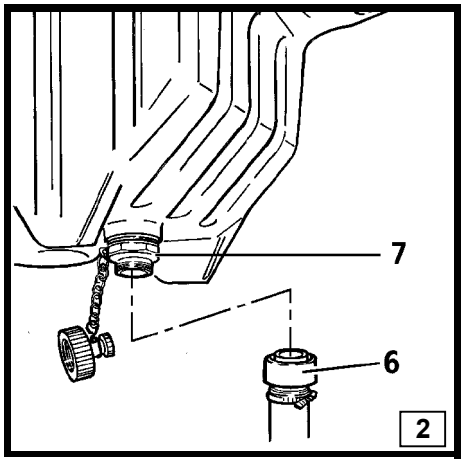

To replace the oil filter elements:

The oil filters are arranged in an upright position on the aggregate carrier of the Diesel (fig. 3).

- Prepare a strap spanner, a suitable container and two original LIEBHERR oil filter cartridges.
- Position the suitable container under the diesel engine.

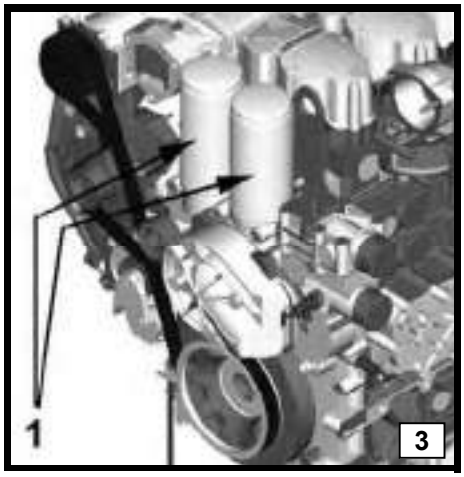

CAUTION

Be careful when removing the filter cartridge to avoid contact with hot oil.

Protect the ribbed V-belt against escaping oil when replacing the oil filter cartridge!

After replacing the oil filter, remove all traces of oil on the Diesel engine, as well as behind the vibration damper in order that this will not be later diagnosed as leaks in the rotary shaft seal.

- Loosen the oil filter cartridges 1 with the strap spanner and unscrew the filters.
- Clean the sealing faces of the filter bracket. The old filter seal and all of its remnants must be removed.
- Apply a thin coat of Diesel engine oil to the rubber sealing ring on the new oil filter cartridge.

https://www.truck-manuals.net/

https://truckmanualshub.com/

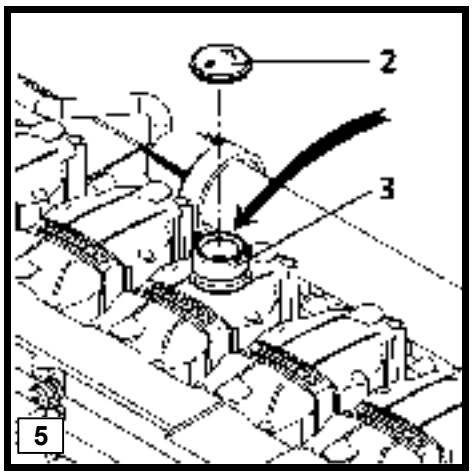

- Screw on the new oil filter cartridge, until the sealing ring is resting on the filter bracket
- Tighten the oil filter cartridge by approx. ½ - ¾. (do not use any tools for tightening).

To add oil:

- Remove the oil filler cap 2 at the top of the rocker box cover (fig. 5).
- Add oil via the oil filler tube 3 until the level is between the minimum and maximum mark on the dipstick 1 (fig. 1).
- Clean the oil filler cap 2, reinstall the oil filler cap 2 and close.

- When adding oil after an oil change or after replacement of the oil filter cartridges you must in addition:
  - Start the Diesel engine.
  - Check the oil pressure on the monitoring display of the machine and check the oil filters for tightness.
  - Switch off the Diesel engine.
  - Check the oil level after 2 - 3 minutes on the dipstick.

CHECKING THE COOLANT LEVEL

ACHTUNG

At or near operating temperature, the engine coolant is hot and under pressure.

Avoid contact with components containing coolant, since it could cause severe burns.

Check coolant level only after the cap of filler neck 6 is cool enough to touch.

To check the coolant level, turn the cap 6 slowly to relieve pressure!

https://www.truck-manuals.net/

. When the coolant is cold, the coolant level should reach the top of the filler neck under the cap 6 of the radiator (fig. 10).

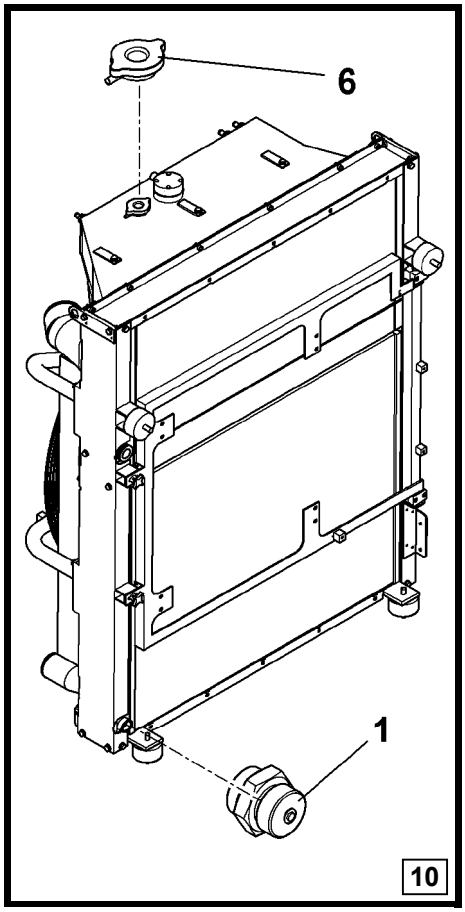

ANTIFREEZE AND CORROSION PROTECTION OF THE COOLANT

. Add the proper antifreeze mixture to the cooling system on a year round basis, not just in the cold season.

. The excavator is delivered from the factory with a cooling system protection to -35° C /-31° F (this corresponds to about 50% antifreeze).

. For the cooling system capacity : see lubrication chart.

. Also the correct concentration of corrosion inhibitors inside the coolant must be maintained permanently.

. The concentration has to be checked after each important coolant make up, and at regular intervals if smaller coolant quantities are refilled frequently.

. If necessary, anticorrosion additives must be added to the cooling system, refer to page 5.6.

CHANGING THE COOLANT

. The coolant in the cooling system has to be changed at least once every two years.

. Preferably keep the valves for the cab heating circuit closed when changing the coolant.

. If the coolant in the heating circuit has to be drained too, the heater core must be vented correctly when refilling the circuit.

. The water flow through the cab heater is possible only with ignition key in contact position.

. **To drain coolant :**

- Unscrew the cover of the drain valve 1 at the bottom of the engine coolant radiator. Attach the drain hose to the valve 1 and drain the coolant into an appropriate container.
- Remove the cover of the drain valve 2 on the engine oil cooler housing (fig. 12) and attach the drain hose to the valve 2.

To add coolant and vent the cooling circuit :

- Remove the drain hoses and screw on and retighten the caps of the drain valves 1 and 2.
- Add coolant until the level reaches the top of the filler tube under the cap 6.
- Remount the sealing cap on the expansion tank and close.
- Diesel Start the Diesel engine and allow to run warm.
- Check the coolant level again when the Diesel has cooled off and refill as required.

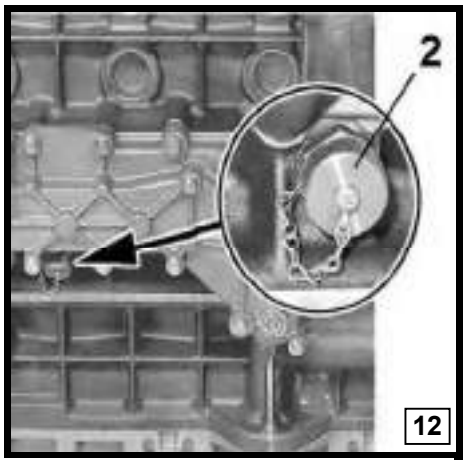

Important!

When adding coolant, make sure that the expansion tank is filled up to the top of the filler tube. Add coolant until the level does no longer drop (it is not possible to overfill the coolant system).

https://www.truck-manuals.net/

https://truckmanualshub.com/

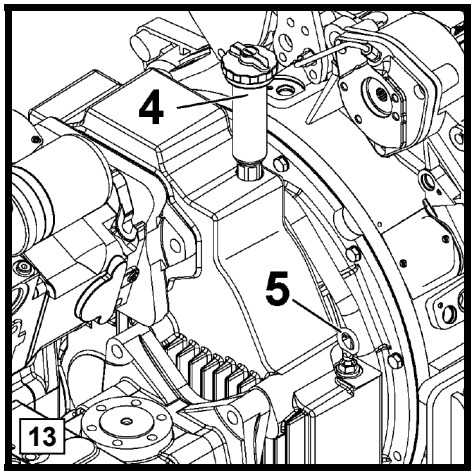

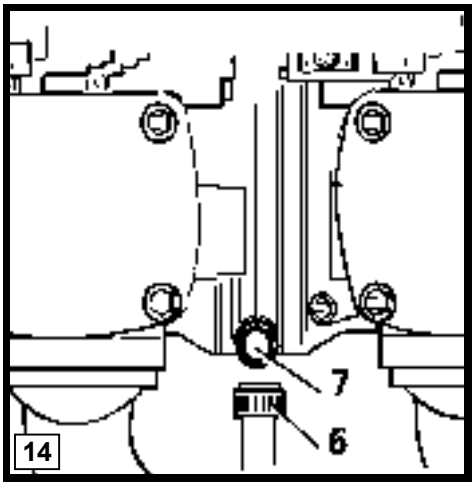

CHANGING THE OIL IN THE SPLITTERBOX

Fig. 13, pos. 4 shows the oil filler and bleeder screw of the splitter box and pos. 5 shows the dipstick to check the oil level.

TO CHECK THE OIL LEVEL

Check the oil level a few minutes after turning off the engine.

TO DRAIN THE OIL

Drain the oil when the oil is at operating temperature

To drain, remove the cap on the drain 7 (fig. 14), install drain hose 6 and drain the oil into an appropriate container.

TO ADD OIL

Add oil to the oil level mark on the dipstick 5, run the engine for a few minutes, stop it and check again the oil level.
Add some oil again if necessary.

See lubrication chart for oil quantities and specifications.

See maintenance chart for oil change intervals.

https://www.truck-manuals.net/

https://truckmanualshub.com/

CHANGING THE OIL IN THE TRAVEL GEAR

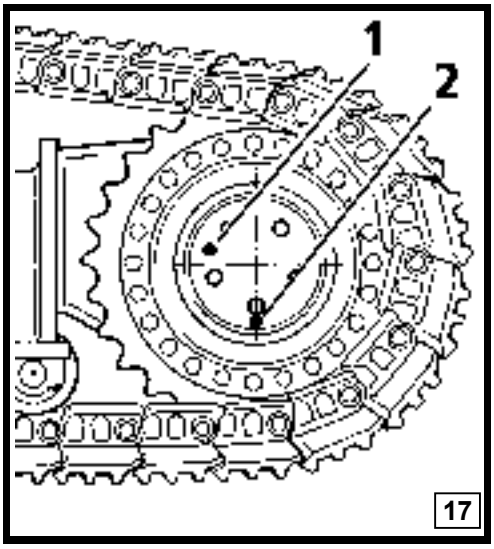

If possible, drain the oil when the oil is at operating temperature.
Before draining or adding oil, move the machine until the drain plug 2 is straight below the centre axle of the gear (fig. 17).
If both plugs are situated on different diameters, always take the outer plug for the drain plug.

TO DRAIN THE OIL

Remove the both plugs and drain the oil into a suitable container.

TO ADD OIL

Remove plug 1.
Reinstall plug 2 and add oil until it drains from bore 1, then reinstall the plug 1.

See lubrication charts for quantities and specifications.
See maintenance chart for oil change intervals

CHANGING THE OIL IN THE SWING GEAR

If possible, drain the oil when the oil is at operating temperature.

Fig. 20 shows:

- 1 : Oil drain valve
- 4 : Oil filler cover / breather cover
- 6 : Expansion reservoir for swing gear oil
- 10 : Swing gear

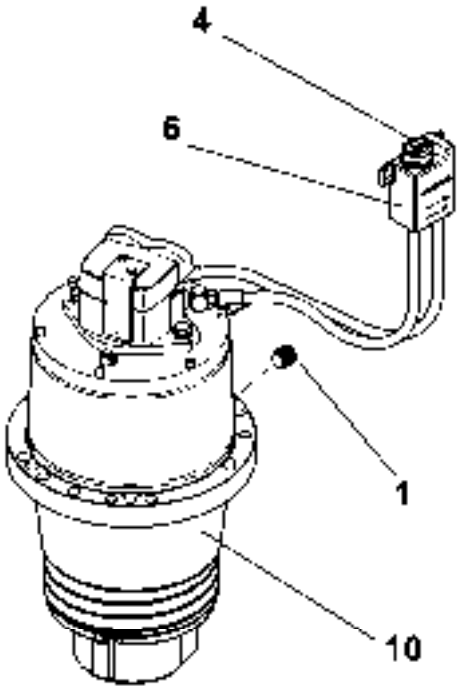

TO DRAIN THE OIL

Remove the filler cover 4, unscrew the plug of the drain valve 1 through the opening in the sheet in the lower middle area of the upper carriage structure. Attach an oil drain hose to the valve 1 and drain the oil into an appropriate container.
Remove the drain hose and reinstall the plug of the drain valve 1.
Reinstall the protective plate 6.

TO ADD OIL

Add oil via the opening of the cover 4 until the level reaches the mark "MAXI" of the expansion reservoir 6. Reinstall the cover 4.

See lubrication charts for quantities and specifications.
See maintenance chart for oil change intervals.

20

https://www.truckmanuals.net/

https://truckmanualshub.com/

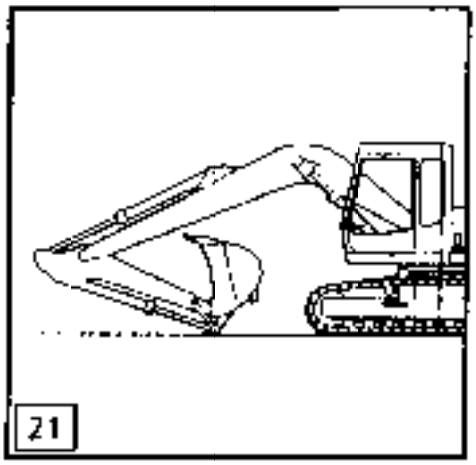

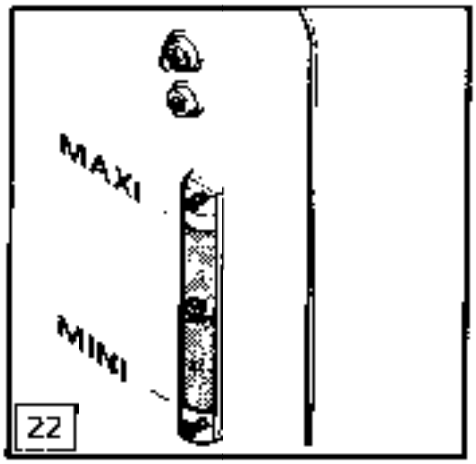

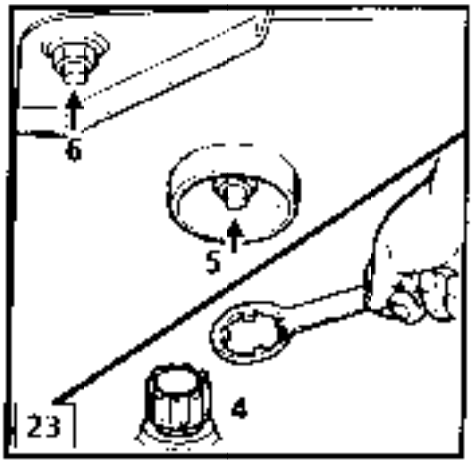

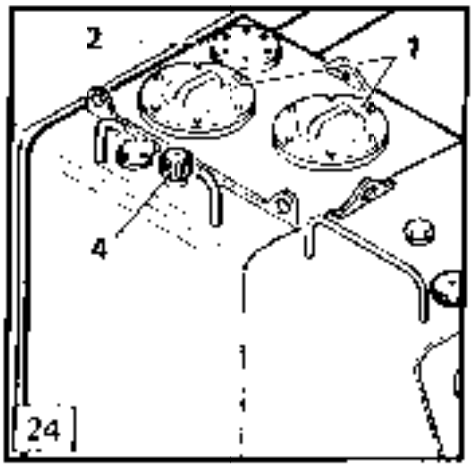

OIL IN THE HYDRAULIC SYSTEM

When checking the oil level or adding oil,

- Park the machine on level ground,
- rest the attachments on the ground with stick and tilt cylinders fully extended

CHECK HYDRAULIC OIL LEVEL

In this position the oil level may not drop below middle level on the sight gauge or oil must be added to the tank until reaching this level.

Level "MAXI" shows the maximum oil level when all cylinders are retracted.

Level "MINI" shows the minimum oil level when all cylinders are all the way extended.

TO DRAIN AND TO ADD OIL TO THE HYDRAULIC TANK

CAUTION

Before draining the oil or opening the hydraulic tank, you always must first unscrew the breather filter 4 one turn to relieve tank pressure.

The hydraulic system should always be refilled or drained using a filler pump.

To drain oil

Remove the cover of the return filter 1 or the cover 2.

The oil must be drained via the two drain valves 5 and 6 in the bottom of the tank.

Attach a drain hose to the valves and suck off or let flow out the oil.

Adding oil to the tank

Unscrew the breather filter 4 one turn.

Add the oil via the filter cover 1 or via the cover 2, until the oil level reaches middle level on the sight gauge.

Close the breather filter.

Add some more oil to fill the tank up to the top. If refilling through the opening of the filter cover 1, pay attention to refill also the return oil compartment R (fig. 26) around the filter centering tube 7 completely.

Reinstall the filter cover 1 or the cover 2.

https://www.truck-manuals.net/

https://truckmanualshub.com/

CAUTION

The hydraulic pumps must be bled after every oil change (see page 6.12).

See lubricant chart for oil specifications and maintenance chart for oil change intervals.

TO DRAIN OFF CONDENSATION

Drain off condensation regularly. To do so, place the drain hose onto the drain valves 5 and 6 until the oil runs clear of any water. (For intervals, refer to maintenance plan).

Note :

When using "environmentally friendly hydraulic fluids" and after machine down time (after about 24 hours) we recommend to drain off any moisture in the hydraulic tank before operating the machine.

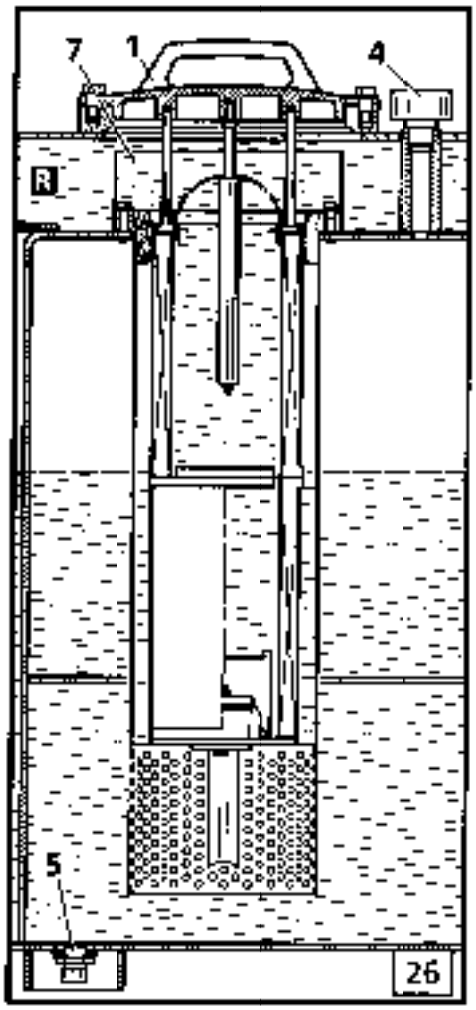

https://www.truck-manuals.net/

https://truckmanualshub.com/

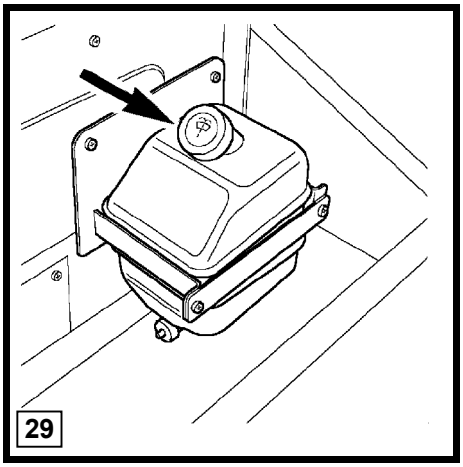

CHECKING THE LEVEL IN THE RESERVOIR OF THE WINDSHIELD WASHER

. The tank for the windshield washing detergent is mounted outside, to the outer wall of the operator's cab.

. Regularly check the level in the windshield washer reservoir , and, if necessary, remove the cover at the filler neck (fig. 29), and refill the reservoir with standard windshield washing detergent .

. Quantity : see the lubricants chart.

. Interval : see the lubricants chart.

https://www.truck-manuals.net/

https://truckmanualshub.com/

THE CENTRALIZED LUBRICATION SYSTEM

Your machine is serially fitted with a centralized lubrication system. With this system all or most of the lube points of the machine which require at least daily lubrication are lubricated via an electrical driven grease pump.

This grease pump (fig.38, pos. 3) is mounted in the area behind the driver's cab.

SERIALLY INSTALLED SEMI-AUTOMATIC SYSTEM OR OPTIONAL INSTALLED FULLY AUTOMATIC SYSTEM

The serially mounted pump (fig.38) is started and stopped by a push button on the rear control console of the driver's cab (semi automatic system).

As an option, the system can be fitted with a pump comprising a control unit (fig.44) which automatically starts and stops the lubrication procedures during working (automatic system).

CONSTRUCTION

The grease delivered by the pump is distributed to the different lubrication points in metered quantities, first via the main distributor 4 (fig. 39) and further via the secondary distributors mounted to the front of the upper carriage (fig. 33, pos. 5) and to the working attachment (as an example, the position 6 on figure 35).

The following lubrication points are connected to the centralized lubrication system::

- the ball bearing races of the swing ring (fig. 33, pos. 8)

- the housing around the output pinion of the swing ring (fig. 34, pos 11), which contains the grease reserves for the swing ring teeth lubrication,

- All or the most of the lubrication points of standard working attachments. The position 9 in figure 35 shows as an example the bearing point bucket tilt cylinder to stick which is connected to lube system.

  On some backhoe attachments, some grease fittings may be installed separately in the area of the connector bracket and shifting lever for the digging tool (fig. 36).

  With special attachments (Telescopic stick, hydraulic offset boom, ...) some bearing points at the attachment or at the working tool are possibly not connected to the central lubrication system.

  This bearing points have to be lubricated daily via separately mounted, red marked lubricating nipples.

CAUTION

When operating a machine and especially if it is fitted with a special working attachment, make sure to lubricate daily all the lubrication points which may be installed separately, i. e. which are not connected to the central lubrication system.

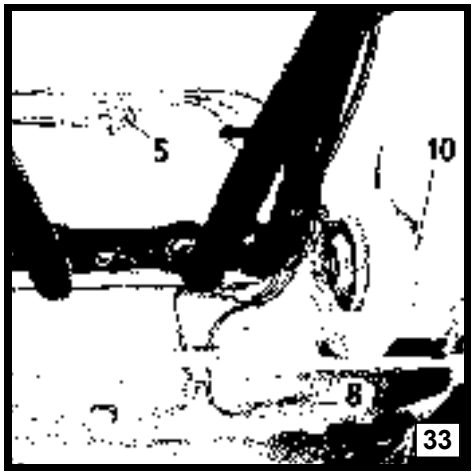

33

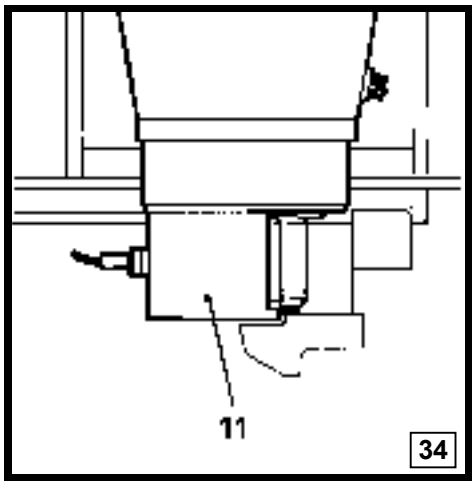

34

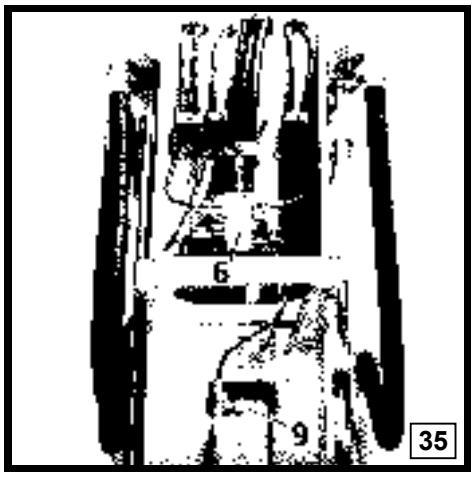

35

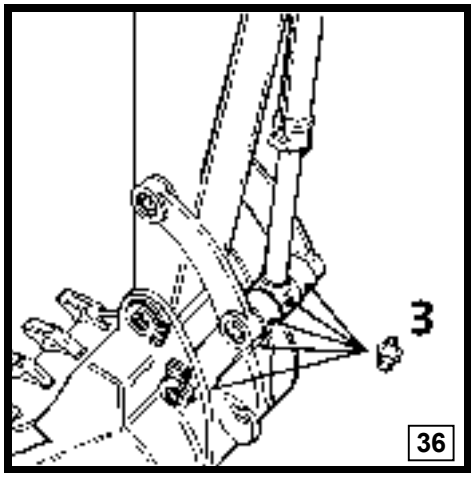

36

https://www.truckmanuals.net/

https://truckmanualshub.com/

The lubrication unit complete 2 (fig. 38) mainly consists of a transparent grease container 13, and an electric motor 14 driving a lube pump 15. The optional mounted automatic lubrication pump also comprises a control unit 16 (fig. 44) which starts and stops the lubricating procedures.

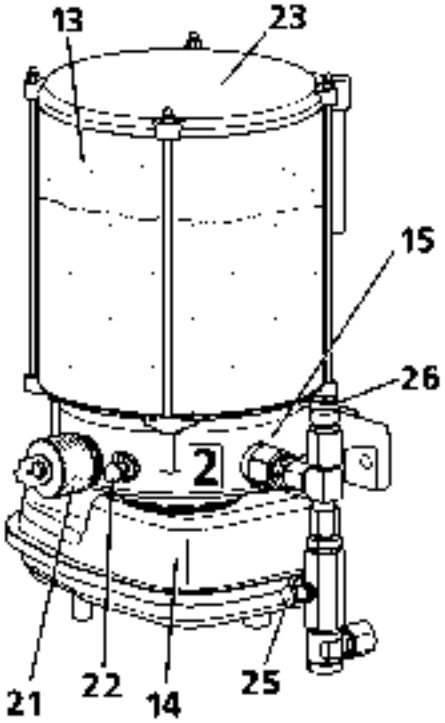

38

SERIALLY MOUNTED SEMI AUTOMATIC SYSTEM

OPERATION OF THE SEMI AUTOMATIC SYTEM

In the semi – automatic system, the pump is controlled by the push button S84 on the rear control desk of the driver's cab.

Depressing the button S84 alternately turns on and off the lube pump. When the pump is greasing, the indicator lamp inside the button lights up.

To lubricate, turn on the button S84 and keep the pump running until clean grease runs out of the bearing points boom cylinders to upper carriage (fig 33, pos. 10).

LUBRICATION INTERVALLS

Under normal working conditions a semi – automatic lubrication must be performed daily.

If the machine is used under hard conditions (working under water, in very abrasive material, …) or in multi shift service, lubricate more often (up to once a working shift or every 4 hours).

OPTIONAL MOUNTED AUTOMATIC SYSTEM

FUNCTION

During a lubricating procedure, all lube points are lubricated one after the other in a certain sequence (progressive system).

After completion of a lubrication procedure, the pump is turned off by a proximity switch 7 (fig. 49) mounted to a distribution element of the main distributor 4.

At each stroke of a piston in this element, the switch 7 gives a pulse signal to the control unit 16, which stops the lubricating procedure as soon as the preadjusted number of strokes has been reached.

During lubrication, the delivery of grease can be checked visually while observing that the indicator stem 27 mounted to the top of the main distributor 4 (fig. 39) moves alternately in and out.

The flow sequence and amount of lubricant for each lubrication point depend on the combination of the distributors and lubrication lines and of the piston size of the distribution elements.

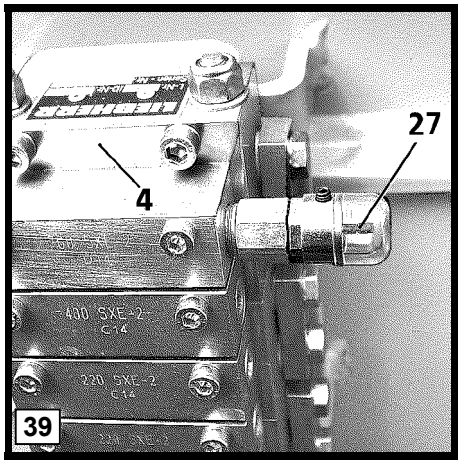

39

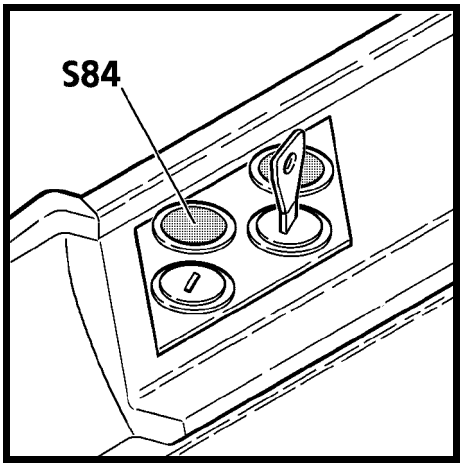

OPERATION OF THE LUBRICATION SYTEM

After turning on the excavator the control light inside the touch S84 (fig. 40) and the green LED 17 (fig. 41) light up for approx. 1,5 sec. to show that the electric pump is operative.

A lubrication procedure will begin automatically after a "cycle time" is over and stop after all points have been lubricated, this without any action by the operator.

https://www.truck-manuals.net/

If the lubrication system is in working order, an additional lubricating procedure of the lube unit can be started any time by depressing either the push button S84 on the rear control desk (fig. 40) or the touch 19 on the motor housing (fig. 44).

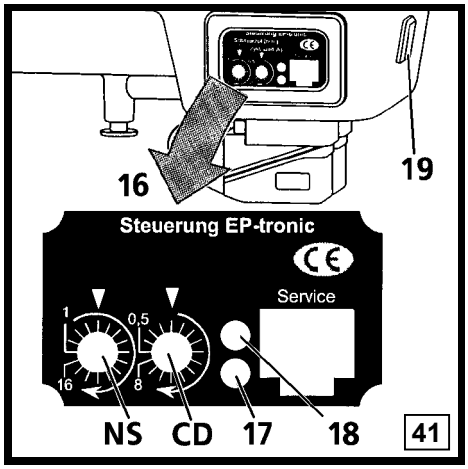

MONITORING OF THE AUTOMATIC LUBRICATION SYTEM.

During a lubrication procedure of the lubrication unit 2, the control light inside the push button S84 and the green LED 17 are on continuously.

In case of a failure in the lube circuit (no stroke signal delivered by the proximity switch 7 about 20 minutes after begin of a lubrication procedure) both LEDs 17 and 18 and the control light inside S84 will start blinking simultaneously.

Possible causes are:

- a plugged or kinked lubrication line, (in this case the grease will flow out of the relief valve 26, fig. 44),
- a defective switch or defective wire,
- the use of too viscous grease at very low temperatures,
- not enough grease in the grease tank 13,
- a problem in the 24 V electrical circuit for the motor 14.

Immediately locate and remedy the cause of the trouble.

2	Lubrication unit cpl.
13	Grease container
14	Electric motor
15	Grease pump
S84	Control-switch inside the cab
16*	Control unit
17*	LED green / Pump operative, resp. pump is lubricating
18*	LED red / failure
19*	Touch / reset
CD*	Rotary switch / Cycle Duration
NS*	Rotary switch / Number of strokes
S84*	Monitoring and Reset-switch inside the cab
*	With automatic system

ADJUSTMENT AND GREASE CONSUMPTION FOR AUTOMATIC SYSTEM

The Cycle Duration can be adjusted between 0,5 and 8 hours via the rotary switch CD (Cycle Duration) after removal of the transparent protection cover.

From factory, the Cycle Duration is adjusted to 1 hour.

The Number of Strokes to be carried out at main distributor for a complete lubricating procedure can be adjusted between 1 and 16 via the rotary switch NS (Number of Strokes) after removal of the transparent protection cover.

From factory, the number of strokes per cycle is adjusted to:

- 8 strokes for machines fitted with an earthmoving or an demolition attachment (digging application),
- 2 strokes for machines with an industry attachment (material handling application).

The factory adjusted values for cycle duration and number of strokes determine a lubricant consumption of approx. 28 cm^3 grease per lubrication cycle, it equals approx. 2,5 kg (5.5 lbs) grease every 100 working hours.

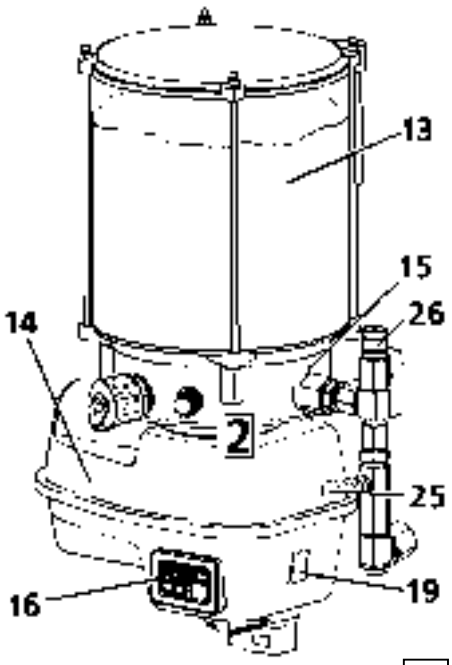

42

https://www.truckmanuals.net/

https://truckmanualshub.com/

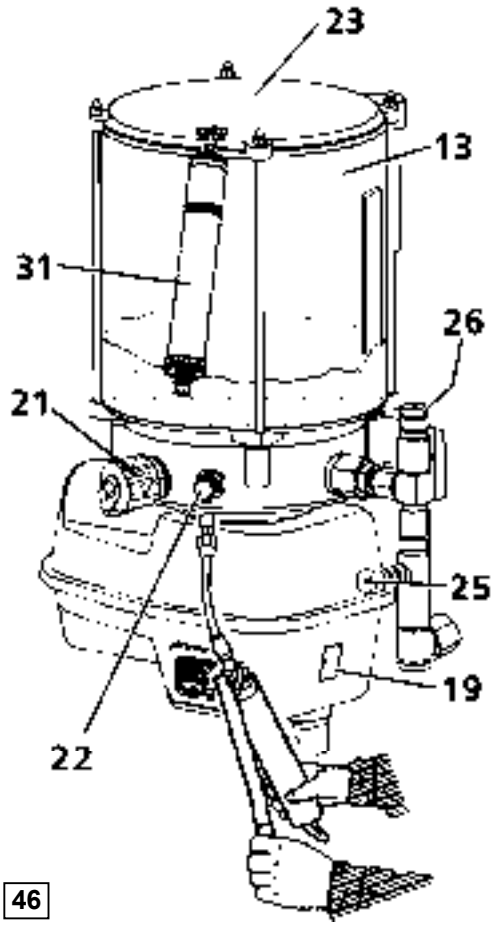

46

In case the lubrication pump does not work, all lubrication points connected to the centralized system may be lubricated via the lube fitting 25 (fig. 46) using a lubrication gun. In this case, press daily or per working shift approx. 200 cm^3 grease into the fitting 25.

TO REFILL THE GREASE CONTAINER

The grease level in the container 13 of the pump must be checked weekly, and if necessary, the container refilled.

See the lubricant chart for grease specification.

The refilling of the grease container should only be done via the special fitting 21.

Insert a grease cartridge in the special filling pump 31 (Id. No. 10009239), connect the pump to the fitting 21 and push the whole content of the cartridge into the container 13 (fig. 46).

Avoid refilling via the upper tank cover 23, since it could create an air pocket in the container and cause the pump to run dry.

For indication of ordering number of grease cartridges, refer to page 5.9.

Without the special filling pump 31 or grease cartridges, the container 13 must be refilled through the grease fitting 22 (fig. 46), using a grease gun.

https://www.truck-manuals.net/

https://truckmanualshub.com/

CHANGES IN THE LUBRICATION CIRCUIT

Before you make any changes to the lubrication system (for example when changing the attachment configuration), always check with a LIEBHERR mechanic first.

Never remove a line and close off an outlet, which is not being used, or the whole lubrication system would be blocked.

Only plug an outlet after the line has been removed from the distributor and the necessary changes have been achieved at the corresponding distribution elements.

This applies as well for main distributor 4 (fig. 49) as for secondary distributors 5 (fig. 50).

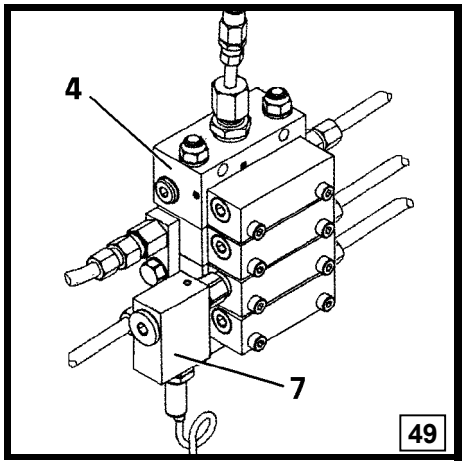

49

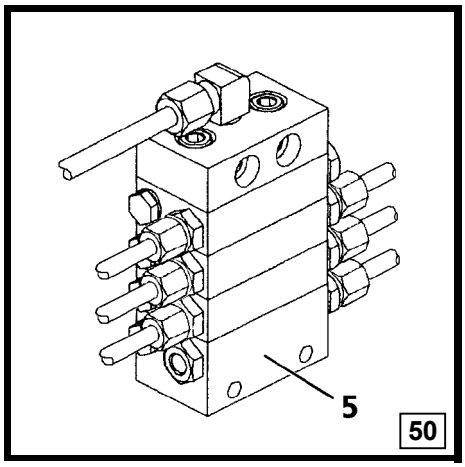

50

https://www.truck-manuals.net/

https://truckmanualshub.com/

GRAPPLE LUBRICATION

The grapple must be lubricated regularly.

The lubrication points on the grapple are marked with red dots on easily accessible points (see arrows).

Every grease fitting must be lubricated daily or once per shift, until clean grease emerges from the bearing.

Lubricate the grapple in the same intervals as noted for the attachment.
In difficult or severe applications, this lubrication interval must be reduced.

Grease Specification: see Lubrication Schedule.

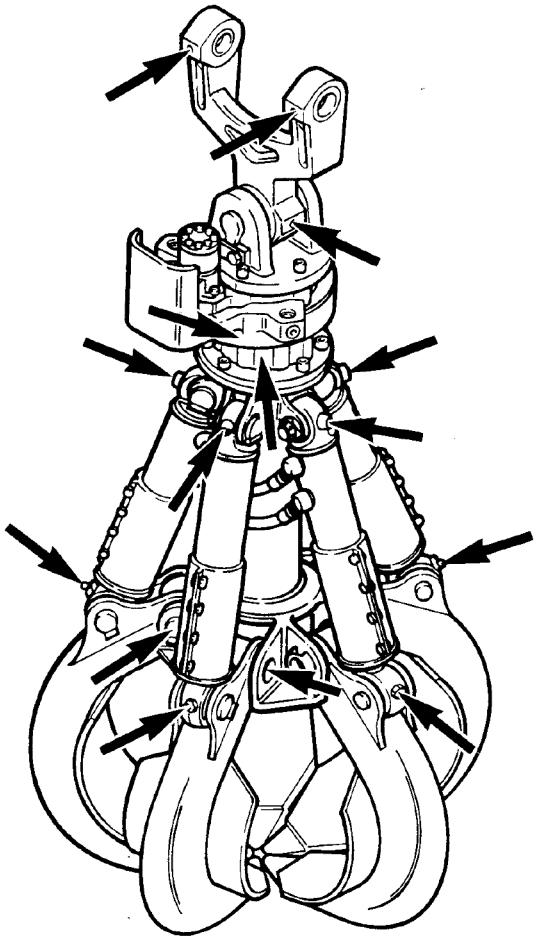

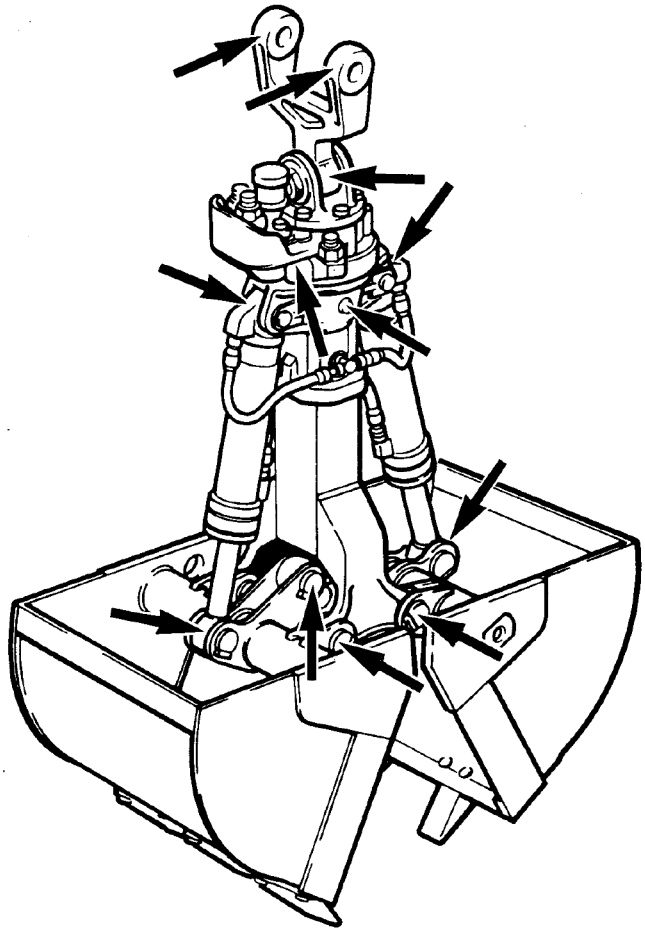

https://www.truck-manuals.net/

MACHINE MAINTENANCE SAFETY

- The machine may not be made unsafe when performing maintenance work. Never attempt maintenance procedures or repairs you do not understand.
- Check the Operator's and Maintenance Manual for service and maintenance intervals. Make sure you use only appropriate tools for all maintenance work.
- Refer to your Operator's and Maintenance Manual to see, who is authorized to perform certain repairs. The operator should only perform the daily / weekly maintenance procedures.

  The remaining work may only be performed by especially trained personnel.
- Use only replacement parts corresponding to the technical requirements specified by the manufacturer. This is assured by using only original Liebherr replacement parts.
- Always wear proper work clothing when maintaining the excavator. Certain work may only be performed with a hard hat, safety shoes, safety glasses and gloves.
- During maintenance, do not allow unauthorized personnel to enter the maintenance area.
- Secure the maintenance area, as necessary.
- Inform the operator before any special or maintenance work. Make sure he knows the person, who is in charge of the work.
- If not otherwise noted in the Operation and Maintenance Manual, always make sure the excavator is parked on firm an level ground and the engine is turned off.
- During maintenance and service work, make sure you always retighten any loosened screw connections!
- If it is necessary to disconnect or remove any safety devices during set up, maintenance or repair, make sure that after completion of repairs, the safety devices are reinstalled and checked for proper function.
- Before any maintenance work and especially when working under the machine, make sure a "Do not operate' tag is attached to the starter switch. Remove the ignition key.
- After end of maintenance works or repair, restart the machine according to the instructions "Machine start up", in this manual.
- Before any repairs or maintenance work, clean any oil, fuel and / or cleaning substances from any fittings and connections. Don't use any harsh cleaners and use only lint free cloths.
- Use only non-flammable cleaning fluids to clean the machine.
- Any welding, torch or grinding work on the machine must be explicitly authorized. Written authorization is necessary for welding on carrying structures. Before any using a welder, torch or grinder, clean off any dust and dirt and remove any flammable materials from the surrounding area. Make sure the area is sufficiently ventilated. Danger of Fire and Explosion!
- Before cleaning the machine with water or steam (high pressure cleaning) or other cleaning fluids, make sure that all openings, which, for safety and/ or functioning reasons should not be exposed to water / steam / cleaners, are covered and / or masked off. Especially sensitive are electrical motors, control boxes and plug connectors.
- Make sure that the temperature sensors of the fire alarm and extinguishers system do not come in contact with the hot cleaning fluids, which could trigger the fire extinguishing system.
  Remove all coverings and masking material after completing the cleaning procedure.
  Then check all fuel lines, engine oil lines and hydraulic oil lines for leaks, loose connections, chafing and / or damage.
  Fix any problems immediately.
- If you use a high pressure cleaner with steam or hot water to clean the machine, observe following recommendations:
  - the distance between the nozzle and the surface to be cleaned must be no lower than 20 inches
  - the water temperature should not exceed 60°c (140°F)
  - limit the water pressure to 80 bar maximum (11500 PSI)
  - if you employ cleaning fluid, only use neutral cleaning agents such as customary car shampoos diluted to 2 or 3 percent maximum
- Never employ high pressure cleaning apparatus during the two first months following machine delivery or repainting.

https://www.truck-manuals.net/

- Observe all product safety guidelines when handling oils, grease, and other chemical substances.
- Make sure service fluids and replacement parts are disposed of properly and in an environ-mentally sound manner.
- When using hot service fluids, be very careful. (They can cause severe burns and injury!).
- Operate combustion motors and fuel operated heaters only in well ventilated areas. Before operating these units, check ventilation. In addition, always follow applicable local regulations.
- Never try to lift heavy parts. Use appropriate lifting devices with sufficient load carrying capacity. When replacing or repairing parts or components, make sure they are mounted very carefully on lifting devices, to prevent any possible danger. Use only suitable and technically sound lifting devices, make sure that lifting tackle, wire cables, etc. has adequate load carrying capacity. Never position yourself, walk or work underneath suspended loads.
- Never use damaged lifting devices, or devices which are not sufficient to carry the load. Always wear gloves when handling wire cables.
- Ask only experienced personnel to attach loads and guide and signal the crane operator. The guide must be within the visibility range of the operator and / or must be in direct voice contact with the operator.
- When working overhead, use appropriate and safe ladders, scaffolding or other working platforms designated for that purpose. Never step on parts or components on the machine when maintaining or repairing items overhead. When working high above ground, make sure you are fitted with ropes and appropriate safety devices which will prevent a possible fall. Always keep handles, steps, railings, platforms and ladders free of dirt, snow and ice!
- When working on the attachments, for example when replacing the bucket teeth, makes sure the attachment is supported properly. Never use metal on metal support!
- For safety reasons, never open and remove a track chain unless having previously totally released the pretension of the chain tensioning unit.
- Never work underneath the machine if it is raised or propped up with the attachment. The undercarriage must be supported with wooden blocks and supports.
- Always support the raised machine in such a way that any shifting to the weight change will not influence the stability. Do not support the machine with metal on metal support.
- Only qualified, especially trained personnel may work on travel gear, brake and steering systems.
- If it becomes necessary that the machine must be repaired on a grade, block the chains with wedges and secure the uppercarriage to the undercarriage with the lock pin.
- Only qualified, especially trained personnel may work on the hydraulic system.
- Never check for leaks with your bare hands, always wear gloves. Fluid escaping from a small hole can have enough force to penetrate the skin.
- Never loosen or remove lines or fittings before the attachment has been lowered to the ground and the engine has been turned off. Then turn the ignition key to contact position with tilted down safety lever, move all servo controls (joysticks and foot pedals) in both direction to release pressures. Then release the tank pressure as outlined in this Operation and Maintenance Manual.
- Always disconnect the battery cable before working on the electrical system or before any arc welding on the machine. Always disconnect the negative (-) cable first and reconnect it last.
- Check the electrical system regularly. Make sure that any problems, such as loose connections, burnt out fuses and bulbs, scorched or chafed cables are fixed immediately by an electrician or qualified personnel.
- Use only Original fuses with the specified amperage. Never use a different size or stronger fuse than the original fuse.
- On machines with electrical medium or high voltage systems:
  - If there is any problem with the electrical energy supply, turn the machine off immediately.
  - Follow established lockout / tag out procedures where applicable.
  - Any work on the electrical system may only be performed by a qualified electrician or qualified personnel under the guidance and supervision of an electrician, according to electro - technical regulations.

https://www.truck-manuals.net/

- On machines with electrical medium or high voltage systems,
  - if there is any problem with the electrical energy supply, turn the machine off immediately.
  - Any work on the electrical system may only be performed by a qualified electrician or qualified personnel under the guidance and supervision of an electrician, according to electro - technical regulations.
- If any work is required on any parts which carry current, use a second person to turn off the main battery switch, if necessary. Rope the work area off with a red and white safety rope or chain, and set up warning signs. Use only insulated tools.
- When working on medium and high voltage components, shut off the voltage and connect the supply cable to the ground and ground the components, such as the capacitors, with a grounding rod.
- Check all disconnected parts if they are truly free of current, ground them and close them off quickly. Insulate any close-by, current carrying parts.

Hydraulic lines and hoses - Maintenance safety

- Hydraulic lines and hoses may never be repaired!
- All hoses, lines and fittings must be checked daily, but at least every 2 weeks for leaks and any externally visible damage! Never check for leaks with your bare hands, use a sheet of paper or something else. Any damaged sections must be replaced immediately! Escaping oil can cause injuries and fires!
- Even if hoses and lines are stored and used properly, they undergo a natural aging process. For that reason, their service life is limited.

  Improper storage, mechanical damage and improper use are the most frequent causes of hose failures.

  Concerning the hoses, you must follow the safety regulations applicable to your work environment and job site and any federal, state and local safety requirements.

  Using hoses and lines close to the limit ranges of permitted use can shorten the service life (for example at high temperatures, frequent working cycles, extremely high impulse frequencies, multi shift or around the clock operations).
- Hoses and lines must be replaced if any of the following points are found during an inspection (see guidelines ISO 8331):
  - Damage on the external layer into the inner layer (such as chaffing, cuts and rips);
  - Brittleness of the outer layer (crack formation of the hose material);
  - Changes in shape, which differ from the natural shape of the hose or line, when under pressure or when not under pressure, or in bends or curves, such as separation of layers, blister or bubble formation, crushing or pliure.
  - Leaks;
  - Non observance of installation requirements;
  - Damage or deformation of hose fittings, which might reduce the strength of the fitting or the connection between hose and fitting;
  - Any movement of hose away from the fitting;
  - Corrosion on fittings, which might reduce the function or the strength of the fitting;

  When replacing hoses or lines, always use Original replacement parts.
- Route or install the hoses and lines properly. Do not mix up the connections!
- Always take care to avoid torsional strain when installing a new hose. On high pressure hydraulic hoses, the mounting screws must be first mounted on both hose ends (full flange or half clamp) and tightened only thereafter.

  On high pressure hoses having one curved end, always tighten first the screws on the curved hose end and only then the screws on the straight hose end.

  Install and tighten the hose clips that may be mounted on the hose middle only when the both hose ends are already tightened.
- Always install hoses so to avoid any friction with other hoses and parts.

  We recommend to keep a distance between hose and other parts of at least one half of the hose outer diameter. Keep a minimum gap of 1/2 inch in any case.

  After mounting a hose connecting two parts that are movable to each other, check during the return to service that the hose is not rubbing in the whole moving range.
- Check daily that all flanges and covers are fixed correctly. It will prevent vibrations and damage during operation.

https://www.truck-manuals.net/

https://truckmanualshub.com/

THE FUEL SYSTEM

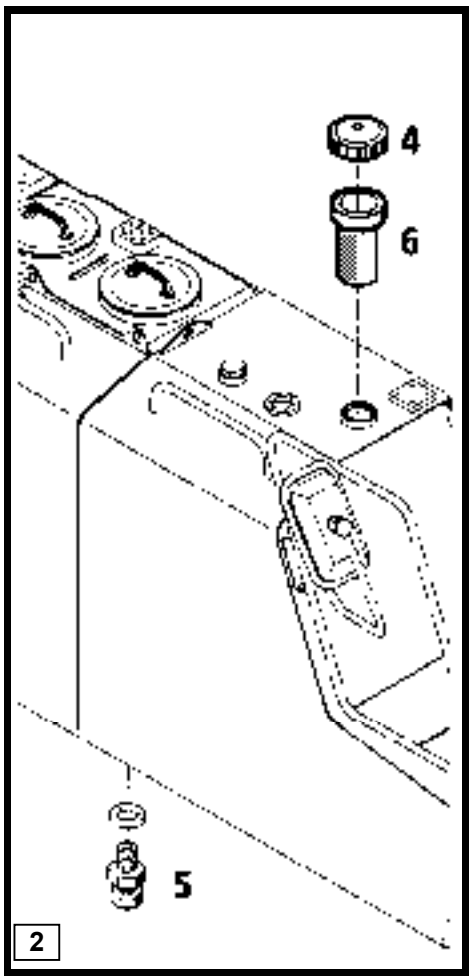

TO DRAIN AND CLEAN THE FUEL TANK

. The fuel tank bottom is equipped with a drain plug 5 (fig. 2).
. To drain the water of the tank, unscrew the plug 5 about two turns, then retighten the plug as soon as water free fuel flows out.
. To empty the tank remove the cover 4 and drain plug 5, and drain the fuel into a suitable container.
. Regularly check the tank and screen filter 6 for contamination.
. If necessary, replace the fuel screen filter 6 and/or flush the fuel tank.

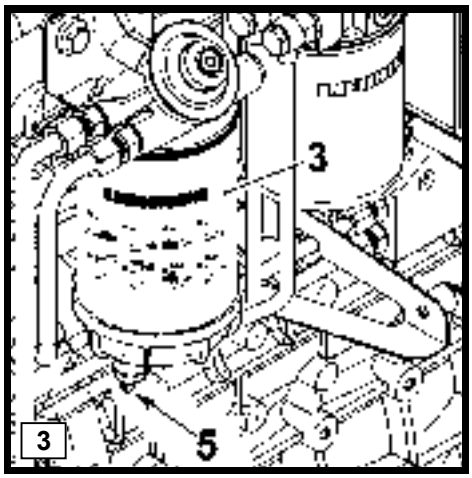

TO DRAIN THE WATER IN THE FUEL PREFILTER

. The water separator of the fuel prefilter must be drained each time the symbol:
. "high water level in fuel prefilter"
. appears on the display.
. Open drain plug 5 (fig. 3) of fuel prefilter 3.
. Drain the water until fuel emerges, then tighten the drain plug 5.

FUEL FILTERS

Replace the cartridges of fuel prefilter 3 (fig. 8) and the fuel fine filter 4 every 1000 working hours.

Changing the fuel prefilter

- Position a collecting container under the fuel prefilter 3.
- Clean fuel pre-filter and the surrounding area thoroughly
- Disconnect electrical connections of water level sensor and fuel prewarming (fig. 5 a and b).
- Drain fuel : Unscrew bleeder screw 6 and drain plug 5.
- Loosen filter cartridge 3 with strap spanner or similar tool and unscrew.
- Unscrew the water separator reservoir 7 from the filter cartridge 3 (fig. 6).
- Dispose of the old filter cartridge 3.
- Clean the water separator reservoir 7 with water and dry with compressed air.
- Apply a little oil to the O-ring 9 of the water separator reservoir.
- Screw the water separator reservoir onto the new filter cartridge 3 until the O-ring 9 is resting on the filter cartridge.

https://www.truck-manuals.net/

- Tighten the water separator reservoir 7 by hand from half a turn.
- Tighten the drain plug 5.
- Check cleanliness of filter head 8 and ensure that the thread adapter is sitting securely in the filter head.
- Clean the filter head if necessary.
- Lubricate sealing ring 10 of the new filter cartridge with clean fuel.
- Fill new filter cartridge 3 with clean fuel and screw on until the sealing ring 10 is resting on the filter head 8.
- Tighten the filter cartridge 3 by hand from half a turn.
- Reconnect the electrical connections a and b and close the bleeder screw 6.
- Bleed the fuel system.

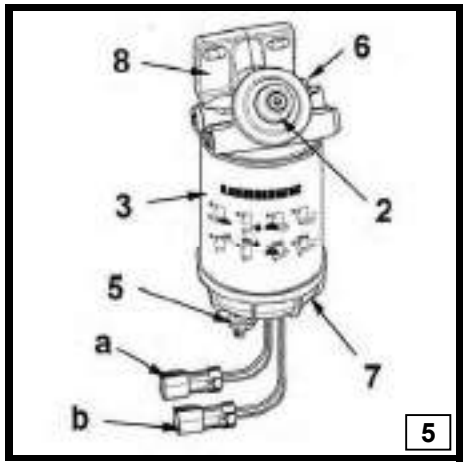

5

Changing the fuel fine filter

- Position a collecting container under the fuel fine filter 4.
- Clean fuel fine filter and the surrounding area thoroughly.
- Loosen filter cartridge 4 with strap spanner or similar tool and unscrew.
- Dispose of the old filter cartridge 4.
- Check cleanliness of filter head and ensure that the thread adapter is sitting securely in the filter head.
- Clean the filter head if necessary.
- Lubricate sealing ring 12 of the new filter cartridge 4 with clean fuel.
- Fill new filter cartridge 4 with clean fuel and screw on until the sealing ring 12 is resting on the filter head.
- Tighten the filter cartridge 4 by hand from half a turn.
- Bleed the fuel system.

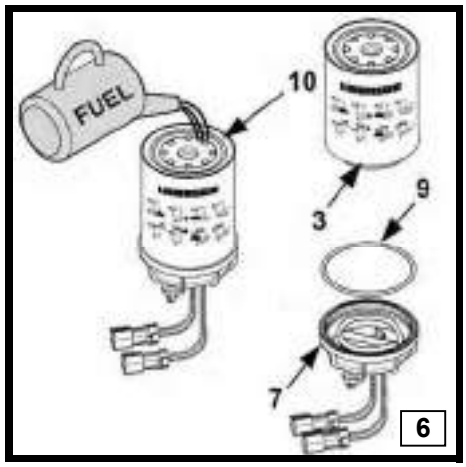

6

TO BLEED THE FUEL SYSTEM

It is necessary to bleed the fuel system after:

- changing of the fuel filter.
- cleaning of the fuel tank.
- repairs to the fuel system.
- running the fuel tank empty.

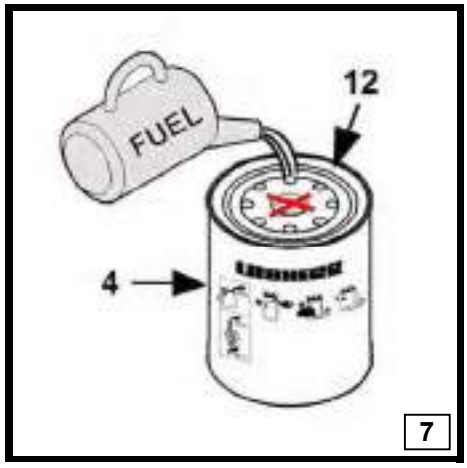

7

CAUTION

Do not open any fuel lines, injection lines or screw connections for bleeding of the fuel system.
Only open the bleeder screw 1 on the filter head of the fine filter 4.

To bleed the fuel system:

- Loosen the bleeder screw 1 on the filter head and unscrew 2 to 3 turns of thread.
- Actuate the hand pump 2.
- When bubble-free fuel flows out of the bleed screw tighten bleeder screw 1 again.
- Continue to actuate the hand pump 2 until resistance becomes intense.
- Start the Diesel engine.

Repeat the bleeding procedure if the Diesel engine will not continue to run after starting.

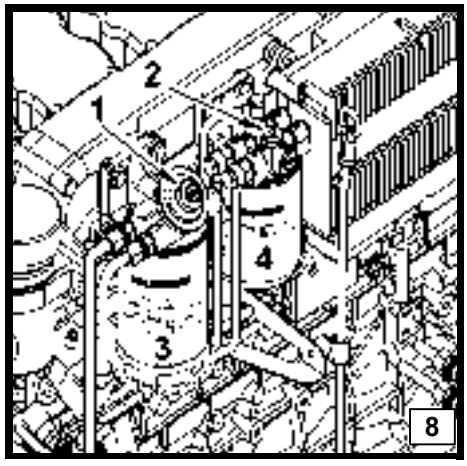

8

https://www.truck-manuals.net/

https://truckmanualshub.com/

THE DIESEL ENGINE

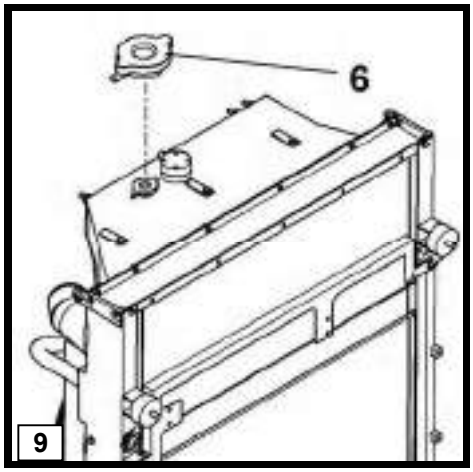

COOLING CIRCUIT

. Clean the cooling grid of the water cooler as required.

. To clean:

- Blow out the cooling grid with compressed air or steam jet from the engine room outwards.

. Replace the pressure relief valve – filler cap (fig. 9, pos. 6) if it leaks.

. Check the condition and for leaks of the hoses between the radiator and engine and check the heater hoses regularly

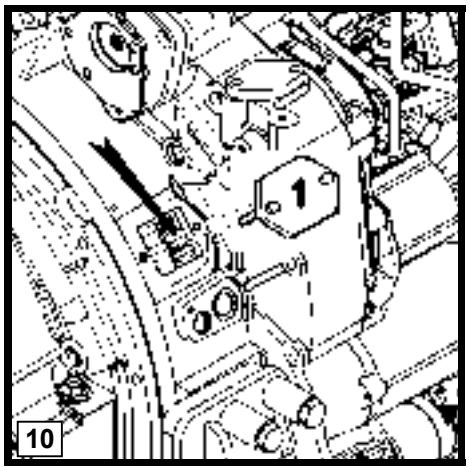

LUBRICATION OF THE STARTER RING GEAR ON THE FLYWHEEL

. The maintenance cover is mounted on the right-hand side of the diesel engine on flywheel housing.

. To lubricate the starter ring:

- Unscrew the maintenance cover 1 from the flywheel housing (fig.10).
- Only grease the starter ring gear 4, the sensor ring gear 5 must be free of grease (fig. 11).
- Check ring gear and, if necessary, grease lightly with regular lubricating grease.
- Turn the engine using the starter and repeat the lubrication on several points.
- Screw on the maintenance cover again.

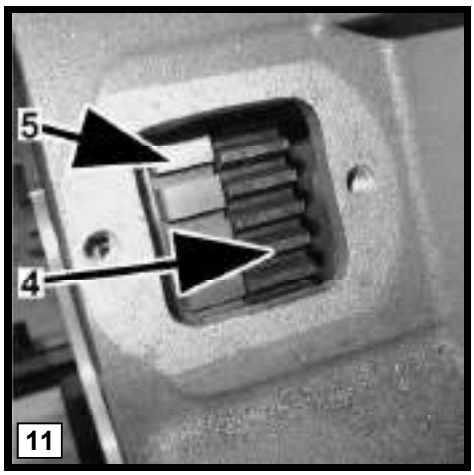

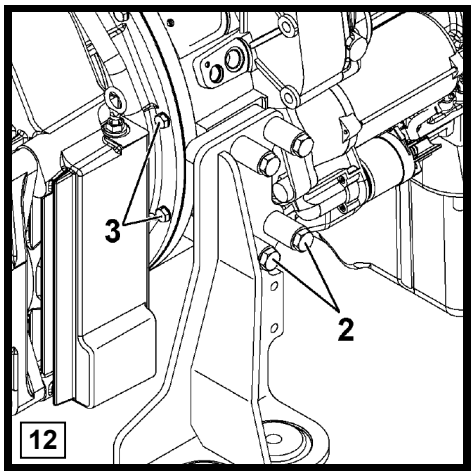

MOUNTING SCREWS

. Check the mounting screws 2 (fig. 12) of the engine supporting brackets mounts and retighten, if necessary. (Torque to 280 Nm (207 ft. lbs.)).

. Check the mounting screws 7 (fig. 12) of the engine rubber mounts and retighten, if necessary. (Torque to 390 Nm (290 ft. lbs.)).

SPLITTERBOX MOUNTING SCREWS

. The mounting screws (fig. 12, pos 3) from splitterbox to the Diesel engine SAE housing must also be checked regularly and retightened, if necessary.

. Torque: 68 Nm (50 ft. lbs.)

https://www.truck-manuals.net/

RIBBED V-BELT

The Diesel engine is equipped with a tensioning device for the ribbed V-belt for generator and air conditioner compressor drive. (fig. 13). This is self-tensioning and thus maintenance-free.

Checking the ribbed V-belt for damage:

Check the V-belt for good condition every 500 working hours.

Damages to the ribbed V-belt include:

- Rib fractures
- Transversal fractures in several ribs
- Rubber nodules in between the ribs
- Deposition of dirt or stones
- Ribs becoming loosened at the base of the ribs
- Transversal fractures on the belt exterior

Replacing the ribbed V-belt:

- Make sure that a ratchet, complying with DIN 3122 D 12,5 (1/2"), as well as a new ribbed V-belt are on-hand.
- Pivot back the tensioning device against the spring force in an anticlockwise direction up to the stop(fig. 14)..
- Remove the ribbed V-belt
- Check tension pulley and belt pulley for sound condition (e.g. worn bearing of tension pulley, as well as wear of the belt pulley profile).
- If parts are damaged, replace the parts
- Mount new ribbed V-belt with pivoted back tensioning device onto the belt pulley of the crankshaft, air-conditioning compressor, generator and deflection pulley

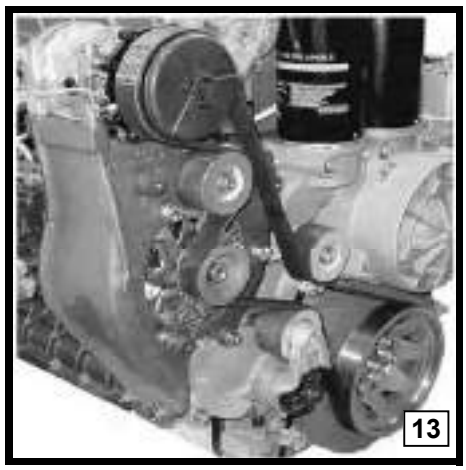
13

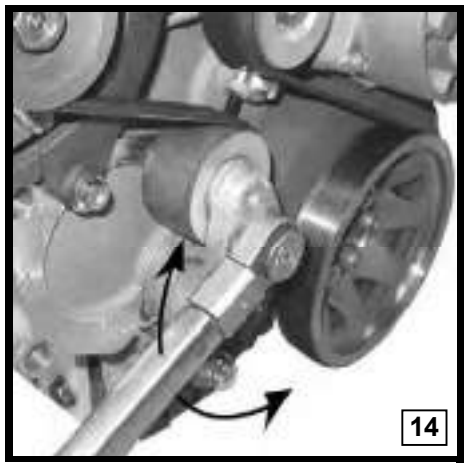
14

OIL SEPARATOR FILTER – CRANKCASE BREATHER

The oil separator is mounted on the right-hand side of the Diesel engine on the same side of the flywheel

The oil separator filter element must be replaced every 1000 working hours.

<u>To replace the oil separator filter element:</u>

- Ensure that an original LIEBHERR oil separator filter element is on-hand.
- Clean the oil separator and the surrounding area thoroughly.
- Unscrew and remove the oil separator sealing cap, if required use a screwdriver (fig. 15).
- Pull out the oil separator filter element and dispose of in an environmentally-friendly manner(fig. 16)..
- Insert new oil separator filter element and push in up to the stop.
- Mount the oil separator sealing cap and tighten by hand to the stop.

15

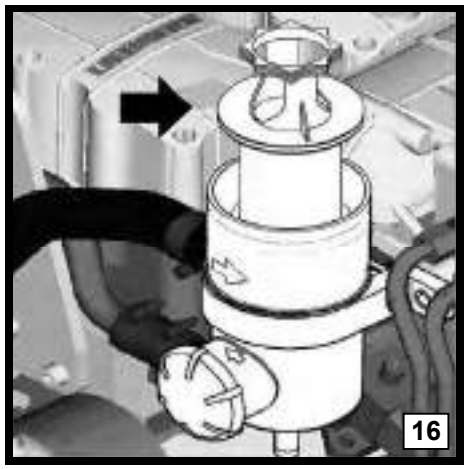
16

https://www.truck-manuals.net/

https://truckmanualshub.com/

THE TRACK COMPONENTS

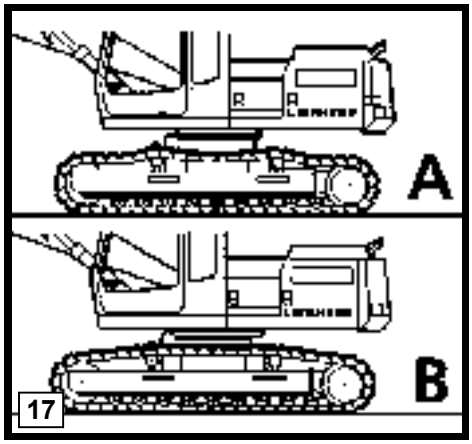

17

- The tracks are maintenance free until the track pads or flanges need to be reconditioned or replaced.
- The lifetime seals in carrier rollers, track rollers and idlers increase the life expectancy of the tracks and protect from dirt and contamination .
- However, even though the track is virtually maintenance free, the following points do need to be checked.

TIGHTENING THE TRACK TENSION

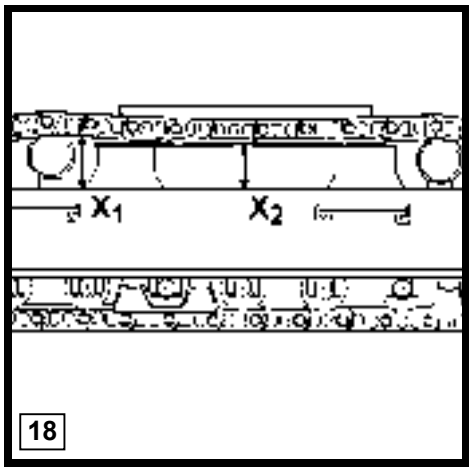

18

- Fig. 17 A shows a track, that is not tightened properly, Fig. 17 B shows a track that is tightened properly.
- The track tension needs to be checked regularly due to normal wear of the tracks, and tightened, if necessary.
- The track chain tension is correct when the slack between both carrier rollers is about 1.2” (30 mm).

To check the chain slack (fig. 18) :

- measure X1, distance between running surface of carrier roller and top of side frame
- measure X2, distance between chain link and top of side frame
- calculate chain slack = X1 - X2.

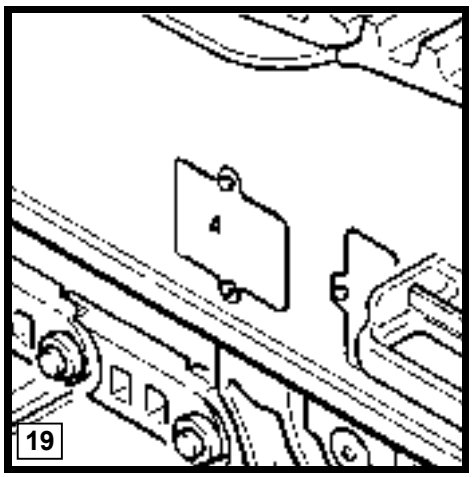

19

To tighten a track :

- Remove the access cover (Fig. 19, pos. 4) on the side frame of the undercarriage.
- Attach a special fitting 2 to grease gun 1 (Fig. 20).
- Connect the grease gun to cylinder 3.,
- Pump grease into cylinder 3 until the track chain is properly tensioned.

To release track tension, carefully release some grease from the grease cylinder by loosening and turning the grease fitting counter clockwise.

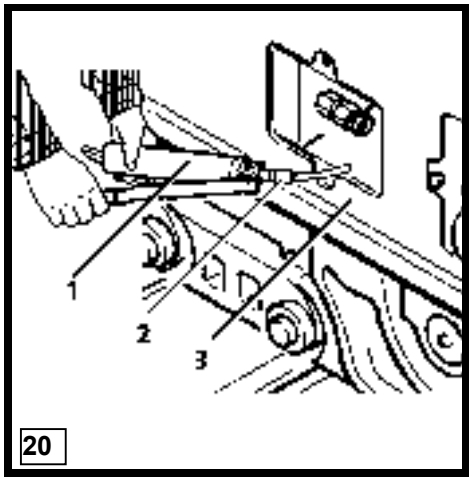

20

DANGER

When adjusting the chain tension, keep your head clear of the access hole. The grease cylinder is under high pressure and the chain will sag.
Grease is under high pressure and might squirt out.

https://www.truck-manuals.net/

https://truckmanualshub.com/

CHECKING TIGHTNESS OF TRACK PADS

Check mounting screws 5 weekly for tightness and, if necessary, retighten (Fig. 21).

Torque the track pad bolts :
- M22× 1,5 -12.9 (chain D7F) to 1070 Nm (790 ft.lbs).
- 1" -14 UNF - 12.9 (chain D8K, B95) to 1560 Nm (1150 ft.lbs).

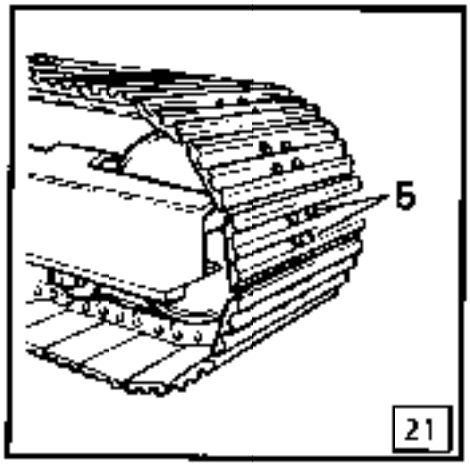

CHECKING MOUNTING SCREWS OF TRAVEL GEARS AND SPROCKET WHEELS

This screws must regularly be checked and retightened.

Torque the mounting screws of the travel gears onto the side frames (M24 -10.9, fig.22, pos.6) to 960 Nm (708 ft.lbs).

Torque the mounting screws of the sprocket wheels onto the travel gears (fig 22, pos.7) :
- M20 - 10.9 (Types 629, 630, 631 and 633; gear FAT 450) to 560 Nm (413 ft lbs).
- M24 - 10.9 (Types 632, 695, 708 and 736; gear FAT 500) to 960 Nm (708 ft.lbs)

Torque the mounting screws of the hydraulic motors onto the travel gears (, fig.22, pos.8) :
- M20 -10.9 to 560 Nm (413 ft.lbs).
- M24 -10.9 to 960 Nm (708 ft.lbs).

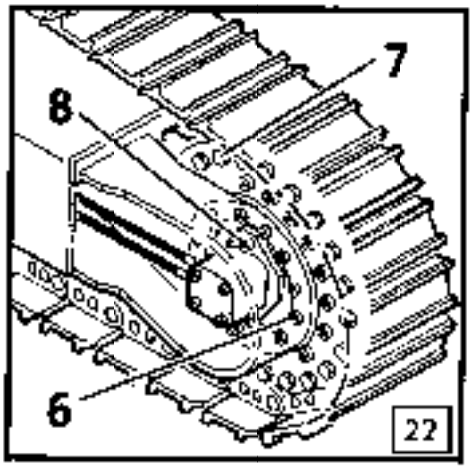

CLEANING THE TRACK COMPONENTS

At the end of a workday, the complete undercarriage should be checked and, if necessary, cleaned and repaired.

CAUTION

DO NOT operate machine if large rocks or pieces of wood, steel, wires or cable are wedged into the track components.

Do not allow **mud**, rocks, etc. to collect on track components.
Dried or frozen mud, as well as rocks or other debris in the track components could cause serious damage to the machine if operated, or if it is attempted to break the machine loose under engine power.
If the machine is frozen to the ground, heat the ground or the track pads to free the machine.
In freezing weather, park machine on planks or logs so the tracks will not freeze to the ground.

The machine can be supported and lifted slightly on each side with the attachment, so the tracks can be cleaned.

Clean the surfaces of the tension unit and apply grease.

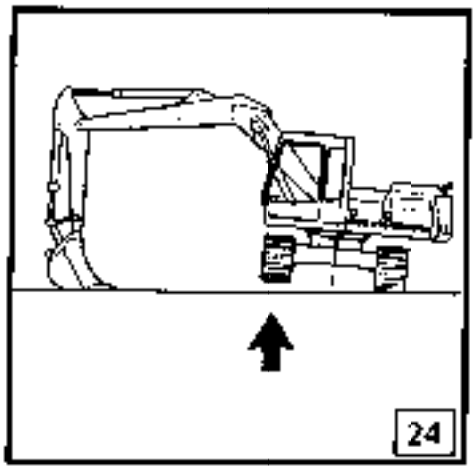

DANGER

Make sure the excavator is supported with wooden blocks.

Notice : **The track chain components of the machines working with their undercarriage the most of time underwater, are exposed to increased rost and premature wear. On these machines, the oil level in travel gears, track rollers and guide wheels must be checked daily. Weekly perform an oil analysis for these components to check the water content of the oil and the component wear. In addition, the oil change intervals must be reduced to 100 working hours.**

https://www.truck-manuals.net/

https://truckmanualshub.com/

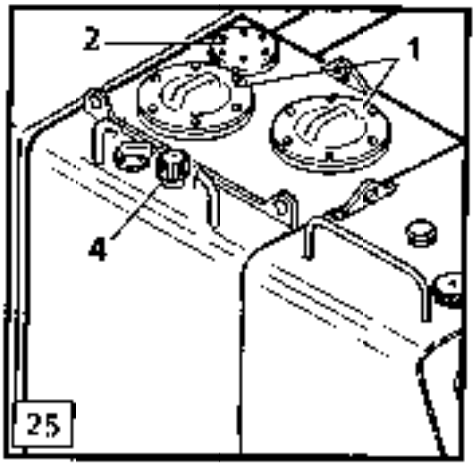

THE HYDRAULIC SYSTEM

Maintenance of the hydraulic system is limited to the hydraulic tank.

None of the other components in the hydraulic system require special maintenance.

However, hydraulic lines and hoses must be regularly checked for leaks.

Cleanliness in the hydraulic system is especially important.

For this reason, the given maintenance intervals to replace the return filter, to clean the oil cooler, and to change the oil need to be strictly observed

DANGER

DO NOT ALLOW YOUR SKIN TO COME INTO CONTACT WITH HOT OIL OR COMPONENTS CONTAINING HOT OIL.
At or near operating temperature, engine and hydraulic oil is hot and can be under pressure.

Always relieve the hydraulic pressure before working on the hydraulic system.

Apply both joysticks (with ignition key in contact position) and then unscrew breather filter (Fig. 29, pos 4) one turn to depressurize the hydraulic tank.

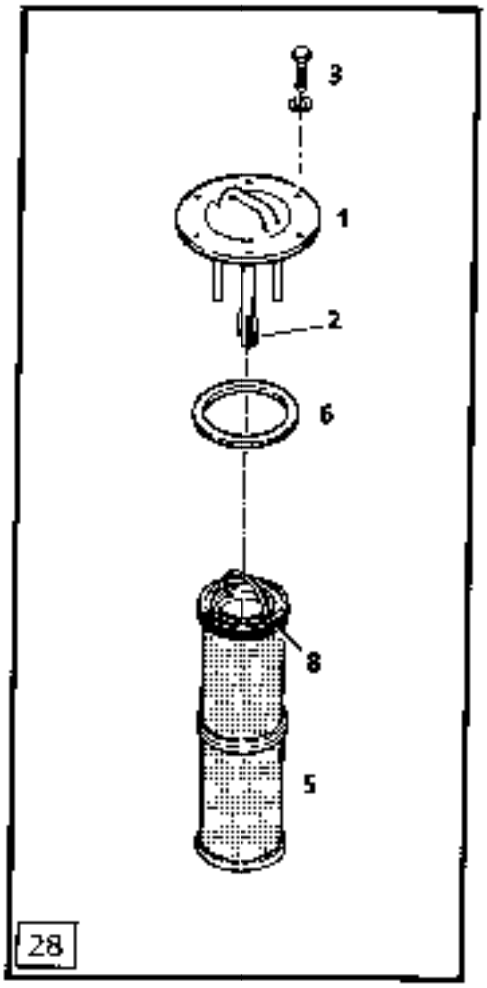

OIL COOLER

A clean oil cooler is necessary to achieve optimum hydraulic oil cooling
Clean the cooling circuit with air or steam at the intervals specified in maintenance schedule, and more often if the working conditions make it necessary.

RETURN FILTERS

The magnetic rod in the return filter (Fig 28, pos 2) should be cleaned daily during the first 300 operating hours, then every week.

Change fibre glass filter element 5 after the first 500 and 1000 operating hours.

Further changes of this element

- every 1000 operating hours,
- and with every occurrence of damage caused by contamination of the hydraulic system.

Notice : **When working under very dusty conditions observe the special recommandations concerning the element change on page 5.9.**

https://www.truck-manuals.net/

To check and clean the magnetic rod and to replace a filter element :

Remove screws 3 (Fig. 28) and pull off cover 1 with magnetic rod 2.

Carefully clean magnetic rod 2.

Remove the filter element 5 and insert the new element, with the LIEBHERR decal on top.

While inserting the new element 5, be sure the O-ring 8 is not damaged.

Install cover 1 and make sure the seal 6 is seated correctly.

Reinstall and regularly tighten the screw 3.

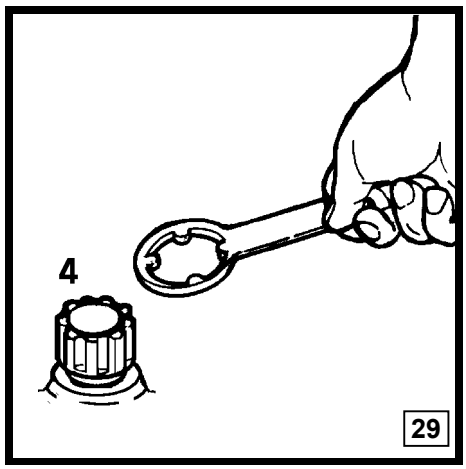

SERVO FILTER

The pressure filter integrated in the control oil unit (fig. 30, pos. 1) is to be cleaned regularly and the filter cartridge changed.

For maintenance intervals, see Maintenance Chart.

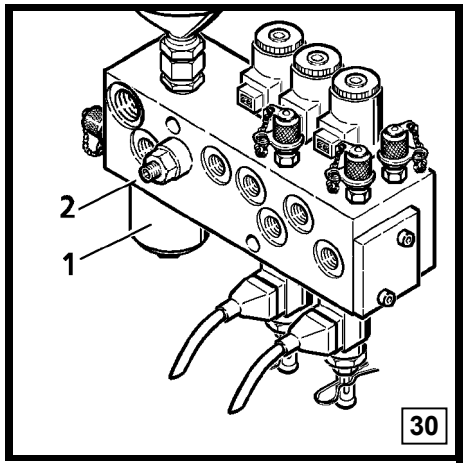

Cleaning the filter :

Remove the filter, remove the filter element and clean the filter housing.

To install a new filter element :

Coat with hydraulic oil the O-rings 4 and 5 and the threads and the sealing faces on the filter head 2 and on the housing 1.

Insert with care the new element 3 onto the centring pin 6.

Reattach the filter housing 1, screw it by hand to the stop and than unscrew it from a quarter turn.

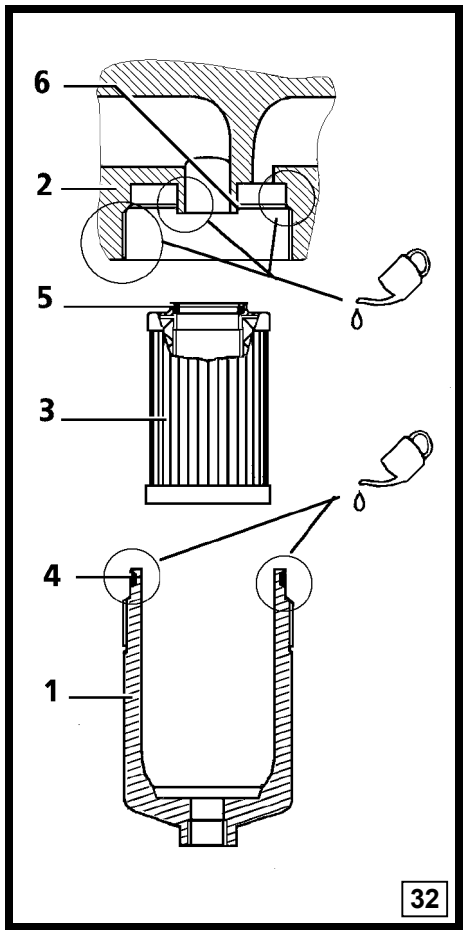

REPAIRING THE HYDRAULIC SYSTEM

Part of the maintenance consists of checking the complete hydraulic system for leaks, loose connections, frayed, worn or damaged lines, tubes and hoses and cleaning the hydraulic cooler as necessary.

DANGER

NEVER CHECK FOR LEAKS WITH YOUR BARE HANDS.

Fluids escaping from a small hole can have enough force to penetrate the skin.

Never disconnect lines or hoses before the attachment is lowered to the ground, the engine is turned off, both joysticks are moved, with ignition key in contact position, and the hydraulic pressure in the tank is relieved by turning the breather filter (Fig. 29, pos. 4).

https://www.truck-manuals.net/

https://truckmanualshub.com/

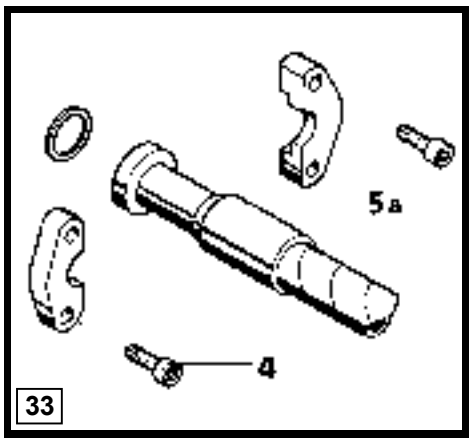

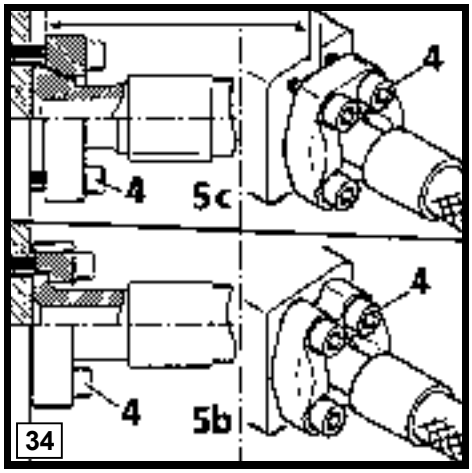

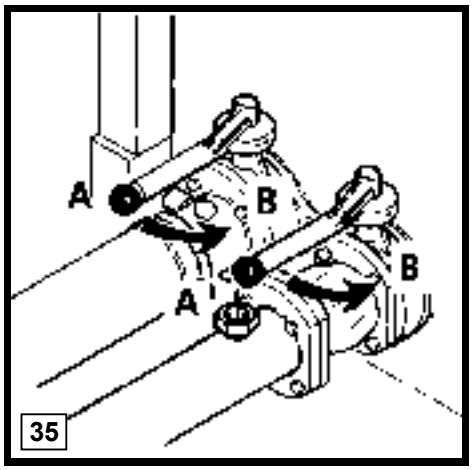

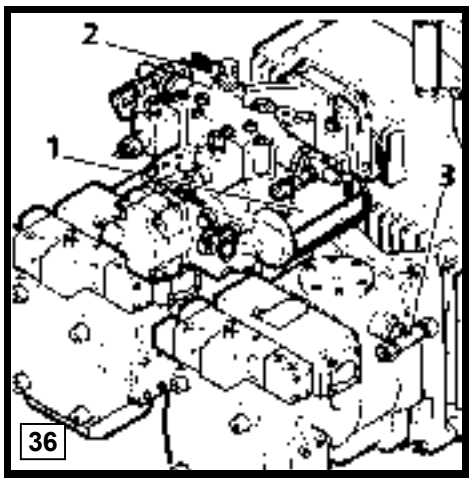

. High pressure hoses with nominal size NW 20, NW 25, NW 32 and with SAE fittings are installed on your machine (fig. 33).

CAUTION

Any time a high pressure hoses is defective (bubbles, moisture, damage on the surface, etc...), it must be replaced. When installing the replacement hose, avoid any stress and strain on the hose.

Do not turn or twist the hose during installation !

. The following O-rings are needed for hydraulic hoses

. NW 20	25×3,53	Id. No. 7367610
. NW 25	32,9×3,53	Id. No. 7367611
. NW 32	37,7×3,5	Id. No 7367612

.

. The mounting screws on the SAE fittings for high pressure hoses must be tightened to the following torque values:

Screw 4 size	Torque value in Nm - Quality 10.9		
	Half flange **5a**	Flange without rim **5b**	Flange with rim **5c**
M10	62	45	65
M12	108	70	110
M14	172	120	180
M16	264	170	250

.

. **Notice: tighten the screws 4 evenly and crosswise!**

REMOVING THE SUCTION HOSE

. If suction hoses have to be removed, the shut off valve at the hydraulic tank has to be closed. Turn the valve by 90° to close (fig.35).

. -A- Open

. -B- Closed

. After the tank pressure is relieved, remove the drain valve on the suction hose fitting on the side of the pump and drain the hydraulic oil from the pump into a suitable container.

. After repair, be certain to return the valve to its original position, push it in its notch and retighten the bleeder filter of the hydraulic tank and bleed the hydraulic pumps.

BLEEDING THE HYDRAULIC PUMPS

. Bleed the hydraulic pumps after any repairs on the pumps and/or after every oil change.

. To bleed the left working pump or the swing pump, loosen the union at the leak oil hose (fig. 36, pos. 2) and let the air escape. As soon as hydraulic oil flows out of the hose, reconnect the leak oil hose.

. To bleed the right working pump, loosen the union 3, let the air escape and retighten the nuts as soon as hydraulic oil flows out.

. Fill the pumps with hydraulic oil through the same connection or plug before initial start up, or after repairs or replacement.

https://www.truck-manuals.net/

https://truckmanualshub.com/

BREATHER FILTER ON HYDRAULIC TANK

This breather filter (fig. 37, pos. 4) must be replaced at each hydraulic oil change.

Notice : When working under very dusty conditions observe the special recommandations concerning the breather filter change on page 5.9.

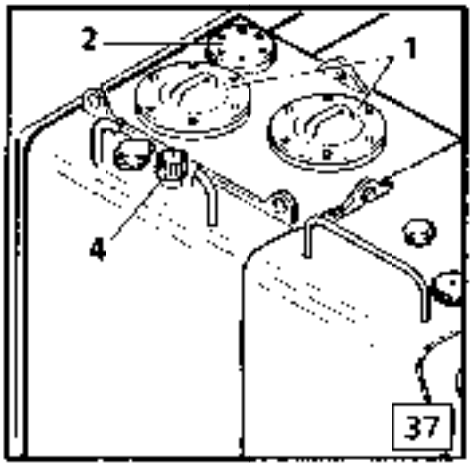

THE SERVO CONTROL SYSTEM

The servo control valves need no special maintenance. However, all tube and hose connections to components as accumulator, pressure relief valves, filter etc. , must be regularly checked for leaks.

DANGER

The accumulator (Fig. 38, pos. 1) keeps the servo control system pressurized even after the engine is turned off. Before any repair in the servo circuit, the pressure must be relieved :
Lower the attachment to the ground, turn the engine off, apply both joysticks (with ignition key in contact position).

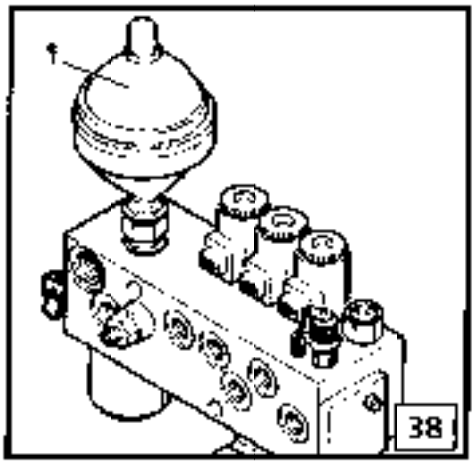

HYDRAULIC CYLINDERS

IMPORTANT :
Before attempting to repair, replace or reseal hydraulic cylinders (Fig. 39) or any other components, contact your **LIEBHERR** dealer.

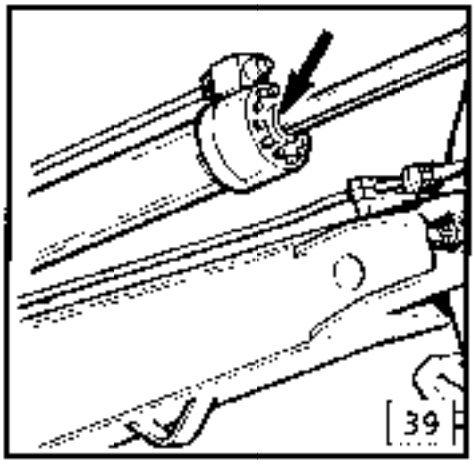

Piston rod preservation :
Corrosion is comparable to wear anu tear.
Therefore, if the machine is not being used for longer than 4 weeks or if the machine is transported by ship, the following should be done.

Park the crawler loader in a way so that the piston rods are retracted as much as possible (fig. 40).

Lubricate all bearings, ball joints, hinges, exposed parts, cable connections and exposed cylinder rods with anti-corrosive grease (LIEBHERR CTK, Id. No. 861331301).

If the machine is used during certain working applications with only a short stroke, the cylinder should also be lubricated.

If the machine is transported by ship (sea water) or in the winter (road salt), the preservation of the piston rods must be rechecked after the machine has been loaded since the anti corrosive grease may have been removed by the wiper ring

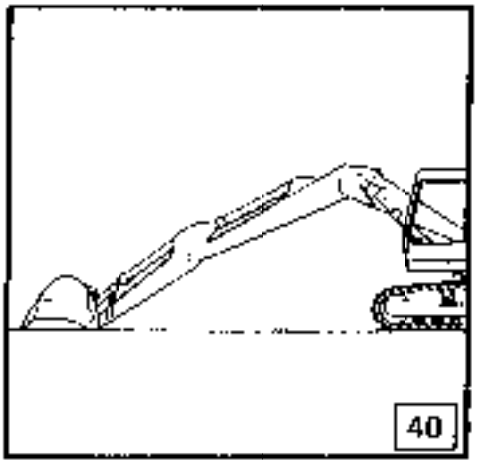

https://www.truck-manuals.net/

https://truckmanualshub.com/

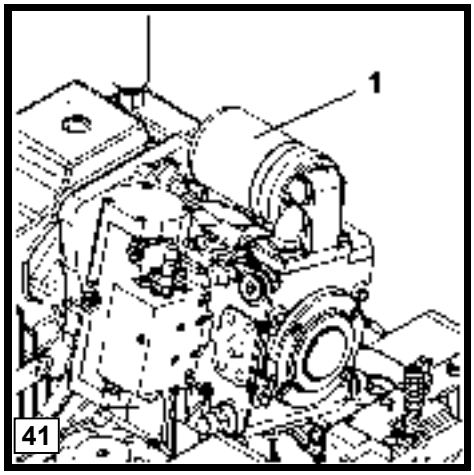

REPLENISHING OIL FILTER IN SWING CIRCUIT

The element of the replenishing oil filter (fig. 41, pos. 1) mounted to the swing pump must be changed regularly.

For maintenance intervals, see Maintenance Chart

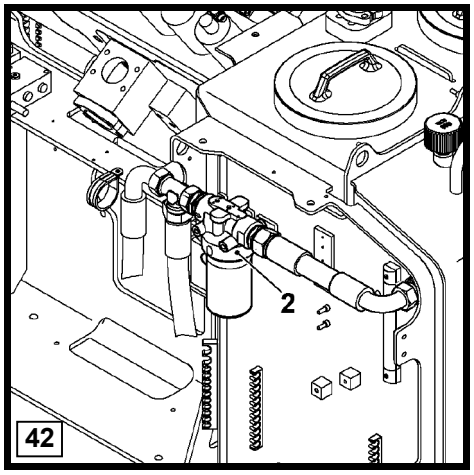

LEAKAGE OIL FILTER

The filter collecting the leakage oil of various hydraulic components is mounted to the rear side of the hydraulic tank (fig. 42, pos. 2), and must be maintained at regular intervals.

During maintenance, the filter element must be replaced or cleaned .

For maintenance intervals, see Maintenance Chart

Notice: The filter element can be cleaned up to maximum 3 times. After 3 cleanings it must be replaced.

Cleaning the filter:

Remove the filter housing 1, pull out the filter element 3 and clean both the filter element and housing.

To install the new or cleaned filter element: (see also fig. 32)

Coat with hydraulic oil the O-rings 4 and 5 and the threads and the sealing faces on the filter head 2 and on the housing 1.

Insert with care the new element 3 onto the centring pin 6.

Reattach the filter housing 1, screw it by hand to the stop and than tighten it with a wrench using the hexagon head at the bottom of the housing 1 (tightening torque: 40^{+10} N.m).

Cleaning the filter :

Remove the filter housing 1, pull out the filter element 3 and clean both the filter element and housing.

To install the new or cleaned filter element :

Coat with hydraulic oil the O-rings 4 and 5 and the threads and the sealing faces on the filter head 2 and on the housing 1.

Insert with care the new element 3 onto the centring pin 6.

Reattach the filter housing 1, screw it by hand to the stop and than tighten it with a wrench using the hexagon head at the bottom of the housing 1 (tightening torque: N.m).

THE SWING AND TRAVEL BRAKES

The travel as well as the swing brakes are wet disk brakes, they are hydraulically vented and fully sealed and integrated into the travel and swing gear.

They are used as a parking brake and are wear resistant and maintenance free.

https://www.truck-manuals.net/

https://truckmanualshub.com/

CHECKING MOUNTING SCREWS FOR TIGHTNESS

The mounting screws listed below must regularly be checked and retightened if necessary. See maintenance chart for check intervals.

MOUNTING SCREWS OF THE COUNTERWEIGHT

This mounting screws M36 10.9 (fig. 45, pos. 1) must be tightened to 2350 Nm (1730 ft.lbs.).

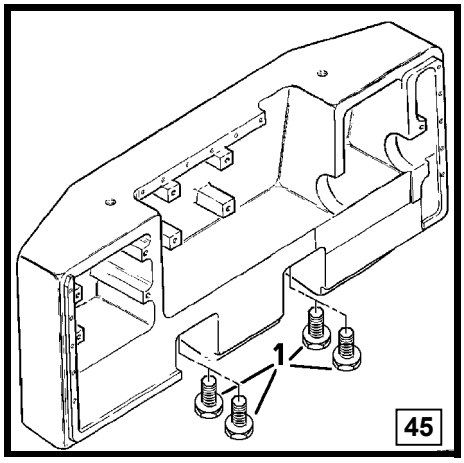

MOUNTING SCREWS OF THE SWING RING

The mounting screws M27 10.9 swing ring to undercarriage (fig. 46, pos. 3) and upper carriage to swing ring (pos. 4) must be tightened to 1400 Nm (1030 ft.lbs.).

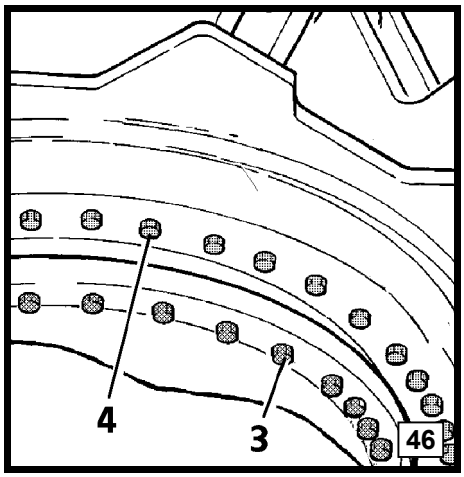

MOUNTING SCREWS OF THE HYDRAULIC OIL AND FUEL TANK

This mounting screws M20 10.9 (fig. 47, pos. 5) must be tightened to 560 Nm (413 ft.lbs.).

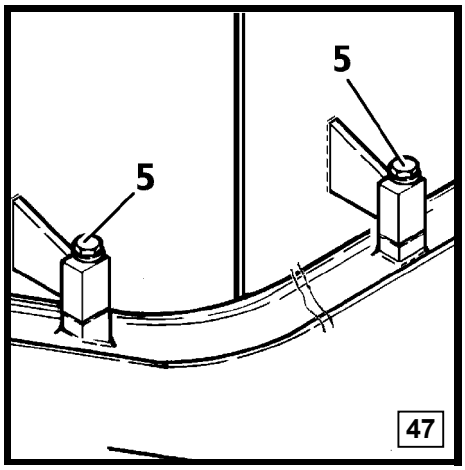

MOUNTING SCREWS OF THE SWING GEAR AND MOTOR

The mounting screws M24 10.9 of the swing gear (fig. 48, pos. 6) must be tightened to 960 Nm (708 ft.lbs.).

The mounting screws M20 10.9 of the swing motor (pos. 7) must be tightened to 560 Nm (413 ft.lbs.).

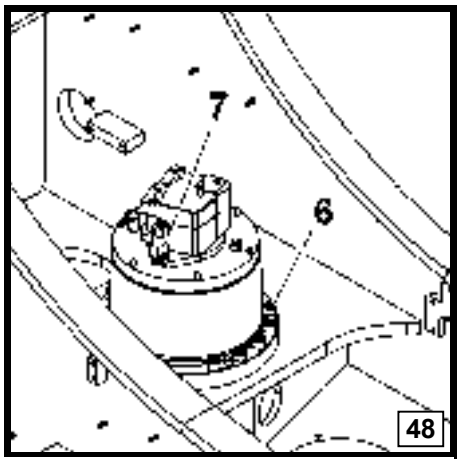

https://www.truck-manuals.net/

https://truckmanualshub.com/

THE DRY AIR FILTER

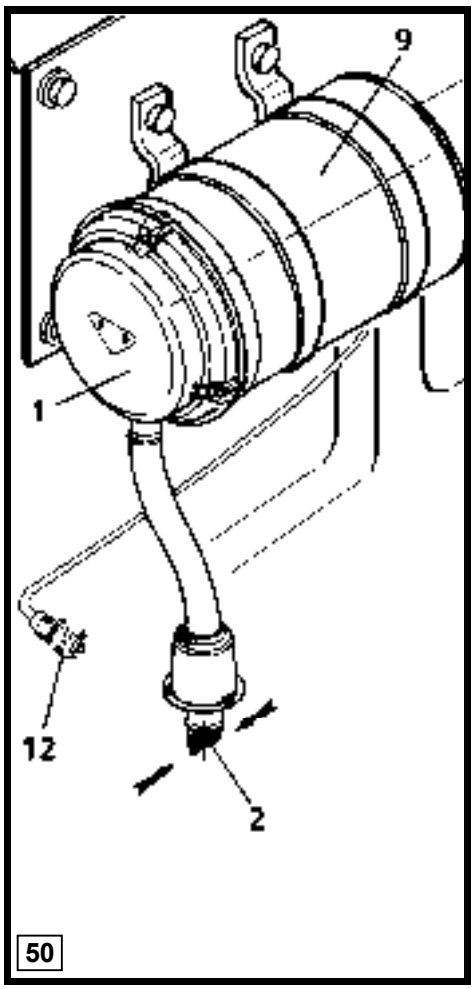

50

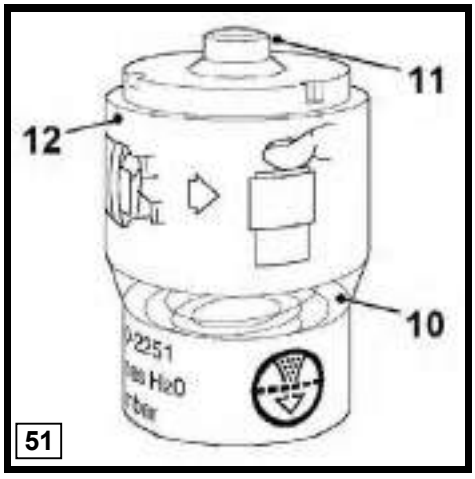

51

For maximum engine protection, the air intake system must be checked and serviced at regular intervals (fig.50).

The air cleaner is designed to give maximum protection at longest maintenance intervals.

Maintenance consists of replacing the filter elements 3 and 6. We do not recommend to clean the filter elements.

The maintenance indicator (fig. 50, pos. 12) monitors the depression occurring at the filter outlet, during the Diesel engine operation.

The coming out of a red stripe in the window 10 shows that the maximum permissible vacuum of 5 kPa (50 mbar) has been reached.
This status remains memorized even after the engine has been shut down (the red strip remains visible in the window 10).

At that time, the corresponding primary filter element must be replaced.

To reset the vacuum indicator, press the "Reset" button 11 (fig. 51).

We recommend that the primary filter element 3 is only removed and replaced after the maximum permissible depression has been reached. However, it should be replaced at least once a year.

Seals between filter elements and the housing 9 can be damaged if the filters elements are removed too often.

The safety element 6 should be replaced after the primary element has been changed 3 times, or at least once a year.

Before the new element is installed, carefully clean the seal and the sealing surface of the filter housing 9.

Manually press to open the dust discharge valve 2 (fig. 50) once a week so it does not stick together because of dust or humidity.

https://www.truck-manuals.net/

https://truckmanualshub.com/

CHANGING THE PRIMARY FILTER ELEMENT

Turn the engine off, remove the cover 1 and pull out the primary element 3 (fig. 53).

Clean the inside of the filter housing and the sealing surface with a damp rag.

Do not direct compressed air into the housing.

Insert a new element, make sure it is seated correctly and replace and lock the cover 1.

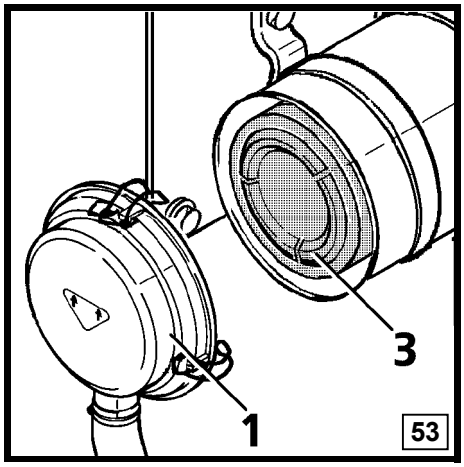

REPLACING THE SAFETY ELEMENT (fig. 55)

The safety element 6 should be replaced at least once a year or after the main element has been replaced 3 times.

Visually check the safety element. It should be replaced if it looks dirty.

This safety element should only be replaced by a LIEBHERR mechanic!

Remove the main element as described before.
Pull out the safety element 6.
Carefully clean the inside of the filter housing with a damp rag.
Clean the sealing surfaces and check for damage.

Carefully insert the new safety element 6 making sure it is seated correctly.

Install the main filter element 3 as described previously and close filter housing.

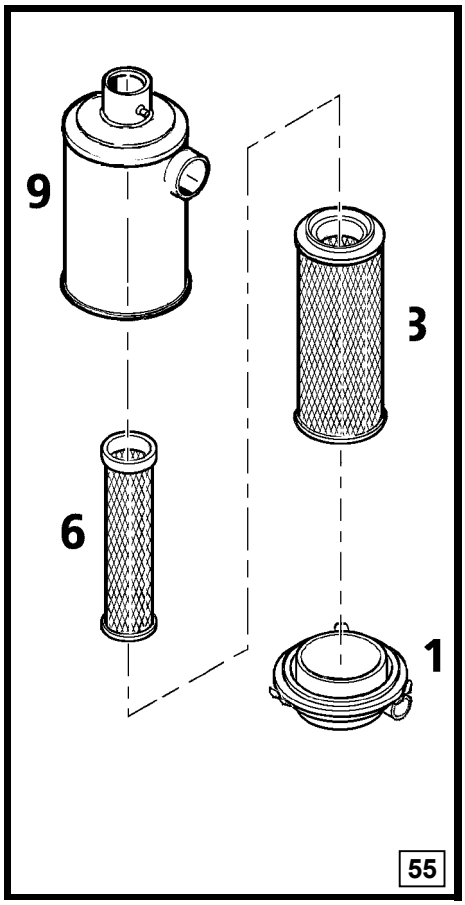

CHECKING THE AIR INLET HOSE (fig. 56)

The air hose between filter and engine air intake pipe 7 must be checked for damage and leaks whenever the filter element is replaced.

If necessary, retighten the clamps 8.

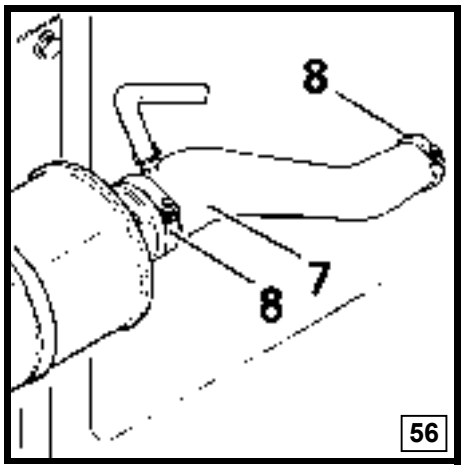

https://www.truck-manuals.net/

https://truckmanualshub.com/

THE ELECTRICAL SYSTEM

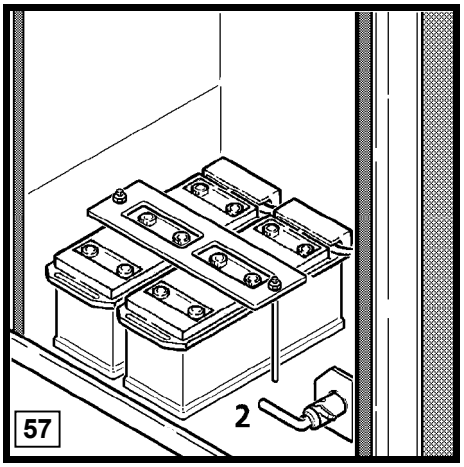

To insure trouble free operation of your machine, the electrical system must be in good condition. The gauges, indicators and components of the electrical system should be checked daily for proper function.

Always replace burnt out fuses and bulbs. DO NOT repair fuses.

Check for bare and damaged wires which could cause damage to the electrical system or a fire. Check for loose, dirty or corroded connections.

IMPORTANT:
When performing repairs on the electrical system, or before using an arc welder on the machine, tilt the battery switch 2 to position B (fig. 57 and 58) to disconnect the batteries (grounding connection opened).
Cover the electrical components (especially the alternator) when washing the excavator to protect it from water.

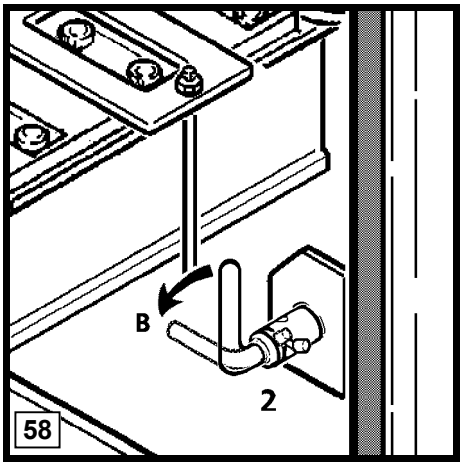

BATTERY MAINTENANCE

In order for the batteries to function properly, it is important to keep them clean at all times.

The battery poles and cable clamps in particular should be cleaned regularly and then coated with acid resistant grease (fig. 58).

To check the electrolyte level, open battery compartment door, lift up rubber cover and remove caps.

The electrolyte level should be 1/2“ (10 - 15 mm) above the plates.

If the electrolyte level is low, add distilled water.

Regularly check the specific gravity with a hydrometer. A fully charged battery should have a value of 1.28 kg/l (31.5°).

Batteries with a lower value should be recharged. Reinstall caps, check mounting security of batteries and close the battery compartment door.

DANGER

Wear protective gloves and safety glasses when handling batteries!
Keep sparks and open flame away from battery.
Battery fumes are highly flammable and explosive.
Batteries contain acid which should not be touched. In case of contact, flush with water and get medical attention.

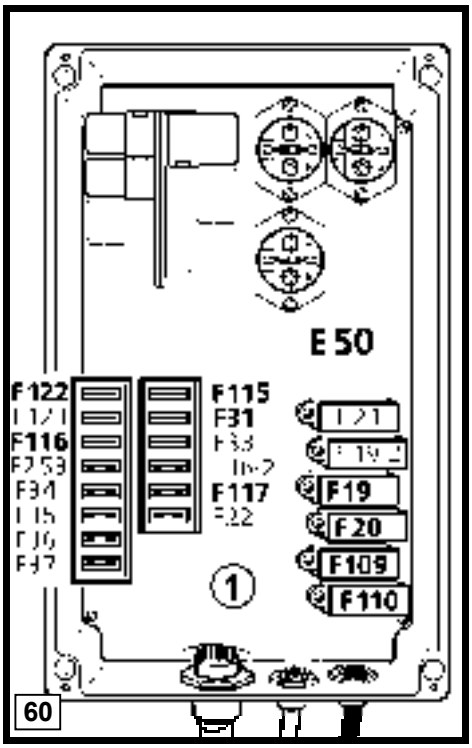

ARRANGEMENT OF THE CIRCUIT BREAKERS AND FUSES

The fuses F1 to F15 are located on the printed circuit in the electrical box of the left control console (fig. 64). Lift off the cover to get to the box.

All other fuses and circuit breakers are located in the junction box E50 (fig. 60, pos. 1) near the hydraulic pumps.

To rearm the circuit breakers F19, F20, F21, F109 and F110, push the corresponding button.

CAUTION

Use only original replacement fuses. If fuses blow frequently, the defect in the affected circuit must be checked and corrected. Never repair a blown fuse!

https://www.truck-manuals.net/

https://truckmanualshub.com/

LOCATION OF FUSES AND CIRCUIT BREAKERS

F1 ..... Reserve
F2 ..... Reserve, Control circuit additional floodlights*
F3 ..... Reserve, Central lubrication*,
..... Swing ring teeth lubrication'
..... windshield wiper and washer for cab roof*
F4 ..... Windshield washer, beacon*, rotating grab*,
..... 24V stabilized supply for sensors and detectors
F5 ..... Windshield wiper motor
F6 ..... Regulation engine RPM / manual
F7 ..... Control unit and Display
F8 ..... Safety lever, Control circuits for servo circuit,
..... Swing brake & pressure cut in*
F9 ... Regulation circuit for hydraulic pumps (U16 - Bst)
F10 ..... Floodlights on upper carriage and cab deck,
..... Solenoid valve for travel speed increase
F11 ..... Reserve
F12 ..... Reserve
F13 ..... Ignition key / Starting circuit,
F14 ..... Dome light, Cigarettes lighter, Horn,
..... Additional floodlights*, reserve
F15 ..... Reserve (terminal 30)

F19 ..... Flame glow plug 1
F19-2 ..... Flame glow plug 2
F20 ..... Main circuit
F109 ..... Options, additional floodlights*
F110 ..... Diesel engine regulator box, Control
..... circuits for starters and preglow, fuel injection

F31 ..... Heater and air conditioner (terminal 15)
F33 ..... Reserve
F34 ..... Additional floodlights / cab front
F35 ..... Additional attachment floodlights
F35-2 ..... Additional attachment floodlights
F36 ..... Additional floodlights / cab rear
F37 ..... Heater and air conditioner (terminal 30)
F115 ..... Engine speed adjustment in manual mode
F116 ..... Diesel engine control unit
F117 ..... Diesel engine control unit
F122 ..... Preglow signal
F123 ..... Preglow signal *

* Optional Installation

F5 to F7, F13, F31, F115 to F123 .. Fuses 7,5A
F1 to F4, F8, F9, F11, F12, F14,
F15, F33 to F37 ..... Fuses ..... 15 A

F10 ..... Fuse ..... 25 A
F 19, F19-2 ..... Circuit breaker 100A
F 20, F 109, F110 ..... Circuit breakers .. 50 A

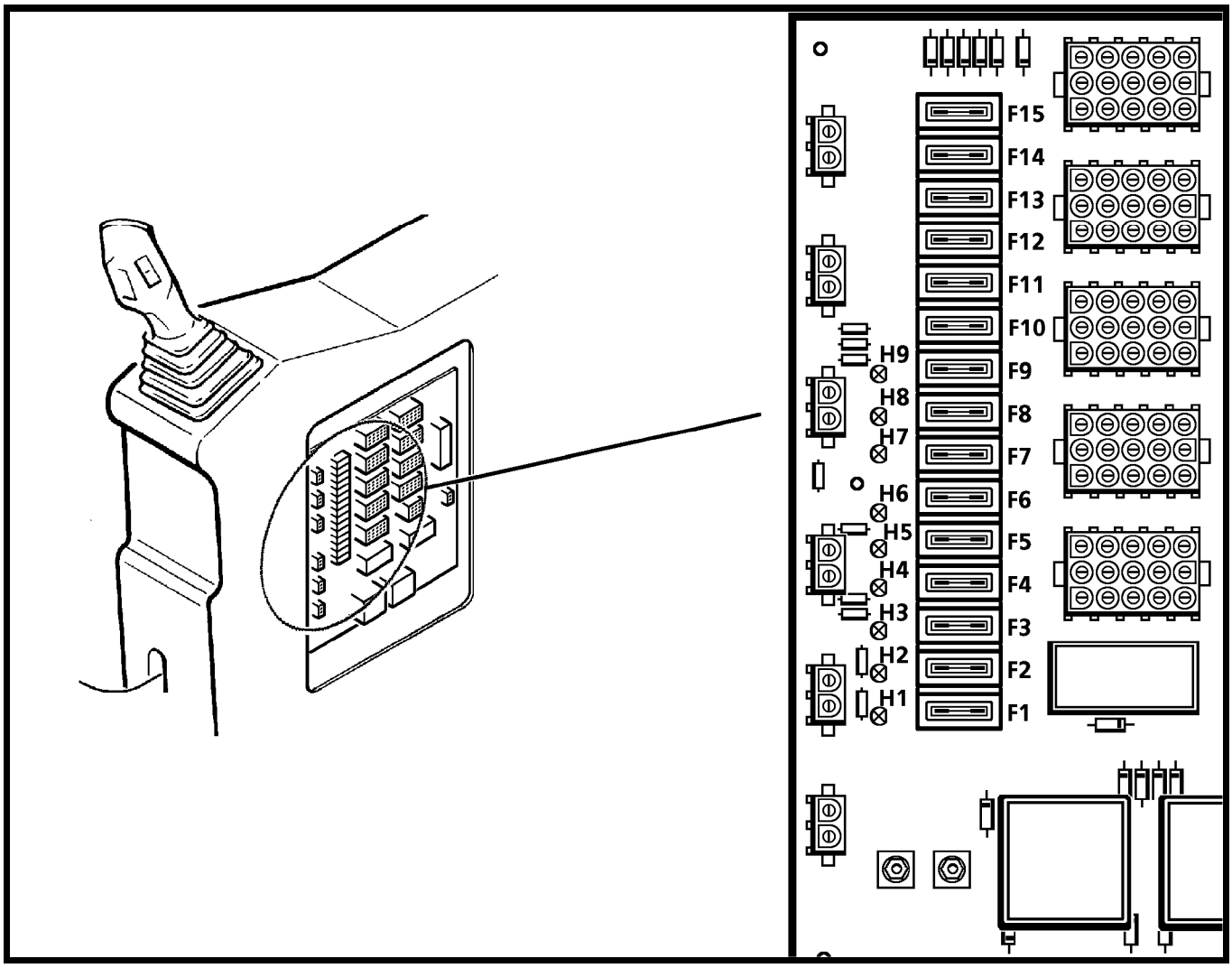

https://www.truck-manuals.net/

THE HEATER AND AIR CONDITIONER

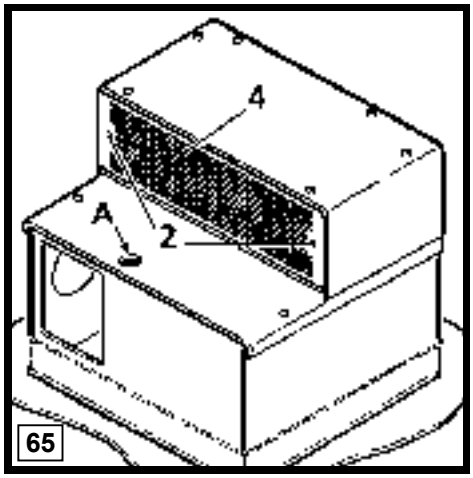

65

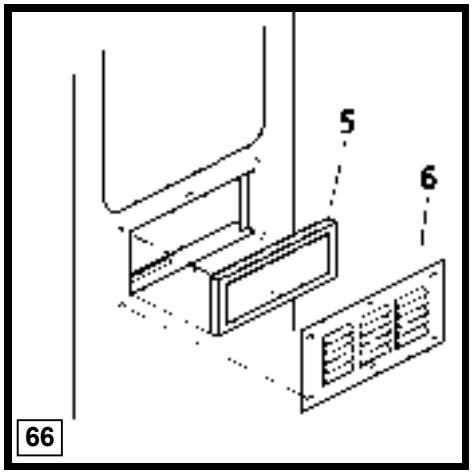

66

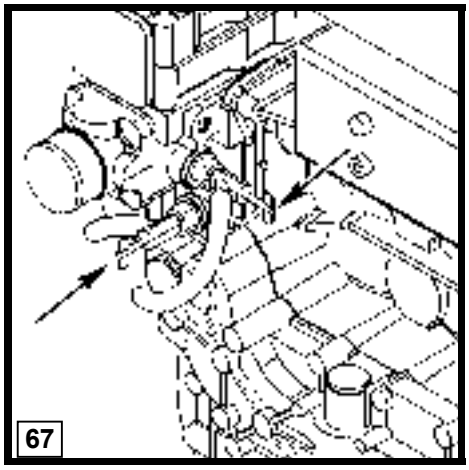
67

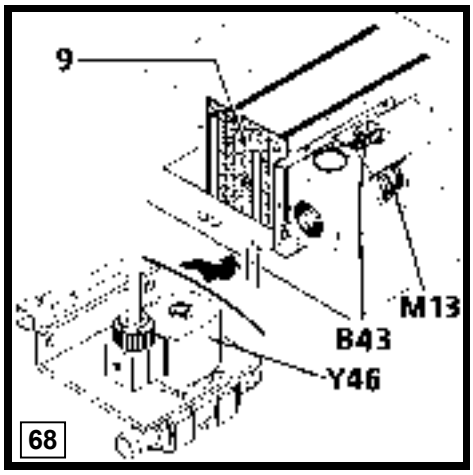

68

. **Heater and air conditioner unit**

. Remove and clean the re-circulated air filter 4 and the fresh air filter 5 of the air conditioner unit every 500 working hours and more often in very dusty conditions.

. If the filters are contaminated, the air flow through the exchangers is reduced, this causing frequent icing and stop of the air co plant.

. Blow out the filter elements with pressure air, or clean them in cold or lukewarm water. Never wash the elements with warm water or using a steam jet. Filter elements which are damaged or in bad condition must be replaced at once.

. Never operate the machine, even for a short time when the filters are removed, this would cause a very quick clogging of the heat exchangers of the unit.

. To remove the re circulated air filter 4, tilt the backrest of the driver's seat forward and turn both quick locks (pos.2, fig. 65) by 90 degrees.

. The fresh air filter 5 is accessible from the outside of the cab, after removal of the deflector 6 (fig. 66).

. Once a year check for damage the lamellas of the heat exchanger 9 (evaporator and heater unit) and in case of clogging blow the exchanger out with pressure air .

. If necessary put the lamellas straight.

.

. **Heater circuit**

. The following maintenance should be performed annually before the beginning of the cold season:

. - check the heater water circuit for leaks,

. - check and if necessary retighten all connections, hose clamps and the seals on the water valves,

. The heater should only be used with a DCA4 antifreeze and anticorrosive mixture. When changing the engine coolant, close the heater valves on the engine (fig. 67). Otherwise the heater core must be vented correctly after refilling the circuit.

. To vent the circuit, remove the red cap at bleeder valve through the opening A (fig.65), press the valve to let the air escape.

. In addition, annually before the beginning of the cold season, and at least if insufficient heating is noticed, remove and clean the solenoid valve Y46 (fig. 68) which controls the warm water flow.

. Clean the membrane of the solenoid valve with clear water and check that the compensation orifice at the membrane is not clogged.

The air conditioner plant

Operate the air conditioner every second week for about 10 minutes regardless of the season.

During the warm season, perform following checks or maintenance works every 500 operating hours :

- check the condenser heat exchanger for clogging, if necessary swing the exchanger out and blow it out from inside (fan side) using pressure air or steam jet until the cooler core is clean. A chocked exchanger core would cause the pressure to increase in the coolant circuit and the air conditioner to be automatically turned off.
- check and retighten the mounting screws of the compressor and its support to the Diesel engine,
- check for tension and good condition of the compressor driving belt (fig. 69),
- check the refrigerating agent level at the sight glass 3 of the drier / receiver unit 7 (fig. 70), with Diesel engine running and turned on air conditioner: if the white float ball 4 (fig. 71) is in the bottom of the sight glass it indicates a lack of refrigerating agent. If in this case a drop of the refrigerating efficiency is noticed, get the installation refilled by an air conditioner specialist.
- determine the degree of moisture in the drying substance inside the drier while checking the colour of the indicator pearl 5 (fig. 71) in the sight glass: the degree of moisture is correct as long as the pearl is blue, at the contrary if the pearl is rose coloured, the drier / receiver unit is saturated with humidity and must be replaced immediately.
- visually check the condition of the refrigerating agent drier / receiver unit 7. If mechanical damage or rust formation is noticed (also at mounting console or hose connections) the receiver must be replaced (Pressure reservoir).

In the both last cases and at least once a year, the drier / receiver unit 7 must be replaced by a qualified air conditioner mechanic.

The air conditioner circuit must then be drained, checked for leaks and then refilled with refrigerating agent and refrigerating oil for the air co compressor

On the occasion also check the hoses of the air conditioner circuit for externally visible damage and if necessary retighten the hose fittings .

In addition, the following maintenance works must be performed at least once a year by an air conditioner specialist:

- check the function of the motor M13 for the evaporator fan and of air dispatching flaps,
- check the air co electrical circuit for good connections and the electrical wires for external damage,
- check the thermostat B43 inside the evaporator unit (for function, correct fixing and damage),
- check the correct function of the pressure switches B44 at the drier / receiver unit 7.

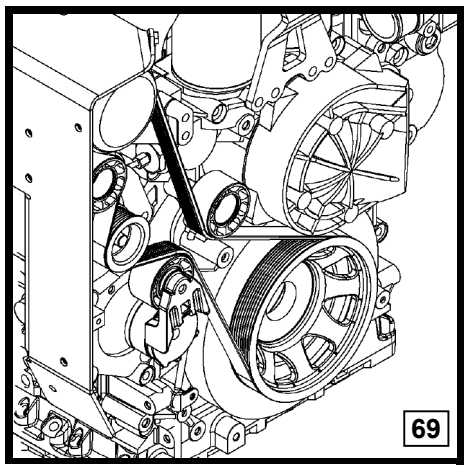

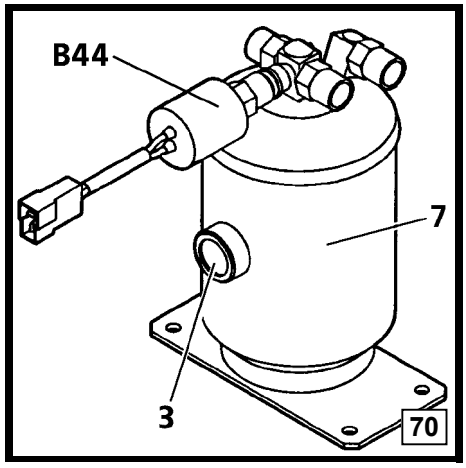

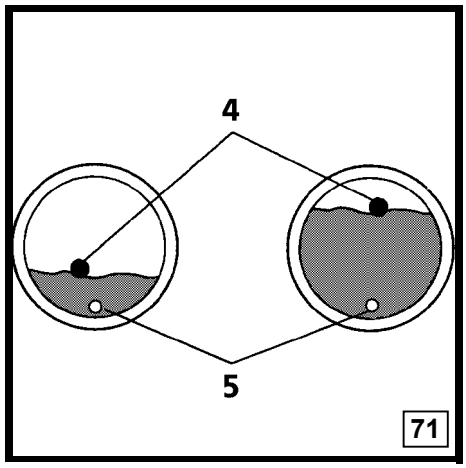

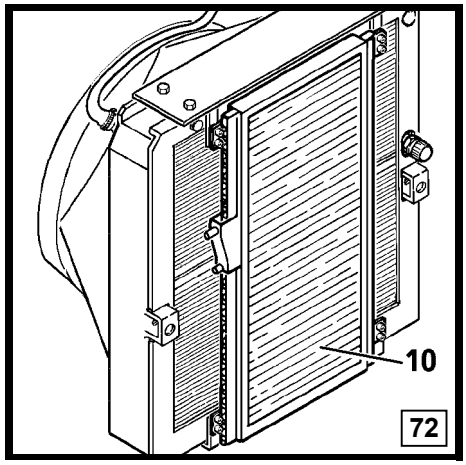

https://www.truck-manuals.net/

https://truckmanualshub.com/

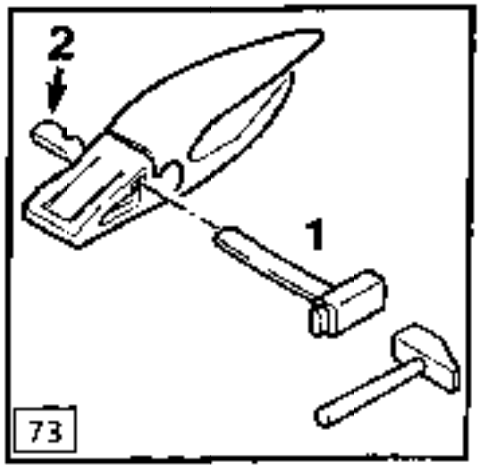

REPLACING THE BUCKET TEETH

Check the bucket teeth regularly for wear.

Greater force is needed to dig if bucket teeth are worn.

Always replace the teeth before the adapter is damaged.
Never work with a missing bucket tooth

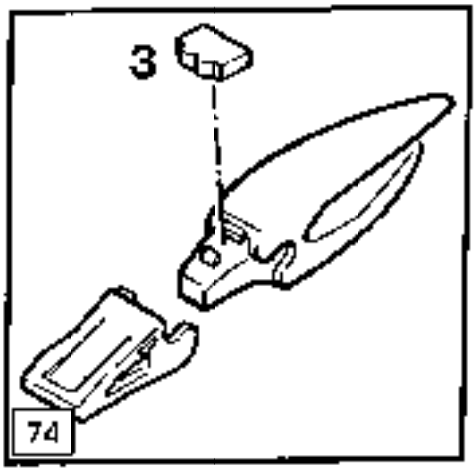

TO REPLACE A TOOTH

- Extract the wedge (fig. 73, pos 2) using a hammer and an extracting tool (fig. 73, pos 1).
- Remove the worn tooth.
- Attach a new rubber fitting on the lock (fig 74, pos 3).
- Push the tooth onto the adapter (fig. 75).
- Use a hammer to insert the wedge 2 (Fig. 76).

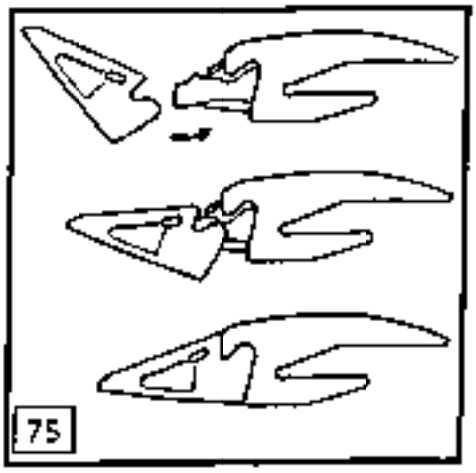

Parts needed for LIEBHERR teeth with horizontal wedges:

Tooth Size / Types / Parts (Design./ Order No.)	ST13 914 934	ST16 914... .. 944	ST 20 934... . 944	ST 25 944 964...
Wedge K	K13 3001157	K16 3001134	K20 3001158	K25 3001159
Lock G	G13 9335853	G16 9329709	G20 9351304	G25 9351306
Tooth C	Z13C 3001288	Z16C 3001318	Z20C 3001319	Z25C 3001130
Tooth CL	Z13CL 3001579	Z16CL 3001132	Z20CL 3001588	Z25CL 3001589
Tooth L	Z13L 3001262	Z16L 3001216	Z20L 3001232	Z25L 3001235
Tooth SL	Z13SL 3001554	Z16SL 3001556	Z20SL 3001556	
Tooth R	Z13R 3001263	Z16R 3001217	Z20R 3001233	Z25R 3001236
Tooth P	Z13P 3001264	Z16P 3001218	Z20P 3001234	Z25P 3001237
Tooth PF	Z13PF	Z16PF 3001440	Z20PF 3001443	Z25PF

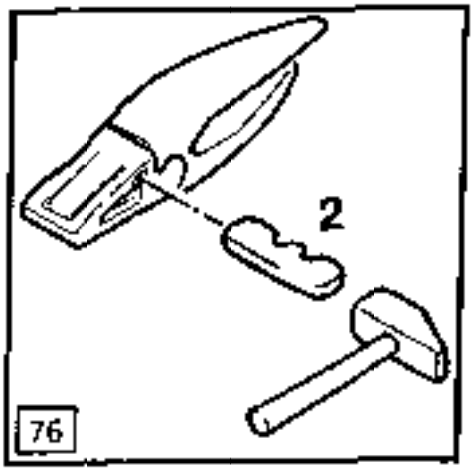

https://www.truck-manuals.net/

https://truckmanualshub.com/

REPLACING WEAR AND TEAR ITEMS

In addition to regulator maintenance, which is to be performed at given intervals, the following repairs may be performed by the operator or maintenance personnel:

- Replacing the worn teeth on the bucket, see page 6.22.
- Replacing the defective seals on hoses and pipes and connections to the hydraulic components.(However, the operator may not work on the pressure relief valves, which are secured with lead seals.)
- Replacing hydraulic hoses, lines, and fittings in the hydraulic circuit.
- Use only genuine LIEBHERR parts (i.e. hoses, hydraulic lines).
- All other repairs should only be done by trained LIEBHERR service personnel.
- Always consult your LIEBHERR dealer, especially when removing counterweight.

WELDING

Any welding on structural parts may only be done by LIEBHERR service personnel. If this rule is neglected, the warranty is voided.

Before welding repairs on other parts, always disconnect the battery. Always remove the negative terminal first and reconnect it last.

CAUTION

Before welding, connect the ground cable as close as possible to the welding point, so the welding current will not run through the swing ring, joints, gears, bushings, rubber parts and seals.

Should welding repairs be done on components which may contain inflammable gases (welded counterweights, hydraulic tanks, fuel tanks, …), these components must be previously and sufficiently ventilated with pressurized air to avoid all fire or explosion hazard.

https://www.truck-manuals.net/

https://truckmanualshub.com/

Works to be performed
R 954C LITRONIC

Check / Maintenance at Operating Hours

by maintenance personnel (Operator) — By authorized trained personnel

☐ First and only interval — ○ Repeat interval

At delivery	Every 8-10	Every 10-50	At 500, 1500, ...	At 1000, 3000,	At 2000, 4000,		Notes, performance guidelines For fill quantities, see lubrication chart
						DIESEL ENGINE & SPLITTERBOX	
○	○	○	○	○	○	Check engine oil level	
○	○	○	○	○	○	Check oil pressure and coolant temperature during operation	
○	○	○	○	○	○	Check clogging of air filter at maintenance indicator	
○	○	○	○	○	○	Check coolant level	
		○	○	○	○	Drain fuel tank	
		○	○	○	○	Check oil level in splitter box	
		○	○	○	○	Empty dust discharge valve at air filter	
			○	○	○	Replace oil in the splitter box	
			○	○	○	Check and clean cooler, ventilator check coolant system for leaks	
			○	○	○	Check condition and tension of ribbed V-belt	
			○	○	○	Replace lube oil filter cartridge	
			○	○	○	Change engine oil	1)
			○	○	○	Check the concentration of anticorrosion additive DCA4 in the coolant	
			○	○	○	Check and adjust valve play	
			○	○	○	Check mounting of engine control unit for good condition	
			○	○	○	Check detectors, transmitters and cable connectors for good condition	
			○	○	○	Check the flap of the Diesel engine brake	
				○	○	Check mounting screws of engine consoles, oil pan and splitter box	
				○	○	Check intake and exhaust system for condition and tightness	
				○	○	Grease flywheel teeth	
				○	○	Replace fuel pre filter cartridge (or if power loss)	
				○	○	Replace fuel fine filter cartridge (or if power loss)	
				○	○	Replace oil separator filter element	
				○	○	Check as necessary adjust or replace fuel injectors (or if power loss) Have this works performed by an authorized LIEBHERR representative	
						Replace antifreeze and anticorrosive coolant mixture (every 3000 hours)	
						Empty water separator at fuel filter (as necess, at least every 500 hours)	
						Replace main element on air filter (as necessary, at least once a year)	
						Replace safety element on air filter (as necessary, at least once a year)!	
						Check air hoses between air filter and engine (at filter maintenance)	
						Check heater flange at intake manifold (yearly at begin of cold season)	

https://www.truck-manuals.net/

https://truckmanualshub.com/

Check / Maintenance at Operating Hours

Works to be performed

by maintenance personnel (Operator) — By authorized trained personnel

□ First and only interval — ○ Repeat interval

At delivery	Every 8-10	Every 10-50	At 500, 1500, ...	At 1000, 3000, ...	At 2000, 4000, ...		Notes, performance guidelines For fill quantities, see lubrication chart
						HYDRAULIC SYSTEM	
○	○	○	○	○	○	Check oil level in hydraulic tank	
○	□	○	○	○	○	Clean magnetic rods in return filters (daily during the first 300 hrs.)	
			○	○	○	Replace servo oil filter on servo oil unit	
			○	○	○	Replace replenishing oil filter on swing pump	
			○	○	○	Check mounting of components	
			○	○	○	Drain condensation water at hydraulic tank (When using environmentally friendly hydraulic fluids keep water percentage below 0,1%, if necessary install a bypass oil filter)	
			○	○	○	If mounted check return filter for hydraulic hammer for cleanliness, replace element if necessary	
			□	○	○	Replace return filter cartridges (first at 500 hours.)	2)
			□	○	○	Clean or replace the filter element of leakage oil filter (first at 500 hours.).Replacement necessary after maximum 3 cleanings	
			□	○	○	If mounted, replace bypass oil filter element (first 500 hours. and at least every 6 months)	2)
				○	○	Check cleanliness of hydraulic oil cooler, clean it as necessary	
				○	○	Check hydraulic system for function and leaks	
				○	○	Check and adjust primary and secondary pressure relief valves	
				○	○	Bleed servo system and hydraulic pumps	
					○	Replace hydraulic oil (or optimize intervals according to oil sample analysis reports)	2) 3)
					○	Replace breather filter on hydraulic tank	2)
						ELECTRICAL SYSTEM	
○	○	○	○	○	○	Check indicator lights and gauges on control panel when starting	
○			○	○	○	Check head and floodlights	
			○	○	○	Check level and specific gravity of electrolyte in the batteries	
			○	○	○	Check and clean battery terminals	
○				○	○	Check system and components for function	
						SWING GEAR	
○			○	○	○	Check oil level and for leaks	
			□	○	○	Replace gear oil (first at 500 hrs.)	
				○	○	Check function and operation of swing brake	
				○	○	Check mounting of gear and oil motor	

https://www.truck-manuals.net/

https://truckmanualshub.com/

Check / Maintenance at Operating Hours

Works to be performed

by maintenance personnel (Operator) — By authorized trained personnel

□ First and only interval — ○ Repeat interval

At delivery	Every 8-10	Every 10-50	At 500, 1500, ...	At 1000, 3000, ...	At 2000, 4000, ...	Works to be performed	Notes, performance guidelines For fill quantities, see lubrication chart
						SWING RING	
	○	○	○	○	○	Lube swing ring bearing	
				○	○	Check, if necessary tighten mounting screws	
				○	○	Check pinion gear mesh	
						TRAVEL GEARS	
○			○	○	○	Check oil level and for leaks	
				○	○	Check function and operation of travel brakes	
				○	○	Check mounting screws of gears, sprocket wheels and oil motors	
			□		○	Replace gear oil (first at 500 hrs.)	SAE 90 oder SAE 80W90
						TRACKS	
○	○	○	○	○	○	Check track chain tension visually, retighten if necessary	
	○					Clean track chains (after working hours)	
		○	○	○	○	Check and tighten mounting screws of track pads and sprocket wheels	
			○	○	○	Clean and lubricate sliding surfaces of chain tensioners	
			○	○	○	Check idlers, carrier and track rollers for leaks	
						CAB & HEATER	
		○	○	○	○	Check level in reservoir for windshield washer, refill if necessary	
				○	○	Check function of heater, (before start of cold season)	
				○	○	Check heater system for leaks	
				○	○	Check and grease locks and hinges on doors and windows	
					○	Check the warm water solenoid valve for function and chocking, clean it as necessary	

https://www.truck-manuals.net/

https://truckmanualshub.com/

Check / Maintenance at Operating Hours

Works to be performed

by maintenance personnel (Operator) — By authorized trained personnel

First and only interval — Repeat interval

At delivery	Every 8-10	Every 10-50	At 500, 1500,	At 1000, 3000,	At 2000, 4000,	Works to be performed	Notes, performance guidelines For fill quantities, see lubrication char
						AIR CONDITIONER	
		O	O	O	O	Operate the air conditioner (at least once every second week)	
			O	O	O	Check the condition of condenser, blow it out if necessary	
			O	O	O	Clean, if necessary replace both air filters in air co unit. Reduce maintenance interval in very dusty conditions	
			O	O	O	Check the mounting screws and the drive belt of air co compressor	
			O	O	O	Check the drier / receiver unit for moisture degree, coolant level and good condition (no rust), replace it if necessary	
					O	Check the condition of evaporator unit, clean as necessary	
					O	Check electrical wires for damage and for loose connections	
					O	Check pressure switch for function	
					O	Check efficiency of air conditioner after opening the circuit, repairs or as necessary	
						Yearly replace the drier receiver unit, for the occasion check the whole circuit for leaks and replace refrigerating agent and refrigerator oil	
						Yearly have the function of the air flaps and of the defrosting thermostat checked by a refrigeration specialist.	
						UNDER / UPPERCARRIAGE, & ATTACHMENTS	
	O	O	O	O	O	Check bucket teeth visually for wear	
O	O	O	O	O	O	Lubricate all grease and lubrication points	
		Δ		O	O	Check all parts for cracks	
		Δ		O	O	Check mounting screws of counterweight and tanks for tightness	
				O	O	Check and lubricate cover hinges and locks, check mounting and efficiency of cover lifting cylinders	
O				O	O	Check the lowering speed of the attachment	≈ 5 Sec
O						Explain proper use and maintenance to the operator	
O						Ask the operator to lubricate the machine using the lube chart, explain defects and deficiencies.	
	O					The daily maintenance work of the driver include the check of the proper function of hydraulic, electric and brakes systems before starting operation. He must also perform daily a visual check of engine, hydraulic system, gears, and track parts for leaks.	

1) Depending on temperature, fuel and oil qualities, the intervals for engine lube oil changes may be reduced, see page 5.4
2) If very dusty working atmosphere, the intervals for replacing the filters may be reduced, see specials instructions on page 5.9
3) When using environmentally friendly hydraulic fluids, maintenance interval must be determined through oil sample analysis reports

Δ) For industrial attachment perform check every 250 hrs

https://www.truck-manuals.net/

https://truckmanualshub.com/

CONTROLS ON JOYSTICK HANDLES FOR US - VERSION

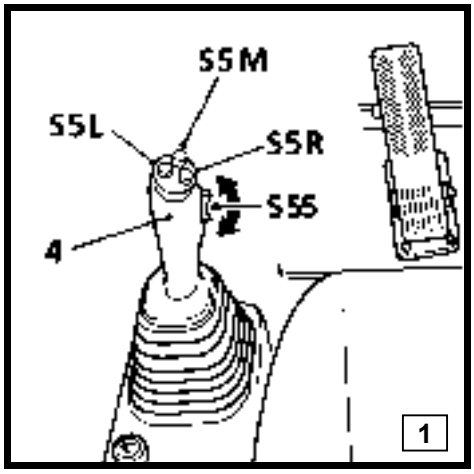

FUNCTIONS CONTROLLED VIA THE SWITCHES IN THE HANDLE OF LEFT JOYSTICK 4 (fig. 1)

S55 = Lifting magnet ON / OFF

S5L = Unlocking of end position of a cylinder

S5M = Horn

S5R = Travel alarm cut-off

Operation of lifting magnet

Rocker switch S55 DOWN = Magnet OFF

Rocker switch S55 UP = Magnet ON

Travel alarm cut-off

Each time the travel pedal is pushed, the travel alarm will sound automatically.

This sound can be silenced earliest 10 seconds after travel start with push button S5R

The travel alarm will be reactivated with every new travel operation.

Unlocking of end position of a cylinder

Press S5L to unlock a cylinder end position that has previously been preselected via switch S54, also see switch S54.

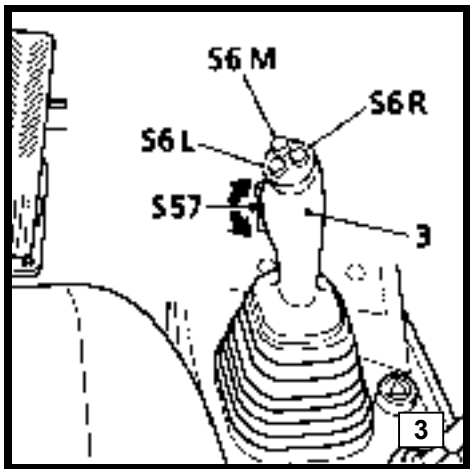

FUNCTIONS CONTROLLED VIA THE SWITCHES IN THE HANDLE OF RIGHT JOYSTICK 3 (fig. 3)

S6L = Rotating device left (grapple, scrap shear, ...)

S6M = Float position boom

S6R = Rotating device right

S57 = Swing brake semi automatic mode
(standart function on R 934 and above, see page 4.12).

https://www.truck-manuals.net/

https://truckmanualshub.com/

GUIDELINES FOR HYDRAULIC EXCAVATORS WHEN THEY ARE USED FOR LIFTING LOADS SUCH AS PIPES, GIRDERS, ETC. .

GENERAL

On April 1, 1976, the German trade unions for below grade and earthmoving construction put safety guidelines in force for excavators, loaders, dozers, etc. , VBG 40, governing hydraulic excavator use, especially when they are used for lifting and transporting loads overhead. These new safety guidelines must be observed.

Overhead lifting, handling and transporting of loads such as pipes, girders, etc.(lifting operation), requires different safety guidelines than just removing, loading and unloading dirt, stone, minerals etc. (digging or excavating operation), because another person (or persons) is required to enter the swing range of the excavator in order to attach or remove the load on boom or stick.

To protect these persons attaching or removing the loads during lifting operation, certain requirements have to be met by excavators, which are used for lifting loads overhead.

Hydraulic excavators, when they are used for lifting operation, must have all the following mentioned special safety devices installed :

- A load hooking system which must ensure safe attaching and removing of the loads and be designed such that accidental unhooking or uncontrolled movement is minimized.
- An overload warning device must be installed, which alerts the operator optically via a warning symbol and acoustically via a buzzer that the weight of the load is heavier than the load permitted by the rated lift capacity chart.
- A boom lowering control device (such as load check valves) must be installed according to the international standard ISO 8643 to prevent unintentional lowering or dropping of the boom because of the weight of the load, which could happen if a line in this hydraulic circuit suddenly develops a leak (for example, should a hydraulic line break or a hose burst,...).
- These valves are installed between the boom cylinders, see fig. 12 (or the stick cylinder) and the control valve block, directly on hydraulic pressure connections of cylinders.
- With a rated lift capacity chart attached inside the cab and within the view of the operator.

Every LIEBHERR hydraulic excavator can be fitted with an ”overload warning device” and/or with load check valves.

DANGER

Never use your machine for lifting operation without it is fitted with all the above mentioned devices.

Never lift loads over people.

No person may fasten or unfasten a load without approval of the operator and this person may only approach the load from one side. The operator may only approve this action when the excavator has stopped and the attachment is not moving.

Only employ sling ropes and accessories which are permitted for lifting operation, regularly checked and in good condition.

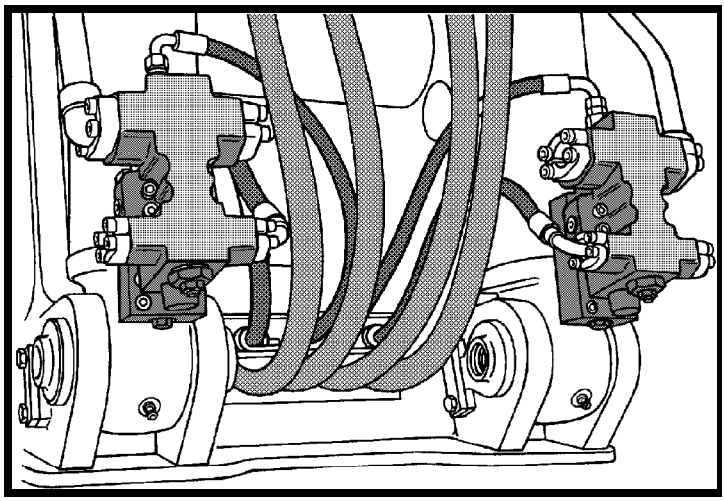

https://www.truck-manuals.net/

https://truckmanualshub.com/

THE OVERLOAD WARNING DEVICE

An overload warning device does not stop a machine when the permissible load range is exceeded.

The operator and nearby personnel are only informed and alerted about the fact that the authorized lift capacity has been reached.

The overload warning device may only be used for lifting operation. For digging operation, the overload warning device must be turned off.

FUNCTION

The overload warning device warns the operator optically via a warning symbol on the display (fig. 24A) and acoustically via a buzzer when the maximum lift capacity (per ISO 10567) has been reached. The device does not turn the excavator off.

The signal is given by a pressure switch 1, which is connected with the piston bottom side of the boom cylinders.

Every reach has a corresponding lift capacity. When a load corresponding to this weight is attached, pressure is created in the boom cylinders and the overload warning device is actuated at a certain pressure.

This capacity can be changed and set by adjusting the pressure setting on the switch depending on the boom position via cam plate 2 and lever 3.

The cam plate is designed to adjust the pressure setting of the switch in relation to the boom position.

Depending on the machine type (with or without outriggers, different track or wheel base width or different types of attachments), appropriate cam plates can be installed on the overload warning device to the right of the swing ring bearing mount.

As per ISO 10567 the rated lift capacity chart indicates either 75% of the static tipping load or 87% of the hydraulic lift capacity (smaller of both).

The stability margin of 25% is valid with the machine on firm, flat ground and for full uppercarriage swing.

OPERATION OF OVERLOAD WARNING DEVICE

For lifting operation

Adjust the overload warning device before using it for the first time.

To put the overload warning device in operation:

- Move lever 3 on switch 1 into working position,
- Open shut off valve 5 (move it to position A),
- Turn the overload warning device ”on” via switch S18.

CAUTION

Make sure to observe all accident prevention regulations when lifting loads with an hydraulic excavator.

Only lift loads of known weight, check your attachment data sheets for load limits, which differ by machine type.

For digging operation

The overload warning device may only be used for lifting operation

For excavating work, turn the overload warning device off as follows:

- Turn the overload warning device off on switch S18,
- Close the shut off valve 5,
- Turn the lever 3 on switch 1 to ”off” position and lock it.

Function Tests

- Check all moving parts regularly for easy movement and lubricate them.
- Check the function of the system daily by extending the boom cylinder all the way to build up maximum operating pressure. The overload device must then actuate the warning buzzer and indicator light.

https://www.truck-manuals.net/

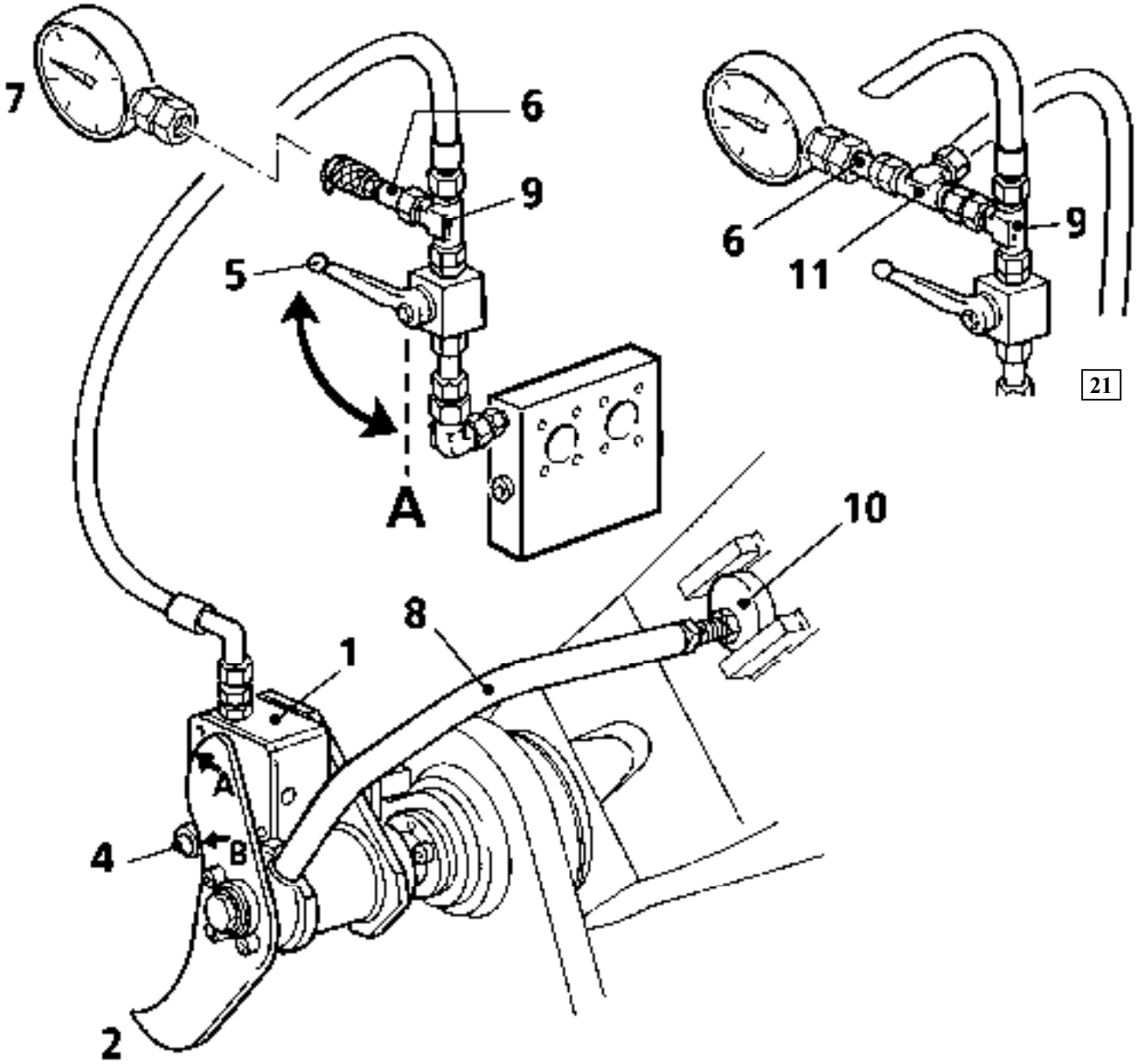

22

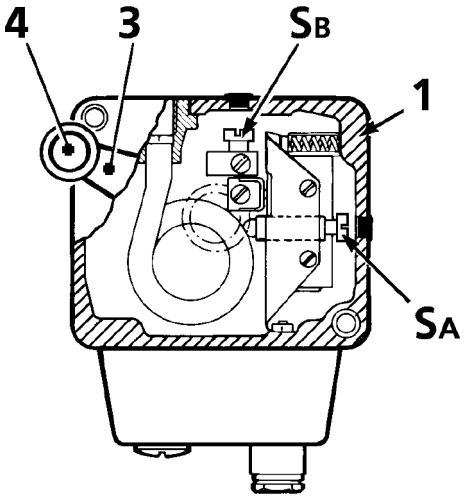

23

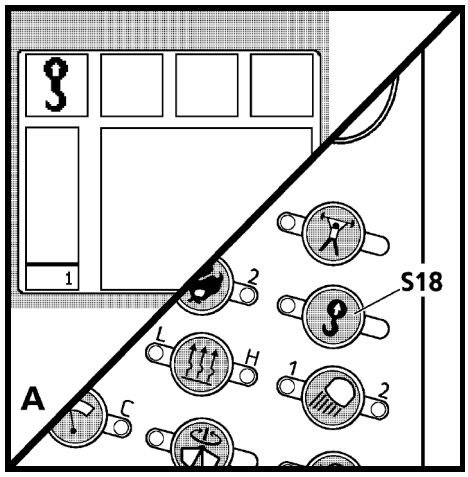

24

https://www.truck-manuals.net/

https://truckmanualshub.com/

- If an excavator is used for lifting operation, it must be tested once a year for stability:
  - Choose any combination of lift capacity / reach in the rated lift capacity chart which is valid for the attachment, which is installed on your machine,
  - multiply the weight by 1,25 and attach this test load to the attachment, at the chosen reach,
  - slightly lift the load,
  - the machine may not tilt, the overload warning device must give and optical and acoustical warning signal.

Important ! This test is - besides a stability test - only a function test for the warning system (qualitative test), it does not mean that the adjustment is correct.

For this reason, the warning device must be checked once a year and adjusted, if necessary, as described below (quantitative test).

TEST AND ADJUSTMENT

Adjustment with boom up (point A)

Remove the cap on test point 6, mount a 0-400 bar pressure gauge 7 so the gauge is visible from the cab.

Move the boom up all the way and, if necessary, adjust bracket 8 via the eccentric plate 10 until roller 4 is exactly on the mark for point A on cam plate 2.

Turn on the warning device on the instrument panel (fig. 24, pos. S18) and open the shut off valve 5 between the warning device and the boom cylinder connection (Position A).

Move the joystick slightly, extend the boom all the way to build up the pressure set on point A on cam plate 2.

This must actuate the warning device.

If the warning device does not turn on (warning symbol and acoustical signal), the shifting point on switch 1 must be reduced.

Remove side cap and adjust screw SA (fig. 23) :

- turn clockwise to increase pressure,
- turn counter clockwise to decrease pressure.

A lower shifting point is permissible.

Adjustment with boom down (point B)

Lower the boom until point B on the cam plate is reached.

Build up pressure as set on point B, as follows:

turn off shut off valve 5, and via an additional L-fitting 11 between pressure gauge and L-fitting 9 (fig. 21), build up pressure on the switch 1,

- either with a separate hand pump
- or via a mini test hose, connected to a pressure test point of the main control valve block for high pressure. The pressure is increased through this hose as soon as any movement is selected.

When the set pressure is reached, the overload warning device must actuate.

If this is not the case, take off the upper cap and adjust the screw SB on the switch1 (fig. 23) :

- turn clockwise to increase pressure,
- turn counter clockwise to decrease pressure.

A lower shifting point is permissible.

Reinstall caps for screws SA and SB, remove pump, mini test hose and pressure gauge, check all moving parts of the overload warning device for easy movement.

https://www.truck-manuals.net/

https://truckmanualshub.com/

ADJUSTABLE OPERATOR'S CAB

The hydraulically adjustable operator's cab is additional equipment which allows the height and/or inclination of the operator's cab to be adjusted steplessly.

- With a cab adjustable in height on hoist frame the height can be adjusted steplessly (fig. 1).
- With an operator's cab adjustable in height and tiltable on hoist frame, the height and inclination can be simultaneously, steplessly adjusted (fig. 2).
  By modifying the bolting on the hoist frame, see pages 8.1.4 and 8.1.5, the "Cab adjustable in height only" can be switched over.
- With an operator's cab tiltable to 30 degrees inclination between 0 and 30 degrees upwards only can be steplessly adjusted (fig. 3)

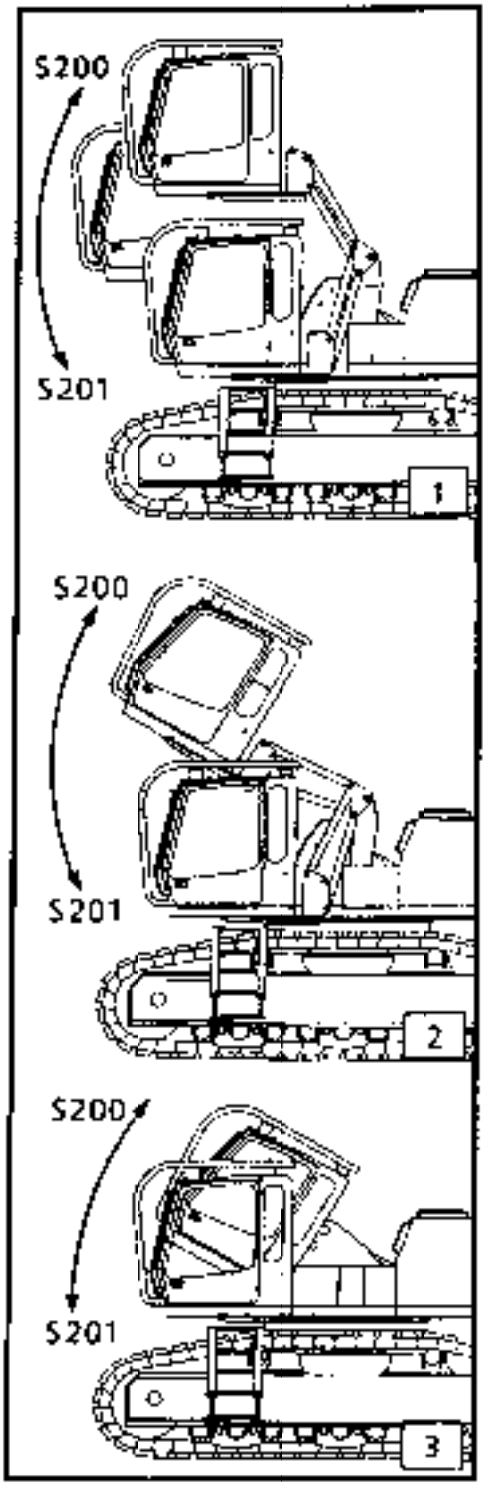

CAUTION

When operating the adjustable cab, the travel route of the excavator must be clear. It must be even, free of any obstructions and may not go down an incline, which could influence the stability of the excavator.

The cab may only be adjusted when the excavator is not moving.

During the cab adjustment, no personnel may be in close range of the excavator!

Check every day the fixation of the cab support before using the excavator!

ENTERING OR LEAVING THE CAB

To enter or leave the cab, always use the itended entry aids (steps and hand rails).

CAUTION

NEVER JUMP OFF THE HYDRAULIC EXCAVATOR.

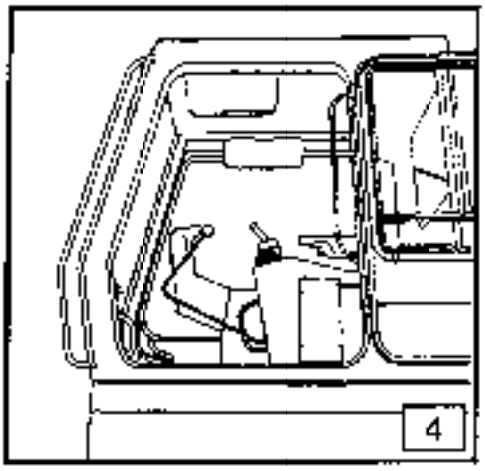

CAUTION

It is essential to have your seat belt fastened if you want to operate the machine with the cab door opened.
If your machine is not fitted out with a belt, so you must compulsorily get one installed before you start working with opened cab door.

https://www.truck-manuals.net/

https://truckmanualshub.com/

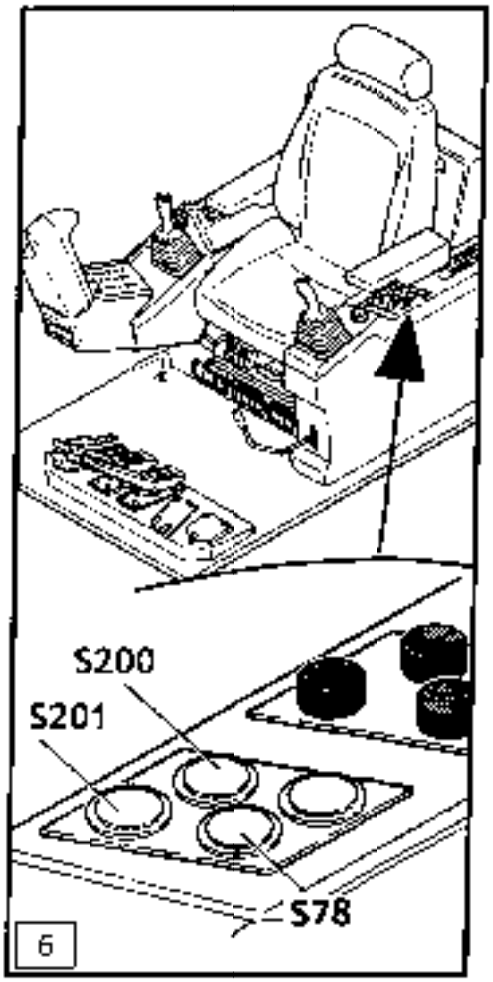

CAB HEIGHT ADJUSTMENT

TO RAISE THE CAB S200

Push the button S200 cab "up" (fig. 6) and raise the cab to the desired position

TO LOWER THE CAB S201

Push the button S201 cab "down" (fig. 6) and to lower the cab

EMERGENCY DOWN S78

If there is a problem on the Diesel engine or in case of some other defect, then the cab can be lowered by pressing the emergency down button S78 (fig. 6).

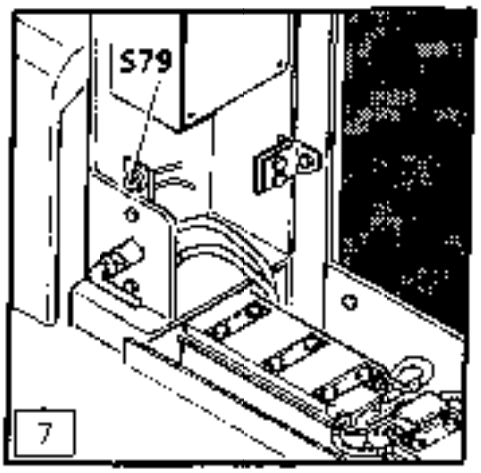

EMERGENCY DOWN S79

The cab can also be lowered externally via the emergency down button S79
The emergency down button is accessible through a side door on the left rear (battery compartement - R964, rear right) (fig. 7).

REPAIRS AND MAINTENANCE

If possible, repairs and maintenance on the cab, the lift arms or the corresponding hydraulic system should be carried out when the cab is lowered

The cab must be supported with suitable support devices before carrying out any repairs and maintenance tasks, which must be done when the cab is raised.

https://www.truck-manuals.net/

https://truckmanualshub.com/

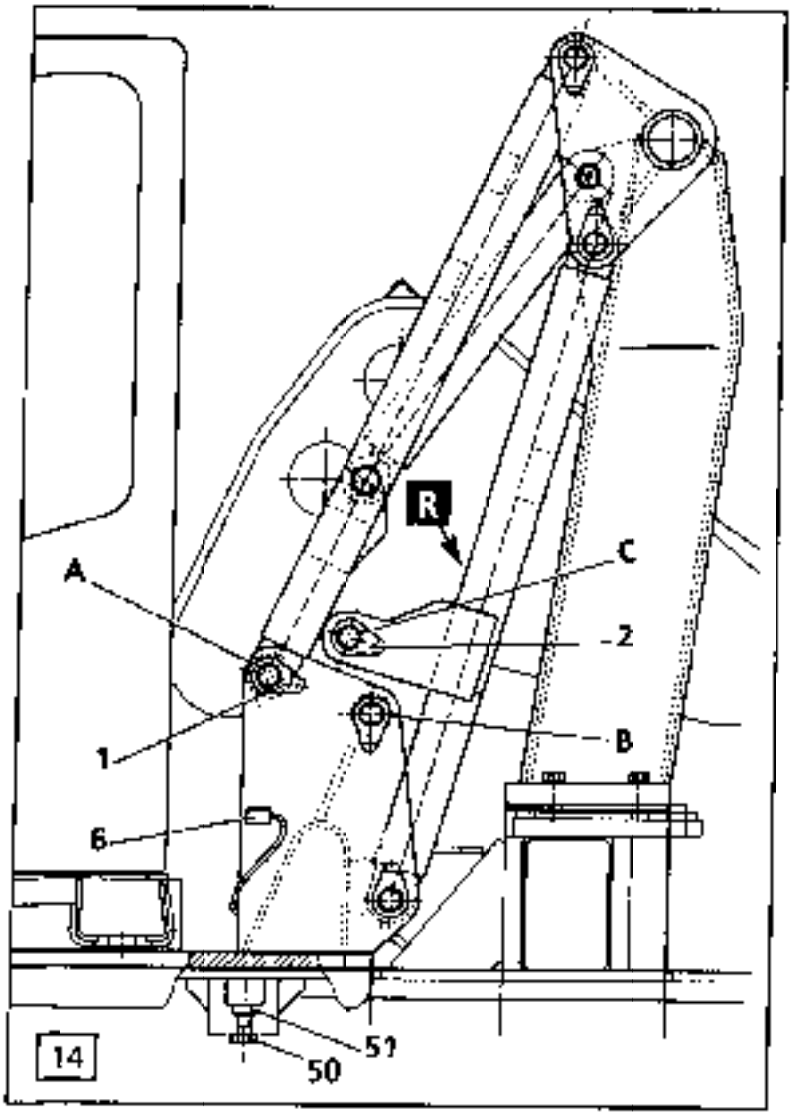

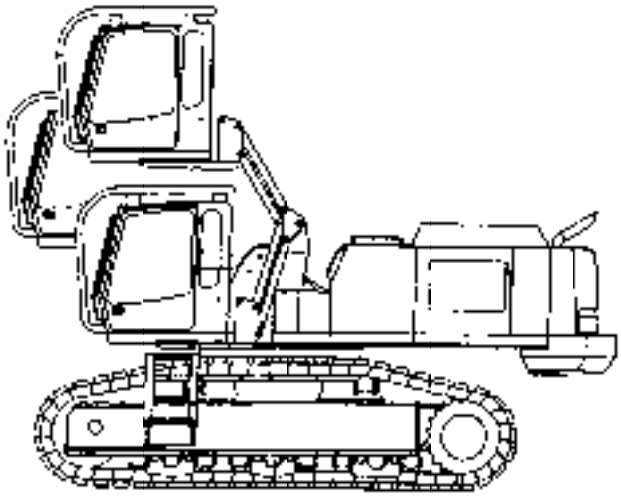

B

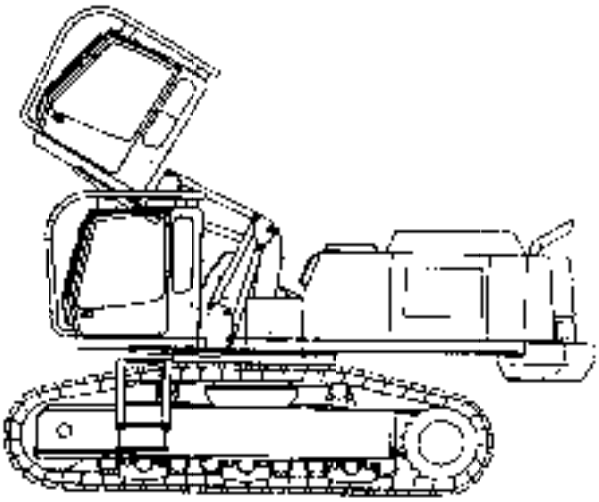

A

16

https://www.truck-manuals.net/

https://truckmanualshub.com/

HEIGHT ADJUSTABLE AND TILTING OPERATOR'S CAB (Optional Version)

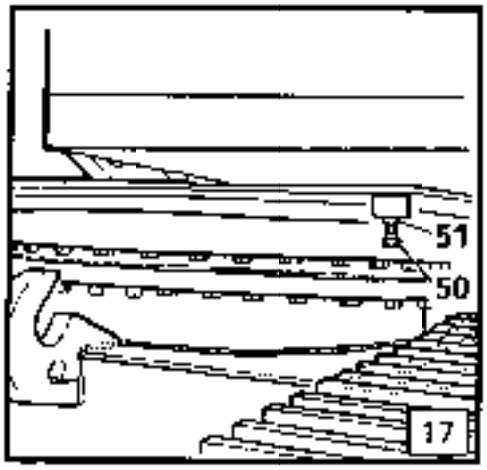

The hydraulically height adjustable and tilting operator's cab tilts progressively to the rear when moving up.

This allows the excavator operator a better view of upper areas on any raised attachment (operating with a demolition attachment, when using lifting tackle, ...).

By changing the pins near the hoist frame fittings to the operator's cab mounting, the "Operator's cab tilting" version can be changed to the "Operator's cab not tilting" version, and vice versa

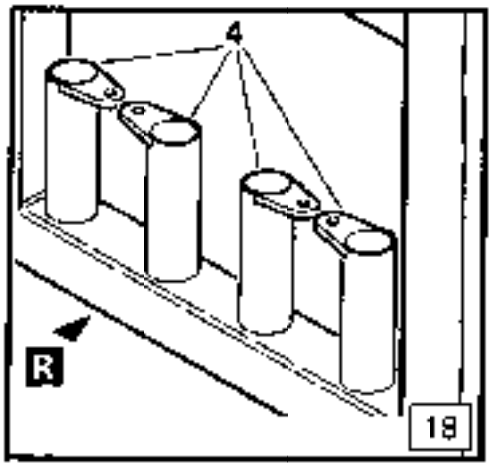

Changing the position of the operator's cab from tilting to not tilting

Proceed in the following manner:

1- Put the operator's cab in the lowermost position.

2- Remove the covering in front of the hoist frame.

3- Release counternut 51 (fig. 14 and 17) below on the inside of the operator's cab and screw in screw 50 until the operator's cab comes to rest.
Retighten counternut 51

4- Remove both pins 1 (one per side) and both pins 2 and place in holders 4 in rear frame R (fig. 14 and 18).

5- Connect control device 5 (fig. 19) to plug 6.

6- Start the Diesel engine and let it run in low idle.

7- Actuate the variable adjustment cylinder of the operator's cab using the control device:

ON = raise

OFF = lower

until the two pins 1 can be placed in the desired bore hole A or B (fig. 14). If necessary, adjust the position of screw 50

Bore hole A means "Operator's cab tilting" position (fig. 16 A)

Bore hole B means "Operator's cab not tilting" position (fig. 16 B).

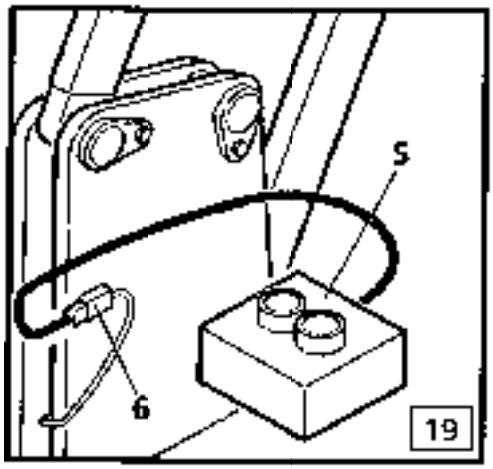

CAUTION

Pins 2 are to be placed in bore hole C on "tilting" version only. On the "not tilting" version, pins 2 remain in the holders in the rear frame.

Secure all pins via fastening screw, even those remaining in holders 4.

8- Disconnect control device 5 and stow in the operator's cab.

9- Return screw 50 to original position and secure via counternut 51.

https://www.truck-manuals.net/

https://truckmanualshub.com/

HYDRAULIC QUICK CHANGE ADAPTER (SWH)

SAFETY RECOMMENDATIONS

- The operator must make sure every time any tool is changed that the locking pins of the quick change coupler are inserted into the bore holes provided on the tool and that the tool is attached properly.
  Make a direct visual check that the tool is fitted securely.

- In addition, the operator must perform a cycle with the tool where the tool may only be raised far enough that the secure fitting, e.g. if the pins are in the pin holes, can be checked by tilting the tool in and out.

- Check fitting of locking pins visually on a daily basis.

- Check for proper function of warning devices visually and acoustically by actuating the SWH coupler.

- If a buzzer sounds or a warning symbol lights up and no locking or unlocking procedure was initiated, shut down operation immediately.
  This may be due to the locking pins changing their fitting position unchecked, e.g. because of leakage.
  If buzzer/warning light are not actuated during any procedure, shut down operation immediately. This may be due to breaks in the cable, a defective plug connection or a defective proximity switch.
  Operation may only be reinitiated after defective parts have been repaired or replaced.

- The load capacity of the hydraulic quick change coupler (SWH) and/or the integrated load hook can be less than or greater than the load capacity of the basic machine.
  During operation, make sure that the values found on the load capacity chart and in the Technical Data of the basic machine are maintained when checking the authorized load capacity of the SWH and/or the integrated load hook.

https://www.truck-manuals.net/

https://truckmanualshub.com/

HYDRAULIC QUICK CHANGE COUPLER (SWH)

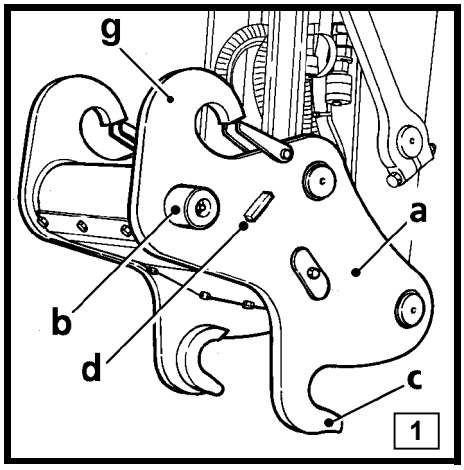

a	**coupler**
b	**locking pins (extended)**
c	**attachment hook for tool**
d	**stop**
g	**load hook**
3	**right joystick**
4	**left joystick with push-buttons left / right**
S47	**push-button quick change coupler (S47 was a key switch up to approx. 12-2004)**
S19	**push button for grapple rotation drive**

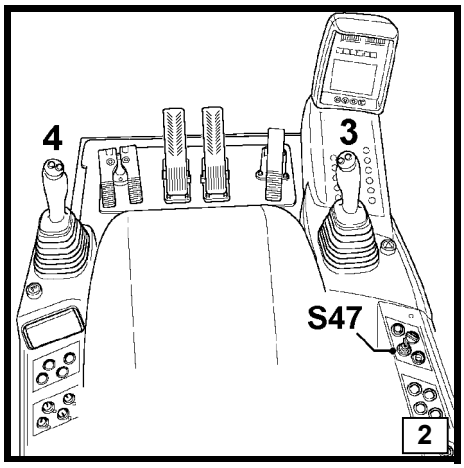

symbol "locking pins inserted" on the screen

TECHNICAL DATA

Maximum operating pressure 100 bar.

PUSH BUTTON S19 (fig. 3)

The hydraulic additional attachment function "rotating device" is actuated via push button S19 (indicator light in the button lights up).

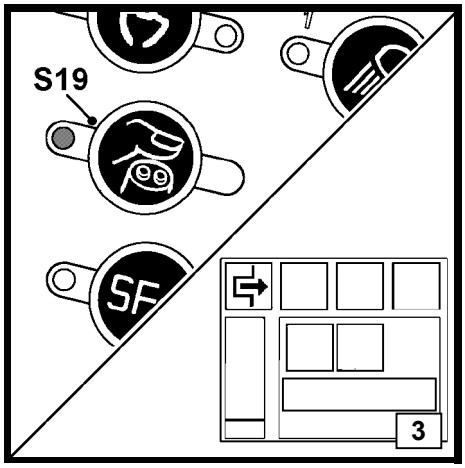

SYMBOL "Locking pins inserted" (fig. 3)

If this symbol appears on the screen, the pins are retracted (tool unlocked)

DANGER

The working tool is only connected to the attachment hook of the "quick change coupler"

PUSH-BUTTON SWITCH S47 (fig. 4)

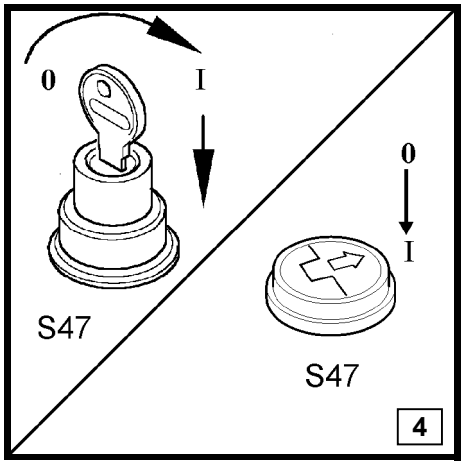

POSITION "0"

In zero position the locking pins of the quick change coupler SWH cannot be retracted.

POSITION "I"

When, The locking pins can be retracted if push button S19 is on and if at the same time the switch S47 is maintained in position "I", this means:

- with the key switch S47: turn the key clockwise to position " I " and then depress and keep the key depressed.

- with the push button S47: press down and hold the button depressed.

https://www.truck-manuals.net/

https://truckmanualshub.com/

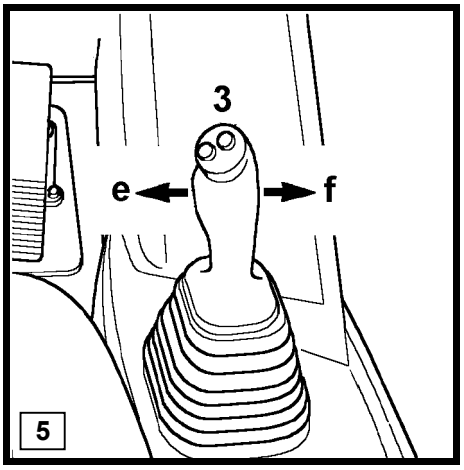

JOYSTICK RIGHT 3 (fig. 5)

TOWARD "e" = extend bucket cylinder.

TOWARD "f" = retract bucket cylinder.

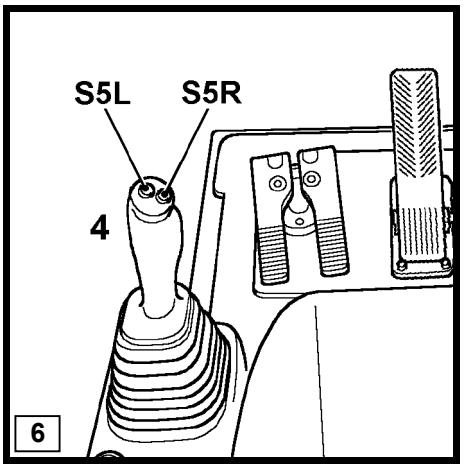

JOYSTICK LEFT 4 (fig. 6)

PUSH-BUTTON LEFT "S5L" = extend locking pins (locking the working tool).

PUSH-BUTTON RIGHT "S5R" = retract the locking pins (unlocking the working tool).

BOTH HANDS CONTROL

. The quick change coupler SWH is controlled by using both hands. The locking pins may only be retracted when push button S19 is actuated and at the same time push-button switch S47 and the push-button S5R on the left joystick are depressed.

. **Notice:**

. **At the opposite, when extending the locking pins via the touch S5L (locking of the quick change coupler), it is not necessary to depress the push button S47 at the same time.**

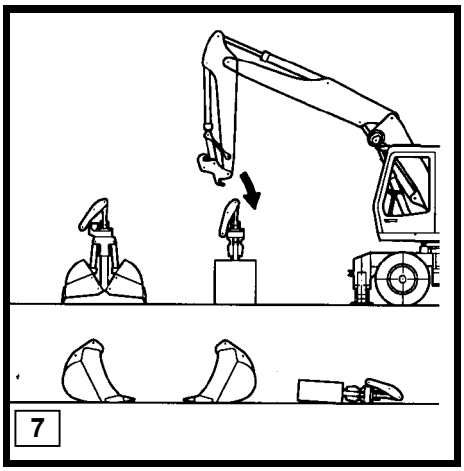

INSTALLATION OF A WORKING TOOL

. Position stick and tool as in figure 7.

CAUTION

- **The tool must be lying freely on level ground.**

. Deflect right joystick 3 (fig. 5) toward "f" and retract the bucket cylinder fully.

. Switch on the additional attachment function "rotating device" by actuating push button S19 (fig. 3) (indicator light on the button lights up).

. Depress the push-button switch S47 (fig. 4) and keep it depressed.

. With switch S47 depressed, press right push-button "S5R" on left joystick 4 (fig. 6) until the locking pins (fig. 1, pos. B) are fully retracted.

. The symbol "locking pins retracted" appears on the screen and the buzzer sounds.

. Release switch S47.

https://www.truck-manuals.net/

https://truckmanualshub.com/

ATTACHING THE WORKING TOOL

Position the quick change coupler in such a way that the tool can be mounted on the attachment hook (fig. 9 and 10) .

Backhoe buckets can alternatively be used as front buckets after changing the attachment pins.

Raise the tool from the ground and extend the bucket cylinder until the bearing plates of the tool (fig. 11) are resting at the stops of the quick change coupler SWH (fig. 1, pos. d).

The attachment bore holes of the tool must be flush with the locking pins (fig. 11 and 12).

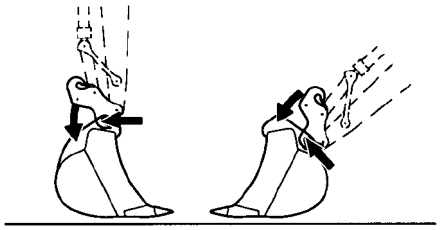

9

CAUTION

- **Keep tools near the ground.**

LOCKING THE COUPLER

With the push button S19 activated, press left push-button “S5L“ (fig. 6) on left joystick 4 until the locking pins are completely out.

The symbol “locking pins“ on the screen should extinguish and the buzzer should stop sounding.

Deactivate push button S19 (indicator light extinguishes).

If properly attached, the tool is now locked in place.

Check visually if the tool is fitted firmly.

In addition, the operator must perform a cycle with the tool where the tool may only be raised far enough that the secure fitting, e.g. if the pins are in the pin holes, can be checked by tilting the tool in and out.

No one is permitted in the danger zone during a test run!

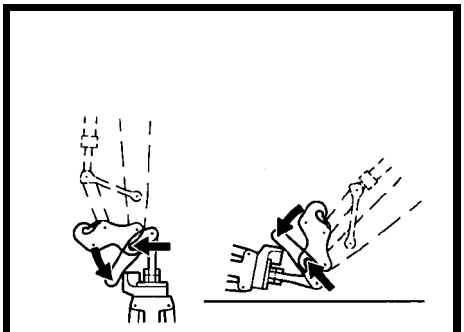

10

DANGER

If a buzzer sounds or a warning symbol lights up and no locking or unlocking procedure was initiated, shut down operation immediately.

This may be due to the locking pins changing their fitting position unchecked, e.g. because of leakage.

If buzzer/warning light are not actuated during any procedure, shut down operation immediately. This may be due to breaks in the cable, a defective plug connection or a defective proximity switch.

Operation may only be reinitiated after defective parts have been repaired or replaced.

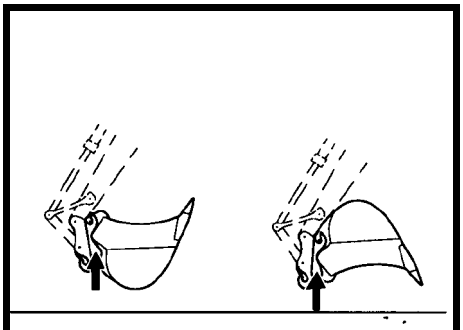

11

Notice:
Before starting operation with tools, e.g. grapple, ditch cleaning bucket, observe all special instructions for mounting and dismantling.

12

https://www.truck-manuals.net/

https://truckmanualshub.com/

REMOVING THE WORKING TOOL

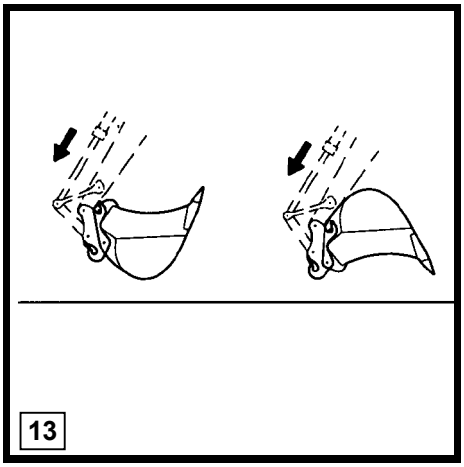

13

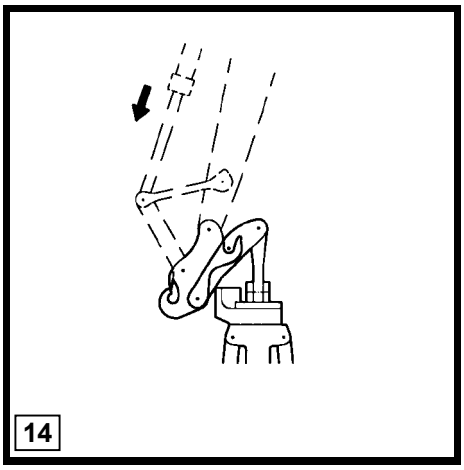

14

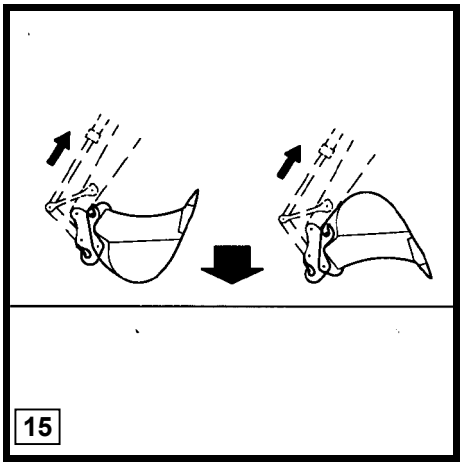

15

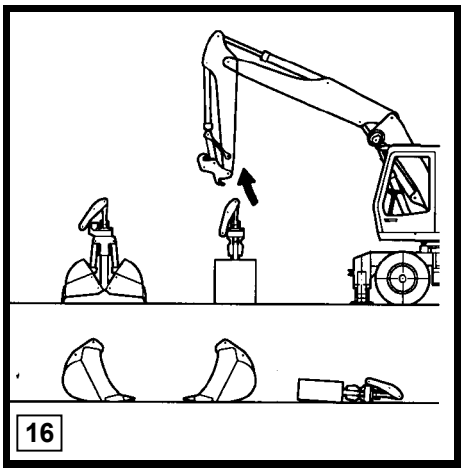

16

CAUTION

- **Always keep the tool at a minimum distance from the ground during any unlocking procedure to avoid dangerous movements.**

. Deflect right joystick 3 (fig. 5) toward “e“ and extend the bucket cylinder fully (fig. 13 and 14).

. Switch on the additional attachment function “rotating device“ by actuating push button S19 (fig. 3) (indicator light on the button lights up).

. Depress the push-button switch S47 (fig. 4) and keep it depressed.

. When switch S47 is depressed, press right push-button “S5R“ on left joystick 4 (fig. 6) until the locking pins (fig. 1, pos. b) are fully inserted.

. The symbol “locking pins retracted“ appears on the screen and the buzzer sounds.

. Release switch S47.

DANGER

- **There is no rigid connection between the coupler and the tool present.**
  The tool can be released.
  To avoid dangerous movements, keep the tool at a minimum distance from the ground.

. Slowly retract bucket cylinder and lay the tool on the ground (fig.15 and 16).

. Deactivate push button S19.

https://www.truck-manuals.net/

https://truckmanualshub.com/

LIFTING TACKLE INSERT

The standard hydraulic quick change coupler comes equipped with two integrated load hooks (fig. 17, pos. g). The hydraulic excavator may only be operated with lifting tackle when the additional safety devices described in chapter 4 “lifting tackle“ are present and operational.

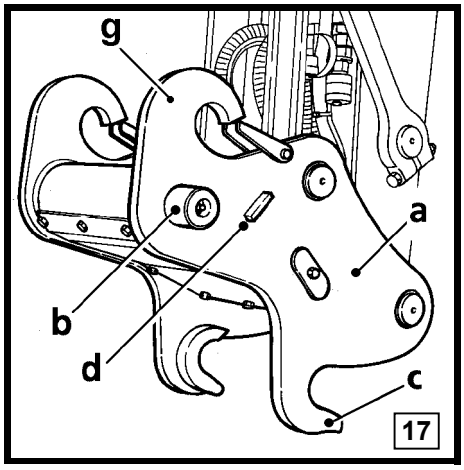

DANGER

Never use attachment hook pos. c to fix loads because the attachment hooks do not provide any secure hold for load attachment items such as cables or chains.

The maximum load capacity of each individual load hook can be found on the quick change coupler. The load capacity of the quick change coupler and/or the integrated load hook can be less than or greater than the load capacity of the basic machine. During operation, make sure that the values found on the load capacity chart and in the Technical Data of the basic machine are maintained when checking the authorized load capacity of the coupler and/or the integrated load hook.

Any load lifting work can only be performed when the tool is attached or dismantled. When the tool is dismantled, it is recommended to fully retract the locking pins on the lifting tackle insert. This prevents the load attachment items (cables, chains) from being routed over the locking pins and thus protects them from being damaged.

If the overload warning device is switched on, the warning buzzer for the retracted locking pins can be turned off via switch S349 (fig. 19) to prevent any constant noise pollution. The symbol “locking retracted“ remains visible/lit up on the instrument panel. The warning buzzer is reactivated automatically when the locking pins are actuated again.

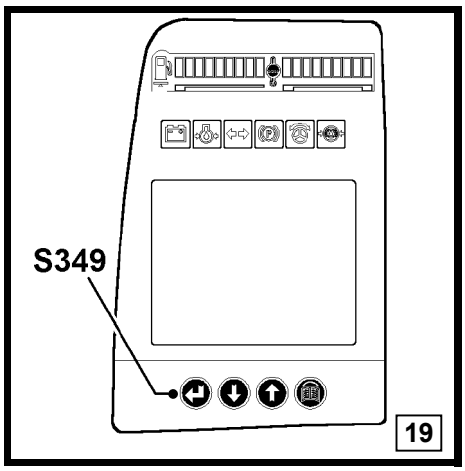

https://www.truck-manuals.net/

https://truckmanualshub.com/

	Yes	No
Functional check out of quick change coupler		
Daily, at machines operating start, check out the quick change coupler functions as well as its warning light and buzzer in the cab.		
This verification can also be done at the first daily tool change.		
Proceed as below :		
Start the Diesel engine and let it run on low idle.		
Opening the quick change coupler:		
Move the equipment so that the tool is lying on the ground, with the bucket cylinder fully extended.		
Press touch S19,		
• Warning light integrated in the touch must light up……	☐	☐
Depress the push button switch S47 (or turn the key switch S47 into position 1 (to the right), and push down the key).		
• Keep switch S47 depressed, press right push button S5R. The quick change coupler locking pins must retract ……	☐	☐
Simultaneously :		
• The symbol "Locking pins retracted" appears on the screen ..…	☐	☐
• The buzzer in the cab must sound	☐	☐
Release the key and turn the switch S47 back to position 0.		
Closing the quick change coupler:		
Depress the push button switch S47 (or turn the key switch S47 into position 1 (to the right), and press the key).		
• Keep switch S47 depressed, press left button S5L. The quick change coupler locking pins must come out	☐	☐
When the locking pins are fully out :		
• Symbol "Locking pins retracted" must light off at the display	☐	☐
• The buzzer in the cab must stop……	☐	☐
Press touch S19,		
• The warning light integrated in the touch must light off.……	☐	☐
Stop the Diesel engine		
Daily visual check out		
• Daily, after above described function verification, control if locking pins a are in fully extended position, that means the tool's attachment bore holes must be flush with locking pins.....	☐	☐
• Check also the good condition of the hydraulic hoses b and of the electrical supply bundle between end of stick and quick change coupler.……	☐	☐
• Check that the safety latches c on the load hooks are in good working order.....……	☐	☐
Lubrication of locking pins.		
• Once a week, give some stroke of grease into each of 4 lube nipples d located in the area of the locking pins	☐	☐
Screen filters inside supply hoses		
• Every 1000 operating hours, check out and clean the screen filters mounted inside the fittings between the hoses b and the hydraulic cylinder of the quick change coupler.....	☐	☐

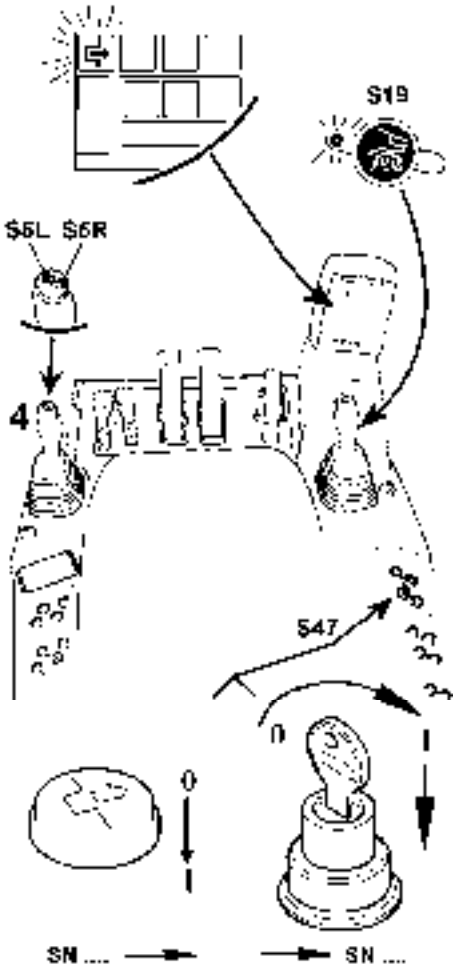

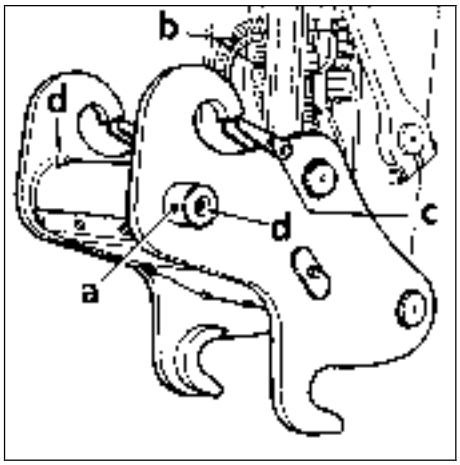

https://www.truck-manuals.net/

https://truckmanualshub.com/

MECHANICAL QUICK CHANGE COUPLER (SWM)

SAFETY RECOMMENDATIONS

- The operator must make sure every time any tool is changed that the locking pins of the quick change coupler are inserted into the bore holes provided on the tool and that the tool is attached properly.
  Make a direct visual check that the tool is fitted securely.

- In addition, the operator must perform a cycle with the tool where the tool is guided as near to the ground as possible.
  No one is permitted in the danger zone during this trial run.

- Check fitting of locking pins visually on a daily basis.

- Check for a secure fitting of the stop screw daily.

- The load capacity of the mechanical quick change coupler SWM and/or the integrated load hook can be less than or greater than the load capacity of the basic machine.
  During operation, make sure that the values found on the load capacity chart and in the Technical Data of the basic machine are maintained when checking the authorized load capacity of the SWM and/or the integrated load hook.

https://www.truck-manuals.net/

https://truckmanualshub.com/

MECHANICAL QUICK CHANGE COUPLER (SWM)

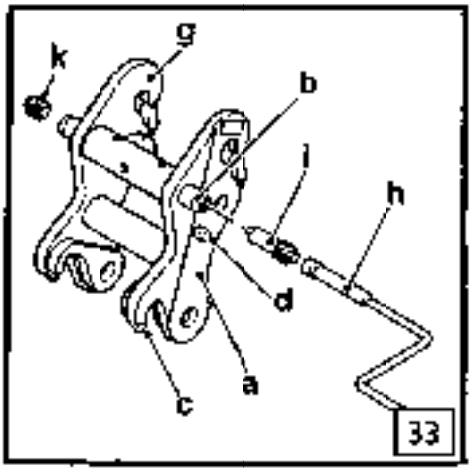

- a coupler
- b locking pins (extended)
- c attachment hook for tool
- d stop
- g load hook
- h crank
- i stop screw
- k plug screw

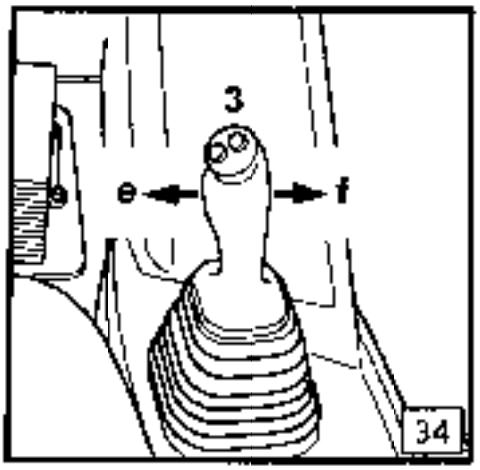

3 right joystick

Deflecting the joystick to the right

Toward "e" = extend bucket cylinder

Toward "f" = retract bucket cylinder

ATTACHING TOOLS

Approach the SWM from the side (fig. 33) and unscrew the stop screw (i) with the crank (h) from the locking pin (b)

Insert the crank (h) in the locking pin (b) and turn it to the left (counterclockwise) until both locking pins (b) are retracted to the stop.

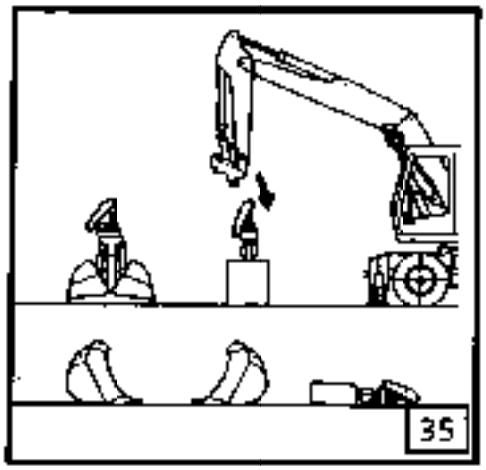

Notice: The stop and plug screws can be screwed in on the opposite side to facilitate left-handed operation.

⚠ DANGER

Make sure that no third person can move the working attachment during this procedure!

Position stick and tool as in figure 35.

⚠ CAUTION

The tool must rest freely on the ground.

Deflect right joystick 3 (fig. 34) toward "f" and fully retract the bucket cylinder.

https://www.truck-manuals.net/

https://truckmanualshub.com/

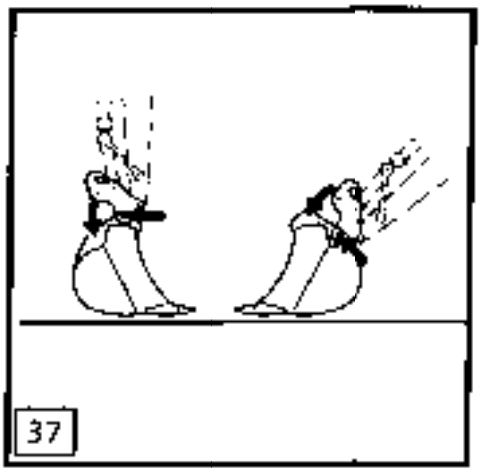

37

ATTACHING TOOLS

Position the quick change coupler in such a way that the tool can be mounted on the attachment hook (fig. 37 and 38).

Backhoe buckets can alternatively be used as front buckets after changing the attachment pins.

Raise the tool from the ground and extend the bucket cylinder until the bearing plates of the tool are resting at the stops of the mechanical quick change coupler. The attachment bore holes of the tool must be flush with the locking pins (fig. 39 and 40).

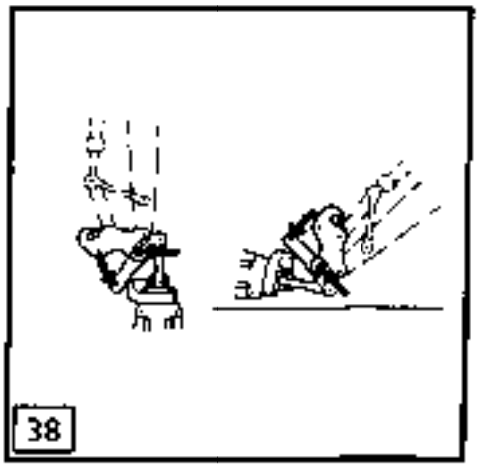

38

CAUTION

Keep tools near the ground.

LOCKING THE COUPLER

Insert the crank (h) in the locking pin (b) (fig. 33) and turn it to the right (clockwise) until both locking pins (b) are extended to the stop (fig. 39 and 40)

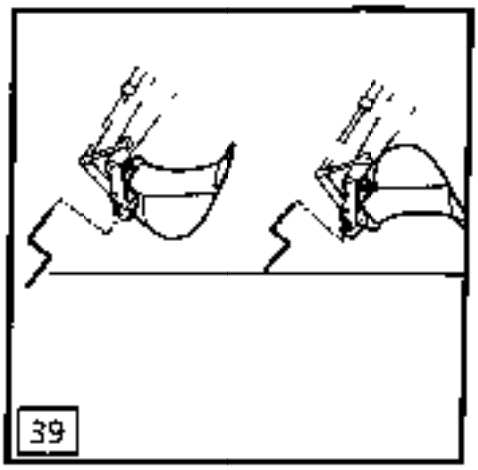

39

DANGER

Make sure that no third person can move the working attachment during this procedure!

Then screw in the stop screw (l) into the locking pin (b).

DANGER

Make sure that the locking pins are always closed on one side by the plug screw and on the other side by the stop screw!
Check for a secure fitting of the stop screw daily.

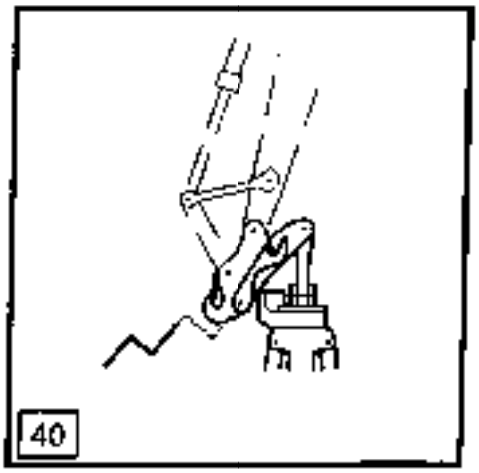

40

Notice: Before starting operation with tools, also observe all instructions for attaching and dismantling attachments.

https://www.truck-manuals.net/

https://truckmanualshub.com/

DISMANTLING TOOLS

CAUTION

Always keep the tool at a minimum distance from the ground during any unlocking procedure to avoid dangerous movements.

Extend bucket cylinder fully to the stop (fig. 41 and 42).

Approach the SWM from the side (fig. 33) unscrew the stop screw (i) with the crank (h) from the locking pin (b).

Insert the crank (h) into the locking pin (b) and by turning it to the left (counterclockwise), turn the pin to the stop.

DANGER

There is no rigid connection between the coupler and the tool present.
The tool can release itself.
To avoid dangerous movements, keep the tool at a minimum distance from the ground.

Slowly retract bucket cylinder and lay the tool freely on the ground (fig. 43 and 44).

A new tool can now be attached.

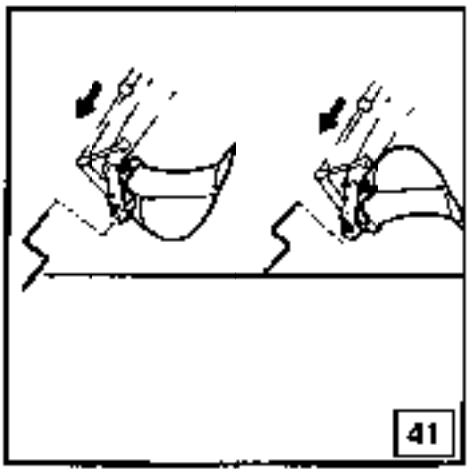
41

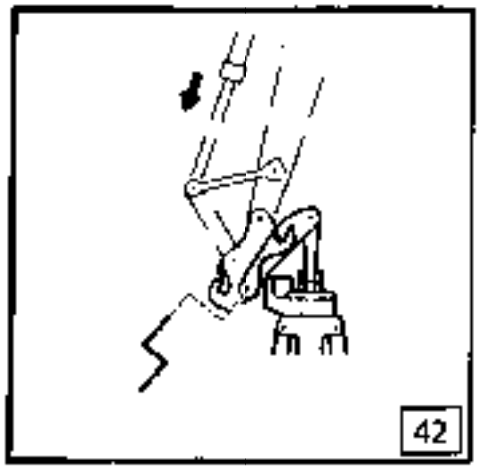
42

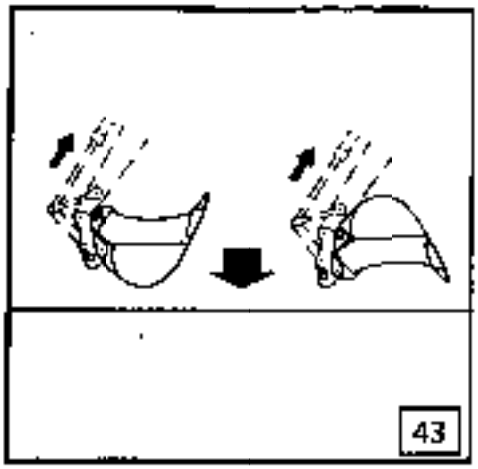
43

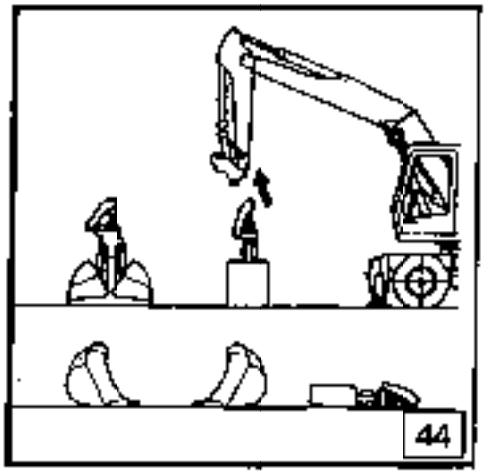
44

https://www.truck-manuals.net/

https://truckmanualshub.com/

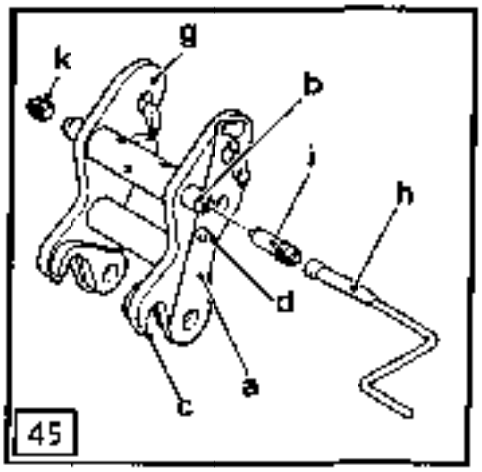

LIFTING TACKLE INSERT

The standard mechanical quick change coupler (SWM) comes equipped with two integrated load hooks (fig. 45, pos. g). The hydraulic excavator may only be operated with lifting tackle when the additional safety devices described in chapter 4 "Lifting tackle" are present and operational.

DANGER

Never use attachment hook pos. c to fix loads because the attachment hooks do not provide any secure hold for load attachment items such as cables or chains.

The maximum load capacity of each individual load hook can be found on the SWM. The load capacity of the SWM and/or the integrated load hook can be less than or greater than the load capacity of the basic machine. During operation, make sure that the values found on the load carrying chart and in the Technical Data of the basic machine are maintained when checking the authorized load capacity of the SWM and/or the integrated load hook.

Any load lifting work can only be performed when the tool is attached or dismantled. When the tool is dismantled, it is recommended to fully retract the locking pins on the lifting tackle insert. This prevents the load attachment items (cables, chains) from being routed over the locking pins and thus protects them from being damaged.

https://www.truck-manuals.net/

https://truckmanualshub.com/

MAINTENANCE RECOMMENDATIONS

The bearing lube points of the mechanical quick change coupler must be lubricated at least once a week.

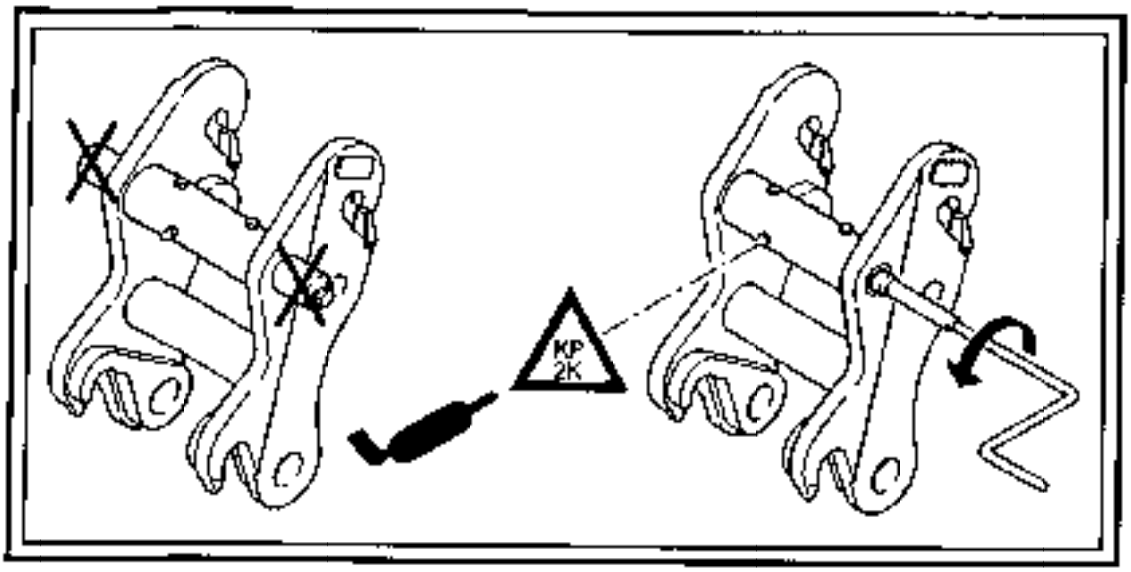

NOTICE

Make absolutely sure that the locking pins are retracted when lubricating.

If the locking pins are extended, the hollow space between the locking pins fills up with grease so that these pins can no longer be moved.

For grease specifications, see grease and service items charts.

https://www.truck-manuals.net/

https://truckmanualshub.com/

HYDRAULIC REMOVABLE COUNTERWEIGHT

The optional equipment "hydraulic removable counterweight" makes it possible to let down and lift the counterweight of the machine (as an example to make the conveyance easier), quickly and without needing any additional lifting device. This is achieved via the telescoping cylinders 2 and using the hydraulic power of the machine.

SAFETY GUIDELINES FOR LIFTING AND LOWERING THE COUNTERWEIGHT

⚠ DANGER

In order to maintain the stability of the machine, a part of the working attachment is to be removed before lowering the counterweight.
As a basic rule, we recommand to remove the whole attachment with exception of the gooseneck boom or the shovel boom.
Never stand below the counterweight during its down or up motion and as long as it is not secured properly with its fastening screws.

⚠ CAUTION

Depending on the machine type, the model of the undercarriage and the carrying out of a possibly mounted additional counterweight, the counterweight assembly may run into the track chains if stroke down to the ground with the uppercarriage lenghtwise.
Before counterweight removal, it must be checked for each machine if this applies or not.
If it does, the counterweight has to be removed either crosswise down to the ground level, or lenghtwise down to supports of adequate hight.

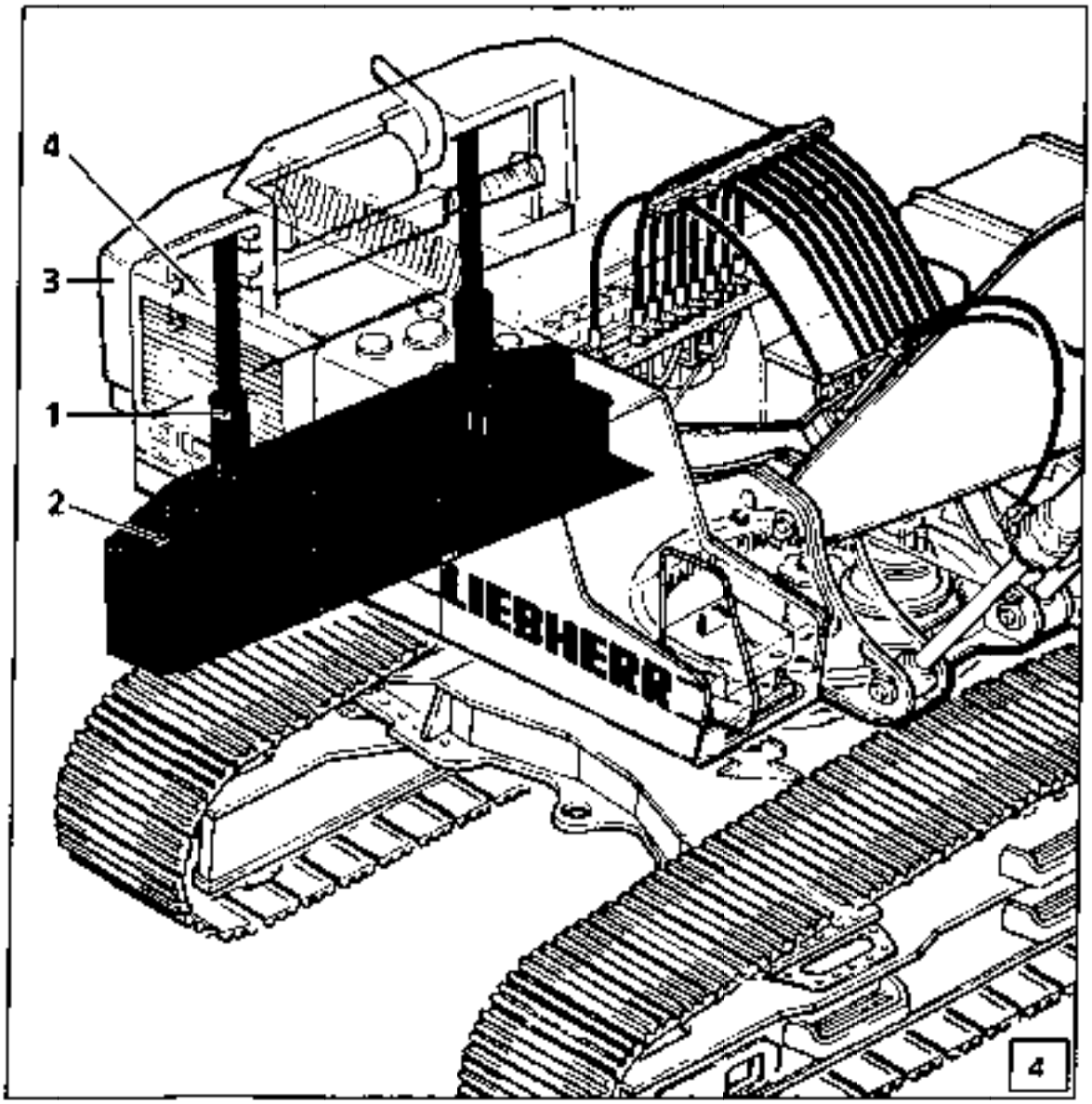

https://www.truck-manuals.net/

https://truckmanualshub.com/

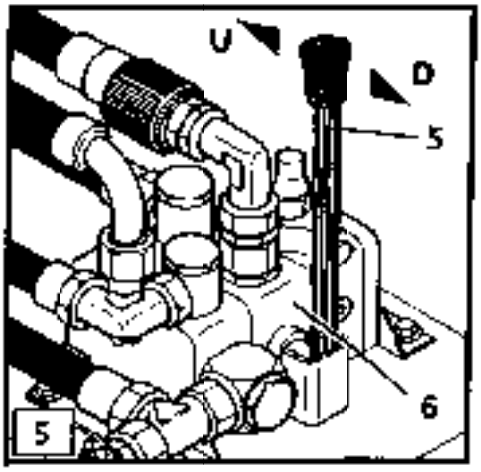

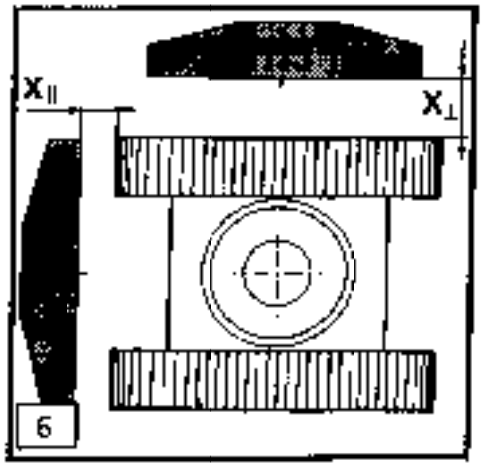

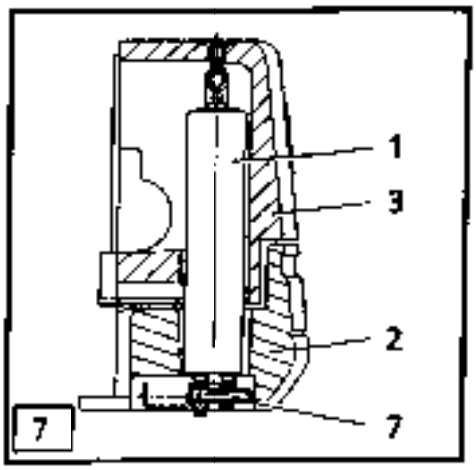

CONTROL LEVER FOR REMOVABLE COUNTERWEIGHT

The control lever 5 (fig. 5) is mounted directly to the control valve 6 situated between the hydraulic pumps and the shell 3. For access, first open the right side door 4 (fig. 4)

Push the lever 5 towards "U" to lift up the counterweight

Pull the lever 5 towards "D" to let it down.

REMOVAL OF THE COUNTERWEIGHT

DANGER

Only lower the counterweight to level, solid and horizontal ground.
If necessary fit the deposit surface with wooden blocks.

Check that the mounting pins 7 are mounted and fully engaged in their bores.

Start and bring the Diesel engine to low idle.

Push the lever 5 in direction U for about 2 minutes to deaerate the hydraulic telescoping cylinders

Remove the fastening screws of the counterweight.

Pull the lever 5 in direction D to let the counterweight down to the ground level or down to installed wooden supports.

Notice the distance X|| or X⊥ between track chain and front face of counterweight (see fig. 6) for later installation.

Extract the pins 7 connecting the counterweight 2 and the telescoping cylinders 1 and fully retract the cylinders (lever 5 towards U).

INSTALLATION OF THE COUNTERWEIGHT

Place the counterweight beside or behind the track chains so that its bearing points are situated just below the telescoping cylinders (consider distance X|| or X⊥ noticed during removal).

Start and bring the Diesel engine to low idle.

Push the lever 5 in direction U for about 2 minutes to deaerate the hydraulic telescoping cylinders.

Pull the lever 5 in direction D to extend the cylinders, insert the connecting pins 7 between counterweight and cylinders and secure the pins.

Coat the mounting pins 7 with grease before installation, this will ensure an easy future removal

Push the lever 5 in direction U. At the end of the elevation of the counterweight, check that it inserts accurately into the structure of the uppercarriage.

https://www.truck-manuals.net/

https://truckmanualshub.com/

Just before the weight comes to contact, insert the mounting bolts and turn them completely in by hand.

Lift up the counterweight some more to the stop and tighten the bolts to the prescribed torque.

Pull the control lever 5 towards D for a short moment so to relieve the pressure inside the telescopic cylinders.

TIGHTENING TORQUES OF MOUNTING BOLTS

The mounting bolts 12 (fig. 10) of the removable counterweight 2 must be torqued to :

Machine	R 944	R 954	R 964	R 974
Screw size	M30/10.9	M36/10.9	M36/10.9	M42/10.9
Torque in N.m (ft.Lbs)	1900 (1400)	3300 (2430)	3300 (2430)	5940 (4380)

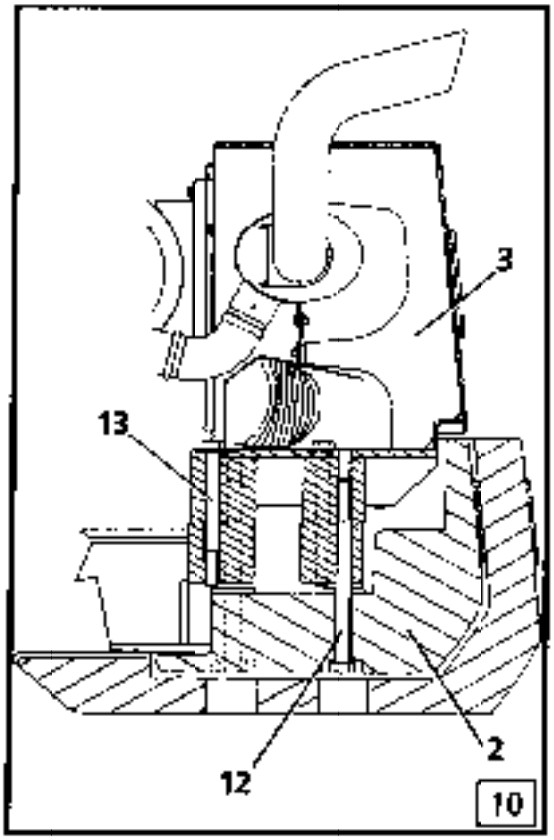

The mounting bolts 18 (fig. 12) of the optionally mounted additional counterweight 8 must be torqued to :

Machine	R 944	R 954	R 964	R 974
Screw size	-	M36/10.9	-	M36/10.9
Torque in N.m (ft.Lbs)	-	3300 (2430)	-	3300 (2430)

Notice : these bolts are not accessible when the counterweight 2 is mounted to the upperframe.

Installation and removal of the additional counterweight 8 to the counterweight 2 is possible only when the counterweight is removed.

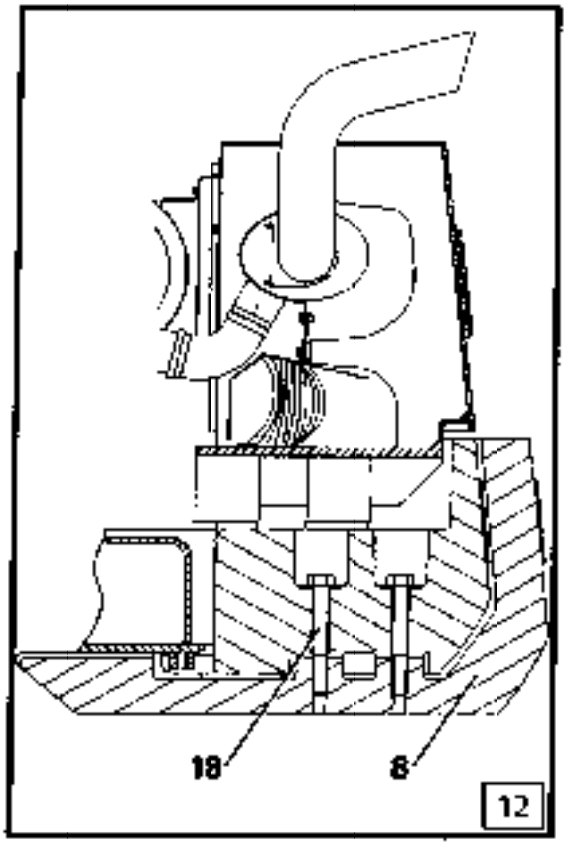

The mounting bolts 13 (fig. 10) of the counterweight shell 3 must be torqued to :

Machine	R 944	R 954	R 964	R 974
Screw size	M30/8.8	M30/10.9	M30/10.9	M42/10.9
Torque in N.m (ft.Lbs)	1350 (995)	1900 (1400)	1900 (1400)	5940 (4380)

Never loosen these bolts when removing the counterweight 2.

The tightening torque of these bolts must be checked at each installation of the main counterweight 2, and in any case every 1000 working hours.

https://www.truck-manuals.net/

https://truckmanualshub.com/

MECHANIC CHANGING of WIDTH of the UNDERCARRIAGE ON MACHINES WITH ADJUSTABLE TRACK GAUGE

On track type excavators, which are fitted with an undercarriage with adjustable track gauge, the width of the undercarriage can be reduced to 3 meter (9.8 ft) to facilitate transporting the excavator.
On the new job site, the track gauge must be reset to the normal gauge, in order to obtain maximum machine stability .

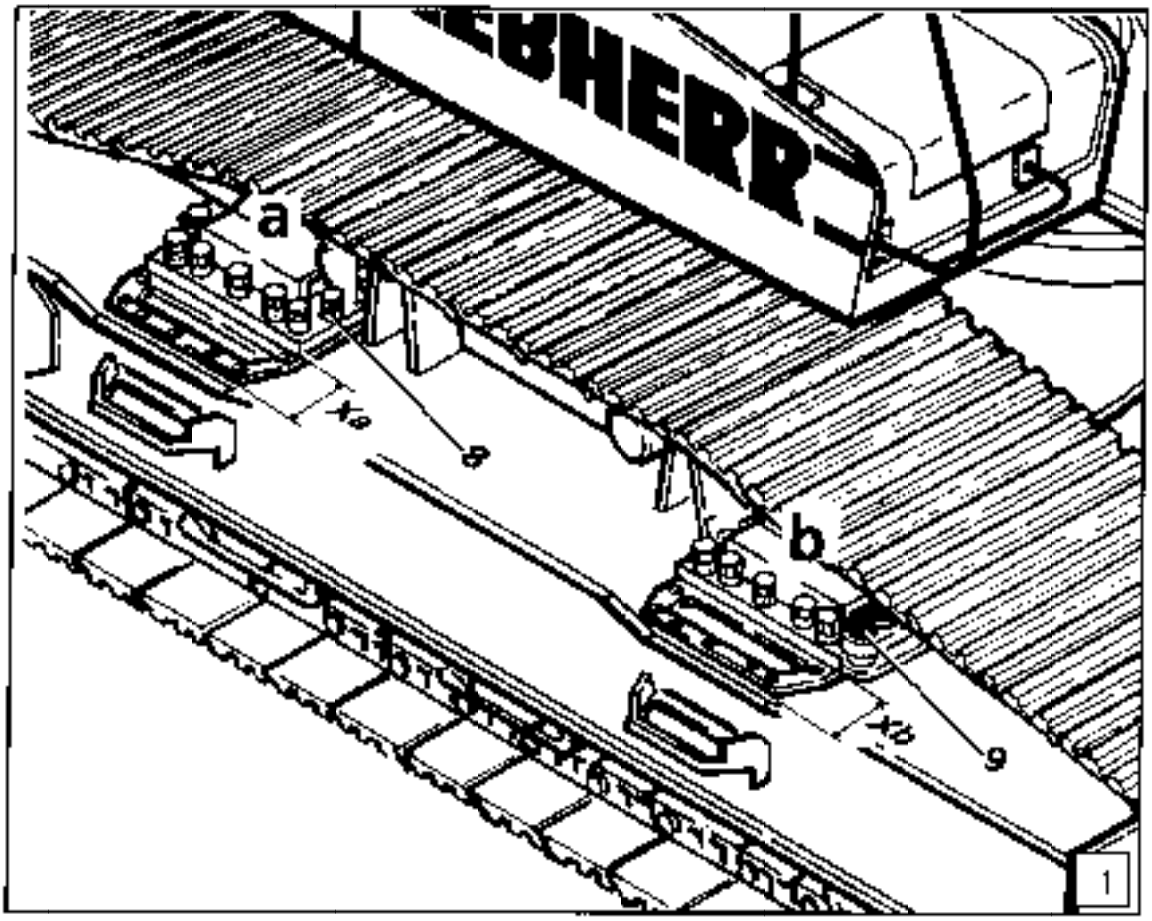

PREREQUISITE TO ADJUSTMENT

- The gauge adjustment, as outlined below, is facilitated if the machine is parked on firm and level ground, such as on an asphalt or concrete base
- To change the track gauge, one the side frame at a time is moved Inward. It is not permitted to move both side frames at the same time.
  Before moving one of the side frames in or out, remove the mounting screws 8 (fig. 1) of the corresponding side frame.
  After the gauge is reduced, retighten the mounting screws 8 with a tightening torque of 2100 Nm.
  Retraction or extension of the side frames is limited by stops. The stop mounting screws 9 (two per point a or b) may not be loosened.
- Before reducing the gauge, the sliding surface covers must be removed if applying, and/or any dirt or dust on the uncovered parts of the sliding surface of the side frames and the center section of the undercarriage must be cleaned off and greased.
- If mounted, the protective covers for the hydraulic hoses to travel motors must be removed from undercarriage central piece before adjustment.

DURING THE ADJUSTMENT

- The operator is not able to watch the retraction and extension operation from the cab, another person must be used as a guide and signal the operator
- For the gauge adjustment, it is necessary to control the travel gears very sensitively and slowly The two manual control levers for travel gear control are used for this purpose (refer to page 4 11) and the Diesel engine speed must be reduced to no more than 1100 RPM .
  The pump flow of the working pumps must also be reduced, if necessary. If no other possibility exits, change over to emergency operation (see page 4 8).

https://www.truck-manuals.net/

https://truckmanualshub.com/

MOVING ONE OF THE SIDE FRAMES IN (Fig. 7, 6 and 8)

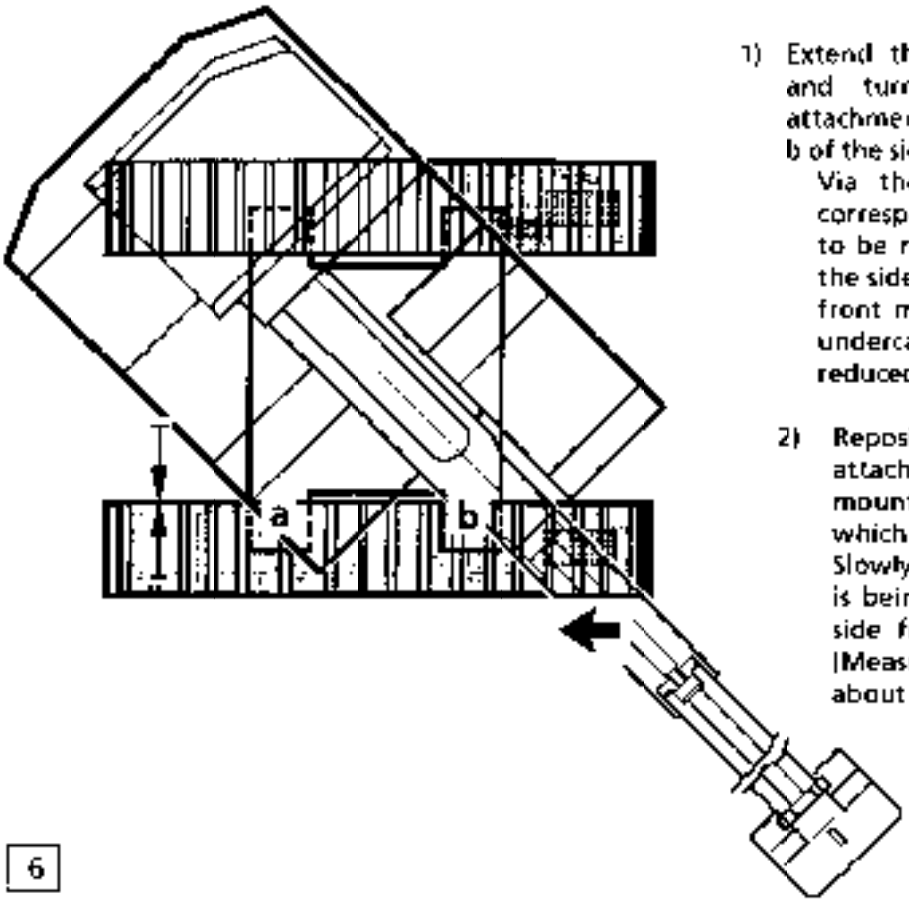

6

1) Extend the attachment near ground level and turn the uppercarriage until the attachment is above the rear mounting point b of the side frame, which is to be moved in.
   Via the manual control lever on the corresponding travel pedal, run the chain to be retracted slowly to the front, until the side frame is about 3 to 4 cm from the front mounting point in direction of the undercarriage, (measurement Xa is being reduced by about 3 to 4 cm).

2) Reposition the uppercarriage so that the attachment is now above the front mounting point "a" of the side frame, which is to be retracted.
   Slowly move the chain on the side which is being retracted to the rear, until the side frame moves in about 6 to 8 cm (Measurement Xb is being reduced by about 6 to 8 cm).

3) Move the side frame as described in paragraph 1) and 2) alternately on the front and rear mounting point by about 6 to 8 cm each, until it is positioned on both sides inside on the stop

The person guiding the operator must watch that the side frame retracts evenly on the front and on the rear. The difference between Xa and Xb may never be more than 6 cm .

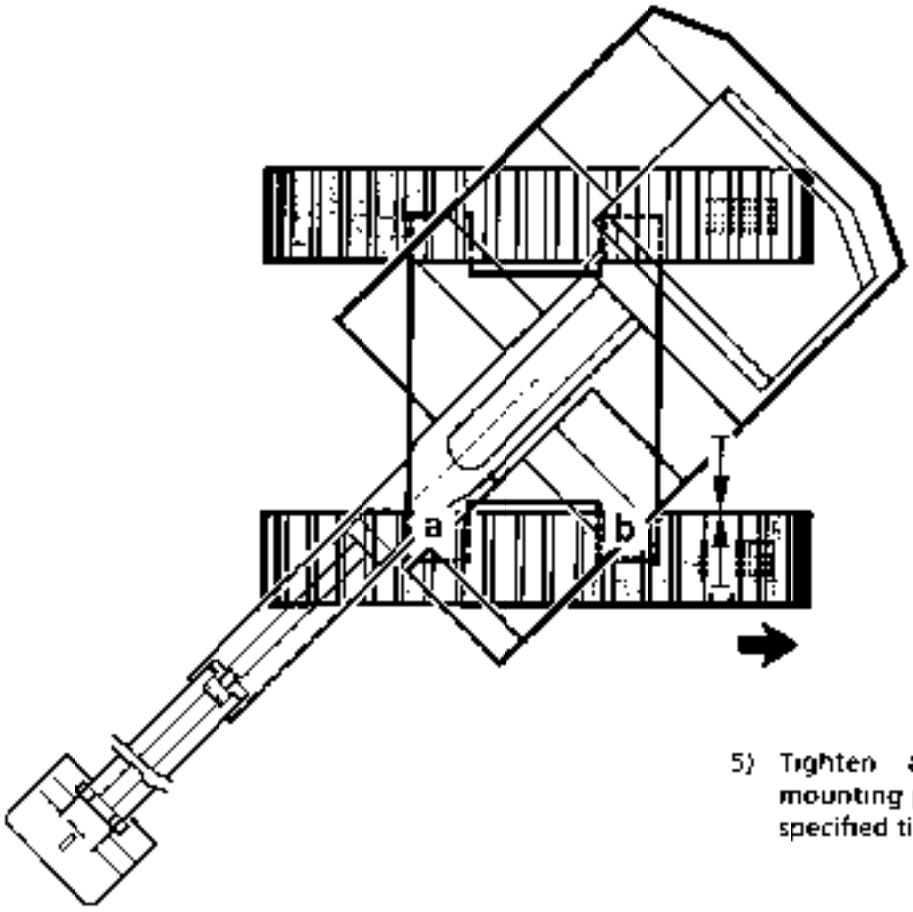

8

4) Attach the mounting screws, but do not tighten them yet If all screws cannot be inserted by hand, then insert first the 2 or 3 mounting screws on the rear or on the front mounting point all the way (but do not tighten them yet) and then move the side frame a little in or out, so that the screws can be inserted easily.

5) Tighten all mounting screws (13 per mounting point in retracted position) to the specified tightening torque.

https://www.truck-manuals.net/

https://truckmanualshub.com/

MOVING ONE OF THE SIDE FRAMES OUT (fig. 1, 10 and 12)

1) Extend the attachment near ground level and turn the uppercarriage until the attachment is above the rear mounting point b of the side frame which is to be moved out.
Via the manual control lever on the corresponding travel pedal, run the chain on the opposite side frame, which is to be retracted, slowly to the rear, until the side frame has moved about 3 to 4 cm from the front mounting point in direction of the undercarriage (measurement Xa is being increased by about 3 to 4 cm).

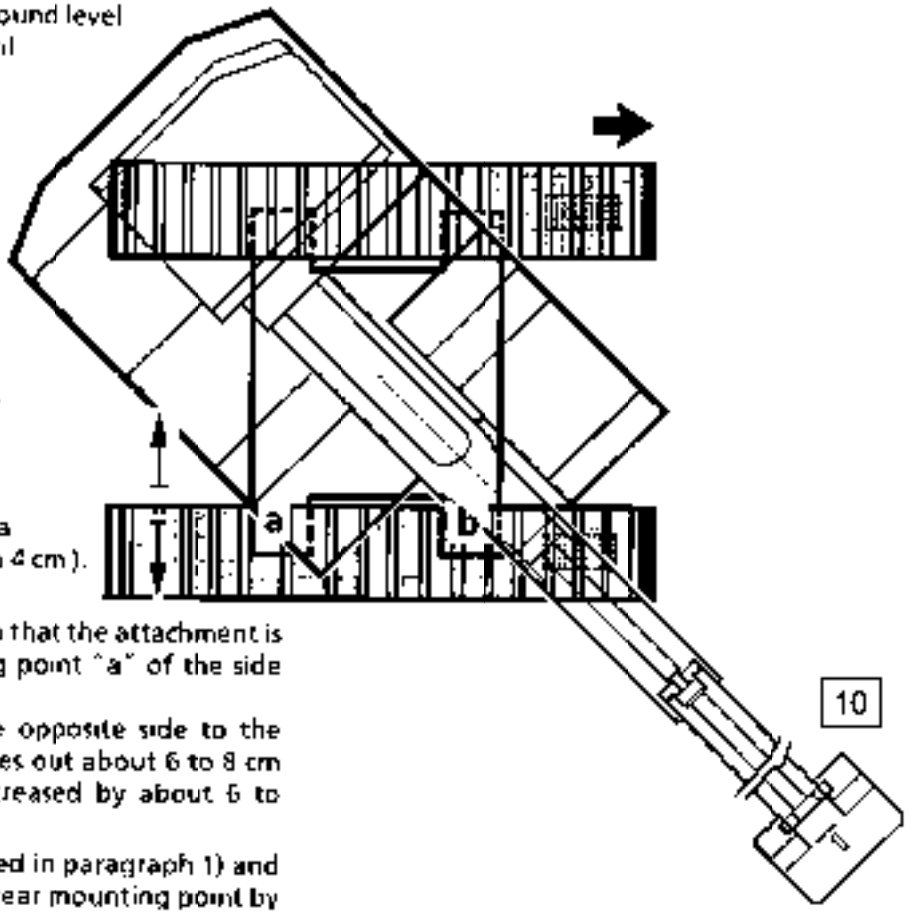

10

2) Reposition the uppercarriage so that the attachment is now above the front mounting point "a" of the side frame which is to be retracted
Slowly move the chain on the opposite side to the front, until the side frame moves out about 6 to 8 cm (Measurement Xb is being increased by about 6 to 8 cm)

3) Move the side frame as described in paragraph 1) and 2) alternately on the front and rear mounting point by about 6 to 8 cm each, until it is positioned on both sides outside the stop.

The person guiding the operator must watch that the side frame moves out evenly on the front and on the rear. The difference between Xa and Xb may never be more than 6 cm.

4) Attach the mounting screws, but do not yet tighten them. If all the screws cannot be inserted by hand, then insert first the 2 or 3 mountingscrews on the rear or on the front mounting point all the way (but do not tighten them yet) and then move the side frame in or about a little so that the screws can be inserted easily.

5) Tighten all the mounting screws (10 per mounting point in extended position) to the specified tightening torque.

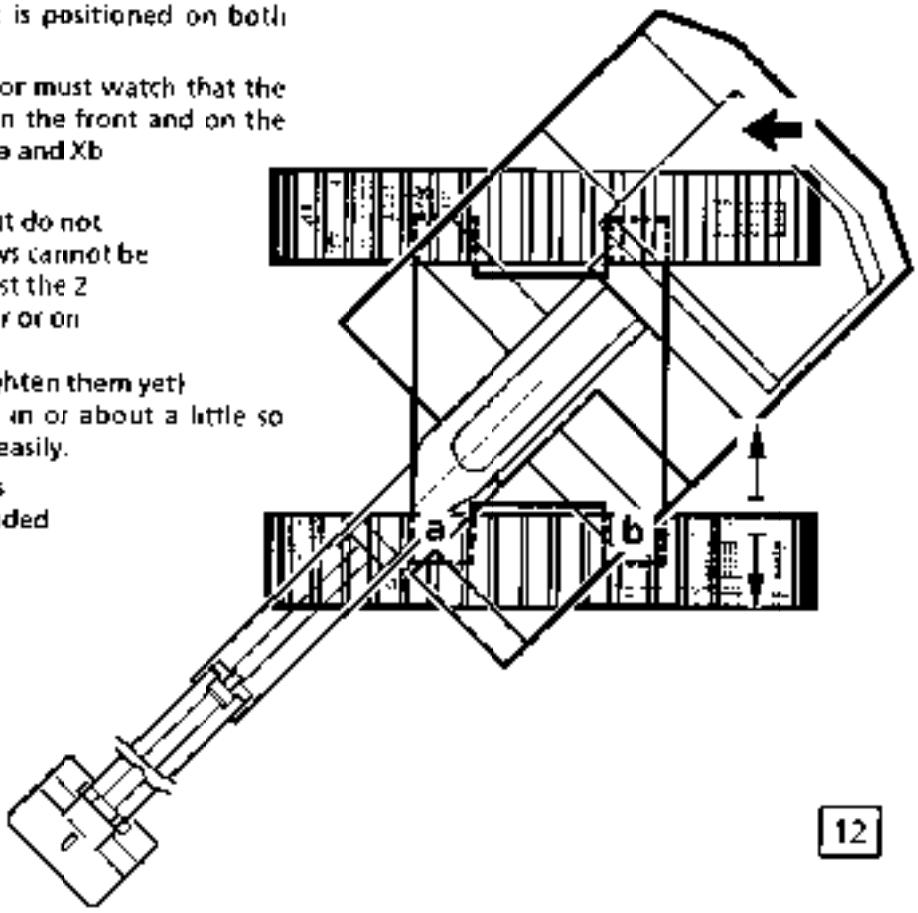

12

https://www.truck-manuals.net/

https://truckmanualshub.com/

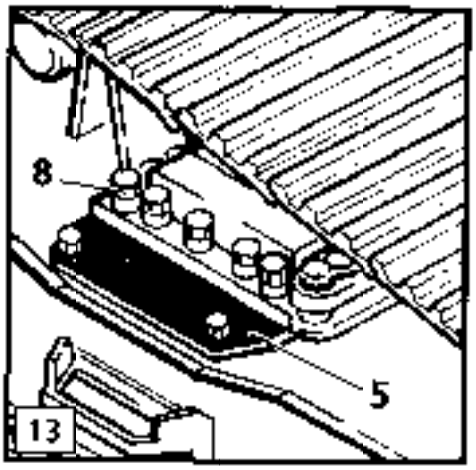

CAUTION

- After moving out the side frames into extended position, the uncovered parts of the sliding surfaces on both side frames must be coated with grease and then protected using the 4 covers 5 which are delivered with the machine.
- The mounting bolts 8 and their sleeves which are not used with the side frames in extended position must be stored in the tool box of the machine.
- To ensure a maximum stability of the excavator, only operate it with the side frames in extended position.

https://www.truck-manuals.net/

https://truckmanualshub.com/

HYDRAULIC AIDED TRACK GAUGE ADJUSTMENT
(For undercarriage with bolted side frames)

- Align upper- and undercarriage in travel direction.
- Take the attached electric control box out of the excavator's tool box and connect it to the both connectors 2A and 2B situated next to the solenoid valves Y22 and Y23 on the inner face of the hydraulic tank (fig. 18 and 20)
- Take both hydraulic hoses 3 out of the tool box and connect them to the quick couplings, one side on the solenoid valve block 6 (couplings C1 and C2, fig. 20) and on the other side to the connection block 7 mounted to the front side of the undercarriage central part (connections C3 and C4, fig. 23)
  (Due to the arrangement of the quick couplings, the hoses cannot be inverted during connection)

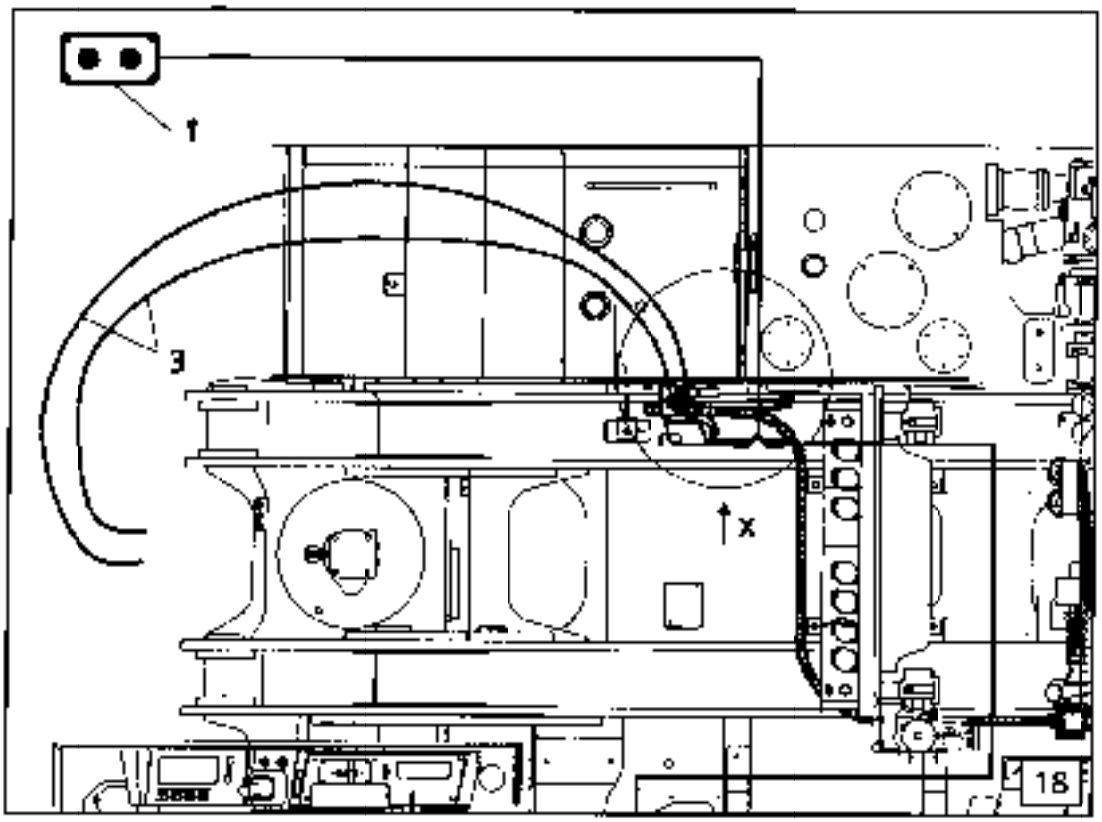

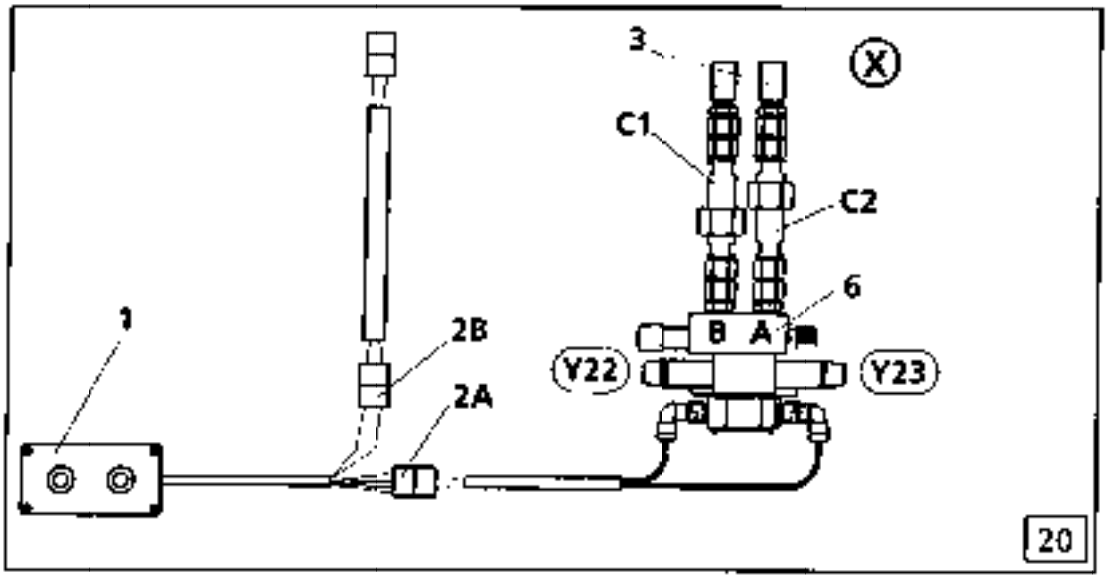

https://www.truck-manuals.net/

https://truckmanualshub.com/

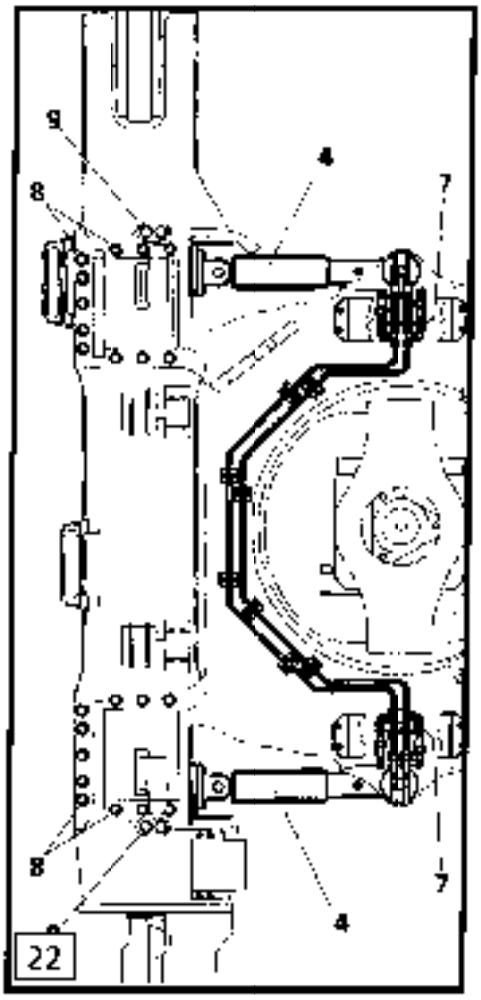

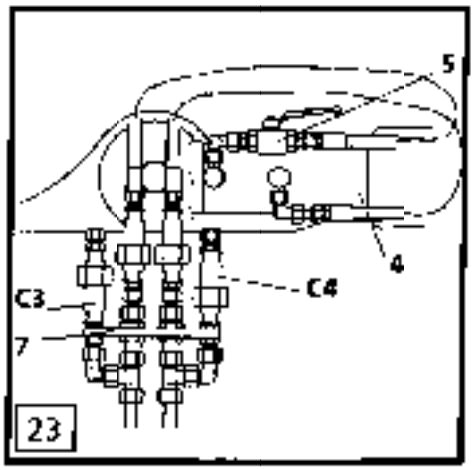

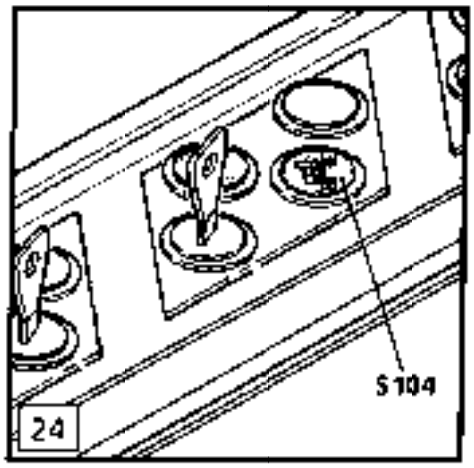

- Check that both adjustment cylinders 4 are bolted together with the side frame to be moved and that both shut-off valves 5 connected to the piston bottom side are in opened position.
- Remove the mounting bolts pos. 8 side frame to central part and if necessary coat with grease the sliding surfaces (also consider "Prerequisite to adjustment" on page 8.5.1)
- Start the engine and actuate the touch S104 (fig. 24) so to make the control box 1 alive.
- Pull up the safety lever and leave the cab.
- Move the side frame out or in, using the appropriate button of the control box 1.
- Normally, i. e. **with the excavator on a flat and firm ground**, the side frame moves simultaneously on both ends. Should the side frame glide differently at the front and rear, so the shut-off valve 5 on the side where it moves faster must be temporarily closed until the frame is about in a line with the central part.
- When the side frame has reached an end position, reinstall and tighten the mounting screws 8.
- Turn off the engine, loosen both adjustment cylinders 4 from the side frame, swing them to the other side and fix them to the second side frame. If necessary, briefly start the engine to adapt the cylinder length. Always turn the engine off before handling the cylinders.
- Remove the mounting bolts of the second side frame.
- Bring the frame to the desired end position as described above and reinstall the screws 8.
- Stop the engine, remove the hydraulic hoses 3 at the quick couplings and close all couplings using the attached plugs.
- Disconnect the control box at both connectors 2A and 2B (fig. 20).
- Replace all removed parts into the tool box of the machine.

https://www.truck-manuals.net/

https://truckmanualshub.com/

FULLY HYDRAULIC ACTUATED TRACK GAUGE ADJUSTMENT

(Only for machine type VH)

MODIFICATION OF UNDERCARRIAGE WIDTH

CAUTION

- **If necessary, loosen and remove the mechanic locking in end position of the width modification device on the undercarriage.**
- **Only perform the track gauge adjustment on flat and solid ground and without travelling during adjustment.**

The adjustment of the undercarriage width is controlled by the left travel pedal 5 when the button S104 (fig. 25) is kept depressed at the same time (control light inside the button must be on)

- Pushing the left pedal forward (fig. 26, 5a) causes the side frames to move in (reduction of undercarriage width, fig. 27)
- Pushing the left pedal backward (fig. 26, 5b) causes the side frames to move out (increase of undercarriage width)

Should a side frame not move in or out, so the travel movement must be actuated briefly foreword and backward on the same side (actuate travel pedal while button S104 is released)

CAUTION

- **Always modify the track gauge so to bring both side frames to the same end position, either fully in or out.**
- **Operating or travelling the machine with the side frames in intermediate position is not allowed.**

LUBRICATION OF THE COULISSES

Check the gliding surfaces on the coulisses (fig. 28, pos. S) at each modification of the undercarriage width.

After a working time with the side frames in extended position the gliding surfaces S must be cleaned from any dirt or dust and then coated with grease before the side frames are retracted.

After extension of the side frames, and before starting to work with the excavator, check the condition of the gliding surfaces S, as necessary clean and coat them with grease

Grease quality: employ the grease recommended in this manual for the lubrication of working attachment of the excavator.

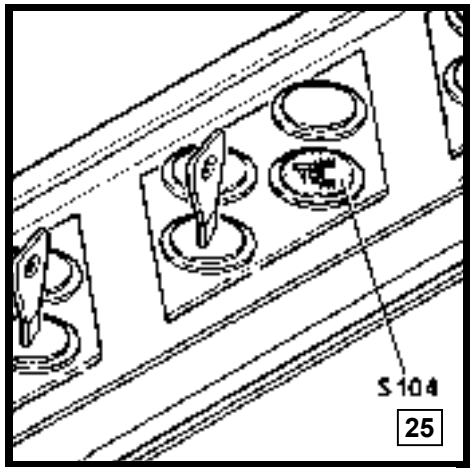

25

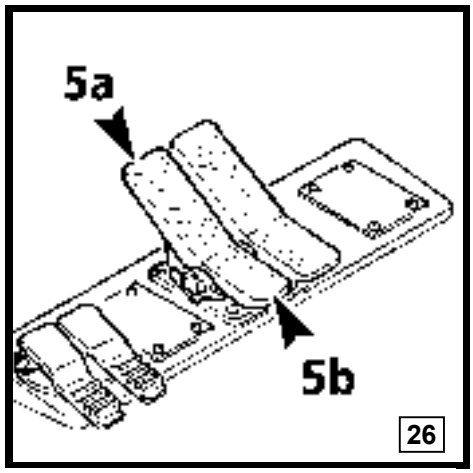

26

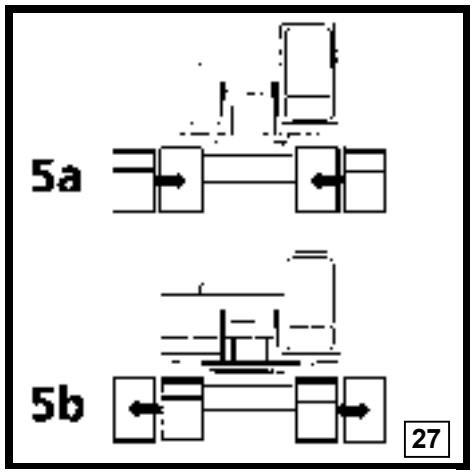

27

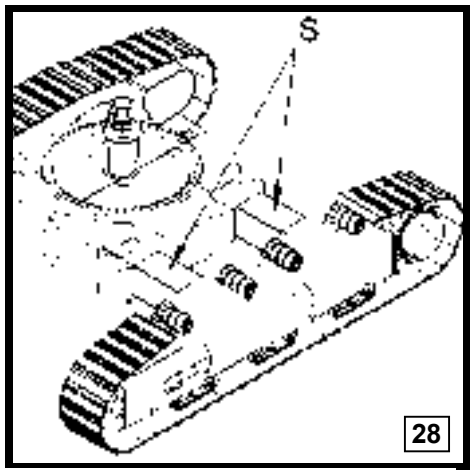

28

https://www.truck-manuals.net/

https://truckmanualshub.com/

BYPASS OIL FILTER FOR HYDRAULIC CIRCUIT

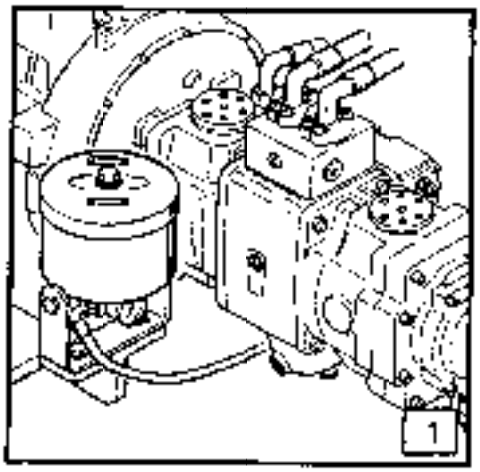

Your Liebherr hydraulic excavator can be equipped with additional oil filters mounted in the bypass of the hydraulic circuit between control valve block - return and the suction line of the working pumps. During operation a small amount of oil always flows via these filters in the bypass to the main return filter.

Predominantly, these filters are designed to drain water by absorbing the water contained in the oil. This guarantees the oil all positive qualities and/or characteristics between oil changes. See next page "appendix 1" as well.

Mounting bypass oil filters is especially recommended when using environmentally safe oils ("bio oils") because these kinds of oil feature a greater capacity to absorb water.

Note: Using these kinds of filters does not relieve the operator of the responsibility of regularly draining the water condensation from the hydraulic tank, see page 5.17.

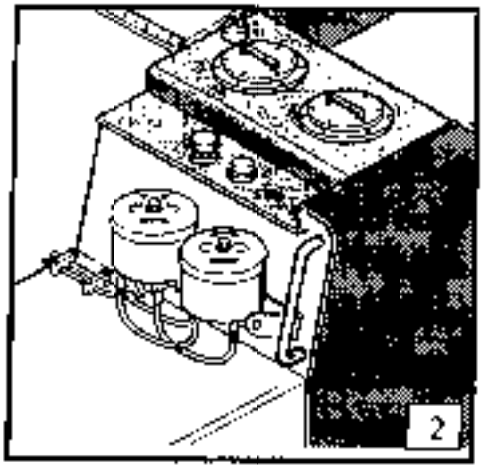

FILTER LOCATION

Depending on the size of the machine model, filters with one or two filter elements are mounted:

- in machine models R 904 to R 944:
  a filter is mounted next to the hydraulic pump (fig. 1)
- in machine models R954 to R 974:
  there are two filters in line either
  - on the back of the control spool board (R 954);
  - on the front of the hydraulic tank (R 964, R 974, ..., fig. 2)

CHANGING FILTER ELEMENTS

The filter elements must be replaced every time return filter elements are changed (see 6.10 and Maintenance Schedule), but at least every six months

DANGER

Never disconnect lines or hoses before the attachment is lowered to the ground, the engine is turned off, both joysticks are moved, with ignition key in contact position, and the hydraulic pressure in the tank is relieved by turning the breather filter.

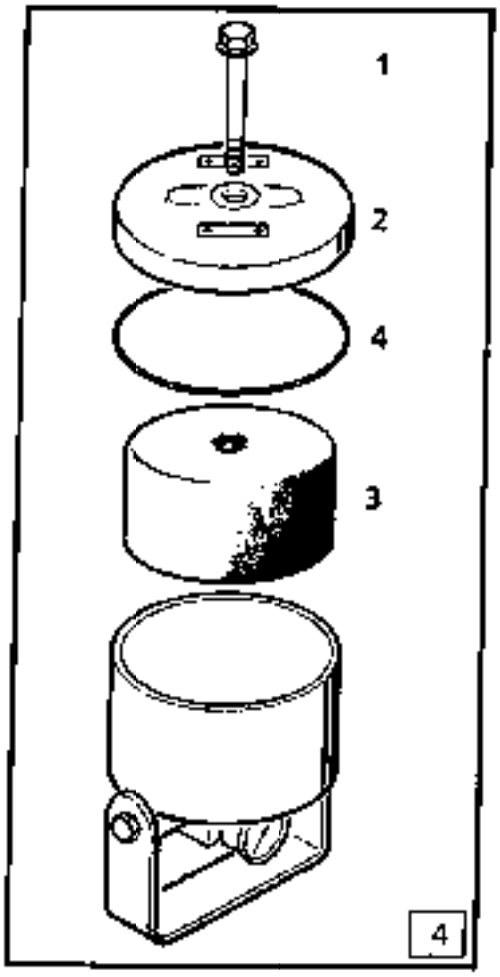

Loosen screw 1, remove cover 2 and pull out the old filter element 3.
Insert a new filter element into filter, clean cover 2 and put in a new O-ring 4
Put on filter cover 2 and retighten screw 1

https://www.truck-manuals.net/

https://truckmanualshub.com/

Description

The Kleenoil Filter Cartridge is made of densely wound long fibre cellulose.
It is covered with a material casing and comes in specified sizes for use in the appropriate filter housings

The variety of applications to which the cartridge is applicable is explained in greater detail in the appropriate data sheets.

Action of Cartridge

The filter cartridge acts both by absorption and adsorption in a continuous recycling process. The long cellulose fibres attract the water formed either through the combustion process or by condensation and absorb it like a sponge, at the same time rejecting the larger oil molecules which are forced to pass between the tight windings of the cartridge. As the oil passes through the cartridge minute particles of carbon, wear metals, and silicon are extracted from the oil by adhering to the many surfaces of the filter - a process known as adsorption. Thus, the cartridge by removing water inhibits the production of acids which both degrade the oil and cause excessive wear. The simultaneous removal of minute contaminants as they occur enables the oil life to be extended whilst remaining within its original operating specification, as laid down by its manufacturer.

Important note

While the filter is extracting the water and contaminants it is continuously safeguarding the desirable elements compounded within the actual oil in use. These typically include, dependent on use, dispersants, detergents, oxidation and rust inhibitors, metal de-activators, pour-point depressants, VI improvers, lubricity agents, fungicidal, anti-foaming and gelling additives. These additives are held in suspension and their levels can be critical if the oil is to maintain its beneficial effect. The Kleenoil filter will not remove these additives.

Specification

Identification :	SDFC 1888, Super Duty Filter Cartridge for use with SDU 9788 Super Duty Unit
Application :	1. As an engine oil filter for sumps up to 80 ltrs. 2. As a hydraulic oil filter 3. As a Diesel oil filter
Water retention level :	0.26 gall. (1, 2 ltr. (to less than 0,05%)
Weights and dimensions :	Height : 110 mm Diameter : 195 mm Weight : 900 g. ± 5%

Oil flow rate : Output levels are dependent on viscosity, temperature, degree of contamination, and oil pressure. Pressure difference - begin : $\Delta p = 3$ bar.

Filtration level : Particulate contaminants in accordance with BS 5540 part 4 : 1981 and ISO/DIS 4406. ISO 14/9 equivalent to NAS 1638 class 6 (hydraulic oil specification)

https://www.truck-manuals.net/

https://truckmanualshub.com/

USE OF ENVIRONMENTALLY FRIENDLY HYDRAULIC FLUIDS IN LIEBHERR EARTHMOVING MACHINES

General

If specific applications require that even in the case of accidents or leakage there may be no damage caused to the environment, hydraulic excavators using environmentally friendly hydraulic fluids can be operated.

These lubricants are free of mineral oils, they are water-soluble in every proportion and meet the requirements for biodegradability.

Never mix them together or with lubricants based on mineral oils.

The following recommendations state how to proceed when using these biodegradable hydraulic fluids in LIEBHERR earthmoving machines.

Prescriptions for biodegradable hydraulic fluids

When using environmentally friendly hydraulic fluids, we exclusively recommend synthetic ester oils with a viscosity according to ISO VG46.

Note :

Due to their limited high temperature stability, **vegetable oils** cannot be used.

Polyglycols decompose various machine paints and should only be used in special cases. In this instance, the material compatibility in regard to seals, paints, etc..., has to be observed.

Due to the lack of experience with the various products, a **"Warranty Declaration"** has to be inquired from the **Oil Supplier** if LIEBHERR earthmoving machines are to be operated with environmentally friendly hydraulic fluids based on synthetic ester upon **"customer's demand"**. The declaration applies for hydraulic components in the case of damage caused by the hydraulic fluid. This "warranty declaration" together with the completely filled out confirmation has to be sent to LIEBHERR.

Fundamentally, the supplier is responsible to maintain the standard of quality, standards and specifications of his product when environmentally friendly products are being used.

In order to avoid misunderstandings, a **distinct reference** must be made on the hydraulic tank, stating the fluid which the machine is operating with.

Attention :

Mixing various "environmentally friendly hydraulic fluids" together is prohibited

The name "synthetic ester" for example does not mean, that all products carrying this name have the same contents. The lack of experience with biodegradable products does not allow a general statement.

Oil change intervals

The oil changes in preset intervals are not allowed for environmentally friendly hydraulic fluids.

The time for oil change must be determined by oil sample analysis and according to the laboratory reports. See page 5.8.

To take the oil samples, LIEBHERR offers its customers a complete **Analysis-Set for Wear Check Lubrication-Analysis** (Id No. 7018368), which consists of 6 coded sample containers, 6 sample cover letters, 6 envelopes as well as a 3 mtr. silicon hose. Oil analysis and laboratory report are already included in the price for the set! Furthermore, only with the first command, a hand pump (Id.No. 8145666) or, as an alternative, an extraction valve (Id.No. 7019068) and a high pressure hose for pressure test-point (Id.No. 7002437), will be necessary only once.

Further oil analysis or oil change intervals have to be carried out according to the sample analysis in the laboratory report from Wear Check. The evaluation result has to be sent to LIEBHERR and the customer.

https://www.truck-manuals.net/

https://truckmanualshub.com/

Oil filters change intervals

The filters change intervals as stated by LIEBHERR must be adhered to

Use only Original LIEBHERR Filters. We recommend the use of special "bio oil filters" to reduce the percentage of zinc in the system (see also chart of return filters).

Water Condensation

Water Condensation must be drained from the hydraulic tank in regular intervals (drain plug on the tank). It is recommended to do this after the machine was stopped for a longer period of time, for exp. Monday morning.

The percentage of condense water is not allowed to exceed 0,1 wgt.%.

Changing to environmentally friendly hydraulic fluid

If machines which used to operate with mineral oils or other hydraulic fluids are modified to operate with environmentally friendly hydraulic fluids, it is imperative to observe all LIEBHERR guidelines for modifications. Flushing the system is absolutely necessary to ensure trouble-free operation.

Never install attachments from other machines without strictly adhering to all guidelines for modifications with regards to the interior coating of components (e.g. the hydraulic tank), and the procedure for flushing with flusher oil (to drain the mineral oil, ...).

The percentage of mineral oil, resulting from changing or mixing with other mineral oil based fluids, remaining within the system is not allowed to exceed 2 wgt.%.

If the changing guidelines stated by LIEBHERR are not adhered to, warranty will be refused in case of damage. In case of a doubt, first obtain these guidelines from your LIEBHERR representative.

Having changed to environmentally friendly hydraulic fluid or when initially filling the system a reference fresh oil sample must be taken after initial warm-up and sent to the laboratory for analysis. The sample must be taken while the machine is running using pressure test-point valve (Id.No. 7019068) or right after stopping the engine via the breather valve using the vacuum pump.

Particular precautions

- When disposing of these fluids make sure that this medium is not treated as a mineral oil, i.e. there are special regulations for the disposal of these fluids in individual countries.

  In case you have any questions please contact your representative waste oil recycler.

- When handling the medium simply use gloves and, in case there is a risk of spraying, use safety goggles as well.

  Wash your hands before taking a break and at the end of your shift. In case the fluids come into contact with skin, rinse with lots of water; in case of eye contact, rinse with water for 10 to 15 minutes.

- After any fluid is spilled or runs out, wash away any smaller amounts with lots of water; larger amounts must be properly collected and disposed of.

- In case of fire, the usual fire extinguishers may be used (like water vapor, CO_2, foam, dry ice extinguishers, ...).

  Never aim a stream of water directly at hot, burning material (risk of splattering).
  Thermal decomposition generates CO and/or CO_2.

https://www.truck-manuals.net/

https://truckmanualshub.com/

REFUELING PUMP

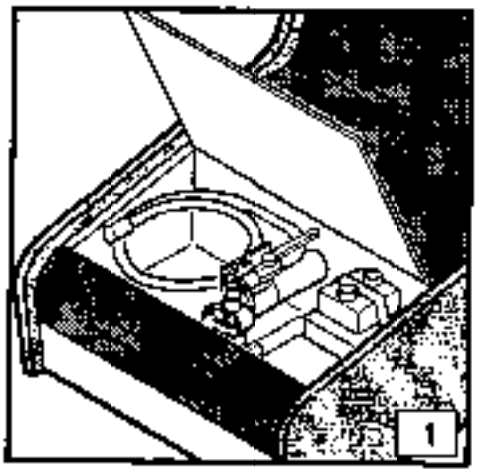

DANGER

Never smoke or allow an open flame in refueling areas.

The fuel tank can be refilled thanks to an optionaly mounted refueling pump driven by an electric motor fed by the batteries.

The equipment, located in the compartment in front of the fuel tank (fig. 1), consists of the pump (whose outlet is connected directly to the tank), a stop valve at the inlet of the pump, an electrical unit, a control box and a flexible suction hose.

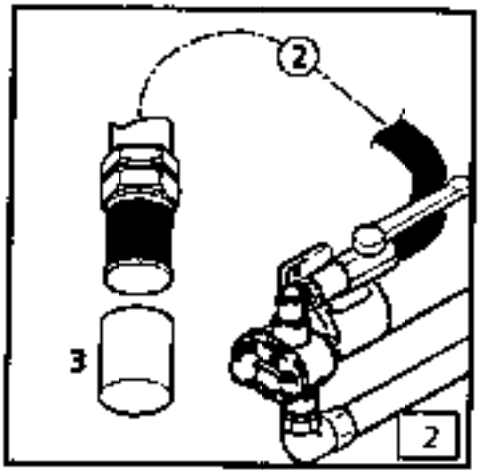

Refueling proceeds as follows :

- Take the hose 2 out of the compartment, remove protective covering 3 (fig. 2) of the suction strainer at the end of the hose and insert the hose into a fully drum of fuel.
- Open stop valve 4 (move the lever to position A), (fig. 3).
- The pump can now be started, by pushing the green control button on the electric box E13.
  When the fuel reaches the maximal allowed level in the tank, the pump will automatically stop
  The pump can be stopped any time by pushing the red button.

After use, wind up the cable and position the box properly and secure using the tightener provided.

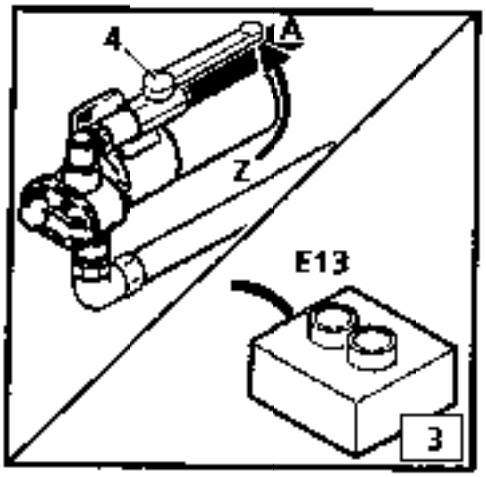

CAUTION

Only use the pump to deliver fuel.
Never let the pump run unloaded (sucking air) even for a short moment. Stop it immediately when the level in the barrel gets too low or during the lapse of time which is necessary to put the suction hose into a new barrel.
Otherwise the pump would be destroyed rapidly.

After refueling, reclose stop valve 4 (position Z), then get hose 2 slowly out of the drum being used, to drain the remaining fuel in the hose into it.

Replace protective covering 3 on the strainer, coil the hose and route it in the space provided. Reclose the compartment.

If at customer's wish the tank has to be refilled with a fast refueling system (for an example from Wiggins) the tank can also be fitted with the adequate receiver.

https://www.truck-manuals.net/