https://truckmanualshub.com/

PREFACE

1. This parts catalog covers the parts for crawler backhoe Model B12, B17 for U.K. and AUSTRALIA.

Pub. No. : 000Y00S3000
Issued : December, 1989.

2. Mounted engine and Model Code.

Model	Model Code	Mounted engine	Model Code
B12	172149(カ、キ、ク、ケ、コ、サ、シ、ス、セ、ソ、ツ、テ)	3TNA72L-UBA	119631B
B17	172150(カ、キ、ク、ケ、コ、サ、シ、ス、セ、ソ、ツ、テ)	3TNA72L-UBB	119631C

3. Color

Color	Munsel No.	Paint Code(16ℓ)	Spray
YANMAR Saffron Yellow	1.0Y7.5/11	933110-91603	977620-30381
YANMAR Cream White	5.0Y9/1	981101-09614	981101-10140
YANMAR Charcoal Gray	N2	981101-09516	977620-30371

4. As this parts catalog covers the specifications of several countries, the Fig. No. for the applicable countries is shown in the following way.

a) When the applicable figure varies according to the appropriate country(s).

Example 1 :

Country	UK	AS	EX
Fig No.	18	19	–

←Abbreviation of the country concerned
UK : United Kingdom
AS : Australia
EX : Others

↑ Fig. number on the page on which the country concerned is shown

In case of Example 1 above, UK(United Kingdom) is shown in Fig.18 and AS (Australia) in Fig.19. EX(Others) is not applicable.

b) When only one figure is available to be applied to one or more countries.

Example 2 :

Country	UK	AS	EX
Application	–	O	–

←Abbreviation of the country concerned
←The country concerned is indicated by a circle (O).

In case of Example 2 AS(Australia) is the applicable country.

(Note)

When the figure or specification is common to all destinations, no indication is given.

https://truckmanualshub.com/

SPECIFICATIONS

Name			YANMAR CRAWLER BACHOE	
Model			B12-P	B12-PR
Engine	Model		3TNA72L-UBA	
	Type		Vertical 3-cylinder water-cooled diesel	
Dimensions	Overall length	mm	3485	
	Overall width	mm	1000	
	Overall height	mm	2070	
Bucket capacity (St'd)		m³	0.04	
Outside width of bucket(St'd)		mm	400	
Max. digging depth		mm	1900	
Max. cutting depth		mm	3430	
Max. dumping height		mm	2420	
Max. cutting radius at ground level		mm	3320	
Min. turning radius			1300	
Boom swing angle		—	(左) 45 (右) 90	
Max. scoop capacity		kg	1050	
Traveling speeds (high·low)		km/hr	1.8	
Climbing ability		—	30	
Distributed weight		kg/cm²	0.235	0.218
Crawler width (St'd)		mm	230	
Blade	Width × height	mm	860×250	
	Capacity	m³	0.06	
Operating weight		kg	1250	1170

https://truckmanualshub.com/

SPECIFICATIONS

Name			YANMAR CRAWLER BACHOE	
Model			B17-P	B17-PR
Engine	Model		3TNA72L-UBB	
	Type		Vertical 3-cylinder water-cooled diesel	
Dimensions	Overall length	mm	3500	
	Overall width	mm	1000	
	Overall height	mm	2070	
Bucket capacity (St'd)		m³	0.045	
Outside width of bucket(St'd)		mm	450	
Max. digging depth		mm	2100	
Max. cutting depth		mm	3570	
Max. dumping height		mm	2550	
Max. cutting radius at ground level		mm	3500	
Min. turning radius			1360	
Boom swing angle		—	(左) 45 (右) 90	
Max. scoop capacity		kg	1050	
Traveling speeds (high·low)		km/hr	2.0	
Climbing ability		—	30	
Distributed weight		kg/cm²	0.254	0.237
Crawler width (St'd)		mm	230	
Blade	Width × height	mm	960×250	
	Capacity	m³	0.06	
Operating weight		kg	1350	1270

https://truckmanualshub.com/

各部の名称
PARTS NAME

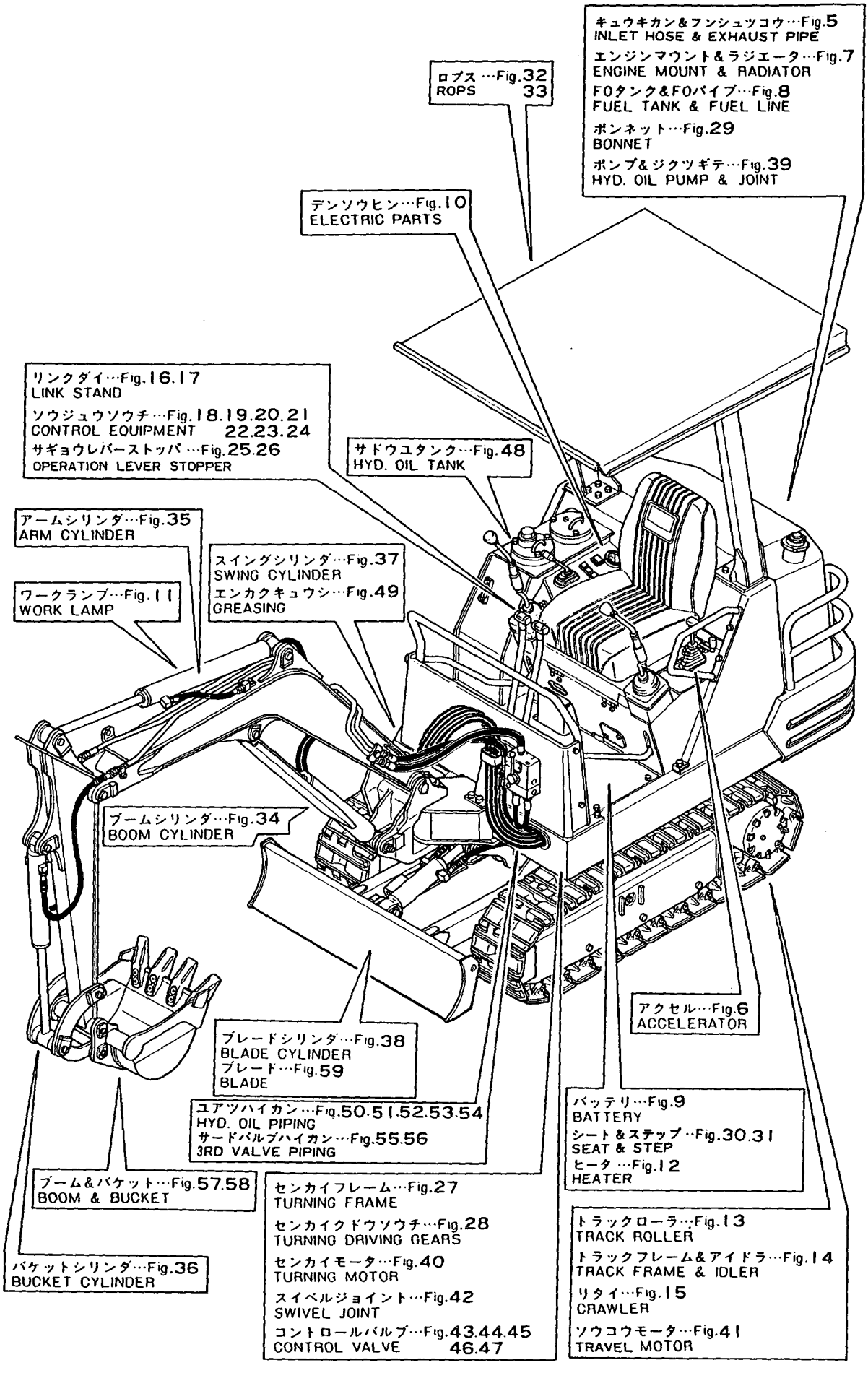

https://truckmanualshub.com/

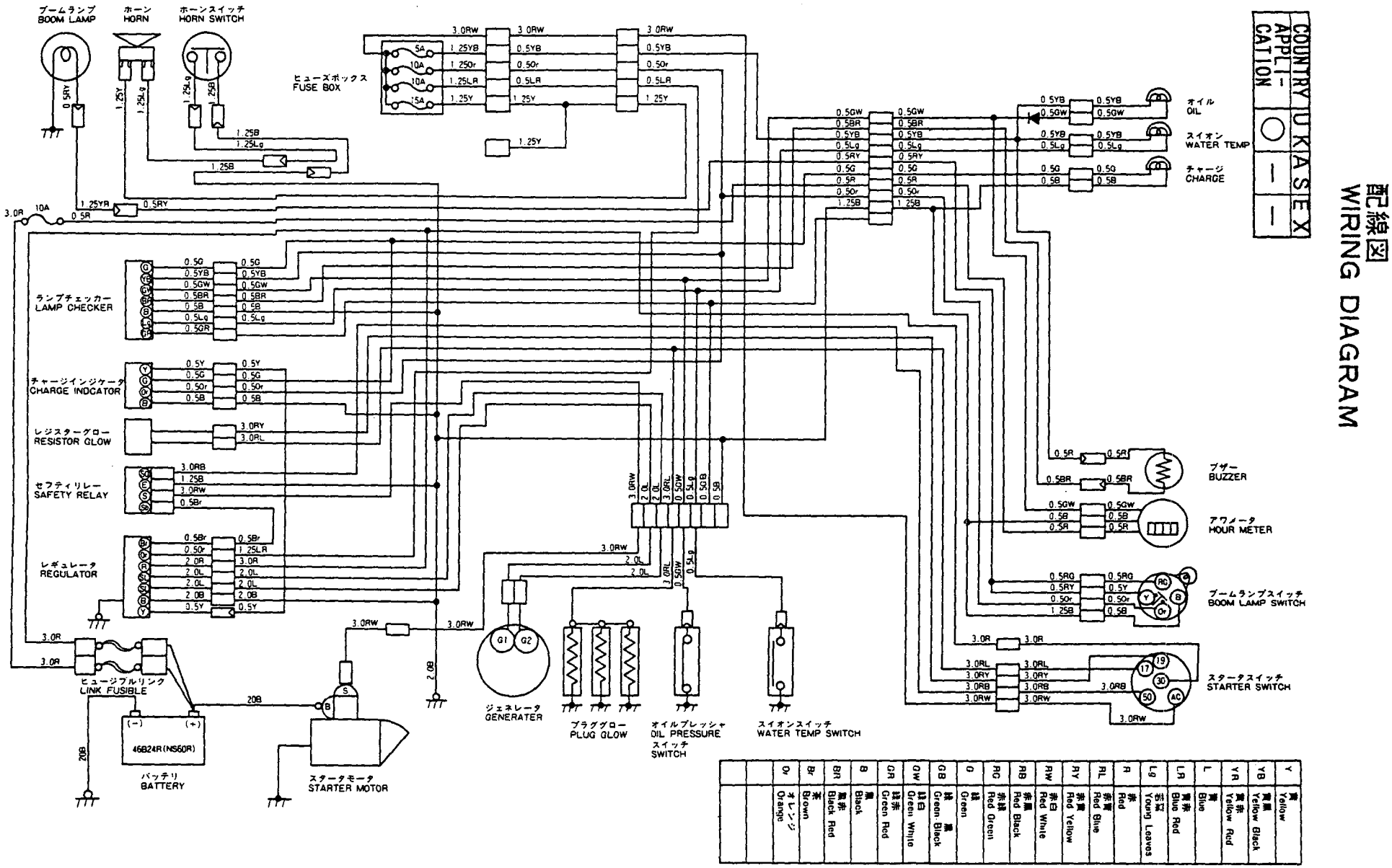

https://truckmanualshub.com/

配線図 WIRING DIAGRAM

COUNTRY	U	K	A	S	E	X
APPLI-CATION	—	○	○			

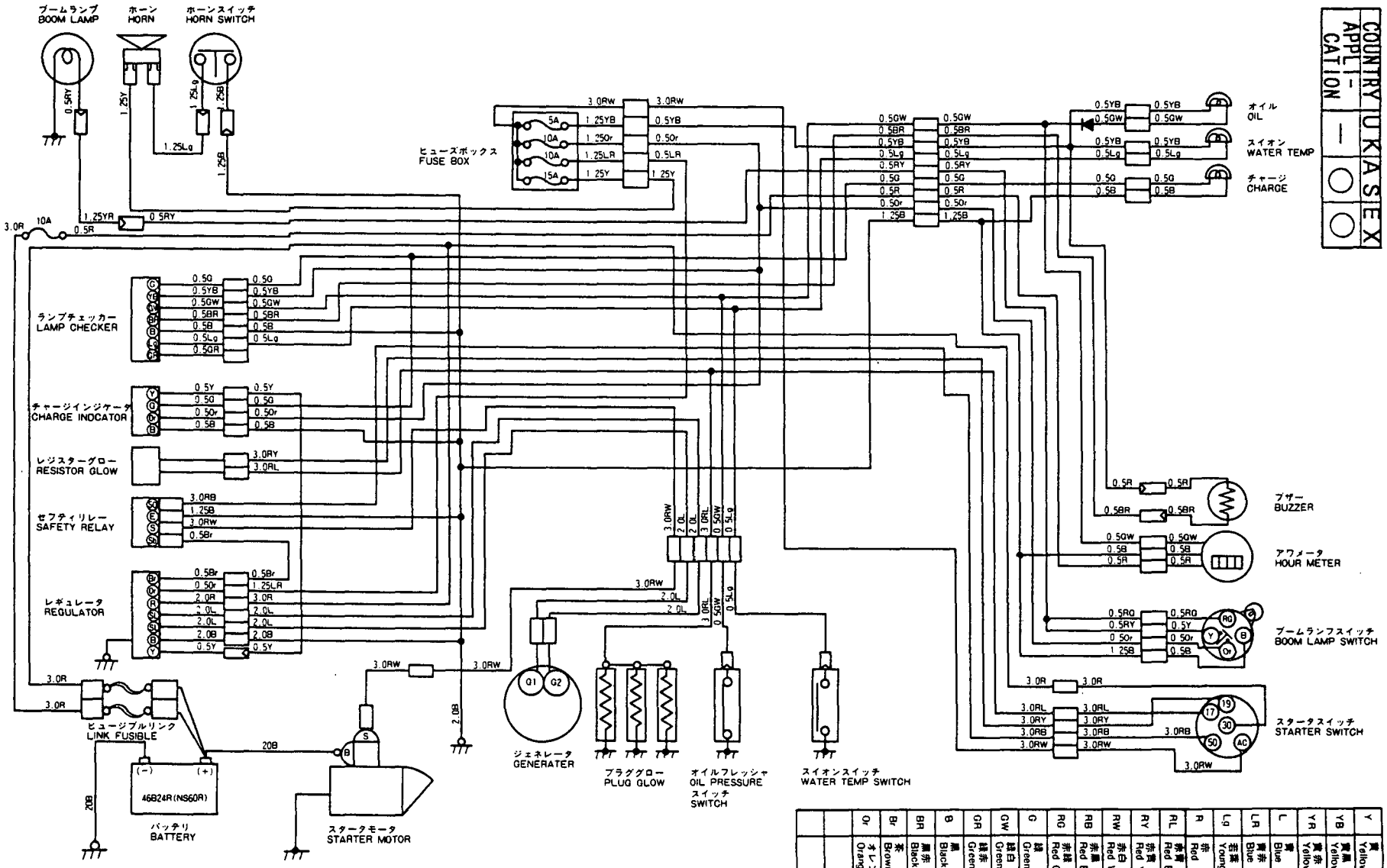

		Or	Br	BR	B	GR	GW	G	RG	RB	RW	RY	RL	R	Lg	LR	L	YR	YB	Y
		オレンジ Orange	茶 Brown	黒赤 Black Red	黒 Black	緑赤 Green Red	緑白 Green White	緑 Green	赤緑 Red Green	赤黒 Red Black	赤白 Red White	赤黄 Red Yellow	赤青 Red Blue	赤 Red	若葉 Young Leaves	青赤 Blue Red	青 Blue	黄赤 Yellow Red	黄黒 Yellow Black	黄 Yellow

https://truckmanualshub.com/

```
1,1,,772149-03700,,"LABEL SET",1,1,,,,,,,,,,,,,,,
2,1,,772150-03700,,"LABEL ASSY",,,,1,1,,,,,,,,,,,,,
3,2,,172149-03160,,LABEL,2,2,,,,,,,,,,,,,,,
4,2,,172150-03120,,LABEL,,,,2,2,,,,,,,,,,,,,
5,2,,172141-03440,,LABEL,1,1,,1,1,,,,,,,,,,,,,
6,2,,172141-03450,,"LABEL, RESERVER(C)",1,1,,1,1,,,,,,,,,,,,,
7,2,,172149-03170,,"LABEL, STRIPE(F)",1,1,,1,1,,,,,,,,,,,,,
8,2,,172149-03180,,LABEL,1,1,,1,1,,,,,,,,,,,,,
9,2,,172149-03190,,LABEL,1,1,,1,1,,,,,,,,,,,,,
10,2,,172149-03200,,"LABEL, STRIPE(R)",1,1,,1,1,,,,,,,,,,,,,
11,2,,172141-03490,,"LABEL, PROTECTOR",2,2,,2,2,,,,,,,,,,,,,
12,2,,172149-03210,,LABEL,1,1,,1,1,,,,,,,,,,,,,
13,2,,172141-03420,,"LABEL, GREASING",1,1,,1,1,,,,,,,,,,,,,
14,2,,172149-03220,,LABEL,1,1,,1,1,,,,,,,,,,,,,
15,2,,172149-03230,,LABEL,1,1,,1,1,,,,,,,,,,,,,
16,2,,172519-03770,,LABEL,1,1,,1,1,,,,,,,,,,,,,
17,2,,172149-03240,,LABEL,1,1,,1,1,,,,,,,,,,,,,
18,2,,172149-03250,,LABEL,1,1,,1,1,,,,,,,,,,,,,
19,2,,172149-03260,,LABEL,2,2,,2,2,,,,,,,,,,,,,
20,2,,172149-03270,,LABEL,1,1,,1,1,,,,,,,,,,,,,
21,2,,172141-03470,,LABEL,1,1,,1,1,,,,,,,,,,,,,
22,2,,172149-03280,,LABEL,1,1,,1,1,,,,,,,,,,,,,
23,2,,172137-03300,,"LABEL, TURNING LOCK",1,1,,1,1,,,,,,,,,,,,,
24,2,,172149-03510,,"LABEL,
SPECIFICATION",1,1,,,,,,72142365,,72142365,,,,,,,,,I
25,2,,172150-03510,,"LABEL,
SPECIFICATION",,,,1,1,,,,,,,,,72142365,,72142365,,,,I
26,2,,172149-03520,,"LABEL, OIL & WATER",1,1,,1,1,,,,,,,,,,,,,
27,2,,172149-03430,,LABEL,1,1,,1,1,,,,,,,,,,,,,
28,2,,172149-03440,,LABEL,1,1,,1,1,,,,,,,,,,,,,
29,2,,172149-03451,,LABEL,1,1,,1,1,,,,,,,,,,,,,
30,2,,172122-03740,,"LABEL, GREASE",1,1,,1,1,,,,,,,,,,,,,
31,2,,172137-03780,,"LABEL, THROTTLE",1,1,,1,1,,,,,,,,,,,,,
32,2,,172149-53400,,"TREE CLIP",2,2,,,,,,,,,,,,,,,
33,2,,22857-300050,,"SCREW 3X 5",4,4,,4,4,,,,,,,,,,,,,
34,2,,933112-20200,,"LABEL, KEY SWITCH",1,1,,1,1,,,,,,,,,,,,,
35,2,,172141-03460,,"LABEL, (D)",1,1,,1,1,,,,,,,,,,,,,
36,2,,933112-50300,,"LABEL, OIL FEED",1,1,,1,1,,,,,,,,,,,,,
37,2,,933112-52100,,"LABEL, FUEL",1,1,,1,1,,,,,,,,,,,,,
38,2,,172125-03950,,"LABEL, AIR CLEANER",1,1,,1,1,,,,,,,,,,,,,
39,2,,172122-03912,,LABEL,1,1,,1,1,,,,,,,,,,,,,
40,2,,121120-44800,,"LABEL, RADIATOR",1,1,,1,1,,,,,,,,,,,,,
41,2,,124764-44920,,"LABEL, ANTI-FREEZING",1,1,,1,1,,,,,,,,,,,,,
```

Fig. 1 メイバン LABEL

https://truckmanualshub.com/

COUNTRY	U K	A S	E X
Fig. No.	1	2	2

1 inc.3～41
2 inc.4～41

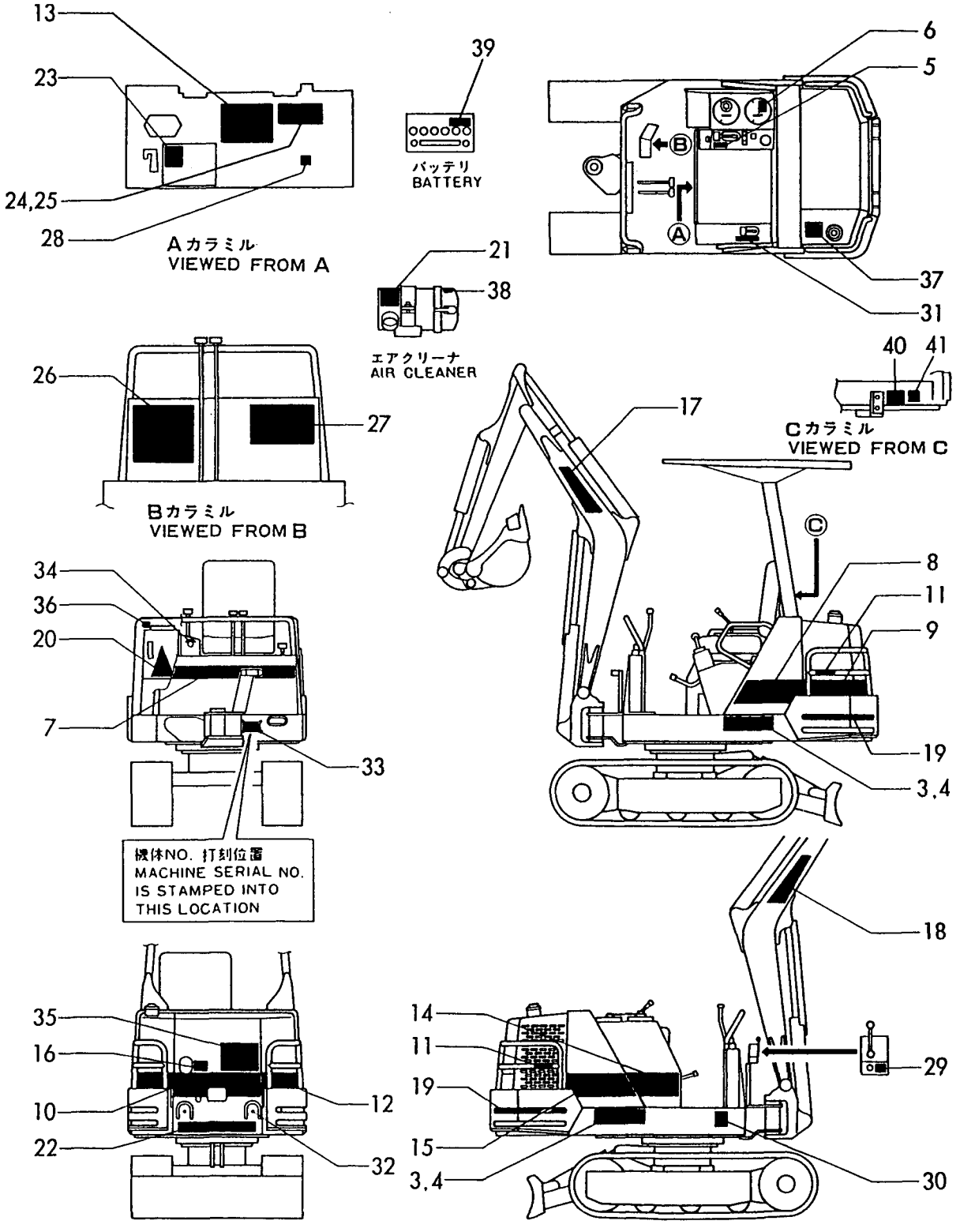

https://truckmanualshub.com/

```
1,1,,772149-03700,,"LABEL SET",1,1,,,,,,,,,,,,,,,
2,1,,772150-03700,,"LABEL ASSY",,,,1,1,,,,,,,,,,,,,
3,2,,172149-03510,,"LABEL,
SPECIFICATION",1,1,,,,,,72142365,,72142365,,,,,,,,,I
4,2,,172150-03510,,"LABEL,
SPECIFICATION",,,,1,1,,,,,,,,,72142365,,72142365,,,I
5,2,,172141-03420,,"LABEL, GREASING",1,1,,1,1,,,,,,,,,,,,,
6,2,,172149-03520,,"LABEL, OIL & WATER",1,1,,1,1,,,,,,,,,,,,,,
7,2,,172122-03141,,"LABEL, GREASE",1,1,,1,1,,,,,,,,,,,,,,
8,2,,172149-03160,,LABEL,2,2,,,,,,,,,,,,,,,,,
9,2,,172150-03120,,LABEL,,,,2,2,,,,,,,,,,,,,
10,2,,172141-03440,,LABEL,1,1,,1,1,,,,,,,,,,,,,,
11,2,,172149-03170,,"LABEL, STRIPE(F)",1,1,,1,1,,,,,,,,,,,,,
12,2,,172141-03450,,"LABEL, RESERVER(C)",1,1,,1,1,,,,,,,,,,,,,,
13,2,,172149-03180,,LABEL,1,1,,1,1,,,,,,,,,,,,,
14,2,,172141-03460,,"LABEL, (D)",1,1,,1,1,,,,,,,,,,,,,
15,2,,172149-03190,,LABEL,1,1,,1,1,,,,,,,,,,,,,
16,2,,172149-03200,,"LABEL, STRIPE(R)",1,1,,1,1,,,,,,,,,,,,,
17,2,,172149-03210,,LABEL,1,1,,1,1,,,,,,,,,,,,,
18,2,,172141-03470,,LABEL,1,1,,1,1,,,,,,,,,,,,,
19,2,,172149-03230,,LABEL,1,1,,1,1,,,,,,,,,,,,,
20,2,,172149-03240,,LABEL,1,1,,1,1,,,,,,,,,,,,,
21,2,,933112-50300,,"LABEL, OIL FEED",1,1,,1,1,,,,,,,,,,,,,
22,2,,172149-03250,,LABEL,1,1,,1,1,,,,,,,,,,,,,
23,2,,172149-03260,,LABEL,2,2,,2,2,,,,,,,,,,,,,
24,2,,172149-03270,,LABEL,1,1,,1,1,,,,,,,,,,,,,
25,2,,172149-03280,,LABEL,1,1,,1,1,,,,,,,,,,,,,
26,2,,172519-03770,,LABEL,1,1,,1,1,,,,,,,,,,,,,
27,2,,172137-03300,,"LABEL, TURNING LOCK",1,1,,1,1,,,,,,,,,,,,,
28,2,,172122-03912,,LABEL,1,1,,1,1,,,,,,,,,,,,,
29,2,,172141-03490,,"LABEL, PROTECTOR",1,1,,1,1,,,,,,,,,,,,,
30,2,,172137-03780,,"LABEL, THROTTLE",1,1,,1,1,,,,,,,,,,,,,
31,2,,172125-03950,,"LABEL, AIR CLEANER",1,1,,1,1,,,,,,,,,,,,,
32,2,,933112-20200,,"LABEL, KEY SWITCH",1,1,,1,1,,,,,,,,,,,,,
33,2,,933112-52100,,"LABEL, FUEL",1,1,,1,1,,,,,,,,,,,,,
34,2,,172149-03220,,LABEL,1,1,,1,1,,,,,,,,,,,,,
35,2,,933112-21400,,"LABEL(A2), OPERATION",1,1,,1,1,,,,,,,,,,,,,
36,2,,172149-53400,,"TREE CLIP",2,2,,,,,,,,,,,,,,,
37,2,,121120-44800,,"LABEL, RADIATOR",1,1,,1,1,,,,,,,,,,,,,
38,2,,124764-44920,,"LABEL, ANTI-FREEZING",1,1,,1,1,,,,,,,,,,,,,
39,2,,22857-300050,,"SCREW 3X 5",4,4,,4,4,,,,,,,,,,,,,
40,2,,172149-03440,,LABEL,1,1,,1,1,,,,,,,,,,,,,
```

Fig. 2 メイバン LABEL

https://truckmanualshub.com/

COUNTRY	U K	A S	E X
Fig. No.	1	2	2

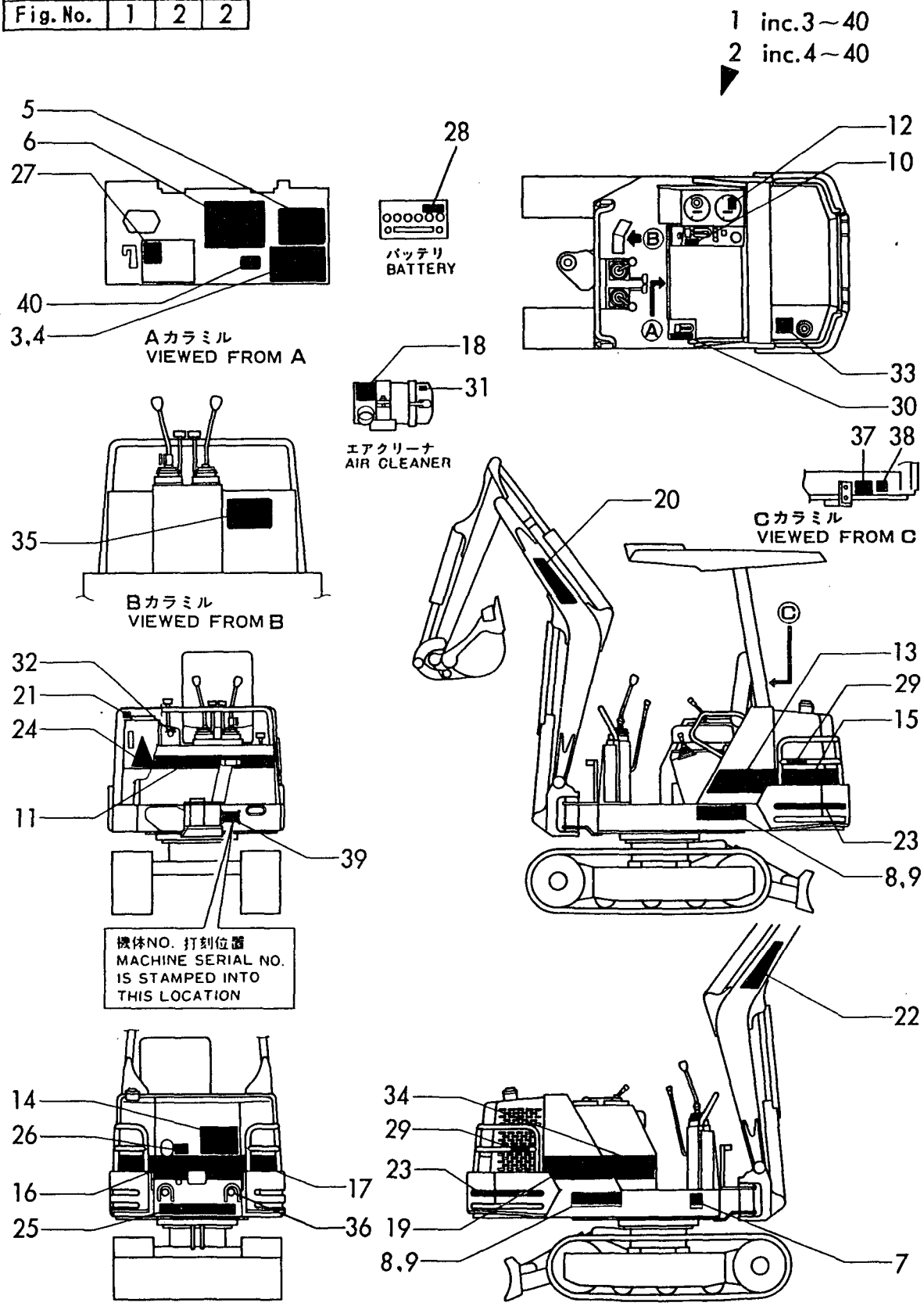

https://truckmanualshub.com/

```
1,1,,772149-05110,,"TOOL ASSY",1,1,,1,1,,,,,,,,,,,,,
2,2,,172137-38131,,"COLLAR, LINK",4,4,,4,4,,,,,,,,,,,,,
3,2,,104200-92350,,"DRIVER, SCREW",1,1,,1,1,,,,,,,,,,,,,
4,2,,119640-92750,,"WRENCH, FILTER",1,1,,1,1,,,,,,,,,,,,,
5,2,,22351-060020,,"SPRING PIN 6X20",4,4,,4,4,,,,,,,,,,,,,
6,2,,22417-800450,,"COTTER PIN 8.0X45",4,4,,4,4,,,,,,,,,,,,,,
7,2,,28110-080100,,"WRENCH  8X10",1,1,,1,1,,,,,,,,,,,,,
8,2,,28110-120140,,"WRENCH 12X14",1,1,,1,1,,,,,,,,,,,,,
9,2,,28110-170190,,"WRENCH 17X19",1,1,,1,1,,,,,,,,,,,,,
10,2,,28110-220240,,"WRENCH 22X24",1,1,,1,1,,,,,,,,,,,,,
11,2,,28110-270300,,"WRENCH 27X30",1,1,,1,1,,,,,,,,,,,,,
12,2,,28150-080000,,"BAR WRENCH  8",1,1,,1,1,,,,,,,,,,,,,
13,2,,28227-271400,,"BOX WRENCH 27X140",1,1,,1,1,,,,,,,,,,,,,,
14,2,,28230-120250,,"TURNING HANDLE",1,1,,1,1,,,,,,,,,,,,,
15,2,,933110-90000,,"BAG, TOOL",1,1,,1,1,,,,,,,,,,,,,
16,2,,933171-00470,,"PLIER (200)",1,1,,1,1,,,,,,,,,,,,,
```

Fig. 3 コウグ TOOL

https://truckmanualshub.com/

COUNTRY	U K	A S	E X
Fig. No.	3	4	4

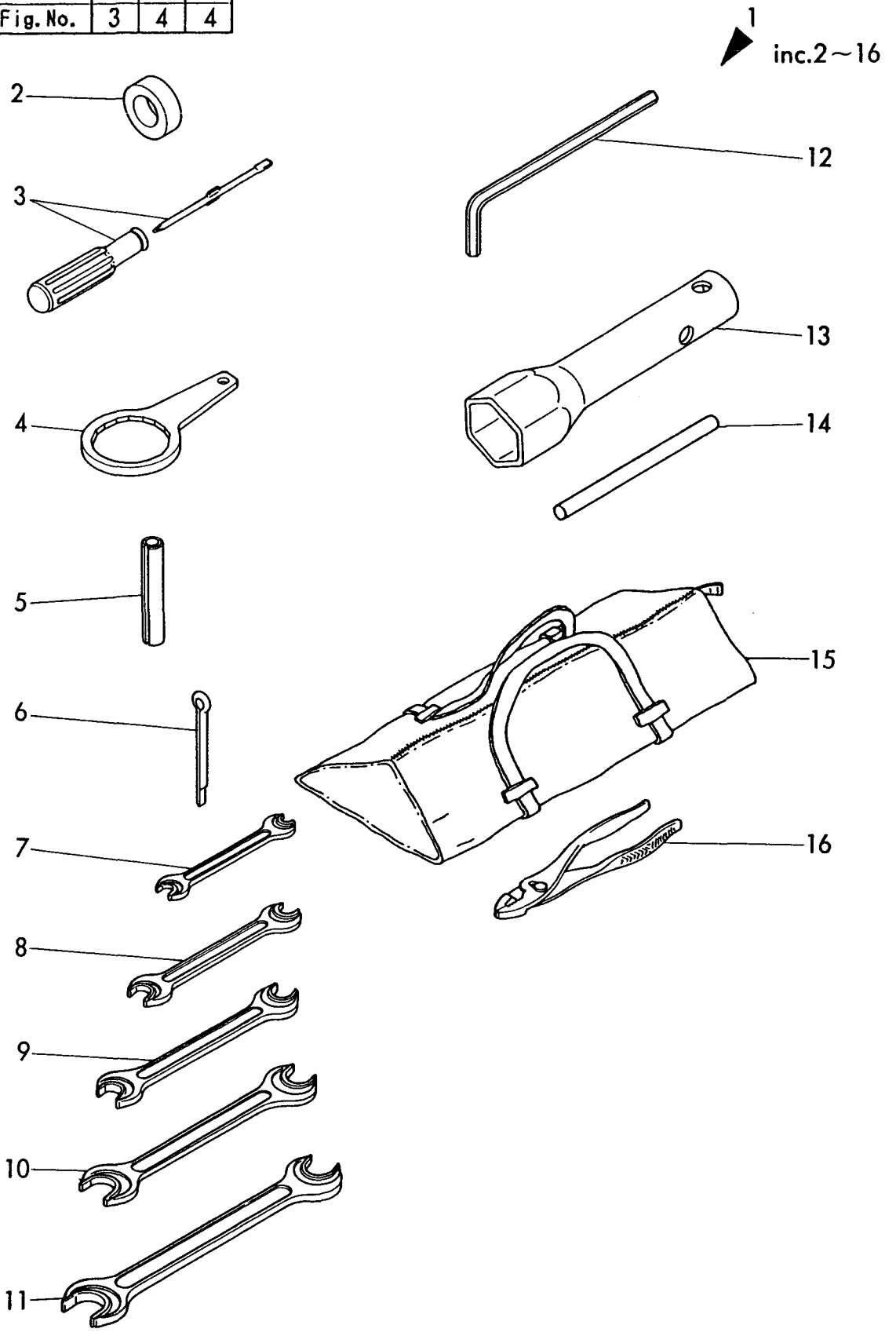

https://truckmanualshub.com/

```
1,1,,772149-05100,,"TOOL ASSY",1,1,,1,1,,,,,,,,,,,,,
2,2,,172137-38131,,"COLLAR,
LINK",4,4,,4,4,,,,72431004,,72431004,,,,72431004,,72431004,,,,I
3,2,,104200-92350,,"DRIVER, SCREW",1,1,,1,1,,,,,,,,,,,,,
4,2,,119640-92750,,"WRENCH, FILTER",1,1,,1,1,,,,,,,,,,,,,
5,2,,22351-060020,,"SPRING PIN
6X20",4,4,,4,4,,,,72453005,,72453005,,,,72453005,,72453005,,,,I
6,2,,22417-800450,,"COTTER PIN
8.0X45",4,4,,4,4,,,,72149217,,72149217,,,,72149217,,72149217,,,,I
7,2,,28110-080100,,"WRENCH  8X10",1,1,,1,1,,,,,,,,,,,,,
8,2,,28110-120140,,"WRENCH 12X14",1,1,,1,1,,,,,,,,,,,,,
9,2,,28110-170190,,"WRENCH 17X19",1,1,,1,1,,,,,,,,,,,,,
10,2,,28110-220240,,"WRENCH 22X24",1,1,,1,1,,,,,,,,,,,,,
11,2,,28110-270300,,"WRENCH 27X30",1,1,,1,1,,,,,,,,,,,,,
12,2,,28150-025000,,"BAR WRENCH  2.5",1,1,,1,1,,,,,,,,,,,,,
13,2,,28150-080000,,"BAR WRENCH  8",1,1,,1,1,,,,,,,,,,,,,
14,2,,28227-271400,,"BOX WRENCH 27X140",1,1,,1,1,,,,,,,,,,,,,
15,2,,28230-120250,,"TURNING HANDLE",1,1,,1,1,,,,,,,,,,,,,
16,2,,933110-09700,,"HOSE, GREASE",1,1,,1,1,,,,,,,,,,,,,
17,2,,933110-09800,,"GUN 800, GREASE",1,1,,1,1,,,,,,,,,,,,,
18,2,,933110-90000,,"BAG, TOOL",1,1,,1,1,,,,,,,,,,,,,
19,2,,933171-00470,,"PLIER (200)",1,1,,1,1,,,,,,,,,,,,,
```

Fig. 4 コウグ TOOL

https://truckmanualshub.com/

COUNTRY	U K	A S	E X
Fig. No.	3	4	4

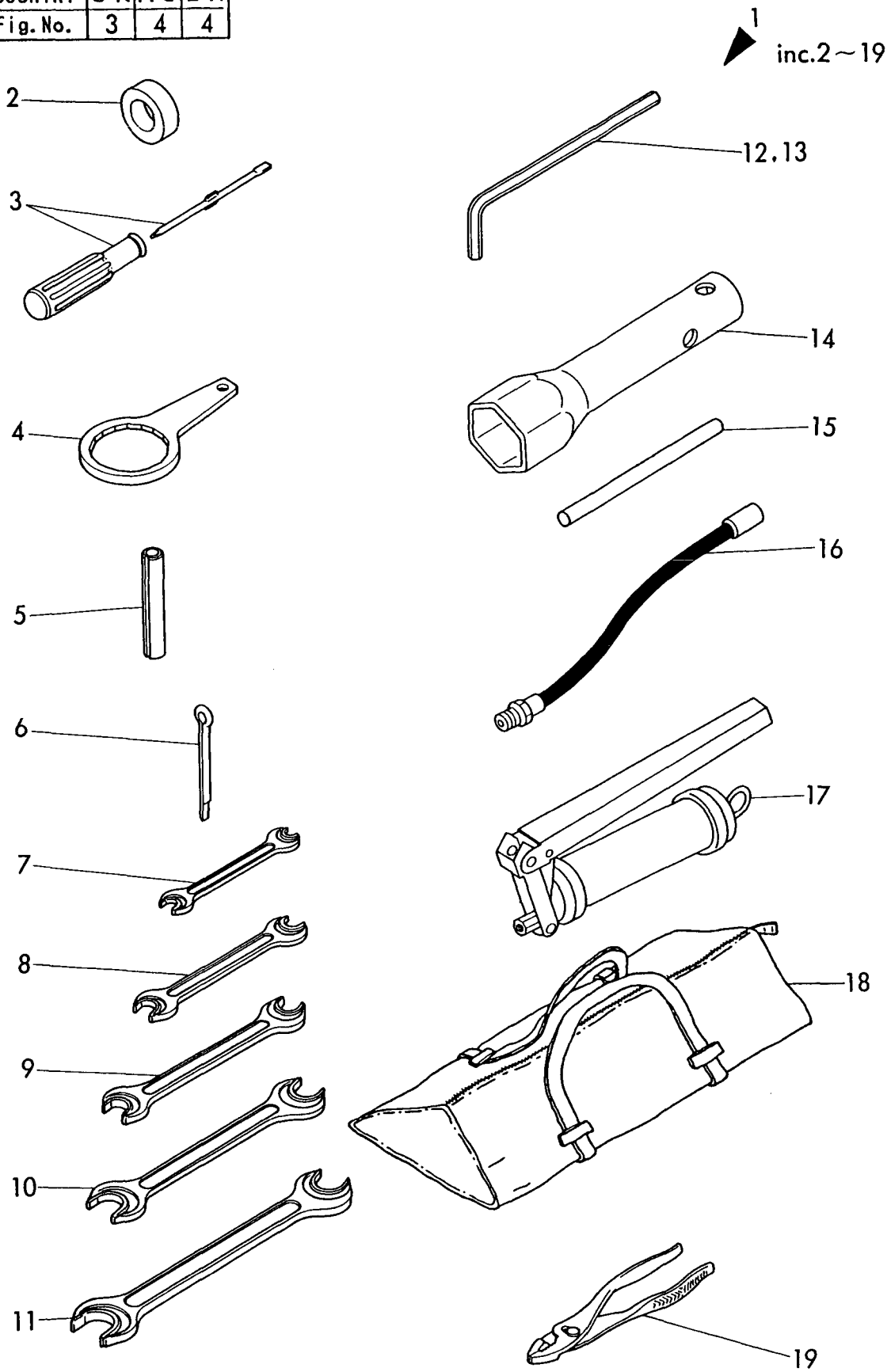

https://truckmanualshub.com/

```
1,1,,172149-11300,,"EXTENSION,
SILENCER",1,1,,1,1,,,,72149232,,72149232,,,,72149232,,72149232,,,,I
2,1,,121120-13580,,CLAMP,1,1,,1,1,,,,,,,,,,,,,,
3,1,,26106-100652,,"BOLT M10X 65 PLATED",1,1,,1,1,,,,,,,,,,,,,,
4,1,,26716-100002,,"NUT M10",1,1,,1,1,,,,,,,,,,,,,,
5,1,,172149-11500,,"PIPE, AIR",1,1,,1,1,,,,,,,,,,,,,,
6,1,,172149-11530,,HOSE,1,1,,1,1,,,,,,,,,,,,,,
7,1,,23000-060000,,"CLAMP 60",2,2,,2,2,,,,,,,,,,,,,,
```

Fig. 5 キュウキカン＆フンシュツコウ INLET HOSE & EXHAUST PIPE

https://truckmanualshub.com/

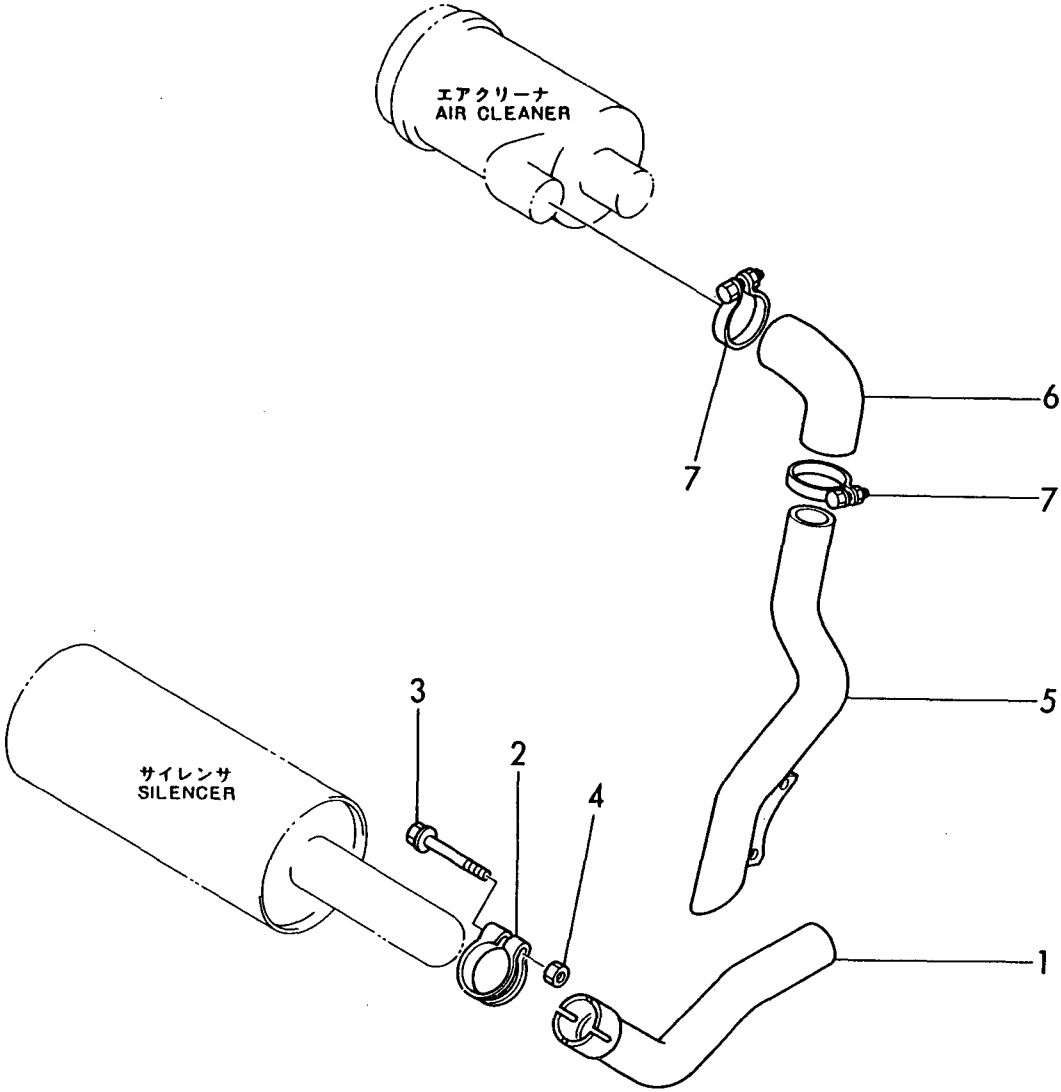

https://truckmanualshub.com/

```
1,1,,172141-12100,,"LEVER W/BUSH, ACCEL",1,1,,1,1,,,,,,,,,,,,,
3,2,,172141-12220,,"BUSH 30X10",2,2,,2,2,,,,,,,,,,,,,
4,1,,172149-12100,,"SUPPORT, CABLE",1,1,,1,1,,,,,,,,,,,,,
5,1,,172149-12110,,"CABLE, THROTTLE",1,1,,1,1,,,,,,,,,,,,,
6,1,,172141-12160,,BRACKET,1,1,,1,1,,,,,,,,,,,,,
7,1,,172141-12232,,SPRING,1,1,,1,1,,,,,,,,,,,,,
8,1,,172141-12240,,SPRING,1,1,,1,1,,,,,,,,,,,,,
9,1,,172141-12250,,PLATE,1,1,,1,1,,,,,,,,,,,,,
10,1,,172142-12420,,PLATE,1,1,,1,1,,,,,,,,,,,,,
11,1,,172137-12270,,"JOINT, CABLE",1,1,,1,1,,,,,,,,,,,,,
12,1,,172113-12521,,"PIN, CABLE",1,1,,1,1,,,,,,,,,,,,,
13,1,,172141-41340,,BOOTS,1,1,,1,1,,,,,,,,,,,,,
14,1,,172122-46630,,"KNOB(D), LEVER",1,1,,1,1,,,,,,,,,,,,,
15,1,,1C6281-52310,,"PIN 6,COME-OFF SNAP",2,2,,2,2,,,,,,,,,,,,,
16,1,,1A1040-56900,,"PIN  6X 17",1,1,,1,1,,,,,,,,,,,,,
17,1,,22137-060000,,"WASHER  6",1,1,,1,1,,,,,,,,,,,,,
18,1,,22217-100000,,"SPRING WASHER 10",3,3,,3,3,,,,,,,,,,,,,
19,1,,24190-160001,,"BALL 1/2",1,1,,1,1,,,,,,,,,,,,,
20,1,,26013-080162,,"BOLT M 8X 16",2,2,,2,2,,,,,,,,,,,,,
21,1,,26116-100202,,"BOLT M10X 20 PLATED",2,2,,2,2,,,,,,,,,,,,,
22,1,,26116-100302,,"BOLT M10X 30 PLATED",1,1,,1,1,,,,,,,,,,,,,
23,1,,933171-15680,,"GROMMET 40X13",1,1,,1,1,,,,,,,,,,,,,
24,1,,172141-12260,,PLATE,1,1,,1,1,,,1,,,,,,,,,,
```

Fig. 6 アクセル ACCELERATOR

https://truckmanualshub.com/

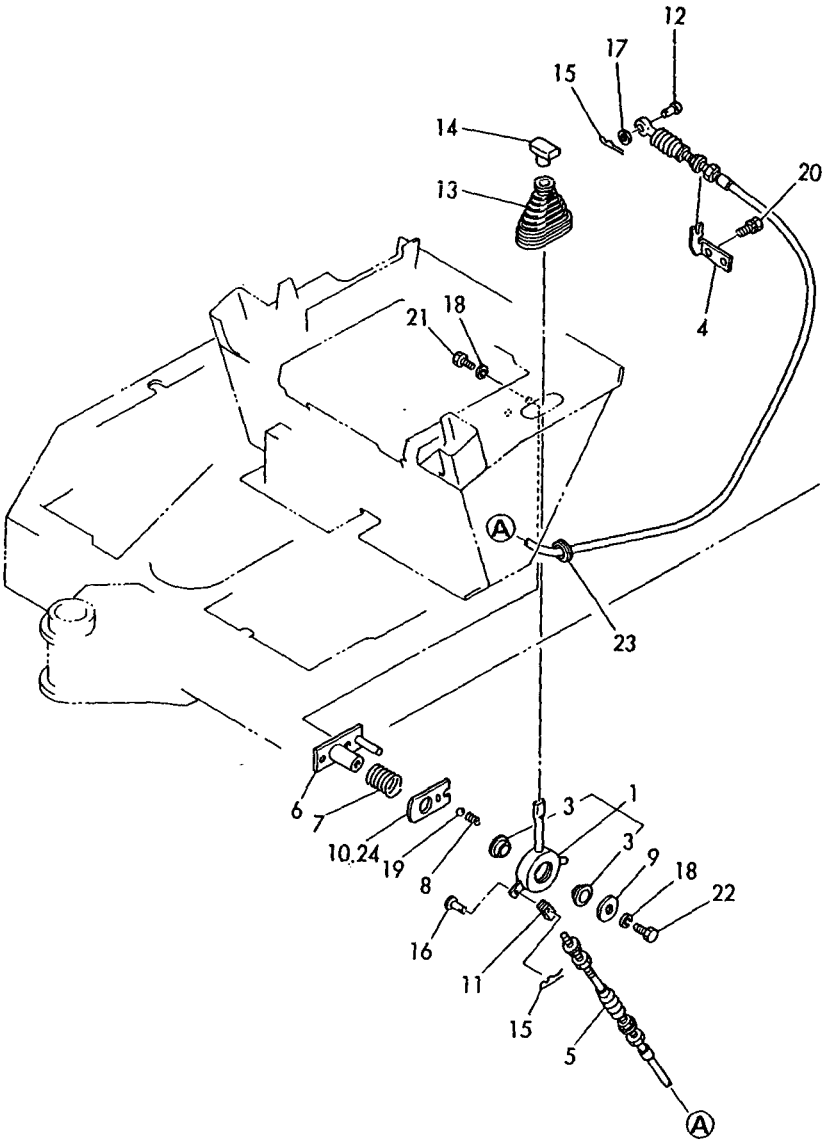

https://truckmanualshub.com/

```
1,1,,172137-13111,,"ENGINE BED(A), LEFT",1,1,,1,1,,,,,,,,,,,,,
2,1,,172137-13141,,"ENGINE BED(A), RIGHT",1,1,,1,1,,,,,,,,,,,,,
3,1,,172137-13161,,"ENGINE BED(B), LEFT",1,1,,1,1,,,,,,,,,,,,,
4,1,,172137-13171,,"ENGINE BED(B), RIGHT",1,1,,1,1,,,,,,,,,,,,,
5,1,,172137-13180,,"ABSORBER, SHOCK",4,4,,4,4,,,,,,,,,,,,,
6,1,,22217-100000,,"SPRING WASHER 10",8,8,,8,8,,,,,,,,,,,,,
7,1,,26013-100202,,"BOLT M10X 20",16,16,,16,16,,,,,,,,,,,,,
8,1,,26716-100002,,"NUT M10",8,8,,8,8,,,,,,,,,,,,,
9,1,,172149-13290,,"MOUNT, RADIATOR",1,1,,1,1,,,,,,,,,,,,,
10,1,,172126-13370,,"HOSE(C), WATER DRAIN",1,1,,1,1,,,,,,,,,,,,,
11,1,,26013-060162,,"BOLT M 6X 16",2,2,,2,2,,,,,,,,,,,,,
12,1,,172149-13500,,HOSE,1,1,,1,1,,,,,,,,,,,,,
13,1,,119631-44502,,RADIATOR,1,1,,1,1,,,,,,,,,,,,,
14,2,,121250-44590,,CLAMP,2,2,,2,2,,,,,,,,,,,,,
15,2,,124450-44590,,CAP,1,1,,1,1,,,,,,,,,,,,,
16,2,,119631-44610,,"SHROUD,RADIATOR",1,1,,1,1,,,,,,,,,,,,,
18,2,,119631-44800,,LABEL,1,1,,1,1,,,,,,,,,,,,,
19,2,,124738-49150,,"PIPE, WATER DRAIN",1,1,,1,1,,,,,,,,,,,,,
20,2,,26014-080162,,"BOLT M 8X 16",4,4,,4,4,,,,,,,,,,,,,
21,1,,121468-44510,,"SUB RESERVOIR ASSY",1,1,,1,1,,,,,,,,,,,,,
23,2,,121450-44531,,CAP,1,1,,1,1,,,,,,,,,,,,,
24,2,,121468-44540,,"PLUG, SUB TANK",1,1,,1,1,,,,,,,,,,,,,
25,2,,124450-44560,,CLAMP,1,1,,1,1,,,,,,,,,,,,,
26,2,,121470-44581,,GASKET,1,1,,1,1,,,,,,,,,,,,,
27,2,,23065-070130,,"PIPE  7X 130",1,1,,1,1,,,,,,,,,,,,,
28,1,,121470-44540,,"LABEL, SUB-TANK",1,1,,1,1,,,,,,,,,,,,,
29,1,,119645-49010,,"PIPE (A), C. WATER",1,1,,1,1,,,,,,,,,,,,,
30,1,,119631-49020,,"PIPE, COOLING WATER",1,1,,1,1,,,,,,,,,,,,,
31,1,,121450-49110,,"COCK ASSY, 3-WAY",1,1,,1,1,,,,,,,,,,,,,
33,2,,121250-49121,,PLUG,1,1,,1,1,,,,,,,,,,,,,
34,2,,24311-000160,,"O-RING 1A P-16.0",2,2,,2,2,,,,,,,,,,,,,
35,1,,23010-038000,,"CLAMP 38",2,2,,2,2,,,,,,,,,,,,,
36,1,,23080-011000,,"CLAMP 11",4,4,,4,4,,,,,,,,,,,,,
37,1,,26013-080162,,"BOLT M 8X 16",2,2,,2,2,,,,,,,,,,,,,
38,1,,26013-080162,,"BOLT M 8X 16",4,4,,4,4,,,,,,,,,,,,,
39,1,,26013-100252,,"BOLT M10X 25",4,4,,4,4,,,,,,,,,,,,,
40,1,,22137-060000,,"WASHER  6",2,2,,2,2,,,,,,,,,,,,,
41,1,,23010-040000,,"CLAMP 40",2,2,,2,2,,,,,,,,,,,,,
```

Fig.7 エンジンマウント＆ラジエータ ENGINE MOUNT & RADIATOR

https://truckmanualshub.com/

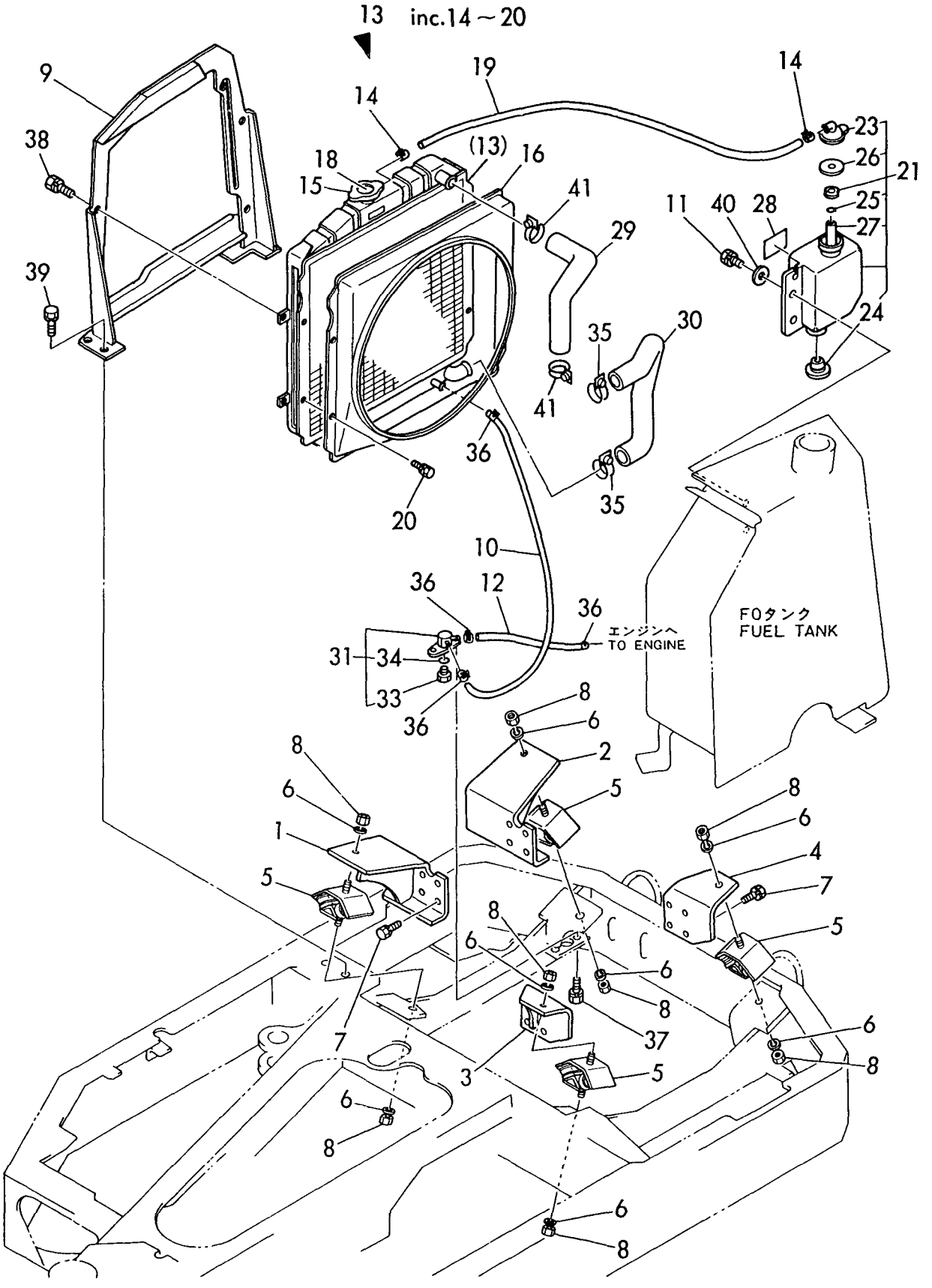

https://truckmanualshub.com/

```
1,1,,772150-14100,,"FUEL TANK ASSY",1,1,,1,1,,,,,,,,,,,,,
2,1,,772149-14100,,"FUEL TANK ASSY",1,1,,1,1,,,1,,,,,,,,,,,
5,2,,172149-14250,,"GAUGE, FUEL",1,1,,1,1,,,,,,,,,,,,,
6,2,,172141-14260,,FLOAT,1,1,,1,1,,,,,,,,,,,,,
7,2,,172122-14300,,"CAP, FUEL TANK",1,1,,1,1,,,,,,,,,,,,,
8,2,,101504-55101,,"STRAINER,FUEL INLET",1,1,,1,1,,,,,,,,,,,,,,
9,2,,23010-014000,,"CLAMP 14",2,2,,2,2,,,,,,,,,,,,,
10,2,,104200-11920,,COCK,1,1,,1,1,,,,,,,,,,,,,
11,1,,23080-013000,,"CLAMP 13,HOSE",1,1,,1,1,,,,,,,,,,,,,
12,1,,26013-120302,,"BOLT M12X 30",3,3,,3,3,,,,,,,,,,,,,
13,1,,933169-22940,,"SPACER, RESERVOIR",1,1,,1,1,,,,,,,,,,,,,
14,1,,172149-14601,,SUPPORT,1,1,,1,1,,,,,,,,,,,,,
15,1,,172149-14620,,HOSE,1,1,,1,1,,,,,,,,,,,,,
16,1,,172149-14630,,HOSE,2,2,,2,2,,,,,,,,,,,,,
17,1,,172126-16540,,"CLAMP 10X70",2,2,,2,2,,,,,,,,,,,,,
18,1,,129335-55700,,"SEPARATOR, WATER",1,1,,1,1,,,,,,,,,,,,,
19,2,,104200-55321,,"VALVE, TAPER",1,1,,1,1,,,,,,,,,,,,,
20,2,,104200-55330,,"SPRING, TAPER VALVE",1,1,,1,1,,,,,,,,,,,,,,
21,2,,104200-55341,,"HANDLE, COCK",1,1,,1,1,,,,,,,,,,,,,
22,2,,124064-55510,,"BOWL, FUEL STRAINER",1,1,,1,1,,,,,,,,,,,,,,
23,2,,102103-55520,,O-RING,1,1,,1,1,,,,,,,,,,,,,
24,2,,110250-55610,,"RETAINING RING",1,1,,1,1,,,,,,,,,,,,,
25,2,,121257-55720,,"SPRING, SCREEN",1,1,,1,1,,,,,,,,,,,,,
26,2,,121257-55731,,FLOAT,1,1,,1,1,,,,,,,,,,,,,
28,2,,101720-55750,,"PLUG 6",2,2,,2,2,,,,,,,,,,,,,
29,2,,104200-55750,,"SCREW M 4",1,1,,1,1,,,,,,,,,,,,,
30,2,,171081-55910,,SCREEN,1,1,,1,1,,,,,,,,,,,,,
31,2,,23418-060000,,"GASKET 6",2,2,,2,2,,,,,,,,,,,,,
32,2,,24311-240100,,"O-RING 1A P-10A",1,1,,1,1,,,,,,,,,,,,,
33,1,,124766-59050,,"CLAMP 12",6,6,,6,6,,,,,,,,,,,,,
34,1,,22217-080000,,"SPRING WASHER  8",1,1,,1,1,,,,,,,,,,,,,
35,1,,26116-080652,,"BOLT M 8X 65 PLATED",1,1,,1,1,,,,,,,,,,,,,,
36,1,,26013-080162,,"BOLT M 8X 16",2,2,,2,2,,,,,,,,,,,,,
37,1,,172149-14190,,"PLATE, GAUGE",1,1,,1,1,,,,,,,,,,,,,
38,1,,26557-060082,,"SCREW M 6X  8",2,2,,2,2,,,,,,,,,,,,,
39,1,,22217-060000,,"SPRING WASHER  6",2,2,,2,2,,,,,,,,,,,,,,
40,1,,23061-100250,,"PIPE 10X 250",1,1,,1,1,,,,,,,,,,,,,
41,1,,22137-120000,,"WASHER 12",3,3,,3,3,,,,,,,,,,,,,
42,1,,194202-56460,,BAND,1,1,,1,1,,,,,,,,,,,,,
```

Fig. 8 FOタンク＆FOパイプ FUEL TANK & FUEL LINE

https://truckmanualshub.com/

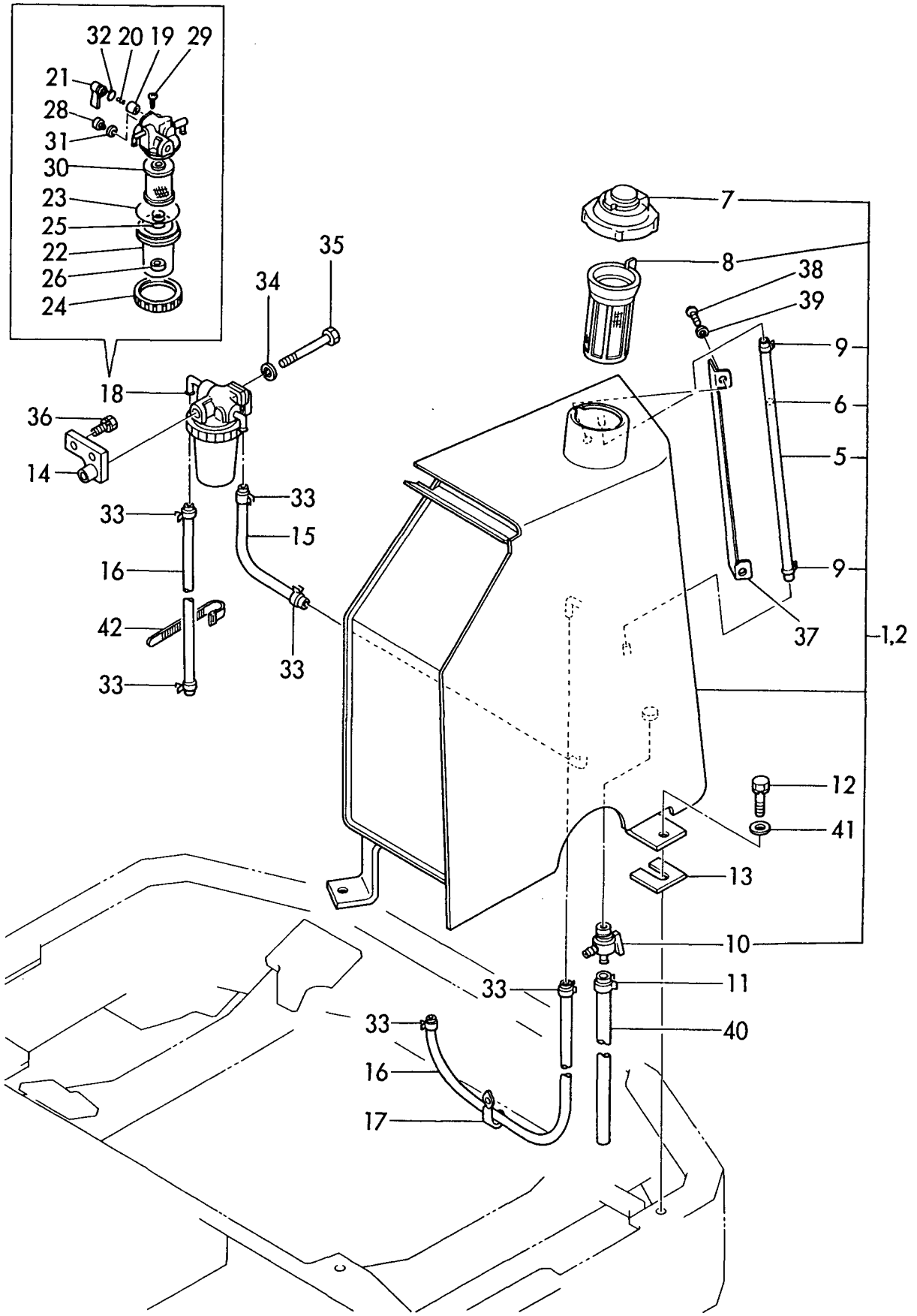

https://truckmanualshub.com/

```
1,1,,172149-16100,,"HARNESS, BATTERY",1,1,,1,1,,,,,,,,,,,,,
2,1,,172149-16110,,"HARNESS, BATTERY",1,1,,1,1,,,,,,,,,,,,,
3,1,,194300-51310,,"BATTERY NS60,DRY",1,1,,1,1,,,,,,,,,,,,,
4,1,,22217-080000,,"SPRING WASHER  8",1,1,,1,1,,,,,,,,,,,,,
5,1,,22137-060000,,"WASHER  6",2,2,,2,2,,,,,,,,,,,,,
6,1,,26716-080002,,"NUT M 8",1,1,,1,1,,,,,,,,,,,,,
7,1,,172149-16301,,"SUPPORT, BATTERY",1,1,,1,1,,,,,,,,,,,,,
8,1,,172149-16320,,"STAY, BATTERY",1,1,,1,1,,,,,,,,,,,,,
9,1,,194940-64750,,"CLAMP,BATTERY",1,1,,1,1,,,,,,,,,,,,,
10,1,,194515-64760,,"ROD, BATTERY CLAMP",2,2,,2,2,,,,,,,,,,,,,,
11,1,,26013-100202,,"BOLT M10X 20",7,7,,7,7,,,,,,,,,,,,,
12,1,,26716-060002,,"NUT M 6",4,4,,4,4,,,,,,,,,,,,,
13,1,,172149-16381,,"STAY, BATTERY",1,1,,1,1,,,,,,,,,,,,,
14,1,,194440-51550,,"COVER, BATTERY",1,1,,1,1,,,,,,,,,,,,,
```

Fig. 9 バッテリ BATTERY

https://truckmanualshub.com/

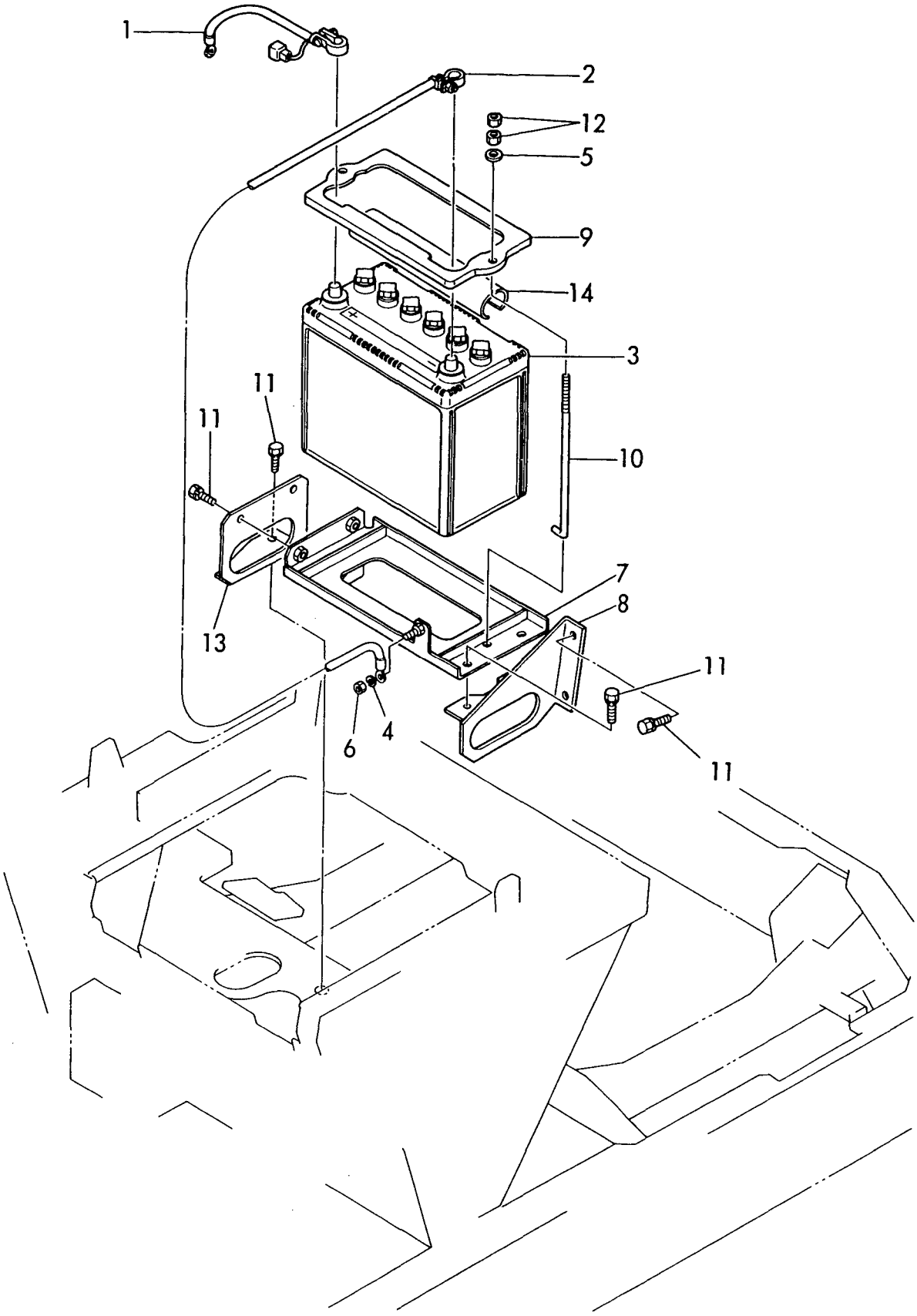

```
1,1,,172149-16500,,"HARNESS A",1,1,,1,1,,,,,,,,,,,,,
2,1,,172149-16510,,HARNESS(B,1,1,,1,1,,,,,,,,,,,,,
3,1,,172149-16520,,"HARNESS, STARTER",1,1,,1,1,,,,,,,,,,,,,
4,1,,172149-16530,,HARNESS(E,1,1,,1,1,,,,,,,,,,,,,
5,1,,172122-16570,,"LINK, FUSIBLE",1,1,,1,1,,,,,,,,,,,,,
6,1,,22137-100000,,"WASHER 10",1,1,,1,1,,,,,,,,,,,,,
7,1,,26117-100162,,"BOLT M10X 16 PLATED",1,1,,1,1,,,,,,,,,,,,,
8,1,,933171-15801,,"WIRE, EARTH",1,1,,1,1,,,,,,,,,,,,,
9,1,,172149-16540,,HARNESS(F,1,1,,1,1,,,,,,,,,,,,,
10,1,,172149-16550,,"GROMMET 40X13",1,1,,1,1,,,,,,,,,,,,,
11,1,,22417-200250,,"COTTER PIN 2.0X25",1,1,,1,1,,,,,,,,,,,,,
12,1,,933110-58400,,"GROMMET 43",1,1,,1,1,,,,,,,,,,,,,
13,1,,172126-16540,,"CLAMP 10X70",3,3,,3,3,,,,,,,,,,,,,
14,1,,194202-56460,,BAND,1,1,,1,1,,,,,,,,,,,,,
15,1,,26116-120162,,"BOLT M12X 16 PLATED",1,1,,1,1,,,,,,,,,,,,,
16,1,,22217-120000,,"SPRING WASHER 12",1,1,,1,1,,,,,,,,,,,,,
17,1,,22217-100000,,"SPRING WASHER 10",1,1,,1,1,,,,,,,,,,,,,
18,1,,933168-56000,,"GROMMET 17X19",2,2,,2,2,,,,,,,,,,,,,
19,1,,933168-55770,,"BAND 146",2,2,,2,2,,,,,,,,,,,,,
20,1,,172149-17100,,PLATE,1,1,,1,1,,,,,,,,,,,,,
21,1,,172149-17120,,LAMP,1,1,,1,1,,,,,,,,,,,,,
22,2,,172149-17140,,BULB(12V-3.4W,1,1,,1,1,,,,,,,,,,,,,
23,1,,172149-17130,,LAMP,1,1,,1,1,,,,,,,,,,,,,
24,2,,172149-17140,,BULB(12V-3.4W,1,1,,1,1,,,,,,,,,,,,,
25,1,,172141-17141,,"UNIT, CHECKER",1,1,,1,1,,,,,,,,,,,,,
26,1,,172141-17150,,BUZZER,1,1,,1,1,,,,,,,,,,,,,
27,1,,172141-17160,,"BOX, FUSE",1,1,,1,1,,,,,,,,,,,,,
28,2,,29411-050000,,"FUSE ( 5A),CARTRIDGE",1,1,,1,1,,,,,,,,,,,,,
29,2,,29411-100000,,"FUSE (10A),CARTRIDGE",2,2,,2,2,,,,,,,,,,,,,
30,2,,29411-150000,,"FUSE (15A),CARTRIDGE",2,2,,2,2,,,,,,,,,,,,,
31,1,,172141-17190,,"SWITCH, WORK LAMP",1,1,,1,1,,,,,,,,,,,,,
32,2,,933113-05120,,"BULB 12V 1.7W",1,1,,1,1,,,,,,,,,,,,,
33,1,,172147-17200,,"METER, HOUR",1,1,,1,1,,,,,,,,,,,,,
34,2,,172147-17210,,"CASE, HOUR METER",1,1,,1,1,,,,,,,,,,,,,
35,2,,172147-17220,,"CAP, HOUR METER",1,1,,1,1,,,,,,,,,,,,,
36,2,,172147-17230,,NUT,2,2,,2,2,,,,,,,,,,,,,
37,2,,172147-17240,,SLEEVE,2,2,,2,2,,,,,,,,,,,,,
38,2,,172147-17250,,"WIRE,LEAD",1,1,,1,1,,,,,,,,,,,,,
39,2,,22217-050000,,"SPRING WASHER  5",2,2,,2,2,,,,,,,,,,,,,
40,1,,121522-77101,,RELAY,1,1,,1,1,,,,,,,,,,,,,
41,1,,119640-77711,,"LIMITER,CURRENT",1,1,,1,1,,,,,,,,,,,,,
42,1,,121522-77721,,"INDICATOR, CHARGING",1,1,,1,1,,,,,,,,,,,,,
43,1,,129155-77810,,RESISTOR,1,1,,1,1,,,,,,,,,,,,,
44,1,,22217-060000,,"SPRING WASHER  6",7,7,,7,7,,,,,,,,,,,,,
45,1,,22217-100000,,"SPRING WASHER 10",2,2,,2,2,,,,,,,,,,,,,
46,1,,26022-050162,,"SCREW M 5X 16",2,2,,2,2,,,,,,,,,,,,,
47,1,,26116-100162,,"BOLT M10X 16 PLATED",2,2,,2,2,,,,,,,,,,,,,
48,1,,26716-060002,,"NUT M 6",7,7,,7,7,,,,,,,,,,,,,
49,1,,933110-00100,,"SWITCH ASSY, STARTER",1,1,,1,1,,,,,,,,,,,,,
51,2,,933110-00301,,"KEY ASSY",1,1,,1,1,,,,,,,,,,,,,
52,1,,933110-05300,,HORN,1,1,,1,1,,,,,,,,,,,,,
53,1,,933113-05190,,"LAMP, OIL",1,1,,1,1,,,,,,,,,,,,,
54,2,,933113-05180,,"BULB 12V 3W",1,1,,1,1,,,,,,,,,,,,,
55,1,,933113-15900,,"COVER, SWITCH TERMI.",1,1,,1,1,,,,,,,,,,,,,
56,1,,172150-63200,,"PANEL ASSY",1,1,,1,1,,,,,,,,,,,,,
57,1,,172141-65970,,"RUBBER, PLATE",1,1,,1,1,,,,,,,,,,,,,
58,1,,26013-100202,,"BOLT M10X 20",2,2,,2,2,,,,,,,,,,,,,
59,1,,26117-100162,,"BOLT M10X 16 PLATED",2,2,,2,2,,,,,,,,,,,,,
60,1,,22137-100000,,"WASHER 10",2,2,,2,2,,,,,,,,,,,,,
61,1,,26022-060122,,"SCREW M 6X 12",1,1,,1,1,,,,,,,,,,,,,
62,1,,26116-060122,,"BOLT M 6X 12 PLATED",2,2,,2,2,,,,,,,,,,,,,
63,1,,22217-060000,,"SPRING WASHER  6",2,2,,2,2,,,,,,,,,,,,,
64,1,,172149-16570,,"HARNESS, HORN",1,1,,1,1,,,1,,,,,,,,,,
```

https://truckmanualshub.com/

```
65,1,,172149-16580,,HARNESS(C),1,1,,1,1,,,1,,,,,,,,,,,
66,1,,172149-63100,,"PANEL ASSY",1,1,,1,1,,,2,,,,,,,,,,,
```

Fig. 10 デンソウヒン ELECTRIC PARTS

https://truckmanualshub.com/

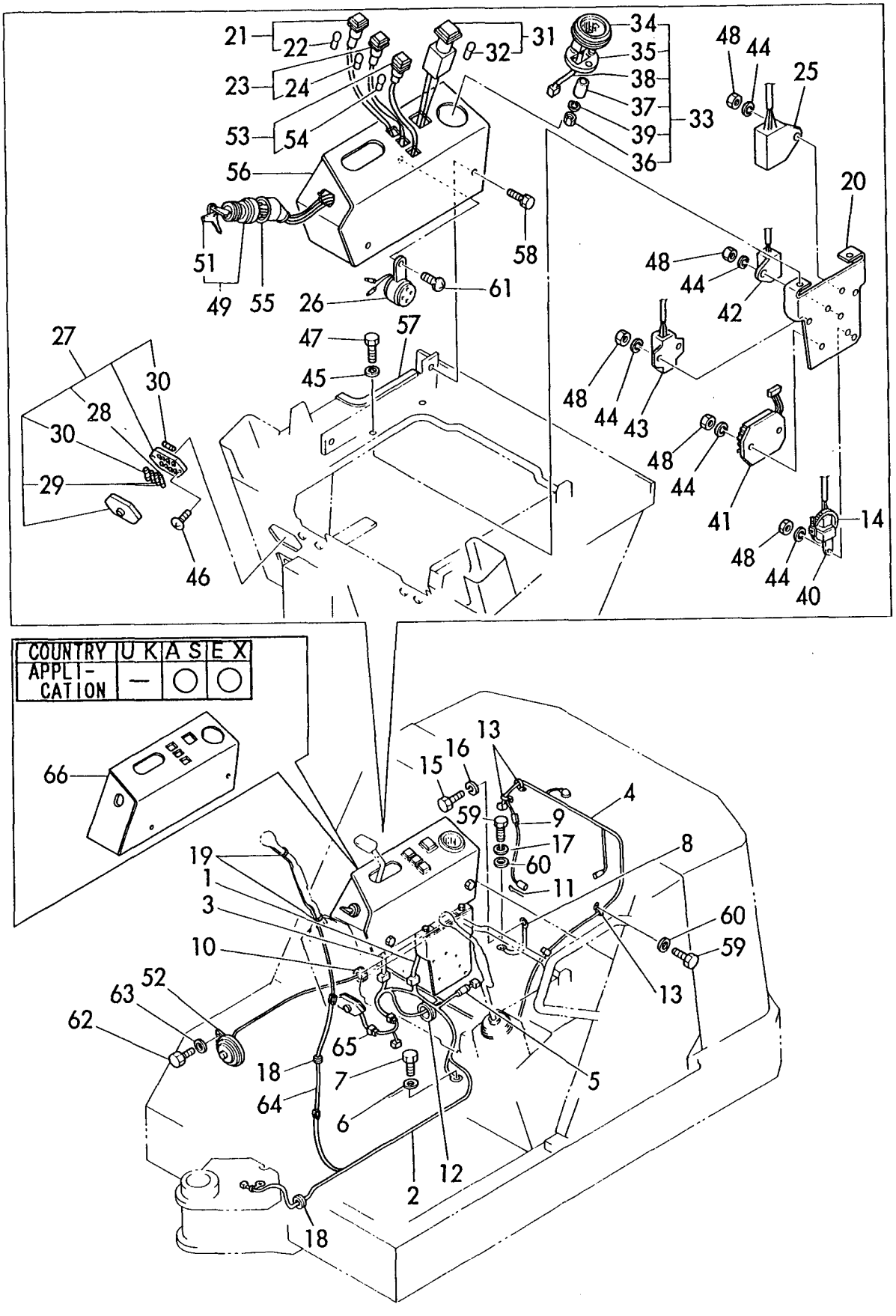

COUNTRY	U K	A S	E X
APPLI-CATION	—	○	○

https://truckmanualshub.com/

```
1,1,,172137-16530,,"LEAD WIRE",1,1,,1,1,,,,,,,,,,,,,
2,1,,172137-16560,,BAND,4,4,,4,4,,,,,,,,,,,,,
3,1,,172137-17400,,"STAY, BOOM LIGHT",1,1,,1,1,,,,,,,,,,,,,,
4,1,,26013-120252,,"BOLT M12X 25",1,1,,1,1,,,,,,,,,,,,,
5,1,,933113-05200,,"LAMP, WORK",1,1,,1,1,,,,,,,,,,,,,
6,2,,933113-05210,,"BULB 12V 27W",1,1,,1,1,,,,,,,,,,,,,,
```

Fig. 11 ワークランプ WORK LAMP

https://truckmanualshub.com/

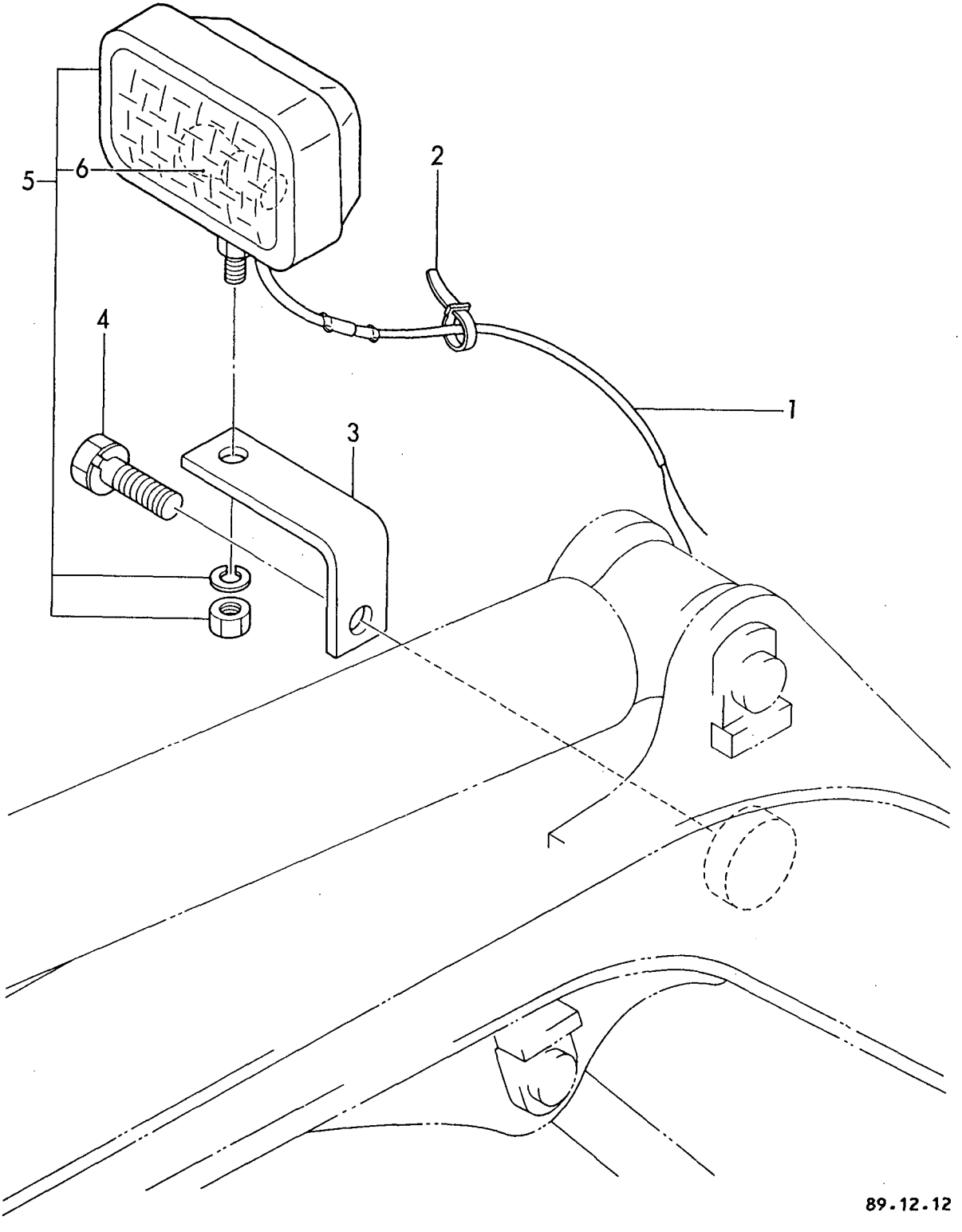

89.12.12

https://truckmanualshub.com/

```
1,1,,772149-17600,,"HEATER ASSY",1,1,,1,1,,,,,,,,,,,,,
2,2,,172124-17630,,"VALVE, MINIATURE",1,1,,1,1,,,,,,,,,,,,,
3,2,,172137-17630,,"JOINT, HEATER",1,1,,1,1,,,,,,,,,,,,,
4,2,,172124-17640,,"JOINT 3/8",2,2,,2,2,,,,,,,,,,,,,
5,2,,172141-17680,,"HOSE ASSY, HEATER",2,2,,2,2,,,,,,,,,,,,,
6,3,,172141-17690,,"HOSE, HEATER",2,2,,2,2,,,,,,,,,,,,,
7,3,,172141-17700,,"TUBE, CORRUGAT",2,2,,2,2,,,,,,,,,,,,,
8,2,,172119-47650,,"JOINT, HOSE",1,1,,1,1,,,,,,,,,,,,,
9,2,,23000-022000,,"CLAMP 22",4,4,,4,4,,,,,,,,,,,,,
10,2,,933152-09280,,"BAND 170",2,2,,2,2,,,,,,,,,,,,,
11,2,,933166-24240,,"ELBOW, SWIVEL JOINT",1,1,,1,1,,,,,,,,,,,,,
12,2,,933171-15680,,"GROMMET 40X13",2,2,,2,2,,,,,,,,,,,,,
```

Fig. 12 ヒータ HEATER

https://truckmanualshub.com/

COUNTRY	U K	A S	E X
Fig. No.	12	—	—

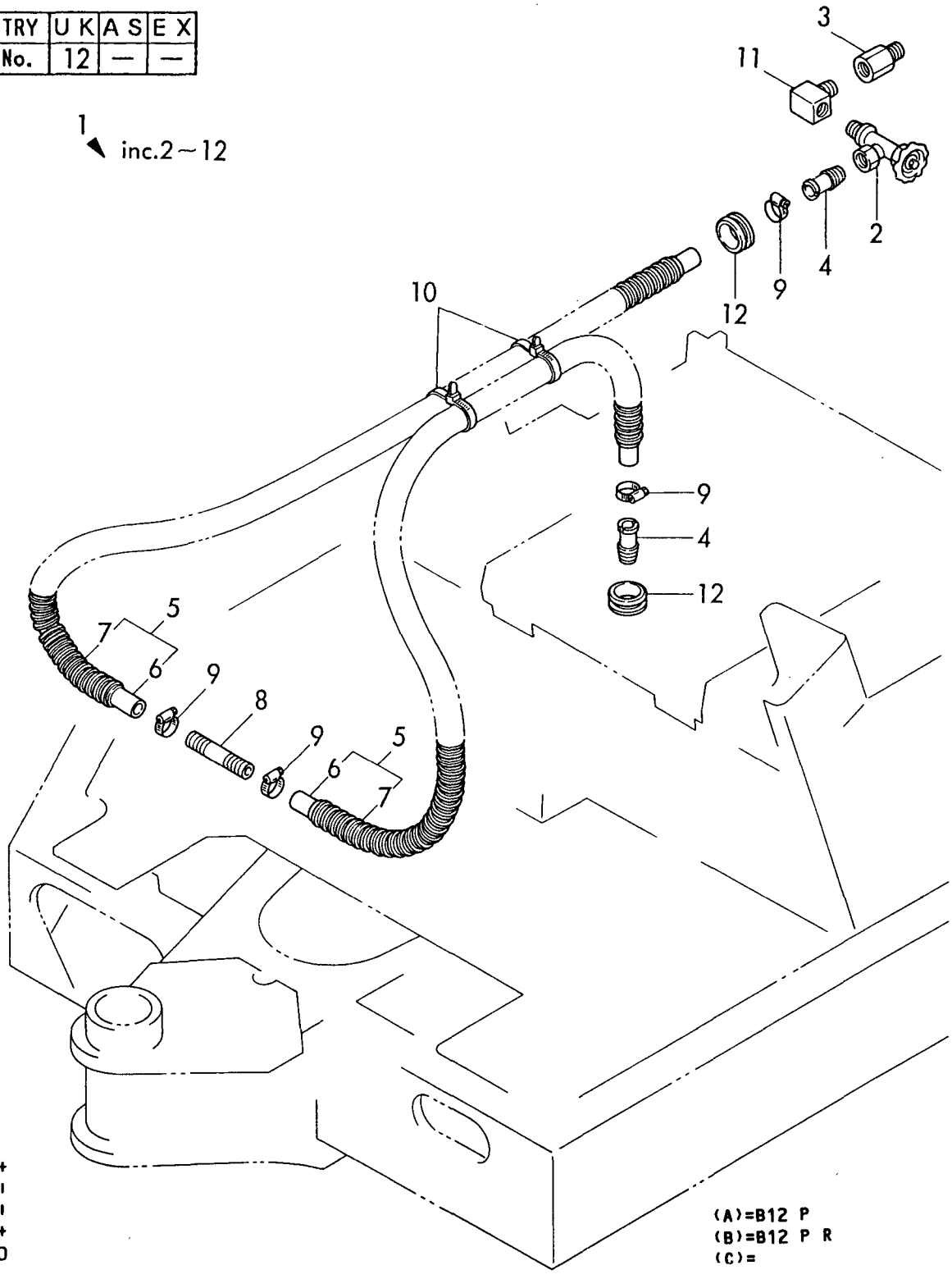

+------+
| 1B14 |
|(1B02)|
+------+
Y00S3000

(A)=B12 P
(B)=B12 P R
(C)=

https://truckmanualshub.com/

```
1,1,,172137-29110,,"SPROCKET,RUBBER CRAW",,2,,,2,,,,,,,,,,,,,
2,1,,172137-29120,,SPROCKET,2,,,2,,,,,,,,,,,,,,
3,1,,26013-100252,,"BOLT M10X 25",18,18,,18,18,,,,,,,,,,,,,
4,1,,772137-37300,,"ROLLER ASSY, TRUCK",6,6,,6,6,,,,,,,,,,,,,
6,2,,172137-37330,,"SHAFT, TRACK ROLLER",6,6,,6,6,,,,,,,,,,,,,,
7,2,,172137-37360,,SEAL,12,12,,12,12,,,,,,,,,,,,,
8,2,,22242-000250,,"CIRCLIP   25",12,12,,12,12,,,,,,,,,,,,,
9,2,,22252-000470,,"CIRCLIP   47",12,12,,12,12,,,,,,,,,,,,,
10,2,,24101-060054,,"BALL BEARING",12,12,,12,12,,,,,,,,,,,,,
```

Fig. 13 トラックローラ TRACK ROLLER

https://truckmanualshub.com/

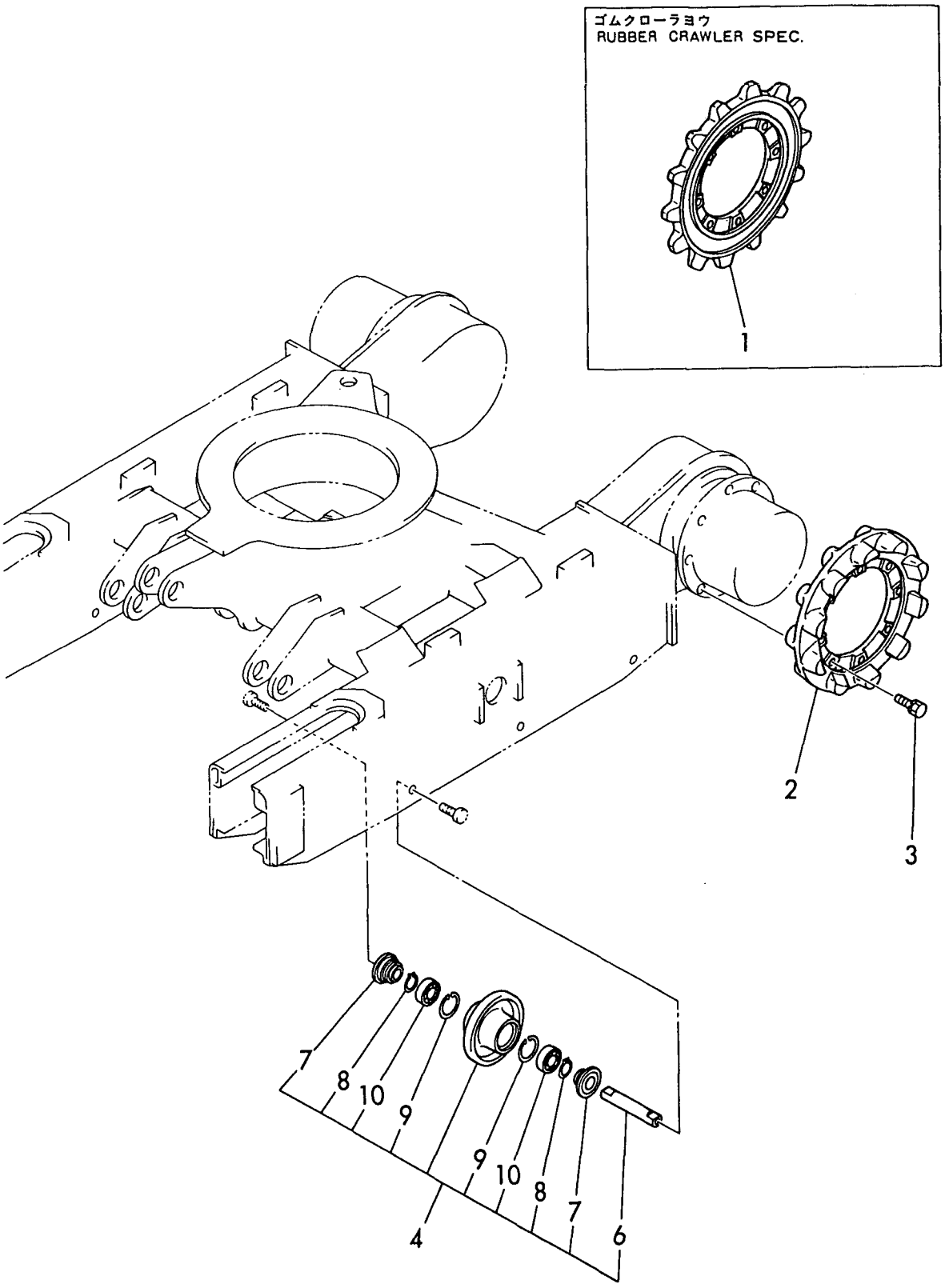

https://truckmanualshub.com/

```
1,1,,772137-37100,,"IDLER ASSY",2,2,,2,2,,,,,,,,,,,,,
3,2,,172137-37110,,"SHAFT, IDLER",2,2,,2,2,,,,,,,,,,,,,
4,2,,172137-37130,,"COVER (L), SEAL",2,2,,2,2,,,,,,,,,,,,,
5,2,,172137-37140,,"COVER (R), SEAL",2,2,,2,2,,,,,,,,,,,,,
6,2,,1A1030-48250,,"SEAL QLF30621218,OIL",4,4,,4,4,,,,,,,,,,,,,
7,2,,22242-000300,,"CIRCLIP   30",2,2,,2,2,,,,,,,,,,,,,
8,2,,22252-000620,,"CIRCLIP 62(H)",4,4,,4,4,,,,,,,,,,,,,
9,2,,24101-062064,,"BALL BEARING",4,4,,4,4,,,,,,,,,,,,,
10,2,,933168-13990,,"COLLAR(B),IDLE.SHAFT",2,2,,2,2,,,,,,,,,,,,,
11,1,,172137-37710,,"SPRING, ADJUSTING",2,2,,2,2,,,,,,,,,,,,,
12,1,,172137-37800,,"TUBE, ADJUSTER",2,2,,2,2,,,,,,,,,,,,,
13,1,,172122-37842,,"VALVE ASSY, NIPPLE",2,2,,2,2,,,,,,,,,,,,,
14,2,,24315-000120,,"O-RING 1B P-12.0",2,2,,2,2,,,,,,,,,,,,,
15,2,,24761-020000,,"NIPPLE PT1/8,GREASE",2,2,,2,2,,,,,,,,,,,,,
16,1,,172137-37850,,"RING, BACK UP",2,2,,2,2,,,,,,,,,,,,,
17,1,,24315-000300,,"O-RING 1B P-30.0",2,2,,2,2,,,,,,,,,,,,,
18,1,,26013-100302,,"BOLT M10X 30",8,8,,8,8,,,,,,,,,,,,,
19,1,,933126-38600,,"SEAL, DUST",2,2,,2,2,,,,,,,,,,,,,
20,1,,933171-13691,,"PLUG PT1/8",2,2,,2,2,,,,,,,,,,,,,
21,1,,172149-50100,,"FRAME, LOWER",1,1,,1,1,,,,,,,,,,,,,
22,1,,172131-50360,,"COVER,UNDER",1,1,,1,1,,,,,,,,,,,,,
23,1,,172141-50890,,GROMMET,2,2,,2,2,,,,,,,,,,,,,
24,1,,172137-51700,,"COVER, MOTOR",2,2,,2,2,,,,,,,,,,,,,
25,1,,172137-51900,,PLATE,4,4,,4,4,,,,,,,,,,,,,
26,1,,22217-100000,,"SPRING WASHER 10",8,8,,8,8,,,,,,,,,,,,,
27,1,,22217-100000,,"SPRING WASHER 10",4,4,,4,4,,,,,,,,,,,,,
28,1,,22217-120000,,"SPRING WASHER 12",12,12,,12,12,,,,,,,,,,,,,
29,1,,26013-100302,,"BOLT M10X 30",8,8,,8,8,,,,,,,,,,,,,
30,1,,26116-100202,,"BOLT M10X 20 PLATED",8,8,,8,8,,,,,,,,,,,,,
31,1,,26116-100202,,"BOLT M10X 20 PLATED",4,4,,4,4,,,,,,,,,,,,,
32,1,,26116-120252,,"BOLT M12X 25 PLATED",12,12,,12,12,,,,,,,,,,,,,
33,1,,172131-78350,,"GROMMET 13.5",2,2,,2,2,,,,,,,,,,,,,
```

Fig. 14 トラックフレーム＆アイドラ TRACK FRAME & IDLER

https://truckmanualshub.com/

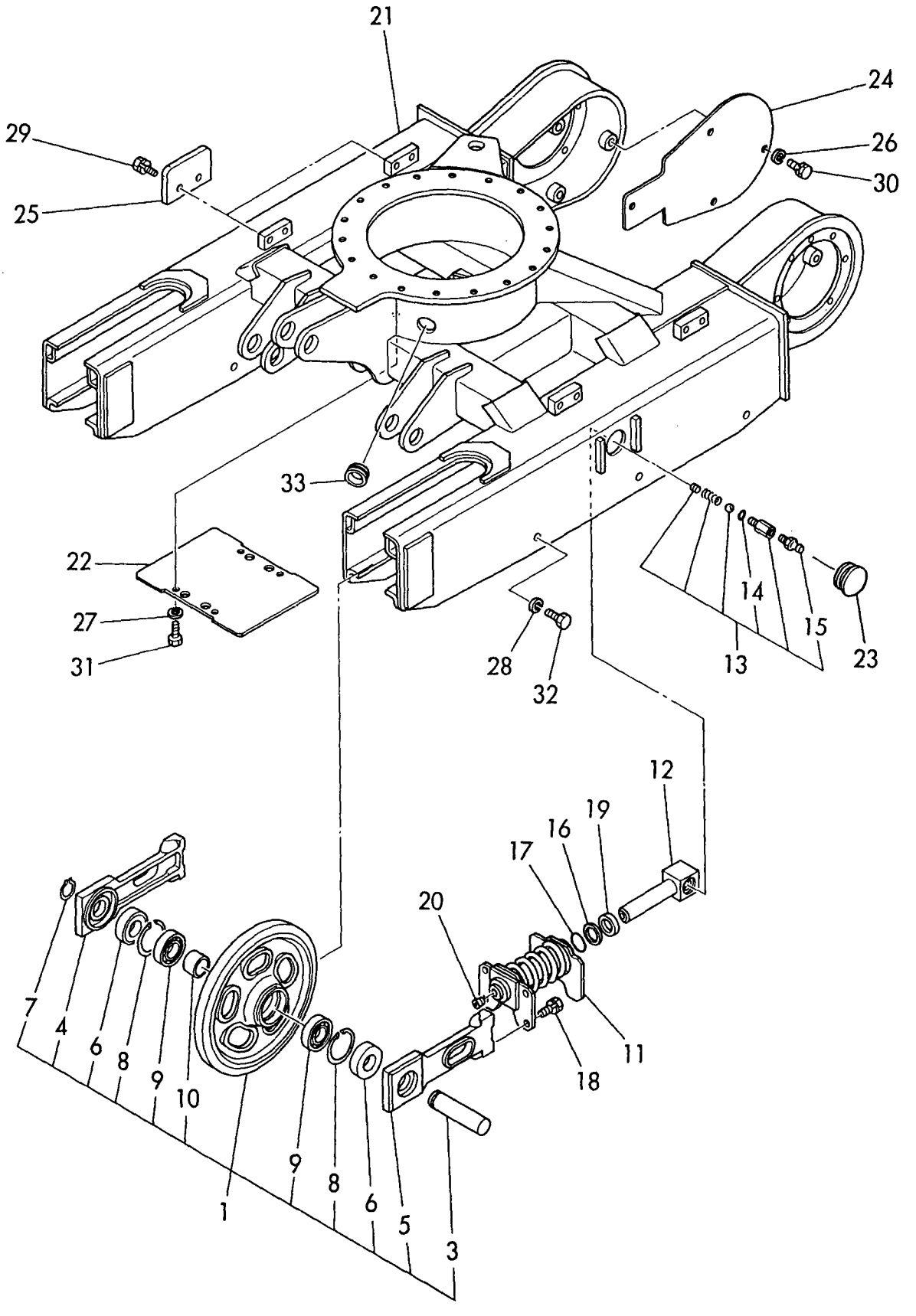

https://truckmanualshub.com/

```
1,1,,772137-38101,,"CRAWLER ASSY",2,,,2,,,,,,,,,,,,,,
2,2,,172137-38101,,"LINK ASSY, TRACK",2,,,2,,,,,,,,,,,,,,
3,3,,172137-38131,,"COLLAR, LINK",58,,,58,,,,,,,,,,,,,,
4,3,,172137-38161,,"PIN, TRACK",58,,,58,,,,,,,,,,,,,,
5,3,,22351-060020,,"SPRING PIN 6X20",58,,,58,,,,,,,,,,,,,,,
6,3,,172137-38111,,"SHOW PLATE",60,,,60,,,,,,,,,,,,,,
7,2,,172137-38131,,"COLLAR, LINK",2,,,2,,,,,,,,,,,,,,
8,2,,172137-38161,,"PIN, TRACK",2,,,2,,,,,,,,,,,,,,
9,2,,22351-060020,,"SPRING PIN 6X20",2,,,2,,,,,,,,,,,,,,
10,1,,172137-38600,,"CRAWLER ASSY, RUBBER",,2,,,2,,,,,,,,,,,,,
```

Fig. 15 リタイ CRAWLER

https://truckmanualshub.com/

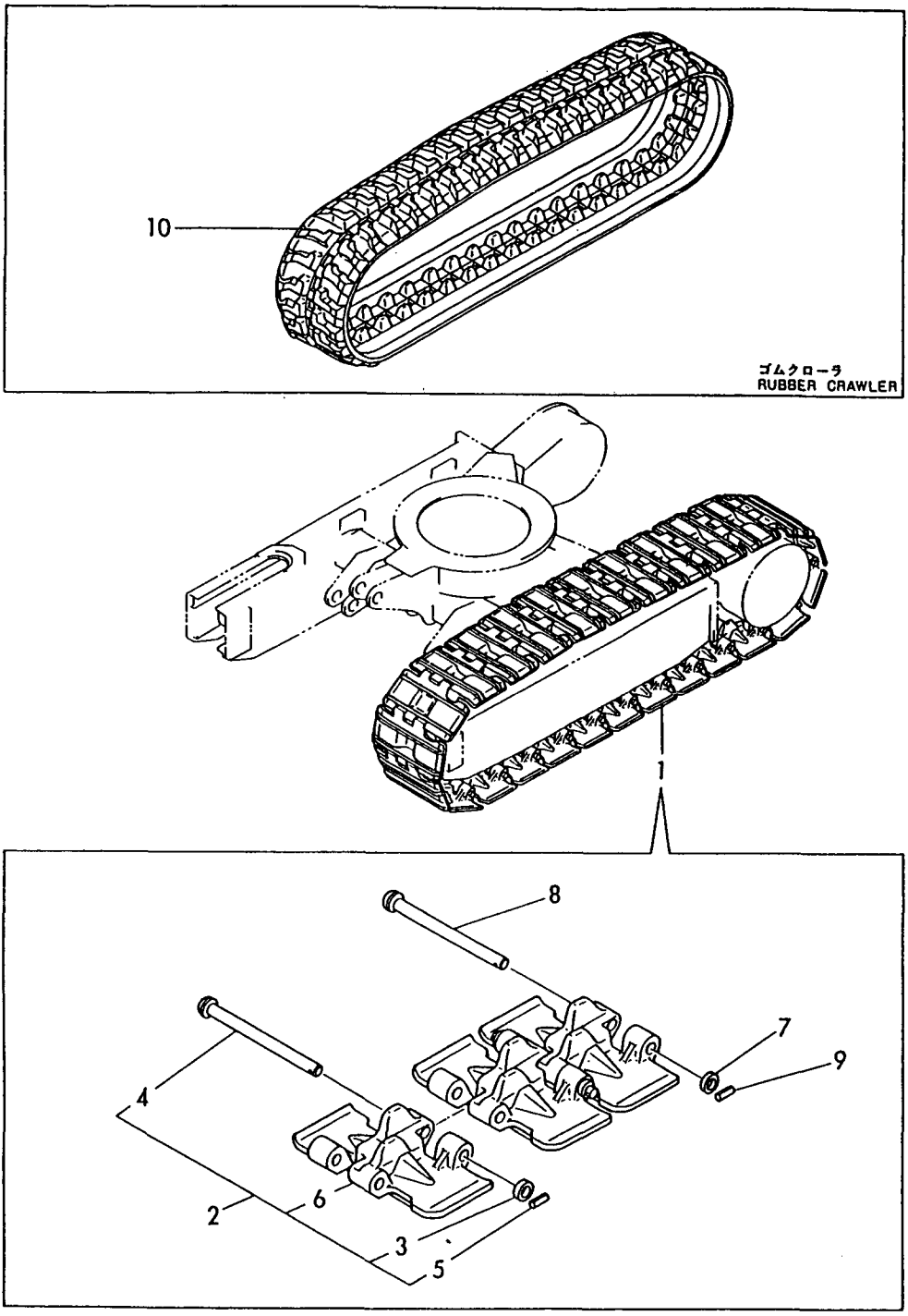

https://truckmanualshub.com/

```
1,1,,172150-41870,,"SUPPORT, LINK",1,1,,1,1,,,,,,,,,,,,,
2,1,,172150-42350,,"BRACKET, SWING",1,1,,1,1,,,,,,,,,,,,,,
3,1,,172150-42400,,"PLATE, LINK",1,1,,1,1,,,,,,,,,,,,,
4,1,,26013-100202,,"BOLT M10X 20",2,2,,2,2,,,,,,,,,,,,,
5,1,,26013-100202,,"BOLT M10X 20",2,2,,2,2,,,,,,,,,,,,,
6,1,,26013-100252,,"BOLT M10X 25",2,2,,2,2,,,,,,,,,,,,,
7,1,,26013-100252,,"BOLT M10X 25",4,4,,4,4,,,,,,,,,,,,,
8,1,,172149-42010,,"BRACKET SET",1,1,,1,1,,,,,,,,,,,,,
9,1,,172149-41860,,"PIN, BLADE",1,1,,1,1,,,,,,,,,,,,,
10,1,,26013-100202,,"BOLT M10X 20",1,1,,1,1,,,,,,,,,,,,,,
11,1,,26013-100202,,"BOLT M10X 20",3,3,,3,3,,,,,,,,,,,,,,
```

Fig. 16 リンクダイ LINK STAND

https://truckmanualshub.com/

COUNTRY	U K	A S	E X
Fig. No.	16	17	17

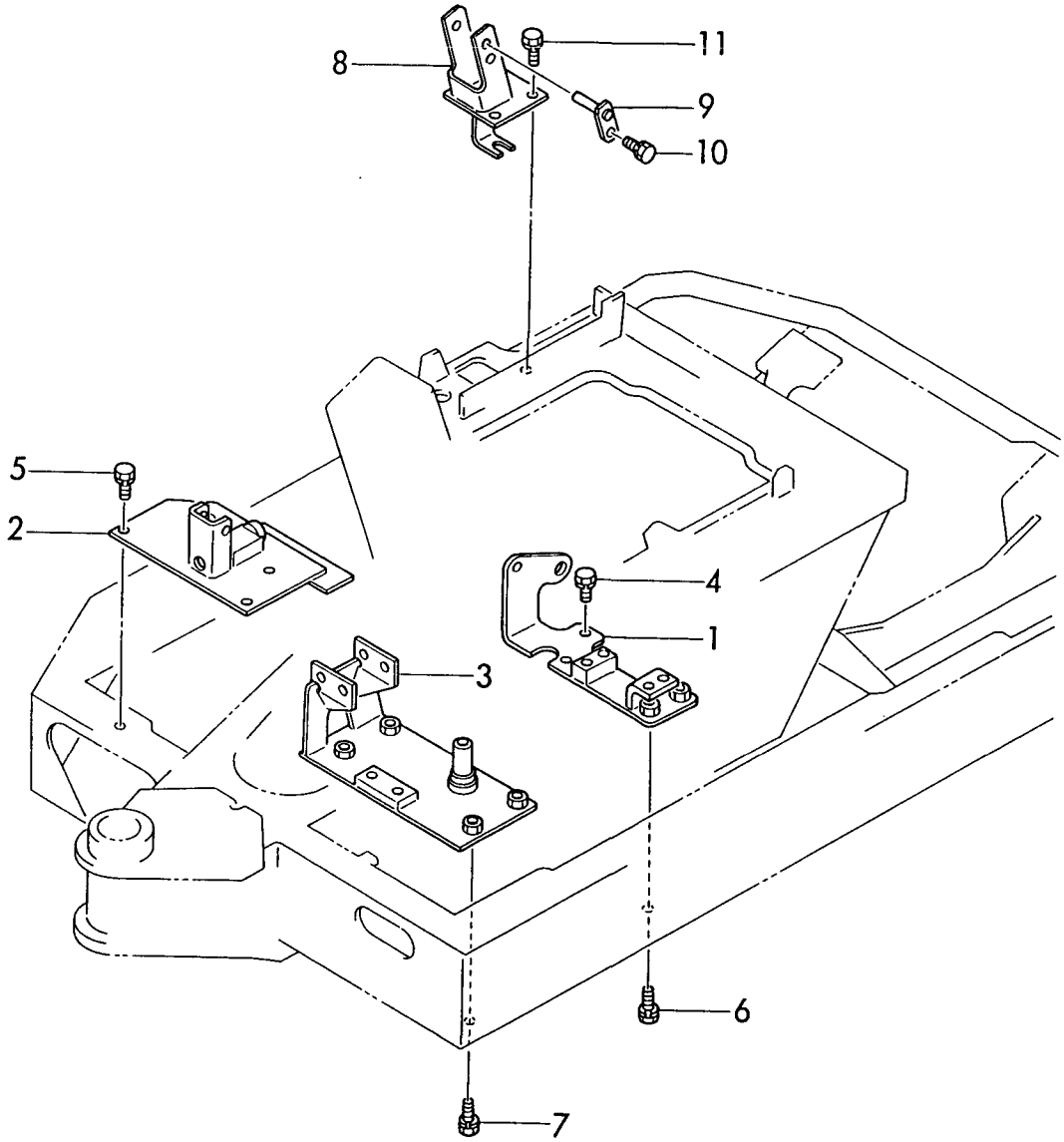

+------+
| 1C02 |
|(1B02)|
+------+

https://truckmanualshub.com/

```
1,1,,172141-41370,,"BUSH 2015",2,2,,2,2,,,,,,,,,,,,,
2,1,,172149-41830,,"SHAFT(A), TRACK",1,1,,1,1,,,,,,,,,,,,,,
3,1,,172149-41860,,"PIN, BLADE",1,1,,1,1,,,,,,,,,,,,,,
4,1,,172149-41900,,"PLATE, LINK",1,1,,1,1,,,,,,,,,,,,,,
5,1,,172149-41950,,"PLATE, TRACK",1,1,,1,1,,,,,,,,,,,,,,
6,1,,172149-42010,,"BRACKET SET",1,1,,1,1,,,,,,,,,,,,,,
7,1,,172149-42100,,"SUPPORT, LINK",1,1,,1,1,,,,,,,,,,,,,,
8,1,,172149-42250,,"COVER, SUPPORT",1,1,,1,1,,,,,,,,,,,,,,
9,1,,22217-080000,,"SPRING WASHER  8",4,4,,4,4,,,,,,,,,,,,,,
10,1,,24761-020000,,"NIPPLE PT1/8,GREASE",1,1,,1,1,,,,,,,,,,,,,,,
11,1,,26013-100202,,"BOLT M10X 20",5,5,,5,5,,,,,,,,,,,,,,
12,1,,26013-100202,,"BOLT M10X 20",1,1,,1,1,,,,,,,,,,,,,,
13,1,,26013-100202,,"BOLT M10X 20",1,1,,1,1,,,,,,,,,,,,,,
14,1,,26013-100202,,"BOLT M10X 20",1,1,,1,1,,,,,,,,,,,,,,
15,1,,26013-100202,,"BOLT M10X 20",3,3,,3,3,,,,,,,,,,,,,,
16,1,,26013-100252,,"BOLT M10X 25",4,4,,4,4,,,,,,,,,,,,,,
17,1,,26116-080162,,"BOLT M 8X 16 PLATED",4,4,,4,4,,,,,,,,,,,,,,,
18,1,,26756-100002,,"LOCK NUT M10 PLATED",2,2,,2,2,,,,,,,,,,,,,,,
19,1,,26116-100252,,"BOLT M10X 25 PLATED",2,2,,2,2,,,,,,,,,,,,,,,
```

Fig. 17 リンクダイ LINK STAND

https://truckmanualshub.com/

COUNTRY	U K	A S	E X
Fig. No.	16	17	17

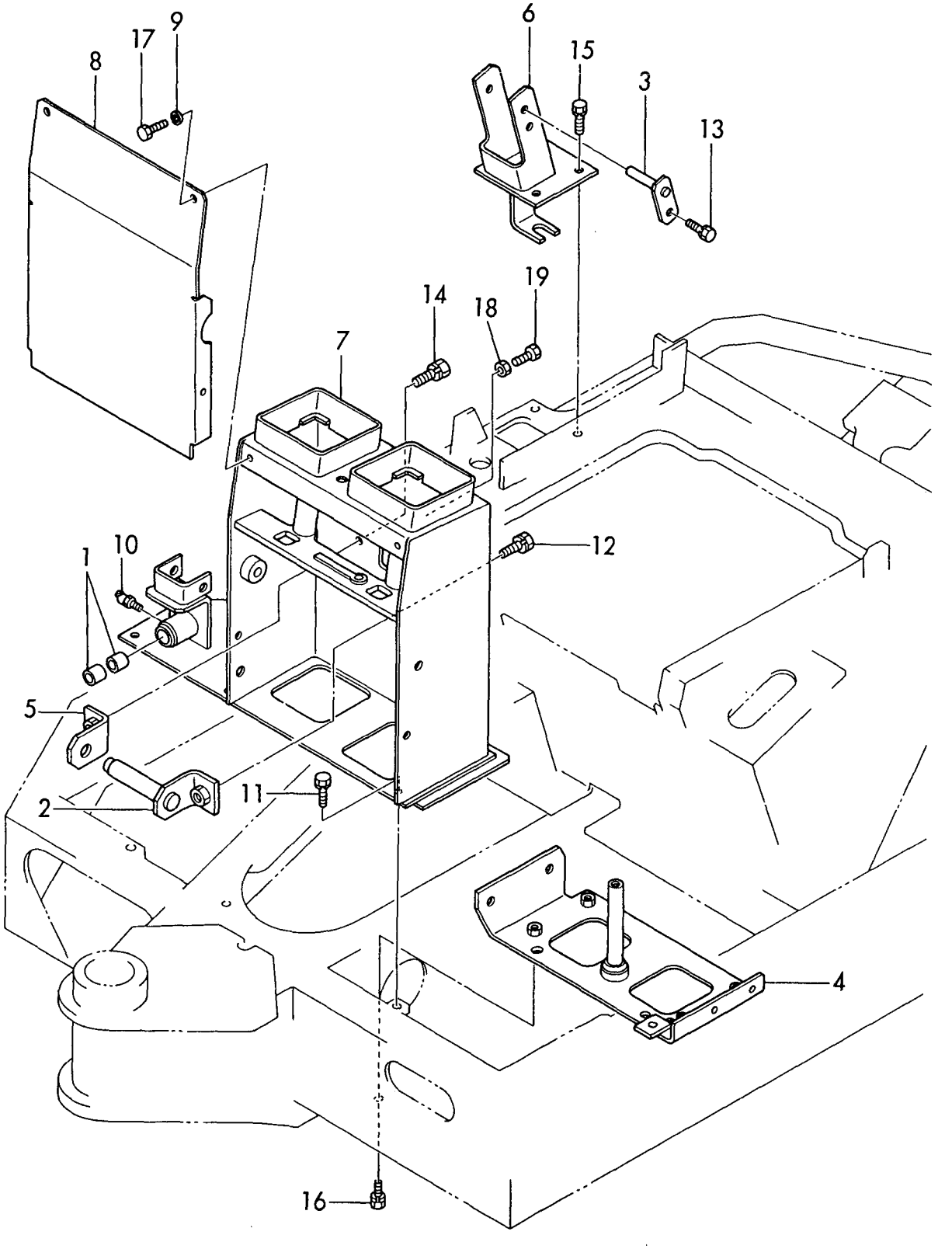

https://truckmanualshub.com/

```
1,1,,172150-41150,,LEVER(R),1,1,,1,1,,,,,,,,,,,,,
2,2,,172142-44170,,"JOINT, LEVER",1,1,,1,1,,,,,,,,,,,,,
3,2,,22351-060018,,"SPRING PIN 6X18",1,1,,1,1,,,,,,,,,,,,,
4,1,,172141-41160,,JOINT,1,1,,1,1,,,,,,,,,,,,,
5,1,,172141-41310,,GROMMET,1,1,,1,1,,,,,,,,,,,,,
6,1,,172141-41330,,"BOOTS, LEVER",1,1,,1,1,,,,,,,,,,,,,
7,1,,172143-45100,,LEVER,1,1,,1,1,,,,,,,,,,,,,
8,1,,172143-45800,,KNOB(A),1,1,,1,1,,,,,,,,,,,,,
9,1,,22217-140000,,"SPRING WASHER 14",1,1,,1,1,,,,,,,,,,,,,
10,1,,26756-140002,,"LOCK NUT M14 PLATED",1,1,,1,1,,,,,,,,,,,,,
11,1,,26757-100002,,"LOCK NUT M10 PLATED",1,1,,1,1,,,,,,,,,,,,,
12,1,,933168-55770,,"BAND 146",2,2,,2,2,,,,,,,,,,,,,
13,1,,172150-41350,,"LINK(A), BOOM",1,1,,1,1,,,,,,,,,,,,,
14,1,,172150-41390,,"LINK(B), BOOM",1,1,,1,1,,,,,,,,,,,,,
15,1,,172150-41420,,"LINK(A), BUCKET",1,1,,1,1,,,,,,,,,,,,,
16,2,,172141-41370,,"BUSH 2015",2,2,,2,2,,,,,,,,,,,,,
18,1,,172150-41550,,"LINK(C), BOOM",1,1,,1,1,,,,,,,,,,,,,
19,2,,172141-41370,,"BUSH 2015",2,2,,2,2,,,,,,,,,,,,,
21,1,,172150-41620,,"LINK(C), BUCKET",1,1,,1,1,,,,,,,,,,,,,
22,2,,172141-41370,,"BUSH 2015",2,2,,2,2,,,,,,,,,,,,,
24,1,,172150-41730,,"SHAFT, LINK",1,1,,1,1,,,,,,,,,,,,,
25,1,,172150-42660,,BRACKET,1,1,,1,1,,,,,,,,,,,,,
26,2,,172141-41370,,"BUSH 2015",2,2,,2,2,,,,,,,,,,,,,
28,1,,172150-42750,,"SHAFT, P.T.O",1,1,,1,1,,,,,,,,,,,,,
29,1,,172122-45720,,"ROD-END 14",2,2,,2,2,,,,,,,,,,,,,
30,1,,172124-46200,,"O-RING 27X5.7",6,6,,6,6,,,,,,,,,,,,,
31,1,,22157-120000,,"WASHER 12",2,2,,2,2,,,,,,,,,,,,,
32,1,,22217-140000,,"SPRING WASHER 14",2,2,,2,2,,,,,,,,,,,,,
33,1,,24761-040000,,"NIPPLE B,GREASE",1,1,,1,1,,,,,,,,,,,,,
34,1,,24761-040000,,"NIPPLE B,GREASE",1,1,,1,1,,,,,,,,,,,,,
35,1,,24761-040000,,"NIPPLE B,GREASE",1,1,,1,1,,,,,,,,,,,,,
36,1,,24761-020000,,"NIPPLE PT1/8,GREASE",1,1,,1,1,,,,,,,,,,,,,
37,1,,26013-100202,,"BOLT M10X 20",2,2,,2,2,,,,,,,,,,,,,
38,1,,26013-100202,,"BOLT M10X 20",2,2,,2,1,,,,,,,,,,,,,
39,1,,26716-140002,,"NUT M14",2,2,,2,2,,,,,,,,,,,,,
40,1,,172150-42780,,"PEDAL, P.T.O",1,1,,1,1,,,,,,,,,,,,,
41,1,,26013-100202,,"BOLT M10X 20",1,1,,1,1,,,,,,,,,,,,,
42,1,,22217-100000,,"SPRING WASHER 10",2,2,,2,2,,,,,,,,,,,,,
43,1,,26116-100202,,"BOLT M10X 20 PLATED",2,2,,2,2,,,,,,,,,,,,,
44,1,,26716-100002,,"NUT M10",2,2,,2,2,,,,,,,,,,,,,
45,1,,172150-42600,,ROD(RA),2,2,,2,2,,,,,,,,,,,,,
46,1,,172150-42620,,"ROD(B), BOOM",1,1,,1,1,,,,,,,,,,,,,
47,1,,172150-42630,,"ROD(B), BUCKET",1,1,,1,1,,,,,,,,,,,,,
48,1,,172143-45670,,"ROD, END 8",1,1,,1,1,,,,,,,,,,,,,
49,1,,172146-45691,,"ROD(C), SPOOL",2,2,,2,2,,,,,,,,,,,,,
50,1,,172122-46512,,"ROD (D), SPOOL",1,1,,1,1,,,,,,,,,,,,,
51,1,,172122-46590,,"ELBALL 8",4,4,,4,4,,,,,,,,,,,,,
52,1,,172122-46590,,"ELBALL 8",2,2,,2,2,,,,,,,,,,,,,
53,1,,172122-46590,,"ELBALL 8",2,2,,2,2,,,,,,,,,,,,,
54,1,,172122-46590,,"ELBALL 8",2,2,,2,2,,,,,,,,,,,,,
55,1,,172122-47250,,"BALL 8, LINK",2,2,,2,2,,,,,,,,,,,,,
56,1,,1C6281-52310,,"PIN 6,COME-OFF SNAP",2,2,,2,2,,,,,,,,,,,,,
57,1,,22217-080000,,"SPRING WASHER  8",2,2,,2,2,,,,,,,,,,,,,
58,1,,22217-080000,,"SPRING WASHER  8",2,2,,2,2,,,,,,,,,,,,,
59,1,,22217-080000,,"SPRING WASHER  8",2,2,,2,2,,,,,,,,,,,,,
60,1,,22217-080000,,"SPRING WASHER  8",2,2,,2,2,,,,,,,,,,,,,
61,1,,22217-080000,,"SPRING WASHER  8",2,2,,2,2,,,,,,,,,,,,,
62,1,,22217-080000,,"SPRING WASHER  8",3,3,,3,3,,,,,,,,,,,,,
63,1,,26116-080302,,"BOLT M 8X 30 PLATED",1,1,,1,1,,,,,,,,,,,,,
64,1,,26716-080002,,"NUT M 8",4,4,,4,4,,,,,,,,,,,,,
65,1,,26716-080002,,"NUT M 8",8,8,,8,8,,,,,,,,,,,,,
66,1,,26716-080002,,"NUT M 8",4,4,,4,4,,,,,,,,,,,,,
67,1,,26716-080002,,"NUT M 8",4,4,,4,4,,,,,,,,,,,,,
```

https://truckmanualshub.com/

```
68,1,,26716-080002,,"NUT M 8",4,4,,4,4,,,,,,,,,,,,,
69,1,,933110-54100,,"PIN 4.75X14",2,2,,2,2,,,,,,,,,,,,,,
```

Fig. 18 ソウジュウソウチ(ブーム & バケット) CONTROL EQUIPMENT (BOOM & BUCKET)

https://truckmanualshub.com/

COUNTRY	U K	A S	E X
Fig. No.	18	19	19

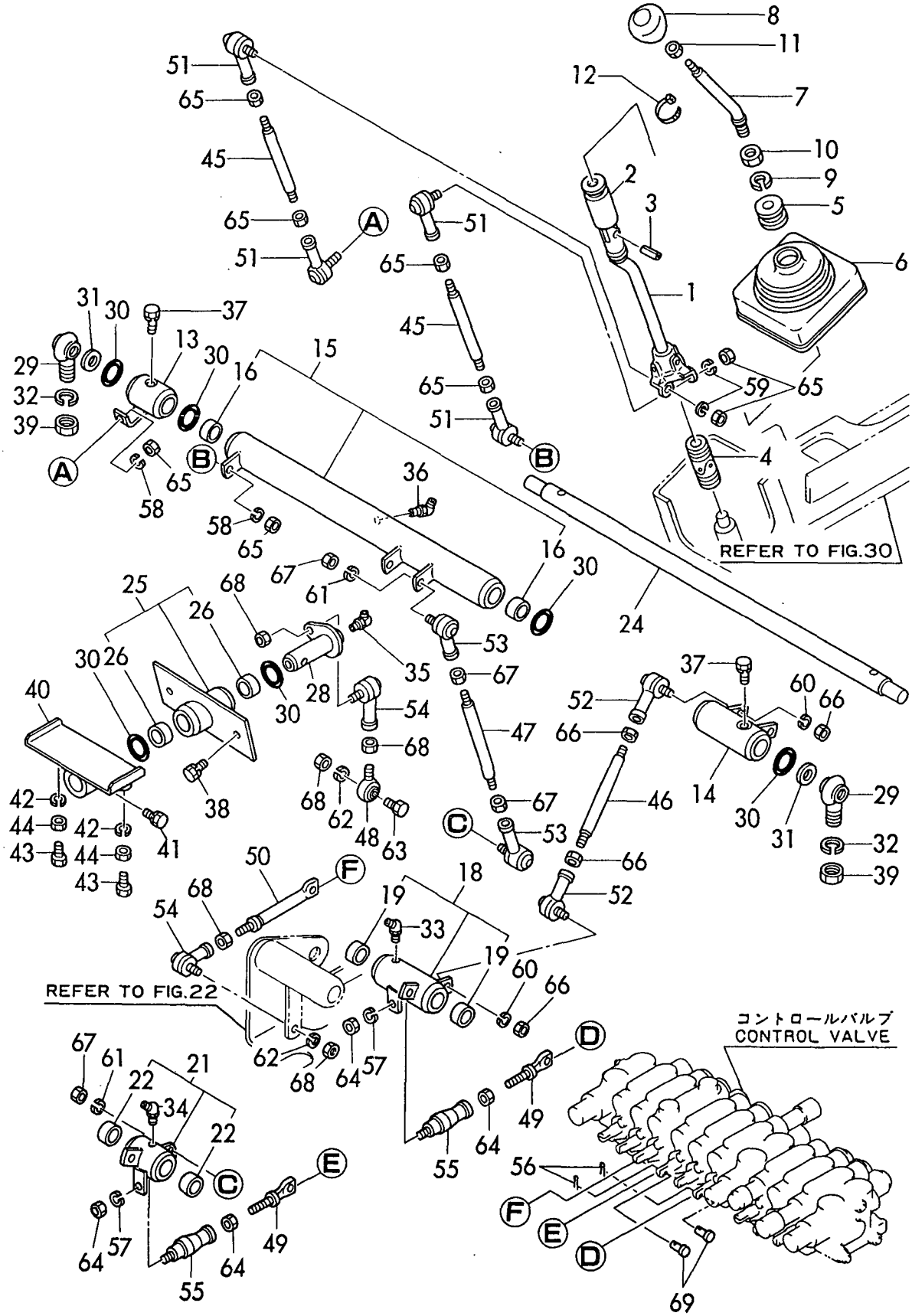

https://truckmanualshub.com/

```
1,1,,172149-41050,,"LEVER (R)",1,1,,1,1,,,,,,,,,,,,,
2,1,,172141-41160,,JOINT,1,1,,1,1,,,,,,,,,,,,,
3,1,,172141-41310,,GROMMET,1,1,,1,1,,,,,,,,,,,,,
4,1,,172141-41330,,"BOOTS, LEVER",1,1,,1,1,,,,,,,,,,,,,
5,1,,24761-040000,,"NIPPLE B,GREASE",1,1,,1,1,,,,,,,,,,,,,
6,1,,172312-46301,,KNOB(A),1,1,,1,1,,,,,,,,,,,,,
7,1,,26757-100002,,"LOCK NUT M10 PLATED",1,1,,1,1,,,,,,,,,,,,,
8,1,,172149-41250,,"LINK(A), BOOM",1,1,,1,1,,,,,,,,,,,,,
9,1,,172149-41300,,"LINK(B), BOOM",1,1,,1,1,,,,,,,,,,,,,
10,1,,172149-41320,,"LINK, BUCKET",1,1,,1,1,,,,,,,,,,,,,
12,2,,172141-41370,,"BUSH 2015",2,2,,2,2,,,,,,,,,,,,,
13,1,,172149-41650,,"SHAFT, LINK",1,1,,1,1,,,,,,,,,,,,,
14,1,,172149-41790,,"STAY, LINK",1,1,,1,1,,,,,,,,,,,,,
15,1,,172122-45720,,"ROD-END 14",1,1,,1,1,,,,,,,,,,,,,
16,1,,172124-46200,,"O-RING 27X5.7",4,4,,4,4,,,,,,,,,,,,,
17,1,,22157-120000,,"WASHER 12",2,2,,2,2,,,,,,,,,,,,,
18,1,,22217-140000,,"SPRING WASHER 14",1,1,,1,1,,,,,,,,,,,,,
19,1,,26013-100202,,"BOLT M10X 20",2,2,,2,2,,,,,,,,,,,,,
20,1,,26716-140002,,"NUT M14",1,1,,1,1,,,,,,,,,,,,,
21,1,,172137-46400,,"TURNBUCKLE M10X40",2,2,,2,2,,,,,,,,,,,,,
22,1,,194150-22480,,"NUT M10",2,2,,2,2,,,,,,,,,,,,,
23,1,,172149-42540,,ROD(C),2,2,,2,2,,,,,,,,,,,,,
24,1,,172149-42641,,ROD(RA),2,2,,2,2,,,,,,,,,,,,,
25,1,,172149-42651,,ROD(RB),2,2,,2,2,,,,,,,,,,,,,
26,1,,172122-46590,,"ELBALL 8",2,2,,2,2,,,,,,,,,,,,,
27,1,,172122-46590,,"ELBALL 8",2,2,,2,2,,,,,,,,,,,,,
28,1,,172122-46590,,"ELBALL 8",2,2,,2,2,,,,,,,,,,,,,
29,1,,1C6281-52310,,"PIN 6,COME-OFF SNAP",2,2,,2,2,,,,,,,,,,,,,
30,1,,22217-080000,,"SPRING WASHER  8",2,2,,2,2,,,,,,,,,,,,,
31,1,,22217-080000,,"SPRING WASHER  8",2,2,,2,2,,,,,,,,,,,,,
32,1,,22217-080000,,"SPRING WASHER  8",2,2,,2,2,,,,,,,,,,,,,
33,1,,26716-080002,,"NUT M 8",8,8,,8,8,,,,,,,,,,,,,
34,1,,26716-080002,,"NUT M 8",4,4,,4,4,,,,,,,,,,,,,
35,1,,26716-080002,,"NUT M 8",4,4,,4,4,,,,,,,,,,,,,
36,1,,26716-100002,,"NUT M10",2,2,,2,2,,,,,,,,,,,,,
37,1,,933110-54100,,"PIN 4.75X14",2,2,,2,2,,,,,,,,,,,,,
38,1,,172149-42450,,"ROD(G), SPOOL",2,2,,2,2,,,,,,,,,,,,,
39,1,,26013-100202,,"BOLT M10X 20",2,2,,2,2,,,,,,,,,,,,,
```

Fig. 19 ソウジュウソウチ(ブーム & バケット) CONTROL EQUIPMENT (BOOM & BUCKET)

https://truckmanualshub.com/

COUNTRY	U K	A S	E X
Fig. No.	18	19	19

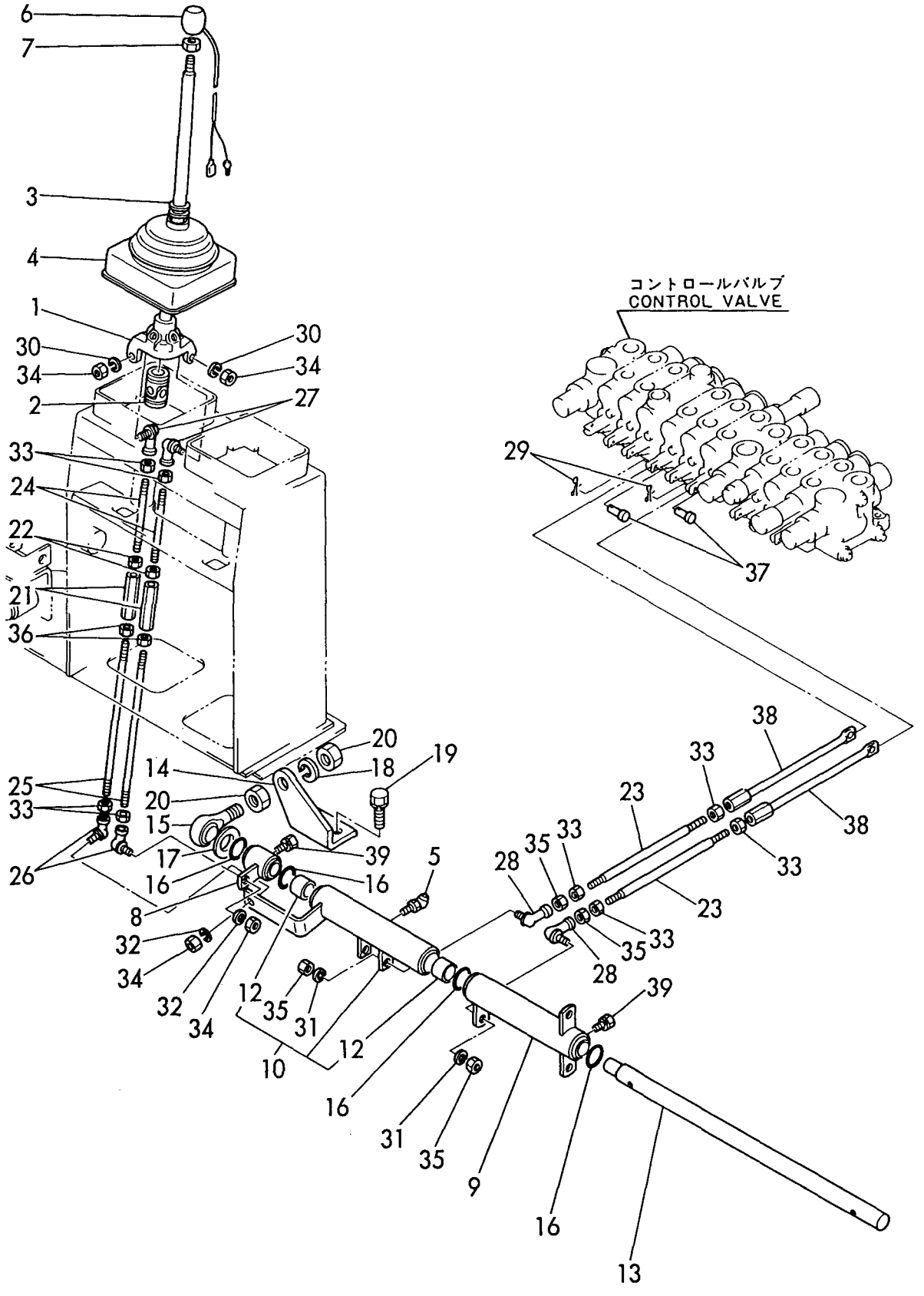

https://truckmanualshub.com/

```
1,1,,172150-41100,,LEVER(L),1,1,,1,1,,,,,,,,,,,,,
2,2,,172142-44170,,"JOINT, LEVER",1,1,,1,1,,,,,,,,,,,,,
3,2,,22351-060018,,"SPRING PIN 6X18",1,1,,1,1,,,,,,,,,,,,,
4,1,,172141-41160,,JOINT,1,1,,1,1,,,,,,,,,,,,,
5,1,,172141-41310,,GROMMET,1,1,,1,1,,,,,,,,,,,,,
6,1,,172141-41330,,"BOOTS, LEVER",1,1,,1,1,,,,,,,,,,,,,
7,1,,172143-45100,,LEVER,1,1,,1,1,,,,,,,,,,,,,
8,1,,172312-46321,,KNOB(B),1,1,,1,1,,,,,,,,,,,,,
9,1,,22217-140000,,"SPRING WASHER 14",1,1,,1,1,,,,,,,,,,,,,
10,1,,26756-140002,,"LOCK NUT M14 PLATED",1,1,,1,1,,,,,,,,,,,,,
11,1,,26757-100002,,"LOCK NUT M10 PLATED",1,1,,1,1,,,,,,,,,,,,,
12,1,,172150-41460,,"LINK(A), ARM",1,1,,1,1,,,,,,,,,,,,,
13,2,,172141-41370,,"BUSH 2015",2,2,,2,2,,,,,,,,,,,,,
15,1,,172150-41500,,"LINK(A), TURNING",1,1,,1,1,,,,,,,,,,,,,
16,2,,172141-41370,,"BUSH 2015",2,2,,2,2,,,,,,,,,,,,,
18,1,,172150-41590,,"LINK(C), ARM",1,1,,1,1,,,,,,,,,,,,,
19,2,,172141-41370,,"BUSH 2015",2,2,,2,2,,,,,,,,,,,,,
21,1,,172150-41660,,"LINK(C), TURNING",1,1,,1,1,,,,,,,,,,,,,
22,2,,172141-41370,,"BUSH 2015",2,2,,2,2,,,,,,,,,,,,,
24,1,,172150-41750,,SHAFT(A),1,1,,1,1,,,,,,,,,,,,,
25,1,,172150-41830,,SHAFT(B),1,1,,1,1,,,,,,,,,,,,,
26,1,,172124-46200,,"O-RING 27X5.7",6,6,,6,6,,,,,,,,,,,,,
27,1,,24761-040000,,"NIPPLE B,GREASE",1,1,,1,1,,,,,,,,,,,,,
28,1,,24761-040000,,"NIPPLE B,GREASE",1,1,,1,1,,,,,,,,,,,,,
29,1,,24761-050000,,"NIPPLE C,GREASE",1,1,,1,1,,,,,,,,,,,,,
30,1,,24761-050000,,"NIPPLE C,GREASE",1,1,,1,1,,,,,,,,,,,,,
31,1,,26013-100202,,"BOLT M10X 20",1,1,,1,1,,,,,,,,,,,,,
32,1,,26013-100202,,"BOLT M10X 20",2,2,,2,2,,,,,,,,,,,,,
33,1,,26013-100302,,"BOLT M10X 30",1,1,,1,1,,,,,,,,,,,,,
34,1,,172150-42610,,ROD(LA),2,2,,2,2,,,,,,,,,,,,,
35,1,,172150-42640,,"ROD(B), ARM",1,1,,1,1,,,,,,,,,,,,,
36,1,,172150-42650,,"ROD(B), TURNING",1,1,,1,1,,,,,,,,,,,,,
37,1,,172146-45691,,"ROD(C), SPOOL",2,2,,2,2,,,,,,,,,,,,,
38,1,,172122-46590,,"ELBALL 8",4,4,,4,4,,,,,,,,,,,,,
39,1,,172122-46590,,"ELBALL 8",2,2,,2,2,,,,,,,,,,,,,
40,1,,172122-46590,,"ELBALL 8",2,2,,2,2,,,,,,,,,,,,,
41,1,,172122-47250,,"BALL 8, LINK",2,2,,2,2,,,,,,,,,,,,,
42,1,,1C6281-52310,,"PIN 6,COME-OFF SNAP",2,2,,2,2,,,,,,,,,,,,,
43,1,,22217-080000,,"SPRING WASHER  8",2,2,,2,2,,,,,,,,,,,,,
44,1,,22217-080000,,"SPRING WASHER  8",4,4,,4,4,,,,,,,,,,,,,
45,1,,22217-080000,,"SPRING WASHER  8",2,2,,2,2,,,,,,,,,,,,,
46,1,,22217-080000,,"SPRING WASHER  8",2,2,,2,2,,,,,,,,,,,,,
47,1,,26716-080002,,"NUT M 8",4,4,,4,4,,,,,,,,,,,,,
48,1,,26716-080002,,"NUT M 8",8,8,,8,8,,,,,,,,,,,,,
49,1,,26716-080002,,"NUT M 8",4,4,,4,4,,,,,,,,,,,,,
50,1,,26716-080002,,"NUT M 8",4,4,,4,4,,,,,,,,,,,,,
51,1,,933110-54100,,"PIN 4.75X14",2,2,,2,2,,,,,,,,,,,,,
```

Fig. 20 ソウジュウソウチ(アーム & センカイ) CONTROL EQUIPMENT (ARM & TURNING)

https://truckmanualshub.com/

COUNTRY	U K	A S	E X
Fig. No.	20	21	21

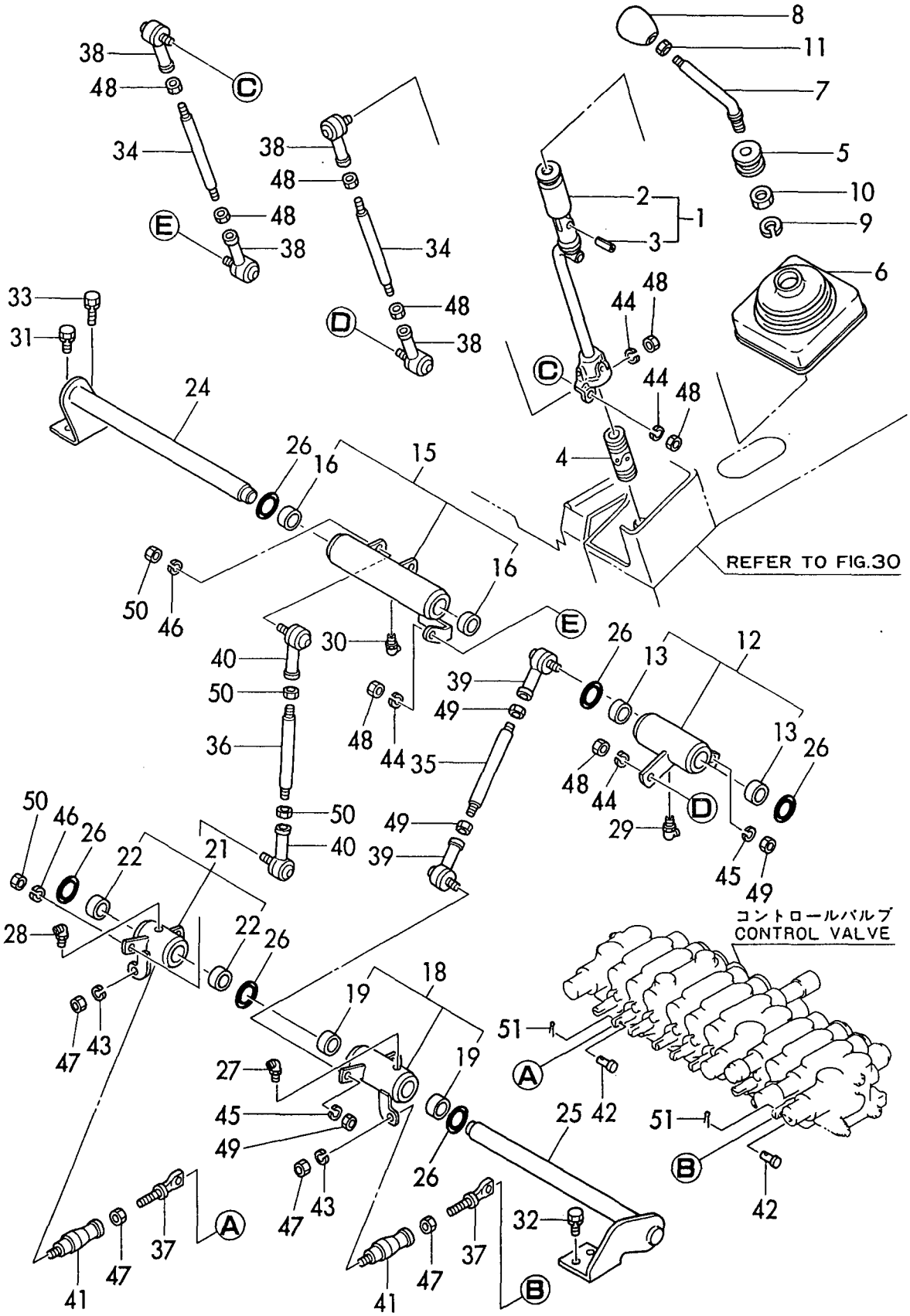

https://truckmanualshub.com/

```
1,1,,172149-41100,,"LEVER L",1,1,,1,1,,,,,,,,,,,,,
2,1,,172141-41150,,"LINK(L), LEVER",1,1,,1,1,,,,,,,,,,,,,
3,1,,172141-41160,,JOINT,1,1,,1,1,,,,,,,,,,,,,
4,1,,172141-41330,,"BOOTS, LEVER",1,1,,1,1,,,,,,,,,,,,,
5,1,,26716-080002,,"NUT M 8",1,1,,1,1,,,,,,,,,,,,,
6,1,,172312-46321,,KNOB(B),1,1,,1,1,,,,,,,,,,,,,
7,1,,22351-030010,,"SPRING PIN 3X10",1,1,,1,1,,,,,,,,,,,,,
8,1,,24311-000140,,"O-RING 1A P-14.0",1,1,,1,1,,,,,,,,,,,,,
9,1,,26116-080202,,"BOLT M 8X 20 PLATED",1,1,,1,1,,,,,,,,,,,,,
10,1,,26757-100002,,"LOCK NUT M10 PLATED",1,1,,1,1,,,,,,,,,,,,,
11,1,,1C6281-52320,,"PIN 8,COME-OFF SNAP",2,2,,2,2,,,,,,,,,,,,,
12,1,,172149-41370,,"LINK, TURNING",1,1,,1,1,,,,,,,,,,,,,
13,2,,172141-41370,,"BUSH 2015",2,2,,2,2,,,,,,,,,,,,,
15,1,,172149-41420,,"LINK, ARM",1,1,,1,1,,,,,,,,,,,,,
16,2,,172141-41370,,"BUSH 2015",2,2,,2,2,,,,,,,,,,,,,
18,1,,172149-41660,,SHAFT(A),1,1,,1,1,,,,,,,,,,,,,
19,1,,172124-46200,,"O-RING 27X5.7",3,3,,3,3,,,,,,,,,,,,,
20,1,,172149-42450,,"ROD(G), SPOOL",2,2,,2,2,,,,,,,,,,,,,
21,1,,26013-100202,,"BOLT M10X 20",2,2,,2,2,,,,,,,,,,,,,
22,1,,172149-42560,,"ROD (D)",1,1,,1,1,,,,,,,,,,,,,
23,1,,172149-42580,,ROD(Z),1,1,,1,1,,,,,,,,,,,,,
24,1,,172149-42620,,"ROD (L)",2,2,,2,2,,,,,,,,,,,,,
25,1,,172122-46590,,"ELBALL 8",2,2,,2,2,,,,,,,,,,,,,
26,1,,172122-47250,,"BALL 8, LINK",2,2,,2,2,,,,,,,,,,,,,
27,1,,1C6281-52310,,"PIN 6,COME-OFF SNAP",2,2,,2,2,,,,,,,,,,,,,
28,1,,22217-080000,,"SPRING WASHER  8",2,2,,2,2,,,,,,,,,,,,,
29,1,,22217-080000,,"SPRING WASHER  8",2,2,,2,2,,,,,,,,,,,,,
30,1,,26716-080002,,"NUT M 8",8,8,,8,8,,,,,,,,,,,,,
31,1,,26716-080002,,"NUT M 8",4,4,,4,4,,,,,,,,,,,,,
32,1,,933110-54100,,"PIN 4.75X14",2,2,,2,2,,,,,,,,,,,,,
33,1,,172122-46570,,"ROD-END  8",2,2,,2,2,,,,,,,,,,,,,
```

Fig. 21 ソウジュウソウチ(アーム & センカイ) CONTROL EQUIPMENT (ARM & TURNING)

https://truckmanualshub.com/

COUNTRY	U K	A S	E X
Fig. No.	20	21	21

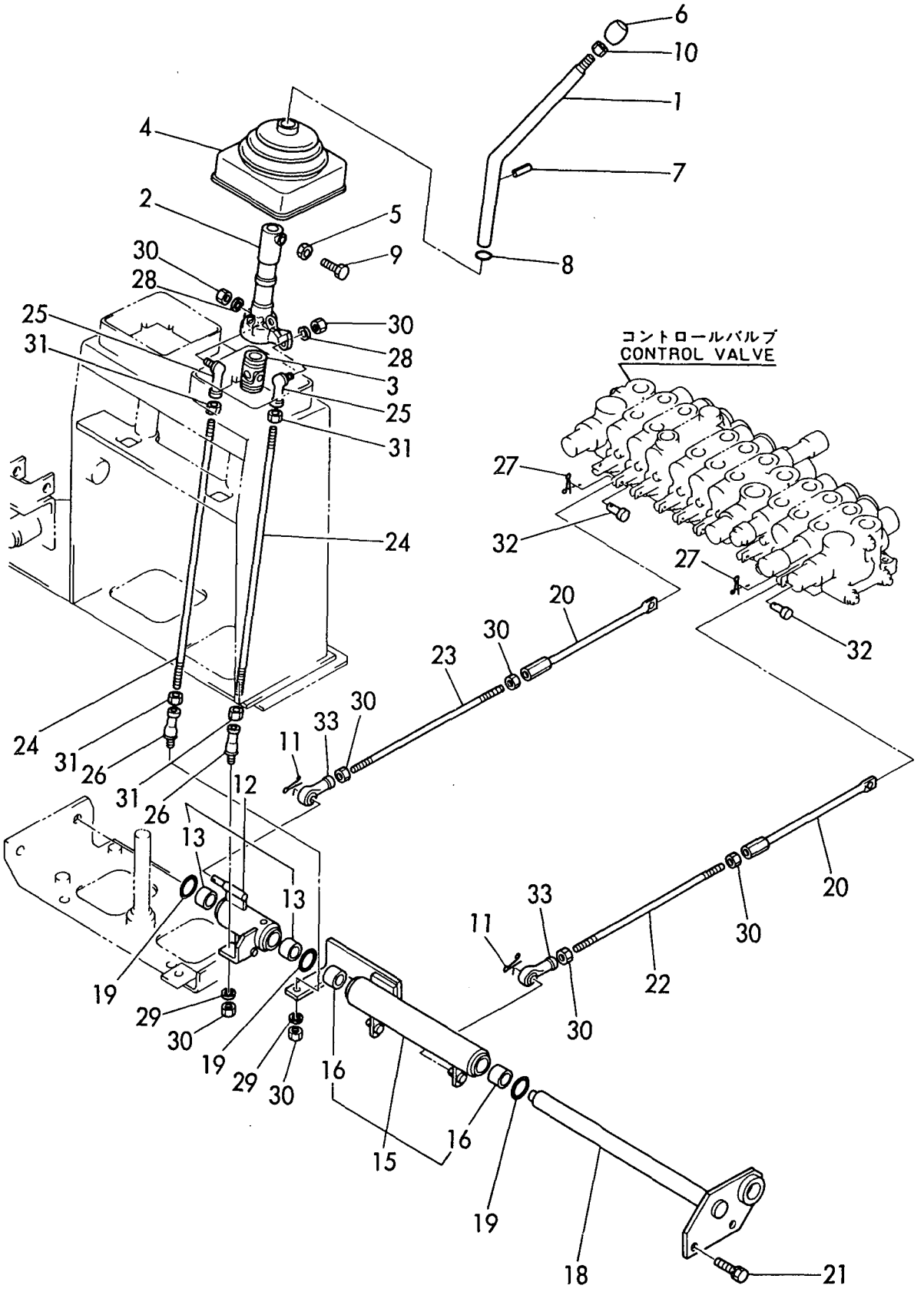

https://truckmanualshub.com/

```
1,1,,172150-41200,,"LEVER(L), TRACK",1,1,,1,1,,,,,,,,,,,,,
3,2,,172141-41370,,"BUSH 2015",2,2,,2,2,,,,,,,,,,,,,
4,1,,172150-41270,,"LEVER(R), TRACK",1,1,,1,1,,,,,,,,,,,,,
6,2,,172141-41370,,"BUSH 2015",2,2,,2,2,,,,,,,,,,,,,
7,1,,172141-41340,,BOOTS,2,2,,2,2,,,,,,,,,,,,,
8,1,,172137-45080,,"KNOB, LEVER",2,2,,2,2,,,,,,,,,,,,,
9,1,,172124-46200,,"O-RING 27X5.7",3,3,,3,3,,,,,,,,,,,,,
10,1,,24761-020000,,"NIPPLE PT1/8,GREASE",2,2,,2,2,,,,,,,,,,,,,,
11,1,,172150-41700,,"LINK, SWING",1,1,,1,1,,,,,,,,,,,,,
12,2,,172141-41370,,"BUSH 2015",2,2,,2,2,,,,,,,,,,,,,
14,1,,172150-41790,,"SHAFT. TRACK",1,1,,1,1,,,,,,,,,,,,,
15,1,,172150-41920,,SHAFT(C),1,1,,1,1,,,,,,,,,,,,,
16,1,,172150-41950,,"LINK, 3RD",1,1,,1,1,,,,,,,,,,,,,
17,2,,172141-41360,,"BUSH 1415",2,2,,2,2,,,,,,,,,,,,,
19,1,,1A1040-45890,,"WASHER 10 36 4.5",1,1,,1,1,,,,,,,,,,,,,
20,1,,172124-46200,,"O-RING 27X5.7",2,2,,2,2,,,,,,,,,,,,,
21,1,,24311-000210,,"O-RING 1A P-21.0",2,2,,2,2,,,,,,,,,,,,,
22,1,,24761-020000,,"NIPPLE PT1/8,GREASE",1,1,,1,1,,,,,,,,,,,,,,
23,1,,26013-100202,,"BOLT M10X 20",2,2,,2,2,,,,,,,,,,,,,
24,1,,26013-100202,,"BOLT M10X 20",2,2,,2,2,,,,,,,,,,,,,
25,1,,26013-100202,,"BOLT M10X 20",1,1,,1,1,,,,,,,,,,,,,
26,1,,172111-16890,,"GROMMET  9",1,1,,1,1,,,,,,,,,,,,,
27,1,,172112-41380,,"SHAFT, BLADE LEVER",1,1,,1,1,,,,,,,,,,,,,,
28,1,,172150-42300,,"PEDAL, SWING",1,1,,1,1,,,,,,,,,,,,,
29,2,,172141-41360,,"BUSH 1415",2,2,,2,2,,,,,,,,,,,,,
31,1,,172149-42400,,"LOCK, SWING",1,1,,1,1,,,,,,,,,,,,,
32,1,,172614-45170,,"SPRING 12",1,1,,1,1,,,,,,,,,,,,,
33,1,,22417-250200,,"COTTER PIN 2.5X20",1,1,,1,1,,,,,,,,,,,,,
34,1,,22417-400400,,"COTTER PIN 4.0X40",1,1,,1,1,,,,,,,,,,,,,
35,1,,24311-000210,,"O-RING 1A P-21.0",2,2,,2,2,,,,,,,,,,,,,
36,1,,933171-18390,,"PIN, FOOT BAR",1,1,,1,1,,,,,,,,,,,,,
37,1,,22217-100000,,"SPRING WASHER 10",2,2,,2,2,,,,,,,,,,,,,
38,1,,26116-100402,,"BOLT M10X 40 PLATED",4,4,,4,4,,,,,,,,,,,,,,
39,1,,26116-100602,,"BOLT M10X 60 PLATED",2,2,,2,2,,,,,,,,,,,,,,
40,1,,26716-100002,,"NUT M10",4,4,,4,4,,,,,,,,,,,,,
41,1,,26716-100002,,"NUT M10",2,2,,2,2,,,,,,,,,,,,,
42,1,,172150-42490,,"LOD, SWING",1,1,,1,1,,,,,,,,,,,,,
43,1,,172150-42700,,"LOD(A), SPOOL",2,2,,2,2,,,,,,,,,,,,,
44,1,,172150-42730,,"LOD(B), SPOOL",1,1,,1,1,,,,,,,,,,,,,
45,1,,172122-46590,,"ELBALL 8",2,2,,2,2,,,,,,,,,,,,,
46,1,,172122-46590,,"ELBALL 8",3,3,,3,3,,,,,,,,,,,,,
47,1,,1C6281-52310,,"PIN 6,COME-OFF SNAP",3,3,,3,3,,,,,,,,,,,,,
48,1,,22217-080000,,"SPRING WASHER  8",2,2,,2,2,,,,,,,,,,,,,
49,1,,22217-080000,,"SPRING WASHER  8",3,3,,3,3,,,,,,,,,,,,,
50,1,,26716-080002,,"NUT M 8",4,4,,4,4,,,,,,,,,,,,,
51,1,,26716-080002,,"NUT M 8",6,6,,6,6,,,,,,,,,,,,,
52,1,,933110-54100,,"PIN 4.75X14",3,3,,3,3,,,,,,,,,,,,,
```

Fig. 22 ソウジュウソウチ（ソウコウ＆スイング）
CONTROL EQUIPMENT （TRAVEL & SWING）

https://truckmanualshub.com/

COUNTRY	U K	A S	E X
Fig. No.	22	23	23

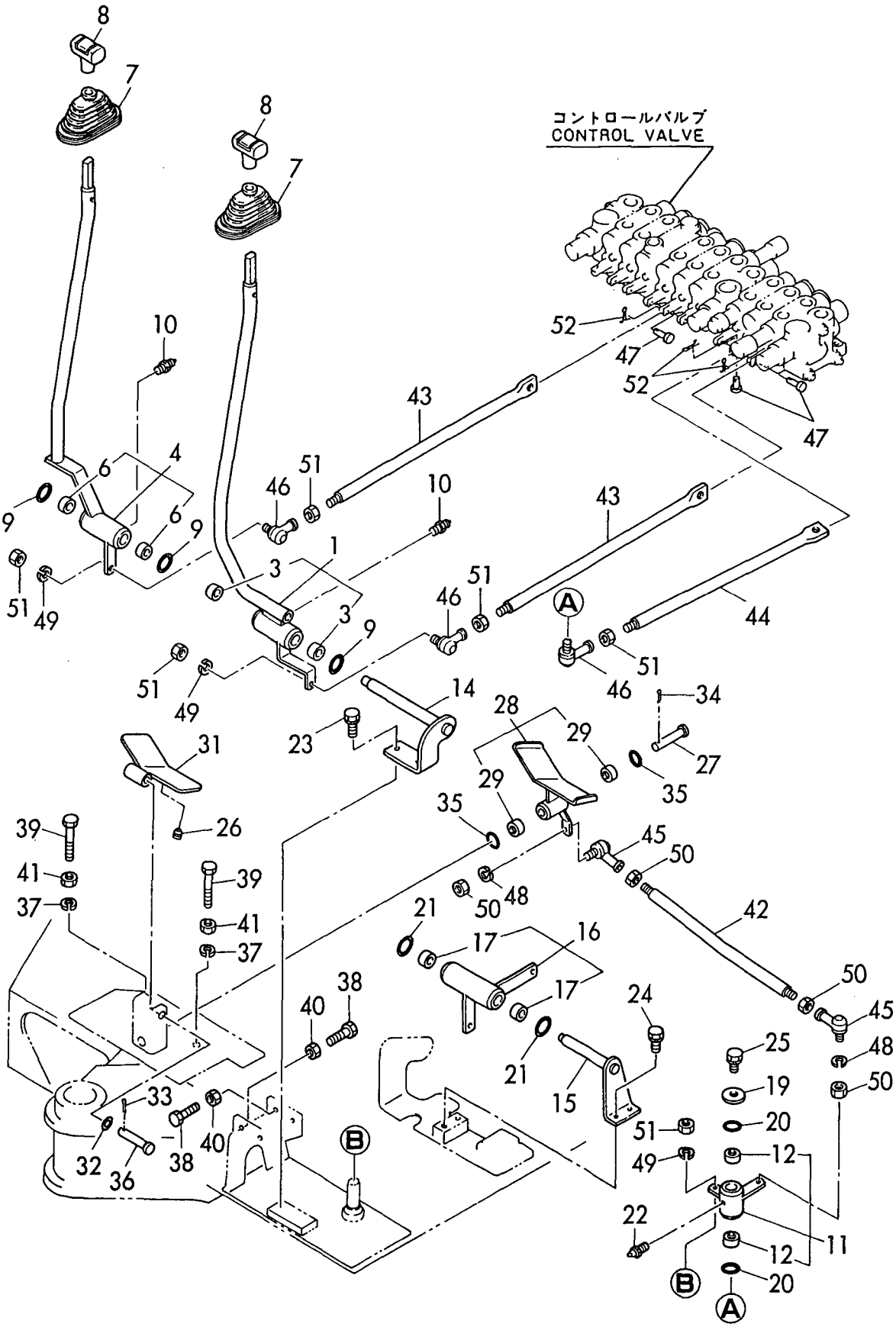

https://truckmanualshub.com/

```
1,1,,172149-41120,,"LEVER(R), TRACK",1,1,,1,1,,,,,,,,,,,,,
3,2,,172141-41370,,"BUSH 2015",2,2,,2,2,,,,,,,,,,,,,
4,1,,172149-41160,,"LEVER(L), TRACK",1,1,,1,1,,,,,,,,,,,,,
6,2,,172141-41370,,"BUSH 2015",2,2,,2,2,,,,,,,,,,,,,
7,1,,172137-45080,,"KNOB, LEVER",2,2,,2,2,,,,,,,,,,,,,
8,1,,24761-050000,,"NIPPLE C,GREASE",4,4,,4,4,,,,,,,,,,,,,
9,1,,24761-040000,,"NIPPLE B,GREASE",1,1,,1,1,,,,,,,,,,,,,
10,1,,172149-41480,,"LINK, TRACK(L)",1,1,,1,1,,,,,,,,,,,,,
11,2,,172141-41370,,"BUSH 2015",2,2,,2,2,,,,,,,,,,,,,
13,1,,172149-41530,,"LINK, TRACK(R)",1,1,,1,1,,,,,,,,,,,,,
14,2,,172141-41370,,"BUSH 2015",2,2,,2,2,,,,,,,,,,,,,
16,1,,172149-41600,,"LINK(B), SWING",1,1,,1,1,,,,,,,,,,,,,
17,1,,172149-41710,,"SHAFT, TRACK",1,1,,1,1,,,,,,,,,,,,,
18,1,,172149-41750,,"LINK(A), SWING",1,1,,1,1,,,,,,,,,,,,,
19,2,,172141-41370,,"BUSH 2015",2,2,,2,2,,,,,,,,,,,,,
21,1,,1A1040-45890,,"WASHER 10 36 4.5",1,1,,1,1,,,,,,,,,,,,,
22,1,,172124-46200,,"O-RING 27X5.7",9,9,,9,9,,,,,,,,,,,,,
23,1,,26013-100202,,"BOLT M10X 20",2,2,,2,2,,,,,,,,,,,,,
24,1,,172111-16890,,"GROMMET  9",1,1,,1,1,,,,,,,,,,,,,
25,1,,172149-41800,,"PEDAL, SWING",1,1,,1,1,,,,,,,,,,,,,
26,1,,172141-41940,,"LOCK, SWING",1,1,,1,1,,,,,,,,,,,,,
27,1,,172614-45170,,"SPRING 12",1,1,,1,1,,,,,,,,,,,,,
28,1,,22217-100000,,"SPRING WASHER 10",2,2,,2,2,,,,,,,,,,,,,
29,1,,22417-250200,,"COTTER PIN 2.5X20",1,1,,1,1,,,,,,,,,,,,,
30,1,,26716-100002,,"NUT M10",2,2,,2,2,,,,,,,,,,,,,
31,1,,933171-18390,,"PIN, FOOT BAR",1,1,,1,1,,,,,,,,,,,,,
32,1,,172149-42500,,"ROD(A), SPOOL",2,2,,2,2,,,,,,,,,,,,,
33,1,,172149-42520,,"ROD(B), SPOOL",1,1,,1,1,,,,,,,,,,,,,
34,1,,172149-42590,,ROD(F),1,1,,1,1,,,,,,,,,,,,,
35,1,,172149-42600,,"ROD, DRIVING",1,1,,1,1,,,,,,,,,,,,,
36,1,,172122-46590,,"ELBALL 8",1,1,,1,1,,,,,,,,,,,,,
37,1,,172122-46590,,"ELBALL 8",3,3,,3,3,,,,,,,,,,,,,
38,1,,172122-47250,,"BALL 8, LINK",4,4,,4,4,,,,,,,,,,,,,
39,1,,172122-47250,,"BALL 8, LINK",1,1,,1,1,,,,,,,,,,,,,
40,1,,1C6281-52310,,"PIN 6,COME-OFF SNAP",3,3,,3,3,,,,,,,,,,,,,
41,1,,22217-080000,,"SPRING WASHER  8",4,4,,4,4,,,,,,,,,,,,,
42,1,,22217-080000,,"SPRING WASHER  8",1,1,,1,1,,,,,,,,,,,,,
43,1,,22217-080000,,"SPRING WASHER  8",3,3,,3,3,,,,,,,,,,,,,
44,1,,22217-080000,,"SPRING WASHER  8",1,1,,1,1,,,,,,,,,,,,,
45,1,,26716-080002,,"NUT M 8",4,4,,4,4,,,,,,,,,,,,,
46,1,,26716-080002,,"NUT M 8",9,9,,9,9,,,,,,,,,,,,,
47,1,,26716-080002,,"NUT M 8",8,8,,8,8,,,,,,,,,,,,,
48,1,,933110-54100,,"PIN 4.75X14",3,3,,3,3,,,,,,,,,,,,,
49,1,,26013-100202,,"BOLT M10X 20",1,1,,1,1,,,,,,,,,,,,,
50,1,,26116-100602,,"BOLT M10X 60 PLATED",2,2,,2,2,,,,,,,,,,,,,
51,1,,172149-42610,,"ROD(R) W/BUSH",1,1,,1,1,,,,,,,,,,,,,
```

Fig. 23 ソウジュウソウチ(ソウコウ＆スイング) CONTROL EQUIPMENT (TRAVEL & SWING)

https://truckmanualshub.com/

COUNTRY	U K	A S	E X
Fig. No.	22	23	23

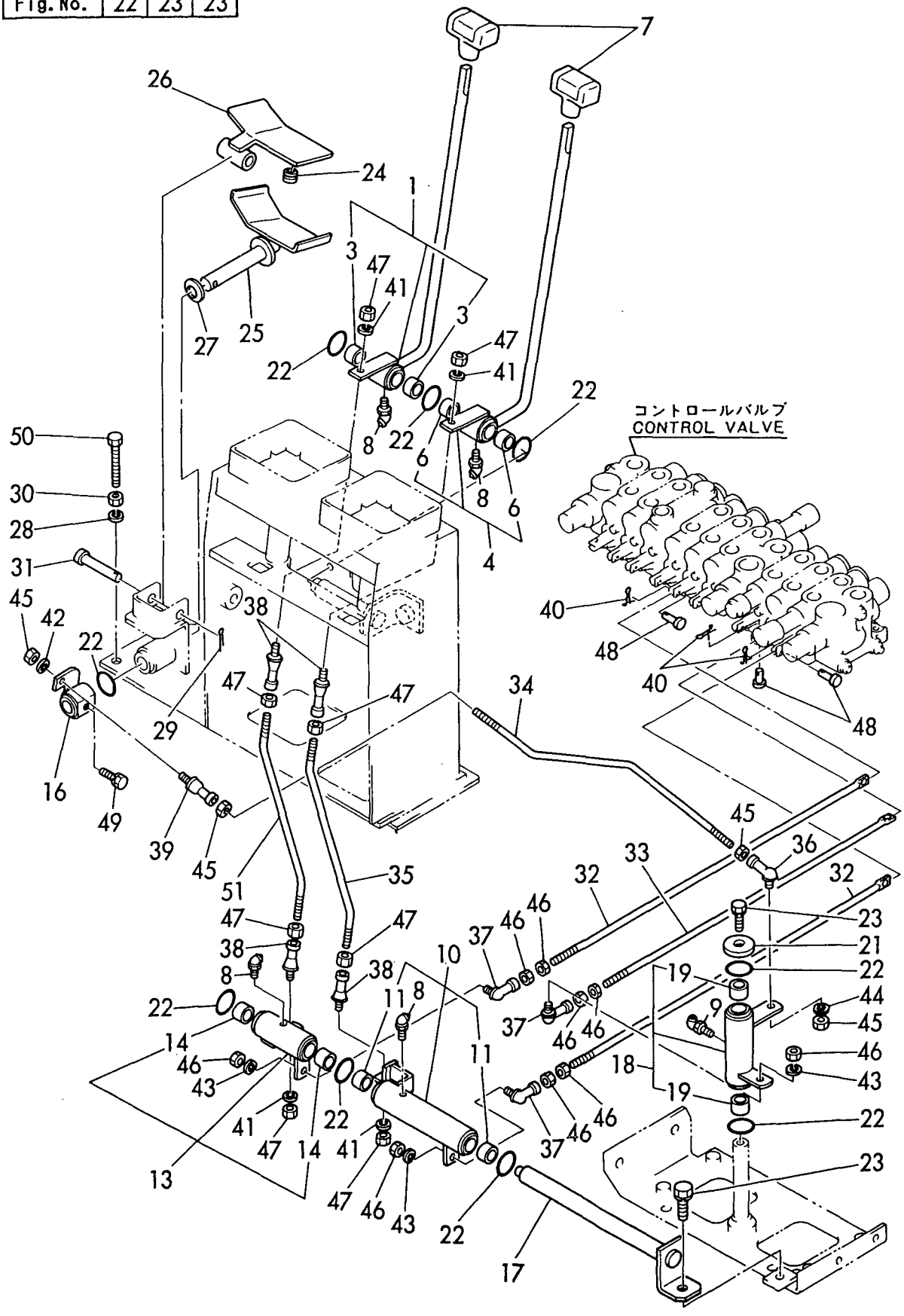

https://truckmanualshub.com/

```
1,1,,172149-41190,,"LEVER, BLADE",1,1,,1,1,,,,,,,,,,,,,
3,2,,172141-41360,,"BUSH 1415",2,2,,2,2,,,,,,,,,,,,,
4,1,,172141-41340,,BOOTS,1,1,,1,1,,,,,,,,,,,,,
5,1,,172116-45940,,"KNOB (C), LEVER",1,1,,1,1,,,,,,,,,,,,,
6,1,,24311-000210,,"O-RING 1A P-21.0",2,2,,2,2,,,,,,,,,,,,,
7,1,,26013-100202,,"BOLT M10X 20",2,2,,2,2,,,,,,,,,,,,,
8,1,,172149-42670,,"SUPPORT, CABLE",1,1,,1,1,,,,,,,,,,,,,
9,1,,172141-42960,,"JOINT, CABLE",1,1,,1,1,,,,,,,,,,,,,
10,1,,172122-46590,,"ELBALL 8",1,1,,1,1,,,,,,,,,,,,,
11,1,,172116-46910,,"JOINT, SPOOL",1,1,,1,1,,,,,,,,,,,,,
12,1,,172149-42680,,"CABLE, BLADE",1,1,,1,1,,,,,,,,,,,,,
13,1,,1C6281-52310,,"PIN 6,COME-OFF SNAP",1,1,,1,1,,,,,,,,,,,,,
14,1,,22217-080000,,"SPRING WASHER  8",2,2,,2,2,,,,,,,,,,,,,
15,1,,933110-54100,,"PIN 4.75X14",1,1,,1,1,,,,,,,,,,,,,
16,1,,26716-080002,,"NUT M 8",1,1,,1,1,,,,,,,,,,,,,
```

Fig. 24 ソウジュウソウチ(ブレード) CONTROL EQUIPMENT (BLADE)

https://truckmanualshub.com/

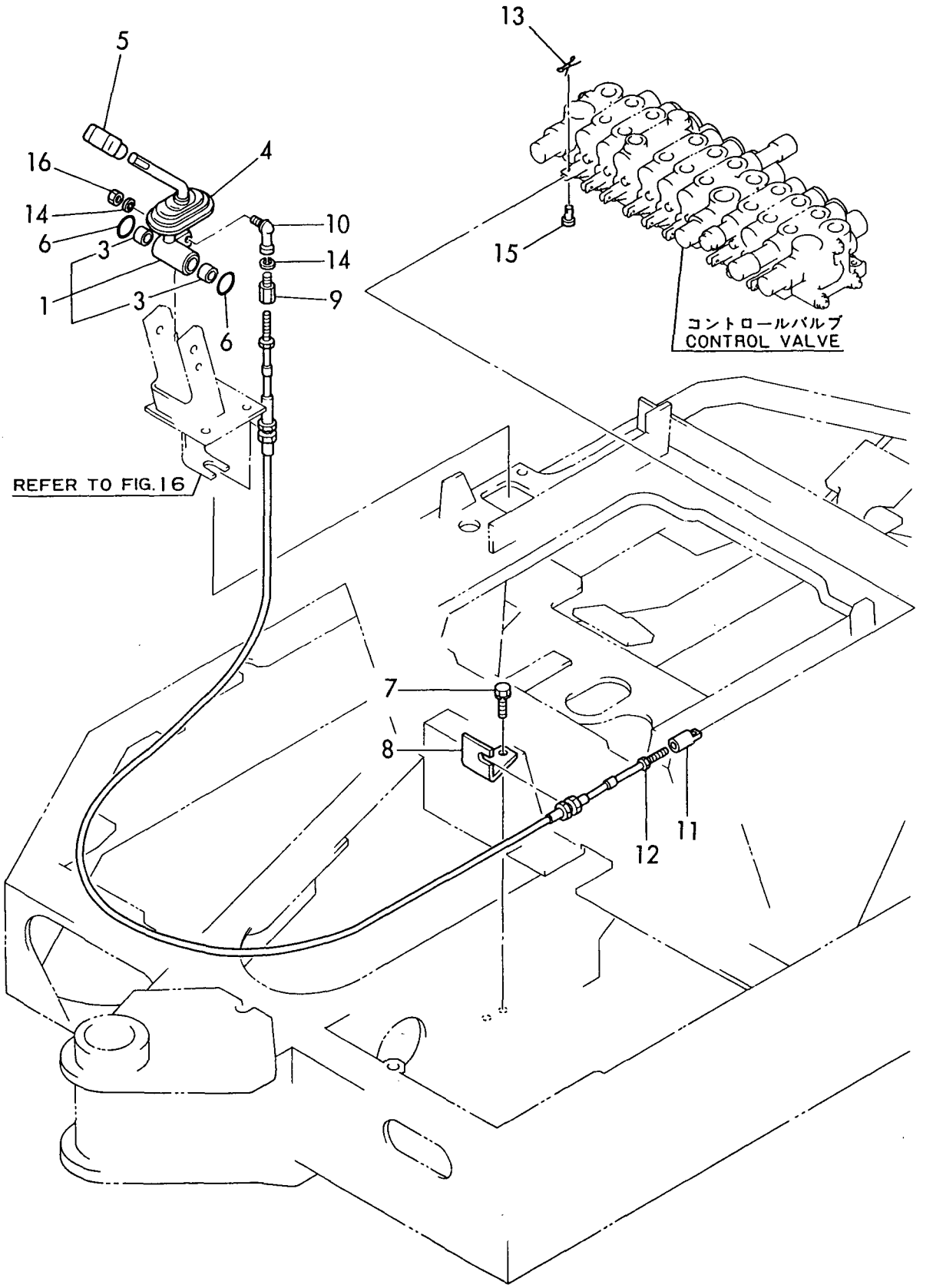

https://truckmanualshub.com/

```
1,1,,172112-41960,,"PIN 8X25.5",1,1,,1,1,,,,,,,,,,,,,
2,1,,172150-42500,,"LEVER(L), LOCK",1,1,,1,1,,,,,,,,,,,,,
3,2,,172141-41360,,"BUSH 1415",2,2,,2,2,,,,,,,,,,,,,
5,1,,172150-42510,,"LEVER(R), LOCK",1,1,,1,1,,,,,,,,,,,,,
6,2,,172141-41360,,"BUSH 1415",2,2,,2,2,,,,,,,,,,,,,
8,1,,172150-42570,,PLATE,2,2,,2,2,,,,,,,,,,,,,
9,1,,172150-42580,,"COLLAR, LOCK",2,2,,2,2,,,,,,,,,,,,,
10,1,,172141-42600,,"PIPE, LOCK",2,2,,2,2,,,,,,,,,,,,,
11,1,,172141-42700,,"LINK, LOCK",4,4,,4,4,,,,,,,,,,,,,
12,1,,172141-42750,,"BOLT, STOPPER",8,8,,8,8,,,,,,,,,,,,,
13,1,,172141-43150,,"HOOK, PEDAL",1,1,,1,1,,,,,,,,,,,,,
14,1,,172141-43160,,"BLACK, PEDAL LOCK",1,1,,1,1,,,,,,,,,,,,,
15,1,,1C6281-52310,,"PIN 6,COME-OFF SNAP",6,6,,6,6,,,,,,,,,,,,,
16,1,,1A1380-56650,,"SPRING,ROTARY CLUTCH",2,2,,2,2,,,,,,,,,,,,,
17,1,,172146-68430,,SPACER,1,1,,1,1,,,,,,,,,,,,,
18,1,,22137-080000,,"WASHER  8",1,1,,1,1,,,,,,,,,,,,,
19,1,,22157-080000,,"WASHER  8",2,2,,2,2,,,,,,,,,,,,,
20,1,,26013-100452,,"BOLT M10X 45",1,1,,1,1,,,,,,,,,,,,,
21,1,,26756-080002,,"LOCK NUT M 8 PLATED",8,8,,8,8,,,,,,,,,,,,,
22,1,,933110-54100,,"PIN 4.75X14",4,4,,4,4,,,,,,,,,,,,,
23,1,,26013-080452,,"BOLT M 8X 45",2,2,,2,2,,,,,,,,,,,,,
24,1,,172116-46630,,"KNOB, LOCK LEVER",2,2,,2,2,,,,,,,,,,,,,
```

Fig. 25 サギョウレバーストッパ OPERATION LEVER STOPPER

https://truckmanualshub.com/

COUNTRY	U K	A S	E X
Fig. No.	25	26	26

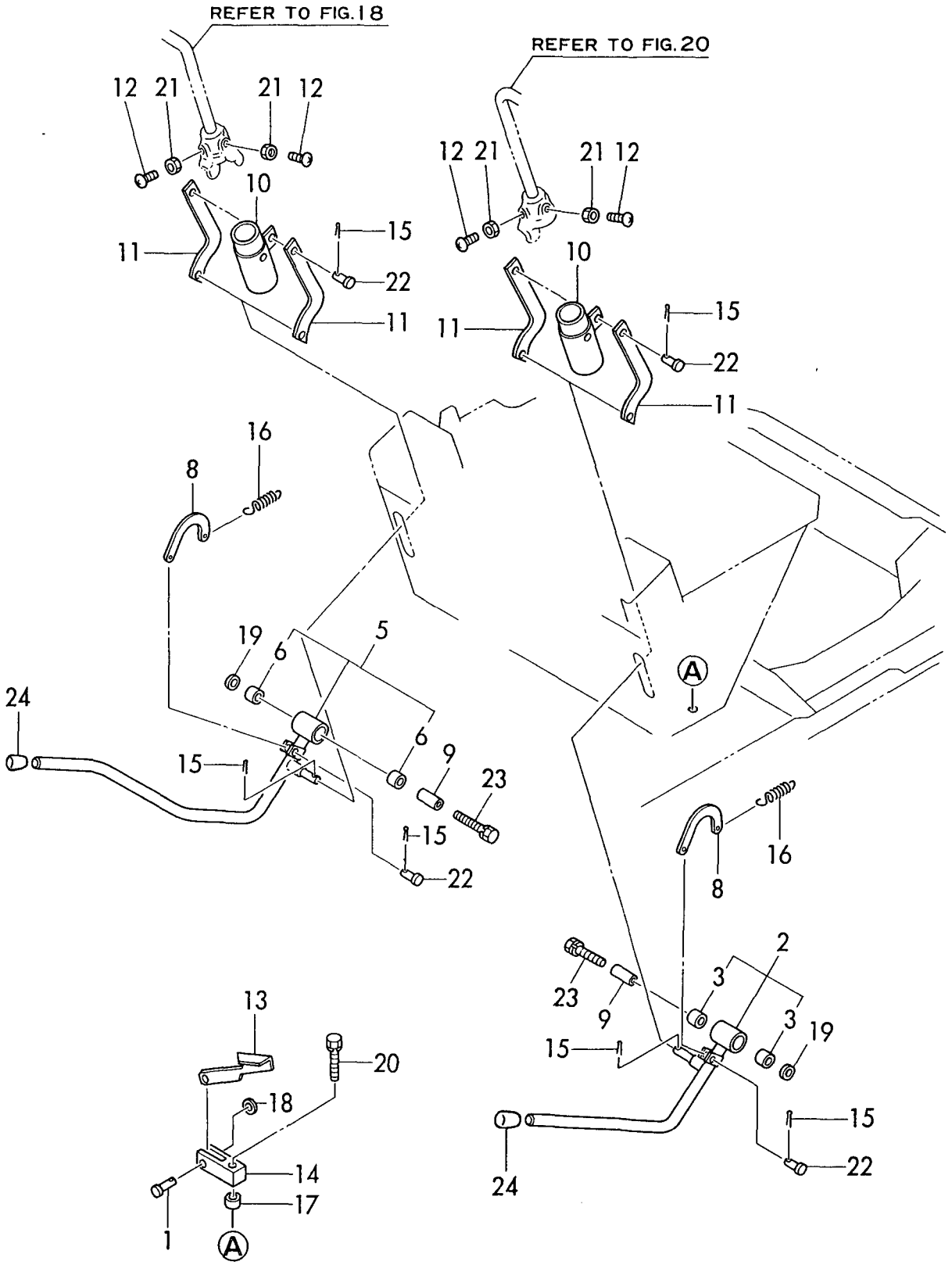

https://truckmanualshub.com/

```
1,1,,172149-42300,,"LEVER, LOCK",1,1,,1,1,,,,,,,,,,,,,
2,1,,172149-42350,,"ARM, LOCK",1,1,,1,1,,,,,,,,,,,,,
3,1,,172149-42390,,SPACER,1,1,,1,1,,,,,,,,,,,,,
4,1,,172141-42600,,"PIPE, LOCK",2,2,,2,2,,,,,,,,,,,,,
5,1,,172141-42700,,"LINK, LOCK",4,4,,4,4,,,,,,,,,,,,,
6,1,,172141-42750,,"BOLT, STOPPER",8,8,,8,8,,,,,,,,,,,,,
7,1,,1C6281-52310,,"PIN 6,COME-OFF SNAP",4,4,,4,4,,,,,,,,,,,,,,
8,1,,22137-120000,,"WASHER 12",4,4,,4,4,,,,,,,,,,,,,
9,1,,26756-080002,,"LOCK NUT M 8 PLATED",8,8,,8,8,,,,,,,,,,,,,
10,1,,26756-120002,,"LOCK NUT M12 PLATED",4,4,,4,4,,,,,,,,,,,,,,
11,1,,933110-54100,,"PIN 4.75X14",4,4,,4,4,,,,,,,,,,,,,
12,1,,933170-01490,,"SPRING 12",4,4,,4,4,,,,,,,,,,,,,
13,1,,172116-46630,,"KNOB, LOCK LEVER",1,1,,1,1,,,,,,,,,,,,,
```

Fig. 26 サギョウレバーストッパ OPERATION LEVER STOPPER

https://truckmanualshub.com/

D72149-45500

COUNTRY	U K	A S	E X
Fig. No.	25	26	26

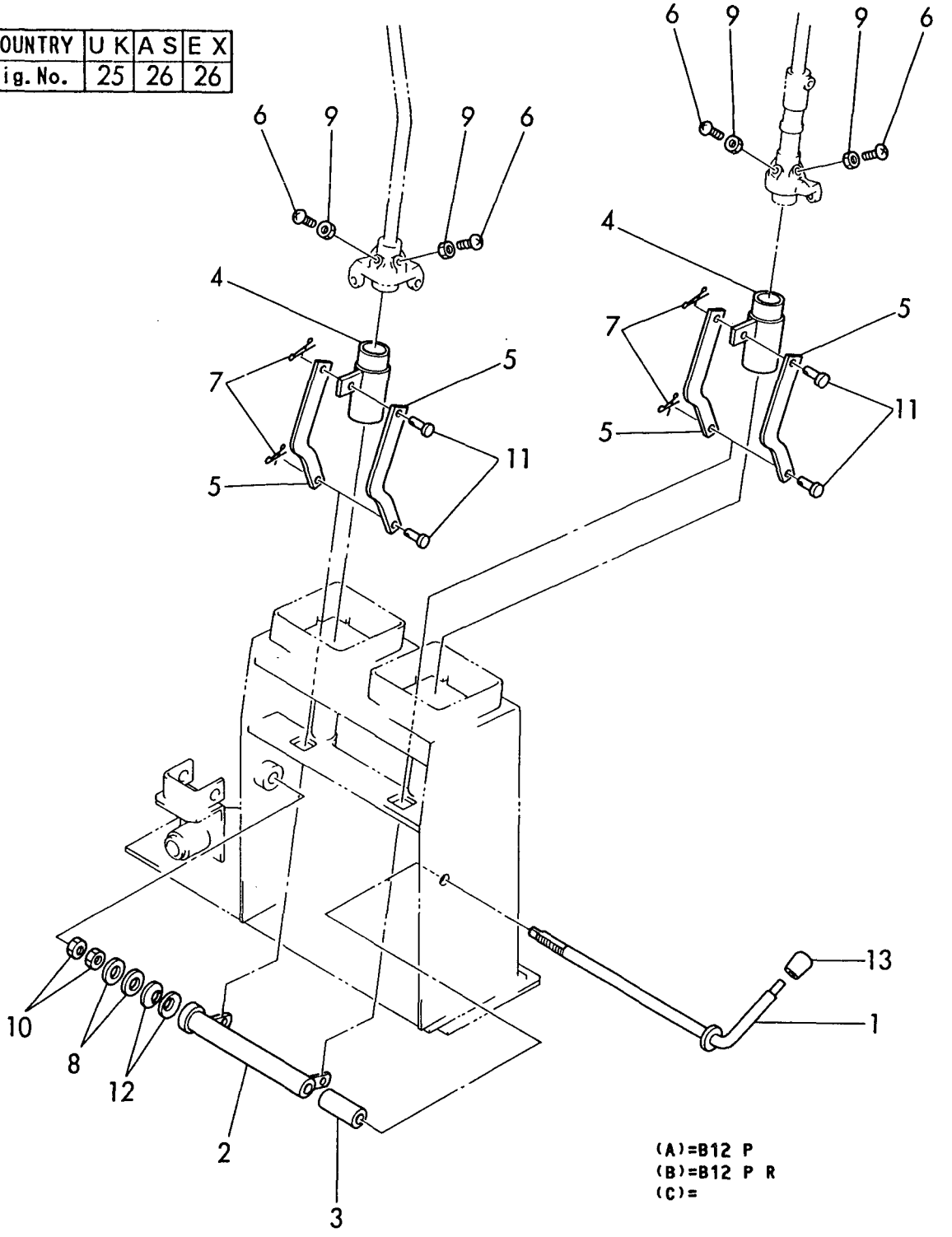

(A)=B12 P
(B)=B12 P R
(C)=

https://truckmanualshub.com/

```
1,1,,172149-53100,,PROTECTOR(L),1,1,,1,1,,,,,,,,,,,,,
2,1,,172149-53190,,PROTECTOR(R),1,1,,1,1,,,,,,,,,,,,,
3,1,,26013-120302,,"BOLT M12X 30",8,8,,8,8,,,,,,,,,,,,,
4,1,,172111-16890,,"GROMMET  9",,,,1,1,,,,,,,,,,,,,
5,1,,172150-53350,,"WEIGHT, COUNTER",,,,1,1,,,,,,,,,,,,,
6,1,,22137-120000,,"WASHER 12",,,,2,2,,,,,,,,,,,,,
7,1,,22217-120000,,"SPRING WASHER 12",,,,2,2,,,,,,,,,,,,,
8,1,,26116-120352,,"BOLT M12X 35 PLATED",,,,2,2,,,,,,,,,,,,,
9,1,,172149-54100,,"FRAME, TURNING",1,1,,1,1,,,,,,,,,,,,,
10,2,,172149-54050,,BUSH,2,2,,2,2,,,,,,,,,,,,,
11,1,,24761-040000,,"NIPPLE B,GREASE",1,1,,1,1,,,,,,,,,,,,,
```

Fig. 27 センカイフレーム TURNING FRAME

https://truckmanualshub.com/

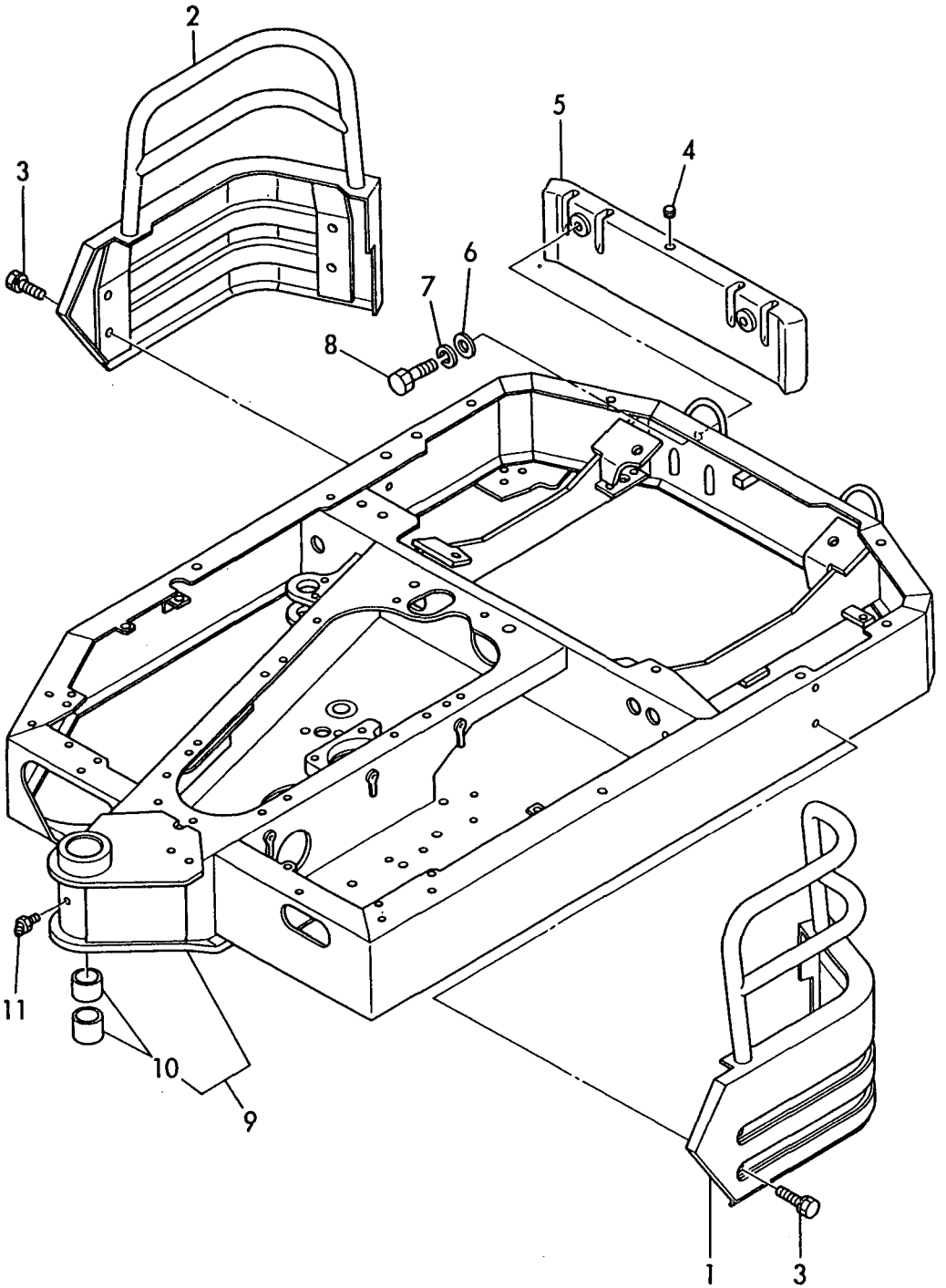

https://truckmanualshub.com/

```
1,1,,172149-57600,,"BEARING, TURNING",1,1,,1,1,,,,,,,,,,,,,
2,2,,172149-57610,,"SEAL SET",1,1,,1,1,,,,,,,,,,,,,
3,3,,172149-57620,,"SEAL, UPPER",1,1,,1,1,,,,,,,,,,,,,
4,3,,172149-57630,,"SEAL,LOWER",1,1,,1,1,,,,,,,,,,,,,
5,1,,22312-100200,,"PARALLEL PIN 10X20",4,4,,4,4,,,,,,,,,,,,,
6,1,,26116-120302,,"BOLT M12X 30 PLATED",18,18,,18,18,,,,,,,,,,,,,,
7,1,,26116-120502,,"BOLT M12X 50 PLATED",18,18,,18,18,,,,,,,,,,,,,,
```

Fig. 28 センカイクドウソウチ TURNING DRIVING GEARS

https://truckmanualshub.com/

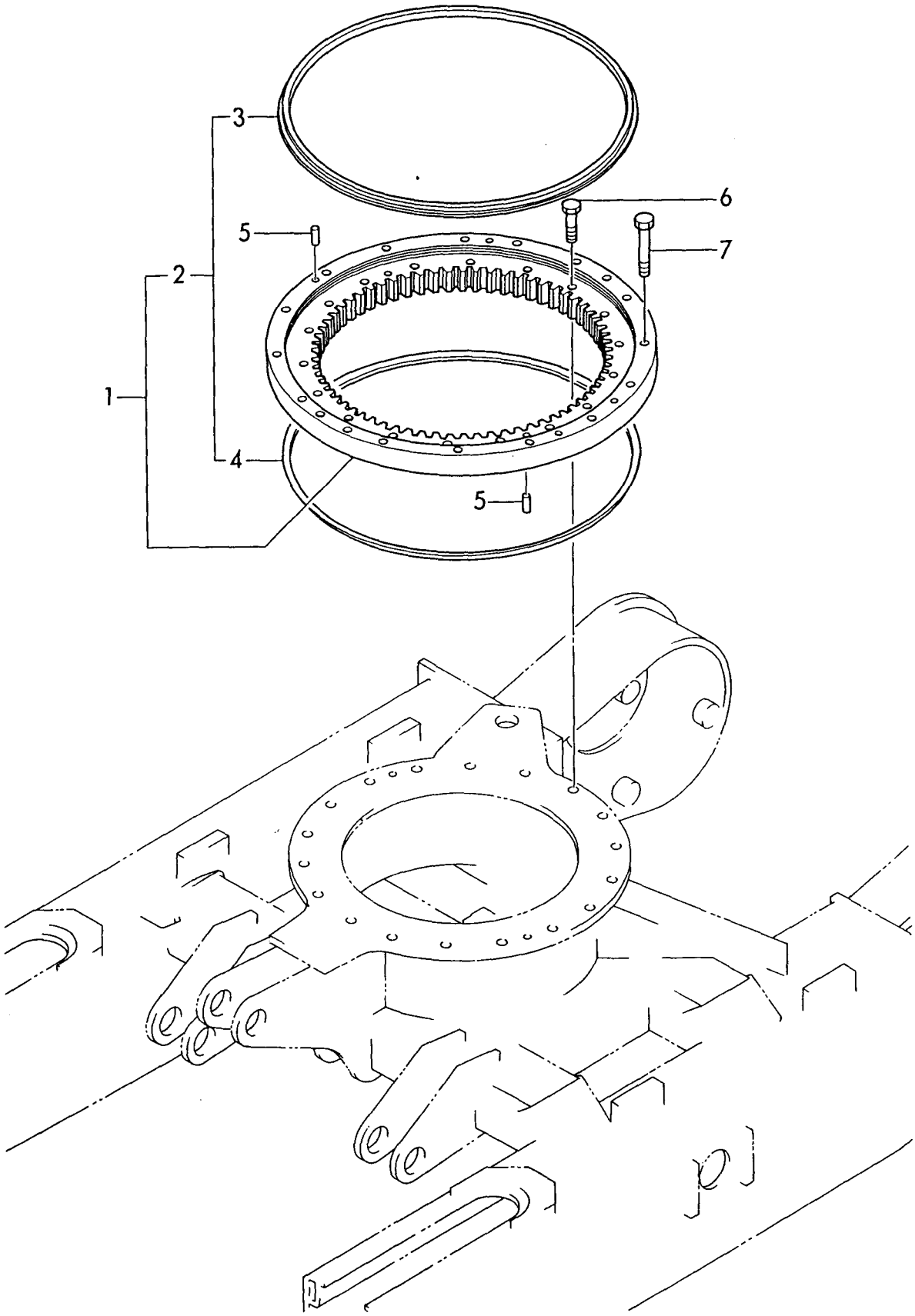

https://truckmanualshub.com/

```
1,1,,172150-05300,,"BOX, TOOL",1,1,,1,1,,,,,,,,,,,,,
2,1,,22137-100000,,"WASHER 10",4,4,,4,4,,,,,,,,,,,,,
3,1,,26013-100202,,"BOLT M10X 20",4,4,,4,4,,,,,,,,,,,,,
4,1,,172116-46630,,"KNOB, LOCK LEVER",1,1,,1,1,,,,,,,,,,,,,
5,1,,172149-58800,,"PIN, LOCK",1,1,,1,1,,,,,,,,,,,,,
6,1,,172149-61100,,"COVER(L), UNDER",1,1,,1,1,,,,,,,,,,,,,
7,1,,172149-61110,,"COVER, UNDER(R)",1,1,,1,1,,,,,,,,,,,,,
8,1,,22217-100000,,"SPRING WASHER 10",8,8,,8,8,,,,,,,,,,,,,
9,1,,26116-100162,,"BOLT M10X 16 PLATED",8,8,,8,8,,,,,,,,,,,,,,
10,1,,194145-04810,,"WASHER 10",2,2,,2,2,,,,,,,,,,,,,
11,1,,194145-04810,,"WASHER 10",4,4,,4,4,,,,,,,,,,,,,
12,1,,194145-04810,,"WASHER 10",3,3,,3,3,,,,,,,,,,,,,
13,1,,172149-65100,,COVER(B),1,1,,1,1,,,,,,,,,,,,,
14,1,,172734-65260,,"PIN, BONNET LEVER",1,1,,1,1,,,,,,,,,,,,,
15,1,,172734-65270,,"SPRING, CATCH",1,1,,1,1,,,,,,,,,,,,,
16,1,,172124-65450,,"LEVER, LOCK",1,1,,1,1,,,,,,,,,,,,,
17,1,,172149-65450,,PLATE(R),1,1,,1,1,,,,,,,,,,,,,
18,1,,172124-65480,,CATCHER,1,1,,1,1,,,,,,,,,,,,,
19,1,,172124-65490,,"PLATE,CATCH",1,1,,1,1,,,,,,,,,,,,,
20,1,,172126-65500,,KEY,1,1,,1,1,,,,,,,,,,,,,
21,1,,172149-65500,,COVER(C),1,1,,1,1,,,,,,,,,,,,,
22,1,,172137-65700,,"RUBBER, CUSHION",2,2,,2,2,,,,,,,,,,,,,
23,1,,172149-65740,,COVER(R),1,1,,1,1,,,,,,,,,,,,,
24,1,,172149-65840,,HOOK,1,1,,1,1,,,,,,,,,,,,,
25,1,,172149-65850,,"PLATE, ROD",1,1,,1,1,,,,,,,,,,,,,
26,1,,22137-080000,,"WASHER  8",2,2,,2,2,,,,,,,,,,,,,
27,1,,22157-080000,,"WASHER  8",2,2,,2,2,,,,,,,,,,,,,
28,1,,22417-200100,,"COTTER PIN 2.0X10",2,2,,2,2,,,,,,,,,,,,,
29,1,,22417-200200,,"COTTER PIN 2.0X20",2,2,,2,2,,,,,,,,,,,,,
30,1,,26013-080162,,"BOLT M 8X 16",2,2,,2,2,,,,,,,,,,,,,
31,1,,26013-100162,,"BOLT M10X 16",3,3,,3,3,,,,,,,,,,,,,
32,1,,26013-100162,,"BOLT M10X 16",8,8,,8,8,,,,,,,,,,,,,
33,1,,26013-100252,,"BOLT M10X 25",4,4,,4,4,,,,,,,,,,,,,
34,1,,26013-120452,,"BOLT M12X 45",4,4,,4,4,,,,,,,,,,,,,
35,1,,26013-100252,,"BOLT M10X 25",2,2,,2,2,,,,,,,,,,,,,
36,1,,172149-64370,,"PLATE, UNDER",1,1,,1,1,,,,,,,,,,,,,
37,1,,172149-64360,,"PLATE, FRAME(L)",1,1,,1,1,,,,,,,,,,,,,
38,1,,26116-100162,,"BOLT M10X 16 PLATED",4,4,,4,4,,,,,,,,,,,,,,
39,1,,22217-100000,,"SPRING WASHER 10",4,4,,4,4,,,,,,,,,,,,,
40,1,,172137-69850,,SCREW,2,2,,2,2,,,,,,,,,,,,,
41,1,,172149-65430,,PLATE(L),1,1,,1,1,,,,,,,,,,,,,
42,1,,172141-68200,,GRIP,1,1,,1,1,,,,,,,,,,,,,
43,1,,26013-100252,,"BOLT M10X 25",2,2,,2,2,,,,,,,,,,,,,
44,1,,172149-05300,,"BOX, TOOL",1,1,,1,1,,,1,,,,,,,,,,
45,1,,172122-55061,,"BRACKET, GREASE PUMP",2,2,,2,2,,,1,,,,,,,,,,
46,1,,22217-060000,,"SPRING WASHER  6",2,2,,2,2,,,1,,,,,,,,,,
47,1,,26013-100202,,"BOLT M10X 20",2,2,,2,2,,,1,,,,,,,,,,
48,1,,26557-060102,,"SCREW M 6X 10",2,2,,2,2,,,1,,,,,,,,,,
```

Fig. 29 ボンネット BONNET

https://truckmanualshub.com/

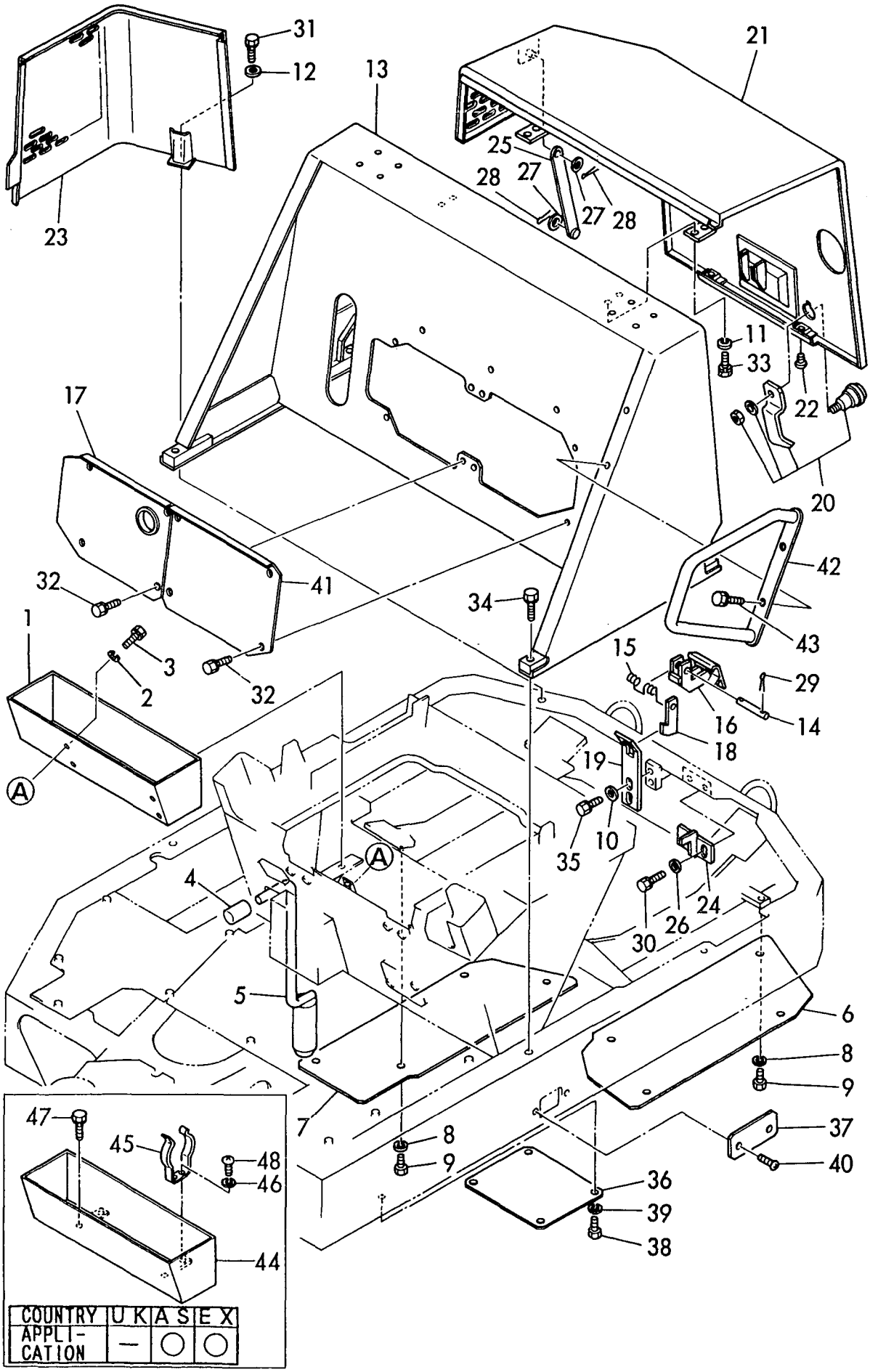

COUNTRY	U K	A S	E X
APPLI-CATION	—	○	○

https://truckmanualshub.com/

```
1,1,,194145-04810,,"WASHER 10",2,2,,2,2,,,,,,,,,,,,,
2,1,,172150-62100,,"STEP, FRONT",1,1,,1,1,,,,,,,,,,,,,
3,1,,172150-62200,,"STEP, CENTER",1,1,,1,1,,,,,,,,,,,,,
4,1,,172150-62220,,"STEP, SIDE",1,1,,1,1,,,,,,,,,,,,,
5,1,,172150-62250,,"MAT, FLOOR",1,1,,1,1,,,,,,,,,,,,,
6,1,,22217-100000,,"SPRING WASHER 10",11,11,,11,11,,,,,,,,,,,,,
7,1,,26116-100202,,"BOLT M10X 20 PLATED",11,11,,11,11,,,,,,,,,,,,,
8,1,,194740-00160,,"WASHER 10, CONICAL",2,2,,2,2,,,,,,,,,,,,,
9,1,,172142-43390,,"COVER, SUPPORT",2,2,,2,2,,,,,,,,,,,,,
10,1,,172116-46630,,"KNOB, LOCK LEVER",1,1,,1,1,,,,,,,,,,,,,
11,1,,172149-64480,,"COLLAR 11X21",1,1,,1,1,,,,,,,,,,,,,
12,1,,1C6281-52320,,"PIN 8,COME-OFF SNAP",2,2,,2,2,,,,,,,,,,,,,
13,1,,194201-61330,,"WASHER 11",5,5,,5,5,,,,,,,,,,,,,
14,1,,172150-64200,,"MOUNT, SEAT",1,1,,1,1,,,,,,,,,,,,,
15,1,,172141-64370,,"CUSHION, SEAT",2,2,,2,2,,,,,,,,,,,,,
16,1,,172150-64550,,"PLATE, SEAT",1,1,,1,1,,,,,,,,,,,,,
17,1,,172149-64450,,"LEVER, SEAT LOCK",1,1,,1,1,,,,,,,,,,,,,
18,1,,172149-64470,,"SEAL, MOUNT",1,1,,1,1,,,,,,,,,,,,,
19,1,,172131-65181,,CABLE,1,1,,1,1,,,,,,,,,,,,,
20,1,,22137-100000,,"WASHER 10",1,1,,1,1,,,,,,,,,,,,,
21,1,,26013-080162,,"BOLT M 8X 16",6,6,,6,6,,,,,,,,,,,,,
22,1,,26013-100202,,"BOLT M10X 20",6,6,,6,6,,,,,,,,,,,,,
23,1,,26716-100002,,"NUT M10",2,2,,2,2,,,,,,,,,,,,,
24,1,,22217-080000,,"SPRING WASHER  8",4,4,,4,4,,,,,,,,,,,,,
25,1,,26716-080002,,"NUT M 8",4,4,,4,4,,,,,,,,,,,,,
26,1,,22137-080000,,"WASHER  8",4,4,,4,4,,,,,,,,,,,,,
27,1,,172137-64201,,SEAT,1,1,,1,1,,,,,,,,,,,,,
28,1,,172149-64420,,"ADJUSTER, SEAT",2,2,,2,2,,,,,,,,,,,,,
29,1,,22137-080000,,"WASHER  8",4,4,,4,4,,,,,,,,,,,,,
30,1,,26013-080162,,"BOLT M 8X 16",4,4,,4,4,,,,,,,,,,,,,
31,1,,26013-080162,,"BOLT M 8X 16",4,4,,4,4,,,,,,,,,,,,,
```

Fig. 30 シート＆ステップ SEAT & STEP

https://truckmanualshub.com/

COUNTRY	U K	A S	E X
Fig. No.	30	31	31

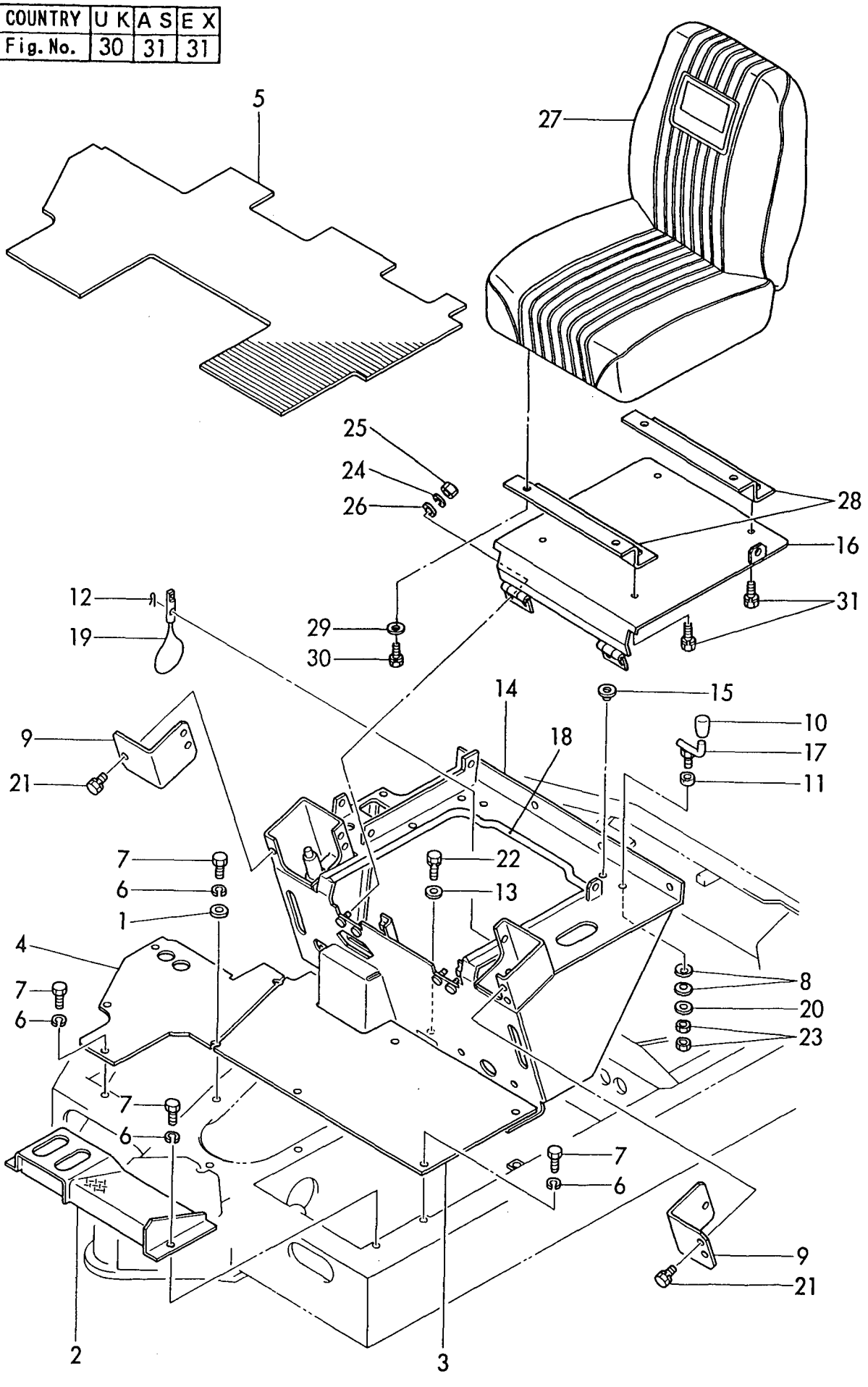

https://truckmanualshub.com/

```
1,1,,194145-04810,,"WASHER 10",2,2,,2,2,,,,,,,,,,,,,
2,1,,172149-62100,,"STEP, CENTER",1,1,,1,1,,,,,,,,,,,,,
3,1,,172149-62150,,"STEP, SIDE",1,1,,1,1,,,,,,,,,,,,,
4,1,,26013-100202,,"BOLT M10X 20",10,10,,10,10,,,,,,,,,,,,,
5,1,,172149-64200,,MOUNT,1,1,,1,1,,,,,,,,,,,,,
6,1,,172149-64340,,"COVER, PEDAL",1,1,,1,1,,,,,,,,,,,,,
7,1,,172149-64400,,"PLATE, SEAT",1,1,,1,1,,,,,,,,,,,,,
8,1,,172149-64420,,"ADJUSTER, SEAT",2,2,,2,2,,,,,,,,,,,,,
9,1,,172149-64450,,"LEVER, SEAT LOCK",1,1,,1,1,,,,,,,,,,,,,
10,1,,172149-64470,,"SEAL, MOUNT",1,1,,1,1,,,,,,,,,,,,,
11,1,,22217-080000,,"SPRING WASHER  8",4,4,,4,4,,,,,,,,,,,,,
12,1,,22217-100000,,"SPRING WASHER 10",2,2,,2,2,,,,,,,,,,,,,
13,1,,26013-080162,,"BOLT M 8X 16",4,4,,4,4,,,,,,,,,,,,,
14,1,,26013-100202,,"BOLT M10X 20",6,6,,6,6,,,,,,,,,,,,,
15,1,,26716-080002,,"NUT M 8",4,4,,4,4,,,,,,,,,,,,,
16,1,,26716-100002,,"NUT M10",2,2,,2,2,,,,,,,,,,,,,
17,1,,172149-64480,,"COLLAR 11X21",1,1,,1,1,,,,,,,,,,,,,
18,1,,194740-00160,,"WASHER 10, CONICAL",2,2,,2,2,,,,,,,,,,,,,
19,1,,26716-100002,,"NUT M10",2,2,,2,2,,,,,,,,,,,,,
20,1,,172116-46630,,"KNOB, LOCK LEVER",1,1,,1,1,,,,,,,,,,,,,
21,1,,22137-100000,,"WASHER 10",1,1,,1,1,,,,,,,,,,,,,
22,1,,172137-64201,,SEAT,1,1,,1,1,,,,,,,,,,,,,
23,1,,172141-64370,,"CUSHION, SEAT",2,2,,2,2,,,,,,,,,,,,,
24,1,,22157-100000,,"WASHER 10",6,6,,6,6,,,,,,,,,,,,,
25,1,,22137-080000,,"WASHER  8",4,4,,4,4,,,,,,,,,,,,,
26,1,,26013-080162,,"BOLT M 8X 16",4,4,,4,4,,,,,,,,,,,,,
```

Fig. 31 シート＆ステップ SEAT & STEP

https://truckmanualshub.com/

COUNTRY	U K	A S	E X
Fig. No.	30	31	31

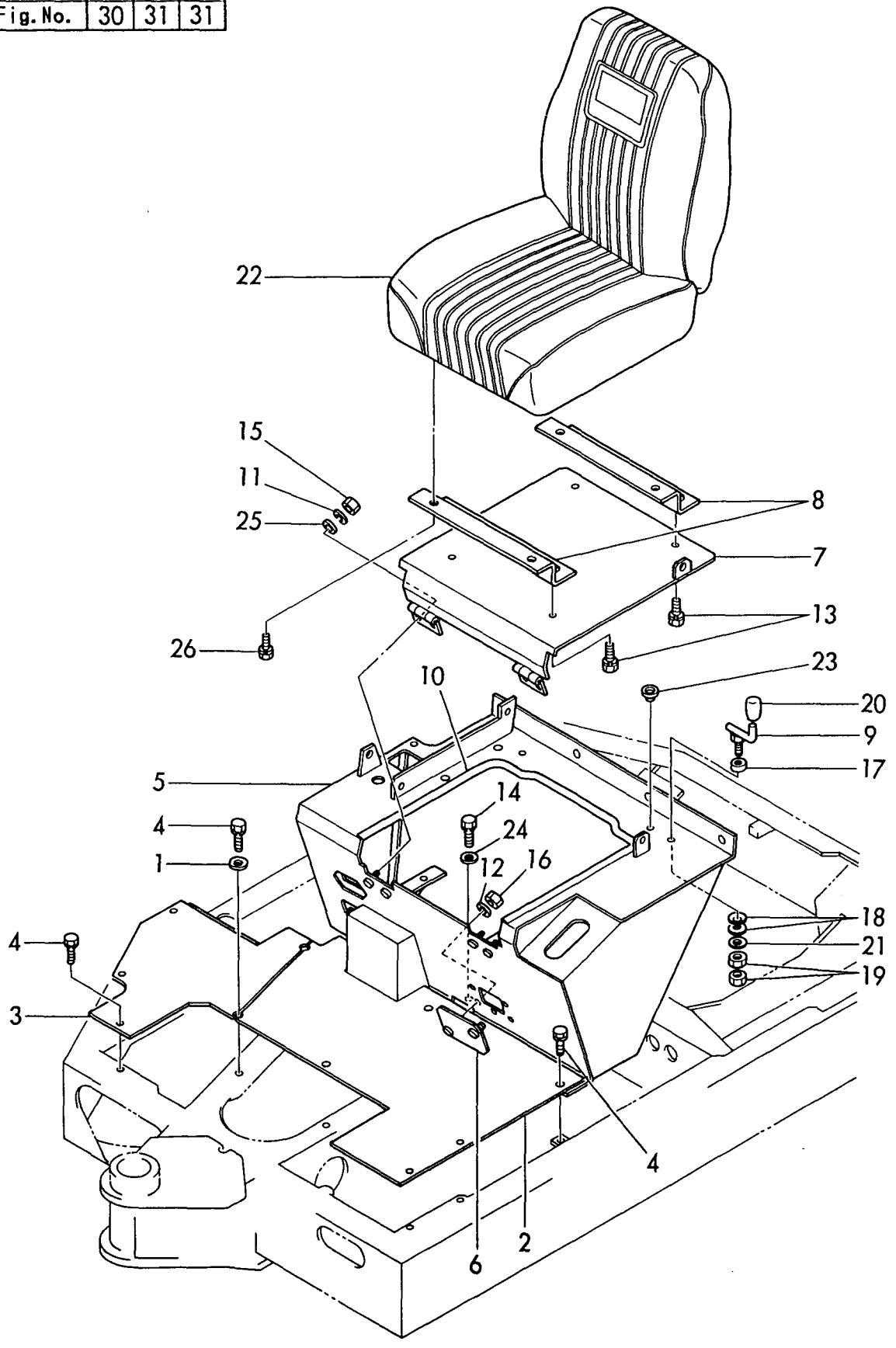

https://truckmanualshub.com/

```
1,1,,772149-66330,,"CANOPY ASSY",1,1,,1,1,,,,,,,,,,,,,
2,2,,172149-66300,,"COLUMN, CANOPY",1,1,,1,1,,,,,,,,,,,,,
3,2,,172149-66550,,WASHER,8,8,,8,8,,,,,,,,,,,,,
4,2,,26013-120352,,"BOLT M12X 35",14,14,,14,14,,,,,,,,,,,,,
5,2,,172149-66390,,"ROOF, CANOPY",1,1,,1,1,,,,,,,,,,,,,
6,3,,172149-66400,,"ROOF, CANOPY",1,1,,1,1,,,,,,,,,,,,,
7,3,,172149-66520,,"TRIM(A), ROOF",2,2,,2,2,,,,,,,,,,,,,
8,3,,172149-66530,,"TRIM(B), ROOF",1,1,,1,1,,,,,,,,,,,,,
9,1,,172149-66570,,"SAFETY WALK (R)",1,1,,1,1,,,,,,,,,,,,,
10,1,,172149-66580,,"SAFETY WALK (L)",1,1,,1,1,,,,,,,,,,,,,
11,1,,172112-69790,,"PLUG 32X2",2,2,,2,2,,,,72149011,,72149011,,,,72149011,,,,
12,1,,22137-100000,,"WASHER 10",6,6,,6,6,,,,,,,,,,,,,
13,1,,22217-100000,,"SPRING WASHER 10",6,6,,6,6,,,,,,,,,,,,,
14,1,,26013-100252,,"BOLT M10X 25",4,4,,4,4,,,,,,,,,,,,,
15,1,,172149-68300,,CANOPY(F),1,1,,1,1,,,,,,,,,,,,,
16,1,,172149-68350,,"COVER, FRONT",1,1,,1,1,,,,,,,,,,,,,
17,1,,26116-100162,,"BOLT M10X 16 PLATED",6,6,,6,6,,,,,,,,,,,,,
```

Fig. 32 ロプス ROPS

https://truckmanualshub.com/

COUNTRY	U K	A S	E X
Fig. No.	32	33	33

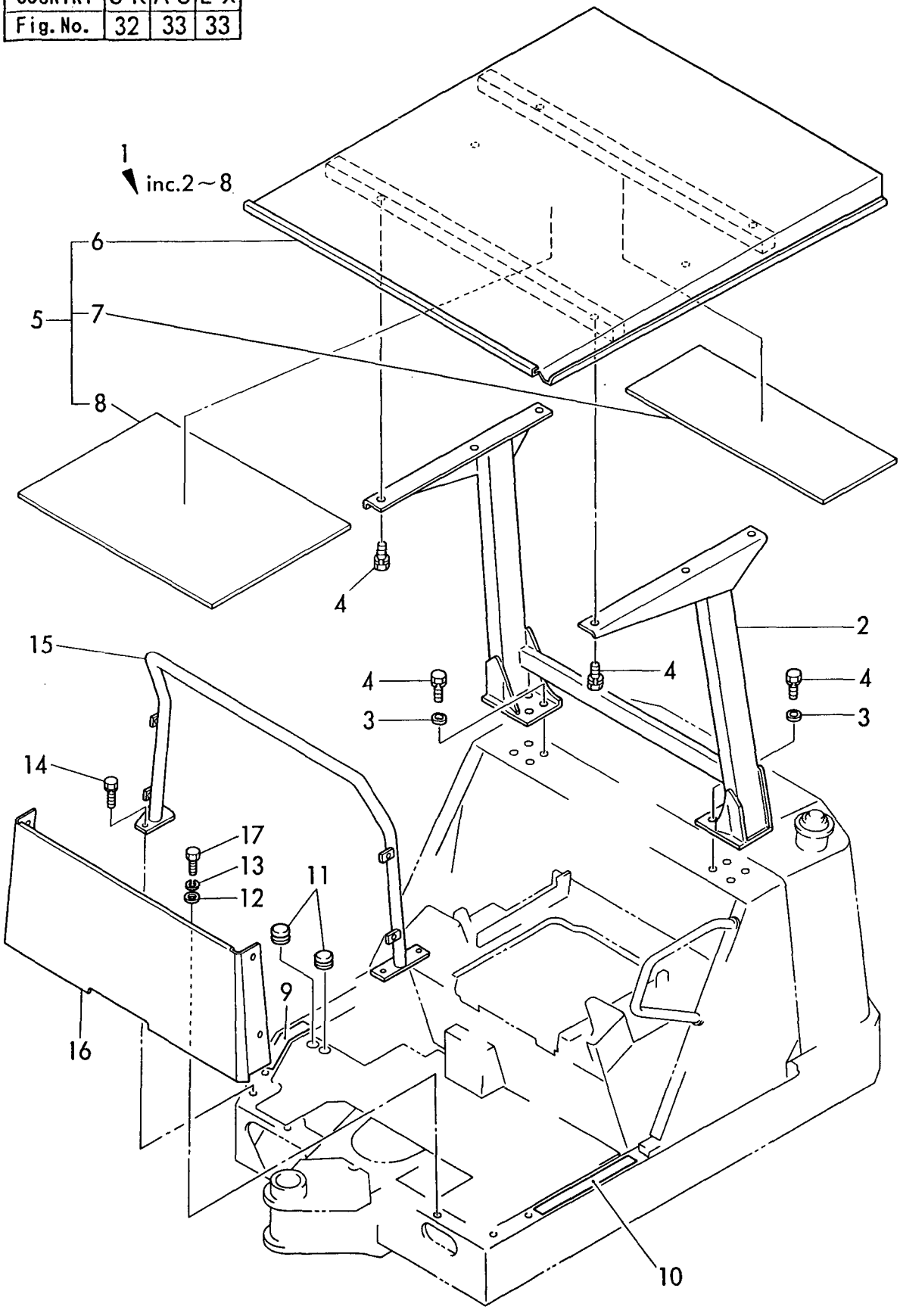

https://truckmanualshub.com/

```
1,1,,772149-68100,,"CANOPY ASSY",1,1,,1,1,,,,,,,,,,,,,
2,2,,172149-68110,,"POLE(L), CANOPY",1,1,,1,1,,,,,,,,,,,,,
3,2,,172149-68120,,"POLE(R), CANOPY",1,1,,1,1,,,,,,,,,,,,,
4,2,,172134-68200,,"ROOF, CANOPY",1,1,,1,1,,,,,,,,,,,,,
5,2,,26013-120252,,"BOLT M12X 25",6,6,,6,6,,,,,,,,,,,,,
6,2,,26013-120352,,"BOLT M12X 35",8,8,,8,8,,,,,,,,,,,,,
7,1,,22137-100000,,"WASHER 10",6,6,,6,6,,,,,,,,,,,,,
8,1,,22217-100000,,"SPRING WASHER 10",6,6,,6,6,,,,,,,,,,,,,
9,1,,26013-100252,,"BOLT M10X 25",4,4,,4,4,,,,,,,,,,,,,
10,1,,172149-68300,,CANOPY(F),1,1,,1,1,,,,,,,,,,,,,
11,1,,172149-68350,,"COVER, FRONT",1,1,,1,1,,,,,,,,,,,,,
12,1,,26116-100162,,"BOLT M10X 16 PLATED",6,6,,6,6,,,,,,,,,,,,,
```

Fig. 33 キャノピ CANOPY

https://truckmanualshub.com/

COUNTRY	U K	A S	E X
Fig. No.	32	33	33

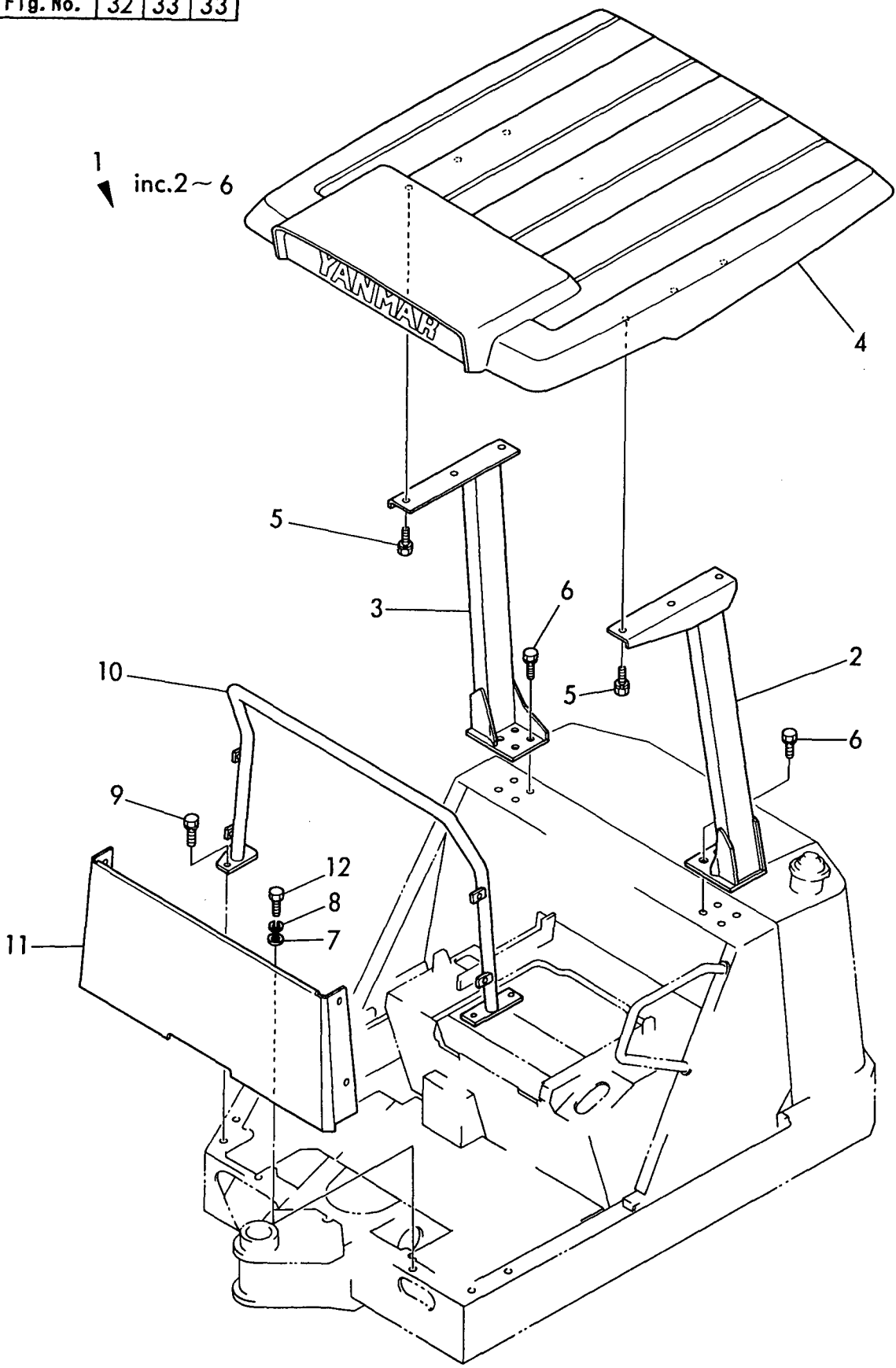

https://truckmanualshub.com/

```
1,1,,172149-72100,,"CYLINDER ASSY,BOOM",1,1,,1,1,,,,,,,,,,,,,
2,2,,772149-72110,,"TUBE W/BUSH, BOOM",1,1,,1,1,,,,,,,,,,,,,
4,3,,172141-72560,,"BUSH 35 40 A, PIN",1,1,,1,1,,,,,,,,,,,,,
5,2,,772149-72200,,"ROD W/BUSH, BOOM",1,1,,1,1,,,,,,,,,,,,,
7,3,,172141-72560,,"BUSH 35 40 A, PIN",1,1,,1,1,,,,,,,,,,,,,
8,2,,172149-72240,,"HEAD 6035",1,1,,1,1,,,,,,,,,,,,,
9,3,,933111-01600,,"BUSH 35 30, ROD",1,1,,1,1,,,,,,,,,,,,,
10,2,,172137-72250,,"COLLAR, CUSHION",1,1,,1,1,,,,,,,,,,,,,
11,2,,172137-72260,,"RING 41, CUSHION",1,1,,1,1,,,,,,,,,,,,,
12,2,,172137-72271,,"COLLAR 41B, CUSHION",1,1,,1,1,,,,,,,,,,,,,,
13,2,,172137-72431,,"PISTON 60G",1,1,,1,1,,,,,,,,,,,,,
14,2,,172137-72462,,"SEAL SET 60B, PISTON",1,1,,1,1,,,,,,,,,,,,,,
18,2,,172149-72010,,"SEAL SET, HEAD",1,1,,1,1,,,,,,,,,,,,,
24,2,,172141-72580,,"NUT M20",1,1,,1,1,,,,,,,,,,,,,
25,2,,172141-73090,,"RING 50, SPRING",1,1,,1,1,,,,,,,,,,,,,
26,2,,24761-040000,,"NIPPLE B,GREASE",1,1,,1,1,,,,,,,,,,,,,
27,2,,933125-59600,,"WASHER 60 B, LOCK",1,1,,1,1,,,,,,,,,,,,,
28,1,,172149-72280,,"COVER, BOOM",1,1,,1,1,,,,,,,,,,,,,
29,1,,22157-100000,,"WASHER 10",1,1,,1,1,,,,,,,,,,,,,
30,1,,22217-100000,,"SPRING WASHER 10",1,1,,1,1,,,,,,,,,,,,,
31,1,,26116-100162,,"BOLT M10X 16 PLATED",1,1,,1,1,,,,,,,,,,,,,,
32,1,,933168-14170,,"SPRING 16",2,2,,2,2,,,,,,,,,,,,,
```

Fig. 34 ブームシリンダ BOOM CYLINDER

https://truckmanualshub.com/

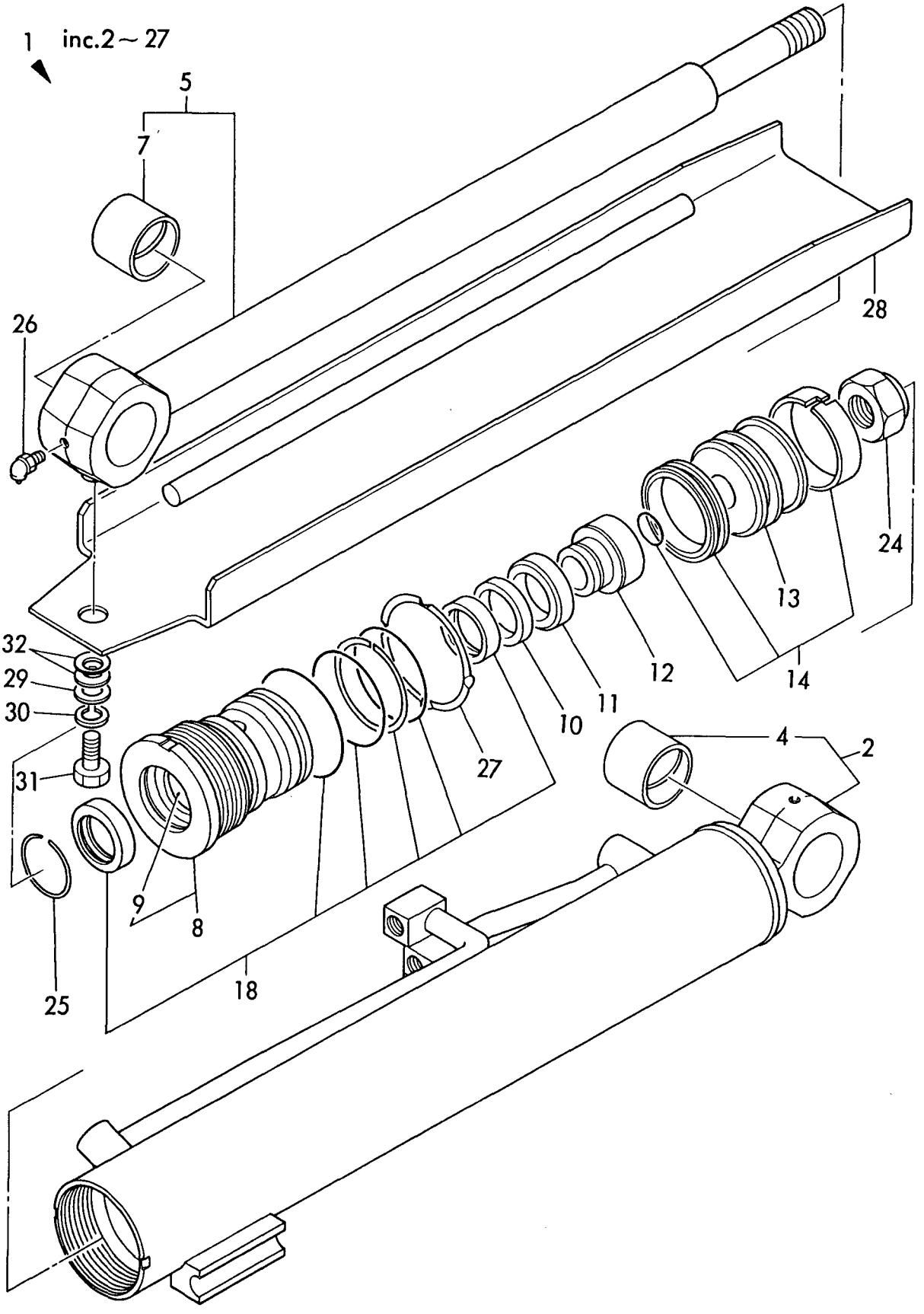

https://truckmanualshub.com/

```
1,1,,172149-72350,,"CYLINDER ASSY, ARM",1,1,,1,1,,,,,,,,,,,,,
2,2,,772149-72360,,"TUBE W/BUSH, ARM",1,1,,1,1,,,,,,,,,,,,,
4,3,,933125-05400,,"BUSH 30X40, PIN",1,1,,1,1,,,,,,,,,,,,,
5,2,,772149-72380,,"ROD W/BUSH, ARM",1,1,,1,1,,,,,,,,,,,,,
7,3,,933125-05400,,"BUSH 30X40, PIN",1,1,,1,1,,,,,,,,,,,,,
8,2,,172137-72431,,"PISTON 60G",1,1,,1,1,,,,,,,,,,,,,
9,2,,172141-72540,,"HEAD 6035, CYLINDER",1,1,,1,1,,,,,,,,,,,,,
10,3,,933111-01600,,"BUSH 35 30, ROD",1,1,,1,1,,,,,,,,,,,,,
11,2,,172137-72452,,"SEAL SET 60A, PISTON",1,1,,1,1,,,,,,,,,,,,,
14,2,,172141-71900,,"SEAL SET, HEAD",1,1,,1,1,,,,,,,,,,,,,
19,2,,172141-72580,,"NUT M20",1,1,,1,1,,,,,,,,,,,,,
20,2,,172141-73090,,"RING 50, SPRING",1,1,,1,1,,,,,,,,,,,,,
21,2,,24761-040000,,"NIPPLE B,GREASE",2,2,,2,2,,,,,,,,,,,,,
22,2,,933125-59600,,"WASHER 60 B, LOCK",1,1,,1,1,,,,,,,,,,,,,
```

Fig. 35 アームシリンダ ARM CYLINDER

https://truckmanualshub.com/

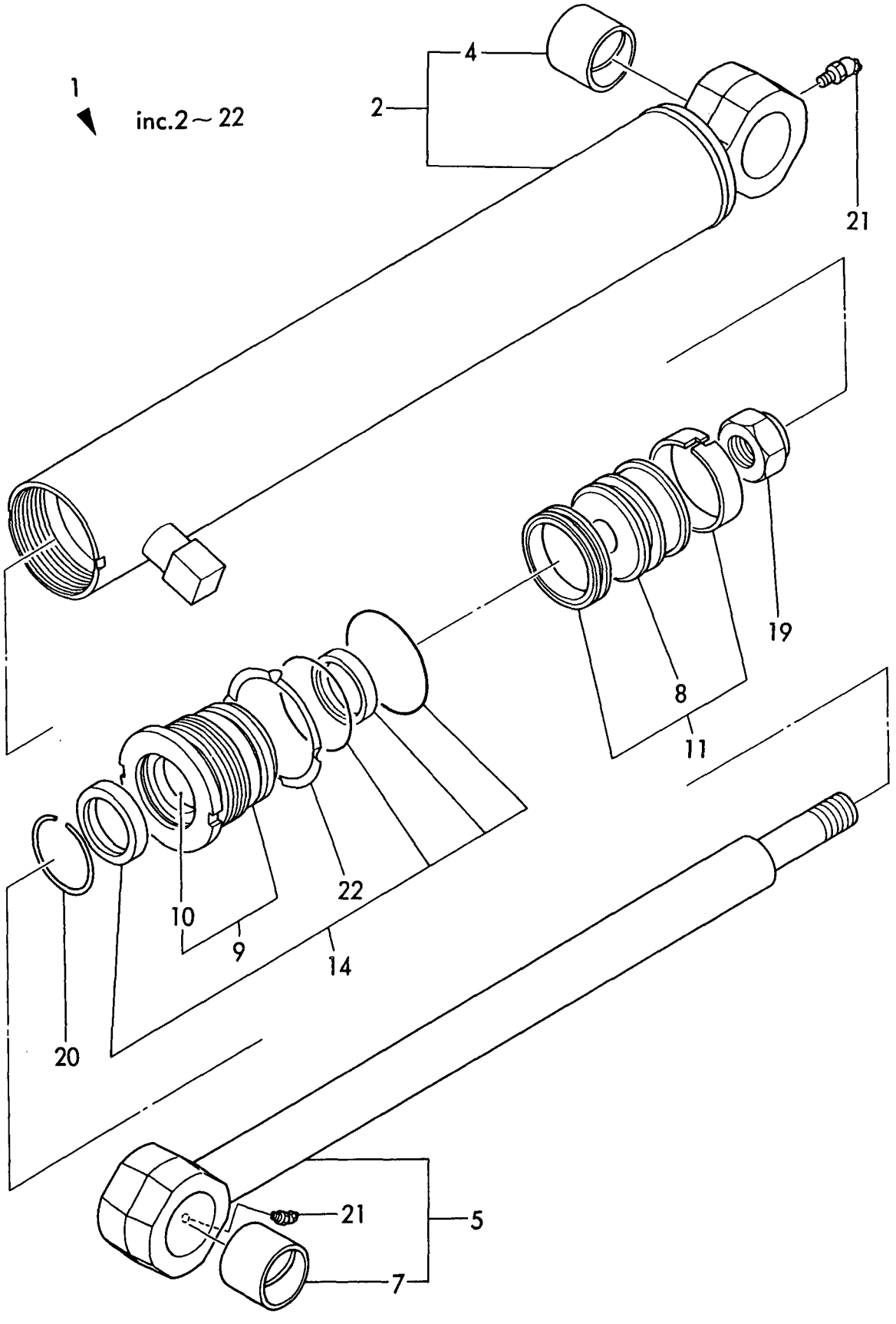

https://truckmanualshub.com/

```
1,1,,933120-28401,,"CYLINDER ASSY,BUCKET",1,1,,1,1,,,,,,,,,,,,,,
2,2,,172137-72431,,"PISTON 60G",1,1,,1,1,,,,,,,,,,,,,
3,2,,172137-72452,,"SEAL SET 60A, PISTON",1,1,,1,1,,,,,,,,,,,,,,
6,2,,24761-040000,,"NIPPLE B,GREASE",1,1,,1,1,,,,,,,,,,,,,
7,2,,933721-28401,,"TUBE W/BUSH, BUCKET",1,1,,1,1,,,,,,,,,,,,,,
9,3,,933125-05400,,"BUSH 30X40, PIN",1,1,,1,1,,,,,,,,,,,,,
10,2,,172141-71900,,"SEAL SET, HEAD",1,1,,1,1,,,,,,,,,,,,,
15,2,,933722-28300,,"ROD ASSY",1,1,,1,1,,,,,,,,,,,,,
17,3,,933125-05500,,"BUSH 30X40 B, PIN",1,1,,1,1,,,,,,,,,,,,,,
18,2,,933125-59600,,"WASHER 60 B, LOCK",1,1,,1,1,,,,,,,,,,,,,,
19,2,,172141-72580,,"NUT M20",1,1,,1,1,,,,,,,,,,,,,
20,2,,172141-72540,,"HEAD 6035, CYLINDER",1,1,,1,1,,,,,,,,,,,,,,
21,3,,933111-01600,,"BUSH 35 30, ROD",1,1,,1,1,,,,,,,,,,,,,
22,2,,172141-73090,,"RING 50, SPRING",1,1,,1,1,,,,,,,,,,,,,
```

Fig. 36 バケットシリンダ BUCKET CYLINDER

https://truckmanualshub.com/

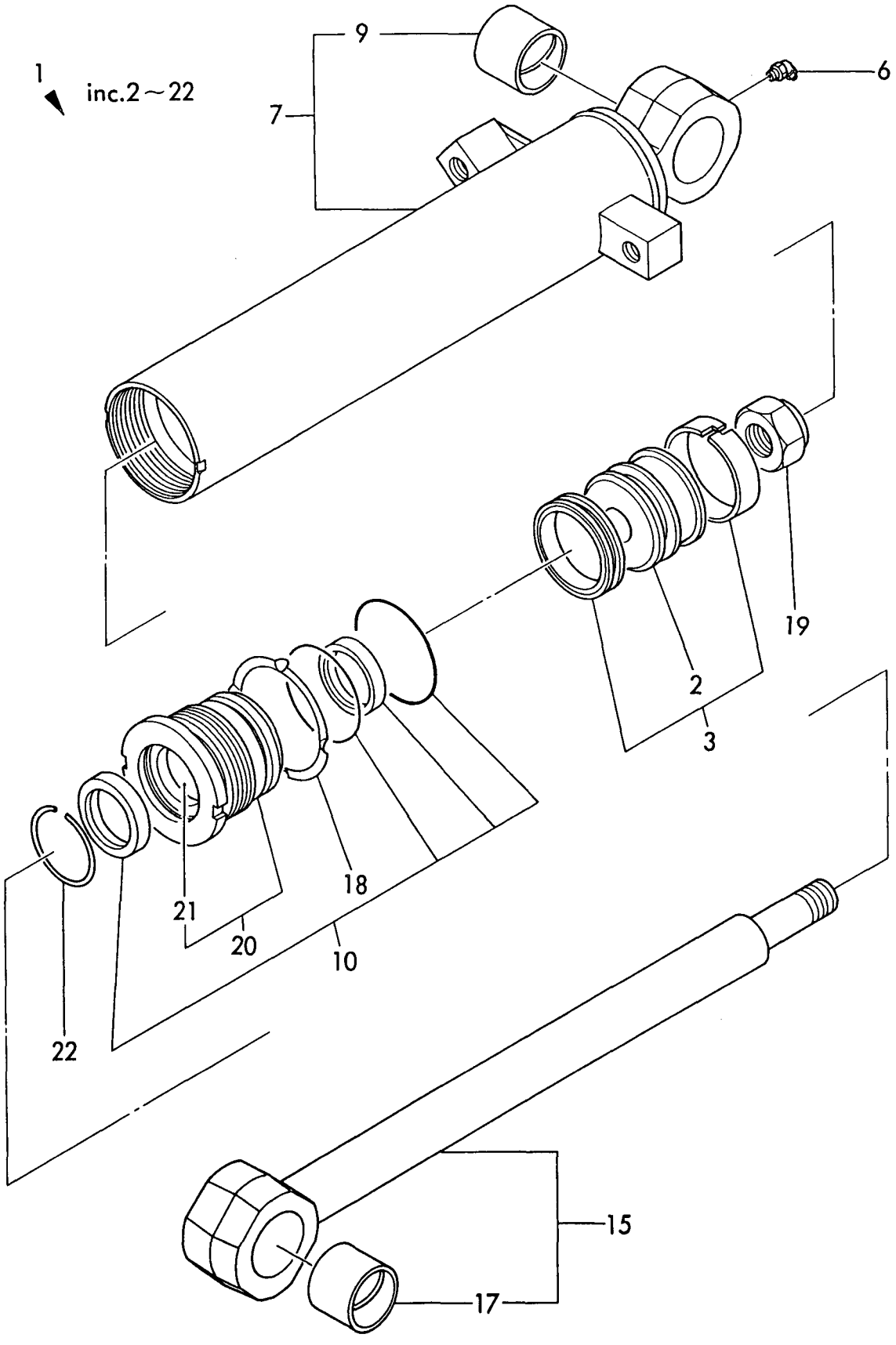

https://truckmanualshub.com/

```
1,1,,172149-72450,,"CYLINDER ASSY, SWING",1,1,,1,1,,,,,,,,,,,,,
2,2,,172149-72020,,"SEAL SET, HEAD",1,1,,1,1,,,,,,,,,,,,,
8,2,,172141-72250,,"U-NUT M27",1,1,,1,1,,,,,,,,,,,,,
9,2,,172141-72420,,"WASHER 70, LOCK",1,1,,1,1,,,,,,,,,,,,,
10,2,,772149-72460,,"TUBE W/BUSH, SWING",1,1,,1,1,,,,,,,,,,,,,
12,3,,933125-12701,,"BUSH 38 50A",1,1,,1,1,,,,,,,,,,,,,
13,2,,772149-72510,,"ROD W/BUSH, SWING",1,1,,1,1,,,,,,,,,,,,,
15,3,,933125-12701,,"BUSH 38 50A",1,1,,1,1,,,,,,,,,,,,,
16,2,,172149-72530,,GLAND,1,1,,1,1,,,,,,,,,,,,,
17,2,,172137-72542,,"PISTON 70",1,1,,1,1,,,,,,,,,,,,,
18,2,,172149-72540,,"HEAD 7040",1,1,,1,1,,,,,,,,,,,,,
19,3,,933135-14600,,"BUSH 40 30, ROD",1,1,,1,1,,,,,,,,,,,,,
20,2,,172149-72000,,"SEAL SET, PISTON",1,1,,1,1,,,,,,,,,,,,,
25,2,,172137-72700,,"RING 40A, CUSHION",1,1,,1,1,,,,,,,,,,,,,
26,2,,172137-72710,,"COLLAR 40B, CUSHION",1,1,,1,1,,,,,,,,,,,,,
27,2,,172137-72720,,"COLLAR 40A, CUSHION",1,1,,1,1,,,,,,,,,,,,,
28,2,,172137-72730,,"RING 44B, CUSHION",1,1,,1,1,,,,,,,,,,,,,
29,2,,172137-72740,,"CUSHION PLUNGER 44 A",1,1,,1,1,,,,,,,,,,,,,
30,2,,172142-72810,,"CIRCLIP 22",1,1,,1,1,,,,,,,,,,,,,
31,2,,22252-000561,,"CIRCLIP   56",1,1,,1,1,,,,,,,,,,,,,
32,2,,24761-020000,,"NIPPLE PT1/8,GREASE",1,1,,1,1,,,,,,,,,,,,,
33,2,,933111-26600,,"RING 55, SPRING",1,1,,1,1,,,,,,,,,,,,,
34,1,,172149-72570,,"COVER, SWING",1,1,,1,1,,,,,,,,,,,,,
35,1,,22157-100000,,"WASHER 10",1,1,,1,1,,,,,,,,,,,,,
36,1,,22217-100000,,"SPRING WASHER 10",1,1,,1,1,,,,,,,,,,,,,
37,1,,26116-100162,,"BOLT M10X 16 PLATED",1,1,,1,1,,,,,,,,,,,,,
38,1,,933168-14170,,"SPRING 16",1,1,,1,1,,,,,,,,,,,,,
```

Fig. 37 スイングシリンダ SWING CYLINDER

https://truckmanualshub.com/

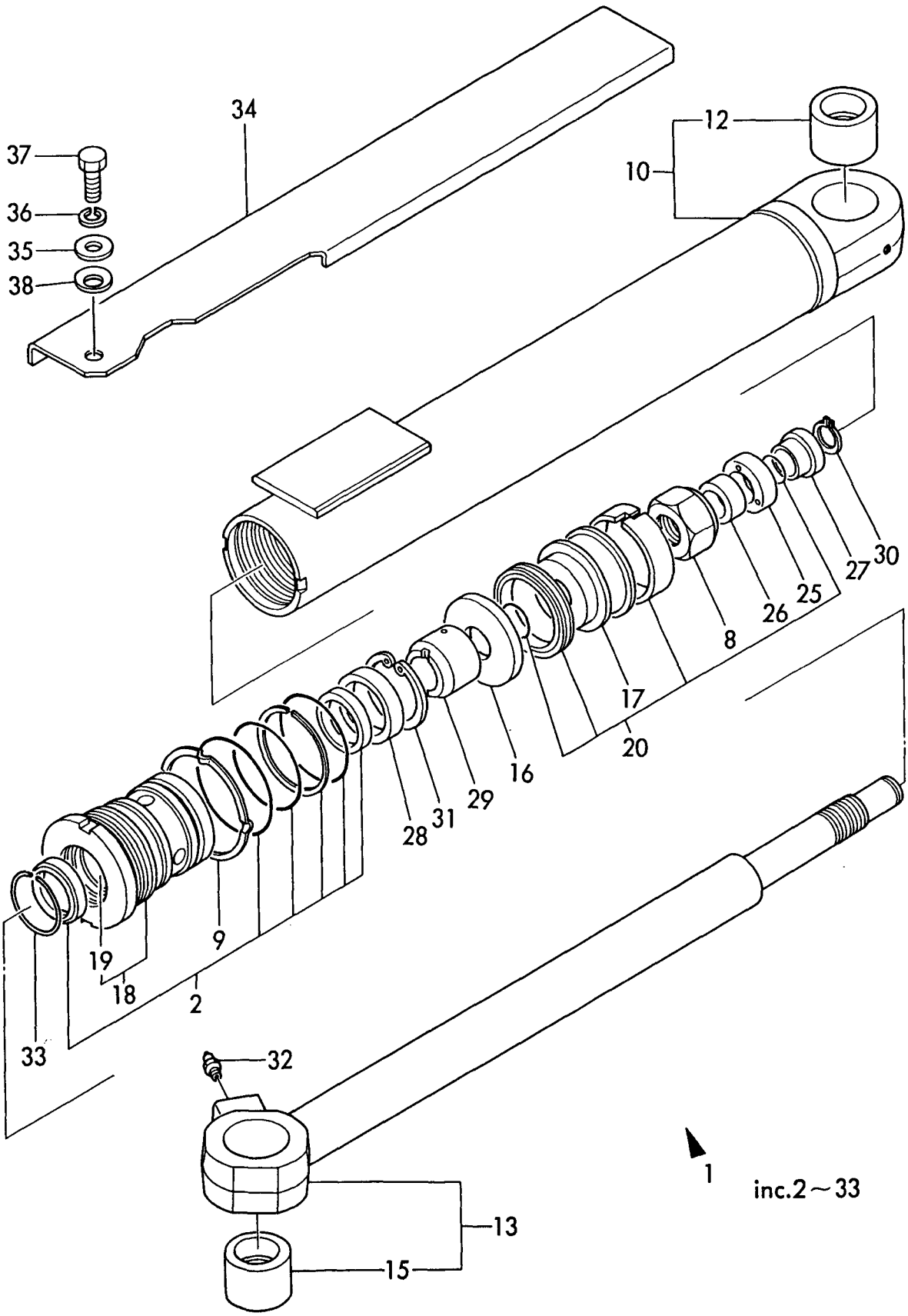

https://truckmanualshub.com/

```
1,1,,933120-28501,,"CYLINDER ASSY, BLADE",1,1,,1,1,,,,,,,,,,,,,,
2,2,,172137-72431,,"PISTON 60G",1,1,,1,1,,,,,,,,,,,,,
3,2,,172137-72452,,"SEAL SET 60A, PISTON",1,1,,1,1,,,,,,,,,,,,,,
6,2,,172141-71900,,"SEAL SET, HEAD",1,1,,1,1,,,,,,,,,,,,,
11,2,,933721-28501,,"TUBE W/BUSH, BLADE",1,1,,1,1,,,,,,,,,,,,,,
13,3,,933125-05500,,"BUSH 30X40 B, PIN",1,1,,1,1,,,,,,,,,,,,,
14,2,,933722-28400,,"ROD W/BUSH, BLADE",1,1,,1,1,,,,,,,,,,,,,
16,3,,933125-05500,,"BUSH 30X40 B, PIN",1,1,,1,1,,,,,,,,,,,,,
17,2,,933125-59600,,"WASHER 60 B, LOCK",1,1,,1,1,,,,,,,,,,,,,,
18,2,,172141-72580,,"NUT M20",1,1,,1,1,,,,,,,,,,,,,
19,2,,172141-72540,,"HEAD 6035, CYLINDER",1,1,,1,1,,,,,,,,,,,,,,
20,3,,933111-01600,,"BUSH 35 30, ROD",1,1,,1,1,,,,,,,,,,,,,
21,2,,172141-73090,,"RING 50, SPRING",1,1,,1,1,,,,,,,,,,,,,
```

Fig. 38 ブレードシリンダ BLADE CYLINDER

https://truckmanualshub.com/

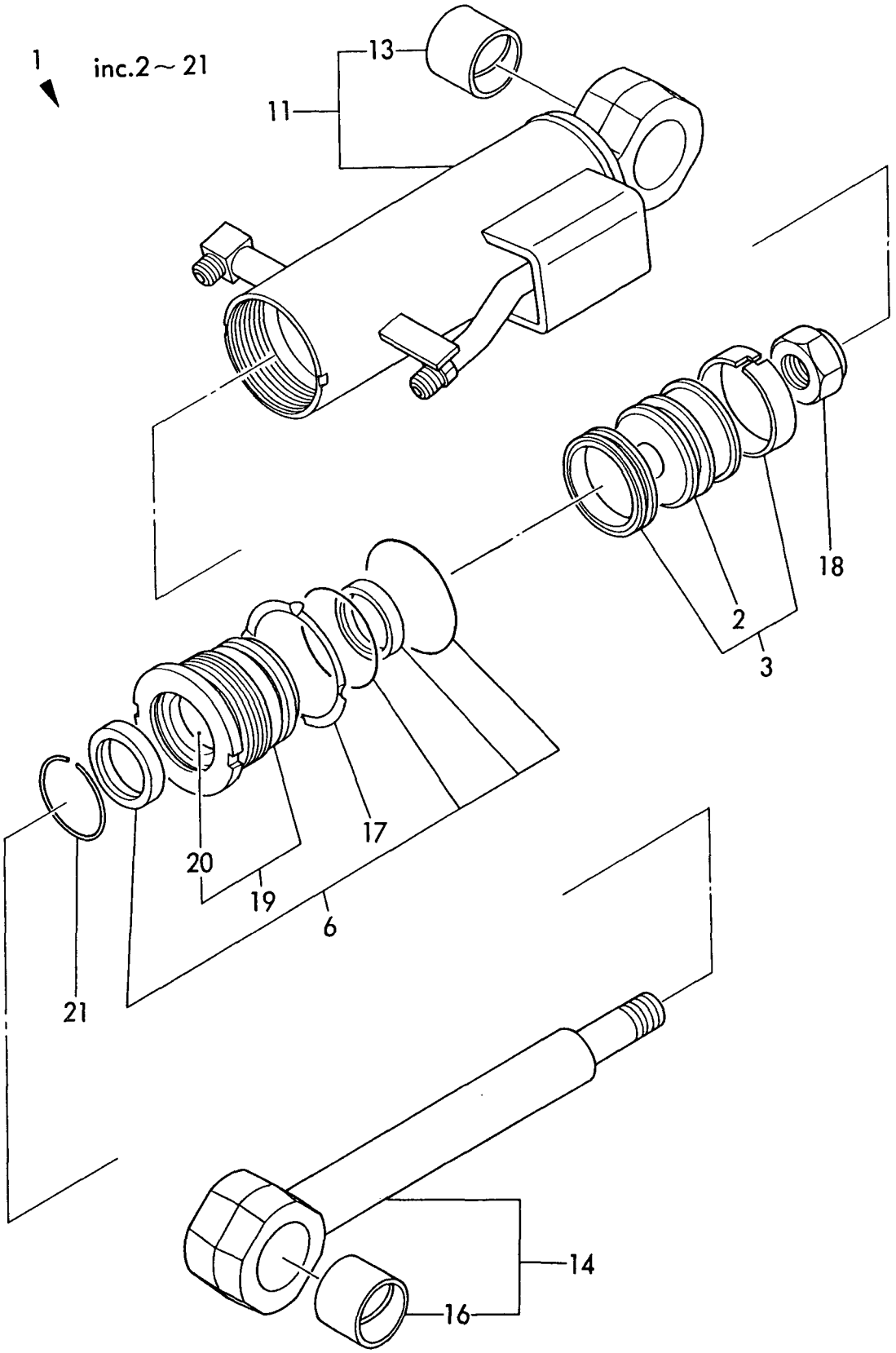

https://truckmanualshub.com/

```
1,1,,172149-71110,,"MOUNT, PUMP",1,1,,1,1,,,,,,,,,,,,,
2,1,,22137-100000,,"WASHER 10",2,2,,2,2,,,,,,,,,,,,,
3,1,,26013-100302,,"BOLT M10X 30",4,4,,4,4,,,,,,,,,,,,,
4,1,,26013-100352,,"BOLT M10X 35",2,2,,2,2,,,,,,,,,,,,,
5,1,,172137-71210,,"JOINT, PUMP",1,1,,1,1,,,,,,,,,,,,,
6,1,,172137-71220,,COUPLING,1,1,,1,1,,,,,,,,,,,,,
7,1,,22351-040008,,"SPRING PIN 4X 8",6,6,,6,6,,,,,,,,,,,,,
8,1,,26450-100352,,"BOLT M10X 35",6,6,,6,6,,,,,,,,,,,,,
9,1,,172122-71130,,"BOLT M10X 30",2,2,,2,2,,,,,,,,,,,,,
10,1,,172149-73110,,"PUMP ASSY, HYD. OIL",1,1,,1,1,,,,,,,,,,,,,,
11,2,,172149-73120,,"REAR KIT",1,1,,1,1,,,,,,,,,,,,,
12,2,,172137-73130,,"PUMP ASSY, CENTER",1,1,,1,1,,,,,,,,,,,,,
13,2,,172149-73130,,"FRONT KIT",1,1,,1,1,,,,,,,,,,,,,
14,2,,172122-73140,,COVER,1,1,,1,1,,,,,,,,,,,,,
15,2,,172149-73140,,BOLT,4,4,,4,4,,,,,,,,,,,,,
16,2,,172122-73150,,"PLATE, CENTER",2,2,,2,2,,,,,,,,,,,,,
17,2,,172122-73170,,"COUPLING, SPLINE",2,2,,2,2,,,,,,,,,,,,,
18,2,,172137-73170,,"MOUNTING FLANGE",1,1,,1,1,,,,,,,,,,,,,
19,2,,172122-73200,,"SEAL SET",1,1,,1,1,,,,,,,,,,,,,
20,2,,22217-100000,,"SPRING WASHER 10",4,4,,4,4,,,,,,,,,,,,,
```

Fig. 39 ポンプ＆ジクツギテ HYD.OIL PUMP & JOINT

https://truckmanualshub.com/

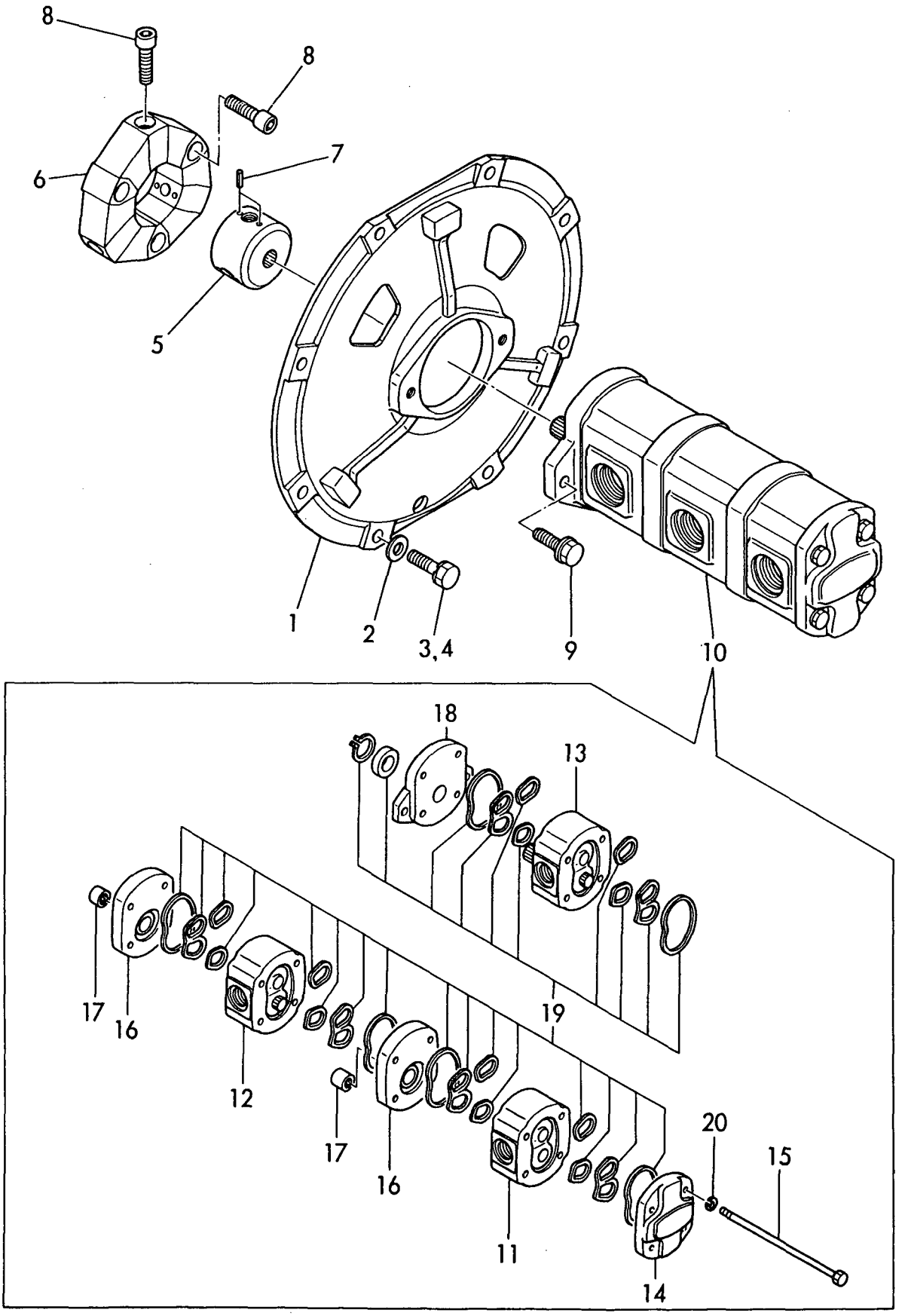

https://truckmanualshub.com/

```
1,1,,172149-73310,,"MOTOR ASSY, TURNING",1,1,,1,1,,,,,,,,,,,,,
2,2,,172149-73320,,"MOTOR ASSY, TURNING",1,1,,1,1,,,,,,,,,,,,,
3,3,,172149-73440,,"PINION(SUB) ASSY",1,1,,1,1,,,,,,,,,,,,,
4,4,,172149-73330,,"HOUSING, BEARING",1,1,,1,1,,,,,,,,,,,,,
5,4,,172149-73340,,"SHAFT ASSY, PINION",1,1,,1,1,,,,,,,,,,,,,
6,4,,172149-73350,,"SPACER, BEARING",1,1,,1,1,,,,,,,,,,,,,
7,4,,172149-73460,,"SEAL KIT, PINION(SUB",1,1,,1,1,,,,,,,,,,,,,
8,4,,172141-77030,,"BEARING, ROLLER",1,1,,1,1,,,,,,,,,,,,,
9,4,,172141-77040,,BEARING,1,1,,1,1,,,,,,,,,,,,,
10,4,,172141-77050,,"RING, RETAINING",1,1,,1,1,,,,,,,,,,,,,
11,4,,172141-77110,,BOLT,4,4,,4,4,,,,,,,,,,,,,
12,4,,22217-120000,,"SPRING WASHER 12",4,4,,4,4,,,,,,,,,,,,,
13,4,,22252-000900,,"CIRCLIP   90",1,1,,1,1,,,,,,,,,,,,,
14,3,,172149-73450,,"MOTOR(SUB) ASSY",1,1,,1,1,,,,,,,,,,,,,
15,4,,172137-70520,,PLUG,2,2,,2,2,,,,,,,,,,,,,
16,4,,172137-70530,,BALL,2,2,,2,2,,,,,,,,,,,,,
17,4,,172137-70600,,VALVE,1,1,,1,1,,,,,,,,,,,,,
18,4,,172148-73360,,DRIVE,1,1,,1,1,,,,,,,,,,,,,
19,4,,172149-73360,,ROLLER,1,1,,1,1,,,,,,,,,,,,,
20,4,,172149-73380,,"HOUSING, VALVE",1,1,,1,1,,,,,,,,,,,,,
21,4,,172149-73390,,PLUG,1,1,,1,1,,,,,,,,,,,,,
22,4,,172149-73400,,BOLT,4,4,,4,4,,,,,,,,,,,,,
23,4,,172149-73410,,FLANGEMOUTING,1,1,,1,1,,,,,,,,,,,,,
24,4,,172149-73470,,"SEAL KIT, MOTOR(SUB",1,1,,1,1,,,,,,,,,,,,,
25,4,,172141-77160,,"PLATE, VALVE",1,1,,1,1,,,,,,,,,,,,,
26,4,,172137-77190,,PLATE,1,1,,1,1,,,,,,,,,,,,,
27,4,,172137-77200,,SPRING,2,2,,2,2,,,,,,,,,,,,,
28,4,,172137-77220,,"TUBE, 3RD",1,1,,1,1,,,,,,,,,,,,,
29,4,,172148-77260,,"DRIVE, VALVE",1,1,,1,1,,,,,,,,,,,,,
30,2,,172149-73500,,"VALVE, BRAKE",1,1,,1,1,,,,,,,,,,,,,
31,3,,172149-73620,,CONNECTOR,2,2,,2,2,,,,,,,,,,,,,
32,3,,172149-73630,,BUSHING,2,2,,2,2,,,,,,,,,,,,,
33,3,,172149-73650,,"SEAL KIT, BRAKE",1,1,,1,1,,,,,,,,,,,,,
34,1,,26013-120402,,"BOLT M12X 40",4,4,,4,4,,,,,,,,,,,,,
```

Fig. 40 センカイモータ TURNING MOTOR

https://truckmanualshub.com/

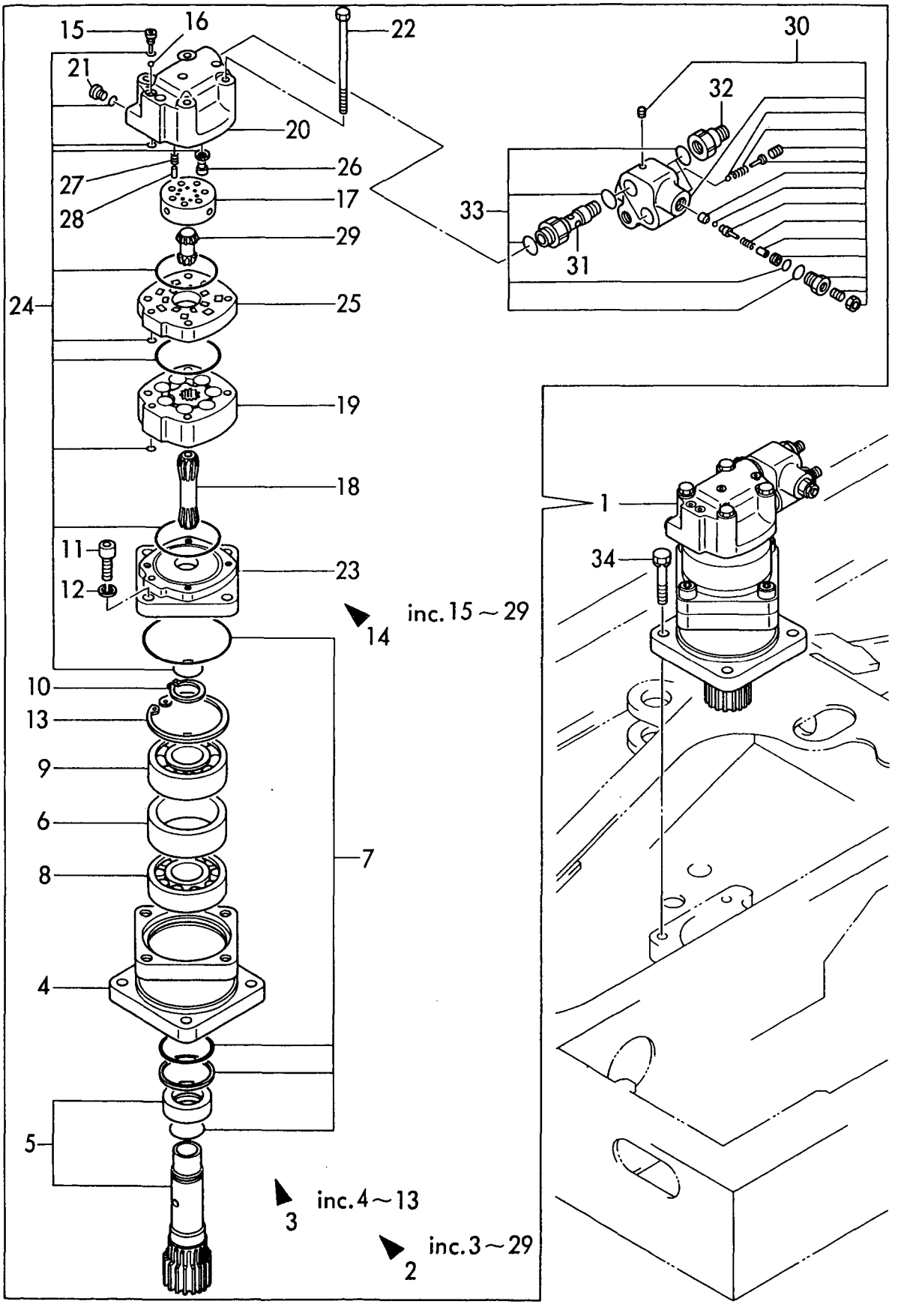

https://truckmanualshub.com/

```
1,1,,172137-73351,,"MOTOR ASSY, DRIVE",2,2,,2,2,,,,,,,,,,,,
2,2,,172137-73361,,"MOTOR ASSY",2,2,,2,2,,,,,,,,,,,,
3,3,,172137-70631,,"REDUCTION GEAR ASSY",2,2,,2,2,,,,,,,,,,,,,
4,4,,172137-70461,,"SEAL KIT, REDUCTION",2,2,,2,2,,,,,,,,,,,,,
5,4,,172137-70471,,SPACER,2,2,,2,2,,,,,,,,,,,,
6,4,,172137-70651,,"GEAR, SUN",2,2,,2,2,,,,,,,,,,,,
7,4,,172137-70661,,BUSH,2,2,,2,2,,,,,,,,,,,,
8,4,,172137-70681,,COVER,2,2,,2,2,,,,,,,,,,,,
9,4,,172137-70741,,HOUSING,2,2,,2,2,,,,,,,,,,,,
10,4,,172137-70770,,"BEARING, DRIVE MOTOR",4,4,,4,4,,,,,,,,,,,,,
11,4,,172137-70781,,"SEAL W/PLATE KIT",2,2,,2,2,,,,,,,,,,,,
12,4,,172137-70791,,PIN,2,2,,2,2,,,,,,,,,,,,
13,4,,172137-70811,,FLANGE,2,2,,2,2,,,,,,,,,,,,
14,4,,172137-70820,,WASHER,2,2,,2,2,,,,,,,,,,,,
15,4,,172137-70830,,WASHER,2,2,,2,2,,,,,,,,,,,,
16,4,,172137-70840,,"CARRIER KIT",2,2,,2,2,,,,,,,,,,,,
17,4,,22242-001100,,"CIRCLIP  110",2,2,,2,2,,,,,,,,,,,,
18,4,,23871-030000,,"PLUG PT 3/8",4,4,,4,4,,,,,,,,,,,,
19,4,,26450-060162,,"BOLT M 6X 16",18,18,,18,18,,,,,,,,,,,,
20,3,,172137-70641,,"MOTOR SUB ASSY",2,2,,2,2,,,,,,,,,,,,
21,4,,172137-70451,,"SEAL KIT, MOTOR",2,2,,2,2,,,,,,,,,,,,
22,4,,172137-70480,,BOLT,8,8,,8,8,,,,,,,,,,,,
23,4,,172137-70490,,PLUG,2,2,,2,2,,,,,,,,,,,,
24,4,,172137-70500,,PLUG,2,2,,2,2,,,,,,,,,,,,
25,4,,172137-70510,,"HOUSING, VALVE",2,2,,2,2,,,,,,,,,,,,
26,4,,172137-70520,,PLUG,4,4,,4,4,,,,,,,,,,,,
27,4,,172137-70530,,BALL,4,4,,4,4,,,,,,,,,,,,
28,4,,172137-70540,,"DRIVE, VALVE",2,2,,2,2,,,,,,,,,,,,
29,4,,172137-70551,,ROLLER,2,2,,2,2,,,,,,,,,,,,
30,4,,172137-70561,,DRIVE,2,2,,2,2,,,,,,,,,,,,
31,4,,172137-70570,,PIN,4,4,,4,4,,,,,,,,,,,,
32,4,,172137-70580,,SPRING,4,4,,4,4,,,,,,,,,,,,
33,4,,172137-70590,,PLATE,2,2,,2,2,,,,,,,,,,,,
34,4,,172137-70600,,VALVE,2,2,,2,2,,,,,,,,,,,,
35,4,,172137-70610,,"PLATE, VALVE",2,2,,2,2,,,,,,,,,,,,
36,4,,172137-70620,,"PLATE, SPACER",2,2,,2,2,,,,,,,,,,,,
37,2,,172137-73370,,"VALVE,COUNTER BALAN.",2,2,,2,2,,,,,,,,,,,,,
38,3,,172137-70850,,"SEAL SET",2,2,,2,2,,,,,,,,,,,,
39,1,,26013-100252,,"BOLT M10X 25",16,16,,16,16,,,,,,,,,,,,
```

Fig. 41 ソウコウモータ TRAVEL MOTOR

https://truckmanualshub.com/

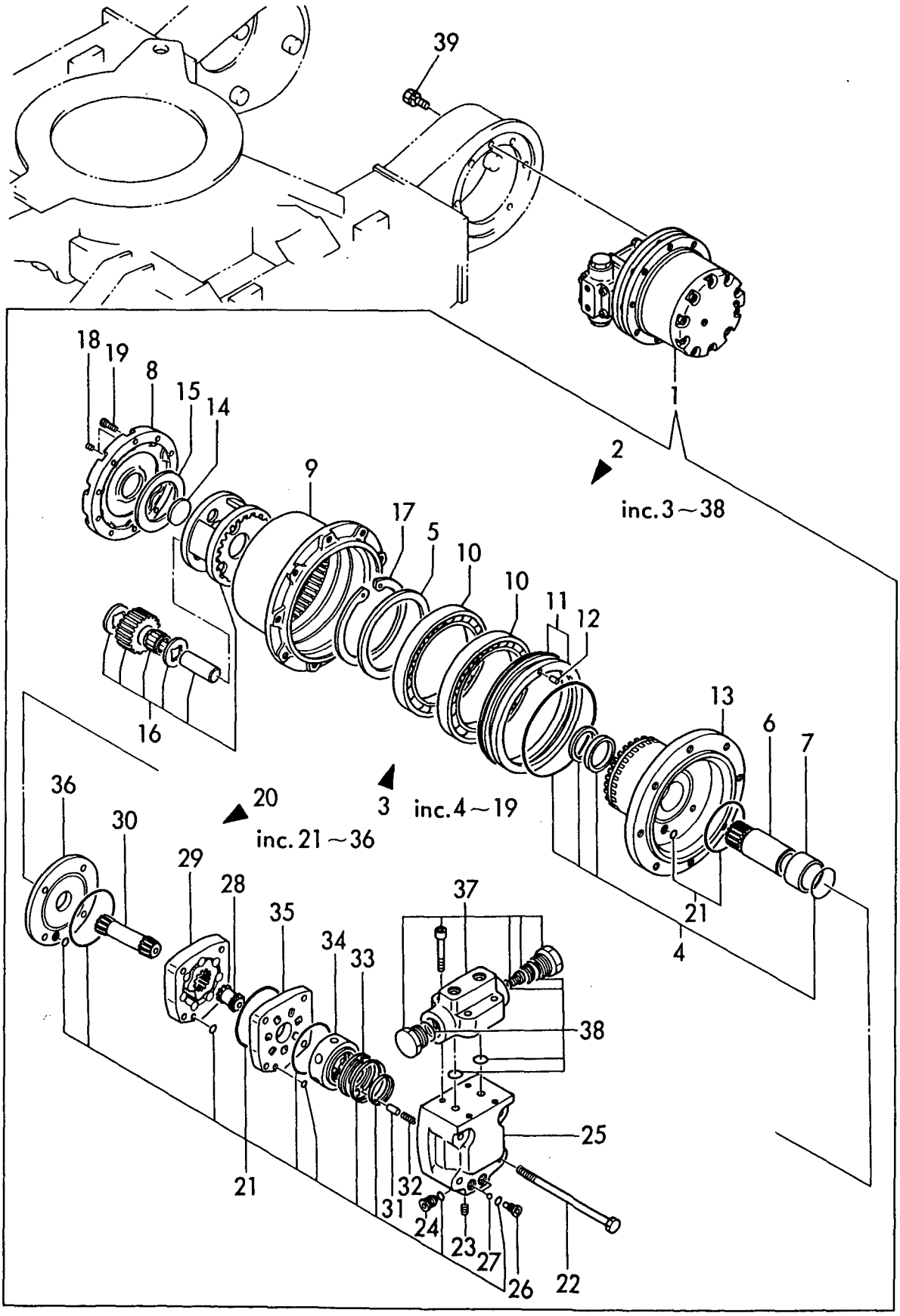

https://truckmanualshub.com/

```
1,1,,172131-73800,,"SWIVEL JOINT ASSY",1,1,,1,1,,,,,,,,,,,,,
2,2,,194630-31910,,"LINER 22.5X40X2",1,1,,1,1,,,,,,,,,,,,,
3,2,,172142-73800,,"O-RING 55.76X5.7",8,8,,8,8,,,,,,,,,,,,,
4,2,,172131-73810,,"SHAFT,SWIVEL",1,1,,1,1,,,,,,,,,,,,,
5,2,,172137-73810,,"HUB, SWIVEL JOINT",1,1,,1,1,,,,,,,,,,,,,
6,2,,172131-73830,,"FLANGE,SWIVEL",1,1,,1,1,,,,,,,,,,,,,
7,2,,172137-73860,,"SPACER, SWIVEL",1,1,,1,1,,,,,,,,,,,,,
8,2,,22242-000451,,"CIRCLIP   45",1,1,,1,1,,,,,,,,,,,,,
9,2,,23871-020000,,"PLUG PT 1/4",6,6,,6,6,,,,,,,,,,,,,
10,2,,24311-000750,,"O-RING 1A P-75.0",1,1,,1,1,,,,,,,,,,,,,
11,2,,24321-000700,,"O-RING 1A G-70.0",1,1,,1,1,,,,,,,,,,,,,
12,2,,26013-100252,,"BOLT M10X 25",3,3,,3,3,,,,,,,,,,,,,
13,1,,172149-76100,,BUSH,1,1,,1,1,,,,,,,,,,,,,
14,1,,26013-100252,,"BOLT M10X 25",4,4,,4,4,,,,,,,,,,,,,
```

Fig. 42 スイベルジョイント SWIVEL JOINT

https://truckmanualshub.com/

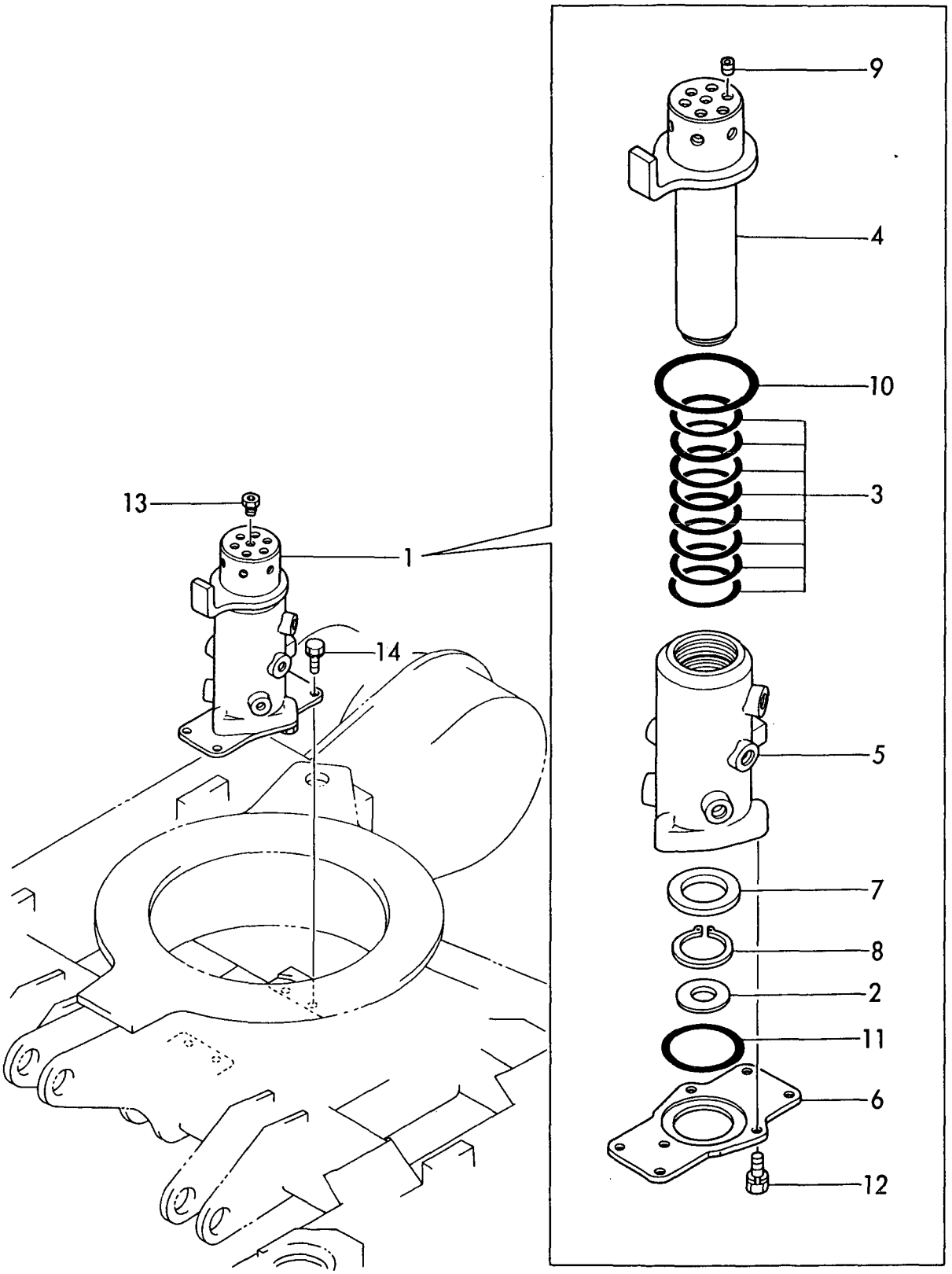

https://truckmanualshub.com/

```
1,1,,172149-74100,,"VALVE ASSY, CONTROL",1,1,,1,1,,,1,,,,,,,,,,
2,2,,172149-74150,,"SECTION ASSY, DRIVE",2,2,,2,2,,,,,,,,,,,,,
4,3,,24325-000550,,"O-RING 1B G-55.0",2,2,,2,2,,,,,,,,,,,,,
5,3,,172137-74440,,"SEAL, OIL",4,4,,4,4,,,,,,,,,,,,,
6,3,,172137-74450,,"PLATE,SEAL",4,4,,4,4,,,,,,,,,,,,,
7,3,,172137-74460,,"SEAT, SPRING",4,4,,4,4,,,,,,,,,,,,,
8,3,,172137-74420,,"SPRING (A), RETURN",2,2,,2,2,,,,,,,,,,,,,
9,3,,172137-74470,,SPACER,2,2,,2,2,,,,,,,,,,,,,
10,3,,172137-74480,,"BOLT, SPOOL",2,2,,2,2,,,,,,,,,,,,,
11,3,,172137-74490,,CAP,2,2,,2,2,,,,,,,,,,,,,
12,3,,172137-74500,,"BOLT, PLATE",4,4,,4,4,,,,,,,,,,,,,
13,3,,172137-74510,,"BOLT, CAP",4,4,,4,4,,,,,,,,,,,,,
14,2,,172149-74360,,"SECTION ASY, TURNING",1,1,,1,1,,,,,,,,,,,,,
16,3,,24325-000550,,"O-RING 1B G-55.0",1,1,,1,1,,,,,,,,,,,,,
17,3,,172137-74440,,"SEAL, OIL",2,2,,2,2,,,,,,,,,,,,,
18,3,,172137-74450,,"PLATE,SEAL",2,2,,2,2,,,,,,,,,,,,,
19,3,,172137-74460,,"SEAT, SPRING",2,2,,2,2,,,,,,,,,,,,,
20,3,,172137-74420,,"SPRING (A), RETURN",1,1,,1,1,,,,,,,,,,,,,
21,3,,172137-74470,,SPACER,1,1,,1,1,,,,,,,,,,,,,
22,3,,172137-74480,,"BOLT,
SPOOL",1,1,,1,1,,,,72142372,,72142372,,,,72142372,,72142372,,,,I
23,3,,172137-
74490,,CAP,1,1,,1,1,,,,72142372,,72142372,,,,72142372,,72142372,,,,I
24,3,,172137-74500,,"BOLT, PLATE",2,2,,2,2,,,,,,,,,,,,,
25,3,,172137-74510,,"BOLT, CAP",2,2,,2,2,,,,,,,,,,,,,
26,3,,172137-74520,,"VALVE, CHECK",1,1,,1,1,,,,,,,,,,,,,
27,3,,172137-74530,,"GUIDE, VALVE",1,1,,1,1,,,,,,,,,,,,,
28,3,,172137-74540,,"SPRING, VALVE",1,1,,1,1,,,,,,,,,,,,,
```

Fig. 43 コントロールバルブ(ソウコウ、センカイ) CONTROL VALVE (TRAVEL、TURNING)

https://truckmanualshub.com/

コントロールバルブ ASSY
CONTROL VALVE ASSY
(172149-74100)
Fig. 43 Ref. No. 1
INC Fig. 43 Ref. No. 2 ~ 28
Fig. 44 Ref. No. 1 ~ 36
Fig. 45 Ref. No. 1 ~ 39
Fig. 46 Ref. No. 1 ~ 35
Fig. 47 Ref. No. 1 ~ 39

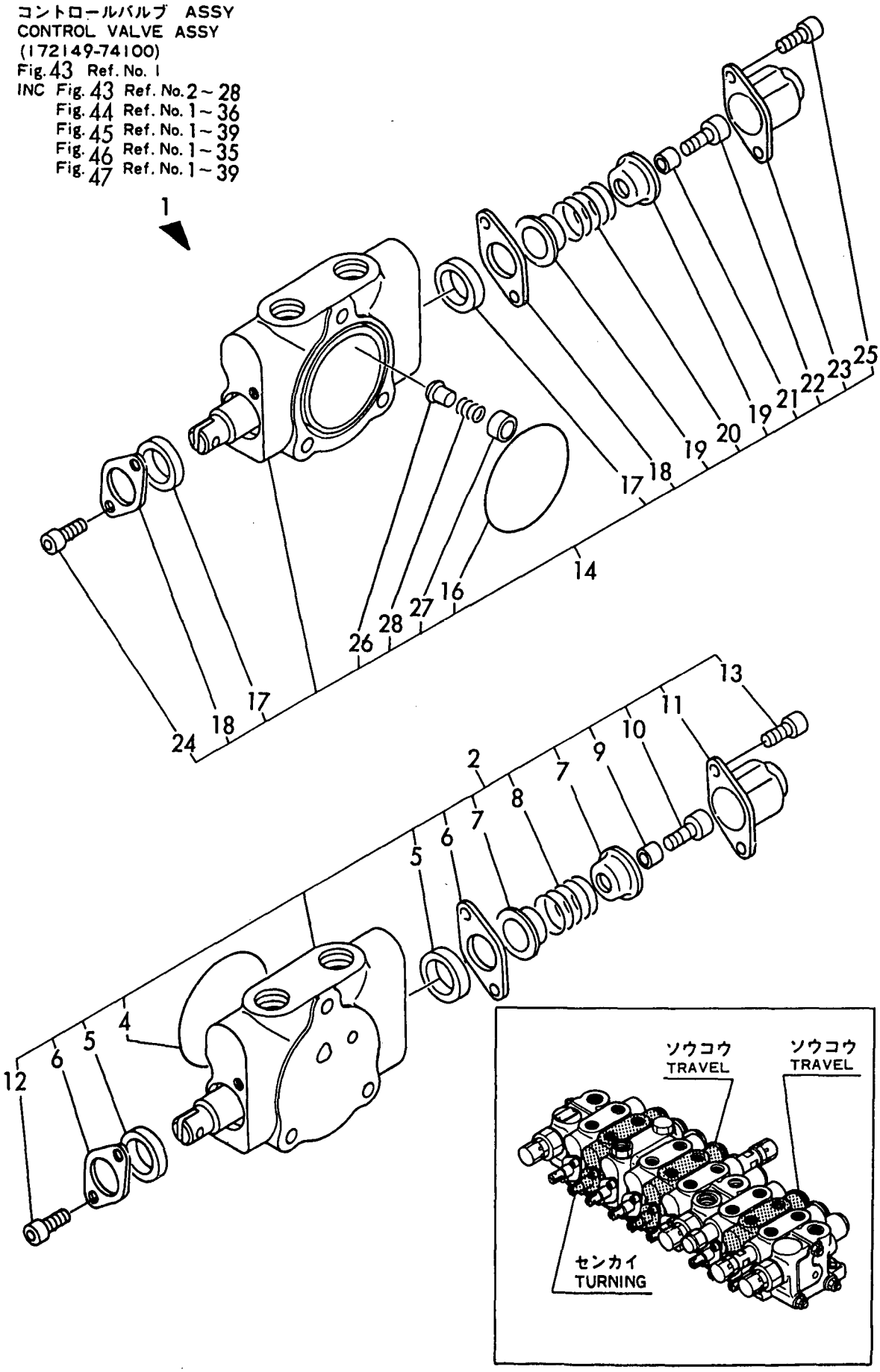

https://truckmanualshub.com/

```
1,2,,172149-74130,,"SECTION ASSY, ARM",1,1,,1,1,,,,,,,,,,,,,
3,3,,24325-000500,,"O-RING 1B G-50.0",1,1,,1,1,,,,,,,,,,,,,
4,3,,172137-74440,,"SEAL, OIL",2,2,,2,2,,,,,,,,,,,,,
5,3,,172137-74450,,"PLATE,SEAL",2,2,,2,2,,,,,,,,,,,,,
6,3,,172137-74460,,"SEAT, SPRING",2,2,,2,2,,,,,,,,,,,,,
7,3,,172137-74420,,"SPRING (A), RETURN",1,1,,1,1,,,,,,,,,,,,,,
8,3,,172137-74470,,SPACER,1,1,,1,1,,,,,,,,,,,,,
9,3,,172137-74480,,"BOLT, SPOOL",1,1,,1,1,,,,,,,,,,,,,
10,3,,172137-74490,,CAP,1,1,,1,1,,,,,,,,,,,,,
11,3,,172137-74500,,"BOLT, PLATE",2,2,,2,2,,,,,,,,,,,,,
12,3,,172137-74510,,"BOLT, CAP",2,2,,2,2,,,,,,,,,,,,,
13,3,,172137-74520,,"VALVE, CHECK",1,1,,1,1,,,,,,,,,,,,,
14,3,,172137-74530,,"GUIDE, VALVE",1,1,,1,1,,,,,,,,,,,,,
15,3,,172137-74540,,"SPRING, VALVE",1,1,,1,1,,,,,,,,,,,,,
16,2,,172137-74600,,"VALVE ASSY,OVER ROAD",2,2,,2,2,,,,,,,,,,,,,,
17,3,,172131-74030,,"NUT M14X1",1,1,,1,1,,,,,,,,,,,,,
18,3,,172131-74050,,"CAP NUT M16X1",1,1,,1,1,,,,,,,,,,,,,
19,3,,24315-000150,,"O-RING 1B P-15.0",1,1,,1,1,,,,,,,,,,,,,
20,3,,172137-74640,,"O-RING 1B S
12.5",1,1,,1,1,,,,72142372,,72142372,,,,72142372,,72142372,,,,I
21,3,,24341-000160,,"O-RING 1A S-16.0",2,2,,2,2,,,,,,,,,,,,,
22,2,,172149-74270,,"SECTION ASSY,
BUCKET",1,1,,1,1,,,,72142372,,72142372,,,,72142372,,72142372,,,,I
24,3,,24325-000500,,"O-RING 1B G-50.0",1,1,,1,1,,,,,,,,,,,,,
25,3,,172137-74440,,"SEAL, OIL",2,2,,2,2,,,,,,,,,,,,,
26,3,,172137-74450,,"PLATE,SEAL",2,2,,2,2,,,,,,,,,,,,,
27,3,,172137-74460,,"SEAT, SPRING",2,2,,2,2,,,,,,,,,,,,,
28,3,,172137-74420,,"SPRING (A), RETURN",1,1,,1,1,,,,,,,,,,,,,,
29,3,,172137-74470,,SPACER,1,1,,1,1,,,,,,,,,,,,,
30,3,,172137-74480,,"BOLT, SPOOL",1,1,,1,1,,,,,,,,,,,,,
31,3,,172137-74490,,CAP,1,1,,1,1,,,,,,,,,,,,,
32,3,,172137-74500,,"BOLT, PLATE",2,2,,2,2,,,,,,,,,,,,,
33,3,,172137-74510,,"BOLT, CAP",2,2,,2,2,,,,,,,,,,,,,
34,3,,172137-74520,,"VALVE, CHECK",1,1,,1,1,,,,,,,,,,,,,
35,3,,172137-74530,,"GUIDE, VALVE",1,1,,1,1,,,,,,,,,,,,,
36,3,,172137-74540,,"SPRING, VALVE",1,1,,1,1,,,,,,,,,,,,,
```

Fig. 44 コントロールバルブ(アーム、バケット) CONTROL VALVE (ARM、BUCKET)

https://truckmanualshub.com/

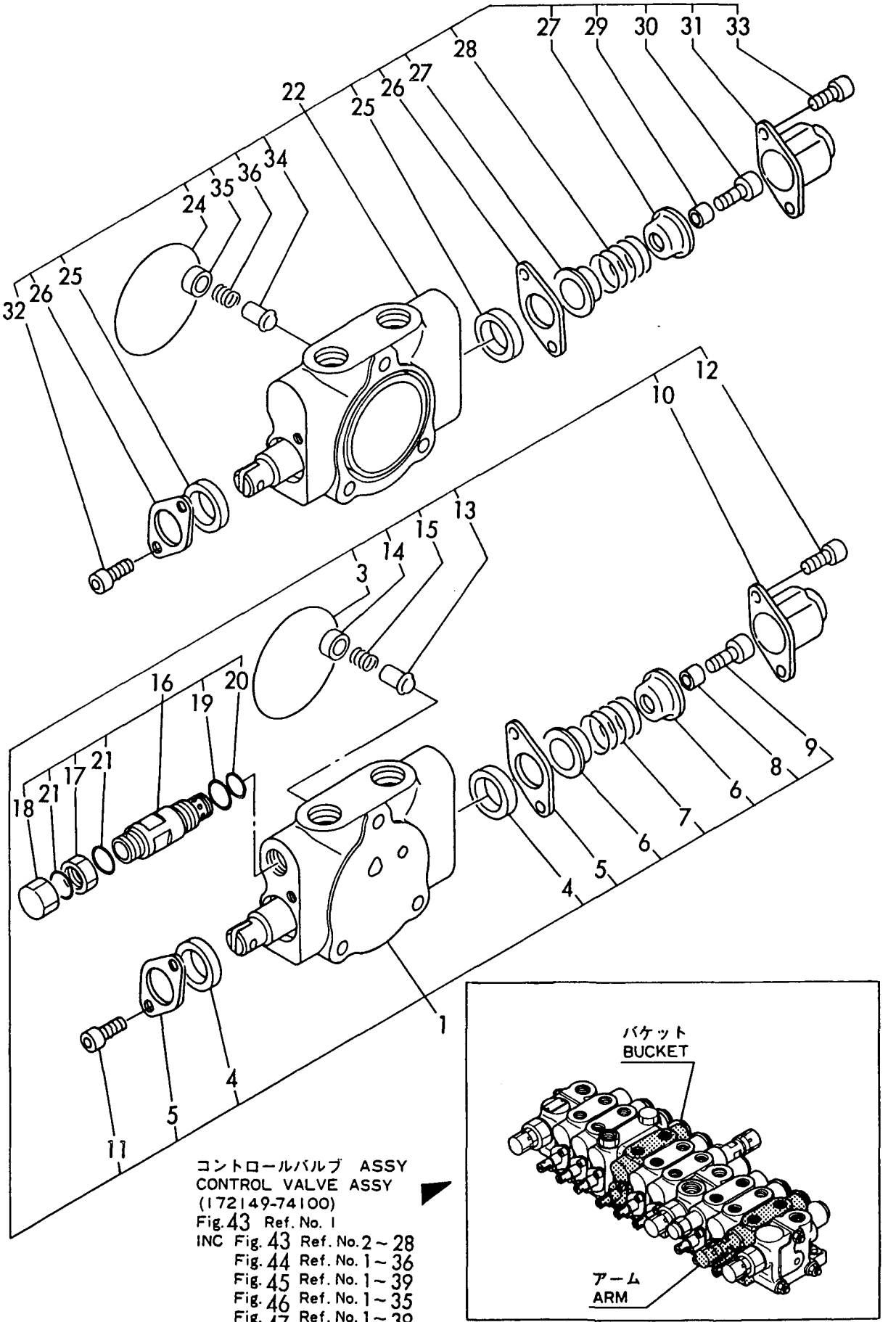

コントロールバルブ ASSY
CONTROL VALVE ASSY
(172149-74100)
Fig. 43 Ref. No. 1
INC Fig. 43 Ref. No. 2～28
Fig. 44 Ref. No. 1～36
Fig. 45 Ref. No. 1～39
Fig. 46 Ref. No. 1～35
Fig. 47 Ref. No. 1～39

https://truckmanualshub.com/

```
1,2,,172149-74200,,"SECTION ASSY, SEING",1,1,,1,1,,,,,,,,,,,,,
3,3,,24325-000550,,"O-RING 1B G-55.0",1,1,,1,1,,,,,,,,,,,,,
4,3,,172137-74440,,"SEAL, OIL",2,2,,2,2,,,,,,,,,,,,,
5,3,,172137-74450,,"PLATE,SEAL",2,2,,2,2,,,,,,,,,,,,,
6,3,,172137-74460,,"SEAT, SPRING",2,2,,2,2,,,,,,,,,,,,,
7,3,,172137-74420,,"SPRING (A), RETURN",1,1,,1,1,,,,,,,,,,,,,
8,3,,172137-74470,,SPACER,1,1,,1,1,,,,,,,,,,,,,
9,3,,172137-74480,,"BOLT, SPOOL",1,1,,1,1,,,,,,,,,,,,,
10,3,,172137-74490,,CAP,1,1,,1,1,,,,,,,,,,,,,
11,3,,172137-74500,,"BOLT, PLATE",2,2,,2,2,,,,,,,,,,,,,
12,3,,172137-74510,,"BOLT, CAP",2,2,,2,2,,,,,,,,,,,,,
13,3,,172137-74520,,"VALVE, CHECK",1,1,,1,1,,,,,,,,,,,,,
14,3,,172137-74530,,"GUIDE, VALVE",1,1,,1,1,,,,,,,,,,,,,
15,3,,172137-74540,,"SPRING, VALVE",1,1,,1,1,,,,,,,,,,,,,
16,2,,172137-74630,,"VALVE ASSY,
SUCTION",1,1,,1,1,,,,72142372,,72142372,,,,72142372,,72142372,,,,I
17,3,,24315-000150,,"O-RING 1B P-15.0",2,2,,2,2,,,,,,,,,,,,,
18,3,,172137-74640,,"O-RING 1B S 12.5",1,1,,1,1,,,,,,,,,,,,,
19,2,,172149-74250,,"SECTION ASSY, BOOM",1,1,,1,1,,,,,,,,,,,,,
21,3,,24325-000500,,"O-RING 1B G-50.0",1,1,,1,1,,,,,,,,,,,,,
22,3,,172137-74440,,"SEAL, OIL",2,2,,2,2,,,,,,,,,,,,,
23,3,,172137-74450,,"PLATE,SEAL",2,2,,2,2,,,,,,,,,,,,,
24,3,,172137-74460,,"SEAT, SPRING",2,2,,2,2,,,,,,,,,,,,,
25,3,,172137-74420,,"SPRING (A), RETURN",1,1,,1,1,,,,,,,,,,,,,
26,3,,172137-74470,,SPACER,1,1,,1,1,,,,,,,,,,,,,
27,3,,172137-74480,,"BOLT, SPOOL",1,1,,1,1,,,,,,,,,,,,,
28,3,,172137-74490,,CAP,1,1,,1,1,,,,,,,,,,,,,
29,3,,172137-74500,,"BOLT, PLATE",2,2,,2,2,,,,,,,,,,,,,
30,3,,172137-74510,,"BOLT, CAP",2,2,,2,2,,,,,,,,,,,,,
31,3,,172137-74520,,"VALVE, CHECK",1,1,,1,1,,,,,,,,,,,,,
32,3,,172137-74530,,"GUIDE, VALVE",1,1,,1,1,,,,,,,,,,,,,
33,3,,172137-74540,,"SPRING, VALVE",1,1,,1,1,,,,,,,,,,,,,
34,2,,172137-74600,,"VALVE ASSY,OVER ROAD",1,1,,1,1,,,,,,,,,,,,,
35,3,,172131-74030,,"NUT M14X1",1,1,,1,1,,,,,,,,,,,,,
36,3,,172131-74050,,"CAP NUT M16X1",1,1,,1,1,,,,,,,,,,,,,
37,3,,24315-000150,,"O-RING 1B P-15.0",1,1,,1,1,,,,,,,,,,,,,
38,3,,172137-74640,,"O-RING 1B S 12.5",1,1,,1,1,,,,,,,,,,,,,
39,3,,24341-000160,,"O-RING 1A S-16.0",2,2,,2,2,,,,,,,,,,,,,
```

Fig. 45 コントロールバルブ(スイング、ブーム) CONTROL VALVE (SWING、BOOM)

https://truckmanualshub.com/

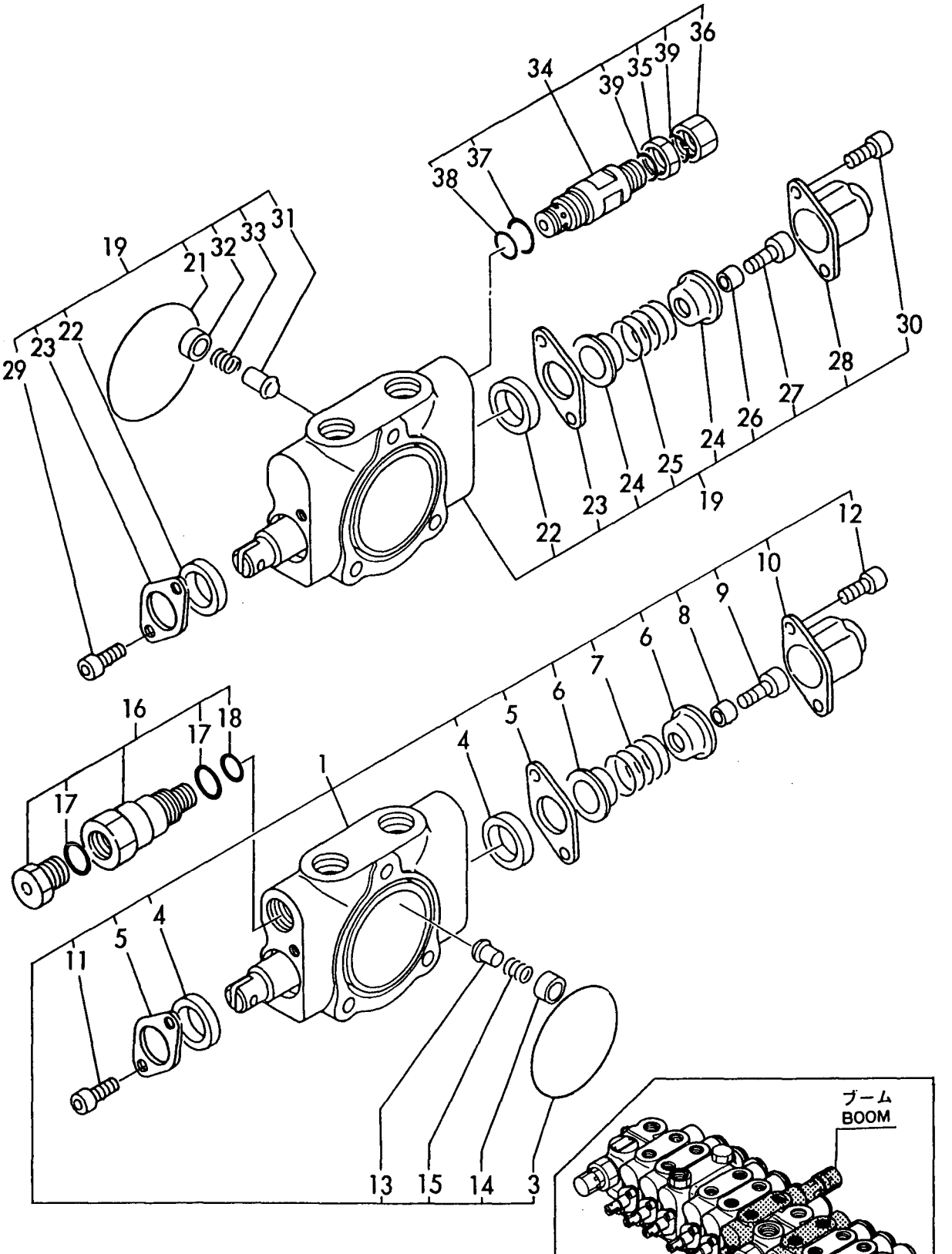

コントロールバルブ ASSY
CONTROL VALVE ASSY
(172149-74100)
Fig. 43 Ref. No. 1
INC Fig. 43 Ref. No. 2～28
Fig. 44 Ref. No. 1～36
Fig. 45 Ref. No. 1～39
Fig. 46 Ref. No. 1～35
Fig. 47 Ref. No. 1～39

https://truckmanualshub.com/

```
1,2,,172149-74380,,"SECTION ASSY,
BLADE",1,1,,1,1,,,,72142372,,72142372,,,,72142372,,72142372,,,,I
3,3,,24325-000550,,"O-RING 1B G-55.0",1,1,,1,1,,,,,,,,,,,,,
4,3,,172137-74440,,"SEAL, OIL",2,2,,2,2,,,,,,,,,,,,,
5,3,,172137-74450,,"PLATE,SEAL",2,2,,2,2,,,,,,,,,,,,,
6,3,,172137-74460,,"SEAT, SPRING",2,2,,2,2,,,,,,,,,,,,,
7,3,,172137-74420,,"SPRING (A), RETURN",1,1,,1,1,,,,,,,,,,,,,,
8,3,,172137-74470,,SPACER,1,1,,1,1,,,,,,,,,,,,,
9,3,,172137-74480,,"BOLT, SPOOL",1,1,,1,1,,,,,,,,,,,,,
10,3,,172137-74490,,CAP,1,1,,1,1,,,,,,,,,,,,,
11,3,,172137-74500,,"BOLT, PLATE",2,2,,2,2,,,,,,,,,,,,,
12,3,,172137-74510,,"BOLT, CAP",2,2,,2,2,,,,,,,,,,,,,
13,3,,172137-74520,,"VALVE, CHECK",1,1,,1,1,,,,,,,,,,,,,
14,3,,172137-74530,,"GUIDE, VALVE",1,1,,1,1,,,,,,,,,,,,,
15,3,,172137-74540,,"SPRING, VALVE",1,1,,1,1,,,,,,,,,,,,,
16,2,,172149-74320,,"SECTION ASSY, P.T.O",1,1,,1,1,,,,,,,,,,,,,,
18,3,,24325-000550,,"O-RING 1B G-55.0",1,1,,1,1,,,,,,,,,,,,,
19,3,,172137-74440,,"SEAL, OIL",2,2,,2,2,,,,,,,,,,,,,
20,3,,172137-
74450,,"PLATE,SEAL",2,2,,2,2,,,,72142372,,72142372,,,,72142372,,72142372,,,,I
21,3,,172137-74460,,"SEAT, SPRING",2,2,,2,2,,,,,,,,,,,,,
22,3,,172137-74420,,"SPRING (A), RETURN",1,1,,1,1,,,,,,,,,,,,,,
23,3,,172137-74470,,SPACER,1,1,,1,1,,,,,,,,,,,,,
24,3,,172137-74480,,"BOLT, SPOOL",1,1,,1,1,,,,,,,,,,,,,
25,3,,172137-74490,,CAP,1,1,,1,1,,,,,,,,,,,,,
26,3,,172137-74500,,"BOLT, PLATE",2,2,,2,2,,,,,,,,,,,,,
27,3,,172137-74510,,"BOLT, CAP",2,2,,2,2,,,,,,,,,,,,,
28,3,,172137-74520,,"VALVE, CHECK",1,1,,1,1,,,,,,,,,,,,,
29,3,,172131-74060,,"GUIDE,CHECK VALVE",1,1,,1,1,,,,,,,,,,,,,
30,3,,172137-74540,,"SPRING, VALVE",1,1,,1,1,,,,,,,,,,,,,
31,3,,172131-74080,,"O-RING 1B S9",1,1,,1,1,,,,,,,,,,,,,
32,3,,172149-74340,,PLUG,1,1,,1,1,,,,,,,,,,,,,
33,3,,24315-000070,,"O-RING 1B P-7.0",1,1,,1,1,,,,,,,,,,,,,
34,3,,172137-74270,,PLUG,2,2,,2,2,,,,,,,,,,,,,
35,3,,24315-000140,,"O-RING 1B P-14.0",2,2,,2,2,,,,,,,,,,,,,
```

Fig. 46 コントロールバルブ(ブレード、P.T.O) CONTROL VALVE (BLADE、P.T.O)

https://truckmanualshub.com/

コントロールバルブ ASSY
CONTROL VALVE ASSY
(172149-74100)
Fig. 43 Ref. No. 1
INC Fig. 43 Ref. No. 2～28
Fig. 44 Ref. No. 1～36
Fig. 45 Ref. No. 1～39
Fig. 46 Ref. No. 1～35
Fig. 47 Ref. No. 1～39

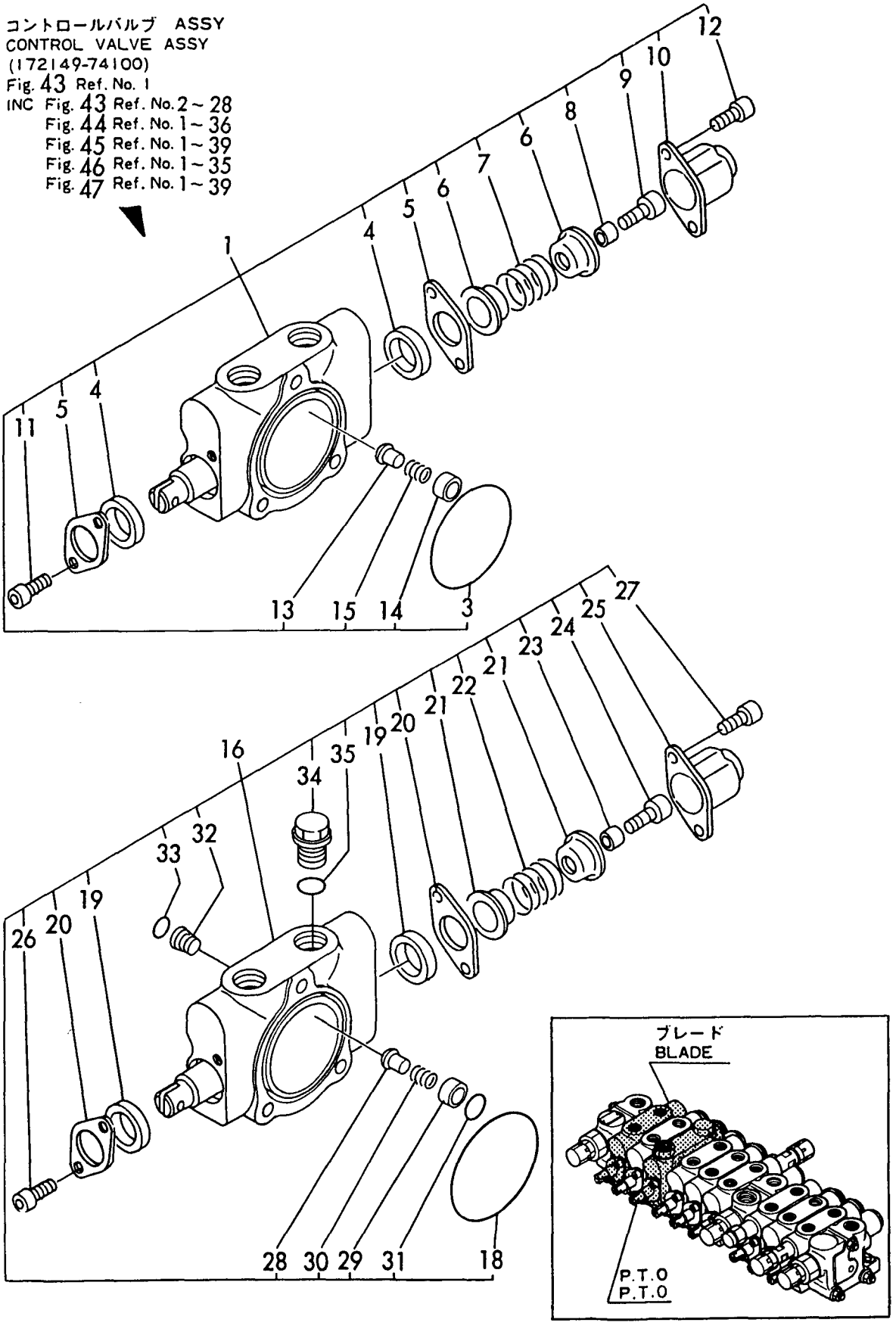

https://truckmanualshub.com/

```
1,2,,172149-74110,,"SECTION ASSY, P1",1,1,,1,1,,,,,,,,,,,,,
3,3,,24325-000500,,"O-RING 1B G-50.0",1,1,,1,1,,,,,,,,,,,,,
4,3,,23871-020000,,"PLUG PT 1/4",1,1,,1,1,,,,,,,,,,,,,
5,2,,172149-74440,,"VALVE, RELIEF",1,1,,1,1,,,,,,,,,,,,,
6,3,,172131-74340,,"VALVE,RELIEF",1,1,,1,1,,,,,,,,,,,,,
7,3,,172137-74580,,"O-RING 15",1,1,,1,1,,,,,,,,,,,,,
8,3,,24315-000220,,"O-RING 1B P-22.0",1,1,,1,1,,,,,,,,,,,,,
9,3,,24315-000100,,"O-RING 1B P-10.0",1,1,,1,1,,,,,,,,,,,,,
10,3,,172137-74040,,"NUT M14",1,1,,1,1,,,,,,,,,,,,,
11,3,,172131-74050,,"CAP NUT M16X1",1,1,,1,1,,,,,,,,,,,,,
12,3,,24341-000160,,"O-RING 1A S-16.0",2,2,,2,2,,,,,,,,,,,,,
13,2,,172149-74220,,"SECTION ASSY, P2",1,1,,1,1,,,,,,,,,,,,,
15,3,,24325-000550,,"O-RING 1B G-55.0",2,2,,2,2,,,,,,,,,,,,,
16,3,,23871-020000,,"PLUG PT 1/4",1,1,,1,1,,,,,,,,,,,,,
17,2,,172149-74440,,"VALVE, RELIEF",1,1,,1,1,,,,,,,,,,,,,
18,3,,172131-74340,,"VALVE,RELIEF",1,1,,1,1,,,,,,,,,,,,,
19,3,,172137-74580,,"O-RING 15",1,1,,1,1,,,,,,,,,,,,,
20,3,,24315-000220,,"O-RING 1B P-22.0",1,1,,1,1,,,,,,,,,,,,,
21,3,,24315-000100,,"O-RING 1B P-10.0",1,1,,1,1,,,,,,,,,,,,,
22,3,,172137-74040,,"NUT M14",1,1,,1,1,,,,,,,,,,,,,
23,3,,172131-74050,,"CAP NUT M16X1",1,1,,1,1,,,,,,,,,,,,,
24,3,,24341-000160,,"O-RING 1A S-16.0",2,2,,2,2,,,,,,,,,,,,,
25,2,,172149-74410,,"SECTION ASSY, P3",1,1,,1,1,,,,,,,,,,,,,
27,3,,24325-000550,,"O-RING 1B G-55.0",1,1,,1,1,,,,,,,,,,,,,
28,2,,172149-74480,,"VALVE, RELIEF",1,1,,1,1,,,,,,,,,,,,,
29,3,,172131-74340,,"VALVE,RELIEF",1,1,,1,1,,,,,,,,,,,,,
30,3,,172137-74580,,"O-RING 15",1,1,,1,1,,,,,,,,,,,,,
31,3,,24315-000220,,"O-RING 1B P-22.0",1,1,,1,1,,,,,,,,,,,,,
32,3,,24315-000100,,"O-RING 1B P-
10.0",1,1,,1,1,,,,72142372,,72142372,,,,72142372,,72142372,,,,I
33,3,,172137-74040,,"NUT M14",1,1,,1,1,,,,,,,,,,,,,
34,3,,172131-74050,,"CAP NUT M16X1",1,1,,1,1,,,,,,,,,,,,,
35,3,,172131-74020,,O-RING,2,2,,2,2,,,,,,,,,,,,,
36,2,,172149-74170,,PLATE,1,1,,1,1,,,,,,,,,,,,,
37,2,,172149-74300,,PLATE,1,1,,1,1,,,,,,,,,,,,,
38,2,,172149-74460,,TIE-ROD,3,3,,3,3,,,,,,,,,,,,,
39,2,,26716-080002,,"NUT M 8",6,6,,6,6,,,,,,,,,,,,,
40,1,,26013-080202,,"BOLT M 8X 20",1,1,,1,1,,,,,,,,,,,,,
41,1,,26013-080252,,"BOLT M 8X 25",2,2,,2,2,,,,,,,,,,,,,
```

Fig. 47 コントロールバルブ(P1、P2、P3) CONTROL VALVE (P1、P2、P3)

https://truckmanualshub.com/

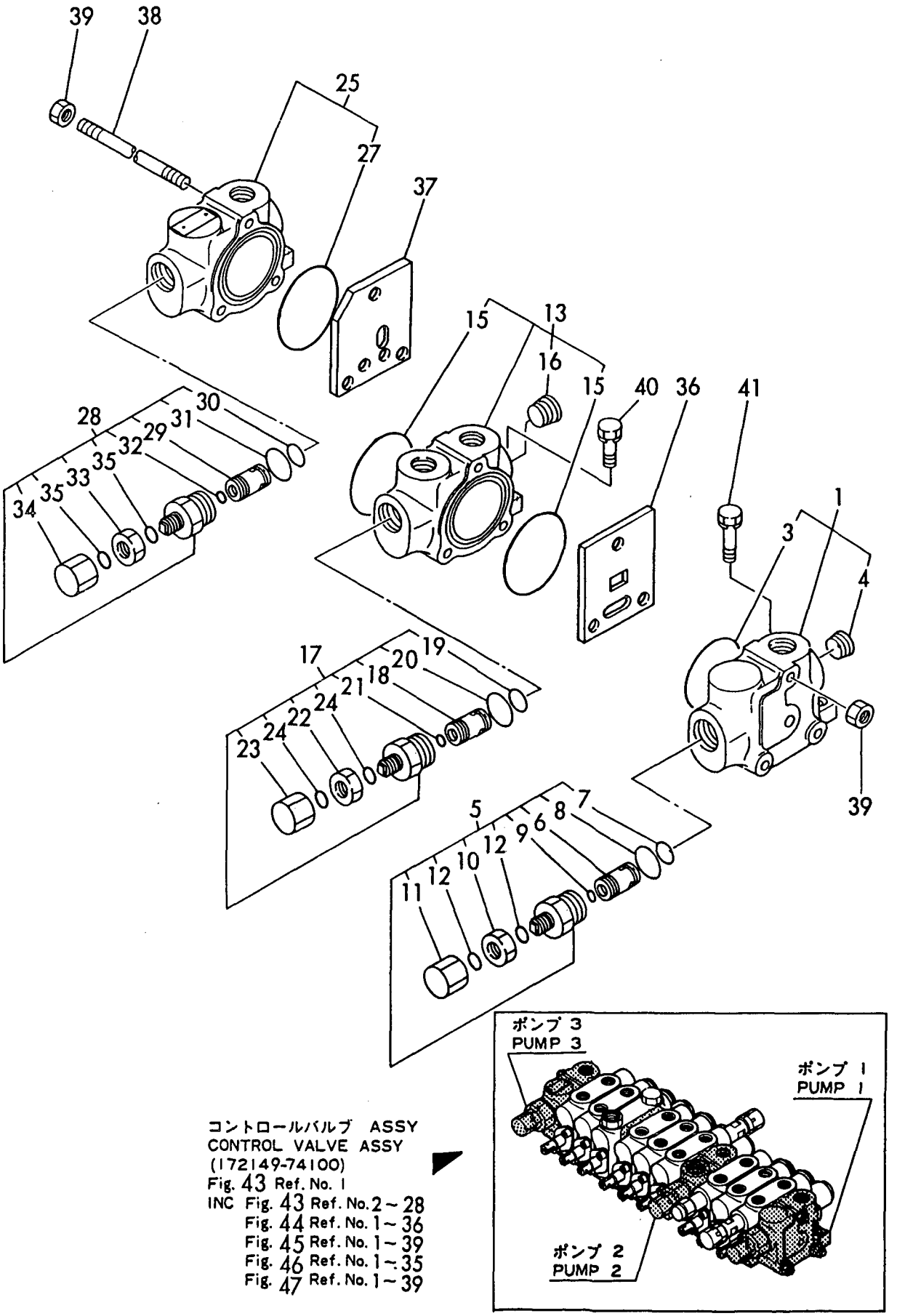

コントロールバルブ ASSY
CONTROL VALVE ASSY
(172149-74100)
Fig. 43 Ref. No. 1
INC Fig. 43 Ref. No. 2～28
Fig. 44 Ref. No. 1～36
Fig. 45 Ref. No. 1～39
Fig. 46 Ref. No. 1～35
Fig. 47 Ref. No. 1～39

https://truckmanualshub.com/

```
1,1,,772149-75100,,"RESERVOIR ASSY",1,1,,1,1,,,,,,,,,,,,,
2,2,,172137-73700,,"FILTER, SUCTION",1,1,,1,1,,,,,,,,,,,,,
3,2,,172141-73710,,"ROD, STRAINER",1,1,,1,1,,,,,,,,,,,,,
4,2,,172141-73750,,"FILTER ASSY, RETURN",1,1,,1,1,,,,,,,,,,,,,
5,3,,172141-73760,,ELEMENT,1,1,,1,1,,,,,,,,,,,,,
6,3,,172141-73770,,"VALVE ASSY, BYPASS",1,1,,1,1,,,,,,,,,,,,,
7,2,,172112-75780,,"SPRING, STRAINER",1,1,,1,1,,,,,,,,,,,,,
8,2,,26716-100002,,"NUT M10",1,1,,1,1,,,,,,,,,,,,,
9,2,,933152-02710,,"SPRING, SIDE CLUTCH",1,1,,1,1,,,,,,,,,,,,,
11,2,,172141-75400,,"COVER, EXIT",1,1,,1,1,,,,,,,,,,,,,
12,2,,172141-75430,,"COVER, INTAKE",1,1,,1,1,,,,,,,,,,,,,
13,2,,172122-75600,,"GAUGE, OIL LEVEL",1,1,,1,1,,,,,,,,,,,,,
14,3,,172122-75620,,BOLT,2,2,,2,2,,,,,,,,,,,,,
15,3,,172122-75630,,GASKET,4,4,,4,4,,,,,,,,,,,,,
16,2,,172116-75850,,"PLUG, OIL FEED",1,1,,1,1,,,,,,,,,,,,,
17,2,,22134-240000,,"WASHER
24",1,1,,1,1,,,,72183020,,72183020,,,,72183020,,72183020,,,,I
18,2,,22417-200160,,"COTTER PIN
2.0X16",1,1,,1,1,,,,72422067,,72422067,,,,72422067,,72422067,,,,I
19,2,,24311-000380,,"O-RING 1A P-38.0",1,1,,1,1,,,,,,,,,,,,,
20,2,,24321-001050,,"O-RING 1A G-105.0",2,2,,2,2,,,,,,,,,,,,,
21,2,,26013-080202,,"BOLT M 8X 20",6,6,,6,6,,,,,,,,,,,,,
22,2,,933171-
23042,,MAGNET,1,1,,1,1,,,,72422067,,72422067,,,,72422067,,72422067,,,,I
23,2,,933171-23050,,"PLUG 1/4",1,1,,1,1,,,,,,,,,,,,,
24,2,,933171-23062,,"PLUG 24, DRAIN",1,1,,1,1,,,,,,,,,,,,,
25,1,,26013-120302,,"BOLT M12X 30",3,3,,3,3,,,,,,,,,,,,,
26,1,,933152-03700,,"WASHER, SIDE CLUTCH",3,3,,3,3,,,,,,,,,,,,,
27,1,,933169-22940,,"SPACER, RESERVOIR",1,1,,1,1,,,,,,,,,,,,,
```

Fig.48 サドウユタンク HYD.OIL TANK

https://truckmanualshub.com/

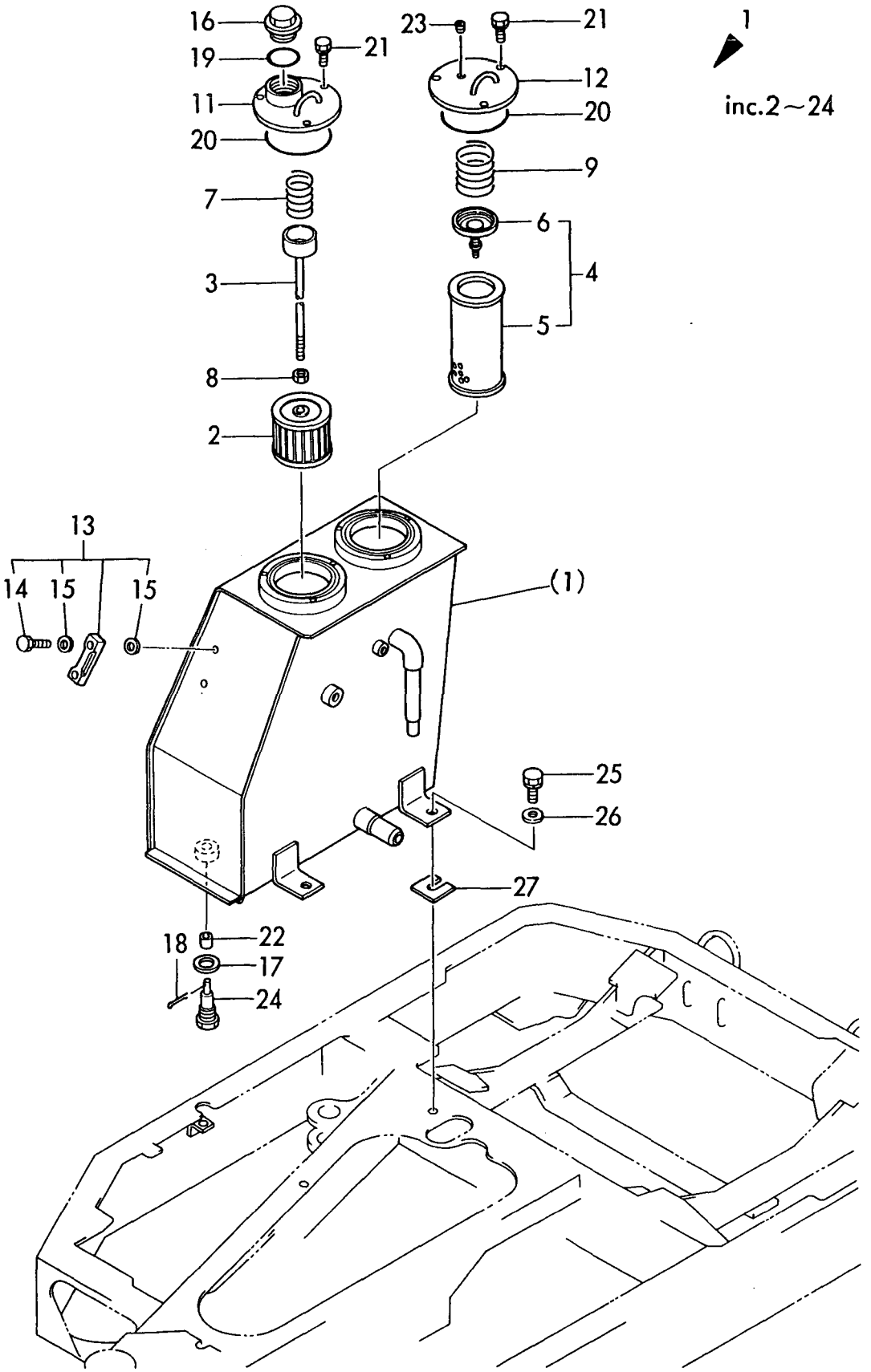

https://truckmanualshub.com/

```
1,1,,172112-77660,,"L-JOINT 1/8",2,2,,2,2,,,,,,,,,,,,,
2,1,,172141-77800,,"JOINT, GREASE",4,4,,4,4,,,,,,,,,,,,,
3,1,,172137-78520,,"PIPE P202FF095",1,1,,1,1,,,,,,,,,,,,,
4,1,,172149-77811,,HOSE,2,2,,2,2,,,,,,,,,,,,,
5,1,,172312-77820,,"FITTING, GREASE",1,1,,1,1,,,,,,,,,,,,,
6,1,,23871-010000,,"PLUG PT 1/8",1,1,,1,1,,,,,,,,,,,,,
7,1,,24761-020000,,"NIPPLE PT1/8,GREASE",3,3,,3,3,,,,,,,,,,,,,,
```

Fig.49 エンカクキュウシ GREASING

https://truckmanualshub.com/

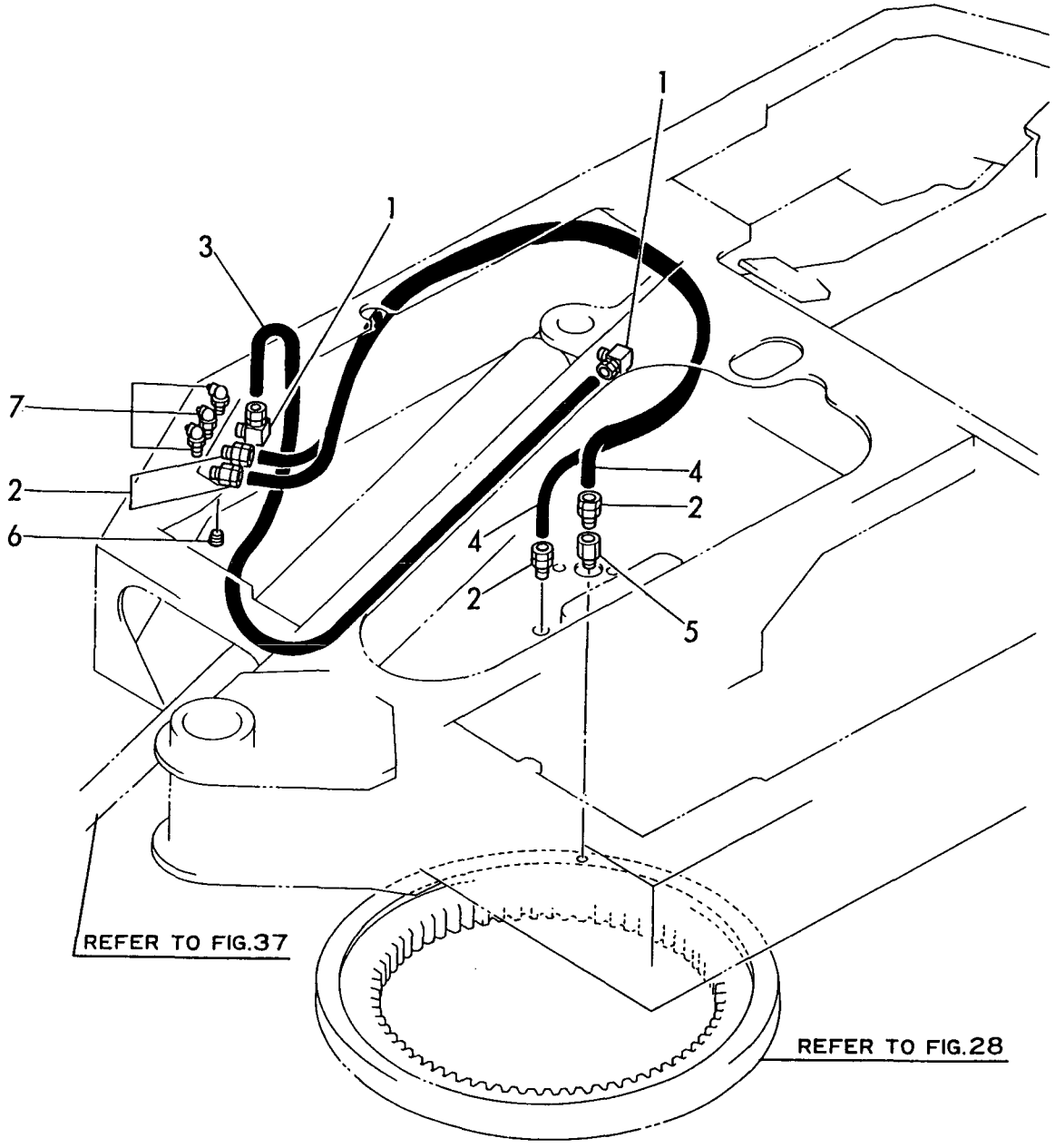

https://truckmanualshub.com/

```
1,1,,172149-76151,,JOINT,3,3,,3,3,,,,,,,,,,,,,
2,1,,172149-76300,,ELBOW,2,2,,2,2,,,,,,,,,,,,,
3,1,,933152-07400,,"O-RING (A)",3,3,,3,3,,,,,,,,,,,,,
4,1,,933160-03530,,"PORT, PUMP EXH.",3,3,,3,3,,,,,,,,,,,,,,
5,1,,933160-03570,,"O-RING (B)",3,3,,3,3,,,,,,,,,,,,,
6,1,,172149-76400,,"TUBE, SUCTION",1,1,,1,1,,,,,,,,,,,,,,
7,1,,22137-100000,,"WASHER 10",2,2,,2,2,,,,,,,,,,,,,
8,1,,26013-100202,,"BOLT M10X 20",2,2,,2,2,,,,,,,,,,,,,,
9,1,,172149-78100,,HOSE,1,1,,1,1,,,,,,,,,,,,,
10,1,,172149-78110,,HOSE,3,3,,3,3,,,,,,,,,,,,,
11,1,,23000-035000,,"CLAMP 35",12,12,,12,12,,,,,,,,,,,,,,
12,1,,23000-048000,,"CLAMP 48",4,4,,4,4,,,,,,,,,,,,,
13,1,,933171-15680,,"GROMMET 40X13",3,3,,3,3,,,,,,,,,,,,,,
14,1,,172149-78150,,HOSE,1,1,,1,1,,,,,,,,,,,,,
15,1,,172149-78160,,HOSE,1,1,,1,1,,,,,,,,,,,,,
16,1,,172149-78170,,HOSE,1,1,,1,1,,,,,,,,,,,,,
17,1,,172149-17640,,CLAMP,1,1,,1,1,,,,,,,,,,,,,
18,1,,26013-100202,,"BOLT M10X 20",2,2,,2,2,,,,,,,,,,,,,,
19,1,,172510-76310,,"ELBOW 3/8",1,1,,1,1,,,,,,,,,,,,,
```

Fig. 50 ユアツハイカン(タンク－バルブ) HYD. OIL PIPING (TANK-VALVE)

https://truckmanualshub.com/

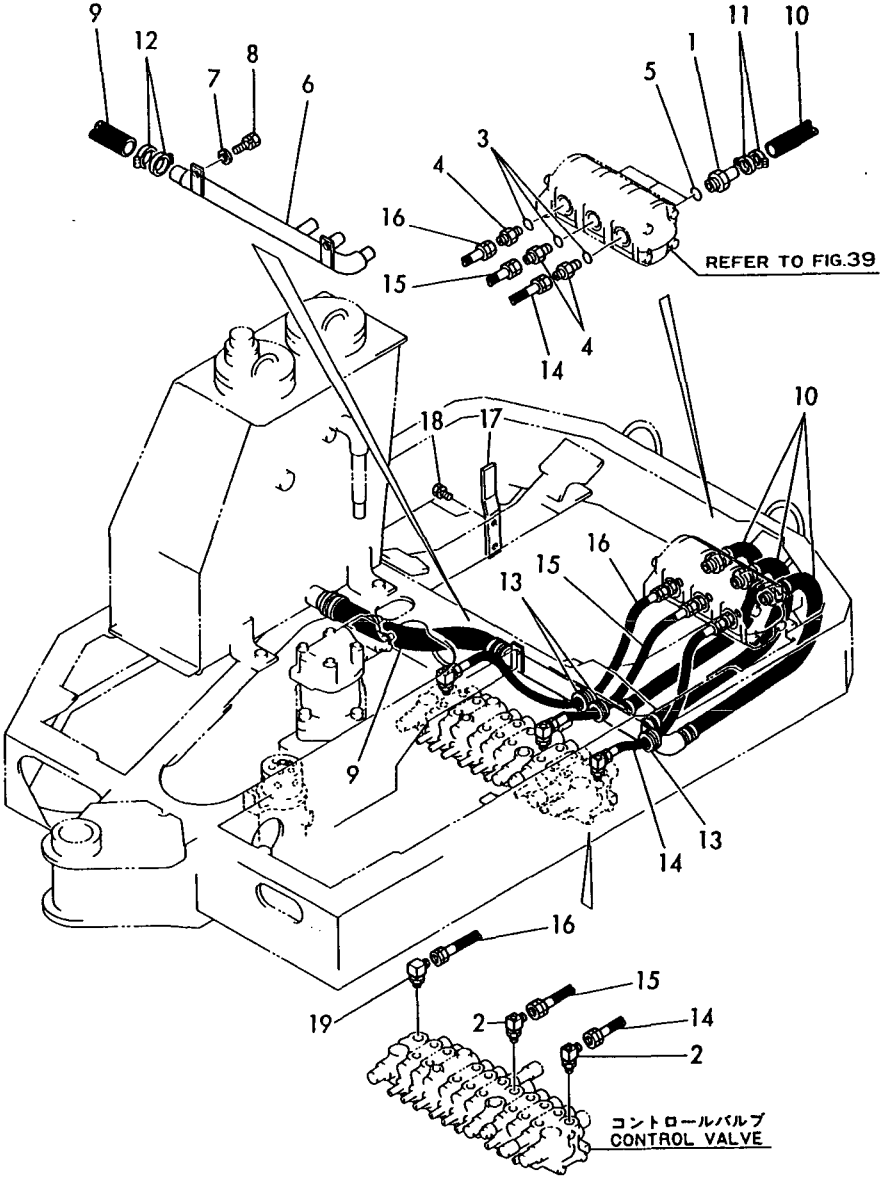

https://truckmanualshub.com/

```
1,1,,23393-020000,,"JOINT 90RGI1/4",5,5,,5,5,,,,,,,,,,,,,
2,1,,172149-76250,,"CONNECTER, GAUGE",1,1,,1,1,,,,,,,,,,,,,
3,1,,172112-77660,,"L-JOINT 1/8",3,3,,3,3,,,,,,,,,,,,,
4,1,,26013-100202,,"BOLT M10X 20",2,2,,2,2,,,,,,,,,,,,,
5,1,,172149-78020,,BUSH,1,1,,1,1,,,,,,,,,,,,,
6,1,,172149-78780,,BUSH,2,2,,2,2,,,,,,,,,,,,,
7,1,,172149-78790,,BUSH,1,1,,1,1,,,,,,,,,,,,,
8,1,,172149-78210,,HOSE,1,1,,1,1,,,,,,,,,,,,,
9,1,,172149-78220,,HOSE,1,1,,1,1,,,,,,,,,,,,,
10,1,,172149-78230,,HOSE,1,1,,1,1,,,,,,,,,,,,,
11,1,,172149-78240,,HOSE,1,1,,1,1,,,,,,,,,,,,,
12,1,,172149-78270,,HOSE,2,2,,2,2,,,,,,,,,,,,,
13,1,,172149-78290,,HOSE,2,2,,2,2,,,,,,,,,,,,,
14,1,,172149-78300,,HOSE,2,2,,2,2,,,,,,,,,,,,,
15,1,,172149-78500,,HOSE,1,1,,1,1,,,,,,,,,,,,,
16,1,,172149-78510,,HOSE,1,1,,1,1,,,,,,,,,,,,,
17,1,,172149-78520,,HOSE,1,1,,1,1,,,,,,,,,,,,,
18,1,,23871-030000,,"PLUG PT 3/8",3,3,,3,3,,,,,,,,,,,,,
19,1,,24315-000110,,"O-RING 1B P-11.0",8,8,,8,8,,,,,,,,,,,,,
20,1,,172123-76120,,"CONNECTOR PF1/4",2,2,,2,2,,,,,,,,,,,,,
21,1,,24315-000110,,"O-RING 1B P-11.0",2,2,,2,2,,,,,,,,,,,,,
22,1,,23394-020000,,"JOINT 45RGI1/4",1,1,,1,1,,,,,,,,,,,,,
23,1,,172149-78350,,"COVER, HOSE",2,2,,2,2,,,,,,,,,,,,,
24,1,,23000-025000,,"CLAMP 25",2,2,,2,2,,,,,,,,,,,,,
25,1,,172312-76250,,"ELBOW PT1/4",1,1,,1,1,,,,,,,,,,,,,
26,1,,23393-020000,,"JOINT 90RGI1/4",2,2,,2,2,,,,,,,,,,,,,
```

Fig. 51 ユアツハイカン(バルブ－スイベル.モータ)
HYD. OIL PIPING (VALVE－SWIVEL.MOTOR)

https://truckmanualshub.com/

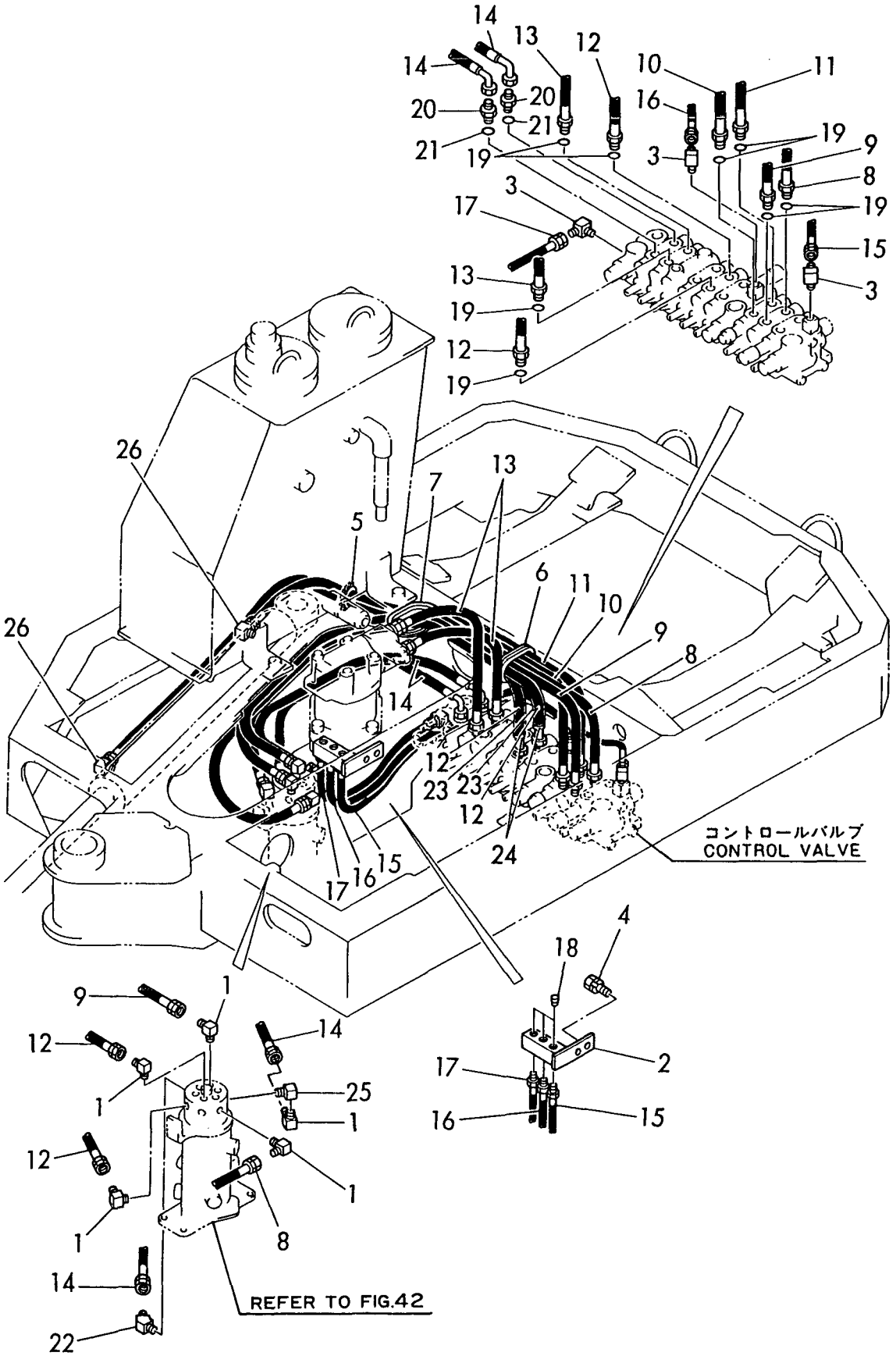

https://truckmanualshub.com/

```
1,1,,172149-76120,,ELBOW,1,1,,1,1,,,,,,,,,,,,,
2,2,,24311-000180,,"O-RING 1A P-18.0",1,1,,1,1,,,,,,,,,,,,,
3,1,,172141-76180,,CONNECTOR,1,1,,1,1,,,,,,,,,,,,,
4,2,,24315-000110,,"O-RING 1B P-11.0",1,1,,1,1,,,,,,,,,,,,,
5,1,,172141-76200,,CONNECTOR,1,1,,1,1,,,,,,,,,,,,,
6,2,,24315-000110,,"O-RING 1B P-11.0",1,1,,1,1,,,,,,,,,,,,,
7,1,,172141-77800,,"JOINT, GREASE",2,2,,2,2,,,,,,,,,,,,,
8,1,,172142-77810,,HOSE,1,1,,1,1,,,,,,,,,,,,,
9,1,,172149-78120,,HOSE,1,1,,1,1,,,,,,,,,,,,,
10,1,,172149-78130,,HOSE,1,1,,1,1,,,,,,,,,,,,,
11,1,,172141-78500,,HOSE,1,1,,1,1,,,,,,,,,,,,,
13,2,,172141-78900,,"TUBE, SPIRAL",1,1,,1,1,,,,,,,,,,,,,
14,1,,23393-030000,,"JOINT 90RGI 3/8",1,1,,1,1,,,,,,,,,,,,,
15,1,,23000-048000,,"CLAMP 48",1,1,,1,1,,,,,,,,,,,,,
16,1,,172149-78400,,"TUBE, COIL",1,1,,1,1,,,,,,,,,,,,,
```

Fig. 52 ユアツハイカン(サドウユタンクモドシ) HYD. OIL PIPING(TANK RETURN)

https://truckmanualshub.com/

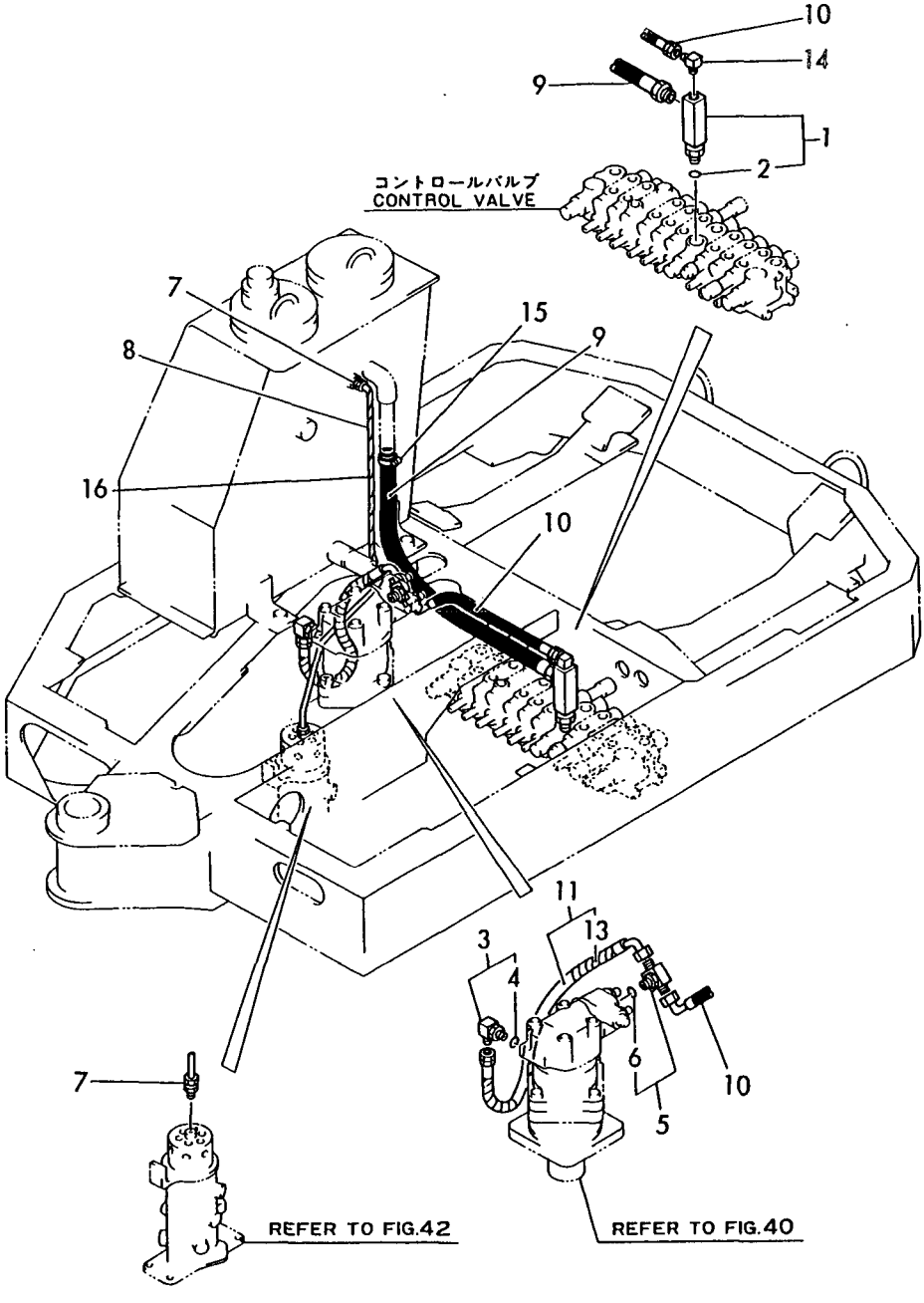

https://truckmanualshub.com/

```
1,1,,172123-76120,,"CONNECTOR PF1/4",4,4,,4,4,,,,,,,,,,,,,
2,1,,23394-020000,,"JOINT 45RGI1/4",2,2,,2,2,,,,,,,,,,,,,
3,1,,172110-76470,,NIPPLE,4,4,,4,4,,,,,,,,,,,,,
4,1,,24315-000110,,"O-RING 1B P-11.0",4,4,,4,4,,,,,,,,,,,,,
5,1,,172149-78330,,HOSE,2,2,,2,2,,,,,,,,,,,,,
6,1,,172149-78310,,HOSE,2,2,,2,2,,,,,,,,,,,,,
7,1,,172149-78320,,HOSE,2,2,,2,2,,,,,,,,,,,,,
```

Fig. 53 ユアツハイカン(ソウコウ) HYD. OIL PIPING(TRAVEL)

https://truckmanualshub.com/

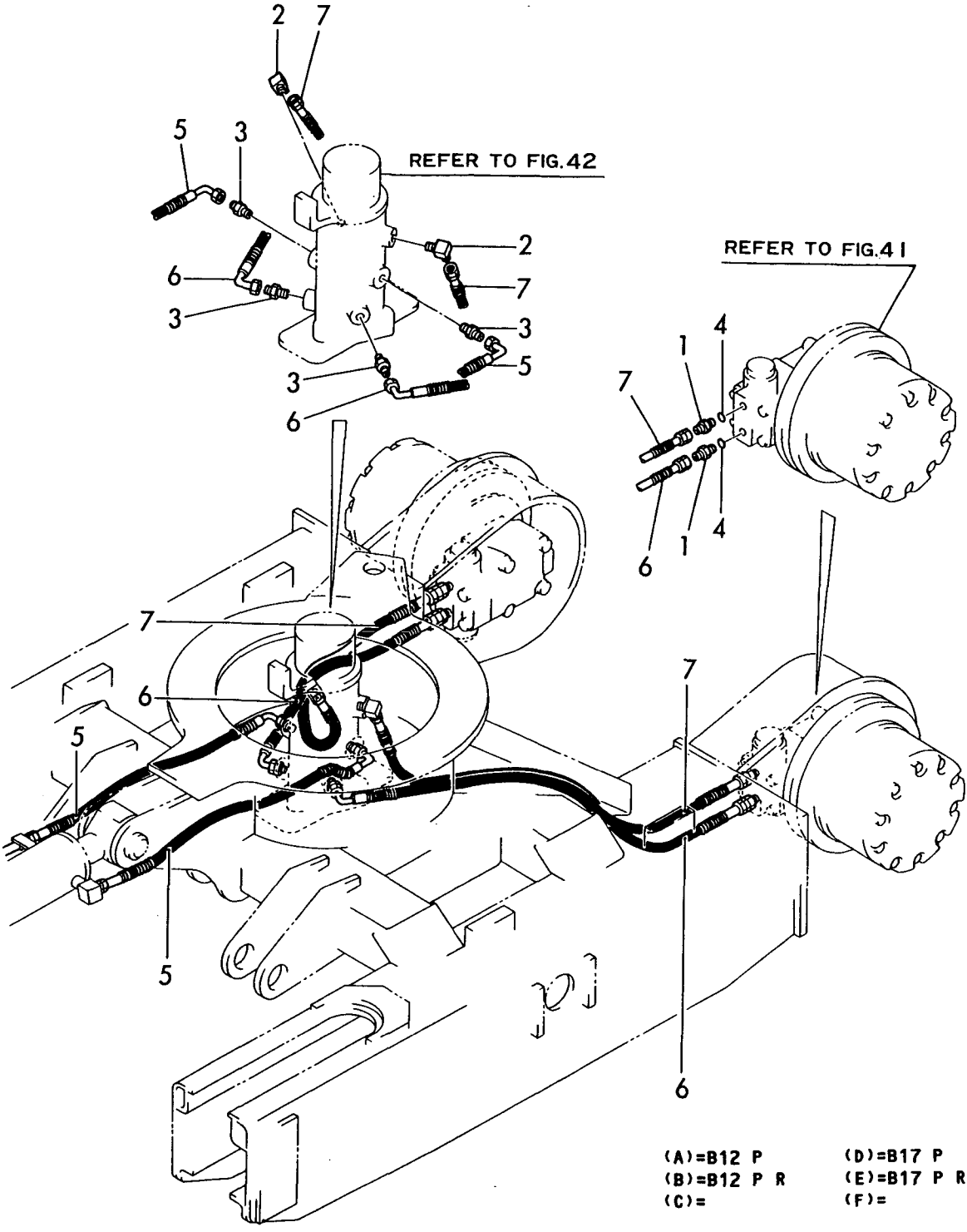

(A)=B12 P
(B)=B12 P R
(C)=
(D)=B17 P
(E)=B17 P R
(F)=

https://truckmanualshub.com/

```
1,1,,172123-76120,,"CONNECTOR PF1/4",2,2,,2,2,,,,,,,,,,,,,
2,1,,24315-000110,,"O-RING 1B P-11.0",6,6,,6,6,,,,,,,,,,,,,,
3,1,,172110-76170,,PLATE,4,4,,4,4,,,,,,,,,,,,,
4,1,,172149-76450,,"TUBE(L), ARM",1,1,,1,1,,,,,,,,,,,,,
5,1,,172149-76470,,"TUBE(R), ARM",1,1,,1,1,,,,,,,,,,,,,
6,1,,172149-76490,,"TUBE(L), BUCKET",1,1,,1,1,,,,,,,,,,,,,
7,1,,172149-76520,,"TUBE(R), BUCKET",1,1,,1,1,,,,,,,,,,,,,
8,1,,172137-76580,,"COLLER 9X11",4,4,,4,4,,,,,,,,,,,,,
9,1,,172149-76580,,"JOINT, BOOM",1,1,,1,1,,,,,,,,,,,,,
10,1,,26013-080162,,"BOLT M 8X 16",3,3,,3,3,,,,,,,,,,,,,
11,1,,26013-080252,,"BOLT M 8X 25",4,4,,4,4,,,,,,,,,,,,,
12,1,,26013-100202,,"BOLT M10X 20",2,2,,2,2,,,,,,,,,,,,,
13,1,,172137-78340,,HOSE,2,2,,2,2,,,,,,,,,,,,,
14,1,,172137-78350,,HOSE,2,2,,,,,,,,,,,,,,,,,
15,1,,172149-78600,,CLAMP,1,1,,1,1,,,,,,,,,,,,,
16,1,,172149-78620,,"PLATE, CLAMP",1,1,,1,1,,,,,,,,,,,,,
17,1,,172149-78650,,"SUPPORT, HOSE",1,1,,1,1,,,,,,,,,,,,,
18,1,,172149-78760,,GROMMET,1,1,,1,1,,,,,,,,,,,,,
19,1,,23271-020501,,HOSE,1,1,,1,1,,,,,,,,,,,,,
20,1,,23271-020571,,HOSE,1,1,,1,1,,,,,,,,,,,,,
21,1,,26013-100202,,"BOLT M10X 20",4,4,,4,4,,,,,,,,,,,,,
22,1,,172149-78190,,HOSE,1,1,,1,1,,,,,,,,,,,,,
23,1,,172149-78200,,HOSE,1,1,,1,1,,,,,,,,,,,,,
24,1,,172149-78250,,HOSE,1,1,,1,1,,,,,,,,,,,,,
25,1,,172149-78260,,HOSE,1,1,,1,1,,,,,,,,,,,,,
26,1,,172149-78280,,HOSE,1,1,,1,1,,,,,,,,,,,,,
27,1,,172149-78820,,"CLAMP, HOSE",1,1,,1,1,,,,,,,,,,,,,
28,1,,172150-78150,,HOSE,,,,2,2,,,,,,,,,,,,,
29,1,,172149-78870,,CLAMP,2,2,,2,2,,,,,,,,,,,,,
30,1,,26013-100202,,"BOLT M10X 20",2,2,,2,2,,,,,,,,,,,,,
31,1,,172149-78180,,HOSE,1,1,,1,1,,,,,,,,,,,,,
32,1,,172149-78960,,"COVER, HOSE",1,1,,1,1,,,1,,,,,,,,,,
33,1,,172149-78970,,"COVER, HOSE",3,3,,3,3,,,1,,,,,,,,,,
34,1,,172149-78350,,"COVER, HOSE",2,2,,2,2,,,1,,,,,,,,,,
35,1,,23000-025000,,"CLAMP 25",2,2,,2,2,,,1,,,,,,,,,,
36,1,,172149-78940,,"COVER, HOSE",2,2,,2,2,,,1,,,,,,,,,,
37,1,,172149-78980,,"COVER, HOSE",1,1,,1,1,,,1,,,,,,,,,,
```

Fig. 54 ユアツハイカン(サギョウキブ) HYD.OIL PIPING (WORK EQUIPMENT)

https://tractormanualshub.com/

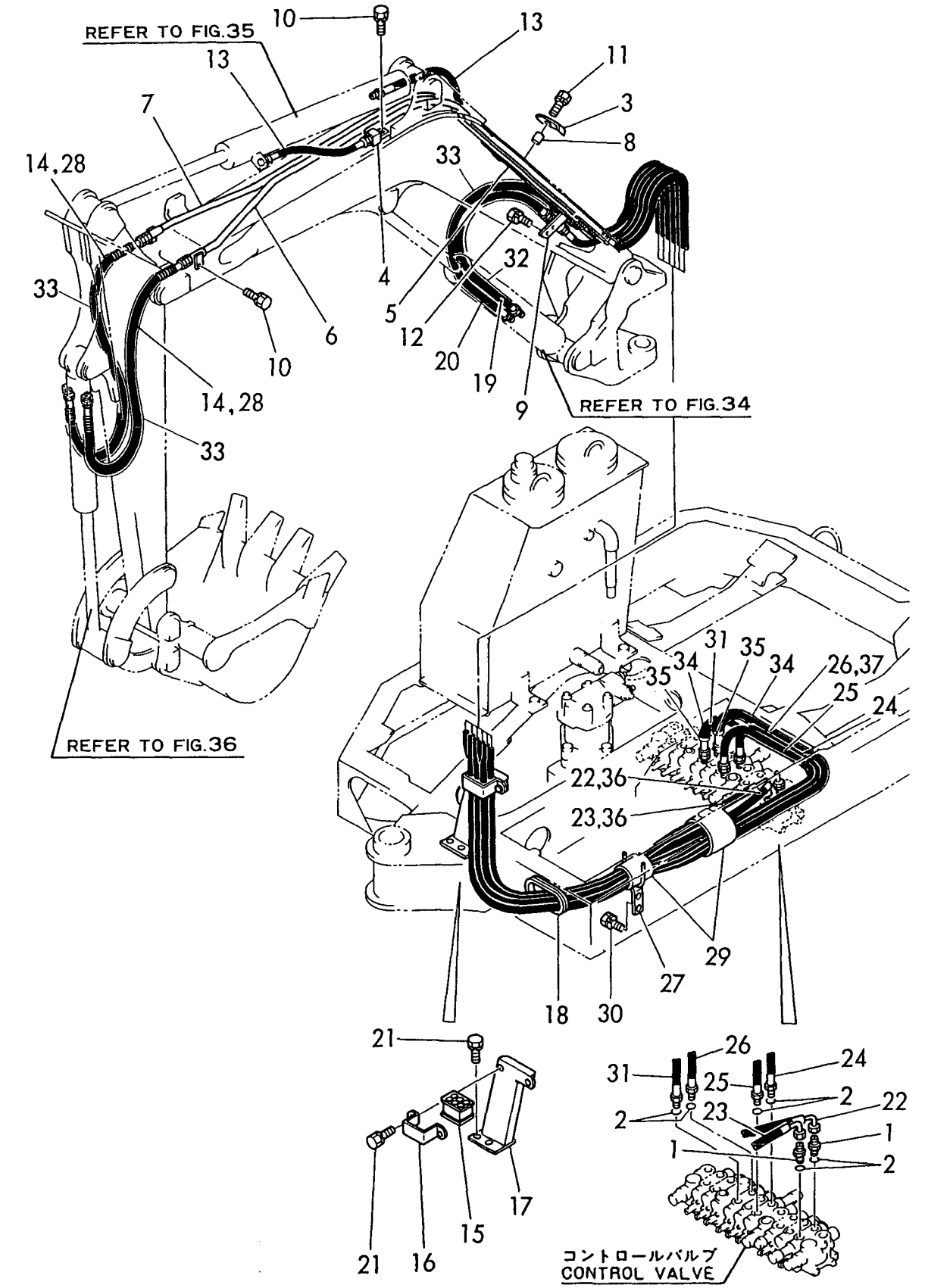

https://truckmanualshub.com/

```
1,1,,23871-040000,,"PLUG PT 1/2",1,1,,1,1,,,,,,,,,,,,,
2,1,,23871-030000,,"PLUG PT 3/8",1,1,,1,1,,,,,,,,,,,,,
3,1,,172730-75140,,ADAPTOR,2,2,,2,2,,,,,,,,,,,,,
4,1,,24311-000140,,"O-RING 1A P-14.0",2,2,,2,2,,,,,,,,,,,,,
5,1,,172149-76200,,CONNECTER,1,1,,1,1,,,,,,,,,,,,,
6,1,,172150-76350,,CONNECTOR,1,1,,1,1,,,,,,,,,,,,,
7,1,,933166-25420,,ADAPTER,1,1,,1,1,,,,,,,,,,,,,
8,1,,933152-24410,,"CONNECTOR (A)",1,1,,1,1,,,,,,,,,,,,,
9,1,,26013-100252,,"BOLT M10X 25",2,2,,2,2,,,,,,,,,,,,,
10,1,,172112-76300,,"RETAINER A,BOOM PIPE",1,1,,1,1,,,,,,,,,,,,,
11,1,,172149-76540,,"TUBE, 3RD",1,1,,1,1,,,,,,,,,,,,,
12,1,,172149-76560,,"TUBE, 3RD",1,1,,1,1,,,,,,,,,,,,,
13,1,,23871-030000,,"PLUG PT 3/8",1,1,,1,1,,,,,,,,,,,,,
14,1,,23871-040000,,"PLUG PT 1/2",1,1,,1,1,,,,,,,,,,,,,
15,1,,26013-100402,,"BOLT M10X 40",3,3,,3,3,,,,,,,,,,,,,
16,1,,933155-09670,,"CLAMP, PIPE",2,2,,2,2,,,,,,,,,,,,,
17,1,,172149-78540,,HOSE,1,1,,1,1,,,,,,,,,,,,,
18,1,,172149-78530,,HOSE,1,1,,1,1,,,,,,,,,,,,,
19,1,,172149-78470,,HOSE,1,1,,1,1,,,,,,,,,,,,,
20,1,,172149-78480,,HOSE,1,1,,1,1,,,,,,,,,,,,,
21,1,,172150-78620,,CLAMP,1,1,,1,1,,,,,,,,,,,,,
22,1,,172150-78650,,HOSE,1,1,,1,1,,,,,,,,,,,,,
23,1,,172145-76180,,"JOINT 3/8",1,1,,1,1,,,,,,,,,,,,,
24,1,,172138-74351,,"VALVE ASSY",1,1,,1,1,,,,,,,,,,,,,
25,2,,172138-74360,,BODY,1,1,,1,1,,,,,,,,,,,,,
26,2,,172138-74370,,ROTOR,1,1,,1,1,,,,,,,,,,,,,
27,2,,172138-74380,,"SEAL, OIL",2,2,,2,2,,,,,,,,,,,,,
28,2,,172138-74390,,SPRING,1,1,,1,1,,,,,,,,,,,,,
29,2,,172138-74400,,ROLLER,1,1,,1,1,,,,,,,,,,,,,
30,2,,172138-74411,,LEVER,1,1,,1,1,,,,,,,,,,,,,
31,2,,172138-74420,,"KNOB, LEVER",1,1,,1,1,,,,,,,,,,,,,
32,2,,172138-74470,,"SEAL SET",1,1,,1,1,,,,,,,,,,,,,
33,2,,23871-010000,,"PLUG PT 1/8",1,1,,1,1,,,,,,,,,,,,,
34,2,,23871-020000,,"PLUG PT 1/4",1,1,,1,1,,,,,,,,,,,,,
35,1,,26116-080852,,"BOLT M 8X 85 PLATED",4,4,,4,4,,,,,,,,,,,,,
36,1,,22217-080000,,"SPRING WASHER  8",4,4,,4,4,,,,,,,,,,,,,
37,1,,172149-78550,,HOSE,1,1,,1,1,,,,,,,,,,,,,
38,1,,172142-78770,,"COVER 16-730, HOSE",1,1,,1,1,,,,,,,,,,,,,
39,1,,172149-78950,,"COVER, HOSE",1,1,,1,1,,,,,,,,,,,,,
40,1,,23000-035000,,"CLAMP 35",2,2,,2,2,,,,,,,,,,,,,
41,1,,23000-025000,,"CLAMP 25",2,2,,2,2,,,,,,,,,,,,,
```

Fig. 55 サードバルブハイカン 3RD VALVE PIPING

https://truckmanualshub.com/

COUNTRY	U K	A S	E X
Fig. No.	55	56	—

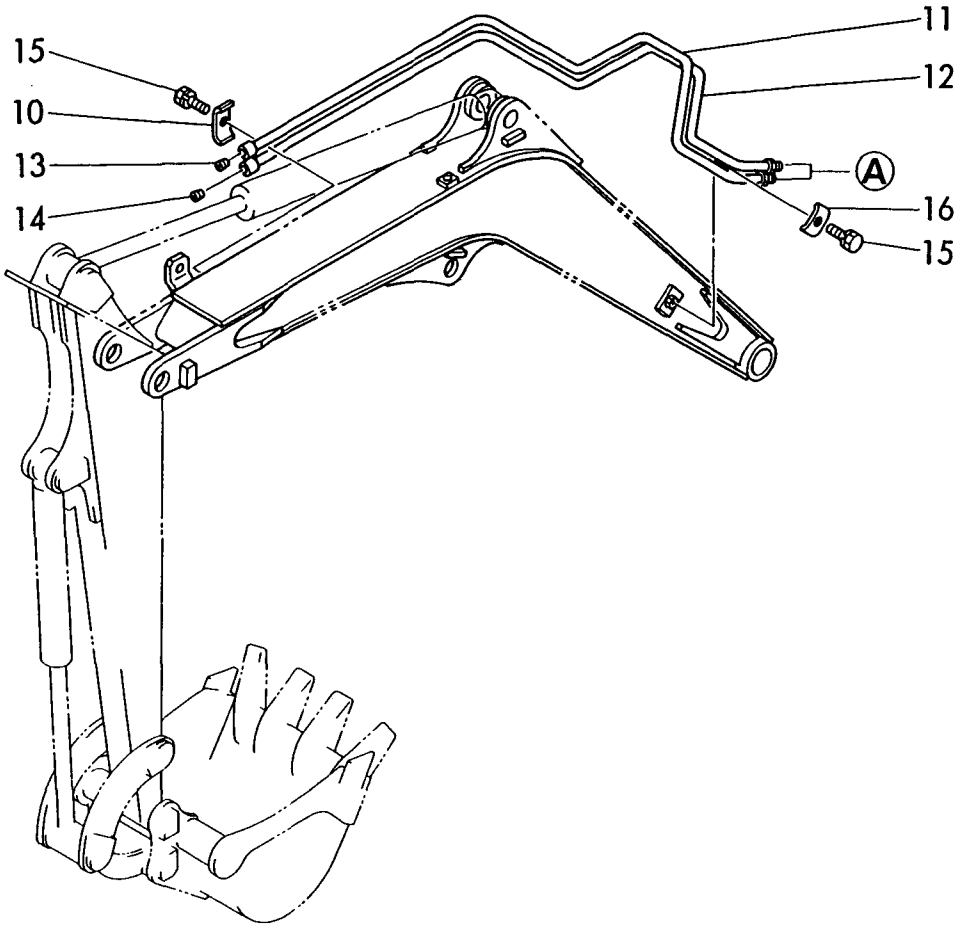

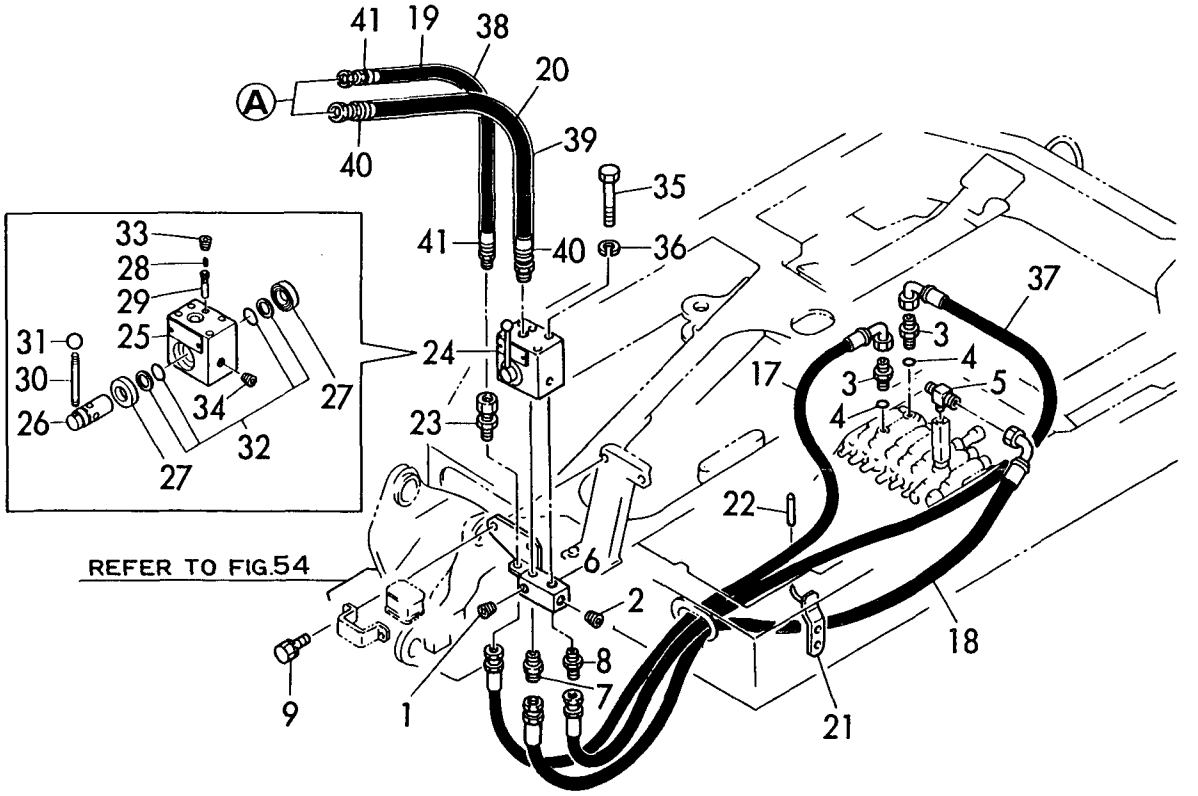

https://truckmanualshub.com/

```
1,1,,26013-100252,,"BOLT M10X 25",2,2,,2,2,,,,,,,,,,,,,
2,1,,172149-41860,,"PIN, BLADE",2,2,,2,2,,,,,,,,,,,,,
3,1,,172149-42750,,"SUPPORT, PEDAL",1,1,,1,1,,,,,,,,,,,,,,
4,1,,172149-42800,,"PEDAL, 3RD",1,1,,1,1,,,,,,,,,,,,,
5,2,,172141-41360,,"BUSH 1415",2,2,,2,2,,,,,,,,,,,,,
7,1,,172149-42850,,"LINK, 3RD",1,1,,1,1,,,,,,,,,,,,,
8,2,,172141-41360,,"BUSH 1415",2,2,,2,2,,,,,,,,,,,,,
10,1,,172149-42890,,"LEVER, LOCK",1,1,,1,1,,,,,,,,,,,,,,
11,1,,172149-42900,,COLLAR,1,1,,1,1,,,,,,,,,,,,,
12,1,,172149-42920,,"ROD, 3RD",1,1,,1,1,,,,,,,,,,,,,
13,1,,172146-45690,,"ROD(C), SPOOL",1,1,,1,1,,,,,,,,,,,,,,
14,1,,172122-46570,,"ROD-END  8",1,1,,1,1,,,,,,,,,,,,,
15,1,,172122-46590,,"ELBALL 8",2,2,,2,2,,,,,,,,,,,,,
16,1,,1C6281-52310,,"PIN 6,COME-OFF SNAP",1,1,,1,1,,,,,,,,,,,,,,
17,1,,22217-080000,,"SPRING WASHER  8",1,1,,1,1,,,,,,,,,,,,,
18,1,,22217-080000,,"SPRING WASHER  8",2,2,,2,2,,,,,,,,,,,,,
19,1,,22217-100000,,"SPRING WASHER 10",1,1,,1,1,,,,,,,,,,,,,
20,1,,26013-100202,,"BOLT M10X 20",4,4,,4,4,,,,,,,,,,,,,
21,1,,26116-080302,,"BOLT M 8X 30 PLATED",1,1,,1,1,,,,,,,,,,,,,,
22,1,,26116-100252,,"BOLT M10X 25 PLATED",1,1,,1,1,,,,,,,,,,,,,,
23,1,,26116-100352,,"BOLT M10X 35 PLATED",1,1,,1,1,,,,,,,,,,,,,,
24,1,,26716-080002,,"NUT M 8",2,2,,2,2,,,,,,,,,,,,,
25,1,,26716-080002,,"NUT M 8",4,4,,4,4,,,,,,,,,,,,,
26,1,,26716-100002,,"NUT M10",1,1,,1,1,,,,,,,,,,,,,
27,1,,933110-54100,,"PIN 4.75X14",1,1,,1,1,,,,,,,,,,,,,
28,1,,172131-03421,,"LABEL, 3RD VALVE",1,1,,1,1,,,,,,,,,,,,,
29,1,,26013-100202,,"BOLT M10X 20",2,2,,2,2,,,,,,,,,,,,,
30,1,,24311-000210,,"O-RING 1A P-21.0",4,4,,4,4,,,,,,,,,,,,,
31,1,,23871-040000,,"PLUG PT 1/2",2,2,,2,2,,,,,,,,,,,,,
32,1,,23871-030000,,"PLUG PT 3/8",2,2,,2,2,,,,,,,,,,,,,
33,1,,172730-75140,,ADAPTOR,1,1,,1,1,,,,,,,,,,,,,
34,1,,24311-000140,,"O-RING 1A P-14.0",1,1,,1,1,,,,,,,,,,,,,
35,1,,172149-76200,,CONNECTER,1,1,,1,1,,,,,,,,,,,,,
36,1,,172149-76700,,CONNECTOR,1,1,,1,1,,,,,,,,,,,,,
37,1,,23391-040000,,"JOINT RGI 1/2",1,1,,1,1,,,,,,,,,,,,,
38,1,,933152-24410,,"CONNECTOR (A)",1,1,,1,1,,,,,,,,,,,,,
39,1,,172112-76300,,"RETAINER A,BOOM PIPE",1,1,,1,1,,,,,,,,,,,,,
40,1,,172149-76540,,"TUBE, 3RD",1,1,,1,1,,,,,,,,,,,,,
41,1,,172149-76560,,"TUBE, 3RD",1,1,,1,1,,,,,,,,,,,,,
42,1,,23871-030000,,"PLUG PT 3/8",1,1,,1,1,,,,,,,,,,,,,
43,1,,23871-040000,,"PLUG PT 1/2",1,1,,1,1,,,,,,,,,,,,,
44,1,,26013-100402,,"BOLT M10X 40",3,3,,3,3,,,,,,,,,,,,,
45,1,,933155-09670,,"CLAMP, PIPE",2,2,,2,2,,,,,,,,,,,,,
46,1,,172149-78450,,HOSE,1,1,,1,1,,,,,,,,,,,,,
47,1,,172149-78460,,HOSE,1,1,,1,1,,,,,,,,,,,,,
48,1,,172149-78900,,"CLAMP, HOSE(3RD)",1,1,,1,1,,,,,,,,,,,,,
49,1,,172149-78920,,HOSE,1,1,,1,1,,,,,,,,,,,,,
50,1,,172149-78470,,HOSE,1,1,,1,1,,,,,,,,,,,,,
51,1,,172149-78480,,HOSE,1,1,,1,1,,,,,,,,,,,,,
```

Fig. 56 サードバルブハイカン 3RD VALVE PIPING

https://truckmanualshub.com/

COUNTRY	U K	A S	E X
Fig. No.	55	56	—

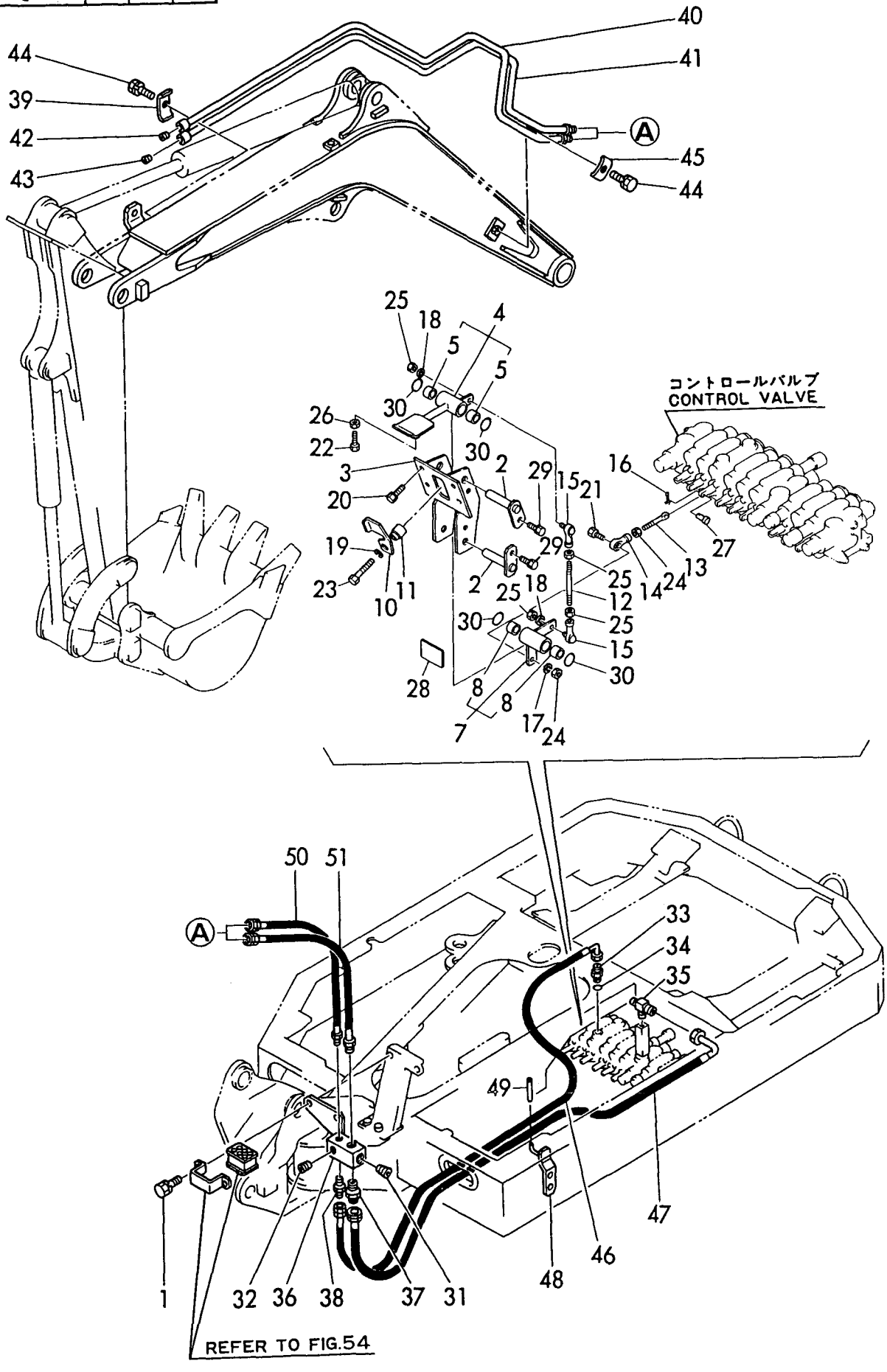

https://truckmanualshub.com/

```
1,1,,172149-81400,,"BOOM, 3RD",1,1,,,,,,,,,,,,,,,
2,2,,172141-82270,,"BUSH 38 45, PIN",2,2,,,,,,,,,,,,,,,,
3,1,,172149-81300,,PIN,1,1,,,,,,,,,,,,,,,,
4,1,,172149-81320,,PIN,1,1,,,,,,,,,,,,,,,,
5,1,,172137-81360,,"PIN 30-109, BOOM",1,1,,,,,,,,,,,,,,,,
6,1,,172141-84600,,"SHIM 35",1,1,,,,,,,,,,,,,,,,
7,1,,22417-800450,,"COTTER PIN 8.0X45",3,3,,,,,,,,,,,,,,,,
8,1,,24761-020000,,"NIPPLE PT1/8,GREASE",1,1,,,,,,,,,,,,,,,,
9,1,,933160-06710,,"SHIM 30, PIN ADJUST",2,2,,,,,,,,,,,,,,,,
10,1,,172138-82101,,"ARM 780 ASSY",1,1,,,,,,,,,,,,,,,,
11,2,,172137-81300,,"BUSH 30X45, PIN",6,6,,,,,,,,,,,,,,,,
12,1,,172137-94250,,"PIN 30- 71",2,2,,,,,,,,,,,,,,,,
13,1,,22417-800450,,"COTTER PIN 8.0X45",2,2,,,,,,,,,,,,,,,,
14,1,,24761-040000,,"NIPPLE B,GREASE",1,1,,,,,,,,,,,,,,,,
15,1,,933160-06710,,"SHIM 30, PIN ADJUST",2,2,,,,,,,,,,,,,,,,
16,1,,172137-84401,,"LINK, BUCKET",1,1,,,,,,,,,,,,,,,,
17,2,,172137-81300,,"BUSH 30X45, PIN",2,2,,,,,,,,,,,,,,,,
18,2,,172137-84450,,"BUSH 30X11, PIN",2,2,,,,,,,,,,,,,,,,
19,1,,172137-84502,,"ARM (L), BUCKET",1,1,,,,,,,,,,,,,,,,
20,1,,172137-84512,,"ARM (R), BUCKET",1,1,,,,,,,,,,,,,,,,
21,1,,172137-86250,,"PIN, BUCKET",2,2,,,,,,,,,,,,,,,,
22,1,,22417-800450,,"COTTER PIN 8.0X45",2,2,,,,,,,,,,,,,,,,
23,1,,24761-020000,,"NIPPLE PT1/8,GREASE",2,2,,,,,,,,,,,,,,,,
24,1,,24761-020000,,"NIPPLE PT1/8,GREASE",2,2,,,,,,,,,,,,,,,,
25,1,,933160-06710,,"SHIM 30, PIN ADJUST",4,4,,,,,,,,,,,,,,,,
26,1,,172137-86250,,"PIN, BUCKET",2,2,,,,,,,,,,,,,,,,
27,1,,772137-86100,,"BUCKET ASSY (400",1,1,,,,,,,,,,,,,,,,
29,3,,172137-86240,,"TEETH, SIDE",2,2,,,,,,,,,,,,,,,,
30,2,,772137-86751,,"TEETE ASSY",3,3,,,,,,,,,,,,,,,,
31,3,,172137-86700,,"SHIM 2.3, TEETH",3,3,,,,,,,,,,,,,,,,
32,3,,172137-86710,,"TEETH SHIM 17 SET",3,3,,,,,,,,,,,,,,,,
33,3,,172137-86751,,"TEETH ASSY",3,3,,,,,,,,,,,,,,,,
34,4,,172141-86231,,TEETH,6,6,,,,,,,,,,,,,,,,
35,4,,172137-86770,,BOLT,6,6,,,,,,,,,,,,,,,,
36,4,,172137-86780,,NUT,6,6,,,,,,,,,,,,,,,,
37,1,,22417-800450,,"COTTER PIN 8.0X45",2,2,,,,,,,,,,,,,,,,
38,1,,24761-020000,,"NIPPLE PT1/8,GREASE",2,2,,,,,,,,,,,,,,,,
39,1,,933160-06710,,"SHIM 30, PIN ADJUST",2,2,,,,,,,,,,,,,,,,
40,1,,172149-83100,,"BRACKET, BOOM",1,1,,,,,,,,,,,,,,,,
41,1,,172149-83110,,PIN,1,1,,,,,,,,,,,,,,,,
42,1,,172149-83130,,PIN,1,1,,,,,,,,,,,,,,,,
43,1,,172149-83150,,PIN,1,1,,,,,,,,,,,,,,,,
44,1,,172149-83170,,PIN,1,1,,,,,,,,,,,,,,,,
45,1,,172149-83180,,PIN,1,1,,,,,,,,,,,,,,,,
46,1,,172149-83190,,"PLATE, LOCK",1,1,,,,,,,,,,,,,,,,
47,1,,172117-83970,,"PLATE (C), LOCK",2,2,,,,,,,,,,,,,,,,
48,1,,172141-84600,,"SHIM 35",2,2,,,,,,,,,,,,,,,,
49,1,,22417-800450,,"COTTER PIN 8.0X45",2,2,,,,,,,,,,,,,,,,
50,1,,22417-800630,,"COTTER PIN 8.0X63",1,1,,,,,,,,,,,,,,,,
51,1,,26013-100252,,"BOLT M10X 25",6,6,,,,,,,,,,,,,,,,
52,1,,933171-29750,,"SHIM SET, PIN 38",2,2,,,,,,,,,,,,,,,,
53,1,,172149-81100,,"BOOM ASSY",1,1,,,,,1,,,,,,,,,,
54,2,,172141-82270,,"BUSH 38 45, PIN",2,2,,,,,1,,,,,,,,,,
```

Fig. 57 ブーム＆バケット(B12) BOOM & BUCKET(B12)

https://truckmanualshub.com/

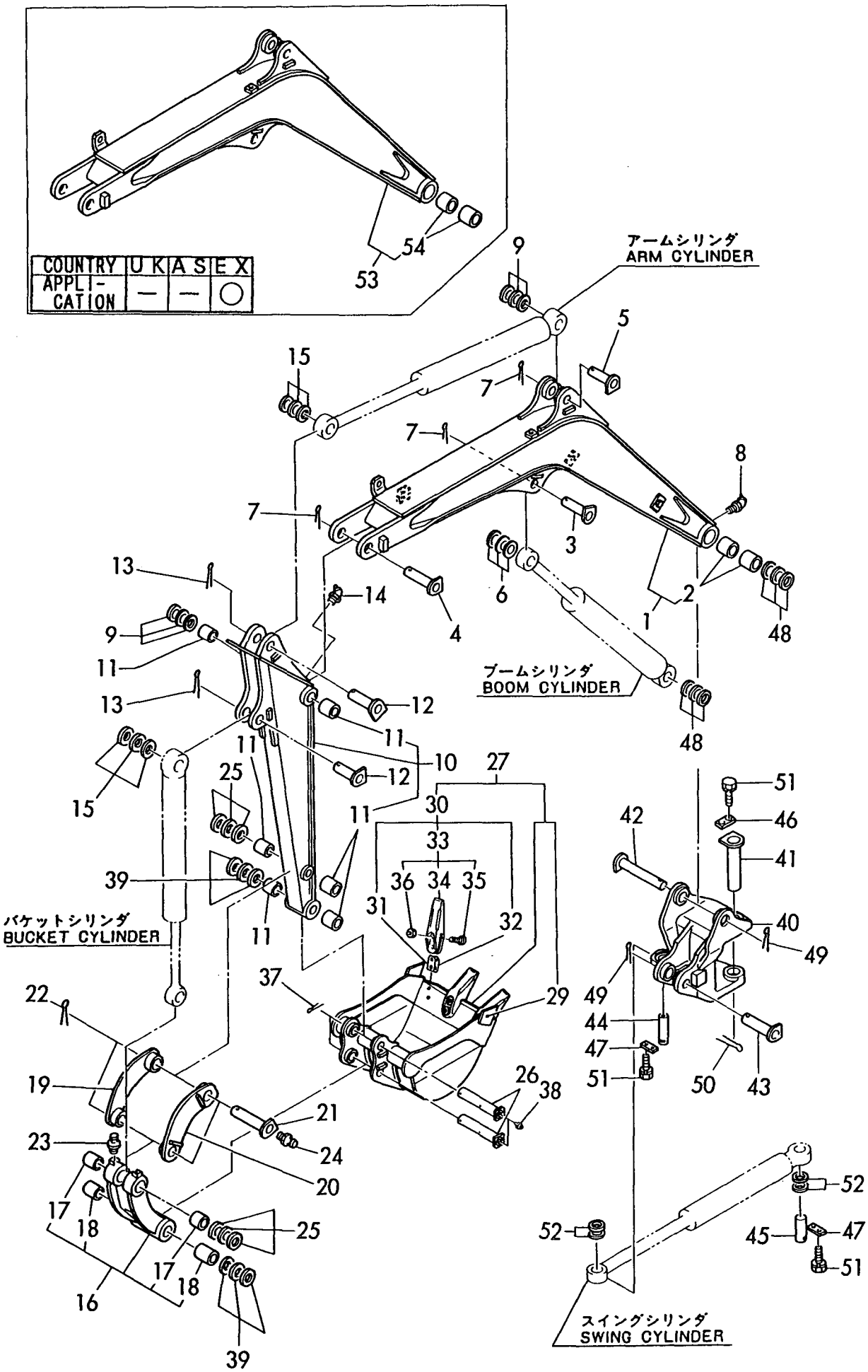

https://truckmanualshub.com/

```
1,1,,172149-81400,,"BOOM, 3RD",,,,1,1,,,,,,,,,,,,,
2,2,,172141-82270,,"BUSH 38 45, PIN",,,,2,2,,,,,,,,,,,,,
3,1,,172149-81300,,PIN,,,,1,1,,,,,,,,,,,,,
4,1,,172149-81320,,PIN,,,,1,1,,,,,,,,,,,,,
5,1,,172137-81360,,"PIN 30-109, BOOM",,,,1,1,,,,,,,,,,,,,
6,1,,172141-84600,,"SHIM 35",,,,1,1,,,,,,,,,,,,,
7,1,,22417-800450,,"COTTER PIN 8.0X45",,,,3,3,,,,,,,,,,,,,
8,1,,24761-020000,,"NIPPLE PT1/8,GREASE",,,,1,1,,,,,,,,,,,,,
9,1,,933160-06710,,"SHIM 30, PIN ADJUST",,,,2,2,,,,,,,,,,,,,
10,1,,172137-82101,,"ARM 950 ASSY",,,,1,1,,,,,,,,,,,,,
11,2,,172137-81300,,"BUSH 30X45, PIN",,,,6,6,,,,,,,,,,,,,
12,1,,172137-94250,,"PIN 30- 71",,,,2,2,,,,,,,,,,,,,
13,1,,22417-800450,,"COTTER PIN 8.0X45",,,,2,2,,,,,,,,,,,,,
14,1,,24761-040000,,"NIPPLE B,GREASE",,,,1,1,,,,,,,,,,,,,
15,1,,933160-06710,,"SHIM 30, PIN ADJUST",,,,2,2,,,,,,,,,,,,,,
16,1,,172137-84401,,"LINK, BUCKET",,,,1,1,,,,,,,,,,,,,
17,2,,172137-81300,,"BUSH 30X45, PIN",,,,2,2,,,,,,,,,,,,,
18,2,,172137-84450,,"BUSH 30X11, PIN",,,,2,2,,,,,,,,,,,,,
19,1,,172137-84502,,"ARM (L), BUCKET",,,,1,1,,,,,,,,,,,,,
20,1,,172137-84512,,"ARM (R), BUCKET",,,,1,1,,,,,,,,,,,,,
21,1,,172137-86250,,"PIN, BUCKET",,,,2,2,,,,,,,,,,,,,
22,1,,22417-800450,,"COTTER PIN 8.0X45",,,,2,2,,,,,,,,,,,,,
23,1,,24761-020000,,"NIPPLE PT1/8,GREASE",,,,2,2,,,,,,,,,,,,,,
24,1,,24761-020000,,"NIPPLE PT1/8,GREASE",,,,2,2,,,,,,,,,,,,,,
25,1,,933160-06710,,"SHIM 30, PIN ADJUST",,,,4,4,,,,,,,,,,,,,,
26,1,,172137-86250,,"PIN, BUCKET",,,,2,2,,,,,,,,,,,,,
27,1,,772137-86300,,"BUCKET ASSY",,,,1,1,,,,,,,,,,,,,
29,3,,172137-86240,,"TEETH, SIDE",,,,2,2,,,,,,,,,,72151134,,72151134,,,,I
30,2,,772137-86751,,"TEETE ASSY",,,,4,4,,,,,,,,,,,,,
31,3,,172137-86700,,"SHIM 2.3, TEETH",,,,4,4,,,,,,,,,,72151134,,72151134,,,,I
32,3,,172137-86710,,"TEETH SHIM 17 SET",,,,4,4,,,,,,,,,,72151134,,72151134,,,,I
33,3,,172137-86751,,"TEETH ASSY",,,,4,4,,,,,,,,,,72151134,,72151134,,,,I
34,4,,172141-86231,,TEETH,,,,4,4,,,,,,,,,,72151134,,72151134,,,,I
35,4,,172137-86770,,BOLT,,,,8,8,,,,,,,,,,72151134,,72151134,,,,I
36,4,,172137-86780,,NUT,,,,8,8,,,,,,,,,,72151134,,72151134,,,,I
37,1,,22417-800450,,"COTTER PIN 8.0X45",,,,2,2,,,,,,,,,,,,,
38,1,,24761-020000,,"NIPPLE PT1/8,GREASE",,,,2,2,,,,,,,,,,,,,,
39,1,,933160-06710,,"SHIM 30, PIN ADJUST",,,,2,2,,,,,,,,,,,,,,
40,1,,172149-83100,,"BRACKET, BOOM",,,,1,1,,,,,,,,,,,,,
41,1,,172149-83110,,PIN,,,,1,1,,,,,,,,,,,,,
42,1,,172149-83130,,PIN,,,,1,1,,,,,,,,,,,,,
43,1,,172149-83150,,PIN,,,,1,1,,,,,,,,,,,,,
44,1,,172149-83170,,PIN,,,,1,1,,,,,,,,,,,,,
45,1,,172149-83180,,PIN,,,,1,1,,,,,,,,,,,,,
46,1,,172149-83190,,"PLATE, LOCK",,,,1,1,,,,,,,,,,,,,
47,1,,172117-83970,,"PLATE (C), LOCK",,,,2,2,,,,,,,,,,,,,
48,1,,172141-84600,,"SHIM 35",,,,2,2,,,,,,,,,,,,,
49,1,,22417-800450,,"COTTER PIN 8.0X45",,,,2,2,,,,,,,,,,,,,
50,1,,22417-800630,,"COTTER PIN 8.0X63",,,,1,1,,,,,,,,,,,,,
51,1,,26013-100252,,"BOLT M10X 25",,,,6,6,,,,,,,,,,,,,
52,1,,933171-29750,,"SHIM SET, PIN 38",,,,2,2,,,,,,,,,,,,,
53,1,,172149-81100,,"BOOM ASSY",,,,1,1,,,1,,,,,,,,,,
54,2,,172141-82270,,"BUSH 38 45, PIN",,,,2,2,,,1,,,,,,,,,,
```

Fig. 58 ブーム＆バケット(B17) BOOM & BUCKET (B17)

https://truckmanualshub.com/

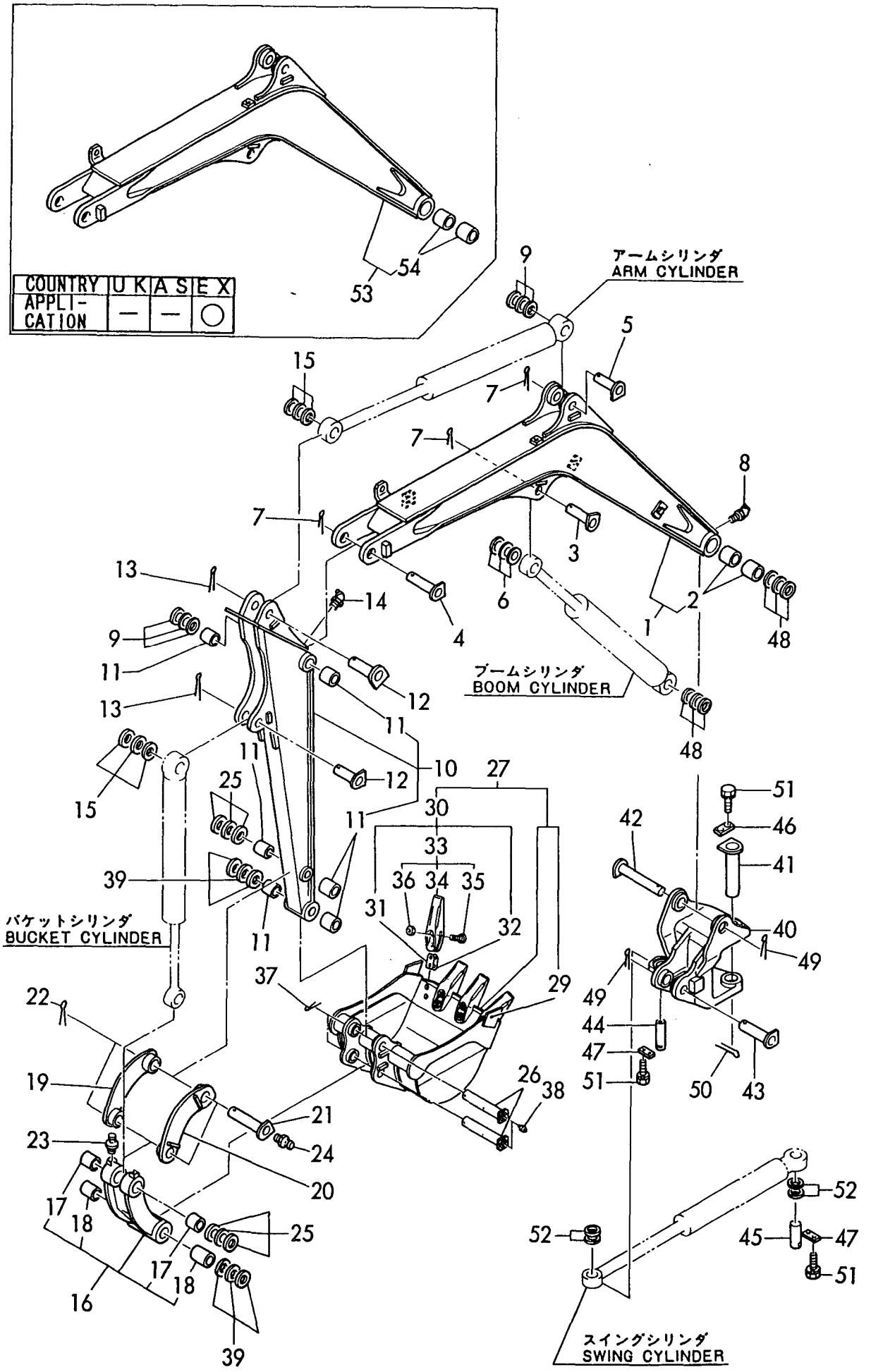

https://truckmanualshub.com/

```
1,1,,172137-94100,,"BLADE ASSY",1,1,,1,1,,,,,,,,,,,,,
2,1,,172137-94250,,"PIN 30- 71",2,2,,2,2,,,,,,,,,,,,,
3,1,,172137-94270,,"PIN 30-71B, BLADE",2,2,,2,2,,,,,,,,,,,,,,
4,1,,22417-800450,,"COTTER PIN 8.0X45",4,4,,4,4,,,,,,,,,,,,,
5,1,,24761-020000,,"NIPPLE PT1/8,GREASE",2,2,,2,2,,,,,,,,,,,,,,,
6,1,,24761-040000,,"NIPPLE B,GREASE",2,2,,2,2,,,,,,,,,,,,,
7,1,,933160-06710,,"SHIM 30, PIN ADJUST",2,2,,2,2,,,,,,,,,,,,,,,
```

Fig. 59 ブレード BLADE

https://truckmanualshub.com/

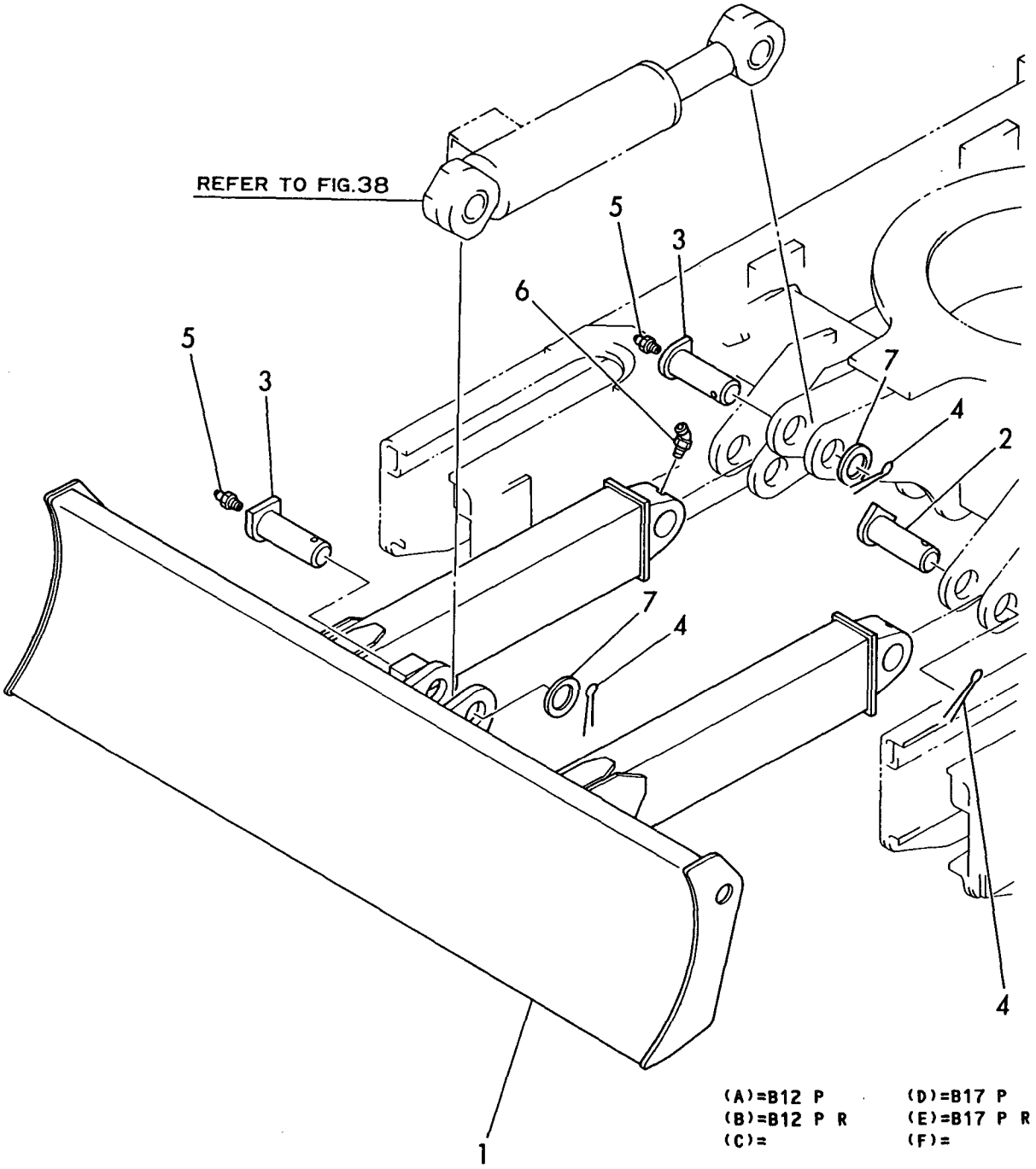

(A)=B12 P
(B)=B12 P R
(C)=
(D)=B17 P
(E)=B17 P R
(F)=

https://truckmanualshub.com/

```
Y00S3000,"Construction equipment",Excavator,B
[Info]
PcNo=Y00S3000
PcName=B12/B17(UK,AS,EX)
JpnUse=0
JpnSec1=
JpnSec2=
JpnSec3=
JpnPreface=0
EngUse=1
EngSec1=CONSTRUCTION
EngSec2=EXCAVATOR (B)
EngSec3=B
EngPreface=1
```

https://truckmanualshub.com/

```
0,Y00S3000
1,001,,"VEHICLE B12/B17"
2,1,,"LABEL(ENGLAND SPEC.)","B12 P","B12 P R",,"B17 P","B17 P R"
2,2,,"LABEL(AUSTRALIA SPEC.)","B12 P","B12 P R",,"B17 P","B17 P R","B17 OPTION"
2,3,,"TOOL(ENGLAND SPEC.)","B12 P","B12 P R",,"B17 P","B17 P R"
2,4,,"TOOL(AUSTRALIA SPEC.)","B12 P","B12 P R",,"B17 P","B17 P R","B17 OPTION"
2,5,,"INLET HOSE & EXHAUST PIPE","B12 P","B12 P R",,"B17 P","B17 P R"
2,6,,ACCELERATOR,"B12 P","B12 P R",,"B17 P","B17 P R"
2,7,,"ENGINE MOUNT & RADIATOR","B12 P","B12 P R",,"B17 P","B17 P R"
2,8,,"FUEL TANK & FUEL LINE","B12 P","B12 P R",,"B17 P","B17 P R"
2,9,,BATTERY,"B12 P","B12 P R",,"B17 P","B17 P R"
2,10,,"ELECTRIC PARTS","B12 P","B12 P R",,"B17 P","B17 P R"
2,11,,"WORK LAMP","B12 P","B12 P R",,"B17 P","B17 P R"
2,12,,HEATER,"B12 P","B12 P R",,"B17 P","B17 P R"
2,13,,"TRACK ROLLER","B12 P","B12 P R",,"B17 P","B17 P R"
2,14,,"TRACK FRAME & IDLER","B12 P","B12 P R",,"B17 P","B17 P R"
2,15,,CRAWLER,"B12 P","B12 P R",,"B17 P","B17 P R"
2,16,,"LINK STAND","B12 P","B12 P R",,"B17 P","B17 P R"
2,17,,"LINK STAND(AUSTRALIA SPEC.)","B12 P","B12 P R",,"B17 P","B17 P R","B17
OPTION"
2,18,,"CONTROL EQUIPMENT(BOOM&BUCKET)","B12 P","B12 P R",,"B17 P","B17 P R"
2,19,,"CONTROL EQUIPMENT(BOOM&BUCKET)","B12 P","B12 P R",,"B17 P","B17 P R","B17
OPTION"
2,20,,"CONTROL EQUIPMENT(ARM&TURNING)","B12 P","B12 P R",,"B17 P","B17 P R"
2,21,,"CONTROL EQUIPMENT(ARM&TURNING)","B12 P","B12 P R",,"B17 P","B17 P R","B17
OPTION"
2,22,,"CONTROL EQUIPMENT(TRAVEL&SWING","B12 P","B12 P R",,"B17 P","B17 P R"
2,23,,"CONTROL EQUIP.(TRAVEL & SWING)","B12 P","B12 P R",,"B17 P","B17 P R","B17
OPTION"
2,24,,"CONTROL EQUIPMENT(BLADE)","B12 P","B12 P R",,"B17 P","B17 P R"
2,25,,"OPERATION LEVER STOPPER","B12 P","B12 P R",,"B17 P","B17 P R"
2,26,,"OPERATION LEVER STOPPER","B12 P","B12 P R",,"B17 P","B17 P R","B17
OPTION"
2,27,,"TURNING FRAME","B12 P","B12 P R",,"B17 P","B17 P R"
2,28,,"TURNING DRIVING GEARS","B12 P","B12 P R",,"B17 P","B17 P R"
2,29,,BONNET,"B12 P","B12 P R",,"B17 P","B17 P R"
2,30,,"SEAT & STEP(ENGLAND SPEC.)","B12 P","B12 P R",,"B17 P","B17 P R"
2,31,,"SEAT & STEP(AUSTRALIA SPEC.)","B12 P","B12 P R",,"B17 P","B17 P R","B17
OPTION"
2,32,,"ROPS(ENGLAND SPEC.)","B12 P","B12 P R",,"B17 P","B17 P R"
2,33,,"CANOPY(AUSTRALIA SPEC.)","B12 P","B12 P R",,"B17 P","B17 P R","B17
OPTION"
2,34,,"BOOM CYLINDER","B12 P","B12 P R",,"B17 P","B17 P R"
2,35,,"ARM CYLINDER","B12 P","B12 P R",,"B17 P","B17 P R"
2,36,,"BUCKET CYLINDER","B12 P","B12 P R",,"B17 P","B17 P R"
2,37,,"SWING CYLINDER","B12 P","B12 P R",,"B17 P","B17 P R"
2,38,,"BLADE CYLINDER","B12 P","B12 P R",,"B17 P","B17 P R"
2,39,,"HYD. OIL PUMP & JOINT","B12 P","B12 P R",,"B17 P","B17 P R"
2,40,,"TURNING MOTOR","B12 P","B12 P R",,"B17 P","B17 P R"
2,41,,"TRAVEL MOTOR","B12 P","B12 P R",,"B17 P","B17 P R"
2,42,,"SWIVEL JOINT","B12 P","B12 P R",,"B17 P","B17 P R"
2,43,,"CONTROL VALVE(TRAVEL, TURNING)","B12 P","B12 P R",,"B17 P","B17 P R"
2,44,,"CONTROL VALVE(ARM, BUCKET)","B12 P","B12 P R",,"B17 P","B17 P R"
2,45,,"CONTROL VALVE(SWING, BOOM)","B12 P","B12 P R",,"B17 P","B17 P R"
2,46,,"CONTROL VALVE(BLADE, P.T.O)","B12 P","B12 P R",,"B17 P","B17 P R"
2,47,,"CONTROL VALVE(P1,P2,P3)","B12 P","B12 P R",,"B17 P","B17 P R"
2,48,,"HYD. OIL TANK","B12 P","B12 P R",,"B17 P","B17 P R"
2,49,,GREASING,"B12 P","B12 P R",,"B17 P","B17 P R"
2,50,,"HYD. OIL PIPING (TANK-VALVE)","B12 P","B12 P R",,"B17 P","B17 P R"
2,51,,"HYD. OIL PIPING (VALVE-SWIVEL.","B12 P","B12 P R",,"B17 P","B17 P R"
2,52,,"HYD. OIL PIPING (TANK RETURN)","B12 P","B12 P R",,"B17 P","B17 P R"
2,53,,"HYD. OIL PIPING (TRAVEL)","B12 P","B12 P R",,"B17 P","B17 P R"
2,54,,"HYD. OIL PIPING (WORK EQUIP.)","B12 P","B12 P R",,"B17 P","B17 P R"
```

https://truckmanualshub.com/

```
2,55,,"3RD VALVE PIPING(ENGLAND SPEC.","B12 P","B12 P R",,"B17 P","B17 P R"
2,56,,"3RD VALVE PIPING","B12 P","B12 P R",,"B17 P","B17 P R","B17 OPTION"
2,57,,"BOOM & BUCKET(B12)","B12 P","B12 P R",,"B17 P","B17 P R","B17 OPTION"
2,58,,"BOOM & BUCKET(B17)","B12 P","B12 P R",,"B17 P","B17 P R","B17 OPTION"
2,59,,BLADE,"B12 P","B12 P R",,"B17 P","B17 P R"
```