https://truckmanualshub.com/

SB4136E00
Jun. 2004

Service Manual

G420E/G424E Tier Ⅱ LP Engine Lift Trucks

G15S-2, G18S-2, G20SC-2
GC15S-2, GC18S-2, GC20SC-2
With G420E Tier Ⅱ LP Engine

G20E-3, G25E-3, G30E-3, G32E-3
GC20E-3, GC25E-3, GC30E-3, GC32E-3
with G424E Tier Ⅱ LP Engine

Downloaded from www.Manualslib.com manuals search engine

https://truckmanualshub.com/

Important Safety Information

Most accidents involving product operation, maintenance and repair are caused by failure to observe basic safety rules or precautions. An accident can often be avoided by recognizing potentially hazardous situations before an accident occurs. A person must be alert to potential hazards. This person should also have the necessary training, skills and tools to perform these functions properly.

Read and understand all safety precautions and warnings before operating or performing lubrication, maintenance and repair on this product.

Basic safety precautions are listed in the “Safety” section of the Service or Technical Manual. Additional safety precautions are listed in the “Safety” section of the owner/operation/maintenance publication.
Specific safety warnings for all these publications are provided in the description of operations where hazards exist. WARNING labels have also been put on the product to provide instructions and to identify specific hazards. If these hazard warnings are not heeded, bodily injury or death could occur to you or other persons. Warnings in this publication and on the product labels are identified by the following symbol.

⚠ WARNING

Improper operation, lubrication, maintenance or repair of this product can be dangerous and could result in injury or death.
Do not operate or perform any lubrication, maintenance or repair on this product, until you have read and understood the operation, lubrication, maintenance and repair information.

Operations that may cause product damage are identified by NOTICE labels on the product and in this publication.

DAEWOO cannot anticipate every possible circumstance that might involve a potential hazard. The warnings in this publication and on the product are therefore not all inclusive. If a tool, procedure, work method or operating technique not specifically recommended by DAEWOO is used, you must satisfy yourself that it is safe for you and others. You should also ensure that the product will not be damaged or made unsafe by the operation, lubrication, maintenance or repair procedures you choose.

The information, specifications, and illustrations in this publication are on the basis of information available at the time it was written. The specifications, torques, pressures, measurements, adjustments, illustrations, and other items can change at any time. These changes can affect the service given to the product. Obtain the complete and most current information before starting any job. DAEWOO dealers have the most current information available.

Downloaded from www.Manualslib.com manuals search engine

https://truckmanualshub.com/

Downloaded from www.Manualslib.com manuals search engine

https://truckmanualshub.com/

WARNING

Read this entire manual and all other publications pertaining to the work to be performed before installing, operating, or servicing this equipment. Practice all plant and safety instructions and precautions. Failure to follow instructions can cause personal injury and/or property damage.

The engine or other type of prime mover should be equipped with an over speed (over temperature, or overpressure, where applicable) shutdown device(s), that operates totally independently of the prime mover control device(s) to protect against runaway or damage to the engine or other type of prime mover with possible personal injury or loss of life should the mechanical-hydraulic governor(s) or electric control(s), the actuator(s), fuel control(s), the driving mechanism(s), the linkage(s), or the controlled device(s) fail.

CAUTION

To prevent damage to a control system that uses an alternator or battery-charging device, make sure the charging device is turned off before disconnecting the battery from the system. Electronic controls contain static-sensitive parts. Observe the following precautions to prevent damage to these parts.

- Discharge body static before handling the control (with power to the control turned off, contact a grounded surface and maintain contact while handling the control).
- Avoid all plastic, vinyl, and Styrofoam (except antistatic versions) around printed circuit boards.
- Do not touch the components or conductors on a printed circuit board with your hands or with conductive devices.

IMPORTANT DEFINITIONS

WARNING—indicates a potentially hazardous situation, which, if not avoided, could result in death or serious injury.

CAUTION—indicates a potentially hazardous situation, which, if not avoided, could result in damage to equipment.

NOTE—provides other helpful information that does not fall under the warning or caution categories.

∗ This manual shows just LP fuel and engine control system for TIER-Ⅱ LP engine, so regarding other ares(basic engine), please refer to the separate manual of SB4008E for G420 and SB2215E for G424.

Downloaded from www.Manualslib.com manuals search engine

https://truckmanualshub.com/

Downloaded from www.Manualslib.com manuals search engine

https://truckmanualshub.com/

Index

WORKING WITH LPG EQUIPMENT

CHAPTER 0 LPG AND LPG FUEL TANKS

LPG Fuel Supply....8
LPG Fuel Tanks....9
Installing LPG Fuel Tanks....9
LPG Fuel Tank Components....10
Fuel Gauge....10
Service Valve....10
Quick Disconnect Coupling....11
Filler Valve....11

CHAPTER 1 ENGINE SPECIFICATION

Indication of Engine Serial Number....12
Specifications(G420E)....13
Specifications(G424E)....14

CHAPTER 2 MI-04 LPG SYSTEM OPERATIONAL OVERVIEW

MI-04 General Description....15
MI-04 LP Fuel Filter....17
MI-04 Fuel Lock-Off (Electric)....17
MI-04 N-2001 Regulator/Converter....18
N-2001 Theory of Operation....19
MI-04 N-CA55-500TR Mixer....20
N-CA55-500-TR Air/Fuel Mixer Theory of Operation....20
MI-04 Electronic Throttle....22
MI-04 Fuel Trim Valve....23
Heated Exhaust Gas Oxygen Sensor (HEGO)....24
MI-04 SECM (General Description)....25
MI-04 SECM (Fuel Management)....25
MI-04 SECM (Load/Speed Management)....27
MI-04 Ignition management....29

CHAPTER 3 MI- 04 MAINTENANCE SCHEDULE

RECOMMENDED MAINTENANCE SCHEDULE....30
Test Fuel System for Leaks....30
Inspect Engine for Fluid Leaks....30
Inspect Vacuum Lines and Fittings....30
Inspect Electrical System....30
Inspect Acceleration Pedal Operation....31
Check Coolant Level....31
Inspect Coolant Hoses....31
Inspect Battery System....31
Inspect Ignition System....31
Replace Spark Plugs....31
Replace LP Fuel Filter Element....32
Testing Fuel Lock-off Operation....33
Pressure Regulator/Converter Testing and nspection....33
Fuel Trim Valve Inspection (FTV)....33
Inspect Air/Fuel Valve Mixer Assembly....33
Inspect for Intake Leaks....34
Inspect Throttle Assembly....34
Checking the TMAP Sensor....34
Inspect Engine for Exhaust Leaks....34
Replace Oxygen Sensor....34
Maintenance Schedule....35

CHAPTER 4 MI-04 LP BASIC TROUBLESHOOTING

Basic Troubleshooting....37

CHAPTER 5 MI-04 LP ADVANCED DIAGNOSTICS

Advanced Diagnostics....44
Reading Diagnostic Fault Codes....44
Displaying Fault Codes (DFC) From SECM Memory....45
Clearing Fault (DFC) Codes....45
Fault Action Descriptions....45
Fault List Definitions....46
Table a. MI-04 Diagnostic Fault Codes (Flash Codes)....48

CHAPTER 6 MI-04 ELECTRICAL CONNECTIONS

Resistance Checks....62
Voltage Checks....63

Downloaded from www.Manualslib.com manuals search engine

https://truckmanualshub.com/

CHAPTER 7 N2001 PRESSURE REGULATOR /CONVERTER

Removal and Installation of N2001 LP Regulator/Converter....64
Hose Connections....65
N2001 Removal Steps: 66
N2001 Regulator Disassembly Steps:....67
N2001 Disassembled Service....69

CHAPTER 8 N-CA55-500TR AIR/FUEL MIXER

Removal and Installation of the N-CA55-500TR Mixer 70
N-CA55-500TR Mixer Removal Steps: 71
N-CA55-500TR Disassembly and Service....72
N-CA55-500TR Disassembled Service....74
Installing the Mixer/Throttle Assembly....75

CHAPTER 9 TEST AND ADJUSTMENTS

N2001 Service Testing 78
Primary Stage Test Hardware 79
Primary Stage Pressure Test....79
N-CA55-500TR Service AVV (Air Valve Vacuum) Testing....81
Ignition Timing Adjustment....82
Idle Mixture Adjustment....85

CHAPTER 10 SERVICE TOOL KIT

Service Tool Kit 87

Downloaded from www.Manualslib.com manuals search engine

https://truckmanualshub.com/

WORKING WITH LPG EQUIPMENT

WARNING

Propane Vapor is heavier than air and can collect in low areas when adequate ventilation or air movement is not present to disperse it. Never check for leaks with a flame or match. Use a leak detector solution or an electronic detector. Make sure the container service valve is closed when connecting or disconnecting. If the container service valve does not operate properly, discontinue use and contact your propane supplier. Never insert any object into the pressure relief valve.

WARNING

LP gas is highly flammable. To prevent personal injury, keep fire and flammable materials away from the lift truck when work is done on the fuel system.
Gas vapor may reduce oxygen available for breathing, cause headache, nausea, dizziness and unconsciousness and lead to injury or death. Always operate the forklift in a well ventilated area
Liquid propane may cause freezing of tissue or frostbite. Avoid direct contact with skin or tissue; always wear appropriate safety protection including gloves and safety glasses when working with liquid propane.

CAUTION

The regulator/converter and mixer are part of a certified system complying with EPA and CARB 2004 requirements. Only trained certified technicians should perform disassemble, service or replacement of the regulator/converter or mixer.

CAUTION

LPG fueled machinery may be garaged anywhere gasoline powered vehicles are garaged. When machines are stored for a long period, it is advisable to shut off the tank supply valve and run the machine until the fuel trapped down stream of the valve is depleted.

NOTE

NFPA (National Fire Protection Agency) 58 covers the procedures for storage and garaging for repair purposes, on propane powered equipment.

CAUTION

Safety is an important consideration for any repair facility, and repairing LPG fueled machinery is no exception. Refer to the NFPA (National Fire Protection Agency) for the appropriate fire extinguisher specifications and fluorescent lighting requirements.

Propane has a heavier than air vapor density and will fall if a leak occurs, while natural gas, by comparison, will rise in the event of a leak (Figure 1).
This is an important property that technicians need to be aware of when performing maintenance. When repairing propane machinery, the work should be performed in the lowest point of the facility where possible. The tank supply should be shut off, except when required for running equipment.

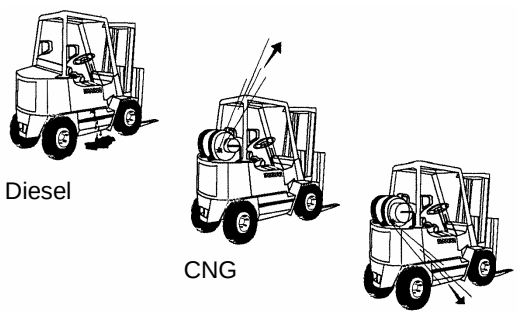

Figure 1

Downloaded from www.Manualslib.com manuals search engine

https://truckmanualshub.com/

CHAPTER 0 LPG AND LPG FUEL TANKS

LPG Fuel Supply

Liquefied petroleum gas (LPG) consists mainly of propane, propylene, butane, and butylenes in various mixtures. LPG is produced as a by-product of natural gas processing or it can be obtained from crude oil as part of the oil refining process. LPG, like gasoline, is a compound of hydrogen and carbon, commonly called hydrocarbons.

In its natural state, propane is colorless and odorless; an odorant (ethyl mercaptan) is added to the fuel so its presence can be detected. There are currently three grades of propane available in the United States. A propane grade designation of HD5 (not exceeding 5% propylene), is used for internal combustion engines while much higher levels of propylene (HD10) are used as commercial grade propane along with a commercial propane /butane mixture.

APPROXIMATE COMPOSITION OF HD5 PROPANE BY VOLUME

Propane (C3H8)	Propy lene	Butane (C4H10)	Iso-Butane	Methane (CH4)	TOTAL
90.0% min.	5% max.	2.0%	1.5%	1.5%	100%

An advantage of LPG is the ability to safely store and transport the product in the liquid state. In the liquid state propane is approximately 270 times as dense as it is in a gaseous form. By pressurizing a container of LPG we can effectively raise the boiling point above –44 deg. C / -42 deg. C, keeping the propane in liquid form. The point at which the liquid becomes a gas (boiling point) depends on the amount of pressure applied to the container.

This process operates similarly to an engine coolant system where water is kept from boiling by pressurizing the system and adding a mixture of glycol. For example water at normal atmospheric pressure will boil at 212 deg. F / 100 deg. C. If an engines operating temperature is approximately 230 deg. F / 110 deg. C, then the water in an open un-pressurized cooling system would simply boil off into steam, eventually leaving the cooling system empty and over heating the engine. If we install a 10 PSIG cap on the radiator, pressurizing the cooling system to 10 PSIG, the boiling point of the water increases to 242 deg. F / 117 deg. C, which will cause the water to remain in liquid state at the engines operating temperature.

The same principle is applied to LPG in a container, commonly referred to as an LPG tank or cylinder. Typically an LPG tank is not filled over 80% capacity allowing for a 20% vapor expansion space. Outside air temperature effect's an LPG tank and must be considered when using an LPG system. (Figure 2) shows the relationship between pressure and temperature in a LPG tank at a steady state condition.

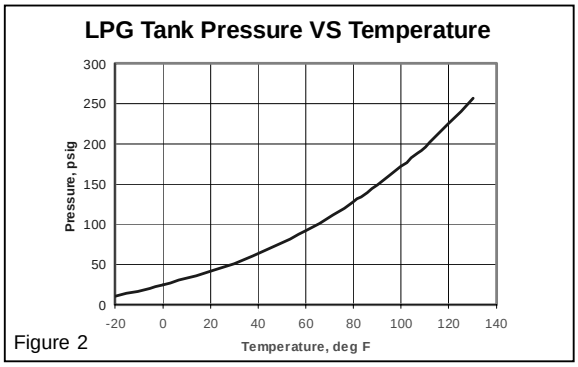

Figure 2

With 128 PSIG vapor pressure acting against the liquid propane the boiling point has been raised to slightly more than 80 deg. F / 27 deg. C.

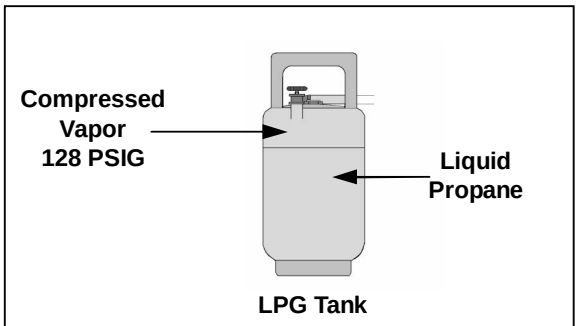

Figure 3

NOTE
Vapor pressure inside an LPG tank depends on the ambient air temperature outside the tank, not the amount of liquid inside the tank. A tank that is ¾ full of liquid propane at 80 deg. F will contain the same vapor pressure as a tank that is only ¼ full of liquid propane.

LPG's relative ease of vaporization makes it an excellent fuel for low-rpm engines on start-and-stop operations. The more readily a fuel vaporizes the more complete combustion will be.
Because propane has a low boiling point (-44F), and is a low carbon fuel, engine life can be extended due to less cylinder wall wash down and little, if any, carbon build up.

Downloaded from www.Manualslib.com manuals search engine

https://truckmanualshub.com/

LPG Fuel Tanks

The two styles of LPG storage containers available for industrial use and lift truck applications are portable universal cylinders and permanently mounted tanks. Portable universal cylinders are used primarily for off-highway vehicles and are constructed in accordance with the DOT-TC (United States Department of Transport – Transport Canada). The cylinders are referred to as universal because they can be mounted in either a vertical or horizontal position (Figure 4).

Figure 4

NOTE
A 375-psig, relief valve is used on a DOT forklift tank. The relief valve must be replaced with a new valve after the first 12 years and every 10 years thereafter.

The tank must be discarded if the collar is damaged to the point that it can no longer protect the valves. It must also be replaced if the foot ring is bent to the point where the tank will not stand or is easily knocked over.

Installing LPG Fuel Tanks

When installing a tank on a lift truck, the tank must be within the outline of the vehicle to prevent damage to the valves when maneuvering in tight spaces. Horizontal tanks must be installed on the saddle that contains an alignment pin, which matches the hole in the collar of the tank. When the pin is in the hole, the liquid withdrawal tube is positioned to the bottom of the tank. A common problem is that often these guide-pins are broken off, allowing the tank to be mounted in any position. This creates two problems. 1). When the liquid withdrawal tube is exposed to the vapor space, it may give a false indication that the tank is empty, when it actually is not. 2). The safety relief valve may be immersed in liquid fuel. If for any reason the valve has to vent, venting liquid can cause a serious safety problem,

CAUTION
When empty, the tank is exchanged with a pre-filled replacement tank. When exchanging a tank, safety glasses and gloves should be worn.

Downloaded from www.Manualslib.com manuals search engine

https://truckmanualshub.com/

LPG Fuel Tank Components

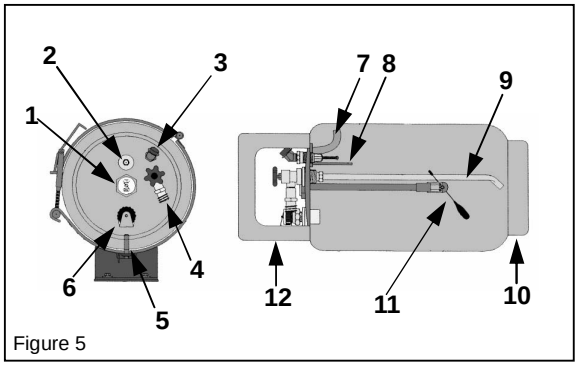

Figure 5

(1) Fuel Gauge (2) 80% Stop Bleeder
(3) Pressure Relief Valve
(4) Service Valve (Tank end male coupling) (5) Filler Valve
(6) Alignment Pin
(7) Vapor Withdrawal Tube (Only used with Vapor Withdrawal)
(8) 80% Limiter Tube (9) Liquid Withdrawal Tube
(10) Foot Ring (11) Fuel Level Float (12) Collar

Fuel Gauge

In figure 5 a visual fuel gauge is used to show the fuel level in the tank. A mechanical float mechanism detects the liquid propane level. A magnet on the end of the float shaft moves a magnetic pointer in the fuel gauge. Some units have an electronic sending unit using a variable resistor, installed in place of a gauge for remote monitoring of the fuel level. The gauge may be changed with fuel in the tank. **DO NOT REMOVE THE FOUR LARGE FLANGE BOLTS THAT RETAIN THE FLOAT ASSEMBLY, WITH FUEL IN THE TANK!**

WARNING
It is not a legal practice to fill the tank through the liquid contents gauge.

In some applications a fixed tube fuel indicator is used in place of a float mechanism. A fixed tube indicator does not use a gauge and only indicates when the LPG tank is 80% full. The fixed tube indicator is simply a normally closed valve that is opened during refueling by the fueling attendant. When opened during refueling and the tanks LPG level is below 80%, a small amount of vapor will exit the valve. When the LPG tank level reaches 80% liquid propane will begin exiting the valve in the form of a white mist (Always wear the appropriate protective apparel when refueling LPG cylinders). In order for this type of gauge to be accurate, the tank must be positioned properly. When full (80% LPG) the valve is closed by turning the knurled knob clockwise. Typically a warning label surrounds the fixed tube gauge which reads **STOP FILLING WHEN LIQUID APPEARS.**

Service Valve

The service valve is a manually operated valve using a small hand wheel to open and close the fuel supply to the service line (fuel supply line). The service valve installs directly into the tank and has two main categories, liquid and vapor service valves. Liquid service valves used on portable LPG tanks use a 3/8” (3/8” NPT) male pipe thread on the service valve outlet for attachment of a quick disconnect coupler.

An excess flow valve is built into the inlet side of the service valve as a safety device in case of an accidental opening of the service line or damage to the service valve itself. The excess flow valve shuts off the flow of liquid propane if the flow rate of the liquid propane exceeds the maximum flow rate specified by the manufacturer.

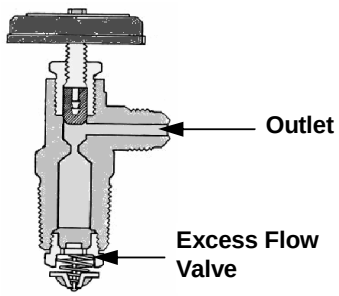

Figure 6

CAUTION
When the tank is in use the service valve should be completely open. If the valve is partly open, the vehicle may not be getting enough fuel to operate efficiently.

In addition to possibly starving the engine for fuel, a partly open valve may restrict the flow enough to prevent the excess flow valve from closing in the event of a ruptured fuel line.

Most liquid service valves have an internal hydrostatic relief valve and are usually labeled **“LIQUID WITH INTERNAL RELIEF”.** The hydrostatic relief valve protects the fuel service line between the tank and the lock off from over pressurization. The internal hydrostatic relief valve has a minimum opening pressure of 375 PSIG and a maximum pressure of 500 PSIG. These type of relief valves have an advantage over external relief valves because the propane is returned to the tank in the event of an over pressurization instead of venting the propane to atmosphere.

Downloaded from www.Manualslib.com manuals search engine

https://truckmanualshub.com/

Quick Disconnect Coupling

The liquid withdrawal or service valve on a DOT tank has male threads and accepts the female portion of a quick disconnect coupling (Figure 8). The female portion is adapted to the liquid hose going to the fuel system. Both halves are equipped with 100% shutoffs, which open when coupled together to allow fuel flow. The coupler has two seals. One is an o-ring and the other is a flat washer. The o-ring prevents leakage from the shaft on the other coupling and the flat washer seals when the coupler is fully connected.

NOTE
The flat seal and/or the o-ring will sometimes pop off when disconnecting and slide up the shaft of the mating connector, causing the valve not to open when fully mated. The extra washer or o-ring must be removed from the shaft and the coupling reconnected.

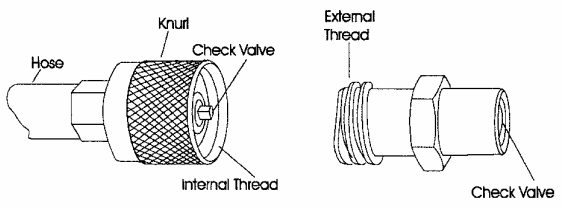

Figure 8

Filler Valve

The liquid filler valve (Figure 9) has a male thread to receive a fuel nozzle and typically has a plastic or brass screw on cap that is retained with a small chain or plastic band to keep debris out of the filler valve. The filler valve is a one-way flow device that uses two check valves to allow fuel to enter the tank but prevent it from exiting. Both check valves are backpressure type check valves, designed so that backpressure from the tank assists the check valves own spring pressure to close the valve. The first valve uses a neoprene on metal seal and the second valve uses a metal on metal seal.

A weakness ring is machined into the filler valve just above the check valves and will allow the filler valve to shear off in case of an accident. The valve will break or shear off above the check valves so that the tank will be sealed and no liquid propane can escape.

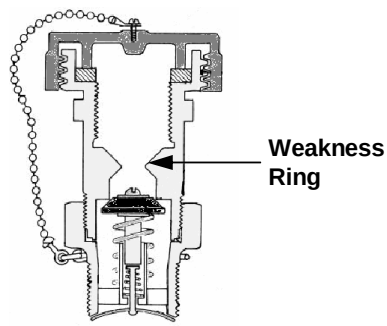

Figure 9

Downloaded from www.Manualslib.com manuals search engine

https://truckmanualshub.com/

CHAPTER 1 ENGINE SPECIFICATION

Indication of Engine Serial Number

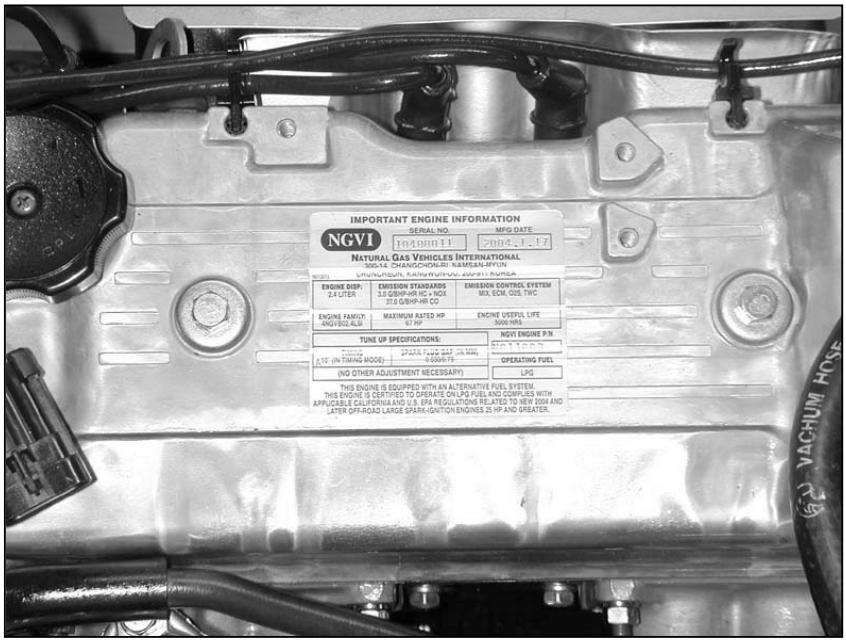

Downloaded from www.Manualslib.com manuals search engine

https://truckmanualshub.com/

Specifications(G420E)

GENERAL DESCRIPTION	
ENGINE TYPE:	Water-cooled, Inline 4-Cycle, 4-Cylinders
COMBUSTION SYSTEM:	Naturally Aspirated 1-Venturi Intake Manifold
	Semi-spherical Combustion chamber
EXHAUST SYSTEM:	Cast Iron, Dry
VALVE CONFIGURATION:	OHC, 2 Valves per Cylinder
DISPLACEMENT:	1,997 cc (122 CID)
BORE:	85 mm (3.35 in.)
STROKE:	88 mm (3.46 in.)
COMPRESSION RATIO:	8.5:1
COMPRESSION PRESSURE:	1,128 kPa (163.5 psi)
VALVE TIMING:	Intake Valve: 12° BTDC(Open)/ 40° ABDC(Close)
	Exhaust Valve: 54° BBDC(Open)/ 6° ATDC(Close)
FIRING ORDER:	1-3-4-2
SPARK PLUGS:	BPR5ES: 0.7-0.8 mm (0.028-0.031 in.) Air Gap
WEIGHT:	139 Kg (306 lbs.), Dry
ROTATION:	Counter-Clockwise (CCW) when viewed from Flywheel End
FUELTYPE:	LPG
GOVERNED SPEED:	2400 +/- 25 RPM
IDLE RPM:	700 +/- 25 RPM
IGNITIOIN TIMING:	Electronic controlled by ECM
LP FUEL SYSTEM	
MIXER:	Piston Type Air Valve Assembly inside, Downdraft
REGULATOR:	Two-Stage Negative Pressure Regulator
FUEL FILTRATION:	40 Microns Maximum
COOLING SYSTEM	
WATER PUMP ROTATION:	V-Belt Drive - Clockwise (CW) when viewed from engine front
THERMOSTAT:	Opening Temperature: 82°C (180°F)
	Fully Open Temperature: 95°C (203°F)
COOLING WATER CAPACITY	3.1 L (block only)
LUBRICATION SYSTEM	
OIL PRESSURE:	450 kPa (65 psi) @ Hi Idle
	50 kPa (7 psi) @ Low Idle
OIL TEMPERATURE:	Upper Limit: 125°C (257°F)
	Recommended: 99 - 110°C (210 - 230°F)
	Lower Limit: 80°C (176°F)
CRANKCASE CAPACITY:	3.7 L
OIL FILTER:	0.3 L
ENGINE OIL SPECIFICATION:	API - SJ, SAE 10W30 or SAE 5W30
ENGINE ELECTRICAL	
IGNITION TYPE:	Electronic Advanced by ECM
IGNITION COIL:	12 V operation volt, Ignition driver circuitry inside
DISTRIBUTOR:	Mitsubishi Distributor
STARTER MOTOR:	12 Volt, 1.2 kW, Reduction drive
ALTERNATOR:	12 Volt, 61 Amp
ENGINE OIL PR. S/W:	24.5 kPa (3.6 psi)
ENGINE CONTROL MODULE(ECM):	12 V operation volt, 24 pins of I/O
VR SENSOR:	Magnetic pick up sensor
TMAP:	Intake Air Temp. & Manifold Absolute Press. Sensor
PEDAL ANGLE SENSOR:	Two-Output Signals (Installed on Accelerator Pedal)
OXYGEN SENSOR:	Heated Exhaust Gas Oxygen Sensor (HEGO) 12 V operation volt
ECT-ECM:	Engine Coolant Temperature Sensor for ECM
ECT-GAUGE	Engine Coolant Temp. Sensor for GAUGE on Instrument Panel
TPS:	Throttle Position Sensor (built in Throttle Body)
THROTTLE BODY:	Electronic Throttle Body
FUEL TRIM VALVE (FTV):	12 V operation volt
LP FUEL LOCK-OFF:	12 V operation volt, ON/OFF Control by ECM
EXHAUST SYSTEM	
CATALYTIC MUFFLER:	Three-way Catalyst included

Downloaded from www.Manualslib.com manuals search engine

https://truckmanualshub.com/

Specifications(G424E)

GENERAL DESCRIPTION	
ENGINE TYPE:	Water-cooled, Inline 4-Cycle, 4-Cylinders
COMBUSTION SYSTEM:	Naturally Aspirated 1-Venturi Intake Manifold Semi-spherical Combustion chamber
EXHAUST SYSTEM:	Cast Iron, Dry
VALVE CONFIGURATION:	OHC, 2 Valves per Cylinder
DISPLACEMENT:	2,350 cc (143 CID)
BORE:	86.5 mm (3.41 in.)
STROKE:	100 mm (3.94 in.)
COMPRESSION RATIO:	8.6:1
COMPRESSION PRESSURE:	1,128 kPa (163.5 psi)
VALVE TIMING:	Intake Valve: 12° BTDC(Open)/ 40° ABDC(Close) Exhaust Valve: 54° BBDC(Open)/ 6° ATDC(Close)
FIRING ORDER:	1-3-4-2
SPARK PLUGS:	BPR5ES: 0.7-0.8 mm (0.028-0.031 in.) Air Gap
WEIGHT:	146 Kg (322 lbs.), Dry
ROTATION:	Counter-Clockwise (CCW) when viewed from Flywheel End
FUELTYPE:	LPG
GOVERNED SPEED:	2600 +/- 25 RPM
IDLE RPM:	700 +/- 25 RPM
IGNITIOIN TIMING:	Electronic controlled by ECM
LP FUEL SYSTEM	
MIXER:	Piston Type Air Valve Assembly inside, Downdraft
REGULATOR:	Two-Stage Negative Pressure Regulator
FUEL FILTRATION:	40 Microns Maximum
COOLING SYSTEM	
WATER PUMP ROTATION:	V-Belt Drive - Clockwise (CW) when viewed from engine front
THERMOSTAT:	Opening Temperature: 82°C (180°F) Fully Open Temperature: 95°C (203°F)
COOLING WATER CAPACITY:	3.1 L (block only)
LUBRICATION SYSTEM	
OIL PRESSURE:	50 kPa (7 psi) @ Low Idle 450 kPa (65 psi) @ Hi Idle
OIL TEMPERATURE:	Upper Limit: 125°C (257°F)
	Recommended: 99 - 110°C (210 - 230°F)
	Lower Limit: 80°C (176°F)
CRANKCASE CAPACITY:	3.7 L
OIL FILTER:	0.3 L
ENGINE OIL SPECIFICATION:	API - SJ, SAE 10W30 or SAE 5W30
ENGINE ELECTRICAL	
IGNITION TYPE:	Electronic Advanced by ECM
IGNITION COIL:	12 V operation volt, Ignition driver circuitry inside
DISTRIBUTOR:	Mitsubishi Distributor
STARTER MOTOR:	12 Volt, 1.2 kW, Reduction drive
ALTERNATOR:	12 Volt, 61 Amp
ENGINE OIL PR. S/W:	24.5 kPa (3.6 psi)
ENGINE CONTROL MODULE(ECM):	12 V operation volt, 24 pins of I/O
VR SENSOR:	Magnetic pick up sensor
TMAP:	Intake Air Temp. & Manifold Absolute Press. Sensor
PEDAL ANGLE SENSOR:	Two-Output Signals (Installed on Accelerator Pedal)
OXYGEN SENSOR:	Heated Exhaust Gas Oxygen Sensor (HEGO) 12 V operation volt
ECT-ECM:	Engine Coolant Temperature Sensor for ECM
ECT-GAUGE	Engine Coolant Temp. Sensor for GAUGE on Instrument Panel
TPS:	Throttle Position Sensor (built in Throttle Body)
THROTTLE BODY:	Electronic Throttle Body
FUEL TRIM VALVE (FTV):	12 V operation volt
LP FUEL LOCK-OFF:	12 V operation volt, ON/OFF Control by ECM
EXHAUST SYSTEM	
CATALYTIC MUFFLER:	Three-way Catalyst included

Downloaded from www.Manualslib.com manuals search engine

https://truckmanualshub.com/

CHAPTER 2 MI-04 LPG SYSTEM OPERATIONAL OVERVIEW

MI-04 General Description

MI-04 control system is designed to provide a complete, fully integrated solution that will meet or exceed TIER-2 Large Spark Ignited Engines emission standards established by the California Air Research Board (CARB) and the Environmental Protection Agency (EPA) for 2004. The MI-04 is a closed loop system utilizing a catalytic muffler to reduce the emission level in the exhaust gas. In order to obtain maximum effect from the catalyst, an accurate control of the air fuel ratio is required. A small engine control module (SECM) uses a heated exhaust gas oxygen sensor (HEGO) in the exhaust system to monitor exhaust gas content.

MI-04 System with the N-CA55-500 Mixer

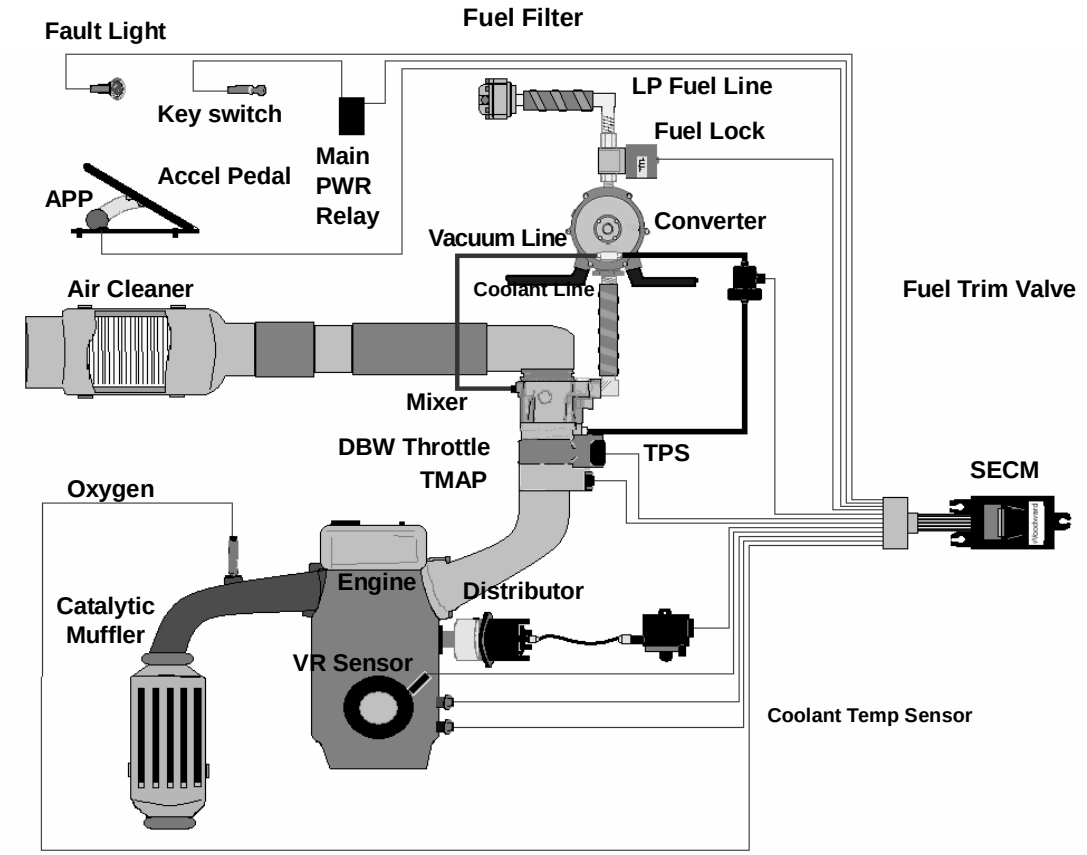

Figure 10

Downloaded from www.Manualslib.com manuals search engine

The SECM makes any necessary corrections to the air fuel ratio by controlling the inlet fuel pressure to the air/fuel mixer by modulating the fuel trim valve (FTV) connected to the regulator. Reducing the fuel pressure leans the air/fuel mixture and increasing the fuel pressure enriches the air/fuel mixture. To calculate any necessary corrections to the air fuel ratio, the SECM uses a number of different sensors to gain information about the engines performance. Engine speed is monitored by the SECM through a variable reluctance (VR) sensor. Intake manifold air temperature and absolute pressure is monitored with a (TMAP) sensor. The MI-04 is a drive by wire (DBW) system connecting the accelerator pedal to the electronic throttle through the electrical harness, mechanical cables are not used. A throttle position sensor (TPS) monitors throttle position in relation to the accelerator pedal position sensor (APP) feedback. Even engine coolant temperature is monitored by the SECM. The SECM controller has full adaptive learning capabilities, allowing it to adapt control function as operating conditions change. Factors such as ambient temperature, fuel variations, ignition component wear, clogged air filter, and other operating variables are compensated.

Open Loop LP Fuel System

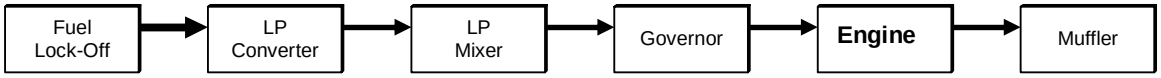

G420/G424 Open Loop LP Fuel System

MI-04 Closed Loop LP Fuel System

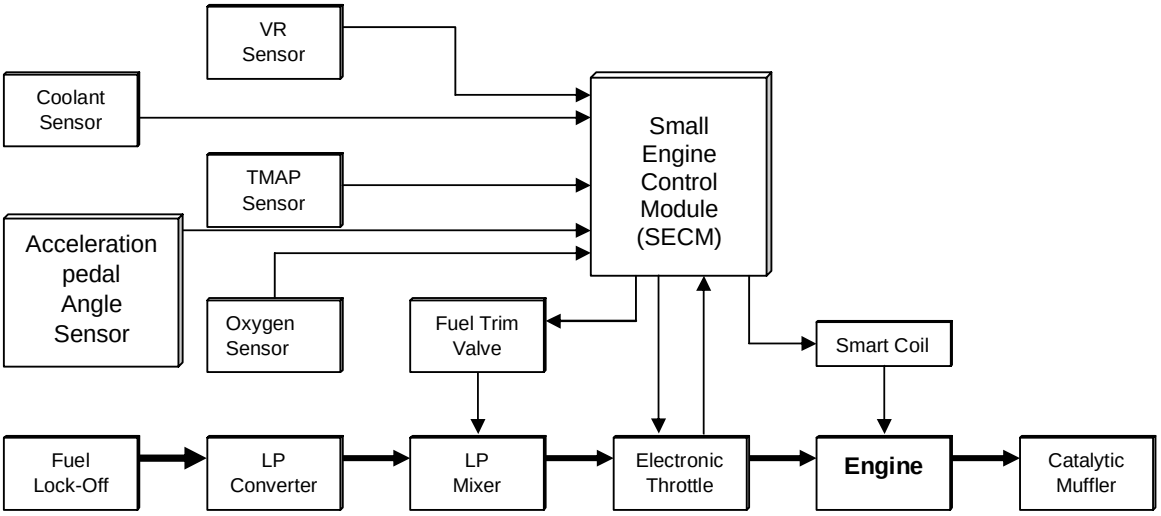

G420E/G424E Closed Loop LP Fuel System

Downloaded from www.Manualslib.com manuals search engine

https://truckmanualshub.com/

MI-04 LP Fuel Filter

Figure 11

After exiting the fuel tank, liquid propane passes through a serviceable inline fuel filter to the electric fuel lock off. (Figure 11) shows a typical inline type LP fuel filter manufactured by Century. The primary function of the fuel filter is to remove particles and sediments that have found their way into the tank. The LP fuel filter will not remove heavy end solids and paraffin's that build up in LPG fuel systems as a result of vaporization.

MI-04 Fuel Lock-Off (Electric)

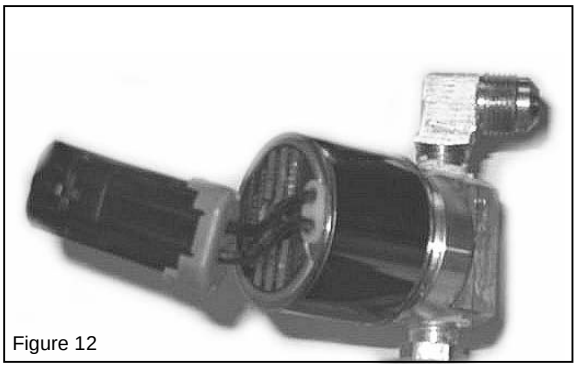
Figure 12

The fuel lock-off is a safety shutoff valve, normally held closed by spring pressure, which is operated by an electric solenoid and prevents fuel flow to the regulator/converter when the engine is not in operation. This is the first of three safety locks in the MI-04 system. (Figure 12) shows the electric fuel lock assembly.

In the MI-04 design, power is supplied to the fuel lock-off with the SECM controlling the lock-off ground (earth) connection. The lock-off remains in a normally closed (NC) position until the key switch is activated, this supplies power to the lock-off and the SECM but will not open the lock-off until the SECM provides the lock-off ground connection. This design gives the SECM full control of the lock-off while providing additional safety by closing the fuel lock-off in the unlikely event of a power failure, wiring failure or module failure.

When the liquid service valve in the fuel container is opened liquid propane flows through the LP filter and through the service line to the fuel lock-off. Liquid propane enters the lock-off through the ¼" NPT liquid inlet port and stops with the lock-off in the normally closed position. When the engine is cranked over the main power relay applies power to the lock-off and the SECM provides the lock-off ground causing current to flow through the windings of the solenoid creating a magnetic field. The strength of this magnetic field is sufficient to lift the lock-off valve off of its seat against spring pressure. When the valve is open liquid propane, at tank pressure, flows through the lock-off outlet to the pressure regulator/converter. A stall safety shutoff feature is built into the SECM to close the lock-off in case of a stall condition. The SECM monitors three engine states. Crank, when the VR sensor detects any engine revolutions. Stall, when the key is in the ON position but the VR sensor detects no engine revolutions, and the Run state, when the engine reaches pre-idle RPM. When an operator turns on the key switch the lock-off is opened but if the operator fails to crank the engine, the SECM will close the lock-off after 5 seconds.

Downloaded from www.Manualslib.com manuals search engine

https://truckmanualshub.com/

MI-04 N-2001 Regulator/Converter

Figure 13

After passing through the electric fuel lock-off, liquid propane enters the N-2001 regulator/converter (Figure 13). The N-2001 functions as a fuel vaporizer, converting liquid propane to vapor propane and as a two-stage negative pressure regulator, supplying the correct vapor propane fuel pressure to the mixer.

The regulator is normally closed requiring a vacuum signal (negative pressure) to allow fuel to flow. This is the second of three safety locks in the MI-04 system. If the engine stops, vacuum signal stops and fuel flow will automatically stop when both the secondary (2nd stage) valve and the primary (1st stage) valve closes. Unlike most other regulator/converters, the N-2001 primary valve closes with fuel pressure rather than against pressure, extending primary seat life and adding additional safety.

Liquid propane must be converted into a gaseous form in order to be used as a fuel for the engine. When the regulator receives the desired vacuum signal it allows propane to flow to the mixer. As the propane flows through the regulator the pressure is reduced in two stages from tank pressure to slightly less than atmospheric pressure. As the pressure of the propane is reduced the liquid propane vaporizes and refrigeration occurs inside the regulator due to the large temperature drop inside the regulator from the vaporization of liquid propane. To replace heat lost to vaporization, engine coolant is supplied by the engine driven water pump and pumped through the regulator. Heat provided by this coolant is transferred through to the fuel vaporization chamber.

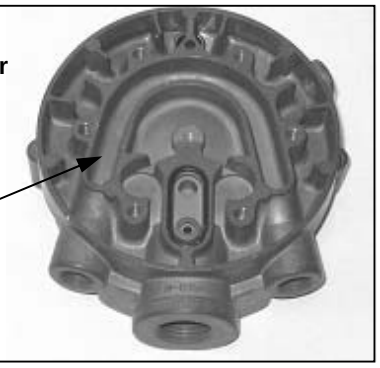

Figure 14

(Figure 14) shows the heat chamber and the coolant passage in the N-2001.

Downloaded from www.Manualslib.com manuals search engine

https://truckmanualshub.com/

N-2001 Theory of Operation

N-2001
Cutaway View

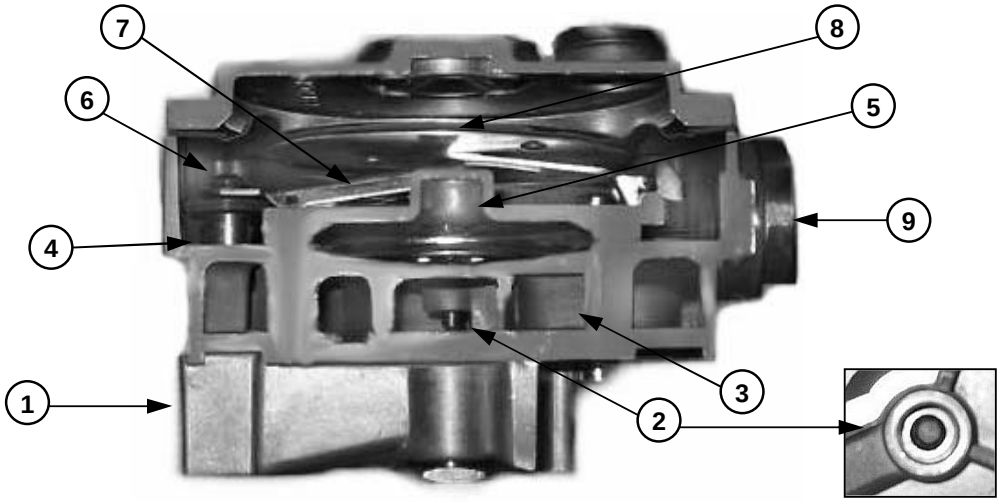

Figure 15

Liquid propane, at tank pressure, enters the N-2001 through the fuel inlet port (1). Propane liquid then flows through the primary valve (2). The primary valve located at the inlet of the expansion chamber (3), is controlled by the primary diaphragm (4), which reacts to vapor pressure inside the expansion chamber. Two springs are used to apply force on the primary diaphragm in the primary diaphragm chamber (5), keeping the primary valve open when no fuel pressure is present.
A small port connects the expansion chamber to the primary diaphragm chamber. At the outlet of the expansion chamber is the secondary valve (6). The secondary valve is held close by the secondary spring on the secondary valve lever (7). The secondary diaphragm controls the secondary lever. When the pressure in the expansion chamber reaches 1.5 psi it causes a pressure/force imbalance across the primary diaphragm (8). This force is greater than the primary diaphragm spring pressure and will cause the diaphragm to close the primary valve.

Since the fuel pressure has been reduced from tank pressure to 1.5 psi the liquid propane vaporizes. As the propane vaporizes it takes on heat from the expansion chamber. This heat is replaced by engine coolant, which is pumped through the coolant passage of the regulator. At this point vapor propane will not flow past the expansion chamber of the regulator until the secondary valve is opened. To open the secondary valve a negative pressure signal must be received from the air/fuel mixer. When the engine is cranking or running a negative pressure signal (vacuum) travels through the vapor fuel outlet connection of the regulator (9), which is the regulator secondary chamber, and the vapor fuel inlet of the mixer. The negative pressure in the secondary chamber causes a pressure/force imbalance on the secondary diaphragm, which overcomes the secondary spring force, opening the secondary valve and allowing vapor propane to flow out of the expansion chamber, through the secondary chamber to the mixer.

Because vapor propane has now left the expansion chamber, the pressure in the chamber will drop, causing the primary diaphragm spring force to re-open the primary valve allowing liquid propane to enter the regulator, and the entire process starts again. This creates a balanced condition between the primary and secondary chambers allowing for a constant flow of fuel to the mixer as long as the demand from the engine is present. The fuel flow is maintained at a constant output pressure, due to the calibrated secondary spring. The amount of fuel flowing will vary depending on how far the secondary valve opens in response to the negative pressure signal generated by the air/fuel mixer. The strength of that negative pressure signal developed by the mixer is directly related to the amount of air flowing through the mixer into the engine. With this process, the larger the quantity of air flowing into the engine, the larger the amount of fuel flowing to the mixer.

Downloaded from www.Manualslib.com manuals search engine

https://truckmanualshub.com/

MI-04 N-CA55-500TR Mixer

Vapor propane fuel is supplied to the N-CA55-500TR mixer by the N-2001 pressure regulator/converter. The N-CA55-500TR mixer uses a piston type air valve assembly to operate a gas-metering valve inside the mixer. The gas-metering valve is normally closed, requiring a negative pressure (vacuum) signal from a cranking or running engine to open. This is the third of the three safety locks in the MI-04 system. If the engine stops or is turned off, the air valve assembly closes the gas-metering valve, stopping fuel flow past the mixer. The gas-metering valve controls the amount of fuel to be mixed with the incoming air at the proper ratio. The air/fuel mixture then travels past the throttle, through the intake manifold and into the engine cylinders where it is compressed, ignited and burned.

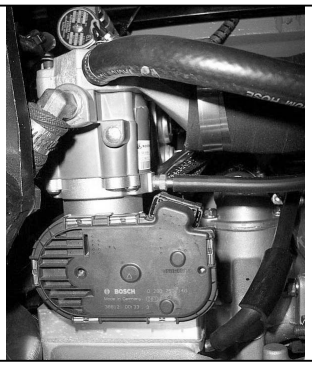

Figure 16

(Figure 16) shows the N-CA55-500TR mixer installed with the electronic throttle.

N-CA55-500-TR Air/Fuel Mixer Theory of Operation

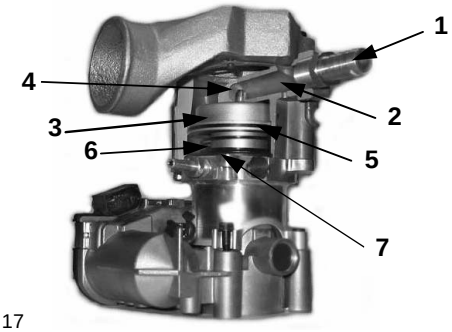

Figure 17

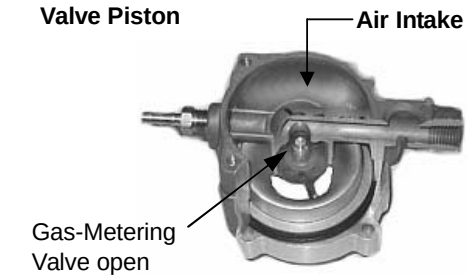

Figure 18

The air/fuel mixer is mounted in the intake air stream between the air cleaner and the throttle. The design of the main body incorporates a cylindrical bore or mixer bore, fuel inlet (1) and a gas discharge jet (2). In the center of the main body is the air valve assembly, which is made up of the piston air valve (3), the gas-metering valve (4), and air valve sealing ring (5), air valve spring (6) and the check valve plate (7). The gas-metering valve is permanently mounted to the piston air valve with a face seal mounted between the two parts.

When the engine is not running this face seal creates a seal against the gas discharge jet, preventing fuel flow with the aid (upward force) of the air valve spring. The outer surface of the piston air valve forms the venturi section of the mixer while the inner portion of the piston is hollow and forms the air valve vacuum chamber. The check valve plate seals off the bottom of the air valve vacuum (AVV) chamber and the air valve sealing ring seals the top portion of the AVV chamber as the piston moves against the air valve spring.

Downloaded from www.Manualslib.com manuals search engine

https://truckmanualshub.com/

When the engine is cranked over it begins to draw in air, creating a negative pressure signal. This negative pressure signal is transmitted through a port in the check valve plate to the AVV chamber. A pressure/force imbalance begins to build across the air valve piston between the AVV chamber (below the piston) and atmospheric pressure above the piston. Approximately 6” W.C. (Water Column) of negative pressure is required to overcome the air valve spring force and push the air valve assembly (piston) downward off the valve seat. Approximately 24” W.C. pushes the valve assembly to the bottom of its travel in the full open position.

The amount of negative pressure generated is a direct result of throttle position and the amount of air flowing through the mixer to the engine. At low engine speeds, low AVV causes the piston air valve to move downward a small amount, creating a small venturi. At high engine speeds, high AVV causes the air valve piston to move much farther creating a large venturi. The variable venturi air/fuel mixer constantly matches venturi size to engine demand. To prevent engine reversion pulses, commonly encountered in small displacement engines, from having an effect on the piston AVV chamber, a check valve is incorporated on the check valve plate control port to the AVV chamber. The check valve is held open with gravity and remains open with any negative pressure signal from the engine. If a reverse pressure pulse, caused by engine reversion, travels up the intake manifold toward the mixer it will close the check valve for the duration of the pulse, preventing the pulse from entering the AVV chamber.

N-CA55-500TR

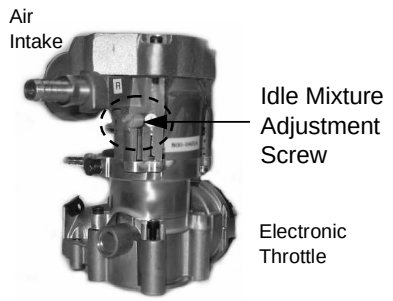

Figure 19

A main mixture adjustment valve on the fuel inlet of the N-CA55-500TR is not used in the MI-04 system, however an idle mixture adjustment is incorporated into the mixer (Figure 19).The idle mixture adjustment is an air bypass port, adjusting the screw all the way in, blocks off the port and enriches the idle mixture. Backing out the idle adjustment screw opens the port and leans the idle mixture. The idle mixture screw is a nylon type screw that is factory set with a tamper resistant cap installed after adjustment. Accurate adjustment of the idle mixture can only be accomplished by adjusting for a specific fuel trim valve (FTV) duty cycle with the service tool software, and should be only be adjusted by trained service technicians.

Downloaded from www.Manualslib.com manuals search engine

https://truckmanualshub.com/

MI-04 Electronic Throttle

Conventional throttle systems rely on mechanical linkage to control the throttle valve. To meet fluctuating engine demands a conventional system will typically include throttle valve actuators designed to readjust the throttle valve opening in response to engine demand, together with idle control actuators or idle air bypass valves.

Figure 20

In contrast, the MI-04 system uses electronic throttle control (ETC). The SECM controls the throttle valve based on engine RPM, engine load, and information received from the Acceleration Pedal. Two mutually opposed potentiometers on the Acceleration Pedal assembly monitor accelerator pedal travel. The electronic throttle used in the MI-04 system is a Bosch 32mm Electronic Throttle Body DV-E5 (Figure 20). The DV-E5 is a single unit assembly, which includes the throttle valve, throttle-valve actuator (DC motor) and the throttle position sensor (TPS) (Figure 21).

The SECM calculates the correct throttle valve opening that corresponds to the driver's demand, makes any adjustments needed for adaptation to the engine's current operating conditions and then generates a corresponding electrical (driver) signal to the throttle-valve actuator.

There are multiple limp-home modes available with ETC. 1. If the throttle itself is suspected of being inoperable, the SECM will remove the power to the throttle motor. When the power is removed, the throttle blade returns to its "default" position, approximately 7% open. 2. If the SECM can still control the throttle but some other part of the system is suspected of failure, the SECM will enter a "Reduced Power" mode. In this mode, the power output of the engine is limited by reducing the maximum throttle position allowed. 3. In some cases, the SECM will shut the engine down. This is accomplished by stopping ignition, turning off the fuel, and disabling the throttle.

In place of a dual TPS design (TPS1 and TPS2), the SECM calculates correct throttle position (Predicted TPS) based on RPM and MAP and compares this to the actual throttle position, based on TPS1. The SECM continuously checks and monitors all sensors and calculations that effect throttle valve position whenever the engine is running. If any malfunctions are encountered, the SECM's initial response is to revert to redundant sensors and calculated data. If no redundant signal is available or calculated data cannot solve the malfunction, the SECM will drive the system into one of it's limp-home modes or shut the engine down, storing the appropriate fault information in the SECM.

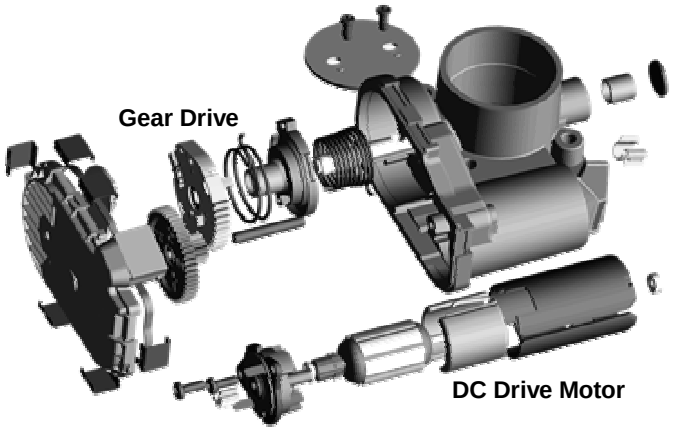

Bosch 32mm Electronic Throttle Body DV-E5

Picture courtesy of Robert Bosch GmbH

Figure 21

Downloaded from www.Manualslib.com manuals search engine

https://truckmanualshub.com/

MI-04 Fuel Trim Valve

Fuel Trim Valve

The Fuel Trim Valve (FTV) is a two-way electric solenoid valve and is controlled by a pulse width modulated (PWM) signal provided by the SECM. The FTV is used to bias the output fuel pressure on the LPG regulator/converter (N-2001), by metering air valve vacuum (AVV) into the atmospheric side of the N-2001 secondary regulator diaphragm. An orifice balance line connected to the air inlet side of the mixer provides atmospheric reference to the N-2001 when the FTV is closed. The SECM uses feedback voltage from the O2 sensor to determine the amount of bias needed to the regulator/converter.

In normal operation the N2001 maintains fuel flow at a constant output pressure, due to the calibrated secondary spring. The amount of fuel flowing from the N2001 will vary depending on how far the secondary diaphragm opens the secondary valve in response to the negative pressure signal generated by the air/fuel mixer. One side of the N2001 secondary diaphragm is referenced to atmospheric pressure while the other side of the diaphragm reacts to the negative pressure signal from the mixer. If the pressure on the atmospheric side of the N2001 secondary diaphragm is reduced, the diaphragm will close the secondary valve until a balance condition exists across the diaphragm, reducing fuel flow and leaning the air/fuel mixture.

A branch-tee fitting is installed in the atmospheric vent port of the N2001 with one side of the branch-tee connected to the intake side of the mixer forming the balance line and referencing atmospheric pressure. The other side of the branch-tee fitting connects to the FTV inlet (small housing side). The FTV outlet (large housing connector side) connects to the AVV port. When the FTV is open AVV is sent to the atmospheric side of the N2001 secondary diaphragm, which lowers the reference pressure, closing the N2001 secondary valve and leaning the air/fuel mixture. The MI-04 system is calibrated to run rich without the FTV. By modulating (pulsing) the FTV the SECM can control the amount of AVV applied to the N2001 secondary diaphragm. Increasing the amount of times the FTV opens (modulation or duty cycle) causes the air/fuel mixture to become leaner; decreasing the modulation (duty cycle) enriches the mixture.

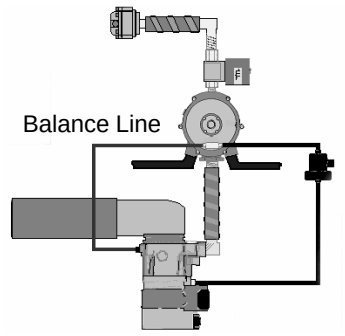

Figure 22

(Figure 22) shows the Fuel Trim Valve connected in the MI-04 system.

Downloaded from www.Manualslib.com manuals search engine

https://truckmanualshub.com/

Heated Exhaust Gas Oxygen Sensor (HEGO)

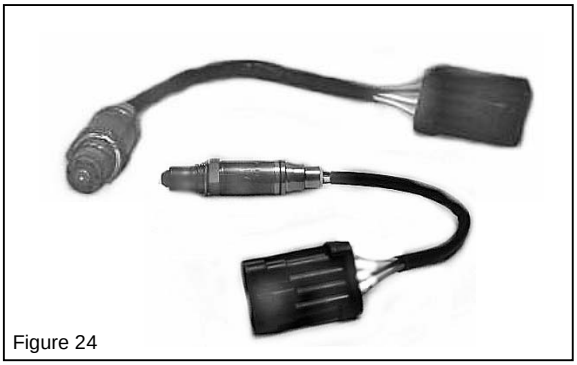

Figure 24

The HEGO sensor (Figure 24) installed in the exhaust manifold before the catalytic muffler is a basic zirconium type oxygen sensor comprised of a hollow cone-shaped internal element made of zirconium dioxide (ZrO2, a ceramic material), which is coated with a thin layer of micro-porous platinum. The outer layer is exposed to the exhaust stream, while the inner layer is vented to the atmosphere and attached to a wire that runs to the SECM. It operates like a galvanic cell with the zirconium dioxide acting as the electrolyte and the platinum layers serving as electrodes. Once the ZrO2 reaches approximately 600 deg. F., it becomes electrically conductive and attracts negatively charged ions of oxygen. These ions collect on the inner and outer platinum surfaces. Naturally, there's more oxygen in plain air than in exhaust, so the inner electrode will always collect more ions than the outer electrode, and this causes a voltage potential for electrons to flow. The concentration of oxygen in the exhaust stream determines the number of ions on the outer electrode, hence the amount of voltage produced. If the engine is running rich, little oxygen will be present in the exhaust, few ions will attach to the outer electrode, and voltage output will be relatively high. In a lean situation, more oxygen will be present, and that translates into more ions on the outer electrode, a smaller electrical potential, and less voltage. In order for the sensor to conduct and create an electrical signal below 600 deg. F., a heated element is added to the sensor housing. Two wires provide the necessary 12VDC and ground signal for the heater element. A fourth wire provides an independent ground for the sensor.

The HEGO stoichiometric air/fuel ratio voltage target is approximately 500mV and changes slightly as a function of speed and load. When the HEGO sensor sends a voltage signal less than 500mV the SECM interprets the air/fuel mixture to be lean. The SECM then decreases the duty cycle of the FTV lowering the amount of air valve vacuum (AVV) acting on the atmospheric side of the N2001 secondary diaphragm, increasing the regulator vapor propane output to richen the air/fuel mixture. The opposite is true if the SECM receives a voltage signal above 500mV from the HEGO. The air/fuel mixture would then be interpreted as being too rich and the SECM would increase the duty cycle of the FTV.

CAUTION
The HEGO sensor used is calibrated to work with the MI-04 system. Using alternate sensors may impact drivability and the ability of the system to diagnose rich and lean conditions.

Downloaded from www.Manualslib.com manuals search engine

https://truckmanualshub.com/

MI-04 SECM (General Description)

The Woodward Small Engine Control Module (SECM) controller has full authority over spark, fuel and air. Utilizing Motorola's HCS12 micro controller, the SECM has 24 pins of I/O and is fully waterproof and shock hardened (Figure 23). To optimize engine performance and drivability, the SECM uses several sensors for closed loop feedback information.
These sensors are used by the SECM for closed loop control in three main categories:

- Fuel Management
- Load/Speed Management
- Ignition Management

Figure 23

The SECM monitors system parameters and stores any out of range conditions or malfunctions as faults in SECM memory. Engine run hours are also stored in memory. Stored fault codes can be displayed on the Malfunction Indicator Light (MIL) as flash codes or read by the MI-04 Service Tool software through a CAN (Controller Area Network) communication link.

Battery power (12 VDC) is supplied through the fuse block to the main power relay. The ignition key switch is used to energize the main power relay. A main power relay supplies 12 VDC power to the SECM, the heated element of the oxygen sensor, Fuel Lock-Off, Fuel Trim Valve (FTV) and the Smart Coil. The SECM supplies positive voltage to the electronic throttle actuator, oil pressure switch and the coolant temperature sensor. Transducer or sensor power (+5 VDC) is regulated by the SECM and supplied to the Temperature/Manifold Air Pressure Sensor (TMAP), Throttle Position Sensor (TPS), and the Accelerator Pedal Position Sensors (APP1 & APP2). The SECM provides a constant voltage (VCC) to the Smart Coil Driver, transducer ground for the all sensors, and a low side driver signal controlling the fuel lock-off, MIL and FTV.

MI-04 SECM (Fuel Management)

During engine cranking at startup, the SECM provides a low side driver signal to the fuel lock-off, which opens the lock-off allowing liquid propane to flow to the N2001 regulator. A stall safety shutoff feature is built into the SECM to close the lock-off in case of a stall condition. The SECM monitors three engine states. Crank, when the VR sensor detects any engine revolutions. Stall, when the key is in the ON position but the VR sensor detects no engine revolutions, and the Run state, when the engine reaches pre-idle RPM. When an operator turns on the key switch the lock-off is opened but if the operator fails to crank the engine, the SECM will close the lock-off after 5 seconds.

To maintain proper exhaust emission levels, the SECM uses a heated exhaust gas oxygen sensor (HEGO) mounted before the catalyst, to measure exhaust gas content in the LP gas system. Engine speed is monitored by the SECM through a variable reluctance (VR) sensor. Intake manifold air temperature and absolute pressure is monitored with a (TMAP) sensor. The HEGO voltage is converted to an air fuel ratio value. This value is then compared to a target value in the SECM. The target value is based on optimizing catalyst efficiency for a given load and speed. The SECM then calculates any corrections that need to be made to the air fuel ratio.

The system operates in open loop fuel control until the engine has done a certain amount of work. This ensures that the engine and HEGO are sufficiently warmed up to stay in control. In open loop control, the FTV duty cycle is based on engine speed and load. Once the HEGO reaches operating temperature the fuel management is in closed loop control for all steady state conditions, from idle through full throttle. In closed loop mode, the FTV duty cycle is based on feedback from the HEGO sensor. In order to handle transient loads, engine RPM and load is compared to a threshold used by the SECM. When this threshold is exceeded, the FTV duty cycle will be set to a Feed Forward Adaptive value.

The SECM then makes any necessary corrections to the air fuel ratio by controlling the inlet fuel pressure to the air/fuel mixer Reducing the fuel pressure leans the air/fuel mixture and increasing the fuel pressure enriches the air/fuel mixture. Control is achieved by modulating the fuel trim

Downloaded from www.Manualslib.com manuals search engine

Catalytic Muffler

All exhaust gases pass through a catalyst that is mounted in the catalytic muffler. It filters the harmful gases through a dense honeycomb structure coated with precious metals such as platinum, palladium, and rhodium. Chemical reactions occur on these surfaces to convert the pollutants into less harmful gases. Catalysts store oxygen on lean mixtures (less than optimal amount of fuel) and release oxygen on rich mixtures (more than optimal amount of fuel). The primary pollutant produced on the lean swing is nitrous oxide. Oxygen is removed from nitrous oxide by the converter, resulting in nitrogen gas, a harmless emission. On the rich cycle, the primary pollutant is carbon monoxide. By adding the oxygen that was stored on the lean cycle to the carbon monoxide, carbon dioxide is produced.

Inside the catalytic muffler is a three-way catalyst as well as sound dampening and spark arresting features. The three-way catalyst section consists of a honeycomb coated with a mixture of platinum, palladium and rhodium. As engine exhaust gases flow through the converter passageways, they contact the coated surface, which initiate the catalytic process. The **reduction catalyst** is the first stage of the catalytic converter. It uses platinum and rhodium to help reduce the NOx emissions. The **oxidation catalyst** is the second stage of the catalytic converter. It reduces the unburned hydrocarbons and carbon monoxide by burning (oxidizing) them over a platinum and palladium catalyst. Cerium is also used to promote oxygen storage and improve oxidation efficiency.

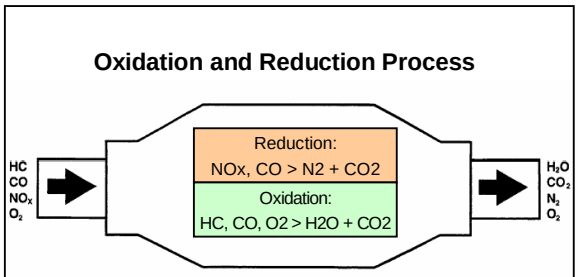

Figure 25

As exhaust and catalyst temperatures rise the following reaction occurs:

- Oxides of nitrogen (NOx) are reduced into simple nitrogen (N2) and carbon dioxide (CO2).
- Hydrocarbons (HC) and carbon monoxide (CO) are oxidized to create water (H2O) and carbon dioxide (CO2).

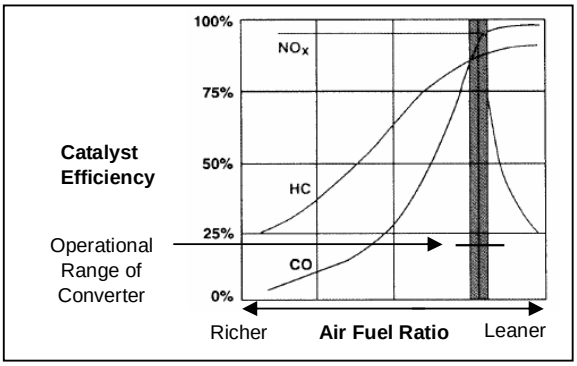

The third stage is the MI-04 control system that monitors the exhaust stream, and uses this information to control the air/fuel mixture. By using the signal from the HEGO the SECM can increase or decrease the amount of oxygen in the exhaust by modulating the FTV and adjusting the air/fuel ratio. This control scheme allows the SECM to make sure that the engine is running at close to the stoichiometric point, and also to make sure that there is enough oxygen in the exhaust to allow the oxidization catalyst to burn the unburned hydrocarbons and CO.

Downloaded from www.Manualslib.com manuals search engine

https://truckmanualshub.com/

MI-04 SECM (Load/Speed Management)

Drive by wire refers to the fact that the MI-04 control system has no throttle cable from the Acceleration Pedal (Figure 26) to the throttle body. Instead, the SECM is electronically connected both to the Acceleration Pedal assembly and the throttle body. The SECM monitors the Acceleration Pedal position and controls the throttle plate by driving a dc motor connected to the throttle. The dc motor actuates the throttle plate to correspond to the Acceleration Pedal position when the operator depresses the pedal. The use of electronic throttle control (ETC) ensures that the engine only receives the correct amount of throttle opening for any given situation, greatly improving idle quality and drivability.

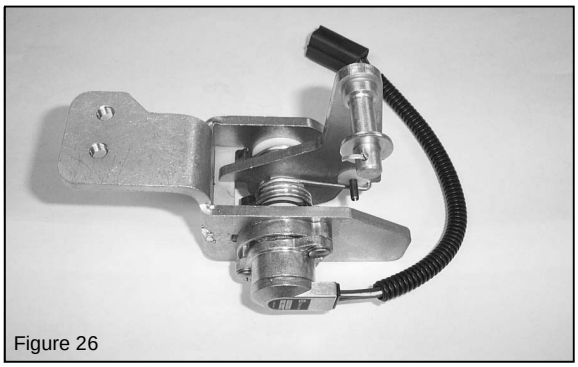

Figure 26

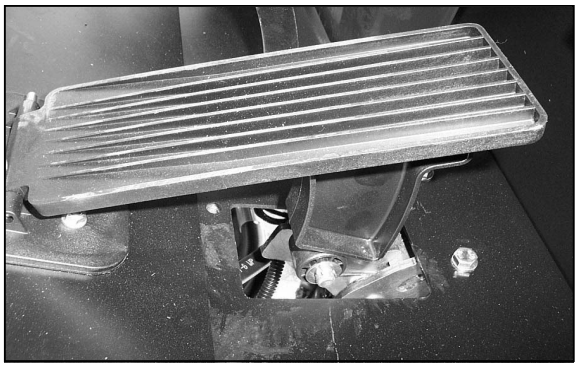

A Throttle Position Sensor (TPS), (Figure 27) which is integral to the Drive By Wire (DBW) throttle assembly, provides feedback for position control by monitoring the exact position of the throttle valve.

NOTE
The DV-E5 is not a serviceable assembly. If the TPS sensor fails, the assembly should be replaced.

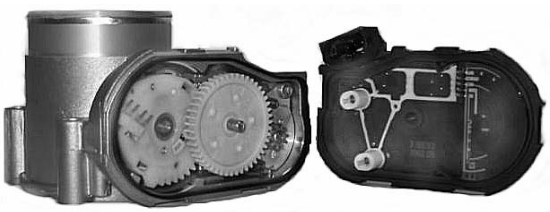

Figure 27

Figure 28

SECM self-calibration and “cross checking” of the TPS is accomplished by comparing the TPS signal to a calculated throttle position in the SECM software (Predicted TPS). In addition to the throttle position sensor, a Temperature/Manifold Air Pressure Sensor (TMAP) is used to monitor intake manifold temperature and pressure (Figure 28). This enables the SECM full control capabilities monitoring actual airflow in relationship to desired airflow. The TMAP sensor is a single unit incorporating both intake manifold temperature and manifold pressure measurement.

Downloaded from www.Manualslib.com manuals search engine

The MI-04 system also performs minimum (min) and maximum (max) governing through the SECM and DBW throttle. For min governing, or idle speed control, the idle speed is fixed by the SECM. Unlike a mechanical system, the idle speed is not adjustable by the end user. The idle speed is adjusted by the SECM based on engine coolant temperature. At these low engine speeds, the SECM uses spark and throttle to maintain a constant speed regardless of load.

The MI-04 system eliminates the need for air velocity governors. This substantially increases the peak torque and power available for a given system as shown in (Figure 29). When the engine speed reaches the max governing point the speed is controlled by closing the DBW throttle. Using the DBW throttle as the primary engine speed control allows for a smooth transition into and out of the governor. If speed exceeds this max governing point, spark is interrupted to attempt to bring the speed back to a point that can be controlled by throttle alone. If over speed is detected multiple times, the engine is shutdown.

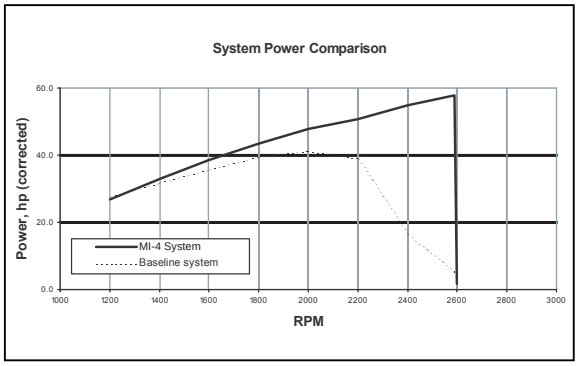

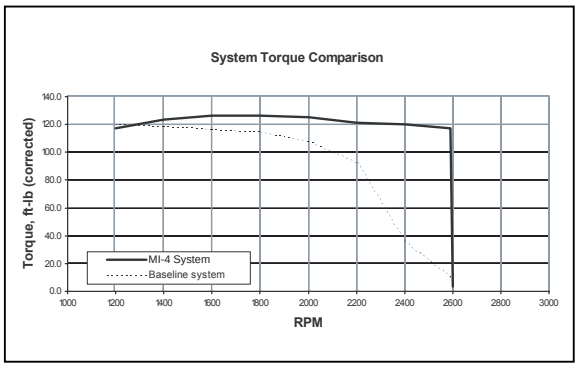

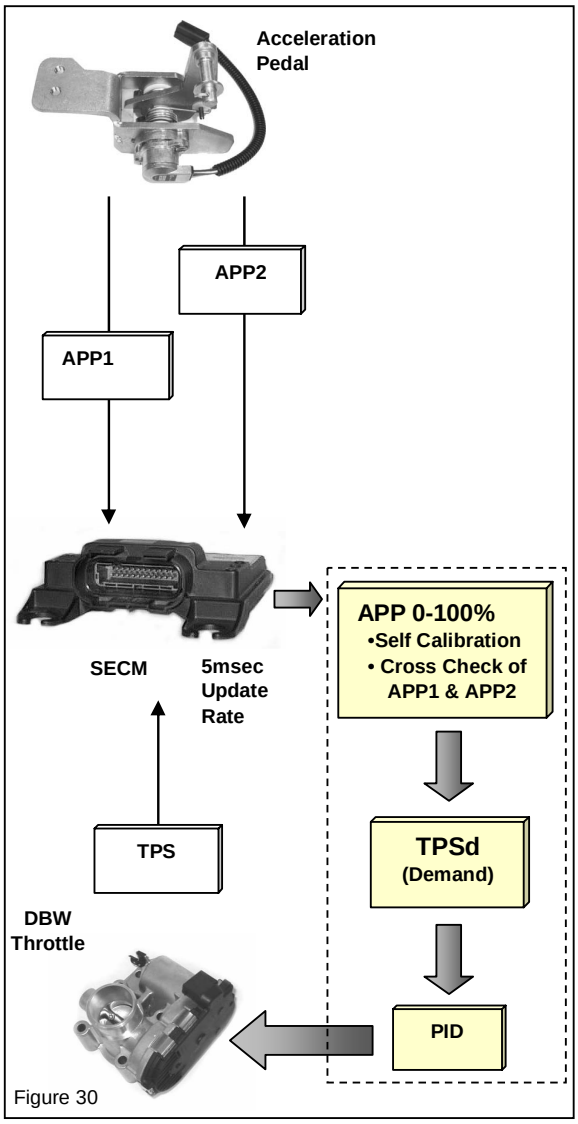

Figure 30

(Figure 30) describes the signal flow process of the MI-04 DBW section. The Acceleration Pedal assembly uses two potentiometers to detect pedal position. These two signals, accelerator pedal position 1 (APP1) and accelerator pedal position 2 (APP2) are sent directly to the SECM. The SECM uses a series of algorithms to self calibrate and cross check the signals from the pedal assembly. A demand position for the throttle will then be derived and sent to the throttle as a throttle position sensor demand (TPSd). The signal will be processed through a PID (Proportional, Integral, Derivative) controller in the SECM to achieve the appropriate motor-current response then passed to the throttle. The throttle moves to the commanded position and provides a feedback signal from the throttle position sensor (TPS) to the SECM.

Downloaded from www.Manualslib.com manuals search engine

https://truckmanualshub.com/

MI-04 Ignition management

In the normal course of events, with the engine operating at the correct temperature in defined conditions, the SECM will use load and engine speed to derive the correct ignition timing. In addition to load and speed there are other circumstances under which the SECM may need to vary the ignition timing, including low engine coolant temperature, air temperature, start-up, idle speed control.

VR Sensor

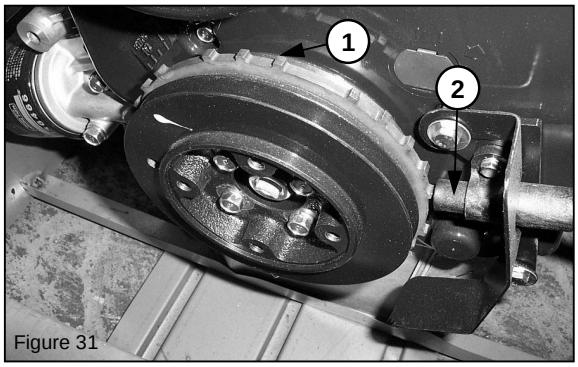

Figure 31

(1) Timing Wheel (2) VR Sensor

A Variable Reluctance sensor (Figure 31) is an electromagnetic device consisting of a permanent magnet surrounded by a winding of wire. The sensor is used in conjunction with a ferrous timing wheel located on the crankshaft pulley. The timing wheel is referred to as 30-5 ignition because the wheel has 30 gear teeth with 5 removed at precise locations, giving the SECM a very accurate speed reference signal. Rotation of the timing wheel near the tip of the sensor changes the magnetic flux, creating an analog voltage signal in the sensor coil.

Ignition Coil (Smart Coil)

The MI-04 system is capable of operating with either a distributor based ignition system or a distributor less ignition system. The current application uses a distributor based ignition system. The distributor will have no internal advance mechanisms giving the SECM consistent authority over ignition timing. The spark is sent to the appropriate cylinder in the conventional way via the rotor arm and spark plug wires. The SECM uses the signal from the VR (Variable Reluctance) sensor mounted near the crankshaft pulley to determine the engine position and RPM at any time. It uses this information together with the information from the TPS sensor and TMAP to calculate the appropriate ignition timing settings for the “smart coil”.

“SmartCoil”

The MI-04 system uses a single coil, which incorporates the ignition driver circuitry inside the coil itself. The SECM signals the “smart coil” when to begin its dwell cycle then the coil waits for the trigger signal from the SECM.

The “smart coil” eliminates the need for a driver circuit inside the SECM or externally from the coil. Using a single VR sensor and “smart coil” eliminates multiple sensors and coil packs used in more complex ignition systems.

Distributor

The distributor of G420/G424 engine has the mechanical advance system internally. But the new distributor of G420E/G424E engine has no internal advance mechanisms.

A333011: Distributor assy for G420E/G424E engines
A218350: Distributor assy for G420/G424 engines

Downloaded from www.Manualslib.com manuals search engine

https://truckmanualshub.com/

CHAPTER 3 MI- 04 MAINTENANCE SCHEDULE

RECOMMENDED MAINTENANCE SCHEDULE

Suggested maintenance requirements for an engine equipped with an MI-04 fuel system are contained in this section. The owner should, however, develop his own maintenance schedule using the requirements listed in this section and any other requirements listed by the engine manufacturer.

Test Fuel System for Leaks

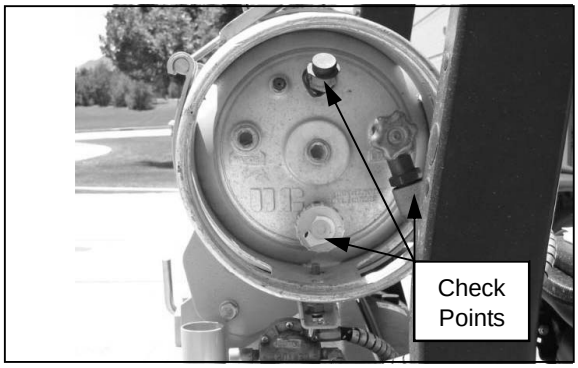

- Obtain a leak check squirt bottle or pump spray bottle.
- Fill the bottle with an approved leak check solution.
- Spray a generous amount of the solution on the fuel system fuel lines and connections, starting at the storage container.
- Wait approximately 15-60 seconds then perform a visual inspection of the fuel system. Leaks will cause the solution to bubble.
- Repair any leaks before continuing.
- Crank the engine through several revolutions. This will energize the fuel lock-off and allow fuel to flow to the pressure regulator/converter. Apply additional leak check solution to the regulator/converter fuel connections and housing. Repeat leak inspection as listed above.
- Repair any fuel leaks before continuing.

Inspect Engine for Fluid Leaks

- Start the engine and allow it to reach operating temperatures.
- Turn the engine off.
- Inspect the entire engine for oil and/or coolant leaks.
- Repair as necessary before continuing.

Inspect Vacuum Lines and Fittings

- Visually inspect vacuum lines and fittings for physical damage such as brittleness, cracks and kinks. Repair/replace as required.
- Solvent or oil damage may cause vacuum lines to become soft resulting in a collapsed line while the engine is running.
- If abnormally soft lines are detected, replace as necessary.

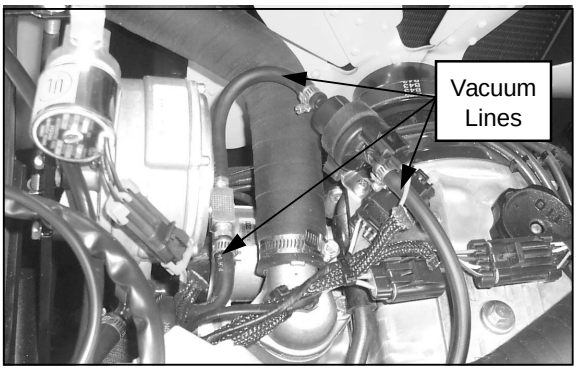

Inspect Electrical System

- Check for loose, dirty or damaged connectors and wires on the harness including: Fuel lock-off, TMAP sensor, O2 sensor, Electronic throttle, Control Relays, Fuel Trim Valve, Acceleration Pedal, and Distributor sensor.
- Repair and/or replace as necessary.

Downloaded from www.Manualslib.com manuals search engine

https://truckmanualshub.com/

Inspect Acceleration Pedal Operation

- Verify Acceleration Pedal travel is smooth without sticking.

Check Coolant Level

- The items below are a general guideline for system checks. Refer to the engine manufacturers specific recommendations for proper procedures.
- Engine must be off and cold.

WARNING
NEVER REMOVE THE PRESSURE CAP ON A HOT ENGINE.

- The coolant level should be equal to the “COLD” mark on the coolant recovery tank.
- Add approve coolant to the specified level if the system is low.

Inspect Coolant Hoses

- Visually inspect coolant hoses and clamps. Remember to check the two coolant lines that connect to the pressure regulator/converter.
- Replace any hose that shows signs of swelling, cracking, abrasion or deterioration.

Inspect Battery System

- Clean battery outer surfaces with a mixture of baking soda and water.
- Inspect battery outer surfaces for damage and replace as necessary.
- Remove battery cable and clean, repair and/or replace as necessary.

Inspect Ignition System

- Disconnect Battery Cables.
- Remove and inspect the spark plugs. Replace as required.
- Test secondary cables with an Ohmmeter. If maximum resistance is higher than 25 kOhms, repair and/or replace.
- Remove distributor cap and perform visual inspection. Replace cap and rotor if corrosion is found on the contacts.
- Inspect the ignition coil for cracks and heat deterioration. Visually inspect the coil heat sink fins. If any fins are broken replace as required.

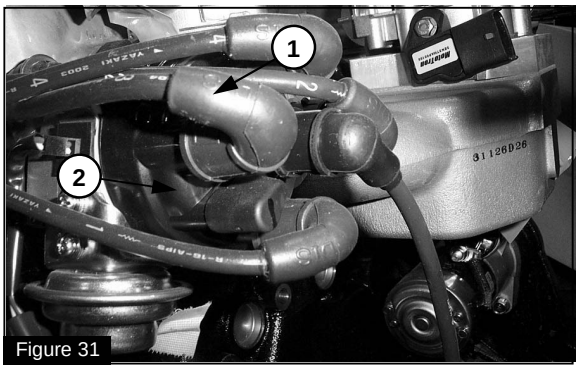

Figure 31

(1) Spark Plug Cables (2) Distributor Cap

Replace Spark Plugs

- Disconnect Battery Cables.
- Using a gentle twisting motion remove the high voltage cables from the spark plugs. Replace any damaged cables.
- Remove the spark plugs.
- Gap the new spark plugs to the proper specifications.

  Spark plug air gap : 0.7 - 0.8 mm

- Apply anti-seize compound to the spark plug threads and install.

  Spark plug tightening torque : 25 N•m (18 lb•ft)

CAUTION
DO NOT OVERTIGHTEN THE SPARK PLUGS.

- Re-install the high voltage cables.

Downloaded from www.Manualslib.com manuals search engine

https://truckmanualshub.com/

Replace LP Fuel Filter Element

Park the lift truck in an authorized refueling area with the forks lowered, parking brake applied and the transmission in Neutral.

1. Close the fuel shutoff valve on the LP-Fuel tank. Run the engine until the fuel in the system runs out and the engine stops.

2. Turn off the ignition switch.

3. Scribe a line across the filter housing covers, which will be used for alignment purposes when re-installing the filter cover.

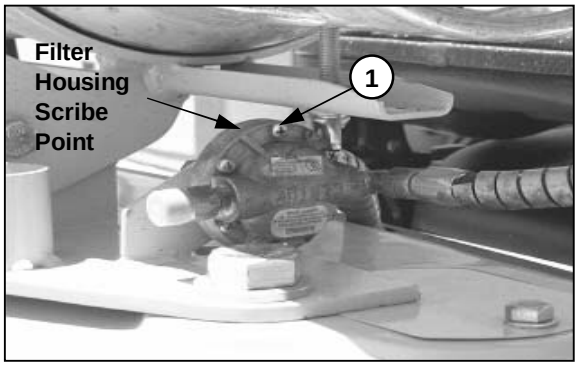

4. Remove the cover retaining screws (1).

Fuel Filter Disassembly

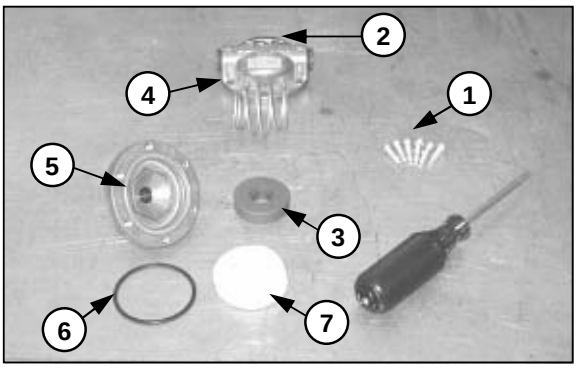

5. Remove top cover (2), magnet (3), spring (4), and filter element (7) from bottom cover (5).

6. Replace the filter element (7).

7. Check bottom cover O-ring seal (6) for damage. Replace if necessary.

8. Re-assemble the filter assembly aligning the scribe lines on the top and bottom covers.

9. Install the cover retaining screws, tightening the screws in an opposite sequence across the cover.

10. Open the fuel valve by slowly turning the valve counterclockwise.

11. Crank the engine several revolutions to open the fuel lock-off. DO NOT START THE ENGINE. Turn the ignition key switch to the off position.

12. Check the filter housing, fuel lines and fittings for leaks. Repair as necessary.

Downloaded from www.Manualslib.com manuals search engine

https://truckmanualshub.com/

Testing Fuel Lock-off Operation

- Start engine.
- Locate the electrical connector for the fuel lock (A).
- Disconnect the electrical connector.
- The engine should run out of fuel and stop within a short period of time.
- Turn the ignition key switch off and re-connect the fuel lock-off connector.

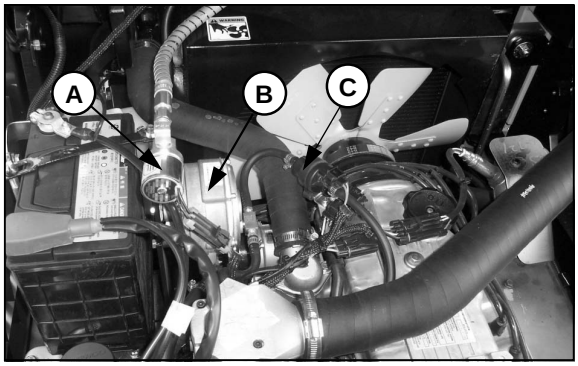

(A) LP fuel lock-off (B) LP regulator/converter
(C) Fuel Trim Valve

NOTE
The length of time the engine runs on trapped fuel vapor increases with any increase in distance between the fuel lock-off and the pressure regulator/converter.

Pressure Regulator/Converter Testing and Inspection

- Visually inspect the pressure regulator/converter (B) housing for coolant leaks. Refer to the pressure regulator/converter section of the service manual if maintenance is required.

NOTE
For pressure testing and internal inspection of the pressure regulator/converter, refer to the pressure regulator/converter section of the service manual.

Fuel Trim Valve Inspection (FTV)

- Visually inspect the Fuel trim valve (C) for abrasions or cracking. Replace as necessary.
- To ensure the valve is not leaking a blow-by test can be performed.

1. With the engine off, disconnect the electrical connector to the FTV.
2. Disconnect the vacuum line from the FTV to the pressure regulator/converter, at the converter's tee connection.
3. Lightly blow through the vacuum line connected to the FTV. Air should not pass through the FTV when de-energized. If air leaks past the FTV when de-energized replace the FTV.

Inspect Air/Fuel Valve Mixer Assembly

Refer to the LP mixer (G) section of the service manual for procedures.

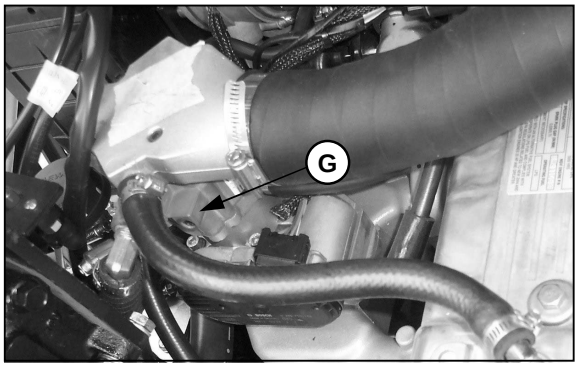

(G) LP mixer

Downloaded from www.Manualslib.com manuals search engine

https://truckmanualshub.com/

Inspect for Intake Leaks

- Visually inspect the intake manifold, throttle assembly (D), and manifold adapters (E), for looseness and leaks. Repair as necessary.

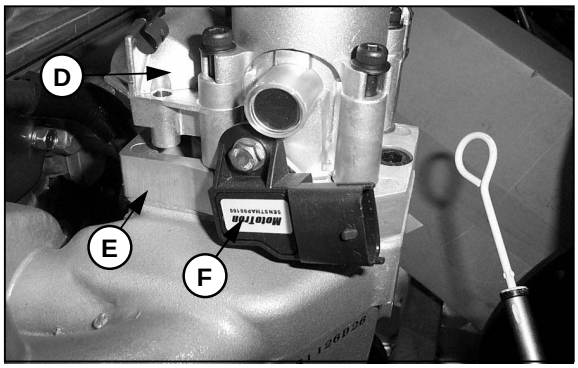

(D) Throttle Assembly (E) Manifold Adapter
(F) TMAP Sensor

Inspect Throttle Assembly

- Visually inspect the throttle assembly motor housing for coking, cracks and missing cover-retaining clips. Repair and/or replace as necessary.

NOTE
Refer to the LP mixer and throttle section of the service manual for procedures on removing the mixer and inspecting the throttle plate.

Checking the TMAP Sensor

- Verify that the TMAP sensor (F) is mounted tightly into the manifold adapter (E), with no leakage.
- If the TMAP is found to be loose, remove the TMAP retaining screw and the TMAP sensor from the manifold adapter.
- Visually inspect the TMAP O-ring seal for damage. Replace as necessary.
- Apply a thin coat of an approved silicon lubricant to the TMAP o-ring seal.
- Re-install the TMAP sensor into the manifold adapter and securely tighten the retaining screw.

Inspect Engine for Exhaust Leaks

- Start the engine and allow it to reach operating temperatures.
- Perform visual inspection of exhaust system.
- Repair any/all leaks found.

Replace Oxygen Sensor

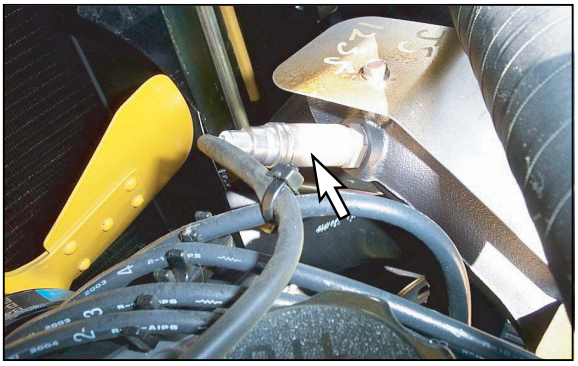

1. Stop engine and wait until the exhaust pipe and exhaust pipe is cooled.
2. Disconnect the electrical connector of oxygen sensor.
3. Remove oxygen sensor.
4. Assemble new oxygen sensor.

   Tightening torque : 45 N•m (32.5 lb•ft)
5. Connect the electrical connector of oxygen sensor.

Downloaded from www.Manualslib.com manuals search engine

https://truckmanualshub.com/

Maintenance Schedule

CHECK POINT	Interval Hours						
	Daily	Every 250hrs or a month	Every 500 Hours or 3 months	Every 1000 Hours or 6 months	Every 1500 Hours or 9 months	Every 2600 Hours or 15 months	Every 4500 Hours or 2 years
General Maintenance Section							
Test Fuel System for Leaks	Prior to any service or maintenance activity						
Inspect engine for fluid leaks	X						
Inspect all vacuum lines and fittings			X				
Inspect electrical system- check for loose, dirty, or damaged wires and connections			X				
Inspect all fuel fittings and hoses				X			
Inspect Acceleration Pedal travel and operation	X						
Engine Coolant Section							
Check Coolant Level	X						
Inspect coolant hoses and fittings for leaks, cracks, swelling, or deterioration				X			
Engine Ignition Section							
Inspect battery for damage and corroded cables						X	
Inspect ignition system					X		
Replace spark plugs					X		
Fuel Lock-Off/Filter Section							
Replace LP fuel filter element					X		
Inspect lock-off and fuel filter for leaks					X		
Ensure lock-off stops fuel flow when engine is off					X		
Pressure Regulator/Converter Section							
Test regulator pressures				X			
Inspect pressure regulator vapor hose for deposit build-up				X			
Inspect regulator assembly for fuel/coolant leaks				X			
Fuel Trim Valve Section							
Inspect valve housing for wear, cracks or deterioration			X				
Ensure valve seals in the closed position when the engine is off			X				

Downloaded from www.Manualslib.com manuals search engine

https://truckmanualshub.com/

Maintenance Schedule Continued							
CHECK POINT	**Interval Hours**						
	Daily	Every 250hrs or a month	Every 500hrs or 3 months	Every 1000 Hours or 6 months	Every 1500 Hours or 9 months	Every 2600 Hours or 15 months	Every 4500 Hours or 2 years
Carburetor Section							
Check air filter indicator	X						
Check for air leaks in the filter system				X			
Inspect air/fuel valve mixer assembly			X				
Inspect air/fuel mixer assembly throat				X			
Check for vacuum leaks in the intake system including manifold adapter and mixer to throttle adapter						X	
Inspect throttle assembly				X			
Inspect air filter			X				
Replace air filter element				X			
Check TMAP sensor for tightness and leaks						X	
Exhaust & Emission Section							
Inspect engine for exhaust leaks	X						
Replace Oxygen Sensor							X
Replace PCV Valve and breather element						X	

Downloaded from www.Manualslib.com manuals search engine

https://truckmanualshub.com/

CHAPTER 4 MI-04 LP BASIC TROUBLESHOOTING

Basic Troubleshooting

The MI-04 systems are equipped with built-in fault diagnostics. Detected system faults can be displayed by the Malfunction Indicator Lamp (MIL) and are covered in the Advanced Diagnostics section. Items such as fuel level, plugged fuel lines, clogged fuel filters and malfunctioning pressure regulators may not set a fault code by the Small Engine Control Module (SECM). Below are basic checks that should be made before referring to the Advanced Diagnostics section, if engine or drivability problems are encountered.

Locating a problem in a propane engine is done exactly the same way as with a gasoline engine. Consider all parts of the ignition and mechanical systems as well as the fuel system.

Problem	Probable Cause	Corrective Action
Engine Cranking but Will Not Start	Fuel container empty	Fill fuel container ● Do not exceed 80% of liquid capacity
	Liquid valve closed	Slowly open liquid valve
	Excess flow valve closed	Reset excess flow valve ● Close liquid valve ● Wait for a “click” sound ● Slowly open liquid valve
	Plugged fuel line	Remove obstruction from the fuel line ● Close liquid fuel valve ● Using caution, disconnect the fuel line (some propane may escape) ● Clear obstruction with compressed air ● Re-connect fuel line ● Slowly open liquid fuel valve ● Leak test
	Broken Fuse - SECM	Replace Fuse for SECM ● *See Maintenance Section of Operation & Maintenance Manual, Fuses replacement*
	Clogged fuel filter	Repair/replace as required ● *See Chapter 3 Fuel Filter replacement*
	Faulty vapor connection between the pressure regulator/converter and the mixer	Check connection ● Verify no holes in hose ● Clamps must be tight ● Look for kinked, pinched and/or collapsed hose
	Fuel Lock-off malfunction	Repair/replace Fuel Lock-off ● *See Chapter 3 Fuel Lock-off*
	Pressure regulator/converter malfunction	Test pressure regulator/converter operation ● *See Chapter 9 Tests and Adjustments*
	Incorrect air/fuel or ignition/spark control	*See Chapter 5 Advanced Diagnostics*

Downloaded from www.Manualslib.com manuals search engine

https://truckmanualshub.com/

Problem	Probable Cause	Corrective Action
Engine Cranking but Will Not Start	No VR Sensor Signal	Verify the VR signal is present ● *See Chapter 5 Advanced Diagnostics*
Difficult to Start	Fuel container almost empty	LPG Vapor from liquid outlet ● Fill fuel container ● Do not exceed 80% of liquid capacity
	Excess flow valve closed	Reset excess flow valve ● Close liquid valve ● Wait for a “click” sound Slowly open liquid valve
	Clogged fuel filter	Repair/replace as required ● *See Chapter 3 Fuel Filter replacement*
	Plugged fuel line	Remove obstruction from the fuel line ● Close liquid fuel valve ● Using caution, disconnect the fuel line (some propane may escape) ● Clear obstruction with compressed air ● Re-connect fuel line ● Slowly open liquid fuel valve ● Leak test
	Faulty vapor connection between the pressure regulator/converter and the mixer	Check connection ● Verify no holes in hose ● Clamps must be tight ● Look for kinked, pinched and/or collapsed hose
	Pressure regulator/converter malfunction	Test pressure regulator/converter operation ● *See Chapter 9 Tests and Adjustments*
	Fuel container almost empty	LPG Vapor from liquid outlet ● Fill fuel container ● Do not exceed 80% of liquid capacity
	Air filter clogged	Check air filter ● Clean/replace as required
	Incorrect air/fuel or ignition control	*See Chapter 5 Advanced Diagnostics*
	Engine Mechanical	*See Engine Manufacturers Service Manual*

Downloaded from www.Manualslib.com manuals search engine

https://truckmanualshub.com/

Problem	Probable Cause	Corrective Action
Will Not Run Continuously	Fuel container almost empty	LPG Vapor from liquid outlet ● Fill fuel container ● Do not exceed 80% of liquid capacity
	Excess flow valve closed	Reset excess flow valve ● Close liquid valve ● Wait for a “click” sound Slowly open liquid valve
	Clogged fuel filter	Repair/replace as required ● *See Chapter 3 Fuel Filter replacement*
	Plugged fuel line	Remove obstruction from the fuel line ● Close liquid fuel valve ● Using caution, disconnect the fuel line (some propane may escape) ● Clear obstruction with compressed air ● Re-connect fuel line ● Slowly open liquid fuel valve & Leak test
	Pressure regulator freezes	Check level in cooling system ● Must be full, check coolant strength ● -35F minimum ● Check coolant hoses ● Watch for kinks and/or pinched hoses ● Verify one pressure hose and one return hose
	Fuel Lock-off malfunction	Repair/replace Fuel Lock-off ● *See Chapter 3 Fuel Lock-off*
	Incorrect idle speed or ignition problem	*See Chapter 5 Advanced Diagnostics*
	Engine Mechanical	*See Engine Manufacturers Service Manual*
Will Not Accelerate/Hesitation During Acceleration	Fuel container almost empty	LPG Vapor from liquid outlet ● Fill fuel container ● Do not exceed 80% of liquid capacity
	Excess flow valve closed	Reset excess flow valve ● Close liquid valve ● Wait for a “click” sound Slowly open liquid valve

Downloaded from www.Manualslib.com manuals search engine

https://truckmanualshub.com/

Problem	Probable Cause	Corrective Action
Will Not Accelerate/Hesitation During Acceleration	Clogged fuel filter	Repair/replace as required ● *See Chapter 3 Fuel Filter replacement*
	Faulty vapor connection between the pressure regulator/converter and the mixer	Check connection ● Verify no holes in hose ● Clamps must be tight ● Look for kinked, pinched and/or collapsed hose
	Throttle butterfly valve not opening or sticking	*See Chapter 5 Advanced Diagnostics*
	Acceleration Pedal signal incorrect or intermittent	
	Incorrect air/fuel or ignition control	
	Engine Mechanical	*See Engine Manufacturers Service Manual*
Engine Stalls	Fuel container almost empty	LPG Vapor from liquid outlet ● Fill fuel container ● Do not exceed 80% of liquid capacity
	Excess flow valve closed	Reset excess flow valve ● Close liquid valve ● Wait for a “click” sound Slowly open liquid valve
	Clogged fuel filter	Repair/replace as required ● *See Chapter 3 Fuel Filter replacement*
	Plugged fuel line	Remove obstruction from the fuel line ● Close liquid fuel valve ● Using caution, disconnect the fuel line (some propane may escape) ● Clear obstruction with compressed air ● Re-connect fuel line ● Slowly open liquid fuel valve & Leak test

Downloaded from www.Manualslib.com manuals search engine

https://truckmanualshub.com/

Problem	Probable Cause	Corrective Action
Engine Stalls	Fuel Lock-off malfunction	Repair/replace Fuel Lock-off ● *See Chapter 3 Fuel Lock-Off*
	Faulty vapor connection between the pressure regulator/converter and the mixer	Check connection ● Verify no holes in hose ● Clamps must be tight ● Look for kinked, pinched and/or collapsed hose
	Pressure regulator freezes	Check level in cooling system ● Must be full, check coolant strength ● -35F minimum ● Check coolant hoses ● Watch for kinks and/or pinched hoses ● Verify one pressure hose and one return hose
	Pressure regulator malfunction	Test pressure regulator operation ● *See Chapter 9 Tests and Adjustments*
	Vacuum leak	Check for vacuum leaks ● Between mixer and throttle body ● Between throttle body and intake manifold ● Between intake manifold and cylinder head
	Air/Fuel Mixer malfunction	Check mixer ● *See Chapter 8 Air/Fuel mixer section*
	Engine Mechanical	*See Engine Manufacturers Service Manual*
Rough Idle	Faulty vapor connection between the pressure regulator/converter and the mixer	Check connection ● Verify no holes in hose ● Clamps must be tight ● Look for kinked, pinched and/or collapsed hose
	Pressure regulator malfunction	Test pressure regulator operation ● *See Chapter 9 Tests and Adjustments*
	Vacuum leak	Check for vacuum leaks ● Between mixer and throttle body ● Between throttle body and intake manifold ● Between intake manifold and cylinder head
	Air/Fuel Mixer malfunction	Check mixer ● *See Chapter 8 Air/Fuel mixer section*

Downloaded from www.Manualslib.com manuals search engine

https://truckmanualshub.com/

Problem	Probable Cause	Corrective Action
Rough Idle	Incorrect Idle speed control	*See Chapter 5 Advanced Diagnostics & Chapter 9 Tests and Adjustments*
	Incorrect timing or spark control	
	Engine Mechanical	*See Engine Manufacturers Service Manual*
High Idle Speed	Incorrect Idle speed control	*See Chapter 5 Advanced Diagnostics & Chapter 9 Tests and Adjustments*
	Throttle sticking	
	Acceleration Pedal sticking or incorrect pedal signal	Check pedal return spring travel for binding ● *See Chapter 5 Advanced Diagnostics*
Poor High Speed Performance	Clogged fuel filter	Repair/replace as required ● *See Chapter 3 Fuel Filter replacement*
	Plugged fuel line	Remove obstruction from the fuel line ● Close liquid fuel valve ● Using caution, disconnect the fuel line (some propane may escape) ● Clear obstruction with compressed air ● Re-connect fuel line ● Slowly open liquid fuel valve & Leak test
	Air filter clogged	Check air filter ● Clean/replace as required
	Faulty vapor connection between the pressure regulator/converter and the mixer	Check connection ● Verify no holes in hose ● Clamps must be tight ● Look for kinked, pinched and/or collapsed hose
	Pressure regulator malfunction	Test pressure regulator operation ● *See Chapter 9 Tests and Adjustments*
	Air/Fuel Mixer malfunction	Check mixer ● *See Chapter 8 Air/Fuel mixer section*
	Restricted exhaust system	Check exhaust system ● Measure exhaust back pressure
	Incorrect ignition control	*See Chapter 5 Advanced Diagnostics & Chapter 9 Tests and Adjustments*
	Incorrect air/fuel control	
	Incorrect throttle position	

Downloaded from www.Manualslib.com manuals search engine

https://truckmanualshub.com/

Problem	Probable Cause	Corrective Action
Excessive Fuel Consumption/LPG Exhaust Smell	Air/Fuel Mixer malfunction	Check mixer ● *See Chapter 8 Air/Fuel mixer section*
	Air filter clogged	Check air filter ● Clean/replace as required
	Vacuum leak	Check system vacuum hoses from regulator to FTV and mixer ● Repair/replace as necessary
	Pressure regulator malfunction/fuel pressure too high	Test pressure regulator operation ● *See Chapter 9 Tests and Adjustments*
	Faulty FTV	Check FTV for housing cracks or obstructions ● *See Chapter 5 Advanced Diagnostics FTV operation* ● Repair and/or replace as necessary
	Weak ignition and/or spark control	*See Chapter 5 Advanced Diagnostics*
	Incorrect air/fuel control	*See Chapter 5 Advanced Diagnostics*
	Exhaust system leaks	Repair exhaust system
	Oxygen sensor failure	Replace as necessary ● *See Chapter 5 Advanced Diagnostics*

Downloaded from www.Manualslib.com manuals search engine

https://truckmanualshub.com/

CHAPTER 5 MI-04 LP ADVANCED DIAGNOSTICS

Advanced Diagnostics

The MI-04 systems are equipped with built-in fault diagnostics. Detected system faults can be displayed by the Malfunction Indicator Lamp (MIL) as Diagnostic Fault Codes (DFC) or flash codes, and viewed in detail with the use of service tool software. When the ignition key is turned ON the MIL will perform a self-test, illuminate once and then go OFF. If a detected fault condition exists, the fault or faults will be stored in the memory of the small engine control module (SECM). Once a fault occurs the MIL will illuminate and remain ON. This signals the operator that a fault has been detected by the SECM.

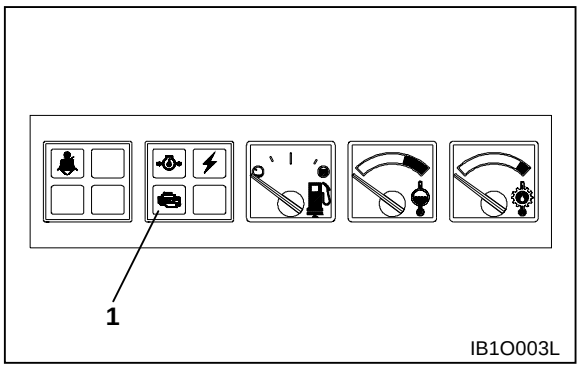

(1) Malfunction Indicator Lamp (MIL) for Engine control system

Reading Diagnostic Fault Codes

All MI-04 fault codes are two digit codes. When the fault codes are retrieved (displayed) the MIL will flash for each digit with a short pause (.5 seconds) between digits and a long pause (1.2 seconds) between fault codes. A code 12 is displayed at the beginning of the code list.

EXAMPLE: A code 26 has been detected (ETCSticking) and the engine has shutdown and the MIL has remained ON. When the codes are displayed the MIL will flash one time (1), pause, then flash two times (2). This identifies a twelve (12), which is the beginning of the fault list. It will then pause for 1.2 seconds (long pause) and flash two times (2), pause, then flash six times (6). This identifies a twenty-six (26), which is the ETCSticking fault. If any additional faults were stored the SECM would again have a long pause, then display the next fault by flashing each digit. Since no other faults were stored there will be a long pause then one flash (1), pause, then two flashes (2). This identifies a twelve meaning the fault list will begin again.

Downloaded from www.Manualslib.com manuals search engine

https://truckmanualshub.com/

Displaying Fault Codes (DFC) From SECM Memory

To enter code display mode you must turn OFF the ignition key. Now turn ON the key but do not start the engine. As soon as you turn the key to the ON position you must cycle the Acceleration Pedal by depressing it to the floor and then fully releasing the pedal (pedal maneuver). You must fully cycle the Acceleration Pedal three (3) times within five (5) seconds to enable the display codes feature of the SECM. Simply turn the key OFF to exit display mode. The code list will continue to repeat until the key is turned OFF. An automatic code display feature is activated if a Acceleration Pedal fault condition exists. This feature enables the service technician to view the fault codes by turning the key to the ON position, if a Acceleration Pedal malfunction is preventing the retrieval of the stored fault codes from the SECM.

Malfunction Indicator Light (MIL)

= CODE 12

Clearing Fault (DFC) Codes

To clear the stored fault codes from SECM memory you must complete the reset fault pedal maneuver.

CAUTION
Once the fault list is cleared it cannot be restored.

First turn OFF the ignition key. Now turn ON the key but do not start the engine. As soon as you turn the key to the ON position you must cycle the Acceleration Pedal by depressing it to the floor and then fully releasing the pedal (pedal maneuver). You must fully cycle the Acceleration Pedal ten (10) times within five (5) seconds to clear the fault code list of the SECM. Simply turn the key OFF to exit the reset mode. The code list is now clear and the SECM will begin storing new fault codes as they occur.

Fault Action Descriptions

Each fault detected by the SECM is stored in memory (FIFO) and has a specific action or result that takes place. Listed below are the descriptions of each fault action.

Engine Shutdown: The most severe action is an Engine Shutdown. The MIL will light and the engine will immediately shutdown, stopping spark with the fuel lock-off closing.

Delayed Engine Shutdown: Some faults such as low oil pressure will cause the MIL to illuminate for 30 seconds and then shutdown the engine.

Disable Throttle: The throttle moves to its default position. The engine will run at idle but will not accelerate.

Limp Home Mode: A “limp home” mode reduces the lift truck power, and is provided to enable the operator to drive the lift truck in an unsafe situation but not use the truck for normal operation.

MIL ONLY: The MIL will light by an active low signal provided by the SECM, indicating a fault condition but no further action will take place.

Downloaded from www.Manualslib.com manuals search engine

https://truckmanualshub.com/

Fault List Definitions

Several sensors in the MI-04 system have input low/high faults and a sensor range fault. These are the coolant temperature sensor, the throttle position sensor and the pedal position sensors. Signals to these sensors are converted into digital counts by the SECM. A low/high sensor fault is normal set when the converted digital counts reach the minimum of 0 or the maximum of 1024 (**1024=5.0 VDC with ~204 counts per volt**). A sensor range fault is set if the parameter measured by the sensor is outside the normal operating range.

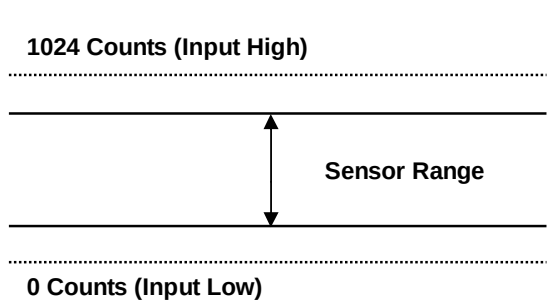

Figure F1

ECTSensorInputLow: (Engine Coolant Temperature Sensor Input is Low) normally set if the coolant sensor wire has shorted to chassis ground or the sensor has failed.

ECTSensorInputHigh: (Engine Coolant Temperature Sensor Input is High) normally set if the coolant sensor wire has been disconnected or the circuit has opened to the SECM.

ECTRangeHigh: (Engine Coolant Temperature Range is High) the sensor has measured an excessive coolant temperature typically due to the engine overheating.

ThrottleSensorInputLo: (Throttle Position Sensor (TPS1) Input is Low) is normally set if the TPS1 signal wire has been disconnected or the circuit has opened to the SECM.

ThrottleSensorInputHi: (Throttle Position Sensor (TPS1) Input is High) is normally set if the TPS1 signal wire has become shorted to power, the TPS1 has failed or the SECM has failed.

ThrottleSensorRangeLo: (Throttle Position Sensor (TPS1) Range has measured Low) the TPS1 potentiometer has malfunctioned. An improper TPS reading may be due to dirt or oxidation on the sensor traces. NOTE: The TPS is not a serviceable item and can only be repaired by replacing the DV-EV throttle assembly.

ThrottleSensorRangeHi: (Throttle Position Sensor (TPS1) Range has measured High) the TPS1 potentiometer has malfunctioned. An improper TPS reading may be due to dirt or oxidation on the sensor traces. NOTE: The TPS is not a serviceable item and can only be repaired by replacing the DV-EV throttle assembly.

ETCSticking: (Electronic Throttle Control is Sticking) is normally set if either of the ETC driver signals have opened or become disconnected. This can also occur if the throttle plate (butterfly valve) inside the throttle bore is sticking. The plate sticking can be due to some type of obstruction; a loose throttle plate or worn components shaft bearings. Certified technicians using the service tool software can perform a throttle motion test to confirm sticking problems. NOTE: The throttle assembly is not a serviceable item and can only be repaired by replacing the DV-EV throttle assembly.

PredictedTPSDifference: (Predicted Throttle Position Sensor Difference) measured TPS1 is different than SECM Calculated throttle position. Normally caused by intake leaks between the throttle assembly and the engine.

ETCSpringTestFailed: (Electronic Throttle Control Spring Return Test has Failed) upon the initial startup of the engine the SECM will perform a safety test of the throttle return spring. If this spring has become weak the throttle will fail the test and set the fault. NOTE: The throttle assembly is not a serviceable item and can only be repaired by replacing the DV-EV throttle assembly.

ETCDriverFault: (Electronic Throttle Control Driver has Failed) an over current condition has occurred on either ETC+ or ETC- driver signals.

MapSensorInputLow: (Manifold Air Pressure Sensor Input is Low) is normally set if the TMAP pressure signal wire has been disconnected or the circuit has opened to the SECM.

MapSensorInputHigh: (Manifold Air Pressure Sensor Input is High) is normally set if the TMAP pressure signal wire has become shorted to power, shorted to the IAT signal, the TMAP has failed or the SECM has failed.

IATSensorInputLow: (Intake Air Temperature Sensor Input is Low) is normally set if the TMAP temperature signal wire has become shorted to ground, shorted to the MAP signal, the TMAP has failed or the SECM has failed.

Downloaded from www.Manualslib.com manuals search engine

https://truckmanualshub.com/

IATSensorInputHigh: (Intake Air Temperature Sensor Input is High) normally set if the TMAP temperature signal wire has become disconnected or the circuit is open to the SECM.

EST1Low: (Electronic Spark Trigger) is a current driver signal and normally set if the signal from the SECM is shorted to ground.

EST1High: (Electronic Spark Trigger) is a current driver signal and normally set if the signal from the SECM is open or lost.

LowOilPressure: (Low Oil Pressure) the oil pressure switch has opened or become disconnected, normally indicating a low oil condition in the engine.

BatterySensorInputLow: (Battery Voltage Sensor Input is Low) normally set if the power to the SECM drops below 8.5 VDC.

BatterySensorInputHigh: (Battery Voltage Sensor Input is High) normally set if the power to the SECM increases above 15.9 VDC.

XDRPSensorInputLow: (Transducer Voltage Sensor Input is Low) normally set if the sensor power from the SECM drops below 4.8 VDC.

XDRPSensorInputHigh: (Transducer Voltage Sensor Input is High) normally set if the sensor power from the SECM increases above 5.9 VDC.

EngineOverspeed: (Engine Over speed) is set when the engine RPM increases above the SECM maximum governing RPM. Typically this is in association with one or more throttle faults. This fault can be set without additional throttle faults if the operator motors the lift truck down a steep grade (hill).

Pedal1SensorInputLo: (Accelerator Pedal Position 1 Sensor Input is Low) normally set if the APP1 signal wire has become disconnected or the circuit is open to the SECM.

Pedal1SensorInputHi: (Accelerator Pedal Position 1 Sensor Input is High) normally set if the APP1 signal wire has become shorted to APP power, APP1 has failed or the SECM has failed.

Pedal1SensorRangeLo: (Accelerator Pedal Position 1 Sensor Range is Low) the APP1 potentiometer has malfunctioned. An improper APP1 reading may be due to dirt or oxidation on the sensor traces.

Pedal1SensorRangeHi: (Accelerator Pedal Position 1 Sensor Range is High) the APP1 potentiometer has malfunctioned. An improper APP1 reading may be due to dirt or oxidation on the sensor traces.

Pedal2SensorInputLo: (Accelerator Pedal Position 2 Sensor Input is Low) normally set if the APP2 signal wire has become shorted to APP power, APP2 has failed or the SECM has failed.

Pedal2SensorInputHi: (Accelerator Pedal Position 2 Sensor Input is High) normally set if the APP2 signal wire has become disconnected or the circuit is open to the SECM.

Pedal2SensorRangeLo: (Accelerator Pedal Position 2 Sensor Range is Low) the APP2 potentiometer has malfunctioned. An improper APP2 reading may be due to dirt or oxidation on the sensor traces.

Pedal2SensorRangeHigh: (Accelerator Pedal Position 2 Sensor Range is Low) the APP2 potentiometer has malfunctioned. An improper APP2 reading may be due to dirt or oxidation on the sensor traces.

Pedal1ToPedal2Difference: (Accelerator Pedal Position Sensor 1 and Accelerator Pedal Position Sensor 2 are Different) normally set when APP1 measured pedal position is different from APP2 measured pedal position.

AFRTrimValveOutput: (Air Fuel Ratio Trim Valve (FTV) Driver) is normally set when the FTV driver signal is open due to the connector becoming disconnected.

AFRTrimValveLowerDC: (Air Fuel Ratio Trim Valve (FTV) Lower Duty Cycle) normally set when the duty cycle of the FTV reaches the minimum limit (running too lean).

AFRTrimValveUpperDC: (Air Fuel Ratio Trim Valve (FTV) Upper Duty Cycle) normally set when the duty cycle of the FTV reaches the maximum limit (running too rich).

O2SensorSwitching: (Oxygen Sensor Switching) is set when the O2 sensor can no longer switch or be driven above and below 500mv by the SECM.

OxygenSensorInputHigh: (Oxygen Sensor Input is High)

OxygenSensorInputLow: (Oxygen Sensor Input is Low)

Downloaded from www.Manualslib.com manuals search engine

https://truckmanualshub.com/

Table a. MI-04 Diagnostic Fault Codes (Flash Codes)

DFC	Probable Fault	Action	Corrective Action, First Check
12	**NONE** Signifies the end of one pass through the fault list	NONE	None, used as a beginning and end of the fault list identification
14	**ECTSensorInputLow** Coolant sensor failure or shorted to GND	Stored Fault Code (MIL Only)	Check ECT sensor connector and wiring for a short to GND ***SECM (SIGNAL) PIN 16 to ECT PIN A*** ***SECM (GND) PIN 1 to ECT PIN B***
15	**ECTSensorInputHigh** Coolant sensor disconnected or open circuit	Stored Fault Code (MIL Only)	Check if ECT sensor connector is disconnected or for an open ECT circuit ***SECM (SIGNAL) PIN 16 to ECT PIN A*** ***SECM (GND) PIN 1 to ECT PIN B***
16	**ECTRangeHigh** Engine Overheating	Delayed Engine Shutdown	Check coolant system for radiator blockage, proper coolant level and for leaks in the system. Possible ECT short to GND, check ECT signal wiring ***SECM (SIGNAL) PIN 16 to ECT PIN A*** ***SECM (GND) PIN 1 to ECT PIN B*** • Check regulator for coolant leaks **See Chapter 7.0*
22	**ThrottleSensorInputLo** TPS1 signal disconnected or open circuit *(Expected faults when ETC connector is unplugged CODES: 22 & 24)*	Disable Throttle	Check throttle connector connection and TPS1 sensor for an open circuit ***ETC PIN 6 to SECM PIN 17 (SIGNAL)*** ***ETC PIN 2 to SECM PIN 1 (GND)***

Downloaded from www.Manualslib.com manuals search engine

https://truckmanualshub.com/

Table a. MI-04 Diagnostic Fault Codes (Flash Codes)

DFC	Probable Fault	Action	Corrective Action, First Check
23	**ThrottleSensorInputHi** TPS1 sensor failure or shorted circuit	Disable Throttle	Check throttle connector and TPS1 sensor wiring for a shorted circuit ***ETC PIN 6 to SECM PIN 17 (SIGNAL)*** ***ETC PIN 2 to SECM PIN 1 (GND)***
24	**ThrottleSensorRangeLo** TPS1 potentiometer malfunction. Improper TPS reading may be due to dirt or oxidation on the sensor traces.	Stored Fault Code (MIL Only)	Check the throttle connector and pins for corrosion. Perform Throttle test with the Service Tool several times to clean sensor To check the TPS disconnect the throttle connector and measure the resistance (1.25KΩ +/-30%) from ***TPS PIN 2 (GND) to PIN 6 (TPS1 SIGNAL)*** ***TPS PIN 3 (PWR) to PIN 6 (TPS1 SIGNAL)*** **See Chapter 6.0 for sensor checks*
25	**ThrottleSensorRangeHi** TPS1 potentiometer malfunction. Improper TPS reading may be due to dirt or oxidation on the sensor traces.	Stored Fault Code (MIL Only)	Check the throttle connector and pins for corrosion. • Perform Throttle test with the Service Tool several times to clean sensor To check the TPS disconnect the throttle connector and measure the resistance (1.25KΩ +/-30%) from ***TPS PIN 2 (GND) to PIN 6 (TPS1 SIGNAL)*** ***TPS PIN 3 (PWR) to PIN 6 (TPS1 SIGNAL)*** **See Chapter 6.0 for sensor checks*

Downloaded from www.Manualslib.com manuals search engine

https://truckmanualshub.com/

Table a. MI-04 Diagnostic Fault Codes (Flash Codes)

DFC	Probable Fault	Action	Corrective Action, First Check
26	**ETCSticking** Throttle plate sticking inside the throttle body or the ETC driver signal is open	Engine Shutdown	Check for debris or obstructions inside the throttle body Perform the Throttle test using the Service Tool and re-check for fault Check throttle-plate shaft for bearing wear Check the ETC driver wiring for an open circuit **ETC+ PIN 1 to SECM PIN 22** **ETC-PIN 4 to SECM PIN 24** Check the ETC internal motor drive by disconnecting the throttle connector and measuring the motor drive resistance at the throttle ***TPS PIN 1 (+DRIVER) to PIN 4 (-DRIVER) ~3.0Ω +/-30%***
27	**PredictedTPSDifference** Measured TPS1 is different than SECM Calculated throttle position	Engine Shutdown	Check for manifold leaks between the throttle and the engine *Note: Fault Code 27 is predicted TPS. This fault means that the throttle and our calculated prediction for throttle do not agree. This code often comes up as suspected during transient manuevers. It is not system trouble. If the fault really sets, then the engine will shut down.*
28	**ETCSpringTestFailed** Upon initial key-up the internal throttle return spring has become weak	Power Limit	Perform throttle spring test by cycling the ignition key and re-check for fault

Downloaded from www.Manualslib.com manuals search engine

https://truckmanualshub.com/

Table a. MI-04 Diagnostic Fault Codes (Flash Codes)

DFC	Probable Fault	Action	Corrective Action, First Check
29	**ETCDriverFault** Throttle driver over-current or driver signals shorted	Disable Throttle	Check ETC driver wiring for a shorted circuit ***ETC+ PIN1 to SECM PIN 22*** ***ETC- PIN 4 to SECM PIN 24*** ● Perform Throttle test and with the Service Tool and re-check for fault Check the ETC internal motor drive by disconnecting the throttle connector and measuring the motor drive resistance at the throttle ***TPS PIN 1 (+DRIVER) to PIN 4 (-DRIVER)* ~3.0Ω +/-30%**
33	**MapSensorInputLow** MAP signal disconnected, open circuit or sensor malfunction *(Expected faults when TMAP connector is unplugged* *CODES: 33 & 38)*	Disable Throttle	Check TMAP connector and MAP signal wiring for an open circuit ***TMAP PIN 4 to SECM PIN 5 (SIGNAL)*** ***TMAP PIN 1 to SECM PIN 1 (GND)*** ***TMAP PIN 3 to SECM PIN 18 (XDCR +5VDC)*** Check the MAP sensor by disconnecting the TMAP connector and measuring at the sensor ***TMAP PIN 1(GND) to PIN 4 (PRESSURE SIGNAL KPA)* (2.4kΩ - 8.2kΩ)** ***TMAP PIN 3(PWR) to PIN 4 (PRESSURE SIGNAL KPA)* (3.4kΩ - 8.2kΩ)**

Downloaded from www.Manualslib.com manuals search engine

https://truckmanualshub.com/

Table a. MI-04 Diagnostic Fault Codes (Flash Codes)

DFC	Probable Fault	Action	Corrective Action, First Check
34	**MapSensorInputHigh** TMAP sensor failure or shorted circuit	Disable Throttle	Check TMAP connector and MAP signal wiring for a shorted circuit ***TMAP PIN 4 to SECM PIN 5 (SIGNAL)*** ***TMAP PIN 1 to SECM PIN 1 (GND)*** ***TMAP PIN 3 to SECM PIN 18 (XDCR +5VDC)*** Check the MAP sensor by disconnecting the TMAP connector and measuring at the sensor ***TMAP PIN 1(GND) to PIN 4 (PRESSURE SIGNAL KPA) (2.4kΩ - 8.2kΩ)*** ***TMAP PIN 3(PWR) to PIN 4 (PRESSURE SIGNAL KPA) (3.4kΩ - 8.2kΩ)***
37	**IATSensorInputLow** TMAP sensor failure or shorted circuit	Stored Fault Code (MIL Only)	Check TMAP connector and IAT signal wiring for a shorted circuit ***TMAP PIN 2 to SECM PIN 4 (SIGNAL)*** ***TMAP PIN 1 to SECM PIN 1 (GND)*** ***TMAP PIN 3 to SECM PIN 18 (XDCR +5VDC)*** To check the IAT sensor of the TMAP disconnect the TMAP connector and measure the IAT resistance ****See the IAT table in Chapter 6.0***

Downloaded from www.Manualslib.com manuals search engine

https://truckmanualshub.com/

Table a. MI-04 Diagnostic Fault Codes (Flash Codes)

DFC	Probable Fault	Action	Corrective Action, First Check
38	**IATSensorInputHigh** IAT signal disconnected, open circuit or sensor malfunction	Stored Fault Code (MIL Only)	Check TMAP connector and IAT signal wiring for an open circuit ***TMAP PIN 2 to SECM PIN 4 (SIGNAL)*** ***TMAP PIN 1 to SECM PIN 1 (GND)*** ***TMAP PIN 3 to SECM PIN 18 (XDCR +5VDC)*** To check the IAT sensor of the TMAP disconnect the TMAP connector and measure the IAT resistance ****See the IAT table in Chapter 6.0***
42	**EST1Low** Coil driver signal low or under-current	Stored Fault Code (MIL Only)	Check coil driver wiring and connector for shorts **SECM PIN 7(EST1) to COIL PIN A** **Verify GND on COIL PIN B** **Verify GND on COIL PIN C** **Verify GND on COIL PIN D** **Verify +12vdc on COIL PIN E** To check the Smart Coil internal circuit disconnect the coil connector and measure the resistance from pin to pin ****See Smart Coil resistance check in Chapter 6.0***

Downloaded from www.Manualslib.com manuals search engine

https://truckmanualshub.com/

Table a. MI-04 Diagnostic Fault Codes (Flash Codes)

DFC	Probable Fault	Action	Corrective Action, First Check
43	**EST1High** Coil driver signal high or over-current	Stored Fault Code (MIL Only)	Check coil driver wiring for an open circuit or disconnected connector **SECM PIN 7(EST1) to COIL PIN A** **Verify GND on COIL PIN B** **Verify GND on COIL PIN C** **Verify GND on COIL PIN D** **Verify +12vdc on COIL PIN E** To check the Smart Coil internal circuit disconnect the coil connector and measure the resistance from pin to pin ***See Smart Coil resistance check in Chapter 6.0***
53	**BatterySensorInputLow** Battery voltage measured below +8.0 VDC	Stored Fault Code (MIL Only)	Check battery voltage ● Perform maintenance check on electrical connections to the battery and chassis ground ● Check battery voltage during starting and with the engine running to verify charging system and alternator function Measure battery power at the SECM with a multimeter ***SECM PIN 13 (BATT +) to SECM PIN 14 (BATT -)***

Downloaded from www.Manualslib.com manuals search engine

https://truckmanualshub.com/

Table a. MI-04 Diagnostic Fault Codes (Flash Codes)

DFC	Probable Fault	Action	Corrective Action, First Check
54	**BatterySensorInputHigh** Battery voltage measured above +15.9 VDC	Stored Fault Code (MIL Only)	Check battery and charging system voltage ● Check battery voltage during starting and with the engine running ● Check voltage regulator, alternator and charging system ● Check battery and wiring for overheating and damage ● Measure battery power at the SECM with a multimeter *SECM PIN 13 (BATT +) to* *SECM PIN 14 (BATT -)*
55	**XDRPSensorInputLow** +5VDC Transducer power supplied by the SECM to the sensors is below +4.60VDC (Expected faults when Transducer power is lost CODES: 22, 24, 33, 62, 64, 66, 68 & 69)	Engine Shutdown	Measure transducer power at the TMAP connector with a multimeter ***TMAP PIN 3 +5VDC to TMAP PIN 1 XDCR GND*** Verify transducer power at the SECM with a multimeter ***SECM PIN 18 +5VDC to SECM PIN 1 XDCR GND*** Verify transducer power at ETC with a multimeter ***ETC PIN 3 XDCR PWR to ETC PIN 2 XDCR GND*** Verify transducer power to the Acceleration Pedal with a multimeter

Downloaded from www.Manualslib.com manuals search engine

https://truckmanualshub.com/

Table a. MI-04 Diagnostic Fault Codes (Flash Codes)

DFC	Probable Fault	Action	Corrective Action, First Check
56	**XDRPSensorInputHigh** +5VDC Transducer power supplied by the SECM to the sensors is above +5.20VDC	Engine Shutdown	Measure transducer power at the TMAP connector with a multimeter ***TMAP PIN 3 +5VDC to TMAP PIN 1 XDCR GND*** Verify transducer power at the SECM with a multimeter ***SECM PIN 18 +5VDC to SECM PIN 1 XDCR GND*** Verify transducer power at ETC with a multimeter ***ETC PIN 3 XDCR PWR to ETC PIN 2 XDCR GND*** Verify transducer power to the Acceleration Pedal with a multimeter
57	**Engine OverSpeed** Engine RPM increased beyond maximum RPM set point	Engine Shutdown	Usually associated with additional ETC faults • Check for ETC Sticking or other ETC faults • Verify if the lift truck was motored down a steep grade
61	**Pedal1SensorInputLo** APP1 signal disconnected, open circuit or sensor malfunction (Expected faults when APP connector is unplugged CODES: 61 & 66)	MIN Power Limit	Check Acceleration Pedal connector • Check APP1 signal at *SECM PIN 15*
62	**Pedal1SensorInputHi** APP1 sensor failure or shorted circuit	MIN Power limit	Check Acceleration Pedal connector • Check APP1 signal at *SECM PIN 15*
63	**Pedal1SensorRangeLo** APP1 potentiometer malfunction. Improper APP1 reading may be due to dirt or oxidation on the sensor traces.	Stored Fault Code (MIL Only)	Check Acceleration Pedal connector • Cycle the pedal several times and check APP1 signal at SECM PIN 15
64	**Pedal1SensorRangeHi** APP1 potentiometer malfunction. Improper APP1 reading may be due to dirt or oxidation on the sensor traces	Stored Fault Code (MIL Only)	Check Acceleration Pedal connector • Cycle the pedal several times and check APP1 signal at SECM PIN 15

Downloaded from www.Manualslib.com manuals search engine

https://truckmanualshub.com/

Table a. MI-04 Diagnostic Fault Codes (Flash Codes)

DFC	Probable Fault	Action	Corrective Action, First Check
65	**Pedal2SensorInputLo** APP2 sensor failure or shorted circuit	MIN power Limit	Check Acceleration Pedal connector • Cycle the pedal several times and check APP2 signal at *SECM PIN 2*
66	**Pedal2SensorInputHi** APP2 signal disconnected, open circuit or sensor malfunction (Expected faults when APP connector is unplugged CODES: 61 & 66)	MIN power Limit	Check Acceleration Pedal connector • Check APP2 signal at *SECM PIN 2*
67	**Pedal2SensorRangeLo** APP2 potentiometer malfunction. Improper APP2 reading may be due to dirt or oxidation on the sensor traces.	Stored Fault Code (MIL Only)	Check Acceleration Pedal connector • Cycle the pedal several times and check APP2 signal at *SECM PIN 2*
68	**Pedal2SensorRangeHi** APP2 potentiometer malfunction. Improper APP2 reading may be due to dirt or oxidation on the sensor traces.	Stored Fault Code (MIL Only)	Check Acceleration Pedal connector • Cycle the pedal several times and check APP2 signal at *SECM PIN 2*
69	**Pedal1ToPedal2Difference** Measured APP2 pedal position signal is different than APP1 signal	MIN power Limit	Check Acceleration Pedal connector • Cycle the pedal several times and check APP1 signal at SECM PIN 15 • Check APP2 signal at SECM PIN 2
71	**AFRTrimValveOutput** FTV modulation driver signal fault	Stored Fault Code (MIL, Disable Adaptive learns)	Check FTV for an open wire or FTV connector being disconnected ***FTV PIN A (SIGNAL) TO PIN B (PWR)*** Check FTV for an open coil by disconnecting the FTV connector and measuring the resistance **(~26Ω +/- 2Ω)** ***FTV PIN A (SIGNAL) TO PIN B (PWR)***

Downloaded from www.Manualslib.com manuals search engine

https://truckmanualshub.com/

Table a. MI-04 Diagnostic Fault Codes (Flash Codes)

DFC	Probable Fault	Action	Corrective Action, First Check
72	**AFRTrimValveLowerDC** FTV duty cycle at lower (lean) limit	Stored Fault Code (MIL, Disable Adaptive learns)	Engine measured Air/Fuel ratio at the O2 sensor is excessively lean ● Check for intake manifold leaks ● Check balance line (vacuum hose) connection at the regulator ● Check N-CA55-500-TR mixer for heavy end build-up and operation (see mixer section) ● Check N2001 secondary for operation or low primary pressure (see N2001 Regulator section) *Note: If LP-Gas fuel in LP tank is not enough, this fault code can be set. If LP tank is frozen, this fault code can be set, too. It is not system trouble.*
73	**AFRTrimValveUpperDC** FTV duty cycle at high (rich) limit (Expected fault when FTV connector is unplugged)	Stored Fault Code (MIL, Disable Adaptive learns)	Engine measured Air/Fuel ratio at the O2 sensor is excessively rich Check FTV connector wiring for an open circuit ***FTV PIN A (SIGNAL) TO PIN B (PWR)*** Check FTV for an open coil by disconnecting the FTV connector and measuring the resistance **(~26Ω +/- 2Ω)** ***FTV PIN A (SIGNAL) TO PIN B (PWR)*** ● Check N-CA55-500-TR mixer for heavy end build-up and operation (see mixer section) ● Check N2001 secondary for operation (see N2001 Regulator section)

Downloaded from www.Manualslib.com manuals search engine

https://truckmanualshub.com/

Table a. MI-04 Diagnostic Fault Codes (Flash Codes)

DFC	Probable Fault	Action	Corrective Action, First Check
74	**O2SensorSwitching** O2 sensor is not switching across the reference AFR voltage	Stored Fault Code (MIL, Disable Adaptive learns)	Check the FTV for proper operation ● Check FTV Hose Connections Check FTV for an open coil by disconnecting the FTV connector and measuring the resistance **(~26Ω +/-2Ω)** ***FTV PIN A (SIGNAL) TO PIN B (PWR)*** *Note: If LP-Gas fuel in LP tank is not enough, this fault code can be set. If LP tank is frozen, this fault code can be set, too. It is not system trouble.*
77	**OxygenSensorInputHigh** O2 sensor SECM driver signal is shorted to power	Stored Fault Code (MIL, Disable Adapts)	Check if O2 sensor is shorted to +5VDC or Battery. ***O2 (SIGNAL) PIN B to SECM PIN 3*** *(AFRTrimValveLowerDC fault should also occur)* Verify O2 sensor heater circuit is operating by measuring circuit resistance **(2.1Ω +/-0.4Ω)** ***O2 PIN C (HEATER GND) to PIN D (HEATER PWR)***

Downloaded from www.Manualslib.com manuals search engine

https://truckmanualshub.com/

CHAPTER 6 MI-04 ELECTRICAL CONNECTIONS

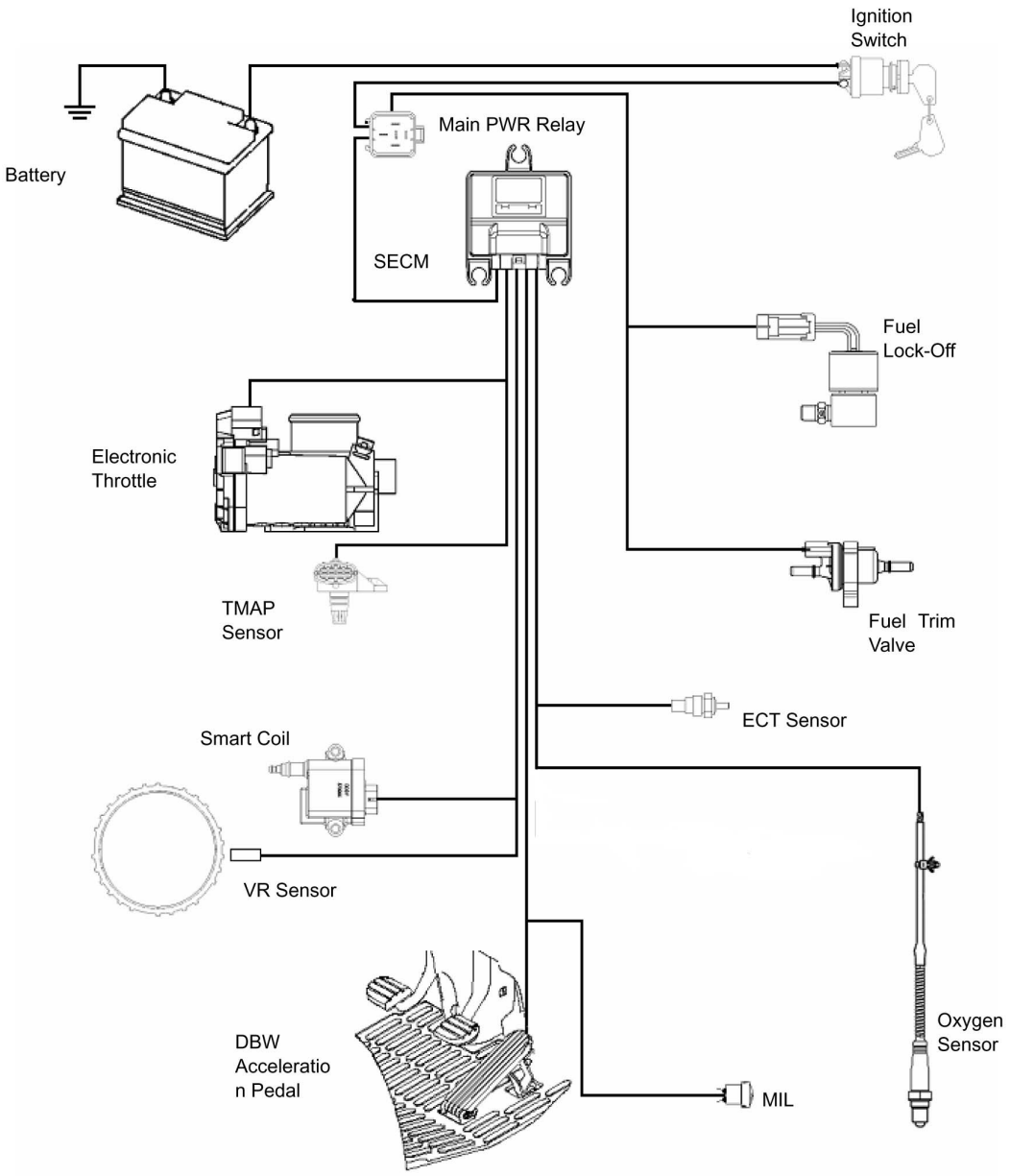

Figure E1

Downloaded from www.Manualslib.com manuals search engine

https://truckmanualshub.com/

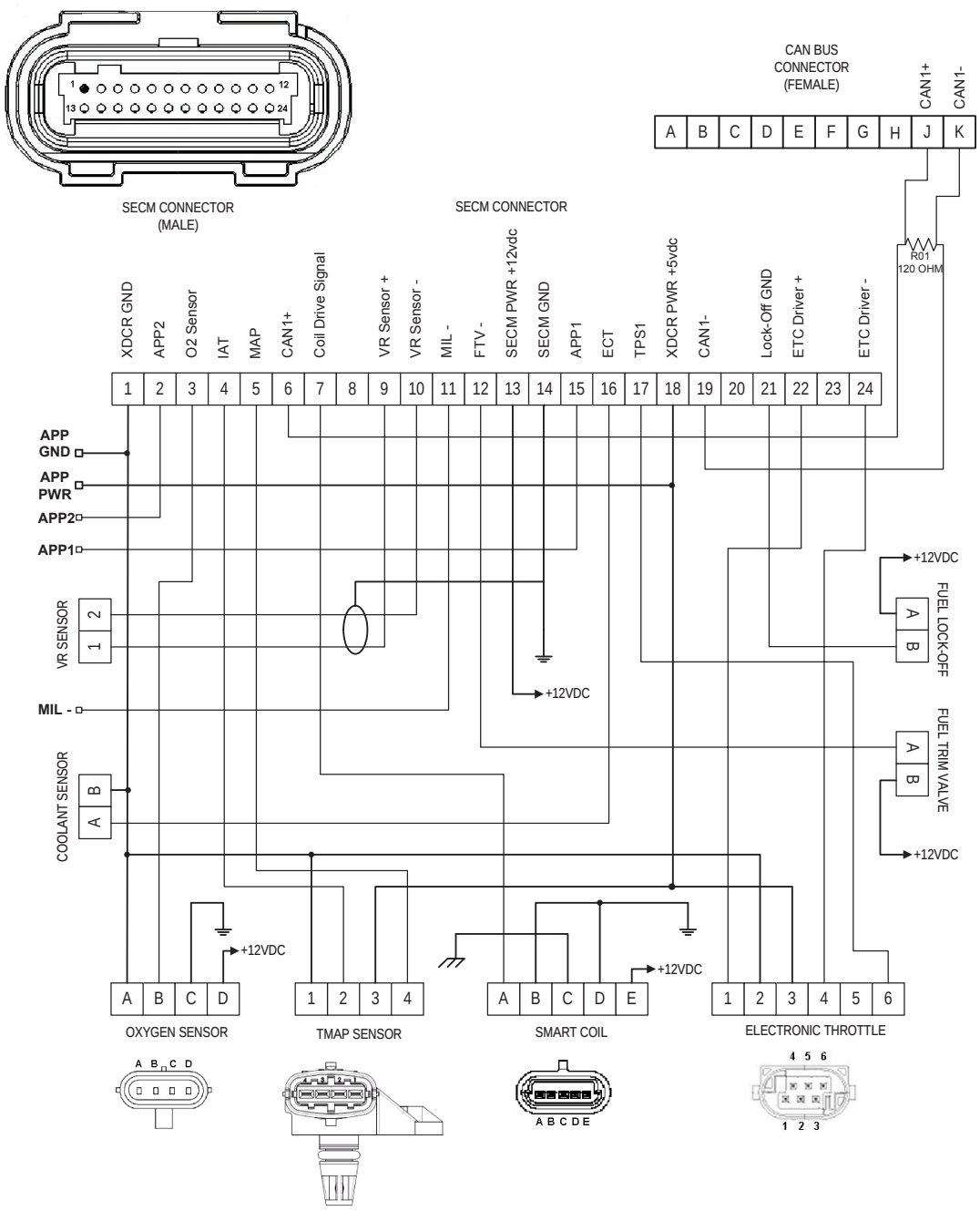

Figure E2

Downloaded from www.Manualslib.com manuals search engine

https://truckmanualshub.com/

Resistance Checks

NOTE
All resistive checks are made with the sensor or device disconnected from the harness.

SENSOR	POINT TO POINT	EXPECTED RANGE
TMAP	TMAP PIN 1 (GND) TO PIN 4 (PRESSURE SIGNAL KPA)	2.4kΩ - 8.2kΩ
	TMAP PIN 3 (PWR) TO PIN 4 (PRESSURE SIGNAL KPA)	3.4kΩ - 8.2kΩ
	TMAP PIN 1 (GND) TO PIN 2 (TEMPERATURE SIGNAL)	*SEE TMAP IAT TABLE FOR PROPER RANGE

TMAP SENSOR IAT TABLE

Temperature in F +/-1	Temperature in C +/-1	Resistance in Ω (OHMS)		
		MINIMUM	NOMINAL	MAXIMUM
-4	-20	14.0K	15.6K	17.3K
32	0	5.4K	5.9K	6.5K
68	20	2.3K	3.0K	3.3K
104	40	1.1K	1.2K	1.3K
140	60	572	612	655
176	80	309	329	351
212	100	176	186	197
248	120	103	110	116

SENSOR	POINT TO POINT	EXPECTED RANGE
TPS (ELECTRONIC THROTTLE)	TPS PIN 2 (GND) TO PIN 6 (TPS1 SIGNAL)	1.25KΩ +/-30%
	TPS PIN 3 (PWR) TO PIN 6 (TPS1 SIGNAL)	1.25KΩ +/-30%
	TPS PIN 1 (+DRIVER) TO PIN 4 (-DRIVER)	~3.0Ω +/-30%

SENSOR	POINT TO POINT	EXPECTED RANGE
ECT (COOLANT TEMPERATURE)	ECT PIN A (SIGNAL) TO PIN B (GND)	2.8KΩ AT 25 C (77 F) +/- 8 C

SENSOR	POINT TO POINT	EXPECTED RANGE
O2 (OXYGEN SENSOR)	O2 PIN C (HEATER GND) TO PIN D (HEATER PWR)	2.1 +/- 0.4 ohms

Downloaded from www.Manualslib.com manuals search engine

SENSOR	POINT TO POINT	EXPECTED RANGE
VR SENSOR	VR PIN 1 (+) TO PIN 2 (-)	~320Ω
SMART COIL	COIL PIN A (SIGNAL) TO PIN B	~10KΩ
	COIL PIN A (SIGNAL) TO PIN D	~34KΩ
	COIL PIN A (SIGNAL) TO PIN E (PWR)	~15KΩ
	COIL PIN B TO PIN D	~44KΩ
	COIL PIN B TO PIN E (PWR)	~26KΩ
	COIL PIN D TO PIN E (PWR)	~17KΩ

CONNECTOR	POINT TO POINT	EXPECTED RANGE
FTV (FUEL TRIM VALVE)	FTV PIN A (SIGNAL) TO PIN B (PWR)	(~26Ω +/-2Ω)

CONNECTOR	POINT TO POINT	EXPECTED RANGE
FUEL LOCK-OFF	LOCK-OFF PIN A (PWR) TO PIN B (GND SIGNAL)	~20-25Ω

Voltage Checks

SENSOR	POINT TO POINT	EXPECTED RANGE
ACCELERATION PEDAL ANGLE SENSOR	APP1: PIN B (SIGNAL A) TO PIN C (GND)	0.4 +/- 0.1V AT LOW IDLE 3.6 +/- 0.15V AT FULL ACCEL
	APP2: PIN E (SIGNAL B) TO PIN D (GND)	4.5 +/- 0.1V AT LOW IDLE 1.4 +/- 0.15V AT FULL ACCEL

Note: When you check the output voltage of acceleration pedal angle sensor, it must be connected to SECM so that SECM can supply 5V to the angle sensor.

Downloaded from www.Manualslib.com manuals search engine

https://truckmanualshub.com/

CHAPTER 7 N2001 PRESSURE REGULATOR /CONVERTER

Propane is a by-product of crude oil and natural gas. In the extraction process various hydrocarbons such as gasoline, kerosene, propane and butane are separated. Each of these carry a certain amount of by-product residue, commonly called heavy ends. Under normal circumstances these residues remain suspended in liquid and pass through the system undetected.

Engine coolant flows through the regulator/converter assisting in the propane vaporization process. As the coolant temperature rises, the regulator/converter temperature also rises. The gas becomes hot and expands to the point where it cannot carry the heavier hydrocarbons or heavy-ends through the system. Because of this, the heavy-ends are deposited (dropped out) into the regulator/converter, the vapor line from the regulator to the mixer and even in the mixer itself. When these heavy-ends cool they form a wax-like deposit or sludge. HD5 grade propane is recommended for motor fuel use, however HD5 propane will carry a certain amount of heavy-ends. A fuel filter cannot remove this because it is not dirt or debris but part of the liquid propane. As these deposits build up over time regulator fuel ports and valve seats can be affected, reducing the performance of the regulator. All propane systems incorporating a regulator/converter are subject to heavy-end fouling over time. Because of this it may be necessary for the certified technician to disassemble, clean and service the regulator/converter after long periods of operation.

Removal and Installation of N2001 LP Regulator/Converter

WARNING

- **LP gas is highly flammable. To prevent personal injury, keep fire and flammable materials away from the lift truck when work is done on the fuel system.**
- **Gas vapor may reduce oxygen available for breathing, cause headache, nausea, dizziness and unconsciousness and lead to injury or death. Always operate the forklift in a well ventilated area**
- **Liquid propane may cause freezing of tissue or frostbite. Avoid direct contact with skin or tissue; always wear appropriate safety protection including gloves and safety glasses when working with liquid propane.**

CAUTION
The regulator/converter and mixer are part of a certified system complying with EPA and CARB 2004 requirements. Only trained certified technicians should perform disassemble, service or replacement of the regulator/converter or mixer.

Downloaded from www.Manualslib.com manuals search engine

https://truckmanualshub.com/

Hose Connections

Proper operation of the closed loop control greatly depends on the correct vacuum hose routing and fuel line lengths. Refer to the connection diagram (Figure R1) for proper routing and maximum hose lengths when reinstalling system components.

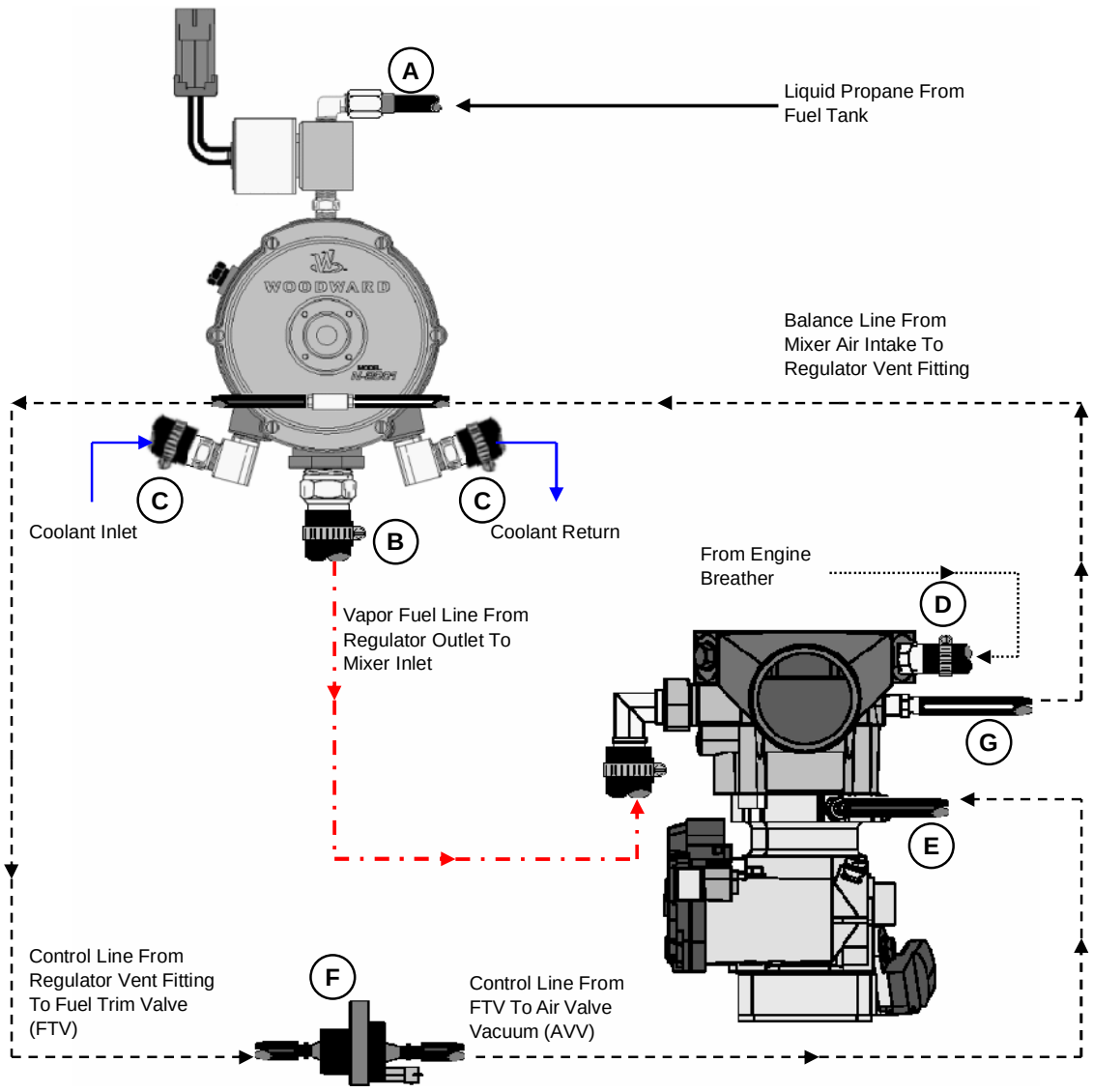

Figure R1

Hose Type

A. High-pressure fuel line.
B. 5/8” I.D. Vapor Hose-Wire Reinforced (15 inch maximum length)
C. 3/8” I.D. Hose-Coolant
D. 1/2” I.D. Hose -Breather
E. 7/32” I.D. Vacuum Hose (10 inch recommended maximum length)
F. 7/32” I.D. Vacuum Hose (11.5 inch recommended maximum length)
G. 7/32” I.D. Vacuum Hose (18 inch recommended maximum length)

Downloaded from www.Manualslib.com manuals search engine

https://truckmanualshub.com/

N2001 Removal Steps:

1. Close the liquid outlet valve in the fuel storage container.

2. Purge the system of fuel by starting the engine and running until all trapped fuel in the system is exhausted and the engine shuts down.

3. Remove the fuel inlet line (1) from the lock-off, the two vacuum lines (2) from the branch-tee fitting in the regulator vent and disconnect the lock-off connector (3).

4. Remove the two rear-mounting bolts that hold the regulator to the support bracket. This will allow you easier access to the remaining hose clamps.

5. Remove the two cooling lines (4) from the regulator.

   NOTE: It will be necessary to either drain the coolant system or clamp off the coolant lines as close to the regulator as possible to avoid a coolant spill when these lines are disconnected.

6. Remove the fuel vapor outlet hose (5) from the regulator.

7. If it is necessary to fully disassemble the N2001 regulator, you will need to remove the fuel lock-off at this time.

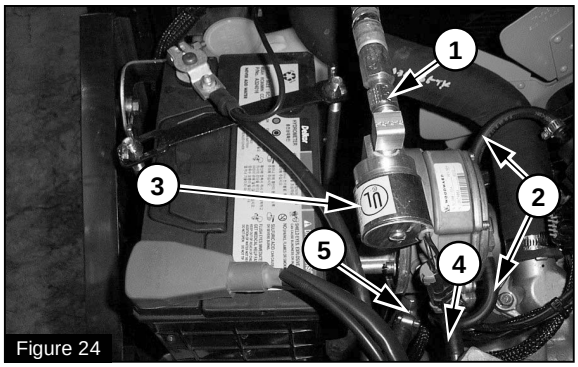

Figure 24

(1) Fuel inlet line (2) Vacuum line (3) Fuel Lock-off
(4) Cooling line (5) Fuel vapor outlet hose

NOTE
For installation of the N2001 reverse the removal steps.

Downloaded from www.Manualslib.com manuals search engine

https://truckmanualshub.com/

N2001 Regulator Disassembly Steps:

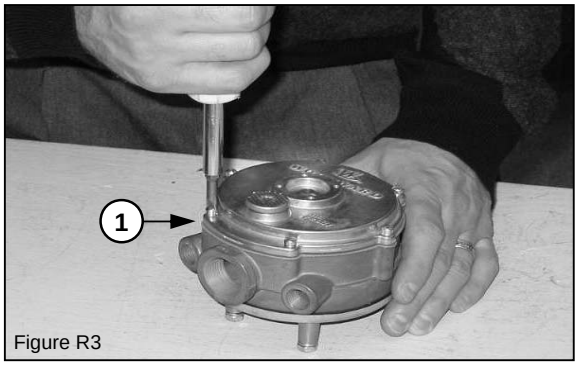

Figure R3

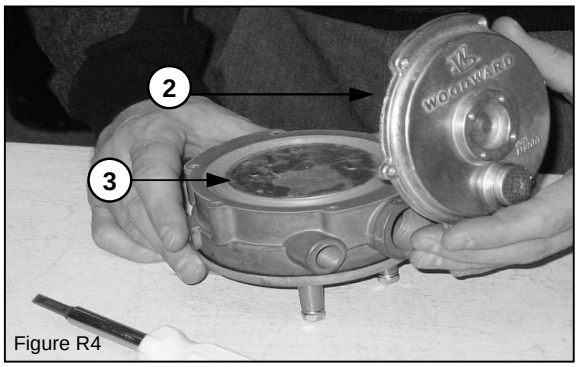

Figure R4

1. Remove the six secondary cover screws (1), the secondary cover (2) and the secondary diaphragm (3).

2. Remove the six primary diaphragm cover screws (4) and the primary cover assembly (5).

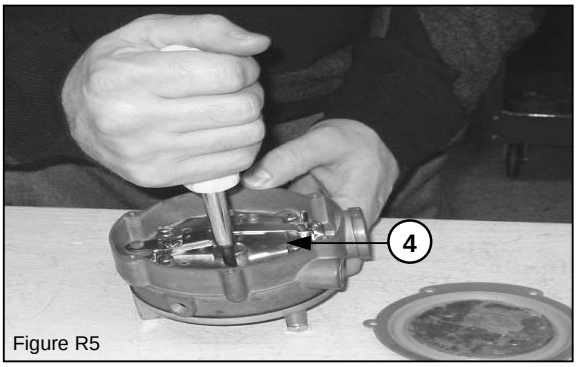

Figure R5

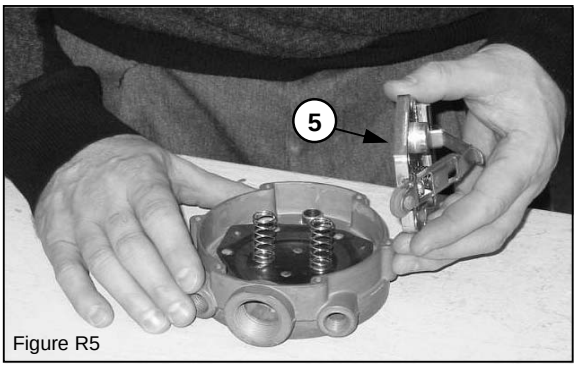

Figure R5

3. Remove the six primary diaphragm cover screws (4) and the primary cover assembly (5).

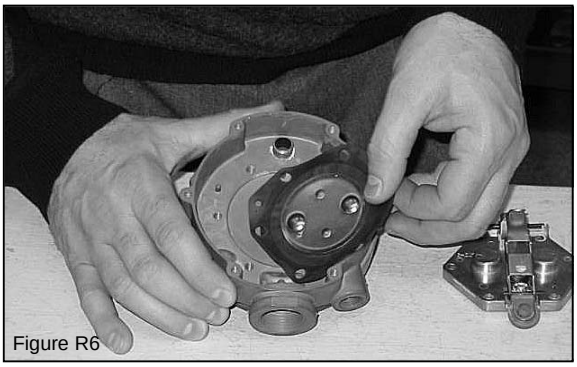
Figure R6

4. Remove the primary diaphragm by sliding the diaphragm to one side, releasing the primary valve pin (Figure R6).

Downloaded from www.Manualslib.com manuals search engine

https://truckmanualshub.com/

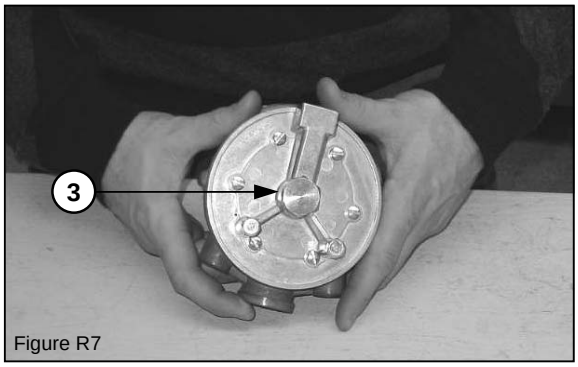

Figure R7

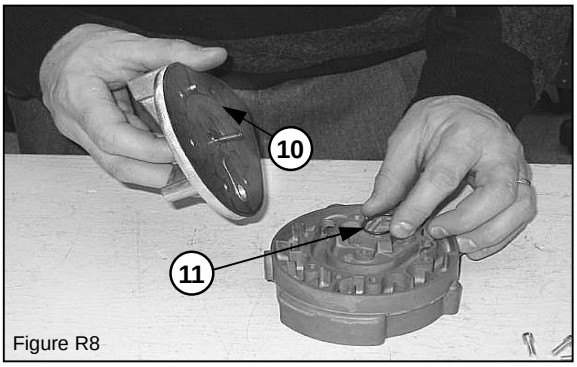

Figure R8

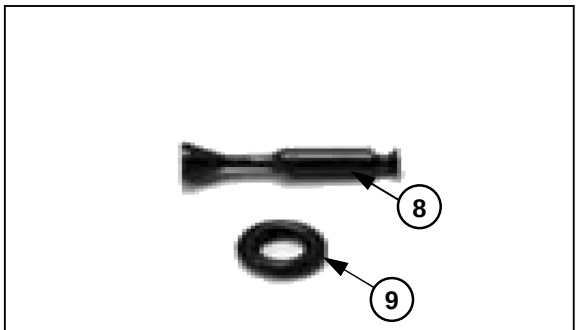

Figure R8

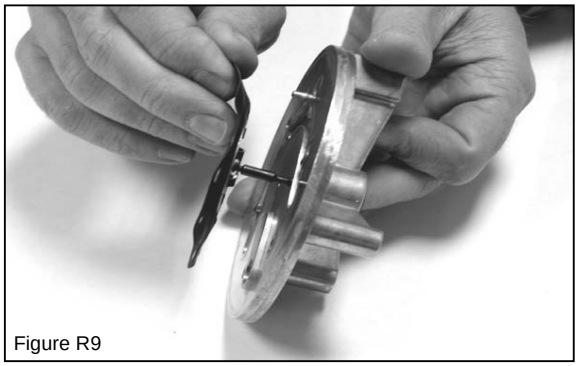
Figure R9

5. Turn the regulator body over with the rear fuel inlet plate facing up. Remove the primary valve access plug (7), the primary valve (8) and the primary valve o-ring seal (9). The primary valve goes through the inlet plate, then through the body assembly and is retained by the primary diaphragm (Figure R9).

6. Remove the body gasket (10), body o-ring seal (11) and the fuel inlet plate, exposing the fuel inlet expansion chamber and the coolant passage.

NOTE
For re-assembly of the N2001 regulator/converter, reverse the steps for disassembly. Tighten all fasteners to recommended torque values and test the regulator before installing in the vehicle. Torque primary cover screws to (40-50 inch lbs.), secondary cover screws to (15-18 inch lbs.).

Downloaded from www.Manualslib.com manuals search engine

https://truckmanualshub.com/

N2001 Disassembled Service

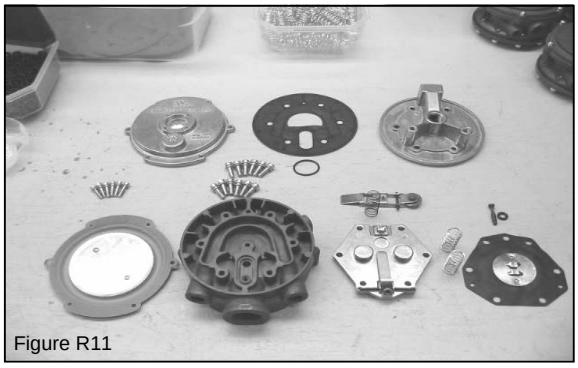
Figure R11

1. Clean the primary and secondary valves with soap and warm water to remove heavy-end deposits. Inspect the valve seats and o-rings for wear. Replace worn components as necessary.

2. Clean the primary and secondary diaphragms with soap and warm water. Inspect for wear, tears or pinholes and deformations that may cause leaks or poor performance of the regulator/converter. Replace components as necessary.

3. Replace the body gasket of the coolant chamber and body o-ring seal when servicing the N2001 to avoid coolant leaks from the fuel expansion chamber to the coolant passage.

4. Clean the regulator body (casting) with a parts cleaning solvent. Be sure to remove all seals and gaskets before cleaning the casting with solvent.

5. Make sure all parts (Figure R11) are completely dry before re-assembly.

Downloaded from www.Manualslib.com manuals search engine

https://truckmanualshub.com/

CHAPTER 8 N-CA55-500TR AIR/FUEL MIXER

Propane is a by-product of crude oil and natural gas. In the extraction process various hydrocarbons such as gasoline, kerosene, propane and butane are separated. Each of these carry a certain amount of by-product residue, commonly called heavy ends. Under normal circumstances these residues remain suspended in liquid and pass through the system undetected.

Engine coolant flows through the regulator/converter assisting in the propane vaporization process. As the coolant temperature rises, the regulator/converter temperature also rises. The gas becomes hot and expands to the point where it cannot carry the heavier hydrocarbons or heavy-ends through the system. Because of this, the heavy-ends are deposited (dropped out) into the regulator/converter, the vapor line from the regulator to the mixer and even in the mixer itself. When these heavy-ends cool they form a wax-like deposit or sludge. HD5 grade propane is recommended for motor fuel use, however HD5 propane will carry a certain amount of heavy-ends. A fuel filter cannot remove this because it is not dirt or debris but part of the liquid propane. As these deposits build up over time regulator fuel ports and valve seats can be affected, reducing the performance of the regulator. All propane systems incorporating a regulator/converter are subject to heavy-end fouling over time. Because of this it may be necessary for the certified technician to disassemble, clean and service the regulator/converter after long periods of operation.

Removal and Installation of the N-CA55-500TR Mixer

WARNING

- **LP gas is highly flammable. To prevent personal injury, keep fire and flammable materials away from the lift truck when work is done on the fuel system.**
- **Gas vapor may reduce oxygen available for breathing, cause headache, nausea, dizziness and unconsciousness and lead to injury or death. Always operate the forklift in a well ventilated area**
- **Liquid propane may cause freezing of tissue or frostbite. Avoid direct contact with skin or tissue; always wear appropriate safety protection including gloves and safety glasses when working with liquid propane.**

CAUTION
The regulator/converter and mixer are part of a certified system complying with EPA and CARB 2004 requirements. Only trained certified technicians should perform disassemble, service or replacement of the regulator/converter or mixer.

Downloaded from www.Manualslib.com manuals search engine

https://truckmanualshub.com/

N-CA55-500TR Mixer Removal Steps:

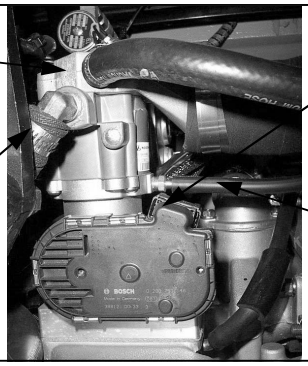

Figure M3

1. Close the liquid outlet valve in the forklift cylinder or fuel storage container.

2. Purge the system of fuel by starting the engine and running until all trapped fuel in the system is exhausted and the engine shuts down.

3. Remove the air horn air inlet adapter and hose (Figure M1-1).

4. Mark the two vacuum lines to the mixer and throttle adapter for identification; they must be installed correctly for proper operation. Remove the two vacuum lines (Figure M1-2).

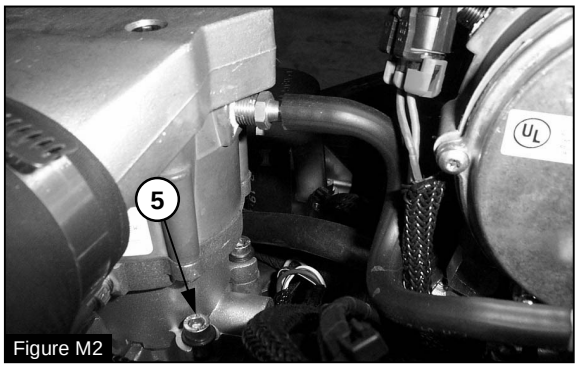

Figure M2

5. Remove the vapor fuel inlet line (Figure M1-3).

6. Remove the electronic throttle connector (Figure M1-4).

7. Remove the four bolts that mount the throttle adapter to the electronic throttle body (Figure M2-5).

8. Remove the mixer/adapter assembly from the throttle by gently pulling upwards.

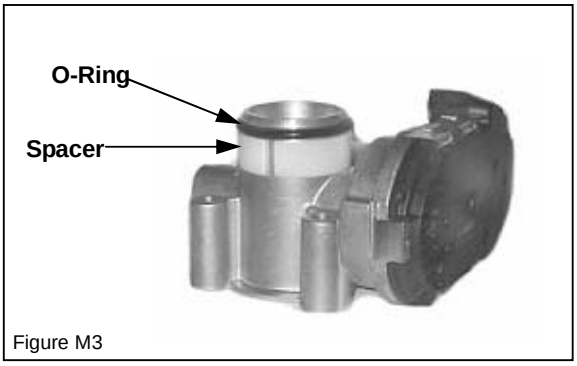

Figure M3

NOTE
There will be a plastic o-ring spacer and an o-ring inside this adapter, be careful not to lose these items when removing the mixer/adapter assembly from the throttle (Figure M3).

Downloaded from www.Manualslib.com manuals search engine

https://truckmanualshub.com/

N-CA55-500TR Disassembly and Service

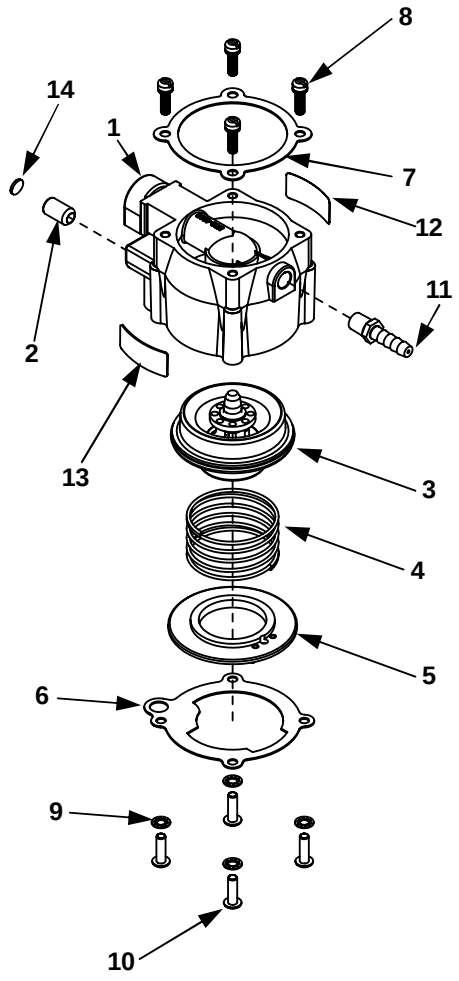

(1) BODY (2) SCREW (3) VALVE (4) SPRING
(5) ASSEMBLY (6) GASKET (7) GASKET (8) SCREW
(9) WASHER (10) SCREW (11) ORIFICE FITTING
(12) LABEL (13) LABEL (14) CAP

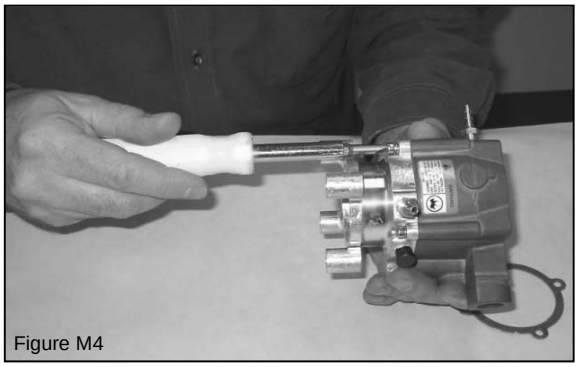
Figure M4

1. With the mixer/adapter assembly removed, and the Air Horn removed from the mixer, remove the four adapter retaining screws from the bottom of the mixer (Figure M4).

Figure M5

2. Gently remove the throttle adapter from the bottom of the mixer (Figure M5).

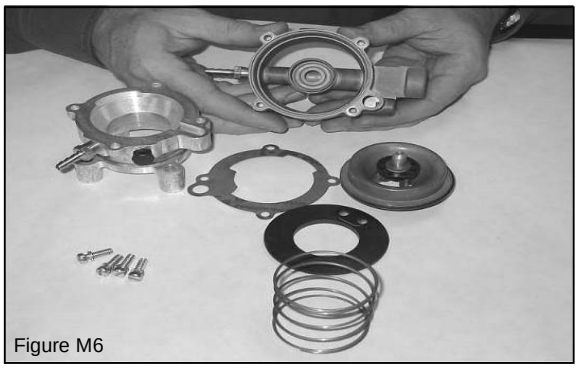
Figure M6

3. Components of the N-CA55-500TR and the mixer body are shown in (Figure M6).

Downloaded from www.Manualslib.com manuals search engine

https://truckmanualshub.com/

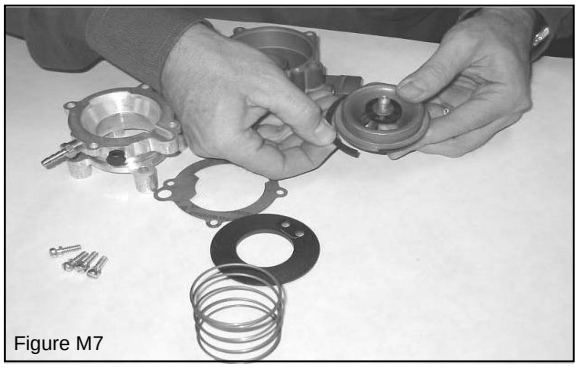
Figure M7

4. Replace the air-valve sealing ring as shown (Figure M7). The ring is similar to a piston ring and forms a seal from the air valve assembly to the mixer main body. Small raised circular formations can be found on one side of this ring. Place the ring so that these circular markings face upward toward the fuel-metering pin for proper sealing.

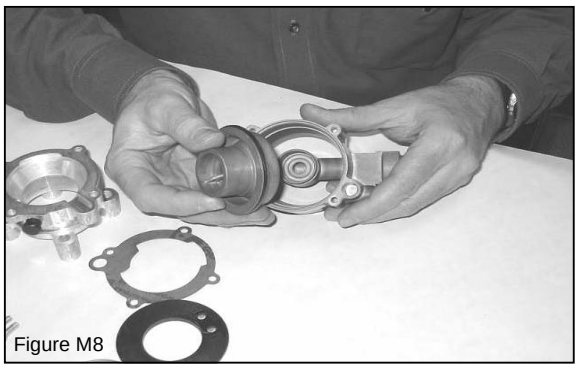
Figure M8

5. Insert the air valve assembly into the main body (Figure M8).

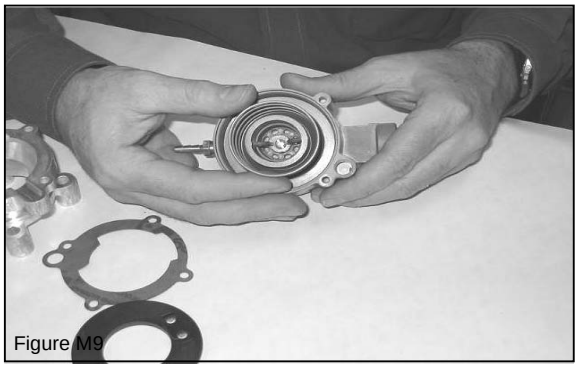
Figure M9

6. Next, install the air valve spring (Figure M9).

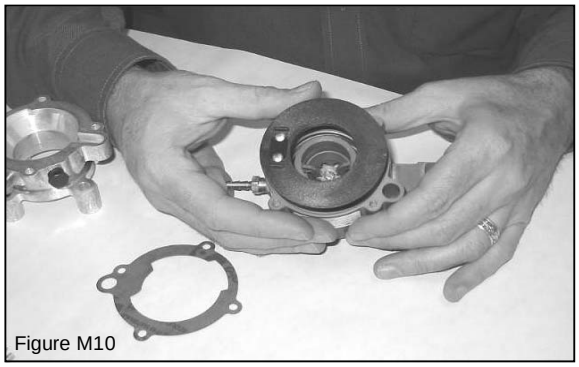
Figure M10

7. After the air valve spring install the check valve plate (Figure M10).

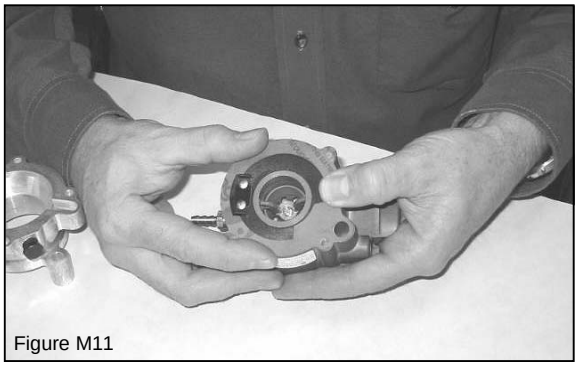
Figure M11

8. Place the mixer to throttle body gasket over the check valve plate (Figure M11). To properly install the gasket the hole for the idle port in the throttle adapter must be aligned with the idle port in the gasket.

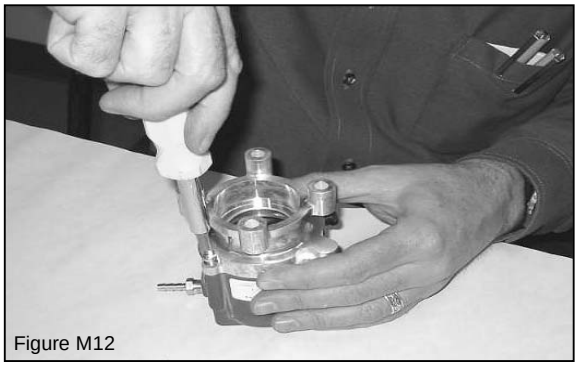
Figure M12

9. Align the check valve notch in the throttle adapter with the mixer check valve and the adapter idle port with the mixer idle port. Install the throttle adapter tamper-resistant screws to the mixer (Figure M12).

Downloaded from www.Manualslib.com manuals search engine

https://truckmanualshub.com/

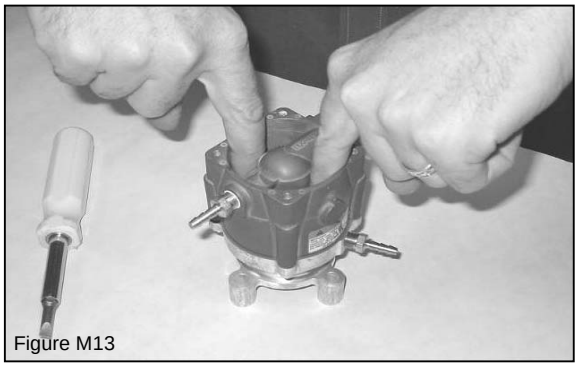
Figure M13

10. Check for binding of the air valve assembly by pressing down with two fingers on opposite sides of the air valve assembly (Figure M13). The air valve assembly should move freely without binding and have full travel. If the air valve is binding, loosen the four adapter retaining screws, re-check the air valve for binding and re-tighten the adapter retaining screws.

11. Clean and check the orifice fitting (Mixer hose barb) for obstruction.

CAUTION
The 1/8" NPT X ¼" hose barb fitting that is installed in the mixer housing uses a specific machined orifice size through the fitting. This orifice fitting is part of the mixer assembly and an integral part of the MI-04 control. DO NOT replace this fitting with a standard hose barb fitting or use a drill bit to clean out the fitting passage way. If this fitting is damaged the mixer will need to be replaced.

N-CA55-500TR Disassembled Service

1. Clean the air valve assembly with soap and warm water to remove heavy-end deposits. Inspect the fuel metering valve and sealing ring for wear. Replace worn components as necessary.

2. Clean the check valve plate with soap and warm water. Inspect for wear, tears or pinholes in the check valve and deformations that may cause leaks or poor performance. Replace components as necessary.

3. Replace all gaskets before assembly.

4. Clean the mixer body (casting) with a parts cleaning solvent. Be sure to remove all seals and gaskets before cleaning the casting with solvent. Make sure all parts are completely dry before re-assembly.

NOTE
For re-assembly of the N-CA55-500TR reverse the disassembly steps.

WARNING
DO NOT spray carburetor cleaner or solvent into the mixer while installed on the engine. These chemicals may damage the oxygen sensor and cause pre-mature failure of the catalytic muffler.

Downloaded from www.Manualslib.com manuals search engine

https://truckmanualshub.com/

Installing the Mixer/Throttle Assembly

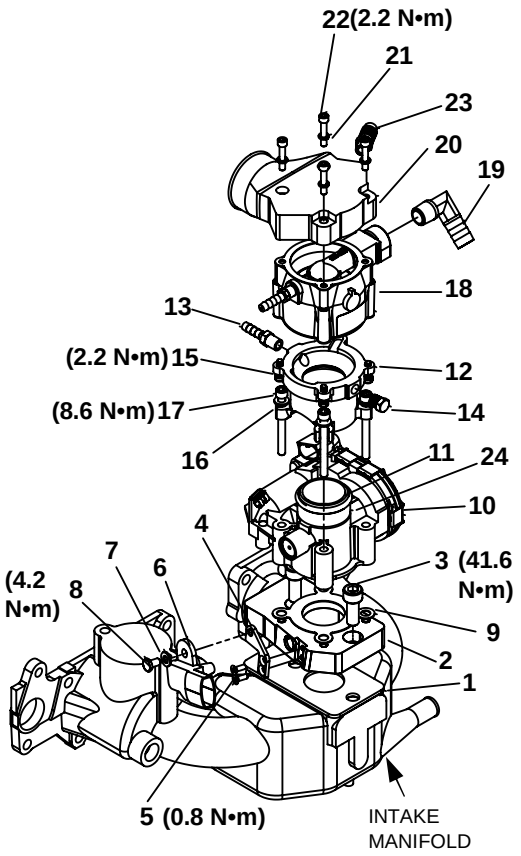

(1) GASKET-INTAKE MANIFOLD
(2) ADAPTER-INTAKE MANIFOLD (3) BOLT-ADAPTER
(4) BRACKET-TMAP (5) BOLT-TMAP BRACKET
(6) TMAP SENSOR (7) WASHER-TMAP MTG
(8) BOLT-TMAP MTG (9) GASKET-ITB(32MM)
(10) ITB(32MM) (11) O-RING (12) APOLLO ADAPTER-ITB
(13) FITTING (14) PLUG (15) BOLT-APOLLO ADAPTER
(16) WASHER-ITB (17) BOLT-ITB
(18) MIXER(CA55) (19) FITTING (20) AIR HORN ADAPTER,
(21) WASHER-AIR HORN (22) BOLT-AIR HORN,
(23) FITTING-VENTILATION (24) O-RING SPACER

The mixer/throttle assembly consists of a manifold adapter, electronic throttle, mixer-throttle adapter and air horn adapter. The manifold adapter is designed to mount the mixer/throttle assembly to a two-bolt intake manifold. The air horn adapter allows the intake hose from the air cleaner to be attached to the mixer air intake, along with the vent line from the engine PCV valve.

Figure M15

1. Align the Mixer-Throttle Adapter gasket between the mixer and the throttle adapter (Figure M15), and then attach the mixer to the adapter using the four tamper-resistant retaining screws.

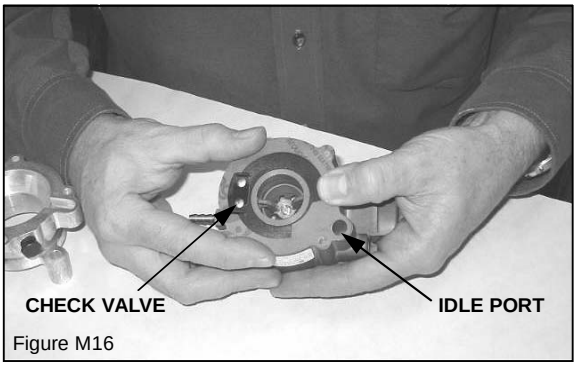

Figure M16

CAUTION
The mixer must be installed with the idle port aligned with the idle port in the adapter, and the mixer check valve aligned with the valve recess in the adapter to operate properly (Figure M16).

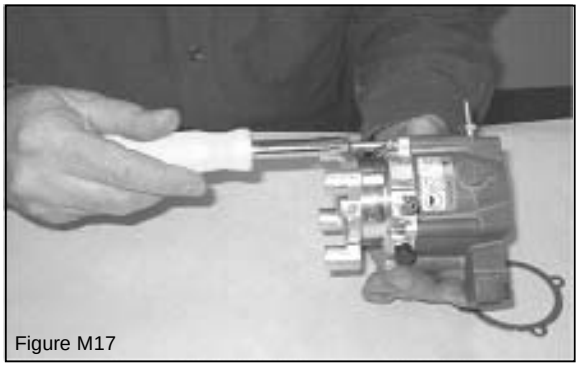
Figure M17

2. Tighten the four tamper-proof retaining screws to the specified torque (Figure M17).

Downloaded from www.Manualslib.com manuals search engine

https://truckmanualshub.com/

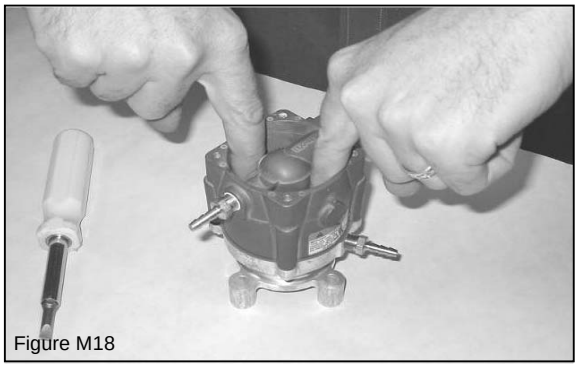

Figure M18

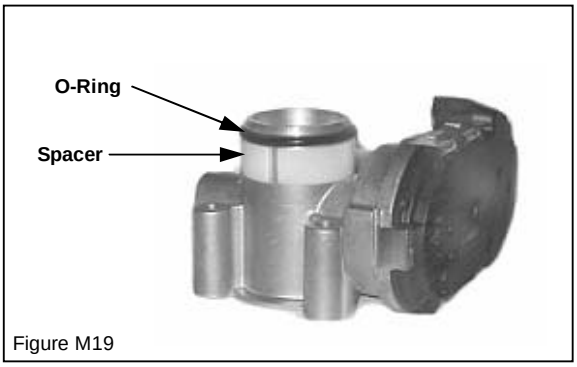

Figure M19

3. Check for free travel of the mixer's piston diaphragm assembly by pushing the piston diaphragm downward (Figure M18). If you detect any binding, loosen the retaining screws, re-align the gasket and re-tighten the retaining screws. Check for binding again, if the piston assembly moves freely, re-torque the fasteners and continue.

4. Install the manifold adapter by placing the manifold gasket between the manifold and the manifold adapter. The manifold adapter should be mounted with the TMAP sensor ports facing the thermostat housing. Tighten the two internal socket bolts to specified torque values.

5. Place the throttle bottom gasket between the electronic throttle assembly and the manifold adapter. Place the throttle assembly on top of the gasket aligning the four mounting holes with the threaded holes in the manifold adapter. The plastic motor assembly cover, of the electronic throttle assembly should be facing opposite of the TMAP sensor mounting holes.

6. Place the O-ring Spacer over the outside throat of the throttle. This spacer is necessary to assure that the O-ring, which seals the throttle to the adapter, properly seats against the throttle adapter.

7. Place the throttle adapter O-ring over the outside throat of the throttle, below the throttle bore retaining lip and on top of the O-ring Spacer (Figure M19). Apply a generous amount of lubricating grease (vacuum grease) to the O-ring and fully seat it against the machined surface.

8. Carefully slide the pre-assembled mixer/throttle adapter assembly over the throat of the throttle using a rocking motion, aligning the mounting holes of the adapter with the mounting holes of the throttle Face the fuel inlet of the mixer toward the plastic motor assembly cover of the electronic throttle assembly.

NOTE
Avoid pinching the O-ring in the cutaway of the throttle adapter. This will damage the O-ring and cause a manifold leak in the system.

Downloaded from www.Manualslib.com manuals search engine

https://truckmanualshub.com/

9. Tighten the four mounting bolts hand tight using a crossing pattern from one side of the adapter to the other. This prevents the adapter O-ring from misaligning against the throttle, which may cut the O-ring and cause an intake leak. Finally, tighten the four throttle adapter fasteners to the specified torque values.

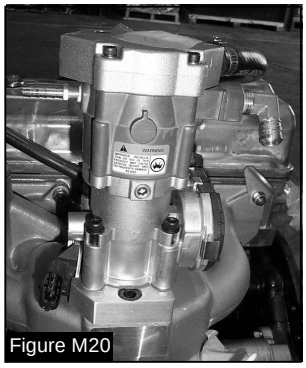

Figure M20

10. Install the TMAP sensor mounting-bracket to the manifold adapter. Apply a small amount of vacuum grease to the TMAP sensor O-ring and install the sensor into the manifold adapter, tighten the fasteners to specified torque values.

NOTE
Be careful not to over tighten the sensor retaining screw or damage to the sensor housing may result.

11. Place mixer intake gasket on top of the mixer (Figure M20), then place the air horn adapter on top of the mixer with the intake tube facing the valve cover (air cleaner side of the engine). Tighten the air horn retaining bolts to specified torque values.

Downloaded from www.Manualslib.com manuals search engine

https://truckmanualshub.com/

CHAPTER 9 TEST AND ADJUSTMENTS

WARNING

- **LP gas is highly flammable. To prevent personal injury, keep fire and flammable materials away from the lift truck when work is done on the fuel system.**
- **Gas vapor may reduce oxygen available for breathing, cause headache, nausea, dizziness and unconsciousness and lead to injury or death. Always operate the forklift in a well ventilated area**
- **Liquid propane may cause freezing of tissue or frostbite. Avoid direct contact with skin or tissue; always wear appropriate safety protection including gloves and safety glasses when working with liquid propane.**

CAUTION
The regulator/converter and mixer are part of a certified system complying with EPA and CARB 2004 requirements. Only trained certified technicians should perform disassemble, service or replacement of the regulator/converter or mixer.

N2001 Service Testing

After overhaul or for simply checking the N2001 regulator/converter operation, the following tests can be performed (See Chapter 7 for removal/installation of the N2001). To check the secondary regulation (output) a simple vacuum hand pump can be used to simulate the vacuum signal transmitted from the air/fuel mixer when the engine is running. You will need the following hardware:

Secondary Stage Test Hardware

1. Hand vacuum pump.
2. Regulator vapor outlet test fitting ¾” NPT X ¼” hose barb.
3. Union Tee ¼” NPT with three ¼” NPT X ¼” hose barb.
4. Vacuum hose.
5. 0-3 in W.C. Magnehelic Gauge (inches of water column).

Secondary Stage (Break-Off) Test

1. Connect the vacuum pump, the Magnahelic gauge and the regulator vapor outlet to the Union Tee fitting (Figure R11). Make sure there is no leakage at any of the fittings.
2. Using the vacuum pump slowly apply enough vacuum to measure above -2 in WC on the gauge. This vacuum signal opens the secondary valve in the N2001 regulator/converter.
3. Release the vacuum pump lever and you will see the gauge needle start falling back toward zero. When the pressure drops just below the specified break-off pressure (-1.2 in WC) of the secondary spring, the needle should stop moving.
4. At this point the secondary valve should close. If the secondary valve seat or the secondary diaphragm is leaking the gauge needle will continue to fall toward zero (proportional to the leak size). An excessively rich air/fuel mixture can be caused by a secondary valve seat leak, repair as necessary (See Chapter 7 for disassembly of the N2001).

Downloaded from www.Manualslib.com manuals search engine

https://truckmanualshub.com/

Secondary Stage Test Connection

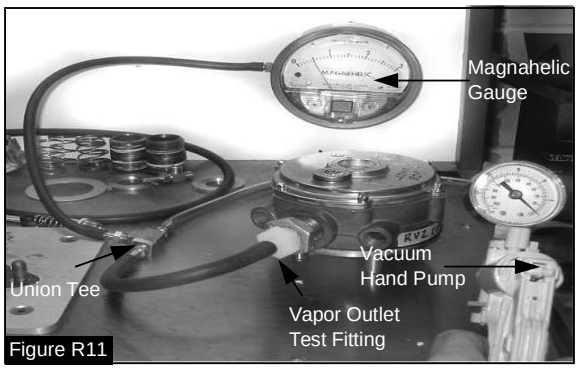

Figure R11

Primary Stage Test Hardware

1. Hand vacuum pump.
2. Regulator Fuel Inlet test fitting (¼" NPT standard air coupling).
3. Test Gauge fitting (1/4" NPT X 1/4" Hose Barb).
4. Vacuum hose or vinyl tubing.
5. 0-60 in W.C. Magnehelic Gauge (inches of water column).

Primary Stage Pressure Test

1. Remove the primary test port plug from the side of the regulator and install the ¼" NPT hose barb fitting.
2. Connect a compressed air line (shop air ~100psi) to the liquid propane fuel inlet of the N2001 Regulator (Figure R12).

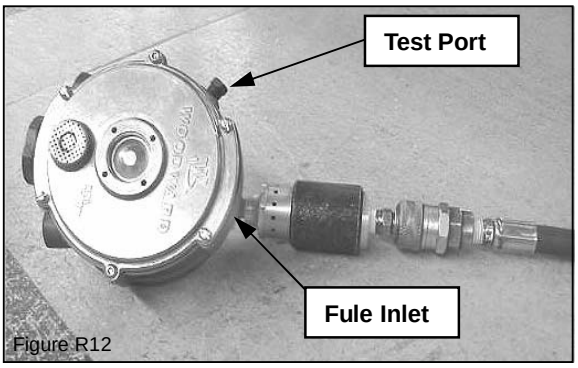

Figure R12

Downloaded from www.Manualslib.com manuals search engine

https://truckmanualshub.com/

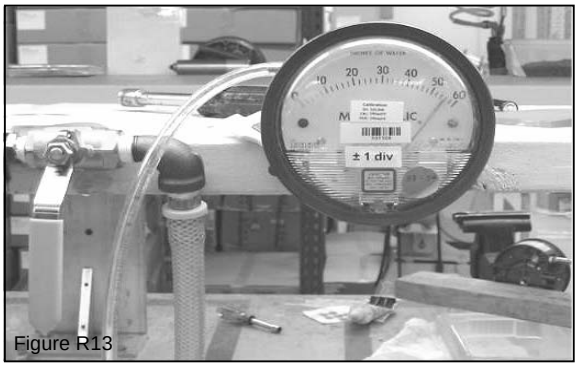

Figure R13

3. Apply compressed air, wait for air to exit the hose barb in the test port, and then connect the Magnahelic gauge (Figure R13) to the hose barb using the vacuum hose or vinyl tubing. This prevents the gauge from reading maximum pressure due to the large velocity of compressed air entering the primary chamber.

4. Make sure there is no leakage at any of the fittings. The static pressure should read between 40-60 inches of water column on the Magnahelic gauge and maintain a constant pressure for 60 seconds.

5. If the pressure reading begins to increase, a leak is most likely present at the primary valve, either the primary valve o-ring or the valve itself. If a leak is present you will need to disassemble the primary side of the regulator, repair the cause of the leak, re-assemble the regulator and test the primary stage again (See Chapter 7 for disassembly of the N2001).

6. If the pressure begins to decrease, the secondary seat is probably not making an adequate seal and is leaking. If a leak is present you will need to disassemble the secondary cover of the regulator, repair the cause of the leak, re-assemble the regulator and test the primary and secondary stage again (See Chapter 7 for disassembly of the N2001).

7. Once the test is successful, re-install the primary test port plug and check the fittings for leaks (See Chapter 7 for installation of the N2001).

NOTE
The N2001 Primary stage pressure can also be tested at idle on a running engine. The N-2001 primary pressure should be between 40" and 55" water column at 700 RPM, idle.

WARNING

- **LP gas is highly flammable. To prevent personal injury, keep fire and flammable materials away from the lift truck when work is done on the fuel system.**
- **Gas vapor may reduce oxygen available for breathing, cause headache, nausea, dizziness and unconsciousness and lead to injury or death. Always operate the forklift in a well ventilated area**
- **Liquid propane may cause freezing of tissue or frostbite. Avoid direct contact with skin or tissue; always wear appropriate safety protection including gloves and safety glasses when working with liquid propane**

Downloaded from www.Manualslib.com manuals search engine

https://truckmanualshub.com/

N-CA55-500TR Service AVV (Air Valve Vacuum) Testing

AVV Test Hardware

1. Mixer AVV test fitting ¼" NPT X ¼" hose barb.
2. Union Tee ¼" NPT with three ¼" NPT X ¼" hose barb.
3. Vacuum hose.
4. 0-20 in W.C. Magnehelic Gauge (inches of water column).

AVV Test

1. Install the Union Tee fitting between the FTV and the AVV fitting.
2. Connect the vacuum hose from the Union Tee fitting to the Magnahelic gauge (Figure T1). You should now have the gauge inline between the FTV and the mixer to throttle adapter.
3. With the engine running at idle (700 RPM) the AVV should be between 5" and 10" water column.

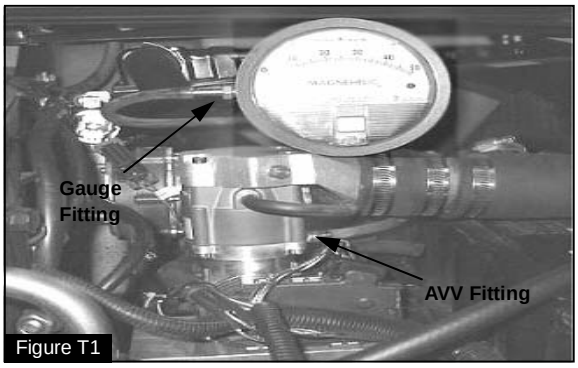

Figure T1

NOTE
If the measured water column is excessively high, check for a sticking or binding piston diaphragm assembly inside the mixer. (See Chapter 8 for removal, installation and disassembly of the N-CA55-500TR mixer).

WARNING
DO NOT spray carburetor cleaner or solvent into the mixer while installed on the engine. These chemicals may damage the oxygen sensor and cause pre-mature failure of the catalytic muffler.

Downloaded from www.Manualslib.com manuals search engine

https://truckmanualshub.com/

Ignition Timing Adjustment

With the MI-04 system both mechanical and vacuum advance are no longer inside the distributor. All ignition timing advance is controlled by the SECM. The only timing adjustment that can be made by a technician is the mechanical alignment of the distributor. The SECM uses a 40-degree timing window from –5 degrees BTDC to 35 degrees BTDC. Because of this an accurate adjustment cannot be made with a standard timing light since the SECM will maintain the correct timing even if the distributor is moved (as long as the distributor setting remains within the 40-degree window). Therefore the ignition timing setting of the distributor becomes very important and is described in the following steps.

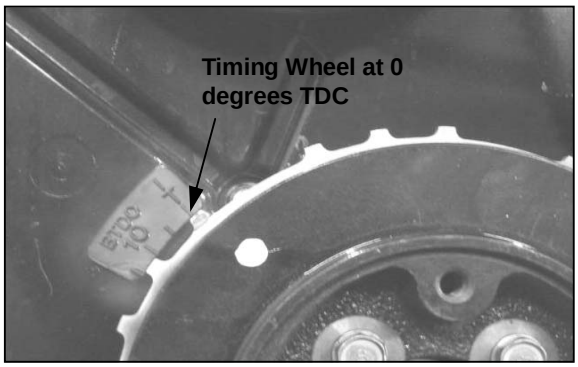

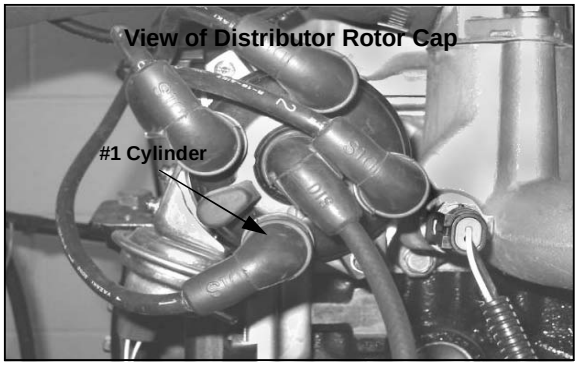

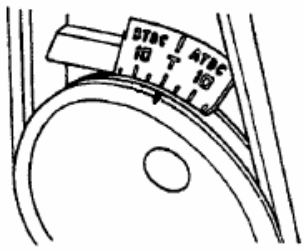

Figure G1

1. Using the timing indicator on the crankshaft pulley, set the engine on 0 degrees Top Dead Center (TDC) of number 1 cylinder (Figure G1).

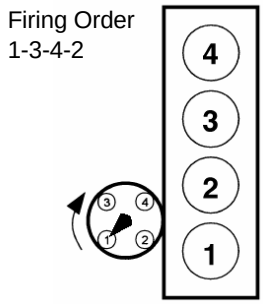

Figure G2

2. Remove the distributor rotor cap and verify that the distributor rotor is lined up with number 1 cylinder on the distributor cap (Figure G2).

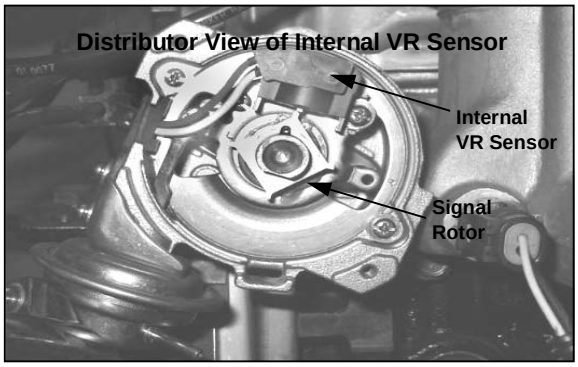

3. Remove the distributor rotor and dust cover so that the internal VR sensor and signal rotor gear are visible (Figure G3). The internal VR sensor inside the distributor is not used by the SECM for a speed reference with the G420E/G424E engine and it's wiring harness does not connect to the system. The distributors internal VR sensor is only used as an alignment reference point for setting the correct distributor position.

Downloaded from www.Manualslib.com manuals search engine

https://truckmanualshub.com/

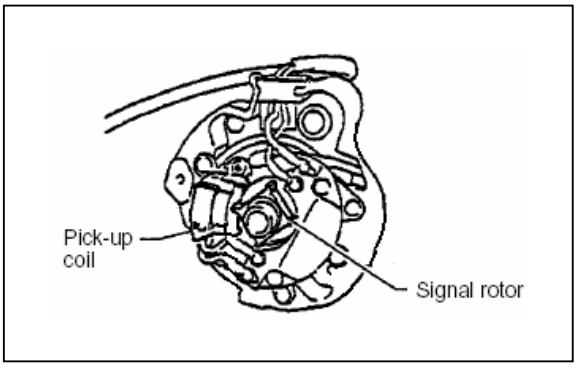

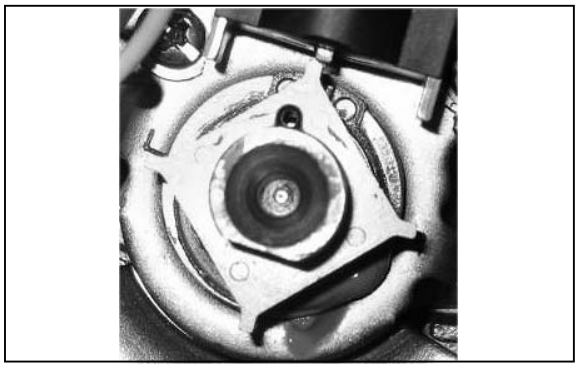

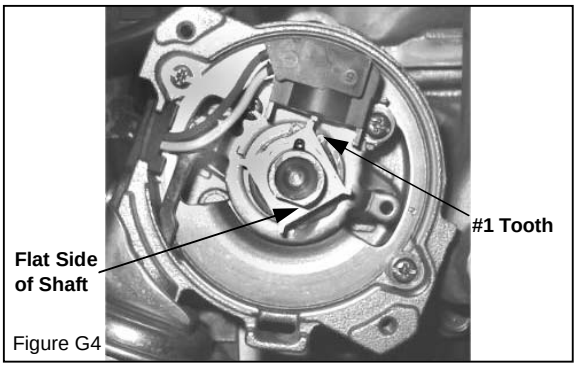

Figure G4

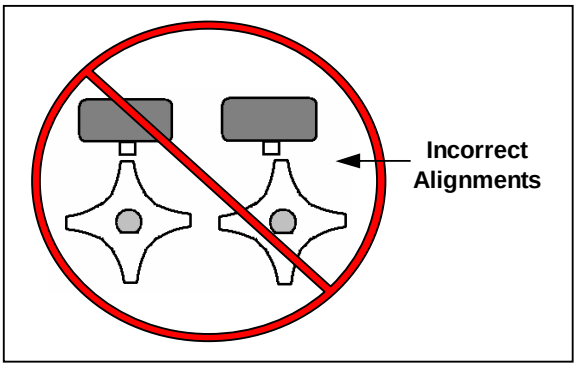

4. Loosen the distributor hold down nut and rotate the distributor so that the signal rotor gear tooth of the #1 cylinder (tooth opposite the flat side of the distributor shaft) lines up with the sensor pickup. (Figure G4).

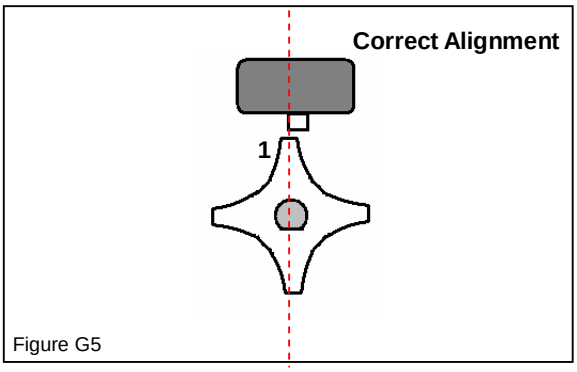

Figure G5

5. To correctly set the distributor, align the center of the #1 cylinder tooth with the leading edge of the VR sensor pickup (Figure G5). Keep in mind that the distributor rotates in a clockwise direction.

6. Once the proper alignment is obtained, lock the distributor in place by tightening the hold down nut to the specified torque value and re-install the rotor, dust cover and rotor cap.

WARNING
Improper alignment of the distributor may cause system ignition problems resulting in ignition misfires or backfires.

Downloaded from www.Manualslib.com manuals search engine

https://truckmanualshub.com/

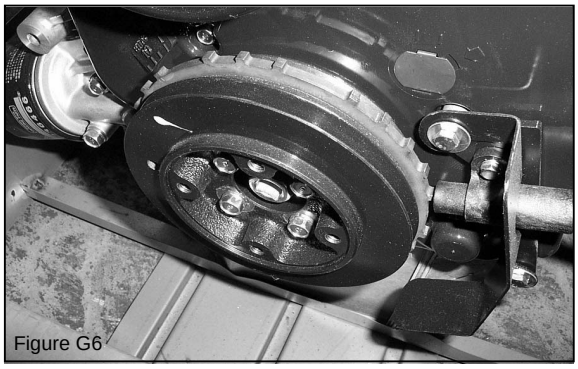
Figure G6

7. After you have completed setting the distributor alignment you will need to adjust the VR sensor used by the SECM for speed reference. This sensor is mounted near the crankshaft pulley wheel (Figure G6).

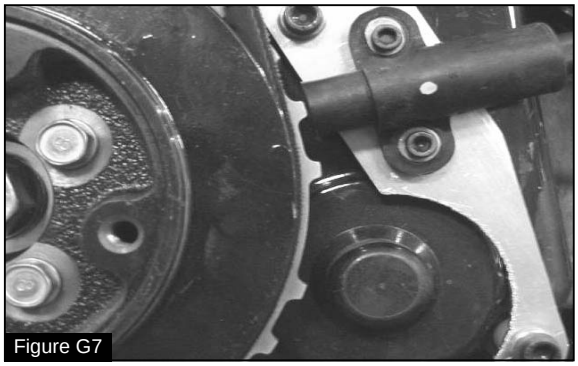
Figure G7

8. Rotate the crankshaft pulley so that one of the gear teeth on the timing wheel aligns in the center of the VR sensor (Figure G7).

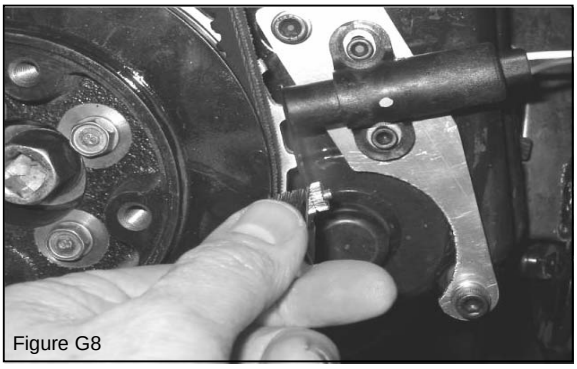
Figure G8

9. Using a feeler gauge (Figure G8), loosen the sensor retaining bolts and adjust the gap between the sensor and the gear tooth from 1.25mm to 1.5mm. Re-tighten the sensor retaining bolts when complete.

10. Rotate the crankshaft pulley 180 degrees and align a timing gear tooth in the center of the VR sensor pickup as you did in step 8. Verify that the sensor gap is still within 1.25mm to 1.5mm. This step is to check timing gear run out and insures proper speed signal amplitude.

11. If the VR sensor gap is not within the specification repeat steps 9 & 10 and continue adjusting the sensor gap until you are within tolerance. This completes setting ignition timing and sets the center of the SECM ignition control range at 15 degrees BTDC.

Downloaded from www.Manualslib.com manuals search engine

https://truckmanualshub.com/

Idle Mixture Adjustment

Figure G7

The method for making the idle mixture adjustment to a running engine is to use the Service Tool software by connecting a laptop computer to the SECM. If you do not have the Service Tool proceed to (step 12). A USB (Universal Serial Bus) to CAN (Controller Area Network) communication adapter by Kavaser will be required along with a Crypt Token (Figure G7). The Crypt Token acts as a security key allowing the laptop to retrieve the necessary data from the SECM.

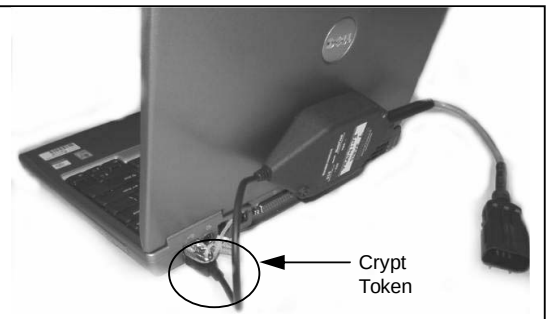

Figure G8

1. Install the Crypt Token in an available USB port in the computer (Figure G8).

2. With the ignition key in the OFF position, connect the Kavaser communication cable from a second USB port on the computer to the CAN communications cable on the engine. (*If your laptop computer does not have a second USB port an appropriate USB Hub will need to be used).

3. Connect a timing light to the engine.

4. Turn the ignition key to the ON position **(Do Not Start the Engine)**.

Figure G9

5. Launch the MotoView program on your computer and open the Service Tool display.

6. Start the engine; you should now see the idle RPM on your Service Tool display Run Screen (Figure G9).

NOTE
Service Tool software (MotoTuneViewer) and the security Crypt Token is obtainable by certified technicians through authorized dealers.

Downloaded from www.Manualslib.com manuals search engine

https://truckmanualshub.com/

AFR		
RPM	0	
AFR	0.0000	
AFR SETPOINT	0.00000	
FTV DUTY CYCLE	45.00	%
O2 SENSOR VOLTS	0	VDC
MAP	10.78	KPA
INTAKE MANIFOLD TEMP	0.00	C
INTAKE MANIFOLD TEMP	32	F
COOLANT TEMP	0.00	C
COOLANT TEMP	32	F

Figure 10

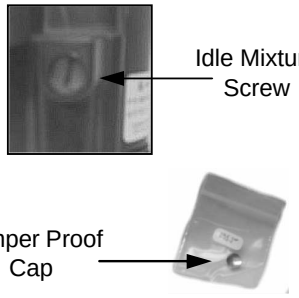

Figure 11

7. While on the Run Screen adjust the idle mixture screw on the mixer until a reading of 25-50% is reached for the FTV Duty Cycle (Figure G10).

8. To make this adjustment you will need to adjust the nylon screw all the way inward and then back out the screw ¼ turn.

9. Use the accelerator pedal to increase RPM above idle momentarily (Rev the engine) then release the pedal to return to idle RPM. The duty cycle setting should remain within the adjustment range (25-50%).

10. To obtain an accurate FTV Duty Cycle reading when the tamper proof is not installed, place your thumb over the idle screw port so that no air will leak past the screw threads.

11. If the FTV Duty Cycle reading is above 50% back the idle adjustment screw out again and re-check your duty cycle reading. Continue to do this until the FTV Duty Cycle reading is within the proper range (25-50%)

12. Turn the ignition key to the OFF position to shut down the engine.

13. Install the tamper proof cap on the idle mixture screw adjustment port so that no further adjustments can be made (Figure G11).

NOTE
If the FTV Duty Cycle reading is cannot be adjusted between 25-50%, check for possible vacuum leaks, manifold leaks or a faulty mixer.

Downloaded from www.Manualslib.com manuals search engine

https://truckmanualshub.com/

CHAPTER 10 SERVICE TOOL KIT

A343079 USB (Universal Serial Bus) to CAN (Controller Area Network) Converter Assembly	
A343080 Service Tool Software (includes CD and Crypt Token (License Dongle))	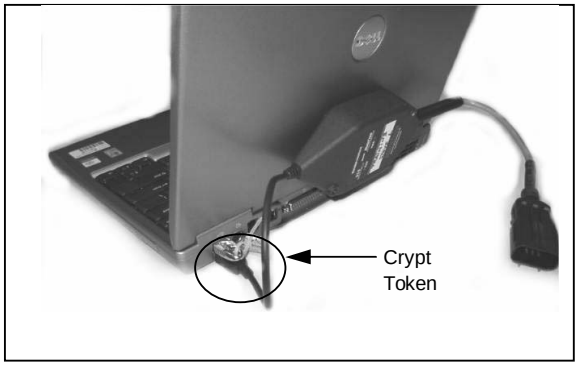
A334071 Extension Cable	

Downloaded from www.Manualslib.com manuals search engine