https://truckmanualshub.com/

OPERATOR'S MANUAL

ENGLISH

KUBOTA
ZERO TURN MOWER

MODELS ZD1211
ZD1211R
ZD1211L
ZD1211RL

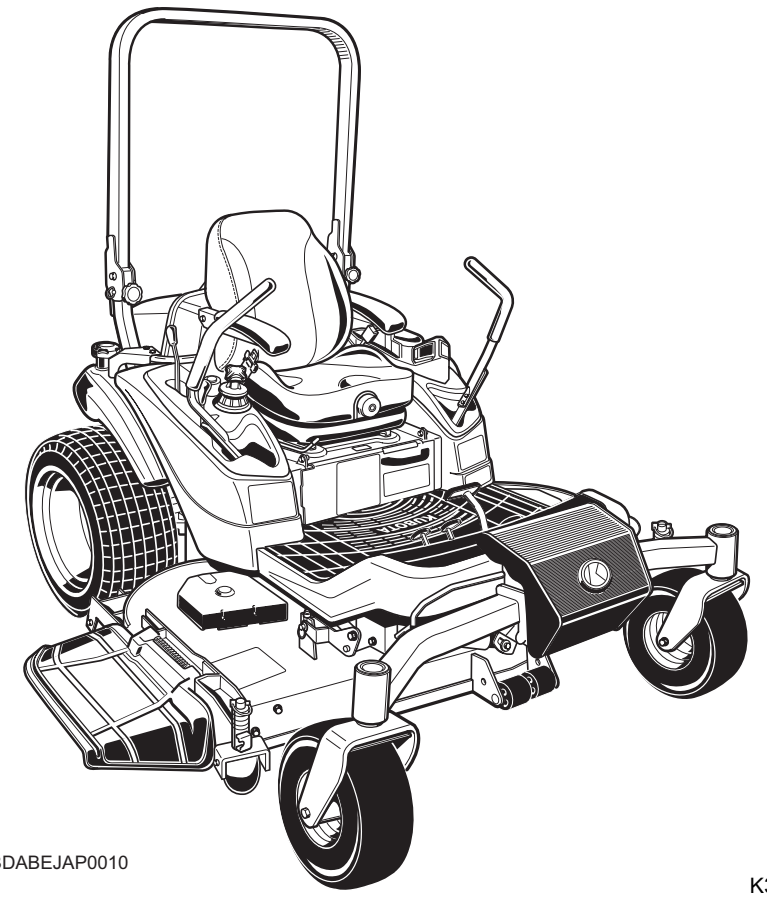

1BDABEJAP0010

K3441-7125-2

READ AND SAVE THIS MANUAL

Kubota

https://truckmanualshub.com/

ABBREVIATION LIST

Abbreviations	Definitions
API	American Petroleum Institute
PTO	Power Take Off
RH/LH	Right-hand and left-hand sides are determined by facing in the direction of forward travel
ROPS	Roll-Over Protective Structures
rpm	Revolutions Per Minute
SAE	Society of Automotive Engineers

UNIVERSAL SYMBOLS

As a guide to the operation of your machine, various universal symbols have been utilized on the instruments and controls. The symbols are shown below with an indication of their meaning.

- Safety Alert Symbol
- Diesel Fuel
- Fuel-Level
- Parking Brake
- Engine-Stop
- Preheat
- Engine-Run
- Starter Control
- Power Take-Off Clutch Control-Off Position (Disengaged)
- Power Take-Off Clutch Control-On Position (Engaged)
- Cutting Height
- Mower-Lowered position
- Mower-Raised position
- Fast
- Slow
- Engine Speed Control
- Neutral
- Battery
- Oil Pressure
- Coolant Temperature

California Proposition 65

⚠ WARNING ⚠

Engine exhaust, some of its constituents, certain vehicle components and fluids, contain or emit chemicals known to the State of California to cause cancer and birth defects or other reproductive harm.

IMPORTANT

The engine in this machine is not equipped by the manufacturer with a standard spark arrester.
It is a violation of California Public Resource Code Section 4442 to use or operate this engine on or near any forest-covered, brush-covered land, or grass- covered land unless the exhaust system is equipped with a working spark arrester meeting state laws. Other states or federal areas may have similar laws.

https://truckmanualshub.com/

FOREWORD

You are now the proud owner of a KUBOTA ZERO TURN MOWER. This machine is a product of KUBOTA's quality engineering and manufacturing. It is made of excellent materials and under a rigid quality control system. It will give you long, satisfactory service. To obtain the best use of your machine, please read this manual carefully. It will help you become familiar with the operation of the machine and contains many helpful hints about machine maintenance. It is KUBOTA's policy to utilize, as quickly as possible, every advance in our research. The immediate use of new techniques in the manufacturing of products may cause some small parts of this manual to become outdated. KUBOTA distributors and dealers will have the most up-to-date information. Please do not hesitate to consult them.

SAFETY FIRST

This symbol, the industry's "Safety Alert Symbol", is used throughout this manual and on labels on the machine itself to warn of the possibility of personal injury. Read these instructions carefully. It is essential that you read the instructions and safety regulations before you attempt to assemble or use this unit.

DANGER : Indicates an imminently hazardous situation which, if not avoided, will result in death or serious injury.

WARNING : Indicates a potentially hazardous situation which, if not avoided, could result in death or serious injury.

CAUTION : Indicates a potentially hazardous situation which, if not avoided, could result in minor or moderate injury.

IMPORTANT : Indicates that equipment or property damage could result if instructions are not followed.

NOTE : Gives helpful information.

https://truckmanualshub.com/

ENGLISH

CONTENTS

⚠SAFE OPERATION ..... ⚠-1

SERVICING OF MACHINE 1

SPECIFICATIONS 3

IMPLEMENT LIMITATIONS 5

INSTRUMENT PANEL AND CONTROLS 6

MOWER MOUNTING 8
- MOUNTING THE MOWER DECK 8
- ADJUSTING THE MOWER 9
- DISMOUNTING THE MOWER DECK 9
- INSTALLING PARTS TO THE MOWER 9
  - Installation of Skid 9
  - Installation of Gauge Wheel 9
  - Installation of Bolt (Adjuster) 10

OPERATING THE ENGINE 11
- GET ON AND GET OFF MACHINE SAFELY 11
- STARTING THE ENGINE 11
  - Key Switch 13
- STOPPING THE ENGINE 14
  - Engine Stop Lever (Inside the Hood) 14
- CHECK DURING OPERATING 14
  - Immediately Stop the Engine if: 14
  - Easy Checker (TM) 14
- LCD MONITOR 15
  - Fuel Gauge 15
  - Coolant Temperature Gauge 16
  - Hourmeter 16
  - Battery Voltage Meter 16
  - Service Code Display 17
  - Overheat Alarm 17
  - Fuel Gauge, Warning Lamp and Fuel Valve 17
- COLD WEATHER STARTING 18
- WARMING UP 18
  - Warm-up and Transmission Oil in the Low Temperature Range 18
- JUMP STARTING 19

OPERATING THE MACHINE 20
- OPERATING NEW MACHINE 20
  - Changing Lubricating Oil for New Machines 20
  - Engine Break-in 20
  - Machine Break-in 20
- OPERATING FOLDABLE ROPS 21
  - To Fold the ROPS 21
  - To Raise the ROPS to Upright Position 22
  - Adjustment of Foldable ROPS 22

https://truckmanualshub.com/

ENGLISH

STARTING 23
Operator's Seat 23
Seat Belt 24
Hydraulic Lift Control Pedal 24
Throttle Lever 24
Parking Brake Pedal 25
Motion Control Lever 25
STOPPING 28
FIXING FRONT AXLE 28
OSCILLATING FRONT AXLE 28
PARKING 29
TRANSPORTING 29
OPTION 30

OPERATING THE MOWER 31
MAKING THE MOST OF YOUR MOWER 31
ADJUSTING CUTTING HEIGHT 31
OPERATING MOWER 34
PTO Lever 34
Starting 34
TREATMENT OF MOWER DECK INSIDE SKID 35
Removing Skids 35
PREVENTING GRASS CLIPPINGS AND DUST FROM SCATTERING 35
Rubber Plates Installation 35

TIRES AND WHEELS 37
TIRES 37
Inflation Pressure 37
WHEELS 37
Remove and Install Front Caster Wheels 38

PERIODIC SERVICE 39
HOW TO OPEN THE HOOD, FRONT COVER & STEP 39
Hood 39
Front Cover 39
Step 39
HOW TO RAISE THE OPERATOR'S SEAT 40
HOW TO TILT UP THE MACHINE 41
HOW TO OPEN THE LEVER GUIDE 42
LIFT-UP POINT 43
Front side: 43
Rear side: 43
DAILY CHECK 44
LUBRICANTS, FUEL AND COOLANT 45
Checking Engine Oil Level 47
Checking Amount of Fuel and Refueling 47
Checking Transmission Fluid Level 48
Checking Coolant Level 48
Checking and Cleaning Radiator Screen and Hood Screen 49
Checking Tire Pressure 50
Inflation Pressure 50
Lubricating All Grease Fittings 50

https://truckmanualshub.com/

MAINTENANCE 51
SERVICE INTERVALS 51
PERIODIC SERVICE CHART LABEL 53
EVERY 50 HOURS 54
Checking Engine Start System 54
Checking OPC System 55
Checking Gear Box Oil Level 55
Greasing 56
Oiling 57
EVERY 100 HOURS 58
Cleaning Air Cleaner Primary Element 58
Checking Fuel Filter 58
Adjusting Fan Drive Belt Tension 59
Adjusting Parking Brake 60
Greasing 61
Checking Battery Condition 61
EVERY 150 HOURS 63
Changing Gear Box Oil 63
EVERY 200 HOURS 64
Changing Engine Oil 64
Replacing Engine Oil Filter 64
Replacing Transmission Oil Filter [HST] 65
Adjusting Front Axle Pivot 65
EVERY 400 HOURS 66
Changing Transmission Fluid and Rear Axle Gear Case Oil (RH and LH) 66
Replacing Hydraulic Oil Filter 67
Replacing Fuel Filter 67
EVERY 1000 HOURS or EVERY 1 YEAR 67
Replacing Air Cleaner Primary Element and Secondary Element 67
EVERY 1500 HOURS 68
Checking Fuel Injection Nozzle (Injection Pressure) 68
EVERY 2000 HOURS or EVERY 2 YEARS 68
Flushing Cooling System and Changing Coolant 68
Anti-freeze 69
EVERY 3000 HOURS 70
Checking Injection Pump 70
EVERY 1 YEAR 70
Checking Fuel Lines 70
Checking Radiator Hose and Clamp 70
Checking Hydraulic Hose 71
Checking Intake Air Line 71
Checking Engine Breather Hose 71
Checking Mower Gear Box Oil Seal 71
EVERY 4 YEARS 72
Replacing Hydraulic Hose 72
Replacing Fuel Lines 72
Replacing Engine Breather Hose 72
Replacing Radiator Hose 72
Replacing Mower Gear Box Oil-Seal 72
Replacing Intake Air Line 72
SERVICE AS REQUIRED 72

https://truckmanualshub.com/

Replacing Fuses 72
Bleeding Fuel System 72
Checking and Replacing Blade 73
Replacing Mower Belt 74

ADJUSTMENT 75
MOTION CONTROL LEVER 75
HST NEUTRAL 75
MAXIMUM SPEED (FORWARD) 75
MOTION CONTROL LEVER OPERATING FORCE 75
MOTION CONTROL LEVER ALIGNMENT 76
MOWER DECK LEVEL 77
ANTI-SCALP ROLLERS 77
LEVEL MOWER DECK (Side-to-Side) 78
LEVEL MOWER DECK (Front-to-Rear) 79
GENERAL TORQUE SPECIFICATION 81
TIGHTENING TORQUE CHART 82

STORAGE 83
MACHINE STORAGE 83
REMOVING THE MACHINE FROM STORAGE 83

TROUBLESHOOTING 84
ENGINE TROUBLESHOOTING 84
POWER TRAIN TROUBLESHOOTING 85
BATTERY TROUBLESHOOTING 86
MACHINE TROUBLESHOOTING 87
MOWER TROUBLESHOOTING 88

INDEX 90

https://truckmanualshub.com/

SAFE OPERATION

Careful operation is your best insurance against an accident. The owner/user can prevent and is responsible for accidents or injuries occurring to themselves, other people or property. Read and understand this manual carefully before operating the machine. All operators, no matter how much experience they may have had, must read this and other related manuals before operating the machine or any implement attached to it. It is the owner's obligation to instruct all operators in safe operation.
If the operator(s) or mechanic(s) cannot read English it is the owner's responsibility to explain this material to them.
This mowing machine is capable of amputating hands and feet and throwing objects. Failure to observe the following safety instructions could result in serious injury or death.

1. BEFORE OPERATING

1. The ZERO TURN MOWING MACHINE has different steering characteristics than other machines with a steering wheel and does not have a service brake pedal (but, has a parking brake lock pedal that can be used to stop the machine in an emergency. Normal slowing down and stopping is done with the motion control levers.). Read and understand the operators manual before operating the machine. Practice operating machine at low engine speed without mower engaged in an unobstructed area.
2. Know your equipment and its limitations. Read all instructions in this manual before attempting to start and operate the machine.
3. Pay special attention to the danger, warning and caution labels on the machine itself.
4. The ROPS is an integral and effective safety device.
   KUBOTA recommends the use of a Roll Over Protective Structures (ROPS) and seat belt in almost all applications. This combination will reduce the risk of serious injury or death, should the machine be upset.
   The machine is equipped with a Foldable ROPS, which may be temporarily folded down only when absolutely necessary for areas with height constraints. There is no operator protection provided by the ROPS in the folded position. For operator safety you must set the ROPS in the upright and locked position and put on the seat belt for all other operations.
   DO NOT remove the ROPS.
   If the ROPS is loosened or removed for any reason, make sure that all parts are reinstalled correctly before operating the machine.
   Never modify or repair a ROPS because welding, bending, drilling, grinding, or cutting may weaken the structure.
   If any structural member of the ROPS is damaged, replace the entire structure at your local KUBOTA Dealer. Any alterations to a ROPS must be approved by the manufacturer.
   Check the area to be mowed and never fold down a folding ROPS in areas where there are slopes, drop offs or water.
   Check carefully for overhead clearances (i.e. branches, doorways, electrical wires) before driving under any objects and do not contact them.
   Keep the ROPS in safe operating condition by periodically thoroughly inspecting for damage and keeping all mounting fasteners tight.

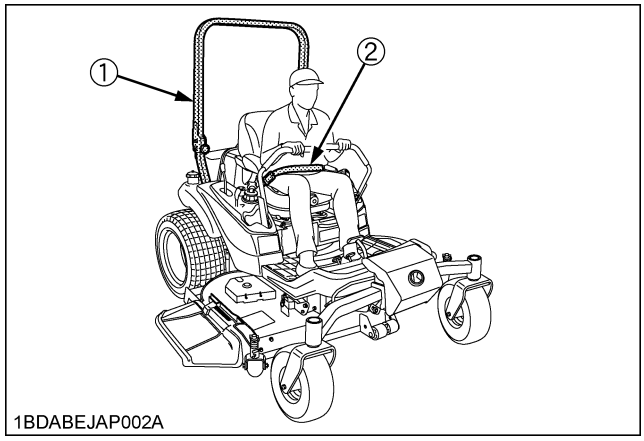

(1) ROPS
(2) Seat belt

https://truckmanualshub.com/

5. Always use the seat belt when the ROPS is upright. Do not use the seat belt if the ROPS is down or if there is no ROPS. Check the seat belt regularly and replace if frayed or damaged. Be certain that the seat belt can be released quickly in the event of an emergency.
6. Do not operate the machine or any attachments while under the influence of alcohol, medication, controlled substances or when fatigued.
7. Do not wear loose, torn, or bulky clothing around machine. The clothing may catch on moving parts or controls, leading to the risk of accident. Wear and use any additional safety items such as hard hat, safety boots or shoes, eye and hearing protection, gloves, etc., as appropriate or required.
8. Do not wear radio or music headphones while operating the machine.
   Safe operation requires your full attention.
9. Carefully check the vicinity before operating machine or any implement attached to it. Clear the work area of objects (wires, rocks, etc.) that might be picked up and thrown. Check for overhead clearance which may interfere with a grass catcher.
10. Check brakes and other mechanical parts for correct adjustment and wear. Replace worn or damaged parts promptly. Check the tightness of all nuts and bolts regularly. (For further details, see "PERIODIC SERVICE" and "ADJUSTMENT" section.)
11. Keep all shields and guards in place. Replace any that are damaged or missing. Do not operate unless they are functioning properly.
12. Before allowing other people to use your machine, explain how to operate and have them read this manual before operation.
13. Do not allow any bystanders around or near machine during operation.
14. Do not allow passengers, children or non-qualified operators on the machine at any time. The operator must remain in the machine seat throughout operation.
15. In addition to the design and configuration of equipment, hazard control and accident prevention are dependent upon the awareness, concern, and prudence of personnel involved in the operation, transport, maintenance of facilities.
16. Evaluate the terrain to determine what accessories and attachments are needed to properly and safely perform the job. Keep the machine and attachments in good operating condition and keep safety devices in place and in proper working condition. Do not operate unless they are functioning properly.
17. Do not modify the machine. Unauthorized modification may affect the function of the machine, which may result in personal injury.
18. Use only implements recommended by KUBOTA. Use proper ballast to front or rear of machine to reduce the risk of upsets. Follow the "SAFE OPERATION" procedures, specified in the manuals with equipment.
19. Keep your machine clean. Accumulations of dirt, grease, and trash can contribute to fires and lead to personal injury.
20. The exhaust gas from the muffler is very hot. To prevent fire, do not expose dry grass, mowed grass, oil and any other combustible materials to exhaust gas. Use a spark arrester where required. Also keep the engine and muffler clean all the time.

2. OPERATING

◆ Starting

1. Always sit in the operator's seat when starting engine or operating levers or controls.
2. Before starting the engine make sure that the motion control levers are in neutral lock, the parking brake is applied, and Power Take Off (PTO) is disengaged (OFF).
3. Do not start engine by shorting across starter terminals. The machine may start in gear and move if normal starting circuitry is bypassed.
4. Do not operate or idle engine in a non-ventilated area. Carbon monoxide gas is colorless, odorless, and deadly.
5. Do not start engine while tilting deck.

◆ Working

1. Do not turn sharply when driving at high speed.
2. To avoid tip over, slow down when turning on uneven terrain or before stopping.
3. Do not operate near ditches, holes, embankments, or other terrain, which may collapse under the machine weight. The risk of machine tip over increases when the ground is loose or wet.
4. Park the machine on a firm and level surface.
5. Watch where you are going at all times. Watch for and avoid obstacles. Be alert at curbs, shrubs, near trees, and other obstructions and hidden hazards. Obstacles can damage machine (fuel hoses, wire harness etc.).
6. Know what is behind you before backing up. Look to the rear before and when backing. Do not mow while in reverse unless absolutely necessary and make sure the area immediately behind you is clear of obstructions or holes and small children. Use extra caution when machine is equipped with Grass Catcher. Your view to the rear is restricted.
7. When working in groups, always let others know what you are doing ahead of time.
8. Do not drive machine on streets or highways. Watch for traffic when you cross roads or operate near roads.
9. Be aware of the mower discharge direction and do not point it at anyone.
   Never operate with the discharge deflector raised, removed or altered, unless using a grass catcher.

https://truckmanualshub.com/

10. When using any attachments, never direct discharge material toward bystanders. Do not allow anyone and pets near the attachments while in operation.
    Do not mow when bystanders are present in the mowing area.
11. To reduce fire hazards, keep the engine exhaust area free of grass or leaves.
12. Be sure rotating blades and engine are stopped and the key is removed before placing hands or feet near blades and cleaning blockages or unclogging chute.
13. Keep hands and feet away from the cutting units. Shut the engine off and wait for all movement to stop before removing grass catcher or unclogging chute.
14. Always inspect the mower for damage after striking a foreign object. Repair or replace any damaged parts before restarting.
15. Operate during daylight or in bright artificial light.
16. If the machine starts to vibrate abnormally, disengage the drive to the attachments, stop the engine and remove the key. Then check the machine immediately.
17. Do not operate the machine when there is a possibility of lightning. Even if the machine is equipped with a cabin, the operator is not protected from lightning.
18. Never raise the deck with the blades running.
    Stop blades if not mowing.

◆ Children

Tragic accidents can occur if the operator is not alert to the presence of children. Children are attracted to the machine and mowing activity.

Never assume that children will remain where you last saw them.

1. Keep children out of the mowing area and under the watchful care of another responsible adult.
2. Be alert and turn machine off if children enter the area.
3. Before and when backing, look behind and down for small children.
4. Never carry children. They may fall off and be seriously injured or interfere with safe machine operation.
5. Never allow children to operate the machine, even under adult supervision. Local regulation can restrict the age of the operator.
6. Use extra care when approaching blind corners, shrubs, trees, or other obstructions that might hide children from sight.
7. Do not mow in reverse unless it is absolutely necessary.

◆ Operators, age 60 years and above

Data indicates that operators, age 60 years and above, are involved in a large percentage of machine-related injuries. These operators must evaluate their ability to operate the machine safely enough to protect themselves and others from serious injury.

◆ Pulling loads

Use extra care when pulling loads to reduce the risk of serious personal injury or death due to a machine tip-over.

a) Pull only from the hitch. Never attach loads to the axle housing or any other point above hitch.
b) Limit loads to those you can safely control.
c) Do not turn sharply.
d) Use care when backing.
e) Use front ballast or wheel weights when suggested in this Operator's Manual.

- Stopping distance increases with speed and weight of towed load. Travel slowly and allow extra time and distance to stop.
- Never allow children or others in or on towed equipment.
- Use additional caution when turning or operating under adverse surface conditions.

◆ Operation on slopes

Slopes are major factor related to loss-of-control and tip-over accidents, which can result in severe injury or death. All slopes require extra caution.

If you cannot back up the slope or if you feel uneasy on it, do not mow it.

If the engine stops when operating on a slope apply the parking brake immediately to prevent machine run away.

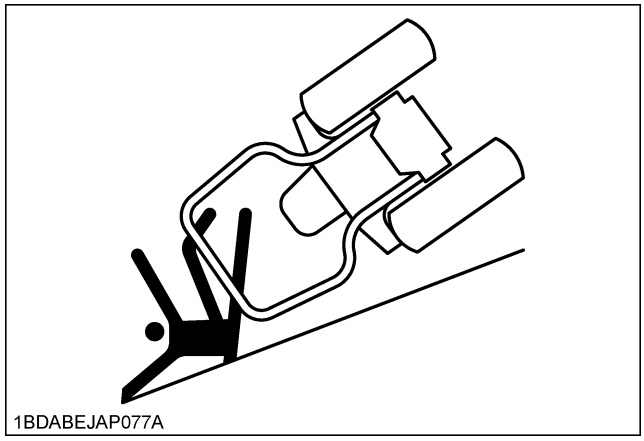
1BDABEJAP077A

DO

1. To avoid tip over, operate across the slopes not up and down. Stay off hills and slopes too steep for safe operation.
2. Remove obstacles such as rocks, tree limbs, etc.

https://truckmanualshub.com/

3. Stay alert for holes in the terrain and other hidden hazards. Keep away from drop-offs. Uneven terrain could overturn the machine. Tall grass can hide obstacles.
4. Follow the manufacturer's recommendations for wheel weight or counterweights to improve stability.
5. Keep all movement on the slopes slow and gradual. Do not make sudden changes in speed or direction.
   If tires lose traction, disengage PTO and proceed slowly straight down the slope.
6. Reduce speed and exercise extreme caution on slopes and in sharp turns to prevent tip-over or loss of control.
7. Use special caution when changing direction on slopes. Slow down, and use extra caution when changing direction on a slope.

DO NOT

1. Do not turn on slopes unless necessary. If necessary, turn uphill slowly and gradually.
2. Do not mow near drop-offs, ditches, or embankments. The mower could suddenly turn over if a wheel is over the edge of cliff or ditch, or if an edge caves in.
3. Do not mow on wet grass. Reduced traction could cause sliding and loss of control.
4. Do not try to stabilize the machine by putting your foot on the ground.
5. Do not use grass catcher on steep slopes.
6. Do not start or stop suddenly on slopes. If tires lose traction, disengage PTO and proceed slowly straight down the slope.
7. Never "freewheel". Do not let the machine travel downhill with motion control levers at neutral lock position or in neutral.
8. Do not operate machine without the mower deck installed.

◆ **Stopping**

1. Park the machine on level ground.
2. Make sure that the machine and all attachments have come to a complete stop before you get off.
3. Before you get off, apply parking brake, place the motion control levers in their neutral lock positions, disengage the PTO, lower all attachments to the ground, turn off the engine, and remove the key.
4. Do not park the machine on dry grass or leaves.

3. USING THE PTO

1. Before installing or using PTO-driven equipment, read the manufacturer's manual and review the safety labels attached to the equipment.
2. Wait until all moving components have completely stopped before connecting, disconnecting, adjusting, cleaning, or servicing any PTO-driven equipment.
3. Use the PTO with KUBOTA approved attachments.

The speed of PTO:
ZD1211 / ZD1211R / ZD1211L / ZD1211RL Without mower: 2450 to 2550 rpm at 3000 engine rpm

4. USING THE LIFT LINK

1. Use lift link only with authorized attachments designed for lift link usage.

5. TRANSPORTING

1. Disengage power to attachment(s) when transporting or not in use.
2. Do not tow this machine. Use a suitable truck or trailer when transporting on public roads.
3. Use extra care when loading or unloading the machine into a trailer or truck. Use full width ramps for loading machine into trailer or truck.
4. This machine is not allowed to be used on public roads.
5. Shut off fuel while storing or transporting.
6. Tie the machine down securely using straps, chains, cable, or ropes.
7. Both front and rear straps should be directed down and outward from the machine.

6. SERVICING AND STORAGE

◆ **Servicing**

1. Before servicing, park the machine on a firm, level surface and apply the parking brake. Remove the key to prevent accidental start-up.
2. Allow the machine time to cool before touching the engine, muffler, radiator, etc.
3. Always stop the engine before refueling. Avoid spills and overfilling. Wipe up spilled fuel immediately.

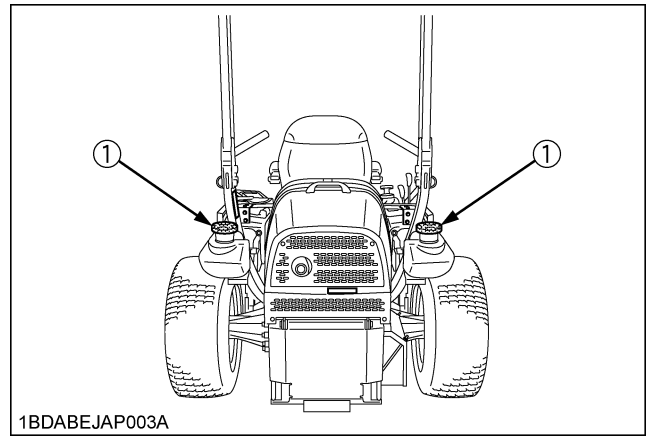

(1) Fuel tank cap

4. Use extra care in handling diesel fuels. They are flammable.

https://truckmanualshub.com/

(1) Use only an approved container.
(2) Do not remove fuel cap or refuel with the engine running. Allow engine to cool before refueling. Do not smoke while refueling or when standing near fuel.
(3) Do not refuel the machine indoors and always clean up spilled fuel or oil.
(4) Do not store the machine or fuel container inside where there is an open flame, such as in a water heater.

5. Do not smoke when working around battery or when refueling. Extinguish all cigarettes, cigars, pipes, and other sources of ignition. Keep all sparks and flames away from battery and fuel tank.

1BDABARAP121A

Never fill containers inside a vehicle or on a truck or trailer bed with a plastic liner.
Always place containers on the ground away from your vehicle before filling.
Remove equipment from the truck or trailer and refuel it on the ground.
If this is not possible, then refuel such equipment with a portable container, rather than from a fuel dispenser nozzle.
Keep the nozzle in contact with the rim of the fuel tank or container opening at all times until fueling is complete.
Do not use a nozzle lock open device.
If fuel is spilled on clothing, change clothing immediately.
Replace fuel cap and tighten securely.
Charge batteries in an open well ventilated area, away from spark and flames.
A battery, especially when charging, will give off hydrogen and oxygen gases, which can explode and cause serious personal injury.
Unplug charger before connecting or disconnecting from battery.

6. Before "jump starting" a dead battery, read and follow all the instructions.

7. Disconnect battery or remove spark plug wire before making any repairs. Disconnect the negative terminal first and the positive last. Reconnect positive first and negative last. Wear protective clothing and use insulated tools.

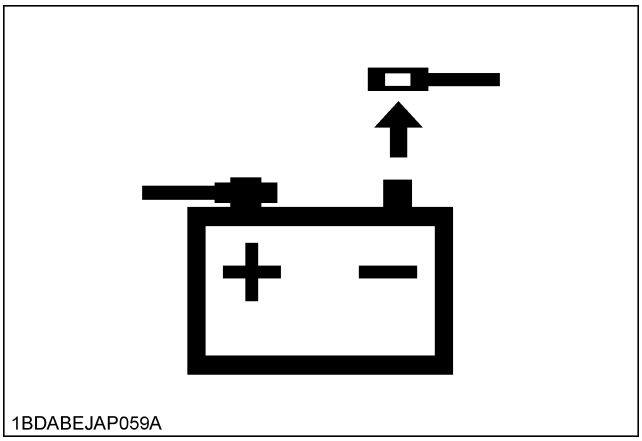
1BDABEJAP059A

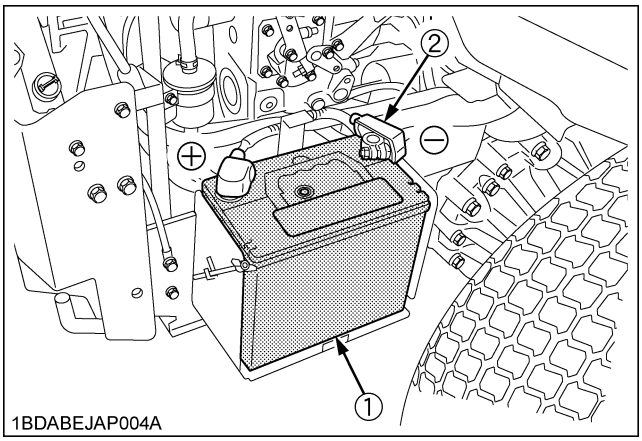

1BDABEJAP004A

(1) Battery *(+): Positive terminal*
(2) Ground cable *(-): Negative terminal*

8. Do not use or charge the refillable type battery if the fluid level is below the LOWER (lower limit level) mark. Otherwise, the battery component parts may prematurely deteriorate, which may shorten the battery's service life or cause an explosion. Check the fluid level regularly and add distilled water as required so that the fluid level is between the UPPER and LOWER levels.

https://truckmanualshub.com/

9. Keep first aid kit and fire extinguisher handy at all times.

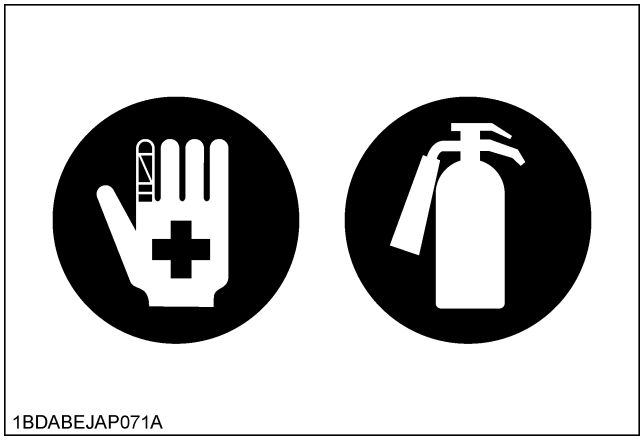
1BDABEJAP071A

10. Do not remove the radiator cap while coolant is hot. When cool, slowly rotate cap to the first stop and allow sufficient time for excess pressure to escape before removing the cap completely. If the machine has a coolant recovery tank, add coolant there instead of the radiator.
11. Do not attempt to mount a tire on a rim unless qualified to do so and all proper safety precautions are followed. Never allow untrained personnel to service machine.
12. Always maintain the correct tire inflation pressure. Do not inflate tires above the recommended pressure shown in the Operator's Manual.

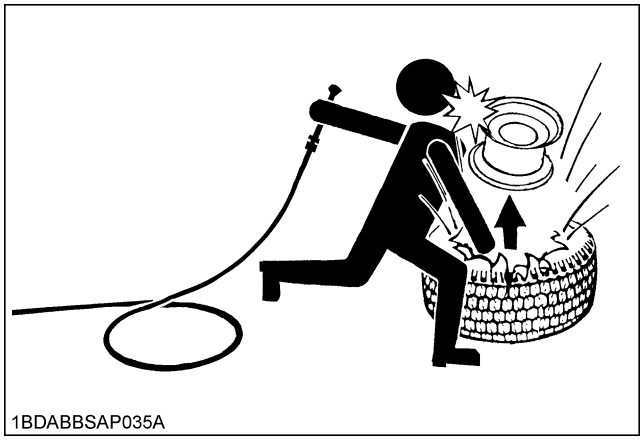
1BDABBSAP035A

13. Provide adequate support when changing wheels.
14. Make sure that wheel nuts and bolts have been tightened to the specified torque.
15. Escaping hydraulic fluid under pressure has sufficient force to penetrate the skin causing serious personal injury. Before disconnecting lines, be sure to relieve all pressure. Before applying pressure to the system, make sure all connections are tight and that lines, pipes, and hoses are not damaged.

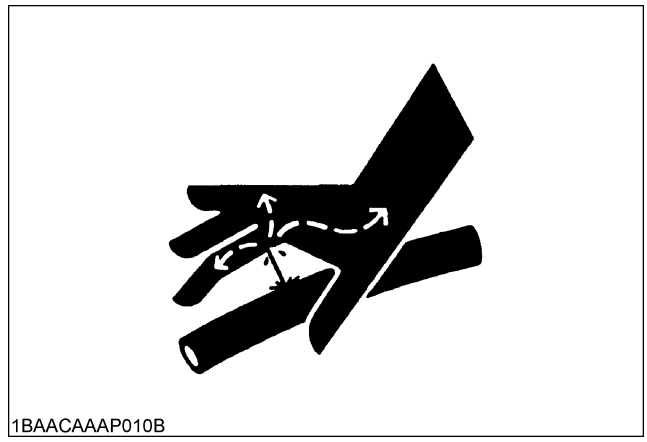
1BAACAAAP010B

16. Fluid escaping from pinholes may be invisible. Use a piece of cardboard or wood to search for suspected leaks: do not use hands. Use safety goggles or other eye protection.
    If you get injured by escaping fluid, see a medical doctor at once. Serious infection or reaction will result if proper medical treatment is not administered immediately. This fluid can produce gangrene or severe allergic reaction.

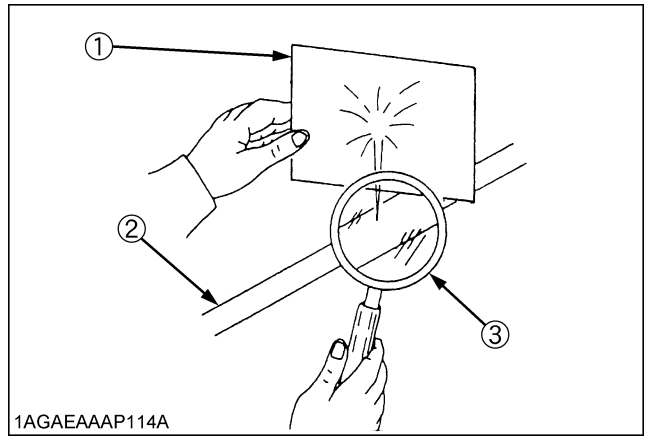

1AGAEAAAP114A

(1) Cardboard
(2) Hydraulic line
(3) Magnifying glass

17. Keep hands and feet away from moving parts. If possible, do not make adjustments or repairs with the engine running.
18. Keep machine free of grass, leaves, or other debris build-up.
19. Do not change the engine governor setting or overspeed the engine.
20. Do not run a machine inside a closed area.
21. Mower blades are sharp and can cut your hands. Wrap the blade(s) or wear gloves, and use extra caution when servicing them. Never straighten or weld blades.
22. Keep nuts and bolts, especially blade attachment bolts, tight and keep equipment in good condition.
23. Never tamper with safety devices. Check their operation for proper function regularly.

https://truckmanualshub.com/

24. Waste products such as used oil, fuel, coolant, brake fluid, and batteries, can harm the environment, people, pets and wildlife. Please dispose of properly.
25. Do not use beverage containers for waste fluids or other products. Someone, particularly children, may drink them by mistake.
26. Securely support machine or any machine elements with stands or suitable blocking before working underneath. For your safety do not rely on hydraulically supported devices, they may leak down, suddenly drop or be accidently lowered.
27. See your local Recycling Center or KUBOTA Dealer to learn how to recycle or get rid of waste products.
    - A Material Safety Data Sheet (MSDS) provides specific details on chemical products; physical and health hazards, safety procedures, and emergency response techniques. The seller of the chemical products used with your machine is responsible for providing the MSDS for that product upon request.

◆ **Storage**

1. Keep the machine and supply of fuel in locked storage and remove the ignition key to prevent children or others from playing or tampering with them.
2. To avoid sparks from an accidental short circuit, always disconnect the battery's ground cable (-) first and reconnect it last.

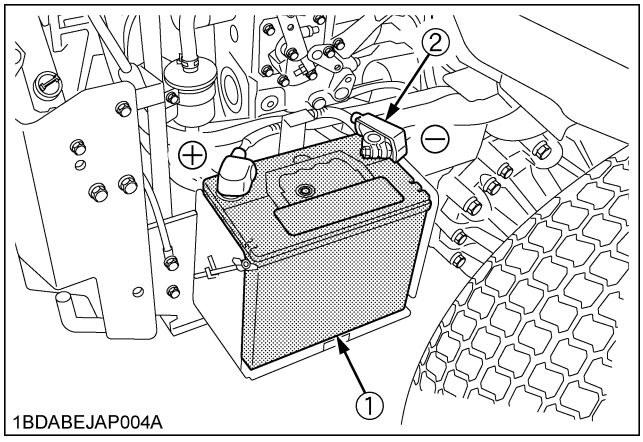

(1) Battery *(+): Positive terminal*
(2) Ground cable *(-): Negative terminal*

3. To avoid the danger of exhaust fume poisoning, do not operate the engine in a closed building without adequate ventilation.
4. To reduce fire hazards, clean the machine thoroughly before storage. Dry grass and leaves around the engine and muffler may ignite.
5. Let engine cool before storing and do not store near flame.
6. Shut off fuel while storing or transporting.

https://truckmanualshub.com/

7. DANGER, WARNING AND CAUTION LABELS

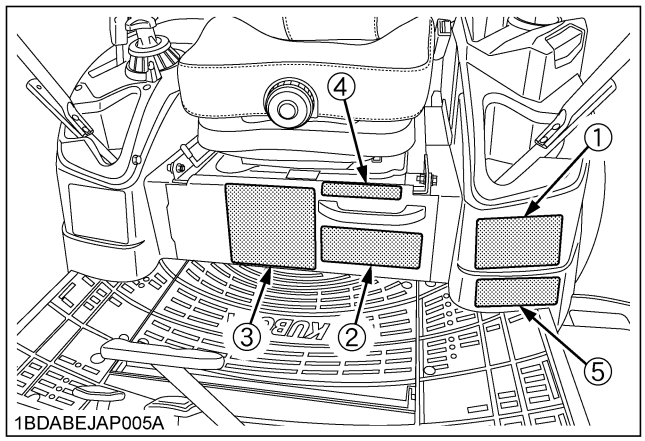

1BDABEJAP005A

(1) Part No. K3181-6585-1

⚠WARNING

TO AVOID SERIOUS INJURY OR DEATH

1. Park the machine on level ground.
2. If necessary to park on an incline.
   ① Stop the machine.
   ② Apply the parking brake.
   ③ Stop the engine.
   If you stop the engine on an incline without applying the parking brake, the machine could move and runaway.
3. If the engine stops suddenly during operation, apply the parking brake immediately to prevent machine runaway.

⚠ADVERTENCIA

PARA EVITAR LESIONES PERSONALES GRAVES O LA MUERTE

1. Estacione la máquina en la tierra del nivel.
2. Si es necesario estacionar en una cuesta,
   ① Apagar la máquina.
   ② Aplique el freno de estacionamiento.
   ③ Luego apague el motor.
   Si apaga el motor en una cuesta sin aplicar el freno de estacionamiento, la máquina puede moverse sin control.
3. Si la máquina se detiene repentinamente durante la operación, enganche el freno de estacionamiento inmediatamente para evitar la pérdida de control.

1BDABCQAP093A

(2) Part No. K3181-6584-1

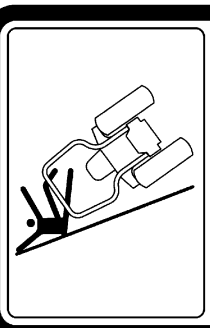

⚠WARNING

TO AVOID SERIOUS INJURY OR DEATH

1. Mow across slopes-Not up and down.
2. Use extreme caution when operating on slopes.
3. Loss of traction may occur when operating on slopes.
4. Drive slowly on slopes.
5. Do not operate on wet slopes.
6. Avoid sudden starts.
7. Execute turns slowly.

⚠ADVERTENCIA

PARA EVITAR LESIONES PERSONALES GRAVES O LA MUERTE

1. Corte el césped de manera transversal en las colinas - No de arriba hacia abajo.
2. Tenga mucho cuidado durante la operación en colinas.
3. Se puede perder tracción durante la operación en colinas.
4. Conduzca lentamente en las colinas.
5. No use la máquina en colinas húmedas.
6. Evite arranques súbitos.
7. Realice las vueltas lentamente.

1BDABCQAP094A

(3) Part No. K3441-6582-1

⚠ WARNING — **TO AVOID SERIOUS INJURY OR DEATH**

1. Read and understand the operator's manual before operation.
2. Do not operate this machine unless you are trained.
3. Before allowing other people to use the machine, have them read the operator's manual.
4. Check the tightness of all nuts and bolts regularly.
5. Before starting the engine, make certain that everyone is at a safe distance from the machine, PTO is disengaged and motion control levers are in neutral lock.
6. Remove objects that could be thrown by the blade.
7. Do not operate the machine when children and/or others are around.
8. Do not carry children or others on the machine at any time.
9. Before dismounting, disengage PTO cluch, lower the implement, place motion control levers in neutral lock position, set the parking brake, stop the engine and remove the key.
10. Keep safety devices (guards, shields and switches) in place, and working.
11. To reduce the fire hazard, keep the exhaust clear of dry grass, dry leaves or other combustible materials.
12. This machine is not for street or highway use.
13. Securely support the machine and implement before working underneath.

⚠ ADVERTENCIA — **PARA EVITAR LESIONES PERSONALES GRAVES O LA MUERTE**

1. Lea y entienda el manual del operador antes de efectuar la operación.
2. No ponga en funcionamiento la máquina a menos que esté capacitado para hacerlo.
3. Antes de permitir que otras personas usen la máquina, indíqueles que lean el manual del operador.
4. Verifique con regularidad el apriete de todas las tuercas y pernos.
5. Antes de arrancar el motor, asegúrese de que todos estén a una distancia segura de la máquina. La toma de fuerza debe estar desactivada y las palancas de control de movimiento bloqueadas en neutro.
6. Retire los objetos que pueden ser lanzados por la cuchilla.
7. No opere la máquina cuando hayan niños u otras personas alrededor.
8. No lleve a niños ni a otras personas en la máquina en ningún momento.
9. Antes de desmontar, desenganche el embrague de la toma de fuerza, baje el implemento, cambie a neutro, aplique el freno de estacionamiento, apague el motor y retire la llave.
10. Mantenga los dispositivos de protección(guardas, barreras de protección e interruptores) en su lugar y en buen estado de funcionamiento.
11. Para reducir los riesgos de incendio, mantenga el escape exento de hierba seca, hojas secas u otros materiales combustibles.
12. Esta máquina no está diseñada para uso en calles ni carreteras.
13. Use un soporte seguro para la máquina y el implemento antes de trabajar debajo de los mismos.

1BDABEJAP065A

1BDABEJAP061A

(4) Part No. K3441-6569-1

⚠ WARNING

When Engine is running, do not open this cover.

⚠ ADVERTENCIA

Nunca abra el capò mientras el motor està en funcionamiento.

1BDABEJAP066A

(5) Part No. K3181-6571-1

⚠WARNING

Operation of this equipment may create sparks that can start fires around dry vegetation.
A spark arrester may be required.
The operator should contact local fire agencies for laws or regulations relating to fire prevention requirements.

⚠ADVERTENCIA

La operación de este equipo puede generar chispas que pueden iniciar incendios en cercanías de vegetación seca.
Podría requerirse un parachispas.
El operador debería contactar a las agencias de bomberos locales para informarse sobre leyes o normas relacionadas con los requisitos de prevención de incendios.

1BDABCQAP1560

https://truckmanualshub.com/

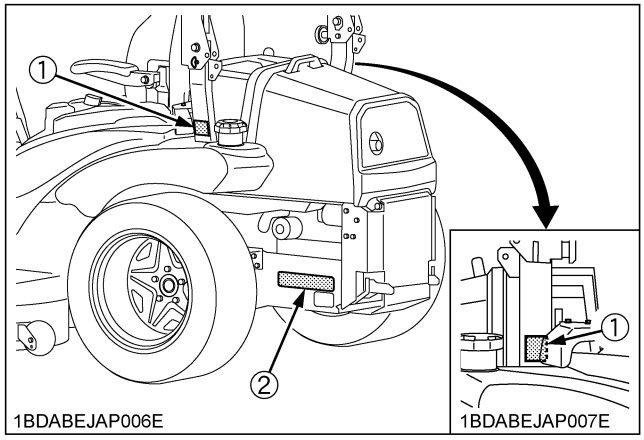

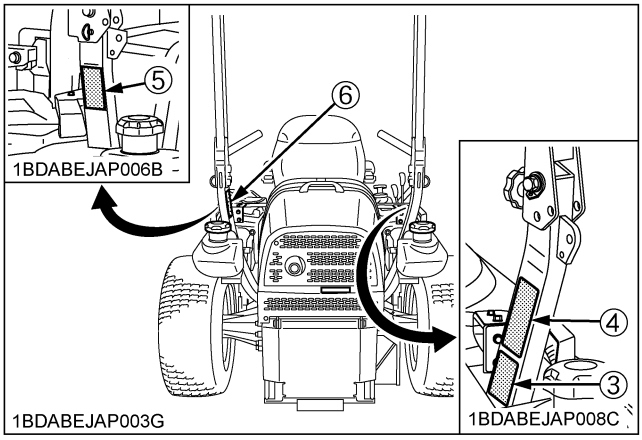

(1) Part No. K3181-6572-1

Diesel fuel only

No fire

1BDABCQAP178A

(2) Part No. K3181-6583-2

1BDABCQAP103A

(3) Part No. K3441-6566-1

1BDABEJAP067A

(4) Part No. K3181-6563-1

1BDABCQAP101A

(5) Part No. K3441-6568-1

1BDABEJAP068A

(6) Part No. K3181-6565-1

1BDABCQAP134A

1BDABEJAP062A

https://truckmanualshub.com/

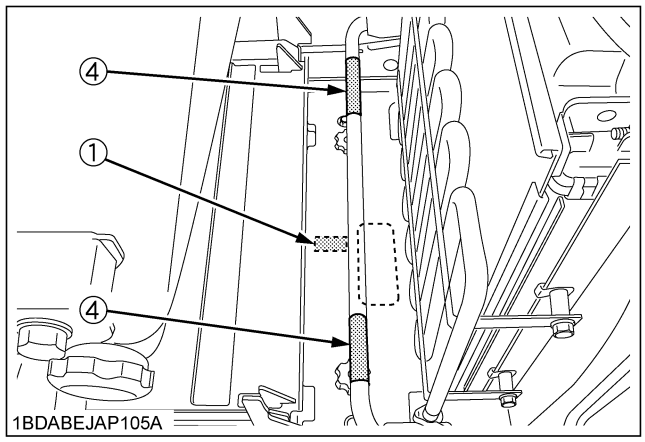

1BDABEJAP105A

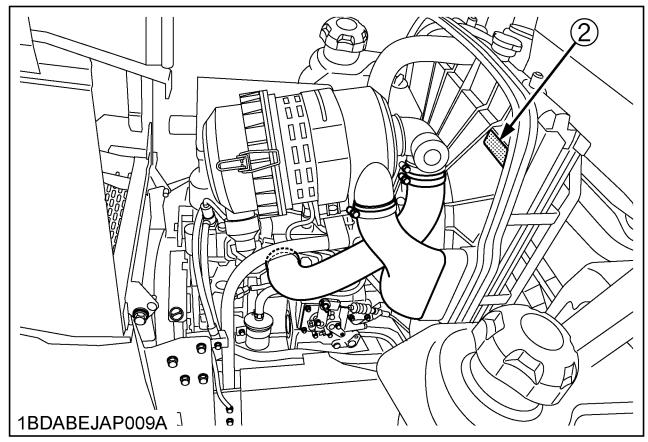

1BDABEJAP009A

(1) Part No. K3111-6591-1
Do not get your hands close to fan belt.

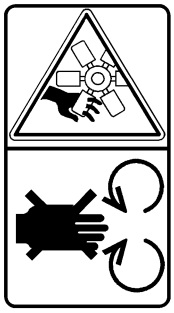
1BDABCQAP107A

(2) Part No. K3181-6586-1
Do not get your hands close to engine fan and fan belt.

1BDABCQAP108A

(4) Part No. K3441-6593-1

1BDABEJAP108A

(3) Part No. K3181-6116-1

1BDAHAGAP127A

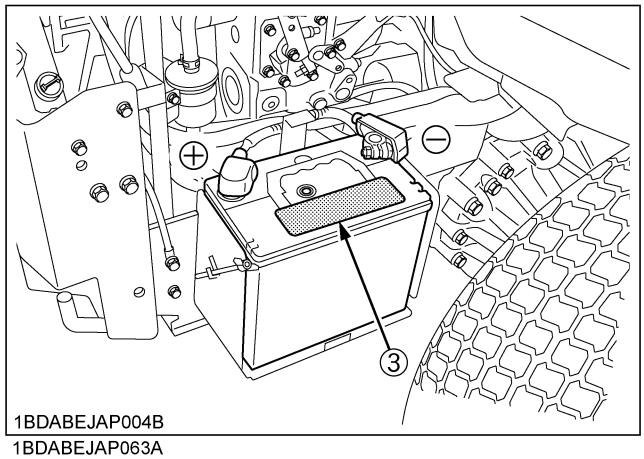

1BDABEJAP004B
1BDABEJAP063A

TO AVOID INJURY FROM BATTERY GASES AND ACIDES

- Keep away cigarettes, flames or sparks.
- Always shield eyes and face from battery.
- Keep out of reach of children.
- Poison causes severe burns.
- Contains sulfuric acid.
- Read and understand operator's manual.
- Danger explosive gases.

1BDAIAEAP0200

https://truckmanualshub.com/

[RCK60P, RCK72P]

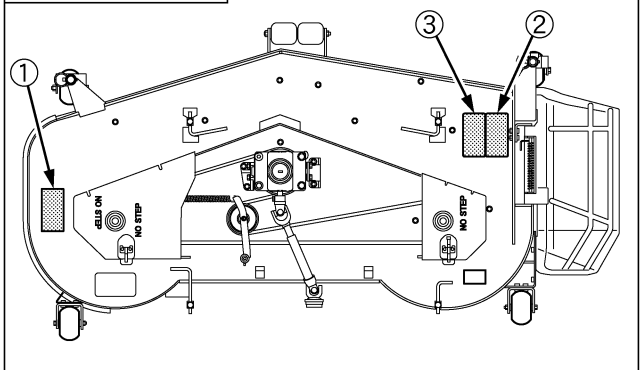

1BDABEJAP010A

[RCK60R, RCK72R]

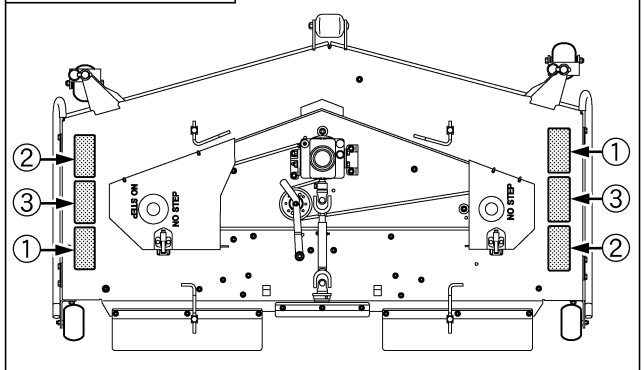

1BDABEJAP070A

(1) Part No. K5681-7312-2

1BDACAEAP015B

(2) Part No. K5681-7311-2

1BDACAEAP016B

(3) Part No. K5681-7310-1

1BDACAEAP017B

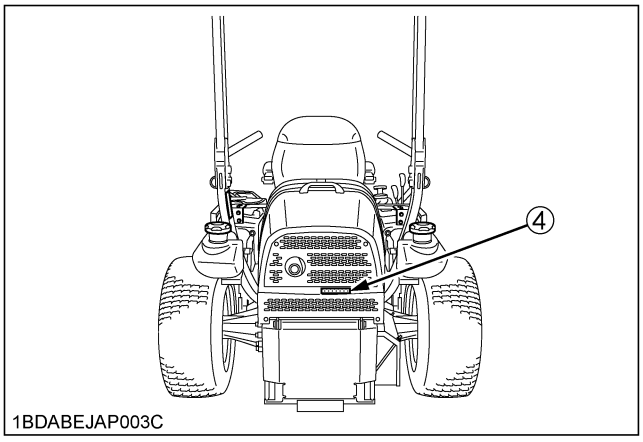

1BDABEJAP003C

1BDABEJAP064A

(4) Part No. K3441-6532-1

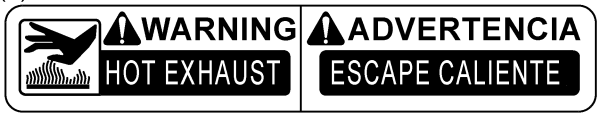

1BDABEJAP069A

8. CARE OF DANGER, WARNING, AND CAUTION LABELS

1. Keep danger, warning and caution labels clean and free from obstructing material.
2. Clean danger, warning and caution labels with soap and water, and dry with a soft cloth.
3. Replace damaged or missing danger, warning and caution labels with new labels from your local KUBOTA Dealer.
4. If a component with danger, warning and caution label(s) affixed is replaced with new part, make sure new label(s) is (are) attached in the same location(s) as the replaced component.
5. Mount new danger, warning and caution labels by applying on a clean dry surface and pressing any bubbles to outside edge.

https://truckmanualshub.com/

https://truckmanualshub.com/

SERVICING OF MACHINE

After reading this manual thoroughly, you will find that you can do some of the regular maintenance yourself. Your dealer is interested in helping you get the best performance from your new machine and wants to help you get the most value from it. When in need of parts or major service, be sure to see your KUBOTA Dealer with the machine, engine and mower serial numbers.

Locate the serial numbers now and record them in the space provided.

	Type	Serial No.
Machine		
ROPS		
Engine		
Mower		
Date of Purchase		
Name of Dealer		
(To be filled in by purchaser)		

◆ **Warranty**

This machine is warranted under the Kubota Limited Express warranty, a copy of which may be obtained from your selling dealer. No warranty shall, however, apply if the machine has not been handled according to the instruction given in the Operator's Manual even it is within the warranty period.

◆ **Scrapping the machine and its procedure**

To put the machine out of service, correctly follow the local rules and regulations of the country or territory where you scrap it. If you have questions, consult your local KUBOTA Dealer.

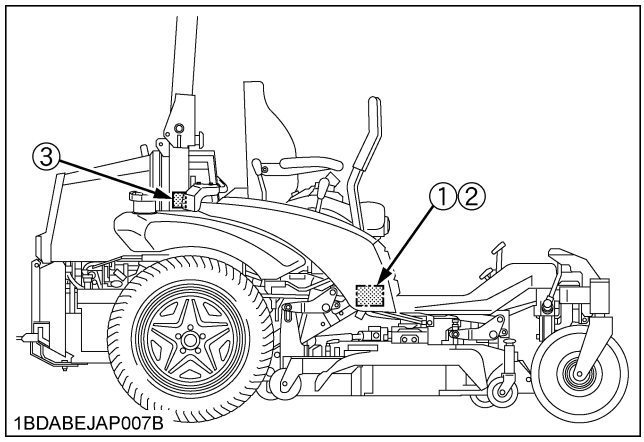

(1) Machine identification plate
(2) Machine serial No.
(3) ROPS serial No.

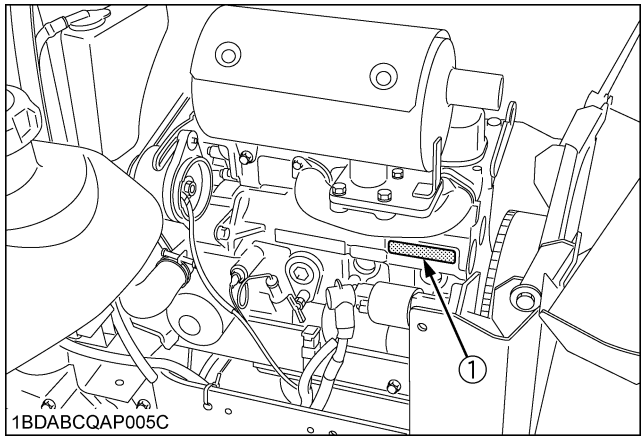

(1) Engine serial No.

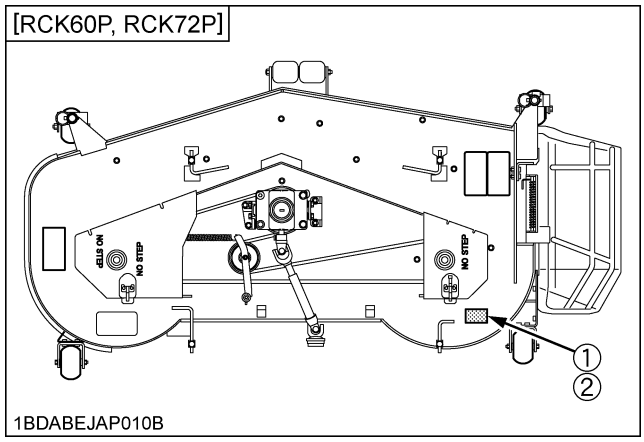

(1) Mower identification plate
(2) Mower serial No.

https://truckmanualshub.com/

[RCK60R, RCK72R]

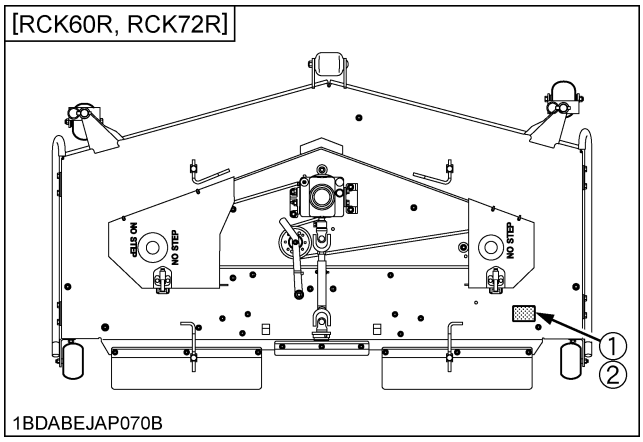

(1) Mower identification plate
(2) Mower serial No.

https://truckmanualshub.com/

SPECIFICATIONS

Model				ZD1211	ZD1211R	ZD1211L	ZD1211RL
Engine	Model			D1105			
	Max. engine power (Gross)		kW (HP)	18.5 (24.8) (*1) (*2)			
	Type			Liquid-cooled			
	Number of cylinders			3			
	Bore and stroke		mm (in.)	78 x 78.4 (3.07 x 3.09)			
	Total displacement		cm^3 (cu. in.)	1123 (68.5)			
	Rated revolution		rpm	3000			
	Low idling revolution		rpm	1400 to 1500			
	Fuel			Diesel fuel No.1 [below -10 ℃(14 ℉)] Diesel fuel No.2 [above -10 ℃(14 ℉)]			
	Starter			Electric starter with battery, glow plug, 12V, 1.2kW			
	Lubrication			Forced lubrication by gear pump			
	Cooling			Liquid with pressurized radiator			
	Battery			SMF51R (12V, RC:80min, CCA:430A)			
Capacities	Fuel tank		L (U.S.gals.)	49 (12.9)			
	Engine crankcase (with filter)		L (U.S.qts.)	3.9 (4.1)			
	Engine coolant		L (U.S.qts.)	3.5 (3.7)			
	Recovery tank		L (U.S.qts.)	0.25 (0.26)			
	Transmission case including Rear axle gear case		L (U.S.qts.)	12.1 (12.8) (*3)			
Dimensions	Overall length		mm (in.)	2260 (89.0)		2380 (93.7)	
	Overall width w/o mower deck		mm (in.)	1510 (59.4)		1540 (60.6)	
	Overall height	With ROPS upright	mm (in.)	2000 (78.7)			
		With ROPS folded	mm (in.)	1640 (64.6)			
	Wheelbase		mm (in.)	1440 (56.7)		1560 (61.4)	
	Min. ground clearance		mm (in.)	135 (5.31) W/60"		135 (5.31) W/72"	
	Tread	Front	mm (in.)	1064 (41.9)		1250 (49.2)	
		Rear	mm (in.)	1210 (47.6)			
Weight (W/O FUEL, W/MOWER DECK)			kg (lbs.)	760 (1676) with 60"	765 (1687) with 60"	790 (1742) with 72"	805 (1775) with 72"

https://truckmanualshub.com/

Model				ZD1211	ZD1211R	ZD1211L	ZD1211RL
Traveling system	Tires	Front		15 x 6.0 - 6 Smooth semi-pneumatic Non flat tire			
		Rear		26 x 12.0 - 16 4PR Turf Low profile tire			
	Traveling speeds	Forward	mph (km/h)	0 to 10.6 (0 to 17.0) (*2)			
		Reverse	mph (km/h)	0 to 5.3 (0 to 8.5) (*2)			
	Steering			2 - Hand levers			
	Transmission			2 - HST w / Gear			
	Parking brake			Wet multi disk / Foot applied, released			
	Min. turning radius		mm (in.)	0 (0)			
PTO	Revolution			1 speed (2540 rpm at 3000 engine rpm)			
	Drive system			Shaft drive, KUBOTA 10 tooth involute spline			
	Clutch type			Wet multi disks			
	PTO brake			Wet single disk			

(Specifications and design subject to change without notice)

NOTE:

*1: Manufacturer's estimate, SAE J1940

*2: At 3000 engine rpm [ZD1211, ZD1211R, ZD1211L, ZD1211RL]

*3: Oil amount when the oil level is at the upper level.

Model				RCK60P-1200Z	RCK60RP-1200Z	RCK72P-1200Z	RCK72RP-1200Z
PRO Commercial Deck (Fabricated deck)	Suitable machine			ZD1211	ZD1211R	ZD1211L	ZD1211RL
	Mounting method			Quick joint, Parallel linkage			
	Adjustment of cutting height			Dial gauge			
	Cutting width		mm (in.)	1524 (60.0)		1829 (72.0)	
	Cutting height		mm (in.)	25 to 127 (1.0 to 5.0)			
	Weight (Approx.)		kg (lbs.)	140 (306)	145 (320)	165 (364)	160 (353)
	Blade spindle speed		r/s (rpm)	55.9 (3355) *1	52.4 (3145) *1	46.7 (2800) *1	
	Blade tip velocity		m/s (fpm)	92 (18050) *1	86 (16900) *1	92 (18050) *1	91 (18000) *1
	Blade length		mm (in.)	523 (20.6)		625 (24.6)	
	Number of blades			3			
	Mower gear box capacity		L (U.S.qts.)	0.5 (0.53)	0.4 (0.42)	0.5 (0.53)	0.4 (0.42)
	Dimensions	Total length	mm (in.)	974 (38.4)	1000 (39.4)	1162 (45.8)	1155 (45.5)
		Total width	mm (in.)	1875 (73.8)	1600 (63.0)	2180 (85.8)	1910 (75.2)
		Total height	mm (in.)	426 (16.8)	420 (16.5)	421 (16.6)	413 (16.3)

*1: Engine Max rpm

https://truckmanualshub.com/

IMPLEMENT LIMITATIONS

The KUBOTA Machine has been thoroughly tested for proper performance with implements sold or approved by KUBOTA. Use with implements below may result in malfunctions or failures of the machine, damage to other property and injury to the operator or others.

- Implements are not sold or approved by KUBOTA
- Implements exceed the maximum specifications listed below, or
- Implements are otherwise unfit for use with the KUBOTA Machine

[Any malfunctions or failures of the machine resulting from use with improper implements are not covered by the warranty.]

UNIT	Maximum loading weight		Implement weight W_1	Maximum total weight
	Front axle Wf	Rear axle Wr		
ZD1211, ZD1211R ZD1211L, ZD1211RL	200 kg (440 lbs.)	920 kg (2028 lbs.)	200 kg (440 lbs.)	1120 kg (2468 lbs.)

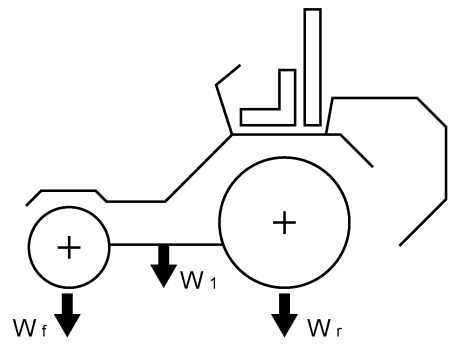

1BDABCQAP132B

OPTION: When using the hitch kit.

IMPORTANT :

- Do not operate on slope when pulling loads.
- Total towed weight must not exceed combined weight of pulling machine, ballast and operator.
- Follow the manufacturer's recommendations for weight limits for towed equipment.

UNIT	Maximum loading weight		Maximum total weight	Tongue weight W_1	Towing capacity W_2
	Front axle Wf	Rear axle Wr			
ZD1211, ZD1211R ZD1211L, ZD1211RL	200 kg (440 lbs.)	630 kg (1388 lbs.)	830 kg (1829 lbs.)	30 kg (66 lbs.)	100 kg (220 lbs.)

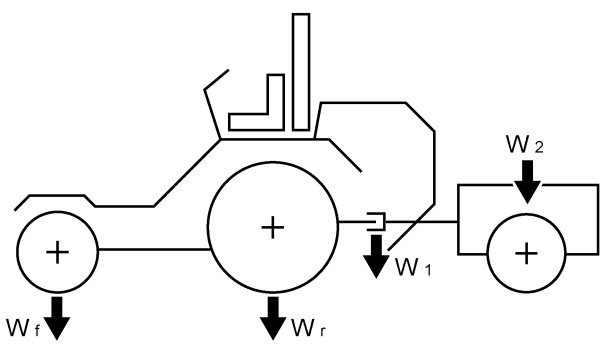

1BDABEJAP011A

https://truckmanualshub.com/

ENGLISH

INSTRUMENT PANEL AND CONTROLS

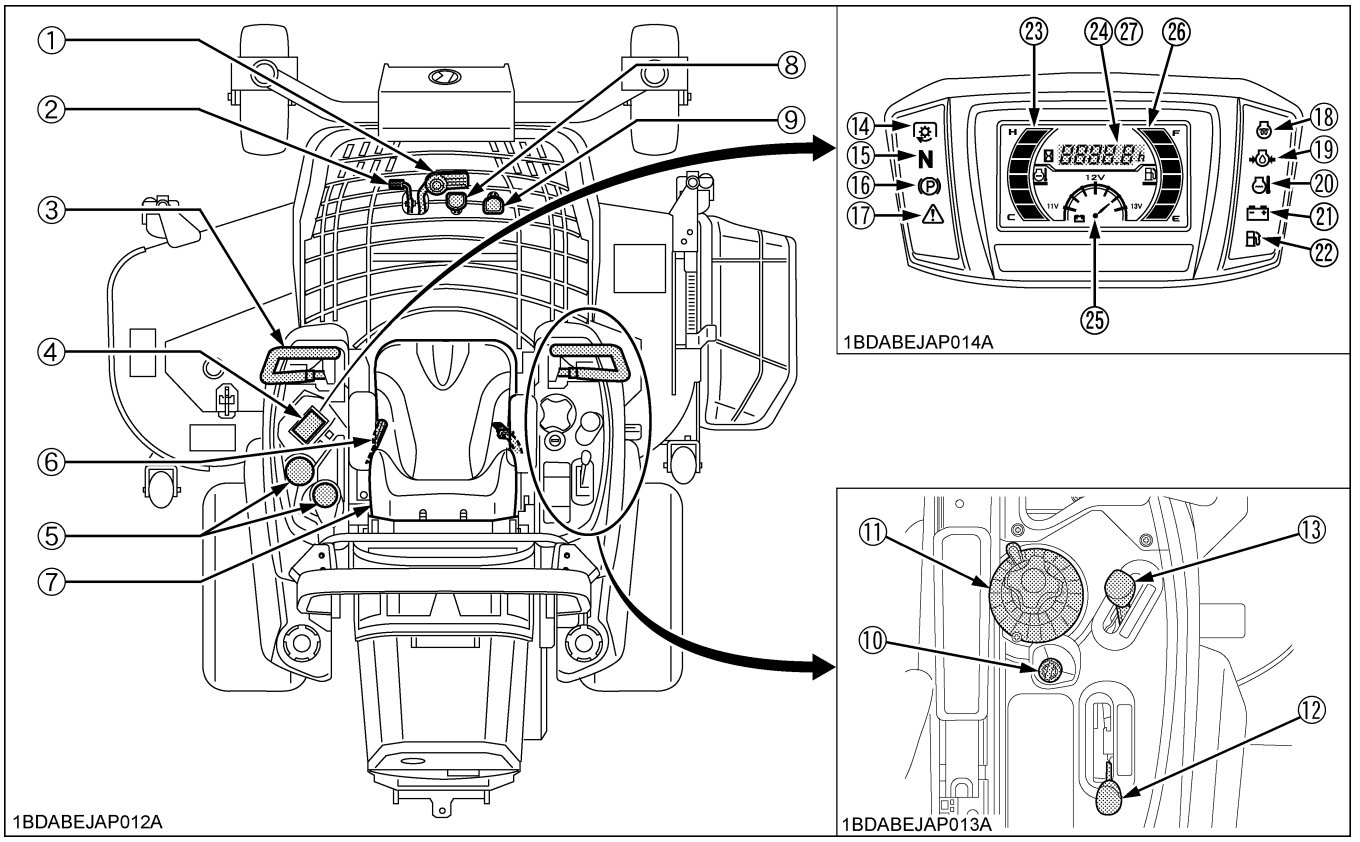

ILLUSTRATED CONTENTS

(1)	*Parking brake pedal*	*11, 25*
(2)	*Parking brake lock pedal*	*11, 25*
(3)	*Motion control lever*	*12, 25*
(4)	*LCD monitor*	*15*
(5)	*Cup holder*	*-*
(6)	*Seat belt*	*24*
(7)	*Operator's seat*	*23*
(8)	*Hydraulic lift control pedal (DOWN)*	*24*
(9)	*Hydraulic lift control pedal (UP)*	*24*
(10)	*Key switch*	*13*
(11)	*Cutting height control dial*	*31*
(12)	*PTO lever*	*12, 34*
(13)	*Throttle lever*	*24*
(14)	*PTO clutch indicator*	*11*

ILLUSTRATED CONTENTS

(15)	*Neutral indicator (Motion control lever)*	*12*
(16)	*Parking brake warning indicator*	*11*
Easy Checker (TM): (17) to (22)		
(17)	*Master system warning indicator*	*14*
(18)	*Glow plug indicator*	*14*
(19)	*Engine oil pressure warning indicator*	*14*
(20)	*Engine overheat warning indicator*	*14*
(21)	*Electrical charge warning indicator*	*14*
(22)	*Fuel level indicator*	*14*
(23)	*Coolant temperature gauge*	*16*
(24)	*Hourmeter*	*16*
(25)	*Battery voltage meter*	*16*
(26)	*Fuel gauge*	*15*
(27)	*Service code display*	*17*

https://truckmanualshub.com/

[RCK60P, RCK72P]

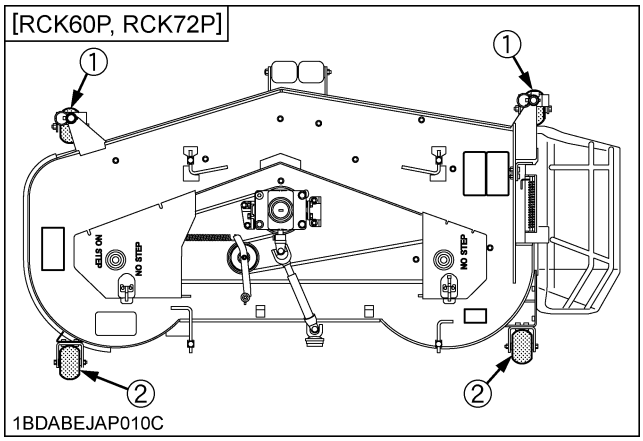

1BDABEJAP010C

ILLUSTRATED CONTENTS

(1) *Anti-scalp roller (Front, swivel type)..... 32*

(2) *Anti-scalp roller (Rear, bolt shift type)*
Rear RH roller is only for RCK72P..... 32

[RCK60R, RCK72R]

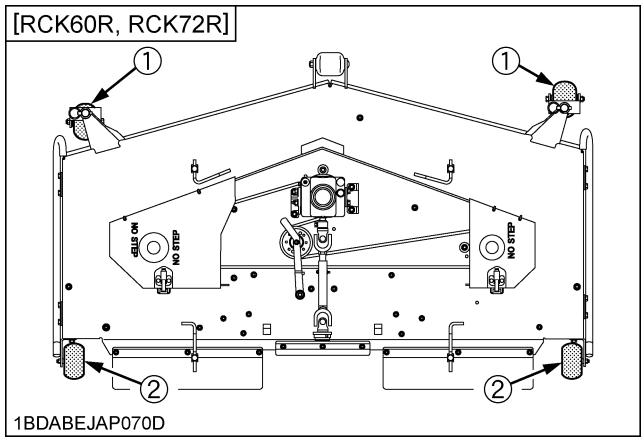

1BDABEJAP070D

ILLUSTRATED CONTENTS

(1) *Anti-scalp roller (Front, swivel type)..... 32*

(2) *Anti-scalp roller (Rear, bolt shift type)..... 32*

https://truckmanualshub.com/

MOWER MOUNTING

MOUNTING THE MOWER DECK

WARNING

To avoid serious injury or death:

- **Park the machine on a firm and level surface.**
- **Apply the parking brake.**
- **Chock the rear tires.**
- **Stop the engine and remove the key.**

1. Before mounting the mower deck, raise the lift links to the full up position.
2. Adjust the cutting height control dial to 1 in. position.
3. Tilt up the machine with the maintenance lift system. (See "HOW TO TILT UP THE MACHINE" in "PERIODIC SERVICE" section.)
4. Place the mower deck at the left side of the machine.

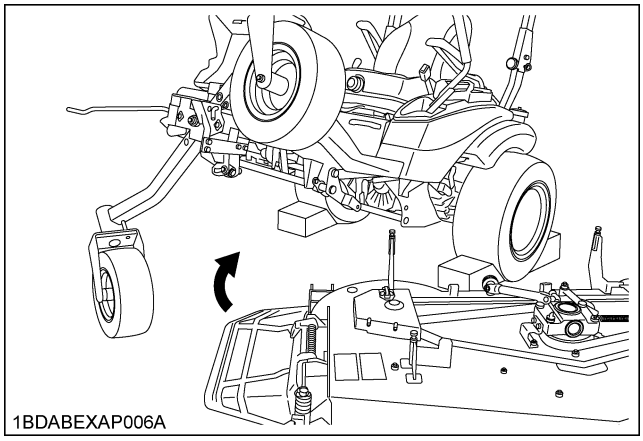

5. Slide the mower deck under the machine, and make sure that the mower gear case is placed properly in the center of the machine, lower the axle from the tilt-up position to the normal position.
6. Place 50 mm (2 in.) wood blocks under each side of the mower deck.
7. Depress the hydraulic lift control pedal (DOWN) and pull down the lift links.
8. Attach the lift links to the mower deck with attaching hardwares.

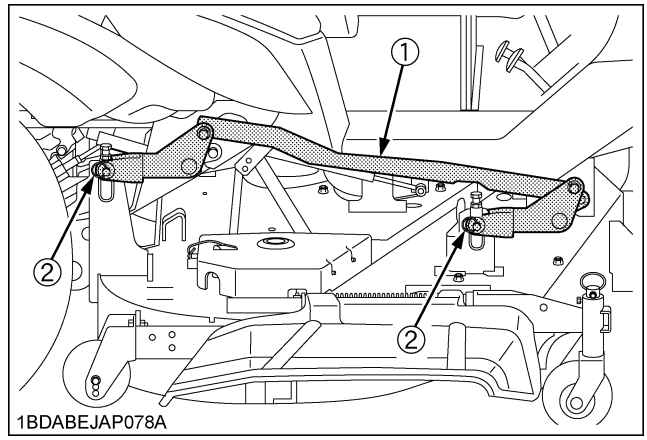

(1) Lift link
(2) Clevis pin, Plain washer, Snap ring

9. Install universal joint.
   Pull back the coupler of the universal joint.
   Push the universal joint onto the PTO shaft until the coupler locks.

IMPORTANT :

- Tug the universal joint backward and forward to make sure it is locked securely.

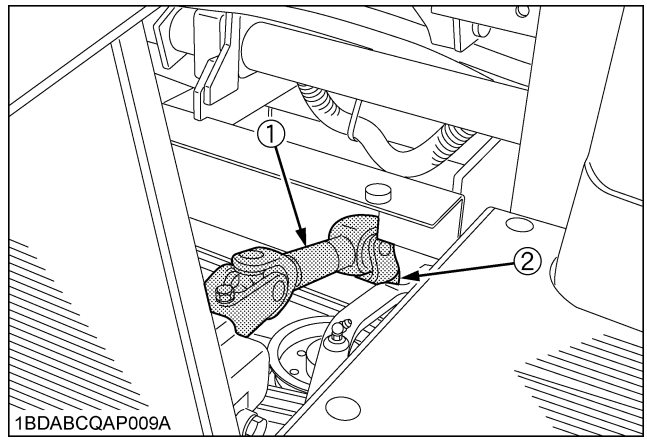

https://truckmanualshub.com/

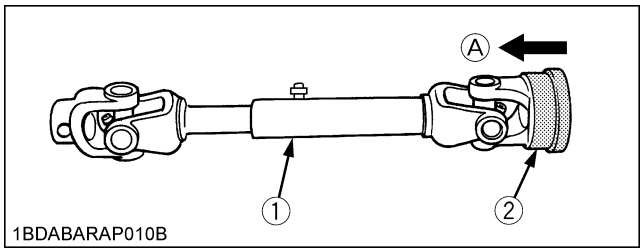

(1) Universal joint *(A) "PULL"*
(2) Coupler

10. After mounting the mower, check the mower level. If necessary, adjust the mower level and anti-scalp rollers.

ADJUSTING THE MOWER

See "OPERATING THE MOWER" and "ADJUSTMENT" section.

DISMOUNTING THE MOWER DECK

For dismounting the mower deck, reverse the above procedures.

INSTALLING PARTS TO THE MOWER

■Installation of Skid

[RCK60R, RCK72R]

Install the skid with 5 flange bolts.

NOTE :
- Right side shown, left side similar

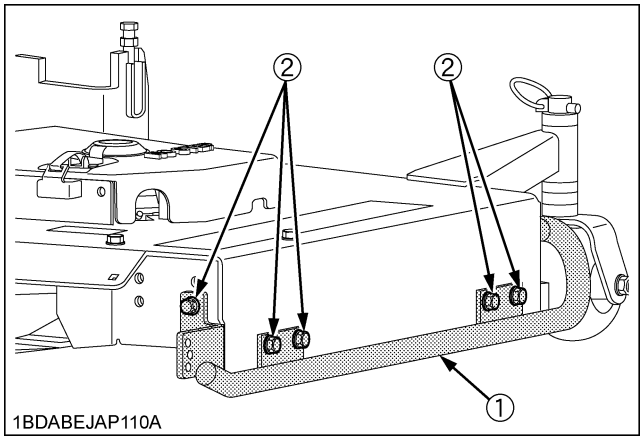

(1) Skid (RH)
(2) Flange bolt (M10)

■Installation of Gauge Wheel

[RCK60P, RCK72P]

Install the gauge wheel to the stay (3L gauge) with gauge wheel boss, sems bolt and locking nut.

IMPORTANT :
- Choose the hole of the stay (3L gauge) by cutting height.
  (See "ADJUSTING CUTTING HEIGHT" in "OPERATING THE MOWER" section.)

NOTE :
- Left side of RCK72P shown, right side of RCK72P and left side of RCK60P similar
- Install the sems bolt from outside.

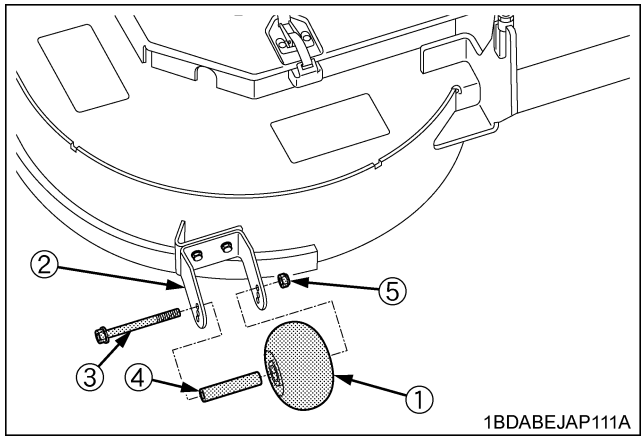

(1) Gauge wheel
(2) Stay (3L gauge)
(3) Sems bolt
(4) Gauge wheel boss
(5) Locking nut

[RCK60R, RCK72R]

Install the gauge wheel with gauge wheel boss, plain washer, sems bolt and locking nut.

IMPORTANT :
- Choose the hole of the skid by cutting height.
  (See "ADJUSTING CUTTING HEIGHT" in "OPERATING THE MOWER" section.)

NOTE :
- Left side of RCK72R shown, right side of RCK72R and both side of RCK60R similar
- Install the sems bolt from inside.

https://truckmanualshub.com/

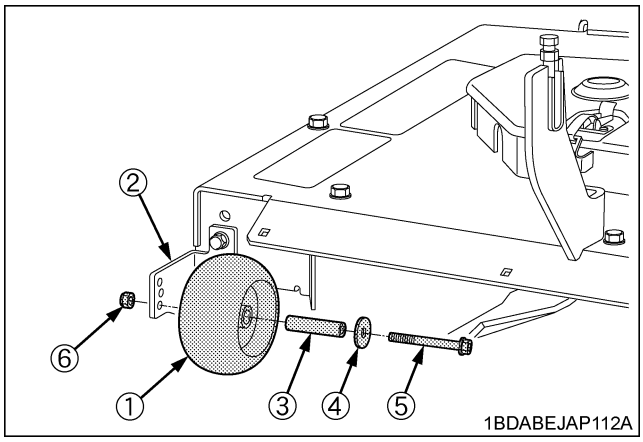

(1) Gauge wheel
(2) Skid (Left)
(3) Gauge wheel boss
(4) Plain washer
(5) Sems bolt
(6) Locking nut

■Installation of Bolt (Adjuster)

1. Install the bolt (adjuster) with the nut.
2. Adjust length (L).
3. Tighten the nut.

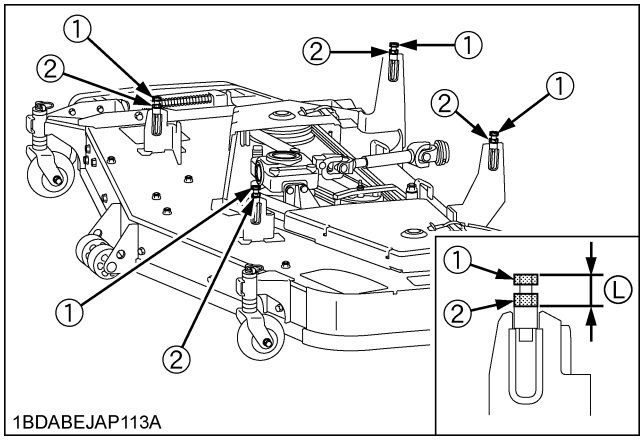

(1) Bolt (Adjuster)
(2) Nut
(L) 25 mm (Reference)

https://truckmanualshub.com/

OPERATING THE ENGINE

WARNING

To avoid serious injury or death:

- **Read and understand "SAFE OPERATION" in the front of this manual.**
- **Read and understand the danger and warning labels located on the machine.**
- **To avoid danger of exhaust fume poisoning, do not operate the engine in a closed building without proper ventilation.**
- **Never start the engine while standing on the ground. Start the engine only from operator's seat.**

GET ON AND GET OFF MACHINE SAFELY

DO NOT step on either side of the mower deck when getting on and getting off the machine. When getting on the machine from either side, step over the mower deck.

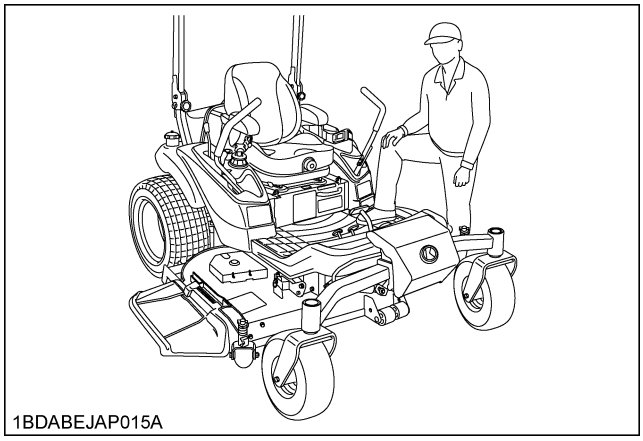

STARTING THE ENGINE

1. **Sit on the operator's seat. Put on the seat belt.**
2. **Apply the parking brake.**

To apply the parking brake:
Depress the parking brake pedal firmly with your right foot and the parking brake lock pedal simultaneously with your left foot. Then release the parking brake pedal while holding the parking brake lock pedal down. Parking brake warning indicator will come ON.

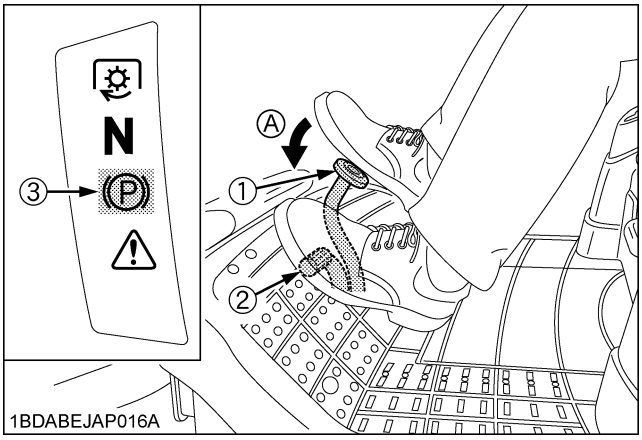

(1) Parking brake pedal
(2) Parking brake lock pedal
(3) Parking brake warning indicator
(A) "DEPRESS"

To release the parking brake:
Depress the brake pedal and release slowly with your right foot without pressing the parking brake lock pedal.

https://truckmanualshub.com/

3. Place the PTO lever in the "DISENGAGED" (OFF) position.

PTO clutch indicator will come OFF.

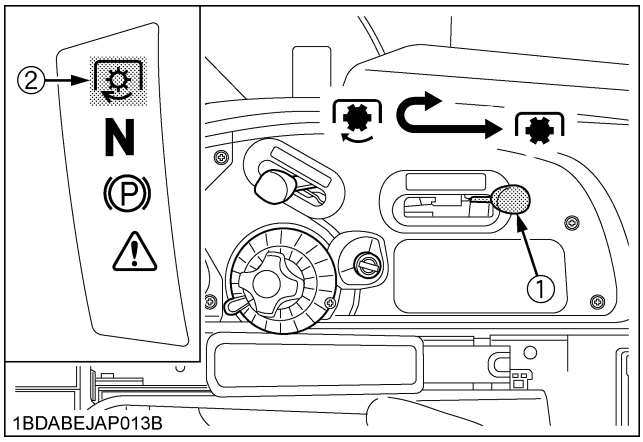

(1) PTO lever — *"ENGAGED" (ON)*
(2) PTO clutch indicator — *"DISENGAGED" (OFF)*

4. Place the motion control levers in the "NEUTRAL LOCK" position.

Neutral indicator will come ON.

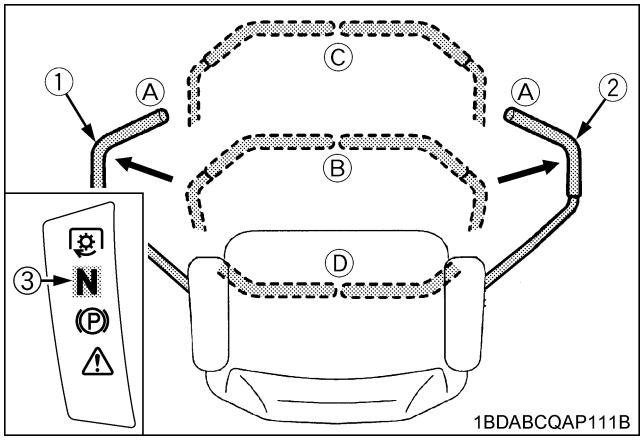

(1) Motion control lever (LH)
(2) Motion control lever (RH)
(3) Neutral indicator
(A) "NEUTRAL LOCK" Position
(B) "NEUTRAL" Position
(C) "FORWARD"
(D) "REVERSE"

5. Set the throttle lever 1/2 way forward.

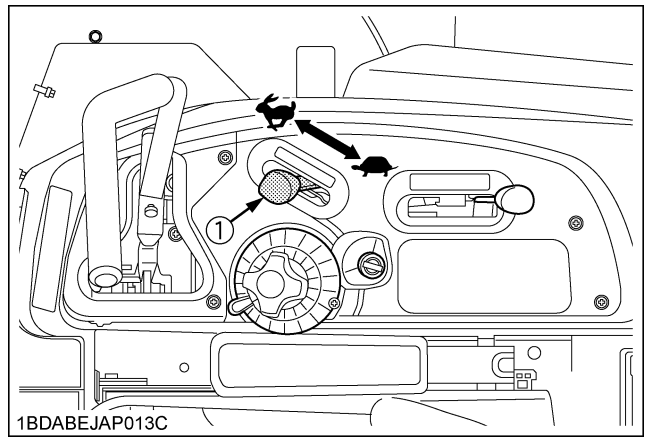

(1) Throttle lever — *"FAST"*, *"SLOW"*

6. Insert the key into the key switch and turn clockwise 1 notch. Make sure the Easy Checker (TM) lights are ON.

IMPORTANT :

- Do not depress the hydraulic lift control pedal.
  When the engine is off, depressing the hydraulic lift control pedal (UP or DOWN) will lower the implement.

https://truckmanualshub.com/

■Key Switch

IMPORTANT :

- Because of the engine start system, the engine may not be started except when the PTO clutch is "DISENGAGED" (OFF), the parking brake lock pedal is applied, motion control levers are in "NEUTRAL LOCK" position and the operator is sitting in the seat.

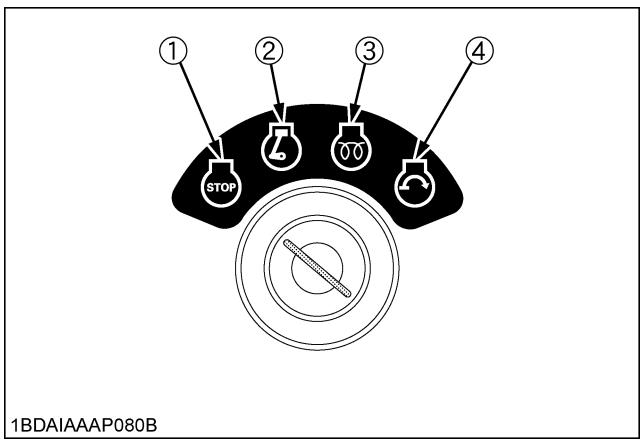

(1)	OFF.....	The position where the key can be inserted into or removed from the key switch. [When the key is turned to this position, the engine shuts off.]
(2)	ON.....	The engine keeps running.
(3)	PREHEAT...	The super glow plug is heated.
(4)	START.....	Apply the parking brake and turn the key switch to this position to start the engine.

7. Turn the key switch clockwise, and hold it for about 5 seconds. (at the "PREHEAT" position)

For the appropriate preheating time, refer to the table below:

Temperature	Preheating Time
Over 0℃ (32℉)	5 sec.
Below 0℃ (32℉)	10 sec.

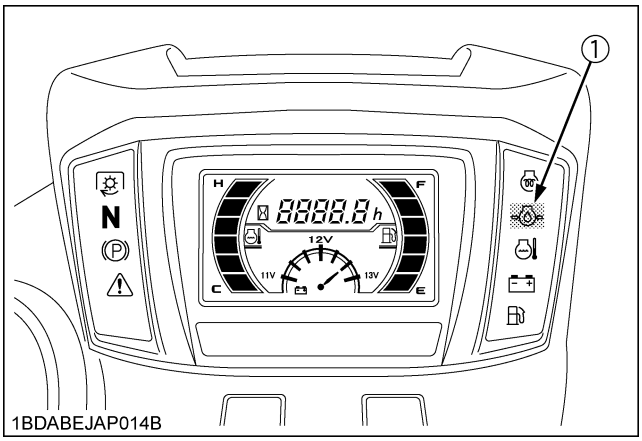

(1) Glow plug indicator

NOTE :

- Glow plug indicator (1) comes on while the engine is being preheated.

8. Turn the key switch to the "START" position and release the key to the "ON" position when the engine starts.

IMPORTANT :

- Do not use starting fluid or ether.
- To protect the battery and the starter, make sure that the starter is not continuously turned for more than 10 seconds.
- Do not turn the key switch while the engine is running.
- When the temperature is below 0℃ (32℉), run the engine at medium speed to warm up the lubricant of the engine and transmission for at least 10 minutes. If the machine is operated before the lubricant is warm enough, the machine life will be shortened.
- Do not operate the machine under full load until it is sufficiently warmed up.
- When the ambient temperature is less than -15℃ (5℉), remove the battery from the machine and store it somewhere warm until next operation.

9. Make sure that the Easy Checker (TM) lights have gone off. If the light is still on, immediately stop the engine and check the remedy following the instruction. (See "CHECK DURING OPERATING" in "OPERATING THE ENGINE" section.)

10. Warm the engine by running at medium speed.

https://truckmanualshub.com/

STOPPING THE ENGINE

1. **After idling the engine, turn the key switch to the "OFF" position.**
2. **Remove the key.**
3. **Do not leave the key switch "ON" (key in the "ON" position) as the battery will discharge when the engine is not running.**
4. **Apply the parking brake.**

■Engine Stop Lever (Inside the Hood)

The engine stops when the key switch is turned "OFF". If the engine does not stop, make sure the motion control levers are in the "NEUTRAL LOCK" position, the PTO lever is "OFF", the mower lowered to the ground and apply the parking brake, then carefully get off the machine. Then open the hood and pull engine stop lever (Red mark) and hold it until the engine stops. Then contact your local KUBOTA Dealer immediately.

WARNING

To avoid serious injury or death:

- **Do not operate the machine until the engine stop system is repaired.**

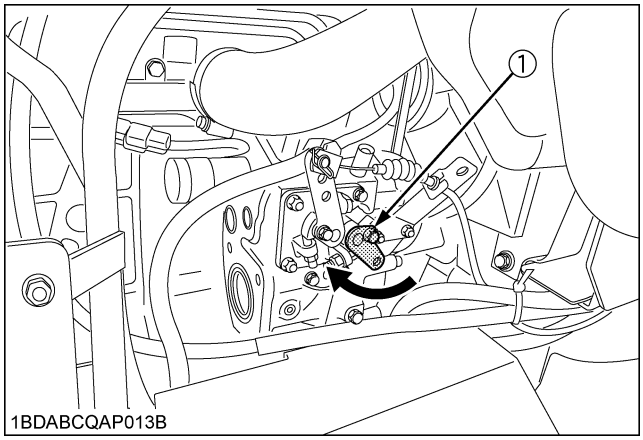

(1) Engine stop lever

CHECK DURING OPERATING

■Immediately Stop the Engine if:

- The engine suddenly slows down or accelerates.
- Unusual noises suddenly occur.
- Exhaust fumes suddenly become discolored.

While driving, make the following checks to see that all the parts are functioning normally.

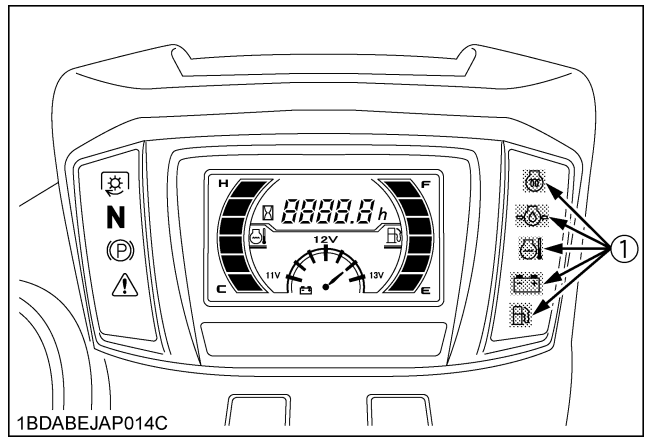

(1) Easy Checker(TM)

■Easy Checker (TM)

If the warning lamps of the Easy Checker(TM) come on during operation, immediately stop the engine, and find the cause as shown below.
Never operate the machine while Easy Checker(TM) lamp is on.

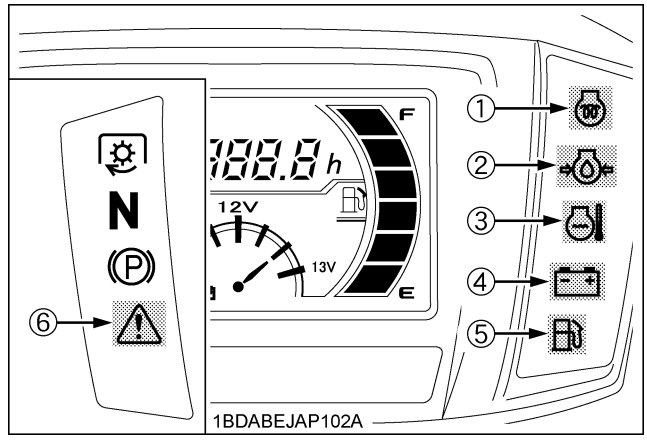

(1) Glow plug Indicator (Pre-heating Indicator)
When the key switch is in the "PREHEAT" position, the glow plug indicator illuminates.

https://truckmanualshub.com/

(2) Engine oil pressure
If the oil pressure in the engine goes below the prescribed level, the warning lamp in the Easy Checker (TM) will come on.
If this should happen during operation, and it does not go off when the engine is accelerated to more than 1000 rpm, check level of engine oil.
(See "Checking Engine Oil Level" in "LUBRICANTS, FUEL AND COOLANT" in "PERIODIC SERVICE" section)

(3) Engine overheat
If the water temperature gauge reads an unusual level and the warning lamp in the Easy Checker(TM) comes on, the engine may be overheated. Check the machine by referring to "TROUBLESHOOTING" section.

(4) Electrical charge
If the alternator is not charging the battery, the warning lamp in the Easy Checker (TM) will come on.
If this should happen during operation, check the electrical charging system or consult your local KUBOTA Dealer.

(5) Fuel level
If the fuel in the tank goes below the prescribed level, the warning lamp in the Easy Checker(TM) will come on.
If this should happen during operation, refuel as soon as possible.
(See "Checking Amount of Fuel and Refueling" in "LUBRICANTS, FUEL AND COOLANT" in "PERIODIC SERVICE" section.)

IMPORTANT :
- When the fuel warning lamp lights up, refuel the tank as soon as possible. If the machine runs out of fuel and stalls, the engine and its components may be damaged.

(6) Master system warning
If trouble should occur at the disconnection of fuel sensor, coolant temperature sensor or LCD monitor malfunction, the indicator flashes as a warning. If the trouble is not corrected by restarting the machine, consult your local KUBOTA Dealer.

NOTE :
- For checking and servicing of your machine, consult your local KUBOTA Dealer for instructions.

LCD MONITOR

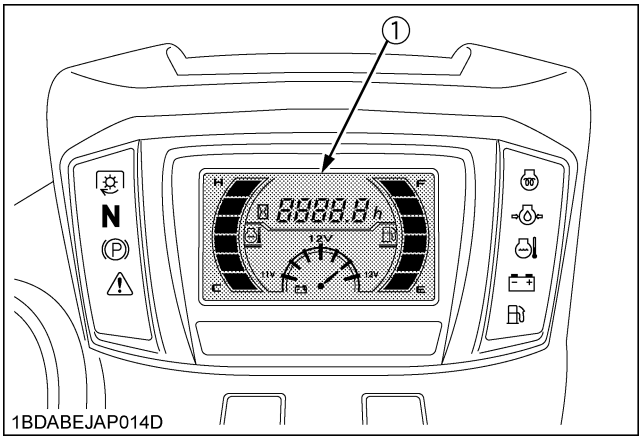

(1) LCD monitor

■Fuel Gauge

When the key switch is on, the fuel gauge indicates the fuel level.
Be careful not to empty the fuel tank. Otherwise air may enter the fuel system.
Should this happen, the system must be bled. (See "Bleeding Fuel System" in "SERVICE AS REQUIRED" in "PERIODIC SERVICE" section.)

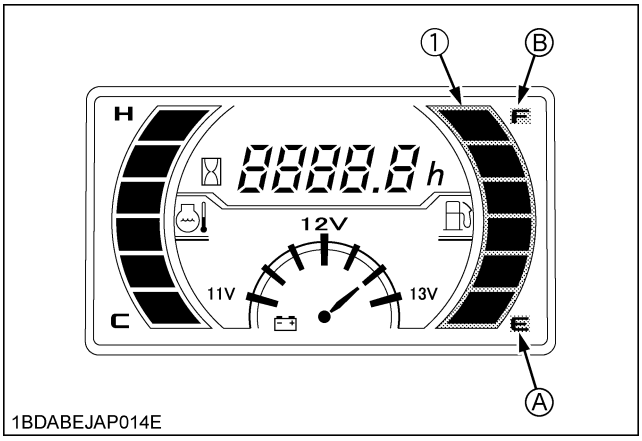

(1) Fuel gauge
(A) "EMPTY"
(B) "FULL"

https://truckmanualshub.com/

ENGLISH

■Coolant Temperature Gauge

WARNING

To avoid serious injury or death:

- **Do not remove radiator cap until coolant temperature is well below its boiling point. Then loosen the cap slightly to relieve any pressure before removing the cap completely.**

1. With the key switch "ON", this gauge indicates the temperature of the coolant. "C" for "cold" and "H" for "hot".
2. If the indicator reaches the "H" position, engine coolant is overheated. Check the machine by referring to "TROUBLESHOOTING" section.

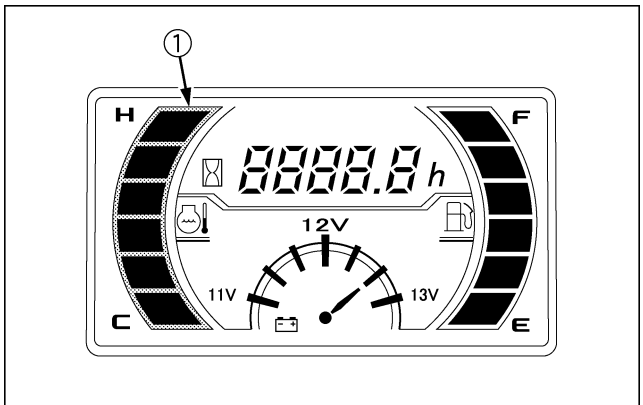

1BDABEJAP014F

(1) Coolant temperature gauge

■Hourmeter

This meter gives readings for the hours the machine has been operated.

The hourmeter indicates in 5 digits the hours the machine has been used; the last digit indicates 1/10 of an hour.

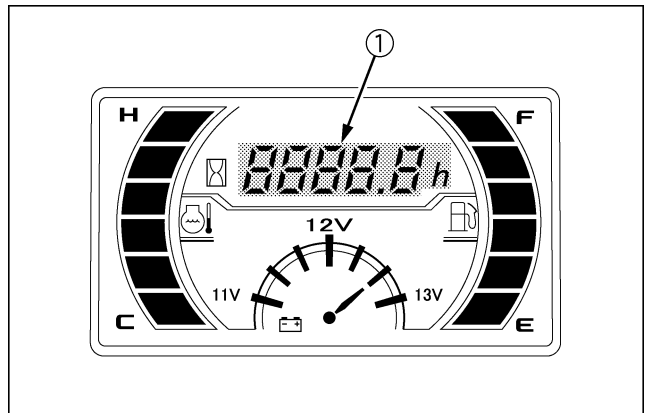

1BDABEJAP014G

(1) Hours used

■Battery Voltage Meter

This meter gives readings for the battery voltage.

Specification: Battery Voltage≧12.0V

If the battery voltage is below 12.0 V, charge the battery.

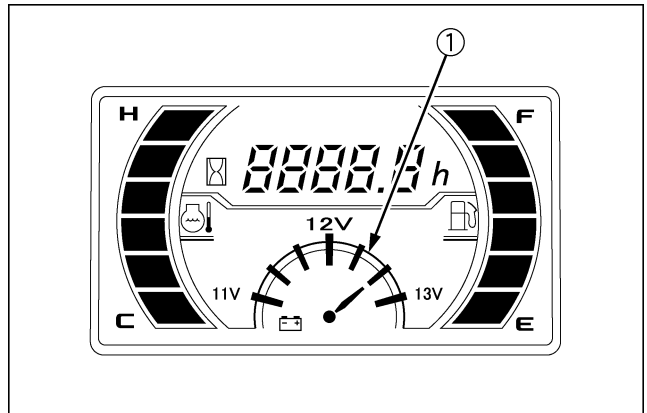

1BDABEJAP014L

(1) Battery voltage meter

https://truckmanualshub.com/

■Service Code Display

The key switch is on, and if the service code ("SER 001" or "SER 002") shown in the figure below is displayed on the LCD monitor, you must do the servicing jobs corresponding to the indication on hour meter (displayed at 10 seconds after that) on the machine. The service code will show at meter hour: 50 hr, 200 hr, 400 hr, 600 hr, 800 hr, 1000 hr....

See "SERVICE INTERVALS" in "MAINTENANCE" section.

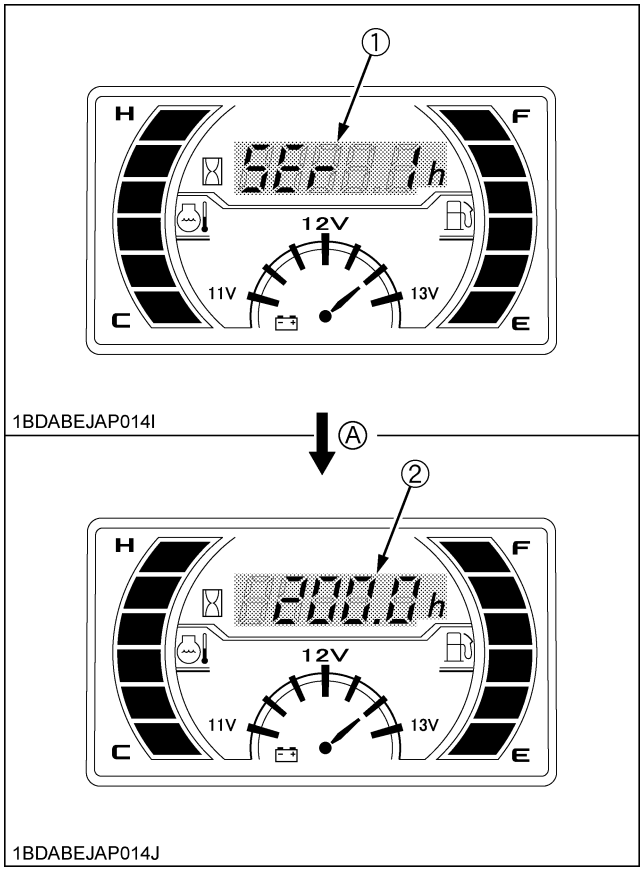

(1) Service code
(2) Hours used
(A) At 10 seconds after the service code has displayed.

■Overheat Alarm

If the temperature of the coolant rises to overheat temperature, the overheat alarm whistles.

Check the machine by referring to "TROUBLE SHOOTING" section.

■Fuel Gauge, Warning Lamp and Fuel Valve

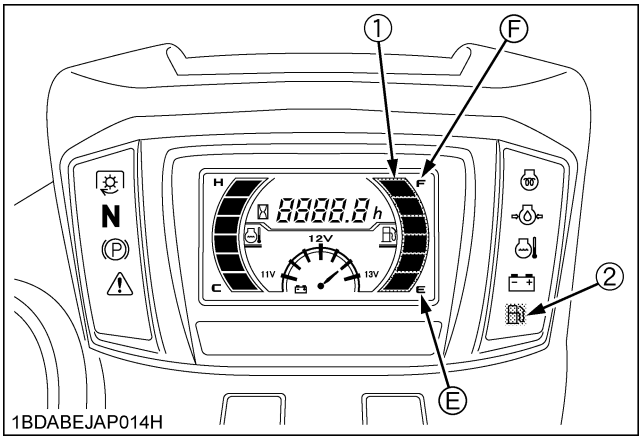

(1) Fuel gauge
(2) Fuel level warning lamp
(E) "EMPTY"
(F) "FULL"

1. The fuel gauge shows the amount of fuel left in the RH tank.
2. Fuel level warning lamp flashes when fuel amount is below 7 L.

IMPORTANT :

- Fill the fuel tank only to bottom of the filler neck.
- Be careful not to empty the fuel tank. Otherwise air may enter the fuel system.
  Should this happen, you must bleed the system. (See "Bleeding Fuel System" in "SERVICE AS REQUIRED" in "PERIODIC SERVICE" section.)
- When refueling, basically fill both fuel tanks full.
- In the case you have a small amount of fuel, if fuel is still in the fuel tank RH, fill the fuel tank LH first.
- The fuel gauge shows the fuel level of fuel tank RH. When the fuel gauge flashes, fill fuel as soon as possible.
- When the fuel gauge flashes, do not fill fuel on a slope. Fuel can absorb air and the engine can stall.
- If the engine stalled with some remaining in the fuel tank RH, close the fuel valve of fuel tank LH and you can operate. (Refer to the following figures.)

https://truckmanualshub.com/

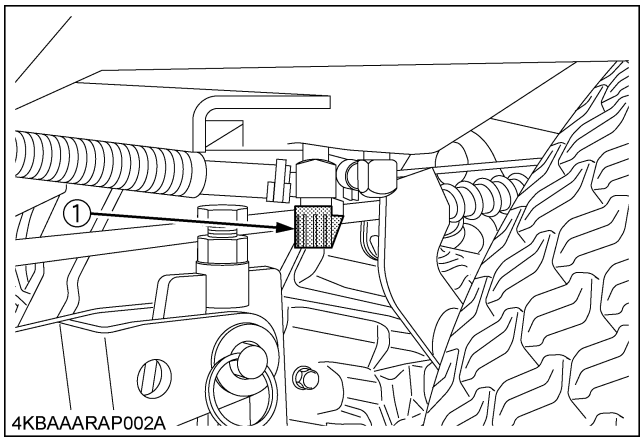

(1) Fuel valve

COLD WEATHER STARTING

When the ambient temperature is below -5℃ (23℉) and the engine is very cold. (If the engine fails to start after 10 seconds, turn off the key for 30 seconds. Then repeat steps 7 and 8 in "STARTING THE ENGINE". To protect the battery and the starter, make sure that the starter is not continuously turned for more than 10 seconds.)

WARMING UP

WARNING

To avoid serious injury or death:

- **Be sure to apply the parking brake during warm-up.**

For 5 minutes after engine start-up, allow the engine to warm up without applying any load. This is to allow oil to reach every engine part. If load should be applied to the engine without this warm-up period, the problems such as seizure, breakage or premature wear may develop.

■Warm-up and Transmission Oil in the Low Temperature Range

Hydraulic oil serves as transmission oil. In cold weather, the oil may be cold with increased viscosity. This can cause delayed oil circulation or abnormally low hydraulic pressure for some time after engine start-up. This in turn can result in trouble in the hydraulic system or damage to the hydraulic clutch.

To prevent the above, observe the following instructions:

Warm up the engine at about 50% of rated rpm according to the table below:

Ambient temperature	Warm-up time requirement
Higher than 0℃ (32℉)	Approx. 5 minutes
-10 to 0℃ (14 to 32℉)	5 to 10 minutes
-20 to -10℃ (-4 to 14℉)	10 to 15 minutes
Below -20℃ (-4℉)	More than 15 minutes

IMPORTANT :

- Do not operate unless the engine is warmed up. If operation is attempted while the engine is still cold, the hydraulic mechanism will not function properly and its service life will be shortened.
- If noises are heard after the hydraulic control lever has been activated and the implement is lifting, the hydraulic mechanism is not adjusted properly. Unless corrected, the unit will be damaged. Contact your local KUBOTA Dealer for adjustment.

https://truckmanualshub.com/

JUMP STARTING

WARNING

To avoid serious injury or death:

- **Keep cigarettes, sparks, and flames away from battery.**
- **If the machine battery is frozen, do not jump start the engine.**
- **Do not connect the other end of negative jumper cable to the negative terminal of the machine battery.**

When jump starting the engine, follow the instructions below to start the engine safely.

1. Bring a helper vehicle with a battery of the same voltage as the disabled machine within easy cable reach. "THE VEHICLES MUST NOT TOUCH".
2. Apply the parking brakes of both vehicles and put the shift levers in neutral. Shut the engine off.
3. Put on safety goggles and rubber gloves.
4. Ensure vent caps are securely in place (if equipped).
5. Attach the red clamp to the positive (red, (+) or pos.) terminal of the dead battery and clamp the other end of the same cable to the positive (red, (+) or pos.) terminal of the helper battery.
6. Clamp the other cable to the negative (black, (-) or neg.) terminal of the helper battery.
7. Clamp the other end to the engine block or the frame of the disabled machine as far from the dead battery as possible.
8. Start the helper vehicle and let its engine run for a few moments. Start the disabled machine.
9. Disconnect the jumper cables in the exact reverse order of attachment. (Steps 7, 6 and 5)

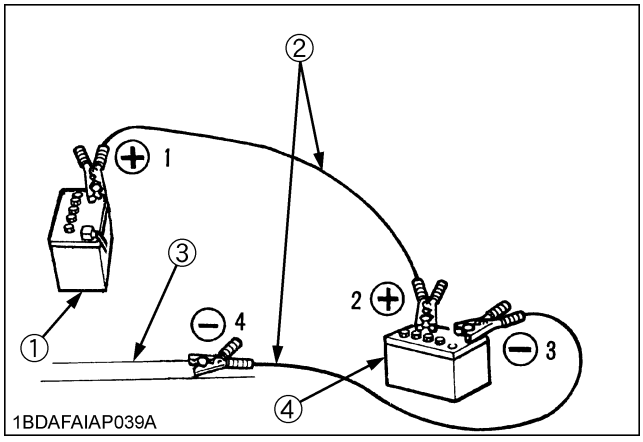

(1) Dead battery
(2) Jumper cables
(3) Engine block or frame
(4) Helper battery

Connect cables in numerical order. Disconnect in reverse order after use.

IMPORTANT :

- This machine has a 12 volt negative (-) ground starting system.
- Use only same voltage for jump starting.
- Use of a higher voltage source on a machine could result in severe damage to the machine electrical system.
  Use only matching voltage source when "jump-starting" a low or dead battery condition.

https://truckmanualshub.com/

OPERATING THE MACHINE

OPERATING NEW MACHINE

How a new machine is operated and maintained determines the life of the machine.

A new machine just off the factory production line has been, of course, tested, but the various parts are not "broken-in" and are not accustomed to each other, so care must be taken to operate the machine for the first 50 hours at a slower speed and avoid excessive work or operation until the various parts become "broken-in." The manner in which the machine is handled during the "breaking-in" period greatly affects the life of your machine. Therefore, to obtain the maximum performance and the longest life of the machine, it is very important to properly break-in your machine. In handling a new machine, the following precautions must be observed.

■Changing Lubricating Oil for New Machines

The lubricating oil is especially important in the case of a new machine. The various parts are not "broken-in" and are not accustomed to each other; small metal grit may develop during the operation of the machine; and this may wear out or damage the parts. Therefore, care must be taken to change the lubricating oil a little earlier than would ordinarily be required.

For further details of change interval hours.

(See "SERVICE INTERVALS" in "MAINTENANCE" section.)

■Engine Break-in

After the first 50 hours of operation, change the engine oil and filter. (See "EVERY 200 HOURS" in "MAINTENANCE" section.)

■Machine Break-in

After the first 400 hours of operation, change the transmission fluid. (See "EVERY 400 HOURS" in "MAINTENANCE" section.)

After the first 50 hours of operation, change the oil filter. (See "EVERY 200 HOURS" "EVERY 400 HOURS" in "MAINTENANCE" section.)

DANGER

To avoid serious injury or death:

- **Do not operate the mower without the deflector shield in the down position.**

WARNING

To avoid serious injury or death:

- **The machine relies upon the engine driven transmission for speed, direction and steering control. If the engine is not running, the machine cannot be driven or controlled.**
  If the engine stops when operating on a slope, apply the parking brake immediately to prevent machine runaway.
- **Do not allow any person other than the driver to ride on the machine.**
- **Do not drive the machine close to the edges of ditches or banks which may collapse under the weight of the machine, especially when the ground is loose or wet.**
- **When turning the machine, be sure to reduce the travel speed and operate motion control levers carefully.**
- **To avoid tip over, operate across slopes, not up and down. Avoid sudden starts and stops on slopes. Slow down, and use extra caution when changing direction on a slope.**
  Park the machine on a firm and level surface.
- **Watch where you are going at all times. Watch for and avoid obstacles. Be alert at curbs, near trees, and other obstructions and hidden hazards.**
- **Do not mow near drop-offs, ditches or embankments. The mower could turn over if a wheel is over the edge of cliff or ditch, or if an edge caves in.**
- **Do not drive machine on streets or highways. Watch for traffic when you cross roads or operate near roads.**
- **Look to the rear before and when backing. Make sure the area immediately behind you is clear of obstructions or holes and small children. Use extra caution when machine is equipped with Grass Catcher.**

WARNING

To avoid serious injury or death:

- **Clear the work area of objects which might be picked up and thrown by blades.**
- **Do not direct the opening of the chute at bystanders or animals. Discharged objects may cause injury. Plan your mowing carefully before starting operation.**
- **Keep bystanders especially children and animals away from the mowing area.**
- **Be sure to disengage the PTO and sit on the operator's seat before starting the engine.**

https://truckmanualshub.com/

OPERATING FOLDABLE ROPS

WARNING

To avoid serious injury or death:

- **Always use the seat belt when the ROPS is installed.**
- **Do not use the seat belt if a foldable ROPS is down or there is no ROPS.**

■To Fold the ROPS

1. Loosen the knob bolts 1 to 2 turns.
2. Remove both lock pins.

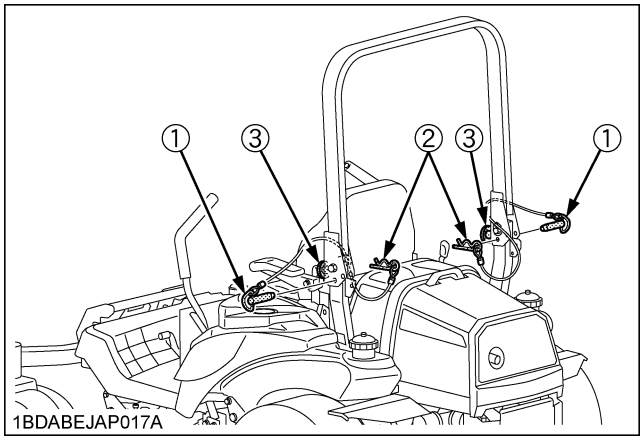

(1) Lock pin
(2) Snap pin
(3) Knob bolt

3. Fold the ROPS.

CAUTION

To avoid personal injury:

- **Hold the ROPS tightly with both hands and fold the ROPS slowly and carefully.**

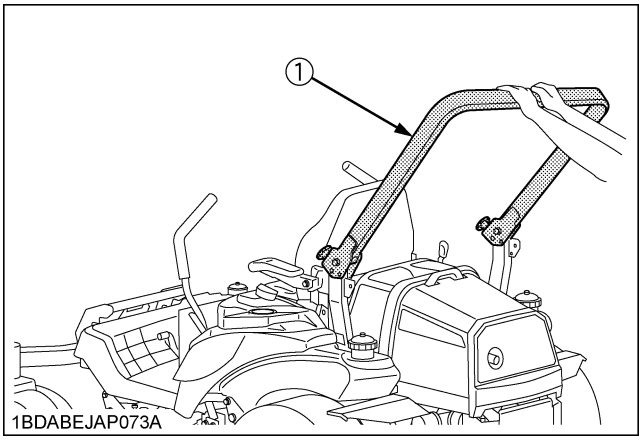

(1) ROPS

4. Align lock pin holes and insert both lock pins and secure them with the snap pins.

CAUTION

To avoid personal injury:

- **Make sure that both lock pins are properly installed and secured with the snap pins.**

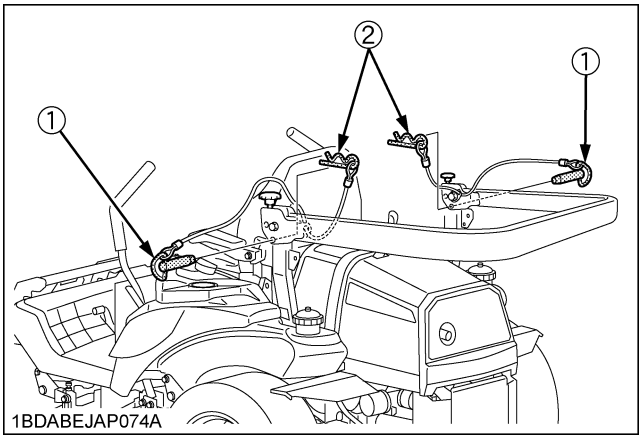

(1) Lock pin
(2) Snap pin

https://truckmanualshub.com/

■To Raise the ROPS to Upright Position

1. Remove both snap pins and lock pins.

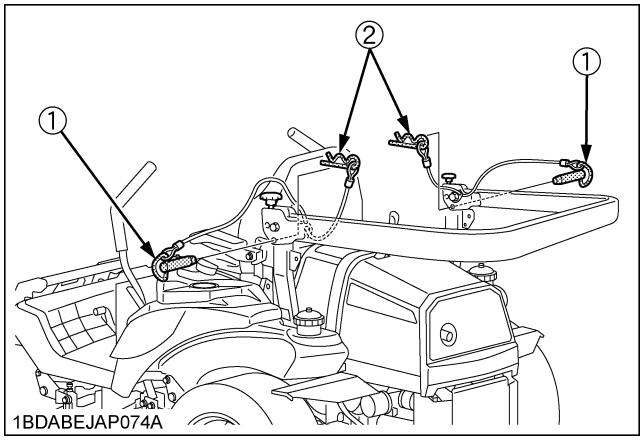

(1) Lock pin
(2) Snap pin

2. Raise ROPS to the upright position.

CAUTION

To avoid personal injury:

- **Hold the ROPS tightly with both hands and raise the ROPS slowly and carefully.**

3. Align lock pin holes, insert both lock pins and secure them with the snap pins.
4. Tighten the knob bolts slightly.

CAUTION

To avoid personal injury:

- **Make sure that both lock pins are properly installed as soon as the ROPS is in the upright position and secured with the snap pins.**

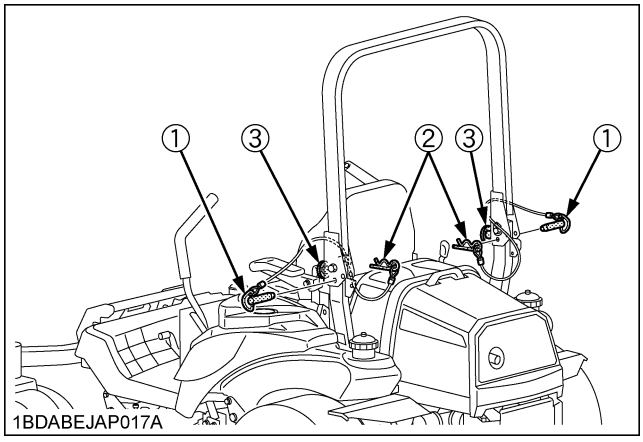

(1) Lock pin
(2) Snap pin
(3) Knob bolt

■Adjustment of Foldable ROPS

- Adjust free fall of the ROPS upper frame regularly.
- If you feel less friction when folding the ROPS, tighten the nut (1) until you feel the right friction in the movement and then replace the hair pin.

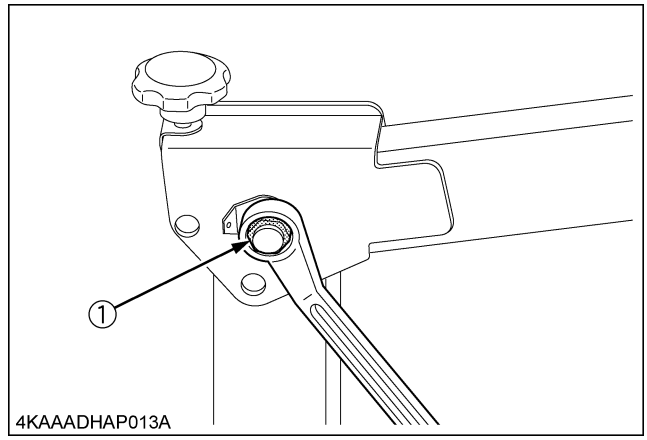

(1) Nut

https://truckmanualshub.com/

STARTING

1. **Adjust the operator's position and apply the seat belt.**

■Operator's Seat

WARNING

To avoid serious injury or death:
- **Make adjustments to the seat only while the machine is stopped.**
- **Make sure that the seat is completely secured after each adjustment.**
- **Do not allow any person other than the driver to ride on the machine.**

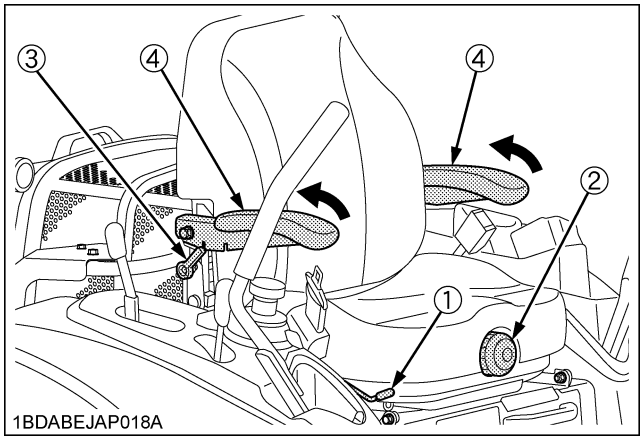

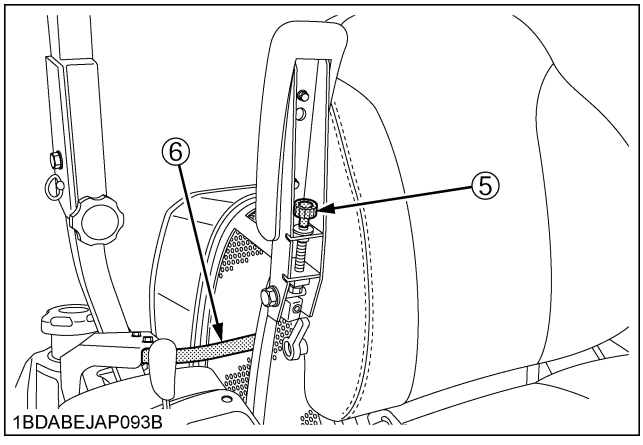

(1) Travel adjust lever
(2) Suspension adjust knob
(3) Lumbar support adjust lever
(4) Arm rest
(5) Arm rest angle adjuster
(6) Bypass pipe

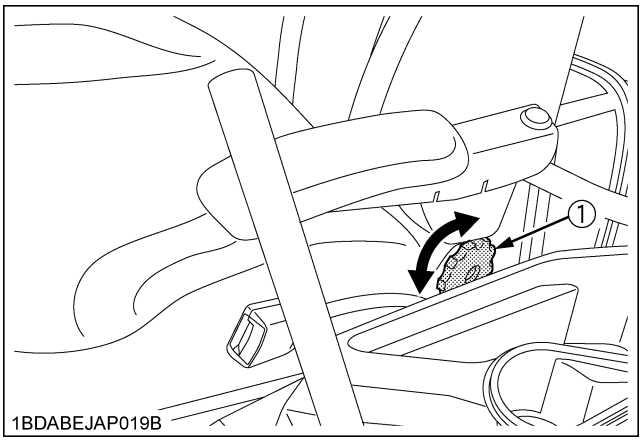

(1) Backrest tilt adjust knob

WARNING

To avoid serious injury or death:
- **Use extra caution when unlocking the travel adjust lever because the seat might slide forward by itself.**

◆ **Travel adjustment**
Unlock the travel adjust lever and slide the seat backward or forward, as required. The seat will lock in position when the lever is released.

◆ **Suspension adjustment**
Turn the suspension adjust knob to achieve the optimum suspension setting.

◆ **Lumbar support adjustment**
Turn the lumbar support adjust lever to the desired position.

◆ **Arm rest**
Arm rest may be set at upright position if desired.

◆ **Arm rest angle adjustment**
Turn the arm rest angle adjuster to the desired angle.

◆ **Backrest tilt adjustment**
Turn the backrest tilt adjust knob to the desired angle.

IMPORTANT :
- After adjusting the operator's seat, be sure to check to see that the seat is properly locked.

NOTE :
- Depending on the seat adjustment level, the seat may contact the bypass pipe during operating. In case of contact, readjust the travel adjust lever, the suspension adjust knob, the backrest tilt adjust knob or the lumbar support adjust lever.

https://truckmanualshub.com/

■Seat Belt

WARNING

To avoid serious injury or death:

- **Always use the seat belt when the ROPS is installed.**
- **Do not use the seat belt if a foldable ROPS is down or there is no ROPS.**

Adjust the seat belt for proper fit and connect to the buckle. The seat belt is an auto-locking retractable type.

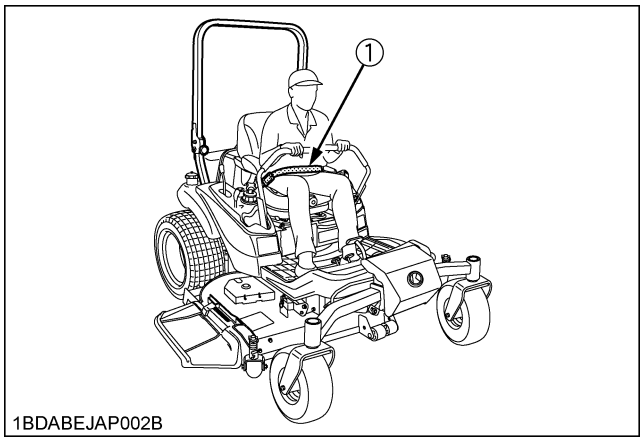

(1) Seat belt

2. Start the engine.
See "OPERATING THE ENGINE" section.

3. Raise the implement.

■Hydraulic Lift Control Pedal

The hydraulic lift control pedal is used to raise and lower the implement used with the machine (ex. Mower).
To lower the implement, depress the hydraulic lift control pedal (DOWN).
To raise it, depress the hydraulic lift control pedal (UP).

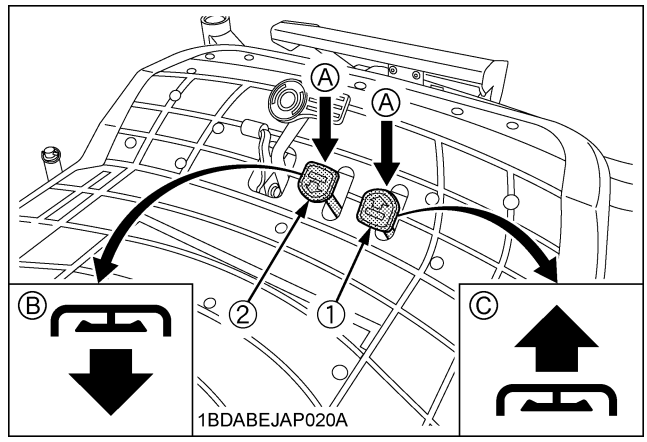

(1) Hydraulic lift control pedal (UP)
(2) Hydraulic lift control pedal (DOWN)
(A) "DEPRESS"
(B) "DOWN"
(C) "UP"

IMPORTANT :

- Do not operate until the engine is warmed up. If operation is attempted when the engine is still cold, the hydraulic system may be damaged.
- Do not operate at slow Engine rpm. Move the throttle lever above 1/2.
- If noises are heard when implement is lifting after the hydraulic lift control pedal has been activated, the hydraulic mechanism is not adjusted properly. Contact your local KUBOTA Dealer for adjustment.
- Do not depress the hydraulic lift control pedal.
  When the engine is off, depressing the hydraulic lift control pedal (UP or DOWN) will lower the implement.

4. Accelerate the engine.

■Throttle Lever

Moving the throttle lever backward decreases the engine speed and moving it forward increases the engine speed.

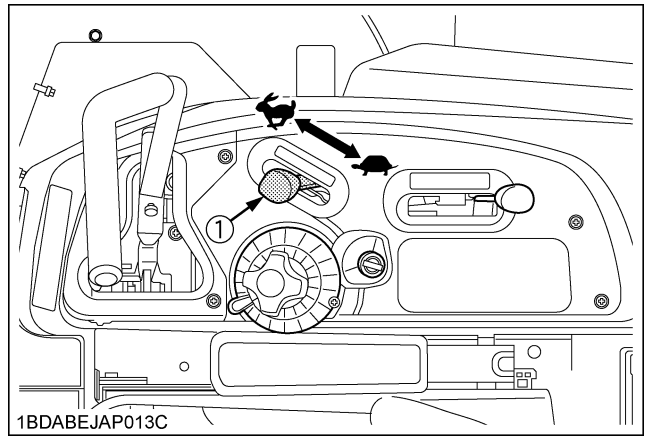

(1) Throttle lever
"INCREASE"
"DECREASE"

https://truckmanualshub.com/

5. Unlock the parking brake.

■Parking Brake Pedal

To release the parking brake:

Depress the brake pedal and release slowly with your right foot, without pressing the parking brake lock pedal.

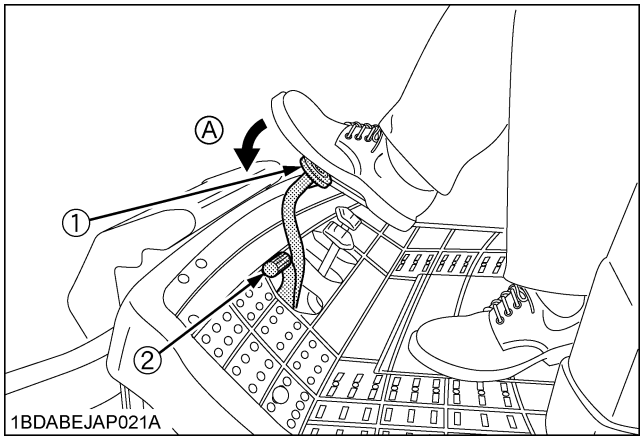

(1) Parking brake pedal *(A) "DEPRESS"*
(2) Parking brake lock pedal

6. Operate the machine.

■Motion Control Lever

WARNING

To avoid serious injury or death:

- **Understand how to use the motion control levers and practice in an unrestricted area at a little more than an idle speed without the mower engaged until becoming proficient in the operation of the machine.**
- **Do not move motion control levers from forward to reverse or reverse to forward position rapidly.**
  Sudden direction changes could cause loss of control or damage to the machine or property.
- **Do not make sharp turns at high speeds.**
  Fast and sharp turns could cause loss of control.
- **Motion control levers must be in "NEUTRAL LOCK" position to safely enter and exit the operator's seat or to carry out maintenance and safety checks.**

Stop position

◆ **Neutral lock position**

- Forward and reverse movement of the motion control levers are prevented when levers are in "NEUTRAL LOCK" position. (Engine can only be started with levers in this position.)

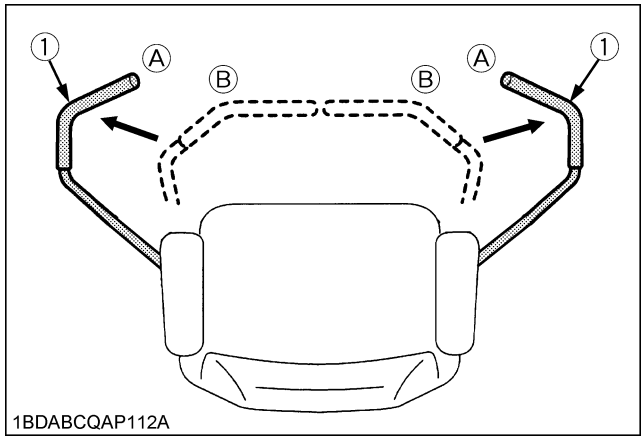

(1) Motion control levers *(A) "NEUTRAL LOCK" position*
(B) "NEUTRAL" position

https://truckmanualshub.com/

Operating position

Machine speed and steering is controlled by the motion control levers, when the engine is running and the parking brake is released.

WARNING

To avoid serious injury or death:

- **No control is provided by the motion control levers when the engine is off.**

◆ **Neutral position**

- Hold the motion control levers and move them inward from the "NEUTRAL LOCK" position so that the machine is in "NEUTRAL". (Engine cannot be restarted.)

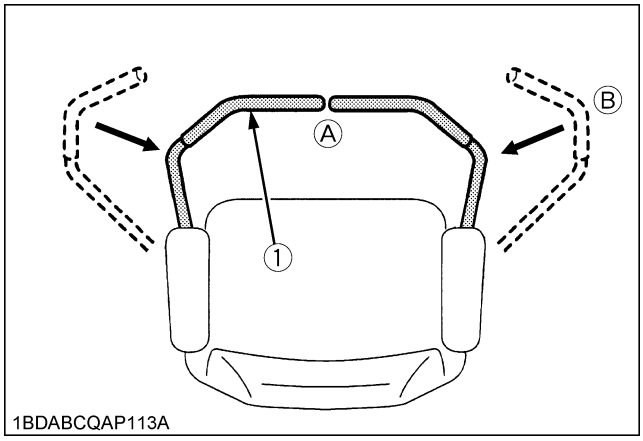

(1) Motion control levers *(A) "NEUTRAL" position*
(B) "NEUTRAL LOCK" position

◆ **Forward and Reverse Motion:**

Refer to the following figures.

1. Move throttle lever to the "FAST" position.
2. Release the parking brake.
3. Move both motion control levers from the "NEUTRAL LOCK" position inward to the "NEUTRAL" position.
4. **To move forward:**
   Push the control levers slowly forward.
   To move reverse:
   Pull both control levers slowly rearward at the same time to start reverse motion.
   To stop:
   Move by hand and hold both motion control levers to the "NEUTRAL" position until the machine comes to a stop.

WARNING

To avoid serious injury or death:

- **The motion control lever adjustment is important to ensure the machine operates properly.**

NOTE :

- The motion control linkages are adjustable.
  If adjustment is required, see "ADJUSTMENT" section. We recommend you to contact your local KUBOTA Dealer.

◆ **Re-start on slopes**

WARNING

To avoid serious injury or death:

- **Do not stop or change directions on slopes. These operations could cause loss of the machine traction or control.**
  Starting procedure on slopes is different from the usual start mode on a flat surface, understand how to re-start on slopes and use extra caution.

If a situation occurs where it is necessary to stop and re-start on a slope, refer to the following operational steps.

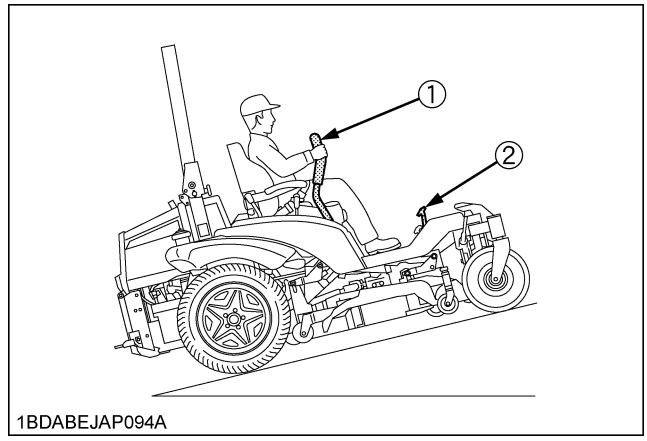

(1) Motion control lever
(2) Parking brake pedal

How to re-start on the slopes:

1. Firmly apply parking brake (enough to prevent movement).
2. Start the engine.
3. Set the throttle lever to the middle position.
4. Place the control levers inward to the "NEUTRAL" position gradually.

https://truckmanualshub.com/

5. Release the parking brake within about 3 seconds.
   If you take more time, the engine will suddenly stop because of a safety device. (This is to prevent the machine from being operated with the parking brake applied.)
   When the engine stops, start over by firmly reapplying the parking brake, and repeat steps 2 through 5 and then 6.
6. Move the machine slowly and carefully.

FORWARD:

- Push both motion control levers forward equally at the same time. For travel forward in a straight line.

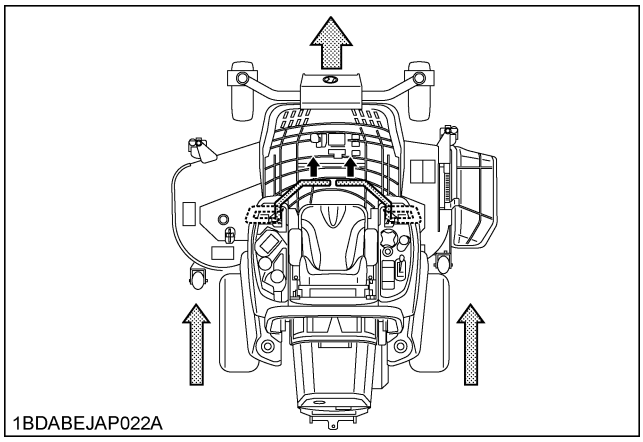
1BDABEJAP022A

REVERSE:

- Pull both motion control levers past center rearward equally at the same time. For rearward travel in a straight line.

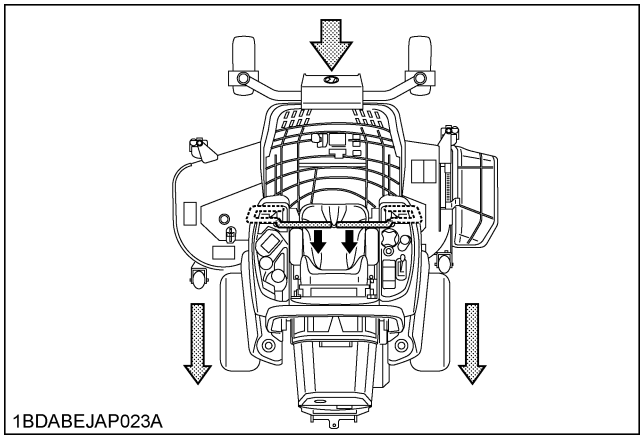
1BDABEJAP023A

GENERAL LEFT TURN:

- Push right motion control lever further forward than the left motion control lever. For forward travel to the left.

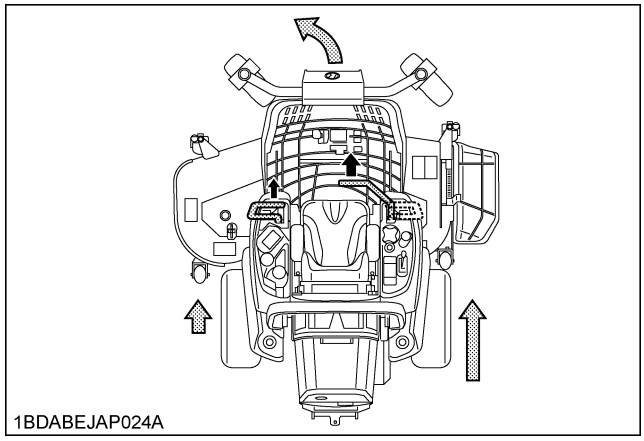
1BDABEJAP024A

GENERAL RIGHT TURN:

- Push left motion control lever further forward than the right motion control lever. For forward travel to the right.

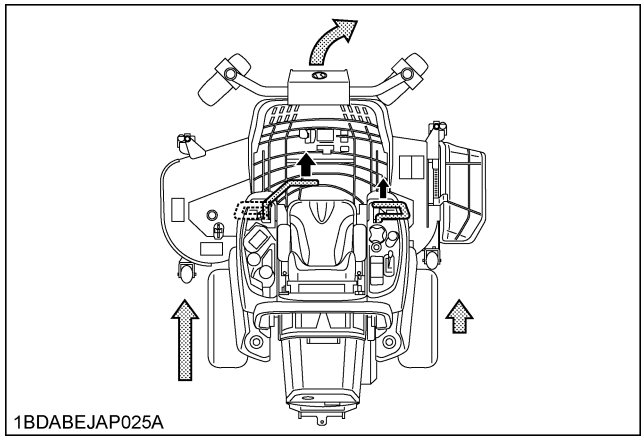
1BDABEJAP025A

SHARP (ZERO) LEFT TURN:

- Push right motion control lever forward and pull left motion control lever rearward at the same time.

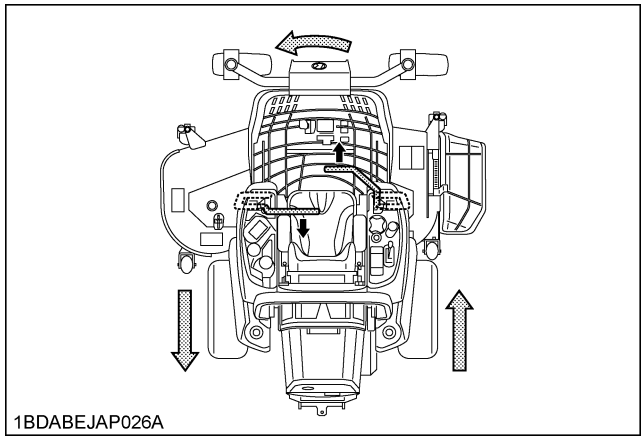
1BDABEJAP026A

https://truckmanualshub.com/

SHARP (ZERO) RIGHT TURN:

- Push left motion control lever forward and pull right motion control lever rearward at the same time.

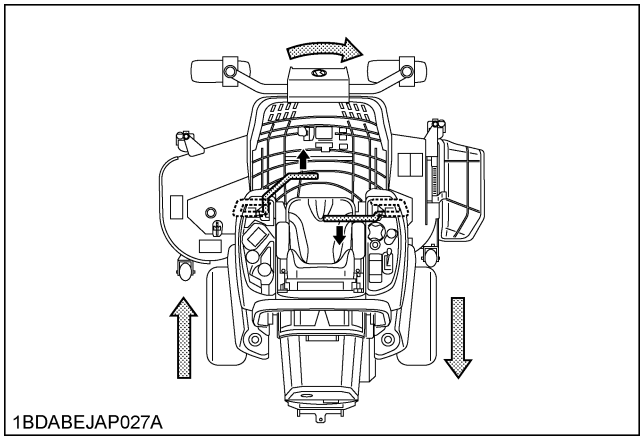

STOPPING

WARNING

To avoid serious injury or death:

- **Park the machine on level ground.**
  If necessary to park on an incline,
  (1) Stop the machine,
  (2) Apply the parking brake, then
  (3) Stop the engine.
- **If you stop the engine on an incline without applying the parking brake, the machine could move and run away.**

IMPORTANT :

- The parking brake pedal is for parking and emergency use only. If the parking brake is applied when the motion control levers are not in "NEUTRAL LOCK" position, the engine will stop within approximately 3 seconds. This feature is to prevent brake and transmission damage during operation.

1. Move both motion control levers to the "NEUTRAL" position to stop the machine.
2. Apply parking brake.
3. Move both motion control levers to "NEUTRAL LOCK" position.
4. Throttle lever in slow position and shift PTO lever to the "DISENGAGE" (OFF) position.
5. Lower all implements to the ground.
6. Turn off the engine and remove the key.

FIXING FRONT AXLE

WARNING

To avoid serious injury or death:

- **Park the machine on a firm and level surface.**
- **Stop the engine, remove the key and engage the parking brake.**

A rigid front axle is recommended for a more even cut under mowing the rough terrain.

1. Open the front cover.
2. Remove the two L-pins from their original position.
3. Insert L-pins into the holes on the front axle as shown below.

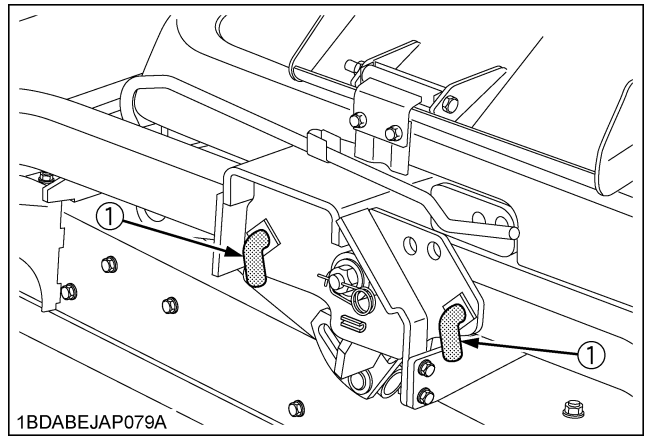

(1) L-pin

4. Install the hairpins between the axle mount frame and the front axle.

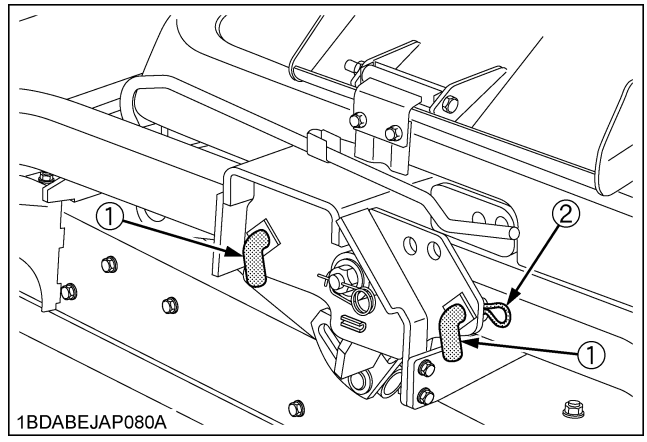

(1) L-pin *(2) Hairpin*

OSCILLATING FRONT AXLE

For oscillating the front axle, reverse the above procedures.

The oscillating front axle provides a smoother ride than the rigid front axle and oscillates with the terrain.

https://truckmanualshub.com/

PARKING

TO LOCK:

Depress the parking brake pedal firmly with your right foot, and the parking brake lock pedal simultaneously with your left foot. Then release the parking brake pedal while holding the parking brake lock pedal down.

TO UNLOCK:

Depress the parking brake pedal and release slowly with your right foot, without pressing the parking brake lock pedal.

WARNING

To avoid serious injury or death:
Before leaving the operator's position,

- **Apply parking brake.**
- **Lower all implements to the ground.**
- **Shut off the engine.**
- **Remove the key.**
- **Place the motion control levers in the "NEUTRAL LOCK" position.**

If necessary to park on an incline, be sure to chock the wheels on the downhill side to prevent accidental rolling of the machine.

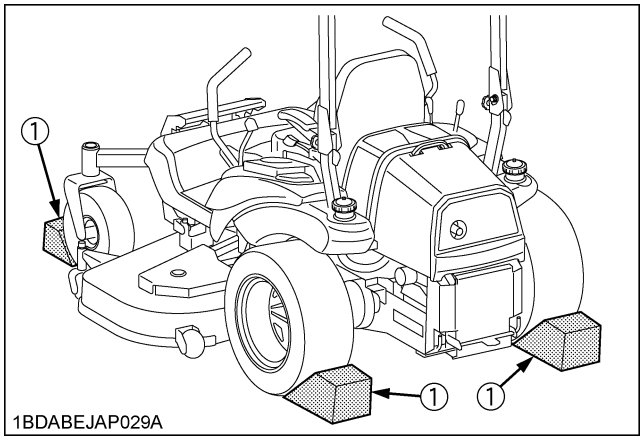

(1) Chocks

TRANSPORTING

IMPORTANT :

1. Transport the machine on a suitable trailer.
   - Shut off the fuel valves below the fuel tanks while transporting.
   - To prevent the hood from opening by wind while in transit, it is necessary to either load the machine backward or use a suitable tie down for the hood.
   - Apply the parking brake and lift down the mower deck to the lowest position.
   - Remove the key.
   - Secure the portions of the machine, which are shown in the figure below, by using heavy duty straps.
   - For a long distance transit, set the mower deck to the 5 inch position.

[FRONT]

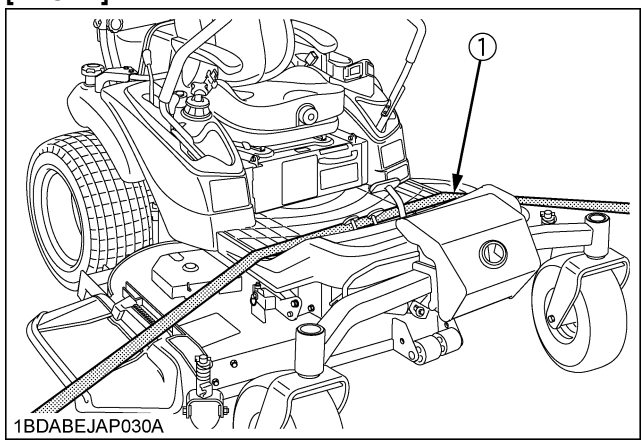

(1) Heavy-duty strap

[REAR]

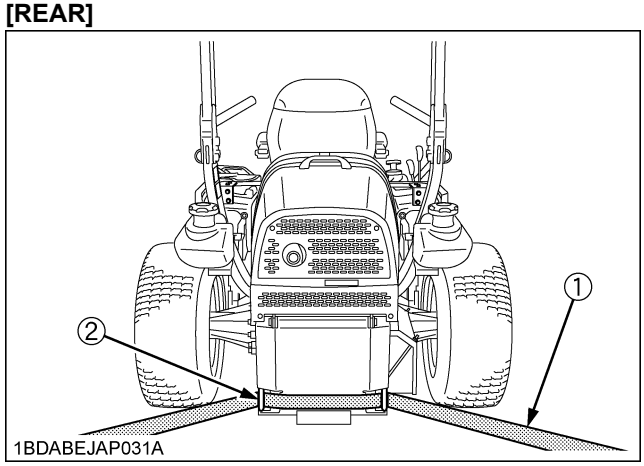

(1) Heavy-duty strap
(2) Rear frame

2. Do not attempt to tow this machine, or damage to the transmission may result.
3. Follow all federal and local regulations for securement.

https://truckmanualshub.com/

OPTION

- For the operation and precautions of option kit, obey the instructions of the manuals attached in the option kit.

https://truckmanualshub.com/

OPERATING THE MOWER

MAKING THE MOST OF YOUR MOWER

1. When using your mower for the first time, choose a smooth level area and cut in straight and slightly overlapping strips.
2. The size and type of the area to be mowed will determine the proper mowing pattern. Take into account obstructions, such as trees, fences and buildings. To keep grass clippings off fences, sidewalks, etc., it is advisable to go over the outside of the area to be mowed several times in a clockwise direction. To mow the area remaining, work in a counterclockwise direction so that the clippings are dispersed onto the previously cut area.

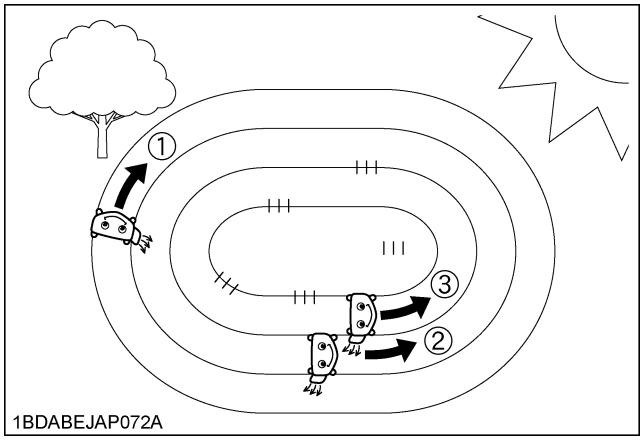

3. Always keep the left side of the mower toward trees, posts or other obstacles on the first trip around the obstacle.
4. Most lawns must be mowed to keep the grass approximately 50 to 80 mm (2 to 3 in.) high. Best results are obtained by cutting often and not too short. To keep a green lawn, never mow more than 1/3 of the height of the grass or a maximum of 25 mm (1 in.) in 1 mowing.
   For extremely tall grass, set the cutting height at maximum cutting height for the first mowing, then reset to the desired height and mow again. Allow the grass to grow to 80 mm (3 in.), then cut off only the top inch.
5. For best appearance, grass must be cut in the afternoon or evening when it is free of moisture.

WARNING

To avoid serious injury or death:

- **Clear the work area of objects which might be picked up and thrown by blades.**
- **Keep bystanders and animals away from the mowing area.**
- **Be sure to disengage the PTO and sit on the operator's seat before starting the engine.**

ADJUSTING CUTTING HEIGHT

DANGER

To avoid serious injury or death:

- **Do not engage the mower in the transport position.**

1. Before adjusting cutting height, check that all tire pressures are correct. If necessary adjust to the correct tire pressure.
2. To set the cutting height, start engine and depress the hydraulic lift control pedal (UP) to raise mower deck to the top position. Adjust the cutting height control dial to desired height.
   Lower the mower deck by depressing the hydraulic lift control pedal (DOWN).
   Then the mower deck will be set to the cutting height.
3. Use the higher settings for mowing in a rough area or when mowing tall grass. Lower settings must be used only for smooth lawns where short grass is desired.

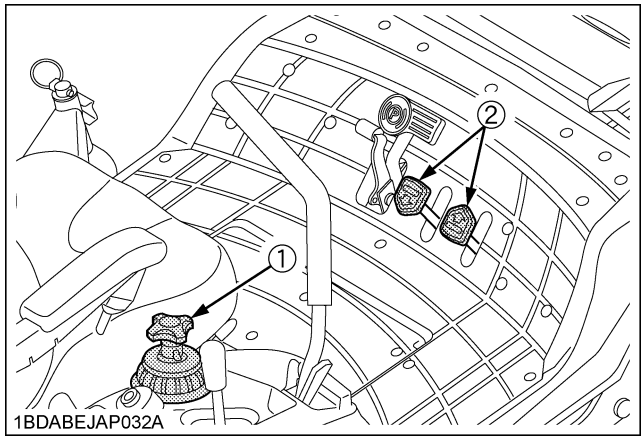

(1) Cutting height control dial
(2) Hydraulic lift control pedal

4. Lower the mower deck by depressing the hydraulic lift control pedal (DOWN). This lowers the mower deck from the "TRANSPORT" position to the "OPERATING" position.
5. Adjust the anti-scalp rollers' height as recommended below for normal operating condition. To minimize gouging and roller damage or wear, the anti-scalp rollers will maintain the ground clearance of 19 mm (3/4 in.).

https://truckmanualshub.com/

IMPORTANT :

- Never allow roller to contact the ground continuously as premature roller wear may develop if set incorrectly.
- Anti-scalp rollers must maintain a minimum clearance of 6 mm (0.24 in.) to the ground.

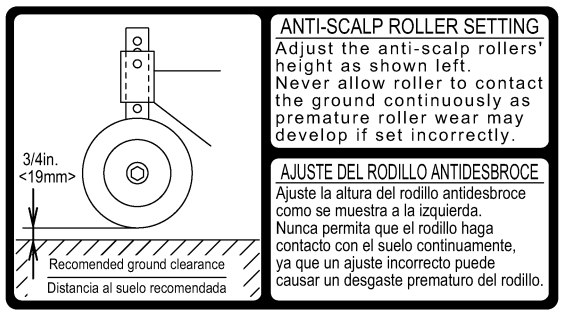

1BDABCQAP136A

[RCK60P]

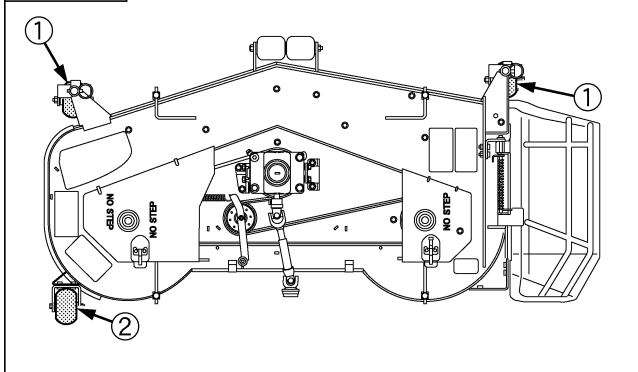

1BDABEJAP095A

(1) Anti-scalp roller (Front, swivel type)
(2) Anti-scalp roller (Rear, bolt shift type)

[RCK72P]

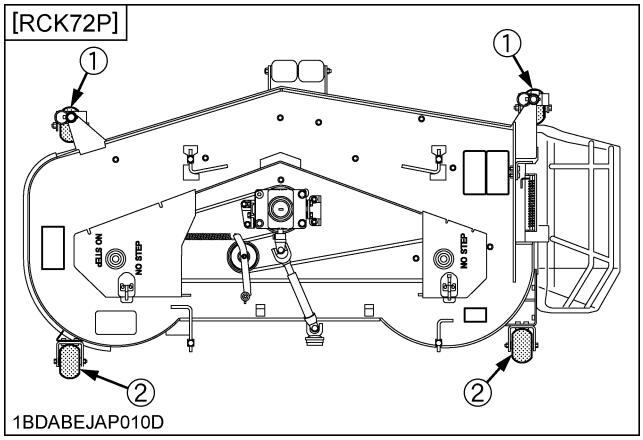

1BDABEJAP010D

(1) Anti-scalp roller (Front, swivel type)
(2) Anti-scalp roller (Rear, bolt shift type)

[RCK60R, RCK72R]

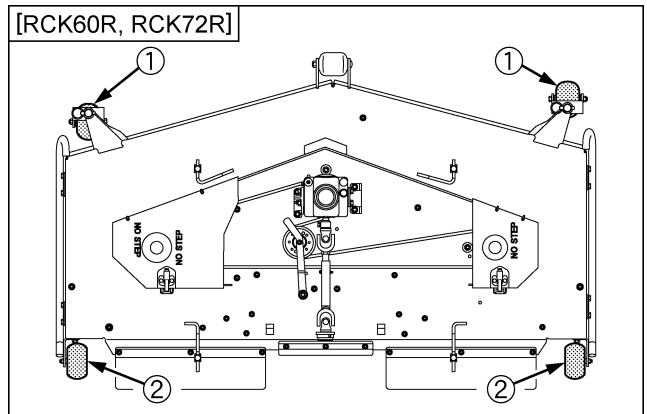

1BDABEJAP070D

(1) Anti-scalp roller (Front, swivel type)
(2) Anti-scalp roller (Rear, bolt shift type)

https://truckmanualshub.com/

Reference

- Set position for recommended ground clearance 19 mm (0.75 in.).

Cutting height inch (mm)	The number of collars under the boss	Position of bolts	Ground clearance mm (Ref.)	
	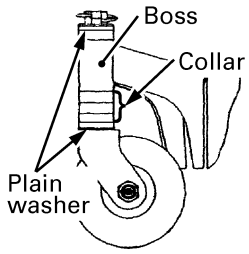 1BDABARAP130A	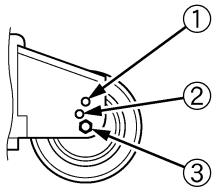 1BDABCQAP162A	Rear anti-scalp roller	
			Pin shift type	Bolt shift type
1.00" (25)	0	1	6	6
1.25" (32)	0		13	12
1.50" (38)	0		19	19
1.75" (44)	1		13	25
2.00" (50)	1	2	19	19
2.25" (58)	2		13	25
2.50" (64)	2	3	19	19
2.75" (70)	3		13	25
3.00" (76)	3		19	(31) *2
3.25" (83)	4		13	(38) *3
3.50" (89)	4		19 *1	(44) *3
3.75" (95)	4		13 *3	(51) *3
4.00" (102)	4		19 *3	(57) *3
4.25" (108)	4		13 *3	(63) *3
4.50" (114)	4		19 *3	(70) *3
4.75" (121)	4		25 *3	(76) *3
5.00" (127)	4		31 *3	(83) *3

*1. For cutting heights above 3.5". The anti-scalp rollers will still be effective against scalping.
*2. For cutting heights above 3.0". The anti-scalp rollers will still be effective against scalping.
*3. Use it if necessary.

https://truckmanualshub.com/

OPERATING MOWER

DANGER

To avoid serious injury or death:

- **Do not operate the mower without the discharge deflector being properly place.**

WARNING

To avoid serious injury or death:

- **Clear the work area of objects which might be picked up and thrown.**
- **Do not direct the opening of the deflector at bystanders especially children or animals. Discharged objects may cause injury. Plan your mowing carefully before starting operations.**
- **Keep bystanders and animals away from the mowing area.**
- **Be sure to disengage the PTO clutch of the mower before attempting to start the engine.**

■PTO Lever

To engage the PTO, move the PTO lever to the "ENGAGED" (ON) position.

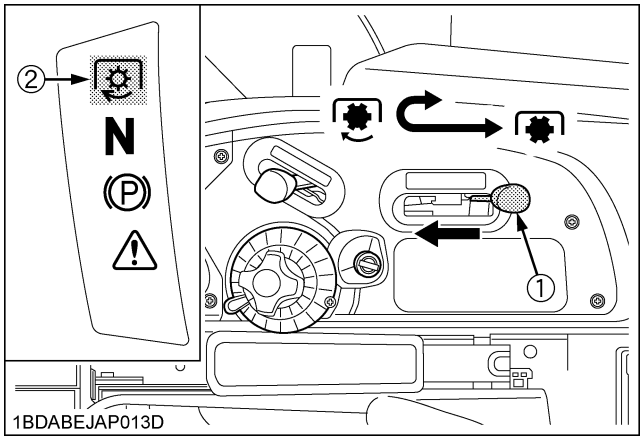

(1) PTO lever *"ENGAGED" (ON)*
(2) PTO clutch indicator *"DISENGAGED" (OFF)*

1. If you get off the seat while the PTO is running, the engine will stop automatically. (Operator presence control)
2. Before starting the engine, pull the PTO lever to the "DISENGAGED" (OFF) position. If it is at the "ENGAGED" (ON) position, the engine will not start.

NOTE :

- These safety features are built-in.

■Starting

WARNING

To avoid serious injury or death:

- **Engine components can get extremely hot from operation. To prevent severe burns, do not touch these areas while the engine is running, or immediately after it is turned off.**
  Never operate the engine without heat shields or guards.

1. Sit on the operator's seat.
2. Start the engine.
3. Engage the PTO lever.
4. Disengage the parking brake.
5. Speed up the engine by moving the throttle lever forward.
6. Push or pull the motion control levers to move forward or backward.

IMPORTANT :

- Never attempt to move the machine with the parking brake "ON".

NOTE :

- Keep the engine running at full throttle for best results. Control travel speed with the motion control levers.
- During heavy duty use, operate the machine at a slower ground speed or go over the area twice.
- Keep the mower deck in the raised position when the mower is disengaged.
- The mower will not cut cleanly if the ground speed is too high or if the blade speed drops due to an overload.
- To prevent the engine from overheating, keep the radiator and radiator screen clean. Check the radiator and radiator screen as often as needed.

https://truckmanualshub.com/

TREATMENT OF MOWER DECK INSIDE SKID

[RCK60R, RCK72R]

NOTE :

- If you wish to avoid the streaking of grass clipping which remain behind after the grass is cut, removing the skids will help prevent streaks of grass clippings from forming.

IMPORTANT :

- Mowing without the skids on a surface that is not properly flat may result in damage to the mower deck. Use caution whenever mowing without the skids attached.
- Mowing without the skids must be done only in locations that are completely flat.

■Removing Skids

WARNING

To avoid serious injury or death:

- **Park the machine on a firm and level surface.**
- **Apply the parking brake.**
- **Stop the engine and remove the key.**

1. Dismount the mower deck.
   (See "DISMOUNTING THE MOWER DECK" in "MOWER MOUNTING" section.)
2. Stand up the mower deck.
3. Remove four bolts as shown in the figure and remove two skids.
4. Mount the mower deck.
   (See "MOUNTING THE MOWER DECK" in "MOWER MOUNTING" section.)

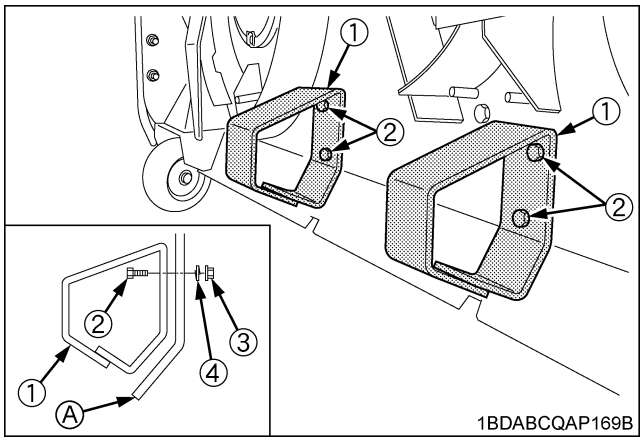

(1) Skid
(2) Bolt
(3) Nut
(4) Spring washer
(A) Mower deck

PREVENTING GRASS CLIPPINGS AND DUST FROM SCATTERING

[RCK60R, RCK72R]

NOTE :

- Never remove the rubber plates off the mower deck. Grass clippings will scatter and pile up to the hood and surrounding area during mowing.
  Continuous mowing under these conditions may result in overheating. This machine is equipped with an overheat warning buzzer as standard.
  Even when the rubber plates are installed, clean the areas around the hood and the transmission at a minimum once every five hours.
  (See "Checking and Cleaning Radiator Screen and Hood Screen" in "LUBRICANTS, FUEL AND COOLANT" in "PERIODIC SERVICE" section.)
- Be aware that when mowing with the rubber plates installed onto the rear of the mower deck, the cut grass will be left in even clearer lines than usual.

■Rubber Plates Installation

WARNING

To avoid serious injury or death:

- **Park the machine on a firm and level surface.**
- **Apply the parking brake.**
- **Stop the engine and remove the key.**

1. Dismount the mower deck.
   (See "DISMOUNTING THE MOWER DECK" in "MOWER MOUNTING" section.)
2. As shown in the figure, use three short square neck bolts and three flange nuts to install the rubber plate 2 and upper plate 2 onto the rear center of the mower deck. Tighten the bolts securely.
3. As shown in the figure, use six short square neck bolts and six flange nuts to install the two rubber plates 1 and the two upper plates 1 onto both sides of the mower deck. Tighten the bolts securely.
4. Mount the mower deck.
   (See "MOUNTING THE MOWER DECK" in "MOWER MOUNTING" section.)

https://truckmanualshub.com/

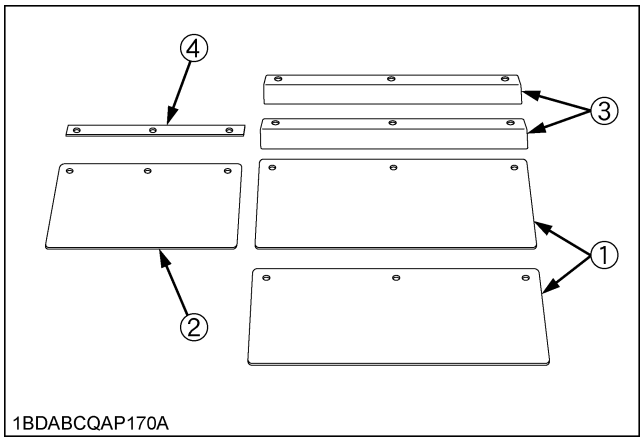

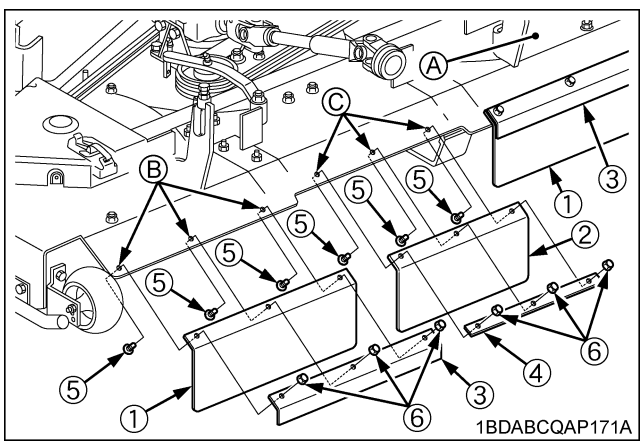

(1) Rubber plate 1 (Both sides)
(2) Rubber plate 2 (Center)
(3) Upper plate 1 (Both sides)
(4) Upper plate 2 (Center)
(5) Short square neck bolt
(6) Flange nut

(A) Mower deck
(B) Hole for installing upper plate 1
(C) Hole for installing upper plate 2

https://truckmanualshub.com/

TIRES AND WHEELS

TIRES

WARNING

To avoid serious injury or death:

- **Do not attempt to mount a tire. This must be done by a qualified person with the proper equipment.**
- **Always maintain the correct tire pressure. Do not inflate tires above the recommended pressure shown in the Operator's Manual.**
- **Inflation pressure in tires rises quickly when using compressed air.**

WARNING

To avoid serious injury or death:

- **Never operate machine with a loose rim, wheel, or axle.**
- **Whenever bolts are loosened, retighten to specified torque.**
- **Check all bolts frequently and keep them tightened.**

■Inflation Pressure

Though the inflation pressure is factory-set to the prescribed level, it naturally drops slowly in the course of time. Thus, check it and inflate as necessary.

	Tire sizes	Recommended Inflation Pressure
Front	15 x 6.0 - 6, Smooth semi-pneumatic Non flat tire	- - -
Rear	26 x 12.0 - 16, 4PR Turf Low profile tire	83 kPa (0.84 kgf/cm², 12 psi)

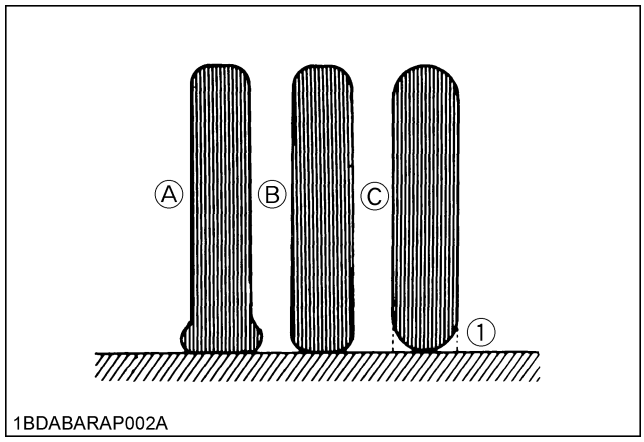

(1) Ground

(A) "INSUFFICIENT"
(B) "NORMAL"
(C) "EXCESSIVE"

WHEELS

IMPORTANT :

- When re-fitting a wheel, tighten the wheel bolt to the following torques then recheck after traveling 200 m (200 yards) changing directions several times.

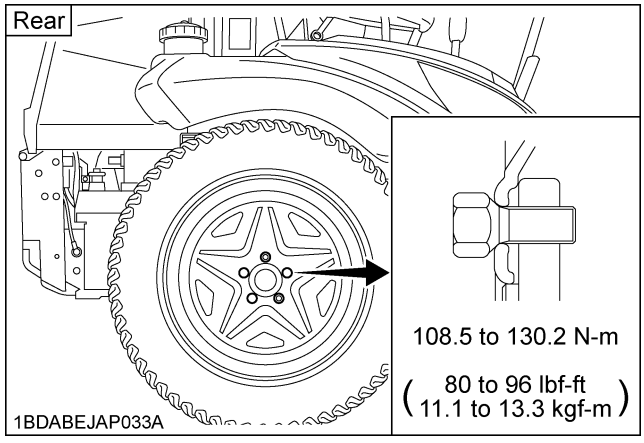

Wheels with beveled or tapered holes:
Use the tapered wheel bolt.

https://truckmanualshub.com/

■Remove and Install Front Caster Wheels

◆ **Removing**

1. Park the machine on a firm and level surface.
2. Stop the engine and apply parking brake.
3. Lift the front of machine with a safe lifting device.
4. Remove the lock nut and the wheel bolt.
   Then remove the nylon sleeve.
5. Remove the wheel from assembly yoke.

◆ **Installing**

1. Install the replacement wheel.
2. Install the nylon sleeve with the wheel bolt and the lock nut.
3. Tighten the nut.

IMPORTANT :

- Insert the wheel bolt from the outside of the yoke.
- Tighten the nut gradually until wheel bearing play is eliminated and wheel turns freely by hand.

Reference

Tightening torque	20 to 25 N-m (14.8 to 18.4 lbf-ft) (2 to 2.5 kgf-m)

4. Lower machine.

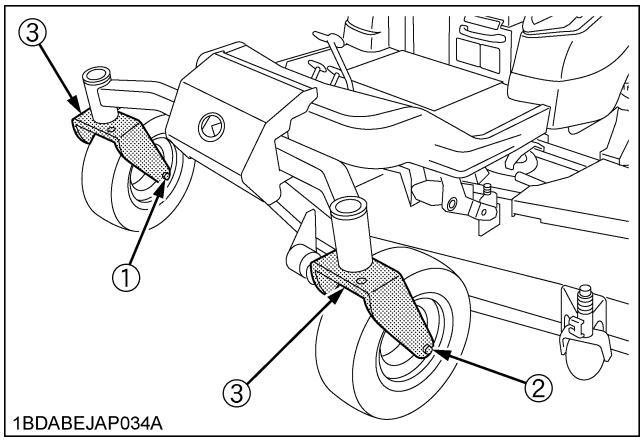

(1) Lock nut
(2) Wheel bolt
(3) Yoke

https://truckmanualshub.com/

PERIODIC SERVICE

HOW TO OPEN THE HOOD, FRONT COVER & STEP

WARNING

To avoid serious injury or death from contact with moving parts:

- **Never open the hood while the engine is running.**
- **Never open the step while the engine is running.**
- **Do not touch muffler or exhaust pipes while they are hot; Severe burns could result.**

■Hood

To open the hood, pull the latch lever frontward.
Lift the grip.

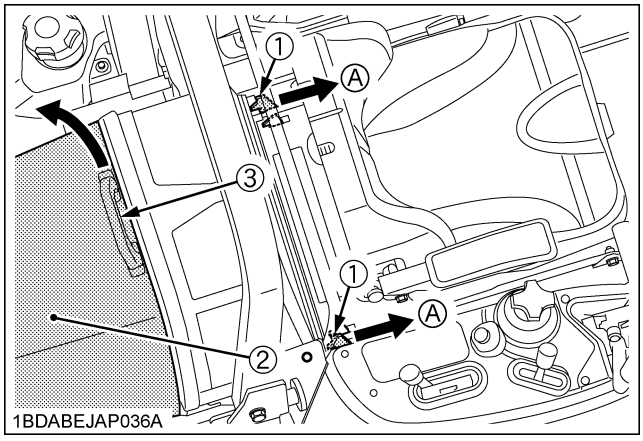

(1) Latch lever *(A) "RELEASE"*
(2) Hood
(3) Grip

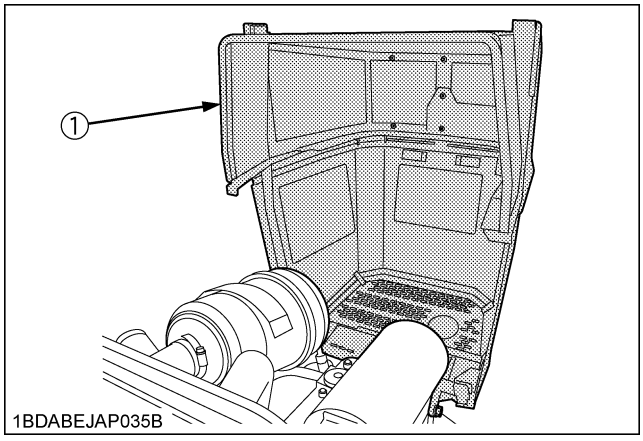

(1) Hood

■Front Cover

To open the front cover, pull the bottom edge of the front cover.

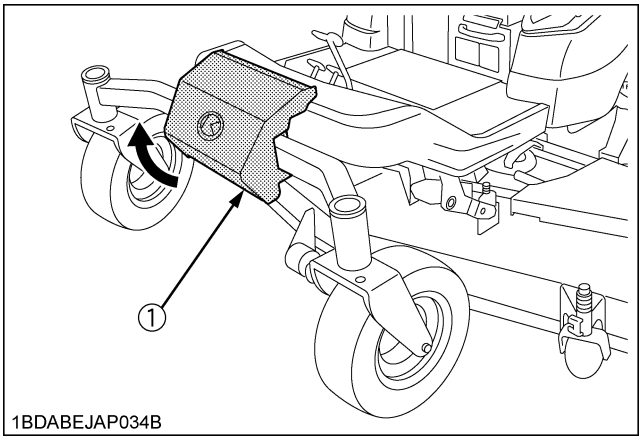

(1) Front cover

■Step

To open the step, pull the grip.

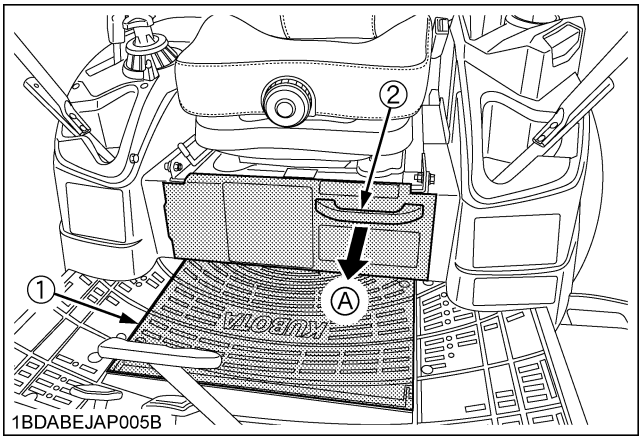

(1) Step *(A) "PULL"*
(2) Grip

https://truckmanualshub.com/

HOW TO RAISE THE OPERATOR'S SEAT

◆ **Raise**

WARNING

To avoid serious injury or death:

- **Fully raise the operator's seat.**
  (To the locked position)
  Do not keep the seat halfway.

1. Seat must be all the way back before raising.
2. Pull the latch lever on the seat panel frontward.

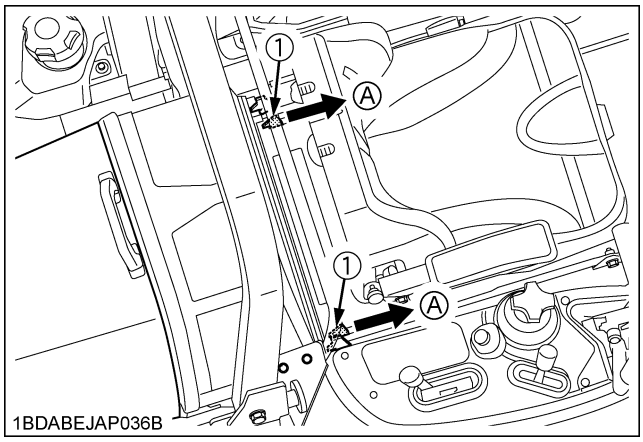

(1) Latch lever *(A) "PULL"*

3. Raise the operator's seat to the "LOCK" position.

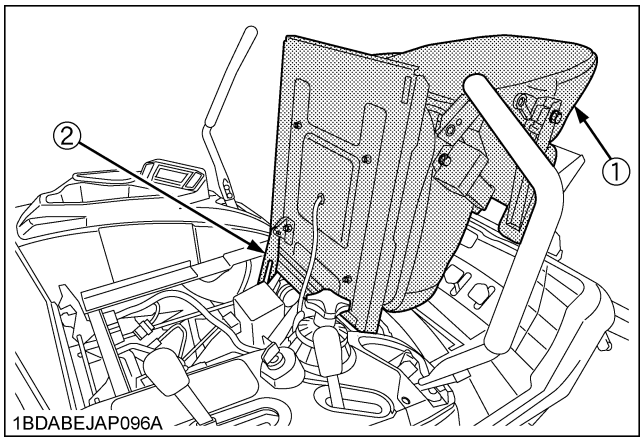

(1) Operator's seat
(2) Seat support

◆ **Lower**

WARNING

To avoid serious injury or death:

- **Do not drop the seat to close it.**
- **Watch your hands. Do not place your hands under the seat, when closing.**

1. Pull up the seat support rod and release the "LOCK".
2. Lower the seat slowly to lock.
3. Slide the seat to proper position.

https://truckmanualshub.com/

HOW TO TILT UP THE MACHINE

WARNING

To avoid serious injury or death:

- **Park the machine on a firm and level surface.**
- **Set the mower deck height to 5 inch.**
- **Stop the engine, remove the key and engage the parking brake.**
- **Be sure to chock the wheels.**
- **Lock the raised axle with an L-pin and Hairpin cotter before working under the machine.**

1. Lower the forward right anti-scalp roller to the lowest position.
2. Fully open the front cover.
3. Unfold the tilt lever.
4. Keep the front cover opened.
5. Remove 2 L-pins.
6. Insert L-pins to both sides of the front axle to position the front wheels. As shown below.

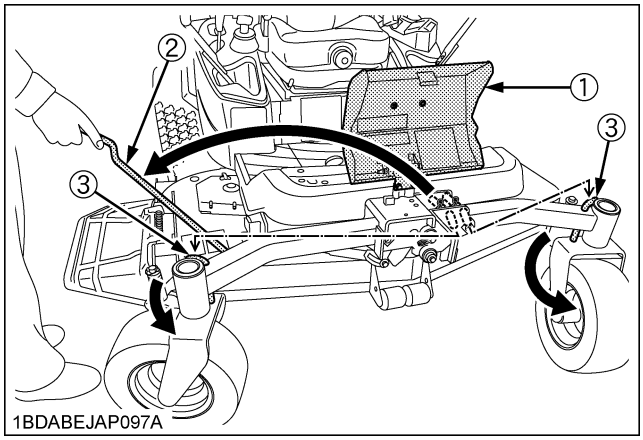

(1) Front cover
(2) Tilt lever
(3) L-pin

7. Turn the tilt lever clockwise to raise the axle to the stop.

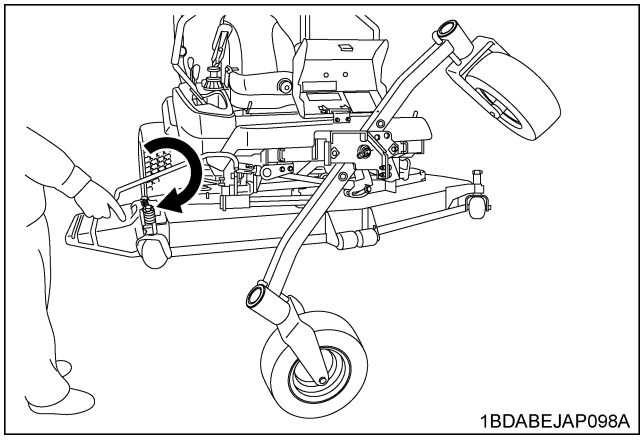

8. Remove the L-pin of the raised wheel and insert it to the outside hole of the frame.
9. Insert the hairpin cotter.

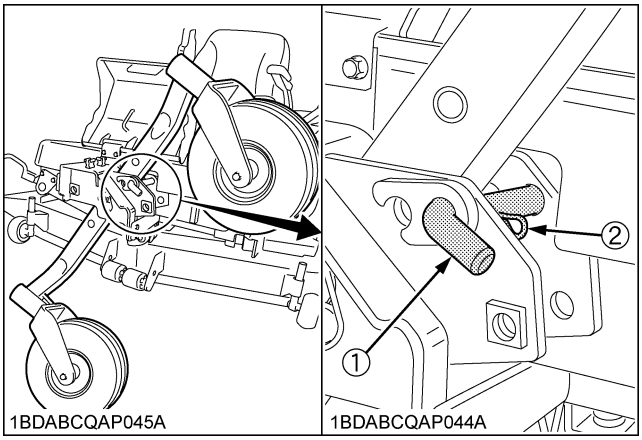

(1) L-pin
(2) Hairpin cotter

https://truckmanualshub.com/

◆ **Return to the normal position.**
Reverse to the above procedure.

IMPORTANT :
- To ensure equal oscillation of the axle and prevent loss of parts.
  Be sure the clevis pin returns to the center position of the front axle arm slot.
  And be sure to install removed parts.

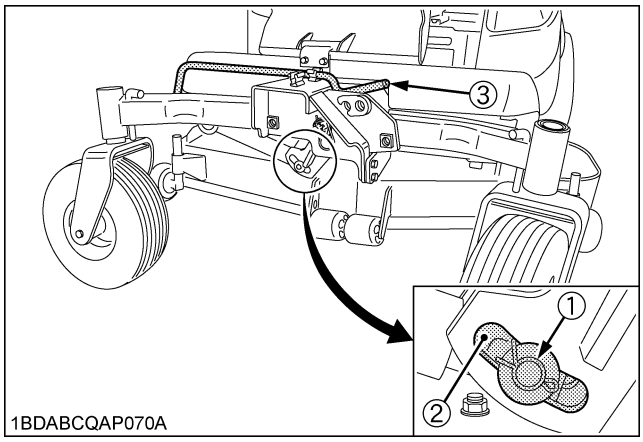

(1) Clevis pin
(2) Slot
(3) Tilt lever

HOW TO OPEN THE LEVER GUIDE

WARNING

To avoid serious injury or death:
- **Park the machine on a firm and level surface.**
- **Stop the engine, remove the key and apply the parking brake.**

1. Remove the screw of the lever guide.
2. Pull up the lever guide.

How to install the lever guide.
1. Install the lever guide.
2. Tighten the screw.

IMPORTANT :
- If the lever guide is out of alignment with the motion control lever, move the lever guide to align it with the motion control lever.

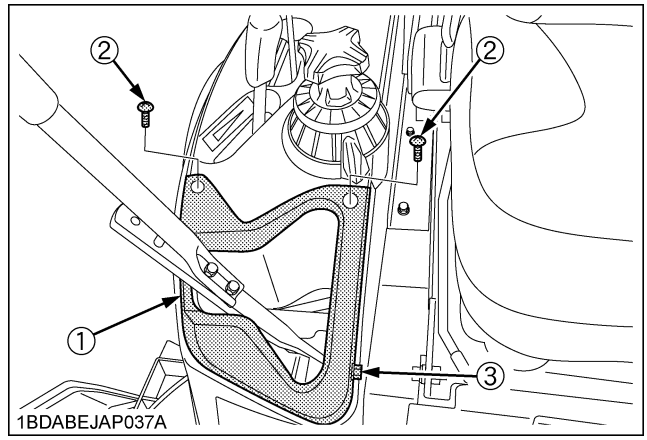

(1) Lever guide
(2) Screw
(3) Screw

https://truckmanualshub.com/

LIFT-UP POINT

WARNING

To avoid serious injury, death or machine damage:

- **Do not work under the machine unless it is secured by safe stands or suitable blocking.**

IMPORTANT :

- When you lift the unit, do not lift the bypass pipe between the fuel tanks LH and RH.

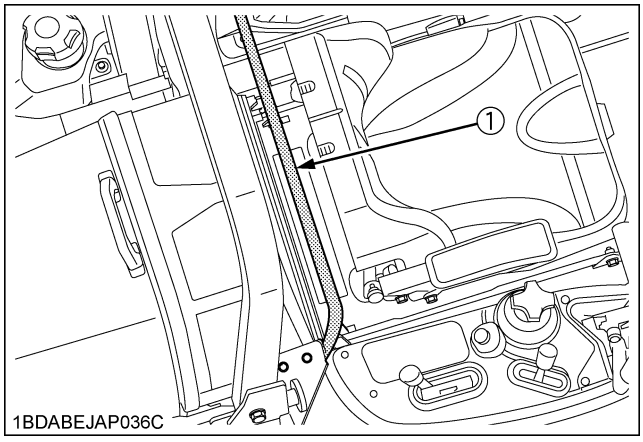

(1) Bypass pipe

■Front side:

Lift the front axle with nylon slings. Or jack up the front axle.
Never lift up the mower deck.

IMPORTANT :

- When you use nylon slings or a jack, make sure to block rear wheels with chocks.

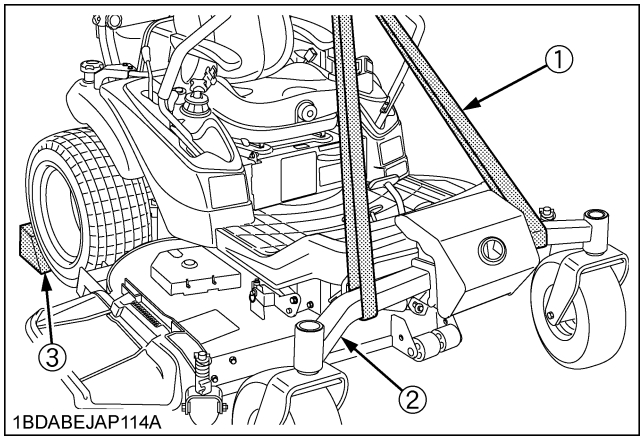

(1) Nylon sling
(2) Front axle
(3) Chock

■Rear side:

Lift the rear frame with a nylon sling. Or jack up the bottom plate.
Never lift up the engine oil pan or battery support.

IMPORTANT :

- When you use a nylon sling or a jack, make sure to block front wheels with chocks.

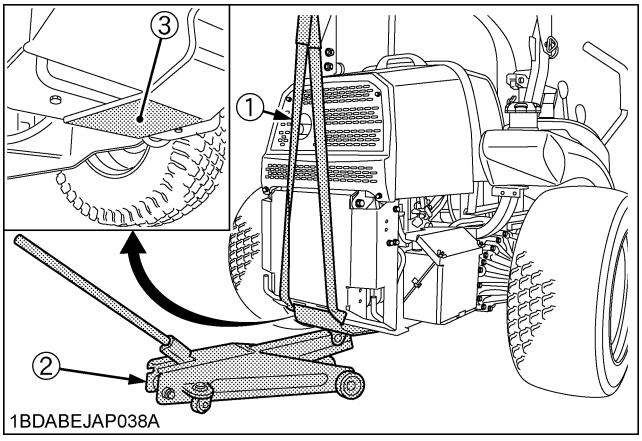

(1) Nylon sling
(2) Jack
(3) Bottom plate

https://truckmanualshub.com/

DAILY CHECK

To prevent trouble from occurring, it is important to know the condition of the machine. Check it before starting.

WARNING

To avoid serious injury or death:

- **Be sure to check and service the machine on a level surface with the engine shut off, the key removed and the parking brake securely set or chock the rear wheels.**

	No.	Check item	Ref. Page
Walking around the machine	1	Tire pressure, wear and damage	37 50
	2	Oil and water leak	-
	3	Fuel level	47
	4	Engine oil level	47
	5	Transmission fluid level	48
	6	Coolant level in the radiator and the recovery tank	48
	7	Damage of machine body, tightness of all bolts and nuts	-
	8	Machine body cleaning	-
	9	Radiator screen	49
	10	Hood screen	49
	11	Brake play	60
	12	Oiling	57
	13	Air cleaner primary element	58

	No.	Check item	Ref. Page
Mower	1	Oil leak	55
	2	Make sure blade bolts are tight	73
	3	Belt and blades wear or damage	73
	4	Check all hardware.	-
	5	Make sure all pins are in place	-
	6	Mower deck cleaning	-
	7	Greasing ● Universal joint ● 3 spindle shafts ● Belt tension pulley ● Belt tension pivot ● Front anti-scalp roller pivot boss ● Front anti-scalp roller	50
While sitting in the operator's seat	1	Motion control lever	-
	2	Parking brake	-
Turning the key switch "ON"	1	Performance of the Easy Checker (TM) light	14
Starting the engine	1	Color of the exhaust fumes	-
	2	Safety systems. If either of these do not operate properly, contact your local KUBOTA Dealer immediately.	54 55
	3	Check for abnormal noise and vibration.	-
Others	1	Check the areas where previous trouble was experienced.	-

https://truckmanualshub.com/

LUBRICANTS, FUEL AND COOLANT

Place	Capacities				Lubricants	
	ZD1211	**ZD1211R**	**ZD1211L**	**ZD1211RL**		
Fuel	49 L (12.9 U.S.gals.)				● No.2-D diesel fuel ● No.1-D diesel fuel if temperature is below -10 ℃ (14 ℉)	
Coolant	3.5 L (3.70 U.S.qts.)				Fresh clean water with anti-freeze	
Recovery tank	0.25 L (0.26 U.S.qts.)					
Engine crankcase	3.9 L (4.1 U.S.qts.)*1				● Engine oil: API service Classification CF or better Above 25 ℃ ...SAE30, SAE10W-30 or 15W-40 (77 ℉) 0 to 25 ℃ .....SAE20, SAE10W-30 or 15W-40 (32 to 77 ℉) Below 0 ℃ .....SAE10W, SAE10W-30 or 15W-40 (32 ℉)	
Transmission case with filter & hose Rear axle gear case (RH &LH)	12.1 L (12.8 U.S.qts.)				● KUBOTA SUPER UDT-2 fluid*2	
Mower gear box	0.5 L (0.53 U.S.qts.)	0.4 L (0.42 U.S.qts.)	0.5 L (0.53 U.S.qts.)	0.4 L (0.42 U.S.qts.)	**ZD1211, ZD1211L** Engine oil: API service Classification SH, SJ or higher SAE10W-30	**ZD1211R, ZD1211RL** SAE90 gear oil (API service classification: more than GL-3)
Greasing	No. of greasing points		Capacity		Type of grease	
King Pin	2		Until grease overflows		● Multipurpose EP2 Grease (NLGI Grade No.2)	
Center Pin	1					
Front wheel	2					
Rear mower link bushing	4					
Front mower link bushing	2					
Tilt lever	1					
Universal joint	3					
Seat adjuster	2					
Cable (throttle)	2		Moderate amount		● Oil	
	[MOWER]					
Universal joint	3		Until grease overflows		● Multipurpose EP2 Grease (NLGI Grade No.2)	
Three spindle shafts	3					
Belt tension pulley	1					
Belt tension pivot	1					
Front anti scalp roller pivot boss	2					
Front anti scalp roller	2					

https://truckmanualshub.com/

Note *1 Oil amount when the oil level is at the upper level of the oil level gauge.
*2 The product name of KUBOTA genuine UDT fluid may be different from that in the Operator's Manual depending on countries or territories. Consult your local KUBOTA Dealer for further detail.

IMPORTANT :
- To prevent serious damage to hydraulic systems, use only KUBOTA genuine fluid or its equivalent.

NOTE :

◆ **Fuel:**
- Cetane number of 45 is minimum. Cetane number greater than 50 is preferred, especially for temperatures below -20℃ (-4℉) or elevations above 1500 m (5000 ft).
- Diesel fuels specified to EN 590 or ASTM D975 are recommended.
- No.2-D is a distillate fuel of lower volatility for engines in industrial and heavy mobile service. (SAE J313 JUN87)

◆ **Engine Oil:**
- Oil used in the engine must have an American Petroleum Institute (API) service classification and Proper SAE Engine Oil according to the ambient temperatures as shown above:

- Refer to the following table for the suitable API classification engine oil according to the engine type (with internal EGR, external EGR or non-EGR) and the fuel.

Fuel used	Engine oil classification (API classification)	
	Oil class of engines except external EGR	Oil class of engines with external EGR
Ultra Low Sulfur Fuel [<0.0015% (15 ppm)]	**CF, CF-4, CG-4, CH-4** or **CI-4**	**CF** or **CI-4** (Class CF-4, CG-4 and CH-4 engine oils cannot be used on EGR type engines)

EGR: Exhaust Gas Re-circulation
- The CJ-4 engine oil is intended for DPF (Diesel Particulate Filter) type engines, and cannot be used on this machine.

	except external EGR	with external EGR
Models	ZD1211, ZD1211R, ZD1211L, ZD1211RL	---

◆ **Transmission Oil:**
KUBOTA Super UDT-2: For an enhanced ownership experience, we highly recommend Super UDT-2 to be used instead of standard hydraulic/transmission fluid.
Super UDT-2 is a proprietary KUBOTA formulation that deliveries superior performance and protection in all operating conditions.
Regular UDT is also permitted for use in this machine.
- Indicated capacities of water and oil are manufacturer's estimate.

https://truckmanualshub.com/

■Checking Engine Oil Level

WARNING

To avoid serious injury or death:

- **Always stop the engine and remove the key before checking oil.**

1. Check engine oil before starting and 5 minutes or more after the engine has stopped.
2. Wipe dipstick area clean.
3. To check the oil level, remove the dipstick, wipe it clean, replace it, and draw it out again. Check to see that the oil level is between the 2 notches.
4. Add new oil to the prescribed level at the oil port if necessary.

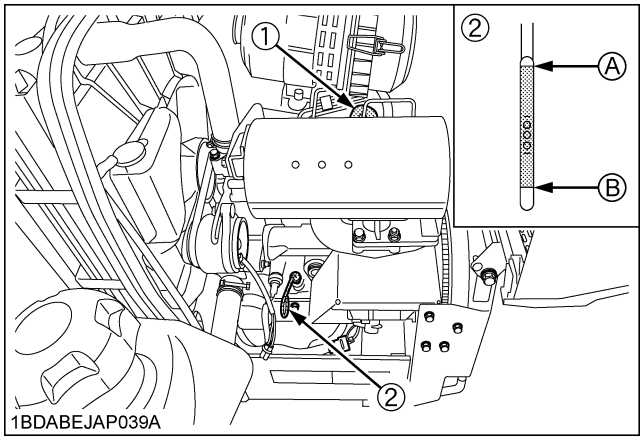

(1) Engine oil port *(A) "UPPER LEVEL"*
(2) Oil level dipstick *(B) "LOWER LEVEL"*

5. When using a different brand or viscosity oil from the previous one, remove all of the old oil and oil filter. Never mix 2 different types of oil.
6. Use the proper Engine Oil SAE according to the ambient temperatures. (See "LUBRICANTS, FUEL AND COOLANT" in "PERIODIC SERVICE" section.)

■Checking Amount of Fuel and Refueling

WARNING

To avoid serious injury or death:

- **Handle fuel carefully. If the engine is running, do not fill the fuel tank. If engine is hot, let engine cool several minutes before adding fuel. Do not smoke while filling the fuel tank or servicing the fuel system. Fill fuel tank only to bottom of filler neck.**

Check the fuel level. Take care that the fuel tank does not become empty.

Fuel tank capacity	49 L (12.9 U.S.gals.)

IMPORTANT :

- Use Diesel Fuel Only

1. Use No.2 diesel fuel.
2. Use No.1 diesel fuel if the temperature is below -10℃ (14℉).
3. Always use a strainer when refueling to prevent fuel injection pump contamination.

IMPORTANT :

- Do not permit dirt or trash or water to get into the fuel system.
- Be careful not to let the fuel tank become empty, otherwise air will enter the fuel system, necessitating bleeding before next engine start.
- Be careful not to spill fuel during refueling. If a spill should occur, wipe it off at once, or it may cause a fire.
- To prevent condensation (water accumulation) in the fuel tank, fill the tank before parking overnight.
- When refueling, basically fill both fuel tanks full.
- In the case you have a small amount of fuel, if fuel is still in the fuel tank RH, fill the fuel tank LH first.
- The fuel gauge shows the fuel level of fuel tank RH. When the fuel gauge flashes, fill fuel as soon as possible.
- When the fuel gauge flashes, do not fill fuel on a slope. Fuel can absorb air and the engine can stall.

https://truckmanualshub.com/

- If the engine stalled with some remaining in the fuel tank RH, close the fuel valve of fuel tank LH and you can operate.

■Checking Transmission Fluid Level

WARNING

To avoid serious injury or death:

- **Allow the transmission case to cool down sufficiently when cleaning its surface.**

1. Park the machine on a flat surface, lower the implement to the ground and shut off the engine and remove the key.
   Allow the machine to idle for 1-3 minutes, and then check fluid.
2. Raise and lock the operator's seat.
3. To check the oil level, draw out the dipstick, wipe it clean, replace it, and draw it out again. Check to see that the oil level lies between the two notches.
   If the level is too low, add the new oil to the prescribed level at the oil inlet.
   (See "LUBRICANTS, FUEL AND COOLANT" in "PERIODIC SERVICE" section.)

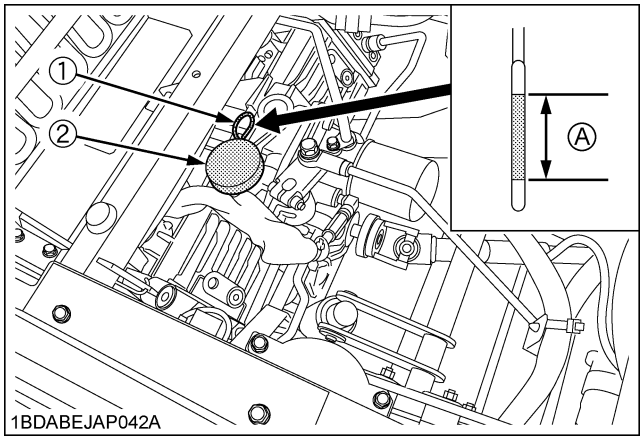

(1) Oil level dipstick
(2) Oil plug and breather cup
(A) Oil level is acceptable within this range.

IMPORTANT :

- If oil level is low, do not run engine.

■Checking Coolant Level

WARNING

To avoid serious injury or death:

- **Do not remove the radiator cap when the engine is hot. Then loosen cap slightly to the stop to relieve any excess pressure before removing cap completely.**

Check the coolant level daily for both the radiator and the recovery tank before starting engine.

1. Remove the radiator cap and check to see that the coolant level is just below the fill port.
2. Check to see that the coolant level is between the "FULL" and "LOW" marks of recovery tank.
3. When the coolant level drops due to evaporation, add water only up to just below the fill port of the radiator and the full level of the recovery tank.
   In case of leakage, add anti-freeze and water in the specified mixing ratio up to the full level.
   (See "Flushing Cooling System and Changing Coolant" in "EVERY 2000 HOURS or EVERY 2 YEARS" in "MAINTENANCE" section.)
4. Check radiator hoses for wear, cracks, bubbles or leaks. If any such are found, repair immediately.
   (See "Replacing Radiator Hose" in "EVERY 4 YEARS" in "MAINTENANCE" section.)
5. Set the direction of the recovery tank cap outlet at left front (45°). Set the bottom tip of the hose between front side of radiator hose and inner side of the frame. (This will prevent the hose from pulling down and open the recovery tank cap.)

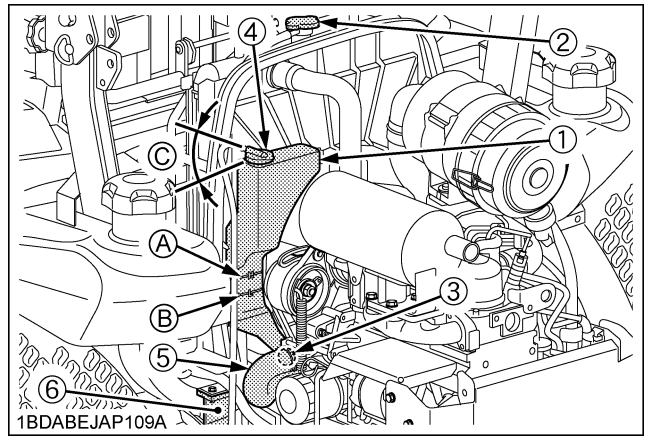

(1) Recovery tank
(2) Radiator cap
(3) Drain plug
(4) Recovery tank cap
(5) Radiator hose
(6) Frame
(A) "FULL"
(B) "LOW"
(C) 45°

https://truckmanualshub.com/

IMPORTANT :
- Start engine with the hood closed.
- If the radiator cap has to be removed, follow the caution above and securely retighten the cap.
- Use clean, distilled water and anti-freeze to fill the radiator and the recovery tank.
- If water should leak, consult your local KUBOTA Dealer.

■Checking and Cleaning Radiator Screen and Hood Screen

WARNING

To avoid serious injury or death:
- **Engine components can get extremely hot from operation. To prevent severe burns, do not touch these areas while the engine is running, or immediately after it is turned off.**
  Never operate the engine without heat shields or guards.

WARNING

To avoid serious injury or death:
- **Be sure to stop the engine and remove the key before cleaning.**

IMPORTANT :
- The air intake area must be clear of debris to prevent the engine from overheating.

Daily or after every 5 hours of operation, check to be sure the radiator screen and the hood screen are clean.
Dirt or chaff on the radiator screen, hood screen or radiator decrease cooling performance.

1. Remove the radiator screen and the hood screen, and remove all foreign material.
2. Remove the dust from between the fins and the tube.
3. Tighten the fan drive belt as necessary. For this, refer to "EVERY 100 HOURS" in "MAINTENANCE" section.
4. If the scale forms in the tube, clean with the scale inhibitor or its equivalent.
5. Each time the hood screen is covered with grass during operation, rub it off the screen with the hand.
   Check the radiator screen from time to time if grass accumulates.
6. If the dust or chaff has accumulated inside of the hood, remove the radiator screen and clean inside completely.
   After cleaning, replace the radiator screens properly.
7. Check the radiator for dust or chaff build up.
   If the dust or chaff has accumulated in the radiator, clear with air pressure (not to exceed 30 psi) or a hose.

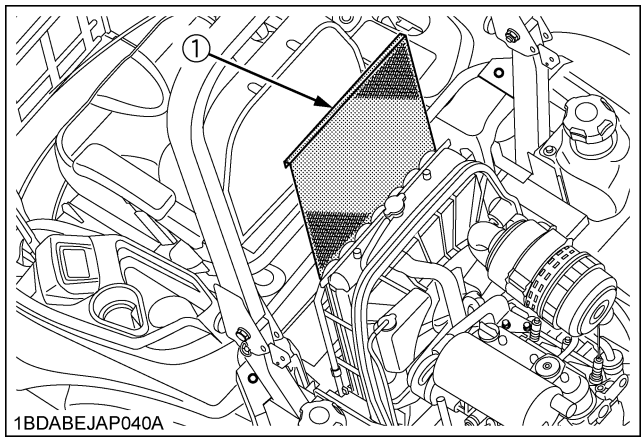

(1) Radiator screen

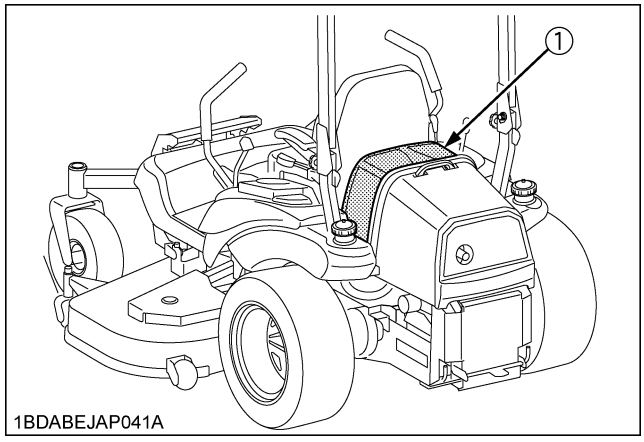

(1) Hood screen

https://truckmanualshub.com/

■Checking Tire Pressure

WARNING

To avoid serious injury or death:

- **Do not attempt to mount a tire on a rim. This must be done by a qualified person with the proper equipment.**
- **Always maintain the correct tire pressure. Inflation pressure in tires rises quickly when using compressed air.**
  Do not inflate tires above the recommended pressure shown in the Operator's Manual.

IMPORTANT :

- Do not use tires larger than specified.

■Inflation Pressure

Though the inflation pressure is factory-set to the prescribed level, it naturally drops slowly in the course of time. Thus, check it and inflate as necessary.

	Tire sizes	Recommended Inflation Pressure
Front	15 x 6.0 - 6, Smooth semi-pneumatic Non flat tire	- - -
Rear	26 x 12.0 - 16, 4PR Turf Low profile tire	83 kPa (0.84 kgf/cm², 12 psi)

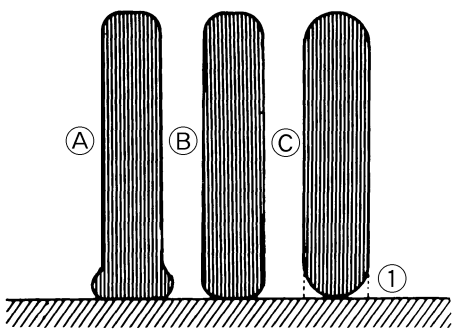

1BDABARAP002A

(1) Ground

(A) "INSUFFICIENT"
(B) "NORMAL"
(C) "EXCESSIVE"

■Lubricating All Grease Fittings

WARNING

To avoid serious injury or death:

- **Be sure to stop the engine and remove the key before greasing.**

Grease the following location.

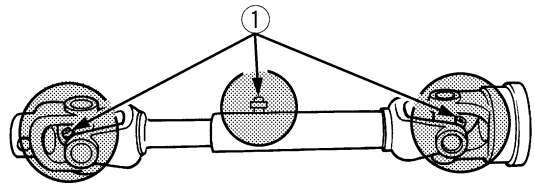

1BDABARAP010G

(1) Mower universal joint

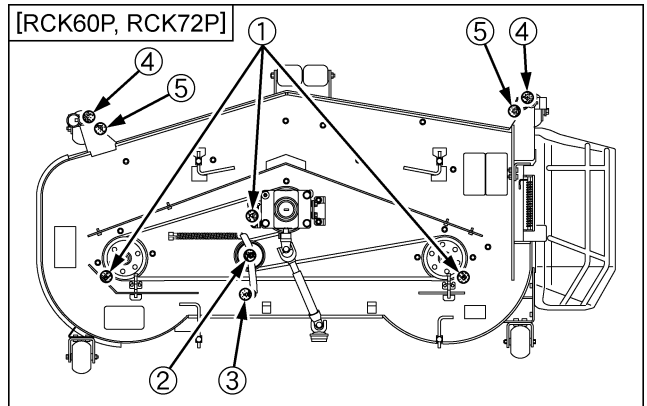

1BDABEJAP044A

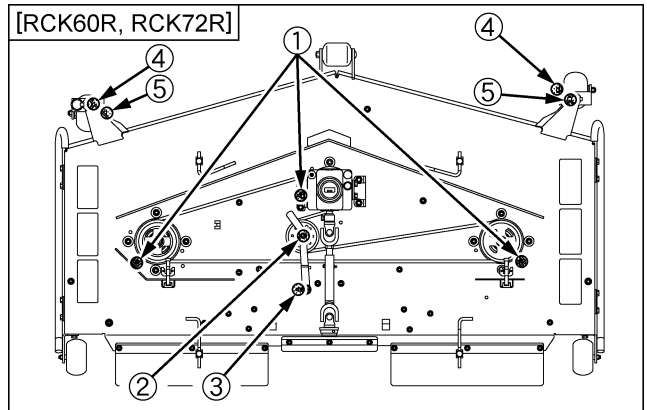

1BDABEJAP081A

(1) Spindle shaft
(2) Belt tension pulley
(3) Belt tension pivot
(4) Front anti-scalp roller pivot boss
(5) Front anti-scalp roller

https://truckmanualshub.com/

MAINTENANCE

SERVICE INTERVALS

You must do the following servicing jobs on the machine at the stated running-time intervals.

No.	Items		Indication hour meter (Hr)													Ref. Page		
			50	100	150	200	250	300	350	400	450	500	550	600	After since			
1	Engine start system	Check	○	○	○	○	○	○	○	○	○	○	○	○	every 50Hr	54		
2	OPC system	Check	○	○	○	○	○	○	○	○	○	○	○	○	every 50Hr	55		
3	Mower gear box oil	Check	○	○	○	○	○	○	○	○	○	○	○	○	every 50Hr	55		
		Change			○			○			○			○	every 150Hr	63		
4	Greasing (except mower and mower link bushings)	-	○	○	○	○	○	○	○	○	○	○	○	○	every 50Hr	56		
5	Throttle Cable	Oil	○	○	○	○	○	○	○	○	○	○	○	○	every 50Hr	57		
6	Greasing (mower link bushings, pivot)	-		○		○		○		○		○		○	every 100Hr	61		
7	Air cleaner primary element	Clean		○		○		○		○		○		○	every 100Hr	58	*2	@
		Replace													every 1000Hr or 1 year	67	*3	
	Secondary element	Replace													every 1000Hr or 1 year	67	*3	
8	Fuel filter element	Check		○		○		○		○		○		○	every 100Hr	58		@
		Replace								○					every 400Hr	67	*6	
9	Fan belt	Adjust		○		○		○		○		○		○	every 100Hr	59		
10	Parking brake	Adjust		○		○		○		○		○		○	every 100Hr	60	*9	
11	Battery condition	Check		○		○		○		○		○		○	every 100Hr	61	*7	
12	Engine oil	Change	◎			○				○				○	every 200Hr	64	*1	
13	Engine oil filter	Replace	◎			○				○				○	every 200Hr	64	*1	
14	Transmission oil filter [HST]	Replace	◎			○				○				○	every 200Hr	65	*1	
15	Front axle pivot	Adjust		◎		○				○				○	every 200Hr	65	*8	

https://truckmanualshub.com/

ENGLISH

No.	Items		Indication hour meter (Hr)													Ref. Page		
			50	100	150	200	250	300	350	400	450	500	550	600	After since			
16	Transmission fluid and Rear axle gear case (RH & LH) fluid	Change								◎					every 400Hr	66		
17	Hydraulic oil filter	Replace								○					every 400Hr	67		
18	Fuel injection nozzle injection pressure	Check													every 1500Hr	68	*6	@
19	Radiator	Clean													every 2000Hr or 2 years	68	*5	
20	Coolant	Change													every 2000Hr or 2 years	68	*5	
21	Injection pump	Check													every 3000Hr	70	*6	@
22	Fuel line	Check													every 1 year	70	*4 *9	@
		Replace													every 4 years	72	*6	
23	Radiator hose and clamp	Check													every 1 year	70	*4 *9	
		Replace													every 4 years	72	*9	
24	Hydraulic hose	Check													every 1 year	71	*4 *9	
		Replace													every 4 years	72	*6	
25	Intake air line	Check													every 1 year	71	*4 *9	@
		Replace													every 4 years	72	*9	
26	Engine breather hose	Check													every 1 year	71	*4 *6	
		Replace													every 4 years	72	*6	
27	Mower gear box oil seal	Check													every 1 year	71	*4 *6	
		Replace													every 4 years	72	*6	
28	Fuel system	Bleed													Service as required	72		
29	Fuse	Replace														72		
30	Blade	Replace														73		
31	Mower belt	Replace														74		

https://truckmanualshub.com/

IMPORTANT :

- The jobs indicated by ◎ must be done initially.
  - *1 The initial 50 hours should not be a replacement (change) cycle.
  - *2 Air cleaner must be cleaned more often in dusty conditions than in normal conditions.
  - *3 Every 1000 hours or every 1 year whichever comes faster.
  - *4 Replace if any deterioration (crack, hardening, scar, or deformation) or damage occurred.
  - *5 Every 2000 hours or every 2 years whichever comes faster.
  - *6 Consult your local KUBOTA Dealer for this service.
  - *7 When the battery is used for less than 100 hours per year, check the battery condition by reading the indicator annually.
  - *8 The initial 100 hours should not be an adjustment cycle.
  - *9 If you feel you are unable to make the following service correctly and safely, contact your local KUBOTA Dealer.
- The items listed above (@ marked) are registered as emission related critical parts by KUBOTA in the U.S.EPA non-road emission regulation. As the engine owner, you are responsible for the performance of the required maintenance on the engine according to the above instruction.
  Please see the Warranty Statement in detail.

PERIODIC SERVICE CHART LABEL

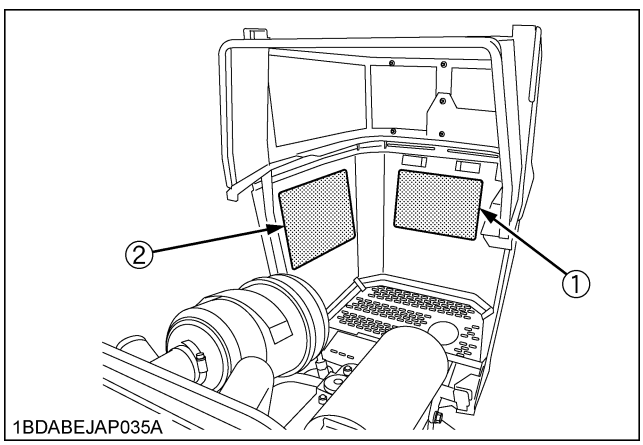

1BDABEJAP035A

(1) Part No. K3441-6552-3 (ENGLISH)

PERIODIC SERVICE CHART

INTERVAL		RECOMMENDED SERVICE ※
DAILY	CHECK	1. Tire pressure, wear, or damage. 2. Oil and water leakage from machine and mower. 3. Engine and transmission oil, radiator and recovery tank coolant and fuel level. 4. Damage to machine body, tightness of all bolts, nuts and pins, etc. 5. Mower blades and belt for wear or damage. 6. Parking brake, speed control levers, all safety switches and easy checker functions. 7. Color of the exhaust fumes, abnormal noise and vibrations.
	CLEAN	・Radiator screen and core, panel screen, air cleaner primary element and mower deck.
	GREASE	・Mower U-joint(3 places)/Spindle shaft(3 places)/ Belt tension pulley(1 place)/Belt tension pivot(1 place)
FIRST 50 Hr. [BREAK-IN] (MUST BE DONE.)	REPLACE	・Engine & HST Transmission oil filters(2 places)
	CHANGE	・Engine oil
FIRST 100 Hr. (MUST BE DONE.)	ADJUST	・Front axle pivot
FIRST 400 Hr. (MUST BE DONE.)	REPLACE	・Hydraulic oil filter
	CHANGE	・Transmission & Rear axle gear case(RH & LH) fluid.

※ : See Operator's Manual in details.
☆ : Should be serviced by KUBOTA Dealer.
★ : Required more often in dusty conditions.
■ : Replace if necessary.
● : Replace for maximum of every 4 years.
▲ : Whichever comes first.

Tire pressure and tightening torque recommendation.

Front	15x 6.0- 6(NO FLAT)	NO NEED	Ensure smooth rotation of wheel. <Do not over tighten.>
Rear	26x12.0-16	83 kPa (12.0 psi)	108.5-130.2 Nm(80.0-96.0 ft・lbs)

INTERVAL		RECOMMENDED SERVICE ※
E	50 Hr.	CHECK ・Mower gear box oil / Engine start system / OPC system
		OIL ・Throttle cable(2 places)/ Motion control lever pivot bushing and contact position(2 places each)
		GREASE ・Front axle and wheel(5 places)/ Universal joint(3 places)/ Seat adjuster(2 places)
V	100 Hr.	CHECK ・Fuel filter element / Battery condition
		CLEAN ・Air cleaner primary element ★
		ADJUST ・Fan belt / Parking brake ☆
	150 Hr.	CHANGE ・Mower gear box oil
	200 Hr.	REPLACE ・Engine oil filter / HST transmission oil filter
		CHANGE ・Engine oil
E		ADJUST ・Front axle pivot / Motion control lever pivot
	400 Hr.	REPLACE ・Fuel filter element ☆ / Hydraulic oil filter
		CHANGE ・Transmission & Rear axle gear case(RH & LH) fluid
R	1500 Hr.☆	CHECK ・Fuel Injection Nozzle Injection Pressure
	3000 Hr.☆	CHECK ・Injection Pump
	1 year	CHECK ※■● ・Radiator hose and clamp / Hydraulic hose / Fuel line / Mower gear box oil seal / Intake Air Line /Engine breather hose
Y	1 year/1000Hr.▲	REPLACE ・Air cleaner both elements
	2 year/2000Hr.▲	CLEAN ・Radiator
		CHANGE ・Coolant

Approximate fluid capacities. unit:L(qts.)

	ZD1211 ZD1211L	ZD1211R ZD1211RL
Engine	3.9(4.10)	
Radiator	3.5(3.70)	
Transmission	12.1(12.8)	
Reserve tank	0.25(0.26)	
Mower gear box	0.5(0.53)	0.4(0.42)

1BDABEJAP060A

(2) Part No. K3441-6553-2 (SPANISH)

TABLA DE SERVICIO PERIODICO

INTERVALO		SERVICIO RECOMENDADO ※
DIARIO	REVISAR	1. Presión, desgaste y daño de los neumáticos. 2. Fugas de aceite y agua de la máquina y del cortacéspedes. 3. Aceite del motor, fluido de transmisión, refrigerante del tanque de recuperación y nivel de combustible. 4. Daño a la carrocería de la máquina, ajuste de todos los pernos, tuercas y pines, etc. 5. Hojas de cortar, desgaste o daño de la correa del cortacéspedes. 6. Freno de estacionamiento, palancas de control de velocidad, todos los interruptores de seguridad y funciones para una fácil inspección. 7. Color del humo del escape, ruido y vibraciones anormales.
	LIMPIAR	・Filtro del radiador, centro del radiador, filtro del panel y elemento primario del filtro de aire.
	ENGRASAR	・Junta universal del cortacéspedes(3lugares)/ Eje de husillo(3lugares)/Polea de tensión de la correa(1lugar)/Pivote de tensión de la correa(1lugar)
PRIMERAS 50 hrs. [Uso inicial] (Debe hacerse)	REEMPLAZAR	・Filtros de aceite del motor y transmisión(HST) (2lugares).
	CAMBIAR	・Aceite del motor
PRIMERAS 100 hrs. (Debe hacerse)	AJUSTAR	・Pivote del eje frontal
PRIMERAS 400 hrs. (Debe hacerse)	REEMPLAZAR	・Filtro del aceite hidráulico
	CAMBIAR	・Fluido de la caja de transmisión y cambio del eje posterior(DER. e IZQ.)

INTERVALO		SERVICIO RECOMENDADO ※
C	50 hr.	REVISAR ・Aceite de la caja de cambios del cortacéspedes / Sistema de arranque del motor / Sistema OPC
		ACEITAR ・Cable de estrangulamiento(2lugares)/Buje de pivote de la palanca de control de movimiento y posicion de contacto(2 lugares cada uno)
		ENGRASAR ・Eje frontal y rueda(5lugares) / Junta universal(3lugares)/ Regulador del asiento(2lugares)
	100 hr.	REVISAR ・Elemento de filtro de combustible / Condición de la batería
		LIMPIAR ・Elemento primario del filtro de aire ★
		AJUSTAR ・Correa del ventilador / Freno de estacionamiento ☆
	150 hr.	CAMBIAR ・Aceite de la caja de cambios del cortacéspedes
A	200 hr.	REEMPLAZAR ・Filtro de aceite del motor / Filtro de aceite de la transmisión(HST)
		CAMBIAR ・Aceite del motor
		AJUSTAR ・Pivote del eje frontal / Pivote de la palanca de control de movimiento
D	400 hr.	REEMPLAZAR ・Elemento de filtro de combustible ☆ / Filtro del aceite hidráulico
		CAMBIAR ・Fluido del acaja de transmision y cambio del eje posterior (DER. e IZQ.)
A	1500hr.☆	REVISAR ・Presión de inyección de la boquilla de inyección de combustible
	3000hr.☆	REVISAR ・Bomba de inyección
	1 año	REVISAR ☆■● ・Manguera y abrazadera del radiador / Manguera del sistema hidráulico / Línea de combustible / Sello del aceite de la caja de cambios del cortacéspedes / Línea de toma de aire / Manguera de respiradero del motor
	1 año/1000hr.▲	REEMPLAZAR ・Ambos elementos filtro de aire
	2 año/2000hr.▲	LIMPIAR ・Radiador
		CAMBIAR ・Refrigerante

※ : Consulte el Manual del Operador para obtener más información.
☆ : El servicio de mantenimiento debe proporcionarlo un distribuidor de KUBOTA.
★ : Se requiere más seguido en condiciones polvorosas.
■ : Reemplace si es necesario.
● : Reemplace todos los 4 años al menos.
▲ : lo que ocurra primero.

Recomendación de presión para neumáticos y par de ajuste.

Frontal	15x 6.0- 6 (No pinchada nada)	Ninguna necesidad	Asegure rotación libre de la rueda. <No apriete en exceso.>	
Posterior	26x12.0-16	83 kPa (12.0 psi)	108.5-130.2 Nm(80.0-96.0 pies・lbs)	

Capacidades de fluido (aproximadas). unidad:L(cuartos de galón)

	ZD1211 ZD1211L	ZD1211R ZD1211RL
Motor	3.9(4.10)	
Radiador	3.5(3.70)	
Transmisión	12.1(12.8)	
Tanque de reserva	0.25(0.26)	
Caja de cambios del cortacéspedes	0.5(0.53)	0.4(0.42)

1BDABEJAP060B

https://truckmanualshub.com/

EVERY 50 HOURS

■Checking Engine Start System

The Engine Start System in your machine is designed to protect you while operating. Please check these Engine Start System periodically. It is recommended to check the Engine Start System before daily operation.

WARNING

To avoid serious injury or death:

- **Do not allow anyone near the machine while testing.**
- **If the machine does not pass one of the following tests, do not operate the machine. See your local KUBOTA Dealer.**
- **Sit on operator's seat for all tests except for Test 1.**

IMPORTANT :

- Check the following tests before operating the machine.

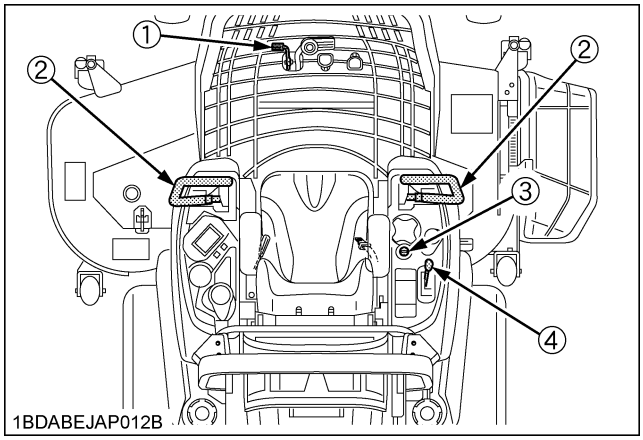

(1) Parking brake lock pedal
(2) Motion control lever
(3) Key switch
(4) PTO lever

Test 1 (OPERATOR NOT ON THE SEAT)

1. Securely set the parking brake.
2. Shift the PTO lever to "DISENGAGE" (OFF) position.
3. Set the motion control levers to the "NEUTRAL LOCK" position.
4. Turn the key switch to "START" position.
5. The engine must not crank.

Test 2 (OPERATOR ON THE SEAT)

1. Do not set the parking brake. (release it from test 1)
2. Shift the PTO lever to "DISENGAGE" (OFF) position.
3. Set the motion control levers to the "NEUTRAL LOCK" position.
4. Turn the key switch to "START" position.
5. The engine must not crank.

Test 3 (OPERATOR ON THE SEAT)

1. Securely set the parking brake.
2. Shift the PTO lever to "DISENGAGE" (OFF) position.
3. Hold the motion control levers and move then inward from "NEUTRAL LOCK" position to "NEUTRAL" position and then release the levers.
4. Turn the key switch to "START" position.
5. The engine must not crank.

Test 4 (OPERATOR ON THE SEAT)

1. Securely set the parking brake.
2. Shift the PTO lever to "ENGAGE" (ON) position.
3. Set the motion control levers to the "NEUTRAL LOCK" position.
4. Turn the key switch to "START" position.
5. The engine must not crank.

NOTE :

- If the engine cranks Test 1 through 4, consult your local KUBOTA Dealer to have the unit checked before operation.

Test 5 (OPERATOR ON THE SEAT)

1. Start the engine.
2. Keep the parking brake securely set.
3. Shift the PTO lever to "DISENGAGE" (OFF) position.
4. Hold the motion control levers and move then inward from "NEUTRAL LOCK" position to "NEUTRAL" position and then release the levers.
5. The engine must shut off after a short time delay.

IMPORTANT :

- For this test only, the engine will shut off in a few seconds.

NOTE :

- If the engine remains running in Test 5, consult your local KUBOTA Dealer to have the unit checked before operation.

https://truckmanualshub.com/

■Checking OPC System

The OPC (Operator Presence Control) system in your machine is designed to protect you while operating. Please check these OPC system periodically. It is recommended to check the OPC system before daily operation.

WARNING

To avoid serious injury or death:

- **Do not allow anyone near the machine while testing.**
- **If the machine does not pass one of the following tests, do not operate the machine. See your local KUBOTA Dealer.**

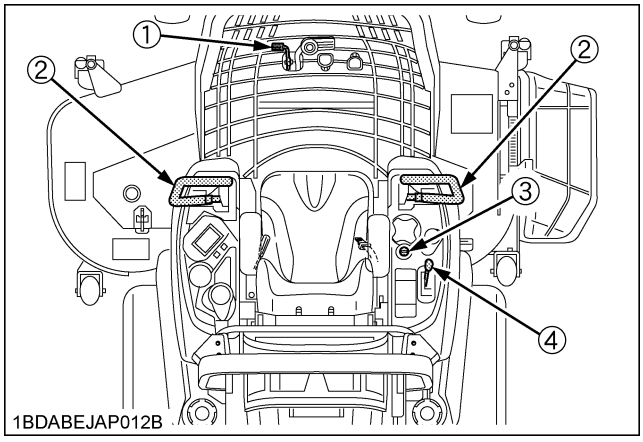

(1) Parking brake lock pedal
(2) Motion control lever
(3) Key switch
(4) PTO lever

Test 1 (OPERATOR ON THE SEAT)

1. Start the engine.
2. Do not set the parking brake.
3. Shift the PTO lever to "DISENGAGE" (OFF) position.
4. Hold the motion control levers and move them inward from "NEUTRAL LOCK" position to "NEUTRAL" position and then release the levers.
5. Stand up. (Do not get off the machine.)
6. The engine must shut off.

Test 2 (OPERATOR ON THE SEAT)

1. Start the engine.
2. Do not set the parking brake.
3. Shift the PTO lever to "ENGAGE" (ON) position.
4. Stand up. (Do not get off the machine.)
5. The engine must shut off.

NOTE :

- If the engine remains running in Test 1 or 2, consult your local KUBOTA Dealer to have the unit checked before operation.

■Checking Gear Box Oil Level

WARNING

To avoid serious injury or death:

- **Always stop the engine and remove the key before checking oil.**

1. Park the machine on a flat surface and lower the mower to the ground.
   To check the oil level, loosen the oil inlet plug with gauge, wipe it clean, reinstall it and loosen it again.
   (Refer to the following figures.)
   Check to see if the oil level is between the notch and tip.
   If the level is too low, add new oil to the prescribed level at the oil inlet.
   (See "LUBRICANTS, FUEL AND COOLANT" in "PERIODIC SERVICE" section.)
2. After checking, reinstall the oil inlet plug with gauge securely.

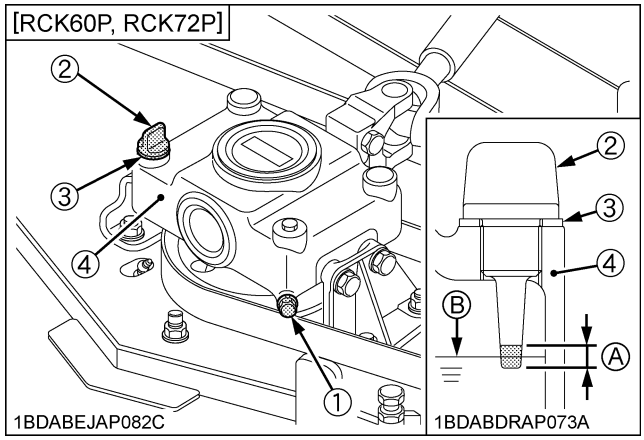

(1) Drain plug
(2) Oil inlet plug with gauge
(3) Seal washer
(4) Gear case
(A) Oil level is acceptable within this range.
(B) Oil level

https://truckmanualshub.com/

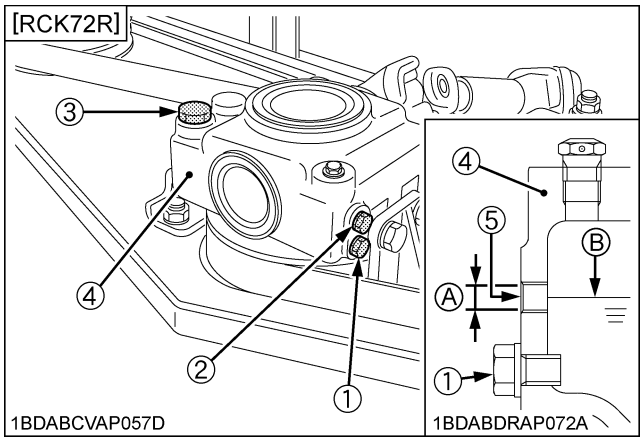

(1) Drain plug
(2) Check plug
(3) Oil inlet plug
(4) Gear case
(5) Check plug port
(A) Oil level is acceptable within this range.
(B) Oil level

NOTE :
- RCK60R Similar

■Greasing

WARNING

To avoid serious injury or death:
- **Be sure to stop the engine and remove the key before greasing.**

Grease the following locations.

IMPORTANT :
- Put grease into front wheel until grease overflows from both ends of the front wheel.

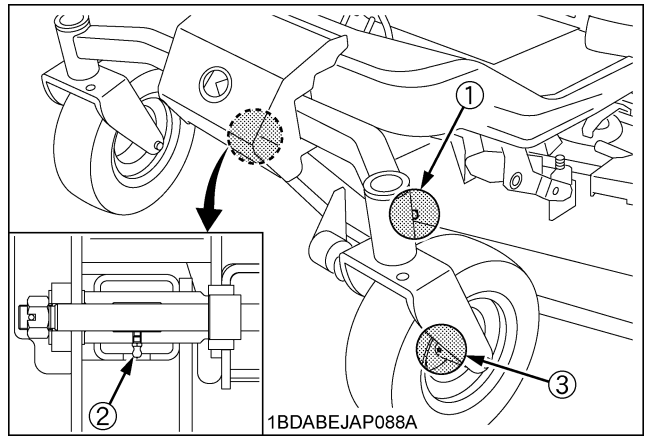

(1) King pin (LH, RH)
(2) Center pin
(3) Front wheel (LH, RH)

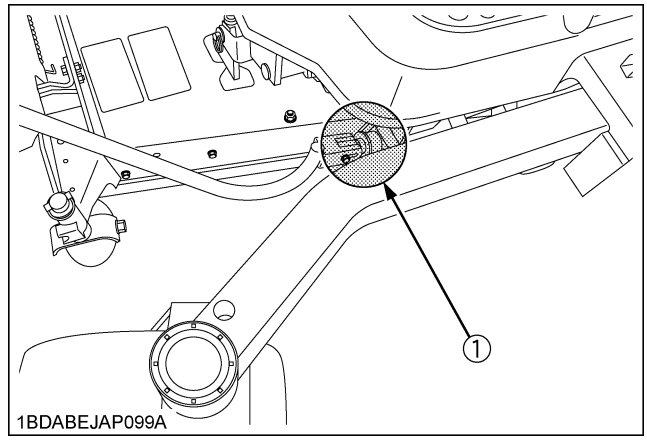

(1) Tilt lever

https://truckmanualshub.com/

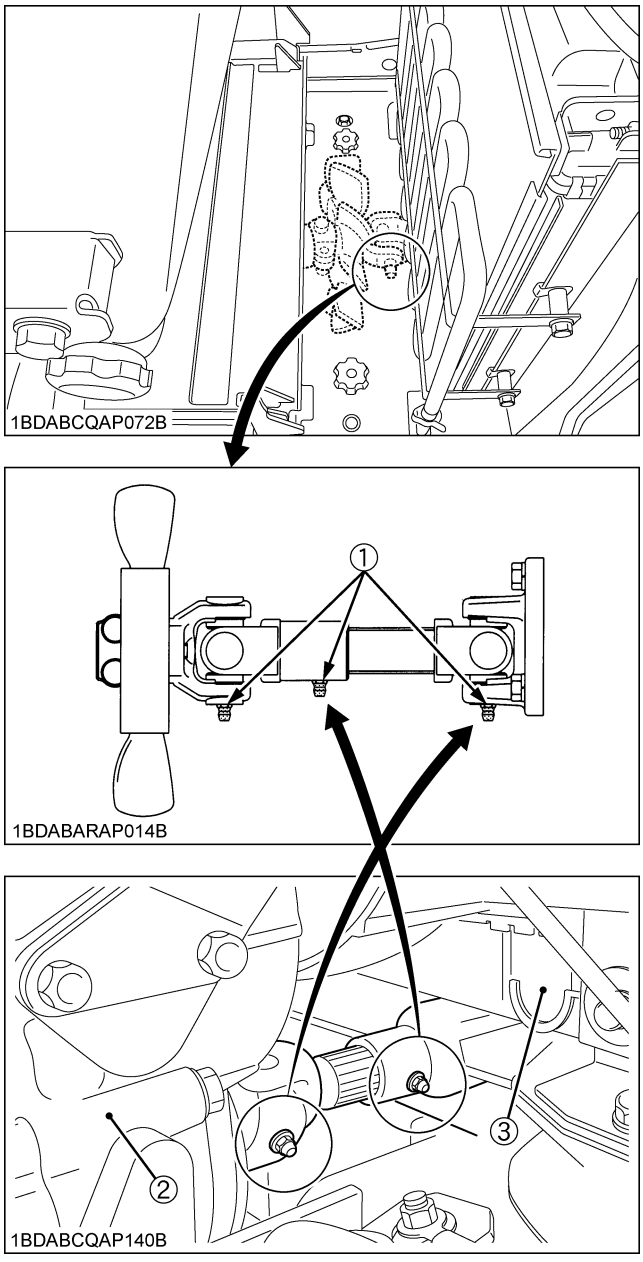

(1) Machine universal joint
(2) Engine
(3) Radiator

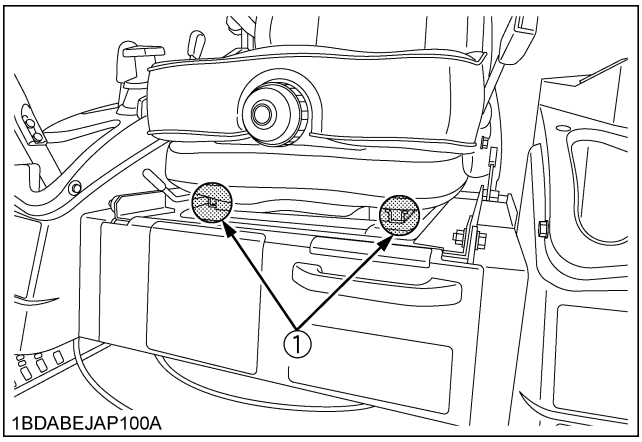

(1) Seat adjuster

■Oiling

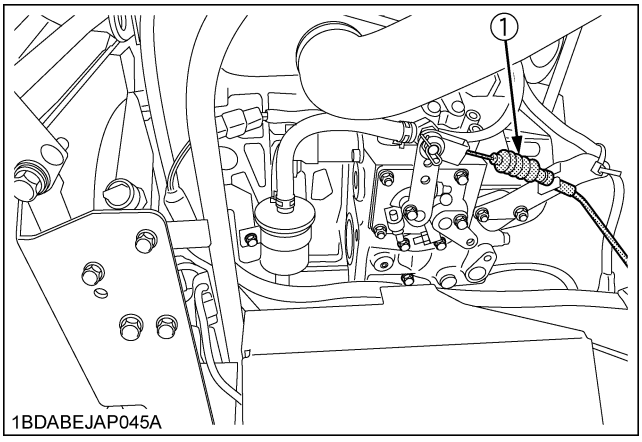

(1) Throttle cable (Oil)

https://truckmanualshub.com/

EVERY 100 HOURS

■Cleaning Air Cleaner Primary Element

WARNING

To avoid serious injury or death:

- **Be sure to stop engine and remove the key before cleaning air cleaner element.**

1. Remove the air cleaner cover and primary element.
2. Clean the primary element:
   - When dry dust adheres to the element, blow compressed air from the inside, turning the element. Pressure of compressed air must be under 205 kPa (2.1 kgf/cm^2, 30 psi).
3. Replace air cleaner primary element:
   Once yearly or every 1000 hours whichever comes first.

NOTE :

- Check to see if the evacuator valve is blocked with dust.

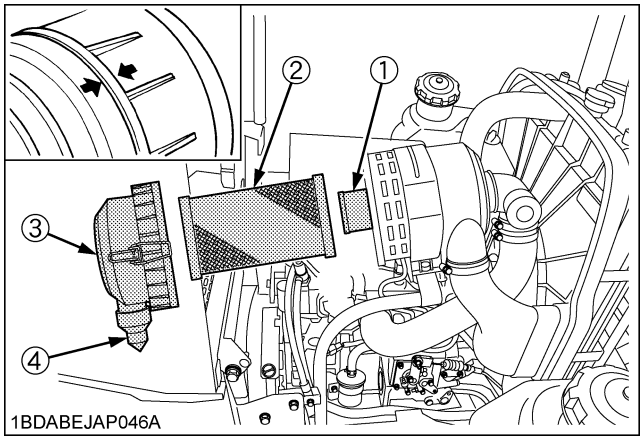

(1) Secondary element
(2) Primary element
(3) Cover
(4) Evacuator valve

NOTE :

- The air cleaner uses a dry element, never apply oil.
- Do not run the engine with filter element removed.
- Operating in dusty conditions requires more frequent maintenance.
- Align the arrow marks when reinstalling the air cleaner cover.
- Do not touch the secondary element except in cases where replacing is required.
  (See "Replacing Air Cleaner Primary Element and Secondary Element" in "EVERY 1000 HOURS or EVERY 1 YEAR" in "MAINTENANCE" section.)

◆ **Evacuator Valve**

Open the evacuator valve once a week under ordinary conditions - or daily when used in a dusty place - to get rid of large particles of dust and dirt.

■Checking Fuel Filter

WARNING

To avoid serious injury or death:

- **Be sure to stop the engine and remove the key when attempting to make the following checks and changes.**
- **Never fail to check the fuel lines periodically. The fuel lines are subject to wear and aging. Fuel may leak out onto the running engine, causing a fire.**

1. Open the step and hood.
2. Close the fuel valves below the fuel tanks LH and RH.

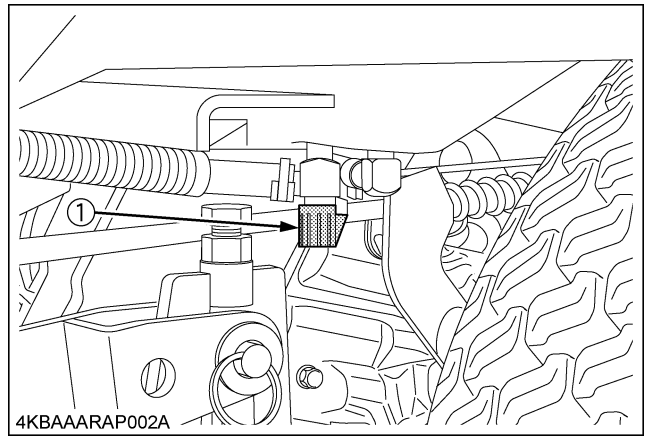

(1) Fuel valve

3. The fuel line is made of rubber and ages regardless of service period.
4. If the fuel line and clamps are found damaged or deteriorated, replace them.
5. Check fuel filter, if it is clogged by debris or contaminated with water, replace it.

IMPORTANT :

- When the fuel line is disconnected for maintenance or repair, close both ends of the fuel line with a piece of clean cloth or paper to prevent dust and dirt from entering. In addition, particular care must be taken not to admit dust and dirt into the fuel pump. Entrance of even a small amount dust or dirt cause premature wear and malfunction of the fuel pump and injector components.

https://truckmanualshub.com/

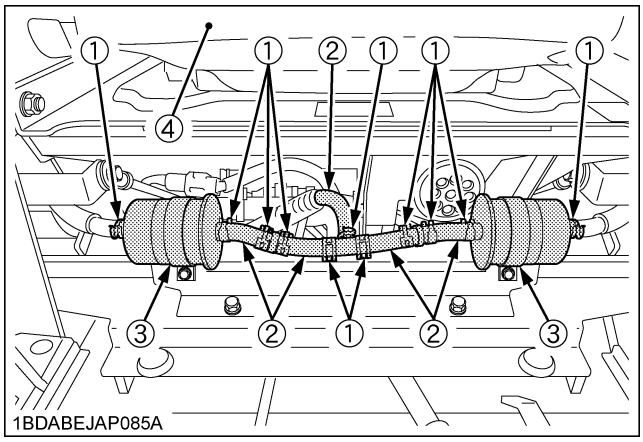

(1) Pipe clamps
(2) Fuel line
(3) Fuel filter
(4) Seat

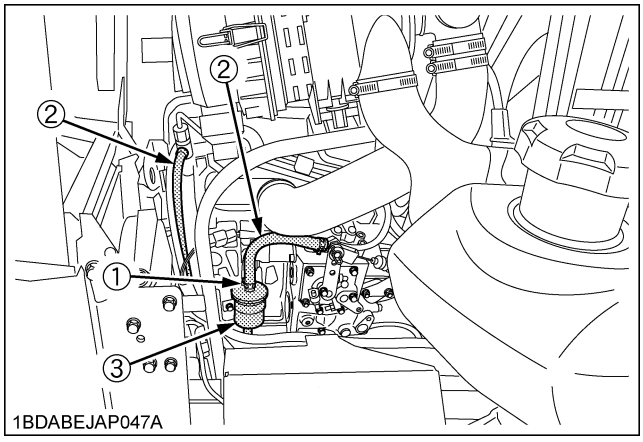

(1) Pipe clamps
(2) Fuel line
(3) Fuel filter

■Adjusting Fan Drive Belt Tension

WARNING

To avoid serious injury or death:

- **Be sure to stop the engine and remove the key before checking belt tension.**

If the fan drive belt becomes loose, the engine may overheat. To adjust, loosen bolts and move the alternator outward to tighten the belt. After adjustment, securely tighten the bolts.

Moderate belt tension:
The belt must deflect approx. 10 mm (0.4 in.) when the center of the belt is depressed with finger pressure of 98N (10kgf, 22 lbs.).

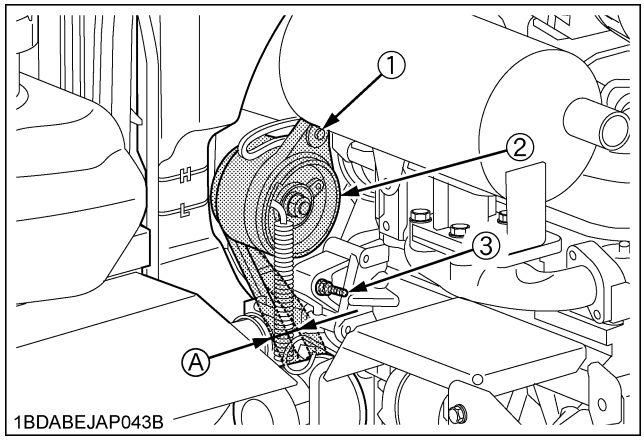

(1) Tension bolt
(2) Alternator
(3) Adjusting bolt
(A) 10 mm (0.4 in.)

https://truckmanualshub.com/

■Adjusting Parking Brake

If you feel you are unable to make the following service correctly and safely, contact your local KUBOTA Dealer.

WARNING

To avoid serious injury or death:

- **Park the machine on a firm and level surface.**
- **Stop the engine and chock the wheels before checking or adjusting.**

IMPORTANT :

- Wrong adjustment may cause machine damage.

(1) Check brake spring

1. Place the motion control levers to the "NEUTRAL LOCK" position.
2. Be sure to chock the rear wheels.
3. Apply the parking brake to the lock position.
4. Check the length of the brake springs on both sides.

(A): Proper brake spring length with the brake applied to the lock position	115 to 117 mm (4.53 to 4.61 in.)

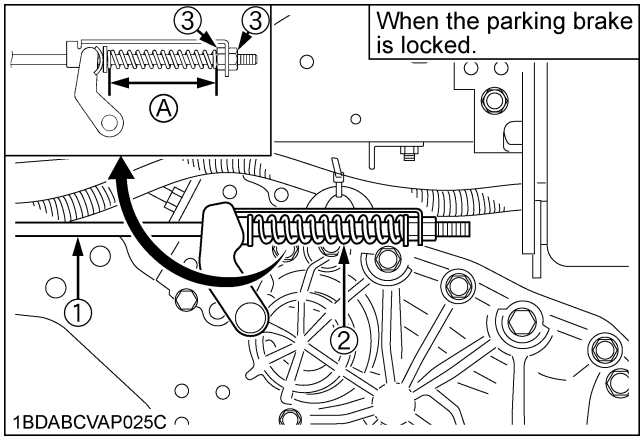

(1) Brake rod *(A) "Parking brake spring length"*
(2) Brake spring
(3) Lock nut

5. If the length of the brake spring is not correct, adjust it. (See "Adjustment of brake spring length" below.)
6. Release the parking brake completely.
7. Hold the brake rod lightly.
8. Check the brake spring play.

(B): Proper brake spring play	Reference: 0.5 to 1.0 mm (0.02 to 0.04 in.)

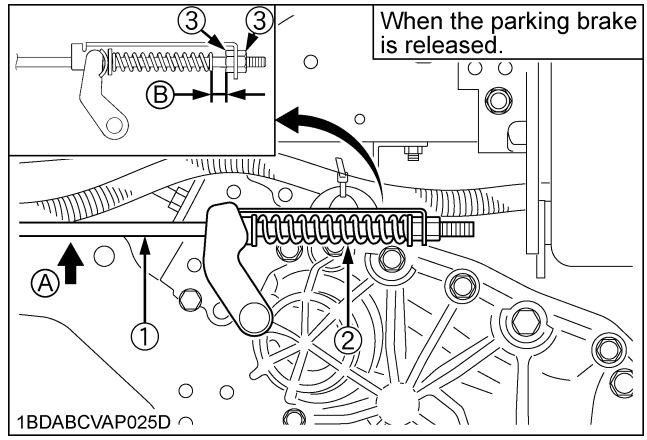

(1) Brake rod *(A) "Hold the brake rod"*
(2) Brake spring *(B) "Parking brake spring play"*
(3) Lock nut

9. If the brake spring play is not correct, adjust it. (See "Adjustment of brake spring play" below.)

◆ **Adjustment of brake spring length**

1. Place the motion control lever to the "NEUTRAL LOCK" position.
2. Apply the parking brake to the lock position.
3. Loosen the lock nuts.
4. Adjust the spring length to the recommendation.
5. Lock the nuts.
6. Check the brake spring play to the recommendation. If there is no play, adjust the brake spring play again. (See "Adjustment of brake spring play" below.)
7. Adjust the other side spring to the same dimension.

◆ **Adjustment of brake spring play**

1. Place the motion control lever to the "NEUTRAL LOCK" position.
2. Be sure to chock the rear wheels.
3. Release the parking brake completely.
4. Loosen the lock nuts.
5. Hold the brake rod by hand.
6. Tighten the nut to the correct space between the end of the spring and the nut.
7. Lock the nuts.
8. Adjust the other side spring to the same dimension.

(2) Check on the slope

1. Place the machine on a 17° ramp.
2. Apply the parking brake.
3. Place the motion control levers in "NEUTRAL LOCK" position and shut off the engine.

https://truckmanualshub.com/

4. Check that the machine does not move.

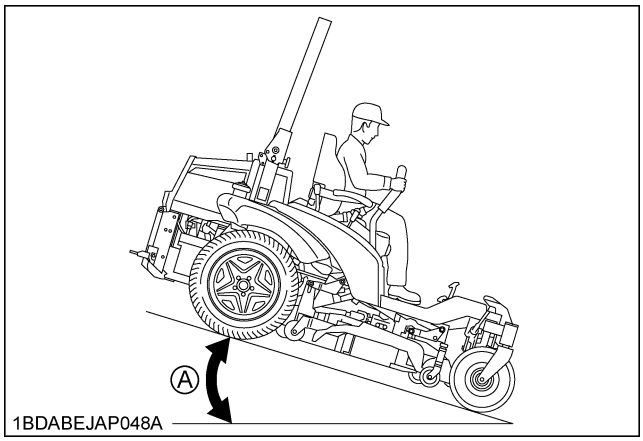

(A) 17° ramp

NOTE :
- For parking brake test purposes, only use 17° ramp.

■Greasing

WARNING

To avoid serious injury or death:
- **Be sure to stop the engine and remove the key before greasing.**

Grease the following location.
If you operated the machine in extremely wet and muddy conditions, lubricate grease fittings more often.

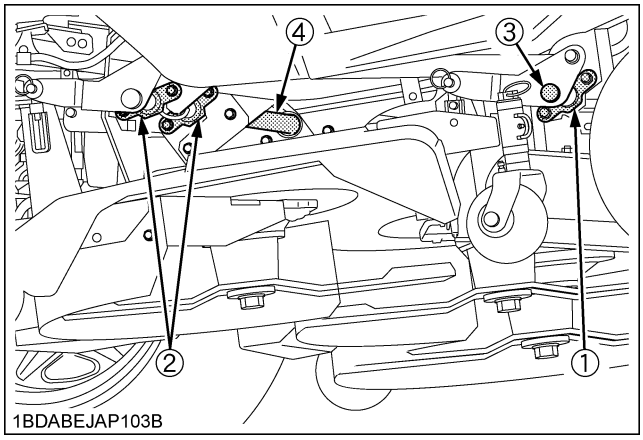

(1) Front mower link bushing (2 places)
(2) Rear mower link bushing (4 places)
(3) Front mower link
(4) Rear mower link

■Checking Battery Condition

DANGER

To avoid the possibility of battery explosion:
For the refillable type battery, follow the instructions below.
- **Do not use or charge the refillable type battery if the fluid level is below the LOWER (lower limit level) mark. Otherwise, the battery component parts may prematurely deteriorate, which may shorten the battery's service life or cause an explosion. Check the fluid level regularly and add distilled water as required so that the fluid level is between the UPPER and LOWER levels.**

DANGER

To avoid serious injury or death:
- **When the battery is being activated, hydrogen and oxygen gases in the battery are extremely explosive. Keep open sparks and flames away from the battery at all times, especially when charging the battery.**

WARNING

To avoid serious injury or death:
- **Batteries, battery posts, terminals and related accessories contain lead and lead compounds, and other chemicals known to the State of California to cause cancer and birth defects or other reproductive harm. WASH HANDS AFTER HANDLING.**
- **Never remove the battery cap while the engine is running.**
- **Keep electrolyte away from eyes, hands and clothes. If you are spattered with it, wash it away completely with water immediately and get medical attention.**
- **Wear eye protection and rubber gloves when working around battery.**

The factory-installed battery is of non-refillable type.
If the battery is weak, charge the battery or replace it with new one.

IMPORTANT :
- Mishandling the battery shortens the service life and adds to maintenance costs.
  The original battery is maintenance free, but needs some servicing.
  If the battery is weak, the engine will be difficult to start and the lights will be dim. It is important to check the battery periodically.
- When exchanging an old battery for a new one, use battery of equal specification in table below.

https://truckmanualshub.com/

Battery Type	Volts (V)	Reserve Capacity (min)	Cold Cranking Amps	Normal Charging Rate(A)
51R	12	80	430	4.5

(For non-accessible maintenance-free type batteries.)
Maintenance-free, non-accessible batteries are designed to eliminate the need to add water. Yet the volume of electrolyte above plates may eventually become depleted due to abnormal conditions such as high heat or improper regulator setting. Use LCD monitor or a voltmeter to check the state of charge. (See reference chart below to determine if charging is necessary.)

Battery voltage	Reference state of charge
12.6	100% (Full charge)
12.4	75%
12.2	50%
12.0	25%
11.8	0%

◆ **How to read the indicator**

Check the battery condition by reading the indicator.

State of indicator display	
Green	Specific gravity of electrolyte and quality of electrolyte are both in good condition.
Black	Needs charging battery.
White	Needs replacing battery.

◆ **Battery Charging**

DANGER

To avoid serious injury or death:

- **When the battery is being activated, hydrogen and oxygen gases in the battery are extremely explosive. Keep open sparks and flames away from the battery at all times, especially when charging the battery.**

WARNING

To avoid serious injury or death:

- **When disconnecting the cable from the battery, start with the negative terminal first. When connecting the cable to the battery, start with the positive terminal first.**
- **Never check battery charge by placing a metal object across the posts.**
  Use a voltmeter or hydrometer.

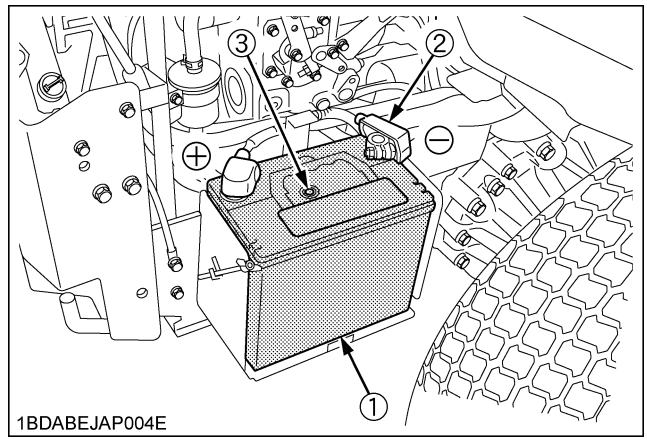

(1) Battery
(2) Ground cable
(3) Indicator
(+): Positive terminal
(-): Negative terminal

1. To slow charge the battery, connect the battery positive terminal to the charger positive terminal and the negative to the negative, then charge for at least 1 hour at 4.5 amperes.
2. A boost charge is only for emergencies. It will partially charge the battery at a high rate and in a short time.
   When using a boost-charged battery, it is necessary to recharge the battery as early as possible.
   Failure to do this will shorten the battery's service life.
3. When the specific gravity of electrolyte is between 1.27 and 1.29 the charging is completed.

◆ **Battery for storage**

1. When storing the machine for a long period, remove the battery from machine, adjust the electrolyte to the proper level and store in a dry place out of direct sunlight.
2. The battery self-discharges while it is stored.
   Recharge it once every 3 months in hot seasons and once every 6 months in cold seasons.

https://truckmanualshub.com/

EVERY 150 HOURS

■Changing Gear Box Oil

WARNING

To avoid serious injury or death:

- **Be sure to stop the engine and remove the key before changing the oil.**

1. To drain the used oil, remove the drain plug and oil inlet plug with gauge at the gear box and drain the oil completely into the oil pan.
2. After draining reinstall the drain plug.
3. Remove the oil level check plug. **[Only R models]**
4. Fill with the new oil up to the check plug port. (See "LUBRICANTS, FUEL AND COOLANT" in "PERIODIC SERVICE" section.)
5. After filling reinstall the check plug and oil inlet plug with gauge securely.

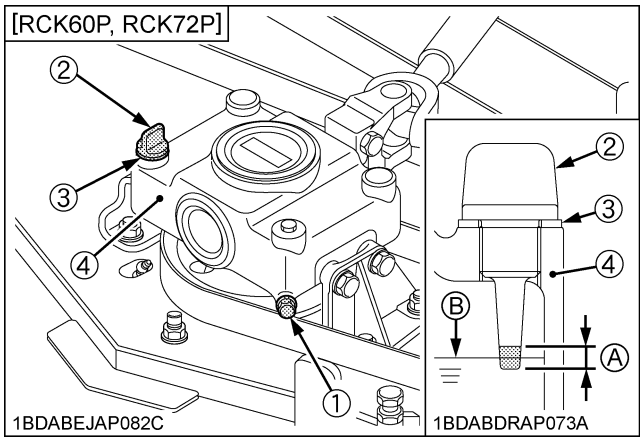

(1) Drain plug
(2) Oil inlet plug with gauge
(3) Seal washer
(4) Gear case
(A) Oil level is acceptable within this range.
(B) Oil level

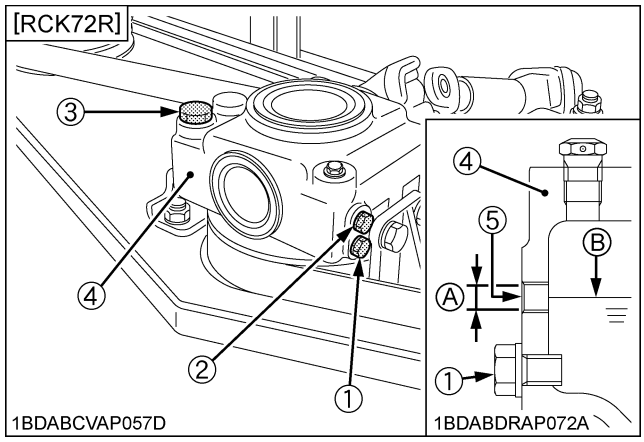

(1) Drain plug
(2) Check plug
(3) Oil inlet plug
(4) Gear case
(5) Check plug port
(A) Oil level is acceptable within this range.
(B) Oil level

NOTE :

- RCK60R Similar

https://truckmanualshub.com/

EVERY 200 HOURS

■Changing Engine Oil

WARNING

To avoid serious injury or death:

- **Be sure to stop the engine and remove the key before changing the oil.**
- **Allow engine to cool down sufficiently; oil can be hot and may cause burns.**

1. To change the used oil, remove the drain plug at the bottom of the engine and drain the oil completely. The used oil can be drained out more easily if the engine is warm.
2. Fill with the new oil up to the upper notch on the dipstick.

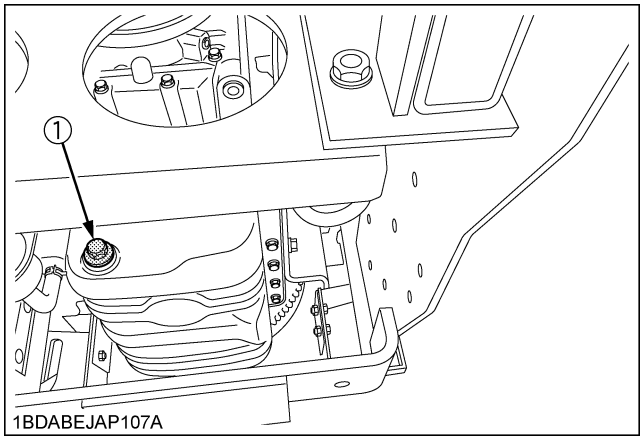

(1) Drain plug

3. To check the oil level. Remove the dipstick, wipe it clean, insert it and draw it out again. Check to see that the oil level is between the two marks.

■Replacing Engine Oil Filter

WARNING

To avoid serious injury or death:

- **Be sure to stop the engine and remove the key before changing the oil and the oil filter.**
- **Allow engine to cool down sufficiently; oil can be hot and may cause burns.**

1. The oil filter must be changed every 200 service hours.
2. Apply a slight coat of oil onto the rubber gasket of new filter.
3. Tighten the filter quickly until it contacts the mounting surface. Tighten filter by hand an additional 1/2 turn only.
4. After the new filter has been replaced, the engine oil level normally lowers a little. Add engine oil to proper level. Check for oil leaks around filter gasket.

IMPORTANT :

- To prevent serious damage to the engine, replacement element of the recommended type must be used. Use only a genuine KUBOTA filter or its equivalent.

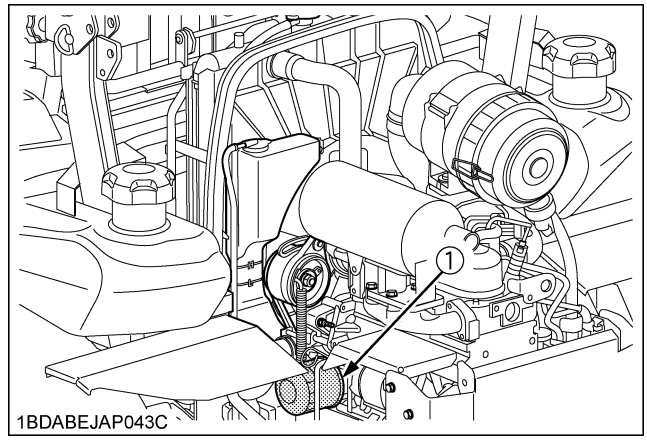

(1) Engine oil filter

https://truckmanualshub.com/

■Replacing Transmission Oil Filter [HST]

WARNING

To avoid serious injury or death:

- **Be sure to stop the engine and remove the key before changing the oil filter.**
- **Allow transmission case to cool down sufficiently; oil can be hot and may cause burns.**

1. The oil filter must be changed every 200 service hours.

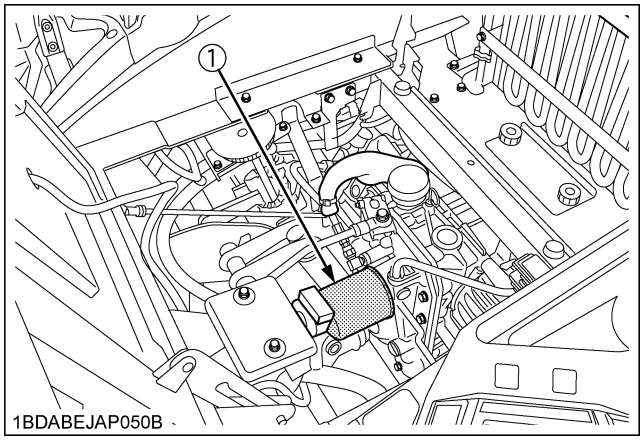

(1) Transmission oil filter [HST]

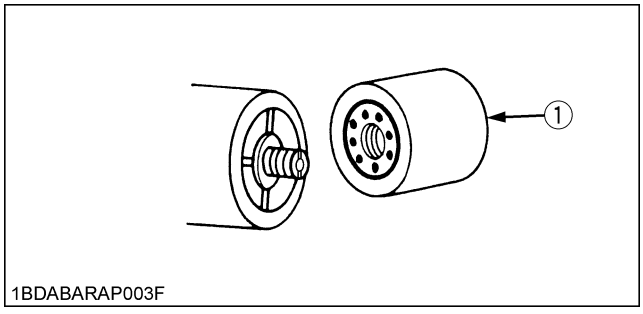

(1) Transmission oil filter [HST]

2. Place an oil pan underneath the oil filter. (Do not drain oil.)
3. Remove the oil filter by using the filter wrench.
4. Apply a slight coat of oil onto the filter gasket.
5. Tighten the filter quickly until it contacts the mounting surface. Tighten filter by hand an additional 1/2 turn only.
6. After the new filter has been replaced, the transmission fluid level normally lowers a little. Add fluid to proper level. Check for oil leaks around filter gasket.

IMPORTANT :

- To prevent serious damage or premature failure to the hydraulic system, use only a KUBOTA genuine filter.

■Adjusting Front Axle Pivot

If the front axle pivot pin adjustment is not correct, vibration in the front wheel can occur.

◆ **Check and Adjustment of the Front Axle End Play**

1. Lift up and securely block the front of the machine.
2. Measure the clearance (L) between the front axle (4) and front axle support (3).
3. If the measurement exceeds the allowable limit, adjust the nut (1).

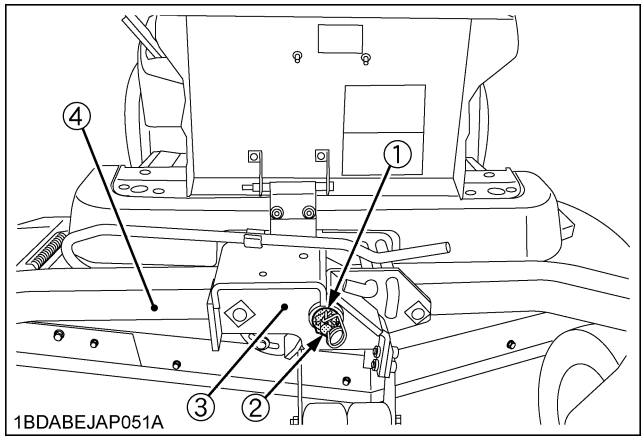

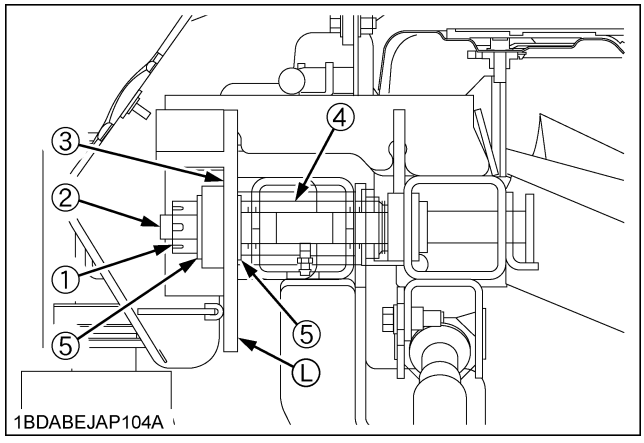

(1) Nut
(2) Center pin
(3) Front axle support
(4) Front axle
(5) Plain washer
(L) Front axle end play

NOTE :

- When fastening the center pin (2), tighten the nut so that the front axle maybe oscillated smoothly by hand.

Front axle end play (L)	Factory spec.	0 to 0.2 mm (0 to 0.008 in.)
	Allowable limit	0.5 mm (0.02 in.)

https://truckmanualshub.com/

EVERY 400 HOURS

■Changing Transmission Fluid and Rear Axle Gear Case Oil (RH and LH)

WARNING

To avoid serious injury or death:

- **Be sure to stop the engine and remove the key before changing or checking the oil.**
- **Allow transmission case to cool down sufficiently; oil can be hot and may cause burns.**

The fluid in the transmission case is also used for the hydrostatic drive system.

1. To drain the transmission oil, place oil pan underneath the transmission case and the rear axle gear case (RH&LH) and remove the drain plug at the bottom of the transmission case and the rear axle gear case (RH&LH).
2. After draining, reinstall the drain plugs.
3. Fill with UDT or SUPER UDT hydrostatic transmission fluid or its equivalent up to the upper line of the gauge.

IMPORTANT :

- It takes time to send the oil from the transmission case to the rear axle case (RH&LH).
  Pour the regulated amount of oil slowly.

4. After running the engine for a few minutes, stop it and check the oil level again; add oil to the prescribed level.

IMPORTANT :

- Operate only at low rpms immediately after changing the transmission fluid and filter.
  Keep the engine at medium speed for a few minutes to insure proper lubrication of all parts so there is no damage to transmission.

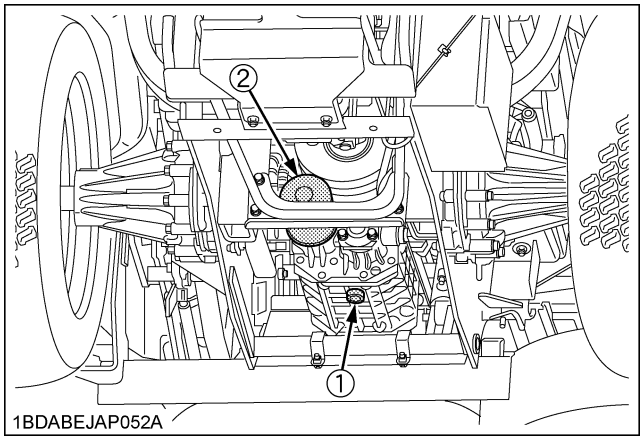

(1) Drain plug
(2) Hydraulic oil filter

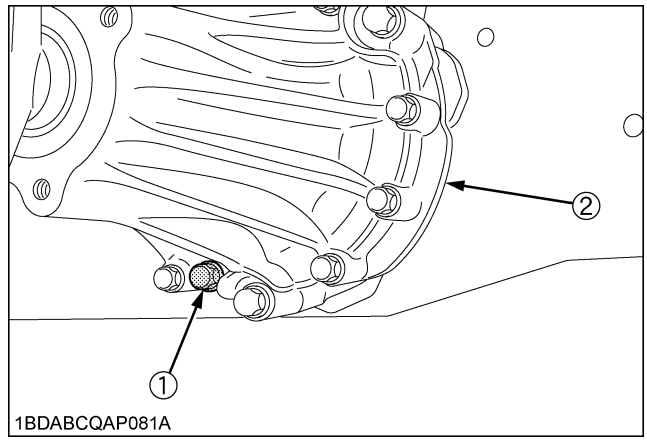

(1) Drain plug
(2) Rear axle gear case LH

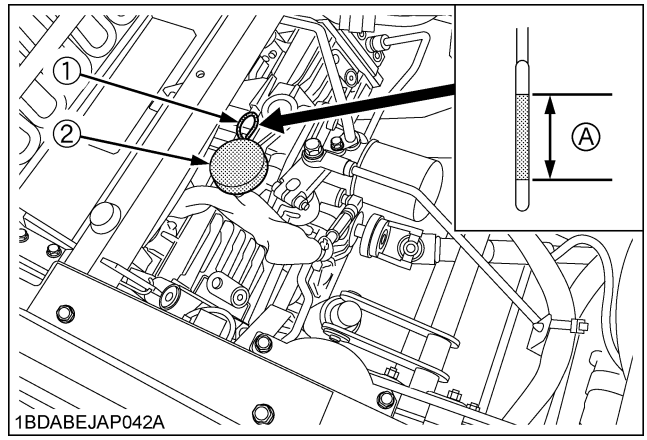

(1) Oil level dipstick
(2) Oil plug and breather cup
(A) Oil level is acceptable within this range.

https://truckmanualshub.com/

■Replacing Hydraulic Oil Filter

WARNING

To avoid serious injury or death:

- **Be sure to stop the engine and remove the key before changing the oil filter.**
- **Allow transmission case to cool down sufficiently; oil can be hot and may cause burns.**

1. The oil filter must be changed every 400 service hours.

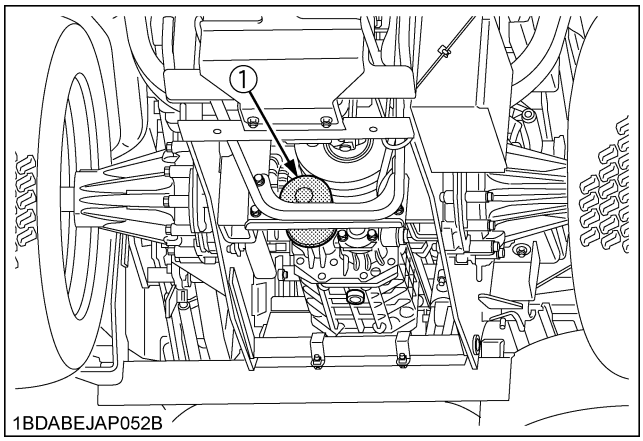

(1) Hydraulic oil filter

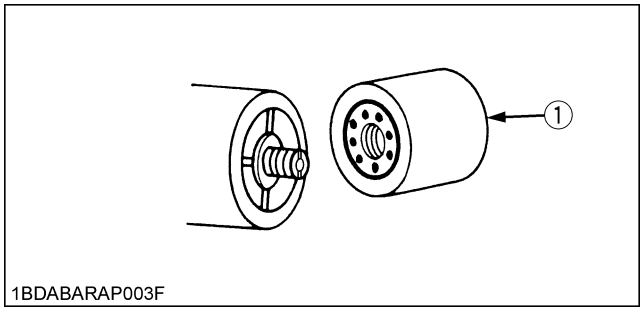

(1) Hydraulic oil filter

2. To drain the transmission oil, place oil pan underneath the transmission case and the rear axle gear case (RH&LH) and remove the drain plug at the bottom of the transmission case and the rear axle gear case (RH&LH).
3. After draining, reinstall the drain plugs.
4. Remove the oil filter by using the filter wrench.
5. Apply a slight coat of oil onto the filter gasket.
6. Tighten the filter quickly until it contacts the mounting surface. Tighten filter by hand an additional 1/2 turn only.
7. After the new filter has been replaced, the transmission fluid level normally lowers a little. Add fluid to proper level. Check for oil leaks around filter gasket.

IMPORTANT :

- To prevent serious damage or premature failure to the hydraulic system, use only a KUBOTA genuine filter.

■Replacing Fuel Filter

Consult your local KUBOTA Dealer for this service.

EVERY 1000 HOURS or EVERY 1 YEAR

Replace every 1000 hours or every 1 year whichever comes faster.

■Replacing Air Cleaner Primary Element and Secondary Element

(See "Cleaning Air Cleaner Primary Element" in "EVERY 100 HOURS" in "MAINTENANCE" section.)

IMPORTANT :

- To prevent serious damage to the engine, use only a KUBOTA genuine filter.

[How to remove the secondary element]

1. Pull out the two tabs of the secondary element using a suitable tool (e.g. Flat-blade screwdriver) as shown in the figure.

IMPORTANT :

- Pull out the tabs only when replacing the secondary element.

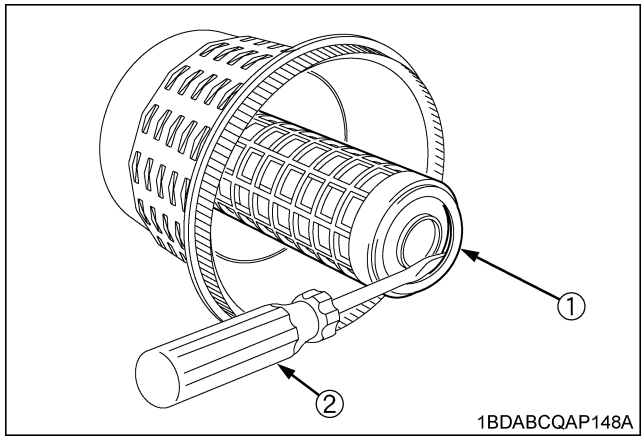

(1) Tab
(2) Flat-blade screwdriver

2. While turning slightly, pull out the secondary element.

https://truckmanualshub.com/

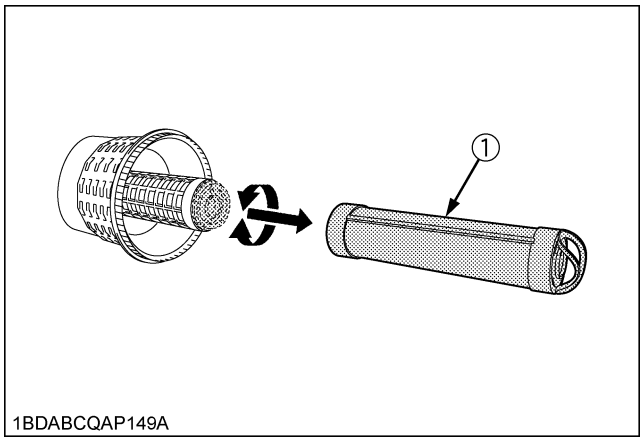

(1) Secondary element

EVERY 1500 HOURS

■Checking Fuel Injection Nozzle (Injection Pressure)

Consult your local KUBOTA Dealer for this service.

EVERY 2000 HOURS or EVERY 2 YEARS

Be sure to do the following service once every 2000 hours or every 2 years whichever comes faster.

■Flushing Cooling System and Changing Coolant

WARNING

To avoid serious injury or death:

- **Do not remove the radiator cap when the engine is hot. Then loosen cap slightly to the stop to relieve any excess pressure before removing cap completely.**

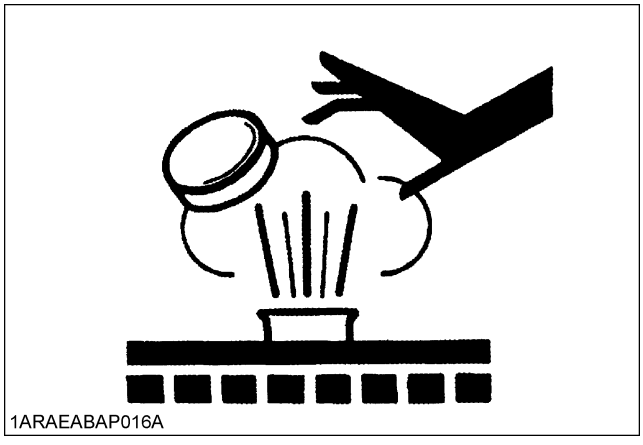

1. Stop the engine and let cool down.
2. To drain the coolant, open the radiator drain valve and remove the radiator drain plug and remove radiator cap. The radiator cap must be removed to completely drain the coolant.
3. After all coolant is drained, close the drain valve and install the drain plug.
4. Fill with clean water and cooling system cleaner.
5. Follow directions of the cleaner instruction.
6. After flushing, fill with clean water and anti-freeze until the coolant level is just below the fill port on the radiator.
   Install the radiator cap securely.
7. Fill with coolant up to the "FULL" mark on the recovery tank.
   Set the direction of the recovery tank cap outlet at left front (45°). Set the bottom tip of the hose between front side of radiator hose and inner side of the frame. (This will prevent the hose from pulling down and open the recovery tank cap.)
8. Start and operate the engine for a few minutes.
9. Stop the engine and let cool.
10. Check coolant level of recovery tank, add coolant if necessary, and install the drain plug.

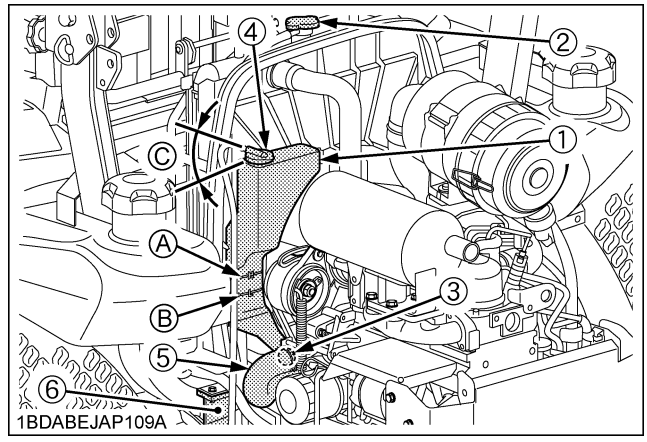

(1) Recovery tank
(2) Radiator cap
(3) Drain plug
(4) Recovery tank cap
(5) Radiator hose
(6) Frame

(A) "FULL"
(B) "LOW"
(C) 45°

https://truckmanualshub.com/

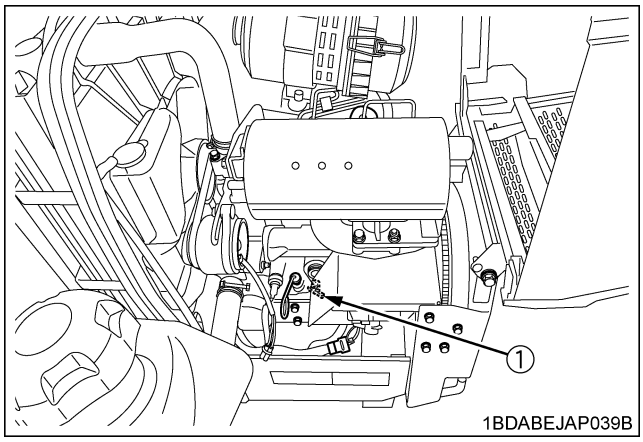

(1) Drain valve

IMPORTANT :
- Do not start engine without coolant.
- Start engine with the hood closed.
- Use clean, distilled water and anti-freeze to fill the radiator and recovery tank.
- When the anti-freeze is mixed with water, the anti-freeze mixing ratio must be less than 50%.
- Securely tighten radiator cap. If the cap is loose or improperly fitted, water may leak out and the engine could overheat.

■Anti-freeze

WARNING

To avoid serious injury or death:
- **When using anti-freeze, put on some protection such as rubber gloves. (Anti-freeze contains poison.)**
- **If someone drank anti-freeze, seek immediate medical help. Do NOT make a person throw up unless told to do so by poison control or a health care professional. Use standard first aid and CPR for signs of shock or cardiac arrest. Call your local Poison Control Center or your local emergency number for further assistance.**
- **When anti-freeze comes in contact with the skin or clothing, wash it off immediately.**
- **Do not mix different types of Anti-freeze. The mixture can produce chemical reaction causing harmful substances.**
- **Anti-freeze is extremely flammable and explosive under certain conditions. Keep fire and children away from anti-freeze.**
- **When draining fluids from the engine, place some container underneath the engine body.**
- **Do not pour waste onto the ground, down a drain, or into any water source.**

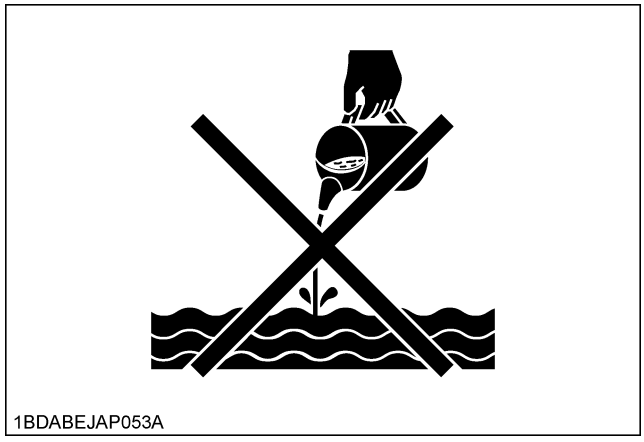

- **Also, observe the relevant environmental protection regulations when disposing of anti-freeze.**

Always use a 50/50 mix of long-life coolant and clean soft water in KUBOTA engines.
Consult your local KUBOTA dealer concerning coolant for extreme conditions.

1. Long-life coolant (hereafter LLC) comes in several types. Use ethylene glycol (EG) type for this engine.
2. Before employing LLC-mixed cooling water, fill the radiator with fresh water and empty it again.
   Repeat this procedure 2 or 3 times to clean up the inside.

https://truckmanualshub.com/

3. Mixing the LLC
   Premix 50% LLC with 50% clean soft water. When mixing, stir it up well, and then fill into the radiator.
4. The procedure for the mixing of water and anti-freeze differs according to the make of the anti-freeze and the ambient temperature. Refer to SAE J1034 standard, more specifically also to SAE J814c.

IMPORTANT :
- When mixing the anti-freeze with water, the anti-freeze mixing ratio is 50%.

Vol % Anti-freeze	Freezing Point		Boiling Point*	
	℃	℉	℃	℉
50	-37	-34	108	226

* At 1.013 x 10^5Pa (760 mmHg) pressure (atmospheric).

A higher boiling point is obtained by using a radiator pressure cap which permits the development of pressure within the cooling system.

5. Adding the LLC
   (1) Add only water if the coolant level reduces in the cooling system by evaporation.
   (2) If there is a mixture leak, add the LLC of the same manufacturer and type in the mixing ratio 50%.

   * Never add any long-life coolant of different manufacturer. (Different brands may have different additive components, and the engine may fail to perform as specified.)

6. When the LLC is mixed, do not employ any radiator cleaning agent. The LLC contains anti-corrosive agent. If mixed with the cleaning agent, sludge may build up, adversely affecting the engine parts.
7. Kubota's genuine long-life coolant has a service life of 2 years. Be sure to change the coolant every 2000 hours or every 2 years whichever comes faster.

NOTE :
- The above data represent industry standards that necessitate a minimum glycol content in the concentrated anti-freeze.

EVERY 3000 HOURS

■Checking Injection Pump

Consult your local KUBOTA Dealer for this service.

EVERY 1 YEAR

■Checking Fuel Lines

If you feel you are unable to make the following service correctly and safely, contact your local KUBOTA Dealer.

(See "Checking Fuel Filter" in "EVERY 100 HOURS" in "MAINTENANCE" section.)

■Checking Radiator Hose and Clamp

If you feel you are unable to make the following service correctly and safely, contact your local KUBOTA Dealer.

WARNING

To avoid serious injury or death:
- **Be sure to stop the engine and remove the key before checking radiator hose and clamps.**

1. If hose clamps are loose or water leaks, tighten clamps securely.
2. Replace hoses and tighten hose clamps securely. If radiator hoses are swollen, hardened or cracked, then replace them immediately.

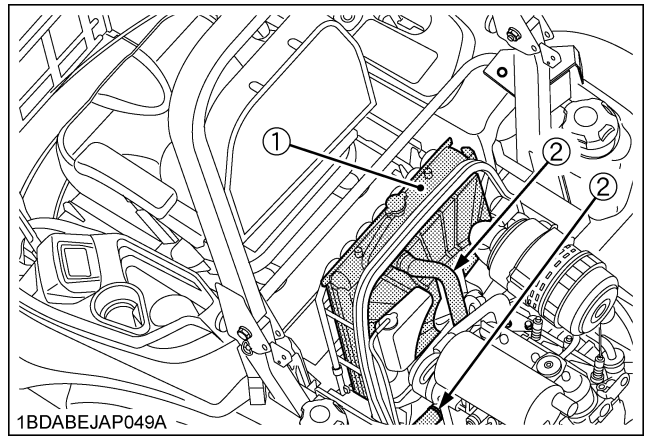

(1) Radiator core
(2) Radiator hose

https://truckmanualshub.com/

■Checking Hydraulic Hose

If you feel you are unable to make the following service correctly and safely, contact your local KUBOTA Dealer.

WARNING

To avoid serious injury or death:

- **Be sure to stop the engine and remove the key before checking and replacing the hydraulic hose.**
- **Allow the transmission case to cool down sufficiently; oil can be hot and may cause burns.**
- **Escaping hydraulic fluid under pressure has sufficient force to penetrate the skin causing serious personal injury. Before disconnecting lines, be sure to relieve all pressure. Before applying pressure to the system, make sure all connections are tight and that lines, pipes, and hoses are not damaged.**

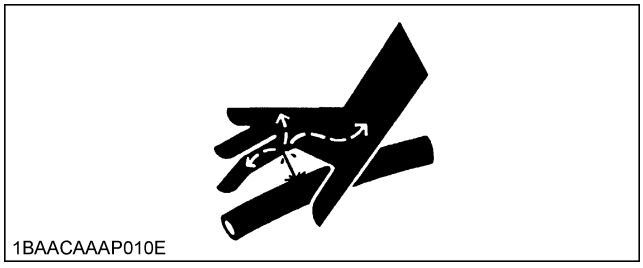

1. Check to see that all lines and hose clamps are tight and not damaged.
2. If hoses and clamps are found worn or damaged, replace or repair them at once.

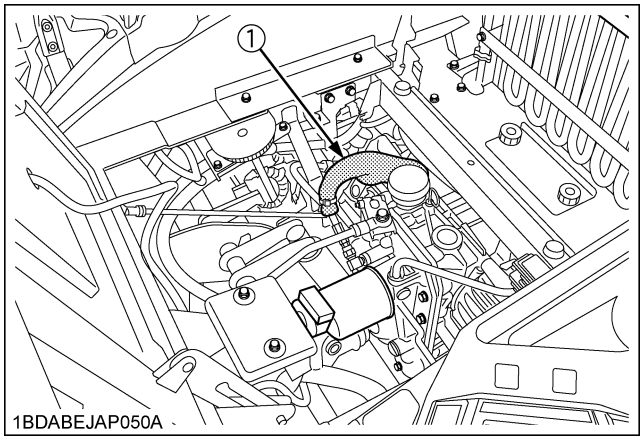

(1) Mower lift cylinder hose

■Checking Intake Air Line

If you feel you are unable to make the following service correctly and safely, contact your local KUBOTA Dealer.

1. Check to see that hoses and hose clamps are tight and not damaged.
2. If hoses and clamps are found worn or damaged, replace or repair them at once.

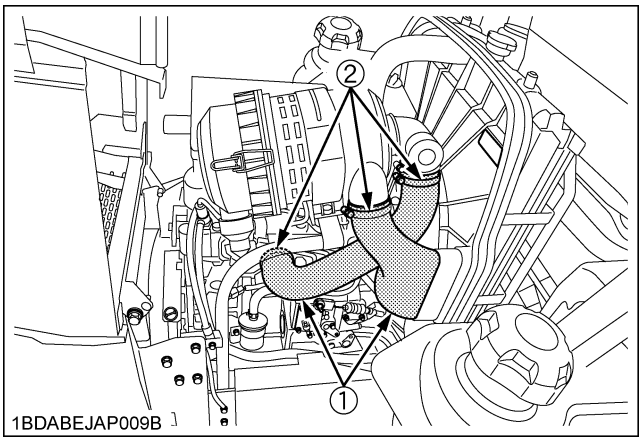

(1) Hose
(2) Clamp

■Checking Engine Breather Hose

Consult your local KUBOTA Dealer for this service.

■Checking Mower Gear Box Oil Seal

Consult your local KUBOTA Dealer for this service.

https://truckmanualshub.com/

EVERY 4 YEARS

■Replacing Hydraulic Hose

Consult your local KUBOTA Dealer for this service.

■Replacing Fuel Lines

Consult your local KUBOTA Dealer for this service.

■Replacing Engine Breather Hose

Consult your local KUBOTA Dealer for this service.

■Replacing Radiator Hose

If you feel you are unable to make the following service correctly and safely, contact your local KUBOTA Dealer.

See "Checking Radiator Hose and Clamp" in "EVERY 1 YEAR" in "MAINTENANCE" section.

■Replacing Mower Gear Box Oil-Seal

Consult your local KUBOTA Dealer for this service.

■Replacing Intake Air Line

If you feel you are unable to make the following service correctly and safely, contact your local KUBOTA Dealer.

See "Checking Intake Air Line" in "EVERY 1 YEAR" in "MAINTENANCE" section.

SERVICE AS REQUIRED

■Replacing Fuses

1. Raise the operator's seat.
2. Remove the blown fuse.
3. Place a new fuse of the same capacity in position.

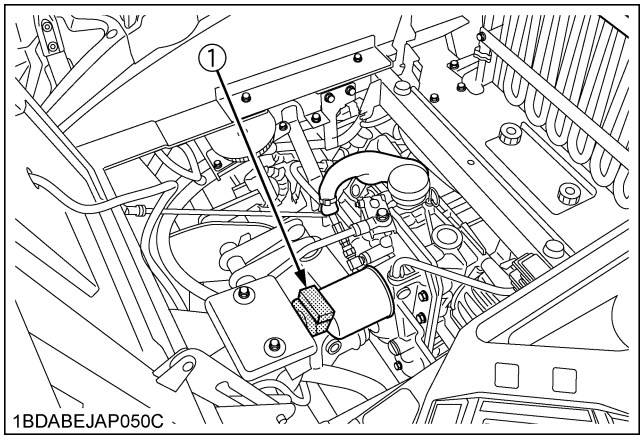

(1) Fuse location

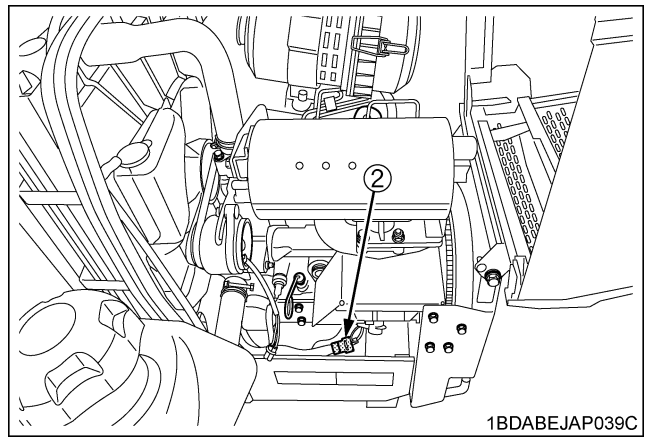

(2) Slow blow fuse

IMPORTANT :

- If the new fuse happens to blow out within a short time, contact your dealer for inspection and repair. Never "jump" the fuse with wire or foil, or install a larger capacity fuse than is recommended.

◆ **Protected circuit**

FUSE NO.	CAPACITY (A)	Protected circuit
(1)	20 A	Engine stop
	15 A	Charge system
	15 A	Main system
	15 A	Aux. outlet
	10 A	Control system
	(20 A)	*(Work light)
(2)	Slow blow fuse 40 A	Check circuit against wrong battery connection

*Option: The fuse must be in only when the work light is attached.

■Bleeding Fuel System

Air must be removed:

1. When the fuel filter or lines are removed.
2. When tank is completely empty.
3. After the machine has not been used for a long period of time.

◆ **Bleeding procedure is as follows:**

1. Fill the fuel tank with fuel.
2. Start the engine and run for about 30 seconds, and then stop the engine.

https://truckmanualshub.com/

■Checking and Replacing Blade

WARNING

To avoid serious injury or death:

- **Be sure to stop the engine and remove the key.**
- **Blades may be sharp. When you handle blades, wear heavy gloves or wrap end of blade with a rag.**

NOTE :

- Before checking or replacing the blade, wipe grass and mud off the top and inside of the mower.
  Especially clean up the inside of the belt cover, because otherwise the belt life will be reduced.

◆ Checking

The blade cutting edges must be kept sharp at all times. Sharpen the cutting edges, if they resemble blade (B). Replace the blades if they appear similar to blade (C).

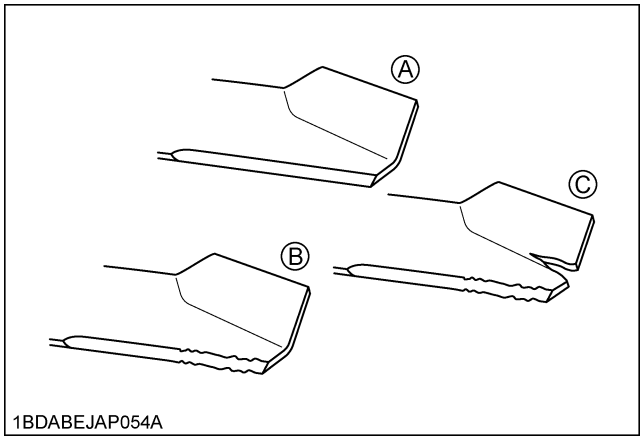

(A) New blade
(B) Worn blade
(C) Cracked blade

◆ Replacing

1. Tilt up the mower deck.
   (See "HOW TO TILT UP THE MACHINE" in "PERIODIC SERVICE" section.)
2. **[RCK60P, RCK72P]**
   Wedge a block of wood between the blade and mower housing or use a box wrench over the pulley nut to prevent the spindle from rotating while removing the blade bolts; loosen the blade bolt as illustrated.
   [RCK60R, RCK72R]
   Set the pipe between the blade and the next blade or use a box wrench over the pulley nut to prevent the spindle from rotating while removing the blade bolts; loosen the blade bolt as illustrated.

IMPORTANT :

- Use the proper metric size box or socket wrench to tighten or loosen the blade mounting bolt.

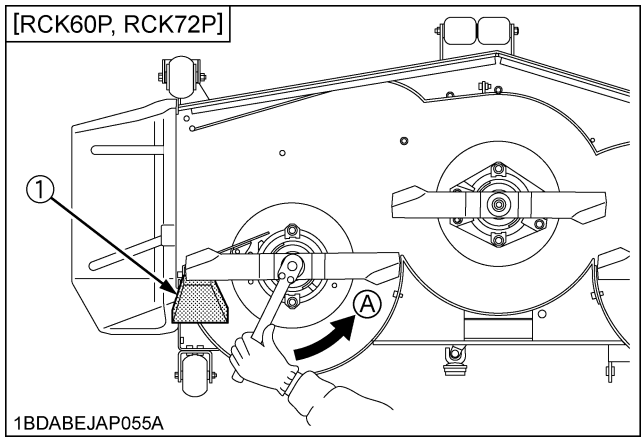

(1) Block *(A) "LOOSEN"*

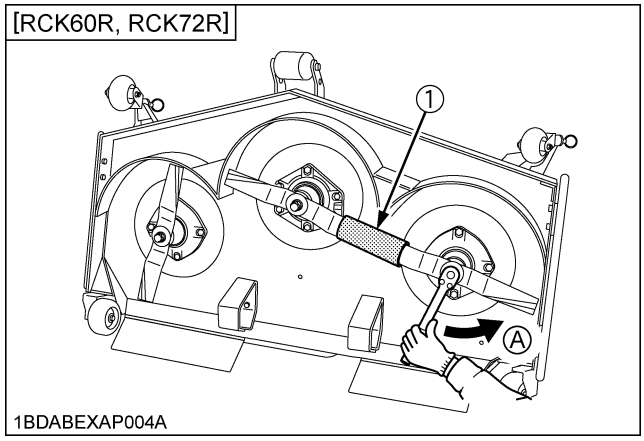

(1) Pipe *(A) "LOOSEN"*

3. To sharpen the blades yourself, clamp the blade securely in a vise.
   Use a large mill file and file along the original bevel until sharp.
4. To check the blade for balance, place a small rod through the center hole. If the blade is not balanced, file the heavy side of the blade until balance is achieved.
5. Pass the spline boss through the blade and 2 cup washers, and tighten the bolt.

NOTE :

- Make sure that the cup washer is not flattened out or worn; this cause blade to slip excessively.
  Replace the 2 cup washers if either is damaged.

https://truckmanualshub.com/

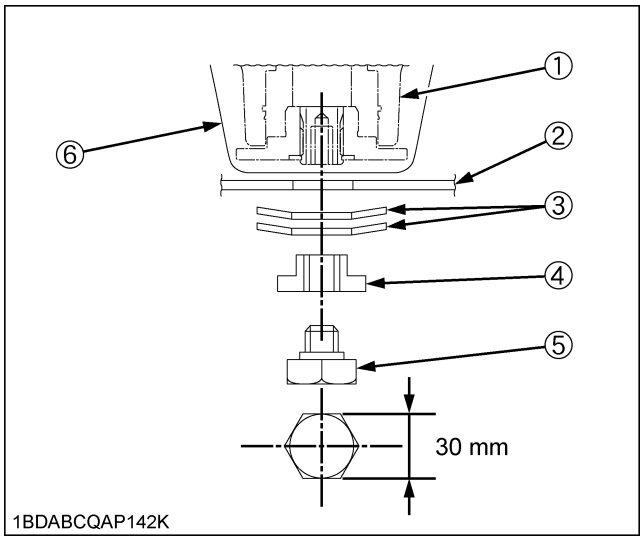

(1) Spindle holder
(2) Blade
(3) 2-Cup washers
(4) Lock washer
(5) Bolt
(6) Spindle guard

IMPORTANT :
- Tighten the three blade bolts to 102.9 to 117.6 N-m (10.5 to 12 kgf-m, 75.9 to 87 lbf-ft) of torque.
- The blade bolts have Right hand threads. Turn them counterclockwise to loosen.
- To prolong the service life of the blades, reposition them as shown in the figure below periodically.

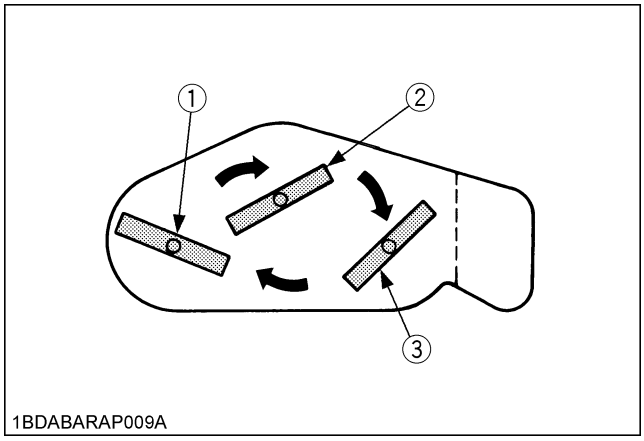

(1) LH blade
(2) Center blade
(3) RH blade

■Replacing Mower Belt

1. Remove the mower deck from the machine according to the procedure "DISMOUNTING THE MOWER DECK".
2. Remove the left and right hand shield from the mower deck.
3. Clean around the gear box.
4. Remove the belt from the tension pulley.
5. Remove the right hand bracket which mounts the gear box to the mower deck and slip the belt over the top of the gear box.
6. To install a new belt, reverse the above procedure.

NOTE :
- Tighten bracket bolts securely 77.5 to 90.2 N-m (8.0 to 9.2 kgf-m, 57.1 to 66.5 lbf-ft).

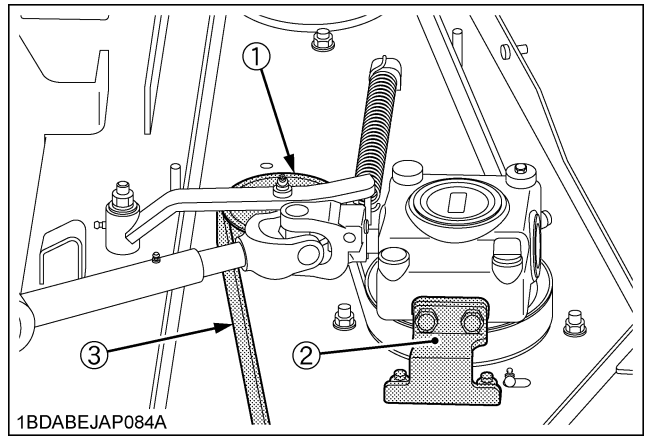

(1) Tension pulley
(2) Bracket (RH)
(3) Belt

https://truckmanualshub.com/

ADJUSTMENT

MOTION CONTROL LEVER

WARNING

To avoid serious injury or death:

- **Park the machine on a firm and level surface.**
- **If it is necessary to run the engine in an enclosed area, use a gas tight exhaust pipe extension to remove the fumes.**
- **Always try to work in a well-ventilated area.**
- **Lift up and secure with jack stands or blocking the rear of the machine, do not run the machine while adjusting.**
  Remove rear wheels.
- **Do not adjust only one of the following adjustments; exclude "MOTION CONTROL LEVER ALIGNMENT".**
  They are interlinked.
- **If you feel you are unable to make the following adjustments correctly and safely, please contact your local KUBOTA Dealer.**

IMPORTANT :

- Right and left motion control levers can be adjusted independently.

■HST NEUTRAL

1. Lift up and secure with jack stands or blocking the rear of the machine frame.
2. Remove both rear wheels.
3. Set the engine speed maximum.
4. Place the motion control lever in the "NEUTRAL LOCK" position.
5. After forward and backward operation, tighten the guide control at the position when wheel axis stops.
6. Adjust the rod length L of the damper 28 to 32 mm (1.1 to 1.3 in.) and tighten.

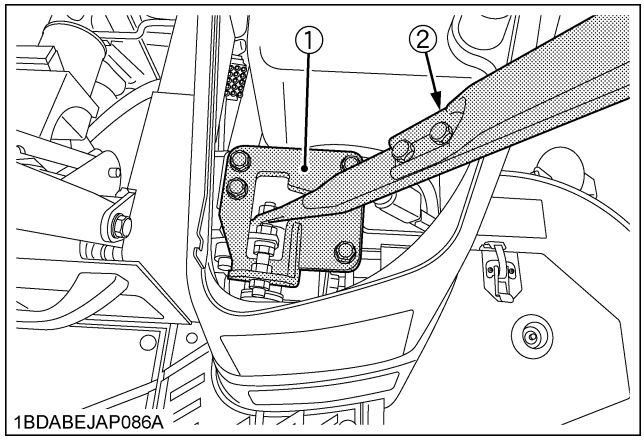

(1) Guide control
(2) Motion control lever

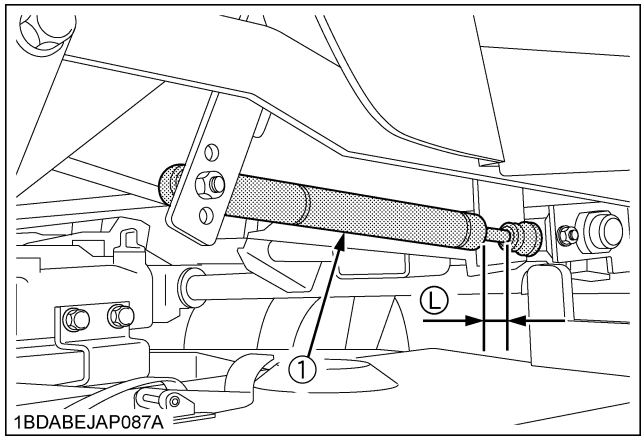

(1) Damper *(L) 28 to 32 mm (1.1 to 1.3 in.)*

■MAXIMUM SPEED (FORWARD)

Consult your local KUBOTA Dealer for this service.

■MOTION CONTROL LEVER OPERATING FORCE

The operating force of the motion control levers can be adjusted to one of 3 levels depending on operator preference.

IMPORTANT :

- Adjust the dampers after adjusting HST neutral.
- Adjusting the motion control lever force will affect the maneuverability.
- For adjustment of LH and RH, use the same hole location.

https://truckmanualshub.com/

1. Change the rear side of the damper to the desired hole location.
   Tighten the rear side damper nut.

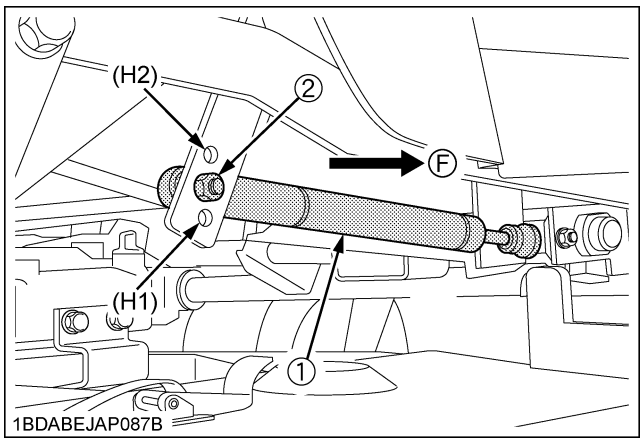

(1) Damper
(2) Damper nut
(F) Front
(H1) Hole for lighter setting
(H2) Hole for heavier setting

■MOTION CONTROL LEVER ALIGNMENT

◆ **Check the alignment**

Check the gap between the levers, at the maximum forward position.

Recommended gap	0 to 4 mm (0 to 0.16 in.)

If positions of the control levers are unequal, an adjustment is necessary.

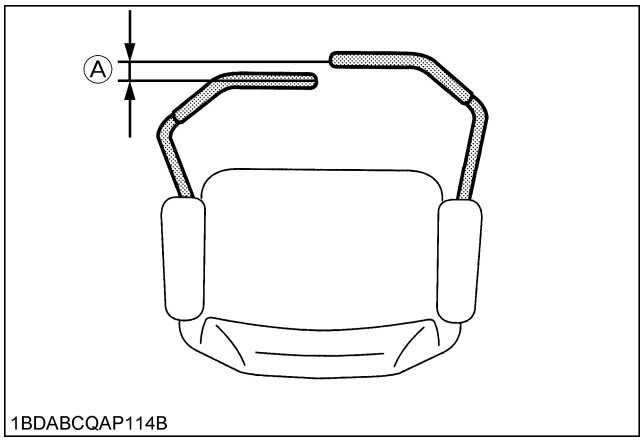

(A) "GAP"

WARNING

To avoid serious injury or death:

- **Park the machine on a firm and level surface.**
- **Stop the engine, remove the key and apply the parking brake.**

◆ **Aligning the control levers**

Lever position (High or Low)

1. Remove the nut and select the motion control lever position, high or low.
2. Tighten the nut.

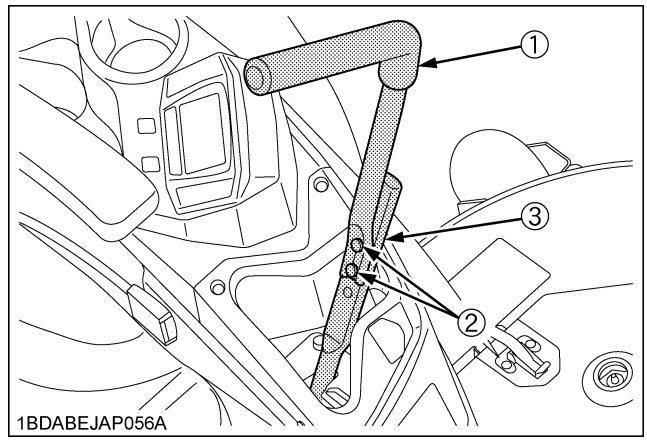

(1) Motion control lever
(2) Bolt
(3) Nut, washer

Lever alignment (Right and Left)

3. Loosen the nut.
4. Slide both levers forward or rearward to desired position within tab slots until levers are aligned.
5. Tighten the nut.

NOTE :

- If the ends of the levers strike against each other while in the "NEUTRAL" position, move the levers outward to the "NEUTRAL LOCK" position and carefully bend them outward.
  Move them back to the "NEUTRAL" position and check for the recommended space.

https://truckmanualshub.com/

MOWER DECK LEVEL

■ANTI-SCALP ROLLERS

WARNING

To avoid serious injury or death:

- **Park the machine on a firm and level surface.**
- **Apply the parking brake.**
- **Stop the engine and remove the key.**
- **Wait for all moving parts to stop.**

IMPORTANT :

- The flattest cut can be achieved by having the anti-scalp rollers adjusted off the ground.
  Check anti-scalp roller adjustments each time the mower deck cutting height is changed.
  It is recommended that all the anti-scalp rollers be kept off the ground to minimize scuffing.

1. Check the machine tire pressure.
   Inflate tires to the correct pressure. (See "TIRES AND WHEELS" section.)
2. Start the engine.
3. Raise up the mower deck to the transport position. (Also the top end of the lift.)
4. Turn the cutting height control dial to adjust height.
5. Lower the mower deck.

Front side anti-scalp roller

6. Adjust height of the front side anti-scalp roller by replacing the collar (collar is raised and lowered) or shifting the pin to approximately 19 mm (3/4 in.) between rollers and ground.
   Adjust both side rollers to the same height.

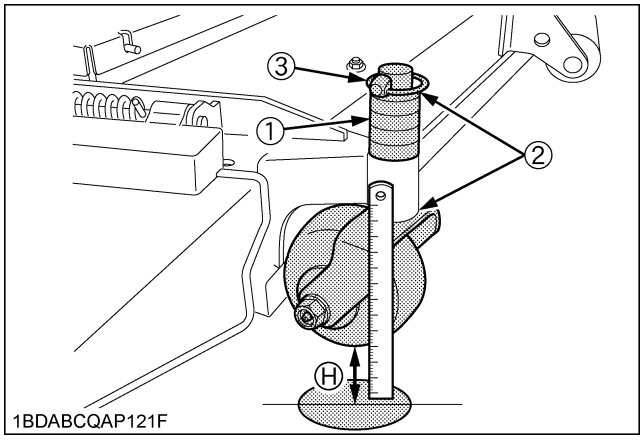

(1) Collar *(H) 19 mm (3/4 in.)*
(2) Washer
(3) Set pin

Rear side anti-scalp roller

7. Adjust height of the rear side anti-scalp roller by shifting the pin or the bolt to approximately 19 mm (3/4 in.) between rollers and ground.
   Adjust both side rollers to the same height.

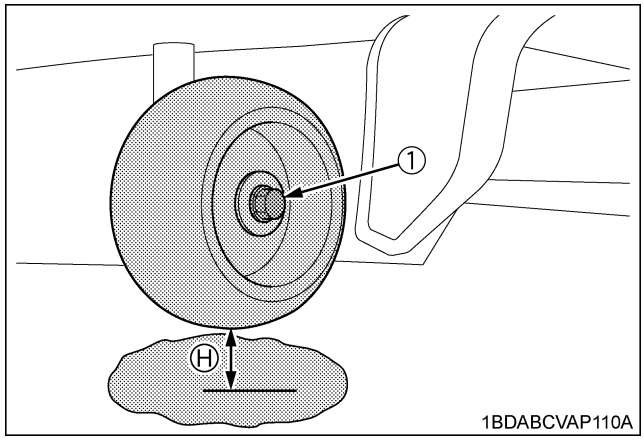

(1) Bolt *(H) 19 mm (3/4 in.)*

https://truckmanualshub.com/

ENGLISH

■LEVEL MOWER DECK (Side-to-Side)

WARNING

To avoid serious injury or death:
- **Park the machine on a firm and level surface.**
- **Apply the parking brake.**
- **Disengage PTO (OFF).**
- **Stop the engine, remove the key and remove the mower universal joint while checking or adjusting the level of the mower deck.**

IMPORTANT :
- Check the machine tire pressure.
  Inflate tires to the correct pressure.
  (See "TIRES AND WHEELS" section.)

◆ Checking level (Side-to-Side)

NOTE :
- Mower deck anti-scalp rollers must not contact the ground.

[RCK60P, RCK72P]
1. Raise the mower deck to the transport position. (Also the top end).
2. Turn the cutting height set dial to the 3 in. cutting height position.
3. Lower the mower deck.
4. Position the right mower blade in the Side-to-Side position.
5. Measure from outside blade tip to the level surface with a short ruler or leveling gauge.

Reference

Height of the blade at the concrete surface	76 mm (3 in.)

NOTE :
- There is a difference of the blade height between on the concrete and ground.

6. Check that the left side blade is same height.
   The difference between both measurements must be less than 3 mm (0.12 in.).
7. If the Side-to-Side adjustment is not within the given tolerance, adjustment is necessary.

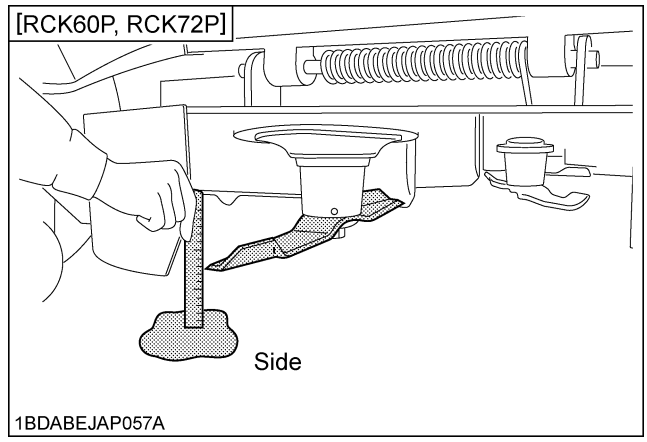

[RCK60R, RCK72R]
1. Raise the mower deck to the transport position. (Also the top end).
2. Turn the cutting height set dial to the 3 in. cutting height position.
3. Lower the mower deck.
4. Turn left blade by hand parallel to machine and turn right blade parallel to machine to measure from the outside blade tip at (L) and (R) to the level surface. The difference between measurements should be less than 3 mm (0.12 in.).

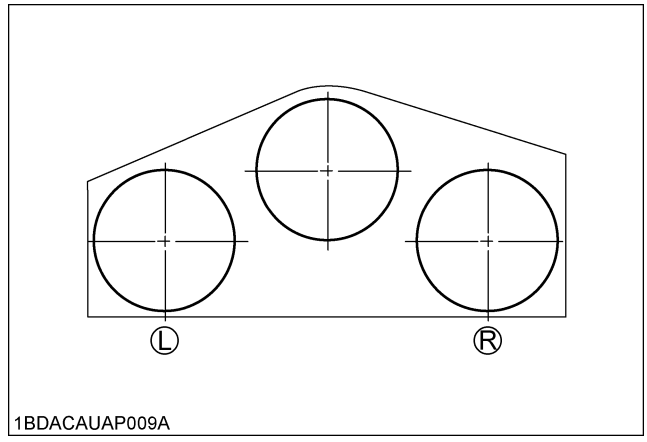

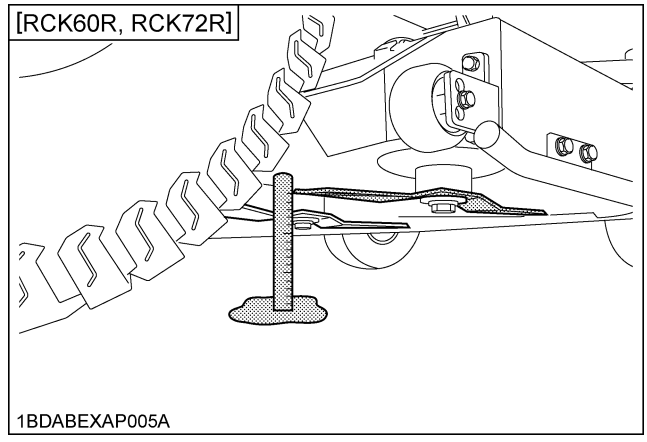

https://truckmanualshub.com/

Reference

Height of the blade at the concrete surface	76 mm (3 in.)

NOTE :
- There is a difference of the blade height between on the concrete and ground.

5. If the Side-to-Side adjustment is not within the given tolerance, adjustment is necessary.

◆ **Adjusting level (Side-to-Side)**
1. Raise up the mower deck to the transport position. (Also the top end).
2. Turn the cutting height set dial to the 3 in. cutting height position.
3. Place 51 mm (2 in.) height wood blocks under each side of the mower deck.
   Anti-scalp rollers must not rest on the wood block.
4. Lower the mower deck.
5. Position mower blade in the Side-to-Side position.
6. Loosen the lock nuts of the right side of the machine.
7. Adjust the cutting height fine tuning bolts to set 76 mm (3 in.) height.
   Front and rear side bolts must be adjusted.
8. Lock the nuts.
9. Adjust the left side equally.
10. Check the side-to-side level and if it is not level, adjustment is necessary.

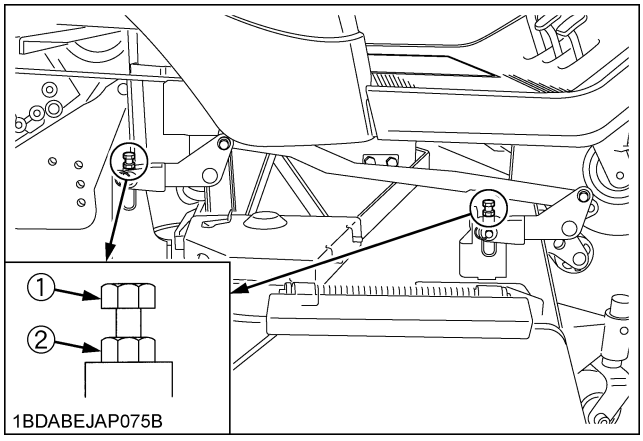

(1) Cutting height fine tuning bolt
(2) Lock nut

■LEVEL MOWER DECK (Front-to-Rear)

WARNING

To avoid serious injury or death:
- **Park the machine on a firm and level surface.**
- **Engage the parking brake.**
- **Disengage PTO.**
- **Stop the engine, remove the key and remove the mower universal joint while checking or adjusting the level of the mower deck.**

IMPORTANT :
- Check the machine tire pressure.
  Inflate tires to the correct pressure.
  (See "TIRES AND WHEELS" section.)

◆ **Checking level (Front-to-Rear)**

NOTE :
- Mower deck anti-scalp rollers must not contact the ground.

1. Raise the mower deck to the transport position. (Also the top end).
2. Turn the cutting height set dial to the 3 in. cutting height position.
3. Lower the mower deck.
4. Position the right mower blade in the Front-to-Rear position.
5. Measure from the right front blade tip to the level surface with a short ruler or leveling gauge.
6. Turn the blade 180° and measure from right rear blade tip to the level surface.
7. Check that the left side blade has the same dimension. The difference between both measurements must be less than 6 mm (0.24 in.).
   Front side must be lower than rear side.
8. If the Front-to-Rear adjustment is not within the given tolerance, adjustment is necessary.

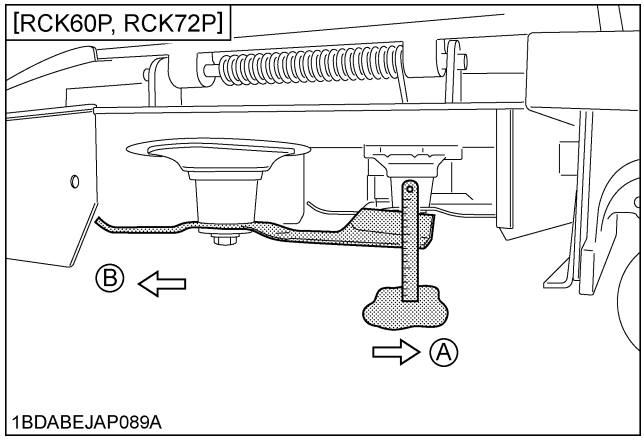

https://truckmanualshub.com/

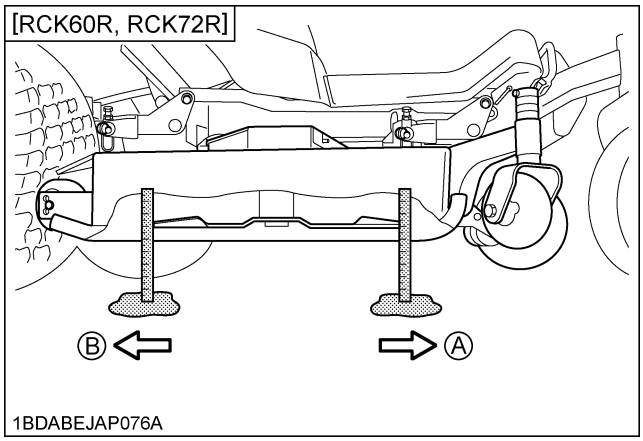

(A) Front
(B) Rear

◆ **Adjusting level (Front-to-Rear)**

1. Raise up the mower deck to the transport position. (Also the top end).
2. Turn the cutting height set dial to the 3 in. cutting height position.
3. Place 51 mm (2 in.) height wood blocks under each side of the mower deck.
   Anti-scalp rollers must not rest on the wood block.
4. Lower the mower deck.
5. Loosen the lock nuts of the front side of the machine.
6. Adjust the cutting height fine tuning bolts to set 76 mm (3 in.) height.
   Both front side bolts must be adjusted.
7. Lock the nuts.
8. Adjust the other side equally.

IMPORTANT :

- The difference between both measurements must be less than 6 mm (0.24 in.).
  Front side must be lower than rear side.

9. Check the front-to-rear level and if it is not level, adjustment is necessary.

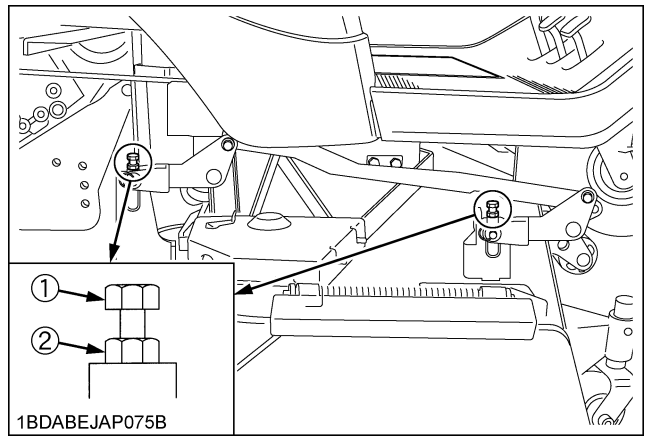

(1) Cutting height fine tuning bolt
(2) Lock nut

https://truckmanualshub.com/

GENERAL TORQUE SPECIFICATION

American standard cap screws with UNC or UNF threads				Metric cap screws			
SAE grade No.		GR.5	GR.8	Property class		Class 8.8	Class 10.9
1/4	(lbf-ft)	8 - 9.6	12 - 14.4	M6	(lbf-ft)	7.2 - 8.3	
	(N-m)	10.7 - 12.9	16.1 - 19.3		(N-m)	9.81 - 11.3	
	(kgf-m)	1.11 - 1.33	1.66 - 1.99		(kgf-m)	1.0 - 1.15	
5/16	(lbf-ft)	17 - 20.5	24 - 29	M8	(lbf-ft)	17.4 - 20.2	21.7 - 25.3
	(N-m)	23.1 - 27.8	32.5 - 39.3		(N-m)	23.6 - 27.4	29.4 - 34.3
	(kgf-m)	2.35 - 2.84	3.31 - 4.01		(kgf-m)	2.4 - 2.8	3.0 - 3.5
3/8	(lbf-ft)	35 - 42	45 - 54	M10	(lbf-ft)	35.5 - 41.2	44.9 - 52.1
	(N-m)	47.5 - 57.0	61.0 - 73.2		(N-m)	48.1 - 55.8	60.8 - 70.5
	(kgf-m)	4.84 - 5.82	6.22 - 7.47		(kgf-m)	4.9 - 5.7	6.2 - 7.2
1/2	(lbf-ft)	80 - 96	110 - 132	M12	(lbf-ft)	57.2 - 66.5	76.0 - 86.8
	(N-m)	108.5 - 130.2	149.2 - 179.0		(N-m)	77.5 - 90.1	103 - 117
	(kgf-m)	11.07 - 13.29	15.22 - 18.27		(kgf-m)	7.9 - 9.2	10.5 - 12.0
9/16	(lbf-ft)	110 - 132	160 - 192	M14	(lbf-ft)	91.2 - 108	123 - 144
	(N-m)	149.2 - 179.0	217.0 - 260.4		(N-m)	124 - 147	167 - 196
	(kgf-m)	15.22 - 18.27	22.14 - 26.57		(kgf-m)	12.6 - 15.0	17.0 - 20.0
5/8	(lbf-ft)	150 - 180	220 - 264	M16	(lbf-ft)	145 - 166	192 - 224
	(N-m)	203.4 - 244.1	298.3 - 358.0		(N-m)	196 - 225	260 - 303
	(kgf-m)	20.75 - 24.91	30.44 - 36.53		(kgf-m)	20.0 - 23.0	26.5 - 31.0

https://truckmanualshub.com/

TIGHTENING TORQUE CHART

Thread size d (mm)	Hexa-Bolt Head size B (mm)	No mark			7T		
		lbf-ft	N-m	kgf-m	lbf-ft	N-m	kgf-m
M8	12 or 13	**13.0 - 15.2** (14.1 ± 1.1)	**17.8 - 20.6** (19.2 ± 1.4)	**1.9 - 2.1** (2.0 ± 0.1)	**17.5 - 20.3** (18.9 ± 1.4)	**23.5 - 27.5** (25.5 ± 2.0)	**2.4 - 2.8** (2.6 ± 0.2)
M10	14 or 17	**28.9 - 33.3** (31.1 ± 2.2)	**39.3 - 45.1** (42.2 ± 2.9)	**4.0 - 4.6** (4.3 ± 0.3)	**35.4 - 41.2** (38.3 ± 2.9)	**48.1 - 55.9** (52.0 ± 3.9)	**4.9 - 5.7** (5.3 ± 0.4)
M12	17 or 19	**46.3 - 53.5** (49.9 ± 3.6)	**62.8 - 72.6** (67.7 ± 4.9)	**6.4 - 7.4** (6.9 ± 0.5)	**57.1 - 66.5** (61.8 ± 4.7)	**77.5 - 90.2** (83.9 ± 6.3)	**8.0 - 9.2** (8.6 ± 0.6)
M14	19 or 22	**79.6 - 92.6** (86.1 ± 6.5)	**107.9 - 125.5** (116.7 ± 8.8)	**11.0 - 12.8** (11.9 ± 0.9)	**91.1 - 108.5** (99.8 ± 8.7)	**123.6 - 147.0** (135.3 ± 11.7)	**12.6 - 15.0** (13.8 ± 1.2)

NOTE :
- Figure "7" on the top of the bolt indicates that the bolt is of special material.
- Before tightening, check the figure on the top of bolt.

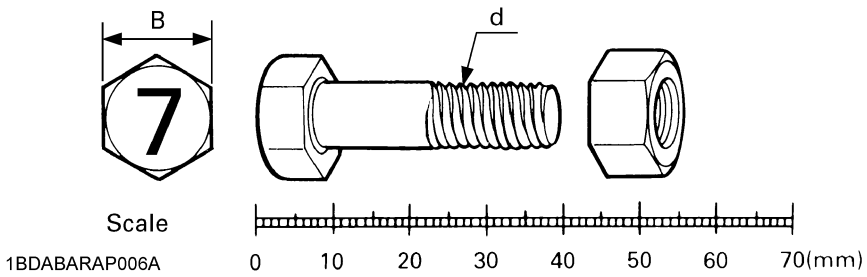

https://truckmanualshub.com/

STORAGE

WARNING

To avoid serious injury or death:

- **Do not clean the machine with engine running.**
- **To avoid the danger of exhaust fume poisoning, do not operate the engine in a closed building without proper ventilation.**
- **When storing, remove the key to avoid unauthorized persons from operating the machine and getting injured.**

MACHINE STORAGE

If you intend to store your machine for an extended period of time, follow the procedures outlined below. These procedures will insure that the machine is ready to operate with minimum preparation when it is removed from storage,

1. Check for loose bolts and nuts, and tighten if necessary.
2. Apply grease to machine areas where bare metal will rust also to pivot areas.
3. Inflate the tires to a pressure a little higher than usual.
4. Change the engine oil and run the engine to circulate oil throughout the engine block and internal moving parts for about 5 minutes.
5. Shut off the fuel valves below the fuel tanks while storing.
6. With all implements lowered to the ground, coat any exposed hydraulic cylinder piston rods with grease.
7. Remove the battery from the machine. When disconnecting the cables from the battery, start with the negative terminal first. When connecting the cables to the battery, start with the positive terminal first.

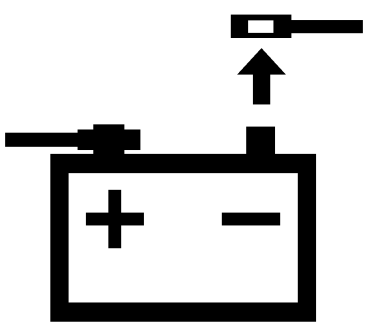

1BDABEJAP059A

8. Keep the machine in a dry place where the machine is sheltered from rain. Cover the machine.
9. Store the machine indoors in a dry area that is protected from sunlight and excessive heat. If the machine must be stored outdoors, cover it with a waterproof tarpaulin.
10. Jack the machine up and place blocks under the front and rear axles so that all 4 tires are off the ground. Keep the tires out of direct sunlight and extreme heat.

IMPORTANT :

- When washing the machine, be sure to stop the engine. Allow sufficient time for the engine to cool before washing.
- Cover the machine after the muffler and the engine have cooled down.

REMOVING THE MACHINE FROM STORAGE

1. Check the tire air pressure and inflate the tires if they are low.
2. Jack the machine up and remove the support blocks.
3. Install the battery. Before installing the battery, make sure it is fully charged.
4. Check the fan belt tension.
5. Check all fluid levels (engine oil, transmission/ hydraulic oil, engine coolant and any attached implements).
6. Check all coolant, hydraulic and fuel hoses for cracks, hardening, bubbles and leaks.
7. Check all control levers and the brake for proper function, repair or lubricate as necessary.
8. Start the engine. Observe all gauges. If all gauges are functioning properly and reading normal, move the machine outside.
9. Once outside, park the machine securely set the parking brake, place the control levers in the neutral lock position and let the engine idle for at least 5 minutes.
10. Shut the engine off and walk around machine and make a visual inspection looking for evidence of oil or water leaks.
11. With the engine fully warmed up, release the parking brake and test the brakes for proper adjustment as you move forward. Adjust the brakes as necessary.

https://truckmanualshub.com/

TROUBLESHOOTING

ENGINE TROUBLESHOOTING

If something is wrong with the engine, refer to the table below for the cause and its corrective measure.

Trouble		Cause	Countermeasure
Engine is difficult to start or will not start		● No fuel flow.	● Check the fuel tank and the fuel filter. Replace filter if necessary. ● Check the fuel valve position.
		● Air or water is in the fuel system.	● Check to see if the fuel line coupler bolt and nut are tight. ● Bleed the fuel system. (See "SERVICE AS REQUIRED" in "MAINTENANCE" section.)
		● In winter, oil viscosity increases, and engine revolution is slow.	● Use oils of different viscosities, depending on ambient temperatures.
		● Battery becomes weak and the engine does not turn over quick enough.	● Clean battery cables and terminals. ● Charge the battery. ● In cold weather, always remove the battery from the engine, charge and store it indoors. Install it on the machine only when the machine is going to be used.
Insufficient engine power.		● Insufficient or dirty fuel. ● The air cleaner is clogged.	● Check the fuel valve position. ● Check the fuel system. ● Clean the element.
Engine stops suddenly.		● Insufficient fuel.	● Check the fuel valve position. ● Refuel. ● Bleed the fuel system if necessary.
Exhaust fumes are colored.	**Black**	● Fuel quality is poor. ● Too much oil. ● Engine is overloaded.	● Change the fuel and fuel filter. ● Check the proper amount of oil. ● Reduce engine load.
	Blue white	● The inside of exhaust muffler is damp from fuel. ● Injection nozzle trouble. ● Fuel quality is poor.	● Heat the muffler by applying load to the engine. ● Check the injection nozzle. ● Change the fuel and fuel filter.
Engine overheats.		● Engine overloaded.	● Lower speed or reduce load.
		● Low coolant level.	● Fill cooling system to the correct level; check radiator and hoses for loose connections or leaks.
		● Loose or damaged fan belt.	● Adjust or replace fan belt.
		● Dirty radiator core or grille screens.	● Remove all trash.
		● Coolant flow route corroded.	● Flush cooling system.
Engine does not stop when key switch is turned OFF.		● Fuse blown (20 A)	● Replace the fuse.

If you have any questions, contact your local KUBOTA Dealer.

https://truckmanualshub.com/

POWER TRAIN TROUBLESHOOTING

If something is wrong with the power train, the master system warning indicator starts blinking and the error code shown below is displayed on the LCD monitor, indicating the location of the trouble. If an error code appears, immediately contact your local KUBOTA Dealer for repairs.

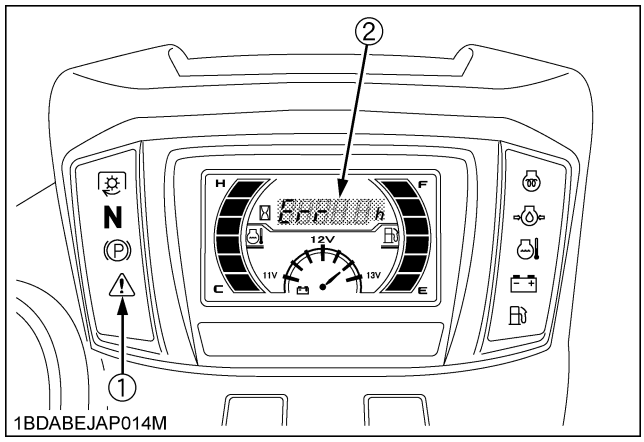

(1) Master system warning indicator
(2) Error code

Displayed error code	Trouble	Operator's action
Err 1	Water temperature sensor trouble	Contact your local KUBOTA Dealer.
Err 2	Fuel sensor trouble	
Err 3	Meter panel memory reading trouble	

https://truckmanualshub.com/

BATTERY TROUBLESHOOTING

Trouble	Cause	Remedy	Preventive measure
Starter does not function.	● Battery overused until lights are dim.	● Charge battery sufficiently. ● Adjust the fan belt.	● Charge the battery properly.
	● Battery has not been recharged.		
	● Poor terminal connection.	● Clean the terminal and tighten securely.	● Keep the terminal clean and tight. Apply grease and treat with anti-corrosives.
	● Battery life expired.	● Replace battery.	
From beginning starter does not function, and lights soon become dim.	● Insufficient charging.	● Charge battery sufficiently.	● Battery must be serviced properly before initial use.
When viewed from top, the top of plates look whitish.	● Battery was used with an insufficient amount of electrolyte.	● Add distilled water and charge the battery.	● Regularly check the electrolyte level.
	● Battery was used too much without recharging.	● Charge battery sufficiently.	● Charge the battery properly.
Recharging is impossible.	● Battery life expired.	● Replace battery.	
Terminals are severely corroded and heat up.	● Poor terminal connection.	● Clean the terminal and tighten securely.	● Keep the terminal clean and tight. Apply grease and treat with anti-corrosives.
Battery electrolyte level drops rapidly.	● There is a crack or pin holes in the electrolytic cells.	● Replace battery.	
	● Charging system trouble.	● Contact your local KUBOTA Dealer.	

If you have any questions, contact your local KUBOTA Dealer.

https://truckmanualshub.com/

MACHINE TROUBLESHOOTING

Trouble	Cause	Remedy
Machine operation is not smooth.	● Hydrostatic transmission fluid is insufficient.	● Fill oil.
	● Filter is clogged.	● Replace the filter.
Machine dose not move while engine is running.	● Parking brake is on.	● Release the parking brake.
	● Transmission fluid level is insufficient.	● Fill oil.
Machine moves when motion control levers are in the "NEUTRAL LOCK" position. (Engine is operated.)	● Hydrostatic lever linkage is not correctly adjusted.	● Consult your dealer for hydrostatic lever linkage adjustment or pressure adjustment.
	● Control linkage pivots are sticking.	● Full up and lubricate linkage.
Fuel decreases uneven in LH and RH tanks.	● Fuel filter is clogged.	● Replace fuel filter.
	● Fuel valve is closed.	● Open the fuel valve.
	● Check valve is clogged.	● Replace check valve.
	● Bypass hose kink in the pipe between LH and RH tanks.	● Remove the kink or replace the pipe.
Master system warning indicator flashes	● Fuel sensor is disconnected.	● Check wire harness.
	● Coolant temperature sensor is disconnected.	● Check wire harness.
	● LCD monitor malfunction	● Replace LCD monitor.
All electrical equipment do not operate.	● Slow blow fuse blown	● Replace the slow blow fuse.

If you have any questions, contact your local KUBOTA Dealer.

https://truckmanualshub.com/

MOWER TROUBLESHOOTING

Trouble	Cause	Remedy
Discharge chute plugged.	● Grass too wet.	● Wait for grass to dry.
	● Grass too long.	● Raise cutting height and cut grass twice.
	● Cutting too low.	● Raise cutting height.
	● Engine r.p.m. too low.	● Mow at full throttle.
	● Ground speed too fast.	● Slow down.
Streaking of grass uncut.	● Ground speed too fast.	● Slow down.
	● Engine r.p.m. too low.	● Mow at full throttle, check and reset engine r.p.m..
	● Grass too long.	● Cut grass twice.
	● Blades dull or damaged.	● Replace blades or have blades sharpened.
	● Debris in mower deck.	● Clean mower deck.
Uneven cut.	● Mower deck not level.	● Level mower deck.
	● Ground speed too fast.	● Slow down.
	● Blades dull.	● Have blades sharpened.
	● Blades worn.	● Replace blades.
	● Low tire inflation.	● Add air to correct pressure.
	● Anti-scalp rollers not adjusted correctly.	● Adjust anti-scalp rollers.
	● Wheels pressure not adjusted correctly.	● Set both tire pressures to the correct pressure. (See "TIRES" in "TIRES AND WHEELS" section.)
Blades scalping grass.	● Cutting height too low.	● Raise cutting height.
	● Turning speed too fast.	● Reduce speed on turns.
	● Ridges in terrain.	● Change mowing pattern.
	● Rough or uneven terrain.	● Adjust wheels pressure and anti scalp rollers.
	● Anti-scalp rollers not adjusted correctly.	● Adjust wheels pressure and anti scalp rollers.
	● Bent blade(s).	● Replace blade(s).
Belt slipping.	● Mower deck plugged.	● Unplug and clean mower deck.
	● Debris in pulleys.	● Clean pulleys.
	● Worn belt.	● Replace belt.
Excessive vibration.	● Debris on mower deck or in pulleys.	● Clean mower deck and pulleys.
	● Damaged drive belt.	● Replace drive belt.
	● Damaged pulleys.	● Replace pulleys.
	● Pulleys out of alignment.	● See your KUBOTA Dealer.
	● Blades out of balance.	● Have blades balanced.

https://truckmanualshub.com/

Trouble	Cause	Remedy
Mower loads down machine.	● Engine r.p.m. too low.	● Mow at full throttle, check and reset engine r.p.m..
	● Ground speed too fast.	● Slow down.
	● Debris wrapped around mower spindles.	● Clean mower.
	● Front of deck lower than rear.	● Adjust deck. (See "MOWER DECK LEVEL" in "ADJUSTMENT" section.)

If you have any questions, contact your local KUBOTA Dealer.

https://truckmanualshub.com/

ENGLISH

INDEX

Adjustment of Foldable ROPS 22
Air Cleaner Primary Element.....58
Air Cleaner Primary Element and Secondary Element 67
Amount of Fuel and Refueling.....47
Anti-freeze 69
ANTI-SCALP ROLLERS 77
Battery Condition.....61
Battery Voltage Meter.....16
Blade 73
Coolant Level 48
Coolant Temperature Gauge.....16
Easy Checker (TM) 14
Engine Break-in.....20
Engine Breather Hose 71
Engine Breather Hose 72
Engine Oil.....64
Engine Oil Filter.....64
Engine Oil Level 47
Engine Start System.....54
Engine Stop Lever (Inside the Hood) 14
Fan Drive Belt Tension.....59
Flushing Cooling System and Coolant 68
Front Axle Pivot.....65
Front Cover 39
Front side: 43
Fuel Filter 58
Fuel Filter 67
Fuel Gauge.....15
Fuel Gauge, Warning Lamp and Fuel Valve ..17
Fuel Injection Nozzle (Injection Pressure).....68
Fuel Lines.....70
Fuel Lines.....72
Fuel System 72
Fuses.....72
Gear Box Oil.....63
Gear Box Oil Level 55
Greasing.....56
Greasing.....61
Hood.....39
Hourmeter 16
HST NEUTRAL 75
Hydraulic Hose 71
Hydraulic Hose 72
Hydraulic Lift Control Pedal.....24
Hydraulic Oil Filter 67
Immediately Stop the Engine if:.....14
Inflation Pressure 37
Inflation Pressure..... 50
Injection Pump..... 70
Installation of Bolt (Adjuster)..... 10
Installation of Gauge Wheel 9
Installation of Skid 9
Intake Air Line..... 71
Intake Air Line..... 72
Key Switch 13
LEVEL MOWER DECK (Front-to-Rear) 79
LEVEL MOWER DECK (Side-to-Side) 78
Lubricating All Grease Fittings..... 50
Lubricating Oil for New Machines 20
Machine Break-in..... 20
MAXIMUM SPEED (FORWARD) 75
Motion Control Lever 25
MOTION CONTROL LEVER ALIGNMENT ... 76
MOTION CONTROL LEVER OPERATING FORCE 75
Mower Belt..... 74
Mower Gear Box Oil Seal 71
Mower Gear Box Oil-Seal 72
Oiling 57
OPC System..... 55
Operator's Seat..... 23
Overheat Alarm 17
Parking Brake 60
Parking Brake Pedal..... 25
PTO Lever 34
Radiator Hose..... 72
Radiator Hose and Clamp 70
Radiator Screen and Hood Screen..... 49
Rear side: 43
Remove and Install Front Caster Wheels..... 38
Removing Skids..... 35
Rubber Plates Installation..... 35
Seat Belt 24
Service Code Display 17
Starting 34
Step 39
Throttle Lever 24
Tire Pressure 50
To Fold the ROPS 21
To Raise the ROPS to Upright Position..... 22
Transmission Fluid and Rear Axle Gear Case Oil (RH and LH)..... 66
Transmission Fluid Level..... 48
Transmission Oil Filter [HST]..... 65

https://truckmanualshub.com/

Warm-up and Transmission Oil in the Low Temperature Range 18