Toro Part No. 01090SL

REPAIRMATE

# KUBOTA
# Workshop Manual
## 05 Series
## Diesel Engine

Reprinted from KUBOTA Workshop Manual, 05 Series Diesel Engine (English language only)
© KUBOTA Corporation 1996

# TO THE READER

This Workshop Manual has been prepared to provide servicing personnel with information on the mechanism, service and maintenance of KUBOTA Diesel Engines 05 SERIES. It is divided into two parts, "Mechanism" and "Disassembling and Servicing" for each section.

## ■ Mechanism

Information on the construction and function are included for each engine section. This part should be understood before proceeding with troubleshooting, disassembling and servicing.

## ■ Disassembling and Servicing

Under the heading "General" section comes general precautions, troubleshooting, lists of servicing specifications and periodic inspection items. For each engine section, there are "Checking and Adjustment", "Disassembling and Assembling", and "Servicing" which cover procedures, precautions, factory specification and allowable limits.

All the engines that have been manufactures since January of 1994 are clean exhaust engines.

The mark [E] in the WSM refers to the said clean engine.

All information, illustrations and specifications contained in this manual are based on the latest production information available at the time of publication.

The right is reserved to make changes in all information at any time without notice.

Due to covering many models of this manual, illustration or picture being used have not been specified as one model.

May '96

© KUBOTA Corporation 1996

01640Z00040

# ⚠ SAFETY FIRST

**This symbol, the industry's "Safety Alert Symbol", is used throughout this manual and decals on the engine itself to warn of the possibility of personal injury. Read these instructions carefully.**

**It is essential that you read the instructions and safety regulations before you attempt to repair or use this unit.**

⚠ **DANGER : Indicates an imminently hazardous situation which, if not avoided, will result in death or serious injury.**

⚠ **WARNING : Indicates a potentially hazardous situation which, if not avoided, could result in death or serious injury.**

⚠ **CAUTION : Indicates a potentially hazardous situation which, if not avoided, may result in minor or moderate injury.**

■ **IMPORTANT : Indicates that equipment or property damage could result if instructions are not followed.**

■ **NOTE : Gives helpful information.**

*00000Z00011*

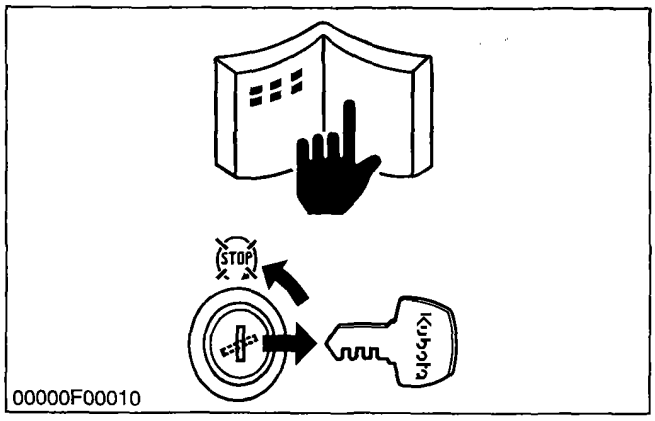

00000F00010

## BEFORE SERVICING AND REPAIRING

(1) Read all instructions and safety instructions in this manual and on your engine safety decals.
(2) Clean the work area and engine.
(3) Place the engine on a firm and level ground.
(4) allow the engine to cool before proceeding.
(5) Stop the engine, and remove the key.
(6) Disconnect the battery negative cable.

*00000Z00021*

00000F00021

## SAFETY STARTING

(1) Do not start the engine by shorting across starter terminals.
(2) Unauthorized modifications to the engine may impair the function and / or safety and affect engine life.

*00000Z00031*

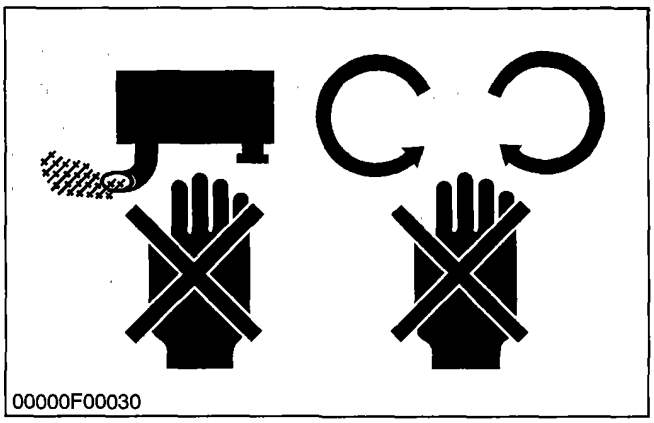

00000F00030

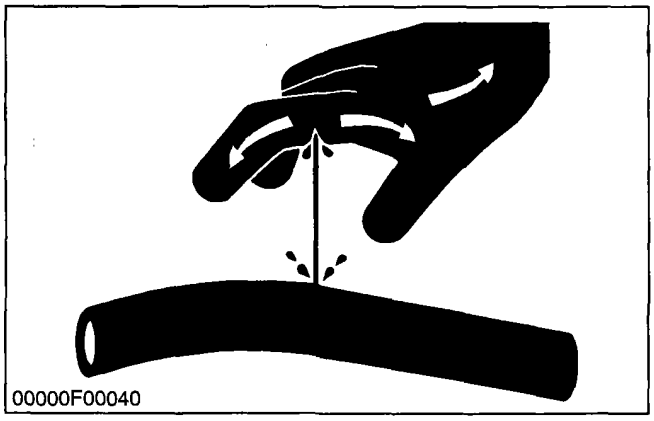

00000F00040

## SAFETY WORKING

(1) Do not work on the engine while under the influence of alcohol, medication, or other substances or while fatigued.
(2) Wear close fitting clothing and safety equipment appropriate to the job.
(3) Use tools appropriate to the work. Makeshift tools, parts, and procedures are not recommended.
(4) When servicing is performed together by two or more persons, take care to perform all work safely.
(5) Do not touch the rotating or hot parts while the engine is running.
(6) Never remove the radiator cap while the engine is running, or immediately after stopping. Otherwise, hot water will spout out from radiator. Only remove radiator cap when cool enough to touch with bare hands. Slowly loosen the cap to first stop to relieve pressure before removing completely.
(7) Escaping fluid (fuel or hydraulic oil) under pressure can penetrate the skin causing serious injury. Relieve pressure before disconnecting hydraulic or fuel lines. Tighten all connections before applying pressure.
(8) Wear a suitable hearing protective device such as earmuffs or earplugs to protect against objectionable or uncomfortable loud noises.

*00000Z00041*

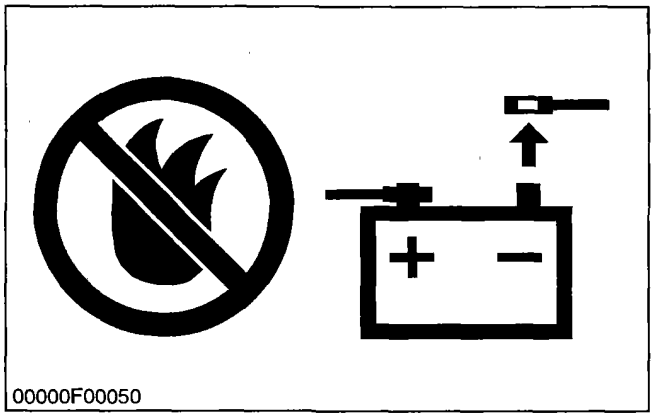


00000F00050

## AVOID FIRES

(1) Fuel is extremely flammable and explosive under certain conditions. Do not smoke or allow flames or sparks in your working area.
(2) To avoid sparks from an accidental short circuit, always disconnect the battery negative cable first and connect it last.
(3) Battery gas can explode. Keep sparks and open flame away from the top of battery, especially when charging the battery.
(4) Make sure that no fuel has been spilled on the engine.

*00000Z00050*

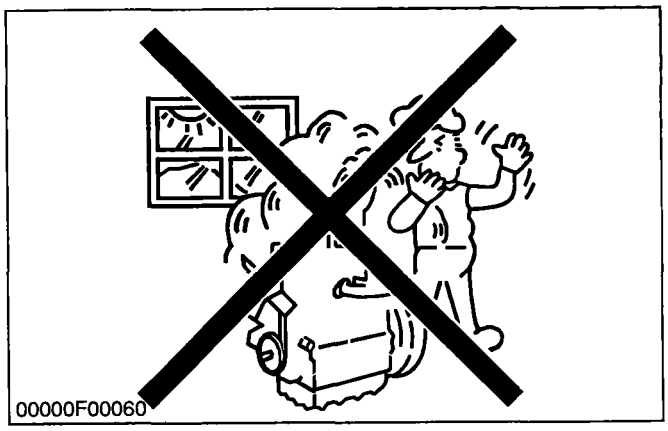


## VENTILATE WORK AREA

(1) If the engine must be running to do same work, make sure the area is well ventilated. Never run the engine in a closed area. The exhaust gas contains poisonous carbon monoxide.

*00000Z00060*

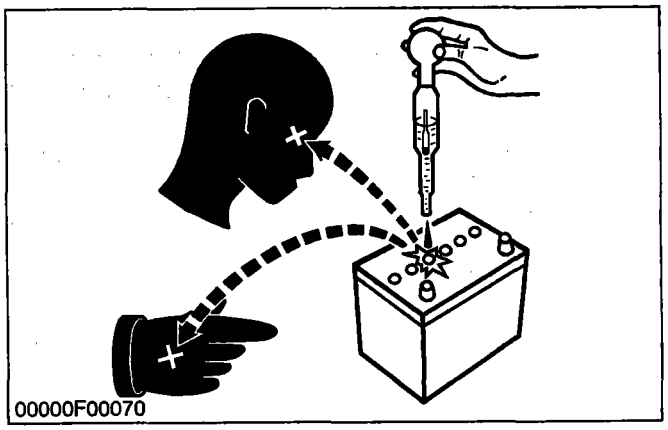


## PREVENT ACID BURNS

(1) Sulfuric acid in battery electrolyte is poisonous. It is strong enough to burn skin, clothing and cause blindness if splashed into eyes. Keep electrolyte away from eyes, hands and clothing. If you spill electrolyte on yourself, flush with water, and get medical attention immediately.

*00000Z00070*

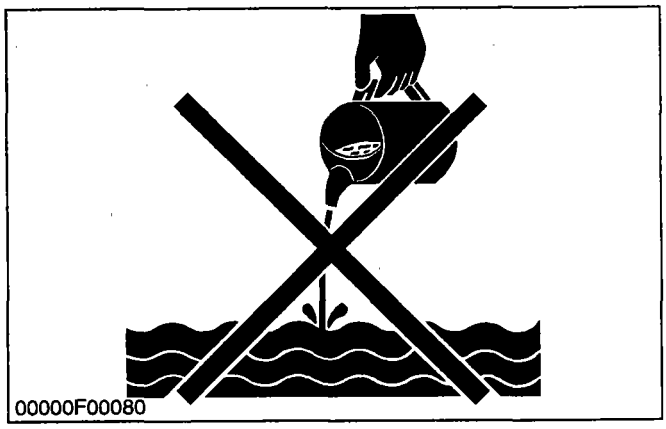


## DISPOSE OF FLUIDS PROPERLY

(1) Do not pour fluids into the ground, down a drain, or into a stream, pond, or lake. Observe relevant environmental protection regulations when disposing of oil, fuel, coolant, electrolyte and other harmful waste.

*00000Z00080*

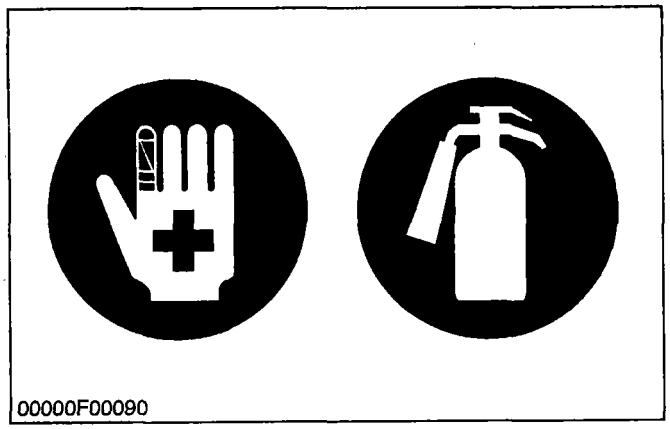


## PREPARE FOR EMERGENCIES

(1) Keep a first aid kit and fire extinguisher handy at all times.
(2) Keep emergency numbers for doctors, ambulance service, hospital and fire department near your telephone.

*00000Z00090*

# SPECIFICATIONS

| Model | | D905-B (E) | | D1005-B (E) | | V1205-B (E) | | V1205-T-B (E) | | V1305-B (E) | |
|---|---|---|---|---|---|---|---|---|---|---|---|
| Number of cylinders | | 3 | | | | 4 | | | | | |
| Type | | Vertical, water-cooled, 4-cycle diesel engine | | | | | | | | | |
| Bore × stroke | mm (in.) | 72 × 73.6 (2.83 × 2.90) | | 76 × 73.6 (2.99 × 2.90) | | 72 × 73.6 (2.83 × 2.90) | | | | 76 × 73.6 (2.99 × 2.90) | |
| Total displacement | $cm^3$ (cu. in.) | 898 (54.86) | | 1001 (61.08) | | 1198 (73.10) | | | | 1335 (81.46) | |
| Brake Horsepower: SAE net cont. | kW/rpm (HP/rpm) | 12.7/3000 (17.0/3000) | 15.3/3600 (20.5/3600) | 14.2/3000 (19.0/3000) | 16.8/3600 (22.5/3600) | 17.2/3000 (23.0/3000) | 20.1/3600 (27.0/3600) | 21.6/3000 (29.0/3000) | 25.7/3600 (34.5/3600) | 19.0/3000 (25.5/3000) | 22.4/3600 (30.0/3600) |
| Brake Horsepower: SAE net intermittent | kW/rpm (HP/rpm) | 14.9/3000 (20.0/3000) | 17.5/3600 (23.5/3600) | 16.8/3000 (22.5/3000) | 19.4/3600 (26.0/3600) | 20.1/3000 (27.0/3000) | 23.5/3600 (31.5/3600) | 25.4/3000 (34.0/3000) | 29.8/3600 (40.0/3600) | 22.4/3000 (30.0/3000) | 25.7/3600 (34.5/3600) |
| Brake Horsepower: SAE gross intermittent | kW/rpm (HP/rpm) | 16.8/3000 (22.5/3000) | 19.4/3600 (26.0/3600) | 18.7/3000 (25.0/3000) | 21.6/3600 (29.0/3600) | 22.4/3000 (30.0/3000) | 26.1/3600 (35.0/3600) | 28.0/3000 (37.5/3000) | 32.8/3600 (44.0/3600) | 25.0/3000 (33.5/3000) | 28.7/3600 (38.5/3600) |
| Brake Horsepower: DIN6271-NA | kW/rpm (ps/rpm) | 12.5/3000 (17.0/3000) | 15.1/3600 (20.5/3600) | 14.0/3000 (19.0/3000) | 16.5/3600 (22.5/3000) | 16.9/3000 (23.0/3000) | 19.9/3600 (27.0/3600) | 21.3/3000 (29.0/3000) | 25.4/3600 (34.5/3600) | 18.8/3000 (25.5/3000) | 22.1/3600 (30.0/3600) |
| Brake Horsepower: DIN6271-NB | kW/rpm (ps/rpm) | 14.3/3000 (19.5/3000) | 16.5/3600 (22.5/3600) | 15.8/3000 (21.5/3000) | 18.4/3600 (25.0/3600) | 19.1/3000 (26.0/3000) | 22.1/3600 (30.0/3600) | 24.3/3000 (33.0/3000) | 28.3/3600 (38.5/3600) | 21.3/3000 (29.0/3000) | 24.6/3600 (33.5/3600) |
| Brake Horsepower: DIN70020 | kW/rpm (ps/rpm) | 15.4/3000 (21.0/3000) | 18.4/3600 (25.0/3600) | 17.3/3000 (23.5/3000) | 20.2/3600 (27.5/3600) | 21.0/3000 (28.5/3000) | 24.3/3600 (33.0/3600) | 26.5/3000 (36.0/3000) | 31.3/3600 (42.5/3600) | 23.2/3000 (31.5/3000) | 26.8/3600 (36.5/3600) |
| Maximum bare speed | rpm | 3200 | 3800 | 3200 | 3800 | 3200 | 3800 | 3200 | 3800 | 3200 | 3800 |
| Minimum idling speed | rpm | 600 | | | | | | | | | |
| Maximum torque | N·m/rpm<br>kgf·m/rpm<br>ft-lbs/rpm | 53.8/2000<br>5.49/2000<br>39.71/2000 | 52.8/2400<br>5.38/2400<br>38.91/2400 | 60.6/2000<br>6.18/2000<br>44.7/2000 | 58.4/2400<br>5.95/2400<br>43.0/2400 | 72.7/2000<br>7.41/2000<br>53.60/2000 | 70.7/2400<br>7.21/2400<br>52.15/2400 | 91.5/2000<br>9.33/2000<br>67.48/2000 | 89.7/2400<br>9.15/2400<br>66.18/2400 | 80.8/2000<br>8.24/2000<br>59.60/2000 | 77.4/2400<br>7.89/2400<br>57.07/2400 |
| Combustion Chamber | | Spherical type | | | | | | | | | |
| Fuel injection pump | | Bosch MD type mini pump | | | | | | | | | |
| Governor | | Centrifugal mechanical governor | | | | | | | | | |
| Direction of rotation | | Counter-clockwise (viewed from flywheel side) | | | | | | | | | |
| Injection nozzle | | Mini nozzle (DNOPD) | | | | | | | | | |
| Injection timing | Without timer | 18 to 20° (0.31 to 0.35 rad.) before T.D.C. | 21 to 23° (0.37 to 0.40 rad.) before T.D.C. | 18 to 20° (0.31 to 0.35 rad.) before T.D.C. | 21 to 23° (0.37 to 0.40 rad.) before T.D.C. | 18 to 20° (0.31 to 0.35 rad.) before T.D.C. | 21 to 23° (0.37 to 0.40 rad.) before T.D.C. | 18 to 20° (0.31 to 0.35 rad.) before T.D.C. | 21 to 23° (0.37 to 0.40 rad.) before T.D.C. | 18 to 20° (0.31 to 0.35 rad.) before T.D.C. | 21 to 23° (0.37 to 0.40 rad.) before T.D.C. |
| Injection timing | With timer | 8 to 10° (0.14 to 0.17 rad.) before T.D.C. | 9 to 11° (0.16 to 0.19 rad.) before T.D.C. | 8 to 10° (0.14 to 0.17 rad.) before T.D.C. | 9 to 11° (0.16 to 0.19 rad.) before T.D.C. | 8 to 10° (0.14 to 0.17 rad.) before T.D.C. | 9 to 11° (0.16 to 0.19 rad.) before T.D.C. | 8 to 10° (0.14 to 0.17 rad.) before T.D.C. | 9 to 11° (0.16 to 0.19 rad.) before T.D.C. | 8 to 10° (0.14 to 0.17 rad.) before T.D.C. | 9 to 11° (0.16 to 0.19 rad.) before T.D.C. |
| Firing order | | 1-2-3 | | | | 1-3-4-2 | | | | | |
| Injection pressure | | 140 $kgf/cm^2$ (13.73 MPa, 1991 psi) | | | | | | | | | |
| Compression ratio | | 22 : 1 | | | | | | | | | |
| Lubricating system | | Forced lubrication by pump | | | | | | | | | |
| Oil pressure indicating | | Electrical type switch | | | | | | | | | |
| Lubricating filter | | Full flow paper filter (cartridge type) | | | | | | | | | |
| Cooling system | | Pressurized radiator, forced circulation with water pump (not included in the basic engine) | | | | | | | | | |
| Starting system | | Electric starting with starter | | | | | | | | | |
| | | 12 V, 0.9 kW | | 12 V, 1.0 kW | | 12 V, 1.2 kw | | | | | |
| Starting support device | | By glow plug in combustion chamber | | | | | | | | | |
| Bettery | | 12 V, 65 AH, equivalent | | | | 12 V, 70 AH, equivalent | | | | | |
| Dynamo for charging | | 12 V, 150 W | | 12 V, 360 W | | | | | | | |
| Fuel | | Diesel fuel No. 2-D (ASTM D975) | | | | | | | | | |
| Lubricating oil | | MIL-L-46152, MIL-L-2104C, quality better than CD class (API) | | | | | | Quality better than CE class (API) | | Quality better than CD class (API) | |
| Lubricating oil capacity | 125 mm (4.92 in.) | 5.1 L (5.39 U.S.qts., 4.49 Imp.qts.) | | | | 6.0 L (6.34 U.S.qts., 5.28 Imp.qts.) | | 6.7 L (7.08 U.S.qts., 5.90 Imp.qts.) | | 6.0 L (6.34 U.S.qts., 5.28 Imp.qts.) | |
| Lubricating oil capacity | 101 mm (3.97 in.) | 4.0 L (4.23 U.S.qts., 3.52 Imp.qts.) | | | | 4.7 L (4.97 U.S.qts., 4.14 Imp.qts.) | | — | | 4.7 L (4.97 U.S.qts., 4.14 Imp.qts.) | |
| Weight (Dry) | kg (lbs) | 93.0 (205.0) | | | | 110.0 (242.5) | | 114.0 (251.3) | | 110.0 (242.5) | |

*01640Z00070*

| Model | | D1105-B (E) | V1505-B (E) | D1105-T-B (E) | V1505-T-B (E) |
|---|---|---|---|---|---|
| Number of cylinders | | 3 | 4 | 3 | 4 |
| Type | | Vertical, water-cooled, 4-cycle diesel engine | | | |
| Bore × stroke mm (in.) | | 78 × 78.4 (3.07 × 3.09) | | | |
| Total displacement $cm^3$ (cu. in.) | | 1123 (68.53) | 1498 (91.41) | 1123 (68.53) | 1498 (91.41) |
| Brake horsepower | SAE net cont. kW/rpm (HP/rpm) | 16.4/3000 (22.0/3000) | 21 6/3000 (29.0/3000) | 20.5/3000 (27.5/3000) | 27.2/3000 (36.5/3000) |
| | SAE net intermittent kW/rpm (HP/rpm) | 18.7/3000 (25.0/3000) | 25.0/3000 (33.5/3000) | 23.5/3000 (31.5/3000) | 31.3/3000 (42.0/3000) |
| | SAE gross intermittent kW/rpm (HP/rpm) | 20.9/3000 (28.0/3000) | 28.0/3000 (37.5/3000) | 26.1/3000 (35.0/3000) | 34.7/3000 (46.5/3000) |
| | DIN6271-NA kW/rpm (ps/rpm) | 16.2/3000 (22.0/3000) | 21.3/3000 (29.0/3000) | 20.2/3000 (27.5/3000) | 26.8/3000 (36.5/3000) |
| | DIN6271-NB kW/rpm (ps/rpm) | 17.6/3000 (24.0/3000) | 23.5/3000 (32.0/3000) | 22.4/3000 (30.5/3000) | 29.8/3000 (40.5/3000) |
| | DIN70020 kW/rpm (ps/rpm) | 19.5/3000 (26.5/3000) | 26.1/3000 (35.5/3000) | 24.6/3000 (33.5/3000) | 32.7/3000 (44.5/3000) |
| Maximum bare speed rpm | | 3200 | | | |
| Minimum idling speed rpm | | 850 to 950 | | | |
| Maximum torque N·m/rpm<br>kgf·m/rpm<br>ft-lbs/rpm | | 68.3/2000<br>6.96/2000<br>50.3/2000 | 91.5/2000<br>9.33/2000<br>67.5/2000 | 86.0/2000<br>8.77/2000<br>63.4/2000 | 114.7/2000<br>11.7/2000<br>84.6/2000 |
| Combustion chamber | | Spherical type (E-TVCE) | | | |
| Fuel injection pump | | Bosch MD type mini pump | | | |
| Governor | | Centrifugal mechanical governor | | | |
| Direction of rotation | | Counter-clockwise (viewed from flywheel side) | | | |
| Injection nozzle | | Mini nozzle (DNOPD) | | | |
| Injection timing | Without timer | 0.31 to 0.35 rad. (18 to 20°) before T.D.C. | | | |
| | With timer | 0.14 to 0.17 rad. (8 to 10°) before T.D.C. | 0.21 to 0.24 rad. (12 to 14°) before T.D.C. | 0.14 to 0.17 rad. (8 to 10°) before T.D.C. | |
| Firing order | | 1-2-3 | 1-3-4-2 | 1-2-3 | 1-3-4-2 |
| Injection pressure | | 13.73 MPa (140 kgf/$cm^2$, 1991 psi) | | | |
| Compression ratio | | 22 : 1 | | 22.5 : 1 | |
| Lubricating system | | Forced lubrication by pump | | | |
| Oil pressure indicating | | Electrical type switch | | | |
| Lubricating filter | | Full flow paper filter (cartridge type) | | | |
| Cooling system | | Pressurized radiator, forced circulation with water pump (not included in the basic engine) | | | |
| Starting system | | Electric starting with starter | | | |
| | | 12 V, 1.0 kW | 12 V, 1.2 kW | 12 V, 1.0 kW | 12 V, 1.2 kW |
| Starting support device | | By glow plug in combustion chamber | | | |
| Bettery | | 12 V, 65 AH, equivalent | 12 V, 70 AH, equivalent | 12 V, 65 AH, equivalent | 12 V, 56 AH |
| Dynamo for charging | | 12 V, 360 W | | | |
| Fuel | | Diesel fuel No. 2-D (ASTM D975) | | | |
| Lubricating oil | | MIL-L-46152, MIL-L-2104C, quality better than CD class (API) | | Quality better than CE class (API) | |
| Lubricating oil capacity | 125 mm (4.92 in.) | 5.1 L (5.39 U.S.qts.,4.49 Imp.qts.) | 6.0 L (6.34 U.S.qts., 5.28 Imp.qts.) | 5.1 L (5.39 U.S.qts., 4.49 Imp.qts.) | 6.7 L (7.08 U.S.qts.,5.90 Imp.qts.) |
| | 101 mm (3.97 in.) | 4.0 L (4.23 U.S.qts.,3.52 Imp.qts.) | 4.7 L (4.97 U.S.qts.,4.14 Imp.qts.) | 4.0 L (4.23 U.S.qts.,3.52 Imp.qts.) | – |
| Weight (Dry) kg (lbs) | | 93.0 (205.0) | 110.0 (242.5) | 97.0 (213.8) | 114.0 (251.3) |

*01640Z00100*

# MECHANISM

## CONTENTS


■ FEATURE ..... M-1
■ ENGINE BODY ..... M-3
[1] CYLINDER BLOCK ..... M-3
[2] CYLINDER HEAD ..... M-3
[3] CRANKSHAFT ..... M-5
[4] PISTON AND PISTON RINGS ..... M-5
[5] CONNECTING ROD ..... M-7
[6] ROCKER ARM ..... M-7
[7] CAMSHAFT ..... M-7
[8] FUEL CAMSHAFT ..... M-9
[9] FLYWHEEL ..... M-9
■ LUBRICATING SYSTEM ..... M-11
[1] GENERAL ..... M-11
[2] OIL PUMP ..... M-13
[3] RELIEF VALVE ..... M-13
[4] OIL FILTER CARTRIDGE ..... M-15
[5] OIL PRESSURE SWITCH ..... M-15
■ COOLING SYSTEM ..... M-17
[1] GENERAL ..... M-17
[2] WATER PUMP ..... M-17
[3] THERMOSTAT ..... M-19
[4] RADIATOR (not included in the basic engine) ..... M-19
[5] RADIATOR CAP ..... M-21
■ INTAKE / EXHAUST SYSTEM ..... M-23
[1] AIR CLEANER (not included in the basic engine) ..... M-23
[2] MUFFLER (not included in the basic engine) ..... M-23
■ FUEL SYSTEM ..... M-25
[1] GENERAL ..... M-25
[2] INJECTION PUMP ..... M-25
(1) Pump Element ..... M-27
(2) Delivery Valve ..... M-27
(3) Dumping Valve ..... M-29
(4) Injection Control ..... M-29
[3] INJECTION NOZZLE ..... M-31
[4] FUEL FILTER (not included in the basic model) ..... M-31
[5] GOVERNOR ..... M-33
[6] AUTOMATIC ADVANCE TIMER (not included in the basic model) ..... M-37
■ ELECTRICAL SYSTEM ..... M-41
[1] CHARGING SYSTEM ..... M-41
(1) Alternator ..... M-41
(2) IC Regulator ..... M-41
■ TURBO CHARGER SYSTEM ..... M-43
(1) Mechanism ..... M-45
(2) Turbine ..... M-47
(3) Compressor ..... M-47
(4) Bearing ..... M-49
(5) Seals (Piston Rings) ..... M-51

# F FEATURE

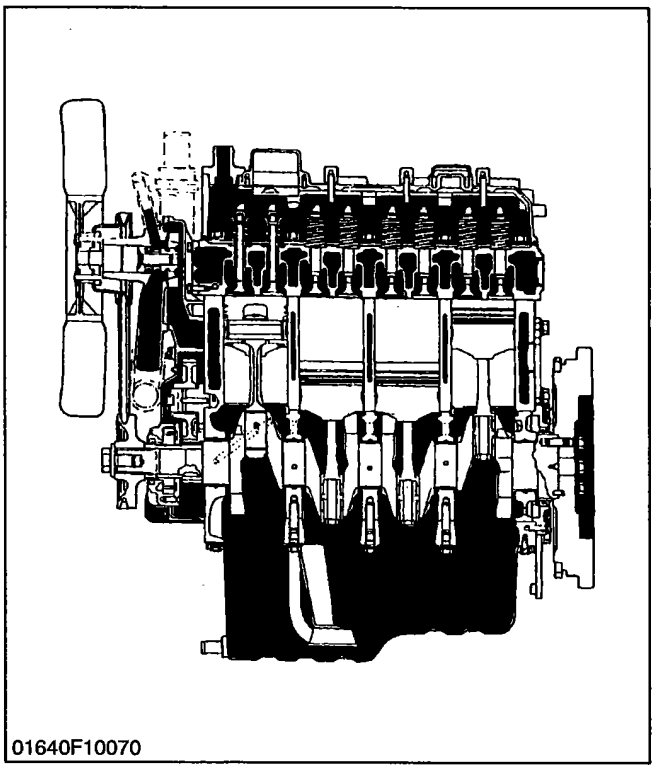

01640F10070

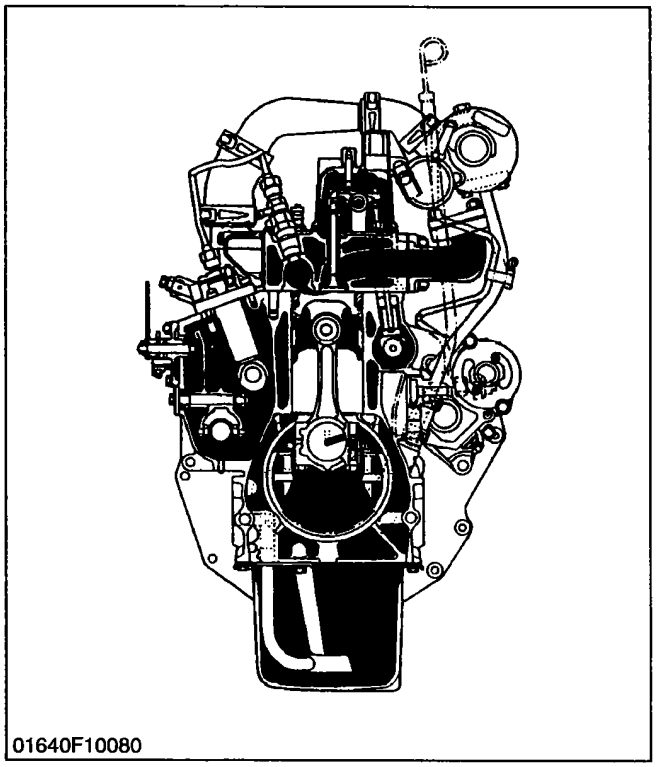

01640F10080

The 05 SERIES ENGINE are vertical, water-cooled, 4 cycle diesel engines.

They are incorporated KUBOTA's foremost technologies. With KUBOTA's E-TVCS (Three Vortex Combustion System), well-known Bosch MD type injection pump and the well-balanced designs, they give greater power, low fuel consumption, little vibration and quiet operation.

**■ NOTE**

- **Since January 1994, E-TVCS has been used for the combustion chamber of our products instead of traditional N-TVCS.**
  **E-TVCS was developed with an eye toward clean exhaust gas which is more environmentally freindly.**
  **The combustion chamber models mentioned hereinafter refers to E-TVCS.**
  **Model of combustion chamber :**
  **N-TVCS**
  **(Engine Serial Number ; 489290 or lower)**
  **E-TVCS**
  **(Engine Serial Number ; 489291 or higher)**

*11900M10011*

# 1 ENGINE BODY

## [1] CYLINDER BLOCK

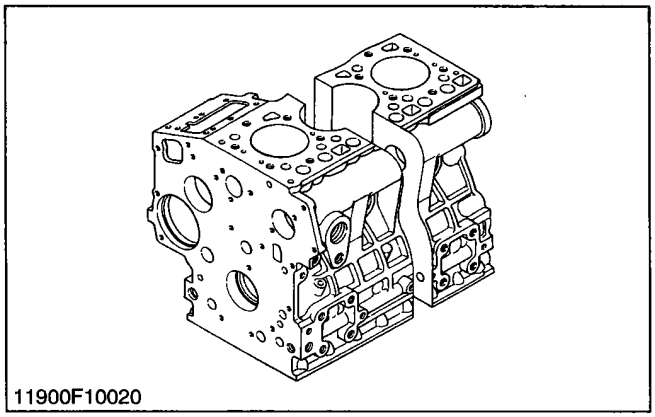
11900F10020

The engine has a high durability tunnel-type cylinder block in which the crank bearing component is a constructed body.

Furthermore, liner less type, allow effective cooling, less distortion, and greater wear-resistance.

The noise level is reduced to a minimum because each cylinder has its own chamber.

*11900M10020*

## [2] CYLINDER HEAD

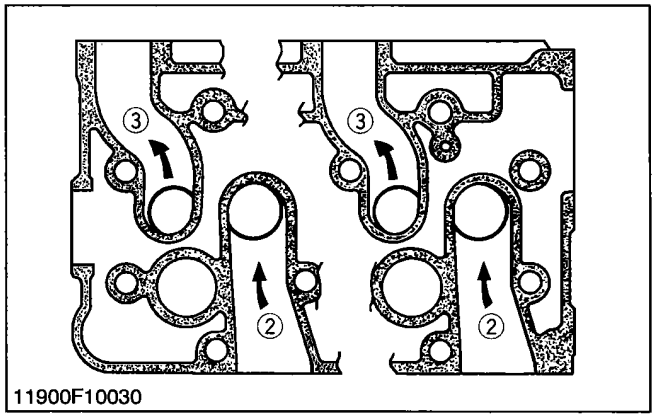

11900F10030

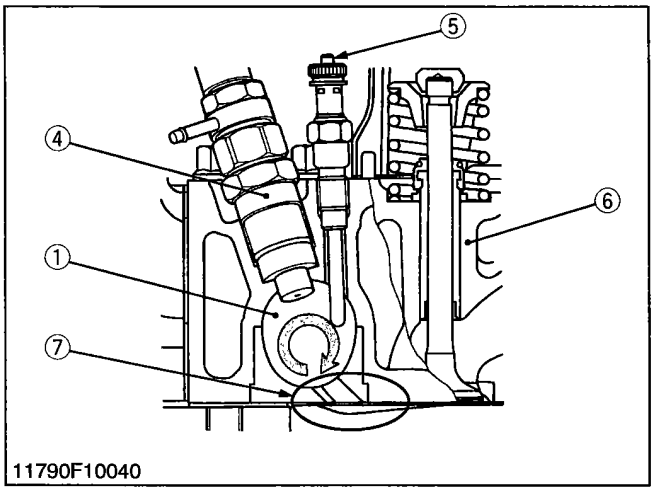

11790F10040

(1) Combustion Chamber
(2) Intake Port
(3) Exhaust Port
(4) Nozzle Assembly
(5) Glow Plug
(6) Cylinder Head
(7) Depression
(8) Compressed Air

**(A) Connect to Combustion Chamber**

The cross-flow type intake / exhaust ports in this engine have their openings at both sides of the cylinder head. Because overlaps of intake / exhaust ports are smaller than in ports of other types which have openings on one side, the suction air can be protected from being heated and expanded by heated exhaust air. The cool, high density suction air has high volume efficiency and raises the power of the engine. Furthermore, distortion of the cylinder head by heated exhaust gas is reduced because intake ports are arranged alternately.

The combustion chamber is of KUBOTA's exclusive E-TVCS combustion chamber type. Suction air is whirled to be mixed effectively with fuel, prompting combustion and reducing fuel consumption.

In the combustion chamber are installed throttle type injection nozzle and rapid heating sheathed type glow plug. This glow plug assures easier than ever engine starts even at -15 °C (5 °F).

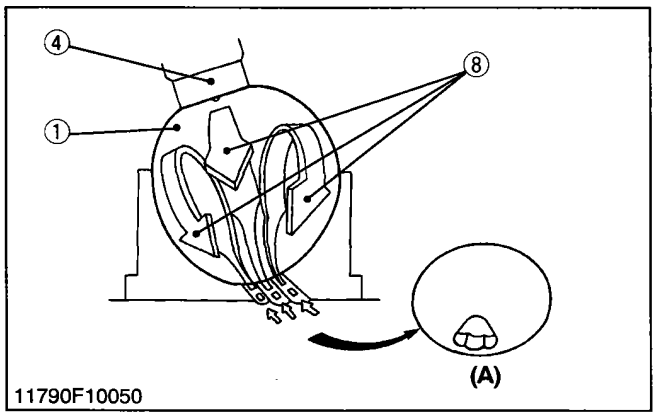

11790F10050

*11900M10031*

## [3] CRANKSHAFT

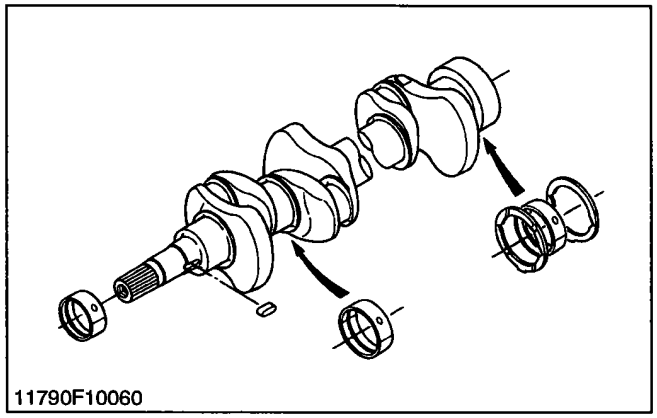
11790F10060

The crankshaft with the connecting rod converts the reciprocating motion of the piston into the rotating motion.

The crankshaft is made of tough special alloy steel, and the journals, pins and oil seal sliding portions are induction hardened to increase the hardness for higher wear resistance.

The front journal is supported by a solid type bearing, the intermediate journal by a split type, and the rear journal by a split type with thrust bearings.

The crankshaft is provided with an oil gallery, through which engine oil is fed to the crankpin portion, and lubricates it.

*11790M10040*

## [4] PISTON AND PISTON RINGS

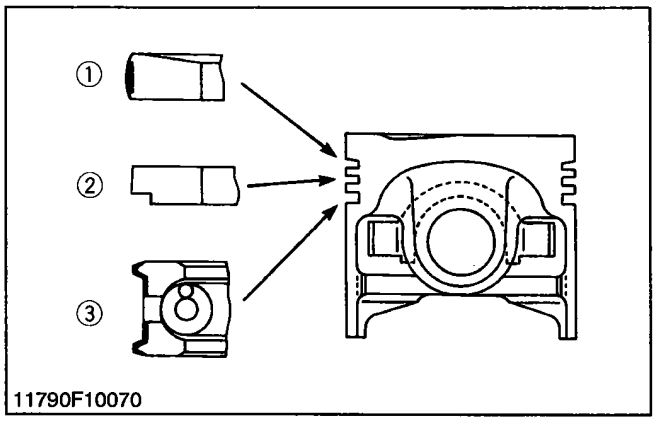

11790F10070

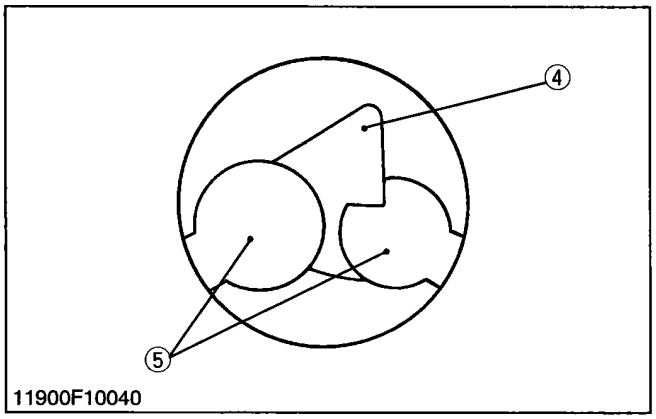

11900F10040

The piston has a slightly oval shape when cold (in consideration of thermal expansion) and a concave head.

Three rings are installed in grooves in the piston.

The top ring (1) is a keystone type, which can stand against heavy loads, and the barrel face on the ring fits well to the cylinder wall.

The second ring (2) is an undercut type, which effectively prevents the oil from being carried up.

The oil ring (3) has chamfered contact faces and an expander ring, which increase the pressure of the oil ring against the cylinder wall.

Several grooves are cut on the top land to help heat dissipate and to prevent scuffing.

(1) Top Ring
(2) Second Ring
(3) Oil Ring
(4) Depression
(5) Valve Recess

*11900M10041*

## [5] CONNECTING ROD

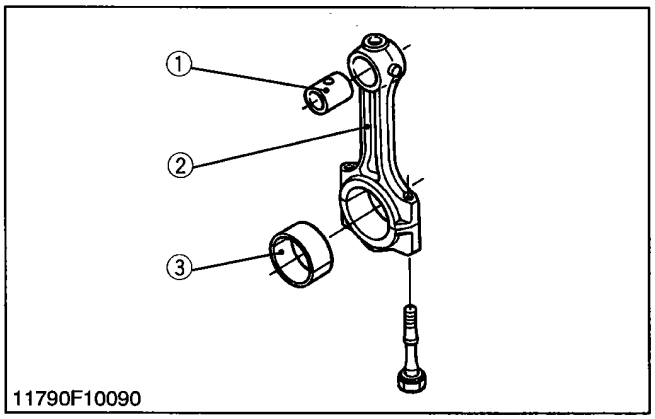


The connecting rod (2) is used to connect the piston with the crankshaft.

The big end of the connecting rod has a crankpin bearing (3) (split type) and the small end has a small end bushing (1) (solid type).

(1) Small End Bushing
(2) Connecting Rod
(3) Crankpin Bearing

*11790M10060*

## [6] ROCKER ARM

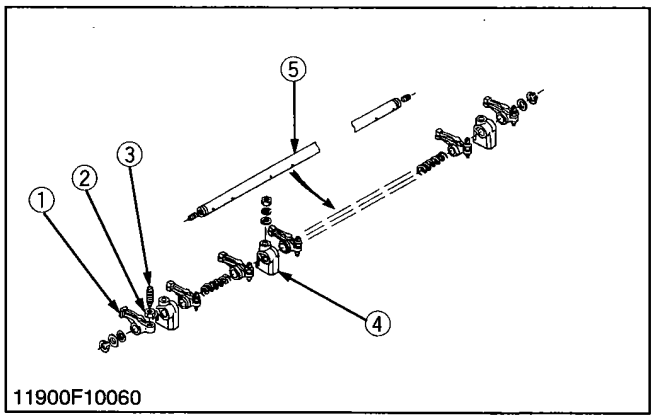


The rocker arm assembly includes the rocker arms (1), rocker arm brackets (4) and rocker arm shaft (5), and converts the reciprocating movement of the push rods to an open / close movement of the intake and exhaust valves.

Lubricating oil pressurized through the bracket to the rocker arm shaft, which serves as a fulcrum so that the rocker arm and the entire system are lubricated sufficiently.

(1) Rocker Arm
(2) Lock Nut
(3) Adjusting Screw
(4) Rocker Arm Bracket
(5) Rocker Arm Shaft

*11900M10070*

## [7] CAMSHAFT

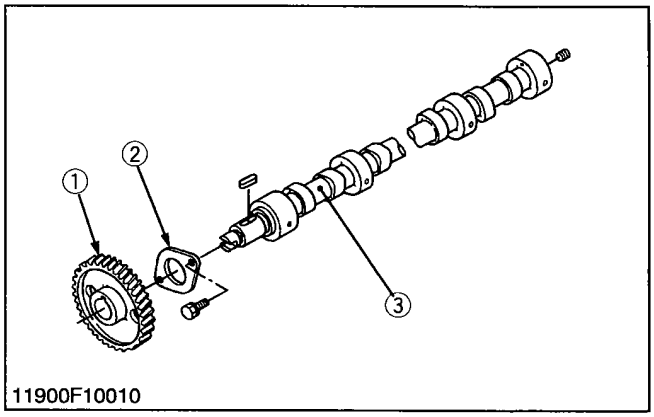


The camshaft (3) is made of special cast iron, and the journal and cam sections are chilled to resist wear.

The journal sections are force-lubricated.

(1) Cam Gear
(2) Camshaft Stopper
(3) Camshaft

*11900M10050*

# [8] FUEL CAMSHAFT

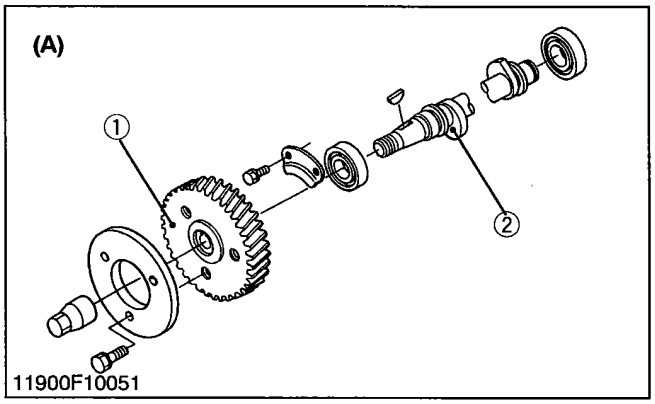


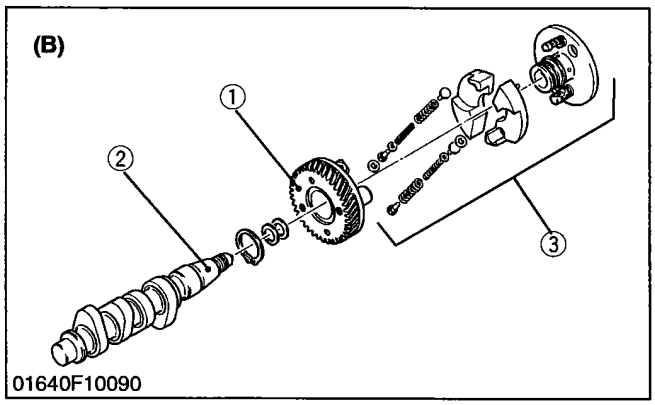


The fuel camshaft (2) controls the reciprocating movement of the injection pump.

The fuel camshaft is made of carbon steel and the cam sections are quenched and tempered to provide greater wear resistance.

(1) Injection Pump Gear
(2) Fuel Camshaft
(3) Automatic Advance Timer (not included in the basic model)

**(A) Without Timer**
**(B) With Timer**

*11900M10061*

# [9] FLYWHEEL

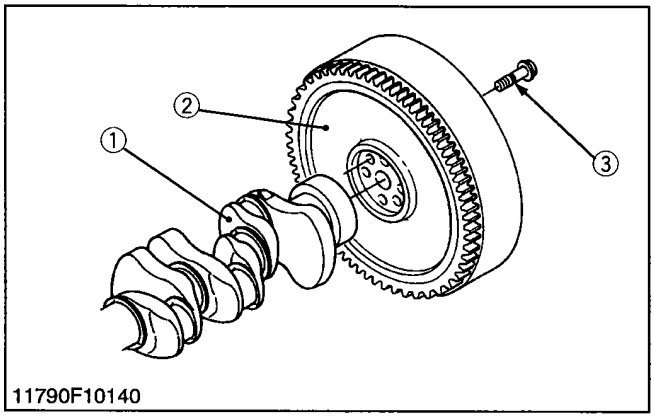


The flywheel stores the rotating force in the combustion stroke as inertial energy, reduces crankshaft rotating speed fluctuation and maintains the smooth rotating conditions.

The flywheel periphery is inscribed with the marks showing fuel injection timing angle lines and top dead center mark **TC**.

The flywheel has gear teeth around its outer rim, which mesh with the drive pinion of the starter.

(1) Crankshaft
(2) Flywheel
(3) Flywheel Screw

*11900M10081*

# 2 LUBRICATING SYSTEM

## [1] GENERAL

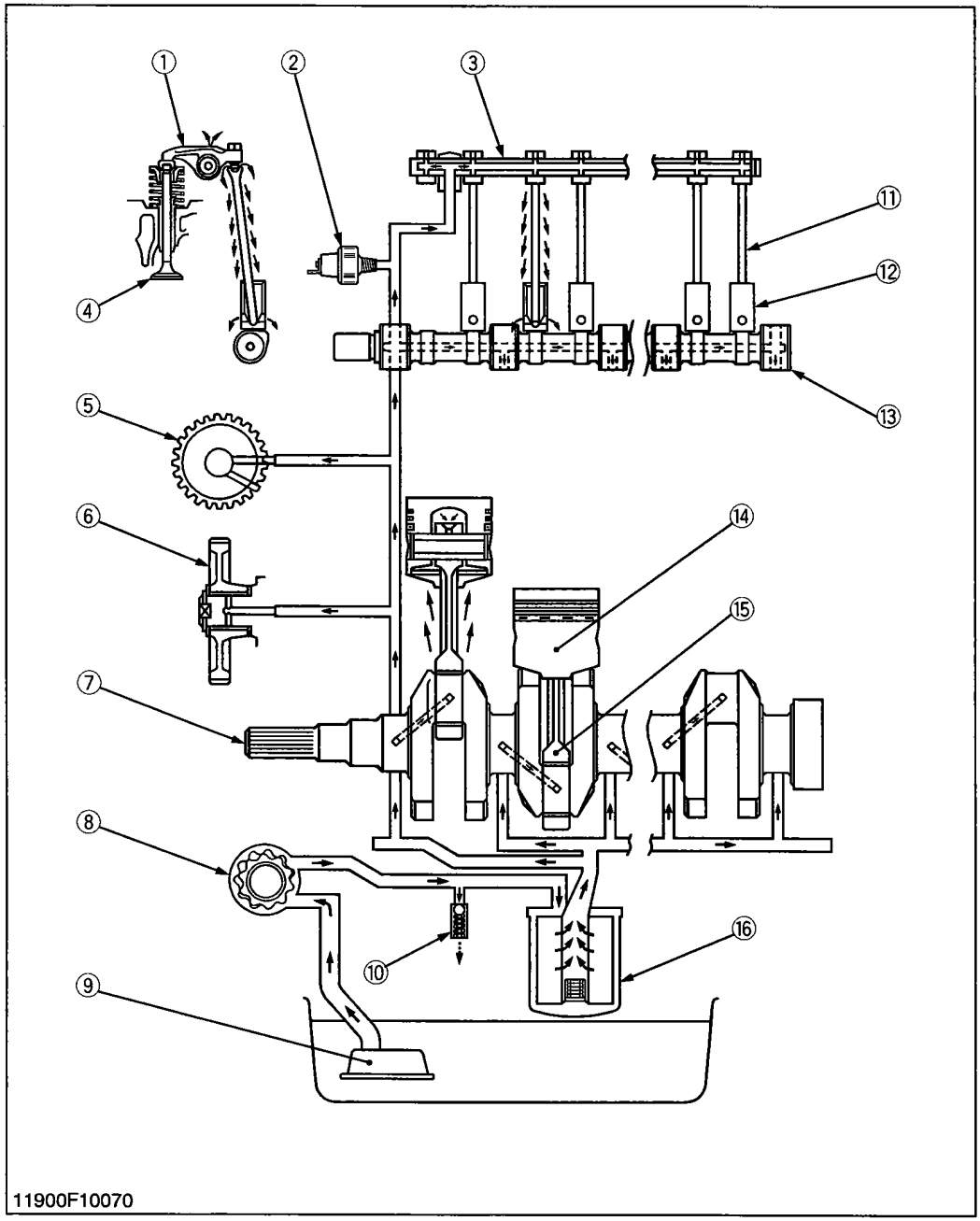


(1) Rocker Arm
(2) Oil Pressure Switch
(3) Rocker Arm Shaft
(4) Valve
(5) Governor Shaft
(6) Idle Gear
(7) Crankshaft
(8) Oil Pump
(9) Oil Strainer
(10) Relief Valve
(11) Push Rod
(12) Tappet
(13) Camshaft
(14) Piston
(15) Connecting Rod
(16) Oil Filter Cartridge

This engine's lubricating system consists of oil strainer (9), oil pump (8), relief valve (10), oil filter cartridge (16) and oil pressure switch (2).

The oil pump sucks lubricating oil from the oil pan through the oil strainer and the oil flows down to the filter cartridge, where it is further filtered. Then the oil is forced to crankshaft (7), connecting rods (15), idle gear (6), governor shaft (5), camshaft (13) and rocker arm shaft (3) to lubricate each part.

Some part of oil, splashed by the crankshaft or leaking and dropping from gaps of each part, lubricates these parts : pistons (14), cylinders, small ends of connecting rods, tappets (12), push rods (11), inlet and exhaust valves (4) and timing gears.

*11900M10090*

## [2] OIL PUMP

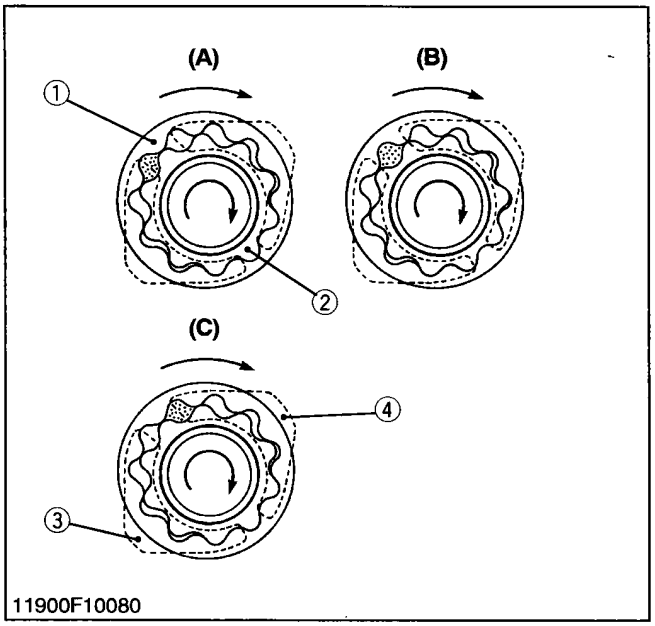


The oil pump in this engine is a trochoid pump.

Inside the pump body, the 10 lobe inner rotor (2) is eccentrically engaged with the 11 lobe outer rotor (1). The inner rotor is driven by the crankshaft, which in turn rotate the outer rotor.

When the inner rotor rotates, the outer rotor also rotates in the same direction. The two rotors have differences in lobe number and center, which generates space between lobes as shown in the figure.

At position **(A)**, there is little space between lobes in the inlet port. As the rotor rotates towards position, the space between the lobes becomes larger, creating a negative pressure which sucks in oil.

Outside the inlet port, as shown in position **(B)**, the space between the lobes becomes gradually smaller, and oil pressure increases. At position **(C)**, oil is discharged from the outlet port.

(1) Outer Rotor
(2) Inner Rotor
(3) Inlet Port
(4) Outlet Port

*11900M10101*

## [3] RELIEF VALVE

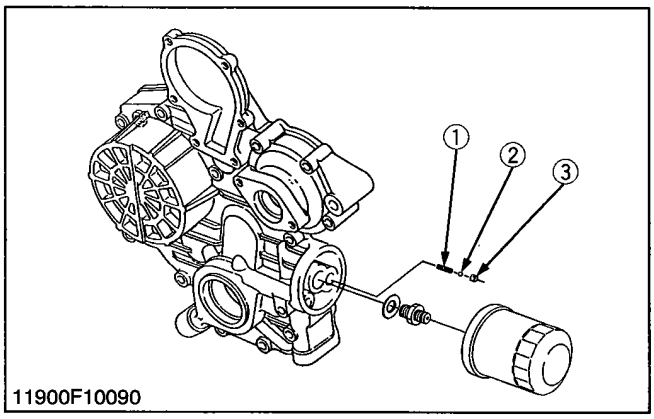


The relief valve prevents the damage of the lubricating system due to high oil pressure. This relief valve is a ball type direct acting relief valve, and is best suited for low pressures.

When oil pressure exceeds the upper limit, the ball (2) is pushed back by the pressure oil and the oil escapes.

(1) Spring
(2) Steel Ball
(3) Valve Seat

*11900M10111*

# [4] OIL FILTER CARTRIDGE

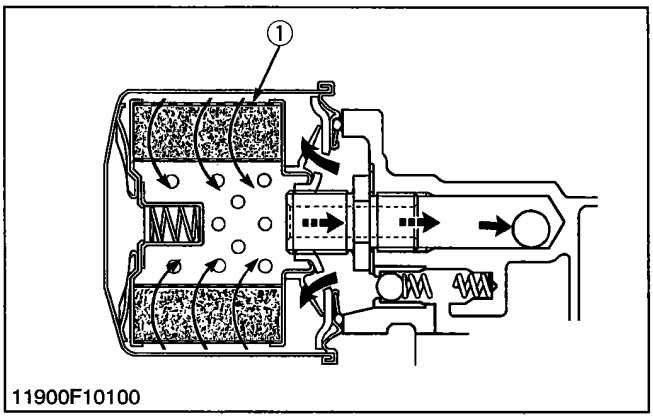


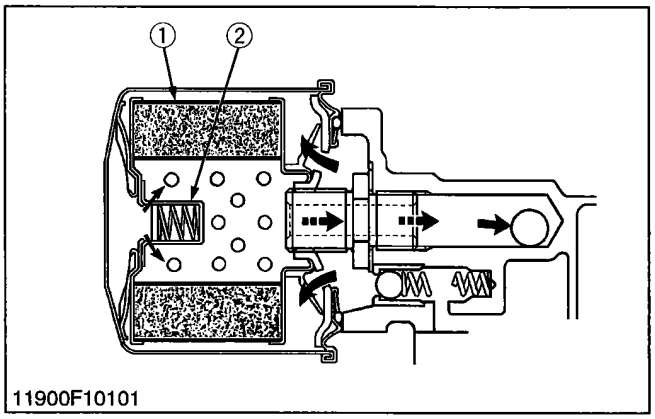


Impurities in engine oil can cause to wear and seize components as well as impairing the physical and chemical properties of the oil itself. Impurities contained in force-fed engine oil are absorbed on the filter paper for removal as they pass through the filter element (1).

When the filter element is clogged and the oil pressure in inlet line builds up by 98 kPa (1.0 kgf/cm$^2$, 14 psi) more than the outlet line, the bypass valve (2) opens and the oil flows from inlet to outlet bypassing the filter element.

(1) Filter Element (2) Bypass Valve

*11900M10120*

# [5] OIL PRESSURE SWITCH

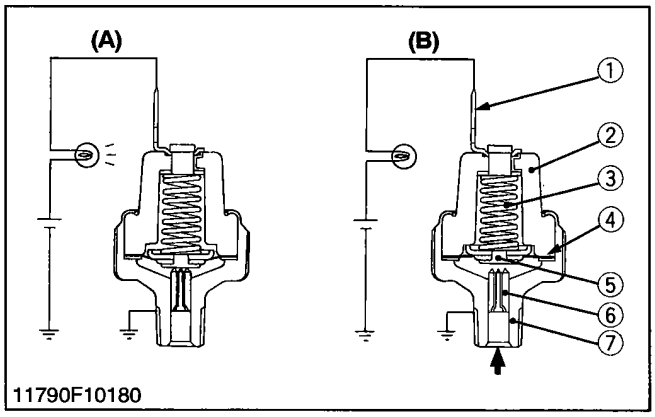


The oil pressure switch is mounted on the cylinder block, to warn the operator that the lubricating oil pressure is poor.

If the oil pressure falls below 49 kPa (0.5 kgf/cm$^2$, 7 psi), the oil warning lamp will light up, warning the operator. In this case, stop the engine immediately and check the cause of pressure drop.

(1) Terminal
(2) Insulator
(3) Spring
(4) Rubber Gasket
(5) Contact Rivet
(6) Contact
(7) Oil Switch Body

**(A) At Oil Pressures of 49 kPa (0.5 kgf/cm$^2$, 7 psi) or Less**
**(B) At Proper Oil Pressure**

*11790M10152*

# 3 COOLING SYSTEM

## [1] GENERAL

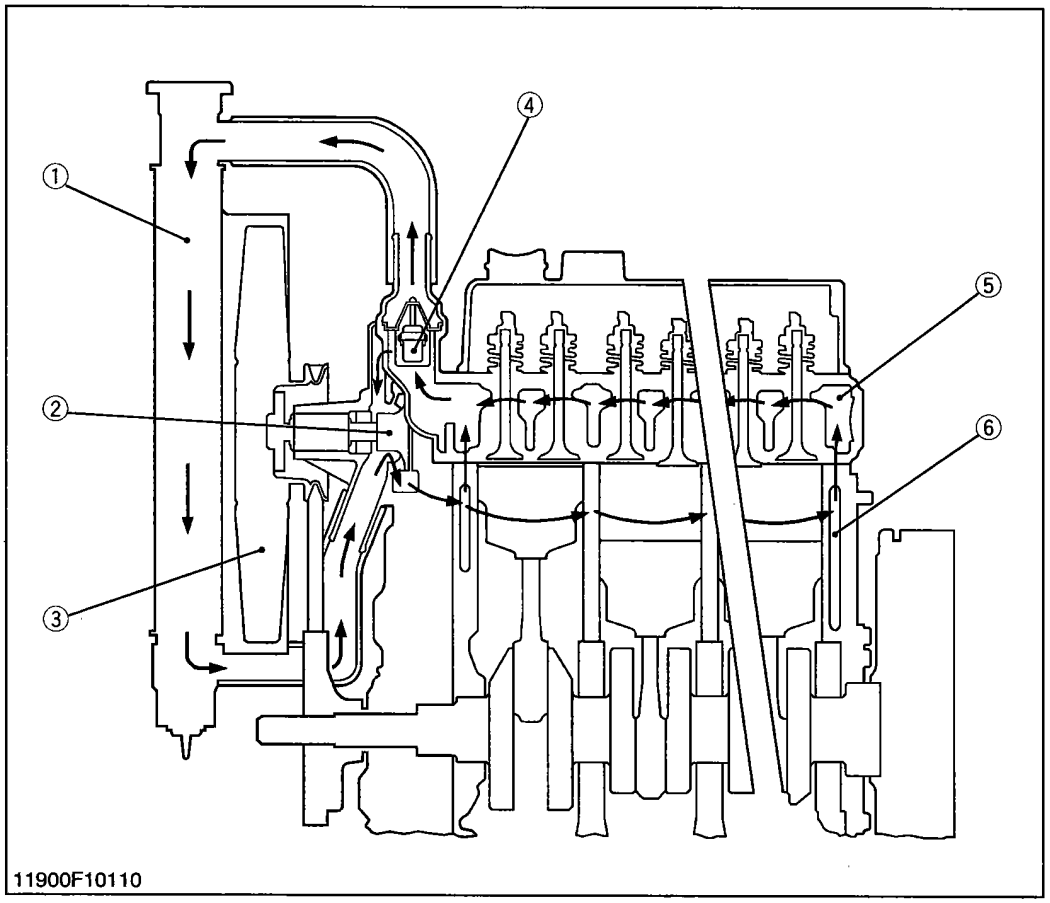


(1) Radiator
(2) Water Pump
(3) Suction Fan
(4) Thermostat
(5) Cylinder Head
(6) Cylinder Block

The cooling system consists of a radiator (1) (not included in the basic engine), centrifugal water pump (2), suction fan (3) and thermostat (4).

The water is cooled through the radiator core, and the fan set behind the radiator pulls cooling air through the core to improve cooling.

The water pump sucks the cooled water, forces it into the cylinder block and draws out the hot water. Then the cooling is repeated. Furthermore, to control temperature of water, a thremostat is provided in the system. When the thermostat opens, the water moves directly to radiator, but when it closes, the water moves toward the water pump through the bypass between thremostat and water pump. The opening temperature of thermostat is approx. 71 °C (160 °F).

*11900M10131*

## [2] WATER PUMP

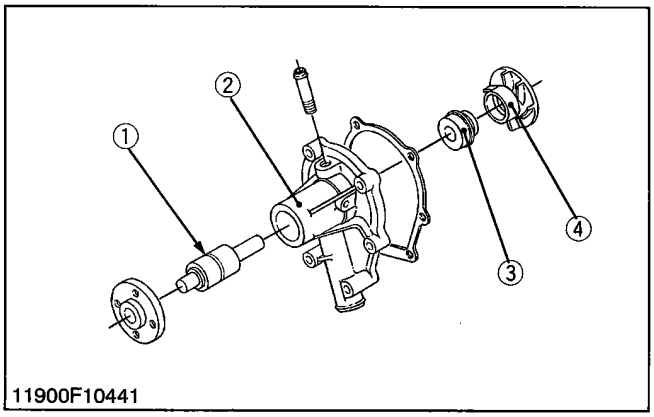


The water pump is driven by the crankshaft via a V belt. Water cooled in the radiator is sucked into the water pump from its lower portion and is sent from the center of the water pump impeller (4) radially outward into the water jacket in the crankcase.

(1) Bearing Unit
(2) Water Pump Body
(3) Mechanical Seal
(4) Water Pump Impeller

*11900M10141*

## [3] THERMOSTAT

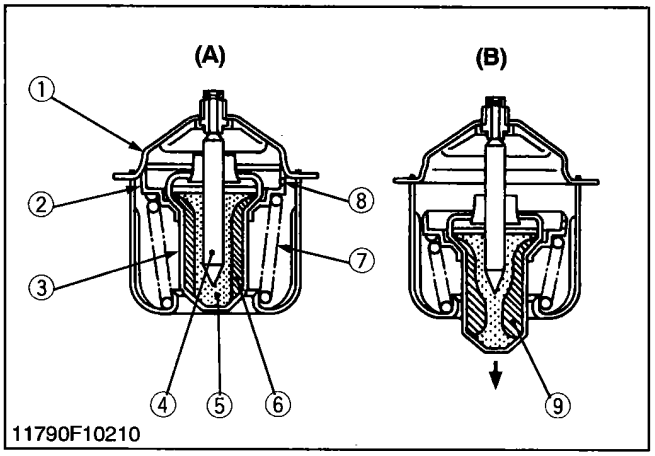


The thermostat maintains the cooling water at correct temperature. KUBOTA's engine uses a wax pellet type thermostat. Wax is enclosed in the pellet. The wax is solid at low temperatures, but turns liquid at high temperatures, expands and opens the valve.

**(A) At low temperature (lower than 71 °C, 160 °F)**

As the thermostat is closed, cooling water circulates in the engine through the water return pipe without running to the radiator.

Air in the water jacket escapes to the radiator side through leak hole (8) of the thermostat.

**(B) At high temperature (higher than 71 °C, 160 °F)**

When the temperature of cooling water exceeds 71 °C (160 °F), wax in the pellet turns liquid and expands. Because the spindle (4) is fixed, the pellet (3) is lowered, the valve (2) is separated from the seat (1), and then cooling water is sent to the radiator.

(1) Seat
(2) Valve
(3) Pellet
(4) Spindle
(5) Synthetic Rubber
(6) Wax (Solid)
(7) Spring
(8) Leak Hole
(9) Wax (Liquid)

*11790M10182*

## [4] RADIATOR (not included in the basic engine)

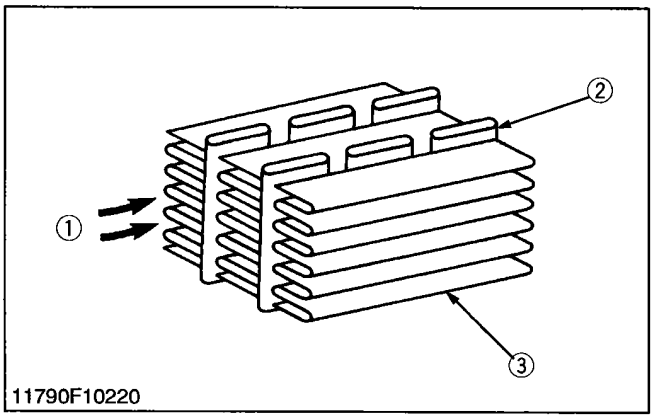


The radiator core consists of water carrying tubes (2) and fins (3) at a right angle to the tubes (2). Heat of hot water in the tubes is radiated from the tube walls and fins. KUBOTA's engine uses corrugated fin type core which has a light weight and high heat transfer rate. Clogging is minimized by the louverless corrugated fins.

(1) Cooling Air
(2) Tube
(3) Fin

*11790M10191*

# [5] RADIATOR CAP

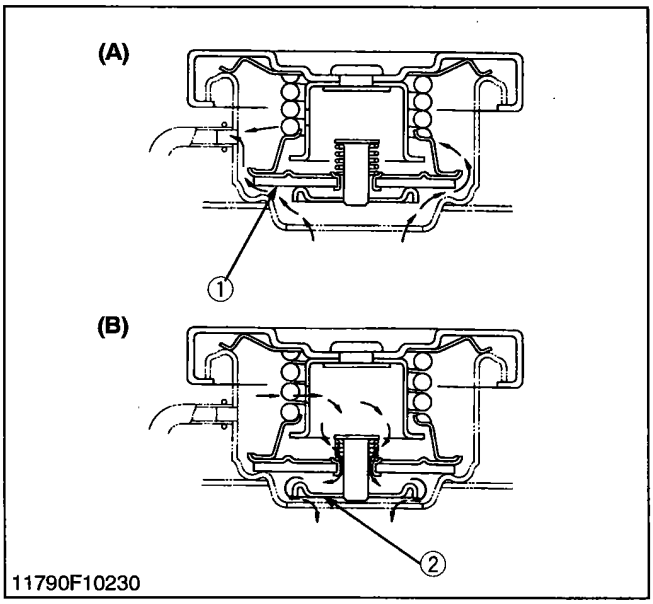


The radiator cap is for sustaining the internal pressure of the cooling system at the specified level 88 kPa (0.9 kgf/cm$^2$, 13 psi) when the engine is in operation. The cap consists of a pressure valve (1) a vacuum valve (2), valve springs, gasket, etc.

Cooling water is pressurized by thermal expansion of steam, and as its boiling temperature rises, generation of air bubbles will be suppressed. (Air bubbles in cooling water lowers the cooling effect.)

(1) Pressure Valve
(2) Vacuum Valve

**(A) When radiator internal pressure is high**
**(B) When radiator internal pressure is negative**

*11790M10201*

# 4 INTAKE / EXHAUST SYSTEM

## [1] AIR CLEANER (not included in the basic engine)

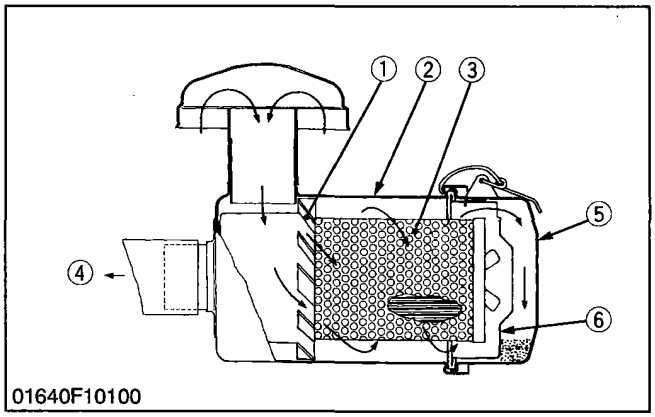


The air cleaner is a dry-cyclone type for easy maintenance. Sucked air is caused to flow in a whirling way with fin (1). As a result, heavier dust particles circulate around the circumference and enter the holes in the baffle cover (6) and accumulate in the dust cup (5). Minute dust, while circulating in the air flow, is absorbed by the element (3) and thus prevented from entering the engine.

(1) Fin
(2) Air Cleaner Body
(3) Air Filter Element
(4) To Cylinder
(5) Dust Cup
(6) Baffle Cover

*01640M10010*

## [2] MUFFLER (not included in the basic engine)

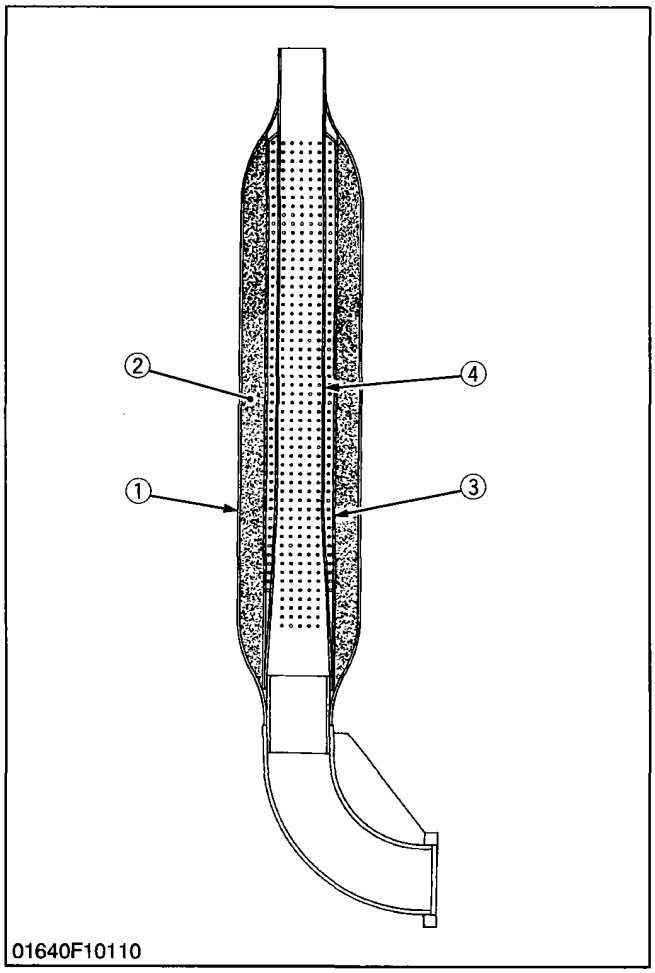


High temperature and high pressure exhaust gas is intermittently discharged by fuel combustion generating pressure waves inside the exhaust pipe which will result in noise.

The muffler is used to reduce this noise.

This muffler consists of a perforated inner tube (4) and outer tube (3), glass wool (2), main body (1), etc. The glass wool placed between the outere tube and main body, absorbs the exhaust noise of higher frequency.

(1) Main Body
(2) Glass Wool
(3) Outer Tube
(4) Inner Tube

*01640M10020*

# 5 FUEL SYSTEM

## [1] GENERAL

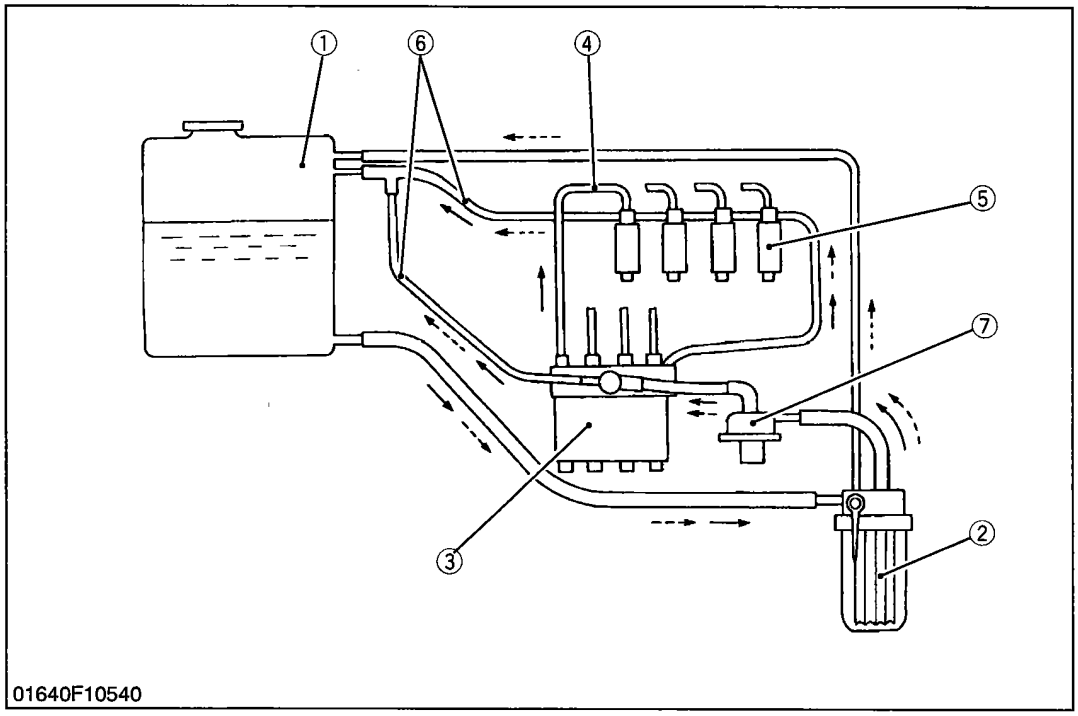


(1) Fuel Tank
(2) Fuel Filter
(3) Injection Pump
(4) Injection Pipe
(5) Injection Nozzle
(6) Fuel Overflow Pipe
(7) Fuel Feed Pump

Fuel from the fuel tank (1) passes through the fuel filter (2), and then enters the injection pump (3) after impurties such as dirt, water, etc. are removed.

The fuel pressurized by the injection pump to the opening pressure (13.73 to 14.71 MPa, 140 to 150 kgf/cm$^2$, 1991 to 2133 psi), of the injection nozzle (5) is injected into the combustion chamber.

Part of the fuel fed to the injection nozzle (5) lubricates the moving parts of the plunger inside the nozzle, then returns to the fuel tank through the fuel overflow pipe (6) from the upper part of the nozzle holder.

*11900M10151*

## [2] INJECTION PUMP

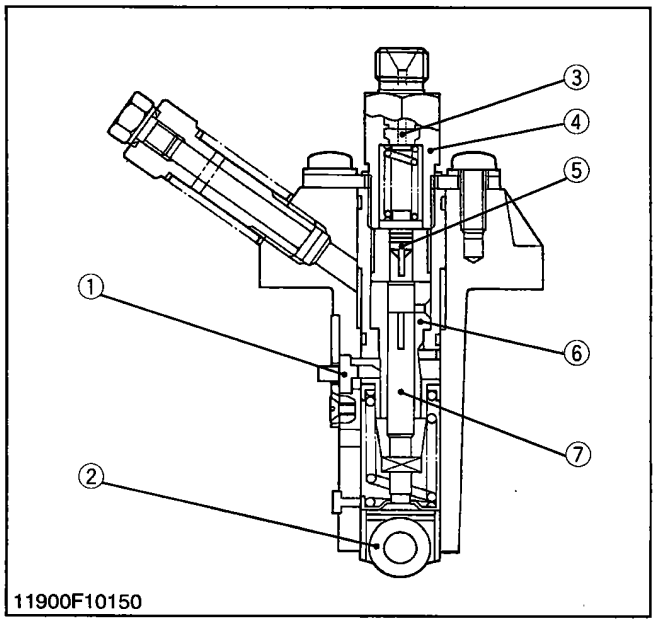


A Bosch MD type mini pump is used for the injection pump. It is small, lightweight and easy to handle.

The plunger (7) with a left-hand lead reciprocates via the tappet roller (2) by means of the fuel camshaft, causing the fuel to be delivered into the injection nozzle.

(1) Control Rack
(2) Tappet Roller
(3) Dumping Valve
(4) Delivery Valve Holder
(5) Delivery Valve
(6) Cylinder
(7) Plunger

*11900M10170*

## (1) Pump Element

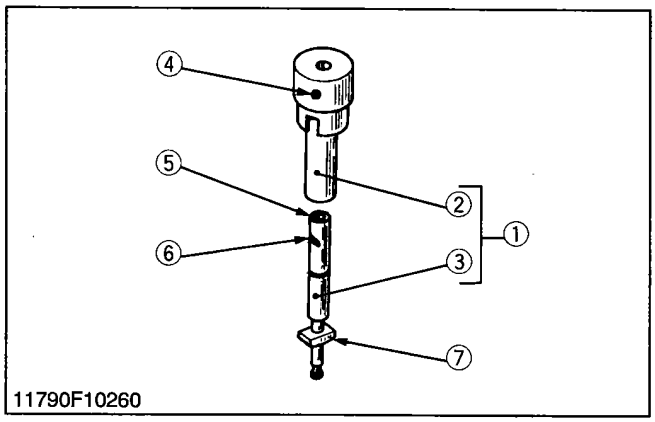


The pump element (1) is consist of the plunger (3) and cylinder (2).

The sliding surfaces are super-precision machined to maintain injection pressure at engine low speeds. Since the driving face (7) fits in the control sleeve, the plunger (3) is rotated by the movement of the control rack to increase or decrease of fuel delivery.

As described above, the plunger (3) is machined to have the slot (5) and the control groove (6).

(1) Pump Element
(2) Cylinder
(3) Plunger
(4) Feed Hole
(5) Slot
(6) Control Groove
(7) Driving Face

*11790M10231*

## (2) Delivery Valve

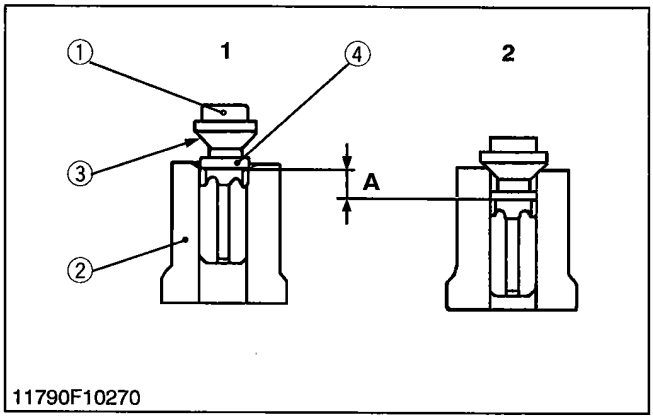


The delivery valve consists of the delivery valve (1) and delivery valve seat (2).

The delivery valve performs the following functions.

**1. Reverse flow preventing function**

If the fuel flow reverse from the injection nozzle side when the plunger lowers, the time lag between the next delivery start and the nozzle injection start increases. To avoid this, the delivery chamber to injection pipe interruption by delivery valve (1) prevents this reverse flow, thus keeping fuel always filled in the nozzle and pipe.

**2. Suck-back function**

After completing the fuel delivery, the delivery valve lowers, and the relief plunger (4) end contacts the delivery valve seat (2). The valve further lowers until its seat surface (3) seats firmly the delivery valve seat. During this time, the amount of fuel corresponding to **(A)** is sucked back from inside the injection pipe, the pressure inside the pipe is reduced, thus leading to an improved injection shut off and preventing after leakage dribbling.

(1) Delivery Valve
(2) Delivery Valve Seat
(3) Seat Surface
(4) Relief Plunger

*11790M10241*

## (3) Dumping Valve

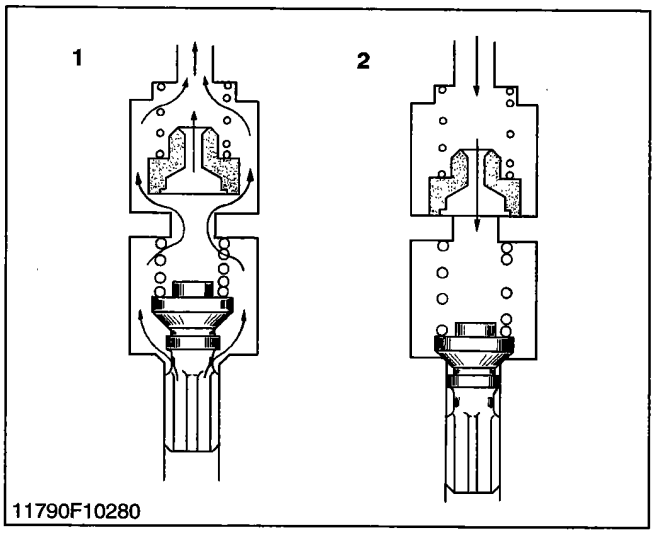


**1. At fuel injection**

Since dumping valve is pushed up to press the spring, fuel is pressure-fed to injection nozzle the same as without dumping valve.

**2. At suck-back**

At suck-back by delivery valve after fuel injection fuel returns through dumping valve orifice. Generally second injection is apt to occur by reflex pressure due to reaction of sudden pressure drop when changing into suck-back by delivery valve from high injection pressure.

As a result of preventing this second injection perfectly by dumping valve and dissolving nozzle clogging, durability of injection nozzle is improved.

*11790M10251*

## (4) Injection Control

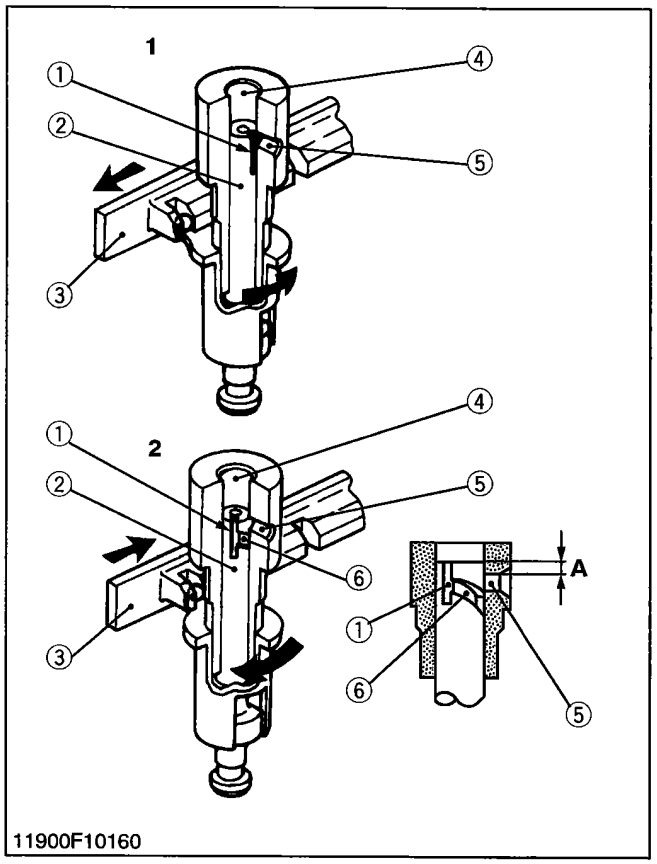


**1. No fuel delivery**

At the engine stop position of the control rack (3), the lengthwise slot (1) on the plunger (2) aligns with the feed hole (5). And the delivery chamber (4) is led to the feed hole during the entire stroke of the plunger.

The pressure in the delivery chamber does not build up and no fuel can be forced to the injection nozzle.

**2. Fuel delivery**

The plunger (2) is rotated (see figure) by the control rack (3).

When the plunger is pushed up, the feed hole (5) is closed. The pressure in the delivery chamber (4) builds up and forcefeeds the fuel to the injection nozzle until the control groove (6) meets the feed hole (5).

The amount of the fuel corresponds to the distance **"A"**.

(1) Slot
(2) Plunger
(3) Control Rack
(4) Delivery Chamber
(5) Feed Hole
(6) Control Groove

*11900M10181*

# [3] INJECTION NOZZLE

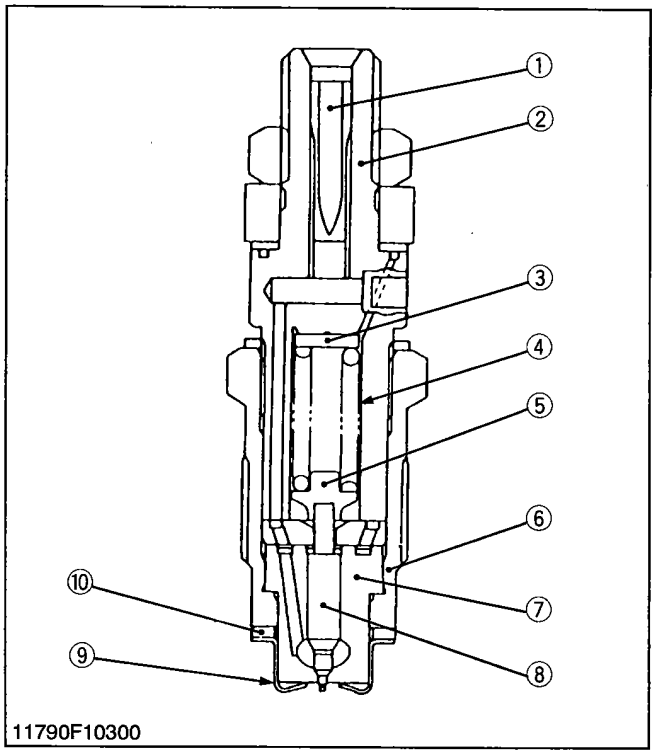


This nozzle is throttle-type. The needle valve (8) is pushed against the nozzle body (7) by the nozzle spring via the push rod (5). Fuel pressurized by the injection pump pushes the needle valve up and then is injected into the sub-combustion chamber.

Excessive flow passes from nozzle holder center through the eye joint and the fuel overflow pipe to the fuel tank.

The injection pressure is 13.73 to 14.71 MPa (140 to 150 kgf/cm$^2$, 1991 to 2133 psi), and is adjusted with adjusting washers (3).

(1) Bar Filter
(2) Nozzle Holder Body
(3) Adjusting Washer
(4) Nozzle Spring
(5) Push Rod
(6) Retaining Nut
(7) Nozzle Body
(8) Needle Valve
(9) Heat Seal
(10) Gasket

*11790M10272*

# [4] FUEL FILTER (not included in the basic model)

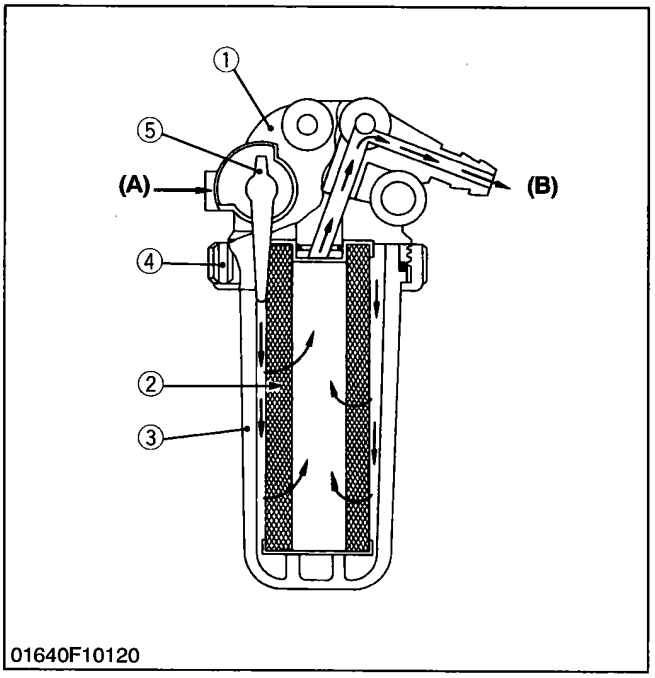


Each moving part of the injection pump and nozzle is extremely precision machined, and clearances of their sliding parts are extremely small. Fuel itself serves as lubricating oil. For this reason, it is extremely important to completely remove water and dirt contained in fuel.

This fuel filter, which uses very fine filter paper, serves to separate and filter dirt in fuel and water accumulated in the tank.

Air vent plug is fitted to the cock body. Before starting or after disassembling and reassembling, loosen this plug and bleed the air in the fuel system.

(1) Cock Body
(2) Filter Element
(3) Filter Cup
(4) Retaining Ring
(5) Fuel Cock

**(A) Inlet**
**(B) Outlet**

*01640M10030*

# [5] GOVERNOR

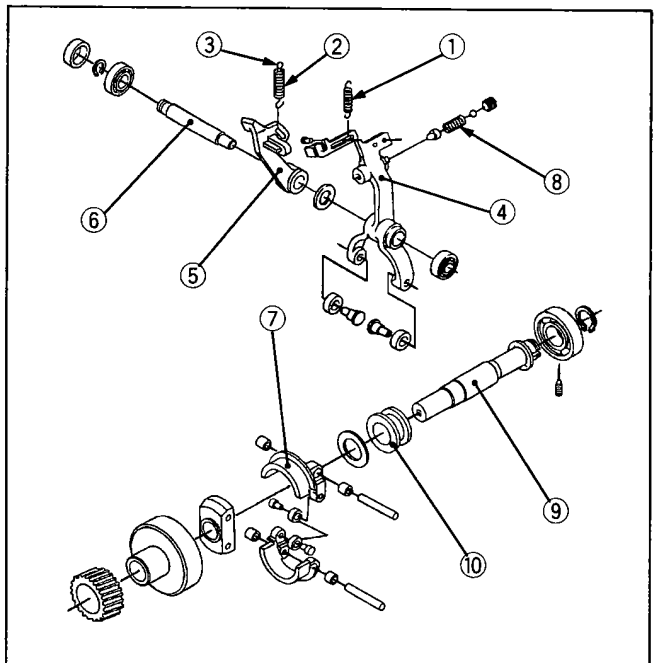

11900F10170

This mechanism maintains engine speed at a constant level even under fluctuating loads, provides stable idling and regulates maximum engine speed by controlling the fuel injection rate.

This engine uses a mechanical governor that controls the fuel injection rate at all speed ranges (from idling to maximum speed) by utilizing the balance between the flyweight's centrifugal force and spring tension.

A governor shaft for monitoring engine speed is independent of the injection pump shaft and rotates at twice the speed of conventional types, providing better response to load fluctuation and delivering greater engine output.

(1) Start Spring
(2) Governor Spring 1
(3) Governor Spring 2
(4) Fork Lever 1
(5) Fork Lever 2
(6) Fork Lever Shaft
(7) Flyweight
(8) Torque Spring
(9) Governor Shaft
(10) Governor Sleeve

*11900M10190*

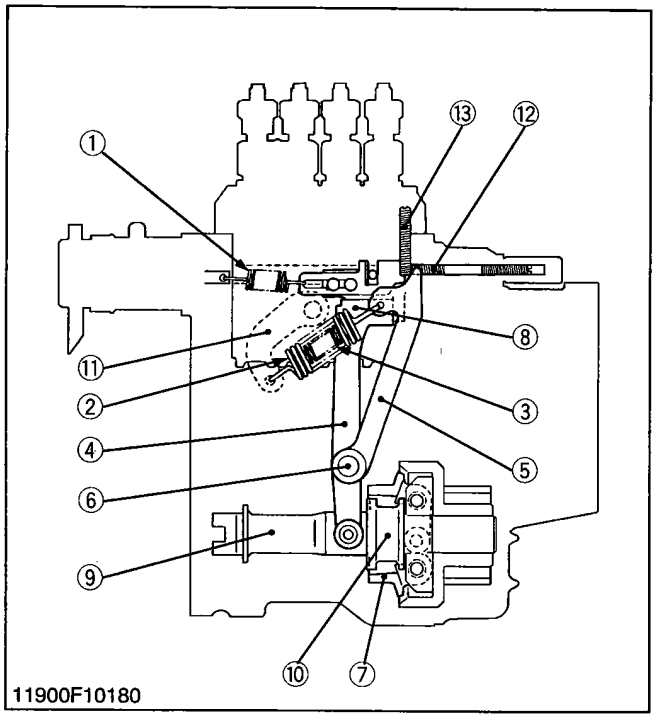

11900F10180

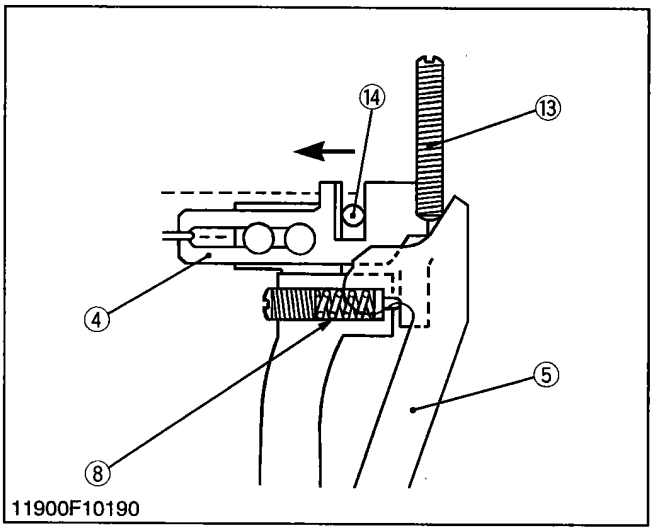

11900F10190

## ■ At Start

As no centrifugal force is applied to flyweight (7), low tension of start spring (1) permits control rack to move to the starting position, supplying the amount of fuel required to start the engine.

## ■ At Idling

Setting speed control lever (11) to the idling position during engine rotation permits the low tension of governor spring 2 (3), start spring (1) and idle limit spring (12) to balance the centrifugal force of flyweight (7) without activating high tension governor spring 1 (2). In this way, the fuel injection rate can be controlled to ensure stable idling.

## ■ At High Speed Running with Overload

Governor spring 1 (2) and 2 (3) control the fuel injection rate. To maintain the required engine speed, fuel is supplied according to the speed control lever setting and load by balancing the tension of governor springs 1 and 2 with the centrifugal force of flyweight (7).

In addition, idle limit spring (12) provides stable engine rotation.

## ■ During Overload

At load increases, the engine speed decreases, reducing the flyweight's centrifugal force. Governor springs 1 (2) and 2 (3), therefore, pull fork levers 1 (4) and 2 (5), increasing the fuel injection rate and maintaining engine speed.

If engine speed decreases due to a further increase in load, fork lever 2 (5) will come in contact with the fuel limit bolt, stopping a further increase in the fuel injection rate.

Torque spring (8) incorporated in fork lever 1 (4) moves the lever in the direction of fuel injection rate increase, thereby boosting torque and providing greater engine output.

(1) Start Spring
(2) Governor Spring 1
(3) Governor Spring 2
(4) Fork Lever 1
(5) Fork Lever 2
(6) Fork Lever Shaft
(7) Flyweight
(8) Torque Spring
(9) Governor Shaft
(10) Governor Sleeve
(11) Speed Control Lever
(12) Idle Limit Spring
(13) Fuel Limit Adjust Bolt
(14) Control Rack Pin

*11900M10200*

# [6] AUTOMATIC ADVANCE TIMER (not included in the basic model)

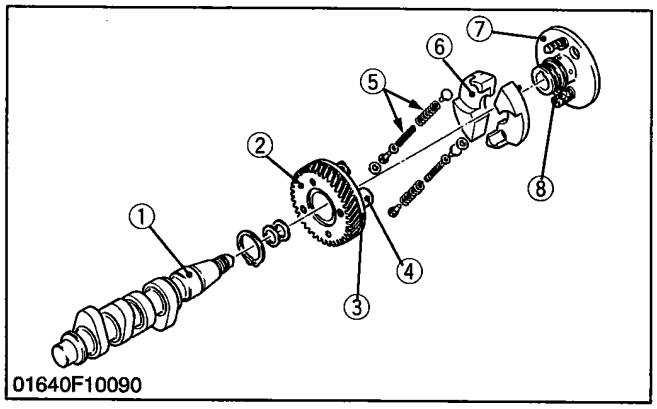

01640F10090

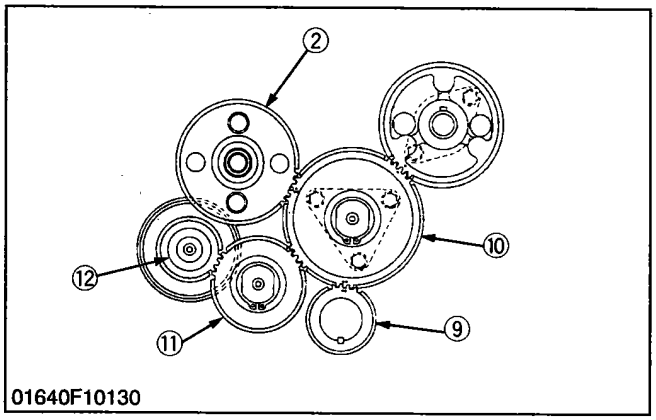

01640F10130

Fuel fed by the injection pump passes through the injection pipe to the injection nozzle. The time required for fuel to flow from the injection pump to the nozzle is almost constant, irrespective of enginespeed. The time required for injected fuel to ignite, burn and reach the maximum pressure is also virtually constant, irrespective of engine speed. Therefore, as engine speed increases, ignition timing is delayed, and vice verse. If fuel injection timing is fixed, it is impossible to provide optimum injection timing at each engine speed. To solve this problem, an automatic injection advance timer is used to control fuel injection timing automatically. This engine uses a mechanical timer for this purpose which utilizes the balance between the flyweight's centrifugal force (generated by engine rotation) and spring tension.

The structure of the timer is as illustrated in the figure.

Hub bolt (8) is inserted into the hole located on one side of flyweight (6). Hub (7) is secured to fuel cemshaft (1) by key and nut. Driving plate (3) is bolted to injection pump gear (2). Driving bolt (4) securing driving plate (3) is in contact with the curved surface of flyweight (6). Timer spring (5) is installed between driving bolt (4) and hub bolt (8).

Therefore, torque is transmitted from the crankshaft to the fuel camshaft via the follwoing route :

Crank gear (9) → Idle gear 1 (10) → Injection pump gear (2) → Driving plate (3) → Driving bolt (4) → Flyweight (6) → Hub bolt (8) → Hub (7) → Fuel camshaft (1)

| | |
|---|---|
| (1) Fuel Camshaft | (7) Hub |
| (2) Inejction Pump Gear | (8) Hub Bolt |
| (3) Driving Plate | (9) Crank Gear |
| (4) Driving Bolt | (10) Idle Gear 1 |
| (5) Timer Spring | (11) Idle Gear 2 |
| (6) Flyweight | (12) Governor Gear |

*01640M10040*

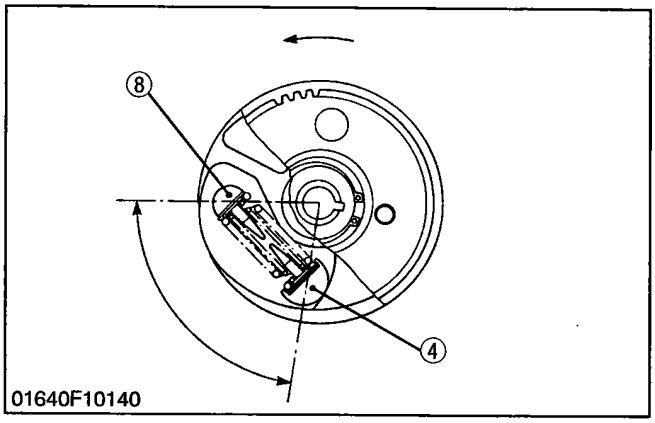


## ■ During low-speed travel

As the centrifugal force applied to flyweight (6) is small, spring force presses the flyweight inward, permitting driving bolt (4) to come in contact with flyweight at the position shown in the figure.

(4)Driving Bolt (8)Hub Bolt

*01640M10050*

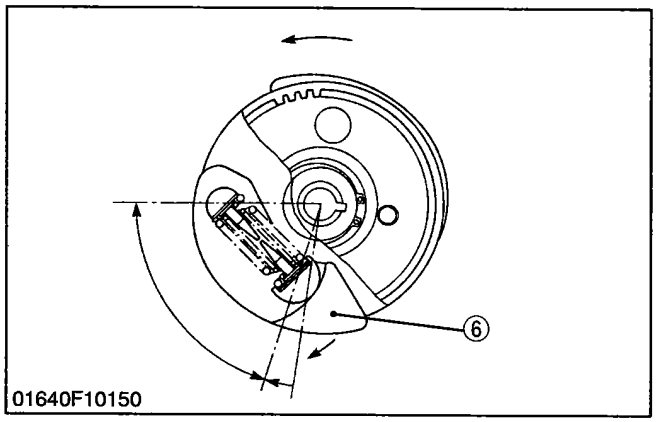


## ■ During medium- to high-speed travel

As engine speed increases, the centrifugal force applied to flyweight (6) increases, expanding it around hub bolt (8) in the direction of the arrow, thereby rotating the position (where driving bolt (4) is in contact with flyweight (6)) through angle 0 as shown in the figure.

Therefore, since the fuel camshaft rotates from injection pump gear (2) in the rotational direction through angle 0, injection timing is advanced.

(6)Flyweight

*01640M10060*

# 6 ELECTRICAL SYSTEM

## [1] CHARGING SYSTEM

### (1) Alternator

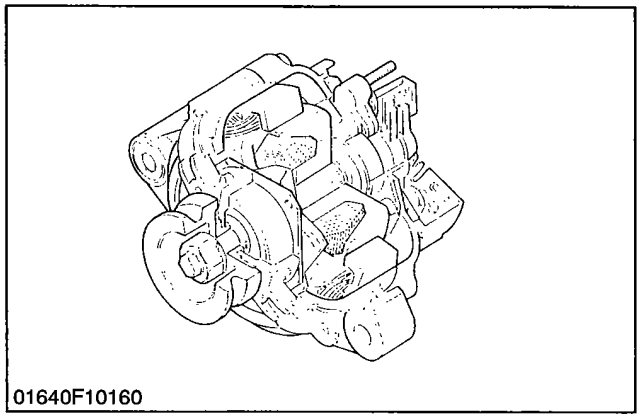
01640F10160

A compact alternator with an IC regulator is used, having the following characteristics:

- Approximately 26 % lighter and 17 % smaller than a standard alternator.
- Cooling performance and safety have been improved by combining the cooling fan with the rotor and incorporating the fan / rotor unit inside the alternator.
- IC regulator is fitted inside the alternator.
- The rectifier, IC regulator and similar components are easy to remove, making it easier to service the alternator.

*01640M90010*

### (2) IC Regulator

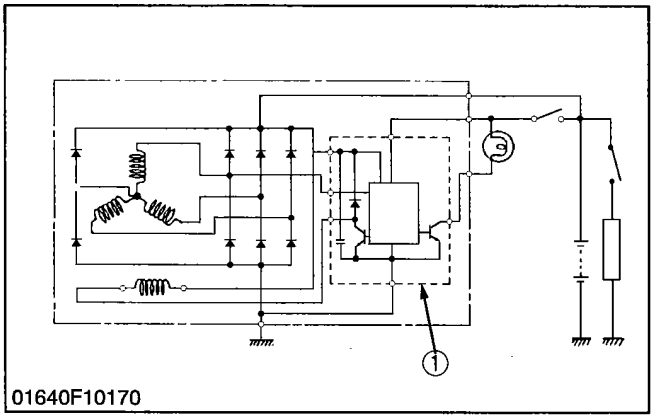

01640F10170

An IC regulator uses solid state transistors, chips or othere semiconductor elements instead of the relays in a conventional regulator. Stable characteristics are achieved by cutting off the field current.

IC regulators have the following characteristics:

- The control voltage does not change over time, so the need for readjustment is eliminated. Since there are no moving parts, IC regulators are extremely durable and resistant to vibration.
- The overheat compensation characteristics ensure that the control voltage is reduces as the temperature rises, so the battery is charged at just the right level.

The internal circuitry of the IC regulator is shown in the diagram. It consists of a hybrid IC incorporating a monolighic IC. (The internal circuitry of the monolithic IC is extremely complex, so it is shown as simply "**M.IC circuit**".

**Tr1** acts as the contacts controlling the field current, and **Tr2** acts as the charge lamp relay controlling the flashing of the charge lamp.

The M.IC circuit controls **Tr1** and **Tr2**, and monitors the alternator output voltage, and detacts any drop in **L** terminal voltage or breaks in the rotor coil.

(1) IC Regulator

*01640M90020*

# 7 TURBO CHARGER SYSTEM

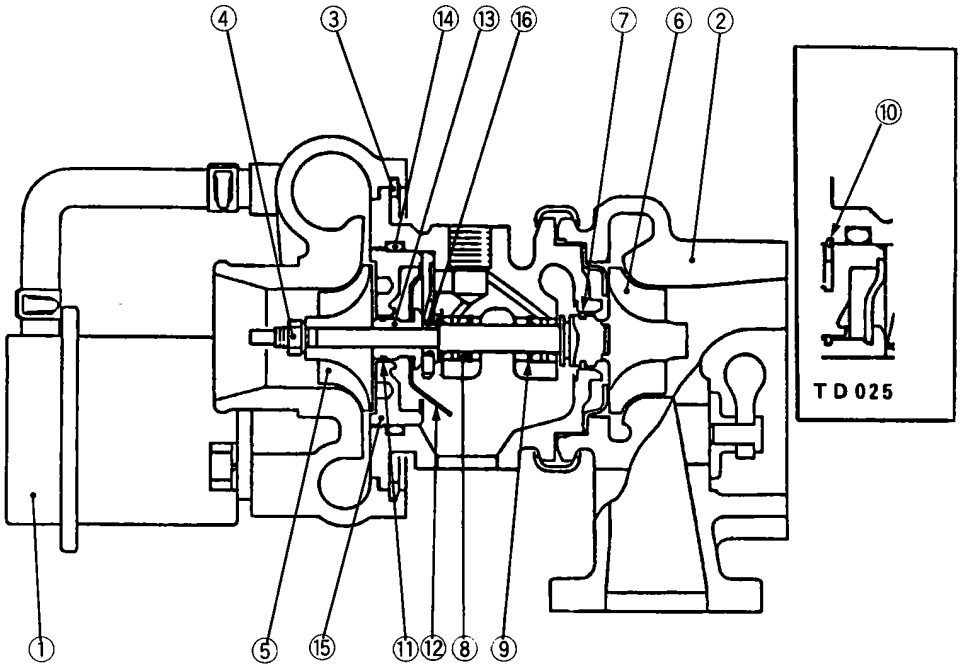


01640F10180

| | | | |
|---|---|---|---|
| (1) Actuator | (5) Compressor Wheel | (9) Snap Ring | (13) Thrust Sleeve |
| (2) Turbine Housing | (6) Turbine Wheel | (10) Snap Ring (TD025) | (14) O-ring |
| (3) Snap Ring | (7) Piston Ring | (11) Piston Ring | (15) Thrust Bearing |
| (4) Lock Nut | (8) Bearing | (12) Oil Deflector | (16) Thrust Ring |

This turbo charger consists basically of a centrifugal compressor mounted on a common shaft with a double flow turbine driven by exhaust gas from the engine.

The turbo charger is capable of supplying far more air to the engine than for a non-supercharged engine, which is without such a charger.

In applications where the boost pressure is relatively low, the turbo charger is capable of reducing the smoke concentration, the concentration in the cylinder, fuel consumption, and deterioration in performance at elevated terrain by increasing the amount of air to the engine.

In applications where the boost pressure is high, the charger is capable of providing a large increase in engine output by increasing the amount of air into the engine, in addition to the above mentioned advantages.

*01640M10070*

## (1) Mechanism

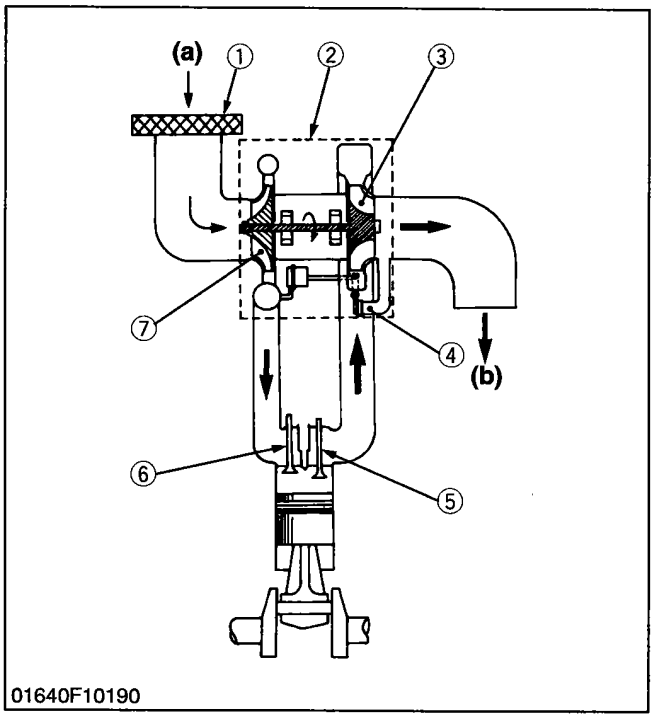


### ■ Turbocharger Works

While the engine is running, exhaust gas passes through the exhaust manifold to rotate the turbine wheel (3) of the turbocharger (2) at high speed.

Rotation of the turbine wheel rotates the compressor wheel (7) at the same speed because both wheels are on the same shaft. As the compressor wheel rotates, air is sucked in, compressed, and sent into the cylinder.

The higher density of the compressed air per cylinder volume results in increased output compared with non-turbocharged engines of the same displacement.

### ■ Advantages

Turbocharged engine have the following advantages:

1. Despite the increase in output, there is little increase in friction loss. Therefore, good mechanical efficiency is insured.
2. During overlap (when both the suction and exhaust valves are open), compresed air forces out exhaust gas and fills the cylinder with fresh air. This increases combustion efficiency.
3. Improvements in mechanical and combustion efficiency lead to a lower fuel consumption.

(1) Air Cleaner
(2) Turbocharger
(3) Turbine Wheel
(4) Waste Gate Valve
(5) Exhaust Valve
(6) Intake Valve
(7) Compressor Wheel

**(a) Air**
**(b) Exhaust Gas**

*01640M10080*

## (2) Turbine

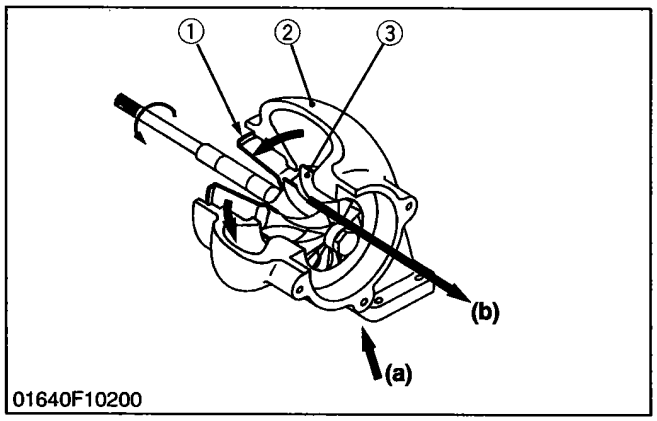

01640F10200

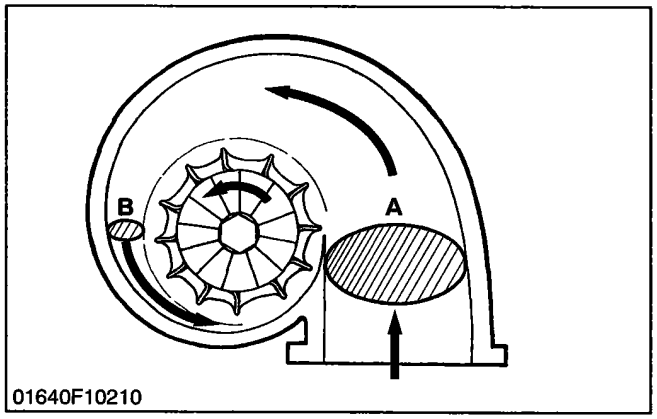

01640F10210

This is a radial flow turbine.

The turbine wheel assembly (3) uniting the turbine wheel and shaft is designed to balance even at high speeds.

The turbine housing (2) has a vortex gas passage. As the passage becomes smaller (from **"A"** to **"B"**), the gas flow rate increases so that the turbine is rotated at high speeds.

The turbine back plate (1) prevents the bearing housing and bearing (floating metal) inside from being directly exposed to the heat of the exhaust gas on the turbine wheel side.

(1) Turbine Back Plate
(2) Turbine Housing
(3) Turbine Wheel Assembly

**(a) From Cylinder**
**(b) To Exhaust Muffler**

*01640M10090*

## (3) Compressor

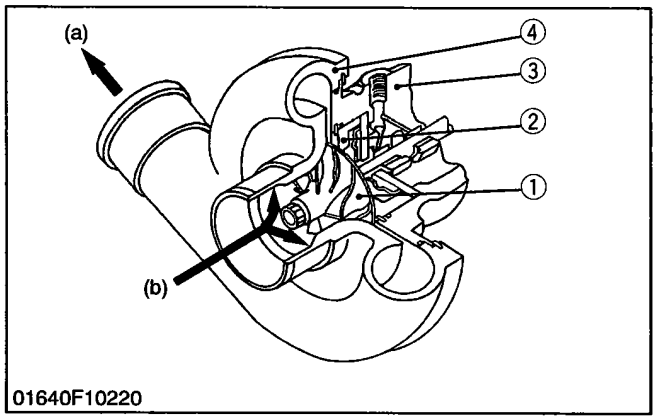

01640F10220

A radial flow compressor is used.

The compressor consists of a cast compressor wheel (1), bearing housing (3), insert (2), compressor cover (4).

Air is sucked at high speed by the compressor wheel. As it passes through the spiral passage in the housing, its speed is reduced to the proper level and forced into the cylinder.

The compressor wheel is a precision-cast component, which maintains the proper balance even at high speeds. Its blades are curved backward to ensure the highest performance.

The compressor housing is designed to regulate the air flow drawn by the wheel and increase its pressure.

(1) Compressor Wheel
(2) Insert
(3) Bearing Housing
(4) Compressor Cover

**(a) To Cylinder**
**(b) From the Air Cleaner**

*01640M10100*

## (4) Bearing

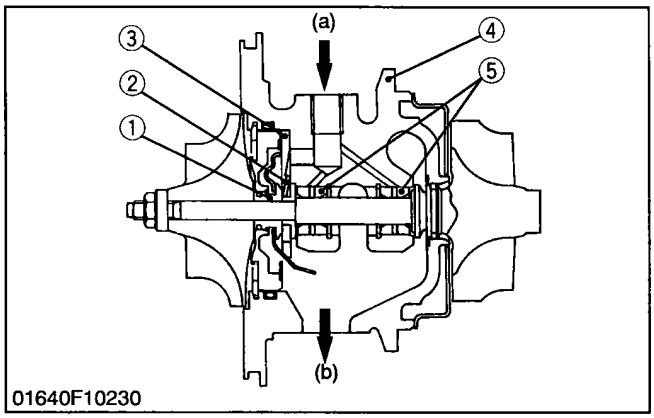


The shaft rotates at a very high speed-tens of thousands of revolutions per minute. To withstand high speeds, the bearings (5) use floating metals. These bearings float on a film oil between the shaft and bearing housing (4) and rotate to reduce the sliding friction.

The shaft also receives thrust force (in the axial direction) on the compressor side from both the turbine and compressor wheels. This load is borne by the thrust bearing (3) fitted between the thrust sleeve (1) and thrust ring (2) which is secured to the shaft and turns together with the shaft.

Lubricating oil fed from the engine's oil pump enters the bearing section through the top of the bearing housing and passes through the internal passages, lubricating the bearings. After that, it returns to the engine from the bottom of the bearing housing.

(1) Thrust Sleeve
(2) Thrust Ring
(3) Thrust Bearing
(4) Bearing Housing
(5) Bearing

**(a) From Engine Oil Pump**
**(b) To the Engine**

*01640M10110*

## (5) Seals (Piston Rings)

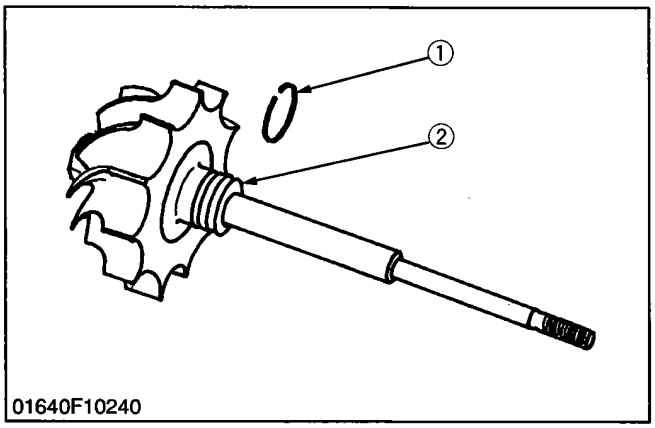

01640F10240

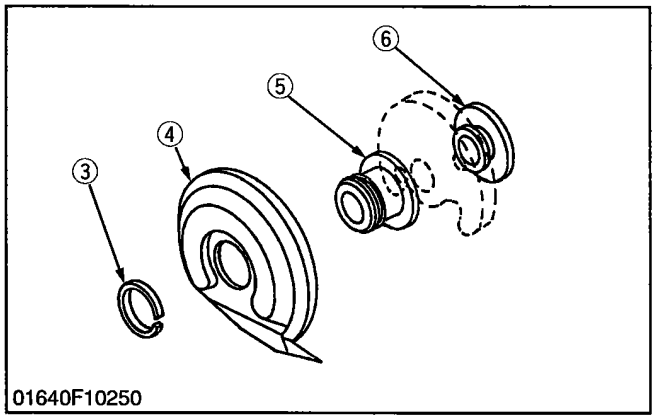

01640F10250

When lubricating oil leaks on the turbine or compressor wheel side, it will adhere to the wheel or housing. the oil may then be contaminated with dust or carbon. Such contamination will destroy the balance of the rotating shaft and prevent normal operation.

To prevent this problem, lubricating oil is sealed by the follwoing parts:

On the turbine wheel side

* A piston ring (1) is placed over the shaft.
* The shaft itself has an oil fling portion (2).

On the compressor wheel side

* A piston ring (3) is placed over the thrust sleever (5).
* The oil deflector (4), which is placed on the thrust sleeve (5), prevents oil from leaking to the piston ring side.

In addition, oil is prevented from leaking to the outside by a seal ring (square rubber ring) placed between the center housing and the back plate.

(1) Piston Ring (on the Turbine Side)
(2) Oil Fling Portion
(3) Piston Ring (Compressor Side)
(4) Oil Deflector
(5) Thrust Sleeve
(6) Thrust Ring

*01640M10120*

# SERVICING

## CONTENTS


■ GENERAL ..... S-1
[1] ENGINE IDENTIFICATION ..... S-1
(1) Model Name and Engine Serial Number ..... S-1
(2) Cylinder Number ..... S-1
[2] GENERAL PRECAUTION ..... S-3
[3] TIGHTENING TORQUES ..... S-5
(1) Tightening torques for special use screws, bolts and nuts ..... S-5
(2) Tightening torques for general use screws, bolts and nuts ..... S-5
[4] TROUBLESHOOTING ..... S-8
[5] SERVICING SPECIFICATIONS ..... S-19
(1) Engine Body ..... S-19
(2) Lubricating System ..... S-25
(3) Cooling System ..... S-25
(4) Fuel System ..... S-26
(5) Electrical System ..... S-27
[6] MAINTENANCE CHECK LIST ..... S-44
[7] CHECK AND MAINTENANCE ..... S-47
(1) Daily Check Points ..... S-47
(2) Check Point of Every 50 hours ..... S-49
(3) Check Point of Every 100 hours ..... S-51
(4) Check Point of Every 800 hours ..... S-57
(5) Check Point of 1500 hours (Serial No : ~ 489290) ..... S-59
[8] SPECIAL TOOLS ..... S-59
■ ENGINE BODY ..... S-73
CHECKING AND ADJUSTING ..... S-73
DISASSEMBLING AND ASSEMBLING ..... S-75
[1] DRAINING WATER AND OIL ..... S-77
[2] EXTERNAL COMPONENTS ..... S-77
[3] CYLINDER HEAD AND VALVES ..... S-79
[4] GEAR CASE ..... S-83
[5] PISTON AND CONNECTING ROD ..... S-95
[6] LYWHEEL AND CRANKSHAFT ..... S-101
SERVICING ..... S-105
[1] CYLINDER HEAD ..... S-105
[2] TIMING GEAR AND CAMSHAFT ..... S-115
[3] PISTON AND CONNECTING ROD ..... S-119
[4] CRANKSHAFT ..... S-125
[5] CYLINDER ..... S-137
■ LUBRICATING SYSTEM ..... S-141
CHECKING ..... S-141
SERVICING ..... S-141
[1] OIL PUMP ..... S-141
■ COOLING SYSTEM ..... S-145
CHECKING ..... S-145
[1] FAN BELT ..... S-145
[2] RADIATOR ..... S-145
DISASSEMBLING AND ASSEMBLING ..... S-147

■ FUEL SYSTEM ..... S-151
CHECKING AND ADJUSTING ..... S-151
[1] INJECTION PUMP ..... S-151
[2] INJECTION NOZZLE ..... S-155
DISASSEMBLING AND ASSEMBLING ..... S-157
[1] INJECTION PUMP ..... S-157
[2] INJECTION NOZZLE ..... S-159
■ ELECTRICAL SYSTEM ..... S-161
CHECKING ..... S-161
[1] STARTER ..... S-161
[2] GLOW PLUG ..... S-163
DISASSEMBLING AND ASSEMBLING ..... S-163
[1] STARTER ..... S-163
[2] ALTERNATOR ..... S-165
SERVICING ..... S-171
[1] STARTER ..... S-171
[2] ALTERNATOR ..... S-175
■ TURBO CHARGER SYSTEM ..... S-181
CHECKING ..... S-181
DISASSEMBLING AND ASSEMBLING ..... S-185

# G GENERAL

## [1] ENGINE IDENTIFICATION

### (1) Model Name and Engine Serial Number

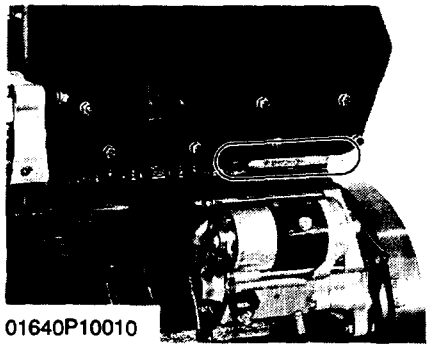
01640P10010

When contacting the manufacturer, always specify your engine model name and serial number.

*01640S10010*

### (2) Cylinder Number

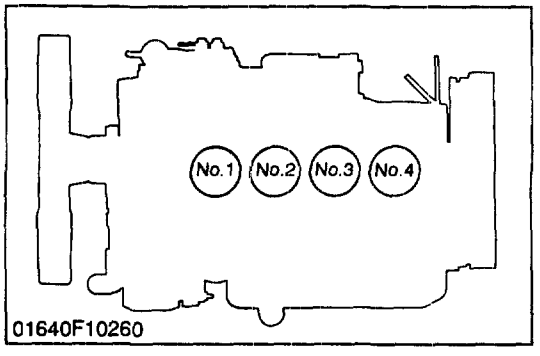

01640F10260

The cylinder numbers of 05 SERIES diesel engine are designated as shown in the figure.

The sequence of cylinder numbers is given as No. 1, No. 2, No. 3 and No. 4 starting from the gear case side.

*01640S10020*

# [2] GENERAL PRECAUTION

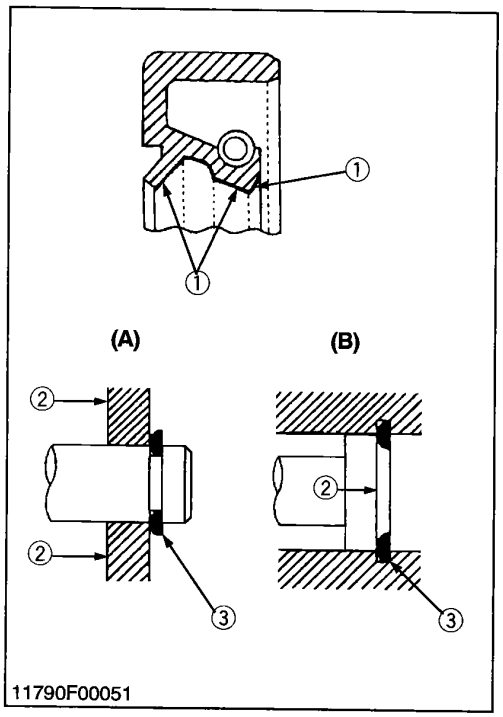


- During disassembly, carefully arrange removed parts in a clean area to prevent confusion later. Screws, bolts and nuts should be replaced in their original position to prevent reassembly errors.
- When special tools are required, use KUBOTA genuine special tools. Special tools which are not frequently used should be make according to the drawings provided.
- Before disassembling or servicing live wires, make sure to always disconnect the grounding cable from the battery first.
- Remove oil and dirt from parts before measuring.
- Use only KUBOTA genuine parts for parts replacement to maintain engine performance and to ensure safety.
- Gaskets and O-rings must be replaced during reassembly. Apply grease to new O-rings or oil seals before assembling.
- When reassembling external or internal snap rings, position them so that the sharp edge faces against the direction from which force is applied.
- Be sure to perform run-in the serviced or reassembled engine. Do not attempt to give heavy load at once, or serious damage may result to the engine.

**CAUTION**

- **Certain components used in this engine (cylinder head-gasket, exhaust gasket, etc.) contain asbestos. Handle with care according to safety regulation.**

(1) Grease
(2) Force
(3) Place the Sharp Edge against the Direction of Force

**(A) External Snap Ring**
**(B) Internal Snap Ring**

*01640S10030*

# [3] TIGHTENING TORQUES

Screws, bolts and nuts must be tightened to the specified torque using a torque wrench, several screws, bolts and nuts such as those used on the cylinder head must be tightened in proper sequence and at the proper torque.

*01640S10760*

## (1) Tightening torques for special use screws, bolts and nuts

■ NOTE

- **In removing and applying the bolts and nuts marked with "*", a pneumatic wrench or similar pneumatic tool, if employed, must be used with enough care not to get them seized.**
- **For "*" marked screws, bolts and nuts on the table, apply engine oil to their threads and seats before tightening.**
- **The letter "M" in Size × Pitch means that the screw, bolt or nut dimension stands for metric. The size is the nominal outside diameter in mm of the threads. The pitch is the nominal distance in mm between two threads.**

| Item | Size × Pitch | N·m | kgf·m | ft-lbs |
|---|---|---|---|---|
| * Cylinder head cover cap nuts | M7 × 1.0 | 6.9 to 8.8 | 0.7 to 0.9 | 5.1 to 6.5 |
| * Cylinder head screws | M10 × 1.25 | 63.7 to 68.6 | 6.5 to 7.0 | 47.0 to 50.6 |
| * Main bearing case screws 1 | M8 × 1.25 | 29.4 to 34.3 | 3.0 to 3.5 | 21.7 to 25.3 |
| * Main bearing case screws 2 | M9 × 1.25 | 49.0 to 53.9 | 5.0 to 5.5 | 36.2 to 39.8 |
| * Flywheel screws | M10 × 1.25 | 53.9 to 58.8 | 5.5 to 6.0 | 39.8 to 43.4 |
| * Connecting rod screws | M8 × 1.0 | 41.2 to 46.1 | 4.2 to 4.7 | 30.4 to 34.0 |
| * Rocker arm bracket nuts | M7 × 1.0 | 21.6 to 26.5 | 2.2 to 2.7 | 15.9 to 19.5 |
| * Idle gear shaft screws | M6 × 1.0 | 9.8 to 11.3 | 1.00 to 1.15 | 7.2 to 8.3 |
| * Crankshaft (Serial No: ~ 604086) | M14 × 1.5 | 142.2 to 152.0 | 14.5 to 15.5 | 104.9 to 112.1 |
| end bolt (Serial No: 604087 ~) | M14 × 1.5 | 235.4 to 245.2 | 24.0 to 25.0 | 173.6 to 180.8 |
| * Bearing case cover screws | M6 × 1.0 | 9.8 to 11.3 | 1.00 to 1.15 | 7.2 to 8.3 |
| Glow plugs (Serial No: ~ 489290) | M10 × 1.25 | 19.6 to 24.5 | 2.0 to 2.5 | 14.5 to 18.1 |
| (Serial No: 489291 ~) | M8 × 1.0 | 7.8 to 14.7 | 0.8 to 1.5 | 5.8 to 10.8 |
| Nozzle holder assembly | M20 × 1.5 | 49.0 to 68.6 | 5.0 to 7.0 | 36.2 to 50.6 |
| Oil switch taper screw | PT 1/8 | 14.7 to 19.6 | 1.5 to 2.0 | 10.8 to 14.5 |
| Injection pipe retaining nuts | M12 × 1.5 | 24.5 to 34.3 | 2.5 to 3.5 | 18.1 to 25.3 |
| Overflow pipe assembly retaining nuts | M12 × 1.5 | 19.6 to 24.5 | 2.0 to 2.5 | 14.5 to 18.1 |
| Starter's terminal **B** mounting nut | M8 | 8.8 to11.8 | 0.9 to 1.2 | 6.5 to 8.7 |

*11790S10643*

## (2) Tightening torques for general use screws, bolts and nuts

When the tightening torques are not specified, tighten the screws, bolts and nuts according to the table below.

| Grade / Nominal Diameter / Unit | Standard Screw and Bolt ⟨4⟩ | | | Special Screw and Bolt ⟨7⟩ | | |
|---|---|---|---|---|---|---|
| | N·m | kgf·m | ft-lbs | N·m | kgf·m | ft-lbs |
| M6 | 7.9 to 9.3 | 0.80 to 0.95 | 5.8 to 6.9 | 9.8 to 11.3 | 1.00 to 1.15 | 7.23 to 8.32 |
| M8 | 17.7 to 20.6 | 1.8 to 2.1 | 13.0 to 15.2 | 23.5 to 27.5 | 2.4 to 2.8 | 17.4 to 20.3 |
| M10 | 39.2 to 45.1 | 4.0 to 4.6 | 28.9 to 33.3 | 48.1 to 55.9 | 4.9 to 5.7 | 35.4 to 41.2 |
| M12 | 62.8 to 72.6 | 6.4 to 7.4 | 46.3 to 53.5 | 77.5 to 90.2 | 7.9 to 9.2 | 57.1 to 66.5 |

Screw and bolt material grades are shown by numbers punched on the screw and bolt heads. Prior to tightening, be sure to check out the numbers as shown below.

| Punched number | Screw and bolt material grade |
|---|---|
| None or 4 | Standard screw and bolt SS41, S20C |
| 7 | Special screw and bolt S43C, S48C (Refined) |

*01640S10040*

# [4] TROUBLESHOOTING

| Symptom | Probable Cause | Solution | Reference Page |
|---|---|---|---|
| **Engine Does Not Start** | • No fuel | Replenish fuel | – |
| | • Air in the fuel system | Vent air | S-49 |
| | • Water in the fuel system | Change fuel and repair or replace fuel system | – |
| | • Fuel pipe clogged | Clean | – |
| | • Fuel filter clogged | Clean or change | S-53 |
| | • Excessively high viscosity of fuel or engine oil at low temperature | Use specified fuel or engine oil | S-51 |
| | • Fuel with low cetane number | Use specified fuel | – |
| | • Fuel leak due to loose injection pipe retaining nut | Tighten retaining nut | – |
| | • Incorrect injection timing | Adjust | S-151, 153 |
| | • Fuel camshaft worn | Replace | S-89 |
| | • Injection nozzle clogged | Clean | S-155, 157 |
| | • Injection pump malfunctioning | Repair or replace | S-87, 153, S-155 |
| | • Seizure of crankshaft, camshaft, piston, cylinder or bearing | Repair or replace | – |
| | • Compression leak from cylinder | Replace head gasket, tighten cylinder head screw, glow plug and nozzle holder | S-73, 79, S-81 |
| | • Improper valve timing | Correct or replace timing gear | S-95 |
| | • Piston ring and cylinder worn | Replace | S-121, 123, S-137 |
| | • Excessive valve clearance | Adjust | S-57 |
| **(Starter Does Not Run)** | • Battery discharged | Charge | – |
| | • Starter malfunctioning | Repair or replace | – |
| | • Key switch malfunctioning | Repair or replace | – |
| | • Wiring disconnected | Connect | – |
| **Engine Revolution Is Not Smooth** | • Fuel filter clogged or dirty | Clean or change | S-53 |
| | • Air cleaner clogged | Clean or change | S-55 |
| | • Fuel leak due to loose injection pipe retaining nut | Tighten retaining nut | – |
| | • Injection pump malfunctioning | Repair or replace | S-87, 153, S-155 |
| | • Incorrect nozzle opening pressure | Adjust | S-155, 157 |
| | • Injection nozzle stuck or clogged | Repair or replace | S-155, 157 |
| | • Governor malfunctioning | Repair | S-91 |
| **Either White or Blue Exhaust Gas Is Observed** | • Excessive engine oil | Reduce to specified level | S-47, 51 |
| | • Piston ring and liner worn or stuck | Repair or replace | S-121, 123, S-137 |
| | • Incorrect injection timing | Adjust | S-151, 153 |
| | • Deficient compression | Adjust top clearance | S-73 |

*11790S1055*

| Symptom | Probable Cause | Solution | Reference Page |
|---|---|---|---|
| **Either Black or Dark Gray Exhaust Gas Is Observed** | • Overload<br>• Low grade fuel used<br>• Fuel filter clogged<br>• Air cleaner clogged<br>• Deficient nozzle injection | Lessen load<br>Use specified fuel<br>Clean or change<br>Clean or change<br>Repair or replace nozzle | –<br>–<br>S-53<br>S-55<br>S-155, 157 |
| **Deficient Output** | • Incorrect injection timing<br>• Engine's moving parts seem to be seizing<br>• Uneven fuel injection<br>• Deficient nozzle injection<br>• Compression leak | Adjust<br>Repair or replace<br>Repair or replace injection pump<br>Repair or replace nozzle<br>Replace head gasket, tighten cylinder head screw, glow plug and nozzle holder | S-151, 153<br>–<br>S-87, 151, S-153<br>S-155, 157<br>S-73, 79, S-81 |
| **Excessive Lubricant Oil Consumption** | • Piston ring's gap facing the same direction<br>• Oil ring worn or stuck<br>• Piston ring groove worn<br>• Valve stem and valve guide worn<br>• Carnkshaft bearing, and crank pin bearing worn<br>• Oil leaking due to defective seals or packing | Shift ring gap direction<br>Replace<br>Replace piston<br>Replace<br>Replace<br>Replace | S-97<br>S-99, 121, S-123<br>S-99, 123<br>S-107, 109<br>S-133, 135<br>– |
| **Fuel Mixed into Lubricant Oil** | • Injection pump's plunger worn<br>• Deficient nozzle injection<br>• Injection pump broken | Replace pump element or injection pump<br>Repair or replace nozzle<br>Replace | S-87, 153, S-155<br>S-79, 159<br>S-87 |
| **Water Mixed into Lubricant Oil** | • Head gasket defective<br>• Cylinder block or cylinder head flawed | Replace<br>Replace | S-81<br>S-107 |
| **Low Oil Pressure** | • Engine oil insufficient<br>• Oil strainer clogged<br>• Relief valve stuck with dirt<br>• Relief valve spring weaken or broken<br>• Excessive oil clearance of crankshaft bearing<br>• Excessive oil clearance of crankpin bearing<br>• Excessive oil clearance of rocker arm bearing<br>• Oil passage clogged<br>• Different type of oil<br>• Oil pump defective | Replenish<br>Clean<br>Clean<br>Replace<br>Replace<br>Replace<br>Replace<br>Clean<br>Use specified type of oil<br>Repair or replace | S-47, 51<br>S-95<br>–<br>–<br>S-129, 131, S-133<br>S-127<br>S-113<br>–<br>–<br>S-141, 143 |
| **High Oil Pressure** | • Different type of oil<br>• Relief valve defective | Use specified type of oil<br>Replace | –<br>– |

*11790S10562*

| Symptom | Probable Cause | Solution | Reference Page |
|---|---|---|---|
| **Engine Overheated** | • Engine oil insufficient | Replenish | S-47, 51 |
| | • Fan belt broken or elongated | Replace or adjust | S-53 |
| | • Cooling water insufficient | Replenish | – |
| | • Radiator net and radiator fin clogged with dust | Clean | – |
| | • Inside of radiator corroded | Clean or replace | – |
| | • Cooling water flow route corroded | Clean or replace | – |
| | • Radiator cap defective | Replace | S-147 |
| | • Overload running | Loosen load | – |
| | • Head gasket defective | Replace | S-81 |
| | • Incorrect injection timing | Adjust | S-151, 153 |
| | • Unsuitable fuel used | Use specified fuel | – |
| **Battery Quickly Discharge** | • Battery electrolyte insufficient | Replenish distilled water and charge | – |
| | • Fan belt slips | Adjust belt tension or change | S-53 |
| | • Wiring disconnected | Correct | – |
| | • Rectifier defective | Replace | S-179 |
| | • Alternator defective | Replace | S-175, 177, S-179 |
| | • Battery defective | Change | – |

*11790S10571*

# [5] SERVICING SPECIFICATIONS

## (1) Engine Body

### Cylinder Head

| Item | Factory Specification | Allowable Limit |
|---|---|---|
| Cylinder Head Surface Flatness | – | 0.05 mm<br>0.0019 in. |
| Top Clearance | 0.55 to 0.75 mm<br>0.0217 to 0.0295 in. | – |
| Compression Pressure | 2.84 to 3.23 MPa<br>29.0 to 33.0 kgf/cm$^2$<br>412 to 469 psi | 2.25 MPa<br>23 kgf/cm$^2$<br>327 psi |
| Variance Among Cylinders | – | 10 % or less |

### Valves

| | | | |
|---|---|---|---|
| Valve Clearance (Cold) | | 0.145 to 0.185 mm<br>0.0057 to 0.0072 in. | – |
| Valve Seal Width | IN. | 2.12 mm<br>0.0835 in | – |
| | EX. | 2.12 mm<br>0.0835 in. | – |
| Valve Seat Angle | IN. | 1.047 rad.<br>60° | – |
| | EX. | 0.785 rad.<br>45° | – |
| Valve Face Angle | IN. | 1.047 rad.<br>60° | – |
| | EX. | 0.785 rad.<br>45° | – |
| Valve Recessing | | – 0.05 to 0.25 mm<br>0.0020 to 0.0060 in. | 0.4 mm<br>0.016 in. |
| Clearance between Valve Stem and Valve Guide | | 0.035 to 0.065 mm<br>0.0014 to 0.0025 in. | 0.1 mm<br>0.0039 in. |
| | | 6.960 to 6.975 mm<br>0.2741 to 0.2764 in. | – |
| | | 7.010 to 7.025 mm<br>0.2760 to 0.2765 in. | – |

*01640S10450*

## Valve Timing

| Item | | Factory Specification | Allowable Limit |
|---|---|---|---|
| Intake Valve<br>Open | D905-B (E)<br>D1005-B (E)<br>V1205-B (E)<br>V1205-T-B (E)<br>V1305-B (E)<br>D1105-B (E)<br>V1505-B (E) | 0.24 rad. (14°)<br>before T.D.C. | – |
| | D1105-T-B (E)<br>V1505-T-B (E) | 0.38 rad. (22°)<br>before T.D.C. | – |
| Close | D905-B (E)<br>D1005-B (E)<br>V1205-B (E)<br>V1205-T-B (E)<br>V1305-B (E)<br>D1105-B (E)<br>V1505-B (E) | 0.52 rad. (30°)<br>after B.D.C. | – |
| | D1105-T-B (E)<br>V1505-T-B (E) | 0.82 rad. (47°)<br>after B.D.C. | – |
| Exhaust Valve<br>Open | D905-B (E)<br>D1005-B (E)<br>V1205-B (E)<br>V1205-T-B (E)<br>V1305-B (E)<br>D1105-B (E)<br>V1505-B (E) | 0.96 rad. (55°)<br>before B.D.C. | – |
| | D1105-T-B (E)<br>V1505-T-B (E) | 0.91 rad. (52°)<br>before B.D.C. | – |
| Close | D905-B (E)<br>D1005-B (E)<br>V1205-B (E)<br>V1205-T-B (E)<br>V1305-B (E)<br>D1105-B (E)<br>V1505-B (E) | 0.24 rad. (14°)<br>after T.D.C. | – |
| | D1105-T-B (E)<br>V1505-T-B (E) | 0.30 rad. (17°)<br>after T.D.C. | – |

## Valve Spring

| | | |
|---|---|---|
| Free Length | 37.0 to 37.5 mm<br>1.457 to 1.476 in. | 36.5 mm<br>1.437 in. |
| Setting Load / Setting Length | 11.97 kgf / 31.0 mm<br>117.4 N / 31.0 mm<br>26.4 lbs / 1.22 in. | 10.2 kgf / 31.0 mm<br>100.0 N / 31.0 mm<br>22.5 lbs / 1.22 in. |
| Tilt | – | 1.0 mm<br>0.039 in. |

*01642S10460*

## Rocker Arm

| Item | Factory Specification | Allowable Limit |
|---|---|---|
| Clearance between Rocker Arm Shaft and Rocker Arm | 0.016 to 0.045 mm<br>0.0006 to 0.0018 in. | 0.10 mm<br>0.0039 in. |
| Rocker Arm Shaft O.D. | 11.973 to 11.984 mm<br>0.4714 to 0.4718 in. | – |
| Rocker Arm I.D. | 12.000 to 12.018 mm<br>0.4724 to 0.4731 in. | – |

## Tappet

| | | |
|---|---|---|
| Clearance between Tappet and Guide | 0.020 to 0.062 mm<br>0.0008 to 0.0024 in. | 0.07 mm<br>0.0028 in. |
| Tappet O.D. | 19.959 to 19.980 mm<br>0.7858 to 0.7866 in. | – |
| Tappet Guide I.D. | 20.000 to 20.021 mm<br>0.7874 to 0.7882 in. | – |

## Camshaft

| | | | |
|---|---|---|---|
| Camshaft Side Clearance | | 0.07 to 0.22 mm<br>0.0028 to 0.0087 in. | 0.3 mm<br>0.0118 in. |
| Camshaft Alignment | | – | 0.01 mm<br>0.0004 in. |
| Cam Height | IN. | 28.80 mm<br>1.1339 in. | 28.75 mm<br>1.1319 in. |
| | EX. | 29.00 mm<br>1.1417 in. | 28.95mm<br>1.1398 in. |
| Oil Clearance of Camshaft | | 0.050 to 0.091 mm<br>0.0020 to 0.0036 in. | 0.12 mm<br>0.0047 in. |
| Camshaft Journal O.D. | | 35.934 to 35.050 mm<br>1.4147 to 1.3799 mm | – |
| Camshaft Bearing I.D. | | 36.000 to 36.025 mm<br>1.4173 to 1.4183 in. | – |

*01640S10470*

## Timing Gear

| Item | Factory Specification | Allowable Limit |
|---|---|---|
| Timing Gear Backlash | | |
| Crank Gear-Idle Gear 1 | 0.032 to 0.115 mm<br>0.0013 to 0.0045 in. | 0.15 mm<br>0.0059 in. |
| Idle Gear 1-Cam Gear | 0.036 to 0.114 mm<br>0.0014 to 0.0045 in. | 0.15 mm<br>0.0059 in. |
| Idle Gear 1-Injection Pump Gear | 0.034 to 0.116 mm<br>0.0013 to 0.0046 in. | 0.15 mm<br>0.0059 in. |
| Idle Gear 1-Idle Gear 2 | 0.0033 to 0.117 mm<br>0.0013 to 0.0046 in. | 0.15 mm<br>0.0059 in. |
| Idle Gear 2-Governor Gear | 0.030 to 0.117 mm<br>0.0012 to 0.0046 in. | 0.15 mm<br>0.0059 in. |
| Clearance between Idle Gear Shaft and Idle Gear Bushing | | |
| Idle Gear 1 | 0.020 to 0.054 mm<br>0.0008 to 0.0021 in. | 0.10 mm<br>0.0039 in. |
| Idle Gear Bushing I.D. | 26.000 to 26.021 mm<br>1.0236 to 1.0244 in. | – |
| Idle Gear Shaft 1 O.D. | 25.967 to 25.980 mm<br>1.0223 to 1.0228 in. | – |
| Idle Gear 2 | 0.020 to 0.054 mm<br>0.0008 to 0.0021 in. | 0.10 mm<br>0.0039 in. |
| Idle Gear Bushing I.D. | 26.000 to 26.021 mm<br>1.0236 to 1.0244 in. | – |
| Idle Gear Shaft 2 O.D. | 25.967 to 25.980 mm<br>1.0223 to 1.0228 in. | – |
| Idle Gear Side Clearance | | |
| Idle Gear 1 | 0.20 to 0.51 mm<br>0.0079 to 0.0200 in. | 0.8 mm<br>0.0315 in. |
| Idle Gear 2 | 0.20 to 0.51 mm<br>0.0079 to 0.0200 in. | 0.8 mm<br>0.315 in. |

*01640S10480*

## Piston · Piston Ring

| Item | | Factory Specification | Allowable Limit |
|---|---|---|---|
| Piston Pin Bore | | 22.000 to 22.013 mm<br>0.8661 to 0.8687 in. | 22.03 mm<br>0.8673 in. |
| Clearance between Compression Ring 2 and Ring Groove | | 0.085 to 0.112 mm<br>0.0033 to 0.0044 in. | 0.20 mm<br>0.0079 in. |
| Clerance between Oil Ring and Ring Groove | | 0.020 to 0.055 mm<br>0.0008 to 0.0021 in. | 0.15 mm<br>0.0059 in. |
| Ring Gap<br>Compression Ring 1 | D905-B (E)<br>V1205-B (E) | 0.25 to 0.40 mm<br>0.0098 to 0.0157 in. | 1.25 mm<br>0.0492 in. |
| | D1005-B (E)<br>V1305-B (E)<br>D1105-B (E)<br>V1505-B (E) | 0.30 to 0.45 mm<br>0.0118 to 0.0170 in. | 1.25 mm<br>0.0492 in. |
| | D1105-T-B (E)<br>V1205-T-B (E)<br>V1505-T-B (E) | 0.20 to 0.35 mm<br>0.0079 to 0.0138 in. | 1.20 mm<br>0.047 in. |
| Compression Ring 2 | D905-B (E)<br>V1205-B (E) | 0.25 to 0.40 mm<br>0.0098 to 0.0157 in. | 1.25 mm<br>0.0492 in. |
| | D1005-B (E)<br>V1305-B (E)<br>D1105-B (E)<br>V1505-B (E) | 0.30 to 0.45 mm<br>0.0118 to 0.0170 in. | 1.25 mm<br>0.0492 in. |
| | V1205-T-B (E) | 0.20 to 0.35 mm<br>0.0079 to 0.0138 in. | 1.20 mm<br>0.047 in. |
| | D1105-T-B (E)<br>V1505-T-B (E) | 0.40 to 0.55 mm<br>0.0157 to 0.0217 in. | 1.20 mm<br>0.047 in. |
| Oil Ring | D905-B (E)<br>D1005-B (E)<br>V1205-B (E)<br>V1205-T-B (E)<br>V1305-B (E)<br>D1105-B (E)<br>V1505-B (E) | 0.25 to 0.40 mm<br>0.0098 to 0.0157 in. | 1.25 mm<br>0.0492 in. |
| | D1105-T-B (E)<br>V1505-T-B (E) | 0.30 to 0.55 mm<br>0.0118 to 0.0217 in. | 1.25 mm<br>0.0492 in. |

## Connecting Rod

| | | |
|---|---|---|
| Connecting Rod Alignment | - | 0.05 mm<br>0.0020 in. |
| Clearance between Piston Pin and Small end Bushing | 0.014 to 0.038 mm<br>0.0006 to 0.0015 in. | 0.15 mm<br>0.0059 in. |
| Piston Pin O.D. | 22.002 to 22.011 mm<br>0.8662 to 0.8666 in. | – |
| Small End Bushing I.D. | 22.025 to 22.040 mm<br>0.8671 to 0.8677 in. | – |

*01642S10490*

## Crankshaft

| Item | Factory Specification | Allowable Limit |
|---|---|---|
| Crankshaft Alignment | – | 0.02 mm<br>0.0008 in. |
| Oil Clearance between Crankshaft and Crankshaft Bearing 1 | 0.034 to 0.114 mm<br>0.0013 to 0.0045 in. | 0.20 mm<br>0.0079 in. |
| Crankshaft O.D. | 47.934 to 47.950 mm<br>1.8872 to 1.8878 in. | – |
| Crankshaft Bearing 1 I.D. | 47.984 to 48.084 mm<br>1.8891 to 1.8917 in. | – |
| Oil Clearance between Crankshaft and Crankshaft Bearing 2 | 0.034 to 0.095 mm<br>0.0013 to 0.0037 in. | 0.20 mm<br>0.0079 in. |
| Crankshaft O.D. | 47.934 to 47.950 mm<br>1.8872 to 1.8878 in. | – |
| Crankshaft Bearing 2 I.D. | 47.984 to 48.029 mm<br>1.8891 to 1.8909 in. | – |
| Oil Clearance between Crankshaft and Crankshaft Bearing 3 | 0.034 to 0.098 mm<br>0.0013 to 0.0039 in. | 0.20 mm<br>0.0079 in. |
| Crankshaft O.D. | 51.921 to 51.940 mm<br>2.0441 to 2.0449 in. | – |
| Crank bearing 3 I.D. | 51.974 to 52.019 mm<br>2.0462 to 2.0480 in. | – |
| Oil Clearance between Crank Pin and Crank Pin Bearing | 0.029 to 0.091 mm<br>0.0011 to 0.0036 in. | 0.20 mm<br>0.0079 in. |
| Crank Pin O.D. | 39.959 to 39.975 mm<br>1.5732 to 1.5738 in. | – |
| Crank Pin Bearing I.D. | 40.004 to 40.050 mm<br>1.5750 to 1.5768 in. | – |
| Crankshaft Side Clearance | 0.15 to 0.31 mm<br>0.0059 to 0.0122 in. | 0.50 mm<br>0.0197 in. |

## Cylinder Liner

| | | | |
|---|---|---|---|
| Cylinder Liner I.D. | D905-B (E)<br>V1205-B (E)<br>V1205-T-B (E) | 72.000 to 72.019 mm<br>2.8346 to 2.8354 in. | + 0.15 mm<br>0.0059 in. |
| | D1005-B (E)<br>V1305-B (E) | 76.000 to 76.019 mm<br>2.9921 to 2.9929 in. | + 0.15 mm<br>0.0059 in. |
| | D1105-B (E)<br>D1105-T-B (E)<br>V1505-B (E)<br>V1505-T-B (E) | 78.000 to 78.019 mm<br>3.0709 to 3.0716 in. | + 0.15 mm<br>0.0059 in. |
| Oversized Cylinder Liner I.D. | | + 0.5 mm<br>+ 0.0197 in. | + 0.15 mm<br>0.0059 in. |

*01642S10500*

## (2) Lubricating System

### Oil Pump

| Item | Factory Specification | Allowable Limit |
|---|---|---|
| Engine Oil Pressure<br>At Idle Speed | 49 kPa<br>0.5 kgf/cm$^2$<br>7 psi | – |
| At Rated Speed | 196.0 to 441.0 kPa<br>2.0 to 4.5 kgkf/cm$^2$<br>28.0 to 64.0 psi | 147.1 kPa<br>1.5 kgf/cm$^2$<br>21.3 psi |
| Clearance between Inner Rotor and Outer Rotor | 0.06 to 0.18 mm<br>0.0024 to 0.0071 in. | – |
| Clearance between Outer Rotor and Pump Body | 0.100 to 0.180 mm<br>0.0039 to 0.0071 in. | – |
| End Clearance between Inner Rotor and Cover | 0.025 to 0.75 mm<br>0.0098 to 0.0295 in. | – |

*01642S10510*

## (3) Cooling System

### Thermostat

| | | |
|---|---|---|
| Thermostat's Valve Opening Temperature | 69.5 to 72.5 °C<br>157.1 to 162.5 °F | – |
| Temperature at Which Thermostat Completely Opens | 85 °C<br>185 °F | – |

### Radiator

| | | |
|---|---|---|
| Radiator Water Tightness | Water tightness at specified pressure<br>137 kPa<br>(1.4 kgf/cm$^2$, 20 psi) | – |
| Radiator Cap Air Leakage | 10 seconds or more<br>88 → 59 kPa<br>0.9 → 0.6 kgf/cm$^2$<br>13 → 9 psi | – |
| Fan Belt Tension | 10 to 12 mm / 98 N<br>10 to 12 mm / 10 kgf<br>0.394 to 0.472 in. /<br>22.1 lbs.) | – |

*01640S10520*

## (4) Fuel System

### Injection Pump

| Item | | Factory specification | Allowable Limit |
|---|---|---|---|
| Injection Timing<br>Without Timer | 3000 rpm | 0.31 to 0.35 rad. (18 to 20°) Before T.D.C. | – |
| | 3600 rpm | 0.37 to 0.40 rad. (21 to 23°) Before T.D.C. | – |
| With Timer | 3000 rpm | 0.14 to 0.17 rad. (8 to 10°) Before T.D.C. | – |
| | V1505-B (E) | 0.21 to 0.24 rad. (12 to 14°) Before T.D.C. | – |
| | 3600 rpm | 0.16 to 0.19 rad. (9 to 11°) Before T.D.C. | – |
| Fuel Titghtness of Pump Element | | – | 14.7 MPa<br>150 kgf/cm$^2$<br>2133 psi |
| Fuel Tightness of Delivery Valve | | More 10 seconds<br>14.7 → 13.7 MPa<br>150 → 140 kgf/cm$^2$<br>2133 → 1990 psi | 5 seconds<br>14.7 → 13.7 MPa<br>150 →140 kgf/cm$^2$<br>2133 → 1990 psi |

### Injection Nozzle

| | | |
|---|---|---|
| Fuel Injection Pressure | 13.73 to 14.71 MPa<br>140 to 150 kgf/cm$^2$<br>1991 to 2133 psi | – |
| Fuel Titghtness of Nozzle Valve Seat | When the pressure is 12.75 MPa (130 kgf/cm$^2$, 1849 psi), the valve seat must be fuel tightness | – |

*01642S10530*

## (5) Electrical System

### Starter

| Item | Factory Specification | Allowable Limit |
|---|---|---|
| Commutator O.D. | 30.0 mm<br>1.1811 in. | 29.0 mm<br>1.1417 in. |
| Mica Undercut | 0.5 to 0.8 mm<br>0.0197 to 0.0315 in. | 0.2 mm<br>0.079 in. |
| Brush Length | 13.0 mm<br>0.5118 in. | 8.5 mm<br>0.3346 in. |

### Alternator

| | | |
|---|---|---|
| No-load Voltage | 13.5 V at 5000 rpm | – |
| Stator Resistance | Less than 1 Ω | – |
| Rotor Resistance | 2.9 Ω | – |
| Slip Ring O.D. | 14.4 mm<br>0.5669 in. | 14 mm<br>0.5512 in. |
| Brush Length | 10.0 mm<br>0.3937 in. | 1.5 mm<br>0.0591 in. |

### Glow Plug

| | | |
|---|---|---|
| Glow Plug Resistance<br>A | Approx. 1.0 to 1.2 Ω | – |
| B | Approx. 0.9 Ω | – |

A : S / N 489290 & below
B : S / N 489291 & above

*01640S10540*

# [6] MAINTENANCE CHECK LIST

To maintain long-lasting and safe engine performance, make it a rule to carry out regular inspections by following the table below.

| Item | | Service Interval | | | | | | | | | | | |
|---|---|---|---|---|---|---|---|---|---|---|---|---|---|
| | | Every 50 hrs | Every 75 hrs | Every 100 hrs | Every 150 hrs | Every 200 hrs | Every 300 hrs | Every 400 hrs | Every 500 hrs | Every 800 hrs | Every 1500 hrs | Every one year | Every two years |
| Checking fuel pipes and clamps | | ☆ | | | | | | | | | | | |
| * Changing engine oil | (1), (3) Oil pan depth (101 mm) | | (1) ☆ | | (3) ☆ | | | | | | | | |
| | (2), (4) Oil pan depth (125 mm) | | | (2) ☆ | | (4) ☆ | | | | | | | |
| Cleaning air filter element | | | | ☆ | | | | | | | | | |
| Cleaning fuel filter element | | | | ☆ | | | | | | | | | |
| Checking fan belt tension and damage | | | | ☆ | | | | | | | | | |
| Checking water pipes and clamps | | | | | | ☆ | | | | | | | |
| * Changing oil filter cartridge | (5), (7) Oil pan depth (101 mm) | | | | (5) ☆ | | (7) ☆ | | | | | | |
| | (6), (8) Oil pan depth (125 mm) | | | | | (6) ☆ | | (8) ☆ | | | | | |
| Changing fuel filter cartridge | | | | | | | | ☆ | | | | | |
| Cleaning radiator interior | | | | | | | | | ☆ | | | | |
| Changing radiator coolant (L.L.C) | | | | | | | | | | | | | ☆ |
| ** Checking injection nozzle | | | | | | | | | | | ☆ | | |
| Changing air filter element | | | | | | | | | | | | ☆ | |
| Cheking valve clearance | | | | | | | | | | ☆ | | | |
| Changing water pipes and clamps | | | | | | | | | | | | | ☆ |
| Changing fuel pipes and clamps | | | | | | | | | | | | | ☆ |

(1), (2) For generators (3000 / 3600 rpm)
(3), (4) For generators (1800 / 1500 rpm) and general construction / industrial machinery and farm equipment
(5), (6) For generators (3000 / 3600 rpm) and general construction / industrial machinery and farm equipment
(7), (8) For generators (1800 / 1500 rpm)

* Change engine oil and oil cartridge after the first 50 hours of operation.
** Maintenance inetrvals as per EPA instructions.

**CAUTION**

- **When changing or inspecting, be sure to level and stop the engine.**

*01640S10730*

# [7] CHECK AND MAINTENANCE

## (1) Daily Check Points

### Checking Engine Oil Level

1. Level the engine.
2. To check the oil level, draw out the dipstick, wipe it clean, reinsert it, and draw it out again.
   Check to see that the oil level lies between the two notches.
3. If the level is too low, add new oil to the specified level.

**IMPORTANT**

- **When using an oil of different maker or viscosity from the previous one, drain old oil. Never mix two different types of oil.**

*01640S10050*

### Checking and Replenish Cooling Water

1. Remove the radiator cap and check to see that the cooling water level is just bellow the port.
2. If low, add clean water and antifreeze.

**CAUTION**

- **Do not remove the radiator cap until cooling water temperature is below its boiling point. Then loosen the cap slightly to relieve any excess pressure before removing the cap completely.**

**IMPORTANT**

- **Be sure to close the radiator cap securely. If the cap is loose or improperly closed, water may leak out and the engine could overheat.**
- **Do not use an antifreeze and scale inhibitor at the same time.**

*01640S10060*

## (2) Check Point of Every 50 hours

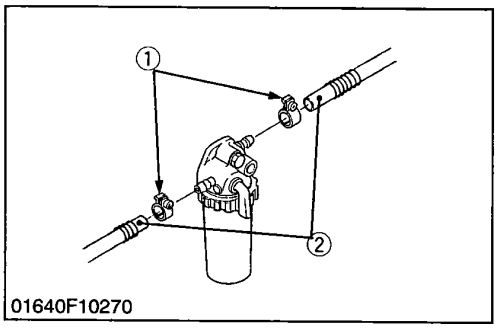

01640F10270

**Checking Fuel Pipe**

1. If the clamp (1) is loose, apply oil to the threads and securely retighten it.
2. The fuel pipe (2) is made of rubber and ages regardless of the period of service.
   Change the fuel pipe together with the clamp every two years.
3. However, if the fuel pipe and clamp are found to be damaged or deteriorate earlier than two years, then change or remedy.
4. After the fuel pipe and the clamp have been changed, bleed the fuel system.

**CAUTION**

- **Stop the engine when attempting the check and change prescribed above.**

(1) Clamp (2) Fuel Pipe

*01640S10070*

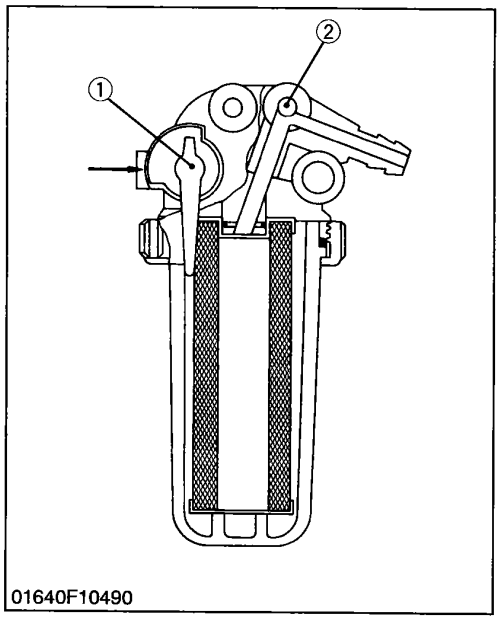

01640F10490

**(When bleeding fuel system)**

1. Fill the fuel tank with fuel, and open the fuel cock (1).
2. Loosen the air vent plug (2) of the fuel filter a few turns.
3. Screw back the plug when bubbles do not come up any more.
4. Open the air vent cock on top of the fuel injection pump.
5. Retighten the plug when bubbles do not come up any more.

**NOTE**

- **Always keep the air vent plug on the fuel injection pump closed except when air is vented, or it may cause the engine to stop.**

(1) Fuel Cock (2) Air Vent Plug

*01640S10080*

## (3) Check Point of Every 100 hours

### Changing Engine Oil

1. After warming up, stop the engine.
2. To change the used oil, remove the drain plug at the bottom of the engine and drain off the oil completely.
3. Reinstall the drain plug.
4. Fill the new oil up to the upper notch on the dipstick. (See page S-47.)

**■ IMPORTANT**

- **Engine oil should be MIL-L-46152 / MIL-L-2104C or have properties of API classification CD / CE grades.**
- **Change the type of engine according to the ambient temperature.**
  **Above 25 °C (77 °F)..... SAE 30 or 10W-30**
  **0 °C to 25 °C (32 °F to 77 °F)..... SAE 20 or 10W-30**
  **Below 0 °C (32 °F)..... SAE 10W or 10W-30**

| Models \ Oil pan depth | Capacity | |
|---|---|---|
| | 125 mm (4.92 in.) | 101 mm (3.97 in.) |
| D905-B (E)<br>D1005-B (E)<br>D1105-B(E)<br>D1105-T-B (E) | 5.1 L<br>5.39 U.S.qts.<br>4.49 Imp.qts | 4.0 L<br>4.23 U.S.qts.<br>3.52 Imp.qts |
| V1205-B (E)<br>V1305-B (E)<br>V1505-B (E) | 6.0 L<br>6.34 U.S.qts.<br>5.28 Imp.qts. | 4.7 L<br>4.97 U.S.qts.<br>4.14 Imp.qts. |
| V1205-T-B (E)<br>V1505-T-B (E) | 6.7 L<br>7.08 U.S.qts.<br>5.90 Imp.qts. | — |

*01640S10090*

### Changing Engine Oil Filter Cartridge

1. Remove the oil filter cartridge with a filter wrench.
2. Apply engine oil to the rubber gasket on the new cartridge.
3. Screw the new cartridge in by hand. (See page S-44.)

**■ NOTE**

- **Over-tightening may cause deformation of rubber gasket.**
- **After cartridge has been replaced, engine oil normally decreases a little.**
  **Check the oil level and add new oil to the specified level.**

*01640S10100*

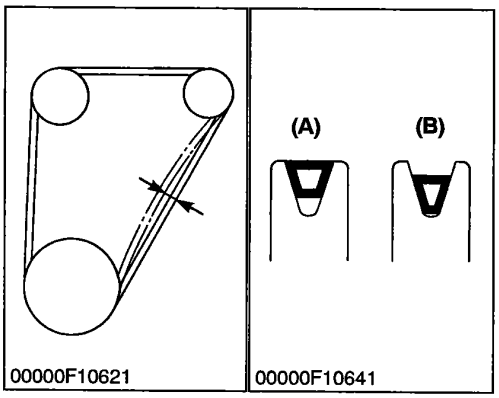


## Checking Fan Belt Tension

1. Press the fan belt between fan pulley and pulley at force of 98 N (10 kgf, 22 lbs).
   Check if the fan belt deflection is 10 to 12 mm (0.394 to 0.472 in.).
2. If the deflection is not within the factory specifications, adjust with the tension pulley adjusting bolts.

**(A) Good** **(B) Bad**

*01640S10110*

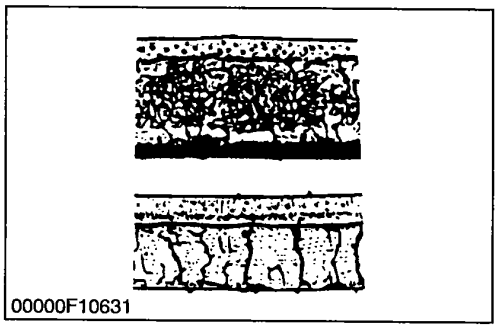


## Checking Fan Belt Damage

1. Check the fan belt for damage.
2. Check if the fan belt is worn and sunk in the pulley groove.
3. Replace the fan belt if the belt is damaged or nearly worn out and deeply sunk in the pulley groove.

*00000S10461*

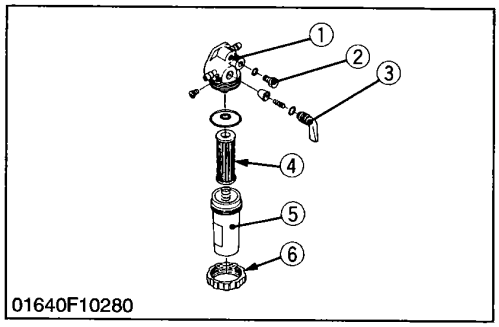


## Cleaning Fuel Filter

1. Close the fuel filter cock (3).
2. Unscrew the retaining ring (6) and remove the cup (5), and rinse the inside with kerosene.
3. Take out the element (4) and dip it in the kerosene to rinse.
4. After cleaning, reassemble the fuel filter, keeping out dust and dirt.
5. Bleed the fuel system.

**■ IMPORTANT**

- **If dust and dirt enter the fuel, the fuel injection pump and injection nozzle will wear quickly. To prevent this, be sure to clean the fuel filter cup periodically.**

(1) Cock Body
(2) Air Vent Plug
(3) Filter Cock
(4) Filter Element
(5) Filter Cup
(6) Retaining Ring

*01640S10120*

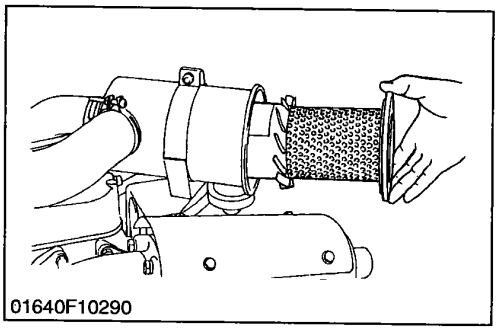
01640F10290

## Cleaning Air Cleaner

1. The air cleaner uses a dry element. Never apply oil to it.
2. Remove and clean out the dust cup before it becomes half full with dust.
3. When the air filter element is dusty, clean it.

■ **NOTE**

- **Change the element once a year or every 6th cleaning.**

■ **IMPORTANT**

- **Install the air cleaner dust cup with "TOP" indicated on the rear of the cup in the upside.**
  **If the dust cup is mounted incorrectly, dust or dirt does not collect in the cup, and direct attachment of the dust to the element will cause its life time to shorten to a great extent.**

*01640S10130*

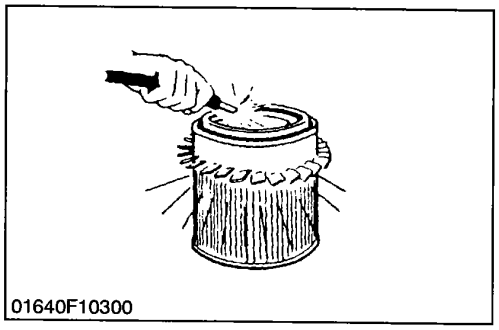
01640F10300

## Cleaning Air Filter Element

- **When dry dust adheres**
  Use clean dry compressed air on the inside of the element.
  Air pressure at the nozzle must not exceed 690 kPa (7 kgf/cm$^2$, 100 psi).
  Maintain reasonable distance between the nozzle and the filter.

*01640S10140*

## (4) Check Point of Every 800 hours

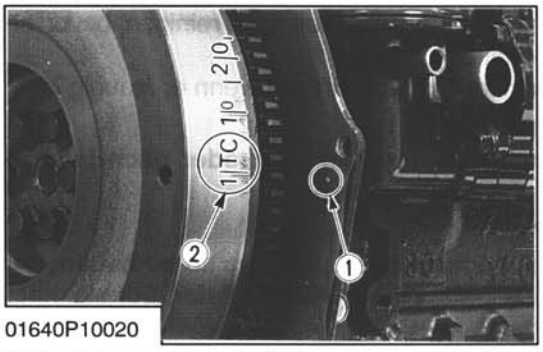

01640P10020

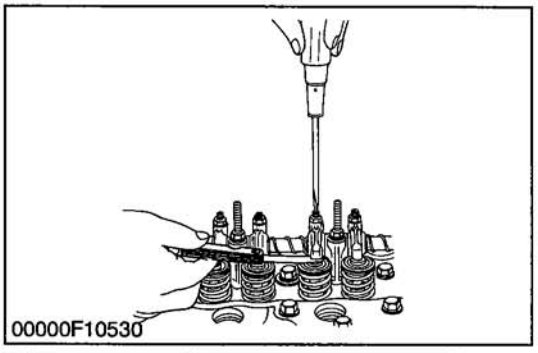
00000F10530

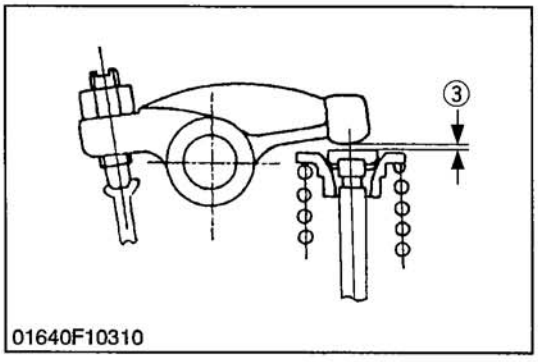

01640F10310

### Checking Valve Clearance

**■ IMPORTANT**

- **Valve clearance must be checked and adjusted when engine is cold.**

1. Remove the head cover.
2. Align the **"1TC"** mark on the flywheel and projection (1) on the housing so that the No. 1 piston comes to the compression or overlap top dead center.
3. Check the following valve clearance marked with "☆" using a feeler gauge.
4. If the clearance, adjust with the adjusting screw.

| | | |
|---|---|---|
| Valve clearance | Factory spec. | 0.145 to 0.185 mm<br>0.0057 to 0.0072 in. |

**■ NOTE**

- **The "TC" marking on the flywheel is just for No. 1 cylinder. there is no "TC" marking for the other cylinders.**
- **No. 1 piston comes to the T.D.C. position when the "TC" marking is aligned with the projection in the window on flywheel-housing. Turn the flywheel 0.26 rad. (15°) clockwise and counter-clockwise to see if the piston is at the compression top dead center or the overlap position. Now referring to the table below, readjust the valve clearance. (The piston is at the top dead center when both the IN. and EX. valves do not move; it is at the overlap position when both the valves move.**
- **Finally turn the flywheel 6.28 rad. (360°) and aligne the "TC" marking and the projection perfectly. Adjust the other valve clearance as required.**
- **After turning the flywheel counterclockwise twice or three times, recheeck the valve clearance.**
- **After adjusting the valve clearance, firmly tighten the lock nut of the adjusting screw.**

| Number of cylinders<br>Valve arrangement<br>Adjustable cylinder<br>Location of piston | | 3 cylinder | | 4 cylinder | |
|---|---|---|---|---|---|
| | | IN. | EX | IN. | EX |
| When No. 1 piston is compression top dead center | 1st | ☆ | ☆ | ☆ | ☆ |
| | 2nd | | ☆ | ☆ | |
| | 3rd | ☆ | | | ☆ |
| | 4th | | | | |
| When No. 1 piston is overlap position | 1st | | | | |
| | 2nd | ☆ | | | ☆ |
| | 3rd | | ☆ | ☆ | |
| | 4th | | | ☆ | ☆ |

(1) Projection
(2) **TC** Mark Line
(3) Valve Clearance

*01640S10150*

## (5) Check Point of 1500 hours (Serial No: ~ 489290)

**CAUTION**

- **Check the nozzle injection pressure and condition after confirming that there is nobody standing in the direction the fume goes. If the fume from the nozzle directly contacts the human body, cells may be destroyed and blood poisoning may be caused.**

*01640S10160*

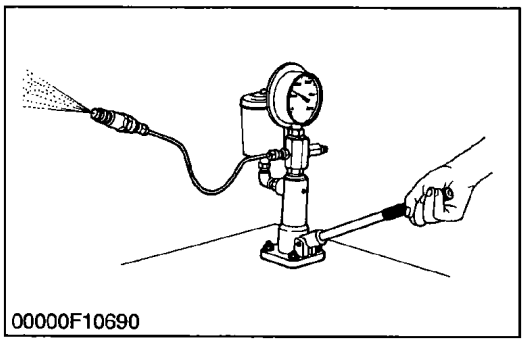

00000F10690

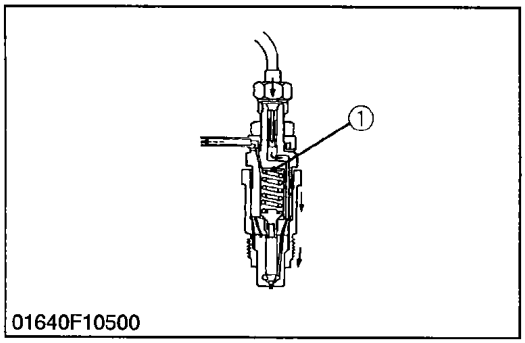


01640F10500

**Checking Nozzle Injection Pressure**

1. Set the injection nozzle to the nozzle tester (Code No: 07909-31361).
2. Slowly move the tester handle to measure the pressure at which fuel begins jetting out from the nozzle.
3. If the measurement is not within the factory specifications, disassemble the injection nozzle, and change adjusting washer (1) until the proper injection pressure is obtained. (See page S-159.)
4. If the spraying condition is defective, replace the nozzle piece.

**(Reference)**

- Pressure variation with 0.025 mm (0.001 in.) difference of adjusting washer thickness.
  Approx. 59 kPa (6 kgf/cm$^2$, 85 psi)

(1) Adjusting Washer

*01640S10170*

# [8] SPECIAL TOOLS

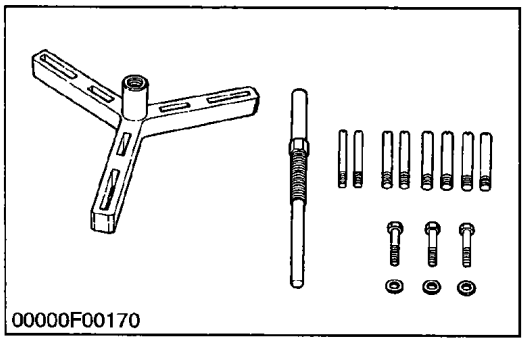

00000F00170

**Flywheel Puller**

Code No: 07916-32011
Application: Use to remove the flywheel.

*01640S10180*

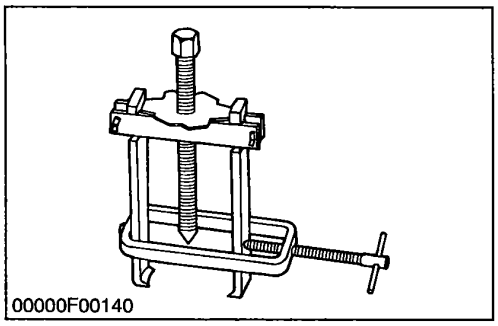
00000F00140

**Special-use Puller Set**

Code No: 07916-09032

Application: Use for pulling out bearings, gears and other parts.

*01640S10190*

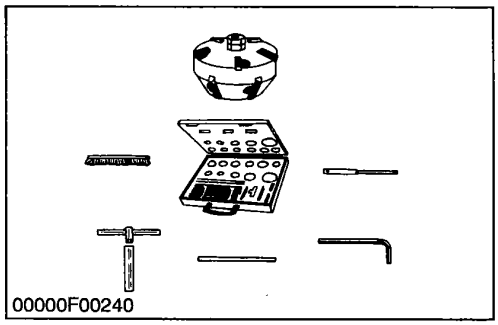
00000F00240

**Valve Seat Cutter Set**

Code No: 07909-33102

Application: Use for correcting valve seats.

*01640S10200*

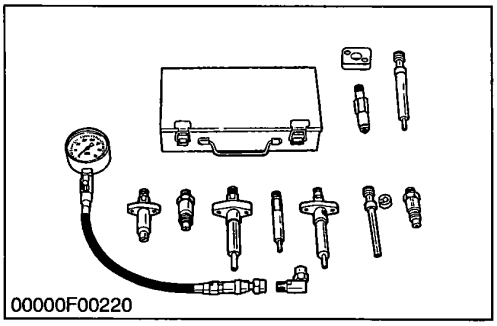
00000F00220

**Diesel Engine Compression Tester**

Code No: 07909-30207

Application: Use for measureing diesel engine compression pressure.

*01640S10210*

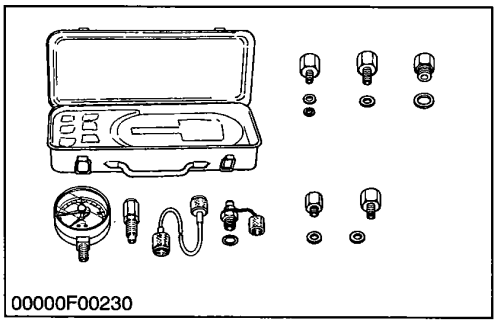
00000F00230

**Oil Pressure Tester**

Code No: 07916-32031

Application: Use for measureing lubricating oil pressure.

*01640S10220*

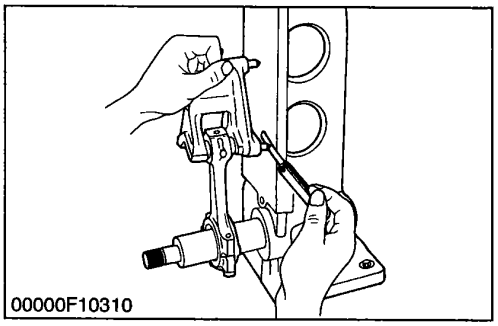
00000F10310

**Connecting Rod Alignment Tool**

Code No: 07909-31661
Application: Use for checking the connecting rod alignment.
Applicable range: Connecting rod big end I.D. 30 to 75 mm (1.18 to 2.95 in.dia.). Connecting rod length 65 to 330 mm (2.56 to 12.99 in.).

*01640S10230*

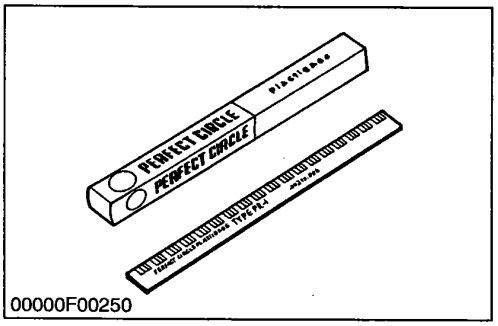

00000F00250

**Press Gauge**

Code No: 07909-30241
Application: Use for checking the oil crearance between crankshaft and bearing, etc.
Measureing range: Green ---- 0.025 to 0.076 mm (0.001 to 0.003 in.)
Red ------- 0.051 to 0.152 mm (0.002 to 0.006 in.)
Blue-------- 0.102 to 0.229 mm (0.004 to 0.009 in.)

*01640S10240*

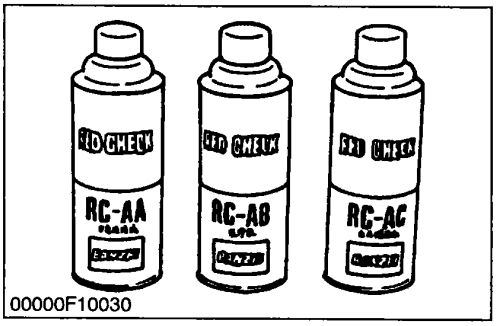

00000F10030

**Red Check (Crack Check Liquid)**

Code No: 07909-31371
Application: Use for checking cracks on cylinder head, cylinder block, etc.

*01640S10250*

■ **NOTE**

- **The following special tools are not provided, so make them referring to the figure.**

*01640S10910*

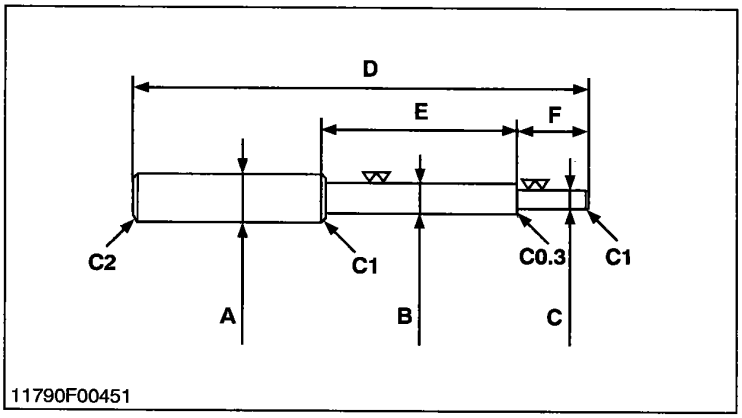


11790F00451

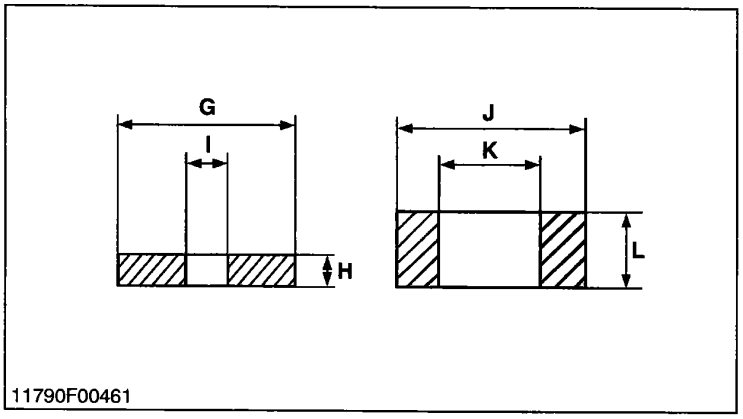


11790F00461

**Valve Guide Replacing Tool**

Application: Use to press out and press fit the valve guide.

| | |
|---|---|
| A | 20 mm dia. (0.79 in. dia.) |
| B | 11.7 to 11.9 mm dia.<br>0.460 to 0.468 in. dia. |
| C | 6.5 to 6.6 mm dia.<br>0.256 to 0.259 in. dia. |
| D | 225 mm (8.86 in.) |
| E | 70 mm (2.76 in.) |
| F | 45 mm (1.77 in.) |
| G | 25 mm (0.98 in.) |
| H | 5 mm (0.197 in.) |
| I | 6.7 to 7.0 mm dia. (0.263 to 0.275 in. dia.) |
| J | 20 mm dia. (0.787 in. dia.) |
| K | 12.5 to 12.8 mm dia. (0.492 to 0.504 in. dia.) |
| L | 8.9 to 9.1 mm (0.350 to 0.358 in.) |
| C1 | Chamfer 1.0 mm (0.039 in.) |
| C2 | Chamfer 2.0 mm (0.079 in.) |
| C0.3 | Chamfer 0.3 mm (0.012 in.) |

*11790G00622*

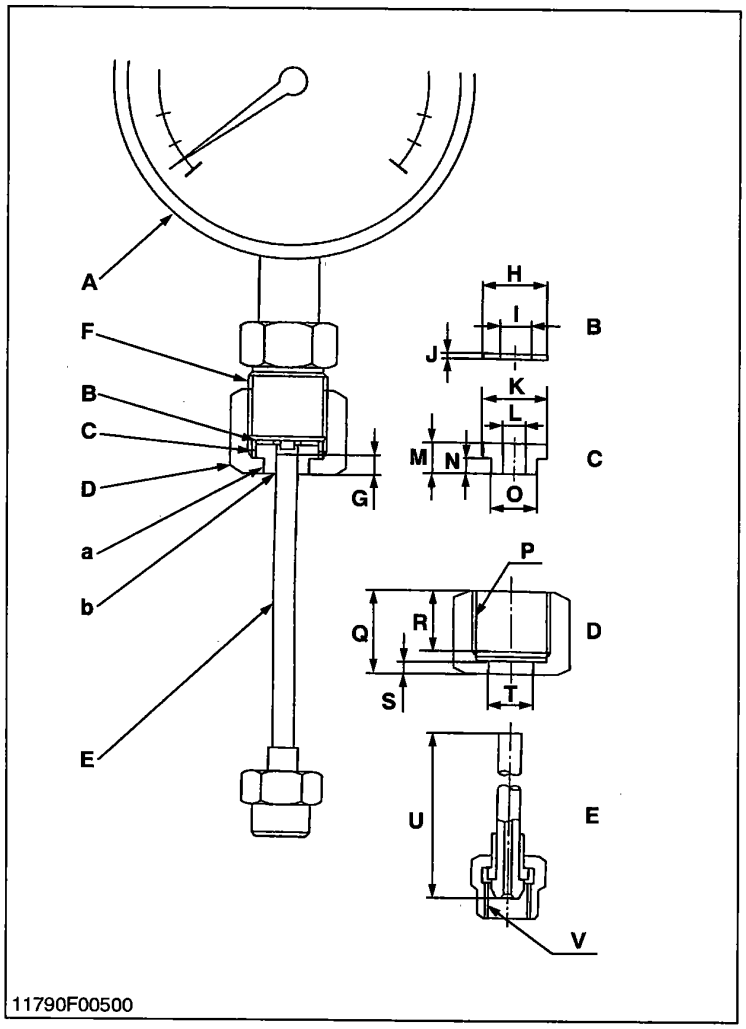


## Injection Pump Pressure Tester

Application: Use to check fuel tightness of injection pumps.

| | |
|---|---|
| A | Pressure gauge full scale : More than 29.4 MPa (300 kgf/cm$^2$, 4267 psi) |
| B | Copper gasket |
| C | Flange (Material : Steel) |
| D | Hex. nut 27 mm (1,06 in.) across the plat |
| E | Injection pipe |
| F | PF 1/2 |
| G | 5 mm (0.20 in.) |
| H | 17 mm dia. (0.67 in. dia.) |
| I | 8 mm dia. (0.31 in. dia.) |
| J | 1.0 mm (0.039 in.) |
| K | 17 mm dia. (0.67 in. dia.) |
| L | 6.10 to 6.20 mm dia.<br>0.2402 to 0.2441 in. dia. |
| M | 8 mm (0.31 in.) |
| N | 4 mm (0.16 in.) |
| O | 11.97 to 11.99 mm dia.<br>0.4713 to 0.4721 in. dia. |
| P | PF 1/2 |
| Q | 23 mm (0.91 in.) |
| R | 17 mm (0.67 in.) |
| S | 4 mm (0.16 in.) |
| T | 12.00 to 12.02 mm dia.<br>0.4724 to 0.4732 in. dia. |
| U | 100 mm (3.94 in.) |
| V | M12 × P1.5 |
| a | Adhesive application |
| b | Fillet welding on the enter circumference |

*11790G00811*

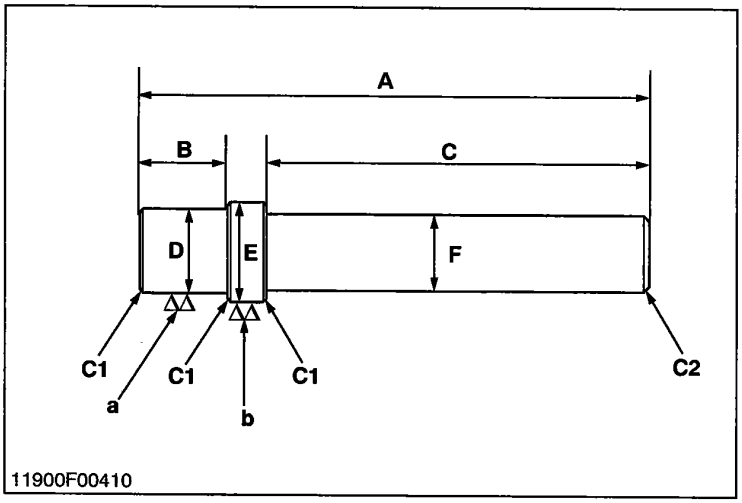


## Bushing Replacing Tool

Application: Use to press out and to press fit the bushing.

1. For small end bushing

| | |
|---|---|
| A | 157 mm (6.1811 in.) |
| B | 24 mm (0.9449 in.) |
| C | 120 mm (4.7244 in.) |
| D | 21.8 to 21.9 mm (0.8583 to 0.8622 in.) |
| E | 24.8 to 24.9 mm (0.9764 to 0.9803 in.) DIA. |
| F | 20 mm (0.7874 in.) |
| a | 6.3 µm (250 µin.) |
| b | 6.3 µm (250 µin.) |

2. For idle gear bushing

| | |
|---|---|
| A | 196 mm (7.7165 in.) |
| B | 26 mm (1.0236 in.) |
| C | 150 mm (5.9055 in.) |
| D | 25.8 to 25.9 mm (1.0157 to 1.0197 in.) |
| E | 28.8 to 28.9 mm (1.0157 to 1.0197 in.) DIA. |
| F | 20 mm (0.7874 in.) |
| a | 6.3 µm (250 µin.) |
| b | 6.3 µm (250 µin.) |

*11900G00441*

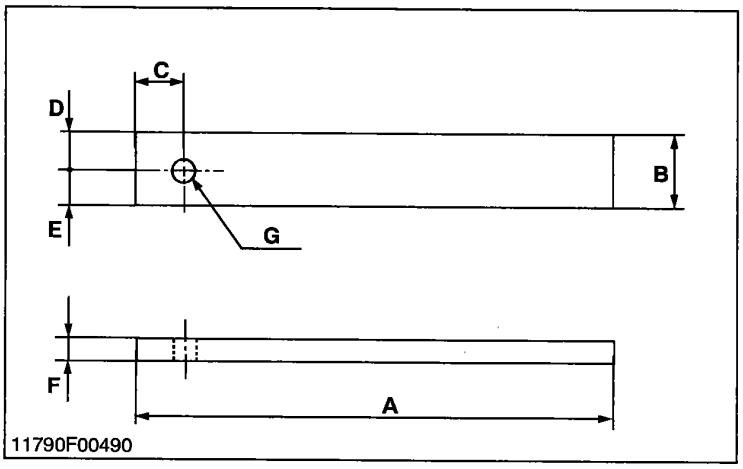


## Flywheel Stopper

Application: Use to loosen and tighten the flywheel screw.

| | |
|---|---|
| A | 200 mm (7.87 in.) |
| B | 30 mm (1.18 in.) |
| C | 20 mm (0.79 in.) |
| D | 15 mm (0.59 in.) |
| E | 15 mm (0.59 in.) |
| F | 8 mm (0.31 in.) |
| G | 10 mm DIA. (0.39 in. DIA.) |

*11790G00801*

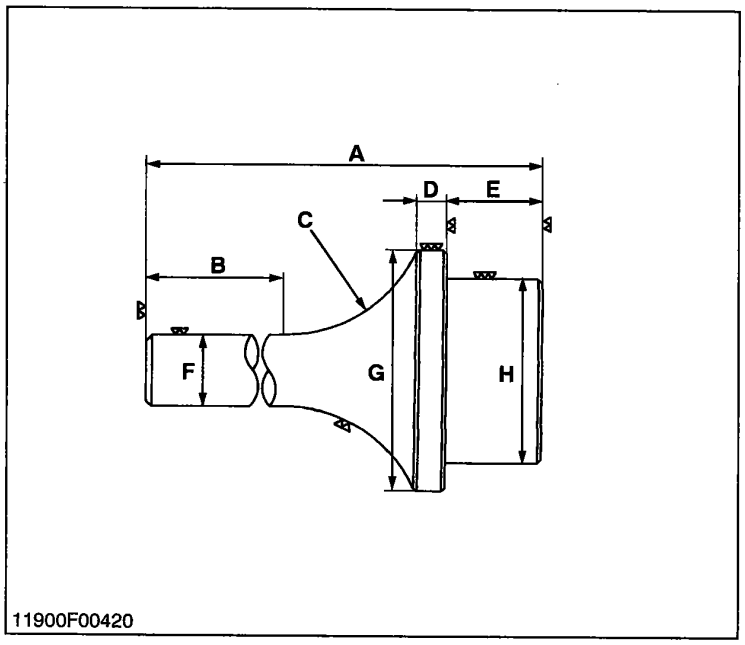


## Crankshaft Bearing 1 Replacing Tool

Application: Use to press out and to press fit the crankshaft bearing 1.

**[Press Out]**

| | |
|---|---|
| A | 135 mm (5.31 in.) |
| B | 72 mm (2.83 in.) |
| C | 40° (1.57 rad.) |
| D | 10 mm (0.39 in.) |
| E | 20 mm (0.79 in.) |
| F | 20 mm (0.79 in.) |
| G | 56.80 to 56.90 mm dia.<br>2.2362 to 2.2402 in. dia. |
| H | 51.80 to 51.90 mm dia.<br>2.0393 to 2.0433 in. dia. |

**[Press Fit]**

| | |
|---|---|
| A | 130 mm (5.12 in.) |
| B | 72 mm (2.83 in.) |
| C | 40° (1.57 rad.) |
| D | 9 mm (0.35 in.) |
| E | 24 mm (0.95 in.) |
| F | 20 mm dia. (0.79 in. dia.) |
| G | 68 mm dia. (2.68 in. dia.) |
| H | 47.38 to 47.48 mm dia.<br>1.865 to 1.869 in. dia. |

*11900G00451*

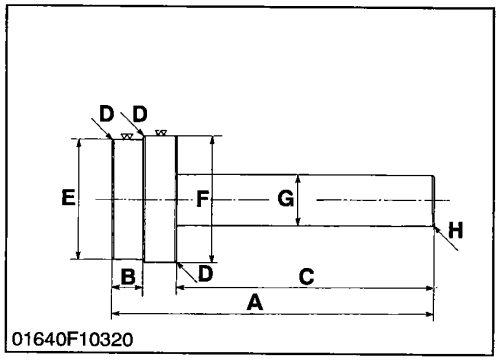


## Governor Gear Holder Bushing Replacing Tool

Application: Use to press out and to press fit the governor gear holder bushing.

| | |
|---|---|
| A | 188 mm (7.4 in.) |
| B | 18 mm (0.7 in.) |
| C | 150 mm (5.9 in.) |
| D | C1 : Chamfer 1.0 mm (0.039 in.) |
| E | 73.9 to 74.0 mm dia. (29.09 to 29.13 in. dia.) |
| F | 69.8 to 69.9 mm dia. (2.748 to 2.751 in. dia.) |
| G | 30 mm dia. (1.181 in. dia.) |
| H | C2 : Chamfer 2.0 mm (0.079 in.) |

*01640S10260*

# 1 ENGINE BODY

## CHECKING AND ADJUSTING

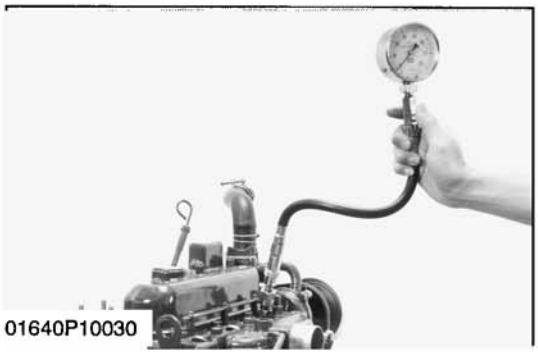
01640P10030

### Compression Pressure

1. After warming up the engine, stop it and remove the air cleaner, the muffler and all nozzle holders.
2. Install a compression tester (Code No: 07909-30204) for diesel engines to nozzle holder hole.
3. After making sure that the speed control lever is set at the stop position (Non-injection), run the engine at 200 to 300 rpm with the starter.
4. Read the maximum pressure. Measure the pressure more than twice.
5. If the measurement is below the allowable limit, check the cylinder, piston ring, top clearance, valve and cylinder head.
6. If the measurement is below the allowable limit, apply a small amount of oil to the cylinder wall through the nozzle hole and measure the compression pressure again.
7. If the compression pressure is still less than the allowable limit, check the top clearance, valve and cylinder head.
8. If the compression pressure increases after applying oil, check the cylinder wall and piston rings.

**NOTE**

- **Check the compression pressure with the specified valve clearance.**
- **Always use a fully charged battery for performing this test.**
- **Variances in cylinder compression values should be under 10 %.**

| | | |
|---|---|---|
| Compression pressure | Factory spec. | 2.84 to 3.24 MPa<br>29 to 33 kgf/cm$^2$<br>412 to 469 psi |
| | Allowable limit | 2.26 MPa<br>23 kgf/cm$^2$<br>327 psi |

*11900S10011*

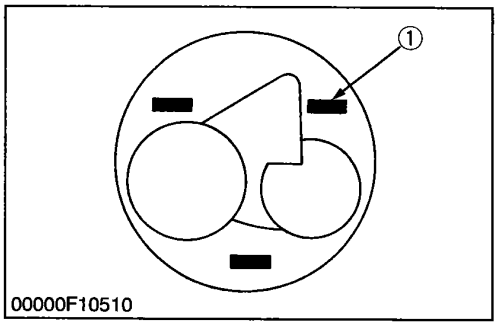

00000F10510

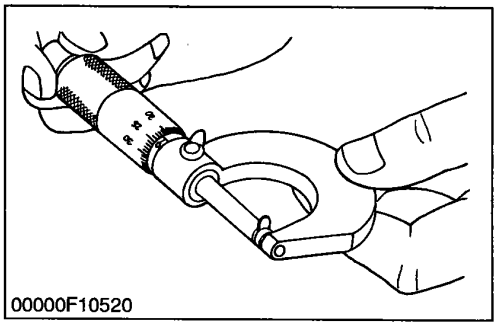
00000F10520

**Top Clearance**

1. Remove the cylinder head (remove the cylinder head gasket completely).
2. Bring the piston to its top dead center fasten 1.5 mm dia. 5 to 7 mm long fuse wires to 3 to 4 spots on the piston top with grease so as to avoid the intake and exhaust valves and the combustion chamber ports.
3. Bring the piston to its middle position, install the cylinder head, and tighten the cylinder head bolts to specification. (Head gasket must be changed to new one.)
4. Turn the crank shaft until the piston exceeds its top dead center.
5. Remove the cylinder head, and measure squeezed fuse wires for thickness.
6. If the measurement is not within the specified value, check the oil clearance of the crankpin journal and the piston pin.

| | | |
|---|---|---|
| Top clearance | Factory spec. | 0.55 to 0.75 mm<br>0.0217 to 0.0295 in. |

| | | |
|---|---|---|
| Tightening torque | Cylinder head mounting bolts | 63.7 to 68.6 N·m<br>6.5 to 7.0 kgf·m<br>47.0 to 50.6 ft-lbs |

(1) Fuse

*01640S10270*

# DISASSEMBLING AND ASSEMBLING

■ **NOTE**

- **The cylinder heads with serial numbers 489291 and on are partially modified in configuration because of the introduction of the nozzle heat seal.**
  **For replacing the cylinder head, see the parts list and choose the right one in reference to its serial number.**

*01640S10280*

# [1] DRAINING WATER AND OIL

### Draining Cooling Water and Engine Oil

**CAUTION**

- **Never remove radiator cap until cooling water temperature is below its boiling point. Then loosen cap slightly to the stop to relieve any excess pressure before removing cap completely.**

1. Prepare a bucket. Open the drain cock to drain cooling water.
2. Prepare an oil pan. Remove the drain plug to drain engine oil in the pan.

*01640S10290*

# [2] EXTERNAL COMPONENTS

### Air Cleaner and Muffler

1. Remove the air cleaner.
2. Remove muffler retaining nuts to remove the muffler.

**(When reassembling)**

- Install the muffler gasket so that its steel side face the muffler.

*01640S10300*

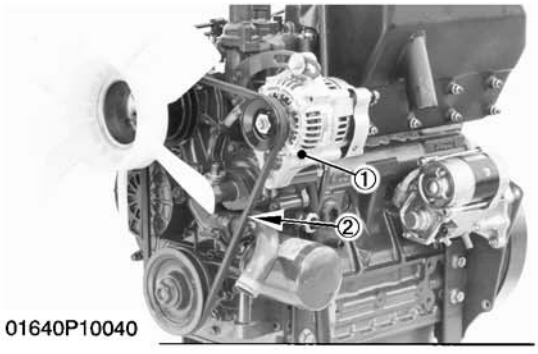

01640P10040

### Alternator and Fan Belt

1. Remove the alternator (1).
2. Remove the fan belt (2).

**(When reassembling)**

- Check to see that there are no cracks on the belt surface.

**■ IMPORTANT**

- **After reassembling the fan belt, be sure to adjust the fan belt tension.**

(1) Alternator (2) Fan Belt

*01640S10310*

# [3] CYLINDER HEAD AND VALVES

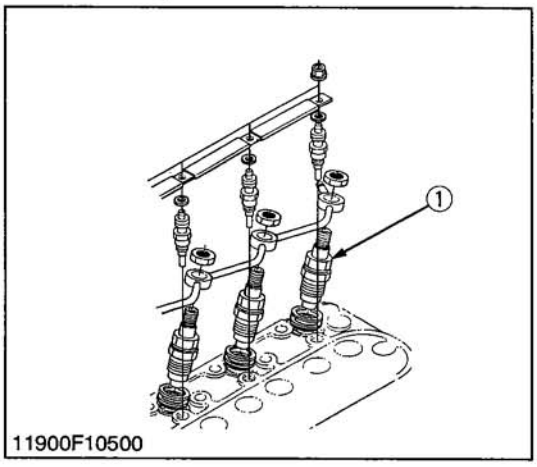

11900F10500

## Nozzle Holder Assembly

1. Loosen the screws on the pipe clamps.
2. Remove the injection pipes.
3. Remove the fuel overflow pipes.
4. Loosen the lock nuts, and remove the nozzle holder assemblies.
5. Remove the copper gaskets on the seats.
6. Remove the nozzle heat seal. (See page S-83.)

(1) Nozzle Holder Assembly

*01640S10320*

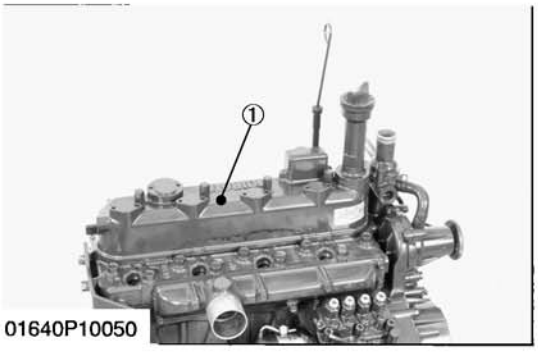

01640P10050

## Cylinder Head Cover

1. Remove the head cover cap nuts.
2. Remove the cylinder head cover (1).

**(When reassembling)**

- Check to see if the cylinder head cover gasket is not defective.

(1) Head Cover

*01640S10330*

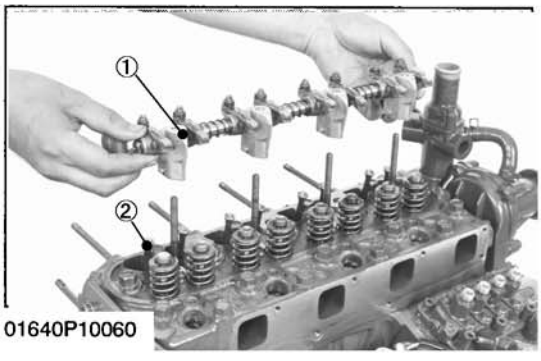

01640P10060

## Rocker Arm and Push Rod

1. Remove the rocker arm bracket mounting nuts.
2. Detach the rocker arm as a unit.
3. Remove the push rods.

**■ IMPORTANT**

- **After reassembling the rocker arm, be sure to adjust the valve clearance.**

**(When reassembling)**

- When putting the push rods onto the tappets, check to see if their ends are properly engaged with the grooves.

(1) Rocker Arm Assembly (2) Push Rod

*11900S10061*

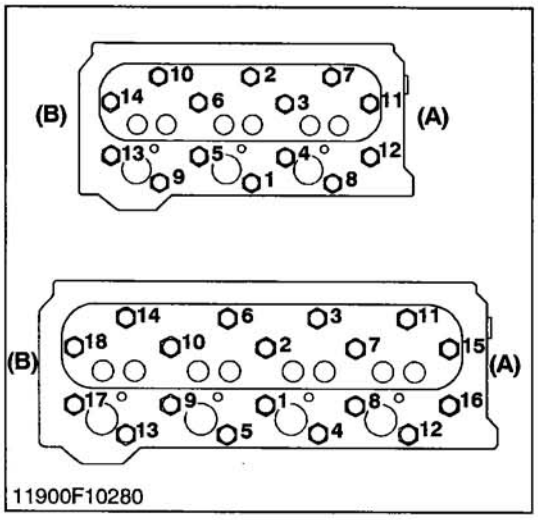

11900F10280

## Cylinder Head

1. Loosen the pipe band, and remove the water return pipe.
2. Remove the cylinder head screws in the order of (14, 18) to (1), and remove the cylinder head.
3. Remove the cylinder head gasket and O-ring.

**(When reassembling)**

- Replace the head gasket with a new one.
- Install the cylinder head, using care not to damage the O-ring.
- Tighten the cylinder head screwsgradually in the order of (1) to (14, 18) after applying engine oil.
- Retighten the cylinder head screws after running the engine for 30 minutes.

**(A) Gear Case Side** **(B) Flywheel Side**

*11900S10072*

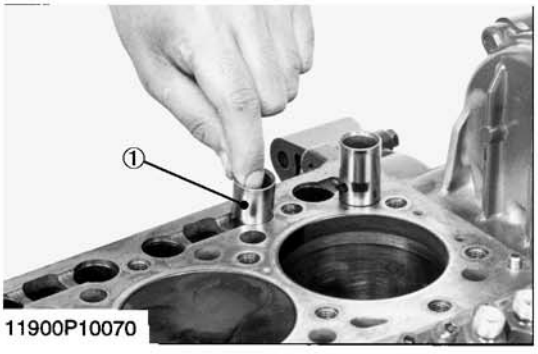

11900P10070

## Tappets

1. Remove the tappets (1) from the crankcase.

**(When reassembling)**

- Before installing the tappets, apply engine oil thinly around them.

**■ IMPORTANT**

- **Mark the cylinder number to the tappets to prevent interchanging.**

(1) Tappet

*11900S10081*

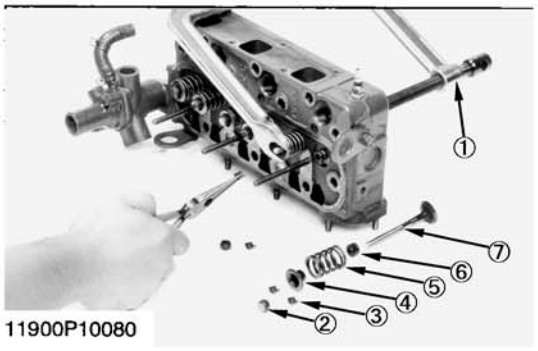

11900P10080

## Valves

1. Remove the valve cap (2).
2. Remove the valve spring collet (3) with a valve lifter.
3. Remove the valve spring retainer (4), valve spring (5) and valve (7).

**(When reassembling)**

- Wash the valve stem and valve guide hole, and apply engine oil sufficiently
- After installing the valve spring collets, lightly tap the stem to assure proper fit with a plastic hammer.

(1) Valve Lifter
(2) Valve Cap
(3) Valve Spring Collet
(4) Valve Spring Retainer
(5) Valve Spring
(6) Valve Stem Seal
(7) Valve

*11900S10091*

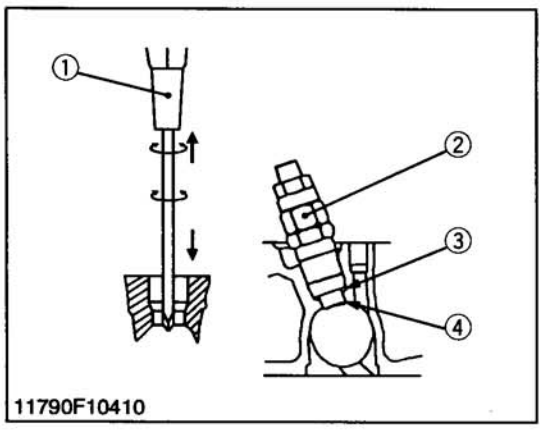

11790F10410

**Nozzle Heat Seal Service Removal Procedure**
**(Engine Serial Number : 489291 and beyond**

■ **IMPORTANT**

- **Use a plus (phillips head) screw driver that has a Dia. which is bigger than the heat seal hole (Approx. 6 mm) 1/4 in.**

1. Drive screw driver lightly into the heat seal hole.
2. Turn screw driver three or four times each way.
3. While turning the screw driver, slowly pull the heat seal out together with the injection nozzle gasket.

   If the heat seal drops, repeat the above procedure. Heat seal and injection nozzle gasket must be changed when the injection nozzle is removed for cleaning or for service.

(1) Plus Screw Driver
(2) Injection Nozzle
(3) Injection Nozzle Packin
(4) Heat Seal

*11790S10131*

# [4] GEAR CASE

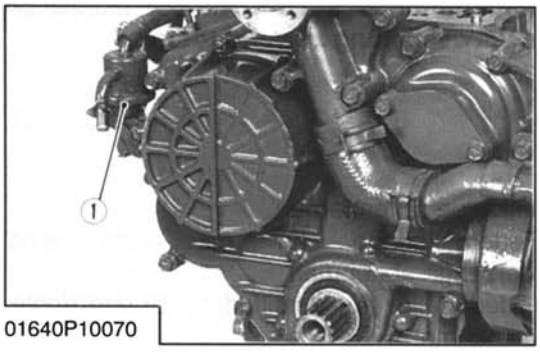

01640P10070

**Fuel Feed Pump and Hour Meter Gear Case**

1. Loosen the pipe clamp and remove the fuel pipe from the injection pump side.
2. Remove the fuel feed pump mounting nuts.
3. Remove the fuel feed pump (1).

**(When reassembling)**

- Apply a liquid gasket (Three Bond 1215 or equivalent) to the both sides of fuel feed pump gasket and hour meter gear case.

(1) Fuel Feed Pump

*01640S10340*

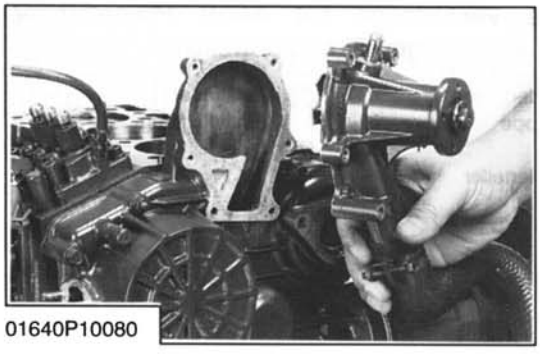
01640P10080

**Water Pump**

1. Remove the water pump flange.

**(When reassembling)**

- Apply a liquid gasket (Three Bond 1215 or equivalent) to the both sides of water pump flange gasket.

*01640S10350*

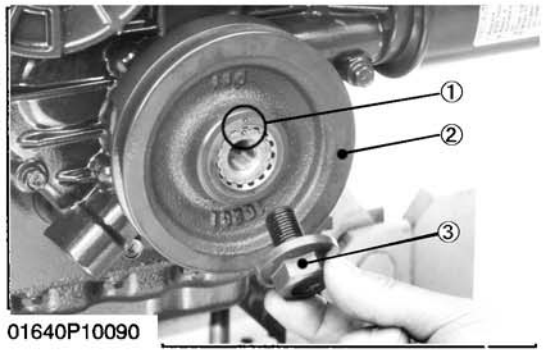

01640P10090

## Fan Drive Pulley

1. Set the stopper to the flywheel.
2. Remove the crankshaft screw (1).
3. Draw out the fan drive pulley (2) with a puller.

**(When reassembling)**

- Install the pulley (D905, D1005, D1105) to the crankshaft, aligning the marks (3) on them.

| | | |
|---|---|---|
| Tightening torque | Crankshaft screw (Serial No : ~ 604086) | 142.2 to 152.0 N·m<br>14.5 to 15.5 kgf·m<br>104.9 to 112.1 ft-lbs |
| | Crankshaft screw (Serial No : 604087 ~) | 235.4 to 245.2 N·m<br>24.0 to 25.0 kgf·m<br>173.6 to 180.8 ft-lbs |

(1) Crankshaft Screw
(2) Fan Drive Pulley
(3) Aligning Marks

*01640S10360*

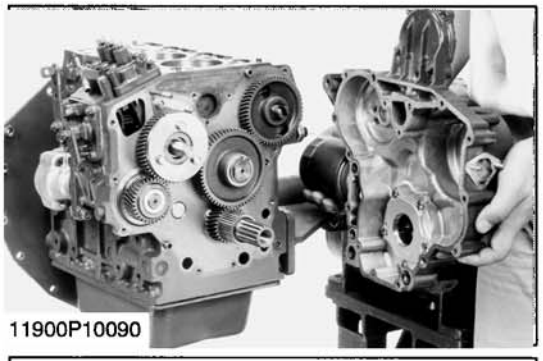
11900P10090

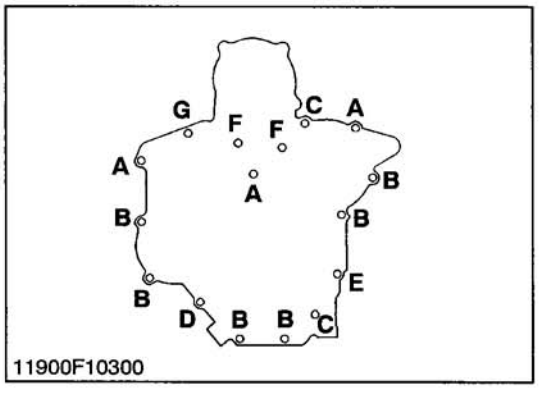

11900F10300

## Gear Case

1. Remove the gear case.

**(When reassembling)**

- Apply a liquid gasket (Three Bond 1215 or equivalent) to both sides of the gear case gasket.
- Grease thinly to the oil seal, and install it, ensuring the lip does not come off.

Length of the gear case mounting bolts (refer to the figure)

| | |
|---|---|
| A : 45 mm | E : 68 mm |
| B : 50 mm | F : 80 mm |
| C : 55 mm | G : Nut |
| D : 59 mm | |

*01640S10370*

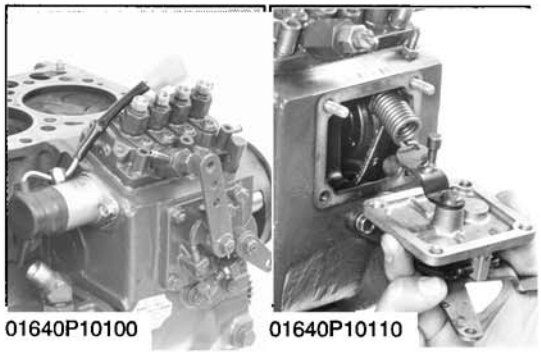
01640P10100 01640P10110

## Engine Stop Solenoid and Speed Control Plate

1. Remove the engine stop solenoid (1).
2. Remove the speed control plate with the governor springs 1 (2).

**(When reassembling)**

- Apply a liquid gasket (Three Bond 1215 or equivalent) to both sides of the solenoid cover gasket and control plate gasket.
- Be careful not to drop the governor springs 1 into the crankcase.

(1) Engine Stop Solenoid
(2) Governor Spring 1

*11900S10121*

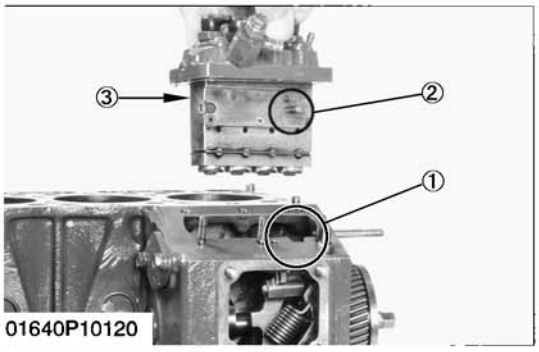

01640P10120

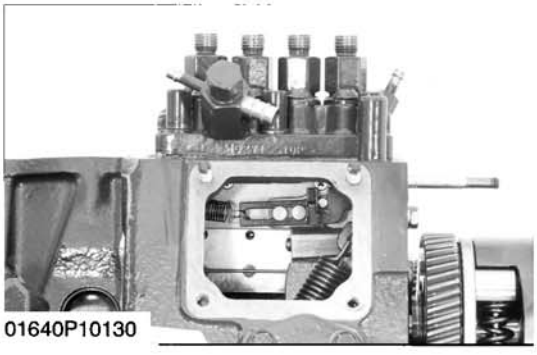
01640P10130

## Injection Pump

1. Align the control rack pin (3) with the notch (1) on the crankcase, and remove the injection pump (2).
2. Remove the injection pump shims.
3. In principle, the injection pump should not be disassembled.

**(When reassembling)**

- When installing the injection pump, insert the control rack pin (3) firmly into the groove of the fork lever and thrust lever.

**■ NOTE**

**(Engine serial number : ~ 489290)**

- **Insert the same number of shims as used before between crank case and pump.**
- **Addition or reduction of shim (0.15 mm, 0.0059 in.) delays or advances the injection timing by approx. 0.026 rad. (1.5°).**
- **Apply liquid-type gasket (Three Bons 1215 or its equivalent) to both sides of the injection pump shim before reassembling.**

**(Engine serial number : 489291 ~ )**

- **The sealant is applied to both sides of the soft metal gasket shim. The liquid gasket is not required for assembling.**
- **Addition or reduction of shim (0.05 mm, 0.0020 in.) delays or advances the injection timing by approx. 0.0087 rad. (0.5°).**
- **In disassembling and replacing, be sure to use the same number of new gasket shims with the same thickness.**

(1) Notch
(2) Injection Pump
(3) Control Rack Pin

*11900S10131*

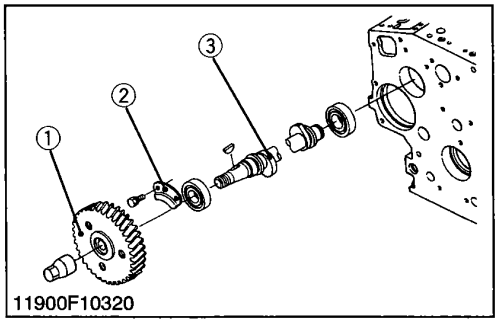

11900F10320

## Fuel Camshaft

1. Remove the fuel camshaft stopper (2).
2. Draw out the fuel camshaft (3) and injection pump gear (1).

**(When reassembling)**

- Apply engine oil thinly to the fuel camshaft before installation.

(1) Injection Pump Gear
(2) Fuel Camshaft Stopper
(3) Fuel Camshaft

*11900S10140*

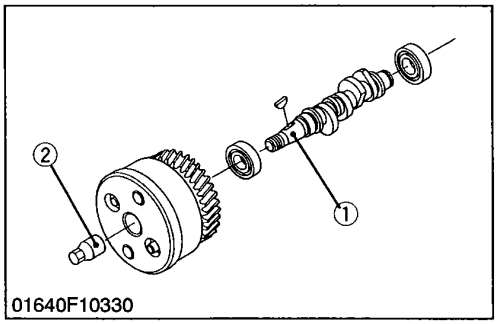

01640F10330

## Timer

**■ IMPORTANT**

- **If there are not problems with the timer, there is no need to separate it from the fuel camshaft.**
- **Hammers and similar tools should not be used if the timer is to be separated from the shaft.**

(1) Fuel Camshaft
(2) Timer Mounting Nut

*01640S10380*

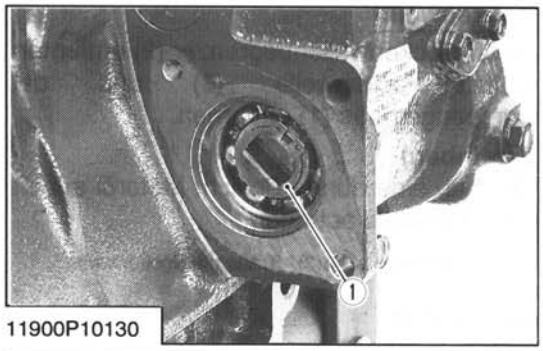

11900P10130

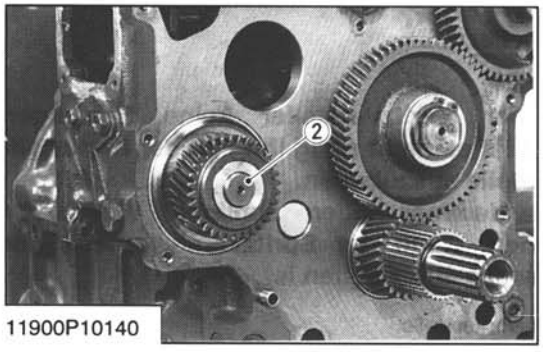

11900P10140

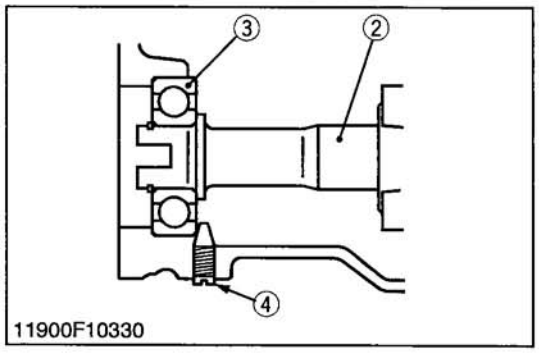

11900F10330

## Governor Shaft

1. Remove the external snap ring (1) from the governor shaft.
2. Remove the governor shaft (2).

**(When reassembling)**

- Make sure assembling the external snap ring of the governor shaft.
- Check the governor shaft for smooth rotation.

**■ IMPORTANT**

- **When replacing the ball bearing of governor shaft, securely fit the ball bearing (3) to the crankcase, apply an adhesive (Three Bond 1324B or equivalent) to the set screw (4), and fasten the screw until its tapered part contacts the circumferential end of the ball bearing.**

(1) External Snap Ring
(2) Governor Shaft
(3) Ball Bearing
(4) Set Screw

*11900S10151*

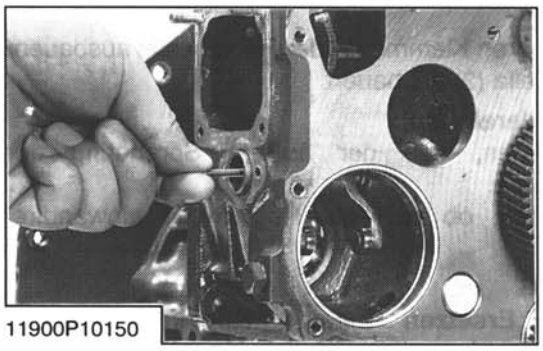
11900P10150

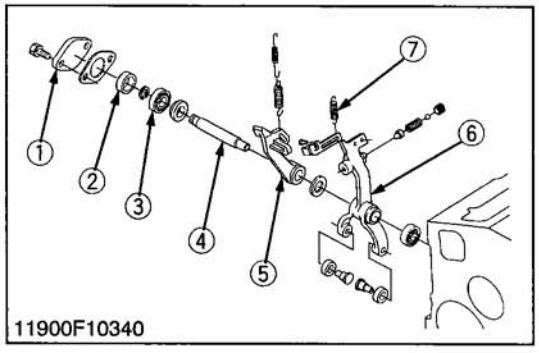

11900F10340

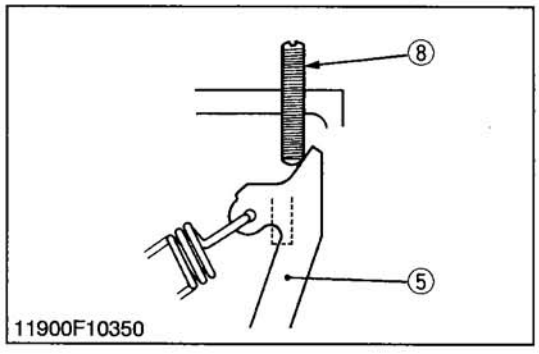

11900F10350

## Fork Lever

1. Remove the start spring (7).
2. Remove the fork lever shaft cover (1).
3. Remove the fork lever shaft (4).
4. Remove the spacer (2), bearing (3) and fork lever 1, 2.

**(When reassembling)**

- Apply a liquid gasket (Three Bond 1215 or equivalent) to both sides of the fork lever shaft cover.
- to assembling the fork lever shaft cover to position the mark **"UP"** on it upwards.
- Make sure assembling the start spring.

**■ IMPORTANT**

- **To assembling the fork lever 2 to the right side of fuel limit bolts as shown in the figure.**

| | |
|---|---|
| (1) Fork Lever Shaft Cover | (5) Fork Lever 2 |
| (2) Spacer | (6) Fork Lever 1 |
| (3) Bearing | (7) Start Spring |
| (4) Fork Lever Shaft | (8) Fuel Limit Bolt |

*11900S10161*

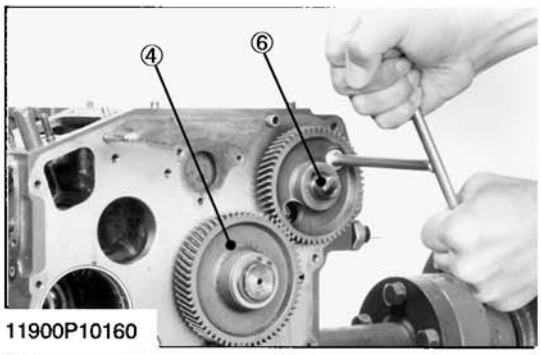

11900P10160

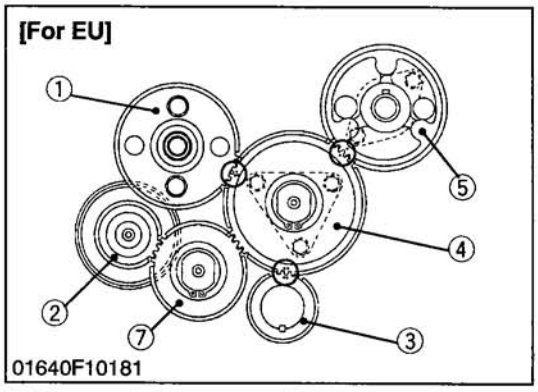

01640F10181

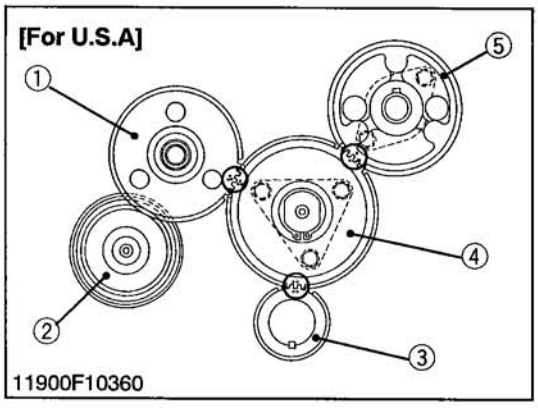

11900F10360

### Cam Gear and Idle Gear 1, 2

1. Remove the external snap ring.
2. Remove the idle gear 2 (7).
3. Remove the idle gear 1 (4).
4. Remove the camshaft stopper mounting bolt.
5. Remove the camshaft (6).

**■ IMPORTANT**

- **When installing the idle gear, be sure to align the alignment marks on gears.**
- **Make sure assembling the external snap ring and stopper.**

(1) Injection Pump Gear
(2) Governor Gear
(3) Crank Gear
(4) Idle Gear 1
(5) Cam Gear
(6) Camshaft
(7) Idle Gear 2

*11900S10171*

## [5] PISTON AND CONNECTING ROD

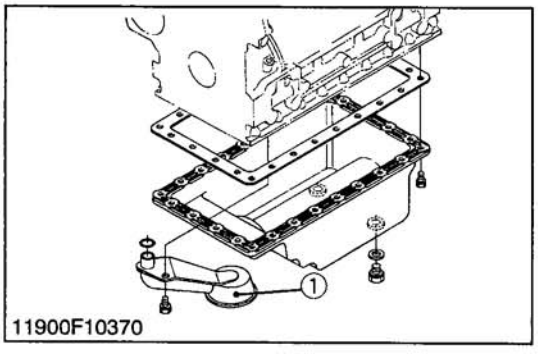

11900F10370

### Oil Pan and Oil Strainer

1. Remove the oil pan mounting screws.
2. Remove the oil pan by lightly tapping the rim of the pan with a wooden hammer.
3. Remove the oil strainer (1).

**(When reassembling)**

- Apply a liquid gasket (Three Bond 1215 or equivalent) to both sides of the oil pan gasket.
- To avoid uneven tightening, tighten mounting screws in diagonal order from the center.
- After cleaning the oil strainer, install it.
- Install the oil strainer (1), using care not to damage the O-ring.

(1) Oil Strainer

*11900S10181*

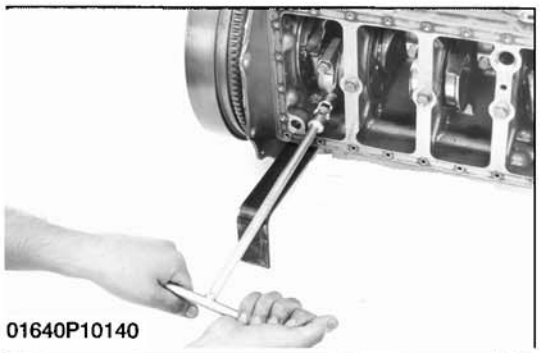
01640P10140

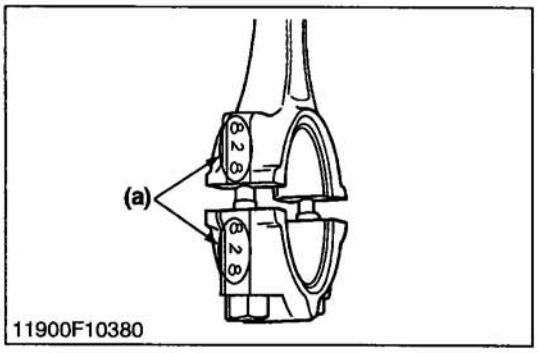

11900F10380

## Connecting Rod Cap

1. Remove the connecting rod screws from connecting rod cap.
2. Remove the connecting rod caps.

**(When reassembling)**

- Align the marks **(a)** with each other. (Face the marks toward the injection pump.)
- Apply engine oil to the connecting rod screws and lightly screw it in by hand, then tighten it to the specified torque.
  If the connecting rod screw won't be screwed in smoothly, clean the threads.
  If the connecting rod screw is still hard to screw in, replace it.

| | | |
|---|---|---|
| Tightening torque | Connecting rod screw | 41.2 to 46.1 N·m<br>4.2 to 4.7 kgf·m<br>30.3 to 33.9 ft-lbs |

**(a) Mark**

*11900S10191*

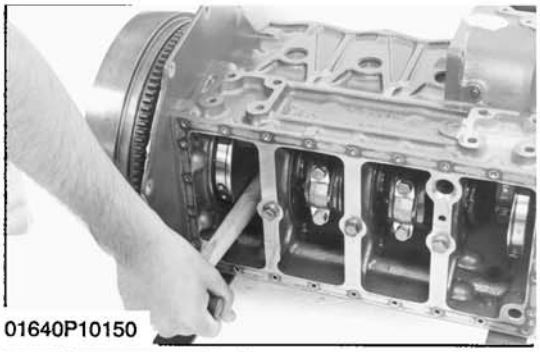
01640P10150

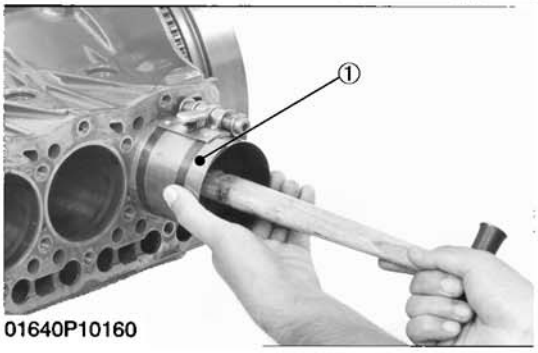

01640P10160

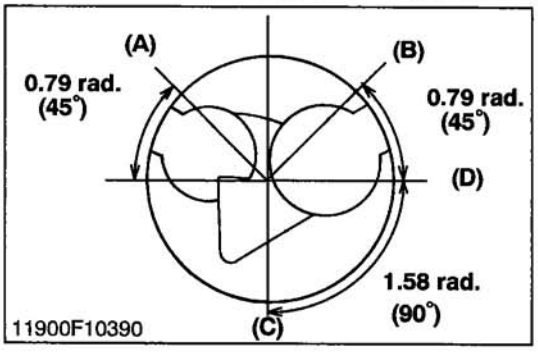

11900F10390

## Piston

1. Turn the flywheel and bring the No. 1 piston to the top dead center.
2. Pull out the piston upward by lightly tapping it from the bottom of the crankcase with the grip of a hammer.

**(When reassembling)**

- Before inserting the piston into the cylinder, apply enough engine oil to the cylinder.
- When inserting the piston into the cylinder, face the mark on the connecting rod to the injection pump.

**■ IMPORTANT**

- **Do not change the combination of cylinder and piston. Make sure of the position of each piston by marking. For example, mark "1" on the No.1 piston.**
- **When inserting the piston into the cylinder, place the gap of the compression ring 1 on the opposite side of the combustion chamber and stagger the gaps of the compression ring 2 and oil ring making a right angle from the gap of the compression ring 1.**
- **Carefully insert the pistons using a piston ring compressor (1). Otherwise, their chrome-plated section may be scratched, causing trouble inside the liner.**

(1) Piston Ring Compressor

**(A) Top Ring Gap**

**(B) Second Ring Gap**

**(C) Oil Ring Gap**

**(D) Piston Pin Hole**

*11900S10201*

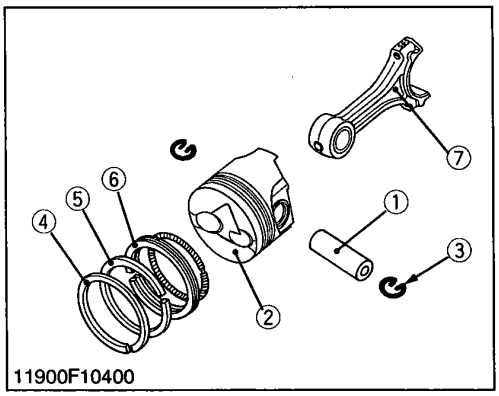

11900F10400

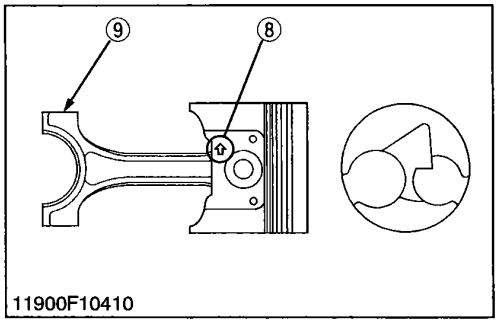

11900F10410

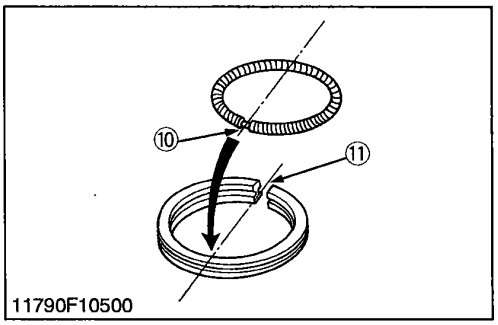

11790F10500

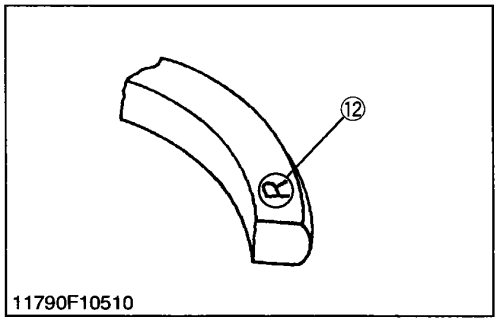

11790F10510

## Piston Ring and Connecting Rod

1. Remove the piston rings using a piston ring tool.
2. Put the casting mark (↑) (8) on the piston as shown in figure.
3. Remove the piston pin (1), and separate the connecting rod (7) from the piston (2).

**(When reassembling)**

- When installing the ring, assemble the rings so that the manufacturer's mark (12) near the gap faces the top of the piston.
- When installing the oil ring onto the piston, place the expander joint (10) on the opposite side of the oil ring gap (11).
- Apply engine oil to the piston pin.
- When installing the piston pin, immerse the piston in 80 °C (176 °F) oil for 10 to 15 minutes and insert the piston pin to the piston.
- When installing the connecting rod to the piston, align the mark (9) on the connecting rod to the casting mark (8).

**■ IMPORTANT**

- **Mark the same number on the connecting rod and the piston so as not to change the combination.**

(1) Piston Pin
(2) Piston
(3) Piston Pin Snap Ring
(4) Compression Ring 1
(5) Compression Ring 2
(6) Oil Ring
(7) Connecting Rod
(8) Casting Mark
(9) Mark
(10) Expander Joint
(11) Oil Ring Gap
(12) Manufacturer's Mark

*11900S10211*

# [6] FLYWHEEL AND CRANKSHAFT

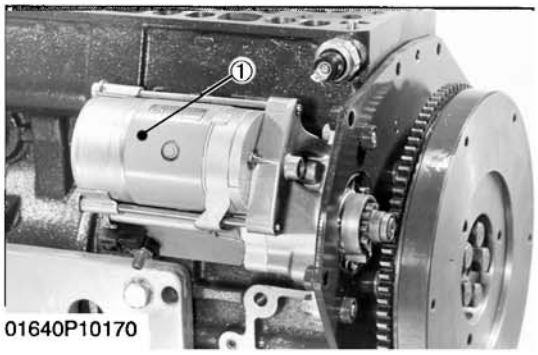

01640P10170

## Starter

1. Remove the starter (1).

(1) Starter

*01640S10390*

01640P10180

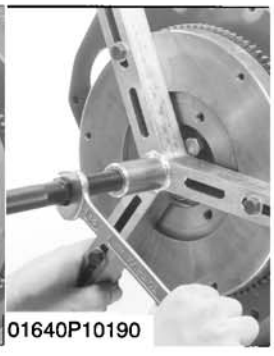
01640P10190

## Flywheel

1. Lock the flywheel not to turn using the flywheel stopper.
2. Remove the flywheel screws, except for two which must be loosened and left as they are.
3. Set a flywheel puller (Code No: 07916-32011), and remove the flywheel.

**(When reassembling)**

- Apply engine oil to the flywheel screws.

*01640S10400*

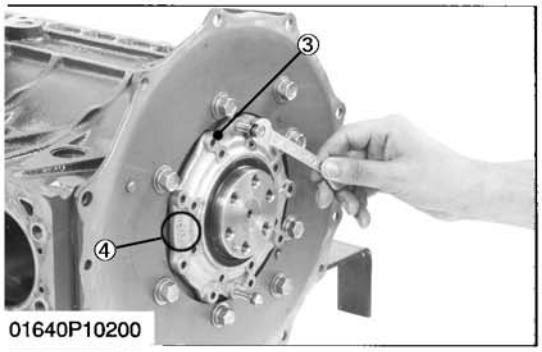

01640P10200

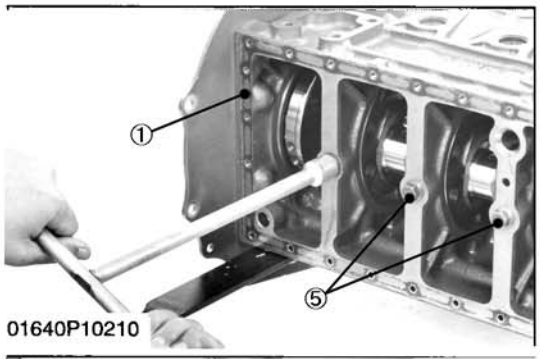

01640P10210

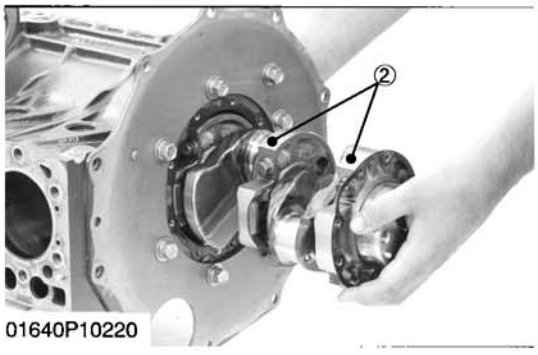

01640P10220

## Bearing Case Cover and Crankshaft

**■ NOTE**

- **Before disassembling, check the side clearance of crankshaft. Also check it during reassembly.**

1. Remove the bearing case cover mounting screws.
2. Screw two removed screws into the screw hole of bearing case cover to remove it.
3. Remove the bearing case screw 2 (5).
4. Pull out the crankshaft.

**(When reassembling)**

**■ IMPORTANT**

- **Install the crankshaft sub assembly, aligning the screw hole of main bearing case 2 (2) with the screw hole of cylinder block (1).**
- **Apply engine oil to the seat and thread of bearing case screw 2 (5) and tightening it.**
- **Install the bearing case cover (3) to position the casting mark "UP" (4) on it upward.**
- **Tighten the bearing case cover mounting screws with even force on the diagonal line.**

(1) Cylinder Block
(2) Main Bearing Case 2
(3) Bearing Case Cover
(4) Top Mark "UP"
(5) Bearing Case Screw 2

*01640S10410*

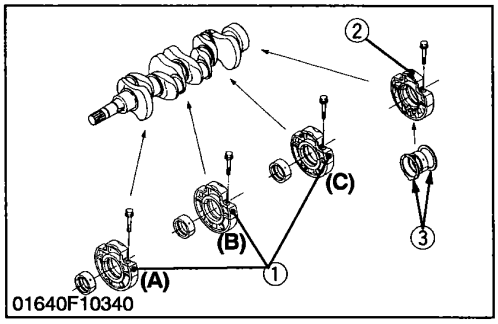

01640F10340

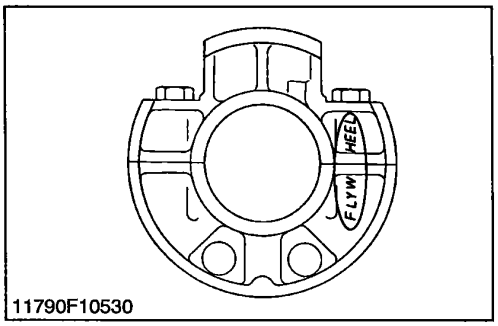

11790F10530

**Main Bearing Case Assembly**

1. Remove the two main bearing case screws 1, and remove the main bearing case assembly (2), being careful with the thrust bearing (3) and crankshaft bearing 2.
2. Remove the main bearing case assembies 1, 2 and 3 as above.

**(When reassembling)**

- Clean the oil passage in the main bearing case.
- Apply clean engine oil on the crankshaft bearing 2 and thrust bearings.
- Since diameters of main bearing case vary, install them in order of makings (**A, B, C**) from the gear case side.
- When installing the main bearing case assemblies 1, 2 and 3, face the mark **"FLYWHEEL"** to the flywheel.
- Be sure to install the thrust bearing with its oil groove facing outward.

(1) Main Bearing Case Assembly 1, 2 and 3
(2) Main Bearing Case Assembly
(3) Thrust Bearing

*11900S10251*

# SERVICING

## [1] CYLINDER HEAD

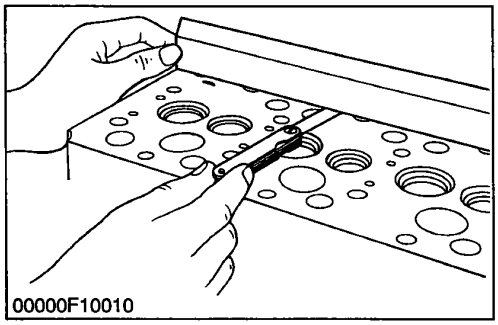
00000F10010

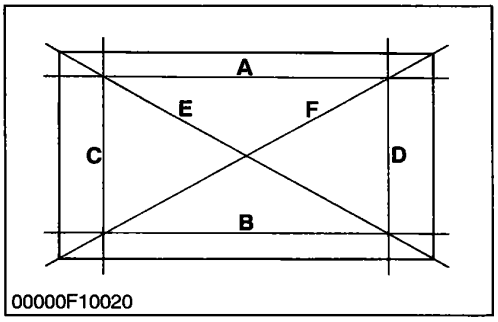

00000F10020

**Cylinder Head Surface Flatness**

1. Thoroughly clean the cylinder head surface.
2. Place a straightedge on the cylinder head's four sides and two diagonal as shown in the figure.
   Measure the clearance with a feeler gauge.
3. If the measurement exceeds the allowable limit, correct it with a surface grinder.

**■ IMPORTANT**

- **Do not place the straight edge on the combustion chamber.**
- **Be sure to check the valve recessing after correcting.**

*00000S10011*

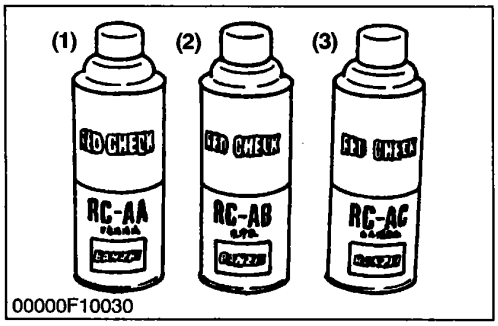

00000F10030

## Cylinder Head Flaw

1. Prepare an air spray red check (Code No. 07909-31371).
2. Clean the surface of the cylinder head with detergent (2).
3. Spray the cylinder head surface with the red permeative liquid (1). Leave it five to ten minutes after spraying.
4. Wash away the red permeative liquid on the cylinder head surface with the detergent (2).
5. Spray the cylinder head surface with white developer (3).
6. If flawed, it can be identified as red marks.

(1) Red Permeative Liquid
(2) Detergent
(3) White Developer

*00000S10020*

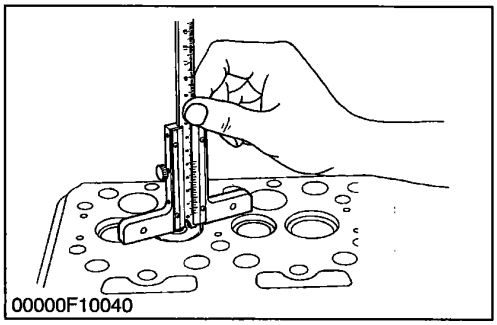
00000F10040

## Valve Recessing

1. Clean the cylinder head, the valve face and seat.
2. Insert the valve into the valve guide.
3. Measure the valve recessing with a depth gauge.
4. If the measurement exceeds the allowable limit, replace the valve.
   If it still exceeds the allowable limit after replacing the valve, correct the valve seat face of the cylinder head with a valve seat cutter (Code No. 07909-33102) or valve seat grinder.
   Then, correct the cylinder head surface with a surface grinder, or replace the cylinder head.

*00000S10031*

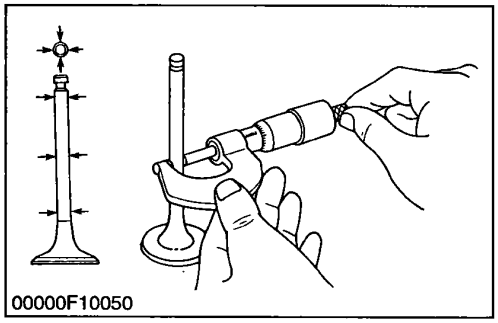
00000F10050

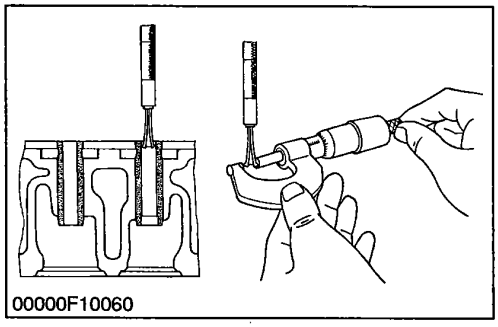
00000F10060

## Clearance between Valve Stem and Valve Guide

1. Remove carbon from the valve guide section.
2. Measure the valve stem O.D. with an outside micrometer.
3. Measure the valve guide I.D. of the cylinder head at the most wear part as shown in the figure below with a small hole gauge. And calculate the clearance.
4. If the clearance exceeds the allowable limit, replace the valves. If it still exceeds the allowable limit, replace the valve guide.

*00000S10042*

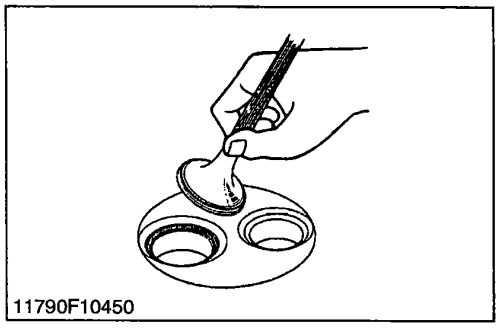
11790F10450

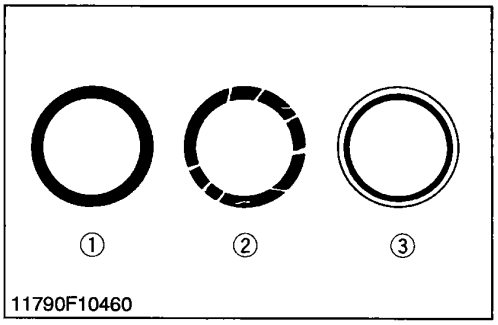

11790F10460

## Valve Seating

1. Coat the valve face lightly with prussian blue and put the valve on its seat to check the contact.
2. If the valve does not seat all the way around the valve seat or the valve contact is less than 70 %, correct the valve seating as follows.
3. If the valve contact does not comply with the reference value, replace the valve or correct the contact of valve seating.

(1) Correct
(2) Incorrect
(3) Incorrect

*11790S10230*

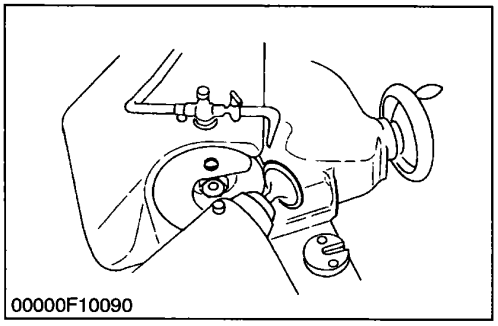
00000F10090

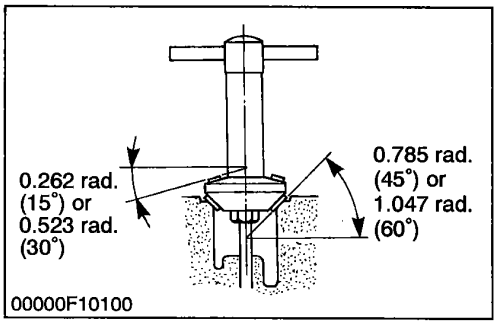

00000F10100

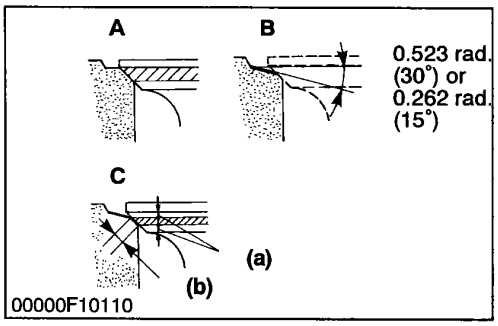

00000F10110

## Correcting Valve and Valve Seat

**■ NOTE**

- **Before correcting the valve and seat, check the valve stem and the I.D. of the valve guide section, and repair them if necessary.**
- **After correcting the valve seat, be sure to check the valve recessing.**

**1) Correcting Valve**

1. Correct the valve with a valve refacer.

**2) Correcting Valve Seat**

1. Slightly correct the seat surface with a 1.047 rad. (60°) (intake valve) or 0.785 rad. (45°) (exhaust valve) seat cutter (Code No. 07909-33102).
2. Resurface the seat surface with a 0.523 rad. (30°) valve seat cutter to intake valve seat and with a 0.262 rad. (15°) valve seat cutter to exhaust valve seat so that the width is close to specified valve seat width (2.12 mm, 0.0835 in.).
3. After resurfacing the seat, inspect for even valve seating, apply a thin film of compound between the valve face and valve seat, and fit them with valve lapping tool.
4. Check the valve seating with prussian blue. The valve seating surface should show good contact all the way around.

**(a) Identical Dimensions**
**(b) Valve Seat Width**
**(A) Check Contact**
**(B) Correct Seat Width**
**(C) Check Contact**

*00000S10070*

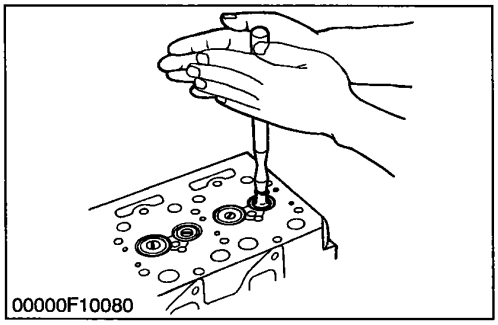
00000F10080

## Valve Lapping

1. Apply compound evenly to the valve lapping surface.
2. Insert the valve into the valve guide. Lap the valve onto its seat with a valve flapper or screwdriver.
3. After lapping the valve, wash the compound away and apply oil, then repeat valve lapping with oil.
4. Apply prussian blue to the contact surface to check the seated rate. If it is less than 70 %, repeat valve lapping again.

**■ IMPORTANT**

- **When valve lapping is performed, be sure to check the valve recessing and adjust the valve clearance after assembling the valve.**

*00000S10060*

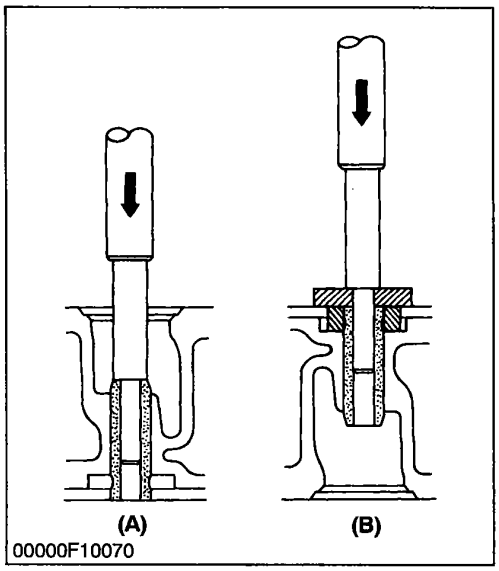

00000F10070

## Replacing Valve Guide

**(When removing)**

1. Using a valve guide replacing tool (see page S-65), press out the used valve guide.

**(When installing)**

1. Clean a new valve guide, and apply engine oil to it.
2. Using a valve guide replacing tool, press in a new valve guide until it is flush with the cylinder head as shown in the figure.
3. Ream precisely the I.D. of the valve guide to the specified dimension.

**■ IMPORTANT**

- **Do not hit the valve guide with a hammer, etc. during replacement.**

**(A) When Removing** **(B) When Installing**

*00000S10052*

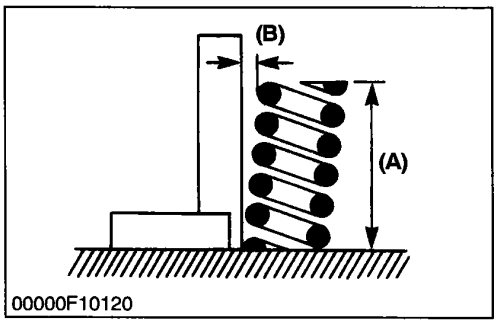

00000F10120

## Free Length and Tilt of Valve Spring

1. Measure the free length **(A)** with vernier calipers. If the measurement is less than the allowable limit, replace it.
2. Put the spring on a surface plate, place a square on the side of the spring, and check to see if the entire side is in contact with the square. Rotate the spring and measure the maximum **(B)**. If the measurement exceeds the allowable limit, replace.
3. Check the entire surface of the spring for scratches. Replac it, if any.

*00000S10082*

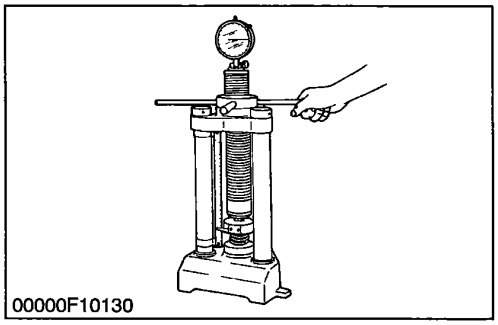
00000F10130

**Valve Spring Setting Load**

1. Place the valve spring on a tester and compress it to the same length it is actually compressed in the engine.
2. Read the compression load on the gauge.
3. If the measurement is less than the allowable limit, replace it.

*00000S10092*

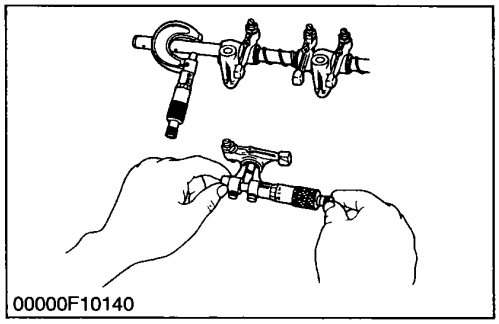
00000F10140

**Oil Clearance between Rocker Arm Shaft and Beraing**

1. Measure the rocker arm bearing I.D. with an inside micrometer.
2. Measure the rocker arm shaft O.D. with an outside micrometer, and then calculate the oil clearance.
3. If the clearance exceeds the allowable limit, replace the rocker arm and measure the oil clearance again. If it still exceeds the allowable limit, replace also the rocker arm shaft.

*00000S10102*

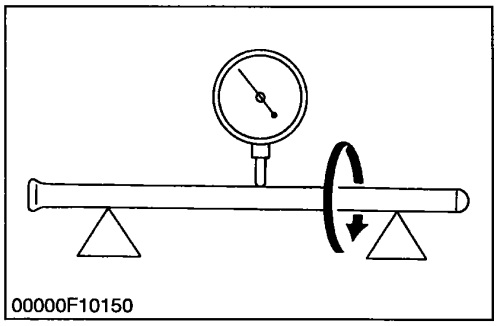
00000F10150

**Push Rod Alignment**

1. Check the both end of the push rod for cracks, damage and unusual wear.
2. Measure the bending of the push rod with a dial indicator.
3. If the measurement exceeds the allowable limit, replace the push rod.

*00000S10111*

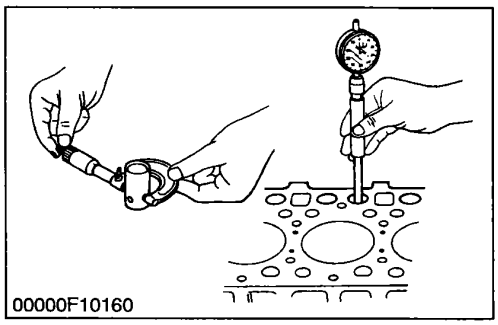
00000F10160

**Oil Clearance between Tappet and Tappet Guide Bore**

1. Measure the tappet O.D. with an outside micrometer
2. Measure the I.D. of the tappet guide bore with a cylinder gauge, and calculate the oil clearance.
3. If the oil clearance exceeds the allowable limit or the tappet is damaged, replace the tappet.

*00000S10122*

# [2] TIMING GEAR AND CAMSHAFT

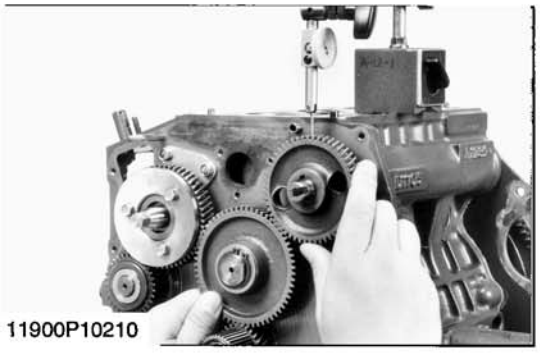
11900P10210

### Timing Gear Backlash

1. Set a dial indicator (lever type) with its tip on the gear tooth.
2. Move the gear to measure the backlash, holding its mating gear.
3. If the backlash exceeds the allowable limit, check the oil clearance of the shafts and the gear.
4. If the oil clearance is proper, replace the gear.

*00000S10132*

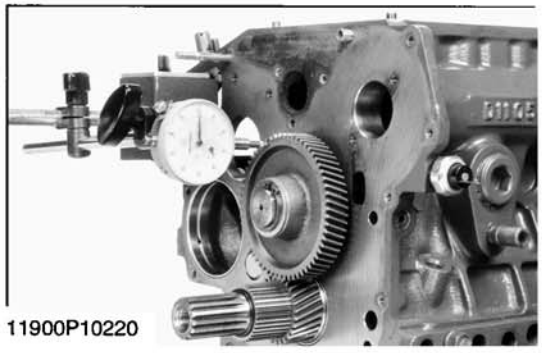
11900P10220

### Idle Gear Side Clearance

1. Set a dial indicator with its tip on the idle gear.
2. Measure the side clearance by moving the idle gear to the front and rear.
3. If the measurement exceeds the allowable limit, replace the idle gear collar.

*00000S10142*

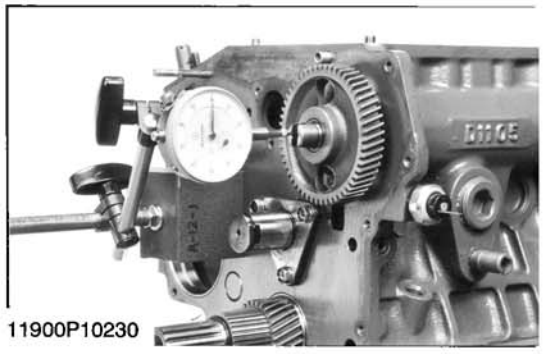
11900P10230

### Camshaft Side Clearance

1. Set a dial indicator with its tip on the camshaft.
2. Measure the side clearance by moving the cam gear to the front and rear.
3. If the measurement exceeds the allowable limit, replace the camshaft stopper.

*00000S10182*

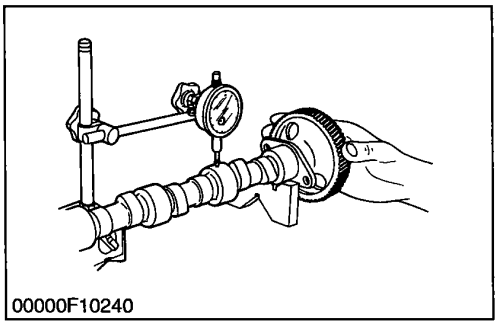
00000F10240

## Camshaft Alignment

1. Support the camshaft with V blocks on the surface plate and set a dial indicator with its tip on the intermediate journal at right angle.
2. rotate the camshaft on the V blocks and get the misalignment (half of the measurement).
3. if the misalignment exceeds the allowable limit, replace the camshaft.

*00000S10191*

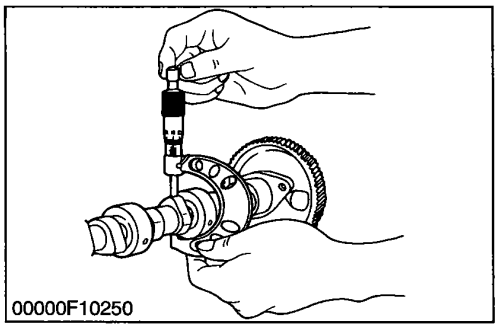
00000F10250

## Cam Height

1. Measure the height of the cam at its highest point with an outside micrometer.
2. If the measurement is less than the allowable limit, replace the camshaft.

*00000S10202*

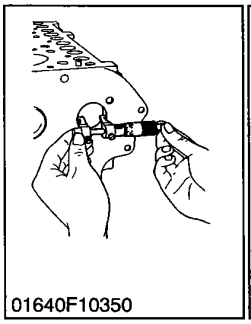
01640F10350

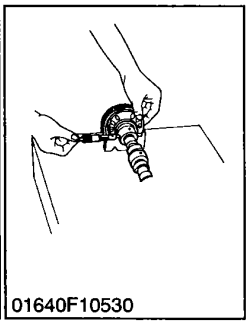
01640F10530

## Oil Clearance of Camshaft Journal

1. Measure the camshaft journal O.D. with an outside micrometer
2. Measure the cylinder block bore I.D. for camshaft with an inside micrometer.
   Calculate the oil clearance.
3. If the clearance exceeds the allowable limit, replace the camshaft.

*00000S10172*

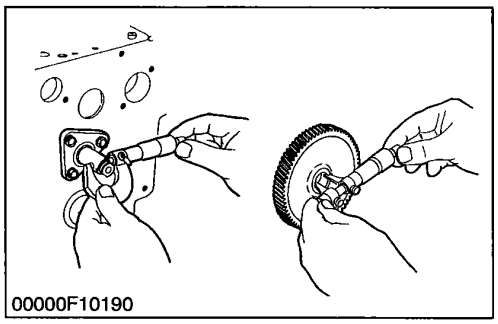
00000F10190

## Oil Clearance between Idle Gear Shaft and Idle Gear Bushing

1. Measure the idle gear shaft O.D. with an outside micrometer.
2. Measure the idle gear bushings I.D. with an inside micrometer, and calculate the oil clearance.
3. If the oil clearance exceeds the allowable limit, replace the bushing.

*00000S10152*

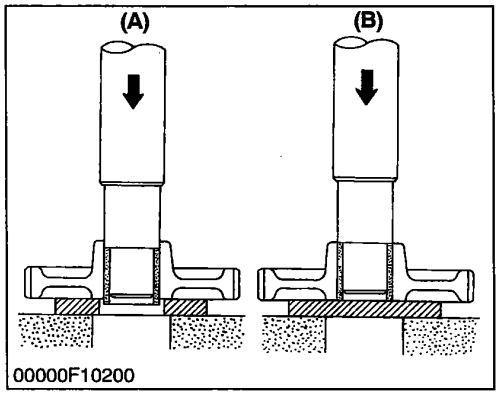


**Replacing Idle Gear Bushing**

**(A) (When removing)**

1. Using an idle gear bushing replacing tool (see page S-69), press out the used bushing.

**(B) (When installing)**

1. Clean a new idle gear bushing and idle gear bore, and apply engine oil to them.
2. Using an idle gear bushing replacing tool, press in a new bushing (service parts) to the specified dimension. (See figure.)

*00000S10161*

# [3] PISTON AND CONNECTING ROD

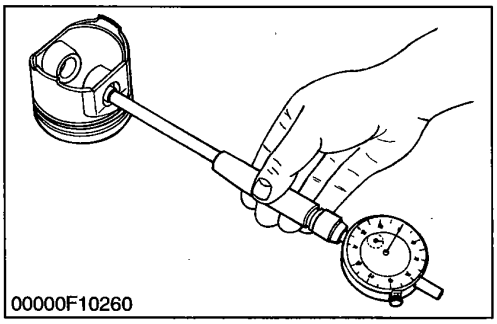


**Piston Pin Bore I.D.**

1. Measure the piston pin bore I.D. in both the horizontal and vertical directions with a cylinder gauge.
2. If the measurement exceeds the allowable limit, replace the piston.

*00000S10212*

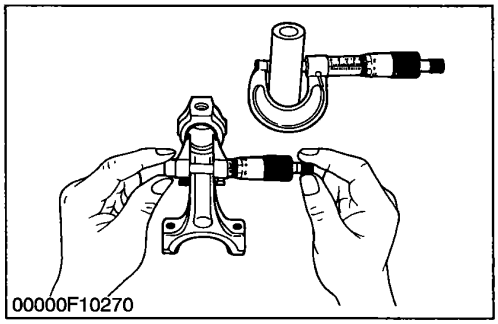


**Oil Clearance between Piston Pin and Small End Bushing**

1. Measure the O.D. of the piston pin where it contacts the bushing with an outside micrometer.
2. Measure the I.D. of the piston pin bushing at the connecting rod small end with a cylilnder gauge.
   Calculate the oil clearance.
3. If the clearance exceeds the allowable limit, replace the bushing. If it still exceeds the allowable limit, replace the piston pin.

*00000S10222*

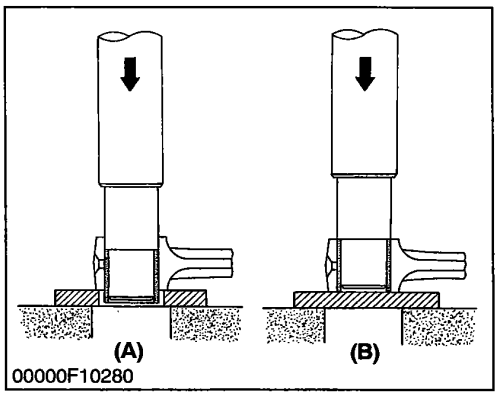


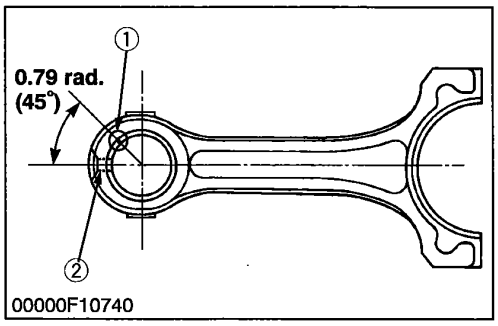


## Replacing Small End Bushing

**(When removing)**

1. Press out the used bushing using a small end bushing replacing tool.

**(When installing)**

1. Clean a new small end bushing and bore, and apply engine oil to them.
2. Insert a new bushing onto the tool and press-fit it with a press so that the seam (1) of bushing positions as shown in the figure, until it is flash with the connecting rod.
3. Drill a hole to the bushing with aligning the oil hole (2) of connecting rod using 4.0 mm dia. (0.157 in. dia.) drill.

**■ NOTE**

- **Be sure to chamfer the oil hole circumference with an oil stone.**

(1) Seam
(2) Oil Hole

**(A) When Removing**
**(B) When Installing**

*00000S10231*

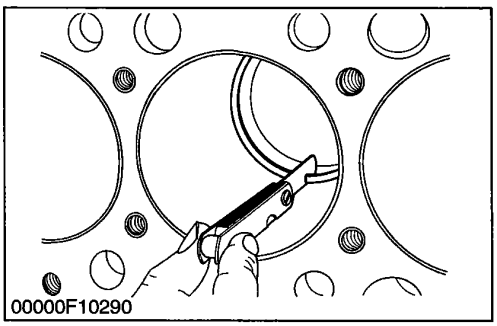


## Piston Ring Gap

1. Insert the piston ring into the lower part of the liner (the least worn out part) with the piston.
2. Measure the ring gap with a feeler gauge.
3. If the gap exceeds the allowable limit, replace the piston ring.

*00000S10242*

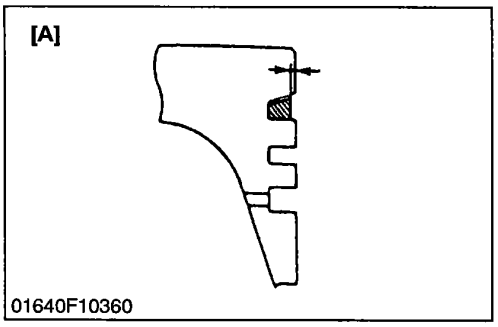


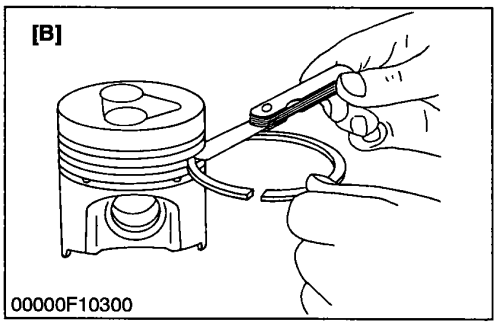


## Clearance between Piston Ring and Groove

1. Remove carbon from the ring grooves.
2. Measure the clearance between the ring and the groove with a feeler gauge or depth gauge.
3. If the clearance exceeds allowable limit, replace the ring since compression leak and oil shortage result.
4. If the clearance still exceeds the allowable limit after replacing the ring, replace the piston.

| | |
|---|---|
| Factory spec : **A** | More than 0.2 mm<br>0.079 in. |

**(A) Top Ring (Key Stone Type)** **(B) 2nd, Oil Ring**

*00000S10252*

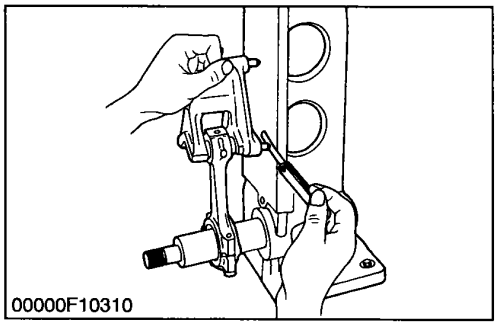


## Connecting Rod Alignment

**■ NOTE**

- **Since the I.D. of the connecting rod small end bushing is the basis of this check, check the bushing for wear beforehand.**

1. Remove the crankpin bearing, and install the connecting rod cap.
2. Install the piston pin in the connecting rod.
3. Install the connecting rod on the connecting rod alignment tool (Code No. 07909-31661).
4. Put a gauge over the piston pin, and move it against the face plate.
5. If the gauge does not fit squarely against the face plate, measure the space between the pin of the gauge and the face plate.
6. If the measurement exceeds the allowable limit, replace the connecting rod.

*00000S10261*

# [4] CRANKSHAFT

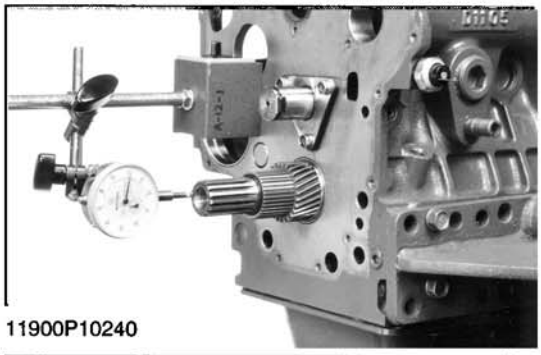

11900P10240

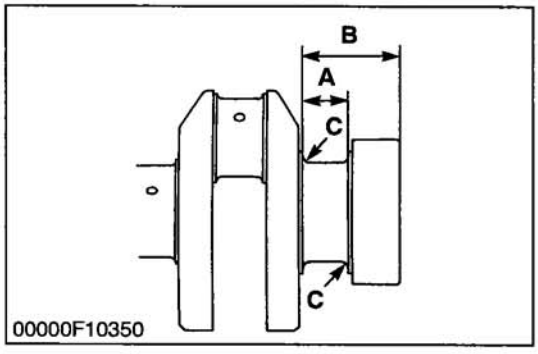


00000F10350

## Crankshaft Side Clearance

1. Set a dial indicator with its tip on the end of the crankshaft.
2. Measure the side clearance by moving the crankshaft to the front and rear.
3. If the measurement exceeds the allowable limit, replace the thrust bearings.
4. If the same size bearing is useless because of the crankshaft journal wear, replace it with an oversize one referring to the table and figure.

| | | |
|---|---|---|
| Crankshaft side clearance | Factory spec. | 0.15 to 0.31 mm<br>0.0059 to 0.0122 in. |
| | Allowable limit | 0.50 mm<br>0.0197 in. |

**(Reference)**

- Oversize thrust bearing

| Oversize | Bearing | Code Number | Marking |
|---|---|---|---|
| 0.2 mm<br>0.008 in. | Thrust bearing 1 02 | 15521-23951 | 020 OS |
| | Thrust bearing 2 02 | 19202-23971 | 020 OS |
| 0.4 mm<br>0.016 in. | Thrust bearing 1 04 | 15521-23961 | 040 OS |
| | Thrust bearing 2 04 | 19202-23981 | 040 OS |

- Oversize dimensions of crankshaft journal

| Over-size / Dimension | 0.2 mm<br>0.008 in. | 0.4 mm<br>0.016 in. |
|---|---|---|
| A | 28.20 to 28.25 mm<br>1.1102 to 1.1122 in. | 28.40 to 28.45 mm<br>1.1181 to 1.1201 in. |
| B | 51.5 to 51.7 mm<br>2.028 to 2.035 in. | 51.6 to 51.8 mm<br>2.031 to 2.039 in. |
| C | 2.3 to 2.7 mm radius<br>0.091 to 0.106 in. radius | 2.3 to 2.7 mm radius<br>0.091 to 0.106 in. radius |
| The crankshaft journal must be fine-finished to higher than (0.8-S) VVVV. | | |

*00000S10291*

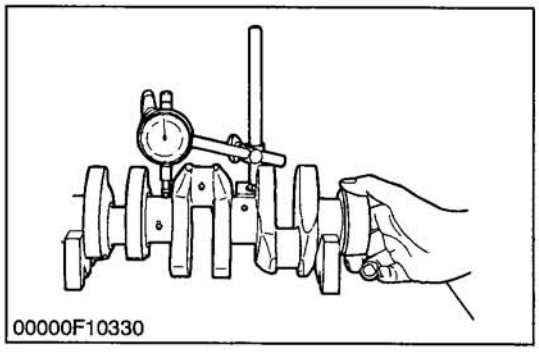

00000F10330

## Crankshaft Alignment

1. Support the crankshaft with V blocks on the surface plate and set a dial indicator with its tip on the intermediate journal at right angle.
2. Rotate the crankshaft on the V blocks and get the misalignment (half of the measurement).
3. If the misalignment exceeds the allowable limit, replace the crankshaft.

*00000S10281*

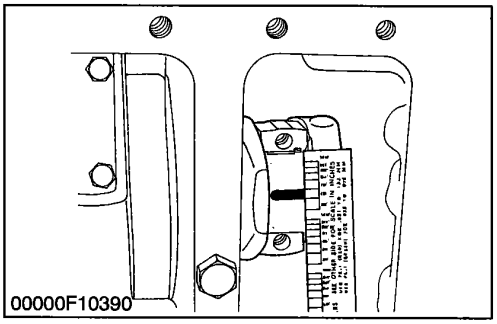
00000F10390

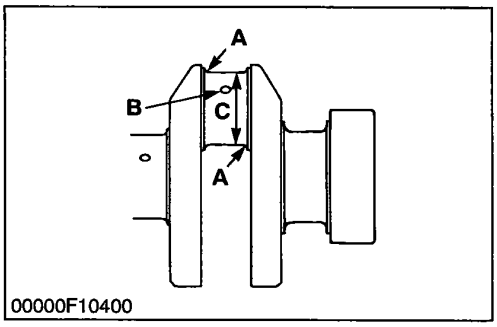

00000F10400

## Oil Clearance between Crankpin and Crankpin Bearing

1. Clean the crankpin and crankpin bearing.
2. Put a strip of plastigage (Code No. 07909-30241) on the center of the crankpin.
3. Install the connecting rod cap and tighten the connecting rod screws to the specified torque, and remove the cap again.
4. Measure the amount of the flattening with the scale, and get the oil clearance.
5. If the oil clearance exceeds the allowable limit, replace the crankpin bearing.
6. If the same size bearing is useless because of the crankpin wear, replace it with an undersize one referring to the table and figure.

■ **NOTE**

- **Never insert the plastigage into the crankpin oil hole.**
- **Be sure not to move the crankshaft while the connecting rod screws are tightened.**

| | | |
|---|---|---|
| Oil clearance between crankpin and crankpin bearing | Factory spec. | 0.029 to 0.091 mm<br>0.00114 to 0.00358 in. |
| | Allowable limit | 0.20 mm<br>0.0079 in. |

| | | |
|---|---|---|
| Crankpin O.D. | Factory spec. | 39.959 to 39.975 mm<br>1.57319 to 1.57382 in. |
| Crankpin bearing I.D. | Factory spec. | 40.004 to 40.050 mm<br>1.57496 to 1.57677 in. |

**(Reference)**

- Undersize crankpin bearing

| Undersize | Bearing | Code Number | Marking |
|---|---|---|---|
| 0.2 mm<br>0.008 in. | Crankpin bearing 02 | 16241-22971 | 020 US |
| 0.4 mm<br>0.016 in. | Crankpin bearing 04 | 16241-22981 | 040 US |

- Undersize dimensions of crankpinl

| Undersize / Dimension | 0.2 mm<br>0.008 in. | 0.4 mm<br>0.016 in. |
|---|---|---|
| A | 2.8 to 3.2 mm radius<br>0.1102 to 0.1260 in.radius | 2.8 to 3.2 mm radius<br>0.1102 to 0.1260 in.radius |
| B | 1.0 to 1.5 mm radius<br>0.0394 to 0.0591 in. radius | 1.0 to 1.5 mm radius<br>0.0394 to 0.0591 in. radius |
| C | 39.759 to 39.775 mm<br>1.56531 to 1.56594 in. | 39.559 to 39.575 mm<br>1.55744 to 1.55807 in. |
| The crankpin must be fine-finished to higher than (0.8-S) ∇∇∇∇. | | |

*00000S10321*

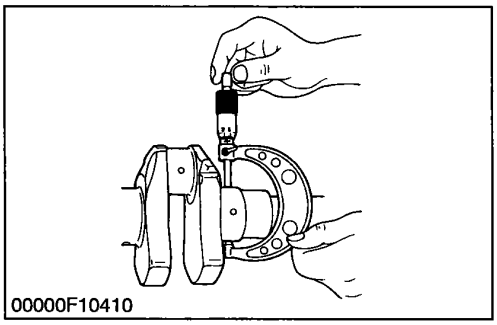
00000F10410

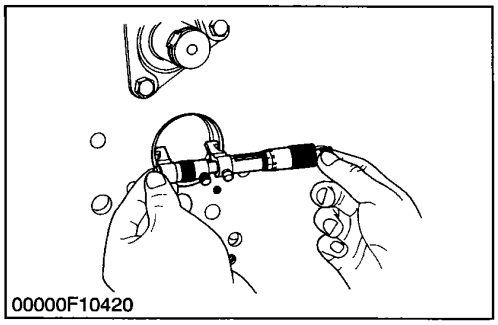
00000F10420

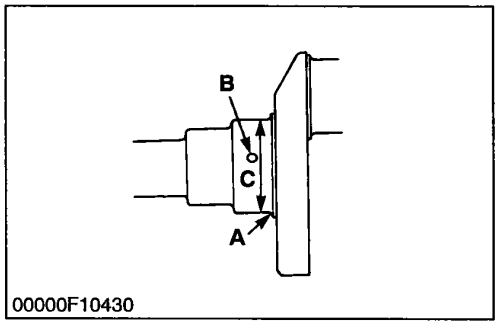

00000F10430

## Oil Clearance between Crankshaft Journal and Crankshaft Bearing 1

1. Measure the O.D. of the crankshaft front journal with an outside micrometer.
2. Measure the I.D. of the crankshaft bearing 1 with an inside micrometer, and calculate the oil clearance.
3. If the oil clearance exceeds the allowable limit, replace the crankshaft bearing 1.
4. If the same size bearing is useless because of the crankshaft journal wear, replace it with an undersize one referring to the table and figure.

| | | |
|---|---|---|
| Oil clearance between crankshaft journal and crankshaft bearing 1 | Factory spec. | 0.034 to 0.114 mm<br>0.00134 to 0.00449 in. |
| | Allowable limit | 0.20 mm<br>0.0079 in. |

| | | |
|---|---|---|
| Crankshaft journal O.D. | Factory spec. | 47.934 to 47.950 mm<br>1.88716 to 1.88779 in. |
| Crankshaft bearing 1 I.D. | Factory spec. | 47.984 to 48.048 mm<br>1.88913 to 1.89165 in. |

**(Reference)**

- Undersize crankshaft bearing 1

| Undersize | Bearing | Code Number | Marking |
|---|---|---|---|
| 0.2 mm<br>0.008 in. | Crankshaft bearing 1<br>02 | 16241-23911 | 020 US |
| 0.4 mm<br>0.016 in. | Crankshaft bearing 1<br>04 | 16241-23921 | 040 US |

- Undersize dimensions of crankshaft journal

| Undersize / Dimension | 0.2 mm<br>0.008 in. | 0.4 mm<br>0.016 in. |
|---|---|---|
| A | 2.3 to 2.7 mm radius<br>0.0906 to 0.1063 in.radius | 2.3 to 2.7 mm radius<br>0.0906 to 0.1063 in.radius |
| B | 1.0 to 1.5 mm radius<br>0.0394 to 0.0591 in. radius | 1.0 to 1.5 mm radius<br>0.0394 to 0.0591 in. radius |
| C | 47.734 to 47.750 mm<br>1.87929 to 1.87992 in. | 47.534 to 47.550 mm<br>1.87142 to 1.87204 in. |
| The crankshaft journal must be fine-finished to higher than ▽▽▽▽ (0.8-S). | | |

*00000S10331*

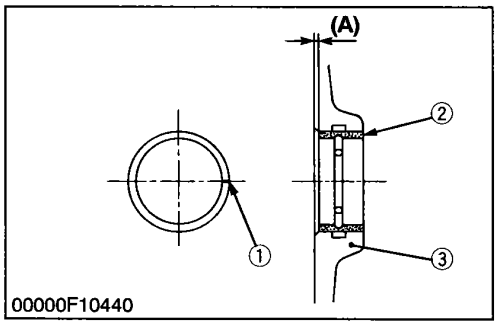


## Replacing Crankshaft Bearing 1

**(When removing)**

1. Press out the used crankshaft bearing 1 using a crankshaft bearing 1 replacing tool.

**(When installing)**

1. Clean a new crankshaft bearing 1 and crankshaft journal bore, and apply engine oil to them.
2. Using a crankshaft bearing 1 replacing tool, press in a new bearing 1 (2) so that its seam (1) directs toward the exhaust manifold side. (See figure)

| | | |
|---|---|---|
| Dimension **(A)** | Factory spec. | 0 to 0.3 mm<br>0 to 0.0118 in. |

(1) Seam
(2) Crankshaft Bearing 1
(3) Cylinder Block

*00000S10341*

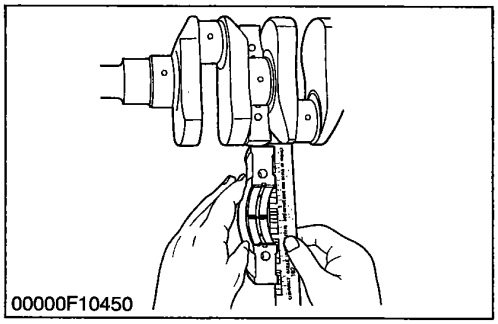
00000F10450

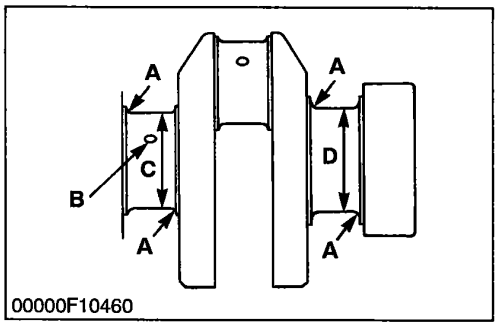

00000F10460

**Oil Clearance between Crankshaft Journal and Crankshaft Bearing 2 (Crankshaft Bearing 3)**

1. Put a strip of plastigage (Code No. 07909-30241) on the center of the journal.
2. Install the bearing case and tighten the bearing case screws 1 to the specified torque, and remove the bearing case again.
3. Measure the amount of the flattening with the scale, and get the oil clearance.
4. If the oil clearance exceeds the allowable limit, replace the crankshaft bearing 2 (crankshaft bearing 3).
5. If the same size bearing is useless because of the crankshaft journal wear, replace it with an undersize one referring to the table and figure.

■ **NOTE**

- **Be sure not to move the crankshaft while the bearing case screws are tightened.**

| | | |
|---|---|---|
| Oil clearance between crankshaft journal and crankshaft bearing 2 | Factory spec. | 0.034 to 0.095 mm<br>0.00134 to 0.00374 in. |
| | Allowable limit | 0.20 mm<br>0.0079 in. |
| Crankshaft journal O.D. (Intermediate) | Factory spec. | 47.934 to 47.950 mm<br>1.88716 to 1.88779 in. |
| Crankshaft bearing 2 I.D. | Factory spec. | 47.984 to 48.029 mm<br>1.88913 to 1.89091 in. |

| | | |
|---|---|---|
| Oil clearance between crankshaft journal and crankshaft bearing 3 | Factory spec. | 0.034 to 0.098 mm<br>0.00134 to 0.00386 in. |
| | Allowable limit | 0.20 mm<br>0.0079 in. |
| Crankshaft journal O.D. (Flywheel side) | Factory spec. | 51.921 to 51.940 mm<br>2.04413 to 2.04488 in. |
| Crankshaft bearing 3 I.D. | Factory spec. | 51.974 to 52.019 mm<br>2.04622 to 2.04799 in. |

*00000S10351*

## Oil Clearance between Crankshaft Journal and Crankshaft Bearing 2 and 3 (Continue)

**(Reference)**

- Undersize crankshaft bearing 2 and 3

| Undersize | Bearing | Code Number | Marking |
|---|---|---|---|
| 0.2 mm<br>0.008 in. | Crankshaft bearing 2 02 | 16241-23931 | 020 US |
| | Crankshaft bearing 3 02 | 16241-23861 | 020 US |
| 0.4 mm<br>0.016 in. | Crankshaft bearing 2 04 | 16241-23941 | 040 US |
| | Crankshaft bearing 3 04 | 16241-23871 | 040 US |

- Undersize dimensions of crankshaft journal

| Undersize / Dimension | 0.2 mm<br>0.008 in. | 0.4 mm<br>0.016 in. |
|---|---|---|
| A | 2.3 to 2.7 mm radius<br>0.0906 to 0.1063 in. radius | 2.3 to 2.7 mm radius<br>0.0906 to 0.1063 in.radius |
| B | 1.0 to 1.5 mm radius<br>0.0394 to 0.0591 in. radius | 1.0 to 1.5 mm radius<br>0.0394 to 0.0591 in. radius |
| C | 47.734 to 47.750 mm<br>1.87929 to 1.87992 in. | 47.534 to 47.550 mm<br>1.87141 to 1.87204 in. |
| D | 51.721 to 51.740 mm<br>2.03626 to 2.03700 in. | 51.521 to 51.540 mm<br>2.02838 to 2.02913 in. |
| • The crankpin journal must be fine-finished to higher than ▽▽▽▽ (0.8 S). | | |

*00000S10352*

# [5] CYLINDER

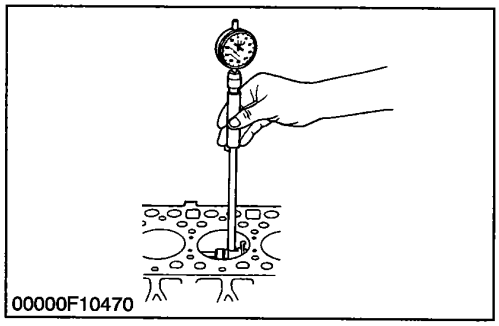


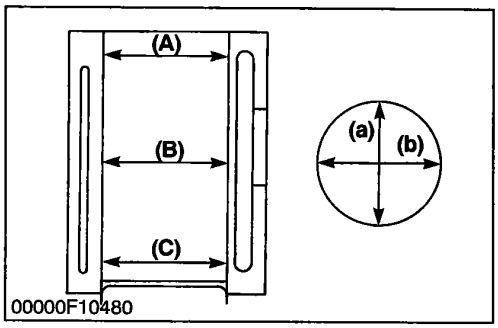


## Cylinder Wear

1. Measure the I.D. of the cylinder at the six positions (see figure) with a cylinder gauge to find the maximum and minimum I.D.'s.
2. Get the difference (Maximum wear) between the maximum and the minimum I.D.'s
3. If the wear exceeds the allowable limit, bore and hone to the oversize dimension. (Refer to **"Correcting Cylinder"**.)
4. Visually check the cylinder wall for scratches. If deep scratches are found, the cylinder should be bored. (Refer to **"Correcting Cylinder"**.)

| | | | |
|---|---|---|---|
| Cylinder I.D. | Factory spec. | D905-B (E)<br>V1205-B (E)<br>V1205-T-B (E) | 72.000 to 72.019 mm<br>2.8346 to 2.8353 in. |
| | | D1005-B (E)<br>V1305-B (E) | 76.000 to 76.019mm<br>2.9921 to 2.9929 in. |
| | | D1105-B (E)<br>D1105-T-B (E)<br>V1505-B (E)<br>V1505-T-B (E) | 78.000 to 78.019 mm<br>3.0709 to 3.0716 in. |
| Maximum wear | Allowable limit | | 0.15 mm<br>0.0059 in. |

**(A) Top**
**(B) Middle**
**(C) Bottom (Skirt)**

**(a) Right-angled to Piston Pin**
**(b) Piston Pin Direction**

*01642S10362*

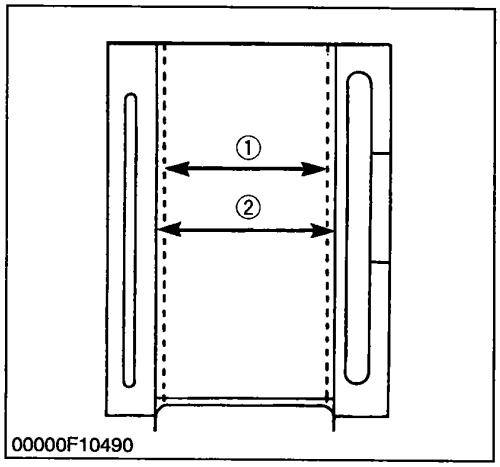


## Correcting Cylinder

1. When the cylinder is worn beyond the allowable limit, bore and hone it to the specified dimension.

| | | | |
|---|---|---|---|
| Cylinder I.D. | Factory spec. | D905-B (E)<br>V1205-B (E)<br>V1205-T-B (E) | 72.500 to 72.519 mm<br>2.8346 to 2.8551 in. |
| | | D1005-B (E)<br>V1305-B (E) | 76.500 to 76.519mm<br>3.0118 to 3.0126 in. |
| | | D1105-B (E)<br>D1105-T-B (E)<br>V1505-B (E)<br>V1505-T-B (E) | 78.500 to 78.519 mm<br>3.0906 to 3.0913 in. |
| Maximum wear | Allowable limit | | 0.15 mm<br>0.0059 in. |
| Finishing | Hone to 1.2 to 2.0 μR max.<br>(0.00047 to 0.00079 in.R max.) | | |

2. Replace the piston and piston rings with oversize (0.5 mm) ones.

| Part Name | Model | Code Number | Marking |
|---|---|---|---|
| Piston | D905-B (E), V1205-B (E) | 16224-2191-0 | 05 OS |
| | V1205-T-B (E) | 16295-2191-0 | |
| | D1005-B (E), V1305-B (E) | 16050-2191-0 | |
| | D1105-B (E), V1505-B (E) | 16060-2191-0 | |
| | D1105-T-B (E)<br>V1505-T-B (E) | 16292-2191-0 | |
| Piston ring assembly | D905-B (E), V1205-B (E) | 15901-2109-0 | 05 OS |
| | V1205-T-B (E) | 16269-2109-0 | |
| | D1005-B (E), V1305-B (E) | 16271-2109-0 | |
| | D1105-B (E), V1505-B (E) | 16261-2109-0 | |
| | D1105-T-B (E)<br>V1505-T-B (E) | 16292-2109-0 | |

### ■ NOTE

- **When the oversize cylinder is worn beyond the allowable limit, replace the cylinder block with a new one.**

(1) Cylinder I.D. (Before Correction) (2) Oversize Cylinder I.D.

*01642S10372*

# 2 LUBRICATING SYSTEM

## CHECKING

01640P10230

**Engine Oil Pressure**

1. Remove the oil switch and set a pressure tester (Code No. 07916-32031).
2. Start the engine. After warming up, measure the oil pressure of both idling and rated speeds.
3. If the oil pressure is less than the allowable limit, check the following.

- Engine oil insufficient
- Oil pump defective
- Oil strainer clogged
- Oil filter cartridge
- Oil gallery clogged
- Excessive oil clearance of bearing
- Foreign matter in the relief valve

**(When reassembling)**

- After checking the engine oil pressure, tighten the engine oil pressure switch to the specified torque.

*11900S10261*

## SERVICING

## [1] OIL PUMP

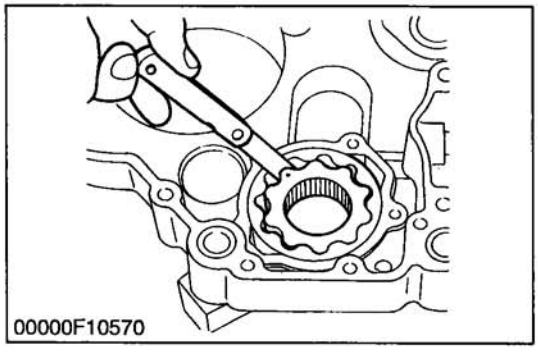
00000F10570

**Rotor Lobe Clearance**

1. Measure the clearance between lobes of the inner rotor and the outer rotor with a feeler gauge.
2. If the clearance exceeds the factory specifications, replace the oil pump rotor assembly.

*00000S10422*

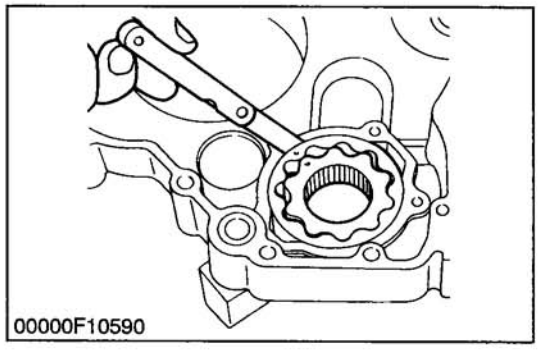
00000F10590

**Clearance between Outer Rotor and Pump Body**

1. Measure the clearance between the outer rotor and the pump body with a feeler gauge.
2. If the clearance exceeds the factory specifications, replace the oil pump rotor assembly.

*00000S10432*

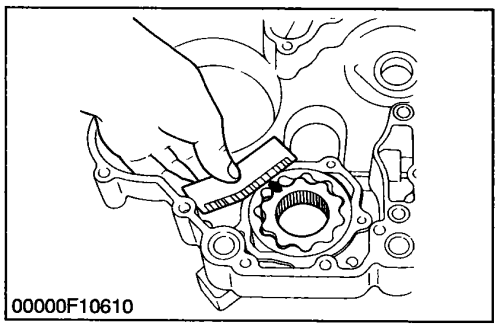


**Clearance between Rotor and Cover**

1. Put a strip of plastigage (Code No. 07909-30241) onto the rotor face with grease.
2. Install the cover and tighten the screws.
3. Remove the cover carefully, and measure the amount of the flattening with the scale and get the clearance.
4. If the clearance exceeds the factory specifications, replace oil pump rotor assembly.

*00000S10442*

# 3 COOLING SYSTEM

## CHECKING

### [1] FAN BELT

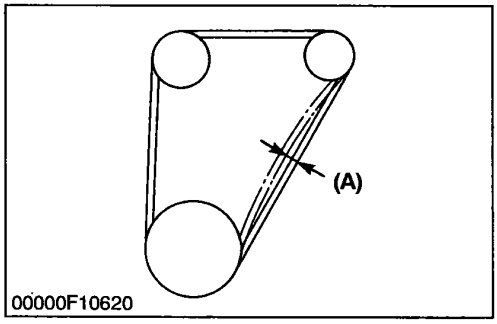


**Fan Belt Tension**

1. Press the fan belt between fan pulley and pulley at force of 10 kgf (98 N, 22 lbs).
   Check if the fan belt deflection is 10 to 12 mm (0.394 to 0.472 in.)
2. If the deflection is not within the factory specifications, adjust with the tension pulley adjusting nut.

*00000S10451*

### [2] RADIATOR

**CAUTION**

- **When removing the radiator cap, wait at least ten minutes after the engine has stopped and cooled down. Otherwise, hot water may gush out, scalding nearby people.**

*01640S10430*

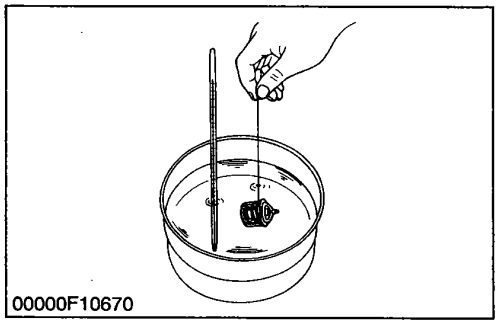


**Thermostat Valve Opening Temperature**

1. Push down the thermostat valve and insert a string between the valve and the valve seat.
2. Place the thermostat and a thermometer in a container with water and gradually heat the water.
3. Hold the string to suspend the thermostat in the water. When the water temperature rises, the thermostat valve will open, allowing it to fall down from the string.
   Read the temperature at this moment on the thermometer.
4. Continue heating the water and read the temperature when the valve has risen by about 6 mm (0.236 in.).
5. If the measurement is not acceptable, replace the thermostat.

| | | |
|---|---|---|
| Thermostat's valve opening temperature | Factory spec. | 69.5 to 72.5 °C<br>157.1 to 162.5 °F |
| Temperature at which thermostat completely opens | Factory spec. | 85 °C<br>185 °F |

*00000S10492*

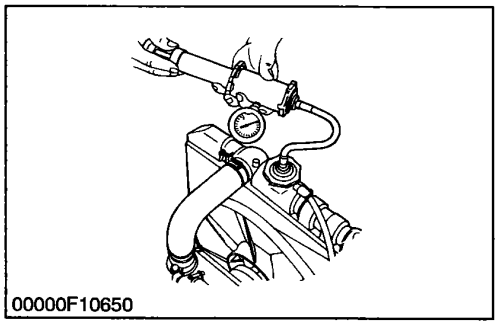
00000F10650

**Radiator Water Leakage**

1. Pour a specified amount of water into the radiator.
2. Set a radiator tester (Code No. 07909-31551).
   Increase water pressure to the specified pressure of 1.4 kgf/cm$^2$ (137 kPa, 20 psi).
3. Check the radiator for water leaks.
4. When water leakage is excessive, replace the radistor. If water leakage is caused by a small pinhole, correct the radiator with radistor cement.

*00000S10471*

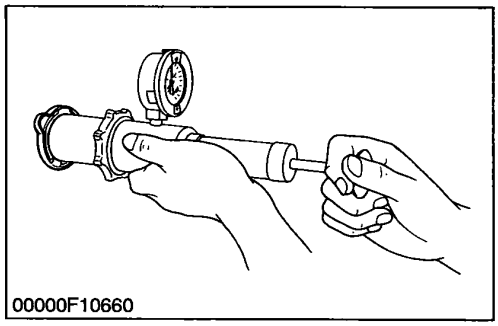
00000F10660

**Radiator Cap Air Leakage**

1. Set a radiator tester (Code No. 07909-31551) on the radiator cap.
2. Apply the specified pressure of 0.9 kgf/cm$^2$ (98.1 kPa, 12.8 psi).
3. ,Check if the pressure drop to less than 0.6 kgf/cm$^2$ (59 kPa, 9 psi) in 10 seconds.
4. If the pressure is less than the factory specification, replace it.

*00000S10481*

# DISASSEMBLING AND ASSEMBLING

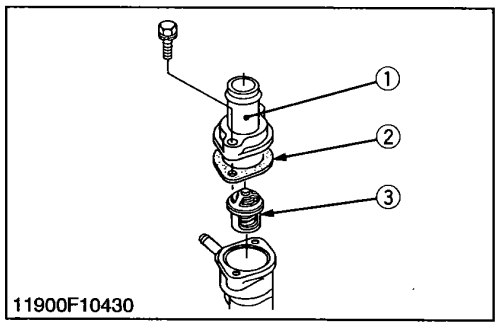

11900F10430

**Thermostat Assembly**

1. Remove the thermostat cover mounting screws, and remove the thermostat cover (1).
2. Remove the thermostat assembly (3).

**(When reassembling)**

- Apply a liquid gasket (Three Bond 1215 or equivalent) only at the thermostat cover side of the gasket (2).

(1) Thermostat Cover
(2) Thermostat Cover Gasket
(3) Thermostat Assembly

*11900S10270*

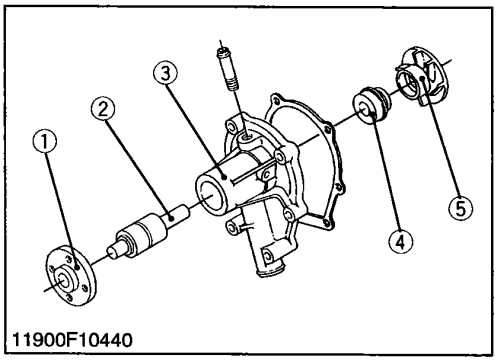

11900F10440

## Water Pump Assembly

1. Loosen the alternator mounting bolts, and remove the fan belt.
2. Remove the fan and fan pulley.
3. Remove the water pump assembly from the gear case cover.
4. Remove the water pump flange (1).
5. Press out the water pump shaft (2) with the impeller (5) on it.
6. Remove the impeller from the water pump shaft.
7. Remove the mechanical seal (4).

**(When reassembling)**

- Apply a liquid gasket (Three Bond 1215 or equivalent) to the both sides of gasket.
- Replace the mechanical seal with new one.

(1) Water Pump Flange
(2) Water Pump Shaft
(3) Water Pump Body
(4) Mechanical Seal
(5) Impeller

*11900S10280*

# 4 FUEL SYSTEM

## CHECKING AND ADJUSTING

## [1] INJECTION PUMP

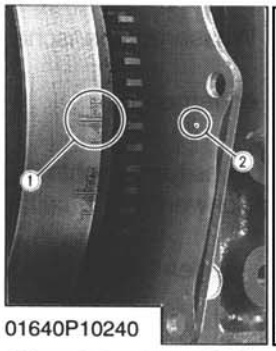

01640P10240

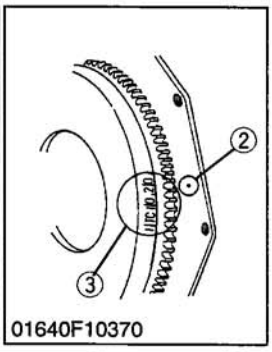

01640F10370

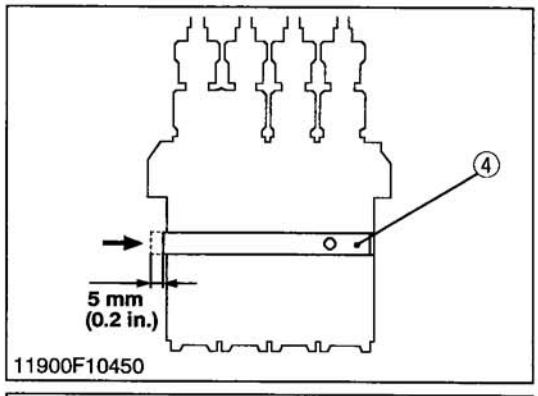

11900F10450

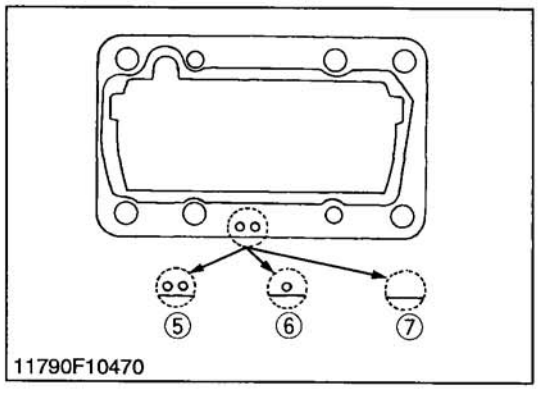

11790F10470

### Injection Timing

**■ IMPORTANT**

- **When inspecting the fuel injection timing, the timing control actuates during starting and the correct fuel injection timing cannot be measured.**

1. Remove the injection pipes.
2. Remove the engine stop solenoid, push in the control rack of the injection pump by 5 mm (0.2 in.) and hold it at that position.
3. Turn the flywheel counterclockwise until fuel flows from the delivery valve holder.
4. Continue to turn the flywheel slowly, and stop it as soon as the fuel level at the tip of the delivery valve holder begins to increase.
5. Check to see if the mark **"FI"** (1) or timing angle lines on the flywheel is aligned with the punch mark (2).
6. If the timing is out of adjustment, readjust the timing with shims.

(1) Mark "FI"
(2) Punch Mark
(3) Timing Mark
(4) Control Rack
(5) Two-holes : 0.20 mm (0.0079 in.)
(6) One-hole : 0.25 mm (0.0098 in.)
(7) Without hole : 0.30 mm (0.0118 in.)

*11900S10291*

## Injection Timing (Continue)

**■ NOTE**

**(Engine serial number : ~ 489290)**

- **Shims are available in thickness of 0.15 mm (0.0059 in.), 0.30 mm (0.0118 in.). Combine these shims for adjustments.**
- **Addition or reduction of shim (0.15 mm, 0.0059 in.) delays or advances the injection timing by approx. 0.026 rad. (1.5°).**
- **After adjusting the injection timing, apply liquid-type gasket (Three Bond 1215 or its equivalent) to both sides of the injection pump shim before reassembling.**

**(Engine serial number : 489291 ~)**

- **The sealant is applied to both sides of the soft metal gasket shim. The liquid gasket is not required for assembling.**
- **Shims are available in thickness of 0.20 mm (0.0079 in.), 0.25 mm (0.0098 in.) and 0.30 mm (0.0118 in.). Combine these shims for adjustments.**
- **Addition or reduction of shim (0.05 mm, 0.0020 in.) delays or advances the injection timing by approx. 0.0087 rad. (0.5°).**
- **In disassembling and replacing, be sure to use the same number of new gasket shims with the same thickness.**

*11900S10292*

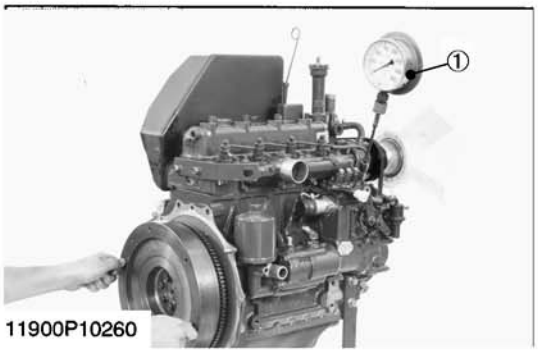


11900P10260

## Fuel Tightness of Pump Element

1. Remove the injection pipes and glow plugs.
2. Install the injection pump pressure tester (1) to the injection pump.
3. Set the speed control lever to the maximum speed position.
4. Turn the flywheel ten times or more to increase the pressure.
5. If the pressure can not reach the allowable limit, replace the pump element or injection pump assembly.

**■ NOTE**

- **Apply a liquid gasket (Three Bond 1215 or equivalent) to both sides of the solenoid cover gasket.**

(1) Injection Pump Pressure Tester

*11900S10301*

11900P10260

**Fuel Tightness of Delivery Valve**

1. Remove the injection pipes and glow plugs.
2. Set a pressure tester to the fuel injection pump.
3. Turn the flywheel and raise the pressure to approx. 14.7 MPa (150 kgf/cm$^2$, 2133 psi).
4. Now turn the flywheel back about half a turn (to keep the plunger free). Maintain the flywheel at this position and clock the time taken for the pressure to drop from 14.7 to 13.7 MPa (from 150 to 140 kgf/cm$^2$, from 2133 to 1990 psi).
5. Measure the time needed to decrease the pressure from 14.7 to 13.7 MPa (from 150 to 140 kgf/cm$^2$, from 2133 to 1990 psi).
6. If the measurement is less than allowable limit, replace the delivery valve.

■ **NOTE**

- **Apply a liquid gasket (Three Bond 1215 or equivalent) to both sides of the solenoid cover gasket.**

*11900S10311*

# [2] INJECTION NOZZLE

⚠ **CAUTION**

- **Check the injection pressure and condition after confirming that there is nobody standing in the direction the fume goes.**
  **If the fume from the nozzle directly contacts the human body, cells may be destroyed and blood poisoning may be caused.**

*11790S10690*

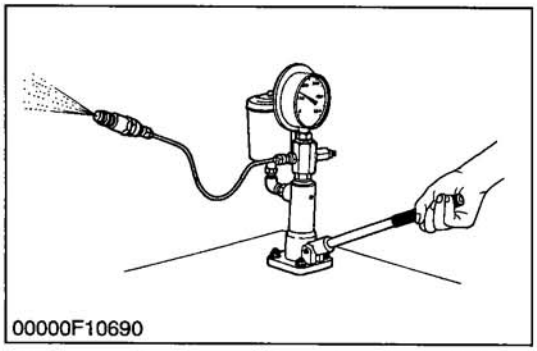
00000F10690

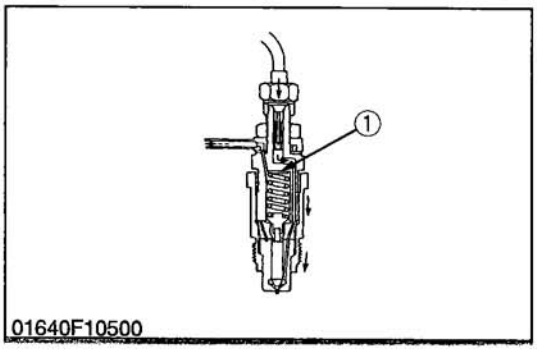

01640F10500

**Nozzle Injection Pressure**

1. Set the injection nozzle to the nozzle tester.
2. Slowly move the tester handle to measure the pressure at which fuel begins jetting out from the nozzle.
3. If the measurement is not within the factory specifications, disassemble the injecetion nozzle, and change adjusting washer (1) until the proper injection pressure is obtained.

**(Reference)**

- Pressure variation with 0.025 mm (0.001 in.) difference of adjusting washer thickness.
  Approx. 59 kPa (6 kgf/cm$^2$, 85 psi)

(1) Adjusting Washer

*00000S10512*

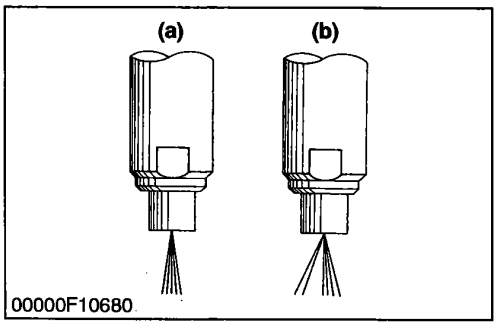


**Nozzle Spraying Condition**

1. Set the injection nozzle to a nozzle tester (Code No. 07909-31361), and check the nozzle spraying condition.
2. If the spraying condition is defective, replace the nozzle piece.

**(a) Good** **(b) Bad**

*00000S10500*

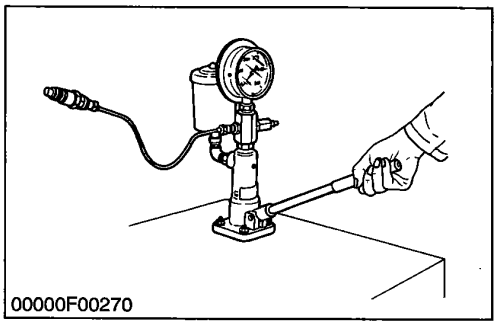


**Valve Seat Tightness**

1. Set the injection nozzle to a nozzle tester (Code No. 07909-31361).
2. Raise the fuel pressure, and keep at 12.75 MPa (130 kgf/cm$^2$, 1849 psi) for 10 seconds.
3. If any fuel leak is found, replace the nozzle piece.

*00000S10521*

# DISASSEMBLING AND ASSEMBLING

## [1] INJECTION PUMP

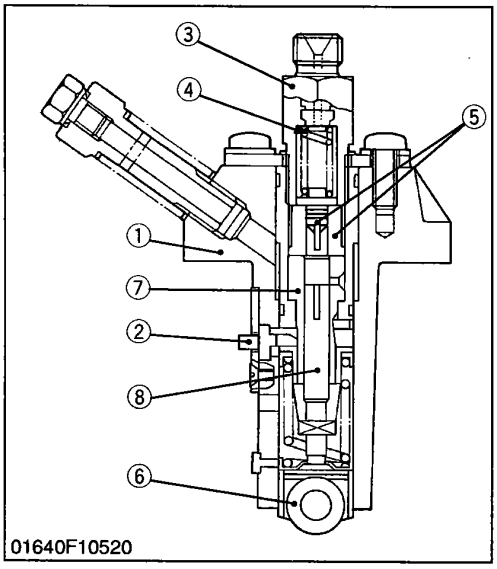


■ **IMPORTANT**

- **If replacing the pump element, the amount of fuel injection should be adjusted on a specified bench.**

(1) Pump Body
(2) Control Rack
(3) Delivery Valve Holder
(4) Delivery Valve Spring
(5) Delivery Valve
(6) Tappet Roller
(7) Cylinder
(8) Plunger

*01640S10440*

# [2] INJECTION NOZZLE

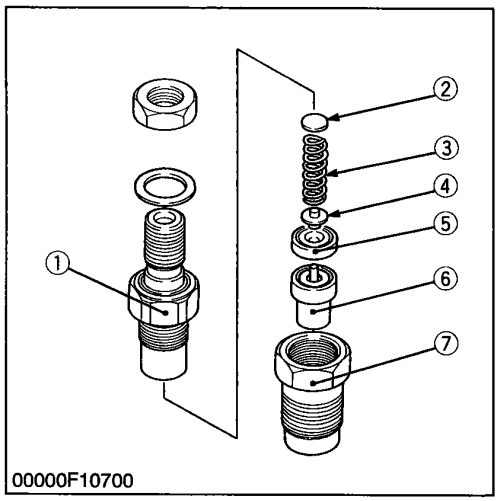


**Nozzle Holder**

1. Secure the nozzle retaining nut (7) with a vise.
2. Remove the nozzle holder (1), and take out parts inside.

**(When reassembling)**

- Assemble the nozzle in clean fuel oil.
- Install the push rod (4), noting its direction.
- After assembling the nozzle, be sure to adjust the fuel injection pressure.

(1) Nozzle Holder
(2) Adjusting Washer
(3) Nozzle Spring
(4) Push Rod
(5) Distance Piece
(6) Nozzle Piece
(7) Nozzle Retaining Nut

*00000S10531*

# 5 ELECTRICAL SYSTEM

## CHECKING

## [1] STARTER

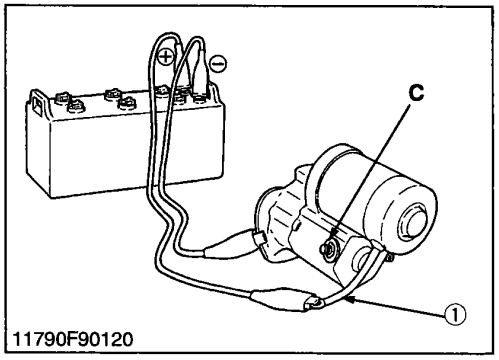

11790F90120

### Motor Test

**CAUTION**

- **Secure the starter in a vise to prevent it from jumping up and down while testing the motor.**

1. Disconnect the ground cable clamp from the battery negative terminal post.
2. Disconnect the battery positive cable and the leads from the starter.
3. Remove the starter motor from the engine.
4. Disconnect the connecting lead (1) from the starter **C** terminal.
5. Connect a jumper lead from the connecting lead (1) to the battery positive terminal post.
6. Connect a jumper lead momentarily between the starter motor housing and the battery negative terminal post.
7. If the motor does not run, check the motor.

(1) Connecting Lead

*11790S90180*

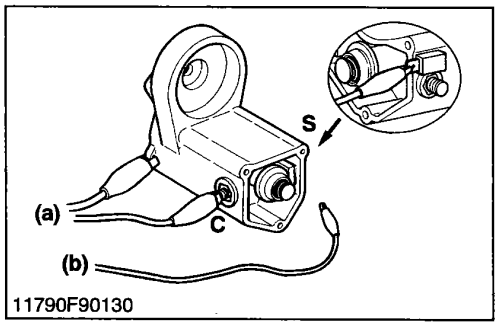

11790F90130

### Magnet Switch Test (Pull-in, Holding Coils)

1. Remove the motor from the starter housing.
2. Preparate a 6 V battery for the test.
3. Connect jumper leads from the battery negative terminal to the housing and the starter **C** terminal.
4. The plunger should be attached and the pinion gear should pop out when a jumper lead is connected from the battery positive terminal to the **S** terminal. It's a correct.
5. Disconnect the jumper lead to the starter **C** terminal. Then the pinion gear should remain popped out. It's a correct.

**IMPORTANT**

- **Testing time must be 3 to 5 sec.**

**(a) To Negative Terminal** **(b) To Positive Terminal**

*11790S90190*

## [2] GLOW PLUG

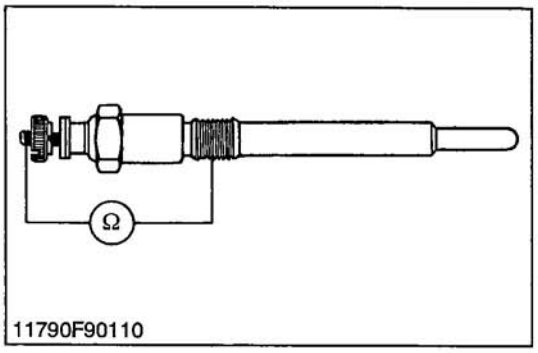

11790F90110

**Glow Plug**

1. Disconnect the leads from the flow plugs.
2. Measure the resistance with a circuit tester across the glow plug terminal and the housing.
3. If 0 ohm is indicated, the screw at the tip of the glow plug and the housing are short-circuited.
4. If the reference value is not indicated, the glow plug is faulty, replace the glow plug.

**[S / No. 489290 and below]**

| | | |
|---|---|---|
| Glow plug resistance | Factory spec. | Approx. 1.0 to 1.2 ohms |

**[S / No. 489291 and above]**

| | | |
|---|---|---|
| Glow plug resistance | Factory spec. | Approx. 0.9 ohms |

*11790S90161*

# DISASSEMBLING AND ASSEMBLING

## [1] STARTER

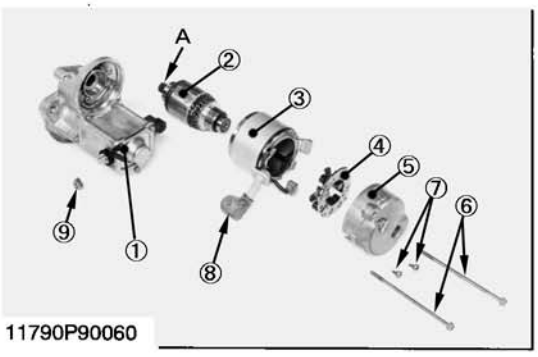

11790P90060

**Disassembling Motor**

1. Disconnected the connecting lead (8) from the magnet switch (1).
2. Remove the through screws (6), and then separate the end frame (5), yoke (3) and armature (2).
3. Remove the two screws (7), and then take out the brush holder (4) from the end frame (5).

**(When reassembling)**

- Apply grease to the spline teeth **(A)** of the armature (2).

(1) Magnet Switch
(2) Armature
(3) Yoke
(4) Brush Holder
(5) End Frame
(6) Screws
(7) Screws
(8) Connecting Lead
(9) Nut

**(A) Spline Teeth**

*11790S90200*

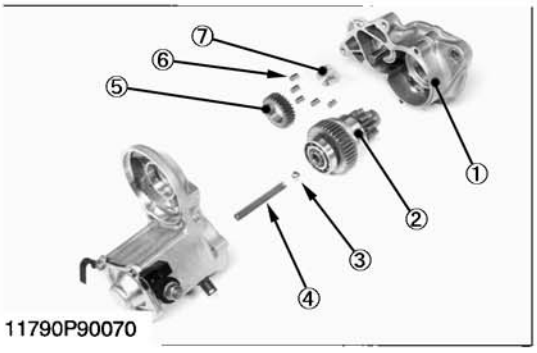

11790P90070

### Disassembling Magnet Switch

1. Remove the drive end frame (1) mounting screws.
2. Take out the over running clutch (2), ball (3), spring (4), gear (5), rollers (6) and retainer (7).

**(When reassembling)**

- Apply grease to the gear teeth of the gear (5) and over running clutch (2), and ball (3).

(1) Drive End Frame
(2) Over Running Clutch
(3) Ball
(4) Spring
(5) Gear
(6) Roller
(7) Retainer

*11790S90210*

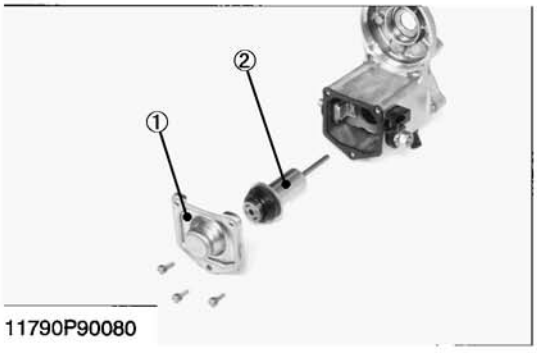

11790P90080

### Plunger

1. Remove the end cover (1).
2. Take out the plunger (2).

(1) End Cover
(2) Plunger

*11790S90220*

## [2] ALTERNATOR

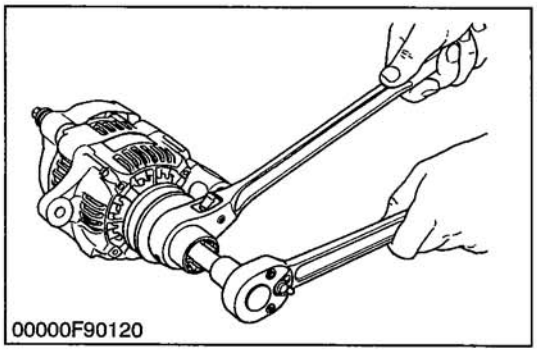
00000F90120

### Pulley

1. Secure the hexagonal end of the pulley shaft with a double-ended ratchet wrench as shown in the figure, loosen the pulley nut with a socket wrench and remove it.

**(When reassembling)**

| | | |
|---|---|---|
| Tightening torque | Pulley nut | 58.3 to 78.9 N·m<br>5.95 to 8.05 kgf·m<br>43.0 to 58.2 ft-lbs |

*00000S90080*

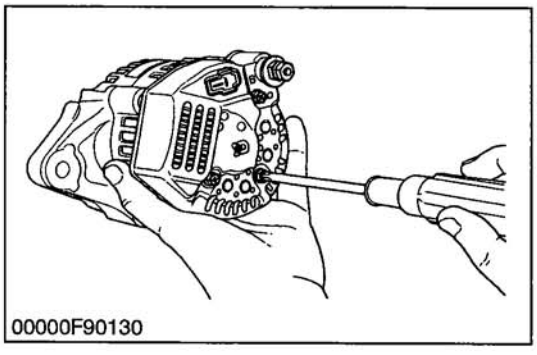
00000F90130

### Rear End Cover

1. Unscrew the three rear end cover screws and the **B** terminal nut, and remove the rear end cover.

*00000S90090*

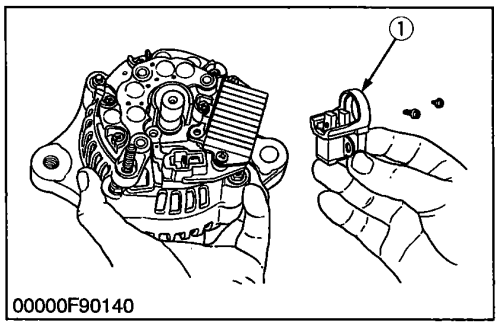


## Brush Holder

1. Unscrew the two screws holding the brush holder, and remove the brush holder (1).

(1) Brush Holder

*00000S90100*

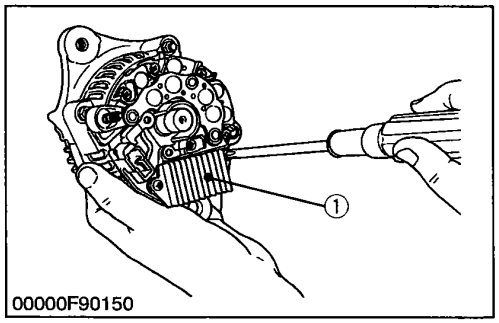


## IC Regulator

1. Unscrew the three screws holding the IC regulator, and remove the IC regulator (1).

(1) IC Regulator

*00000S90110*

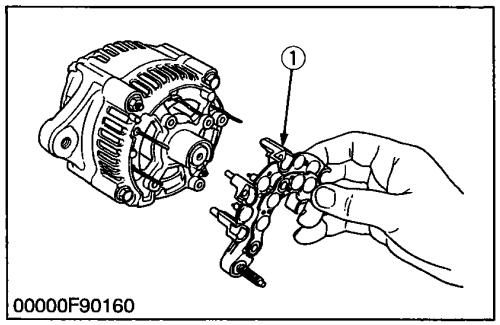


## Rectifier

1. Remove the four screws holding the rectifier and the stator lead wires.
2. Remove the rectifier (1).

(1) Rectifier

*00000S90120*

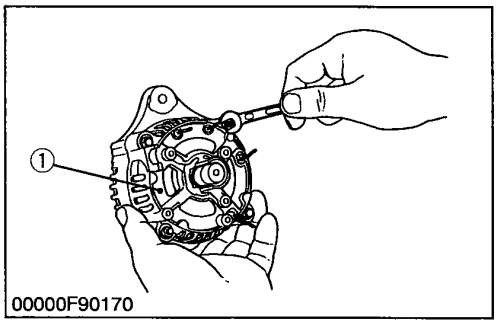


## Rear End Frame

1. Unscrew the two nuts and two screws holding the drive end frame and the rear end frame.
2. Remove the rear end frame (1).

(1) Rear End Frame

*00000S90130*

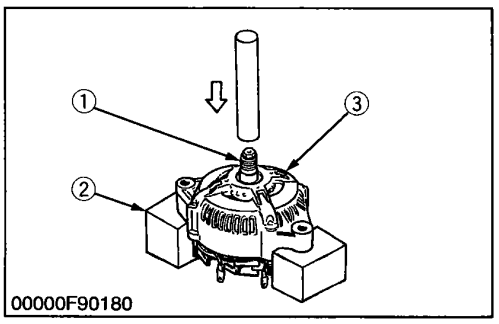


## Rotor

1. Press out the rotor (1) from drive end frame (3).

**■ IMPORTANT**

- **Take special care not to drop the rotor and damage the slip ring or fan, etc.**

(1) Rotor
(2) Block
(3) Drive End Frame

*00000S90140*

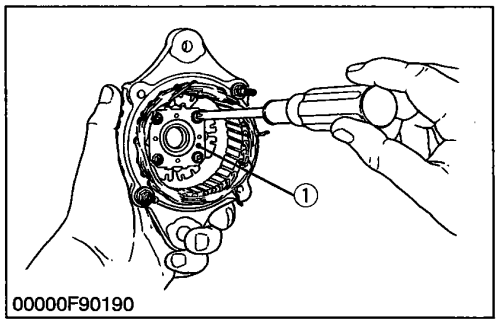

00000F90190

## Retainer Plate

1. Unscrew the four screws holding the retainer plate, and remove the retainer plate (1).

(1) Retainer Plate

*00000S90150*

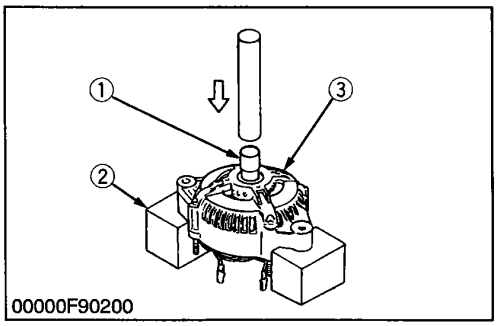

00000F90200

## Bearing on Drive End Side

1. Press out the bearing from drive end frame (3) with a press and jig (1).

(1) Jig
(2) Block
(3) Drive End Frame

*00000S90160*

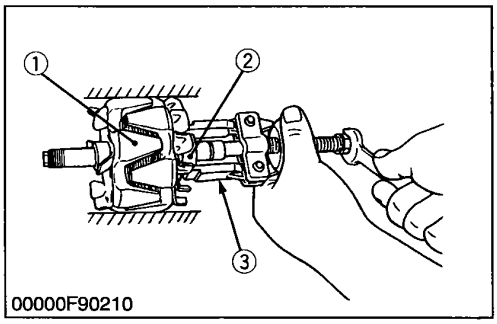

00000F90210

## Bearing at Slip Ring Side

1. Lightly secure the rotor (1) with a vise to prevent damage, and remove the bearing (2) with a puller (3).

(1) Rotor
(2) Bearing
(3) Puller

*00000S90170*

# SERVICING

## [1] STARTER

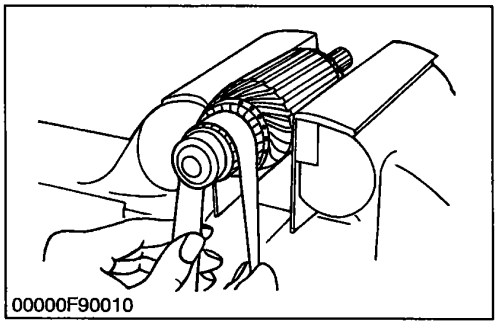
00000F90010

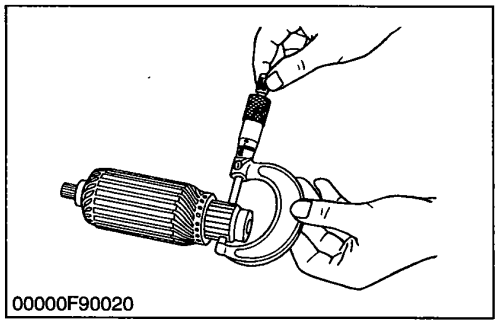
00000F90020

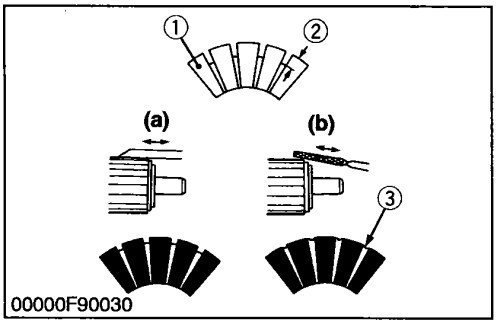

00000F90030

### Commutator and Mica

1. Check the contact face of the commutator for wear, and grind the commutator with emery paper if it is slightly worn.
2. Measure the commutator O.D. with an outside micrometer at several points.
3. If the minimum O.D. is less than the allowable limit, replace the armature.
4. If the difference of the O.D.'s exceeds the allowable limit, correct the commutator on a lathe to the factory specification.
5. Measure the mica undercut.
6. If the undercut is less than the allowable limit, correct it with a saw blade and chamfer the segment edges.

(1) Segment
(2) Depth of Mica
(3) Mica

**(a) Good**
**(b) Bad**

*00000S90011*

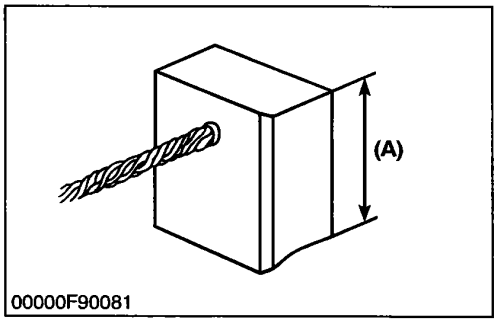

00000F90081

### Brush Wear

1. If the contact face of the brush is dirty or dusty, clean it with emery paper.
2. Measure the brush length **(A)** with vernier calipers.
3. If the length is less than the allowable limit, replace the yoke assembly and brush holder.

*00000S90041*

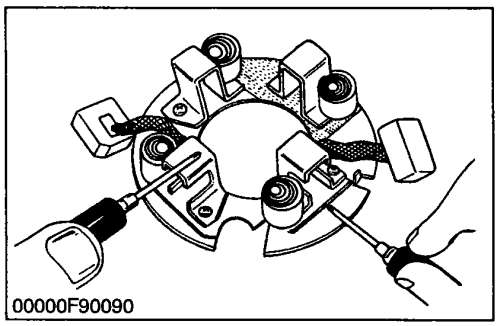
00000F90090

## Brush Holder

1. Check the continuity across the brush holder and the holder support with an ohmmeter.
2. If it conducts, replace the brush holder.

*00000S90050*

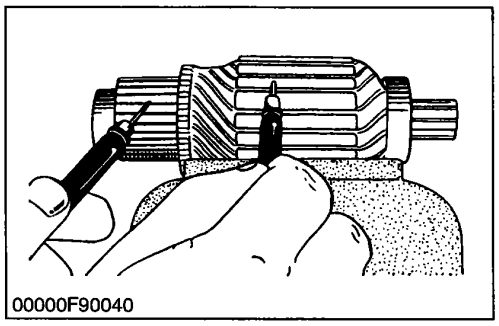
00000F90040

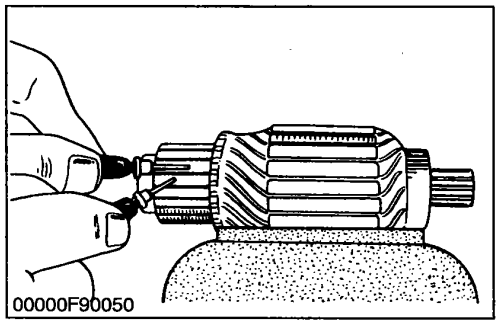
00000F90050

## Armature Coil

1. Check the continuity across the commutator and armature coil core with an ohmmeter.
2. If it conducts, replace the armature.
3. Check the continuity across the segments of the commutator with an ohmmeter.
4. If it does not conduct, replace the armature.

*00000S90020*

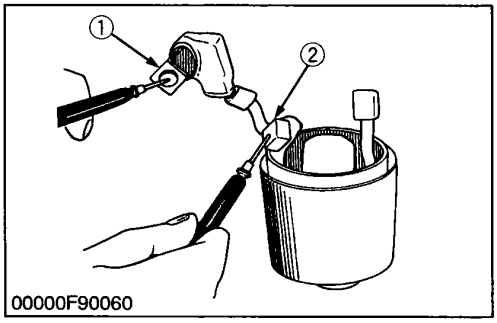

00000F90060

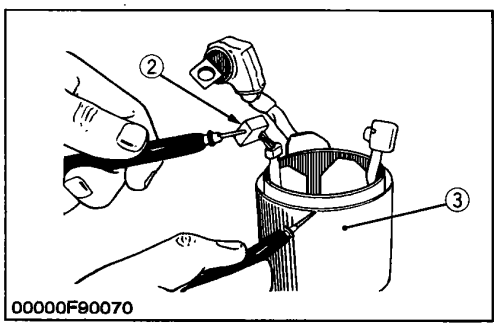

00000F90070

## Field Coil

1. Check the continuity across the lead (1) and brush (2) with an ohmmeter.
2. If it does not conduct, replace the yoke assembly.
3. Check the continuity across the brush (2) and yoke (3) with an ohmmeter.
4. If it conducts, replace the yoke assembly.

(1) Lead
(2) Brush
(3) Yoke

*00000S90030*

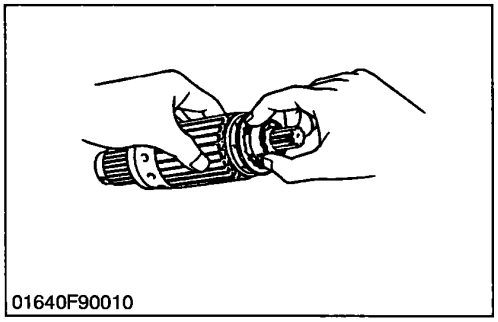
01640F90010

**Armature Bearing**

1. Check the bearing for smooth rotation.
2. If it does not smooth rotation, replace it.

*01640S90010*

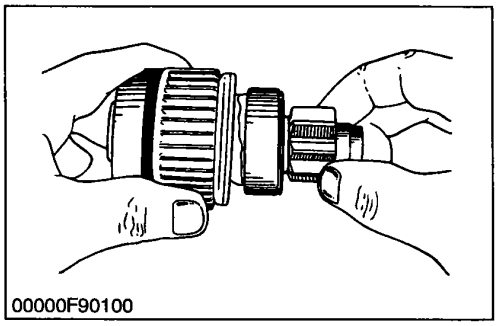
00000F90100

**Overrunning Clutch**

1. Inspect the pinion for wear or damage.
2. If there is any defect, replace the overrunning clutch assembly.
3. Check that the pinion turns freely and smoothly in the overrunning direction and does not slip in the cranking direction.
4. If the pinion slips or does not turn in the both directions, replace the overrunning clutch assembly.

*00000S90060*

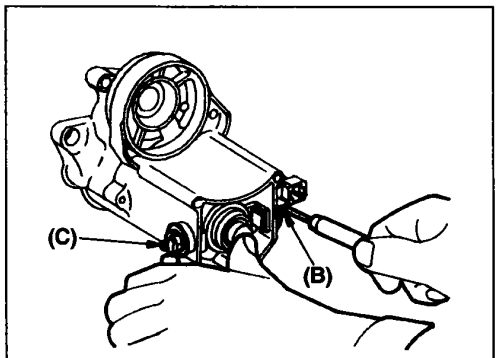

01640F90020

**Magnet Switch**

1. Check the continuity across the **"C"** terminal and the **"B"** terminal with an ohmmeter pushing the plunger.
2. If it does not conduct, check the contacts.

*01640S90020*

## [2] ALTERNATOR

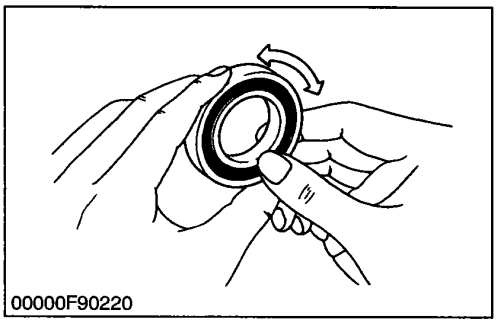
00000F90220

**Bearing**

1. Check the bearing for smooth rotation.
2. If it does not rotate smoothly, replace it.

*00000S90180*

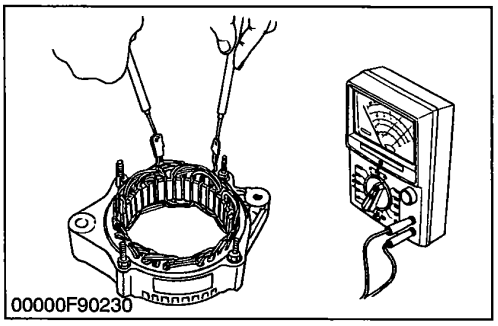
00000F90230

**Stator**

1. Measure the resistance across each lead of the stator coil with an ohmmeter.
2. If the measurement is not within factory specification, replace it.
3. Check the continuity across each stator coil lead and core with an ohmmeter.
4. If infinity is not indicated, replace it.

*00000S90191*

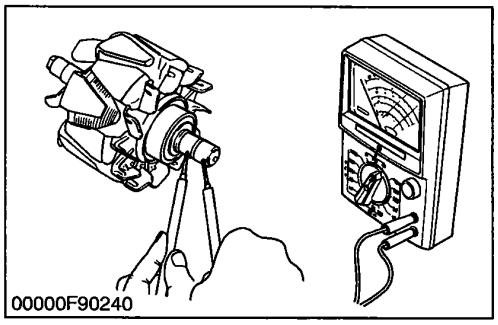
00000F90240

**Rotor**

1. Measure the resistance across the slip rings.
2. If the resistance is not the factory specification, replace it.
3. Check the continuity across the slip ring and core with an ohmmeter.
4. If continuous, replace it.

*00000S90201*

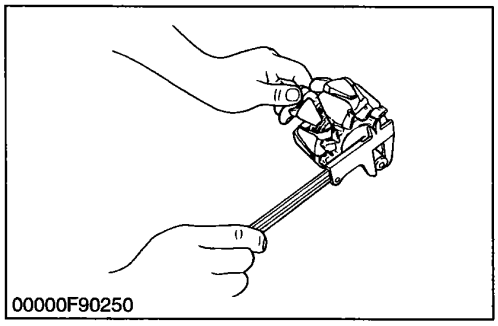
00000F90250

**Slip Ring**

1. Check the slip ring for score.
2. If scored, correct with an sand paper or on a lathe.

*01640S90030*

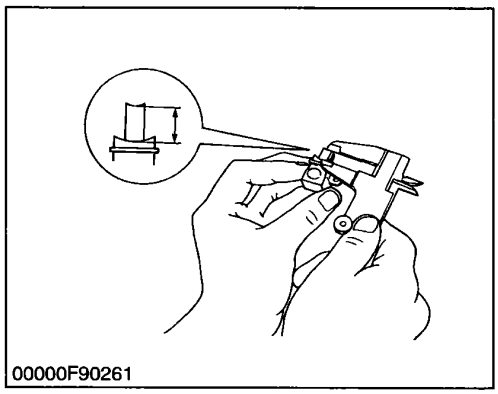
00000F90261

**Brush Wear**

1. Check the length of the brush, if the length is shorter than the allowable limit, replace it.
2. Make sure that the brush moves smoothly.
3. If the brush is defective, replace it.

*01640S90040*

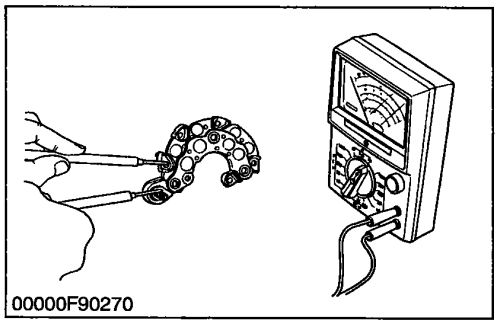
00000F90270

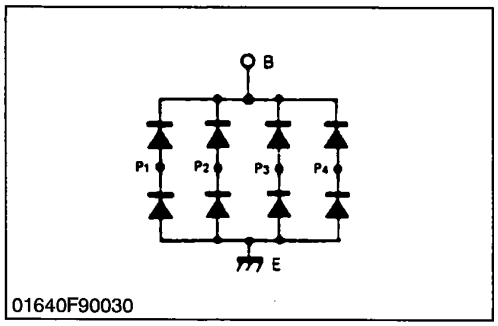

01640F90030

**Rectifier**

1. Check the continuity across each diode of rectifier with an ohmmeter.
2. The rectifier is normal if the diode in the rectifier conducts in one direction and does not conduct in the reverse direction.

*01640S90050*

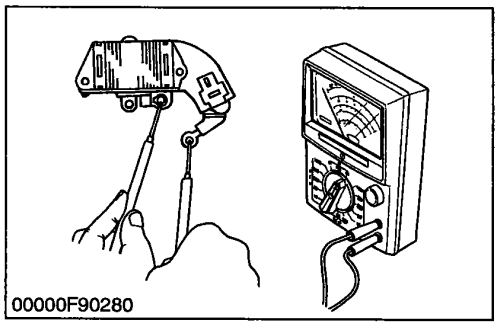
00000F90280

**IC Regulator**

1. Check the continuity across the **"B"** terminal and the **"F"** terminal of IC regulator with an ohmmeter.
2. The IC regulator is normal if the conducts in one direction and does not conduct in the reverse direction.

*01640S90060*

# 6 TURBO CHARGER SYSTEM

## CHECKING

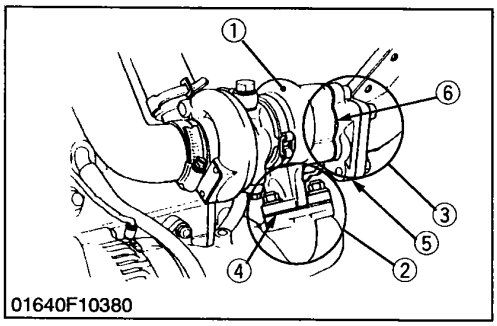


### Turbine Side

1. Check the exhaust port (3) and inlet port (2) side of the turbine housing (1) to see if there is no exhaust gas leak.
2. If any gas leak is found, retighten the bolts and nuts or replace the gasket (4) / (5) / (6) with new one.

(1) Turbine Housing
(2) Inlet Port
(3) Exhaust Port
(4) Gasket
(5) Gasket
(6) Gasket

*01640S10810*

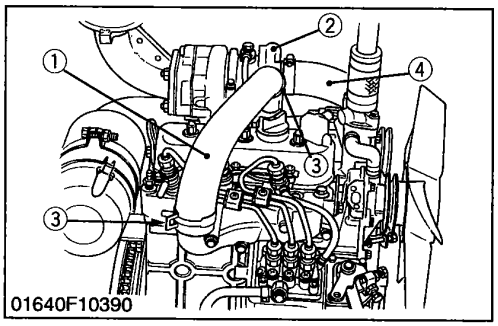


### Compressor Side

1. Check the inlet pipe 1 (1) of the compressor cover (2) to see if there is no air leak.
2. Check for loose connections or cracks in the suction side of the intake pipe (4).
3. If any air leak is found, change the clamp (3) and or inlet pipes.

(1) Inlet Pipe 1
(2) Compressor Cover
(3) Clamp
(4) Intake Pipe

*01640S10820*

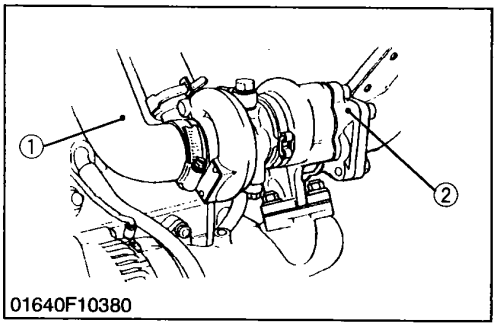


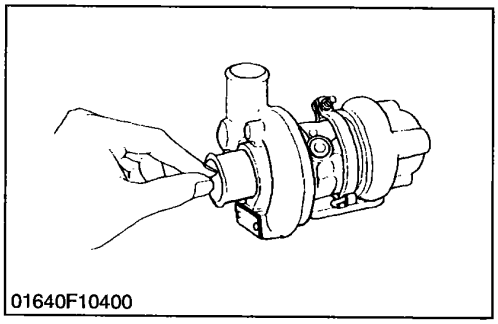


### Wheel Shaft

1. Remove the intake pipe (1) and flange (2).
2. Turn the compressor wheel gently with a finger and check for contact.
3. If the wheel does not turn smoothly and / or found the damage, and abnormal sound, check the axial and radial clearance.
4. If the compressor / turbine wheel and housing is found to be damaged, replace the turbocharger assembly with new one.

(1) Intake Pipe
(2) Flange

*01640S10830*

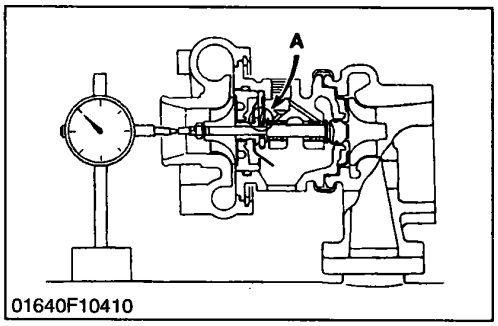

01640F10410

## Axial Clearance

1. Set the dial gauge.
2. Move the shaft in the axial direction, and measure the end play.
3. If the end play **(A)** exceeds 0.12 mm (0.0047 in.), replace the turbocharger assembly with new one.

*01640S10840*

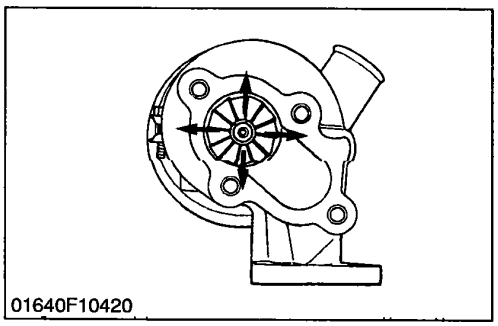
01640F10420

## Radial Clearance

1. Move the compressor / turbine wheel (up and down / right and left).
2. If the wheel contact to the housing, replace the turbocharger assembly with new one.

*01640S10850*

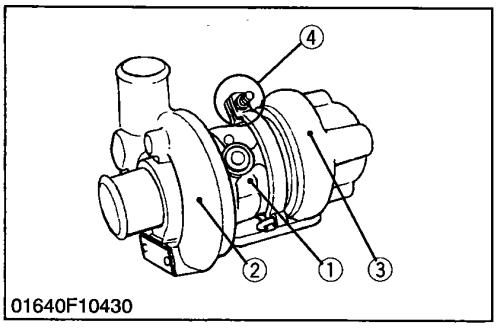

01640F10430

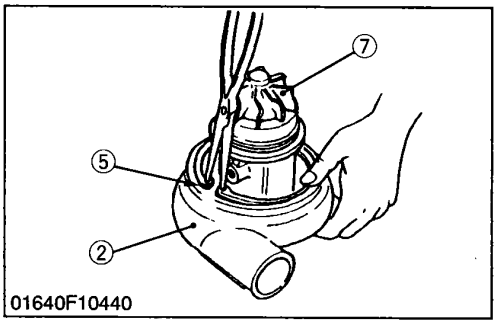

01640F10440

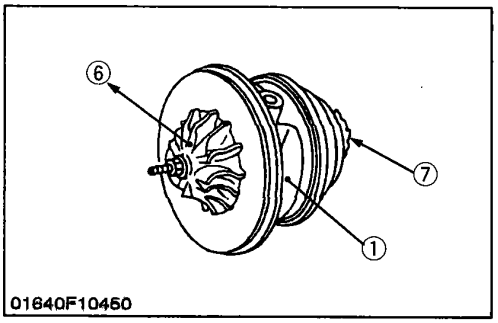

01640F10450

## Turbine / Compressor Wheel

■ **NOTE**

- **When carbon or oil adheres to the wheel remove the carbon or oil adheres with a brass brush or other soft tools.**
- **Do not scratch or damage the wheel with a brass brush or any other soft tools.**
- **Do not disassembling the compressor wheel and turbine shaft.**
- **After cleaning the compressor / turbine wheel, be sure to check the axial and radial clearance.**

1. Parting marks must be marked on the bearing housing (1) and compressor (2) / turbine housing (3).
2. Remove the coupling (4) and turbine housing.
3. Remove the snap ring (5) and compressor housing (2).
4. Clean the compressor wheel (6) and turbine wheel (7) with a brass brush or other soft tools.

| | | |
|---|---|---|
| Tightening torque | Housing clamp bolt | 1.47 to 2.45 N·m<br>0.15 to 0.25 kgf·m<br>1.09 to 1.91 ft-lbs |

(1) Bearing Housing
(2) Compressor Housing
(3) Turbine Housing
(4) Coupling
(5) Snap Ring
(6) Compressor / Wheel
(7) Turbine Wheel

*01640S10860*

# DISASSEMBLING AND ASSEMBLING

**CAUTION**

- **While the engine is running and or just after it stops, the turbocharger is hot, be careful not to touch the turbocharger.**

**NOTE**

- **When detaching and attaching the turbocharger assembly, be very careful not to allow dust, dirt and other foreign matters in the oil pipes.**
- **When the turbocharger assembly has been replaced, pour fresh engine oil through the oil filter port of the turbocharger.**
- **Before starting the engine, make sure that the air cleaner is in position.**

*01640S10870*

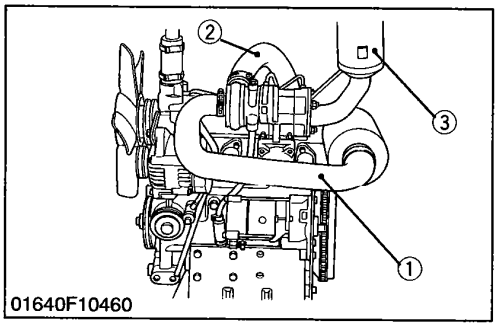

01640F10460

## Air Cleaner and Muffler

1. Remove the intake pipe (1).
2. Remove the inlet pipe 1 (2).
3. Remove the muffler (3).

**(When reassembling)**

- Replace the gaskets with new one.

(1) Intake Pipe
(2) Inlet Pipe 1
(3) Muffler

*01640S10880*

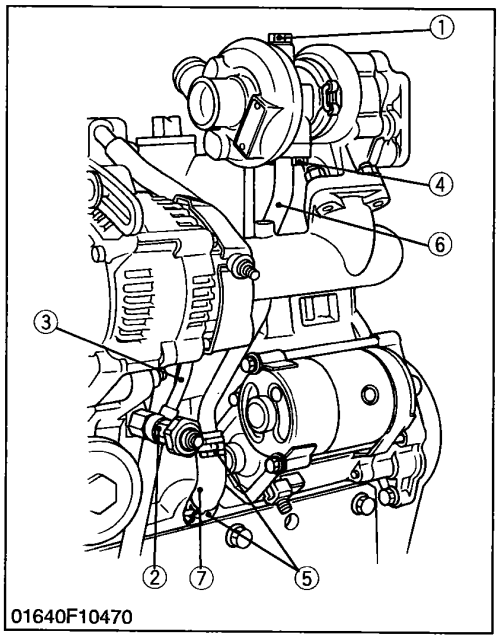

01640F10470

## Oil Pipe

1. Remove the joint bolt (2), (3) and take off the pipe 1 (4).
2. Remove the bolts (5) and release the clamp (6).
3. Disconnect the oil pipe 2 (7) and pipe 4 (8).

**(When reassembling)**

- Pour fresh engine oil through the oil filter port of the turbocharger.
- Replace the gaskets with new one.
- Be careful not to allow dust, dirt and other foreign matters in the oil pipes.

**NOTE**

- **Tape or plug all openings to prevent foreign matters from damaging the oil cavities in the turbocharger.**

(1) Joint Bolt
(2) Joint Bolt
(3) Oil Pipe 1
(4) Bolt
(5) Clamp
(6) Oil Pipe 2
(7) Oil Pipe 4

*01640S10890*

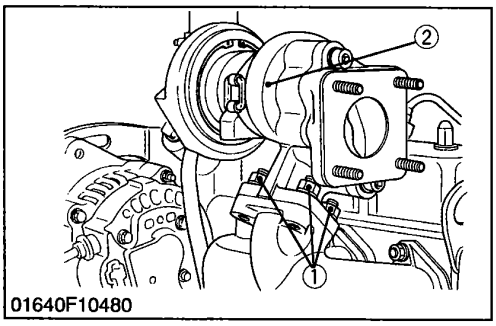

01640F10480

## Turbocharger

1. Remove the bolt (1).
2. Take off the turbocharger assemble (2).

**(When reassembling)**

- Replace the gasket with new one.

(1) Bolt (2) Turbocharger Assemble

*01640S10900*