https://truckmanualshub.com/

# Model 875 Series
# Tilloll
# Operator's Manual

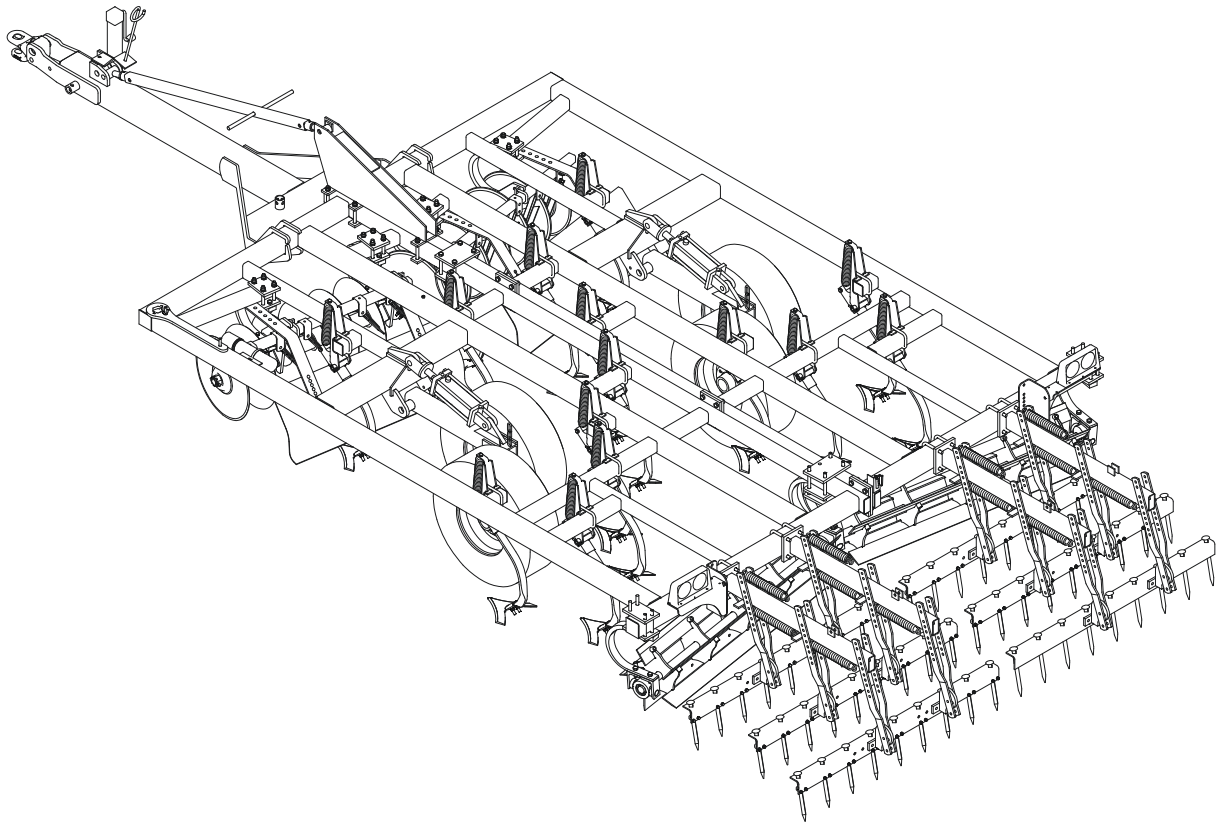

**LANDOLL CORPORATION**
1900 North Street
Marysville, Kansas 66508
(785) 562-5381
**800-428-5655 ~ WWW.LANDOLL.COM**

**F-60-0211** **02/2011**

https://truckmanualshub.com/

https://truckmanualshub.com/

# Table of Contents


## 1 Introduction

Understanding Safety Statements . . . . . 1-2

## 2 Standard Specifications

## 3 Assembly Instructions

Frame Assembly - Rigid Models . . . . . 3-2
Frame Assembly - 15’ Fold Model . . . . . 3-3
Frame Assembly - Wing Models . . . . . 3-7
Shank, Clamp, and Sweep Assembly . . . . . 3-7
Gauge Wheel Installation . . . . . 3-9
Hydraulic Lift Installation - Rigid and 15’ Fold . . . . . 3-9
Hydraulic Lift Installation - Fold Models . . . . . 3-11
Hydraulic Fold Installation - All Fold Models . . . . . 3-13
Disc Gang and Spray Shield Installation . . . . . 3-17
Reel Assembly Installation . . . . . 3-20
Harrow Assembly Installation . . . . . 3-23
Pull Hitch Installation - 15’ Fold Model . . . . . 3-25
Pull Hitch Installation - All Other Models . . . . . 3-25
Warning Lights Installation . . . . . 3-28
Lubrication . . . . . 3-31
Decal Placement . . . . . 3-31

## 4 Operation and Maintenance

Tractor Preparation . . . . . 4-2
Tilloll Preparation . . . . . 4-2
Attaching to the Tractor . . . . . 4-3
Transport . . . . . 4-4
Field Operation . . . . . 4-5
Disc Gang Scraper Adjustment . . . . . 4-5
Spray Shield Adjustment . . . . . 4-6
Spray Boom Location . . . . . 4-6

https://truckmanualshub.com/

**Reel Adjustment** . . . . . **4-6**
**Harrow Adjustment** . . . . . **4-7**
**Wheel Bearing Maintenance** . . . . . **4-9**
**Hydraulic Maintenance** . . . . . **4-9**
**Lubrication** . . . . . **4-9**
**Storage** . . . . . **4-9**

# 5 Troubleshooting Guide

https://truckmanualshub.com/

# Chapter 1

# Introduction

The Landoll Model 875 Tilloll is a quality product designed to give years of trouble free performance. By following each section of this manual, your system will perform as designed for you and your operation

**CHAPTER 1** gives basic instructions on the use of this manual.

**CHAPTER 2** gives product specifications. These specifications supply lengths and measures for your equipment. A Standard Bolt Torque Table is provided to give guidelines for bolt torques to be used when servicing this product.

**CHAPTER 3** contains assembly instructions for your Model 875 Tilloll. When these procedures are correctly followed, your equipment should provide you years of trouble-free operation and service.

**CHAPTER 4** instructs how to operate your equipment before using it, and describes adjustments needed. It also gives practical advice for the care and maintenance of your Landoll equipment. Drawings in this section locate adjustment points on the equipment.

**NOTE: IF THE EQUIPMENT IS IMPROPERLY ASSEMBLED OR MAINTAINED, THE WARRANTY IS VOID. IF YOU HAVE ANY QUESTIONS CONTACT:**

**LANDOLL CORPORATION**
**1900 NORTH STREET**
**MARYSVILLE, KANSAS 66508**
**or phone:**
**(785) 562-5381 or**
**(800) 428-5655**
**or FAX:**
**(888) 527-3909**

**CHAPTER 5** is a troubleshooting guide to aid in diagnosing and solving problems with the equipment.

**PARTS LIST** is a separate manual showing the various assemblies, subassemblies, and systems. Refer to that manual when ordering Landoll replacement parts. Order parts from your Landoll dealer.

**WARRANTY** The Warranty Registration form is included with the product documents. Fill it out and mail it within 15 days of purchase.

**NOTE: IMPROPER ASSEMBLY, MODIFICATION, OR MAINTENANCE OF YOUR LANDOLL MACHINE CAN VOID YOUR WARRANTY.**

**COMMENTS** Address comments or questions regarding this publication to:

**LANDOLL CORPORATION**
**1900 NORTH STREET**
**MARYSVILLE, KANSAS 66508**
**ATTENTION: PUBLICATIONS -DEPT. 55**

https://truckmanualshub.com/



# Understanding Safety Statements

You will find various types of safety information on the following pages and on the machine signs (decals) attached to the vehicle. This section explains their meaning.

The Safety Alert Symbol means ATTENTION! YOUR SAFETY IS INVOLVED!

**DANGER**

**Danger means a life-threatening situation exists. Death can occur if safety measures or instructions on this label are not properly followed.**

**WARNING**

**Warning means serious injury or death can occur if safety measures or instructions on this label are not properly followed.**

**CAUTION**

**Caution means serious equipment or other property damage can occur if instructions on this label are not properly followed.**

**NOTE**

*Means that failure to follow these instructions could cause damage to the equipment or cause it to operate improperly.*

**NOTE**

*Make sure you read and understand the information contained in this manual and on the machine signs (decals) before you attempt to operate or maintain this vehicle.*

The safety statements contained in this manual relate to the operation of the Model 875 Tilloll.

https://truckmanualshub.com/

# Chapter 2

# Standard Specifications

| 875 SERIES TILLOLL | | | | | | |
|---|---|---|---|---|---|---|
| MODEL NO. | WIDTH OF CUT | TRANSPORT WIDTH | TRANSPORT HEIGHT | NO. OF SHANKS | NO. OF 20” DISC BLADES | ESTIMATED WEIGHT (LBS.) |
| 875-10 | 10’-6” | 12’-0” | N/A | 14 | 14 | 5,059 |
| 875-13 | 13’-6” | 15’-0” | N/A | 18 | 20 | 5,753 |
| 875-15 | 15’-0” | 16’-6” | N/A | 20 | 22 | 6,090 |
| 875-15F | 15’-0” | 9’-4” | 8’-6” * | 20 | 22 | 6,900 |
| 875-18 | 18’-0” | 10’-6” | 8’-6” ** | 24 | 26 | 9,700 |
| 875-21 | 21’-0” | 13’-6” | 8’-6” ** | 28 | 30 | 10,050 |
| 875-25 | 25’-6” | 15’-0” | 8’-6” ** | 34 | 38 | 10,917 |

* 180° Single Fold
** 180° Fold
Specifications are subject to change without prior notification.

https://truckmanualshub.com/



## LANDOLL CORPORATION
### GENERAL TORQUE SPECIFICATIONS (REV. 4/97)

THIS CHART PROVIDES TIGHTENING TORQUES FOR GENERAL PURPOSE APPLICATIONS WHEN SPECIAL TORQUES ARE NOT SPECIFIED ON PROCESS OR DRAWING.

ASSEMBLY TORQUES APPLY TO PLATED NUTS AND CAPSCREWS ASSEMBLED WITHOUT SUPPLEMENTAL LUBRICATION (AS RECEIVED CONDITION).

THEY DO NOT APPLY IF SPECIAL GRAPHITE MOLY-DISULFIDE OR OTHER EXTREME PRESSURE LUBRICANTS ARE USED.

WHEN FASTENERS ARE DRY (SOLVENT CLEANED), ADD 33% TO AS RECEIVED CONDITION TORQUE.

BOLT HEAD IDENTIFICATION MARKS INDICATE GRADE AND MAY VARY FROM MANUFACTURER TO MANUFACTURER.

THICK NUTS MUST BE USED ON GRADE 8 CAPSCREWS.

USE VALUE IN [ ] IF USING PREVAILING TORQUE NUTS.

**TORQUE IS SPECIFIED IN FOOT POUNDS**

| UNC Size | SAE Grade 2 | | SAE Grade 5 | | SAE Grade 8 | | UNF Size | SAE Grade 2 | | SAE Grade 5 | | SAE Grade 8 | |
|---|---|---|---|---|---|---|---|---|---|---|---|---|---|
| 1/4-20 | 4 | [5] | 6 | [7] | 9 | [11] | 1/4-28 | 5 | [6] | 7 | [9] | 10 | [12] |
| 5/16-18 | 8 | [10] | 13 | [16] | 18 | [22] | 5/16-24 | 9 | [11] | 14 | [17] | 20 | [25] |
| 3/8-16 | 15 | [19] | 23 | [29] | 35 | [43] | 3/8-24 | 17 | [21] | 25 | [31] | 35 | [44] |
| 7/16-14 | 24 | [30] | 35 | [43] | 55 | [62] | 7/16-20 | 27 | [34] | 40 | [50] | 60 | [75] |
| 1/2-13 | 35 | [43] | 55 | [62] | 80 | [100] | 1/2-20 | 40 | [50] | 65 | [81] | 90 | [112] |
| 9/16-12 | 55 | [62] | 80 | [100] | 110 | [137] | 9/16-18 | 60 | [75] | 90 | [112] | 130 | [162] |
| 5/8-11 | 75 | [94] | 110 | [137] | 170 | [212] | 5/8-18 | 85 | [106] | 130 | [162] | 180 | [225] |
| 3/4-10 | 130 | [162] | 200 | [250] | 280 | [350] | 3/4-16 | 150 | [188] | 220 | [275] | 320 | [400] |
| 7/8-9 | 125 | [156] | 320 | [400] | 460 | [575] | 7/8-14 | 140 | [175] | 360 | [450] | 500 | [625] |
| 1-8 | 190 | [237] | 408 | [506] | 680 | [850] | 1-14 | 210 | [263] | 540 | [675] | 760 | [950] |
| 1-1/8-7 | 270 | [337] | 600 | [750] | 960 | [1200] | 1-1/8-12 | 300 | [375] | 660 | [825] | 1080 | [1350] |
| 1-1/4-7 | 380 | [475] | 840 | [1050] | 1426 | [1782] | 1-1/4-12 | 420 | [525] | 920 | [1150] | 1500 | [1875] |
| 1-3/8-6 | 490 | [612] | 110 | [1375] | 1780 | [2225] | 1-3/8-12 | 560 | [700] | 1260 | [1575] | 2010 | [2512] |
| 1-1/2-6 | 650 | [812] | 1460 | [1825] | 2360 | [2950] | 1-1/2-12 | 730 | [912] | 1640 | [2050] | 2660 | [3325] |
| 1-3/4-5 | 736 | [920] | 1651 | [2063] | 2678 | [3347] | 1-3/4-12 | 920 | [1150] | 2063 | [2579] | 3347 | [4183] |

### METRIC

COARSE THREAD METRIC CLASS 10.9 FASTENERS AND CLASS 10.0 NUTS AND THROUGH HARDENED FLAT WASHERS, PHOSPHATE COATED, ROCKWELL "C" 38-45.
USE VALUE IN [ ] IF USING PREVAILING TORQUE NUTS.

| Nominal Thread Diameter mm | Standard Torque | | | | Nominal Thread Diameter mm | Standard Torque | | | |
|---|---|---|---|---|---|---|---|---|---|
| | Newton-Meters | | Foot-Pounds | | | Newton-Meters | | Foot-Pounds | |
| 6 | 10 | [14] | 7 | [10] | 20 | 385 | [450] | 290 | [335] |
| 7 | 16 | [22] | 12 | [16] | 24 | 670 | [775] | 500 | [625] |
| 8 | 23 | [32] | 17 | [24] | 27 | 980 | [1105] | 730 | [825] |
| 10 | 46 | [60] | 34 | [47] | 30 | 1330 | [1470] | 990 | [1090] |
| 12 | 80 | [101] | 60 | [75] | 33 | 1790 | [1950] | 1340 | [1450] |
| 14 | 125 | [155] | 90 | [115] | 36 | 2325 | [2515] | 1730 | [1870] |
| 16 | 200 | [240] | 150 | [180] | 39 | 3010 | [3210] | 2240 | [2380] |
| 18 | 275 | [330] | 205 | [245] | | | | | |

**Table 2-1: General Torque Specifications**

https://truckmanualshub.com/



## LANDOLL CORPORATION
### HYDRAULIC FITTING TORQUE SPECIFICATIONS
### 37° JIC, ORS, & ORB (REV. 10/97)

THIS CHART PROVIDES TIGHTENING TORQUES FOR HYDRAULIC FITTING APPLICATIONS WHEN SPECIAL TORQUES ARE NOT SPECIFIED ON PROCESS OR DRAWING.

ASSEMBLY TORQUES APPLY TO PLATED CARBON STEEL AND STAINLESS STEEL FITTINGS ASSEMBLED WITHOUT SUPPLEMENTAL LUBRICATION (AS RECEIVED CONDITION). THEY DO NOT APPLY IF SPECIAL GRAPHITE MOLY-DISULFIDE OR OTHER EXTREME PRESSURE LUBRICANTS ARE USED. BRASS FITTINGS AND ADAPTERS - 65% OF THE TORQUE VALUE FOR STEEL. STAINLESS STEEL, ALUMINUM AND MONEL - THREADS ARE TO BE LUBRICATED.

**TORQUE IS SPECIFIED IN FOOT POUNDS**

**PARKER BRAND FITTINGS**

| Dash Size | 37 Degree JIC | O-Ring (ORS) | O-Ring Boss (ORB) |
|---|---|---|---|
| -4 | 11-13 | 15-17 | 13-15 |
| -5 | 14-16 | — | 21-23 |
| -6 | 20-22 | 34-36 | 25-29 |
| -8 | 43-47 | 58-62 | 40-44 |
| -10 | 55-65 | 100-110 | 57.5-62.5 |
| -12 | 80-90 | 134-146 | 75-85 |
| -16 | 115-125 | 202-218 | 109-121 |
| -20 | 160-180 | 248-272 | 213-237 |
| -24 | 185-215 | 303-327 | 238-262 |
| -32 | 250-290 | — | 310-340 |

**GATES BRAND FITTINGS**

| Dash Size | 37 Degree JIC | O-Ring (ORS) | O-Ring Boss (ORB) |
|---|---|---|---|
| -4 | 10-11 | 10-12 | 14-16 |
| -5 | 13-15 | — | — |
| -6 | 17-19 | 18-20 | 24-26 |
| -8 | 34-38 | 32-40 | 37-44 |
| -10 | 50-56 | 46-56 | 50-60 |
| -12 | 70-78 | 65-80 | 75-83 |
| -14 | — | 65-80 | — |
| -16 | 94-104 | 92-105 | 111-125 |
| -20 | 124-138 | 125-140 | 133-152 |
| -24 | 156-173 | 150-180 | 156-184 |
| -32 | 219-243 | — | — |

**AEROQUIP BRAND FITTINGS**

| Dash Size | 37 Degree JIC | O-Ring (ORS) | O-Ring Boss (ORB) |
|---|---|---|---|
| -4 | 11-12 | 10-12 | 14-16 |
| -5 | 15-16 | — | 18-20 |
| -6 | 18-20 | 18-20 | 24-26 |
| -8 | 38-42 | 32-35 | 50-60 |
| -10 | 57-62 | 46-50 | 72-80 |
| -12 | 79-87 | 65-70 | 125-135 |
| -14 | — | — | 160-180 |
| -16 | 108-113 | 92-100 | 200-220 |
| -20 | 127-133 | 125-140 | 210-280 |
| -24 | 158-167 | 150-165 | 270-360 |
| -32 | 245-258 | — | — |

**Table 2-2: Hydraulic Fitting Torque Specifications**

https://truckmanualshub.com/



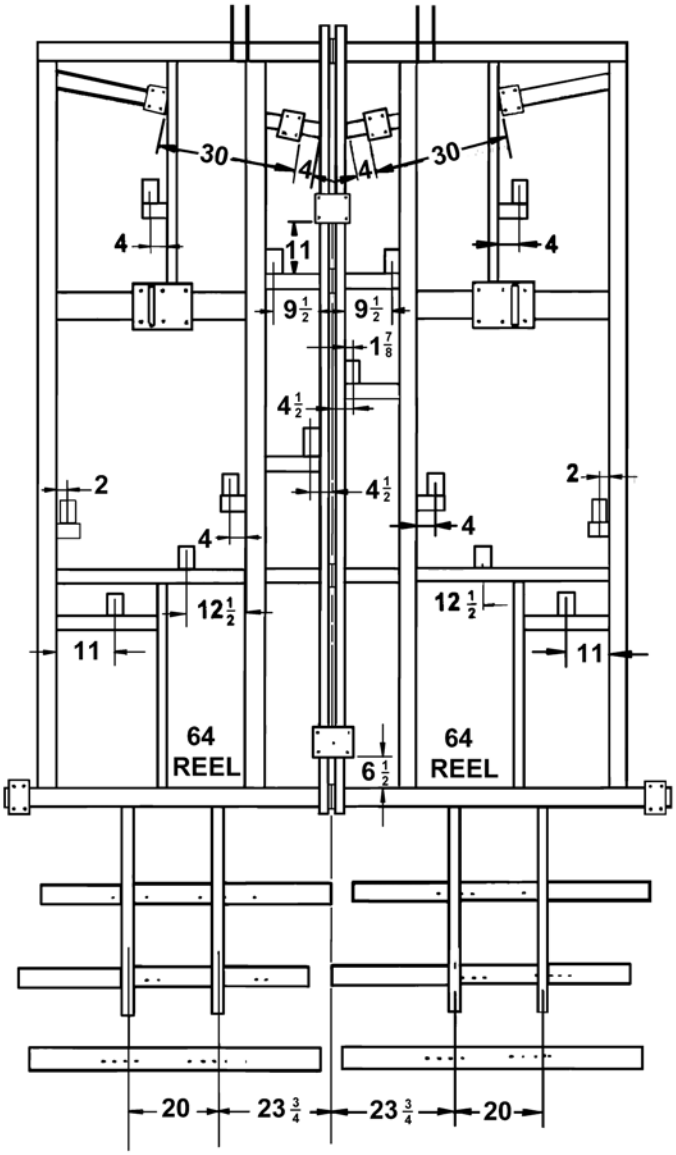


SHANK SPACING - 9" ON CENTER

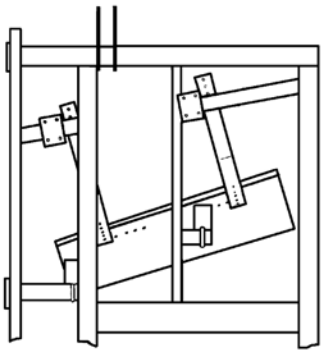

DISC GANG AND SPRAY SHIELD LOCATION

875-10 shank placement

**Figure 2-1: 875-10 Shank Placement Assembly**

https://truckmanualshub.com/



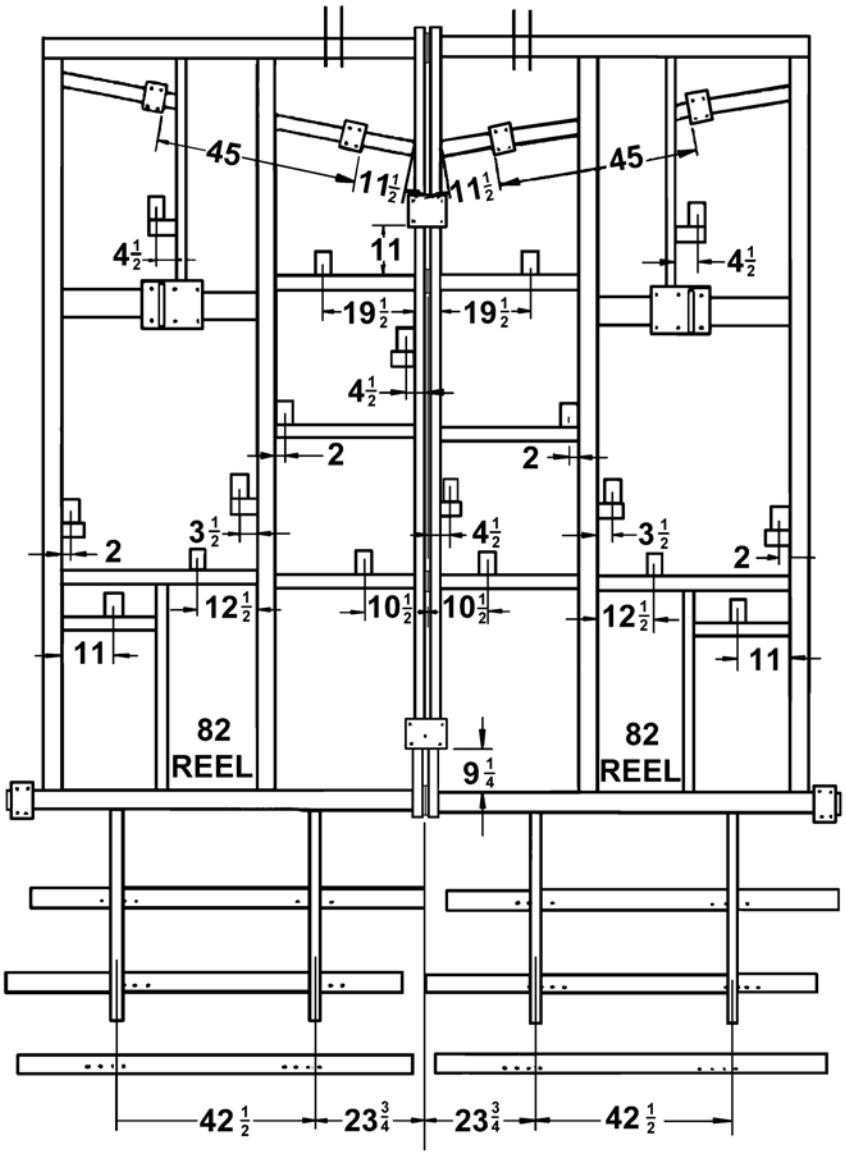


SHANK SPACING - 9" ON CENTER

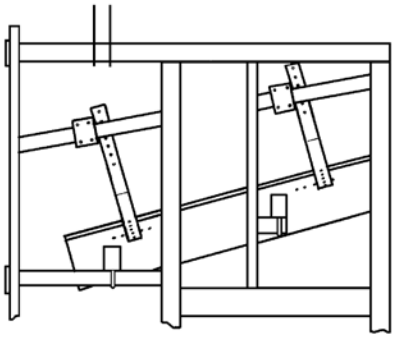

DISC GANG AND SPRAY SHIELD LOCATION

875-13 shank placement

**Figure 2-2: 875-13 Shank Placement Assembly**

https://truckmanualshub.com/



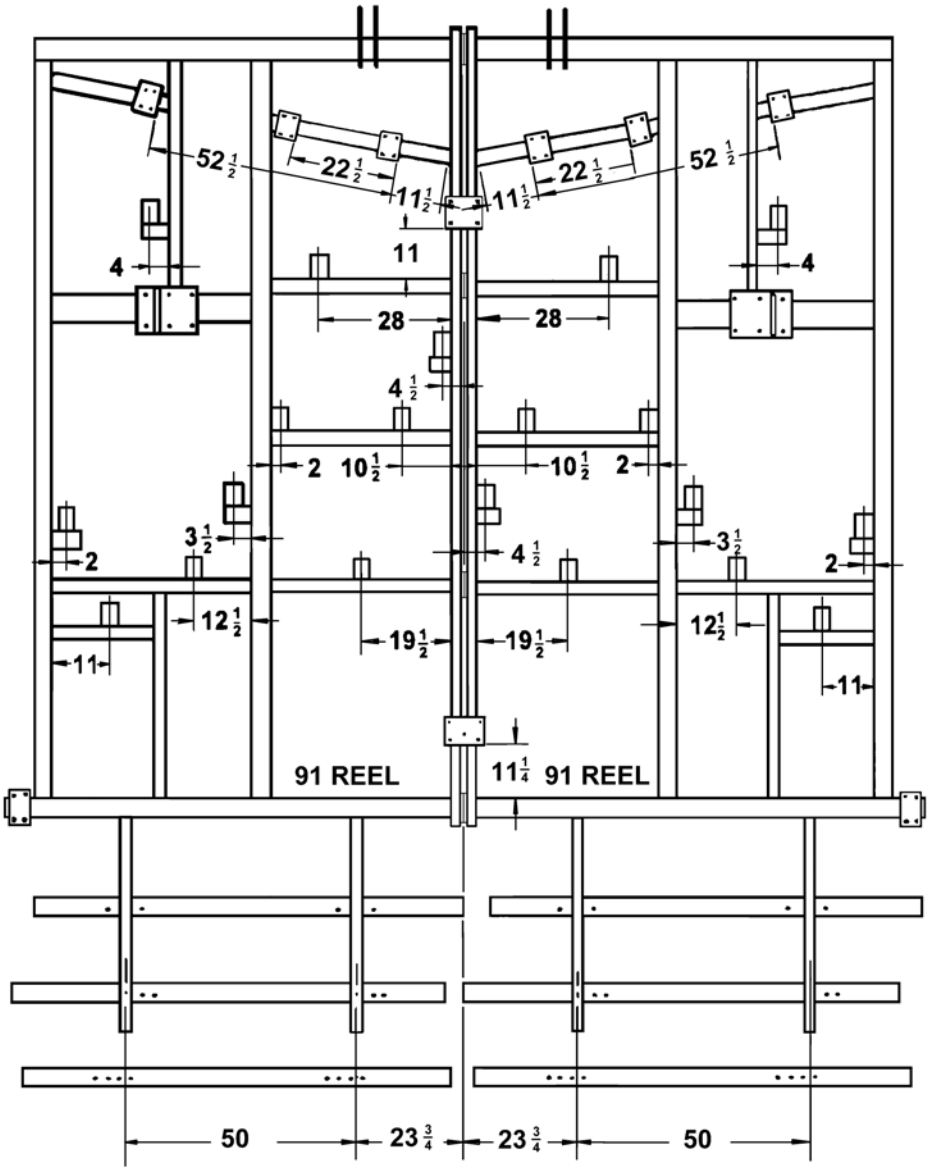


SHANK SPACING - 9” ON CENTER

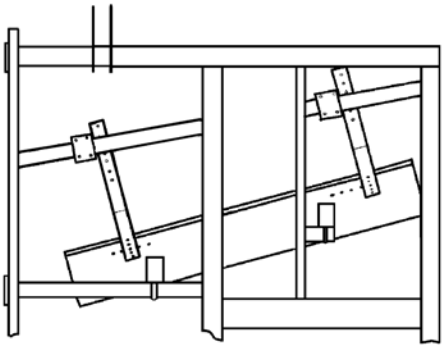

875-15 shank placement

DISC GANG AND SPRAY SHIELD LOCATION

**Figure 2-3: 875-15 Shank Placement Assembly**

https://truckmanualshub.com/



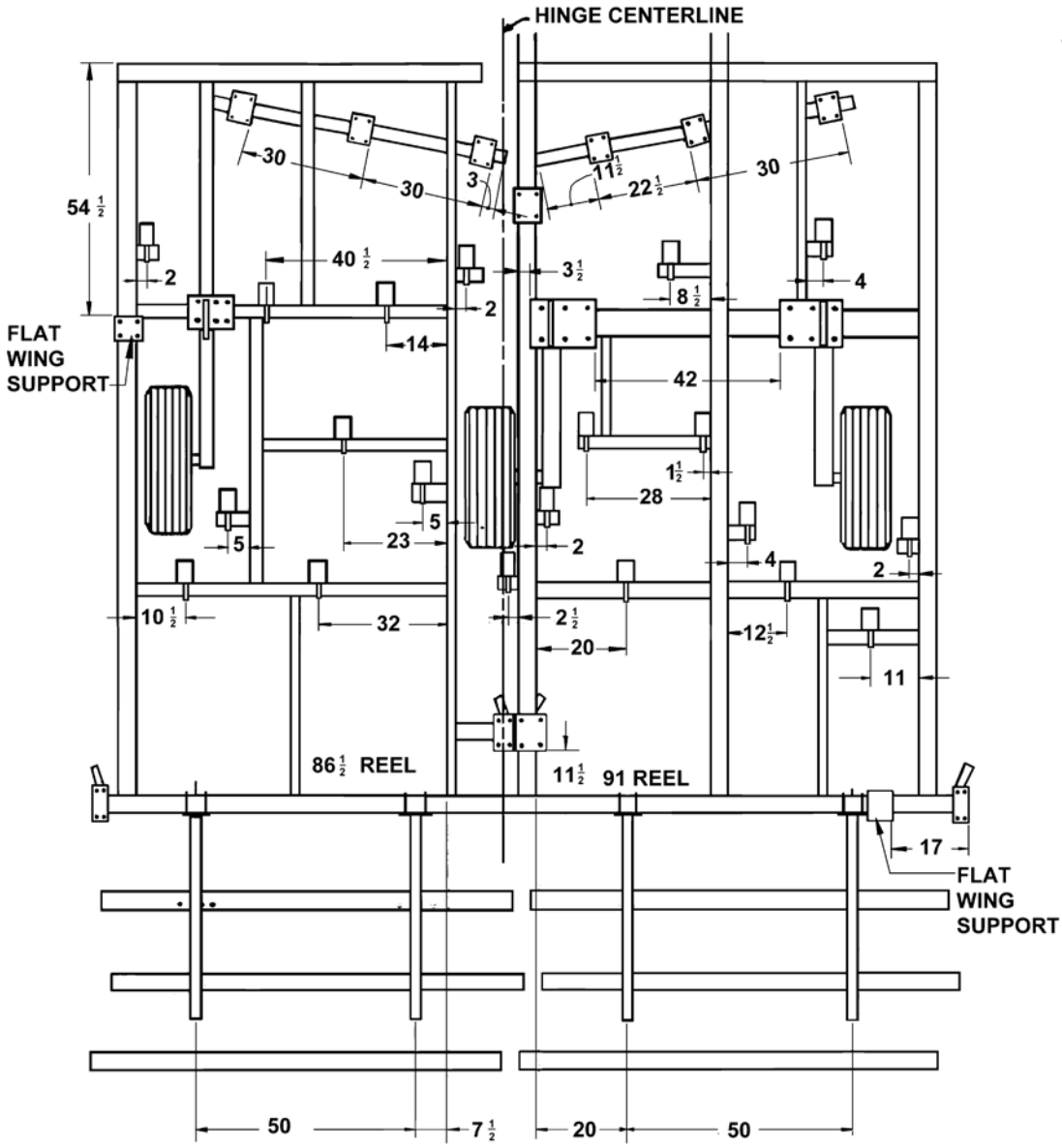


SHANK SPACING - 9” ON CENTER

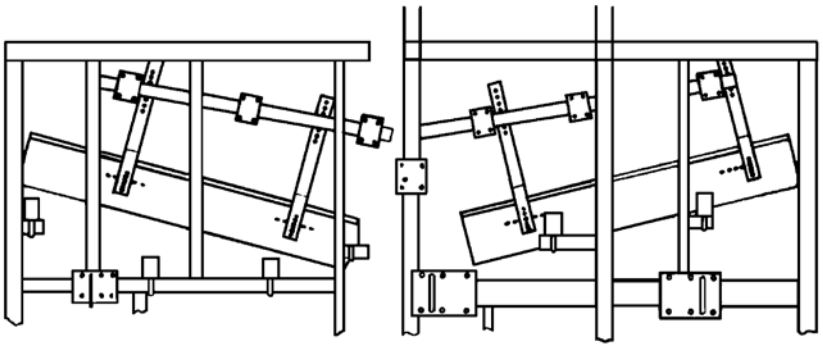

875-15f shank placement

DISC GANG AND SPRAY SHIELD LOCATION

**Figure 2-4: 875-15F Shank Placement Assembly**

https://truckmanualshub.com/



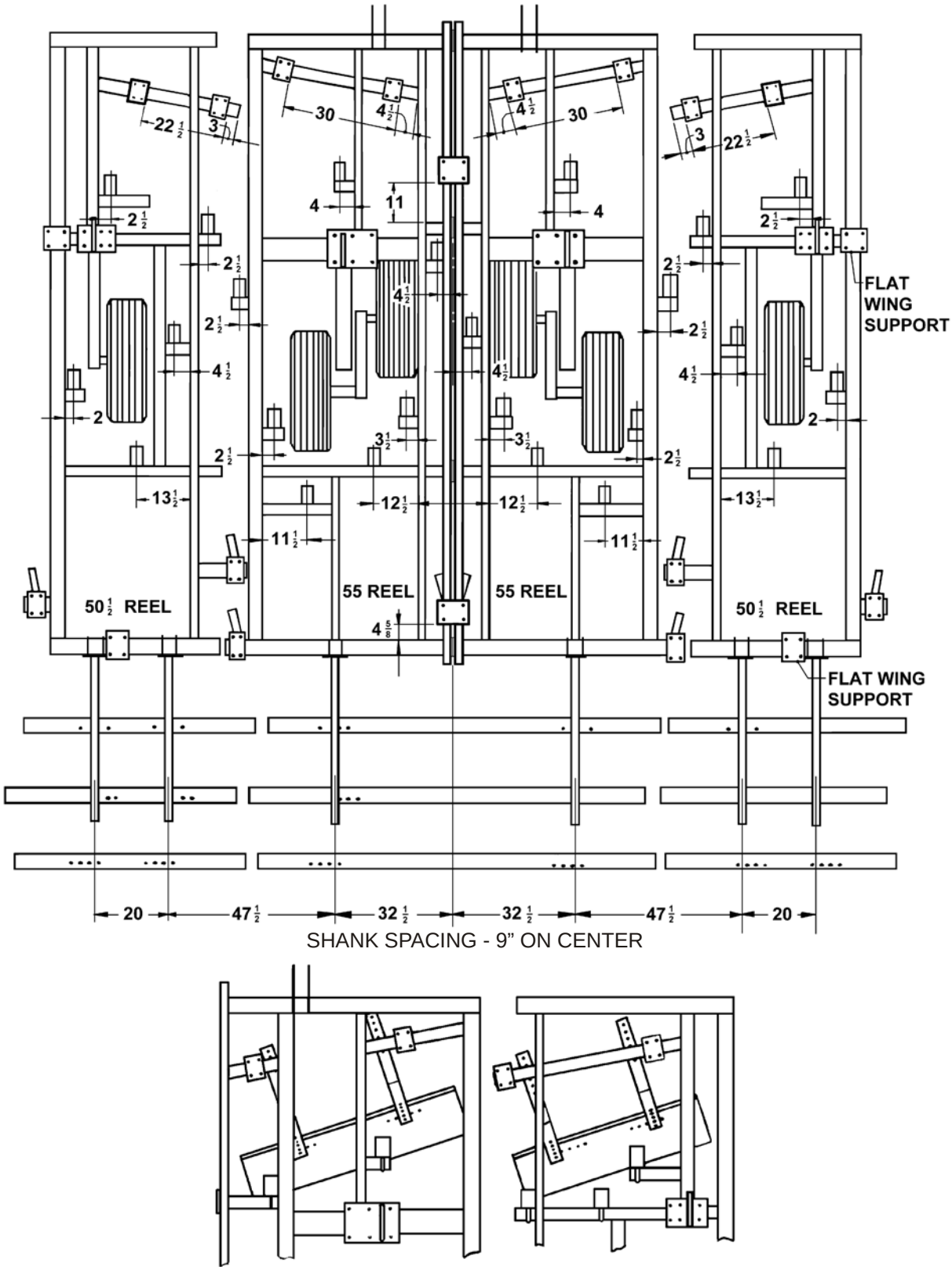


875-18 shank placement

**Figure 2-5: 875-18 Shank Placement Assembly**

https://truckmanualshub.com/



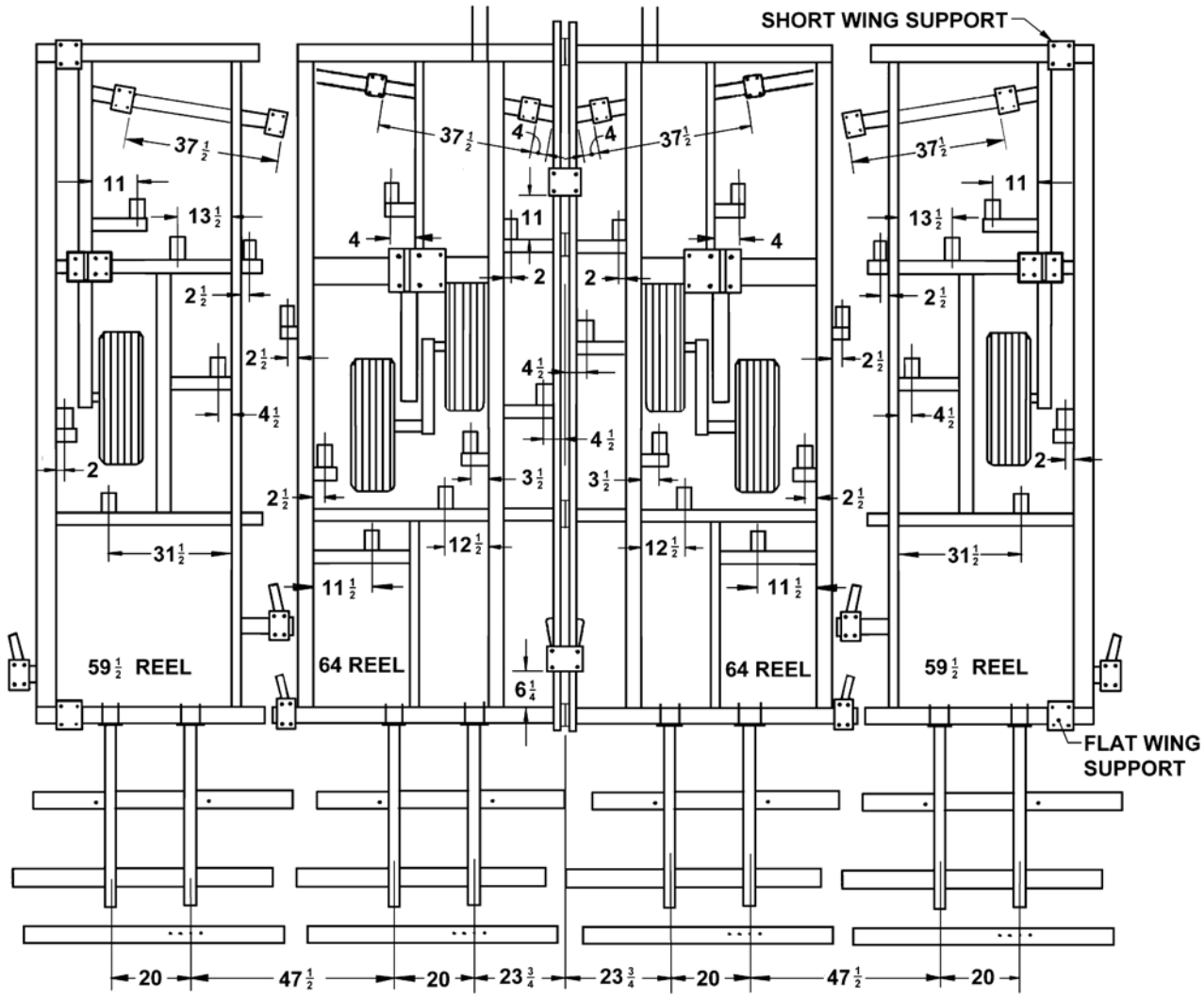


SHANK SPACING - 9” ON CENTER

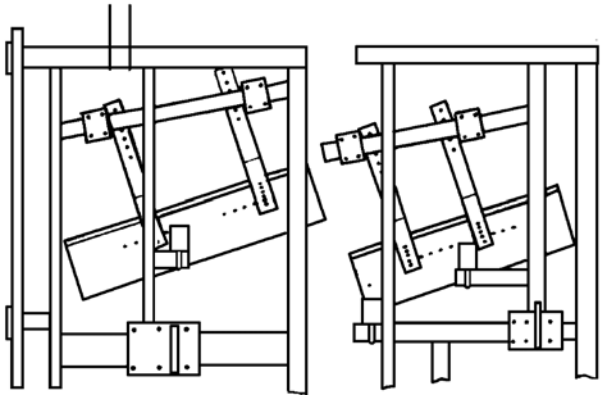

875-21 shank placement

DISC GANG AND SPRAY SHIELD LOCATION

**Figure 2-6: 875-21 Shank Placement Assembly**

https://truckmanualshub.com/



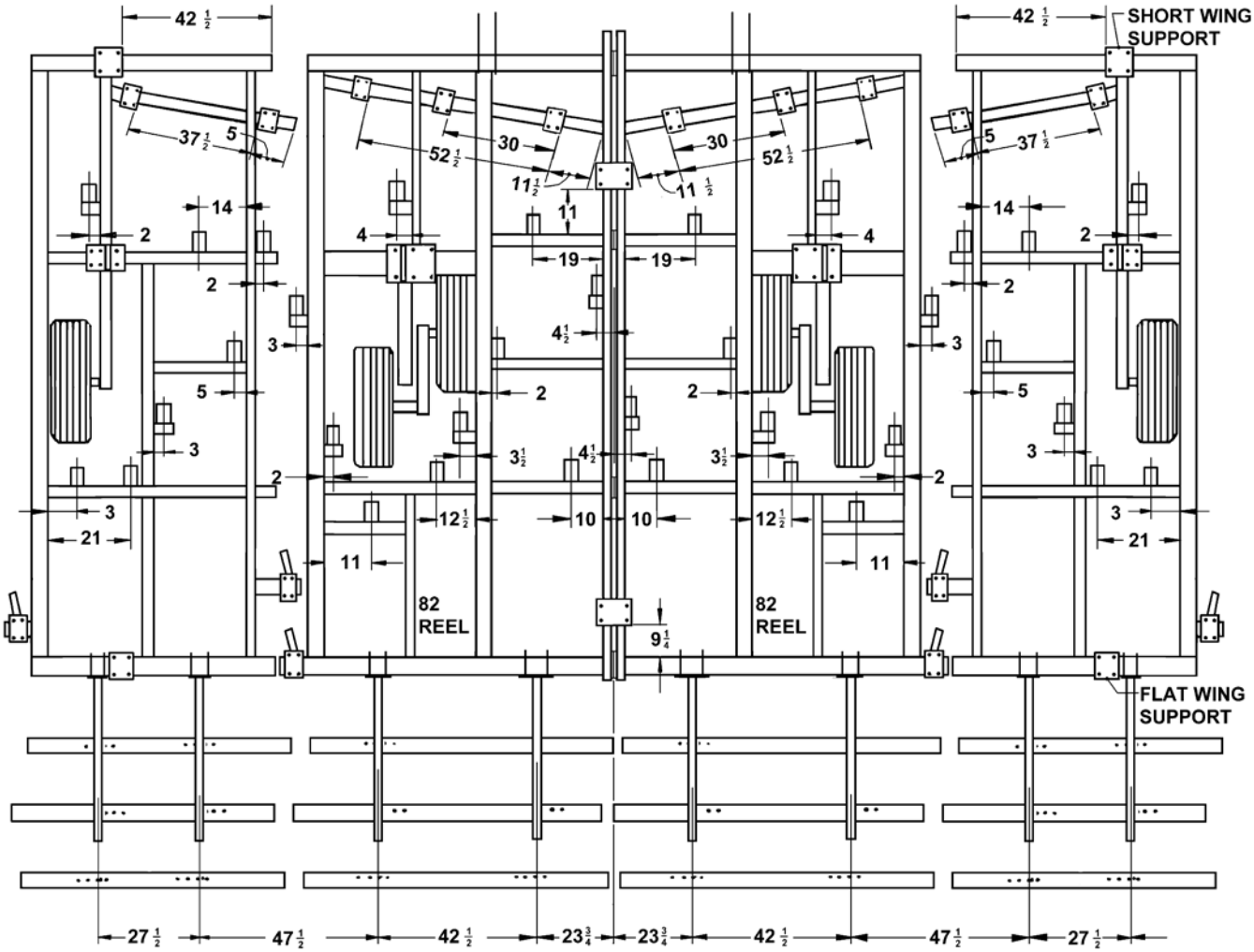


SHANK SPACING - 9” ON CENTER

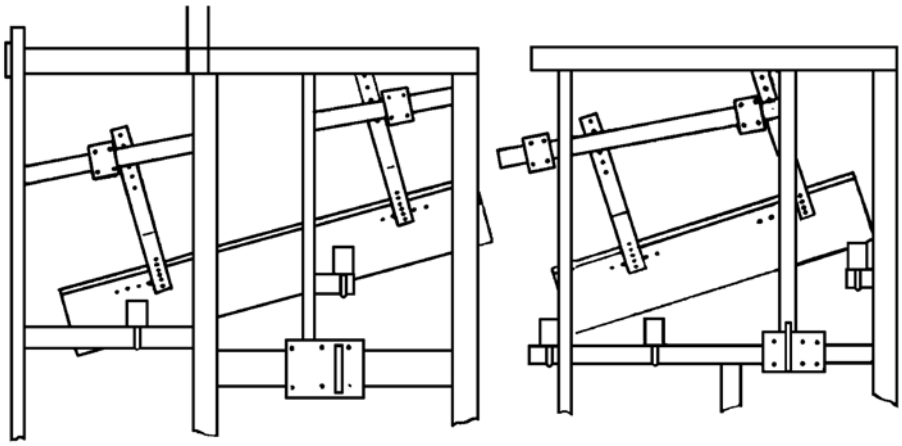

875-25 shank placement

DISC GANG AND SPRAY SHIELD LOCATION

**Figure 2-7: 875-25 Shank Placement Assembly**

https://truckmanualshub.com/

# Chapter 3

# Assembly Instructions

It is very important that your new 875 Series Tilloll be properly assembled, adjusted and lubricated before use. Illustrations to assist with the assembly process are provided in **“Standard Specifications” on page 2-1**.They show proper shank, disc gang and mounting bracket spacings. Illustrations in this section show proper assembly procedures. Remove paint from grease fittings. Replace any grease fittings that are damaged or missing. Be sure to return screws, clips, etc., to their original locations.

To insure alignment of assemblies, **leave the nuts loose until completion** of final assembly. Use lock washers or flat washers as specified. Spread all cotter pins.

**After completion** of final assembly, **tighten all nuts evenly** to prevent misalignment, distortion or binding. Tighten all screws and nuts to the recommended torques shown in **Table 2-1**.

**DANGER**

**To prevent accidental lowering:**
**1. All hydraulically elevated equipment must be locked out using the cylinder lockouts:**
**2. Lower equipment to the ground while servicing or when it is idle.**
**Failure to take measures to prevent accidental lowering may result in serious personal injury or death.**

**DANGER**

**Disc blades are extremely sharp. Exercise extreme care when working on or near disc blades. Do not allow discs to roll over or fall onto any bodily part. Do not allow wrenches to slip when working near disc blades. Never push wrenches toward disc blades. Do not climb over machine above disc blades. Failure to stay clear of disc blade edges can cause serious personal injury or death.**

**WARNING**

**Do not attempt to lift heavy parts (such as the frame, disc gangs, rock shaft, and pull hitch) manually. Use a hoist or a fork lift to move these parts into position.**

**CAUTION**

**Be sure to bleed the hydraulic system of all air in lines after installation. Failure to bleed the system of all air can result in permanent equipment damage.**

https://truckmanualshub.com/



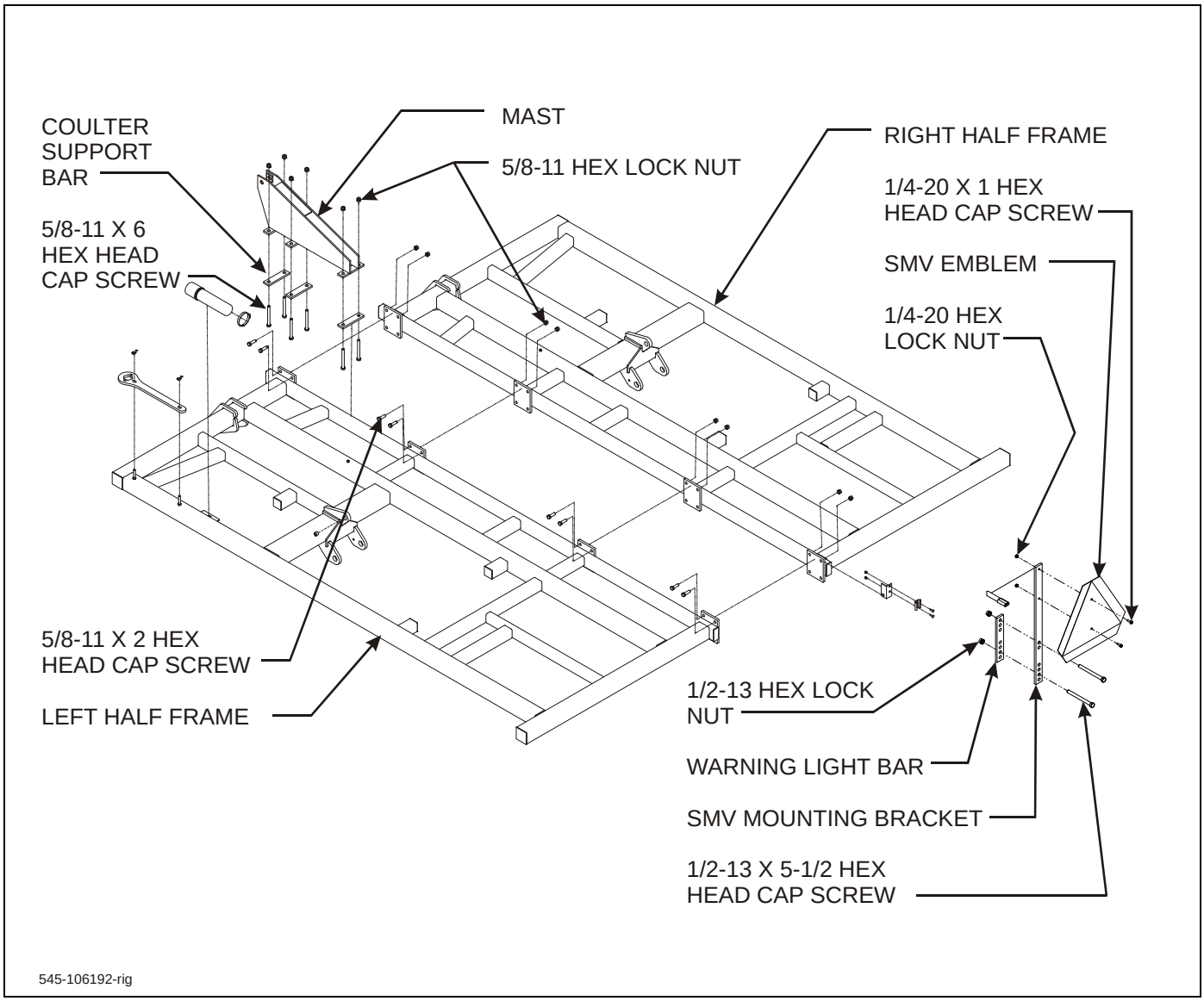


**Figure 3-1: Frame Assembly - Rigid Models**

# Frame Assembly - Rigid Models

**IMPORTANT**

**Read all safety precautions at the front of the section before attempting any of the following procedures.**

1. Bolt frame halves together using 5/8-11 x 2 hex head cap screws and hex lock nuts **(See Figure 3-1.)**
2. Attach SMV mounting bracket and warning light bar to rear frame near the center using 1/2-13 x 5-1/2 hex head cap screw and hex lock nuts**.**
3. Attach SMV emblem to SMV mounting bracket using 1/4-20 x 1 hex head cap screws and hex lock nuts.
4. Place frame assembly on stands approximately 36" high.
5. Install mast to frame using coulter support bars, 5/8-11 x 6 hex head cap screws, and hex lock nuts.

**WARNING**

**Do not attempt to lift heavy parts (such as the frame, disc gangs, rock shaft, and pull hitch) manually. Use a hoist or a fork lift to move these parts into position.**

https://truckmanualshub.com/



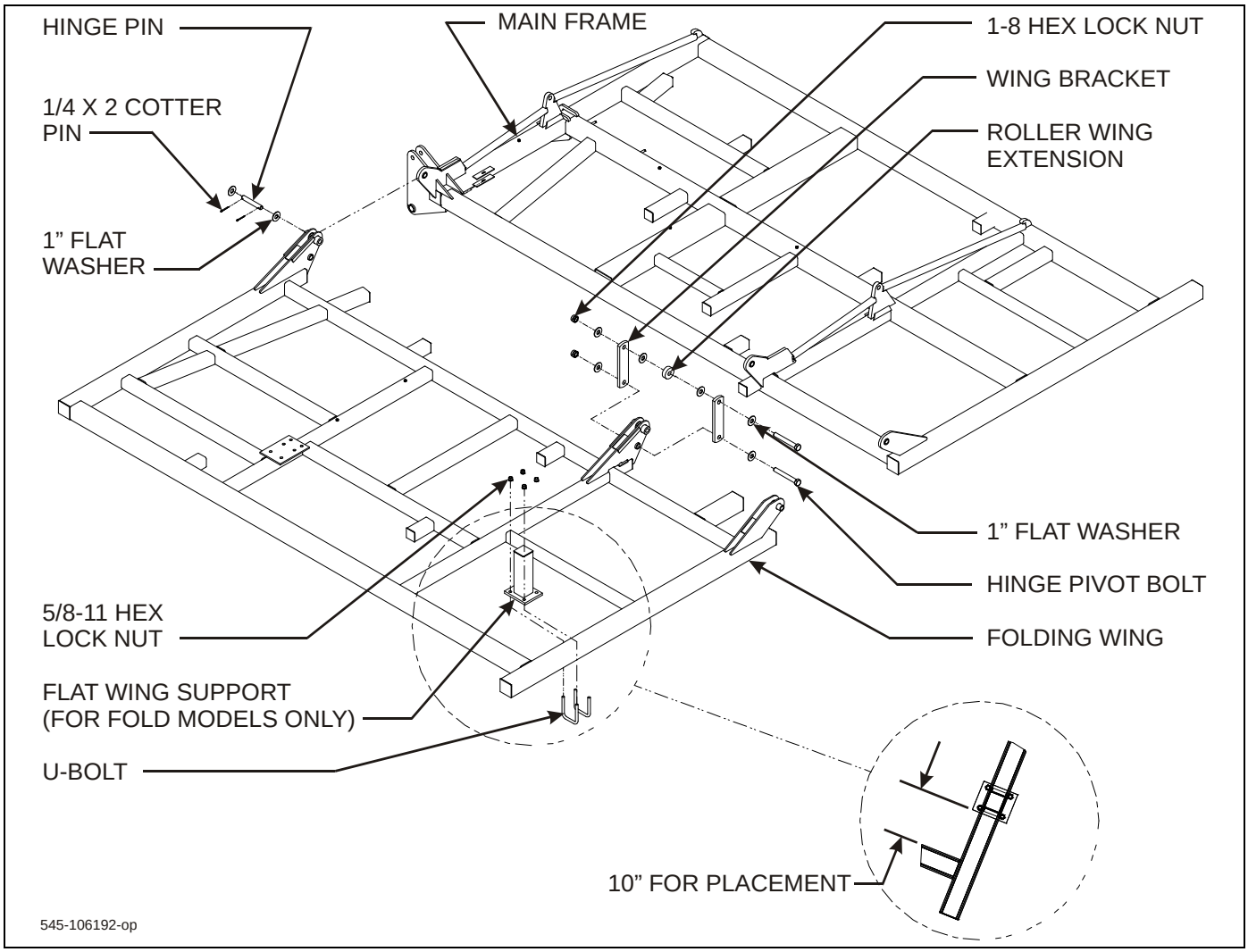


**Figure 3-2: Frame Assembly - 15' Fold Model**

# Frame Assembly - 15' Fold Model

**IMPORTANT**

**Read all safety precautions at the front of the section before attempting any of the following procedures.**

1. Connect main frame and folding wing together using hinge pin, 1" flat washers, and 1/4 x 2 cotter pins **(See Figure 3-2.)**
2. Place frame assembly on stands approximately 36" high.

**WARNING**

**Do not attempt to lift heavy parts (such as the frame, disc gangs, rock shaft, and pull hitch) manually. Use a hoist or a fork lift to move these parts into position.**

https://truckmanualshub.com/



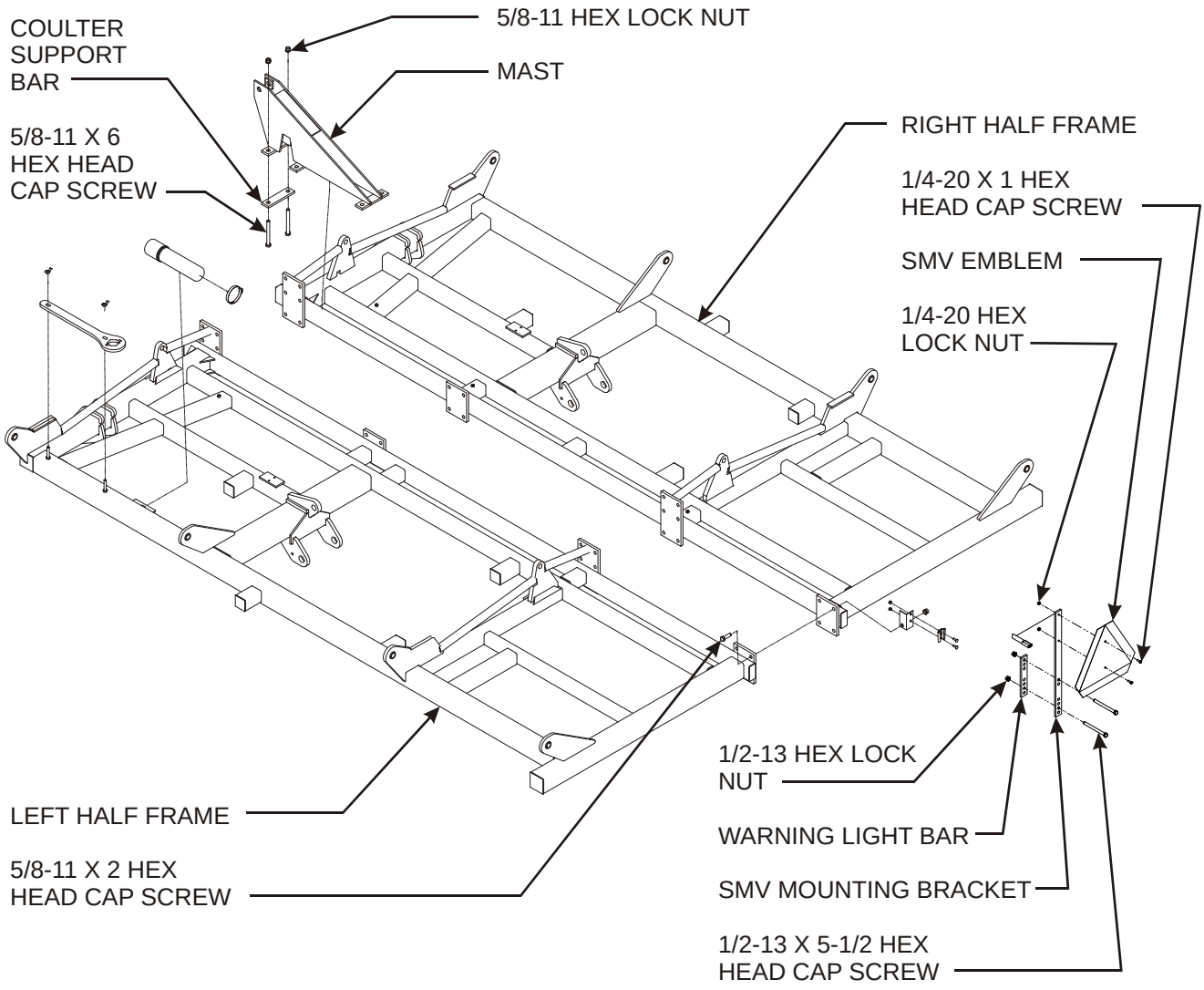


**Figure 3-3: Frame Assembly - Fold Models**

https://truckmanualshub.com/



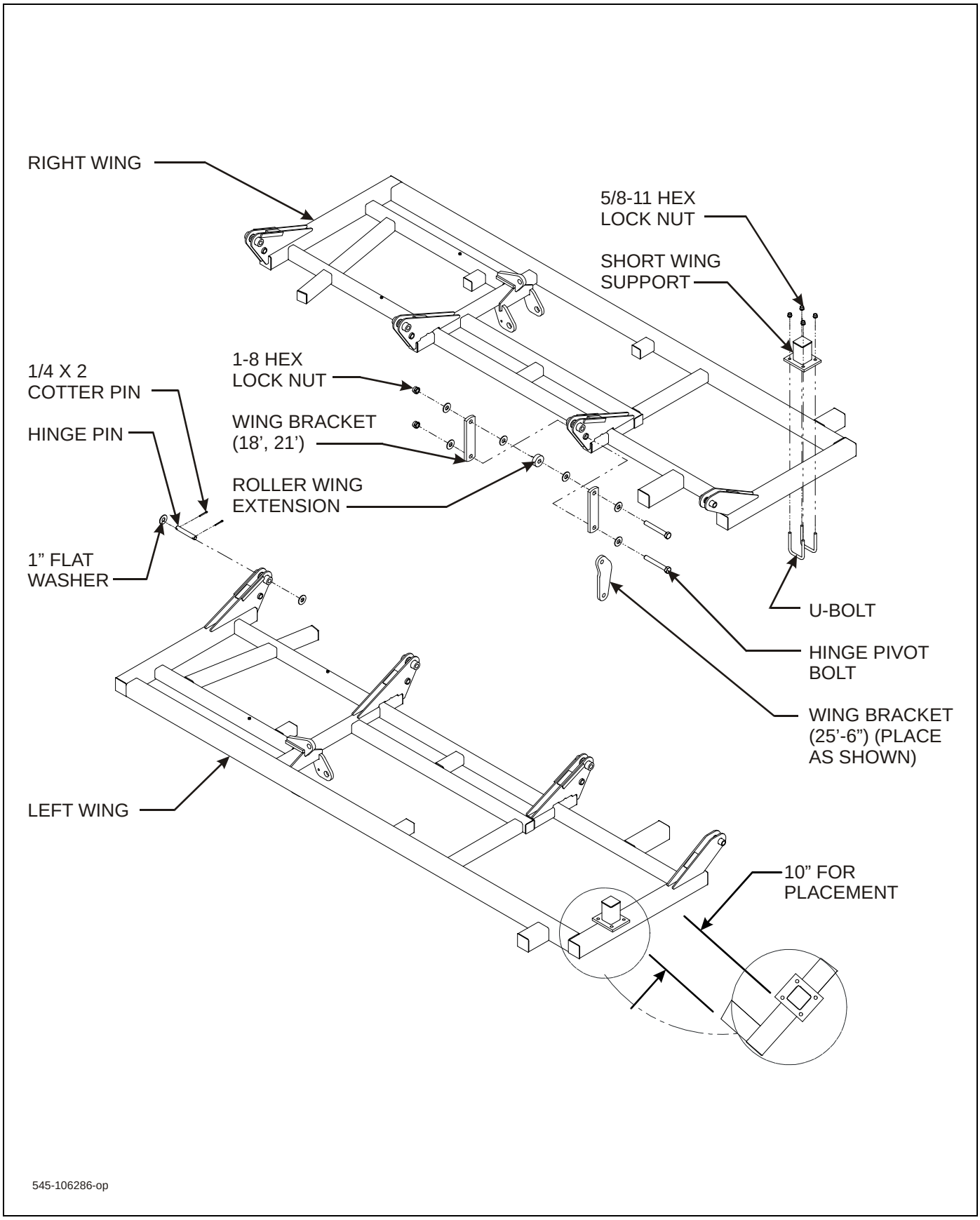


**Figure 3-4: Frame Assembly - Fold Models**

https://truckmanualshub.com/



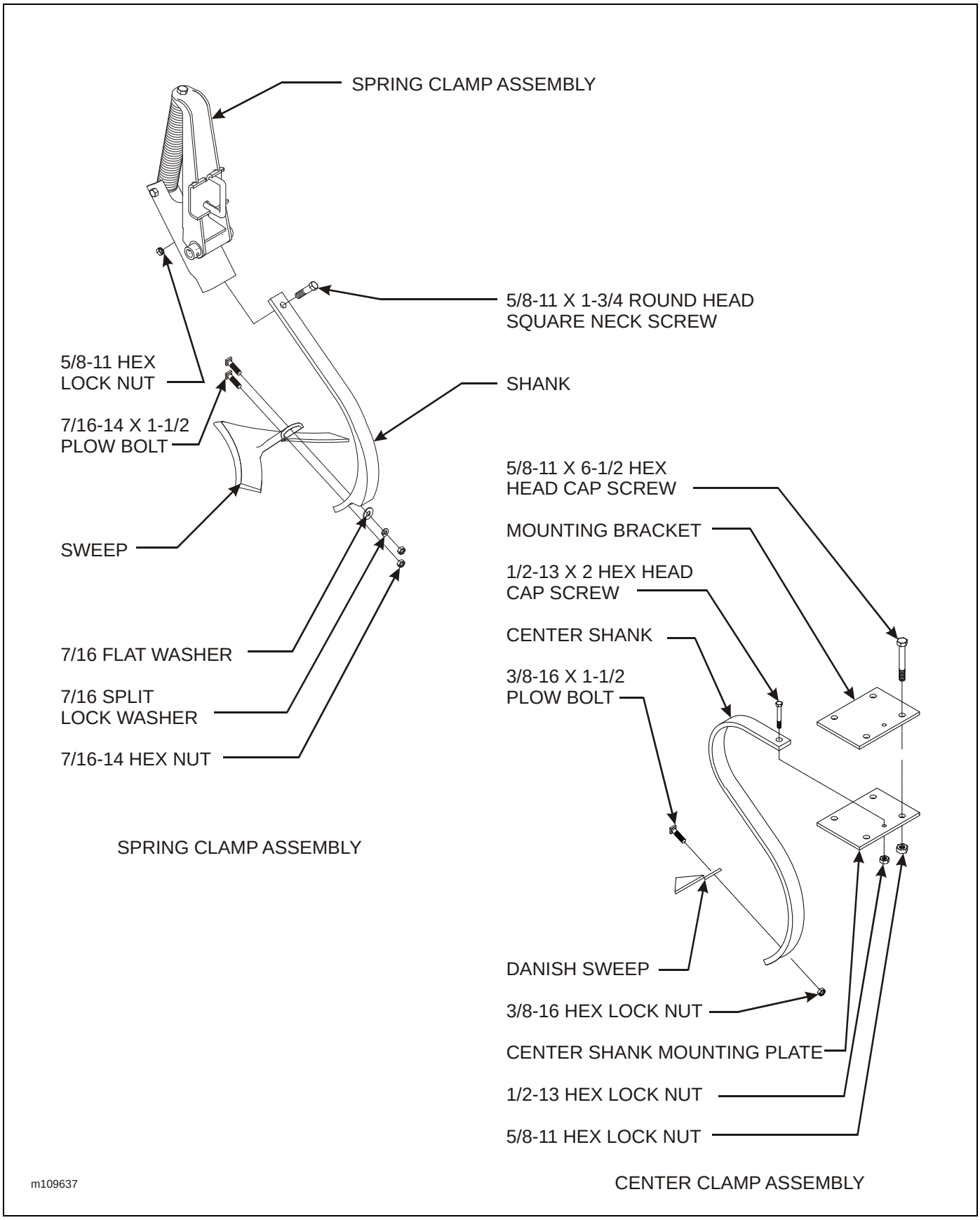


**Figure 3-5: Shank, Clamp, and Sweep Assembly**

https://truckmanualshub.com/


# Frame Assembly - Wing Models

**IMPORTANT**

**Read all safety precautions at the front of the section before attempting any of the following procedures.**

1. Bolt main frame halves together using 5/8-11 x 2 hex head cap screws and hex lock nuts **(See Figure 3-3.)**
2. Attach SMV mounting bracket and warning light bar to rear frame near the center using 1/2-13 x 5-1/2 hex head cap screw and hex lock nuts**.**
3. Attach SMV emblem to SMV mounting bracket using 1/4-20 x 1 hex head cap screws and hex lock nuts.
4. Connect wings to frame using hinge pin, 1" flat washers, and 1/4 x 2 cotter pins **(See Figure 3-4.)**
5. Place frame and wing assembly on stands approximately 36" high.
6. Install mast to frame using coulter support bars, 5/8-11 x 6 hex head cap screws, and hex lock nuts.

**WARNING**

**Do not attempt to lift heavy parts (such as the frame, disc gangs, rock shaft, and pull hitch) manually. Use a hoist or a fork lift to move these parts into position.**

# Shank, Clamp, and Sweep Assembly

**IMPORTANT**

**Read all safety precautions at the front of the section before attempting any of the following procedures.**

1. Center Clamp Assembly:
   a. Attach center shank to center shank mounting plate using 1/2-13 x 2 hex head cap screw and hex lock nut **(See Figure 3-5.)** Install center shank mount assembly to frame using center mounting bracket, 5/8-11 x 6-1/2 hex head cap screws and hex lock nuts **(See Figures 2-1 through 2-7 for location on frame).**
   b. Install danish sweep to center shank assembly using 3/8-16 x 1-1/2 plow bolt and hex lock nut.
2. Spring Clamp Assembly:
   a. Slide shank into spring clamp assembly and fasten tight using 5/8-11 x 1-3/4 round head square neck screw and hex lock nut **(See Figure 3-5.)**
   b. Install sweep to shank using 7/16-14 x 1-1/2 plow bolts, flat washers, split lock washers, and hex nuts.
   c. Recheck all bolts to be sure they are torqued to proper specifications, inspect all pivot points to insure they are snug, but not binding. Grease all fittings.

https://truckmanualshub.com/



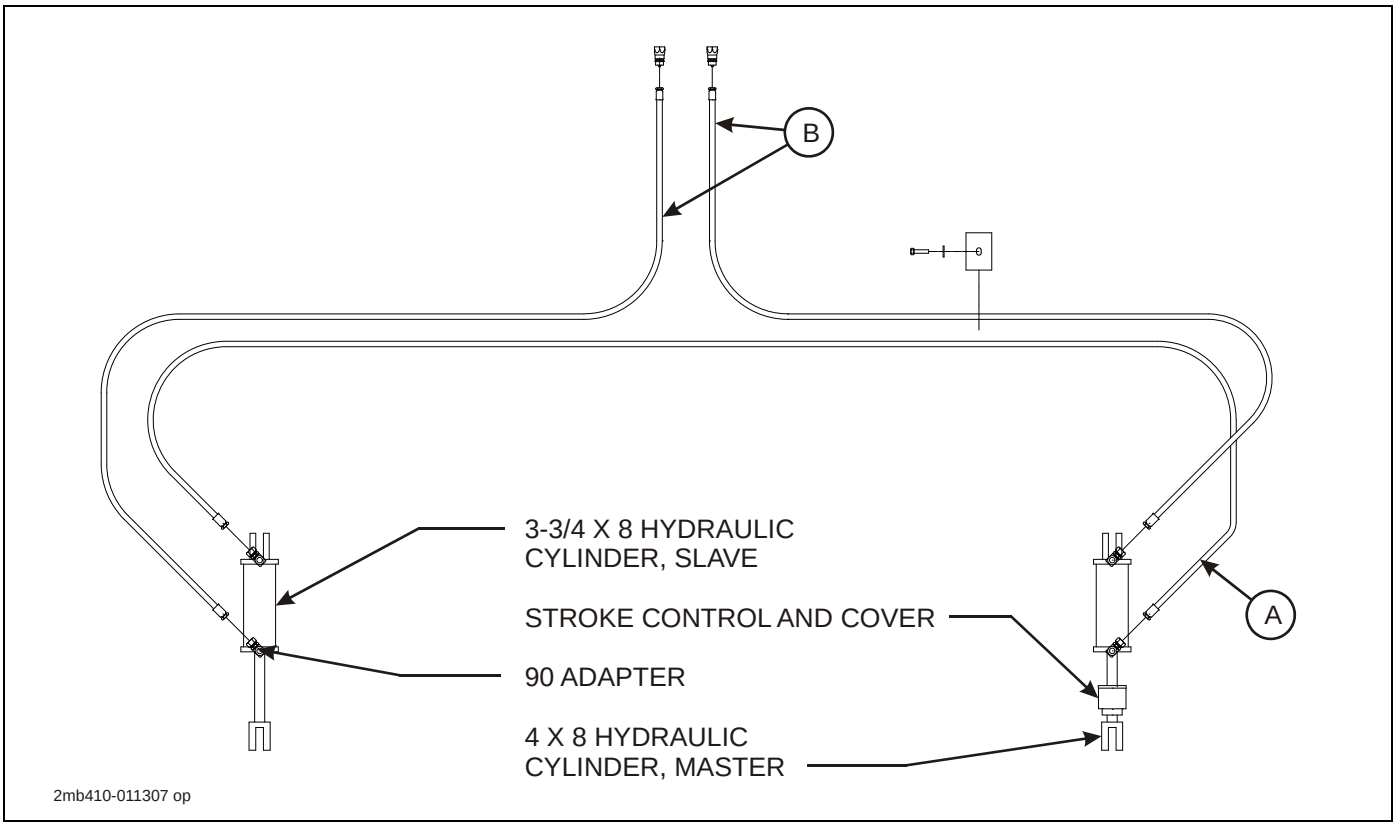


**Figure 3-6: Hydraulic Lift Assembly - Rigid Models**

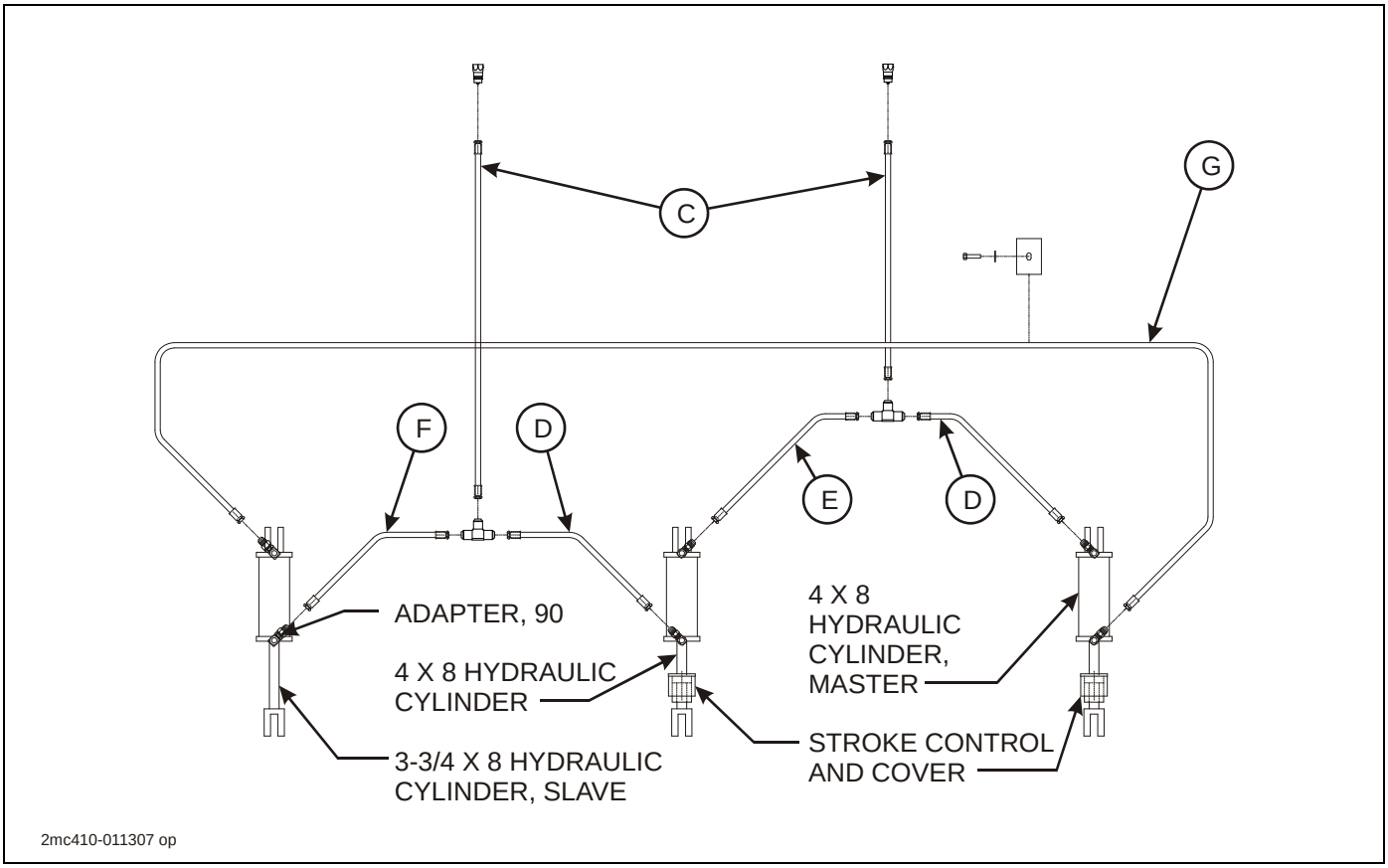


**Figure 3-7: Hydraulic Lift Assembly - 15’ Fold Model**

https://truckmanualshub.com/


## Gauge Wheel Installation

1. All gauge wheel arms, rockshafts, and hubs come already assembled from the factory.
2. Mount the tires on the wheels and install on the hubs.
3. Recommended tires: 11L X 15 10 ply

## Hydraulic Lift Installation - Rigid and 15’ Fold

**IMPORTANT**

**Read all safety precautions at the front of the section before attempting any of the following procedures.**

1. Install stroke control and stroke control cover on master cylinder(s), and parallel system cylinder on 15’ fold model. Replace cylinder yoke(s). Adjust cylinder extended length to measure 28-1/4" from hole center to hole center. Tighten lock bolt or set screw to lock yoke in place.

**NOTE**

*Always adjust the slave cylinder extended length to measure the same as the master cylinder to allow the unit to operate level in the field.*

2. Install the master cylinders (all models) and slave cylinder (rigid models) on the main frame ports up, using clevis pin and cotter pins. Connect rod to gauge wheel arm or rockshaft using extended pin and 1/4 hair pins.
3. Install the non-series cylinder on the 15’ fold model on the main frame ports up, using clevis pin and cotter pins. Connect rod to gauge wheel arm or rockshaft using extended pin and 1/4 hair pins.
4. Install the slave cylinder on the 15’ fold model on the wing frame ports up, using clevis pin and cotter pins. Connect rod to gauge wheel arm or rockshaft using extended pin and 1/4 hair pins.
5. Install $90^{o}$ adapters into base and rod end of each lift cylinder.
6. Install hoses **(See Figures 3-6 and 3-7 and Table 3-1).**

**IMPORTANT**

**All cylinder ports are plugged. Do not forget to remove all plugs and replace with hoses or fittings before applying hydraulic pressure to cylinders.**

| ITEM | PART NO. | HOSE LENGTH (MODEL USED) |
|---|---|---|
| A | 1-397-010301114<br>1-397-010301194 | 1/2 X 114 (875-10)<br>1/2 X 194 (875-13 & 875-15) |
| B | 1-397-010301238<br>1-397-010301284 | 1/2 X 238 (875-10)<br>1/2 X 284 (875-13 & 875-15) |
| C | 162780 | 1/2 X 251 (875-15F) |
| D | 71508984 | 3/8 X 42 (875-15F) |
| E | 137602 | 3/8 X 27 (875-15F) |
| F | 1422176 | 3/8 X 116 (875-15F) |
| G | 117260 | 3/8 X 156 (875-15F) |

**Table 3-1: Hydraulic Hose Installation - Rigid and 15’ Fold**

https://truckmanualshub.com/



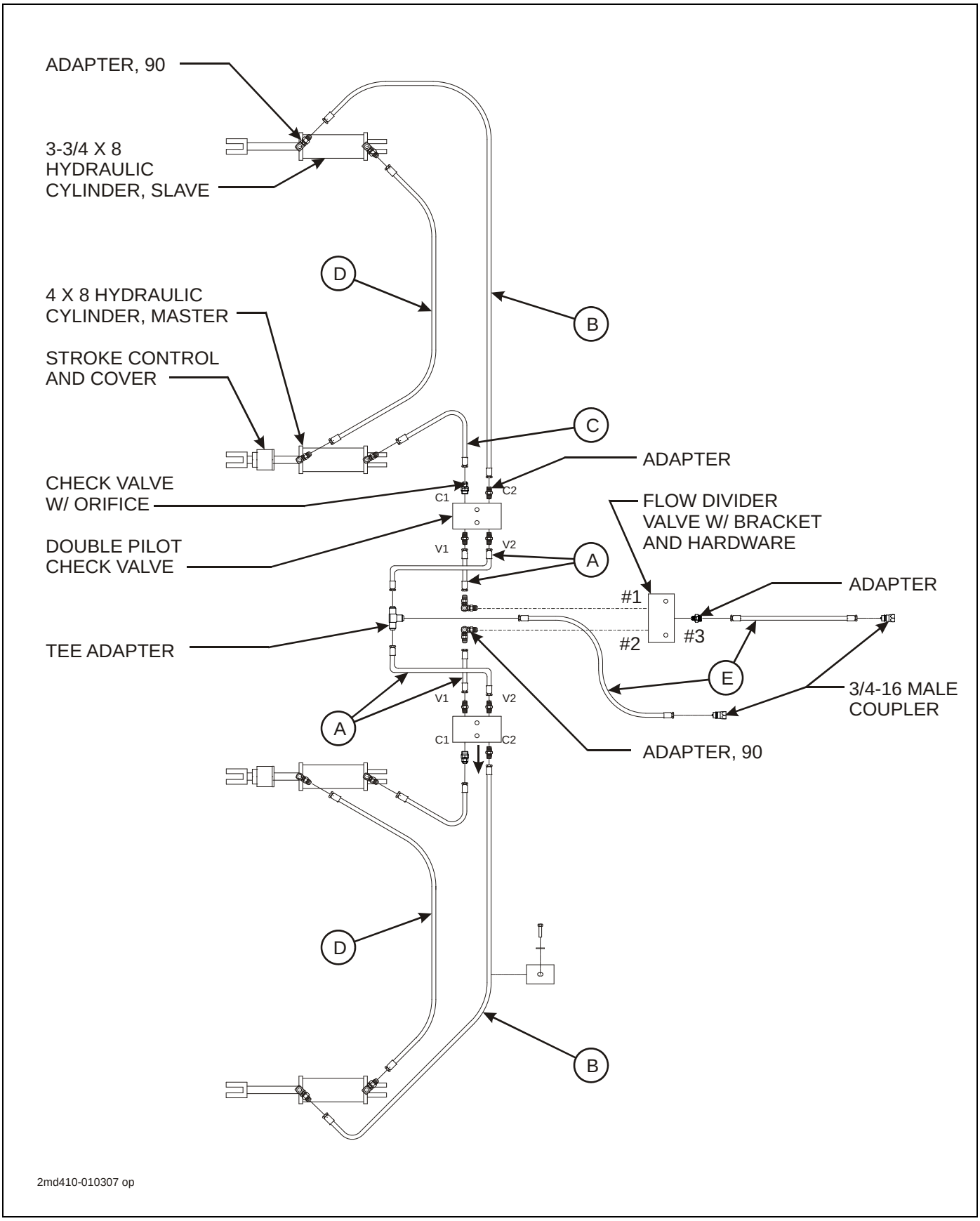


**Figure 3-8: Hydraulic Lift Assembly - Fold Models**

https://truckmanualshub.com/



# Hydraulic Lift Installation - Fold Models

**IMPORTANT**

**Read all safety precautions at the front of the section before attempting any of the following procedures.**

1. Install stroke control and stroke control cover on master cylinders. Replace cylinder yokes. Adjust cylinder extended length of all cylinders to measure 28-1/4" from hole center to hole center. Tighten lock bolt or set screw to lock yoke in place.

**NOTE**

*Always adjust the slave cylinder extended length to measure the same as the master cylinder to allow the unit to operate level in the field* ***(See Table 3-2 and Figure 3-8 .)***

2. Install the master cylinders on the main frame ports up, using clevis pin and cotter pins. Connect rod to gauge wheel arm or rockshaft using extended pin and 1/4 hair pins.
3. Install the slave cylinders on the wing frame ports up, using clevis pin and cotter pins. Connect rod to gauge wheel arm or rockshaft using extended pin and 1/4 hair pins.
4. Install 90$^{o}$ adapters into base and rod end of each lift cylinder.
5. Install three 90$^{o}$ adapters in ports #1 and #2 of flow divider valve. Secure flow divider valve to flow divider mounting bracket using 5/16-18 x 3 hex head cap screws, flat washers, and hex lock nuts. Install check valves on frame using 3/8-16 x 1-3/4 hex head cap screws and split lock washers.

**IMPORTANT**

**Mount double pilot check valves so that the ports V1 and V2 are facing the flow divider valve with V1 port behind the V2 port. Install hose A in V1 ports of each check valve and connect to 90$^{o}$ adapters on the flow divider valve. Install hose a into V2 port of each check valve. Connect together hose A with tee adapter.**

6. Screw check valve w/ orifice into port C1 of check valves.
7. Screw adapters into ports C2, V1, and V2 of check valves. Use hose C to connect check valve w/ orifice to base port of master cylinders.
8. Connect hose B from adapter in C2 port of check valves to the rod end of slave cylinders.
9. Connect hose D from the base end of slave cylinders to the rod end of master cylinders.
10. Install one hose E from tee adapter to coupler. Install other hose E from adapter in port #3 in flow divider valve to coupler.

**IMPORTANT**

**All cylinder ports are plugged. Do not forget to remove all plugs and replace with hoses or fittings before applying hydraulic pressure to cylinders.**

| ITEM | PART NO. | HOSE LENGTH (MODEL USED) |
|---|---|---|
| A | 137602 | 3/8 X 27 (875-18) |
| | 153841 | 3/8 X 18 (875-21) |
| | 1-397-010369036 | 3/8 X 36 (875-25) |
| B | 137599 | 3/8 X 126-1/4 (875-18 & 875-21) |
| | 116435 | 3/8 X 146 (875-25) |
| C | 1-397-010369036 | 3/8 X 36 (875-18) |
| | 71508992 | 3/8 X 50 (875-21 & 875-25) |
| D | 141881 | 3/8 X 136 (ALL MODELS) |
| E | 156964 | 1/2 X 204 (ALL MODELS) |

**Table 3-2: Hydraulic Hose Installation - Fold Models**

https://truckmanualshub.com/



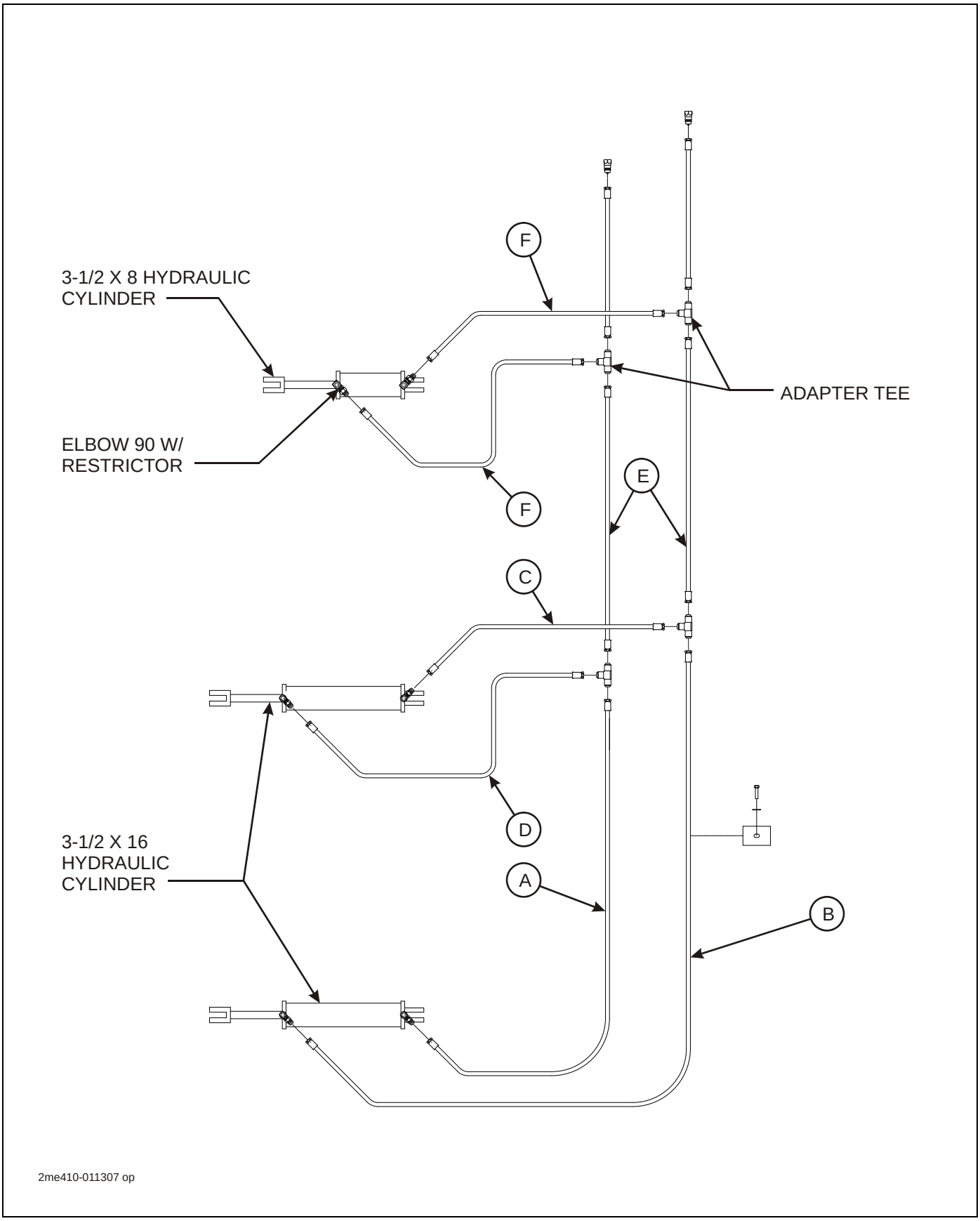


**Figure 3-9: Hydraulic Fold Assembly - 15’ Fold Model**

https://truckmanualshub.com/


# Hydraulic Fold Installation - All Fold Models

**IMPORTANT**

**Read all safety precautions at the front of the section before attempting any of the following procedures.**

1. Install wing fold bracket to wing hinge using hinge pivot bolt through bracket, wing hinge, second bracket, and hex lock nut. Install base end of fold cylinders to main frame cylinder anchor using cylinder pin and hair pins. Install rod end of fold cylinders to wing fold brackets inserting hinge pivot bolt through wing fold bracket, flat washer, yoke, roller, yoke, flat washer, wing fold bracket, and hex lock nut. Do not overtighten bolts. Linkage must be snug, but move freely **(See Figures 3-2 and 3-4)**.
2. Install short and flat wing supports on wings using u-bolts and 5/8-11 hex lock nuts. **See Figures 2-1 through 2-7, 3-2, and 3-4** for locations.
3. Install $90^{o}$ elbows with restrictors into base and rod end of each cylinder.
4. Install hoses **(See Figures 3-9 and 3-10. See Table 3-3 and Table 3-4).**

| ITEM | PART NO. | HOSE LENGTH (MODEL USED) |
|---|---|---|
| A | 1413183 | 3/8 X 103 (875-15F) |
| B | 1413572 | 3/8 X 107-1/4 (875-15F) |
| C | 137602 | 3/8 X 27 (875-15F) |
| D | 1-397-010369036 | 3/8 X 36 (875-15F) |
| E | 123547 | 3/8 X 56 (875-15F) |
| F | 71508954 | 3/8 X 22 (875-15F) |

**Table 3-3: Hydraulic Hose Installation - 15’ Fold Model**

https://truckmanualshub.com/



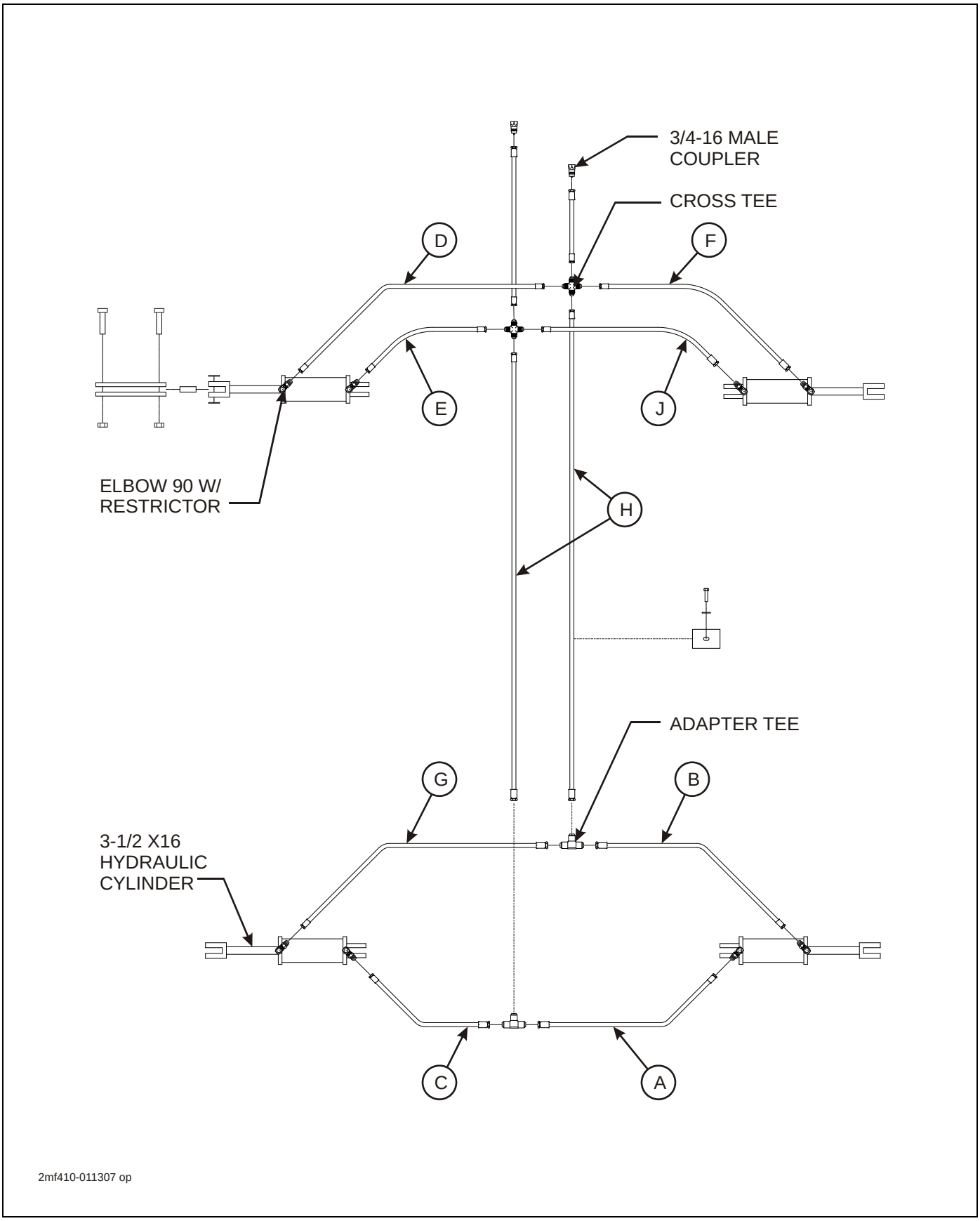


**Figure 3-10: Hydraulic Fold Assembly - 18’, 21’, 25’-6” Fold Models**

https://truckmanualshub.com/


| ITEM | PART NO. | HOSE LENGTH (MODEL USED) |
|---|---|---|
| A | 116489 | 3/8 X 64 (875-18) |
| | 153843 | 3/8 X 67 (875-21) |
| | 116490 | 3/8 X 78” (875-25) |
| B | 71508987 | 3/8 X 86 (875-18 & 875-21) |
| | 116433 | 3/8 X 90 (875-25) |
| C | 123547 | 3/8 X 56 (875-18 & 875-21) |
| | 116489 | 3/8 X 64 (875-25) |
| D | 1-397-010369036 | 3/8 X 36 (875-18) |
| | 71508992 | 3/8 X 50 (875-21) |
| | 123547 | 3/8 X 56 (875-25) |
| E | 137602 | 3/8 X 27 (875-18 & 875-21) |
| | 71508984 | 3/8 X 42 (875-25) |
| F | 71508992 | 3/8 X 50 (875-18) |
| | 153843 | 3/8 X 67 (875-21) |
| | 116490 | 3/8 X 78 (875-25) |
| G | 153343 | 3/8 X 67 (875-18 & 875-21) |
| | 116490 | 3/8 X 78 (875-25) |
| H | 116490 | 3/8 X 78 (875-18) |
| | 147583 | 3/8 X 72 (875-21 & 875-25) |
| J | 137602 | 3/8 X 27 (875-18) |
| | 123547 | 3/8 X 56 (875-21) |
| | 116489 | 3/8 X 64 (875-25) |

**Table 3-4: Hydraulic Hose Installation - 18’, 21’, 25’-6” Fold Models**

https://truckmanualshub.com/



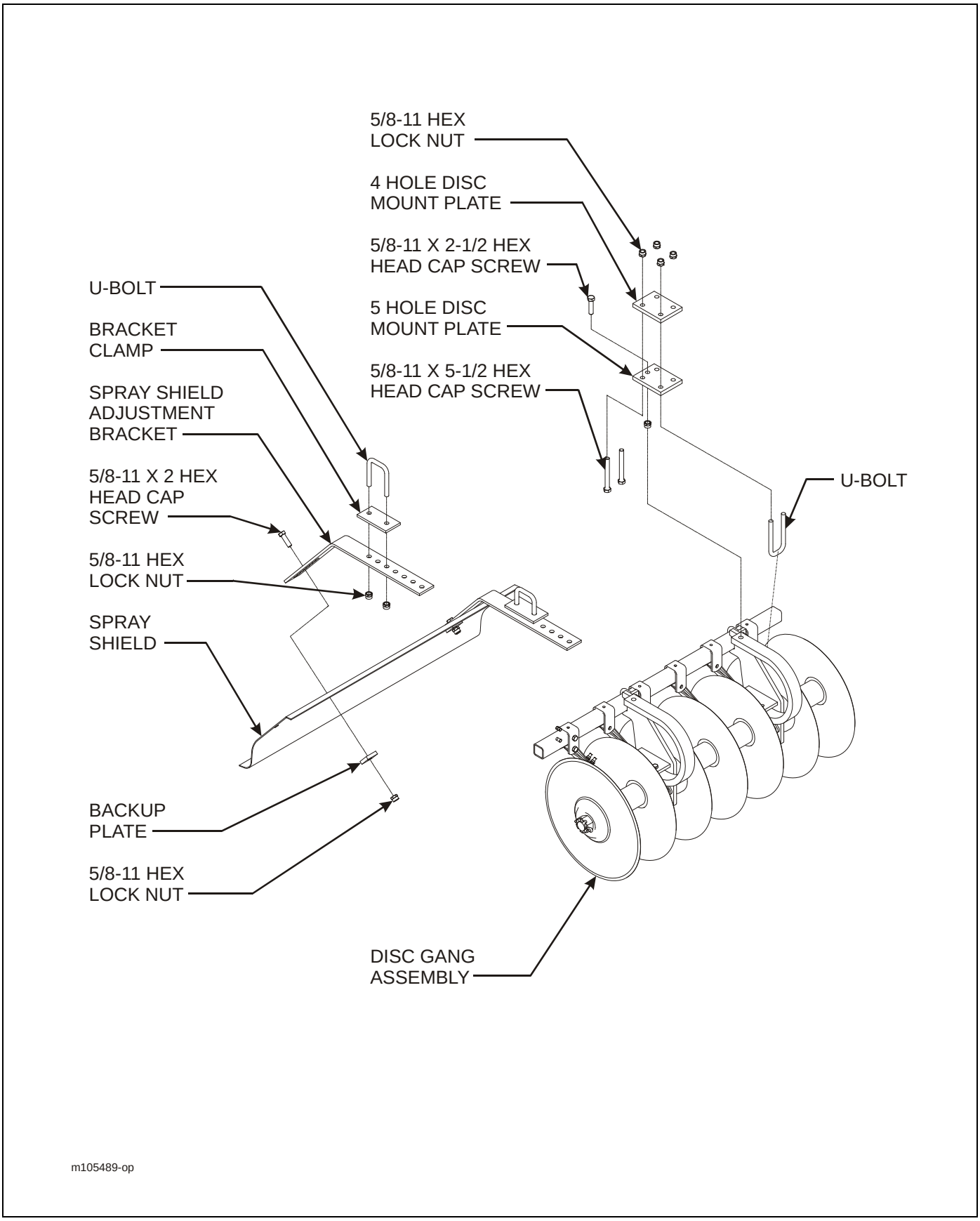


**Figure 3-11: Disc Gang and Spray Shield Installation - 18’, 21’, 25’-6” Models**

https://truckmanualshub.com/


# Disc Gang and Spray Shield Installation

**IMPORTANT**

**Read all safety precautions at the front of the section before attempting any of the following procedures.**

1. Roll correct size disc gang assembly under frame and wing assembly. **See Table 3-5** for disc size and location.

**IMPORTANT**

**Disc gangs without flat coulter blade are used on main frame. The flat coulter blade should be to the outside of the machine.**

2. Install disc gangs on main frames using 4 and 5 hole disc mount plates, u-bolts, 5/8-11 x 5-1/2 hex head cap screws, and hex lock nuts **(See Figure 3-11.)**

**IMPORTANT**

**The distance between the disc gang nuts at center of unit should be 1-1/2".**

3. Install disc gangs on wings using 4 and 5 hole disc mount plates, u-bolts, 5/8-11 x 5-1/2 hex head cap screws, and hex lock nuts.

**IMPORTANT**

**The distance between last blade on main frame and first blade on wing should be 7-1/2".**

**IMPORTANT**

**Disc rod and slotted nut should be tightened to a torque of 1200 ft. lb. This is equivalent to a 200 lb. man standing at the end of a 6 foot long wrench. Install spacer washers at end of disc rod as required.**

4. Tighten 5/8-11 x 2-1/2 hex head cap screws attaching 5 hole plates to spring shank disc mounts. Now tighten 5/8-11 x 5-1/2 hex head cap screws and u-bolts. Be sure 5 hole plate contacts frame evenly and bearings are square on disc rod when tightening or unnecessary bearing load can occur.

**IMPORTANT**

**Last disc blade on all main frame disc gangs are not equipped with a scraper.**

5. Attach spray shield adjustment bracket to frame, as shown for your model size, using u-bolt, bracket clamp, and 5/8-11 hex lock nuts. These brackets are attached to frame as shown to incline the shields toward the middle of the machine and carry soil back to center of the main frame **(See Figures 2-1 through 2-7 for location on frame).**
6. Attach spray shield to adjustment bracket, as shown in **Figure 3-11,** using 5/8-11 x 2 hex head cap screw, backup plate, and hex lock nuts. Shields attached in position shown in Figure should be set to allow the machine to operate from 3-5 inches deep. Tighten all spray shield screws and u-bolts.

| NO. OF BLADES | USED ON MODEL |
|---|---|
| 6 BLADE | 875-18 - WINGS |
| 7 BLADE | 875-10 MODEL; 875-18 MODEL - MAIN FRAME |
| 8 BLADE | 875-21 MODEL - MAIN FRAME AND WINGS; 875-25 MODEL - WINGS |
| 10 BLADE | 875-13 MODEL |
| 10 BLADE/ 1 COULTER | 875-15F MODEL - MAIN FRAME |
| 11 BLADE | 875-15 MODEL; 875-15F MODEL - WING; 875-25 MODEL - MAIN FRAME |

**Table 3-5: Disc Gang Size and Location**

https://truckmanualshub.com/



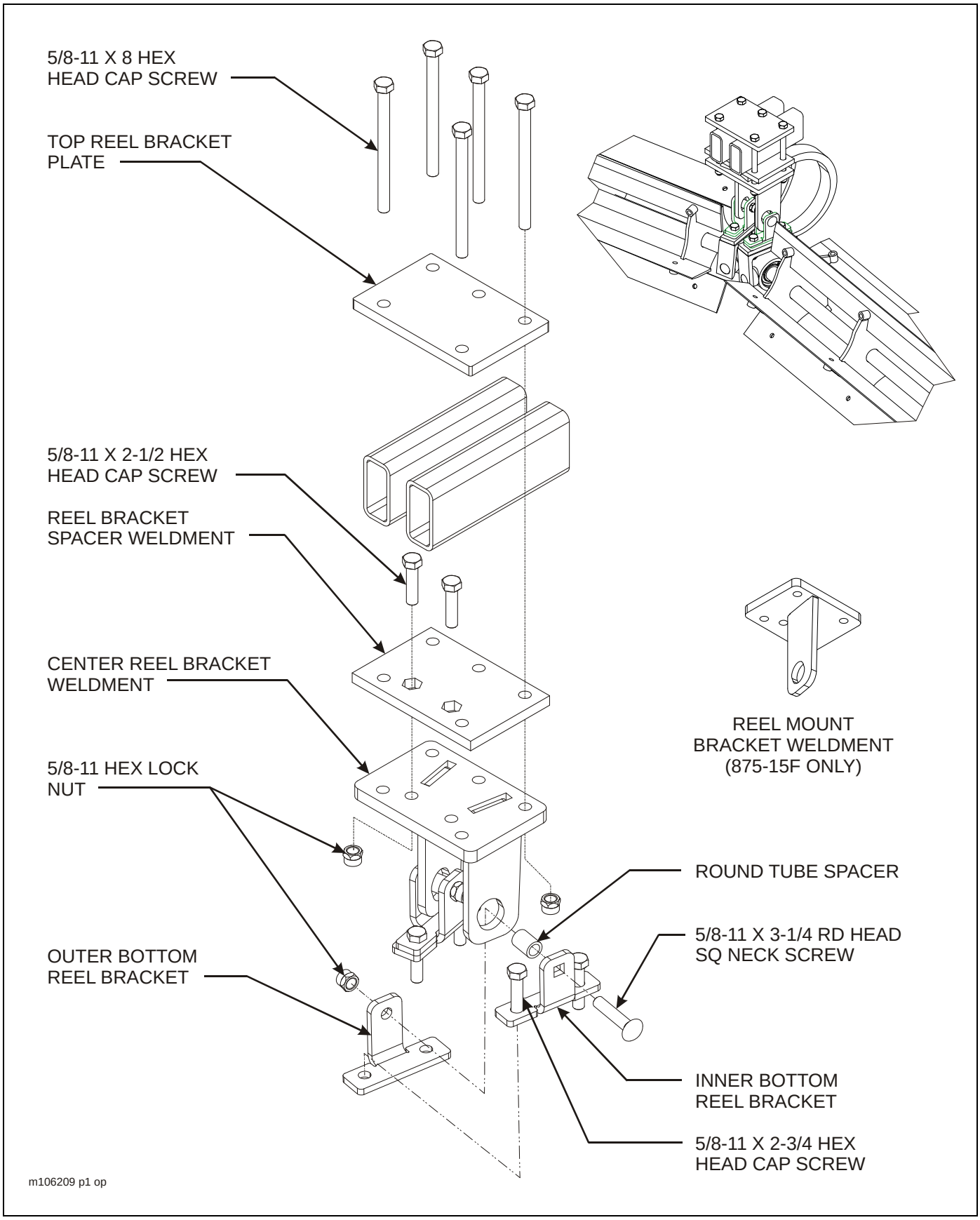


**Figure 3-12: Center Reel Assembly Installation**

https://truckmanualshub.com/



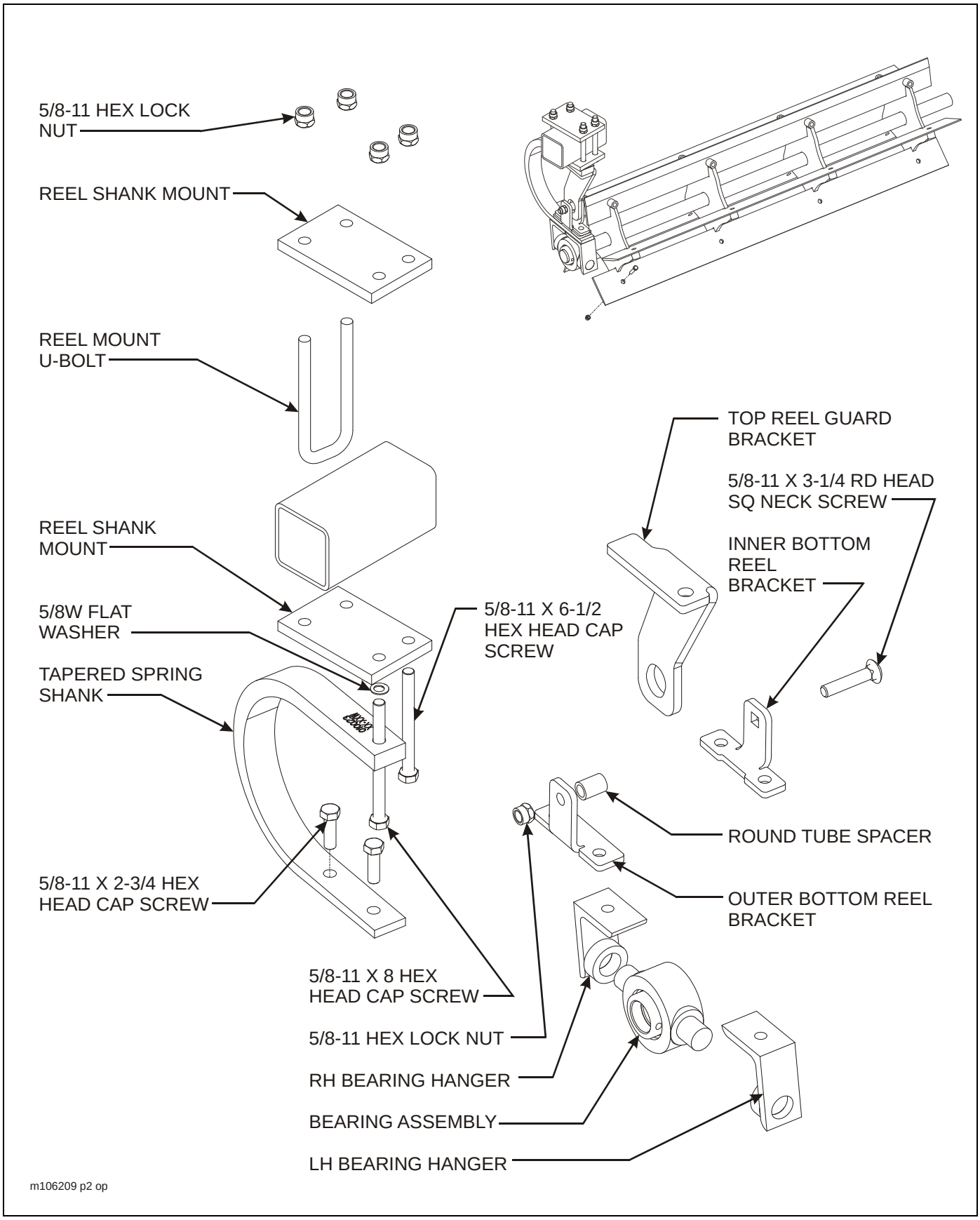


**Figure 3-13: Outer Reel Assembly Installation**

https://truckmanualshub.com/



# Reel Assembly Installation

**IMPORTANT**

1. **Read all safety precautions at the front of the section before attempting any of the following procedures.**
2. **See Figures 2-1 through 2-7 for location on frame.**

1. For center reel shank assembly:
   a. Set inner bottom bracket on top of outer bottom reel bracket and loosely attach to each flange of center reel bracket weldment using 5/8-11 x 3-1/4 round head square neck screw, round tube spacer, and hex lock nut.

**NOTE**

*The reel mount bracket weldment for 875F will only use one bottom reel bracket assembly. All other fold models will require a bottom reel assembly attached to each flange of the center reel bracket weldment.*

   b. The inner reel bracket (with square hole) must be placed toward the reel blades **(See Figures 3-12 and 3-13).**

**WARNING**

**The inner reel bracket (with square hole) must be placed toward the reel blades. If not installed properly, damage to the machine may occur.**

   c. Attach reel bracket spacer weldment to top of center reel bracket weldment using 5/8-11 x 2-1/2 hex head cap screws and hex lock nuts.
   d. Bolt together reel guard inner and outer brackets, tapered spring shank, and bearing hangers using 5/8-11 x 2-3/4 hex head cap screws and hex lock nuts.
   e. Tighten all screws in reel guard assembly.
   f. Install bearing assembly and bearing hangers on reel shaft so that the grease zerk is at the rear of the machine and all lock collars face the center of the machine.
   g. Attach reel assembly to shanks using 5/8-11 x 2 hex head cap screws and hex lock nuts.
   h. Carefully lift reel assembly and loosely bolt top reel bracket plate to frame as shown in **Figure 3-12** using 5/8-11 x 8 hex head cap screws and hex lock nuts **(See Figures 2-1 through 2-7 for location on frame.)**

**CAUTION**

**When working with the reels use care because they rotate freely and can catch an arm, hand, or foot and can cause severe injury.**

2. For outer reel shank assembly:
   a. Set inner bottom reel bracket on top of outer bottom reel bracket and loosely attach to top reel guard bracket using 5/8-11 x 3-1/4 round head square neck screw, round tube spacer, and hex lock nut. The inner reel bracket (with square hole) must be placed toward the reel blades **(See Figures 3-12 and 3-13).**

**WARNING**

**The inner reel bracket (with square hole) must be placed toward the reel blades. If not installed properly, damage to the machine may occur.**

   b. Bolt together reel guard inner and outer brackets, tapered spring shank, and bearing hangers using 5/8-11 x 2-3/4 hex head cap screws and hex lock nuts.
   c. Tighten all screws in reel guard assembly.
   d. Install bearing assembly and bearing hangers on reel shaft so that the grease zerk is at the rear of the machine and all lock collars face the center of the machine.
   e. Attach reel assembly to shanks using 5/8-11 x 2 hex head cap screws and hex lock nuts.
   f. Carefully lift reel assembly and loosely bolt outer reel shank mount plates, tapered spring shank, and top reel guard bracket to main frame and wings in position shown in **Figure 3-13** using u-bolt, 5/8-11 x 6-1/2 hex head cap screw, 5/8-11 x 8 hex head cap screw and hex lock nuts **(See Figures 2-1 through 2-7 for location on frame.)**

https://truckmanualshub.com/


3. Once center and outer reel assemblies are attached to the frame, adjust as necessary to center on frame and to prevent binding.

**IMPORTANT**

**Distance between reel blade and shank should be 1 inch.**

4. Reel bearings lock collars should be installed as described below:
   a. Mate cam of collar with cam on the inner race of the bearing.
   b. Pressing collar lightly against inner ring, turn the collar in the same direction of the reel rotation. You will feel the collar tighten at this point.
   c. With a punch and hammer, strike the collar four times. This will tighten the collar as tight as necessary.
   d. Lock the collar with the set screw.

**CAUTION**

**When working with the reels use care because they rotate freely and can catch an arm, hand, or foot and can cause severe injury.**

5. Once all adjustments have been made, tighten all hardware.

https://truckmanualshub.com/



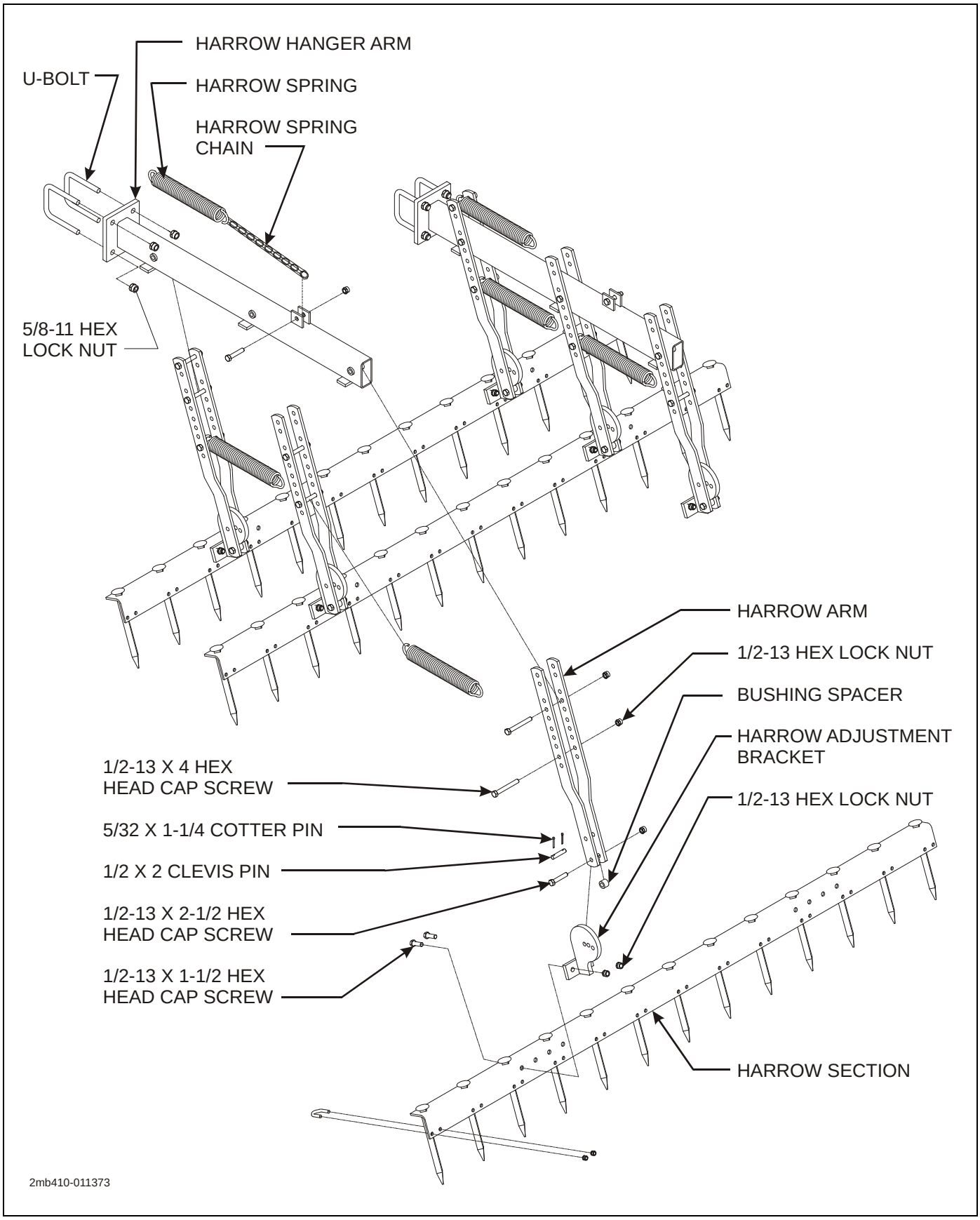


**Figure 3-14: Harrow Assembly Installation**

https://truckmanualshub.com/


# Harrow Assembly Installation

**IMPORTANT**

**Read all safety precautions at the front of the section before attempting any of the following procedures.**

1. Install harrow hanger arms to rear of frame using u-bolts and 5/8-11 hex lock nuts **(See Figures 2-1 through 2-7 for location on frame).**
2. Attach harrow arms to harrow hanger arms by placing 1/2-13 x 4 hex head cap screws through the 4th hole in both harrow arms. Secure with 1/2-13 hex lock nut.

**IMPORTANT**

**Allow enough slack in screw so harrow arms may pivot freely.**

3. Connect harrow arms together through bottom hole using 1/2-13 x 2-1/2 hex head cap screw, spacer bushing, and hex lock nut.
4. Install harrow springs and chains as shown in **Figure 3-14** using 1/2-13 x 4 hex head cap screws and hex lock nuts. The top spring is anchored in the 1st hole from the top. Front lower spring and rear lower spring are anchored in the 7th hole from the top of the harrow arm. Upper chain is anchored through the enlarged link with a 1/2-13 x 2-1/2 hex head cap screw and hex lock nut and hooked on the spring in the 8th link from the bolt. Lower chains are anchored in the second from bottom harrow arm hole and hooked on the spring in the 4th link from the screw.
5. Attach harrow adjustment bracket between harrow arms using 1/2 x 2 clevis pin and 5/32 x 1-1/4 cotter pins.
6. Attach harrow adjustment brackets to harrow sections with 1/2-13 x 1-1/2 hex head cap screws and hex lock nuts **(See Figures 2-1 through 2-7 for location on frame).**

**IMPORTANT**

**Refer to operating instructions for angle adjustment (See “Harrow Adjustment” on page 4-7.)**

https://truckmanualshub.com/



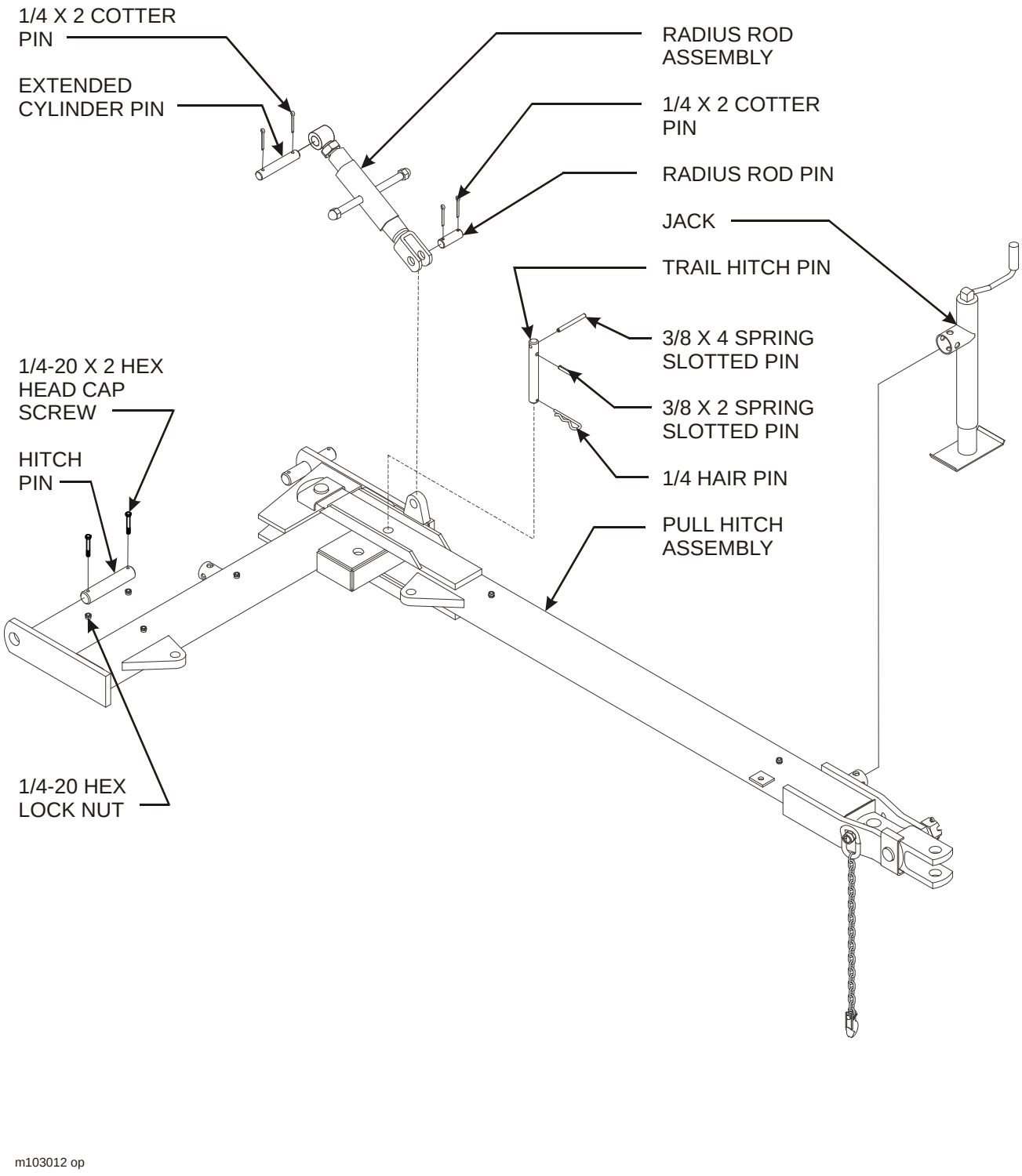


**Figure 3-15: Pull Hitch Installation - 15’ Fold Model**

https://truckmanualshub.com/


## Pull Hitch Installation - 15’ Fold Model

1. Install pull hitch assembly to frame using hitch pins and 1/4 x 2-1/2 cotter pins **(See Figure 3-15.)**
2. Attach radius rod assembly to mast using extended cylinder pin and 1/4 x 2 cotter pins.

**IMPORTANT**

**The radius rod affects two adjustments:**

- **It locates the pull hitch clevis at the proper height for the tractor draw bar.**
- **It levels the machine. lengthening and shortening can be accomplished by using the radius rod handle.**

3. Install jack on pull hitch using hitch pin w/ chain included.

**IMPORTANT**

**Remove the 1/4 hair pin and trail pin before folding and unfolding. Pins must be in place while operating or transporting equipment.**

## Pull Hitch Installation - All Other Models

1. Install pull hitch assembly to frame using hitch pins, flat washers, and 1/4 x 2-1/2 cotter pins **(See Figure 3-16.)**
2. Install hitch ring assembly to pull hitch assembly using 1-8 x 8 or 1-8 x 8-1/2 hex head cap screw, flat washer, hitch bushing, and hex lock nut.
3. Install radius rod assembly attached to pull hitch to mast using extended cylinder pin and 1/4 x 2 cotter pins.

**IMPORTANT**

**The radius rod affects two adjustments:**

- **It locates the pull hitch clevis at the proper height for the tractor draw bar.**
- **It levels the machine. lengthening and shortening can be accomplished by using the radius rod handle.**

4. For all fold models, install hose bracket on pull hitch with special nut and 1/2-13 hex nut. On all rigid models, install hose bracket and hose bracket mount to pull hitch assembly using 1/2-13 x 1-1/2 hex head cap screw, hex lock nut, special nut, and hex nut **(See Figure 3-16.)**
5. Install jack to pull hitch assembly using hitch pin with chain included.

https://truckmanualshub.com/



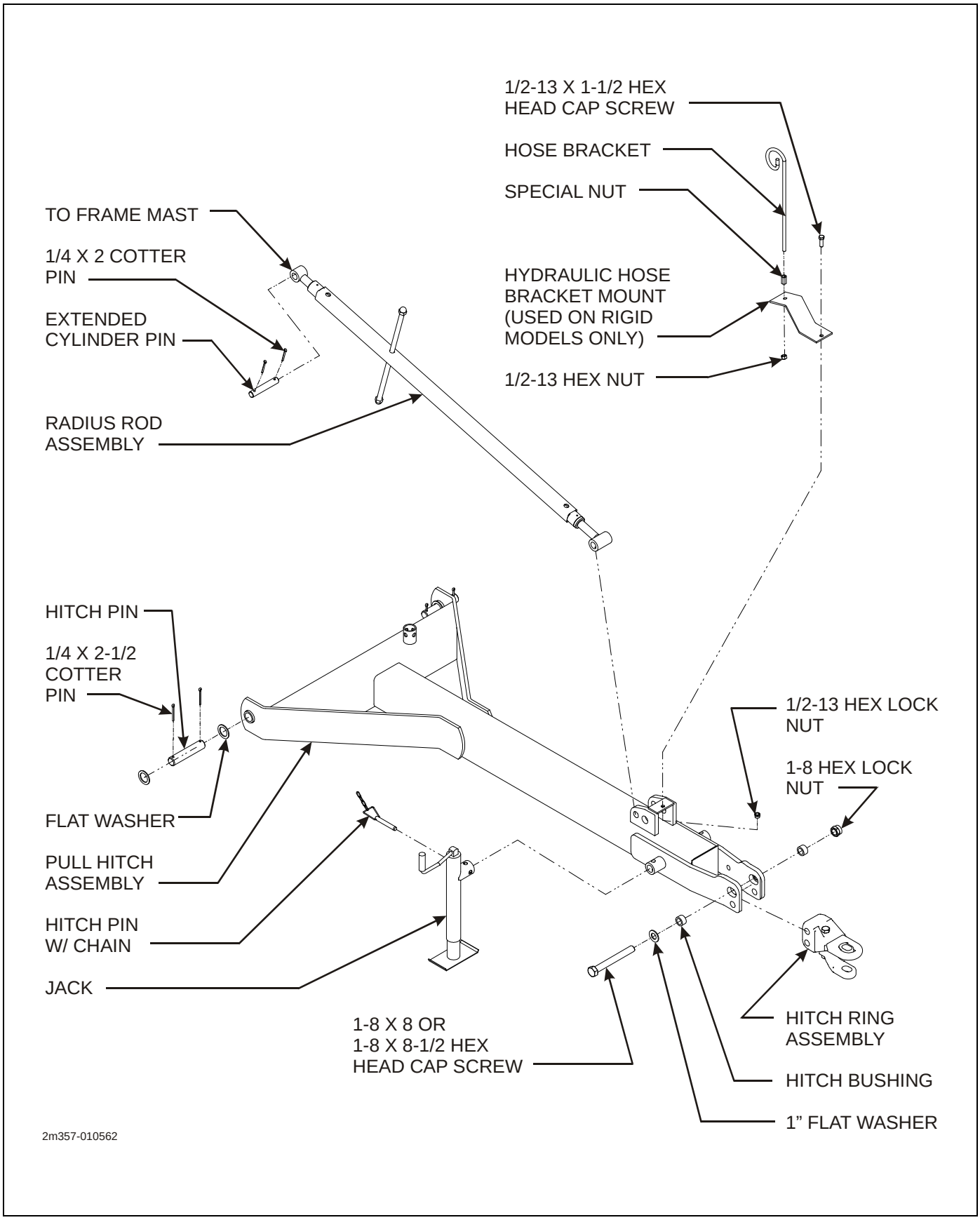


**Figure 3-16: Pull Hitch Installation - All Other Models**

https://truckmanualshub.com/



| WIRING CHART | | |
|---|---|---|
| 7-PIN CONN. | 4-PIN CONN. | |
| GRND.1 | A | GROUND |
| YEL.3 | B | LEFT AMBER |
| GRN.5 | C | RIGHT AMBER |
| BRN.6 | D | TAIL LIGHT (RED) |

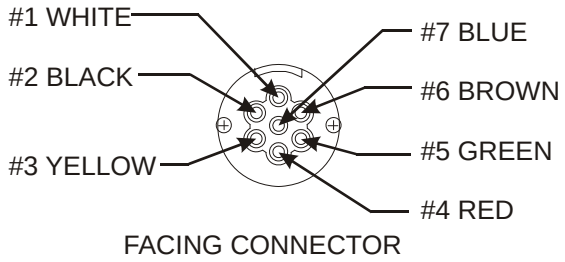


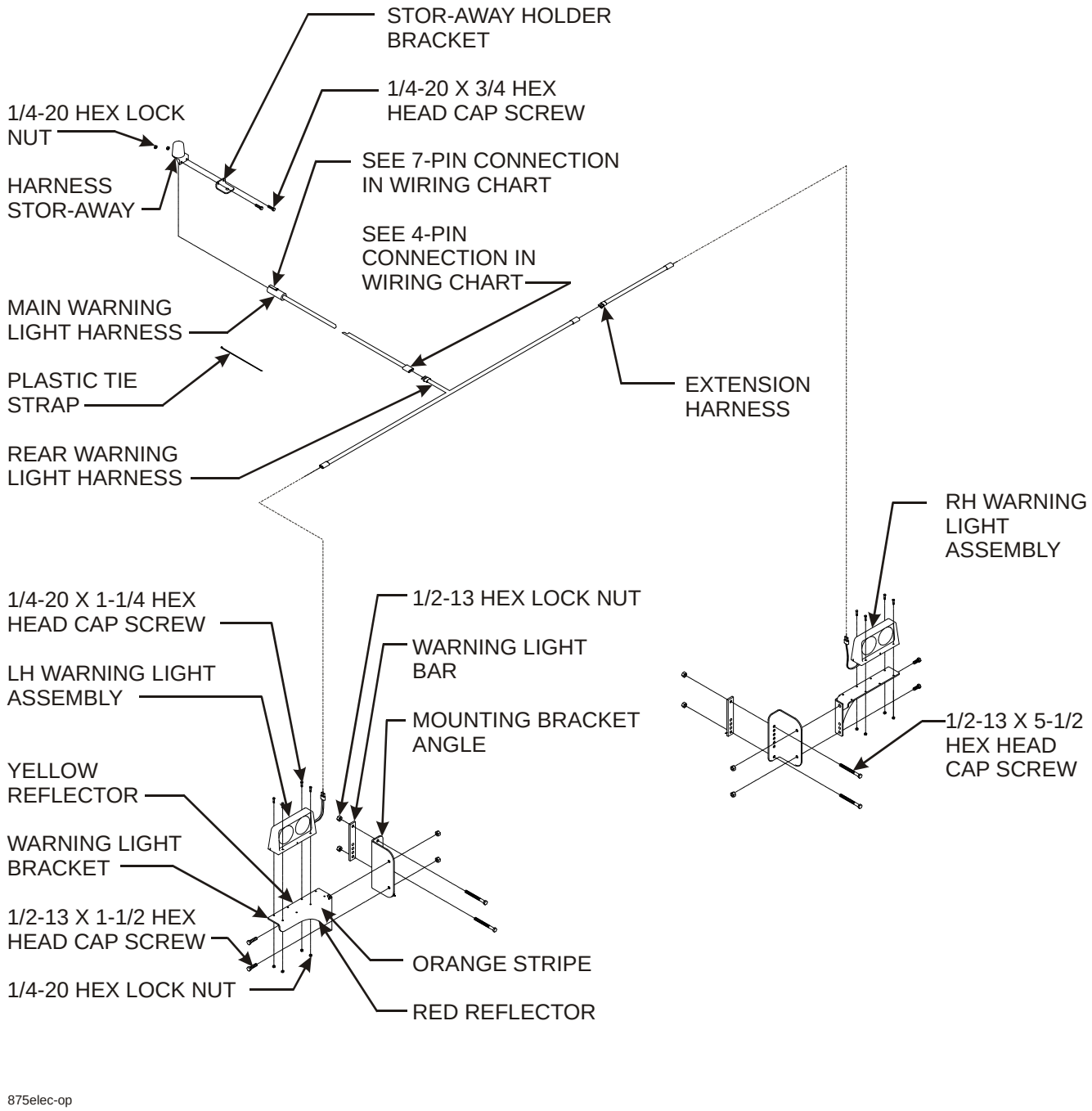


**Figure 3-17: Electrical Installation**

https://truckmanualshub.com/


# Warning Lights Installation

1. Assemble lights to the warning light bracket using 1/4-20 X 1-1/4 hex head cap screws and hex lock nuts. Insure the wires are in the groove in the base of the light toward the mounting surface on the bracket. Assemble one light for left side and one for right side. The red light should be to the rear with the amber light being the outer most light **(See Figure 3-17.)**
2. Install a red reflector and an orange stripe on the rear side of each warning light bracket.
3. Install a yellow reflector on the front side of each warning light bracket.
4. Assemble mounting bracket angle to warning light bracket assembly using 1/2-13 x 1-1/2 hex head cap screws and hex lock nuts.
5. Assemble warning light bar and warning light bracket assembly to outer rear of frame as shown in **Figure 3-17** using 1/2-13 x 5-1/2 hex head cap screws and hex lock nuts.

**IMPORTANT**

**Make sure lights are positioned for maximum visibility from the rear.**

6. Install the rear wiring harness between the lights. **Note: A 30" extension is required to one side on all models.**
7. Install the main harness by starting at the hitch and routing the harness through the hose loops to the extension harness.
8. Insure the harnesses are clear of any moving parts and secure the harnesses with tie wraps provided.

https://truckmanualshub.com/



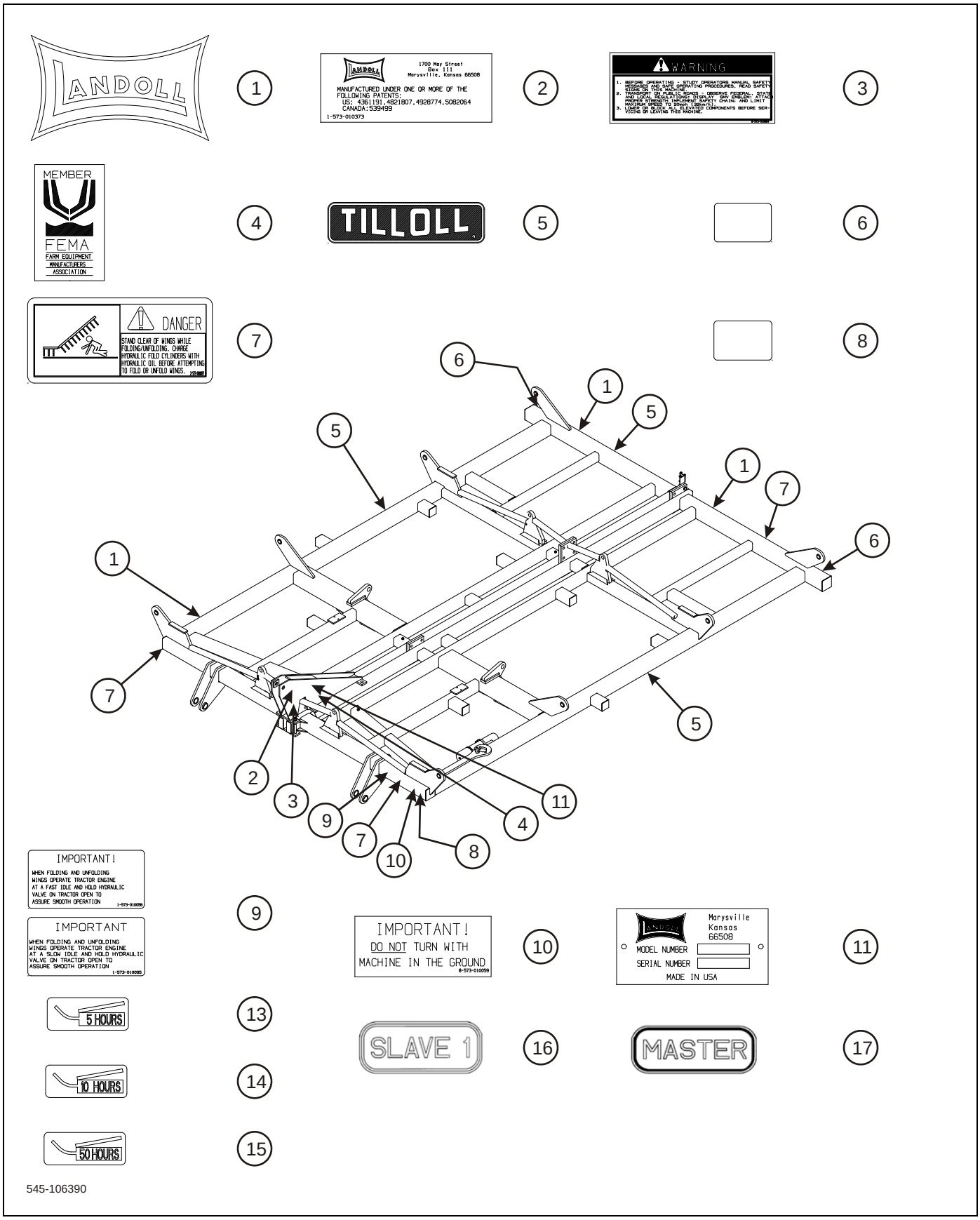


**Figure 3-18: Decal Installation (1 of 2)**

https://truckmanualshub.com/



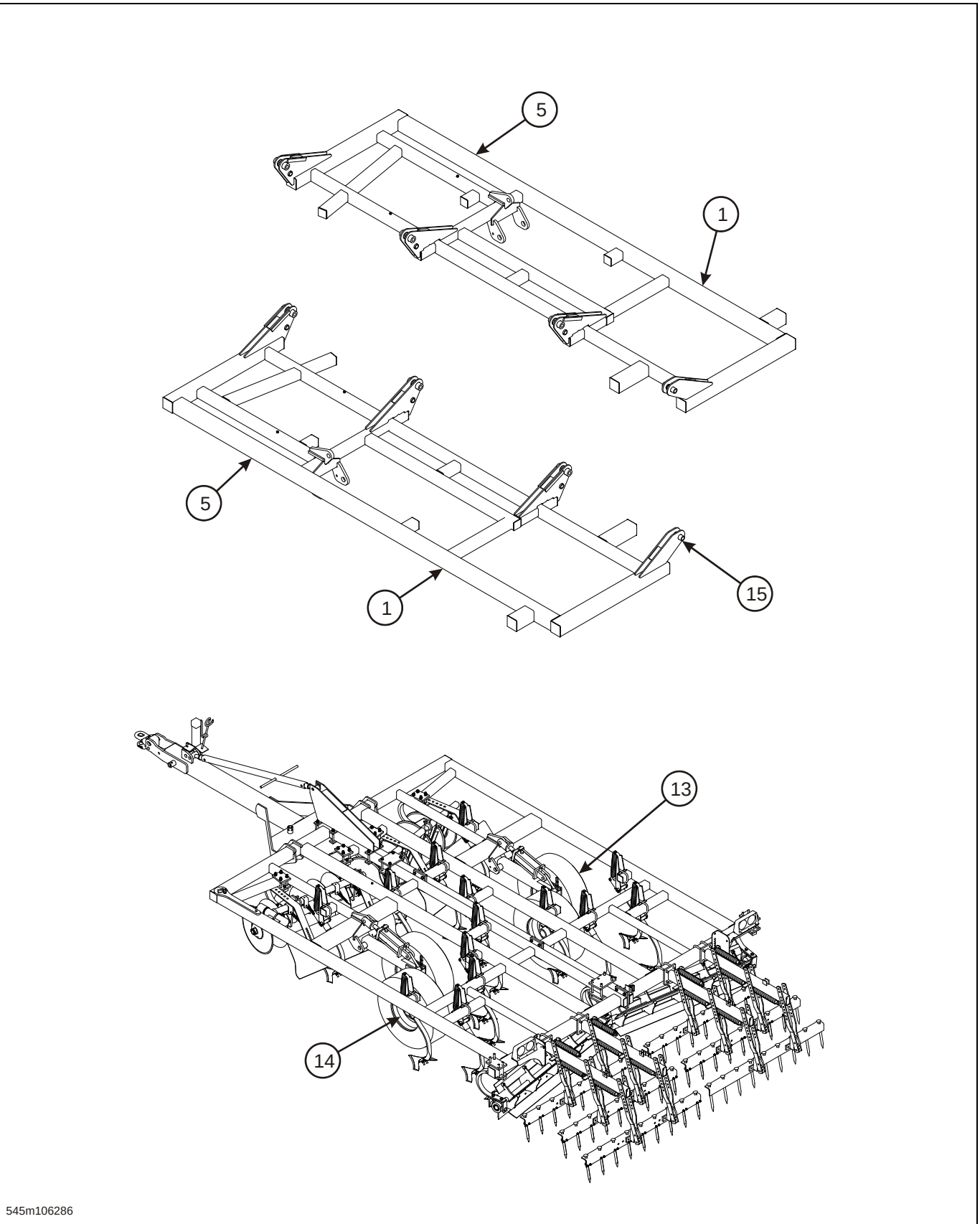


**Figure 3-19: Decal Installation (2 of 2)**

https://truckmanualshub.com/


## Lubrication

The 875 Series Tilloll must be lubricated before using it for the first time, and at regular intervals thereafter. Use a standard multi-purpose grease. **See “Lubrication” on page 4-9** to lubricate your 875 Series Tilloll.

## Decal Placement

Decals are extremely important for naming purposes and for alerting others to the presence of the machine. PLACE ALL DECALS on the Tilloll as shown in **Figures 3-18 and 3-19.** Center them as nearly as possible between the top and bottom on the frame bar. Sometimes, shank spacing may position a tool frame too near the end of the frame bar to place a reflective tape square exactly as shown. Then place the square between the U-bolts on the tool frame as near the proper location as possible. A red reflective square is attached to the rear of the left- and right-hand end tool frames at the factory. If any decals become unreadable, or are destroyed during use, get replacement decals from your Landoll dealer as soon as possible, and replace them on the machine.

https://truckmanualshub.com/


# Notes

https://truckmanualshub.com/

# Chapter 4

# Operation and Maintenance

**DANGER**

**Never allow anyone to ride on the 875 Series Tilloll at any time. Allowing a person to ride on the machine can inflict serious personal injury or death to that person.**

**DANGER**

**Disc blades are extremely sharp. Exercise extreme care when working on or near disc blades. Do not allow discs to roll over or fall onto any bodily part. Do not allow wrenches to slip when working near disc blades. Never push wrenches toward disc blades. Do not climb over machine above disc blades. Failure to stay clear of disc blade edges can cause serious personal injury or death.**

**DANGER**

**Stand clear of wings while folding or unfolding. All hydraulically elevated equipment must have cylinder lockouts installed or be lowered to the ground, when servicing or when equipment is idle. Failure to take preventive measures against accidental lowering can result in serious personal injury.**

**DANGER**

**Always lock the tractor drawbar in the center position when transporting the unit. Failure to do so can result in serious injury or death and cause damage to the equipment.**

**DANGER**

**When transporting the unit, place cylinder lockouts in the transport lock position after fully extending the cylinders. Insert the lockout pins to secure the cylinder lockouts. Failure to lockout the cylinders can cause the unit to settle during transport, which can result in serious injury or death and cause damage to the equipment.**

**CAUTION**

**When transporting farm implements on public roads, it is the responsibility of the operator to abide by state and local laws concerning wide loads, speed, safety emblems and safety lighting equipment. Drive at safe speeds. Particularly when rounding corners, crossing rough ground or driving on hillsides, to prevent tipping the tractor.**

https://truckmanualshub.com/

## Tractor Preparation

The Landoll 875 Series Tilloll is designed to be pulled by tractor equipped with a double lip or clevis type hitch. If your tractor is not equipped as such, you need to purchase the hitch from your local tractor dealer. If your Tilloll is equipped with the clevis option, this should be removed. The clevis option is only for transport use. Before attaching the Tilloll, prepare the tractor as follows:

1. Inflate the rear tractor tires equally and add ballast according to the tractor operator's manual.
2. Lock the tractor drawbar in the center position.
3. Install front end weights as needed on the tractor to maintain stability.

## Tilloll Preparation

1. Prior to operating the 875 Series Tilloll, inspect it thoroughly for good operating condition.
2. Replace worn or missing parts.
3. When the machine is new, check the bolt tightness after a few hours of operation. Tighten any loose nuts or bolts. Check the gauge wheel lug bolts daily.
4. Check the gauge wheel tire inflation. Inflate all tires equally to avoid side draft. Follow the tire manufacturer's recommended pressures listed on the sidewall of the tires.
5. Check disc scrapers for proper adjustment to the disc blade **(See Figure 4-1.)** To adjust the pressure of the disc gang scrapers, loosen the u-bolts that clamp the assembly to the disc gang and slide the scraper assembly into the disc blades. Only enough pressure is required to keep the disc blades clean. The scraper blades are reversible to allow extended use before replacement is required.
6. Lubricate the machine as shown in **"Lubrication" on page 4-9 (See Figure 4-6.)**

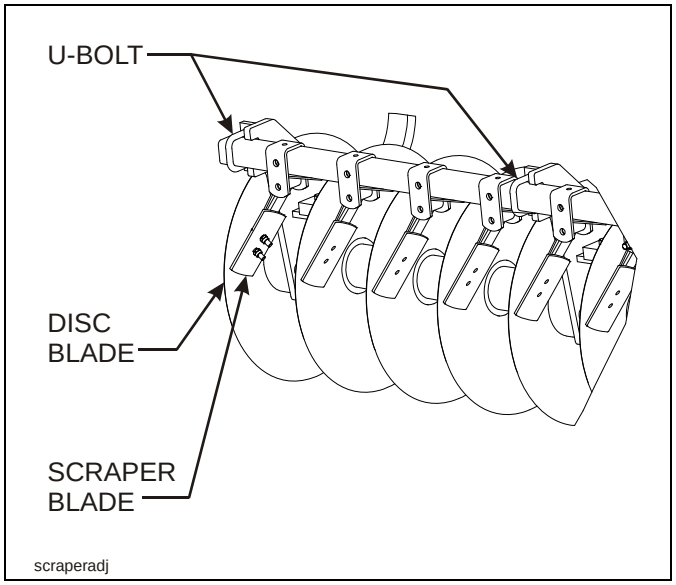


**Figure 4-1: Disc Scraper Adjustment to Disc Blade**

https://truckmanualshub.com/


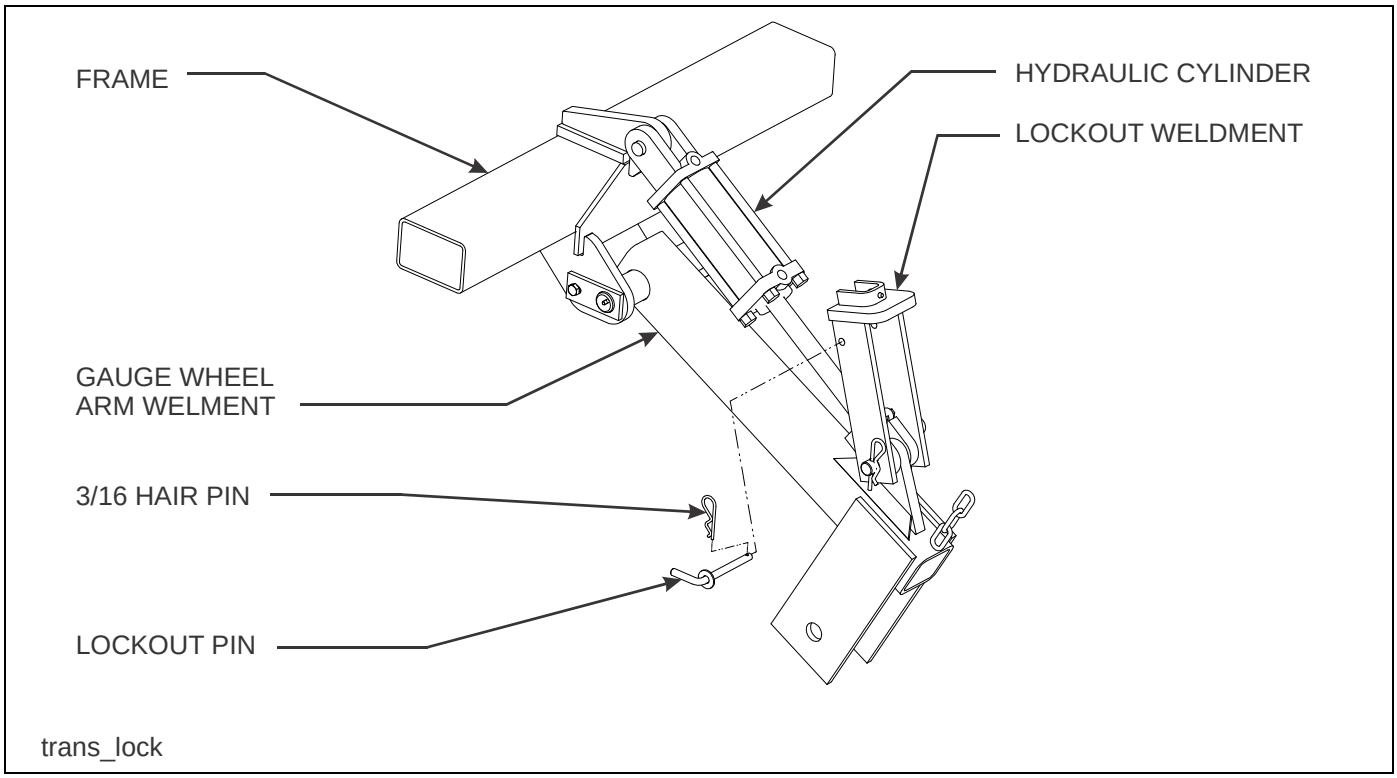


**Figure 4-2: Transport Locks**

## Attaching to the Tractor

1. Align the tractor drawbar with the machine. Raise or lower the Tilloll ring hitch, as needed, using the swivel jack. Attach the unit with proper size hitch pin.
2. Clean all hydraulic couplings and attach to the tractor. When properly attached, the hydraulic control lever should cause the Tilloll to:
   a. Lower to the ground when the control arm is moved forward or downward, and
   b. Raise when the control arm is moved backward or upward.
3. Fully extend the hydraulic gauge wheel cylinders, and place the cylinder lockouts in the transport lock position over the cylinder rods. Secure the lockouts with the lockout pins **(See Figure 4-2.)**
4. Always place the swivel jack on the interior mount before setting the machine in motion.

https://truckmanualshub.com/

# Transport

1. Raise the unit to full transport height.
2. Fold the wings.

**IMPORTANT**

**When folding or unfolding wings, operate tractor engine at a slow idle on 15'F units and a fast idle on 18', 21', 25'-6" units, and hold hydraulic valve on tractor open to assure smooth operation.**

3. Place the transport lock brackets on the rods of the lift cylinders on the main frame and pin in place **(See Figure 4-3.)**

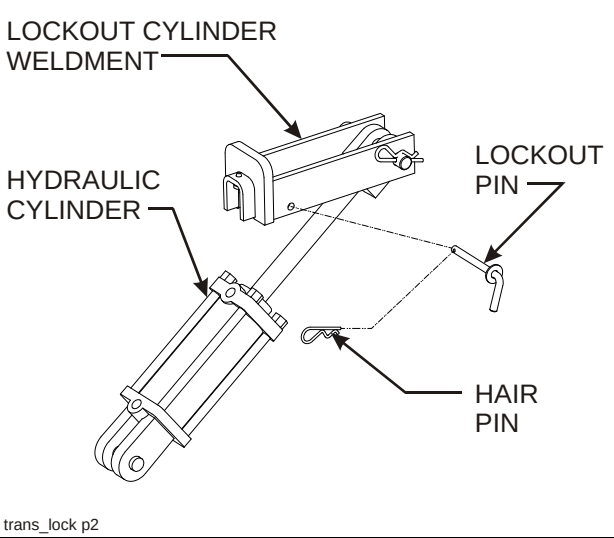


**Figure 4-3: Frame Lift Cylinders**

**WARNING**

**Failure to use transport lock pins during transport may result in permanent equipment damage, serious injury, or death.**

**IMPORTANT**

**When transporting farm implements on public roads, it is the responsibility of the operator to abide by state and local laws concerning wide load, speeds, and safety lighting equipment. The slow moving vehicle sign can be attached to the implement when necessary.**

https://truckmanualshub.com/


# Field Operation

1. Raise the unit to take the weight off of the transport locks. Remove the transport locks from the lift cylinders (on the main frame only) **(See Figure 4-4.)**

**IMPORTANT**

**When folding or unfolding wings, operate tractor engine at a slow idle on 15'F units and a fast idle on 18', 21', 25'-6" units, and hold hydraulic valve on tractor open to assure smooth operation.**

**CAUTION**

**Drive at reasonable speeds to insure your safety. Slow down before making sharp turns or using the brakes. Drive slowly over rough ground, side hills, and around curves to avoid tipping.**

2. Check the front to rear leveling of the frame. Adjust radius rod until frame is level at working depth and all sections of the machine are cutting at the same depth **(See Figure 4-4.)**

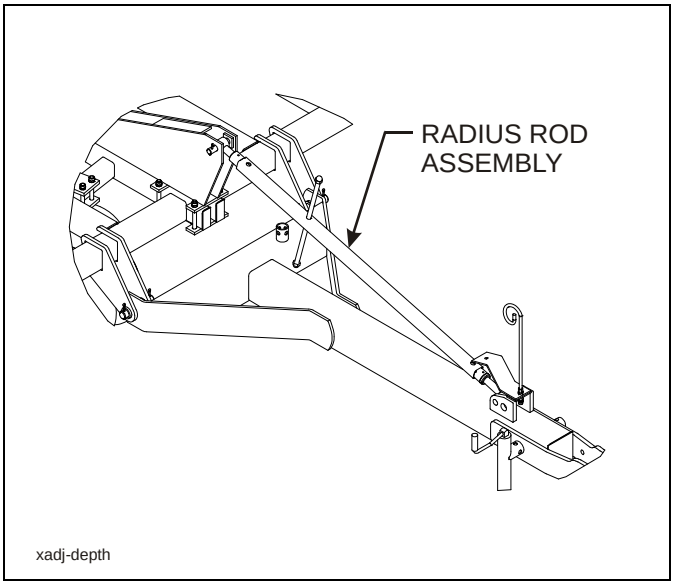


**Figure 4-4: Adjusting Unit Working Depth**

3. Set the unit working depth (1 - 5 inches) by adjusting the stroke control on the master cylinder. For stability, it is important that the gauge wheels always apply slight pressure against the soil.
4. Select proper speed (from 5 - 8 miles per hour) for best results.
5. Always lift the Tilloll completely out of the ground before turning or backing. This prevents shank, disc, or harrow damage or damage to their respective mounting brackets.
6. It is important to keep all bolts tight at all times, especially during the first few hours of operation. Be sure to check the shank U-bolts and pivot bolts. Tighten wheel lug bolts to 90 ft-lbs of torque. After break-in period, check them periodically. Loose bolts can result in lost, broken, or prematurely worn parts and unnecessary down time. Refer to torque specifications in **Table 2-1 and Table 2-2** when retightening loose bolts.
7. Reduce speed at field ends, and lift the Tilloll completely out of the ground before turning.
8. When operating in the field, run the implement with a minimum overlap of one foot to insure an even mixing and leveling of the soil.

# Disc Gang Scraper Adjustment

1. To adjust the pressure of the disc gang scrapers, loosen the U-bolts that hold the scraper assembly in place. Slide the scraper assembly toward the disc blades until there is enough pressure on the scrapers to clean the discs.

**IMPORTANT**

**The scraper blades are reversible to allow extended use before replacement is required.**

**IMPORTANT**

**The straight coulter at the end of each disc gang is to control the flow of soil out of the side of the machine.**

https://truckmanualshub.com/

## Spray Shield Adjustment

1. The spray shields directly behind the disc gang have two uses and can be adjusted accordingly.
   a. The spray shield controls the flow of soil so an even spray pattern for herbicide can be maintained directly behind the spray shield.
   b. The spray shield controls the movement of soil by the discs. The discs are used primarily to cut residue and level the ground for good spray application.
2. The spray shields should be run at ground level to level the soil.
3. The shields should also be set at an angle to carry some soil back to the center of the machine as it levels the soil. Set the spray shield up if the machine is to operate deeper or there is excessive trash.
4. Set the spray shield down if the machine is to operate at a shallower depth, or when there is a minimum amount of trash.
5. Adjust spray shields outward on machine if too much dirt is moving around the outer edge and leaving a ridge. This will move dirt toward center and level the soil.

## Spray Boom Location

The spray boom for herbicide incorporation should be set directly behind the spray shield when working in ridged field conditions. It can also be set in front of the machine in level field conditions.

## Reel Adjustment

1. The reel is preset at the factory at the correct angle. This angle is set to move worked soil back to the center of the implement. The angle also determines the incorporation ability of the reel
2. Check lock collars on reel bearings during the first hour of use. Retighten, if necessary, as described in **step 4 on page 3-21.**

**CAUTION**

**When working with the reels, use care because they rotate freely and can catch an arm, hand, or foot and can cause severe injury.**

https://truckmanualshub.com/


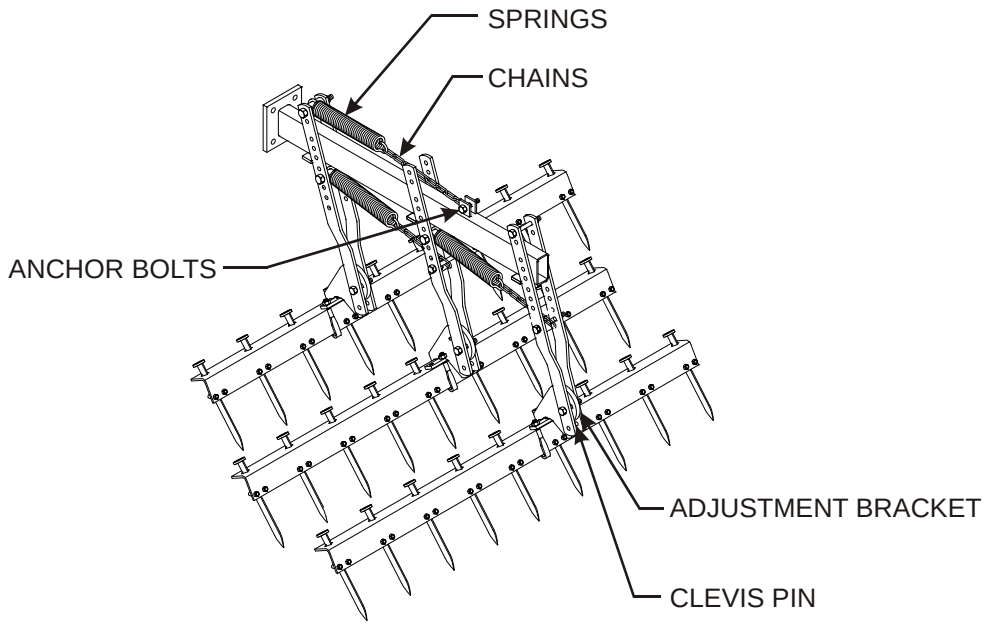


**Figure 4-5: Harrow Adjustment**

# Harrow Adjustment

1. The harrow on the rear of the machine can be set for a variety of field conditions **(See Figure 4-5.)** The harrow that is set up according to the assembly instructions for a working depth of 3 - 5 inches.
   a. For deeper working depths, the harrow can be adjusted up.
   b. For running the implement at shallower depths, the harrow can be lowered.
   c. Spring tension can be increased by lowering the rear mounting point of the two lower springs and raising the front mounting point of the upper spring an equal number of holes.
   d. For more aggressive action by the harrow, the angle of the harrow can be changed. By removing the cotter pin and clevis pin, the harrow teeth can be set at 45, 30, or 15 degrees. The larger the angle, the more leveling and mixing of the soil will occur. With the smaller angle, there is less mixing of the soil, but the harrow has a greater ability to allow trash to flow through evenly.

https://truckmanualshub.com/

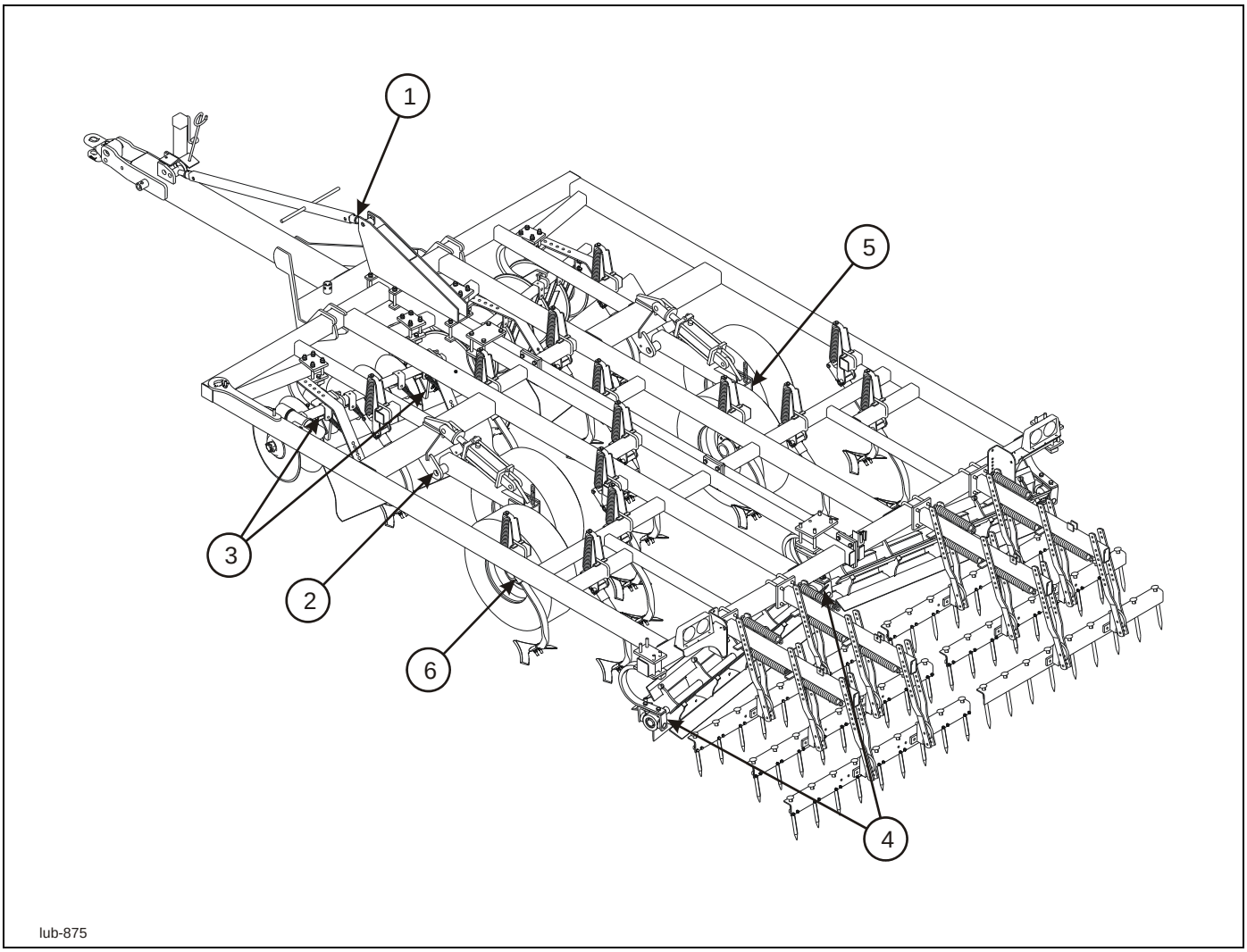


**Figure 4-6: Lubrication Points**

| LUBRICATION | | | |
|---|---|---|---|
| **ITEM** | **DESCRIPTION** | **NO. OF LUBE POINTS** | **INTERVAL (HOURS UNLESS STATED)** |
| 1 | Radius Rod | 2 | 50 |
| 2 | Gauge Wheel Pivot Pin | 1 | 10 |
| 3 | Disc Gang Bearing | 2 | 5 |
| 4 | Reel Bearing | 2 | 10 |
| 5 | Walking Beam | 1 | Yearly |
| 6 | Wheel Bearing | 1 | Yearly |
| | | | |
| Note: Lube all points with high grade multi-purpose grease. | | | |

**Table 4-1: Lubrication Schedule**

https://truckmanualshub.com/


## Wheel Bearing Maintenance

Wheel bearing maintenance should be performed at the beginning of every season of use. Check the wheel bearings periodically for excessive end play. If needed, adjust or replace them using the following procedure:

1. Place the frame on blocks or stands sufficient to lift the tire clear of the ground.
2. Remove the hub cap, cotter pin, slotted nut and washer.
3. Remove the hub. Clean and inspect the bearings and hub cavity. Replace any worn or defective parts.
4. Repack the bearings using a high-quality wheel bearing grease.
5. Reinstall the hub with a new seal and the inner bearing in place.
6. Install the outer bearing cone, washer and slotted nut.
7. Tighten the slotted nut while rotating the hub until there is a slight resistance to wheel rotation. Then, back the slotted nut off one notch, until the wheel rotates freely without end play.
8. Install a new cotter pin and replace the hub cap.

## Hydraulic Maintenance

1. Check the tractor hydraulic fluid level per tractor owners manual and after any leakage. Check fluid level with the cylinders in the retracted position.
2. If a cylinder or valve leaks, disassemble the parts to determine the cause of the leak. Any time a cylinder is opened up, or whenever any seal replacement is necessary, it is advisable to clean all parts and replace all seals. Seal kits are available from your Landoll dealer.
3. Check all hydraulic hoses weekly. Look for binding or cracking. Replace all worn or defective parts immediately.

## Lubrication

1. **Table 4-1 and Figure 4-6** specifies the number and the period of lubrication points on the **875 Series Tilloll**. Proper maintenance of your machine will, under normal operating conditions, help to keep it operating at or near its peak performance for an extended period of time. Proper maintenance is also a condition of keeping your warranty in good status.

## Storage

1. The service life of the Tilloll will be extended by proper off-season storage practices. Prior to storing the unit, complete the following procedures:
   a. Completely clean the unit.
   b. Inspect the machine for worn or defective parts. Replace as needed.
   c. Repaint all areas where the original paint film is worn off.
   d. Grease all exposed metal surfaces of shanks, points and discs.
   e. Lubricate each point of the machine as stated in **“Lubrication” on page 4-9.**
2. Store the unit in a shed or under a tarpaulin to protect it from the weather. The ground tools and tires should rest on boards, or some other object, to keep them out of the soil.

https://truckmanualshub.com/


# Notes

https://truckmanualshub.com/

# Chapter 5

# Troubleshooting Guide

The Troubleshooting Guide, shown below, is included to help you quickly locate problems that can happen using your 875 Tilloll. Follow all safety precautions stated in the previous sections when making any adjustments to your machine.

| PROBLEM | PROBABLE CAUSE | SOLUTION |
|---|---|---|
| DISC GANG THROWING RIDGE TO OUTSIDE | Unit is not level | Turn radius rod to raise front of machine, machine must be level, front to rear, while running at desirable depth. |
| | Disc gang bearing mounts on wrong side of c-spring | Remount disc gang on top of C-spring |
| | Reel angle incorrect | Check and set according to specifications. |
| | Dirt not flowing under shield properly | Adjust shield. |
| | Excessive loose dirt | Minimize field trips - 2 to 3 trips may leave powder and cause ridging. |
| | Moving too slowly | Machine needs to be pulled at least 5.5 mph.<br><br>Set harrow according to operating instructions **(See "Harrow Adjustment" on page 4-7.)** |
| DISC GANG PLUGGING | Disc gang mounted too deep | Check disc gang as above, may be too deep. |
| | Unit not level | Check to see that machine is level while machine is running |
| | Disc blade wear | Replace disc blades. |
| | Dirt not flowing under shield properly | Adjust shield. |
| DISC GANG NOT TURNING IN LIGHT SOIL | Scrapers adjusted too tight against blade | Readjust scrapers |
| DISC SCRAPER BENDING | Improper pressure against disc blade | Disc scraper must be set tight against disc blades and be in contact for full length of scraper edge. May need to loosen two bolts and rotate scraper blade forward or backward to accomplish this. |
| PLUGGING BETWEEN DISC AND SPRAY SHIELD | Dirt not flowing under shield | Readjust spray shield (usually up and/or to the rear).<br><br>Machine running too deep. Raise to proper operating depth by adjusting stroke control depth stop on master cylinder. |
| | Conditions too wet | Wait until conditions are proper for tillage. |

https://truckmanualshub.com/



| PROBLEM | PROBABLE CAUSE | SOLUTION |
|---|---|---|
| 10" SWEEPS WILL NOT PENETRATE | Machine not set deep enough | Check for correct pitch on sweeps (The correct pitch is 47$^{o}$). |
| SHANKS NOT STRAIGHT UP AND DOWN ON FRAME OR HAVE EXCESSIVE WEAR | Excessive wear at pivot bolt | Replace bolt-on shank holder, if needed.<br><br>Replace bushing, if needed. |
| SHANK SPRINGS BREAKING | Spring pivot bolt too tight | Spring pivot bolt must be loose enough to allow spring plug to pivot so spring is not forced to bend. |
| SCREW IN TOP OF SPRING BREAKING | Lock nut should be tightened against shank bracket instead of spring plug | Verify that there are three threads between lock nut and spring plug. |
| PLUGGING IN SHANK AREA | Shank placement not according to specifications | Check shank placement against **Figures 2-1 through 2-7.** |
| | Ground too wet | Wait until ground conditions are proper for tillage. |
| REEL VIBRATING | Rear of machine too deep | Level machine by turning radius rod. |
| | Running machine too slow | Machine needs to be pulled at least 5.5 mph. |
| REEL COMING LOOSE IN FIELD | Reel bearing lock collars mounted on wrong side of reel | Mount lock collars on side of reel toward center of machine.<br><br>Lock collars tightened in wrong direction. Lock in direction of reel rotation. |
| REEL NOT MOVING SOIL ADEQUATELY | Reel mounted backwards | Mount again per assembly instructions **(See “Reel Assembly Installation” on page 3-20.)** |
| | Running machine too slow | Machine needs to be pulled at least 5.5 mph. |
| | Machine not level | Adjust radius rod to level machine. |

https://truckmanualshub.com/



| PROBLEM | PROBABLE CAUSE | SOLUTION |
|---|---|---|
| ROCKS JAMMING IN END OF REEL AND LOCKING UP REEL | Reel blade too long | Cut 1-1/2" off the end of reel blade. |
| | Reel angle wrong for terrain | Cut blade off at angle toward rear of blade to provide a relief area for rocks. |
| HARROW PLUGGING | Improperly set harrow | Set according to operating instructions **(See "Harrow Adjustment" on page 4-7.)** |
| WINGS FOLDING TOO FAST | Restrictor elbows not installed | Check to make sure restrictors are installed per assembly instructions.<br><br>Idle tractor when folding.<br><br>Turn tractor hydraulic flow down.<br><br>Engage hydraulic valve. Hold fully engaged until folded. |
| MACHINE RUNNING DEEP TO ONE SIDE | Distance from frame to axle of gauge wheels differ | a. Set all depth stops the same.<br>b. Raise machine until all cylinders are fully extended.<br>c. Measure cylinders from pin to pin. Verify that all cylinders are same length.<br>d. If measurements are not the same, **see "Hydraulic Lift Installation - Fold Models" on page 3-11** to readjust cylinder length.<br><br>Wing cylinders may need to vary in length from main cylinders, per soil conditions.<br><br>Check that tires are same size and pressure is correct.<br><br>Check for hydraulic leakage and repair. |
| CYLINDERS BROKEN IN TRANSPORT | Machine not properly secured during transport | Use transport locks and let machine down on locks during transport **(See "Transport" on page 4-4.)** |

https://truckmanualshub.com/


# Notes

https://truckmanualshub.com/

https://truckmanualshub.com/

Equipment from Landoll Corporation is built to exacting standards ensured by ISO 9001 registration at all Landoll manufacturing facilities.

# Model 875 Series
# Tilloll
# Operator's Manual

## Re-Order Part Number F-60-0211

**LANDOLL CORPORATION**
1900 North Street
Marysville, Kansas 66508
(785) 562-5381
**800-428-5655 ~ WWW.LANDOLL.COM**

Copyright 2010. Landoll Corporation
"All rights reserved, including the right to reproduce this material or portions thereof in any form"