https://truckmanualshub.com/

PREFACE

1. This parts catalog is the last edtion of clawler back - hoe Model B22 - 2 for AMMANN YANMAR.(M/#20001～)

Issue No. : 000Y00S3351

Date of Issue : Dec., 1995

2. Model Neme

SECTION	Model	Column	Column Name	Code
I (Vehicle)	B22-2C AY-1	(A)	B22-2 C(R)AY	172174C
	B22-2CR AY-1	(A)	B22-2 C(R)AY	172174A
	B22-2P AY-1	(B)	B22-2 P(R)AY	172174D
	B22-2PR AY-1	(B)	B22-2 P(R)AY	172174B
II (Engine)	3TN75L-RB1	(A)	3TN75L-RB1	Q19830A,BBB,U26

3. Parts catalog history

	Parts catalog No.	Published	Note
1st edition	000Y00S3350	Aug., 1993	Scrap old edition
1st revised	000Y00S3351	Dec., 1995	

4. The parts No. to be procured locally is 172162 - OOOOO.

JIMBO.1995.12.(22),MEISEI,KITEX

https://truckmanualshub.com/

TABLE OF PAINTED COLOR

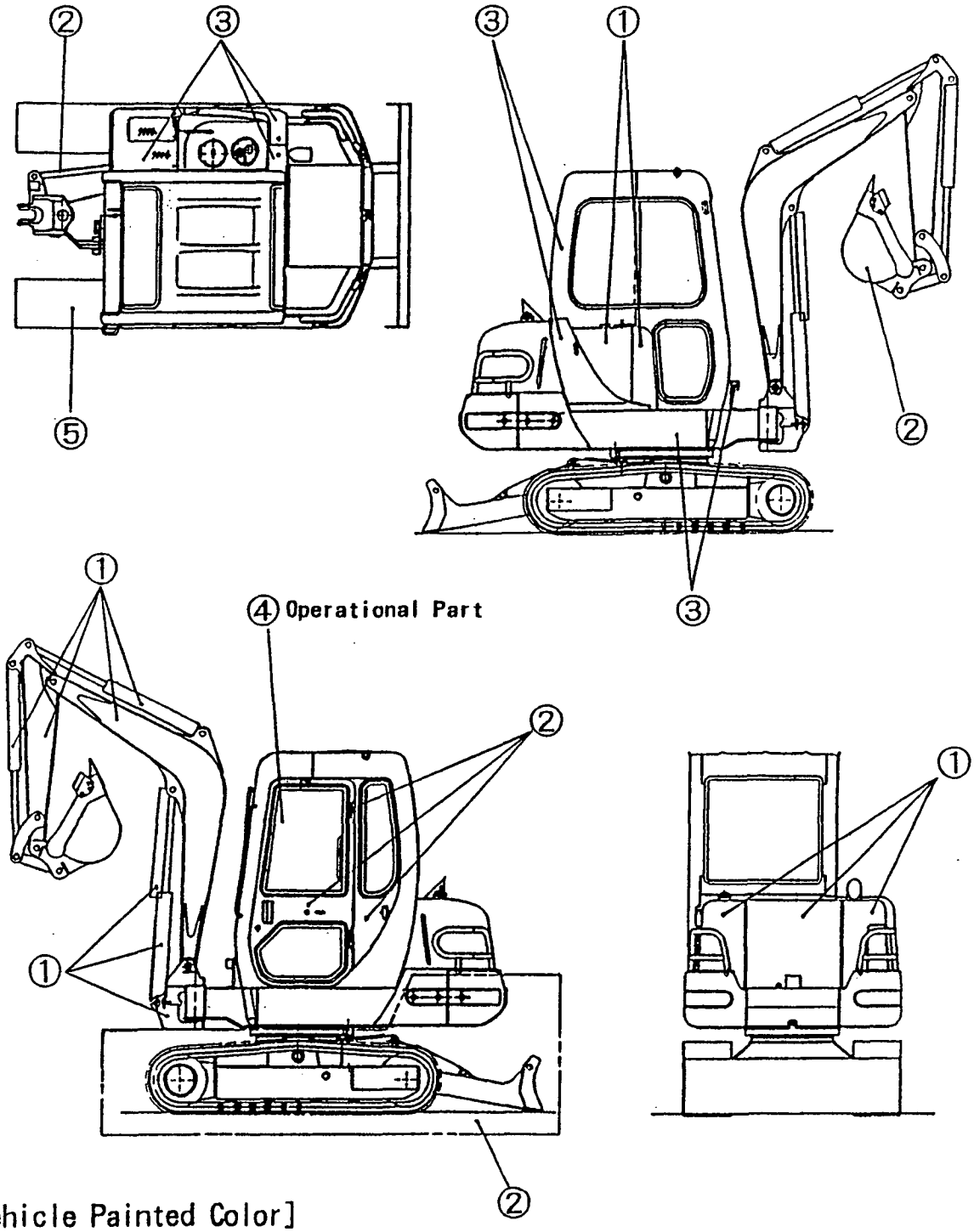

[Vehicle Painted Color]

Part	Paint color	Munsel No.	16L Can	Spray
①	YANMAR New Permanent Yellow	5. 2Y8. 5/11	981101-09519	977620-30871
②	YANMAR New Deep Green	0. 6B2. 2/4. 2	981101-09588	977620-30881
③	YANMAR New Grayish Green	2. 9Bg4. 8/3. 0	981101-09616	977620-30861
④	YANMAR Dark Olive Gray	5. 39Y2. 97/0. 78	----	TOR-90460003
⑤	YANMAR Charcoal Gray	N2	981101-09516	977620-30371

https://truckmanualshub.com/

PICTURESQUE INDEX (1) ·····MAIN PARTS

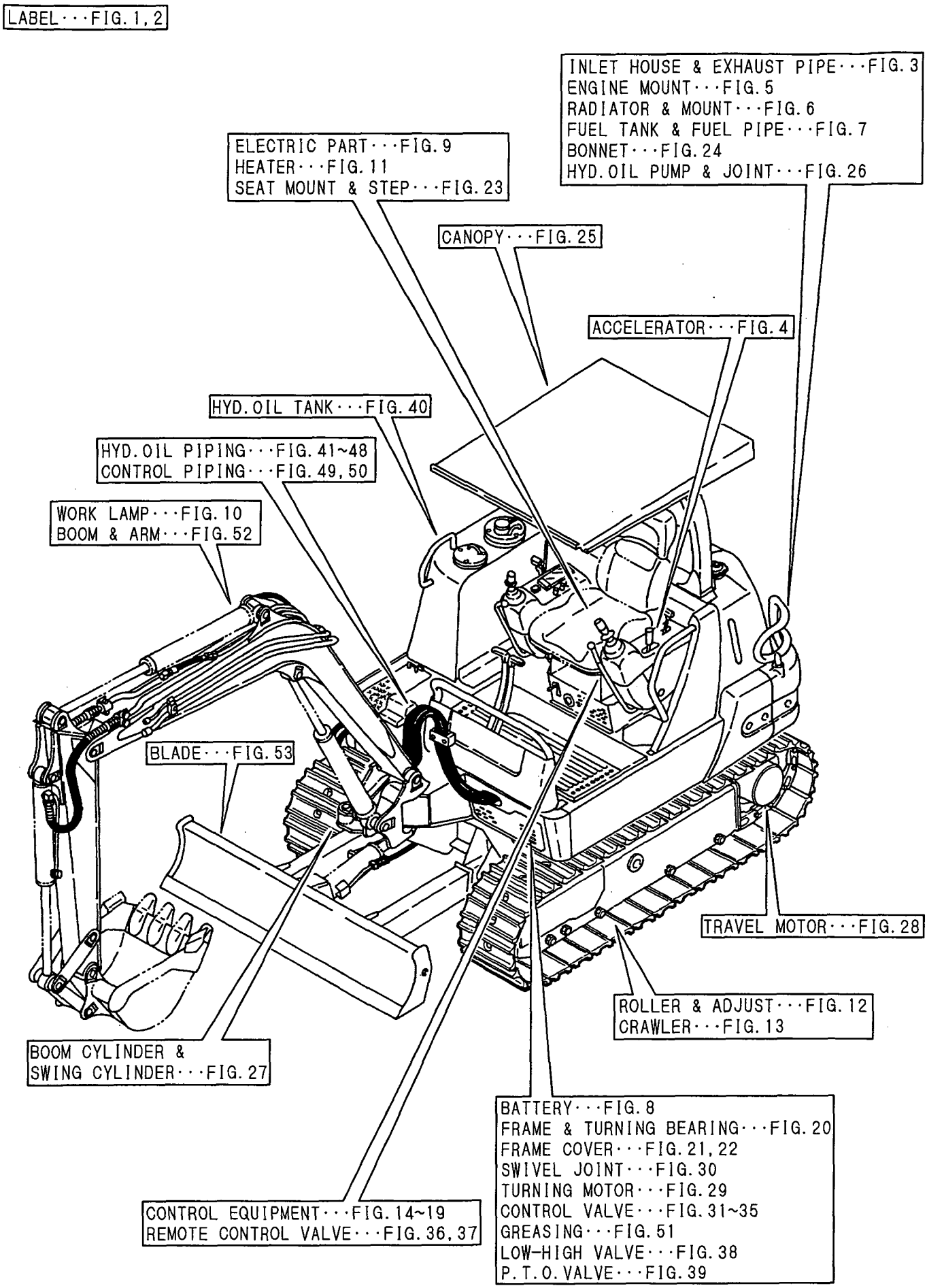

https://truckmanualshub.com/

PICTURESQUE INDEX (2) ·····MAIN PARTS

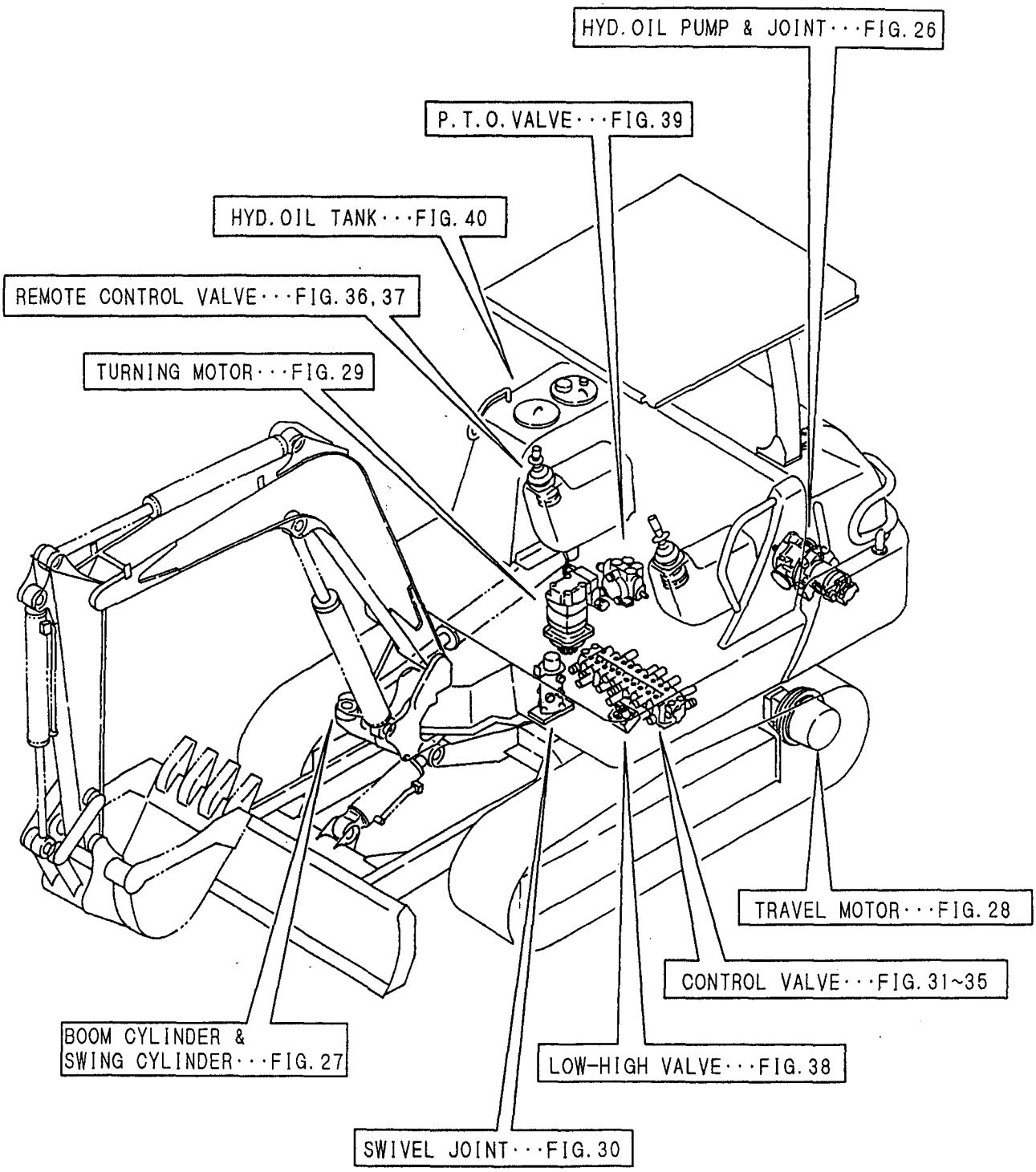

https://truckmanualshub.com/

PICTURESQUE INDEX (3) ·····FIGURE

Fig.1 LABEL (CABIN)

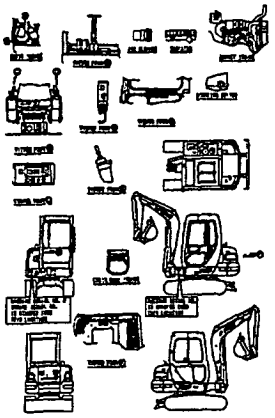

Fig.2 LABEL (CANOPY)

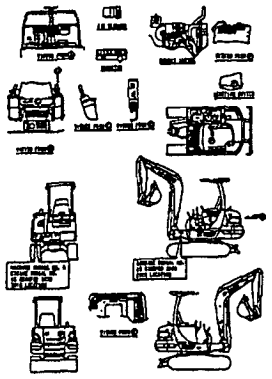

Fig.3 INLET HOUSE & EXHAUST PIPE

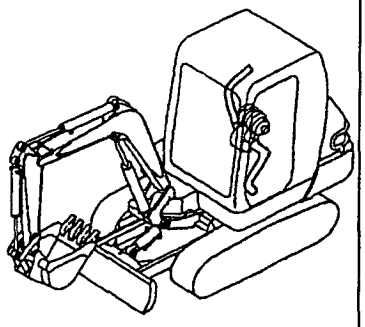

Fig.4 ACCELERATOR

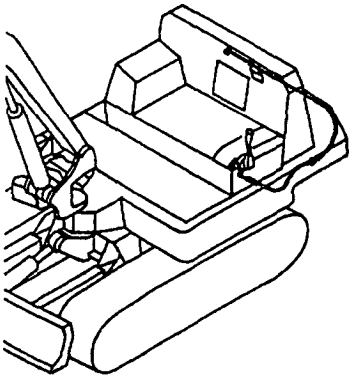

Fig.5 ENGINE MOUNT

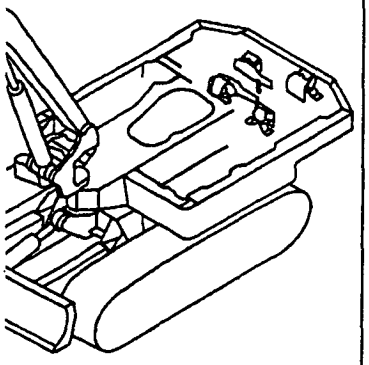

Fig.6 RADIATOR & MOUNT

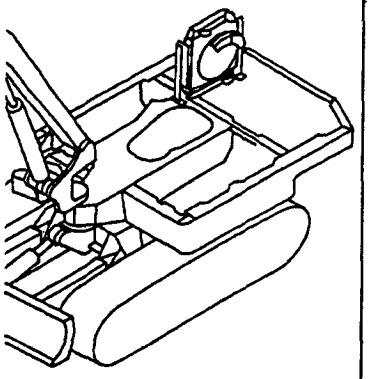

Fig.7 FUEL TANK & FUEL PIPE

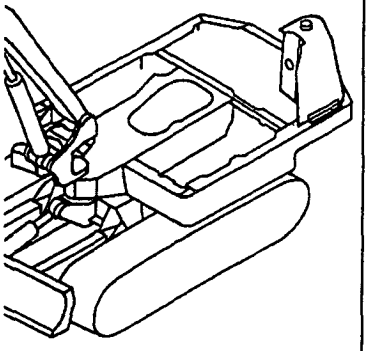

Fig.8 BATTERY

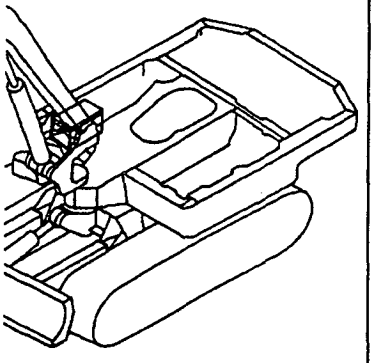

Fig.9 ELECTRIC PART

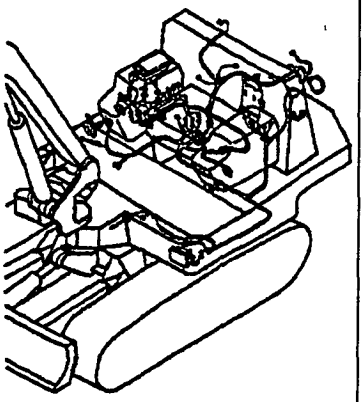

Fig.10 WORK LAMP

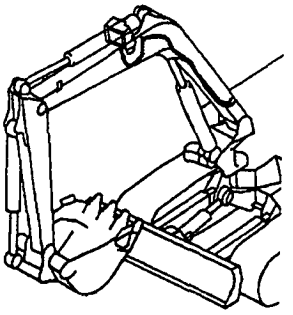

Fig.11 HEATER

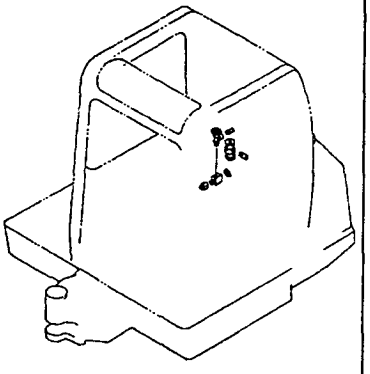

Fig.12 ROLLER & ADJUST

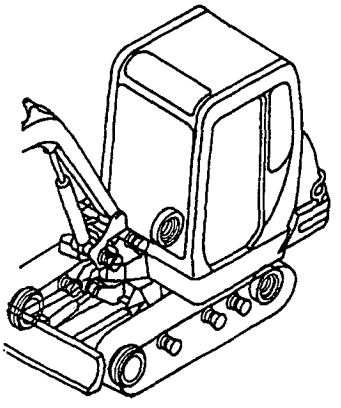

https://truckmanualshub.com/

Fig.13 CRAWLER

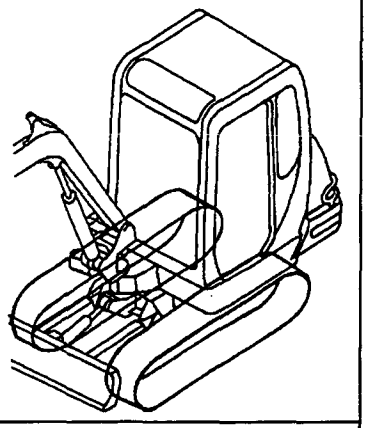

Fig.14 CONTROL EQUIPMENT (LEVERSTAND)

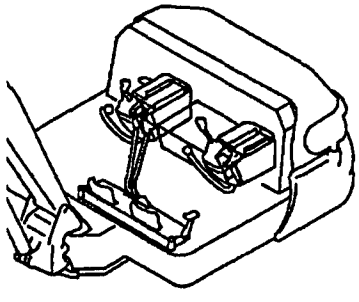

Fig.15 CONTROL EQUIPMENT (TRAVEL)

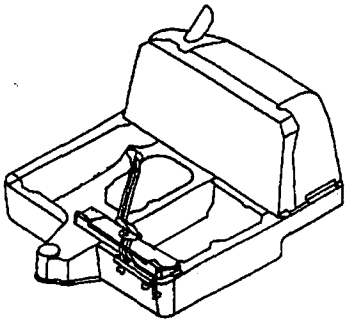

Fig.16 CONTROL EQUIPMENT (SWING)

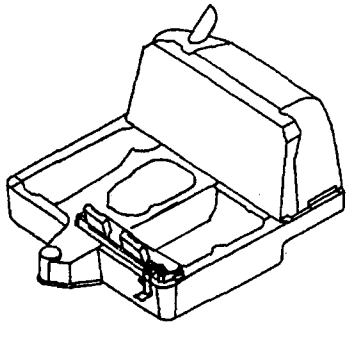

Fig.17 CONTROL EQUIPMENT (BLADE)

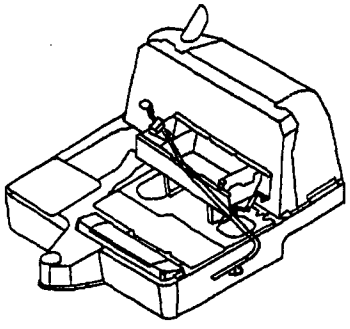

Fig.18 CONTROL EQUIPMENT (CUT OFF LEVER & LOW-HIGH PEDAL)

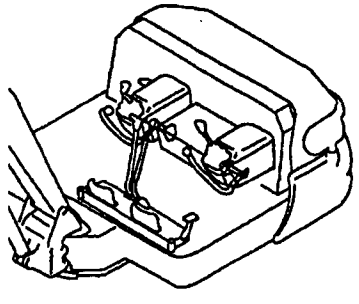

Fig.19 CONTROL EQUIPMENT (P.T.O.CONTROL)

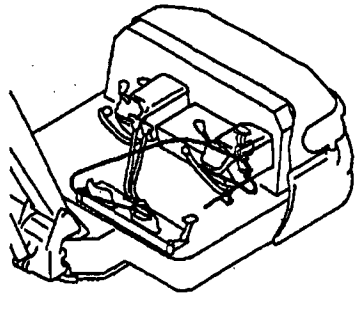

Fig.20 FRAME & TURNING BEARING

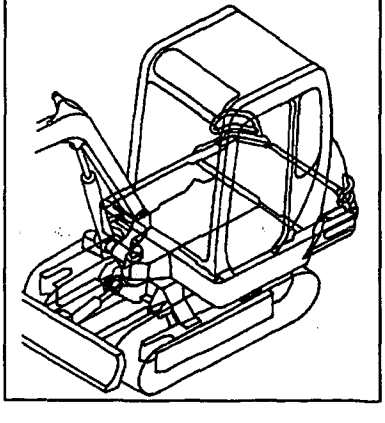

Fig.21 FRAME COVER (CABIN)

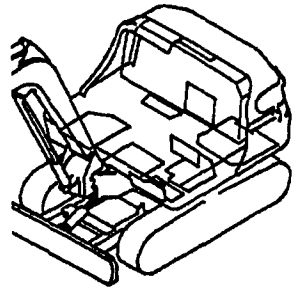

Fig.22 FRAME COVER (CANOPY)

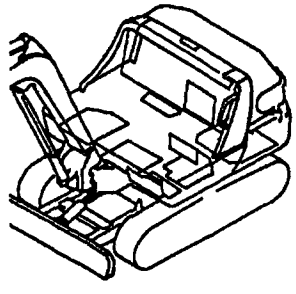

Fig.23 SEAT MOUNT & STEP

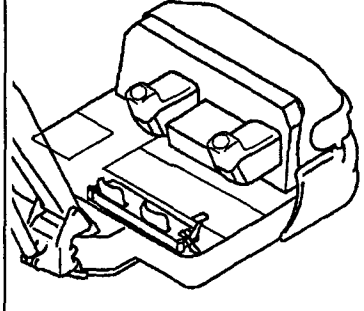

Fig.24 BONNET

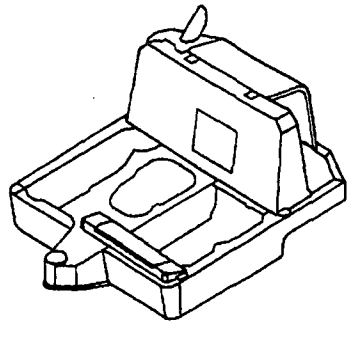

https://truckmanualshub.com/

Fig.25 CANOPY

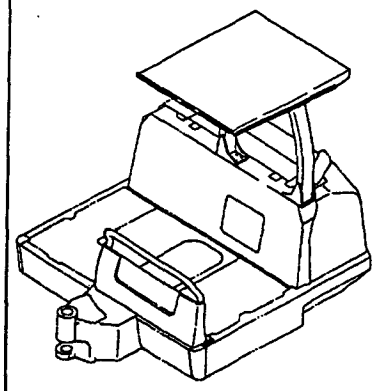

Fig.26 HYD. OIL PUMP & JOINT

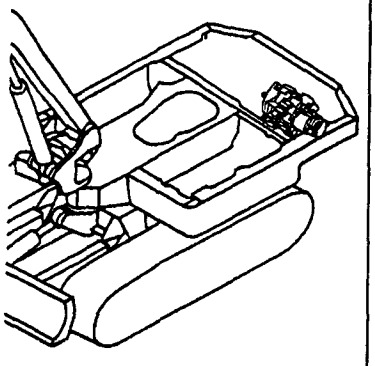

Fig.27 BOOM CYLINDER & SWING CYLINDER

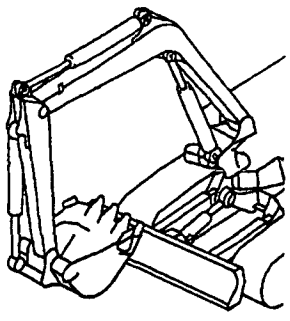

Fig.28 TRAVEL MOTOR

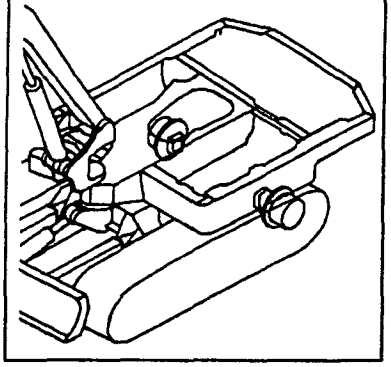

Fig.29 TURNING MOTOR

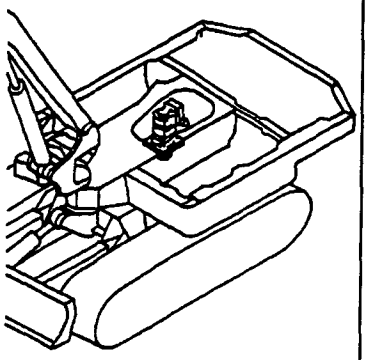

Fig.30 SWIVEL JOINT

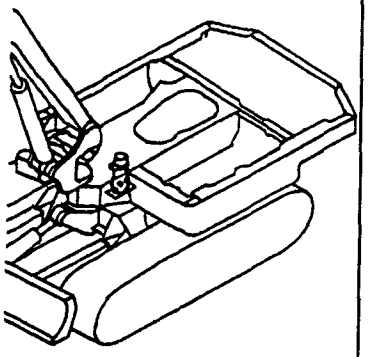

Fig.31 CONTROL VALVE (P PORT)

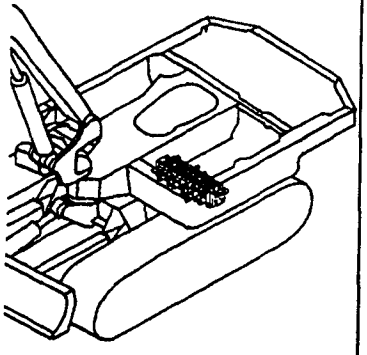

Fig.32 CONTROL VALVE (TRAVEL)

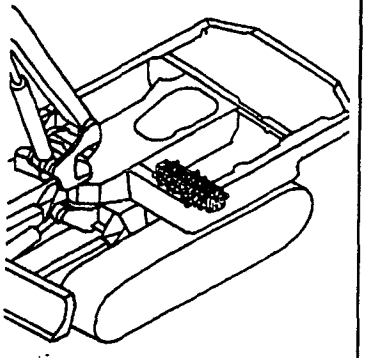

Fig.33 CONTROL VALVE (ARM & SWING)

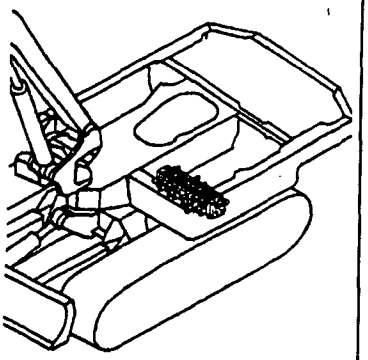

Fig.34 CONTROL VALVE (BOOM & BUCKET)

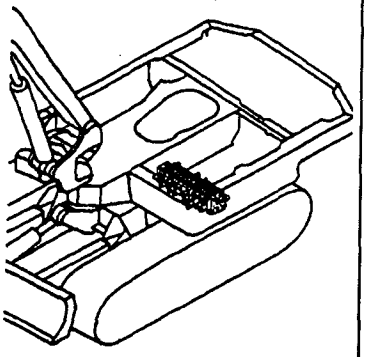

Fig.35 CONTROL VALVE (TURNING & BLADE)

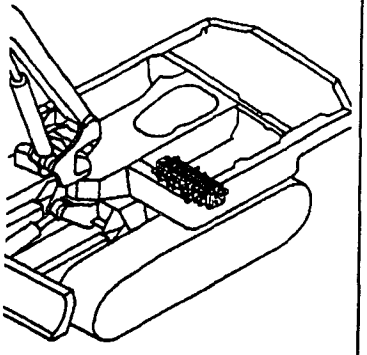

Fig.36 REMOTE CONTROL VALVE (LEFT)

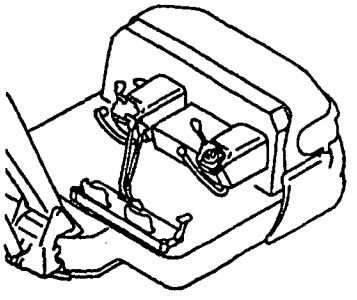

https://truckmanualshub.com/

Fig.37 REMOTE CONTROL VALVE (RIGHT)

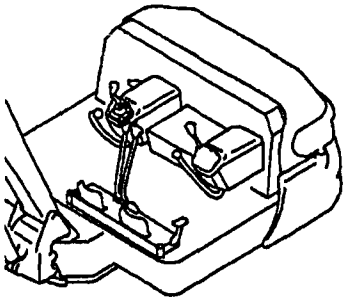

Fig.38 LOW-HIGH VALVE

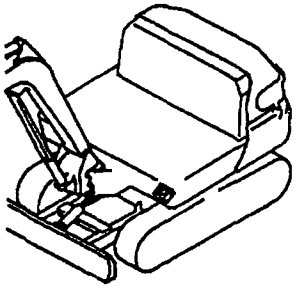

Fig.39 P.T.O. VALVE

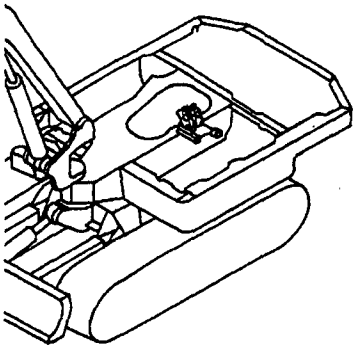

Fig.40 HYD.OIL TANK

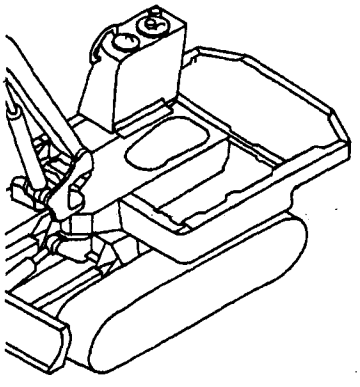

Fig.41 HYD.OIL PIPING (TANK~PUMP~VALVE)

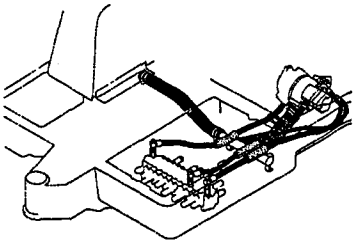

Fig.42 HYD.OIL PIPING (VALVE~MOTOR, BOOM)

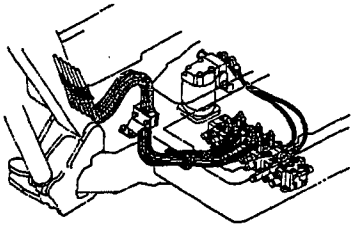

Fig.43 HYD.OIL PIPING (VALVE~SWIVEL, SWING)

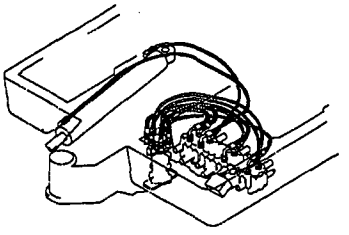

Fig.44 HYD.OIL PIPING (RETURN)

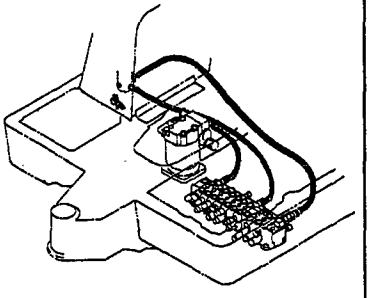

Fig.45 HYD.OIL PIPING (P.T.O.VALVE, FRAME)

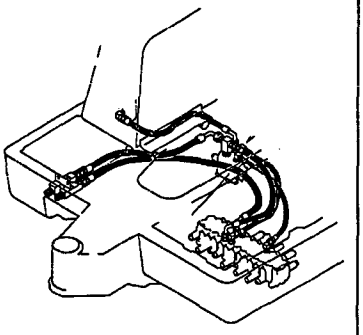

Fig.46 HYD.OIL PIPING (TRAVEL)

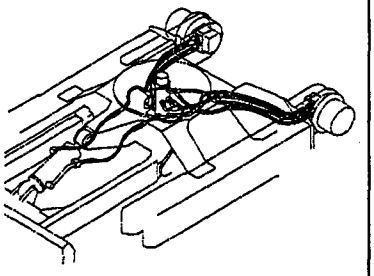

Fig.47 HYD.OIL PIPING (BOOM)

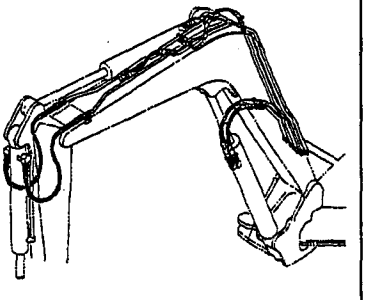

Fig.48 HYD.OIL PIPING (P.T.O.VALVE, BOOM)

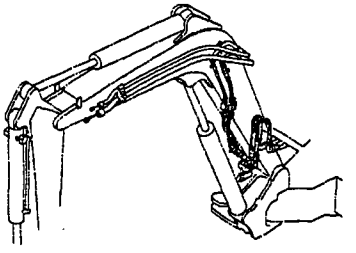

https://truckmanualshub.com/

Fig.49 CONTROL PIPING (PUMP~LOW-HIGH V~RETURN)

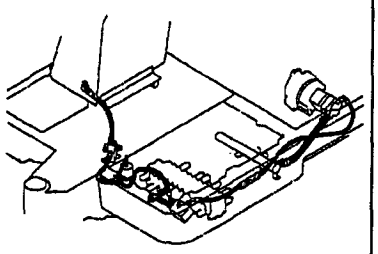

Fig.50 CONTROL PIPING (DIRECT)

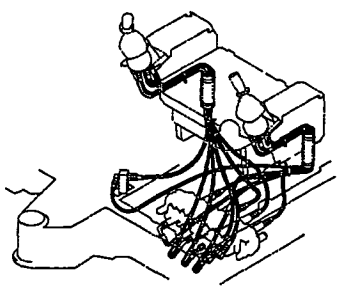

Fig.51 GREASING

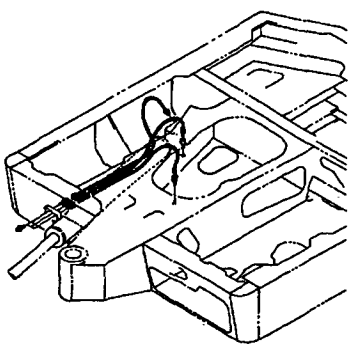

Fig.52 BOOM & ARM

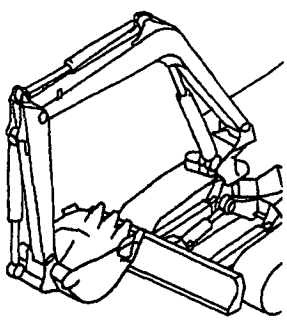

Fig.53 BLADE

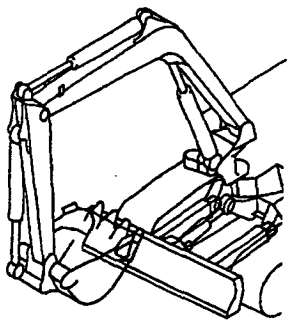

https://truckmanualshub.com/

WIRING DIAGRAM

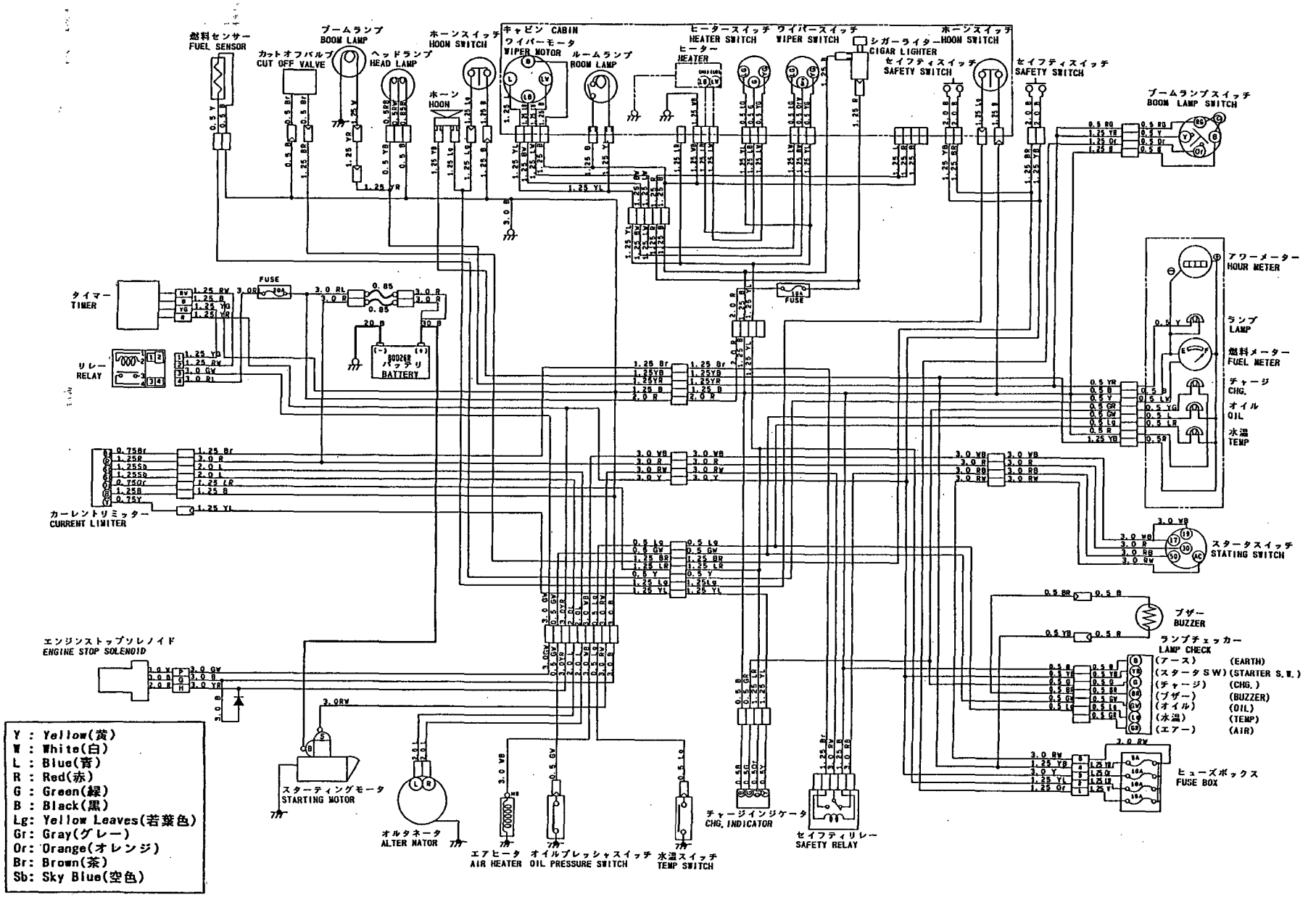

https://truckmanualshub.com/

```
1,1,,772171-03220,,"LABEL ASSY",1,,,,,,,,,,,,,,,,,,
1-1,1,,772174-03110,,"LABEL ASSY",1,,,,,,R,,72174AMA-1,M910001,,,,,,,,
2,2,,172171-03130,,"LABEL,SPACIFICATION",1,,,,,,,,,,,,,,,,,,
2-1,2,,172174-03130,,"LABEL F/G/E,SMALL",1,,,,,,R,,72174AMA-1,M910001,,,,,,,,
3,2,,172171-03151,,LABEL,1,,,,,,,,,,,,,,,,,,
3-1,2,,172174-03150,,LABEL,1,,,,,,R,,72174AMA-1,M910001,,,,,,,,
4,2,,172519-03150,,"LABEL, ACCEL",1,,,,,,,,,,,,,,,,,,
4-1,2,,172174-03190,,"LABEL,ACCELERATOR",1,,,,,,R,,72174AMA-1,M910001,,,,,,,,
5,2,,172171-03161,,LABEL,1,,,,,,,,,,,,,,,,,,
5-1,2,,172174-03160,,LABEL,1,,,,,,R,,72174AMA-1,M910001,,,,,,,,
6,2,,172143-03180,,LABEL,1,,,,,,,,,,,,,,,,,,
6-1,2,,172159-03290,,LABEL,1,,,,,,R,,72174AMA-1,M910001,,,,,,,,
7,2,,172171-03180,,"LABEL, OIL/WATER",1,,,,,,,,,,,,,,,,,,
7-1,2,,172174-03180,,"LABEL, OIL/WATER",1,,,,,,R,,72174AMA-1,M910001,,,,,,,,
8,2,,172159-03300,,LABEL,2,,,,,,,,,,,,,,,,,,
8-1,2,,172174-03630,,LABEL,2,,,,,,R,,72174AMA-1,M910001,,,,,,,,
9,2,,172168-03211,,LABEL,1,,,,,,,,,,,,,,,,,,
9-1,2,,172174-03250,,LABEL,1,,,,,,R,,72174AMA-1,M910001,,,,,,,,
10,2,,172159-03310,,LABEL,1,,,,,,,,,,,,,,,,,,
10-1,2,,172174-03710,,LABEL,1,,,,,,R,,72174AMA-1,M910001,,,,,,,,
11,2,,172171-03261,,"LABEL,BOOM",1,,,,,,,,,,,,,,,,,,
11-1,2,,172174-03280,,"LABEL,REAR",1,,,,,,R,,72174AMA-1,M910001,,,,,,,,
12,2,,172159-03320,,LABEL,1,,,,,,,,,,,,,,,,,,
12-1,2,,172174-03700,,LABEL,1,,,,,,R,,72174AMA-1,M910001,,,,,,,,
13,2,,172137-03301,,"LABEL, TURNING LOCK",1,,,,,,,,,,,,,,,,,,
13-1,2,,172159-03551,,"LABEL, TURNING LOCK",1,,,,,,R,,72174AMA-
1,M910001,,,,,,,,
14,2,,172141-03360,,"LABEL, START SWITCH",1,,,,,,,,,,,,,,,,,,
14-1,2,,172161-03360,,"LABEL,STARTER SWITCH",1,,,,,,R,,72174AMA-
1,M910001,,,,,,,,
15,2,,172165-03430,,"LABEL,GREASE FEED",1,,,,,,,,,,,,,,,,,,
15-1,2,,172174-03330,,"LABEL,GREASE FEED",1,,,,,,R,,72174AMA-1,M910001,,,,,,,,
16,2,,172165-03440,,"LABEL, GREASE",1,,,,,,,,,,,,,,,,,,
16-1,2,,172174-03340,,"LABEL, GREASE",1,,,,,,R,,72174AMA-1,M910001,,,,,,,,
17,2,,172142-03451,,"LABEL, BOOM",2,,,,,,,,,,,,,,,,,,
17-1,2,,172174-03350,,"LABEL, BOOM",2,,,,,,R,,72174AMA-1,M910001,,,,,,,,
18,2,,22857-300050,,"SCREW 3X 5",4,,,,,,,,,,,,,,,,,,
19,2,,172162-03180,,"LABEL,HEATER SWITCH",1,,,,,,,,,,,,,,,,,,
19-1,2,,172174-03550,,"LABEL,HEATER SWITCH",1,,,,,,R,,72174AMA-
1,M910001,,,,,,,,
20,2,,172165-03460,,"LABEL, PATERN A",1,,,,,,,,,,,,,,,,,,
20-1,2,,172174-03360,,"LABEL,PATTERN A",1,,,,,,R,,72174AMA-1,M910001,,,,,,,,
21,2,,933112-50700,,"LABEL, OIL FEED",1,,,,,,,,,,,,,,,,,,
21-1,2,,172159-03340,,"LABEL, OIL FEED",1,,,,,,R,,72174AMA-1,M910001,,,,,,,,
22,2,,933112-52500,,"LABEL, FUEL",1,,,,,,,,,,,,,,,,,,
22-1,2,,172159-03350,,"LABEL, FUEL",1,,,,,,R,,72174AMA-1,M910001,,,,,,,,
23,2,,933112-54300,,"LABEL, AIR CLEANER",1,,,,,,,,,,,,,,,,,,
23-1,2,,172159-03360,,"LABEL, AIR CLEANER",1,,,,,,R,,72174AMA-1,M910001,,,,,,,,
24,2,,933112-55700,,"LABEL, SUB-TANK",1,,,,,,,,,,,,,,,,,,
24-1,2,,172159-03370,,"LABEL, SUBTANK",1,,,,,,R,,72174AMA-1,M910001,,,,,,,,
25,2,,933112-55800,,"LABEL, RADIATER",1,,,,,,,,,,,,,,,,,,
25-1,2,,172159-03380,,"LABEL, RADITATER",1,,,,,,R,,72174AMA-1,M910001,,,,,,,,
26,2,,933112-55900,,"LABEL, ANTI-FREEZING",1,,,,,,,,,,,,,,,,,,
26-1,2,,172159-03390,,"LABEL, ANTI-FREEZING",1,,,,,,R,,72174AMA-
1,M910001,,,,,,,,
27,2,,172165-03230,,"LABEL, P.T.O.",1,,,,,,,,,,,,,,,,,,
27-1,2,,172174-03270,,"LABEL, P.T.O.",1,,,,,,R,,72174AMA-1,M910001,,,,,,,,
28,2,,172168-03300,,"LABEL, SELECT",1,,,,,,,,,,,,,,,,,,
28-1,2,,172174-03300,,"LABEL, SELECT",1,,,,,,R,,72174AMA-1,M910001,,,,,,,,
29,2,,172165-03301,,"LABEL,CAB",1,,,,,,,,,,,,,,,,,,
29-1,2,,172174-03290,,"LABEL,CAB",1,,,,,,R,,72174AMA-1,M910001,,,,,,,,
30,2,,172165-03311,,LABEL,1,,,,,,,,,,,,,,,,,,
30-1,2,,172174-03310,,LABEL,1,,,,,,R,,72174AMA-1,M910001,,,,,,,,
```

https://truckmanualshub.com/

```
31,2,,172165-03321,,LABEL,1,,,,,,,,,,,,,,,,,,
31-1,2,,172174-03320,,LABEL,1,,,,,,R,,72174AMA-1,M910001,,,,,,,,,
32,2,,172162-03190,,"LABEL,WIPER SWITCH",1,,,,,,,,,,,,,,,,,,
32-1,2,,172174-03560,,"LABEL,WIPER SWITCH",1,,,,,,R,,72174AMA-1,M910001,,,,,,,,,
33,2,,172174-03690,,"LABEL,RADIATOR",1,,,,,,W,,72174AMA-1,M910001,,,,,,,,,
34,2,,933112-45400,,"LABEL, DANGER (B)",1,,,,,,,,,,,,,,,,,,
34-1,2,,172174-03570,,"LABEL,DANGER",1,,,,,,R,,72174AMA-1,M910001,,,,,,,,,
35,2,,172174-03620,,LABEL,1,,,,,,W,,72174AMA-1,M910001,,,,,,,,,
36,2,,172174-03600,,LABEL,1,,,,,,W,,72174AMA-1,M910001,,,,,,,,,
37,2,,172174-03610,,"LABEL,CONTACT",1,,,,,,W,,72174AMA-1,M910001,,,,,,,,,
38,2,,172174-03640,,"LABEL,TRANSPORT",1,,,,,,W,,72174AMA-1,M910001,,,,,,,,,
39,2,,172174-03650,,"LABEL,GREASE CYL.",2,,,,,,W,,72174AMA-1,M910001,,,,,,,,,
40,2,,172174-03660,,"LABEL,CABLE",1,,,,,,W,,72174AMA-1,M910001,,,,,,,,,
41,2,,172174-03670,,"LABEL,NEUTRAL",1,,,,,,W,,72174AMA-1,M910001,,,,,,,,,
42,2,,172147-03210,,LABEL,1,,,,,,,,,,,,,,,,,,
42-1,2,,172174-03380,,LABEL,1,,,,,,R,,72174AMA-1,M910001,,,,,,,,,
43,2,,172168-03270,,LABEL,1,,,,,,,,,,,,,,,,,,
43-1,2,,172174-03240,,LABEL,1,,,,,,R,,72174AMA-1,M910001,,,,,,,,,
43A,2,,172174-03680,,"LABEL,SWING AREA",1,,,,,,W,,72174AMA-1,M910001,,,,,,,,,
45,1,,172141-03440,,LABEL,1,,,,,,,1,,,,,,,,,,
45-1,1,,172174-03410,,"LABEL, RESTART",1,,,,,,R,1,72174AMA-1,M910001,,,,,,,,,
46,1,,172171-03520,,"LABEL, OIL/WATER",1,,,,,,,1,,,,,,,,,,
46-1,1,,172174-03420,,"LABEL,FEEDWATER",1,,,,,,R,1,72174AMA-1,M910001,,,,,,,,,
47,1,,172165-03500,,"LABEL,GREASE FEED",1,,,,,,,1,,,,,,,,,,
47-1,1,,172174-03460,,"LABEL,GREASE FEED",1,,,,,,R,1,72174AMA-1,M910001,,,,,,,,,
48,1,,172171-03510,,"LABEL, GREASE",1,,,,,,,1,,,,,,,,,,
48-1,1,,172174-03470,,"LABEL, GREASE",1,,,,,,R,1,72174AMA-1,M910001,,,,,,,,,
49,1,,933112-50300,,"LABEL, OIL FEED",1,,,,,,,1,,,,,,,,,,
49-1,1,,172174-03490,,LABEL,1,,,,,,R,1,72174AMA-1,M910001,,,,,,,,,
50,1,,933112-52100,,"LABEL, FUEL",1,,,,,,,1,,,,,,,,,,
50-1,1,,172174-03500,,LABEL,1,,,,,,R,1,72174AMA-1,M910001,,,,,,,,,
51,1,,172125-03950,,"LABEL, AIR CLEANER",1,,,,,,,1,,,,,,,,,,
51-1,1,,172174-03510,,"LABEL, AIR CLEANER",1,,,,,,R,1,72174AMA-
1,M910001,,,,,,,,,
52,1,,124764-44810,,"LABEL, SUB-TANK",1,,,,,,,1,,,,,,,,,,
52-1,1,,172174-03520,,"LABEL,SUB-TANK",1,,,,,,R,1,72174AMA-1,M910001,,,,,,,,,
53,1,,121120-44800,,"LABEL, RADIATOR",1,,,,,,,1,,,,,,,,,,
53-1,1,,172174-03530,,"LABEL, RADIATER",1,,,,,,R,1,72174AMA-1,M910001,,,,,,,,,
54,1,,124764-44920,,"LABEL, ANTI-FREEZING",1,,,,,,,1,,,,,,,,,,
54-1,1,,172174-03540,,"LABEL, ANTI-FREEZING",1,,,,,,R,1,72174AMA-
1,M910001,,,,,,,,,
55,1,,172174-03840,,"LABEL,RADIATOR",1,,,,,,W,1,72174AMA-1,M910001,,,,,,,,,
56,1,,172174-03780,,"LABEL, PROTECTOR",2,,,,,,W,1,72174AMA-1,M910001,,,,,,,,,
57,1,,172174-03860,,"LABEL,ENGINE COVER",1,,,,,,W,1,72174AMA-1,M910001,,,,,,,,,
58,1,,172174-03820,,"LABEL,NEUTRAL",1,,,,,,W,1,72174AMA-1,M910001,,,,,,,,,
59,1,,172174-03850,,"LABEL,ENGINE ROOM",1,,,,,,W,1,72174AMA-1,M910001,,,,,,,,,
60,1,,172174-03770,,LABEL,1,,,,,,W,1,72174AMA-1,M910001,,,,,,,,,
61,1,,172174-03750,,LABEL,1,,,,,,W,1,72174AMA-1,M910001,,,,,,,,,
62,1,,172174-03760,,"LABEL,CONTACT",1,,,,,,W,1,72174AMA-1,M910001,,,,,,,,,
63,1,,172174-03790,,"LABEL,TRANSPORT",1,,,,,,W,1,72174AMA-1,M910001,,,,,,,,,
64,1,,172174-03800,,"LABEL,GREASE CYL.",2,,,,,,W,1,72174AMA-1,M910001,,,,,,,,,
65,1,,172174-03810,,"LABEL,BOOSTER",1,,,,,,W,1,72174AMA-1,M910001,,,,,,,,,
66,1,,172174-03830,,"LABEL,SWING AREA",1,,,,,,W,1,72174AMA-1,M910001,,,,,,,,,
```

Fig. 1 LABEL (CABIN)

https://truckmanualshub.com/

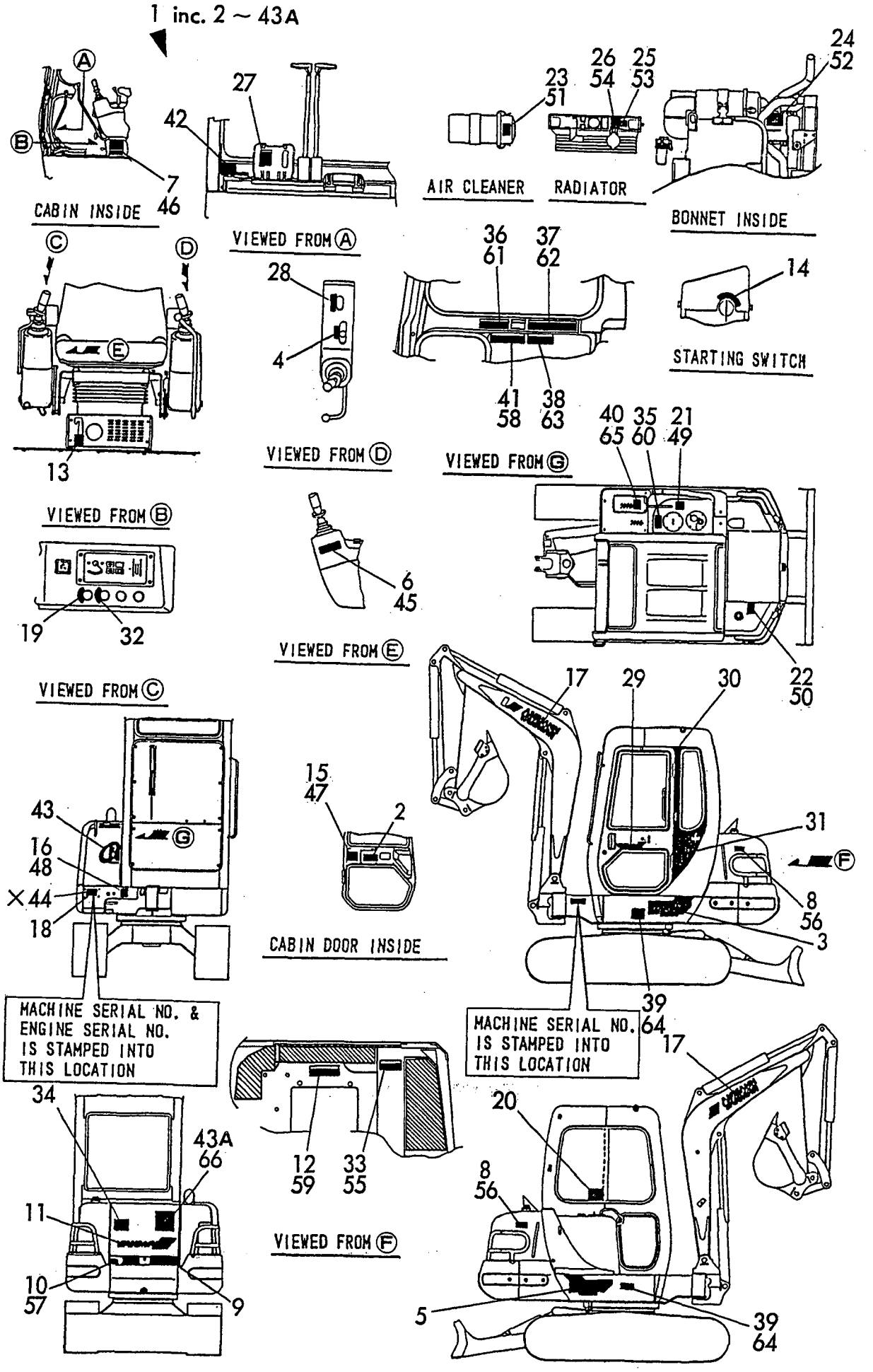

× MARK PARTS: NOT SOLD SEPARATELY.

https://truckmanualshub.com/

```
1,1,,772171-03230,,"LABEL SET",,1,,,,,,,,,,,,,,,,
1-1,1,,772174-03100,,"LABEL SET",,1,,,,,R,,,,72174AMA-1,M910001,,,,,,,
2,2,,172171-03130,,"LABEL,SPACIFICATION",,1,,,,,,,,,,,,,,,,
2-1,2,,172174-03130,,"LABEL F/G/E,SMALL",,1,,,,,R,,,,72174AMA-1,M910001,,,,,,,
3,2,,172171-03151,,LABEL,,1,,,,,,,,,,,,,,,,
3-1,2,,172174-03150,,LABEL,,1,,,,,R,,,,72174AMA-1,M910001,,,,,,,
4,2,,172519-03150,,"LABEL, ACCEL",,1,,,,,,,,,,,,,,,,
4-1,2,,172174-03190,,"LABEL,ACCELERATOR",,1,,,,,R,,,,72174AMA-1,M910001,,,,,,,
5,2,,172171-03161,,LABEL,,1,,,,,,,,,,,,,,,,
5-1,2,,172174-03160,,LABEL,,1,,,,,R,,,,72174AMA-1,M910001,,,,,,,
6,2,,172143-03180,,LABEL,,1,,,,,,,,,,,,,,,,
6-1,2,,172159-03290,,LABEL,,1,,,,,R,,,,72174AMA-1,M910001,,,,,,,
7,2,,172171-03180,,"LABEL, OIL/WATER",,1,,,,,,,,,,,,,,,,
7-1,2,,172174-03180,,"LABEL, OIL/WATER",,1,,,,,R,,,,72174AMA-1,M910001,,,,,,,
8,2,,172159-03300,,LABEL,,2,,,,,,,,,,,,,,,,
8-1,2,,172174-03630,,LABEL,,2,,,,,R,,,,72174AMA-1,M910001,,,,,,,
9,2,,172168-03211,,LABEL,,1,,,,,,,,,,,,,,,,
9-1,2,,172174-03250,,LABEL,,1,,,,,R,,,,72174AMA-1,M910001,,,,,,,
10,2,,172159-03310,,LABEL,,1,,,,,,,,,,,,,,,,
10-1,2,,172174-03710,,LABEL,,1,,,,,R,,,,72174AMA-1,M910001,,,,,,,
11,2,,172171-03261,,"LABEL,BOOM",,1,,,,,,,,,,,,,,,,
11-1,2,,172174-03280,,"LABEL,REAR",,1,,,,,R,,,,72174AMA-1,M910001,,,,,,,
12,2,,172159-03320,,LABEL,,1,,,,,,,,,,,,,,,,
12-1,2,,172174-03700,,LABEL,,1,,,,,R,,,,72174AMA-1,M910001,,,,,,,
13,2,,172137-03301,,"LABEL, TURNING LOCK",,1,,,,,,,,,,,,,,,,
13-1,2,,172159-03551,,"LABEL, TURNING LOCK",,1,,,,,R,,,,72174AMA-
1,M910001,,,,,,
14,2,,172141-03360,,"LABEL, START SWITCH",,1,,,,,,,,,,,,,,,,
14-1,2,,172161-03360,,"LABEL,STARTER SWITCH",,1,,,,,R,,,,72174AMA-
1,M910001,,,,,,
15,2,,172165-03430,,"LABEL,GREASE FEED",,1,,,,,,,,,,,,,,,,
15-1,2,,172174-03330,,"LABEL,GREASE FEED",,1,,,,,R,,,,72174AMA-1,M910001,,,,,,,
16,2,,172165-03440,,"LABEL, GREASE",,1,,,,,,,,,,,,,,,,
16-1,2,,172174-03340,,"LABEL, GREASE",,1,,,,,R,,,,72174AMA-1,M910001,,,,,,,
17,2,,172142-03451,,"LABEL, BOOM",,2,,,,,,,,,,,,,,,,
17-1,2,,172174-03350,,"LABEL, BOOM",,2,,,,,R,,,,72174AMA-1,M910001,,,,,,,
18,2,,22857-300050,,"SCREW 3X 5",,4,,,,,,,,,,,,,,,,
19,2,,172151-03540,,"LABEL,PATTERN A",,1,,,,,,,,,,,,,,,,
19-1,2,,172174-03370,,"LABEL,PATTERN A",,1,,,,,R,,,,72174AMA-1,M910001,,,,,,,
20,2,,172165-03230,,"LABEL, P.T.O.",,1,,,,,,,,,,,,,,,,
20-1,2,,172174-03270,,"LABEL, P.T.O.",,1,,,,,R,,,,72174AMA-1,M910001,,,,,,,
21,2,,933112-50700,,"LABEL, OIL FEED",,1,,,,,,,,,,,,,,,,
21-1,2,,172159-03340,,"LABEL, OIL FEED",,1,,,,,R,,,,72174AMA-1,M910001,,,,,,,
22,2,,933112-52500,,"LABEL, FUEL",,1,,,,,,,,,,,,,,,,
22-1,2,,172159-03350,,"LABEL, FUEL",,1,,,,,R,,,,72174AMA-1,M910001,,,,,,,
23,2,,933112-54300,,"LABEL, AIR CLEANER",,1,,,,,,,,,,,,,,,,
23-1,2,,172159-03360,,"LABEL, AIR CLEANER",,1,,,,,R,,,,72174AMA-1,M910001,,,,,,,
24,2,,933112-55700,,"LABEL, SUB-TANK",,1,,,,,,,,,,,,,,,,
24-1,2,,172159-03370,,"LABEL, SUBTANK",,1,,,,,R,,,,72174AMA-1,M910001,,,,,,,
25,2,,933112-55800,,"LABEL, RADIATER",,1,,,,,,,,,,,,,,,,
25-1,2,,172159-03380,,"LABEL, RADITATER",,1,,,,,R,,,,72174AMA-1,M910001,,,,,,,
26,2,,933112-55900,,"LABEL, ANTI-FREEZING",,1,,,,,,,,,,,,,,,,
26-1,2,,172159-03390,,"LABEL, ANTI-FREEZING",,1,,,,,R,,,,72174AMA-
1,M910001,,,,,,
27,2,,172165-03141,,"LABEL,FRONT",,1,,,,,,,,,,,,,,,,
27-1,2,,172174-03140,,"LABEL,FRONT",,1,,,,,R,,,,72174AMA-1,M910001,,,,,,,
28,2,,172168-03300,,"LABEL, SELECT",,1,,,,,,,,,,,,,,,,
28-1,2,,172174-03300,,"LABEL, SELECT",,1,,,,,R,,,,72174AMA-1,M910001,,,,,,,
29,2,,172174-03690,,"LABEL,RADIATOR",,1,,,,,W,,,,72174AMA-1,M910001,,,,,,,
30,2,,933112-45400,,"LABEL, DANGER (B)",,1,,,,,,,,,,,,,,,,
30-1,2,,172174-03570,,"LABEL,DANGER",,1,,,,,R,,,,72174AMA-1,M910001,,,,,,,
31,2,,172174-03620,,LABEL,,1,,,,,W,,,,72174AMA-1,M910001,,,,,,,
32,2,,172174-03600,,LABEL,,1,,,,,W,,,,72174AMA-1,M910001,,,,,,,
```

https://truckmanualshub.com/

```
33,2,,172174-03610,,"LABEL,CONTACT",,1,,,,,W,,,,72174AMA-1,M910001,,,,,,,
34,2,,172174-03640,,"LABEL,TRANSPORT",,1,,,,,W,,,,72174AMA-1,M910001,,,,,,,
35,2,,172174-03650,,"LABEL,GREASE CYL.",,2,,,,,W,,,,72174AMA-1,M910001,,,,,,,
36,2,,172174-03660,,"LABEL,CABLE",,1,,,,,W,,,,72174AMA-1,M910001,,,,,,,
37,2,,172174-03670,,"LABEL,NEUTRAL",,1,,,,,W,,,,72174AMA-1,M910001,,,,,,,
38,2,,172147-03210,,LABEL,,1,,,,,,,,,,,,,,,,,
38-1,2,,172174-03380,,LABEL,,1,,,,,R,,,,72174AMA-1,M910001,,,,,,,
39,2,,172168-03270,,LABEL,,1,,,,,,,,,,,,,,,,,
39-1,2,,172174-03240,,LABEL,,1,,,,,R,,,,72174AMA-1,M910001,,,,,,,
39A,2,,172174-03680,,"LABEL,SWING AREA",,1,,,,,W,,,,72174AMA-1,M910001,,,,,,,
41,1,,172141-03440,,LABEL,,1,,,,,,1,,,,,,,,,,,
41-1,1,,172174-03410,,"LABEL, RESTART",,1,,,,,R,1,,,72174AMA-1,M910001,,,,,,,
42,1,,172171-03520,,"LABEL, OIL/WATER",,1,,,,,,1,,,,,,,,,,,
42-1,1,,172174-03420,,"LABEL,FEEDWATER",,1,,,,,R,1,,,72174AMA-1,M910001,,,,,,,
43,1,,172165-03500,,"LABEL,GREASE FEED",,1,,,,,,1,,,,,,,,,,,
43-1,1,,172174-03460,,"LABEL,GREASE FEED",,1,,,,,R,1,,,72174AMA-1,M910001,,,,,,,
44,1,,172171-03510,,"LABEL, GREASE",,1,,,,,,1,,,,,,,,,,,
44-1,1,,172174-03470,,"LABEL, GREASE",,1,,,,,R,1,,,72174AMA-1,M910001,,,,,,,
45,1,,172155-03790,,LABEL,,1,,,,,,1,,,,,,,,,,,
45-1,1,,172174-03490,,LABEL,,1,,,,,R,1,,,72174AMA-1,M910001,,,,,,,
46,1,,933112-52100,,"LABEL, FUEL",,1,,,,,,1,,,,,,,,,,,
46-1,1,,172174-03500,,LABEL,,1,,,,,R,1,,,72174AMA-1,M910001,,,,,,,
47,1,,172125-03950,,"LABEL, AIR CLEANER",,1,,,,,,1,,,,,,,,,,,
47-1,1,,172174-03510,,"LABEL, AIR CLEANER",,1,,,,,R,1,,,72174AMA-
1,M910001,,,,,,,
48,1,,124764-44810,,"LABEL, SUB-TANK",,1,,,,,,1,,,,,,,,,,,
48-1,1,,172174-03520,,"LABEL,SUB-TANK",,1,,,,,R,1,,,72174AMA-1,M910001,,,,,,,
49,1,,121120-44800,,"LABEL, RADIATOR",,1,,,,,,1,,,,,,,,,,,
49-1,1,,172174-03530,,"LABEL, RADIATER",,1,,,,,R,1,,,72174AMA-1,M910001,,,,,,,
50,1,,124764-44920,,"LABEL, ANTI-FREEZING",,1,,,,,,1,,,,,,,,,,,
50-1,1,,172174-03540,,"LABEL, ANTI-FREEZING",,1,,,,,R,1,,,72174AMA-
1,M910001,,,,,,,
51,1,,172174-03840,,"LABEL,RADIATOR",,1,,,,,W,1,,,72174AMA-1,M910001,,,,,,,
52,1,,172174-03780,,"LABEL, PROTECTOR",,2,,,,,W,1,,,72174AMA-1,M910001,,,,,,,
53,1,,172174-03860,,"LABEL,ENGINE COVER",,1,,,,,W,1,,,72174AMA-1,M910001,,,,,,,
54,1,,172174-03820,,"LABEL,NEUTRAL",,1,,,,,W,1,,,72174AMA-1,M910001,,,,,,,
55,1,,172174-03850,,"LABEL,ENGINE ROOM",,1,,,,,W,1,,,72174AMA-1,M910001,,,,,,,
56,1,,172174-03770,,LABEL,,1,,,,,W,1,,,72174AMA-1,M910001,,,,,,,
57,1,,172174-03750,,LABEL,,1,,,,,W,1,,,72174AMA-1,M910001,,,,,,,
58,1,,172174-03760,,"LABEL,CONTACT",,1,,,,,W,1,,,72174AMA-1,M910001,,,,,,,
59,1,,172174-03790,,"LABEL,TRANSPORT",,1,,,,,W,1,,,72174AMA-1,M910001,,,,,,,
60,1,,172174-03800,,"LABEL,GREASE CYL.",,2,,,,,W,1,,,72174AMA-1,M910001,,,,,,,
61,1,,172174-03810,,"LABEL,BOOSTER",,1,,,,,W,1,,,72174AMA-1,M910001,,,,,,,
62,1,,172174-03830,,"LABEL,SWING AREA",,1,,,,,W,1,,,72174AMA-1,M910001,,,,,,,
```

Fig. 2 LABEL (CANOPY)

https://truckmanualshub.com/

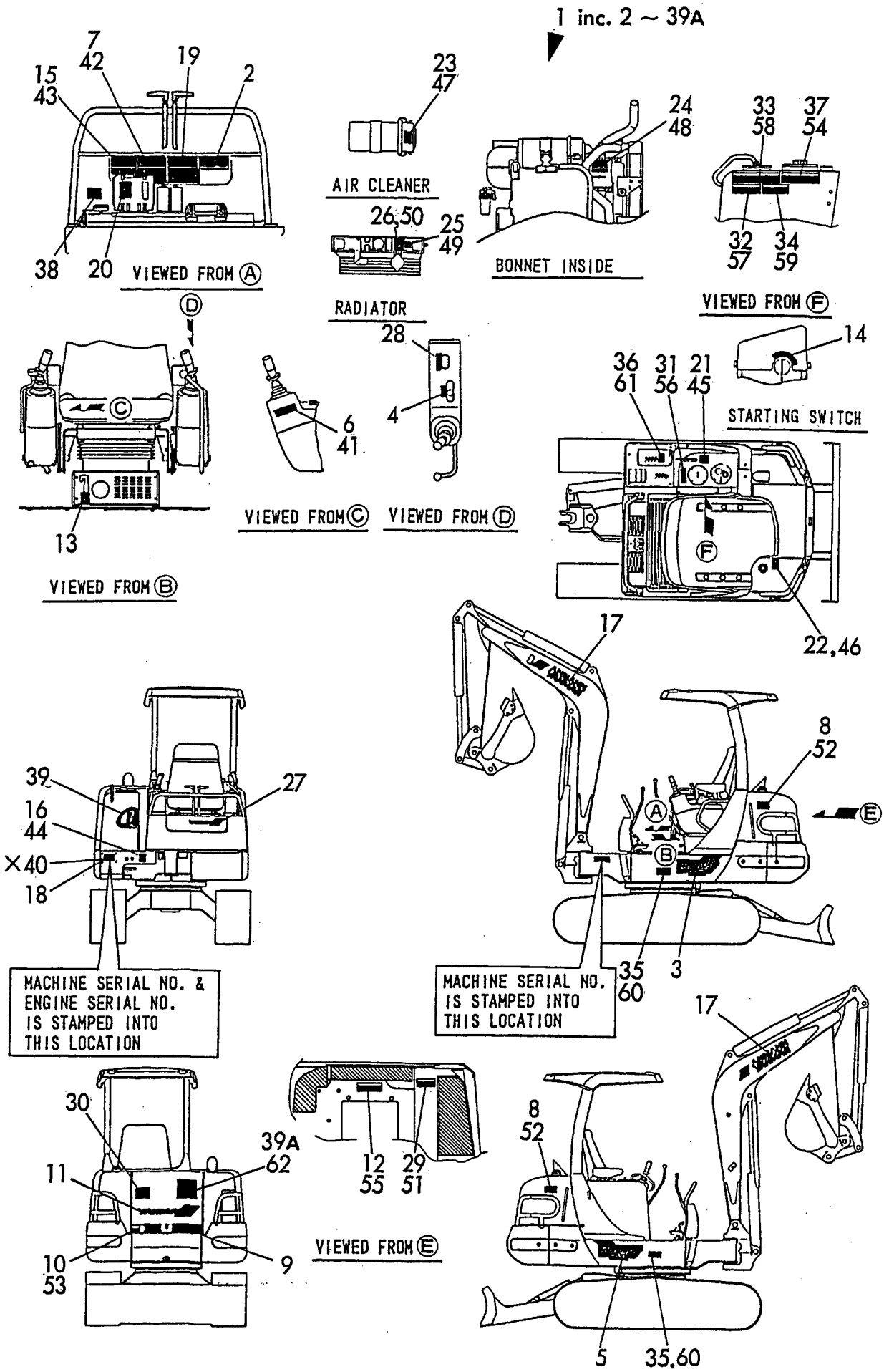

× MARK PARTS: NOT SOLD SEPARATELY.

https://truckmanualshub.com/

```
1,1,,172171-11300,,"PIPE TAIL",1,1,,,,,,,,,,,,,,,,
1-1,1,,172174-11300,,"NOZZLE,SILENCER BLST",1,1,,,,,R,,72174AMA-
1,M910001,72174AMA-1,M910001,,,,,,,
2,1,,119831-13580,,CLAMP,1,1,,,,,,,,,,,,,,,,
3,1,,22117-080000,,"WASHER  8",1,1,,,,,,,,,,,,,,,,
4,1,,22217-080000,,"SPRING WASHER  8",1,1,,,,,,,,,,,,,,,,
5,1,,26106-080552,,"BOLT M 8X 55 PLATED",1,1,,,,,,,,,,,,,,,,
6,1,,26706-080002,,"NUT M 8",1,1,,,,,,,,,,,,,,,,
7,1,,172171-11500,,"HOSE,AIR CLEANER",1,1,,,,,,,,,,,,,,,,
8,1,,23000-070000,,"CLAMP 70",1,1,,,,,,,,,,,,,,,,
9,1,,172122-79890,,"CLAMP 350",1,1,,,,,,,,,,,,,,,,
9-1,1,,172159-45160,,"CLAMP 350",1,1,,,,,R,,72174AMA-1,M910001,72174AMA-
1,M910001,,,,,,,
```

Fig. 3 INLET HOUSE & EXHAUST PIPE

https://truckmanualshub.com/

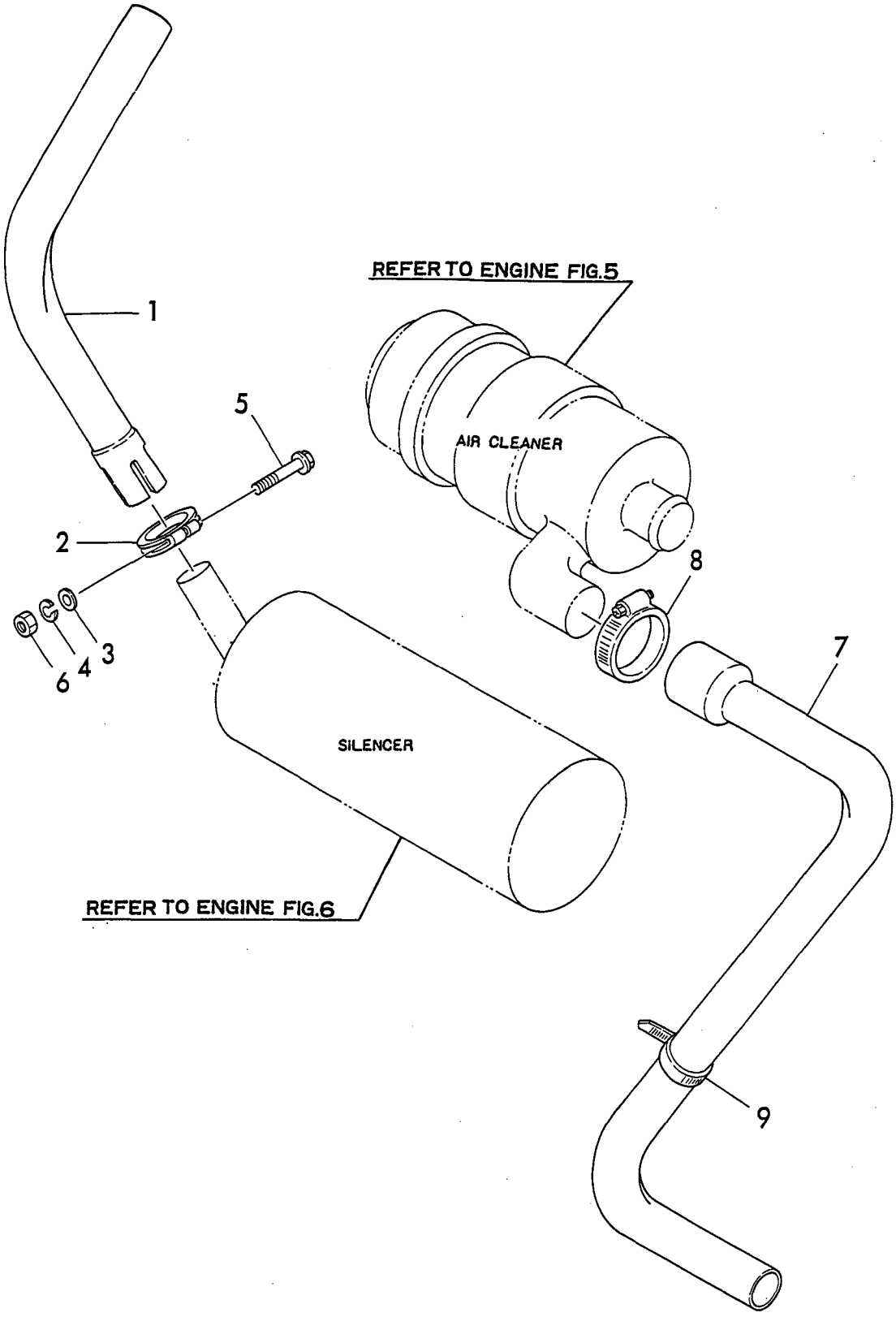

https://truckmanualshub.com/

```
1,1,,172168-12150,,"LEVER,ACCEL(EP)",1,1,,,,,,,,,,,,,,,,,
1-1,1,,172179-
12100,,"LEVER,ACCEL",1,1,,,,,N,,72168243,*1994.11,72168243,*1994.11,,,,,,,
1A,2,,172165-
12140,,GRIP,1,1,,,,,W,,72165500,*1996.05,72165500,*1996.05,,,,,,,,,I
2,1,,172168-12110,,"CABLE,ACCEL(S)",1,1,,,,,,,,,,,,,,,,,
3,1,,172137-12270,,"JOINT, CABLE",1,1,,,,,,,,,,,,,,,,,
3-1,1,,172159-12270,,"JOINT, CABLE",1,1,,,,,R,,72174AMA-1,M910001,72174AMA-
1,M910001,,,,,,,
4,1,,172141-12280,,"CLAMP, ACCEL WIRE",1,1,,,,,,,,,,,,,,,,,
4-1,1,,172161-12280,,"CLAMP,ACCEL.WIRE",1,1,,,,,R,,72174AMA-1,M910001,72174AMA-
1,M910001,,,,,,,
5,1,,172113-12521,,"PIN, CABLE",1,1,,,,,,,,,,,,,,,,,
5-1,1,,172159-12520,,"PIN, CABLE",1,1,,,,,R,,72174AMA-1,M910001,72174AMA-
1,M910001,,,,,,,
6,1,,1C6281-52310,,"PIN 6,COME-OFF SNAP",2,2,,,,,,,,,,,,,,,,,
6-1,1,,172159-42070,,"PIN 6,COME-OFF SNAP",2,2,,,,,R,,72174AMA-
1,M910001,72174AMA-1,M910001,,,,,,,
7,1,,1A1040-56900,,"PIN  6X 17",1,1,,,,,,,,,,,,,,,,,
7-1,1,,172159-12530,,"PIN  6X 17",1,1,,,,,R,,72174AMA-1,M910001,72174AMA-
1,M910001,,,,,,,
8,1,,1A1380-58050,,"GROMMET 16X20X4.5",1,1,,,,,,,,,,,,,,,,,
9,1,,22137-060000,,"WASHER 6, POLISHED",2,2,,,,,,,,,,,,,,,,,
10,1,,22217-080000,,"SPRING WASHER  8",2,2,,,,,,,,,,,,,,,,,
11,1,,26013-100302,,"BOLT M10X 30",2,2,,,,,,,,,,,,,,,,,
12,1,,26116-080162,,"BOLT M 8X 16 PLATED",2,2,,,,,,,,,,,,,,,,,
```

Fig. 4 ACCELERATOR

https://truckmanualshub.com/

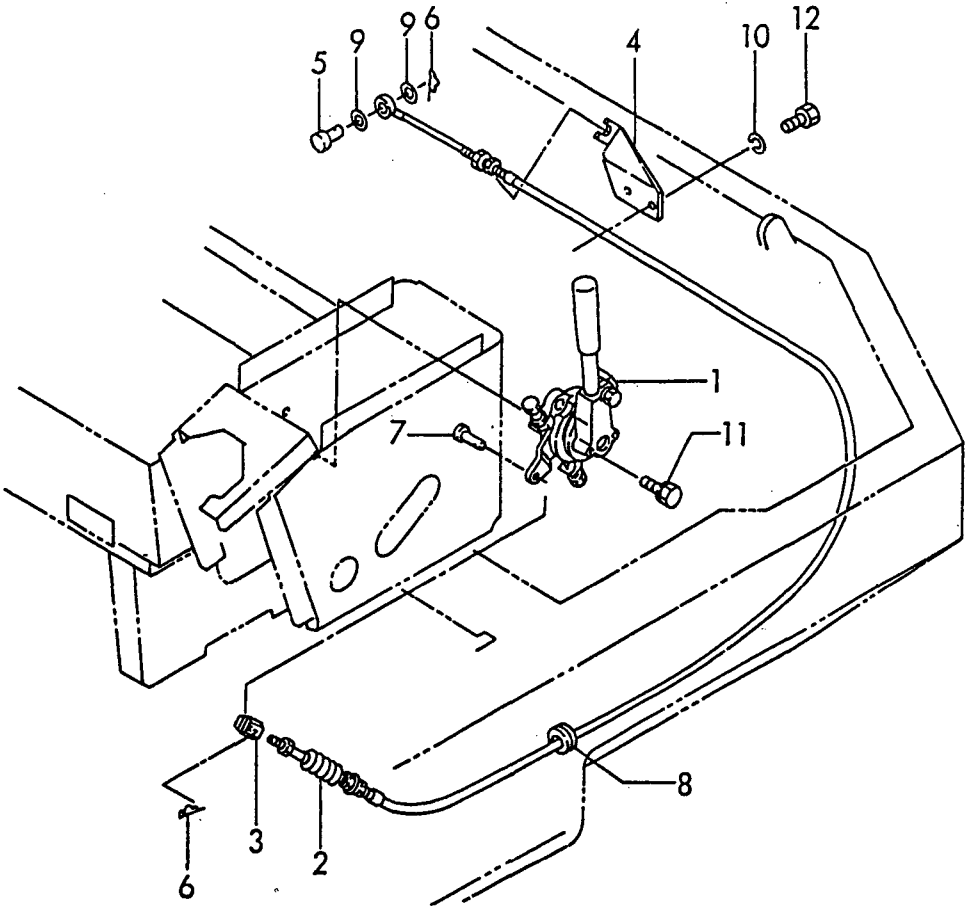

https://truckmanualshub.com/

```
1,1,,196420-02310,,"ABSORBER, SHOCK",2,2,,,,,,,,,,,,,,,,
2,1,,172146-13100,,BRACKET,1,1,,,,,,,,,,,,,,,,
2-1,1,,172174-13140,,BRACKET,1,1,,,,,R,,72174AMA-1,M910001,72174AMA-
1,M910001,,,,,,,
3,1,,172168-13100,,"MOUNT(R), ENGINE",1,1,,,,,,,,,,,,,,,,
3-1,1,,172174-13100,,"MOUNT(R), ENGINE",1,1,,,,,R,,72174AMA-1,M910001,72174AMA-
1,M910001,,,,,,,
4,1,,172146-13110,,BRACKET,1,1,,,,,,,,,,,,,,,,
4-1,1,,172174-13170,,BRACKET,1,1,,,,,R,,72174AMA-1,M910001,72174AMA-
1,M910001,,,,,,,
5,1,,172168-13120,,"MOUNT(L), ENGINE",1,1,,,,,,,,,,,,,,,,
5-1,1,,172174-13190,,"MOUNT(L), ENGINE",1,1,,,,,R,,72174AMA-1,M910001,72174AMA-
1,M910001,,,,,,,
6,1,,172168-13150,,BRACHET,2,2,,,,,,,,,,,,,,,,
6-1,1,,172174-13210,,BRACKET,2,2,,,,,R,,72174AMA-1,M910001,72174AMA-
1,M910001,,,,,,,
7,1,,172168-13180,,"BRACKET COMP.,ENGINE",2,2,,,,,,,,,,,,,,,,
7-1,1,,172174-13220,,BRACKET,2,2,,,,,R,,72174AMA-1,M910001,72174AMA-
1,M910001,,,,,,,
8,1,,172162-13200,,"BOLT M10X30",8,8,,,,,,,,,,,,,,,,
8-1,1,,172174-13260,,"BOLT M10X30",8,8,,,,,R,,72174AMA-1,M910001,72174AMA-
1,M910001,,,,,,,
9,1,,172124-13230,,"STOPPER, ENGINE",4,4,,,,,,,,,,,,,,,,
9-1,1,,172174-13270,,"STOPPER, ENGINE",4,4,,,,,R,,72174AMA-1,M910001,72174AMA-
1,M910001,,,,,,,
10,1,,172131-37170,,"BOLT M12X 30",6,6,,,,,,,,,,,,,,,,
11,1,,172137-46040,,"SEAT, SPRING",8,8,,,,,,,,,,,,,,,,
12,1,,22217-100000,,"SPRING WASHER 10",8,8,,,,,,,,,,,,,,,,
13,1,,22217-120000,,"WASHER 12,SPRING",6,6,,,,,,,,,,,,,,,,
14,1,,22217-120000,,"WASHER 12,SPRING",8,8,,,,,,,,,,,,,,,,
15,1,,26013-100252,,"BOLT W/WASHER M10X25",8,8,,,,,,,,,,,,,,,,
16,1,,26013-120302,,"BOLT W/WASHER M12X30",8,8,,,,,,,,,,,,,,,,
17,1,,26716-120002,,"NUT M12",8,8,,,,,,,,,,,,,,,,
18,1,,172168-13250,,"ABSORBER,SHOCK 180",2,2,,,,,,,,,,,,,,,,
```

Fig. 5 ENGINE MOUNT

https://truckmanualshub.com/

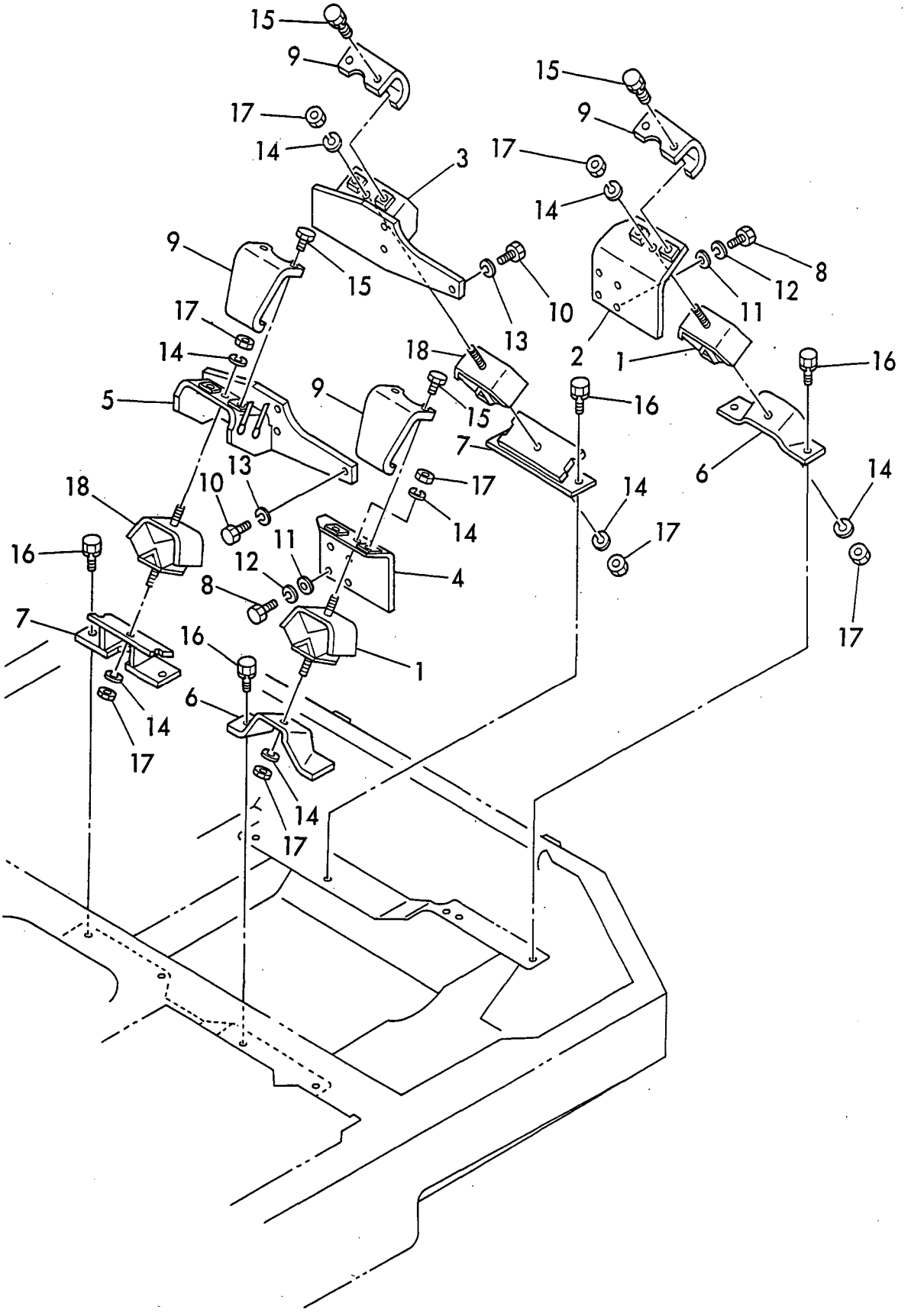

https://truckmanualshub.com/

```
1,1,,172171-13300,,"MOUNT(R), RADIATOR",1,1,,,,,,,,,,,,,,,,
1-1,1,,172174-13300,,"MOUNT(R), RADIATOR",1,1,,,,,R,,72174AMA-
1,M910001,72174AMA-1,M910001,,,,,,,
2,1,,172122-13310,,"MOUNT, RADIATOR",4,4,,,,,,,,,,,,,,,,
3,1,,172171-13330,,"PLATE, RADIATOR",1,1,,,,,,,,,,,,,,,,
3-1,1,,172174-13330,,"PLATE, RADIATOR",1,1,,,,,R,,72174AMA-1,M910001,72174AMA-
1,M910001,,,,,,,
4,1,,172171-13340,,"MOUNT L CMP,RADIATOR",1,1,,,,,,,,,,,,,,,,
4-1,1,,172174-13340,,"MOUNT L CMP,RADIATOR",1,1,,,,,R,,72174AMA-
1,M910001,72174AMA-1,M910001,,,,,,,
5,1,,172171-13410,,BRACKET,1,1,,,,,,,,,,,,,,,,
5-1,1,,172174-13410,,BRACKET,1,1,,,,,R,,72174AMA-1,M910001,72174AMA-
1,M910001,,,,,,,
6,1,,172171-13450,,"HOSE 7X750",1,1,,,,,,,,,,,,,,,,
6-1,1,,172174-13450,,"HOSE 7X750",1,1,,,,,R,,72174AMA-1,M910001,72174AMA-
1,M910001,,,,,,,
6-2,1,,172174-13451,,"HOSE
7X1090",1,1,,,,,S,,72174015,*1993.03,72174015,*1993.03,,,,,,,,,I
7,1,,172312-13430,,"HOSE(A), DRAIN",1,1,,,,,,,,,,,,,,,,
7-1,1,,172174-14630,,"HOSE(A), DRAIN",1,1,,,,,R,,72174AMA-1,M910001,72174AMA-
1,M910001,,,,,,,
7-2,1,,172174-13460,,"HOSE
7X560",1,1,,,,,S,,72174015,*1993.03,72174015,*1993.03,,,,,,,,,I
8,1,,121468-44510,,"SUB-TANK ASSY",1,1,,,,,,,,,,,,,,,,
9,2,,121470-44521,,"BODY,SUB-TANK",1,1,,,,,,,,,,,,,,,,
10,2,,121450-44531,,CAP,1,1,,,,,,,,,,,,,,,,
11,2,,121468-44540,,"PLUG, SUB-TANK",1,1,,,,,,,,,,,,,,,,
12,2,,124450-44560,,CLAMP,1,1,,,,,,,,,,,,,,,,
13,2,,121470-44581,,GASKET,1,1,,,,,,,,,,,,,,,,
14,2,,23065-070130,,"PIPE  7X 130",1,1,,,,,,,,,,,,,,,,
15,1,,172122-79890,,"CLAMP 350",2,2,,,,,,,,,,,,,,,,
15-1,1,,172159-45160,,"CLAMP 350",2,2,,,,,R,,72174AMA-1,M910001,72174AMA-
1,M910001,,,,,,,
16,1,,119831-44551,,RADIATOR,1,1,,,,,,,,,,,,,,,,
17,2,,119831-44650,,"RADIATOR SUB-ASSY.",1,1,,,,,,,,,,,,,,,,
18,2,,124450-44590,,"CAP, RADIATOR",1,1,,,,,,,,,,,,,,,,
19,2,,119831-44660,,SHROUD,1,1,,,,,,,,,,,,,,,,
20,2,,119831-44670,,"RUBBER PIPE",1,1,,,,,,,,,,,,,,,,
21,2,,121250-44590,,CLAMP,2,2,,,,,,,,,,,,,,,,
22,2,,26014-080162,,"BOLT M 8X 16",4,4,,,,,,,,,,,,,,,,
23,2,,124450-44800,,"LABEL, RADIATOR",1,1,,,,,,,,,,,,,,,,
24,1,,119831-44570,,"NET, WIRE",1,1,,,,,,,,,,,,,,,,
25,1,,119831-49010,,"PIPE (A), C. WATER",1,1,,,,,,,,,,,,,,,,
26,1,,119831-49020,,PIPE(B)C.WATER,,1,,,,,,,,,,,,,,,,
27,1,,119831-49040,,PIPE(B)C.WATER,1,,,,,,,,,,,,,,,,
28,1,,119831-49050,,PIPE(B)C.WATER,1,,,,,,,,,,,,,,,,
29,1,,121450-49110,,"COCK ASSY, 3-WAY",1,1,,,,,,,,,,,,,,,,
31,2,,121250-49121,,PLUG,1,1,,,,,,,,,,,,,,,,
32,2,,24311-000160,,"O-RING 1A P-16.0",1,1,,,,,,,,,,,,,,,,
33,1,,124766-59050,,"CLAMP 12",4,4,,,,,,,,,,,,,,,,
34,1,,22137-060000,,"WASHER 6, POLISHED",2,2,,,,,,,,,,,,,,,,
35,1,,22137-080000,,"WASHER 8, POLISHED",2,2,,,,,,,,,,,,,,,,
36,1,,23010-038000,,"CLAMP 38",4,4,,,,,,,,,,,,,,,,
37,1,,26013-060202,,"BOLT M 6X 20",2,2,,,,,,,,,,,,,,,,
38,1,,26013-080162,,"BOLT W/WASHER M8X16",4,4,,,,,,,,,,,,,,,,
39,1,,26013-080162,,"BOLT W/WASHER M8X16",2,2,,,,,,,,,,,,,,,,
40,1,,26013-100202,,"BOLT W/WASHER M10X20",3,3,,,,,,,,,,,,,,,,
40-1,1,,26013-100202,,"BOLT W/WASHER
M10X20",4,4,,,,,K,,72174015,*1993.03,72174015,*1993.03,,,,,,,,,I
41,1,,26013-080162,,"BOLT W/WASHER M8X16",2,2,,,,,,,,,,,,,,,,
42,1,,26051-080002,,"NUT M 8",8,8,,,,,,,,,,,,,,,,
43,1,,172171-13500,,"GUIDE,DRAIN HOSE",1,1,,,,,,,,,,,,,,,,
```

https://truckmanualshub.com/

43-1,1,,172174-13500,,"GUIDE,WTR.DRAIN HOSE",1,1,,,,R,,72174AMA-
1,M910001,72174AMA-1,M910001,,,,,,,
43-2,1,,172174-13500,,"GUIDE,WTR.DRAIN
HOSE",1,1,,,,Z,,72174015,*1993.03,72174015,*1993.03,,,,,,,,,I
44,1,,172171-13510,,"HOSE,GUIDE",2,2,,,,,,,,,,,,,,,,,,
44-1,1,,172174-13510,,"HOSE,GUIDE",2,2,,,,R,,72174AMA-1,M910001,72174AMA-
1,M910001,,,,,,,
44-2,1,,172174-
13510,,"HOSE,GUIDE",2,2,,,,Z,,72174015,*1993.03,72174015,*1993.03,,,,,,,,,I
45,1,,26013-100252,,"BOLT W/WASHER
M10X25",1,1,,,,Z,,72174015,*1993.03,72174015,*1993.03,,,,,,,,,I
46,1,,1A1380-58050,,"GROMMET
16X20X4.5",2,2,,,,W,,72174023,*1993.12,72174023,*1993.12,,,,,,,,,I

Fig. 6 RADIATOR & MOUNT

https://truckmanualshub.com/

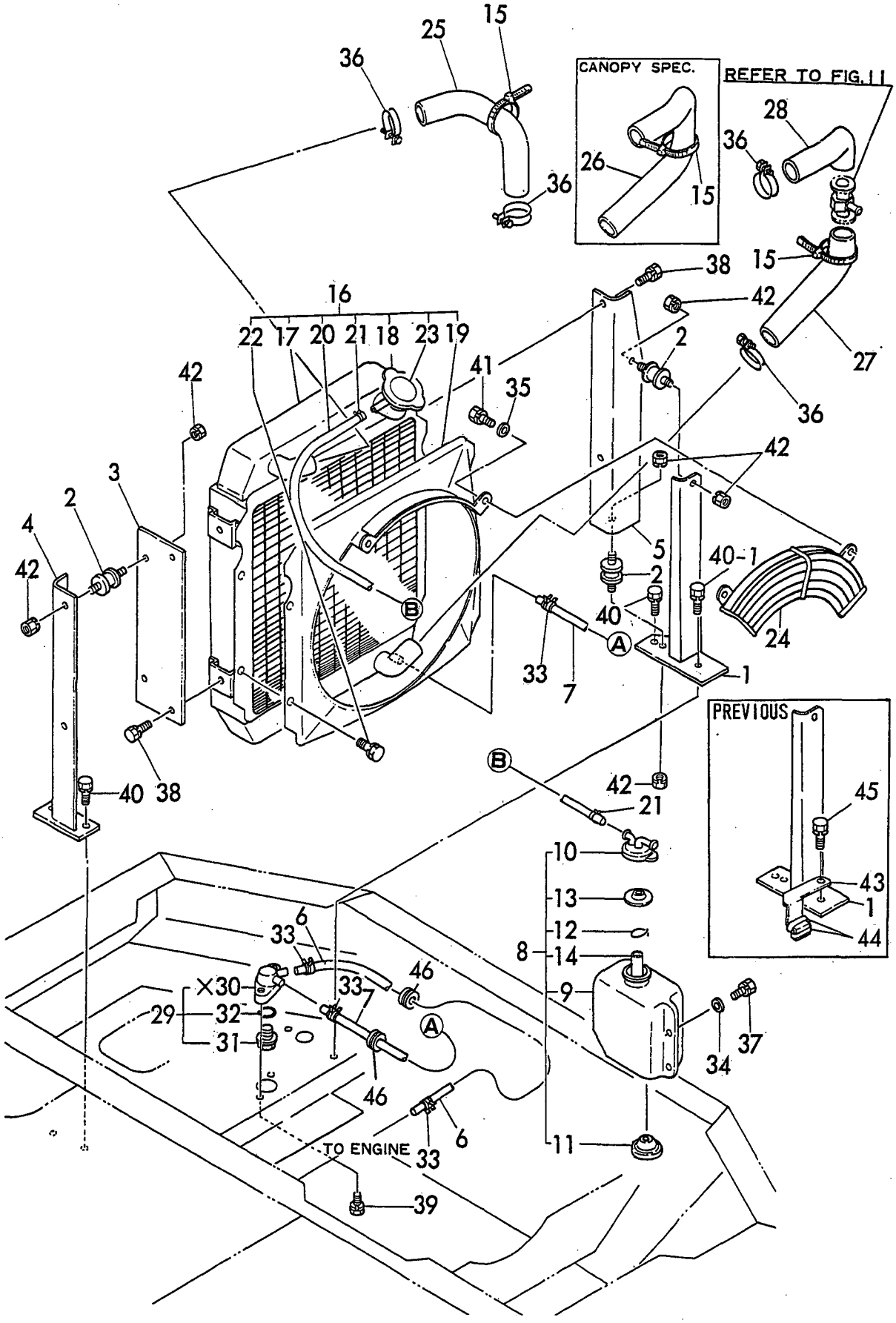

× MARK PARTS: NOT SOLD SEPARATELY.

https://truckmanualshub.com/

```
1,1,,772171-14100,,"TANK ASSY",1,1,,,,,,,,,,,,,,,,
1-1,1,,772174-14100,,"TANK ASSY",1,1,,,,,R,,72174AMA-1,M910001,72174AMA-
1,M910001,,,,,,,
2,2,,104200-11920,,COCK,1,1,,,,,,,,,,,,,,,,,
3,2,,172162-14180,,"GAUGE UNIT,FUEL",1,1,,,,,,,,,,,,,,,,,
4,2,,172162-14200,,GASKET,1,1,,,,,,,,,,,,,,,,,
6,3,,172171-14150,,"RUBBER,SEAL",1,1,,,,,,,,,,,,,,,,,
7,3,,172168-14220,,"SEAL A,CR SPONGE",1,1,,,,,,,,,,,,,,,,,,
7-1,3,,172174-14340,,"SEAL A,CR SPONGE",1,1,,,,,R,,72174AMA-1,M910001,72174AMA-
1,M910001,,,,,,,
8,3,,172168-14240,,"SEAL B,CR SPONGE",2,2,,,,,,,,,,,,,,,,,,
8-1,3,,172174-14360,,"SEAL B,CR SPONGE",2,2,,,,,R,,72174AMA-1,M910001,72174AMA-
1,M910001,,,,,,,
9,2,,172141-14260,,FLOAT,1,1,,,,,,,,,,,,,,,,,
10,2,,172122-14300,,"CAP, FUEL TANK",1,1,,,,,,,,,,,,,,,,,
11,3,,105430-55070,,GASKET,1,1,,,,,,,,,,,,,,,,,
12,2,,26557-050122,,"SCREW M 5X 12",5,5,,,,,,,,,,,,,,,,,
13,2,,172142-14420,,"PIPE, FUEL",1,1,,,,,,,,,,,,,,,,,
13-1,2,,172142-14421,,"HOSE, FUEL
GAUGE",1,1,,,,,N,,72168223,*1994.05,72168223,*1994.05,,,,,,,,,I
14,2,,101504-55101,,"STRAINER,FUEL INLET",1,1,,,,,,,,,,,,,,,,,
15,2,,22217-050000,,"SPRING WASHER  5",5,5,,,,,,,,,,,,,,,,,,
16,2,,23010-014000,,"CLAMP 14",2,2,,,,,,,,,,,,,,,,,
17,1,,172142-14320,,"GAUGE, FUEL",1,1,,,,,,,,,,,,,,,,,
18,1,,194145-04810,,"WASHER 10",6,6,,,,,,,,,,,,,,,,,
18-1,1,,172159-65930,,"WASHER 10",6,6,,,,,R,,72174AMA-1,M910001,72174AMA-
1,M910001,,,,,,,
19,1,,22217-100000,,"SPRING WASHER 10",6,6,,,,,,,,,,,,,,,,,
20,1,,23080-013000,,"CLAMP 13,HOSE",1,1,,,,,,,,,,,,,,,,,
21,1,,26116-100252,,"BOLT M10X 25 PLATED",6,6,,,,,,,,,,,,,,,,,
22,1,,172171-14600,,"HOSE 800",1,1,,,,,,,,,,,,,,,,,
22-1,1,,172174-14640,,"HOSE 800",1,1,,,,,R,,72174AMA-1,M910001,72174AMA-
1,M910001,,,,,,,
23,1,,172142-14620,,"HOSE L750, FUEL",1,1,,,,,,,,,,,,,,,,,
23-1,1,,172174-14620,,"HOSE 7X750,FUEL",1,1,,,,,R,,72174AMA-1,M910001,72174AMA-
1,M910001,,,,,,,
24,1,,172126-16540,,"CLAMP 10X70",1,1,,,,,,,,,,,,,,,,,
25,1,,129335-55700,,"SEPARATOR, WATER",1,1,,,,,,,,,,,,,,,,,
26,2,,104200-55321,,"VALVE, TAPER",1,1,,,,,,,,,,,,,,,,,
27,2,,104200-55330,,"SPRING, TAPER VALVE",1,1,,,,,,,,,,,,,,,,,
28,2,,104200-55341,,"HANDLE, COCK",1,1,,,,,,,,,,,,,,,,,
29,2,,124064-55510,,"BOWL, FUEL STRAINER",1,1,,,,,,,,,,,,,,,,,
30,2,,102103-55520,,O-RING,1,1,,,,,,,,,,,,,,,,,
31,2,,110250-55610,,"RING, RETAINING",1,1,,,,,,,,,,,,,,,,,
32,2,,121257-55720,,"SPRING, SCREEN",1,1,,,,,,,,,,,,,,,,,
33,2,,121257-55731,,FLOAT,1,1,,,,,,,,,,,,,,,,,
35,2,,101720-55750,,"PLUG 6",2,2,,,,,,,,,,,,,,,,,
36,2,,104200-55750,,"SCREW M 4",1,1,,,,,,,,,,,,,,,,,,
37,2,,171081-55910,,SCREEN,1,1,,,,,,,,,,,,,,,,,
38,2,,23418-060000,,"GASKET 6, NYLON",2,2,,,,,,,,,,,,,,,,,
39,2,,24311-240100,,"O-RING 1A P-10A",1,1,,,,,,,,,,,,,,,,,
40,1,,23010-016000,,"CLAMP 16",6,6,,,,,,,,,,,,,,,,,
41,1,,22217-080000,,"SPRING WASHER  8",1,1,,,,,,,,,,,,,,,,,
42,1,,26116-080652,,"BOLT M 8X 65 PLATED",1,1,,,,,,,,,,,,,,,,,
43,1,,194440-51620,,"CLAMP, WIRE HARNESS",1,1,,,,,,,,,,,,,,,,,
44,1,,172171-14610,,"HOSE 260,FUEL",1,1,,,,,,,,,,,,,,,,,
44-1,1,,172174-14610,,"HOSE 7X260,FUEL",1,1,,,,,R,,72174AMA-1,M910001,72174AMA-
1,M910001,,,,,,,
45,1,,172168-14270,,"COVER ASSY",1,1,,,,,,,,,,,,,,,,,
45-1,1,,172174-14270,,"COVER COMP.W/SEAL",1,1,,,,,R,,72174AMA-
1,M910001,72174AMA-1,M910001,,,,,,,
46,1,,22217-080000,,"SPRING WASHER  8",2,2,,,,,,,,,,,,,,,,,
47,1,,26116-080162,,"BOLT M 8X 16 PLATED",2,2,,,,,,,,,,,,,,,,,,
```

https://truckmanualshub.com/

48,1,,172171-14300,,W-CLAMP,1,1,,,,,,,,,,,,,,,,

Fig. 7 FUEL TANK & FUEL PIPE

https://truckmanualshub.com/

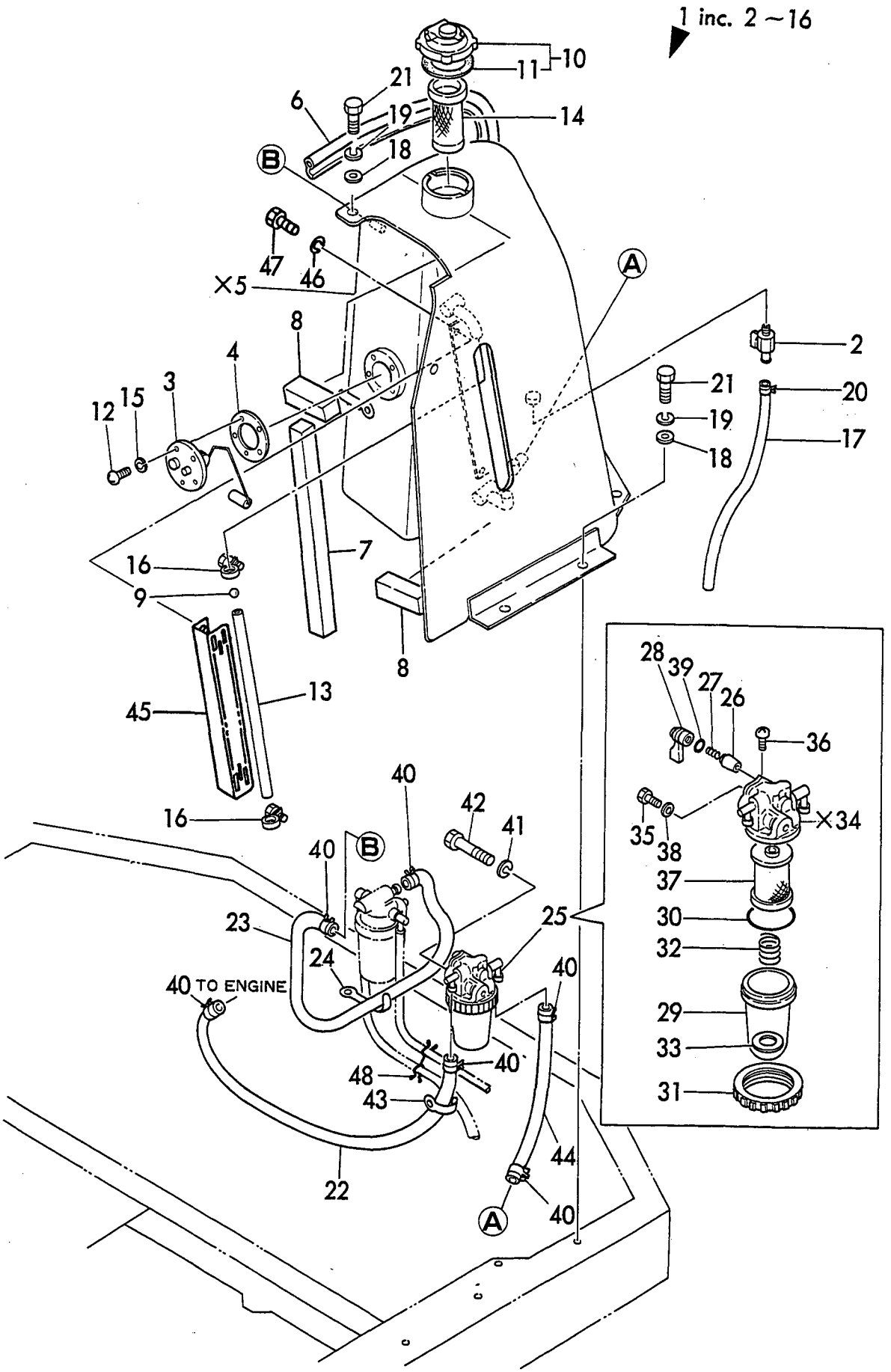

× MARK PARTS: NOT SOLD SEPARATELY.

https://truckmanualshub.com/

```
1,1,,172142-16100,,"CORD(+), BATTERY",1,1,,,,,,,,,,,,,,,,
2,1,,172161-16200,,"BATTERY B208G",1,1,,,,,,,,,,,,,,,,
2-1,1,,172174-
16100,,BATTERY,1,1,,,,,S,,72174003,*1992.11,72174003,*1992.11,,,,,,,,,I
3,1,,172142-16110,,"CORD(-), BATTERY",1,1,,,,,,,,,,,,,,,,
4,1,,933171-15710,,"ROD(B), BATTERY FIX",2,2,,,,,,,,,,,,,,,,,
4-1,1,,172174-16310,,"ROD(B), BATTERY FIX",2,2,,,,,R,,72174AMA-
1,M910001,72174AMA-1,M910001,,,,,,,
5,1,,22137-100000,,"WASHER 10,POLISHED",1,1,,,,,,,,,,,,,,,,
6,1,,22217-080000,,"SPRING WASHER  8",1,1,,,,,,,,,,,,,,,,
7,1,,22217-100000,,"SPRING WASHER 10",1,1,,,,,,,,,,,,,,,,
8,1,,26716-080002,,"NUT M 8",1,1,,,,,,,,,,,,,,,,
9,1,,26716-100002,,"NUT M10",1,1,,,,,,,,,,,,,,,,
10,1,,172168-16300,,"CLAMP, BATTERY",1,1,,,,,,,,,,,,,,,,
10-1,1,,172174-16301,,"CLAMP, BATTERY",1,1,,,,,R,,72174AMA-1,M910001,72174AMA-
1,M910001,,,,,,,
11,1,,22157-080000,,"WASHER  8",2,2,,,,,,,,,,,,,,,,
12,1,,26716-080002,,"NUT M 8",4,4,,,,,,,,,,,,,,,,
13,1,,172161-16230,,"RUBBER,BATTERY",1,1,,,,,,,,,,,,,,,,
```

Fig. 8 BATTERY

https://truckmanualshub.com/

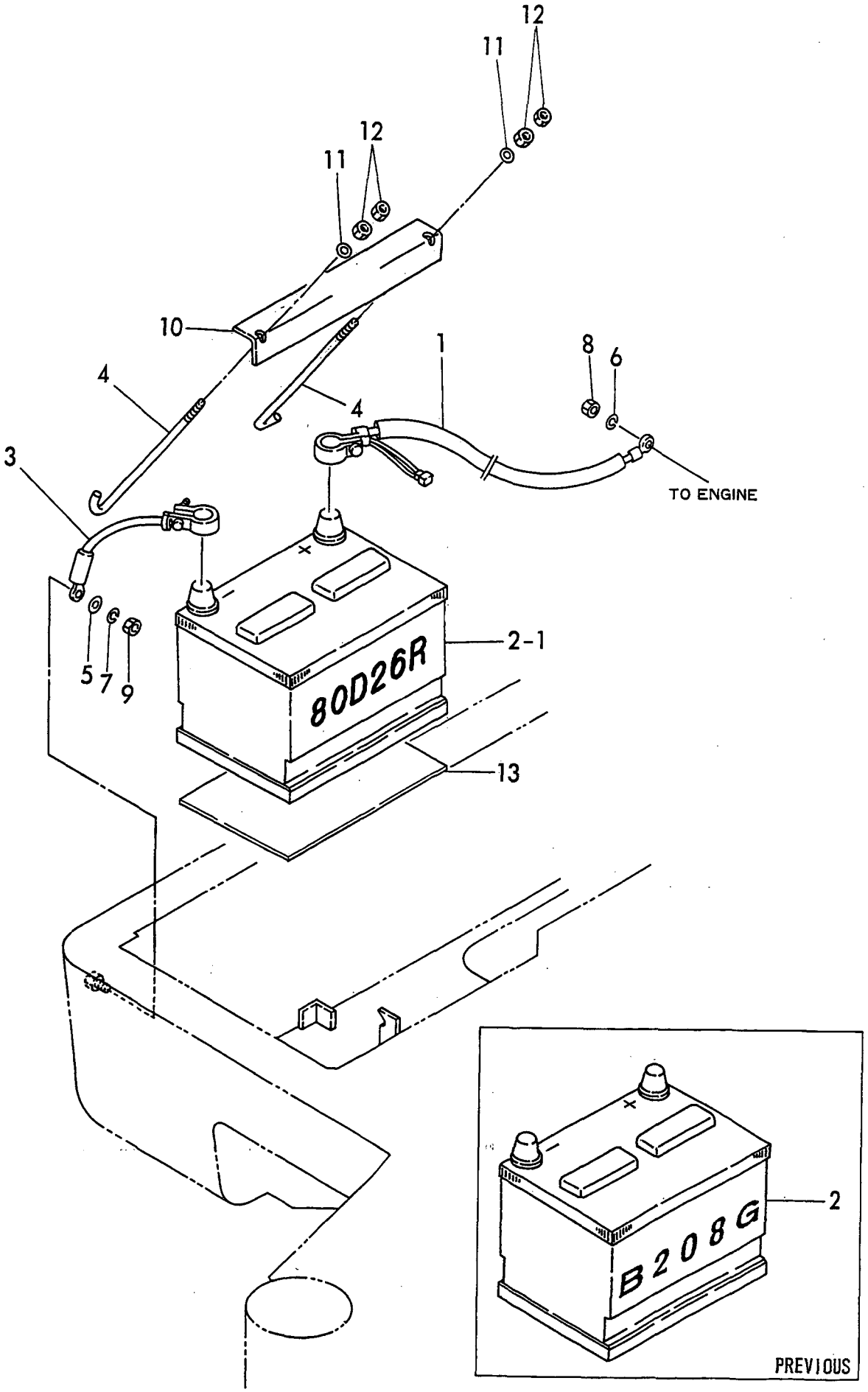

https://truckmanualshub.com/

```
1,1,,172168-16500,,HARNESS(A),1,1,,,,,,,,,,,,,,,,
2,1,,172168-16510,,HARNESS(B),1,1,,,,,,,,,,,,,,,,
3,1,,172168-16520,,"HARNESS C",1,1,,,,,,,,,,,,,,,,
4,1,,172165-16530,,"HARNESS D",1,1,,,,,,,,,,,,,,,,
5,1,,172126-16540,,"CLAMP 10X70",2,2,,,,,,,,,,,,,,,,
6,1,,172122-16570,,"LINK, FUSIBLE",1,1,,,,,,,,,,,,,,,,
7,1,,172122-79890,,"CLAMP 350",1,1,,,,,,,,,,,,,,,,
7-1,1,,172159-45160,,"CLAMP 350",1,1,,,,,R,,72174AMA-1,M910001,72174AMA-
1,M910001,,,,,,,
8,1,,1A1380-58050,,"GROMMET 16X20X4.5",1,1,,,,,,,,,,,,,,,,
9,1,,22137-100000,,"WASHER 10,POLISHED",,1,,,,,,,,,,,,,,,,
10,1,,22137-120000,,"WASHER 12,POLISHED",2,2,,,,,,,,,,,,,,,,
11,1,,22217-100000,,"SPRING WASHER 10",2,2,,,,,,,,,,,,,,,,
12,1,,22217-100000,,"SPRING WASHER 10",,1,,,,,,,,,,,,,,,,
13,1,,22217-120000,,"WASHER 12,SPRING",2,2,,,,,,,,,,,,,,,,
14,1,,26116-100162,,"BOLT M10X 16 PLATED",,1,,,,,,,,,,,,,,,,
15,1,,26116-100162,,"BOLT M10X 16 PLATED",2,2,,,,,,,,,,,,,,,,
16,1,,26116-120162,,"BOLT M12X 16 PLATED",2,2,,,,,,,,,,,,,,,,
17,1,,29311-515000,,"GROMMET 51X5",1,1,,,,,,,,,,,,,,,,
18,1,,26116-060122,,"BOLT M 6X 12",1,1,,,,,,,,,,,,,,,,
19,1,,933171-15801,,"WIRE, EARTH",1,1,,,,,,,,,,,,,,,,
20,1,,172162-17100,,"BOX ASSY, INDICATOR",1,1,,,,,,,,,,,,,,,,
20-1,1,,172162-17101,,"BOX ASSY,
INDICATOR",1,1,,,,,N,,72162464,*1994.05,72162464,*1994.05,,,,,,,
22,2,,172162-17120,,VALVE,4,4,,,,,,,,,,,,,,,,
22A,2,,172162-
17130,,HOURMETER,1,1,,,,,W,,72162464,*1994.05,72162464,*1994.05,,,,,,,
23,1,,172168-17100,,"BRACKET ASSY, ELEC.",1,1,,,,,,,,,,,,,,,,
23-1,1,,172174-17100,,"BRACKET (E) ASSY",1,1,,,,,R,,72174AMA-1,M910001,72174AMA-
1,M910001,,,,,,,
24,1,,172168-17120,,"BRACKET ASSY, TIMER",1,1,,,,,,,,,,,,,,,,
24-1,1,,172174-17120,,"BRACKET T COMPL.",1,1,,,,,R,,72174AMA-1,M910001,72174AMA-
1,M910001,,,,,,,
25,1,,172141-17141,,"UNIT, CHECKER",1,1,,,,,,,,,,,,,,,,
26,1,,172141-17150,,BUZZER,1,1,,,,,,,,,,,,,,,,
27,1,,172141-17160,,"BOX, FUSE",1,1,,,,,,,,,,,,,,,,
27-1,1,,172141-17161,,"BOX,
FUSE",1,1,,,,,N,,72165378,*1993.04,72165378,*1993.04,,,,,,,,I
28,2,,29411-050000,,"FUSE (
5A),CARTRIDGE",1,1,,,,,Z,,72165378,*1993.04,72165378,*1993.04,,,,,,,,I
29,2,,29411-100000,,"FUSE
(10A),CARTRIDGE",2,2,,,,,Z,,72165378,*1993.04,72165378,*1993.04,,,,,,,,I
30,2,,29411-150000,,"FUSE (15A),CARTRIDGE",2,2,,,,,,,,,,,,,,,,
30-1,2,,29411-150000,,"FUSE
(15A),CARTRIDGE",5,5,,,,,K,,72165378,*1993.04,72165378,*1993.04,,,,,,,,I
31,1,,172141-17190,,"SWITCH, WORK LAMP",1,1,,,,,,,,,,,,,,,,
32,2,,172141-17230,,"BULB 24V- 6W",1,1,,,,,,,,,,,,,,,,
33,1,,172162-17410,,"LAMP ASSY, HEADLIGHT",1,1,,,,,,,,,,,,,,,,
34,2,,29220-788200,,BULB,1,1,,,,,,,,,,,,,,,,
35,1,,119247-77100,,"RELAY, SAFETY",1,1,,,,,,,,,,,,,,,,
36,1,,119640-77711,,"LIMITER,CURRENT",1,1,,,,,,,,,,,,,,,,
37,1,,121522-77721,,"INDICATOR, CHARGING",1,1,,,,,,,,,,,,,,,,
38,1,,119650-77910,,"RELAY, GROW",1,1,,,,,,,,,,,,,,,,
41,1,,119632-77920,,TIMER,1,1,,,,,,,,,,,,,,,,
41-1,1,,119632-77921,,"TIMER(1
SEC.",1,1,,,,,N,,72175176,*1994.12,72175176,*1994.12,,,,,,,,I
42,1,,22137-060000,,"WASHER 6, POLISHED",2,2,,,,,,,,,,,,,,,,
43,1,,22137-060000,,"WASHER 6, POLISHED",1,1,,,,,,,,,,,,,,,,
44,1,,22137-060000,,"WASHER 6, POLISHED",2,2,,,,,,,,,,,,,,,,
45,1,,22137-060000,,"WASHER 6, POLISHED",1,1,,,,,,,,,,,,,,,,
46,1,,933168-55770,,"BAND 146",1,1,,,,,,,,,,,,,,,,
47,1,,22217-080000,,"SPRING WASHER  8",2,2,,,,,,,,,,,,,,,,
48,1,,22217-080000,,"SPRING WASHER  8",2,2,,,,,,,,,,,,,,,,
```

https://truckmanualshub.com/

```
49,1,,22217-100000,,"SPRING WASHER 10",3,3,,,,,,,,,,,,,,,,
50,1,,26013-060122,,"BOLT M 6X 12",2,2,,,,,,,,,,,,,,,,
51,1,,26022-050162,,"SCREW M 5X 16",2,2,,,,,,,,,,,,,,,,
52,1,,26022-060122,,"SCREW M 6X 12",1,1,,,,,,,,,,,,,,,,
53,1,,26022-060122,,"SCREW M 6X 12",1,1,,,,,,,,,,,,,,,,
54,1,,26022-060122,,"SCREW M 6X 12",2,2,,,,,,,,,,,,,,,,
55,1,,26022-060162,,"SCREW M 6X 16",1,1,,,,,,,,,,,,,,,,
56,1,,26022-060162,,"SCREW M 6X 16",1,1,,,,,,,,,,,,,,,,
57,1,,26022-060162,,"SCREW M 6X 16",1,1,,,,,,,,,,,,,,,,
58,1,,26022-060252,,"SCREW M 6X 25",2,2,,,,,,,,,,,,,,,,
59,1,,26589-040202,,"SCREW M4,BINDING",4,4,,,,,,,,,,,,,,,,
60,1,,26116-080162,,"BOLT M 8X 16 PLATED",2,2,,,,,,,,,,,,,,,,
61,1,,26116-080162,,"BOLT M 8X 16 PLATED",2,2,,,,,,,,,,,,,,,,
62,1,,26716-100002,,"NUT M10",3,3,,,,,,,,,,,,,,,,
63,1,,933110-00100,,"SWITCH ASSY, STARTER",1,1,,,,,,,,,,,,,,,,
65,2,,933110-00301,,"KEY ASSY",1,1,,,,,,,,,,,,,,,,
66,1,,933110-05300,,HORN,1,1,,,,,,,,,,,,,,,,
67,1,,933113-15900,,"COVER, SWITCH TERMI.",1,1,,,,,,,,,,,,,,,,
68,1,,194464-52190,,"SWITCH, SAFETY START",2,2,,,,,,,,,,,,,,,,
69,1,,22137-180000,,"WASHER 18",2,2,,,,,,,,,,,,,,,,
70,1,,26776-180002,,"NUT M18,LOCK",2,2,,,,,,,,,,,,,,,,
71,1,,172142-16550,,CLAMP,1,1,,,,,,,,,,,,,,,,
72,1,,172165-16560,,"HARNESS (G)",1,1,,,,,,,,,,,,,,,,
73,1,,22217-060000,,"SPRING WASHER  6",1,1,,,,,,,,,,,,,,,,
74,1,,172137-16000,,WIRE,1,,,,,,,,,,,,,,,,
75,1,,172171-16100,,"HARNESS,EF WIRE",1,,,,,,,,,,,,,,,,
76,1,,172122-16590,,"BAND 200F",2,,,,,,,,,,,,,,,,
77,1,,172137-62970,,"GROMMET 16",2,,,,,,,,,,,,,,,,
78,1,,172122-79890,,"CLAMP 350",2,,,,,,,,,,,,,,,,
78-1,1,,172159-45160,,"CLAMP 350",2,,,,,R,,72174AMA-1,M910001,,,,,,,,
79,1,,22857-400120,,"SCREW 4X12",2,,,,,,,,,,,,,,,,
80,1,,172162-17330,,"SWITCH,WIPER",1,,,,,,,,,,,,,,,,
81,1,,933113-15000,,"CIGAR LIGHTER ASSY",1,,,,,,,,,,,,,,,,
82,1,,172162-17610,,"SWITCH,HEATER",1,,,,,,,,,,,,,,,,
83,1,,172165-16600,,"HARNESS E",1,,,,,,,,,,,,,,,,
```

Fig. 9 ELECTRIC PART

https://truckmanualshub.com/

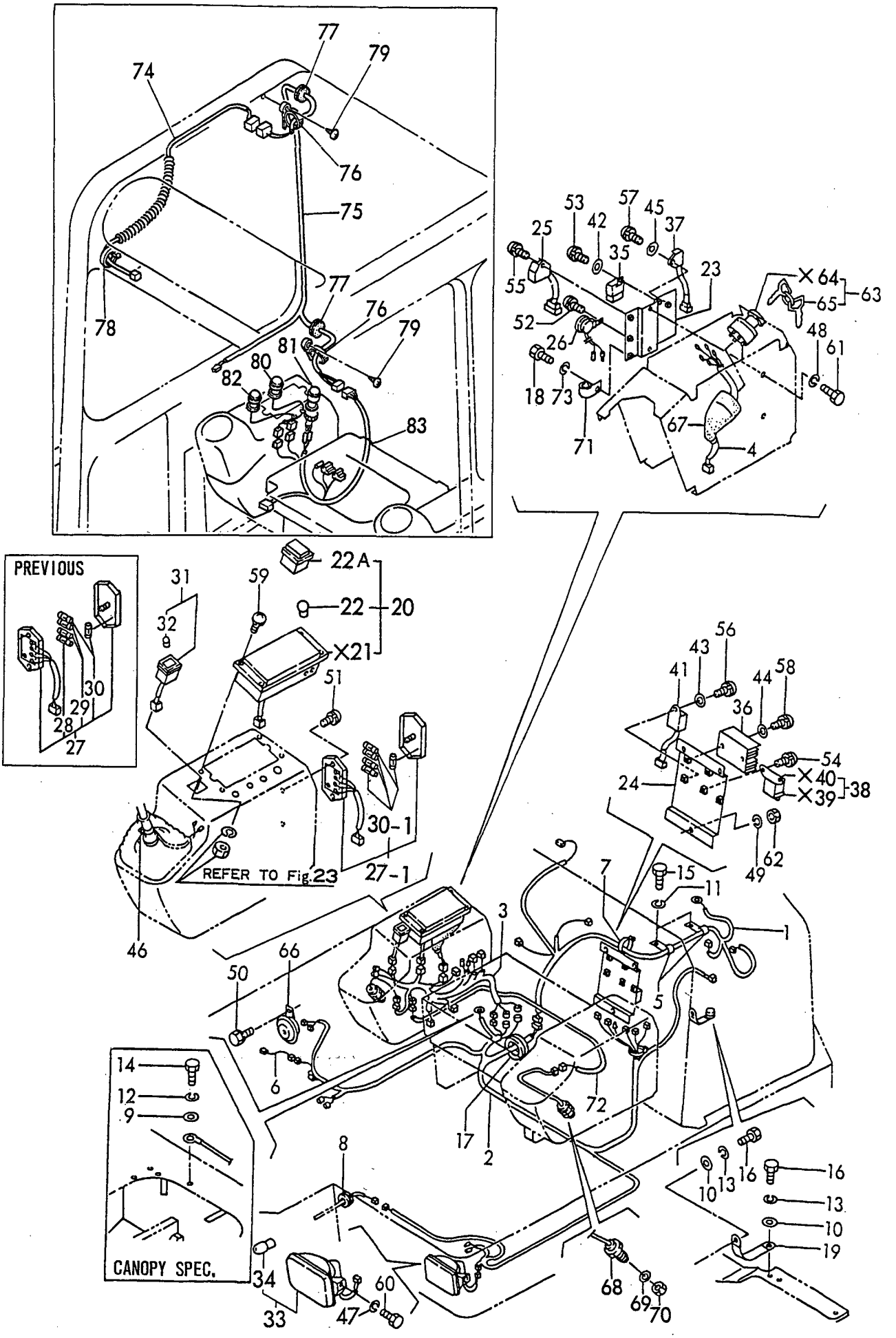

× MARK PARTS: NOT SOLD SEPARATELY.

https://truckmanualshub.com/

```
1,1,,172137-16560,,BAND,5,5,,,,,,,,,,,,,,,,
1-1,1,,172159-17430,,BAND,5,5,,,,,R,,72174AMA-1,M910001,72174AMA-
1,M910001,,,,,,,
2,1,,172141-16560,,"WIRE, LAMP",1,1,,,,,,,,,,,,,,,,
2-1,1,,172161-16560,,"WIRE,LAMP",1,1,,,,,R,,72174AMA-1,M910001,72174AMA-
1,M910001,,,,,,,
3,1,,172141-17200,,"LAMP, WORK",1,1,,,,,,,,,,,,,,,,
3-1,1,,172161-17200,,"LAMP,WORK",1,1,,,,,R,,72174AMA-1,M910001,72174AMA-
1,M910001,,,,,,,
4,2,,172141-17210,,"BULB 12V-60W",1,1,,,,,,,,,,,,,,,,
4-1,2,,172161-17210,,"BULB 15V-60W",1,1,,,,,R,,72174AMA-1,M910001,72174AMA-
1,M910001,,,,,,,
5,1,,172137-17401,,COVER,1,1,,,,,,,,,,,,,,,,
5-1,1,,172159-17450,,"COVER, LAMP",1,1,,,,,R,,72174AMA-1,M910001,72174AMA-
1,M910001,,,,,,,
6,1,,26013-120302,,"BOLT W/WASHER M12X30",1,1,,,,,,,,,,,,,,,,
7,1,,933152-03700,,"WASHER, SIDE CLUTCH",1,1,,,,,,,,,,,,,,,,
7-1,1,,172159-75500,,"WASHER, SIDE CLUTCH",1,1,,,,,R,,72174AMA-
1,M910001,72174AMA-1,M910001,,,,,,,
8,1,,22137-100000,,"WASHER 10,POLISHED",1,1,,,,,,,,,,,,,,,,
```

Fig. 10 WORK LAMP

https://truckmanualshub.com/

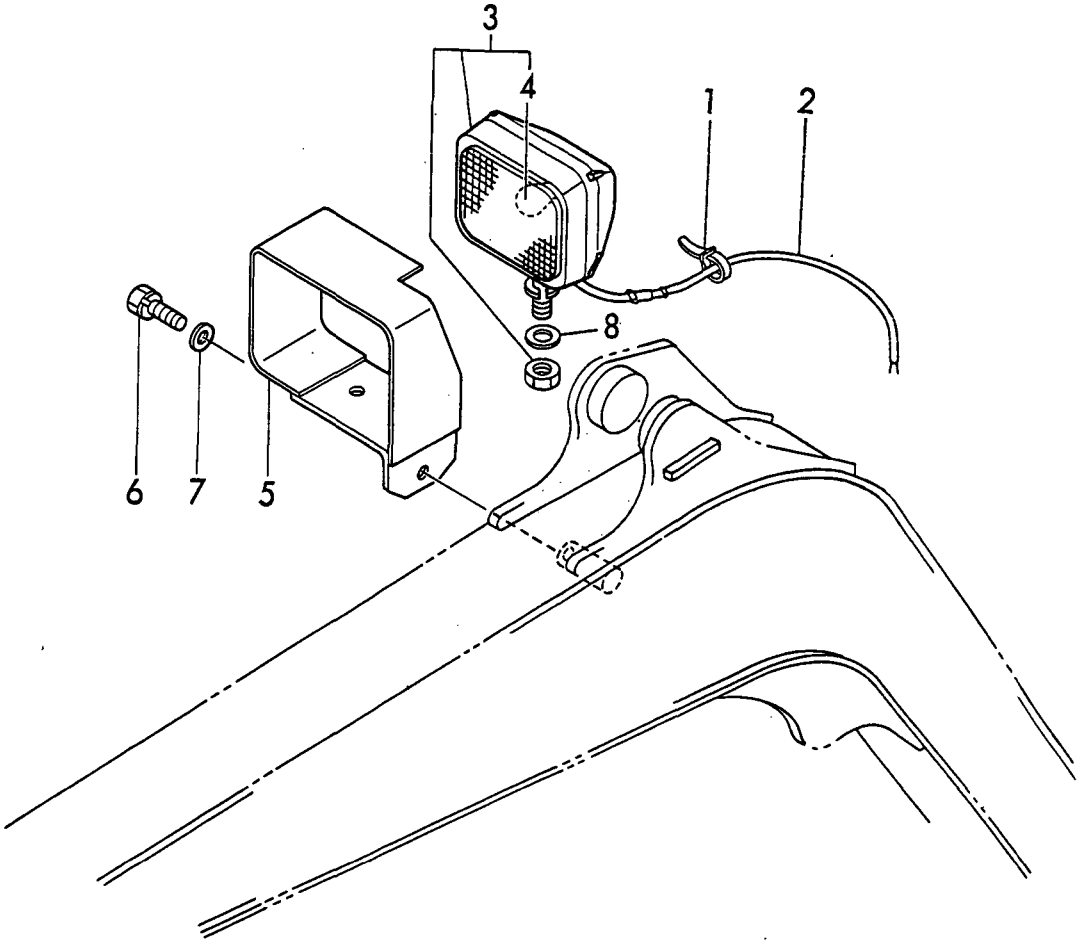

https://truckmanualshub.com/

```
1,1,,172168-17600,,"CONNECTOR PT3/8-M16",1,,,,,,,,,,,,,,,,,,
1-1,1,,172174-17620,,"CONNECTOR PT3/8-M16",1,,,,,,R,,72174AMA-1,M910001,,,,,,,,,
2,1,,172124-17630,,"VALVE, MINIATURE",1,,,,,,,,,,,,,,,,,,
3,1,,172137-17630,,"JOINT, HEATER",1,,,,,,,,,,,,,,,,,,
3-1,1,,172161-13510,,"JOINT,HEATER",1,,,,,,R,,72174AMA-1,M910001,,,,,,,,,
4,1,,172124-17640,,"JOINT 3/8",2,,,,,,,,,,,,,,,,,,
5,1,,124465-44950,,"GASKET 16",1,,,,,,,,,,,,,,,,,,
6,1,,172141-13490,,JOINT,1,,,,,,,,,,,,,,,,,,
6-1,1,,172161-13490,,"JOINT,COOL.WTR.PIPE",1,,,,,,R,,72174AMA-1,M910001,,,,,,,,,
```

Fig. 11 HEATER

https://truckmanualshub.com/

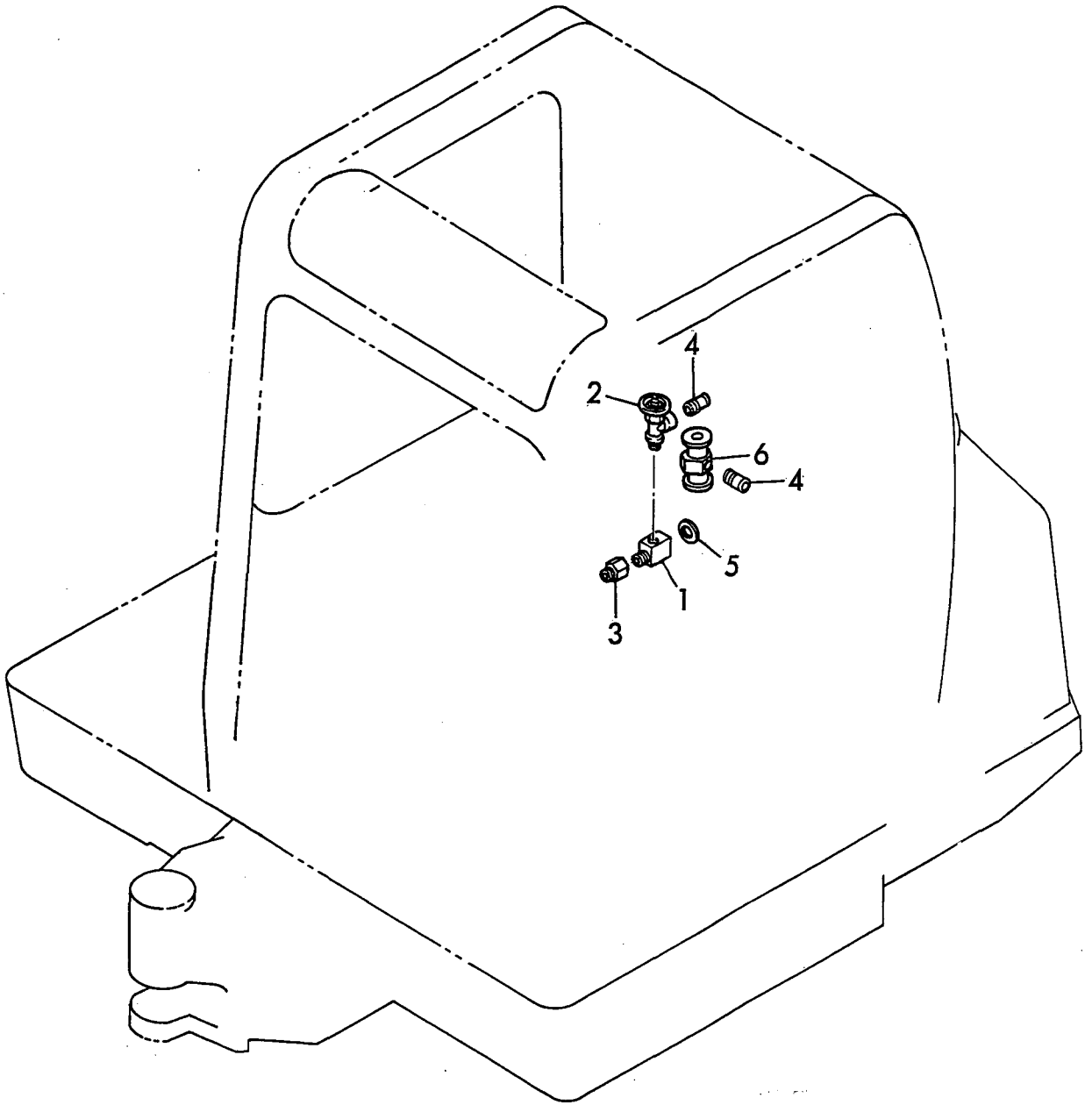

https://truckmanualshub.com/

```
1,1,,772141-37100,,"IDLER 280 ASSY",2,2,,,,,,,,,,,,,,,,
1-1,1,,772141-
37101,,IDLER,2,2,,,,,R,,72175004,*1994.02,72175004,*1994.02,,,,,,,,,I
2,1,,772146-37100,,"IDLER 280 ASSY",2,2,,,,,,1,,,,,,,,,,,
2-1,1,,772146-
37101,,IDLER,2,2,,,,,R,1,72175004,*1994.02,72175004,*1994.02,,,,,,,,,I
3,2,,172141-99490,,"IDLER KIT, FRONT",2,2,,,,,,,,,,,,,,,,,
4,3,,172141-37130,,"SHAFT, IDLER",2,2,,,,,,,,,,,,,,,,,
5,3,,172141-37140,,"SEAL 357220",4,4,,,,,,,,,,,,,,,,,
6,3,,22242-000300,,"CIRCLIP   30",2,2,,,,,,,,,,,,,,,,,
7,3,,22252-000720,,"CIRCLIP   72",4,4,,,,,,,,,,,,,,,,,
8,3,,24101-062074,,"BALL BEARING",4,4,,,,,,,,,,,,,,,,,
9,2,,172141-37100,,"IDLER 280",2,2,,,,,,,,,,,,,,,,,
10,2,,172146-37100,,"IDLER 280",2,2,,,,,,1,,,,,,,,,,,
11,2,,172141-37110,,"FORK(L), IDLER",2,2,,,,,,,,,,,,,,,,,
11-1,2,,172141-37111,,"FORK(L),
IDLER",2,2,,,,,R,,72175004,*1994.02,72175004,*1994.02,,,,,,,,,I
12,2,,172141-37120,,"FORK(R), IDLER",2,2,,,,,,,,,,,,,,,,,
12-1,2,,172141-37121,,"FORK(R),
IDLER",2,2,,,,,R,,72175004,*1994.02,72175004,*1994.02,,,,,,,,,I
13,1,,933171-13691,,"PLUG PT1/8",2,2,,,,,,,,,,,,,,,,,
14,1,,772142-37300,,"ROLLER ASSY, TRACK",6,6,,,,,,,,,,,,,,,,,
16,2,,172146-37310,,"SHAFT, ROLLER",6,6,,,,,,,,,,,,,,,,,
17,2,,172141-37320,,"SPACER 75X2.6",12,12,,,,,,,,,,,,,,,,,
18,2,,1A1030-48250,,"SEAL QLF30621218,OIL",12,12,,,,,,,,,,,,,,,,,
19,2,,22252-000620,,"CIRCLIP 62(H)",12,12,,,,,,,,,,,,,,,,,
20,2,,22252-000750,,"CIRCLIP   75",12,12,,,,,,,,,,,,,,,,,
21,2,,933111-73800,,BEARING,12,12,,,,,,,,,,,,,,,,,
22,1,,172113-36050,,"BOLT, ROLLER ADJUST",6,6,,,,,,,,,,,,,,,,,
23,1,,22217-160000,,"SPRING WASHER 16",6,6,,,,,,,,,,,,,,,,,
24,1,,26657-160002,,"CAP NUT M16",6,6,,,,,,,,,,,,,,,,,
25,1,,172146-37700,,SPRING,2,2,,,,,,,,,,,,,,,,,
26,1,,172141-37801,,"PISTON, ADJUST",2,2,,,,,,,,,,,,,,,,,
27,1,,172122-37843,,"VALVE ASSY, NIPPLE",2,2,,,,,,,,,,,,,,,,,
28,2,,24315-000140,,"O-RING 1B P-14.0",2,2,,,,,,,,,,,,,,,,,
29,2,,24761-020000,,"NIPPLE PT1/8,GREASE",2,2,,,,,,,,,,,,,,,,,
30,1,,172141-37850,,"RING G35, BACK UP",2,2,,,,,,,,,,,,,,,,,
31,1,,24325-000350,,"O-RING 1B G 35.0",2,2,,,,,,,,,,,,,,,,,
32,1,,26013-100402,,"BOLT M10X 40",8,8,,,,,,,,,,,,,,,,,
33,1,,933126-34300,,"SEAL 3547710",2,2,,,,,,,,,,,,,,,,,
34,1,,172141-29110,,SPROCKET,2,2,,,,,,,,,,,,,,,,,
35,1,,26013-120302,,"BOLT W/WASHER M12X30",18,18,,,,,,,,,,,,,,,,,
```

Fig. 12 ROLLER & ADJUST

https://quickmanualshub.com/

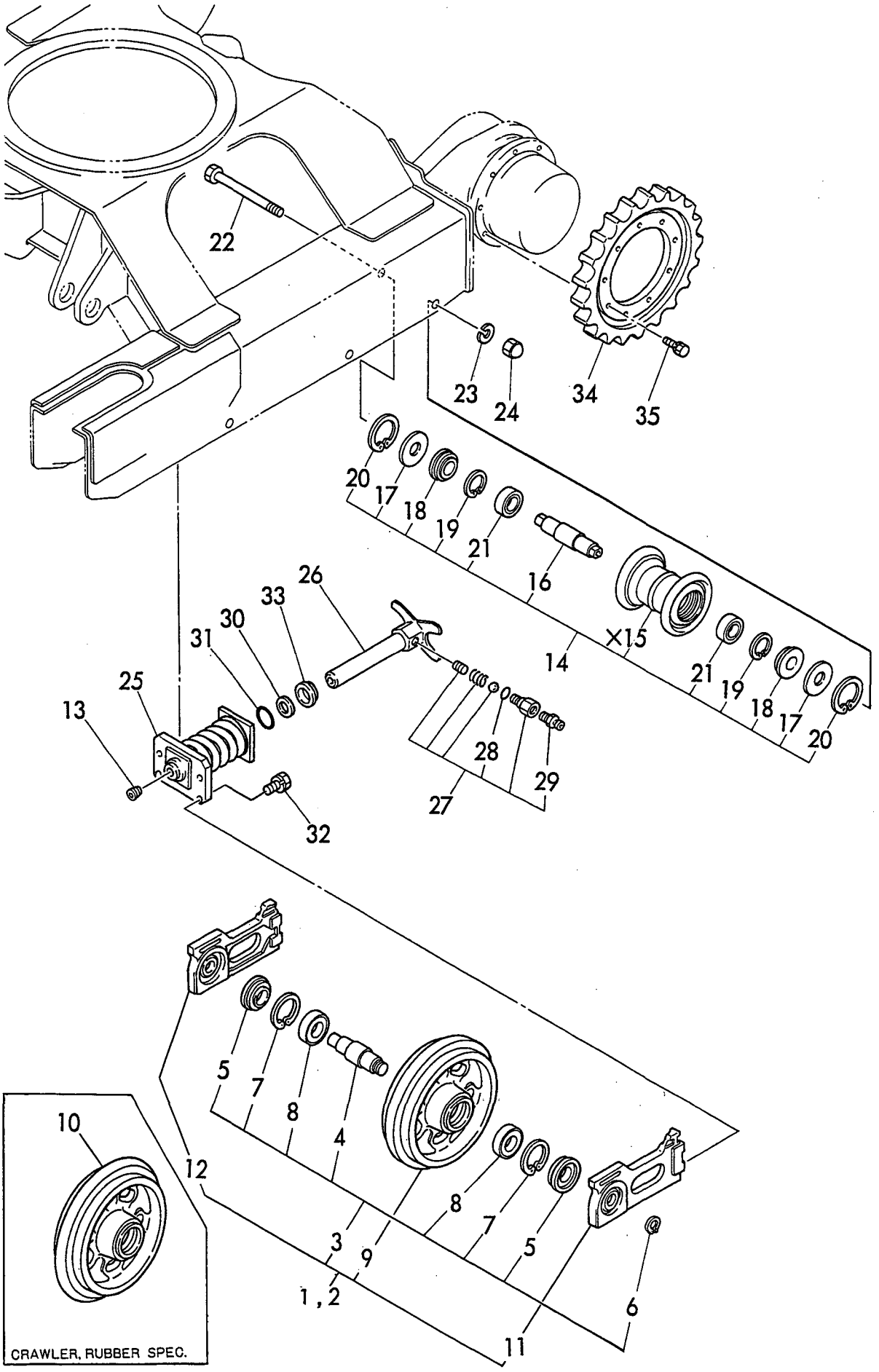

× MARK PARTS: NOT SOLD SEPARATELY.

https://truckmanualshub.com/

```
1,1,,172141-38100,,"CRAWLER 270 ASSY",2,2,,,,,,,,,,,,,,,,
2,2,,172141-38230,,"SHOE 270, CRAWLER",72,72,,,,,,,,,,,,,,,,
3,2,,172141-38150,,"LINK ASSY, CRAWLER",2,2,,,,,,,,,,,,,,,,
4,3,,172141-38200,,BUSH,72,72,,,,,,,,,,,,,,,,
5,3,,172141-38210,,"PIN, CRAWLER",70,70,,,,,,,,,,,,,,,,
6,1,,172141-38220,,"PIN, MASTER",2,2,,,,,,,,,,,,,,,,
7,1,,172614-38300,,"PIN 5X45, LOCK",2,2,,,,,,,,,,,,,,,,
8,1,,172141-38240,,"TRACK 270, MASTER",2,2,,,,,,1,,,,,,,,,,
9,1,,172141-38610,,"CRAWLER, RUBBER",2,2,,,,,,,,,,,,,,,,
9-1,1,,172161-38610,,"CRAWLER, RUBBER",2,2,,,,,R,,72174AMA-1,M910001,72174AMA-
1,M910001,,,,,,,
```

Fig. 13 CRAWLER

https://truckmanualshub.com/

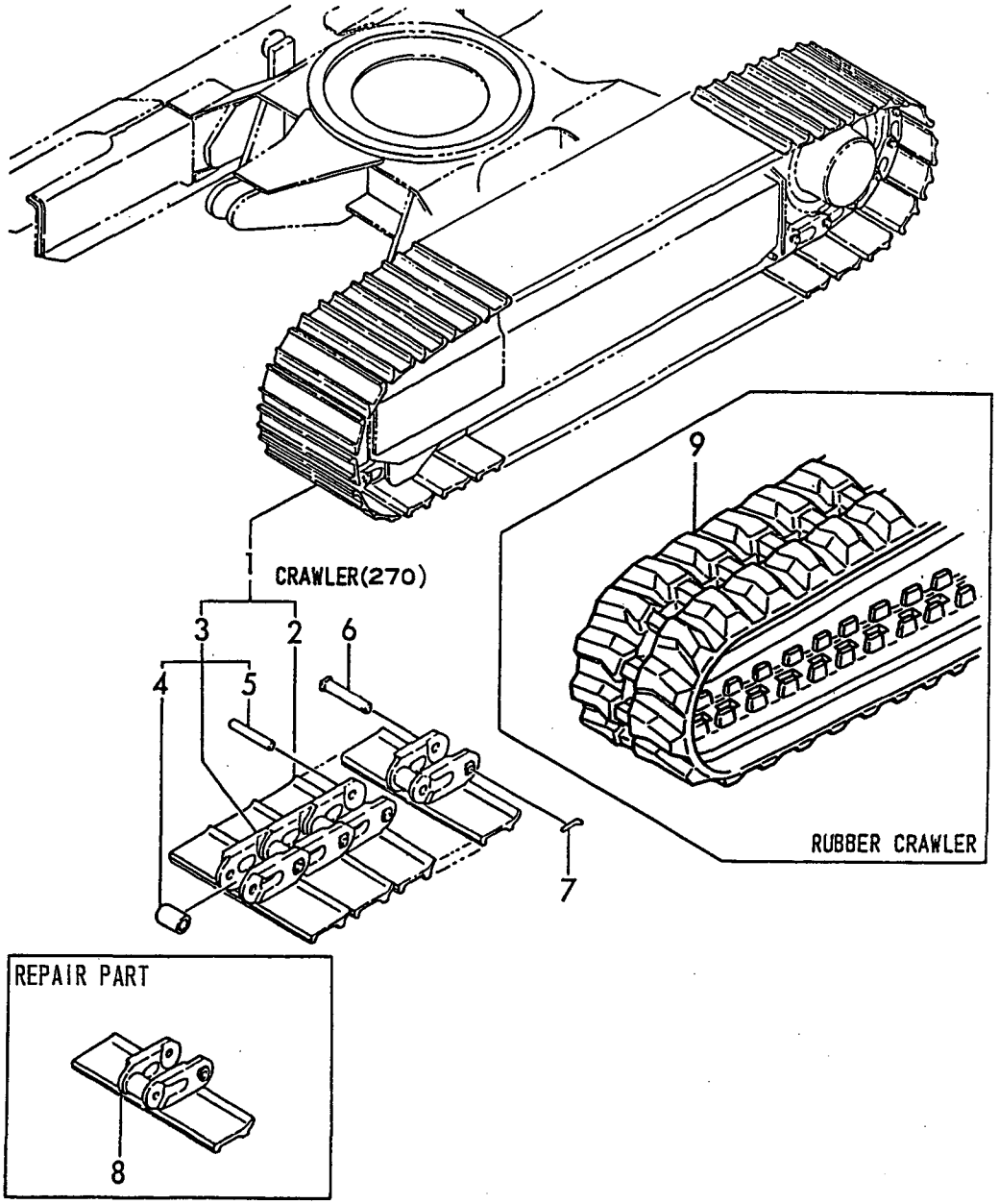

https://truckmanualshub.com/

```
1,1,,172146-41320,,GROMMET,1,1,,,,,,,,,,,,,,,,
2,1,,194145-04810,,"WASHER 10",2,2,,,,,,,,,,,,,,,,
2-1,1,,172159-65930,,"WASHER 10",2,2,,,,,R,,72174AMA-1,M910001,72174AMA-
1,M910001,,,,,,,
3,1,,172165-46400,,SUPPORT,1,1,,,,,,,,,,,,,,,,
3-1,1,,172174-44110,,SUPPORT,1,1,,,,,R,,72174AMA-1,M910001,72174AMA-
1,M910001,,,,,,,
4,1,,172165-46660,,COVER,1,1,,,,,,,,,,,,,,,,
4-1,1,,172174-44210,,COVER,1,1,,,,,R,,72174AMA-1,M910001,72174AMA-
1,M910001,,,,,,,
5,1,,172165-47100,,"STAND R, LEVER",1,1,,,,,,,,,,,,,,,,
5-1,1,,172174-44100,,"STAND R, LEVER",1,1,,,,,R,,72174AMA-1,M910001,72174AMA-
1,M910001,,,,,,,
6,2,,172141-41370,,"BUSH 2015",2,2,,,,,,,,,,,,,,,,
6-1,2,,172161-41370,,"BUSH 2015",2,2,,,,,R,,72174AMA-1,M910001,72174AMA-
1,M910001,,,,,,,
8,2,,24550-025150,,"BUSH 25X15",2,2,,,,,,,,,,,,,,,,
9,1,,172165-47300,,"STAND L, LEVER",1,1,,,,,,,,,,,,,,,,
9-1,1,,172174-44450,,"STAND L, LEVER",1,1,,,,,R,,72174AMA-1,M910001,72174AMA-
1,M910001,,,,,,,
10,2,,172141-41370,,"BUSH 2015",2,2,,,,,,,,,,,,,,,,
10-1,2,,172161-41370,,"BUSH 2015",2,2,,,,,R,,72174AMA-1,M910001,72174AMA-
1,M910001,,,,,,,
12,2,,24550-025150,,"BUSH 25X15",2,2,,,,,,,,,,,,,,,,
13,1,,172165-47730,,"GUIDE, HOSE",1,1,,,,,,,,,,,,,,,,
13-1,1,,172174-44710,,"GUIDE L, HOSE",1,1,,,,,R,,72174AMA-1,M910001,72174AMA-
1,M910001,,,,,,,
14,1,,172165-47770,,"BRACKET, ACCEL",1,1,,,,,,,,,,,,,,,,
14-1,1,,172174-44740,,"BRACKET, ACCEL",1,1,,,,,R,,72174AMA-1,M910001,72174AMA-
1,M910001,,,,,,,
15,1,,172165-47900,,"BRACKET R",1,1,,,,,,,,,,,,,,,,
15-1,1,,172174-44770,,"BRACKET R",1,1,,,,,R,,72174AMA-1,M910001,72174AMA-
1,M910001,,,,,,,
16,1,,172165-47930,,"BRACKET L",1,1,,,,,,,,,,,,,,,,
16-1,1,,172174-44790,,"BRACKET L COMP.,EP",1,1,,,,,R,,72174AMA-
1,M910001,72174AMA-1,M910001,,,,,,,
17,1,,172165-47960,,"BOLT M 8",4,4,,,,,,,,,,,,,,,,
17-1,1,,172174-44810,,"BOLT M 8",4,4,,,,,R,,72174AMA-1,M910001,72174AMA-
1,M910001,,,,,,,
18,1,,172165-47980,,"SHIM 42X25.5X0.5",4,4,,,,,,,,,,,,,,,,
18-1,1,,172174-44820,,"SHIM 42X25.5X0.5",4,4,,,,,R,,72174AMA-1,M910001,72174AMA-
1,M910001,,,,,,,
19,1,,172151-53430,,GROMMET,2,2,,,,,,,,,,,,,,,,
20,1,,172165-47990,,WASHER,2,2,,,,,,,,,,,,,,,,
20-1,1,,172174-44860,,WASHER,2,2,,,,,R,,72174AMA-1,M910001,72174AMA-
1,M910001,,,,,,,
21,1,,172519-63240,,"BOLT  8X 16",8,8,,,,,,,,,,,,,,,,
21-1,1,,172174-44850,,"BOLT  8X 16",8,8,,,,,R,,72174AMA-1,M910001,72174AMA-
1,M910001,,,,,,,
22,1,,22217-100000,,"SPRING WASHER 10",7,7,,,,,,,,,,,,,,,,
23,1,,22242-000250,,"CIRCLIP 25S",2,2,,,,,,,,,,,,,,,,
24,1,,24761-020000,,"NIPPLE PT1/8,GREASE",4,4,,,,,,,,,,,,,,,,
25,1,,26013-080202,,"BOLT W/WASHER M8X20",4,4,,,,,,,,,,,,,,,,
26,1,,26013-080202,,"BOLT W/WASHER M8X20",4,4,,,,,,,,,,,,,,,,
27,1,,26013-100202,,"BOLT W/WASHER M10X20",2,2,,,,,,,,,,,,,,,,
28,1,,26116-100202,,"BOLT M10X 20 PLATED",5,5,,,,,,,,,,,,,,,,
29,1,,26116-100902,,"BOLT M10X 90 PLATED",2,2,,,,,,,,,,,,,,,,
30,1,,194630-62360,,GROMMET,4,4,,,,,,,,,,,,,,,,
31,1,,26116-100504,,"BOLT M10X 50 PLATED",1,1,,,,,,,,,,,,,,,,
32,1,,26716-100002,,"NUT M10",1,1,,,,,,,,,,,,,,,,
33,1,,22217-080000,,"SPRING WASHER  8",4,4,,,,,,,,,,,,,,,,
34,1,,24311-000340,,"O-RING 1A P-34.0",4,4,,,,,,,,,,,,,,,,
35,1,,172165-47720,,"GUIDE COMP.,HOSE",1,1,,,,,,,,,,,,,,,,
```

https://truckmanualshub.com/

35-1,1,,172174-44870,,"GUIDE COMP.,HOSE",1,1,,,,R,,72174AMA-1,M910001,72174AMA-1,M910001,,,,,,,

Fig. 14 CONTROL EQUIPMENT (LEVER STAND)

https://truckmanualshub.com/

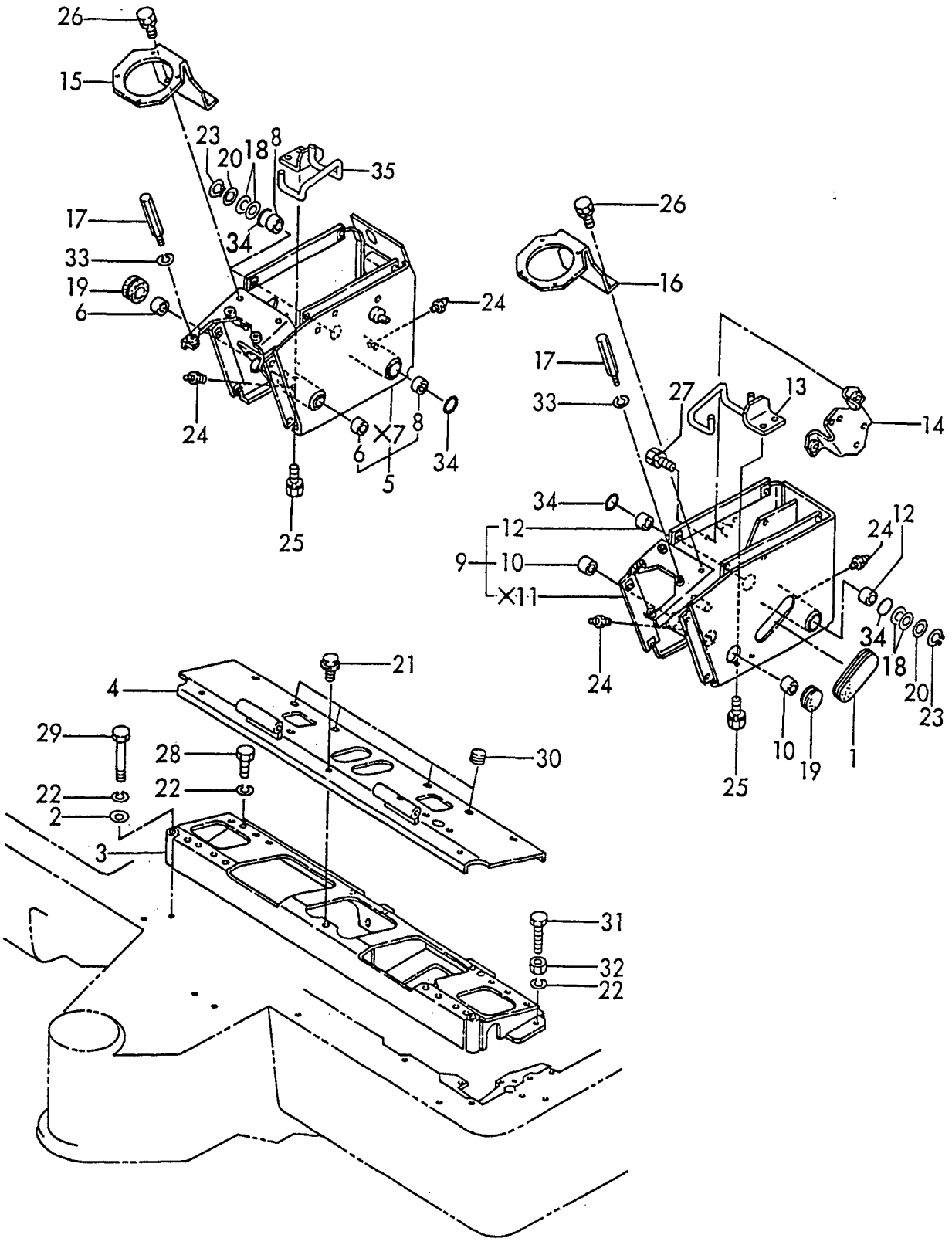

× MARK PARTS: NOT SOLD SEPARATELY.

https://truckmanualshub.com/

1,1,,172141-41340,,BOOTS,2,2,,,,,,,,,,,,,,,,
2,1,,172122-45050,,"KNOB (L)",1,1,,,,,,,,,,,,,,,,
3,1,,172122-45060,,"KNOB (R)",1,1,,,,,,,,,,,,,,,,
4,1,,172168-45100,,"LEVER L COMP.,TRACK",1,1,,,,,,,,,,,,,,,,
4-1,1,,172174-45100,,LEVER(L),1,1,,,,,R,,72174AMA-1,M910001,72174AMA-1,M910001,,,,,,,
5,2,,172141-41370,,"BUSH 2015",2,2,,,,,,,,,,,,,,,,
5-1,2,,172161-41370,,"BUSH 2015",2,2,,,,,R,,72174AMA-1,M910001,72174AMA-1,M910001,,,,,,,
6,1,,172168-45120,,"LEVER R COMP.,TRACK",1,1,,,,,,,,,,,,,,,,
6-1,1,,172174-45160,,"LEVER(R), TRACK",1,1,,,,,R,,72174AMA-1,M910001,72174AMA-1,M910001,,,,,,,
7,2,,172141-41370,,"BUSH 2015",2,2,,,,,,,,,,,,,,,,
7-1,2,,172161-41370,,"BUSH 2015",2,2,,,,,R,,72174AMA-1,M910001,72174AMA-1,M910001,,,,,,,
8,1,,172124-46200,,"O-RING 27X5.7",3,3,,,,,,,,,,,,,,,,
8-1,1,,172161-46200,,"O-RING 27X5.7",3,3,,,,,R,,72174AMA-1,M910001,72174AMA-1,M910001,,,,,,,
9,1,,24761-020000,,"NIPPLE PT1/8,GREASE",2,2,,,,,,,,,,,,,,,,
10,1,,26116-100504,,"BOLT M10X 50 PLATED",4,4,,,,,,,,,,,,,,,,
11,1,,26716-100002,,"NUT M10",4,4,,,,,,,,,,,,,,,,
12,1,,26756-100002,,"LOCK NUT M10 PLATED",2,2,,,,,,,,,,,,,,,,
13,1,,172168-45200,,"SHAFT, TRACK",1,1,,,,,,,,,,,,,,,,
13-1,1,,172174-45380,,"SHAFT, TRACK",1,1,,,,,R,,72174AMA-1,M910001,72174AMA-1,M910001,,,,,,,
14,1,,26013-100252,,"BOLT W/WASHER M10X25",2,2,,,,,,,,,,,,,,,,
15,1,,172165-46100,,"PEDAL L ASSY",1,1,,,,,,,,,,,,,,,,
15-1,1,,172174-46100,,"PEDAL L ASSY",1,1,,,,,R,,72174AMA-1,M910001,72174AMA-1,M910001,,,,,,,
16,1,,172165-46150,,"PEDAL R COMP",1,1,,,,,,,,,,,,,,,,
16-1,1,,172174-46150,,"PEDAL R COMP",1,1,,,,,R,,72174AMA-1,M910001,72174AMA-1,M910001,,,,,,,
17,1,,26013-060302,,"BOLT M 6X 30",4,4,,,,,,,,,,,,,,,,
18,1,,172168-45940,,"ROD 200",2,2,,,,,,,,,,,,,,,,
18-1,1,,172174-47120,,"ROD 200",2,2,,,,,R,,72174AMA-1,M910001,72174AMA-1,M910001,,,,,,,
19,1,,172122-46590,,"ELBALL 8",2,2,,,,,,,,,,,,,,,,
20,1,,22137-080000,,"WASHER 8, POLISHED",2,2,,,,,,,,,,,,,,,,
21,1,,22417-160160,,"COTTER PIN 1.6X16",2,2,,,,,,,,,,,,,,,,
22,1,,26051-080002,,"NUT M 8",4,4,,,,,,,,,,,,,,,,
23,1,,933110-54100,,"PIN 4.75X14",2,2,,,,,,,,,,,,,,,,
23-1,1,,172159-42910,,"PIN 4.75X14",2,2,,,,,R,,72174AMA-1,M910001,72174AMA-1,M910001,,,,,,,

Fig. 15 CONTROL EQUIPMENT (TRAVEL)

https://truckmanualshub.com/

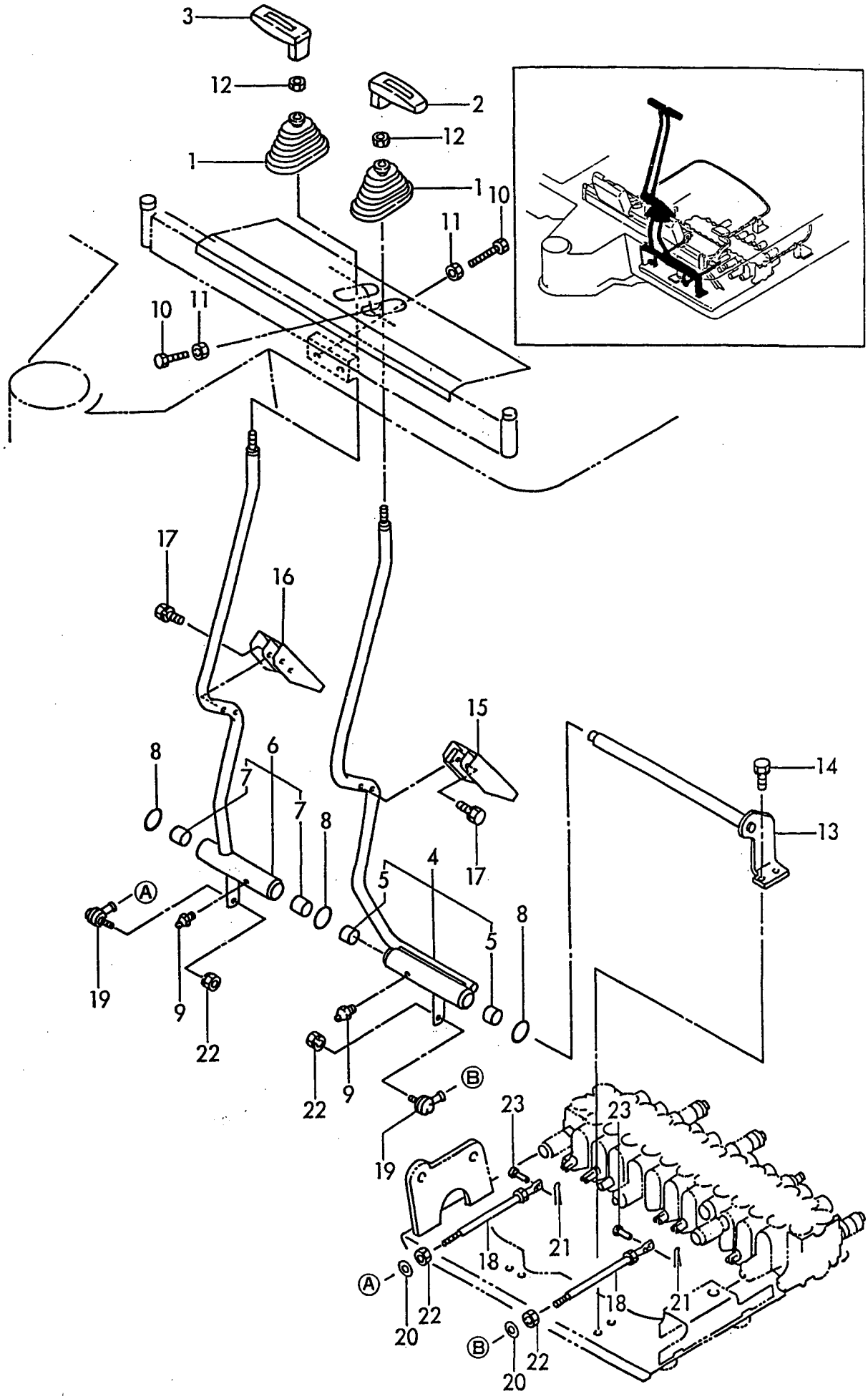

https://truckmanualshub.com/

1,1,,1A1040-45890,,"WASHER 10 36 4.5",1,1,,,,,,,,,,,,,,,,
1-1,1,,172159-41860,,"WASHER 10 36 4.5",1,1,,,,,R,,72174AMA-1,M910001,72174AMA-1,M910001,,,,,,,
2,1,,172124-46200,,"O-RING 27X5.7",2,2,,,,,,,,,,,,,,,,
2-1,1,,172161-46200,,"O-RING 27X5.7",2,2,,,,,R,,72174AMA-1,M910001,72174AMA-1,M910001,,,,,,,
3,1,,172165-46300,,"LINK W/BUSH",1,1,,,,,,,,,,,,,,,,
3-1,1,,172174-45410,,"LINK, PEDAL",1,1,,,,,R,,72174AMA-1,M910001,72174AMA-1,M910001,,,,,,,
4,2,,172141-41360,,"BUSH 1415",2,2,,,,,,,,,,,,,,,,
4-1,2,,172161-41360,,"BUSH 1415",2,2,,,,,R,,72174AMA-1,M910001,72174AMA-1,M910001,,,,,,,
5,1,,172165-46350,,"BRACKET, PEDAL",1,1,,,,,,,,,,,,,,,,
5-1,1,,172174-45470,,"BRACKET, PEDAL",1,1,,,,,R,,72174AMA-1,M910001,72174AMA-1,M910001,,,,,,,
6,1,,172165-46390,,"PIN 14X105",1,1,,,,,,,,,,,,,,,,
6-1,1,,172174-45510,,"PIN 14X105",1,1,,,,,R,,72174AMA-1,M910001,72174AMA-1,M910001,,,,,,,
7,1,,172168-46800,,"LINK W/BUSH, SWING",1,1,,,,,,,,,,,,,,,,
7-1,1,,172174-45520,,"LINK W/BUSH, SWING",1,1,,,,,R,,72174AMA-1,M910001,72174AMA-1,M910001,,,,,,,
8,2,,172141-41370,,"BUSH 2015",2,2,,,,,,,,,,,,,,,,
8-1,2,,172161-41370,,"BUSH 2015",2,2,,,,,R,,72174AMA-1,M910001,72174AMA-1,M910001,,,,,,,
9,1,,172168-46820,,SHAFT,1,1,,,,,,,,,,,,,,,,
9-1,1,,172174-45570,,SHAFT,1,1,,,,,R,,72174AMA-1,M910001,72174AMA-1,M910001,,,,,,,
10,1,,22217-100000,,"SPRING WASHER 10",1,1,,,,,,,,,,,,,,,,
11,1,,22351-040032,,"SPRING PIN 4X32",1,1,,,,,,,,,,,,,,,,
12,1,,24311-000210,,"O-RING 1A P-21.0",2,2,,,,,,,,,,,,,,,,
13,1,,24761-020000,,"NIPPLE PT1/8,GREASE",1,1,,,,,,,,,,,,,,,,
14,1,,24761-040000,,"NIPPLE B,GREASE",1,1,,,,,,,,,,,,,,,,
15,1,,26051-080002,,"NUT M 8",7,7,,,,,,,,,,,,,,,,
16,1,,26013-100202,,"BOLT W/WASHER M10X20",2,2,,,,,,,,,,,,,,,,
17,1,,26013-100252,,"BOLT W/WASHER M10X25",2,2,,,,,,,,,,,,,,,,
18,1,,26116-100202,,"BOLT M10X 20 PLATED",1,1,,,,,,,,,,,,,,,,
19,1,,172068-28490,,"SPRING 8",4,4,,,,,,,,,,,,,,,,
19-1,1,,172174-46360,,"SPRING 8",4,4,,,,,R,,72174AMA-1,M910001,72174AMA-1,M910001,,,,,,,
20,1,,172157-45990,,"BOOTS, PEDAL",1,1,,,,,,,,,,,,,,,,
21,1,,172165-46230,,"SHAFT, SWING",2,2,,,,,,,,,,,,,,,,
21-1,1,,172174-46230,,"SHAFT, SWING",2,2,,,,,R,,72174AMA-1,M910001,72174AMA-1,M910001,,,,,,,
22,1,,172165-46260,,"COVER, PEDAL",2,2,,,,,,,,,,,,,,,,
22-1,1,,172174-46260,,"COVER, PEDAL",2,2,,,,,R,,72174AMA-1,M910001,72174AMA-1,M910001,,,,,,,
23,1,,172165-46280,,"PEDAL ASSY, SWING",1,1,,,,,,,,,,,,,,,,
23-1,1,,172174-46280,,"PEDAL COMP.,SWING",1,1,,,,,R,,72174AMA-1,M910001,72174AMA-1,M910001,,,,,,,
24,1,,172165-46340,,BOLT,2,2,,,,,,,,,,,,,,,,
24-1,1,,172174-46350,,BOLT,2,2,,,,,R,,72174AMA-1,M910001,72174AMA-1,M910001,,,,,,,
25,1,,22137-080000,,"WASHER 8, POLISHED",2,2,,,,,,,,,,,,,,,,
26,1,,22351-040020,,"SPRING PIN 4X20",2,2,,,,,,,,,,,,,,,,
27,1,,26116-080254,,"BOLT M 8X 25 PLATED",2,2,,,,,,,,,,,,,,,,
28,1,,26716-080002,,"NUT M 8",2,2,,,,,,,,,,,,,,,,
29,1,,26756-080002,,"LOCK NUT M 8 PLATED",4,4,,,,,,,,,,,,,,,,
30,1,,172122-46590,,"ELBALL 8",3,3,,,,,,,,,,,,,,,,
31,1,,172168-46840,,"ROD 240",1,1,,,,,,,,,,,,,,,,
31-1,1,,172174-47140,,"ROD 240",1,1,,,,,R,,72174AMA-1,M910001,72174AMA-1,M910001,,,,,,,
32,1,,172168-46860,,"ROD 100",1,1,,,,,,,,,,,,,,,,

https://truckmanualshub.com/

32-1,1,,172174-47150,,"ROD 100",1,1,,,,,R,,72174AMA-1,M910001,72174AMA-
1,M910001,,,,,,,
33,1,,172122-47250,,"BALL 8, LINK",1,1,,,,,,,,,,,,,,,,,
34,1,,22137-080000,,"WASHER 8, POLISHED",4,4,,,,,,,,,,,,,,,,,

Fig. 16 CONTROL EQUIPMENT (SWING)

https://truckmanualshub.com/

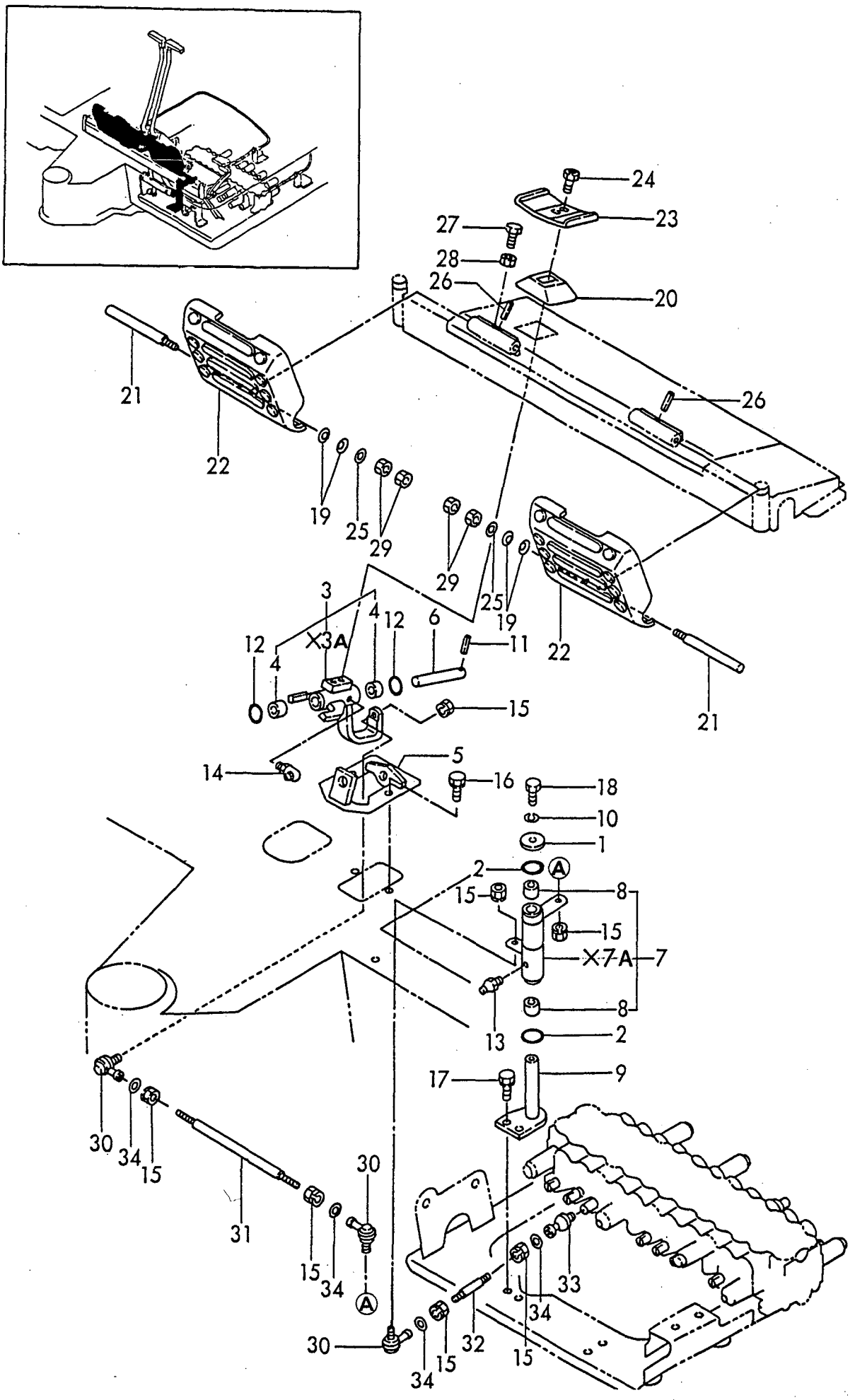

× MARK PARTS: NOT SOLD SEPARATELY.

https://truckmanualshub.com/

```
1,1,,172165-45270,,"LEVER ASSY, BLADE S",1,1,,,,,,,,,,,,,,,,,
1-1,1,,172174-45210,,"LEVER ASSY, BLADE S",1,1,,,,,R,,72174AMA-
1,M910001,72174AMA-1,M910001,,,,,,,
2,1,,172116-45940,,"KNOB (C), LEVER",1,1,,,,,,,,,,,,,,,,,
3,1,,22351-050032,,"SPRING PIN 5X32",1,1,,,,,,,,,,,,,,,,,
4,1,,172165-45140,,"LINK, BLADE",1,1,,,,,,,,,,,,,,,,,
4-1,1,,172174-45300,,"LINK, BLADE",1,1,,,,,R,,72174AMA-1,M910001,72174AMA-
1,M910001,,,,,,,
5,1,,172165-45180,,"BRACKET ASSY, REAR",1,1,,,,,,,,,,,,,,,,,
5-1,1,,172174-45330,,"BRACKET ASY",1,1,,,,,R,,72174AMA-1,M910001,72174AMA-
1,M910001,,,,,,,
6,2,,172141-41360,,"BUSH 1415",2,2,,,,,,,,,,,,,,,,,
6-1,2,,172161-41360,,"BUSH 1415",2,2,,,,,R,,72174AMA-1,M910001,72174AMA-
1,M910001,,,,,,,
7,1,,24311-000210,,"O-RING 1A P-21.0",2,2,,,,,,,,,,,,,,,,,
8,1,,26013-100202,,"BOLT W/WASHER M10X20",3,3,,,,,,,,,,,,,,,,,
9,1,,26116-100354,,"BOLT M10X 35 PLATED",2,2,,,,,,,,,,,,,,,,,
10,1,,26716-100002,,"NUT M10",2,2,,,,,,,,,,,,,,,,,
11,1,,172141-42950,,"CABLE, BLADE",1,1,,,,,,,,,,,,,,,,,
12,1,,172141-42960,,"JOINT, CABLE",1,1,,,,,,,,,,,,,,,,,
12-1,1,,172159-42940,,"JOINT, CABLE",1,1,,,,,R,,72174AMA-1,M910001,72174AMA-
1,M910001,,,,,,,
13,1,,172168-45140,,"SUPPORT,BR CABLE",1,1,,,,,,,,,,,,,,,,,
13-1,1,,172174-47100,,"SUPPORT,BR CABLE",1,1,,,,,R,,72174AMA-1,M910001,72174AMA-
1,M910001,,,,,,,
14,1,,172142-45670,,"ROD, SPOOL",1,1,,,,,,,,,,,,,,,,,
14-1,1,,172174-47110,,"ROD,SPOOL",1,1,,,,,R,,72174AMA-1,M910001,72174AMA-
1,M910001,,,,,,,
15,1,,172122-46590,,"ELBALL 8",1,1,,,,,,,,,,,,,,,,,
16,1,,22417-160160,,"COTTER PIN 1.6X16",1,1,,,,,,,,,,,,,,,,,
17,1,,26013-100202,,"BOLT W/WASHER M10X20",2,2,,,,,,,,,,,,,,,,,
18,1,,26051-080002,,"NUT M 8",1,1,,,,,,,,,,,,,,,,,
19,1,,933110-54100,,"PIN 4.75X14",1,1,,,,,,,,,,,,,,,,,
19-1,1,,172159-42910,,"PIN 4.75X14",1,1,,,,,R,,72174AMA-1,M910001,72174AMA-
1,M910001,,,,,,,
20,1,,933168-28480,,"WASHER 20X9X3.2",1,1,,,,,,,,,,,,,,,,,
20-1,1,,172174-47160,,"WASHER 20X9X3.2",1,1,,,,,R,,72174AMA-1,M910001,72174AMA-
1,M910001,,,,,,,
```

Fig. 17 CONTROL EQUIPMENT (BLADE)

https://truckmanualshub.com/

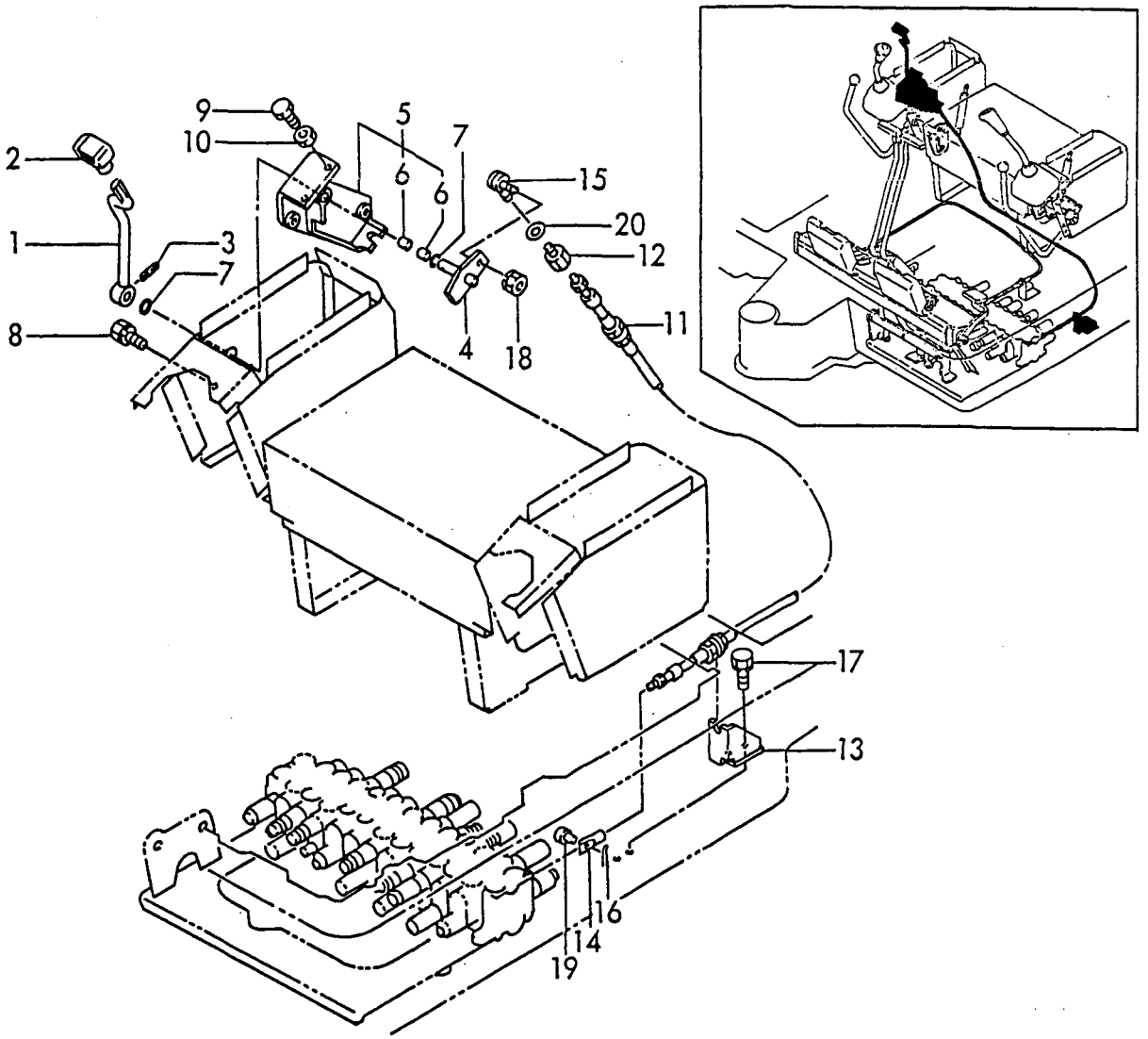

https://truckmanualshub.com/

1,1,,172519-17111,,BRACKET,1,2,,,,,,,,,,,,,,,,
1-1,1,,172174-45710,,"BRACKET,SAFETY SW.",1,2,,,,,R,,72174AMA-
1,M910001,72174AMA-1,M910001,,,,,,,
2,1,,1D4070-23580,,"GRIP,RED ROUND",1,2,,,,,,,,,,,,,,,,
3,1,,172124-46200,,"O-RING 27X5.7",2,4,,,,,,,,,,,,,,,,
3-1,1,,172161-46200,,"O-RING 27X5.7",2,4,,,,,R,,72174AMA-1,M910001,72174AMA-
1,M910001,,,,,,,
4,1,,172168-47700,,LEVER,,1,,,,,,,,,,,,,,,,
4-1,1,,172174-45800,,"LEVER R CMP.,EP LOCK",,1,,,,,R,,,,72174AMA-
1,M910001,,,,,,,
5,1,,172165-47680,,"LEVER L",1,1,,,,,,,,,,,,,,,,
5-1,1,,172174-44660,,"RUBBER L CMP,EP LOCK",1,1,,,,,R,,72174AMA-
1,M910001,72174AMA-1,M910001,,,,,,,
6,1,,172165-47500,,"ARM ASSY, LOCK",1,2,,,,,,,,,,,,,,,,
6-1,1,,172174-45720,,"ARM, LOCK",1,2,,,,,R,,72174AMA-1,M910001,72174AMA-
1,M910001,,,,,,,
7,1,,172165-47550,,BUSH,1,2,,,,,,,,,,,,,,,,
7-1,1,,172174-45760,,BUSH,1,2,,,,,R,,72174AMA-1,M910001,72174AMA-
1,M910001,,,,,,,
8,1,,172165-47600,,"GUIDE R ASSY, LOCK",,1,,,,,,,,,,,,,,,,
8-1,1,,172174-45770,,"GUIDE R ASSY, LOCK",,1,,,,,R,,,,72174AMA-1,M910001,,,,,,,
9,1,,172165-47620,,"GUIDE L COMP.,LOCK",1,1,,,,,,,,,,,,,,,,
9-1,1,,172174-44630,,"GUIDE L COMP.,LOCK",1,1,,,,,R,,72174AMA-
1,M910001,72174AMA-1,M910001,,,,,,,
10,1,,172165-47801,,"SPRING,GAS",1,2,,,,,,,,,,,,,,,,
11,1,,1A1380-56661,,"SPRING,ROTARY RETURN",1,2,,,,,,,,,,,,,,,,
11-1,1,,172174-45840,,"SPRING,ROTARY RETURN",1,2,,,,,R,,72174AMA-
1,M910001,72174AMA-1,M910001,,,,,,,
12,1,,22137-080000,,"WASHER 8, POLISHED",4,4,,,,,,,,,,,,,,,,
13,1,,22137-080000,,"WASHER 8, POLISHED",2,4,,,,,,,,,,,,,,,,
14,1,,22272-000070,,"CIRCLIP E- 7",1,2,,,,,,,,,,,,,,,,
15,1,,22351-060040,,"SPRING PIN 6X40",1,2,,,,,,,,,,,,,,,,
16,1,,22417-200200,,"COTTER PIN 2.0X20",4,4,,,,,,,,,,,,,,,,
17,1,,26013-080202,,"BOLT W/WASHER M8X20",2,4,,,,,,,,,,,,,,,,
18,1,,26013-100202,,"BOLT W/WASHER M10X20",2,4,,,,,,,,,,,,,,,,
19,1,,172165-47970,,BAR,1,,,,,,,,,,,,,,,,
19-1,1,,172174-47970,,BAR,1,,,,,R,,72174AMA-1,M910001,,,,,,,,
20,1,,933171-21700,,"PIN (B), SPOOL LINK",1,1,,,,,,,,,,,,,,,,
20-1,1,,172174-45980,,"PIN,SPOOL LINK",1,1,,,,,R,,72174AMA-1,M910001,72174AMA-
1,M910001,,,,,,,
21,1,,172165-45720,,BRACKET,1,1,,,,,,,,,,,,,,,,
21-1,1,,172174-45880,,"BRACKET COMPL.",1,1,,,,,R,,72174AMA-1,M910001,72174AMA-
1,M910001,,,,,,,
22,1,,172122-45830,,"PAD, METAL",1,1,,,,,,,,,,,,,,,,
23,1,,172165-46170,,"PADAL ASSY, LOW-HIGH",1,1,,,,,,,,,,,,,,,,
23-1,1,,172174-45910,,"PADAL ASSY, LOW-HIGH",1,1,,,,,R,,72174AMA-
1,M910001,72174AMA-1,M910001,,,,,,,
24,1,,172165-46190,,"LINK ASSY, LOW-HIGH",1,1,,,,,,,,,,,,,,,,
24-1,1,,172174-45940,,"LINK COMP.,LOW-HIGH",1,1,,,,,R,,72174AMA-
1,M910001,72174AMA-1,M910001,,,,,,,
25,1,,172165-46210,,ROD,1,1,,,,,,,,,,,,,,,,
25-1,1,,172174-45970,,ROD,1,1,,,,,R,,72174AMA-1,M910001,72174AMA-
1,M910001,,,,,,,
26,1,,1C6281-52310,,"PIN 6,COME-OFF SNAP",1,1,,,,,,,,,,,,,,,,
26-1,1,,172159-42070,,"PIN 6,COME-OFF SNAP",1,1,,,,,R,,72174AMA-
1,M910001,72174AMA-1,M910001,,,,,,,
27,1,,22137-100000,,"WASHER 10,POLISHED",1,1,,,,,,,,,,,,,,,,
28,1,,22417-160160,,"COTTER PIN 1.6X16",1,1,,,,,,,,,,,,,,,,
29,1,,24311-000210,,"O-RING 1A P-21.0",2,2,,,,,,,,,,,,,,,,
30,1,,26013-100202,,"BOLT W/WASHER M10X20",2,2,,,,,,,,,,,,,,,,
31,1,,26347-100002,,"U-NUT M10",1,1,,,,,,,,,,,,,,,,
32,1,,933110-54100,,"PIN 4.75X14",1,1,,,,,,,,,,,,,,,,

https://truckmanualshub.com/

32-1,1,,172159-42910,,"PIN 4.75X14",1,1,,,,,R,,72174AMA-1,M910001,72174AMA-1,M910001,,,,,,,
33,1,,22351-035040,,"SPRING PIN 3.5X40",1,2,,,,,,,,,,,,,,,,,

Fig. 18 CONTROL EQUIPMENT (CUT OFF LEVER & LOW-HIGH PEDAL)

https://truckmanualshub.com/

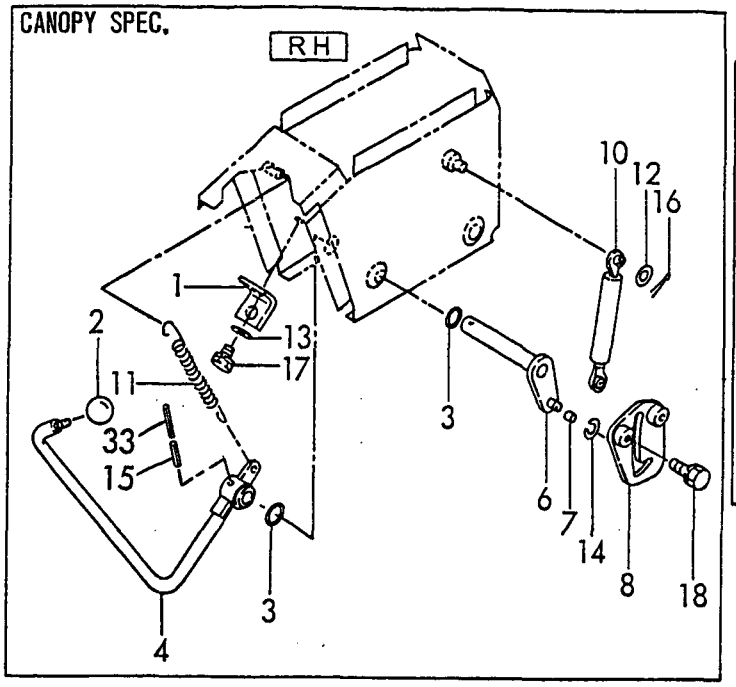

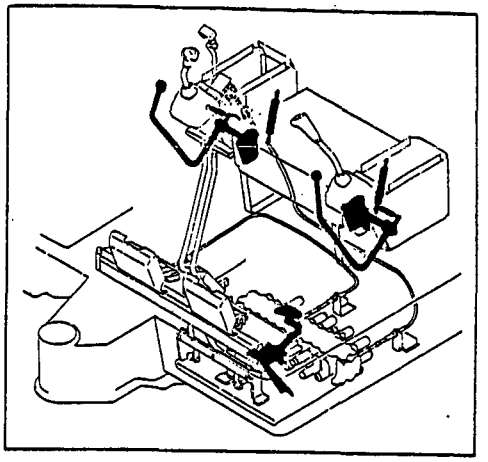

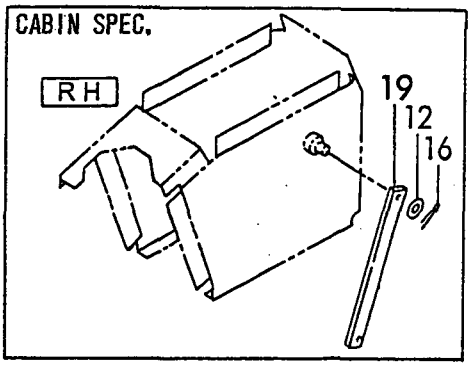

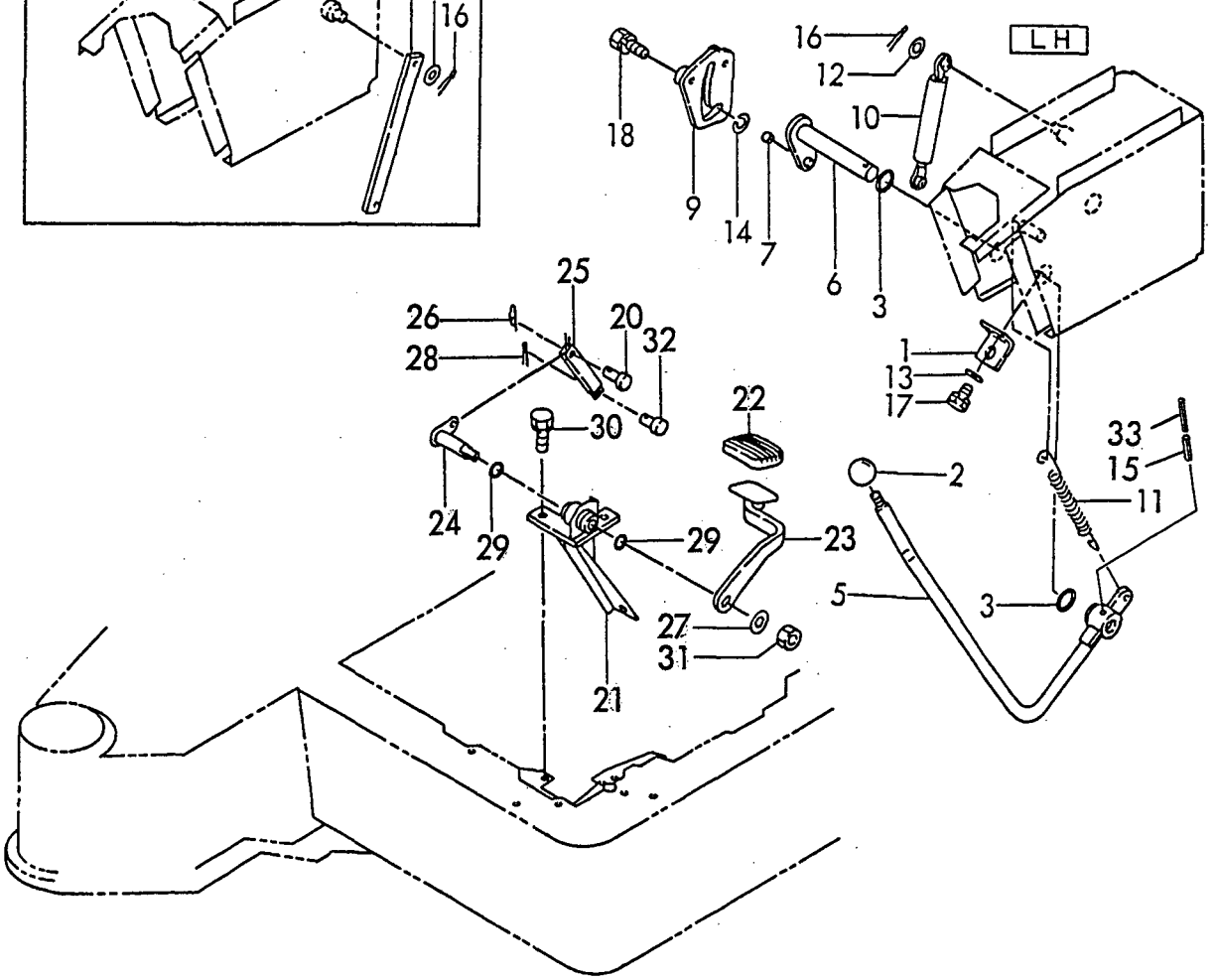

https://truckmanualshub.com/

```
1,1,,1C6141-35370,,"SPRING,LOCK",1,1,,,,,,,,,,,,,,,,
1-1,1,,172174-47200,,"SPRING, LOCK",1,1,,,,,R,,72174AMA-1,M910001,72174AMA-
1,M910001,,,,,,,
2,1,,172141-42960,,"JOINT, CABLE",1,1,,,,,,,,,,,,,,,,
2-1,1,,172159-42940,,"JOINT, CABLE",1,1,,,,,R,,72174AMA-1,M910001,72174AMA-
1,M910001,,,,,,,
3,1,,172151-45650,,CABLE,1,1,,,,,,,,,,,,,,,,
4,1,,172142-45670,,"ROD, SPOOL",1,1,,,,,,,,,,,,,,,,
4-1,1,,172174-47110,,"ROD,SPOOL",1,1,,,,,R,,72174AMA-1,M910001,72174AMA-
1,M910001,,,,,,,
5,1,,172157-45990,,"BOOTS, PEDAL",1,1,,,,,,,,,,,,,,,,
6,1,,172168-46250,,SUPPORT,1,1,,,,,,,,,,,,,,,,
6-1,1,,172174-47210,,"SUPPORT,P.T.O.CABLE",1,1,,,,,R,,72174AMA-
1,M910001,72174AMA-1,M910001,,,,,,,
7,1,,172165-46280,,"PEDAL ASSY, SWING",1,1,,,,,,,,,,,,,,,,
7-1,1,,172174-46280,,"PEDAL COMP.,SWING",1,1,,,,,R,,72174AMA-1,M910001,72174AMA-
1,M910001,,,,,,,
8,1,,172165-46340,,BOLT,2,2,,,,,,,,,,,,,,,,
8-1,1,,172174-46350,,BOLT,2,2,,,,,R,,72174AMA-1,M910001,72174AMA-
1,M910001,,,,,,,
9,1,,172165-46350,,"BRACKET, PEDAL",1,1,,,,,,,,,,,,,,,,
9-1,1,,172174-47260,,"BRACKET, PEDAL",1,1,,,,,R,,72174AMA-1,M910001,72174AMA-
1,M910001,,,,,,,
10,1,,172165-46390,,"PIN 14X105",1,1,,,,,,,,,,,,,,,,
10-1,1,,172174-47300,,"PIN 14X105",1,1,,,,,R,,72174AMA-1,M910001,72174AMA-
1,M910001,,,,,,,
11,1,,172165-46450,,"LOCK CMP",1,1,,,,,,,,,,,,,,,,
11-1,1,,172174-47310,,"LOCK CMP",1,1,,,,,R,,72174AMA-1,M910001,72174AMA-
1,M910001,,,,,,,
12,1,,172165-46480,,BOLT,1,1,,,,,,,,,,,,,,,,
12-1,1,,172174-47340,,BOLT,1,1,,,,,R,,72174AMA-1,M910001,72174AMA-
1,M910001,,,,,,,
13,1,,172165-46490,,SHIM,5,5,,,,,,,,,,,,,,,,
13-1,1,,172174-47350,,SHIM,5,5,,,,,R,,72174AMA-1,M910001,72174AMA-
1,M910001,,,,,,,
14,1,,172122-46590,,"ELBALL 8",1,1,,,,,,,,,,,,,,,,
15,1,,172165-46600,,"LINK, PEDAL",1,1,,,,,,,,,,,,,,,,
15-1,1,,172174-47360,,"LINK, PEDAL",1,1,,,,,R,,72174AMA-1,M910001,72174AMA-
1,M910001,,,,,,,
16,2,,172141-41360,,"BUSH 1415",2,2,,,,,,,,,,,,,,,,
16-1,2,,172161-41360,,"BUSH 1415",2,2,,,,,R,,72174AMA-1,M910001,72174AMA-
1,M910001,,,,,,,
17,1,,172168-46870,,BRACKET,1,1,,,,,,,,,,,,,,,,
17-1,1,,172174-47420,,"BRACKET COMP.,P.T.O.",1,1,,,,,R,,72174AMA-
1,M910001,72174AMA-1,M910001,,,,,,,
18,1,,22137-080000,,"WASHER 8, POLISHED",2,2,,,,,,,,,,,,,,,,
19,1,,22351-040032,,"SPRING PIN 4X32",1,1,,,,,,,,,,,,,,,,
20,1,,22417-160160,,"COTTER PIN 1.6X16",1,1,,,,,,,,,,,,,,,,
21,1,,24311-000210,,"O-RING 1A P-21.0",2,2,,,,,,,,,,,,,,,,
22,1,,24761-040000,,"NIPPLE B,GREASE",1,1,,,,,,,,,,,,,,,,
23,1,,26013-100162,,"BOLT M10X 16",2,2,,,,,,,,,,,,,,,,
24,1,,26013-100202,,"BOLT W/WASHER M10X20",2,2,,,,,,,,,,,,,,,,
25,1,,26013-100202,,"BOLT W/WASHER M10X20",2,2,,,,,,,,,,,,,,,,
26,1,,26051-080002,,"NUT M 8",1,1,,,,,,,,,,,,,,,,
27,1,,26116-080254,,"BOLT M 8X 25 PLATED",2,2,,,,,,,,,,,,,,,,
28,1,,26716-080002,,"NUT M 8",2,2,,,,,,,,,,,,,,,,
29,1,,26756-080002,,"LOCK NUT M 8 PLATED",2,2,,,,,,,,,,,,,,,,
30,1,,933110-54100,,"PIN 4.75X14",1,1,,,,,,,,,,,,,,,,
30-1,1,,172159-42910,,"PIN 4.75X14",1,1,,,,,R,,72174AMA-1,M910001,72174AMA-
1,M910001,,,,,,,
31,1,,933168-28480,,"WASHER 20X9X3.2",1,1,,,,,,,,,,,,,,,,
31-1,1,,172174-47160,,"WASHER 20X9X3.2",1,1,,,,,R,,72174AMA-1,M910001,72174AMA-
1,M910001,,,,,,,
```

https://truckmanualshub.com/

32,1,,172141-42960,,"JOINT, CABLE",1,1,,,,,,,,,,,,,,,,
32-1,1,,172159-42940,,"JOINT, CABLE",1,1,,,,,R,,72174AMA-1,M910001,72174AMA-1,M910001,,,,,,,
33,1,,172142-45670,,"ROD, SPOOL",1,1,,,,,,,,,,,,,,,,
33-1,1,,172174-47110,,"ROD,SPOOL",1,1,,,,,R,,72174AMA-1,M910001,72174AMA-1,M910001,,,,,,,
34,1,,1A1040-45890,,"WASHER 10 36 4.5",1,1,,,,,,,,,,,,,,,,
34-1,1,,172159-41860,,"WASHER 10 36 4.5",1,1,,,,,R,,72174AMA-1,M910001,72174AMA-1,M910001,,,,,,,
35,1,,172312-45930,,"SPRING 13X1.2X70",1,1,,,,,,,,,,,,,,,,
35-1,1,,172174-46400,,"SPRING 13X1.2X70",1,1,,,,,R,,72174AMA-1,M910001,72174AMA-1,M910001,,,,,,,
36,1,,172116-45940,,"KNOB (C), LEVER",1,1,,,,,,,,,,,,,,,,
37,1,,172168-46100,,BRACKET,1,1,,,,,,,,,,,,,,,,
37-1,1,,172174-46410,,BRACKET,1,1,,,,,R,,72174AMA-1,M910001,72174AMA-1,M910001,,,,,,,
38,1,,172168-46160,,"LINK W/BUSH",1,1,,,,,,,,,,,,,,,,
38-1,1,,172174-46470,,"LINK COMPL.",1,1,,,,,R,,72174AMA-1,M910001,72174AMA-1,M910001,,,,,,,
39,2,,172141-41370,,"BUSH 2015",2,2,,,,,,,,,,,,,,,,
39-1,2,,172161-41370,,"BUSH 2015",2,2,,,,,R,,72174AMA-1,M910001,72174AMA-1,M910001,,,,,,,
40,1,,172168-46190,,LEVER,1,1,,,,,,,,,,,,,,,,
40-1,1,,172174-46510,,"LEVER, REGULATOR",1,1,,,,,R,,72174AMA-1,M910001,72174AMA-1,M910001,,,,,,,
41,1,,172124-46200,,"O-RING 27X5.7",2,2,,,,,,,,,,,,,,,,
41-1,1,,172161-46200,,"O-RING 27X5.7",2,2,,,,,R,,72174AMA-1,M910001,72174AMA-1,M910001,,,,,,,
42,1,,172168-46231,,"CABLE, 3RDV",1,1,,,,,,,,,,,,,,,,
43,1,,172122-46590,,"ELBALL 8",1,1,,,,,,,,,,,,,,,,
44,1,,933168-28480,,"WASHER 20X9X3.2",1,1,,,,,,,,,,,,,,,,
44-1,1,,172174-47160,,"WASHER 20X9X3.2",1,1,,,,,R,,72174AMA-1,M910001,72174AMA-1,M910001,,,,,,,
45,1,,22217-100000,,"SPRING WASHER 10",4,4,,,,,,,,,,,,,,,,
46,1,,22351-080020,,"SPRING PIN 8X20",1,1,,,,,,,,,,,,,,,,
47,1,,22417-160160,,"COTTER PIN 1.6X16",1,1,,,,,,,,,,,,,,,,
48,1,,24761-050000,,"NIPPLE C,GREASE",1,1,,,,,,,,,,,,,,,,
49,1,,26051-080002,,"NUT M 8",1,1,,,,,,,,,,,,,,,,
50,1,,26116-100202,,"BOLT M10X 20 PLATED",3,3,,,,,,,,,,,,,,,,
51,1,,26116-100602,,"BOLT M10X 60 PLATED",1,1,,,,,,,,,,,,,,,,
52,1,,933110-54100,,"PIN 4.75X14",1,1,,,,,,,,,,,,,,,,
52-1,1,,172159-42910,,"PIN 4.75X14",1,1,,,,,R,,72174AMA-1,M910001,72174AMA-1,M910001,,,,,,,

Fig. 19 CONTROL EQUIPMENT (P.T.O. CONTROL)

https://truckmanualshub.com/

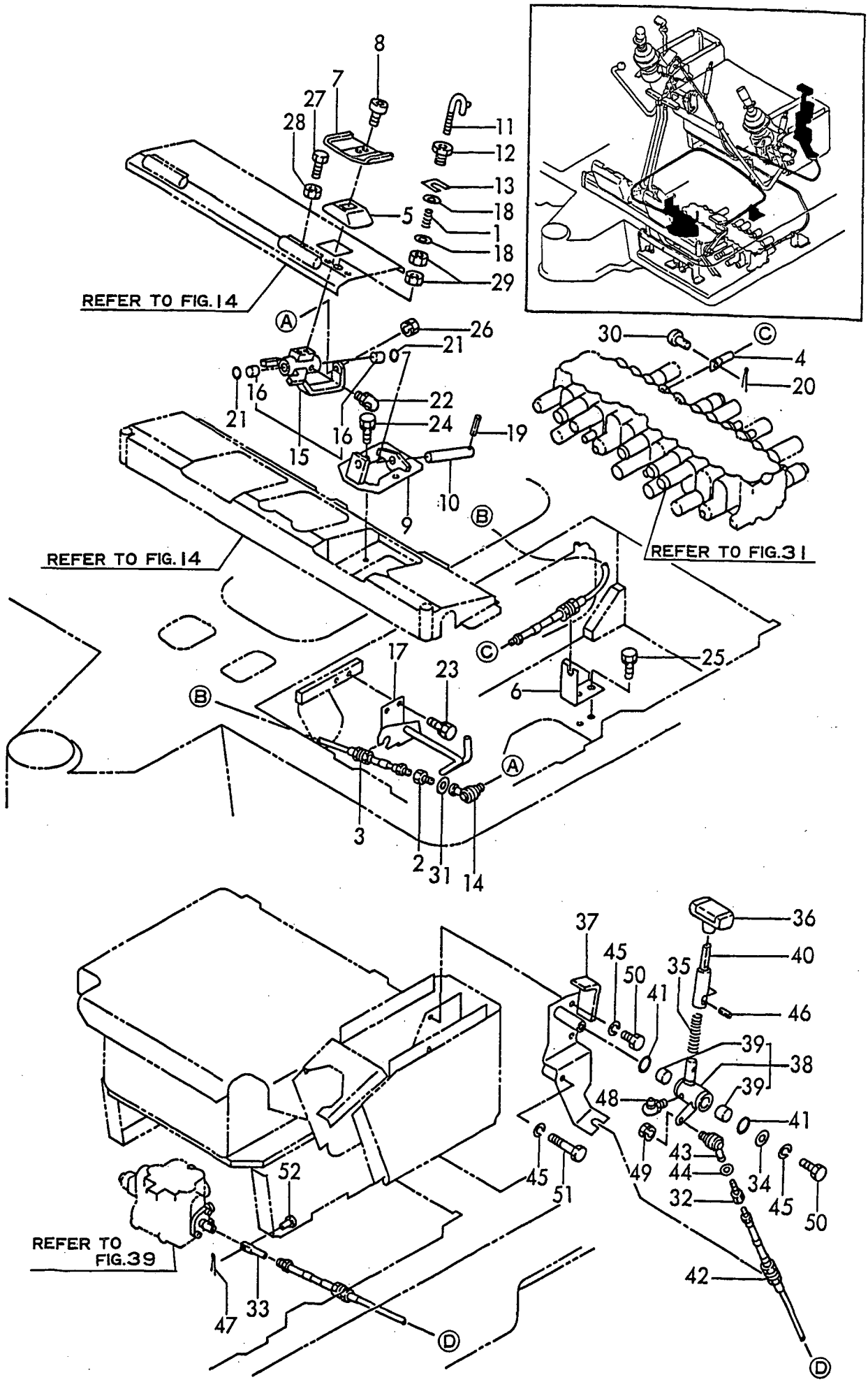

https://truckmanualshub.com/

```
1,1,,172141-37501,,PLATE,4,4,,,,,,,,,,,,,,,,
1-1,1,,172161-37500,,"PLATE COMP.,SHOE",4,4,,,,,R,,72174AMA-1,M910001,72174AMA-
1,M910001,,,,,,,
2,1,,26013-100302,,"BOLT M10X 30",8,8,,,,,,,,,,,,,,,,,
3,1,,172171-54101,,"FRAM, LOWER",1,1,,,,,,,,,,,,,,,,,
3-1,1,,172174-50100,,"FRAME COMP.,LOWER",1,1,,,,,R,,72174AMA-1,M910001,72174AMA-
1,M910001,,,,,,,
4,1,,172148-61100,,"COVER,TRAVEL",2,2,,,,,,,,,,,,,,,,,
4-1,1,,172174-50750,,"COVER,MOTOR",2,2,,,,,R,,72174AMA-1,M910001,72174AMA-
1,M910001,,,,,,,
5,1,,172141-50761,,"COVER, UNDER",1,1,,,,,,,,,,,,,,,,,
5-1,1,,172161-50760,,"COVER,UNDER",1,1,,,,,R,,72174AMA-1,M910001,72174AMA-
1,M910001,,,,,,,
6,1,,172141-50890,,GROMMET,2,2,,,,,,,,,,,,,,,,,
7,1,,22217-100000,,"SPRING WASHER 10",8,8,,,,,,,,,,,,,,,,,
8,1,,22217-120000,,"WASHER 12,SPRING",4,4,,,,,,,,,,,,,,,,,
9,1,,26116-100202,,"BOLT M10X 20 PLATED",8,8,,,,,,,,,,,,,,,,,
10,1,,26116-120252,,"BOLT M12X 25 PLATED",4,4,,,,,,,,,,,,,,,,,
11,1,,172730-05250,,"WASHER 12",12,12,,,,,,,,,,,,,,,,,
11-1,1,,172161-50890,,"WASHER 12",12,12,,,,,R,,72174AMA-1,M910001,72174AMA-
1,M910001,,,,,,,
12,1,,172141-50901,,"GUARD, SHOE",4,4,,,,,,,,,,,,,,,,,
12-1,1,,172161-50900,,"GUARD,SHOE",4,4,,,,,R,,72174AMA-1,M910001,72174AMA-
1,M910001,,,,,,,
13,1,,26013-120452,,"BOLT M12X 45",12,12,,,,,,,,,,,,,,,,,
14,1,,172730-05250,,"WASHER 12",9,9,,,,,,,,,,,,,,,,,
14-1,1,,172161-50890,,"WASHER 12",9,9,,,,,R,,72174AMA-1,M910001,72174AMA-
1,M910001,,,,,,,
15,1,,172131-37170,,"BOLT M12X 30",7,7,,,,,,,,,,,,,,,,,
15-1,1,,172174-53360,,"BOLT M12X 30",7,7,,,,,R,,72174AMA-1,M910001,72174AMA-
1,M910001,,,,,,,
16,1,,172168-53300,,"WEIGHT L",1,1,,,,,,,,,,,,,,,,,
16-1,1,,172174-53400,,"WEIGHT L",1,1,,,,,R,,72174AMA-1,M910001,72174AMA-
1,M910001,,,,,,,
17,1,,172171-53310,,"WEIGHT,CENTER",1,1,,,,,,,,,,,,,,,,,
17-1,1,,172174-53310,,"WEIGHT,CENTER",1,1,,,,,R,,72174AMA-1,M910001,72174AMA-
1,M910001,,,,,,,
18,1,,172171-53340,,"WEIGHT,SIDE(L)",1,1,,,,,,,,,,,,,,,,,
18-1,1,,172174-53340,,"WEIGHT,SIDE(L)",1,1,,,,,R,,72174AMA-1,M910001,72174AMA-
1,M910001,,,,,,,
19,1,,172141-53350,,"GROMMET 26",6,6,,,,,,,,,,,,,,,,,
19-1,1,,172161-53350,,"GROMMET 26",6,6,,,,,R,,72174AMA-1,M910001,72174AMA-
1,M910001,,,,,,,
20,1,,172168-53350,,"WEIGHT R",1,1,,,,,,,,,,,,,,,,,
20-1,1,,172174-53460,,"WEIGHT R",1,1,,,,,R,,72174AMA-1,M910001,72174AMA-
1,M910001,,,,,,,
21,1,,172171-53350,,"WEIGHT,SIDE(R)",1,1,,,,,,,,,,,,,,,,,
21-1,1,,172174-53350,,"WEIGHT,SIDE(R)",1,1,,,,,R,,72174AMA-1,M910001,72174AMA-
1,M910001,,,,,,,
22,1,,172168-53450,,"BOLT 12X70",3,3,,,,,,,,,,,,,,,,,
22-1,1,,172174-53510,,"BOLT 12X70",3,3,,,,,R,,72174AMA-1,M910001,72174AMA-
1,M910001,,,,,,,
23,1,,22217-120000,,"WASHER 12,SPRING",11,11,,,,,,,,,,,,,,,,,
24,1,,26116-120552,,"BOLT M12X 55 PLATED",1,1,,,,,,,,,,,,,,,,,
25,1,,172171-54100,,"FRAME W/BUSH,TURNING",1,1,,,,,,,,,,,,,,,,,
25-1,1,,172174-54100,,"FRAME W/BUSH,TURNING",1,1,,,,,R,,72174AMA-
1,M910001,72174AMA-1,M910001,,,,,,,
25-2,1,,172174-54101,,"FRAME
W/BUSH,TURNING",1,1,,,,,S,,72174015,*1993.03,72174015,*1993.03,,,,,,,,,I
26,2,,172171-54750,,"BUSH 50X65",2,2,,,,,,,,,,,,,,,,,
26-1,2,,172174-54750,,"BUSH 50X65",2,2,,,,,R,,72174AMA-1,M910001,72174AMA-
1,M910001,,,,,,,
27,2,,172165-81760,,"SEAL 50X60X4, DUST",2,2,,,,,,,,,,,,,,,,,
```

https://truckmanualshub.com/

```
27-1,2,,172174-81760,,"SEAL 50X60X4, DUST",2,2,,,,,R,,72174AMA-
1,M910001,72174AMA-1,M910001,,,,,,,
28,1,,24761-040000,,"NIPPLE B,GREASE",1,1,,,,,,,,,,,,,,,,,,
29,1,,194940-24350,,"PIN 10X28,STRAIGHT",4,4,,,,,,,,,,,,,,,,,,
29-1,1,,172161-57660,,"PIN 10X28,STRAIGHT",4,4,,,,,R,,72174AMA-
1,M910001,72174AMA-1,M910001,,,,,,,
30,1,,172141-57600,,"BEARING, SWING",1,1,,,,,,,,,,,,,,,,,,
30-1,1,,172141-57601,,"BEARING,
SWING",1,1,,,,,R,,72168168,*1992.12,72168168,*1992.12,,,,,,,,,I
31,2,,172141-57610,,"SEAL KIT",1,1,,,,,,,,,,,,,,,,,,
32,3,,172141-57620,,"SEAL, UPPER",1,1,,,,,,,,,,,,,,,,,,
33,3,,172141-57630,,"SEAL,LOWER",1,1,,,,,,,,,,,,,,,,,,
34,1,,172141-57650,,"BOLT M12X 55 PLATED",38,38,,,,,,,,,,,,,,,,,,
34-1,1,,172161-57650,,"BOLT M12X55",38,38,,,,,R,,72174AMA-1,M910001,72174AMA-
1,M910001,,,,,,,
35,1,,172122-50852,,"GUARD(L), SPROCKET",1,1,,,,,,,,,,,,,,,,,,
35-1,1,,172161-50850,,"GUARD L,SPROCKET",1,1,,,,,R,,72174AMA-1,M910001,72174AMA-
1,M910001,,,,,,,
36,1,,172122-50862,,"GUARD(R), SPROCKET",1,1,,,,,,,,,,,,,,,,,,
36-1,1,,172161-50860,,"GUARD R,SPROCKET",1,1,,,,,R,,72174AMA-1,M910001,72174AMA-
1,M910001,,,,,,,
37,1,,26013-120252,,"BOLT M12X 25",6,6,,,,,,,,,,,,,,,,,,
```

Fig. 20 FRAME & TURNING BEARING

https://truckmanualshop.com/

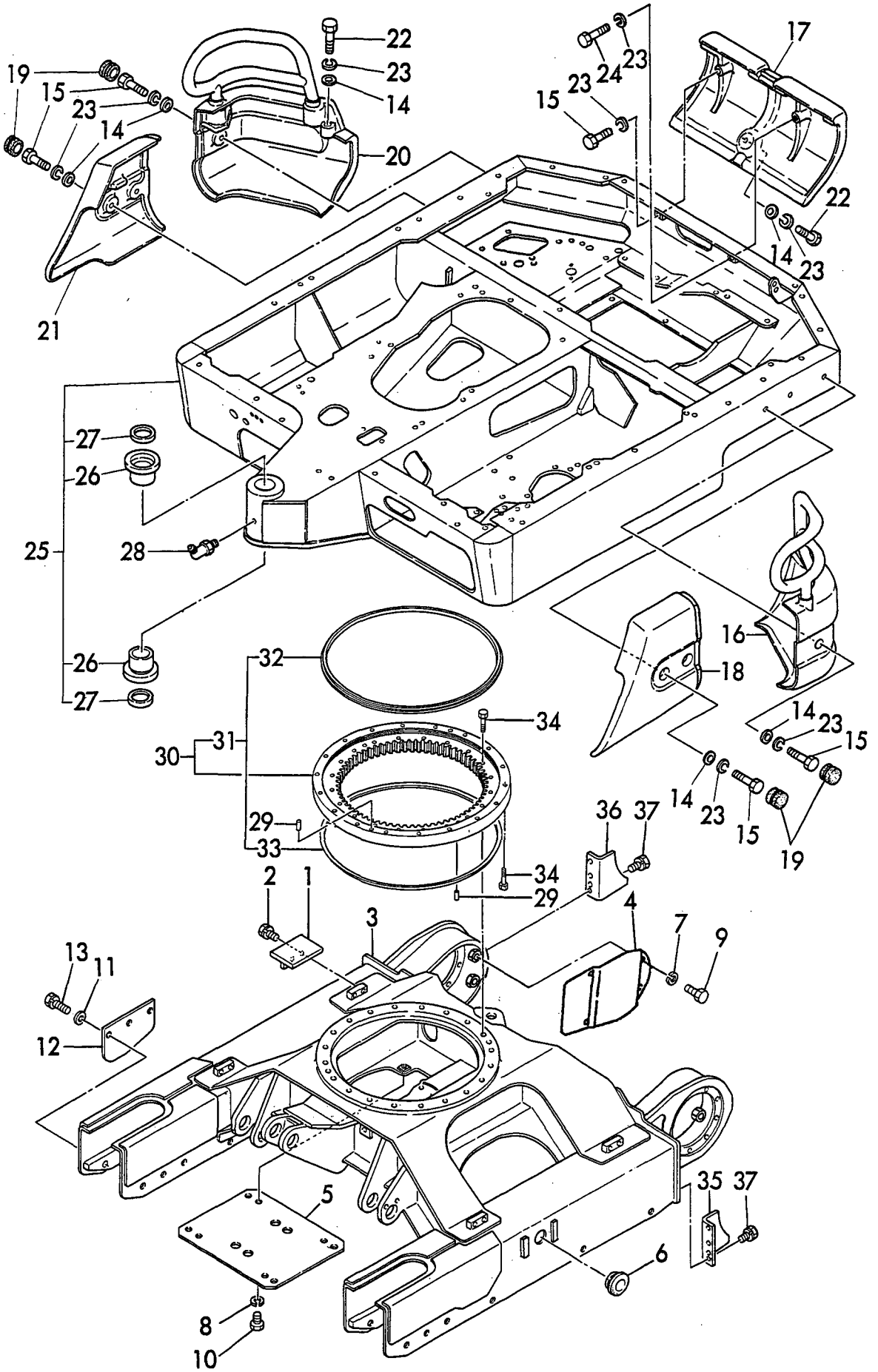

https://truckmanualshub.com/

```
1,1,,172732-11510,,GROMMET,1,,,,,,,,,,,,,,,,,
2,1,,172165-61190,,COVER(R),1,,,,,,,,,,,,,,,,,
2-1,1,,172174-61100,,COVER(R),1,,,,,,R,,72174AMA-1,M910001,,,,,,,,,
3,1,,172171-61300,,COVER(A),1,,,,,,,,,,,,,,,,,
3-1,1,,172174-61300,,COVER(A),1,,,,,,R,,72174AMA-1,M910001,,,,,,,,,
4,1,,172168-61350,,COVER,1,,,,,,,,,,,,,,,,,
4-1,1,,172174-61150,,COVER,1,,,,,,R,,72174AMA-1,M910001,,,,,,,,,
5,1,,172165-61450,,COVER,1,,,,,,,,,,,,,,,,,
5-1,1,,172174-61450,,COVER,1,,,,,,R,,72174AMA-1,M910001,,,,,,,,,
6,1,,172168-61500,,PLATE;A,1,,,,,,,,,,,,,,,,,
6-1,1,,172174-61480,,PLATE;A,1,,,,,,R,,72174AMA-1,M910001,,,,,,,,,
7,1,,172168-61510,,"PLATE (B",1,,,,,,,,,,,,,,,,,
7-1,1,,172174-61490,,"PLATE (B)",1,,,,,,R,,72174AMA-1,M910001,,,,,,,,,
8,1,,172171-61520,,"PLATE,C",1,,,,,,,,,,,,,,,,,
8-1,1,,172174-61520,,"PLATE,C",1,,,,,,R,,72174AMA-1,M910001,,,,,,,,,
9,1,,172171-61530,,"PLATE D COMPL.",1,,,,,,,,,,,,,,,,,
9-1,1,,172174-61530,,"PLATE D COMPL.",1,,,,,,R,,72174AMA-1,M910001,,,,,,,,,
10,1,,172168-61550,,"PLATE F",1,,,,,,,,,,,,,,,,,
10-1,1,,172174-61500,,"PLATE F",1,,,,,,R,,72174AMA-1,M910001,,,,,,,,,
11,1,,172171-61550,,"PLATE E",1,,,,,,,,,,,,,,,,,
11-1,1,,172174-61550,,"PLATE E",1,,,,,,R,,72174AMA-1,M910001,,,,,,,,,
11-2,1,,172174-61551,,"PLATE E",1,,,,,,S,,72174015,*1993.03,,,,,,,,,,,I
12,1,,172168-61560,,"PLATE G",1,,,,,,,,,,,,,,,,,
12-1,1,,172174-61560,,"PLATE G",1,,,,,,R,,72174AMA-1,M910001,,,,,,,,,
13,1,,172165-61650,,"COVER, FRONT",1,,,,,,,,,,,,,,,,,
13-1,1,,172174-61650,,"COVER,FRONT",1,,,,,,R,,72174AMA-1,M910001,,,,,,,,,
14,1,,172165-61700,,"COVER ASSY, BL LINK",1,,,,,,,,,,,,,,,,,
14-1,1,,172174-61700,,"COVER COMP.,BL LINK",1,,,,,,R,,72174AMA-
1,M910001,,,,,,,,,
15,1,,172165-61720,,RUBBER,1,,,,,,,,,,,,,,,,,
15-1,1,,172174-61720,,RUBBER,1,,,,,,R,,72174AMA-1,M910001,,,,,,,,,
16,1,,172165-61740,,COVER,1,,,,,,,,,,,,,,,,,
16-1,1,,172174-61740,,"COVER M COMPL.",1,,,,,,R,,72174AMA-1,M910001,,,,,,,,,
17,1,,172165-61780,,"BRACKET ASSY",1,,,,,,,,,,,,,,,,,
17-1,1,,172174-61780,,"BRACKET COMPL.",1,,,,,,R,,72174AMA-1,M910001,,,,,,,,,
18,1,,172165-61801,,PLUG,5,,,,,,,,,,,,,,,,,
19,1,,172519-63240,,"BOLT  8X 16",4,,,,,,,,,,,,,,,,,
19-1,1,,172174-44850,,"BOLT  8X 16",4,,,,,,R,,72174AMA-1,M910001,,,,,,,,,
20,1,,172519-63240,,"BOLT  8X 16",4,,,,,,,,,,,,,,,,,
20-1,1,,172174-44850,,"BOLT  8X 16",4,,,,,,R,,72174AMA-1,M910001,,,,,,,,,
21,1,,172519-63240,,"BOLT  8X 16",1,,,,,,,,,,,,,,,,,
21-1,1,,172174-44850,,"BOLT  8X 16",1,,,,,,R,,72174AMA-1,M910001,,,,,,,,,
22,1,,22137-100000,,"WASHER 10,POLISHED",5,,,,,,,,,,,,,,,,,
23,1,,22137-100000,,"WASHER 10,POLISHED",9,,,,,,,,,,,,,,,,,
24,1,,22217-100000,,"SPRING WASHER 10",25,,,,,,,,,,,,,,,,,
25,1,,22217-100000,,"SPRING WASHER 10",2,,,,,,,,,,,,,,,,,
26,1,,22217-140000,,"SPRING WASHER 14",2,,,,,,,,,,,,,,,,,
27,1,,26013-080162,,"BOLT W/WASHER M8X16",2,,,,,,,,,,,,,,,,,,
28,1,,26013-100352,,"BOLT M10X 35",5,,,,,,,,,,,,,,,,,
29,1,,26116-100162,,"BOLT M10X 16 PLATED",2,,,,,,,,,,,,,,,,,
30,1,,26116-100202,,"BOLT M10X 20 PLATED",25,,,,,,,,,,,,,,,,,
31,1,,26116-140352,,"BOLT M14X 35 PLATED",2,,,,,,,,,,,,,,,,,
32,1,,26367-100002,,"U-NUT M10",4,,,,,,,,,,,,,,,,,
```

Fig. 21 FRAME COVER (CABIN)

https://truckmanualshub.com/

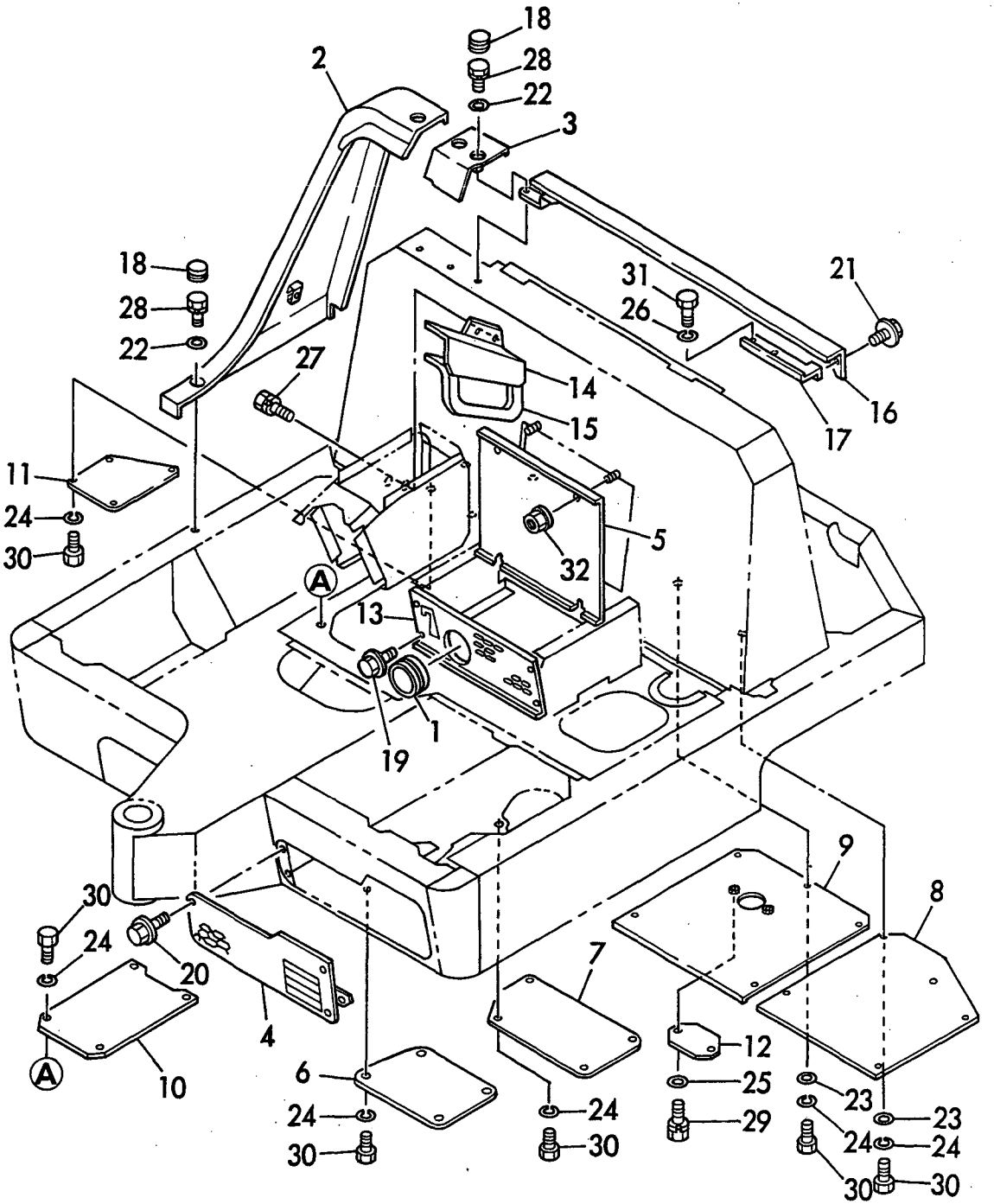

https://truckmanualshub.com/

```
1,1,,194145-04810,,"WASHER 10",,3,,,,,,,,,,,,,,,,
1-1,1,,172159-65930,,"WASHER 10",,3,,,,,R,,,,72174AMA-1,M910001,,,,,,,
2,1,,172165-61190,,COVER(R),,1,,,,,,,,,,,,,,,,
2-1,1,,172174-61100,,COVER(R),,1,,,,,R,,,,72174AMA-1,M910001,,,,,,,
3,1,,172168-61350,,COVER,,1,,,,,,,,,,,,,,,,
3-1,1,,172174-61150,,COVER,,1,,,,,R,,,,72174AMA-1,M910001,,,,,,,
4,1,,172171-61400,,COVER(B),,1,,,,,,,,,,,,,,,,
4-1,1,,172174-61400,,"COVER B COMPL.",,1,,,,,R,,,,72174AMA-1,M910001,,,,,,,
5,1,,172165-61450,,COVER,,1,,,,,,,,,,,,,,,,
5-1,1,,172174-61450,,COVER,,1,,,,,R,,,,72174AMA-1,M910001,,,,,,,
6,1,,172168-61500,,PLATE;A,,1,,,,,,,,,,,,,,,,
6-1,1,,172174-61480,,PLATE;A,,1,,,,,R,,,,72174AMA-1,M910001,,,,,,,
7,1,,172168-61510,,"PLATE (B",,1,,,,,,,,,,,,,,,,
7-1,1,,172174-61490,,"PLATE (B)",,1,,,,,R,,,,72174AMA-1,M910001,,,,,,,
8,1,,172171-61520,,"PLATE,C",,1,,,,,,,,,,,,,,,,
8-1,1,,172174-61520,,"PLATE,C",,1,,,,,R,,,,72174AMA-1,M910001,,,,,,,
9,1,,172171-61530,,"PLATE D COMPL.",,1,,,,,,,,,,,,,,,,
9-1,1,,172174-61530,,"PLATE D COMPL.",,1,,,,,R,,,,72174AMA-1,M910001,,,,,,,
10,1,,172168-61550,,"PLATE F",,1,,,,,,,,,,,,,,,,
10-1,1,,172174-61500,,"PLATE F",,1,,,,,R,,,,72174AMA-1,M910001,,,,,,,
11,1,,172171-61550,,"PLATE E",,1,,,,,,,,,,,,,,,,
11-1,1,,172174-61550,,"PLATE E",,1,,,,,R,,,,72174AMA-1,M910001,,,,,,,
11-2,1,,172174-61551,,"PLATE E",,1,,,,,S,,,,72174015,*1993.03,,,,,,,,,I
12,1,,172168-61560,,"PLATE G",,1,,,,,,,,,,,,,,,,
12-1,1,,172174-61560,,"PLATE G",,1,,,,,R,,,,72174AMA-1,M910001,,,,,,,
13,1,,172165-61650,,"COVER, FRONT",,1,,,,,,,,,,,,,,,,
13-1,1,,172174-61650,,"COVER,FRONT",,1,,,,,R,,,,72174AMA-1,M910001,,,,,,,
14,1,,172165-61700,,"COVER ASSY, BL LINK",,1,,,,,,,,,,,,,,,,
14-1,1,,172174-61700,,"COVER COMP.,BL LINK",,1,,,,,R,,,,72174AMA-
1,M910001,,,,,,
15,1,,172165-61720,,RUBBER,,1,,,,,,,,,,,,,,,,
15-1,1,,172174-61720,,RUBBER,,1,,,,,R,,,,72174AMA-1,M910001,,,,,,,
16,1,,172165-61801,,PLUG,,6,,,,,,,,,,,,,,,,
17,1,,172165-61820,,"COVER L COMP.,SI",,1,,,,,,,,,,,,,,,,
17-1,1,,172174-61820,,"COVER L COMP.,SI",,1,,,,,R,,,,72174AMA-1,M910001,,,,,,,
18,1,,172519-63240,,"BOLT  8X 16",,4,,,,,,,,,,,,,,,,
18-1,1,,172174-44850,,"BOLT  8X 16",,4,,,,,R,,,,72174AMA-1,M910001,,,,,,,
19,1,,172519-63240,,"BOLT  8X 16",,4,,,,,,,,,,,,,,,,
19-1,1,,172174-44850,,"BOLT  8X 16",,4,,,,,R,,,,72174AMA-1,M910001,,,,,,,
20,1,,22137-100000,,"WASHER 10,POLISHED",,9,,,,,,,,,,,,,,,,
21,1,,22137-100000,,"WASHER 10,POLISHED",,9,,,,,,,,,,,,,,,,
22,1,,22217-100000,,"SPRING WASHER 10",,25,,,,,,,,,,,,,,,,
23,1,,22217-100000,,"SPRING WASHER 10",,2,,,,,,,,,,,,,,,,
24,1,,26013-080162,,"BOLT W/WASHER M8X16",,2,,,,,,,,,,,,,,,,
25,1,,26013-100352,,"BOLT M10X 35",,9,,,,,,,,,,,,,,,,
26,1,,26116-100162,,"BOLT M10X 16 PLATED",,2,,,,,,,,,,,,,,,,
27,1,,26116-100202,,"BOLT M10X 20 PLATED",,25,,,,,,,,,,,,,,,,
28,1,,26367-100002,,"U-NUT M10",,4,,,,,,,,,,,,,,,,
29,1,,172732-11510,,GROMMET,,1,,,,,,,,,,,,,,,,
```

Fig. 22 FRAME COVER (CANOPY)

https://truckmanualshub.com/

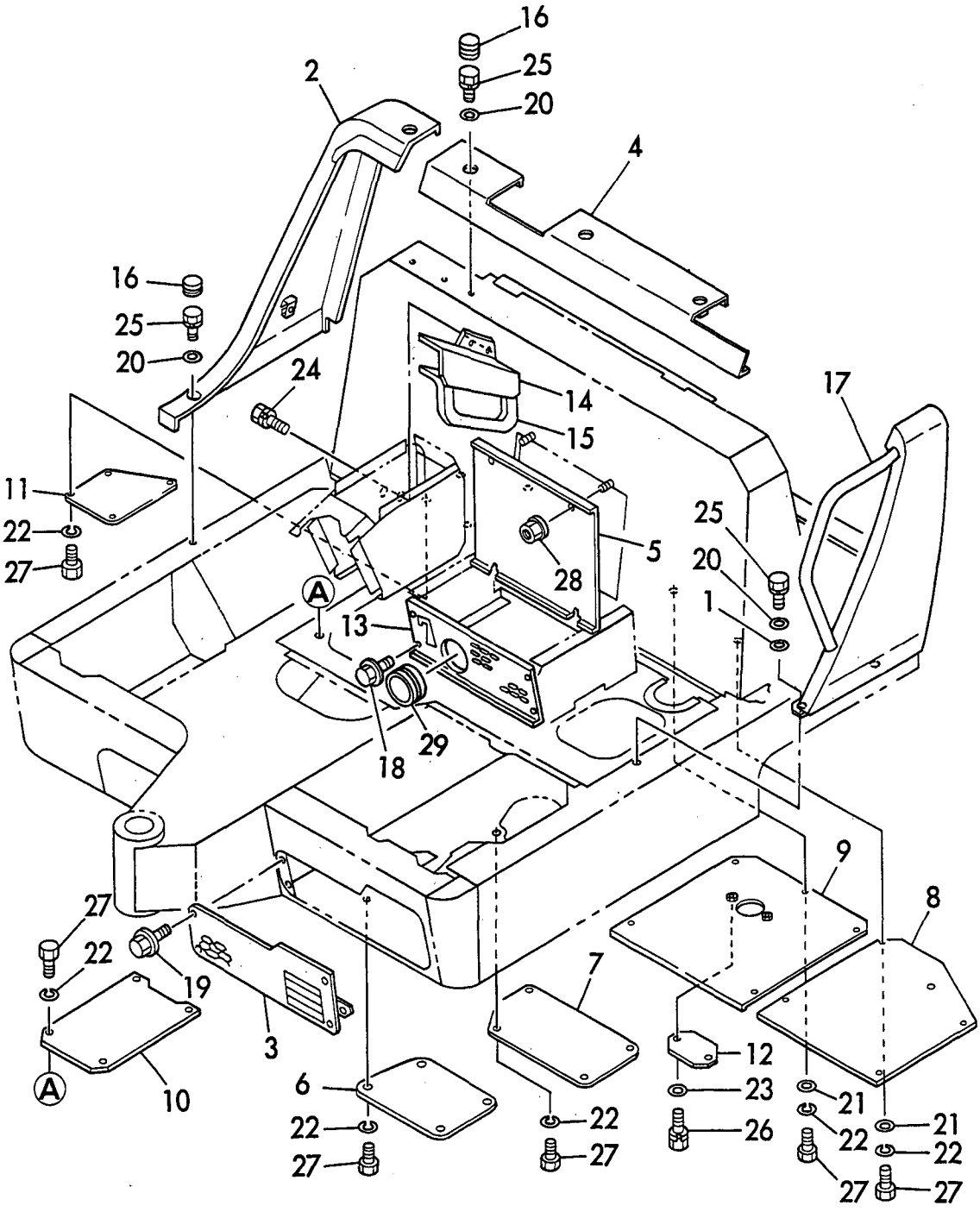

https://truckmanualshub.com/

1,1,,172165-62100,,STEP,1,1,,,,,,,,,,,,,,,,
1-1,1,,172174-62170,,STEP,1,1,,,,,R,,72174AMA-1,M910001,72174AMA-
1,M910001,,,,,,,
2,1,,172171-62150,,"STEP ASSY",1,1,,,,,,,,,,,,,,,,
2-1,1,,172174-62150,,"STEP ASSY",1,1,,,,,R,,72174AMA-1,M910001,72174AMA-
1,M910001,,,,,,,
3,1,,172168-62200,,"MAT, FLOOR",1,1,,,,,,,,,,,,,,,,
4,1,,172142-62300,,"WING BOLT M10X15",2,2,,,,,,,,,,,,,,,,
4-1,1,,172174-62450,,"WING BOLT M10X15",2,2,,,,,R,,72174AMA-1,M910001,72174AMA-
1,M910001,,,,,,,
5,1,,172165-62600,,"STEP C COMP.,SI",1,1,,,,,,,,,,,,,,,,
5-1,1,,172174-62290,,"STEP C COMP.,SI",1,1,,,,,R,,72174AMA-1,M910001,72174AMA-
1,M910001,,,,,,,
6,1,,172165-62630,,"RUBBER 90,EDGE",2,2,,,,,,,,,,,,,,,,
6-1,1,,172174-62440,,"RUBBER 90,EDGE",2,2,,,,,R,,72174AMA-1,M910001,72174AMA-
1,M910001,,,,,,,
7,1,,172165-62800,,"GROMMET 26",1,1,,,,,,,,,,,,,,,,
8,1,,22217-100000,,"SPRING WASHER 10",7,7,,,,,,,,,,,,,,,,
9,1,,22217-100000,,"SPRING WASHER 10",9,9,,,,,,,,,,,,,,,,
10,1,,22217-100000,,"SPRING WASHER 10",4,4,,,,,,,,,,,,,,,,
11,1,,22417-320200,,"COTTER PIN 3.2X20",2,2,,,,,,,,,,,,,,,,
12,1,,26116-100202,,"BOLT M10X 20 PLATED",7,7,,,,,,,,,,,,,,,,
13,1,,26116-100202,,"BOLT M10X 20 PLATED",9,9,,,,,,,,,,,,,,,,
14,1,,26116-100202,,"BOLT M10X 20 PLATED",4,4,,,,,,,,,,,,,,,,
15,1,,194300-21460,,CAP,1,1,,,,,,,,,,,,,,,,
16,1,,172168-63100,,"PANEL(L),INST(EP",1,1,,,,,,,,,,,,,,,,
17,1,,172519-63240,,"BOLT 8X 16",16,16,,,,,,,,,,,,,,,,
17-1,1,,172174-44850,,"BOLT 8X 16",16,16,,,,,R,,72174AMA-1,M910001,72174AMA-
1,M910001,,,,,,,
18,1,,172165-63600,,"COVER (R)",1,1,,,,,,,,,,,,,,,,
19,1,,172165-63620,,"COVER (L)",1,1,,,,,,,,,,,,,,,,
20,1,,172165-63650,,"PLUG 10,HOLE",3,3,,,,,,,,,,,,,,,,
21,1,,172165-63660,,CAP,1,1,,,,,,,,,,,,,,,,
22,1,,172165-63700,,"PANEL(R),INST(EP",1,1,,,,,,,,,,,,,,,,
23,1,,22137-040000,,"WASHER 4, POLISHED",4,4,,,,,,,,,,,,,,,,
24,1,,26716-040002,,"NUT M 4",4,4,,,,,,,,,,,,,,,,
25,1,,172165-64300,,MOUNT,1,1,,,,,,,,,,,,,,,,
25-1,1,,172174-64300,,"MOUNT A",1,1,,,,,R,,72174AMA-1,M910001,72174AMA-
1,M910001,,,,,,,
26,1,,172165-64360,,"MOUNT B COMP.,EP",1,1,,,,,,,,,,,,,,,,
26-1,1,,172174-64360,,"MOUNT B",1,1,,,,,R,,72174AMA-1,M910001,72174AMA-
1,M910001,,,,,,,
27,1,,172165-64390,,MOUNT,1,1,,,,,,,,,,,,,,,,
27-1,1,,172174-64390,,"MOUNT C",1,1,,,,,R,,72174AMA-1,M910001,72174AMA-
1,M910001,,,,,,,
28,1,,26013-080202,,"BOLT W/WASHER M8X20",4,4,,,,,,,,,,,,,,,,
29,1,,26013-080552,,"BOLT M 8X 55",4,4,,,,,,,,,,,,,,,,
30,1,,26013-100202,,"BOLT W/WASHER M10X20",4,4,,,,,,,,,,,,,,,,
31,1,,172122-17190,,CLIP,,5,,,,,,,,,,,,,,,,
32,1,,172122-17190,,CLIP,,4,,,,,,,,,,,,,,,,
33,1,,172157-54850,,"GROMMET 18",,1,,,,,,,,,,,,,,,,
34,1,,172151-62240,,GROMMET,,2,,,,,,,,,,,,,,,,
35,1,,172165-68250,,"PLUG,RUBBER",,1,,,,,,,,,,,,,,,,
36,1,,172165-62300,,"STEP D",1,1,,,,,,,,,,,,,,,,
36-1,1,,172174-62300,,"STEP D",1,1,,,,,R,,72174AMA-1,M910001,72174AMA-
1,M910001,,,,,,,
37,1,,26013-100202,,"BOLT W/WASHER M10X20",3,3,,,,,,,,,,,,,,,,
38,1,,172116-46630,,"KNOB, LOCK LEVER",1,1,,,,,,,,,,,,,,,,
39,1,,172171-58800,,"PIN, LOCK",1,1,,,,,,,,,,,,,,,,
39-1,1,,172174-58800,,"PIN, LOCK",1,1,,,,,R,,72174AMA-1,M910001,72174AMA-
1,M910001,,,,,,,

Fig. 23 SEAT MOUNT & STEP

https://truckmanualshub.com/

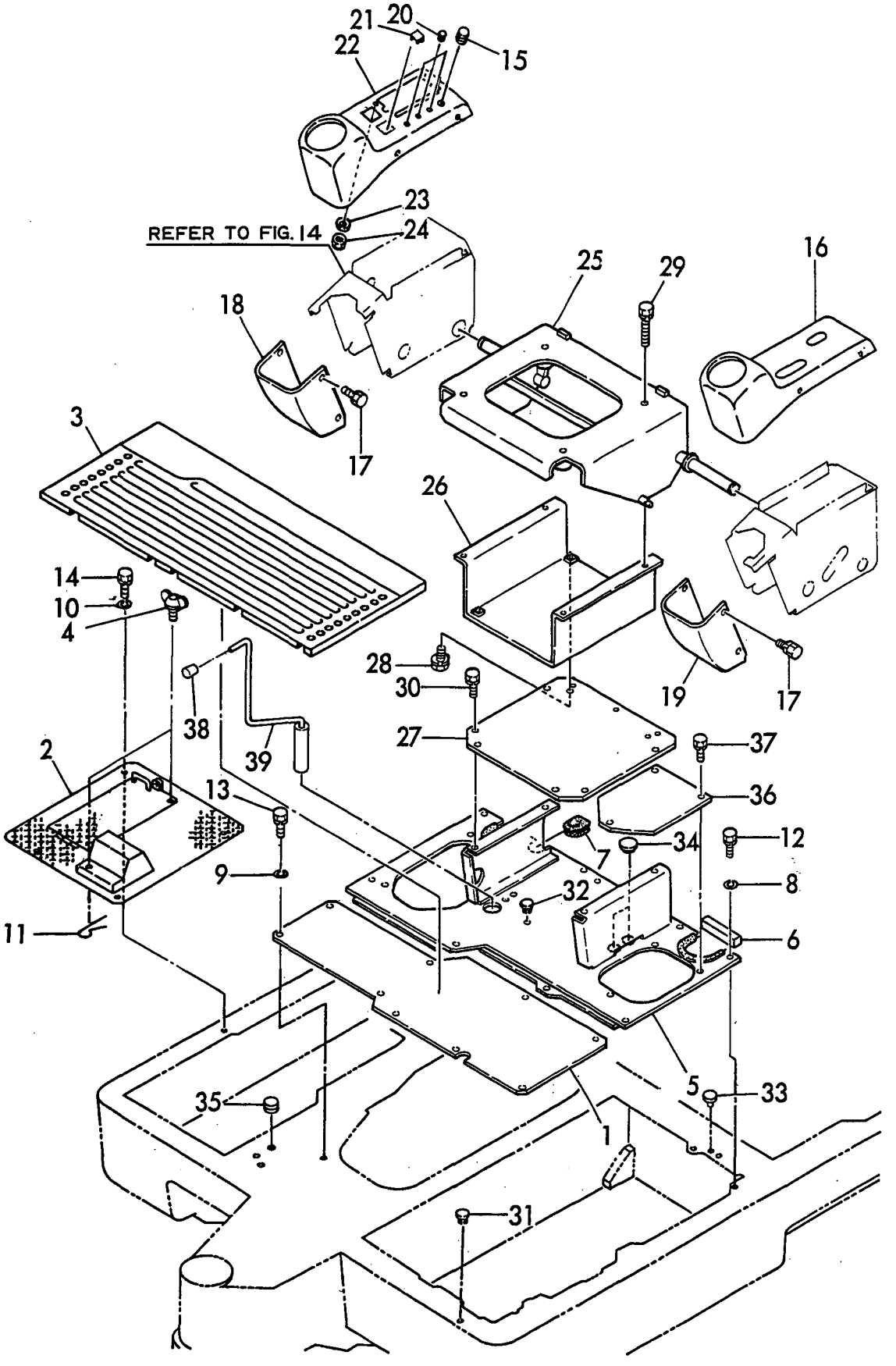

https://truckmanualshub.com/

```
1,1,,194145-04810,,"WASHER 10",4,4,,,,,,,,,,,,,,,,
1-1,1,,172159-65930,,"WASHER 10",4,4,,,,,R,,72174AMA-1,M910001,72174AMA-
1,M910001,,,,,,,
2,1,,194145-04810,,"WASHER 10",6,6,,,,,,,,,,,,,,,,
2-1,1,,172159-65930,,"WASHER 10",6,6,,,,,R,,72174AMA-1,M910001,72174AMA-
1,M910001,,,,,,,
3,1,,194145-04810,,"WASHER 10",4,4,,,,,,,,,,,,,,,,
3-1,1,,172159-65930,,"WASHER 10",4,4,,,,,R,,72174AMA-1,M910001,72174AMA-
1,M910001,,,,,,,
4,1,,172171-65100,,"BONNET CR CMP(EV",1,1,,,,,,,,,,,,,,,,
4-1,1,,172174-65100,,BONNET,1,1,,,,,R,,72174AMA-1,M910001,72174AMA-
1,M910001,,,,,,,
6,2,,172171-65780,,"RUBBER,SEAL C",1,1,,,,,,,,,,,,,,,,
7,2,,172168-65790,,RUBBER,1,1,,,,,,,,,,,,,,,,
7-1,2,,172174-65760,,"RUBBER,SEAL D",1,1,,,,,R,,72174AMA-1,M910001,72174AMA-
1,M910001,,,,,,,
8,2,,172171-65820,,"RUBBER,SEAL D",1,1,,,,,,,,,,,,,,,,
9,2,,172171-65850,,"RUBBER,SEAL K",1,1,,,,,,,,,,,,,,,,
9-1,2,,172174-65850,,"RUBBER,SEAL K",1,1,,,,,R,,72174AMA-1,M910001,72174AMA-
1,M910001,,,,,,,
10,1,,172168-65200,,"PIPE, EXH.EXTENSION",1,1,,,,,,,,,,,,,,,,
10-1,1,,172174-65350,,"PIPE, EXH.EXTENSION",1,1,,,,,R,,72174AMA-
1,M910001,72174AMA-1,M910001,,,,,,,
11,1,,172168-65260,,"SPRING,GAS",1,1,,,,,,,,,,,,,,,,
12,1,,172734-65260,,"PIN, BONNET LEVER",1,1,,,,,,,,,,,,,,,,
12-1,1,,172159-65940,,"PIN, BONNET LEVER",1,1,,,,,R,,72174AMA-
1,M910001,72174AMA-1,M910001,,,,,,,
13,1,,172734-65270,,"SPRING, CATCH",1,1,,,,,,,,,,,,,,,,
13-1,1,,172159-65960,,"SPRING CATCH",1,1,,,,,R,,72174AMA-1,M910001,72174AMA-
1,M910001,,,,,,,
14,1,,172171-65300,,"BONNET B CMP(EV",1,1,,,,,,,,,,,,,,,,
14-1,1,,172174-65300,,BONNET,1,1,,,,,R,,72174AMA-1,M910001,72174AMA-
1,M910001,,,,,,,
16,2,,172168-65760,,RUBBER,1,1,,,,,,,,,,,,,,,,
17,1,,172124-65450,,"LEVER, LOCK",1,1,,,,,,,,,,,,,,,,
17-1,1,,172159-65050,,"LEVER, LOCK",1,1,,,,,R,,72174AMA-1,M910001,72174AMA-
1,M910001,,,,,,,
18,1,,172171-65450,,"BONNET A CMP(EV",1,1,,,,,,,,,,,,,,,,
18-1,1,,172174-65450,,"BONNET A CMP(EV",1,1,,,,,R,,72174AMA-1,M910001,72174AMA-
1,M910001,,,,,,,
20,2,,172168-65750,,RUBBER,1,1,,,,,,,,,,,,,,,,
21,1,,172126-65460,,HOOK,1,1,,,,,,,,,,,,,,,,
21-1,1,,172161-65070,,"HOOK COMP.,KEY",1,1,,,,,R,,72174AMA-1,M910001,72174AMA-
1,M910001,,,,,,,
22,1,,172124-65480,,CATCHER,1,1,,,,,,,,,,,,,,,,
22-1,1,,172159-65950,,CATCHER,1,1,,,,,R,,72174AMA-1,M910001,72174AMA-
1,M910001,,,,,,,
23,1,,172124-65490,,"PLATE,CATCH",1,1,,,,,,,,,,,,,,,,
23-1,1,,172159-65690,,"PLATE,CATCH",1,1,,,,,R,,72174AMA-1,M910001,72174AMA-
1,M910001,,,,,,,
24,1,,172126-65500,,KEY,1,1,,,,,,,,,,,,,,,,
25,2,,172126-65571,,"WASHER LOCK",1,1,,,,,,,,,,,,,,,,
26,2,,26347-100002,,"U-NUT M10",1,1,,,,,,,,,,,,,,,,
27,1,,172171-65600,,"DUCT ASSY",1,1,,,,,,,,,,,,,,,,
27-1,1,,172174-65600,,"DUCT ASSY",1,1,,,,,R,,72174AMA-1,M910001,72174AMA-
1,M910001,,,,,,,
27-2,1,,172174-65601,,"DUCT
ASSY",1,1,,,,,N,,72174015,*1993.03,72174015,*1993.03,,,,,,,,,I
28,1,,172171-65650,,"BRACKET COMPL.",1,1,,,,,,,,,,,,,,,,
28-1,1,,172174-65650,,"BRACKET COMPL.",1,1,,,,,R,,72174AMA-1,M910001,72174AMA-
1,M910001,,,,,,,
29,1,,172168-65740,,SEAL,1,1,,,,,,,,,,,,,,,,
```

```
29-1,1,,172174-65740,,"SEAL,DUCT",1,1,,,,,R,,72174AMA-1,M910001,72174AMA-
1,M910001,,,,,,,
30,1,,172171-65830,,"RUBBER,SEAL E",1,1,,,,,,,,,,,,,,,,,
31,1,,22137-080000,,"WASHER 8, POLISHED",2,2,,,,,,,,,,,,,,,,,,
32,1,,22137-100000,,"WASHER 10,POLISHED",2,2,,,,,,,,,,,,,,,,,,
33,1,,22137-100000,,"WASHER 10,POLISHED",3,3,,,,,,,,,,,,,,,,,,
34,1,,22217-080000,,"SPRING WASHER  8",2,2,,,,,,,,,,,,,,,,,,
35,1,,22217-080000,,"SPRING WASHER  8",3,3,,,,,,,,,,,,,,,,,,
36,1,,22217-100000,,"SPRING WASHER 10",2,2,,,,,,,,,,,,,,,,,,
37,1,,22217-100000,,"SPRING WASHER 10",3,3,,,,,,,,,,,,,,,,,,
38,1,,22417-200200,,"COTTER PIN 2.0X20",2,2,,,,,,,,,,,,,,,,,,
39,1,,22417-200200,,"COTTER PIN 2.0X20",2,2,,,,,,,,,,,,,,,,,,
40,1,,26013-100252,,"BOLT W/WASHER M10X25",4,4,,,,,,,,,,,,,,,,,,
41,1,,26013-100252,,"BOLT W/WASHER M10X25",6,6,,,,,,,,,,,,,,,,,,
42,1,,26013-100252,,"BOLT W/WASHER M10X25",4,4,,,,,,,,,,,,,,,,,,
43,1,,26013-120352,,"BOLT M12X 35",5,5,,,,,,,,,,,,,,,,,,
44,1,,26116-080162,,"BOLT M 8X 16 PLATED",3,3,,,,,,,,,,,,,,,,,,
45,1,,26116-080202,,"BOLT M 8X 20 PLATED",2,2,,,,,,,,,,,,,,,,,,
46,1,,26116-100202,,"BOLT M10X 20 PLATED",2,2,,,,,,,,,,,,,,,,,,
47,1,,26116-100202,,"BOLT M10X 20 PLATED",3,3,,,,,,,,,,,,,,,,,,
48,1,,22157-080000,,"WASHER  8",2,2,,,,,,,,,,,,,,,,,,
49,1,,933110-00301,,"KEY ASSY",1,1,,,,,,,,,,,,,,,,,,
50,1,,172119-68600,,BUCK,1,1,,,,,,,,,,,,,,,,,,
51,1,,22117-080000,,"WASHER  8",2,2,,,,,,,,,,,,,,,,,,
52,1,,26116-080202,,"BOLT M 8X 20 PLATED",2,2,,,,,,,,,,,,,,,,,,
53,1,,26716-080002,,"NUT M 8",2,2,,,,,,,,,,,,,,,,,,
```

Fig. 24 BONNET

https://truckmanualshub.com/

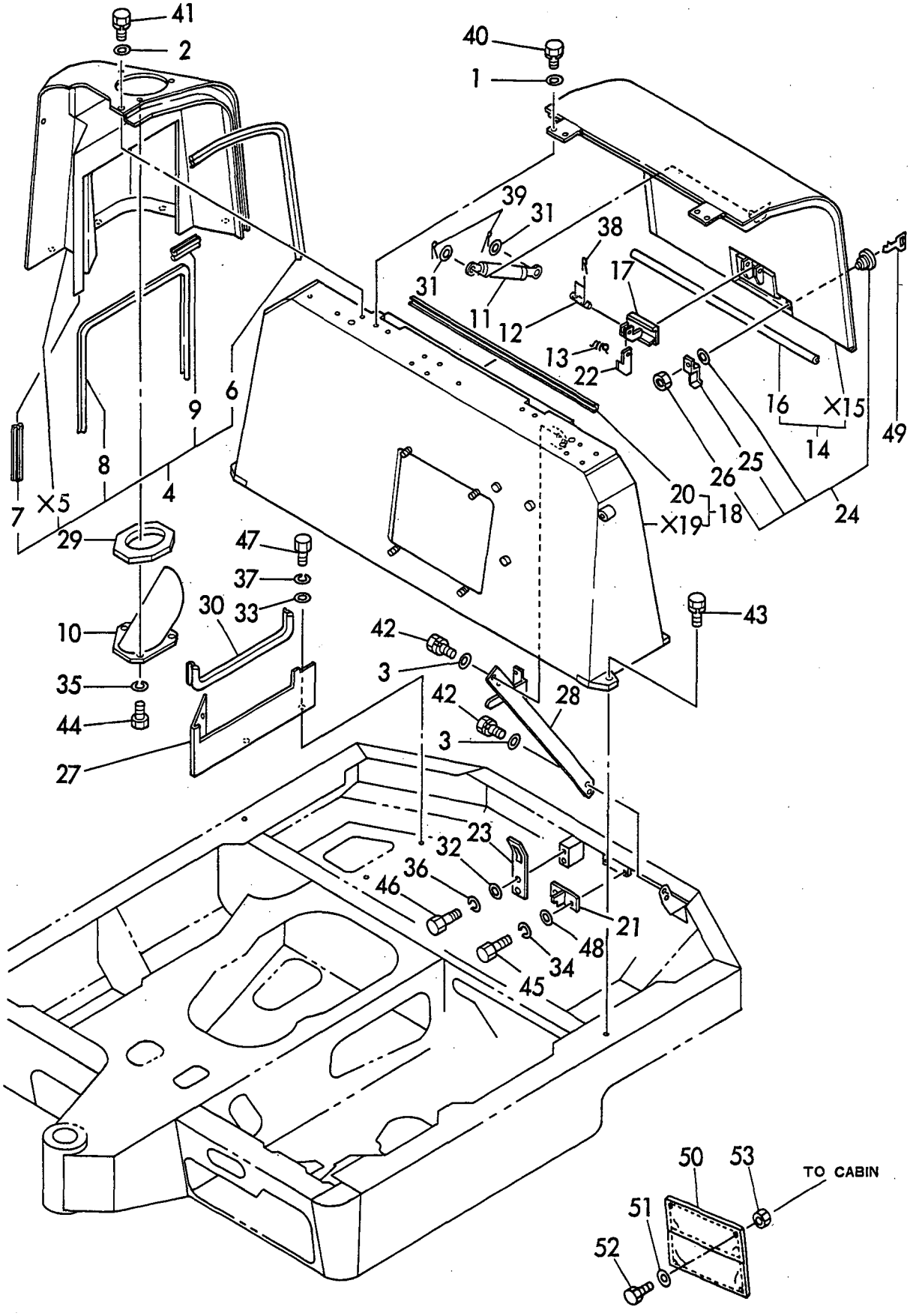

× MARK PARTS: NOT SOLD SEPARATELY.

https://truckmanualshub.com/

```
1,1,,772168-68110,,"CANOPY ASSY",,1,,,,,,,,,,,,,,,,,
1-1,1,,772174-68100,,"CANOPY ASSY",,1,,,,,R,,,,72174AMA-1,M910001,,,,,,,
2,2,,172168-68200,,"COLUMN R COMPL.",,1,,,,,,,,,,,,,,,,,
2-1,2,,172174-68201,,"COLUMN R COMPL.",,1,,,,,R,,,,72174AMA-1,M910001,,,,,,,
3,2,,172168-68250,,"COLUMN L COMPL.",,1,,,,,,,,,,,,,,,,,
3-1,2,,172174-68251,,"COLUMN L COMPL.",,1,,,,,R,,,,72174AMA-1,M910001,,,,,,,
4,2,,172168-68100,,"ROOF COMP.,CANOPY",,1,,,,,,,,,,,,,,,,,
4-1,2,,172174-68100,,"ROOF COMP.,CANOPY",,1,,,,,R,,,,72174AMA-1,M910001,,,,,,,
5,2,,22217-140000,,"SPRING WASHER 14",,8,,,,,,,,,,,,,,,,,
6,2,,26013-120352,,"BOLT M12X 35",,6,,,,,,,,,,,,,,,,,
7,2,,26116-140352,,"BOLT M14X 35 PLATED",,8,,,,,,,,,,,,,,,,,
8,1,,172165-68200,,"CANOPY F CMP",,1,,,,,,,,,,,,,,,,,
8-1,1,,172174-68300,,"CANOPY F COMPL.",,1,,,,,R,,,,72174AMA-1,M910001,,,,,,,
9,1,,26013-120352,,"BOLT M12X 35",,2,,,,,,,,,,,,,,,,,
```

Fig. 25 CANOPY

https://truckmanualshub.com/

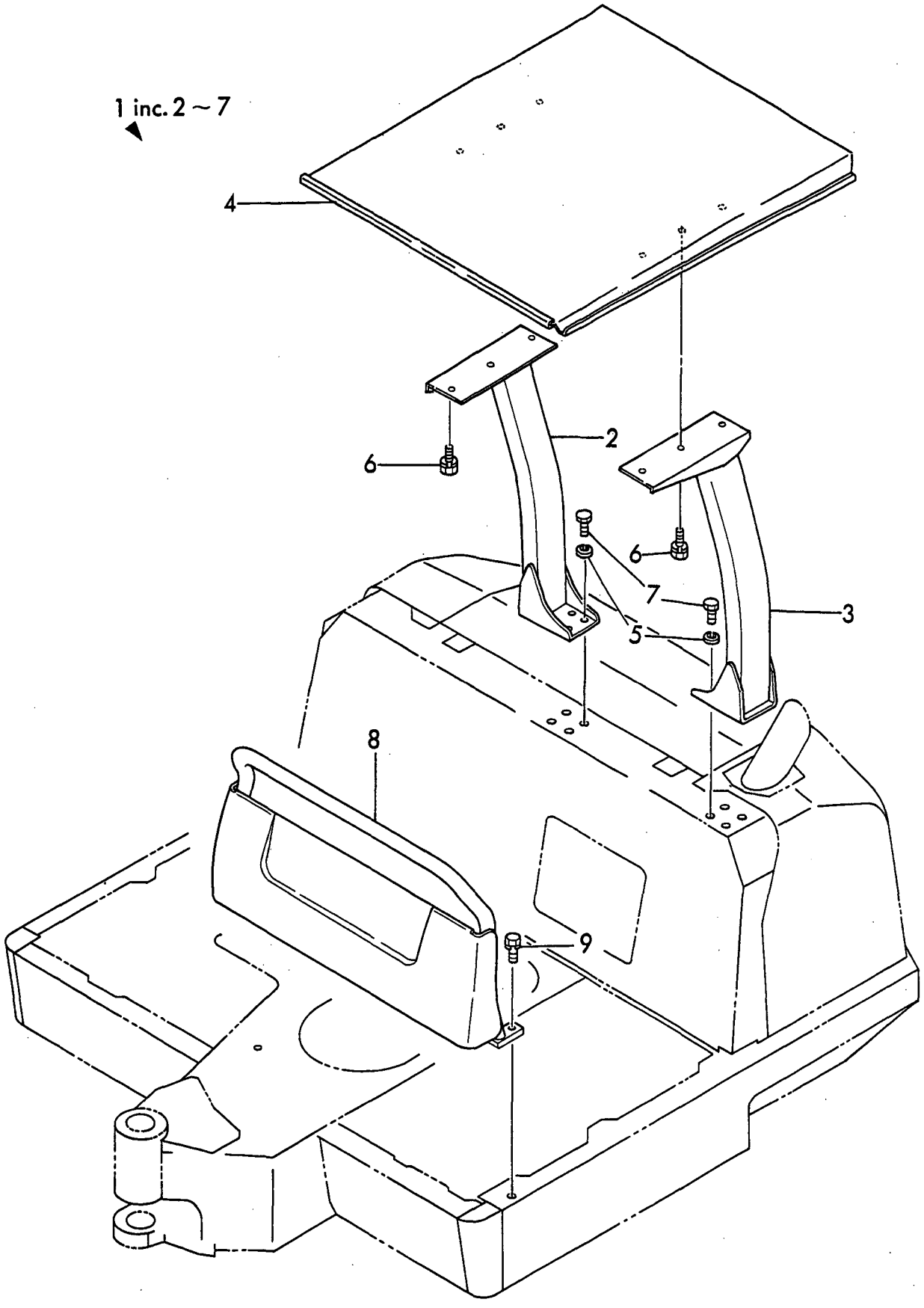

https://truckmanualshub.com/

```
1,1,,172168-71100,,COVER,1,1,,,,,,,,,,,,,,,,,
1-1,1,,172174-71100,,"COVER,FLYWHEEL",1,1,,,,,R,,72174AMA-1,M910001,72174AMA-
1,M910001,,,,,,,
2,1,,26013-100302,,"BOLT M10X 30",8,8,,,,,,,,,,,,,,,,,
3,1,,172165-71200,,COUPLING,1,1,,,,,,,,,,,,,,,,,
4,1,,26450-120402,,"BOLT M12X 40",3,3,,,,,,,,,,,,,,,,,
5,1,,172171-73110,,"PUMP ASSY",1,1,,,,,,,,,,,,,,,,,
5-1,1,,172171-73111,,"PUMP
ASSY",1,1,,,,,S,,72168207,*1993.11,72168207,*1993.11,,,,,,,,,I
6,2,,172168-71200,,"SHAFT ASSY, ROCKER",1,1,,,,,,,,,,,,,,,,,
7,3,,172168-71310,,SHAFT,1,1,,,,,,,,,,,,,,,,,
8,3,,172168-71320,,"SEAL CASE",1,1,,,,,,,,,,,,,,,,,
9,3,,172168-71330,,BEARING,1,1,,,,,,,,,,,,,,,,,
10,3,,172147-73680,,"SEAL, OIL",1,1,,,,,,,,,,,,,,,,,
11,3,,172162-73790,,"O-RING 140",1,1,,,,,,,,,,,,,,,,,
12,3,,22242-000250,,"CIRCLIP 25S",2,2,,,,,,,,,,,,,,,,,
13,3,,22252-000620,,"CIRCLIP 62(H)",1,1,,,,,,,,,,,,,,,,,
14,2,,172168-71210,,"HANGER COMPL.",1,1,,,,,,,,,,,,,,,,,
15,3,,172168-71340,,O-RING,1,1,,,,,,,,,,,,,,,,,
16,3,,172168-71550,,COVER,1,1,,,,,,,,,,,,,,,,,
17,3,,26450-060162,,"BOLT M 6X 16",4,4,,,,,,,,,,,,,,,,,
18,2,,172168-71220,,"ROTORY SET",1,1,,,,,,,,,,,,,,,,,
19,2,,172168-71230,,"COVER ASSY,GEAR CASE",1,1,,,,,,,,,,,,,,,,,
20,3,,172168-71350,,"PLATE, CONTROL",1,1,,,,,,,,,,,,,,,,,
21,3,,172168-71360,,"GASKET, BONNET",1,1,,,,,,,,,,,,,,,,,
22,3,,172168-71370,,CPUPRING,1,1,,,,,,,,,,,,,,,,,
23,3,,172168-71560,,BEARING,1,1,,,,,,,,,,,,,,,,,
24,3,,172141-73210,,CIRCLIP,1,1,,,,,,,,,,,,,,,,,
25,3,,172165-73580,,ORIFICE,3,3,,,,,,,,,,,,,,,,,
26,3,,172142-74650,,"PLUG 1/8",1,1,,,,,,,,,,,,,,,,,
27,3,,22312-060140,,"PARALLEL PIN 6X14",2,2,,,,,,,,,,,,,,,,,
28,3,,24315-000080,,"O-RING 1B P-8.0",1,1,,,,,,,,,,,,,,,,,
29,3,,26450-100302,,"BOLT M10X 30",4,4,,,,,,,,,,,,,,,,,
30,3,,26450-100502,,"BOLT 10X 50",1,1,,,,,,,,,,,,,,,,,
31,2,,172168-71240,,"SPRING,CONTROL",1,1,,,,,,,,,,,,,,,,,
32,3,,172168-71380,,RETAINER,1,1,,,,,,,,,,,,,,,,,
33,3,,172168-71390,,RETAINER,1,1,,,,,,,,,,,,,,,,,
34,3,,172168-71400,,COVER,1,1,,,,,,,,,,,,,,,,,
35,3,,172168-71410,,SPRING,1,1,,,,,,,,,,,,,,,,,
36,3,,172168-71420,,SPRING,1,1,,,,,,,,,,,,,,,,,
37,3,,172168-71430,,O-RING,1,1,,,,,,,,,,,,,,,,,
38,3,,172168-71440,,SHIM,2,2,,,,,,,,,,,,,,,,,
39,3,,172168-71450,,SHIM,2,2,,,,,,,,,,,,,,,,,
40,3,,172168-71460,,SHIM,2,2,,,,,,,,,,,,,,,,,
41,3,,172165-73640,,"ADJUST SCREW",1,1,,,,,,,,,,,,,,,,,
42,3,,172165-73670,,"NUT M 6",1,1,,,,,,,,,,,,,,,,,
43,3,,26450-080302,,"BOLT M 8X 30",2,2,,,,,,,,,,,,,,,,,
44,2,,172171-71250,,"PISTON ASSY, CONTROL",1,1,,,,,,,,,,,,,,,,,
45,3,,172168-71470,,CYLINDER,1,1,,,,,,,,,,,,,,,,,
46,3,,172171-71480,,PISTON,1,1,,,,,,,,,,,,,,,,,
47,3,,172168-71490,,"PARALLEL PIN",2,2,,,,,,,,,,,,,,,,,
48,3,,172168-71500,,"PARALLEL PIN",1,1,,,,,,,,,,,,,,,,,
49,3,,172168-71510,,O-RING,1,1,,,,,,,,,,,,,,,,,
50,3,,172168-71520,,"CONICAL SPRING",4,4,,,,,,,,,,,,,,,,,
51,3,,172168-71530,,RETAINER,1,1,,,,,,,,,,,,,,,,,
52,3,,172165-73790,,O-RING,1,1,,,,,,,,,,,,,,,,,
53,3,,172143-74220,,O-RING,1,1,,,,,,,,,,,,,,,,,
54,3,,26450-080252,,"BOLT M 8X 25",2,2,,,,,,,,,,,,,,,,,
55,2,,172168-
71270,,PLAG,1,1,,,,,Z,,72168207,*1993.11,72168207,*1993.11,,,,,,,,,I
56,2,,172171-71280,,"PUMP ASSY, DPLX.GEAR",1,1,,,,,,,,,,,,,,,,,
57,3,,172171-71290,,"PUMP ASSY, GEAR",1,1,,,,,,,,,,,,,,,,,
58,4,,172141-71520,,RING,2,2,,,,,,,,,,,,,,,,,
```

https://truckmanualshub.com/

```
59,4,,172168-71540,,PLATE,1,1,,,,,,,,,,,,,,,,,
60,4,,172141-71550,,O-RING,2,2,,,,,,,,,,,,,,,,,
61,4,,172141-71560,,RING,2,2,,,,,,,,,,,,,,,,,
62,4,,172141-73220,,PLATE,2,2,,,,,,,,,,,,,,,,,
63,4,,172141-73230,,GUIDE,2,2,,,,,,,,,,,,,,,,,
64,4,,172141-73240,,"PIN, PARALLEL",4,4,,,,,,,,,,,,,,,,,
65,4,,26450-100752,,"BOLT,SOCKET HEAD",4,4,,,,,,,,,,,,,,,,,
66,3,,172168-71300,,"PUMP, HYD. OIL",1,1,,,,,,,,,,,,,,,,,
67,4,,172141-73240,,"PIN, PARALLEL",2,2,,,,,,,,,,,,,,,,,
68,4,,172165-73860,,COUPLING,1,1,,,,,,,,,,,,,,,,,
69,4,,172165-73870,,O-RING,1,1,,,,,,,,,,,,,,,,,
70,4,,172165-73880,,O-RING,1,1,,,,,,,,,,,,,,,,,
71,4,,26450-080182,,"BOLT M 8X 18",2,2,,,,,,,,,,,,,,,,,
72,4,,26450-080402,,"BOLT 8X40",4,4,,,,,,,,,,,,,,,,,
73,2,,24311-000140,,"O-RING 1A P-
14.0",1,1,,,,,Z,,72168207,*1993.11,72168207,*1993.11,,,,,,,,,I
74,1,,26013-120352,,"BOLT M12X 35",2,2,,,,,,,,,,,,,,,,,
75,1,,172164-
73110,,VALVE,1,1,,,,,W,,72168207,*1993.11,72168207,*1993.11,,,,,,,,,I
```

Fig. 26 HYD. OIL PUMP & JOINT

https://truckmanualshub.com/

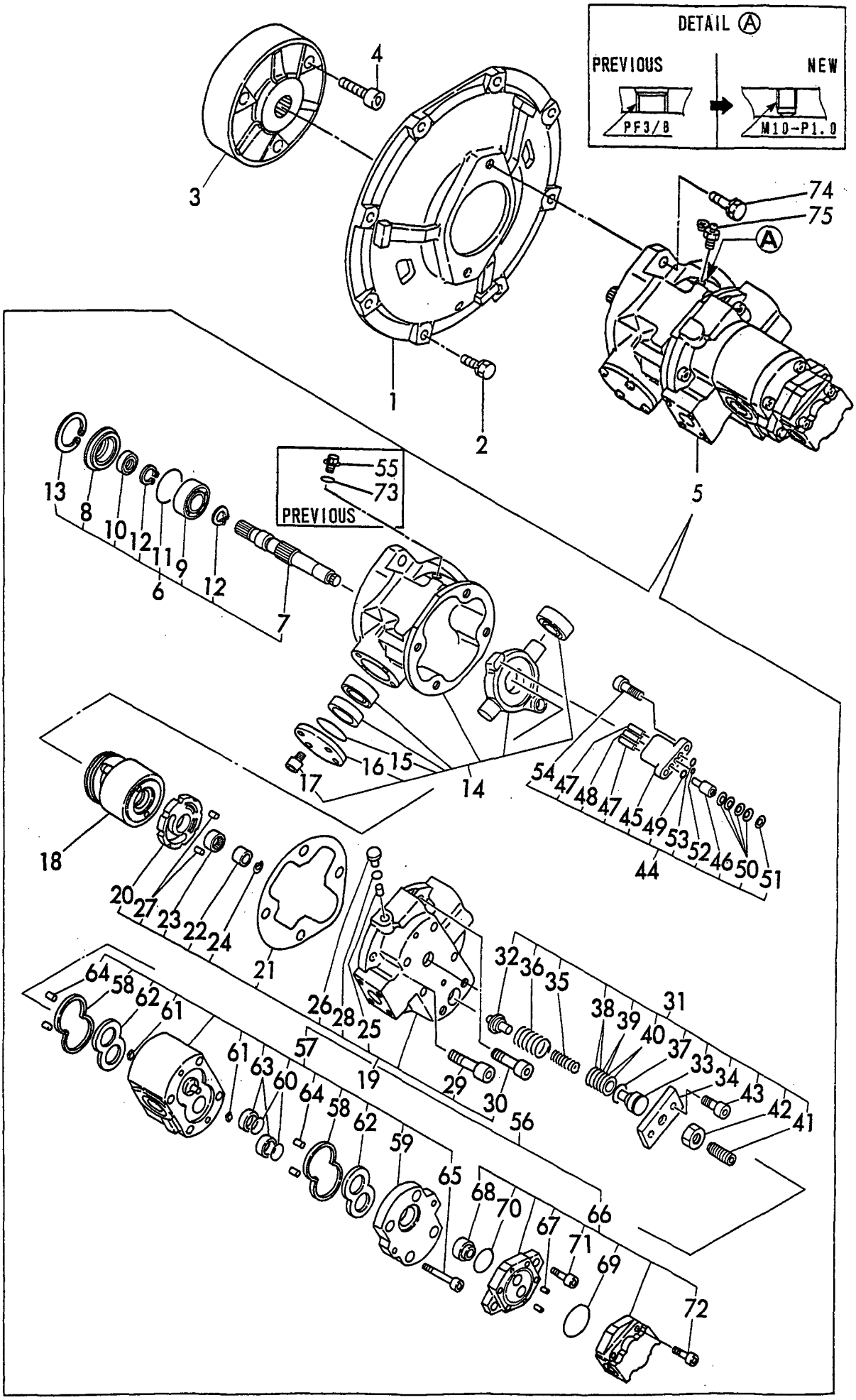

https://truckmanualshub.com/

```
1,1,,933147-03400,,"WASHER, BRAKE ARM",2,2,,,,,,,,,,,,,,,,,
1-1,1,,172161-72920,,WASHER,2,2,,,,,R,,72174AMA-1,M910001,72174AMA-
1,M910001,,,,,,,
2,1,,933168-14170,,"SPRING 16",4,4,,,,,,,,,,,,,,,,,
2-1,1,,172159-72860,,SPRING,4,4,,,,,R,,72174AMA-1,M910001,72174AMA-
1,M910001,,,,,,,
3,1,,172162-61770,,"GUIDE,SLIDE",2,2,,,,,,,,,,,,,,,,,
```

Fig. 27 BOOM CYLINDER & SWING CYLINDER

https://truckmanualshub.com/

BOOM CYLINDER

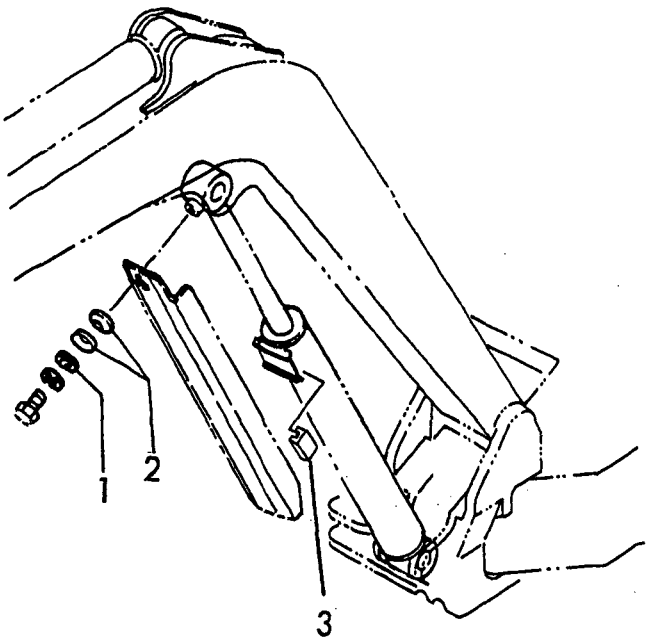

SWING CYLINDER

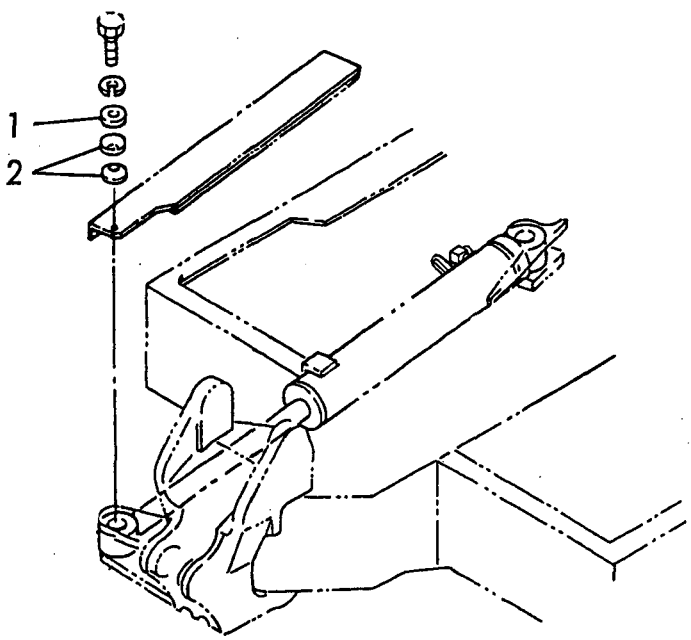

```
1,1,,172171-73700,,"MOTOR ASSY,DRIVING",2,2,,,,,,,,,,,,,,,,
2,2,,172148-70240,,ORIFICE,4,4,,,,,,,,,,,,,,,,
3,2,,172148-70250,,SPOOL,2,2,,,,,,,,,,,,,,,,
4,2,,172141-70290,,"HOLDER, SPRING",2,2,,,,,,,,,,,,,,,,
5,2,,172148-70301,,PLUG,4,4,,,,,,,,,,,,,,,,
6,2,,172141-70310,,"SNAP RING",2,2,,,,,,,,,,,,,,,,
7,2,,172122-70410,,PIN,4,4,,,,,,,,,,,,,,,,
8,2,,172147-70440,,"SEAT, SPRING",4,4,,,,,,,,,,,,,,,,
9,2,,172147-70450,,SPRING,4,4,,,,,,,,,,,,,,,,
10,2,,172147-70460,,CAP,4,4,,,,,,,,,,,,,,,,
11,2,,172141-70480,,PIN,2,2,,,,,,,,,,,,,,,,
12,2,,172147-70490,,SPRING,2,2,,,,,,,,,,,,,,,,
13,2,,172147-70500,,PLUG,4,4,,,,,,,,,,,,,,,,
14,2,,172147-70510,,PLUG,6,6,,,,,,,,,,,,,,,,
15,2,,172122-70540,,"BOLT, SOCKET",12,12,,,,,,,,,,,,,,,,
16,2,,172171-70800,,REDUCTION,2,2,,,,,,,,,,,,,,,,
17,3,,172141-70030,,"BEARING, ANGULAR",2,2,,,,,,,,,,,,,,,,
18,3,,172141-70040,,"NUT, RING",2,2,,,,,,,,,,,,,,,,
19,3,,172141-70060,,"GEAR(B), PLANETARY",8,8,,,,,,,,,,,,,,,,
20,3,,172141-70070,,"CAGE & ROLLER",8,8,,,,,,,,,,,,,,,,
21,3,,172141-70080,,COLLAR,8,8,,,,,,,,,,,,,,,,
22,3,,172141-77090,,WASHER,8,8,,,,,,,,,,,,,,,,
23,3,,172141-70100,,"PLATE, THRUST",2,2,,,,,,,,,,,,,,,,
24,3,,172141-70110,,SCREW,8,8,,,,,,,,,,,,,,,,
25,3,,172141-70120,,"GEAR, SUN",2,2,,,,,,,,,,,,,,,,
26,3,,172141-70150,,"CAGE & ROLLER",6,6,,,,,,,,,,,,,,,,
27,3,,172141-70160,,"INNER LACE",6,6,,,,,,,,,,,,,,,,
28,3,,172148-70170,,HOLDER,2,2,,,,,,,,,,,,,,,,
29,3,,172141-70180,,"PLATE(T1.8), THRUST",2,2,,,,,1,,,,,,,,,,
30,3,,172171-70820,,"PLATE, THRUST",2,2,,,,,1,,,,,,,,,,
31,3,,172141-70190,,"PLATE(T2.3), THRUST",2,2,,,,,1,,,,,,,,,,
32,3,,172141-70200,,"PLATE(T2.8), THRUST",2,2,,,,,1,,,,,,,,,,
33,3,,172147-70220,,PLUG,4,4,,,,,,,,,,,,,,,,
34,3,,172141-70230,,WIRE,2,2,,,,,,,,,,,,,,,,
35,3,,172122-70350,,BALL,264,264,,,,,,,,,,,,,,,,
36,3,,172171-70810,,"GEAR, DRIVE",2,2,,,,,,,,,,,,,,,,
37,3,,172148-70180,,"GEAR(A), PLANETARY",6,6,,,,,,,,,,,,,,,,
38,3,,172168-71770,,"SEAL SET, REDUCTION",2,2,,,,,,,,,,,,,,,,
39,4,,172141-70020,,"SEAL, FLOATING",2,2,,,,,,,,,,,,,,,,
40,4,,172162-70820,,O-RING,2,2,,,,,,,,,,,,,,,,
41,3,,172168-71840,,COVER,2,2,,,,,,,,,,,,,,,,
42,3,,172122-73430,,PLUG,4,4,,,,,,,,,,,,,,,,
43,3,,22242-000350,,"CIRCLIP   35",2,2,,,,,,,,,,,,,,,,
44,3,,22351-050016,,"SPRING PIN 5X16",6,6,,,,,,,,,,,,,,,,
45,3,,23871-020000,,"PLUG PT1/4,SCREW",4,4,,,,,,,,,,,,,,,,
46,3,,23871-030000,,"PLUG PT3/8,SCREW",6,6,,,,,,,,,,,,,,,,
47,2,,172171-70830,,PLATE,2,2,,,,,,,,,,,,,,,,
48,2,,172168-71780,,"SEAL SET, MOTOR",2,2,,,,,,,,,,,,,,,,
49,3,,172171-70370,,"SEAL, OIL",2,2,,,,,,,,,,,,,,,,
50,3,,24315-000070,,"O-RING 1B P-7.0",6,6,,,,,,,,,,,,,,,,
51,3,,24315-000100,,"O-RING 1B P-10.0",4,4,,,,,,,,,,,,,,,,
52,3,,24315-000140,,"O-RING 1B P-14.0",4,4,,,,,,,,,,,,,,,,
53,3,,24315-000290,,"O-RING 1B P-29.0",4,4,,,,,,,,,,,,,,,,
54,3,,24325-001200,,"O-RING BG120.0",2,2,,,,,,,,,,,,,,,,
55,2,,172168-71790,,"SEAL KIT, BLOCK",2,2,,,,,,,,,,,,,,,,
56,3,,172147-70580,,"RING P12 T2, BACK UP",4,4,,,,,,,,,,,,,,,,
57,3,,172147-70600,,"RING P15,T3,BACKUP",4,4,,,,,,,,,,,,,,,,
58,3,,24315-000070,,"O-RING 1B P-7.0",6,6,,,,,,,,,,,,,,,,
59,3,,24315-000110,,"O-RING 1B P-11.0",4,4,,,,,,,,,,,,,,,,
60,3,,24315-000120,,"O-RING 1B P-12.0",2,2,,,,,,,,,,,,,,,,
61,3,,24315-000150,,"O-RING 1B P-15.0",2,2,,,,,,,,,,,,,,,,
62,3,,24315-000160,,"O-RING 1B P-16.0",4,4,,,,,,,,,,,,,,,,
63,3,,24315-000240,,"O-RING 1B P-24.0",2,2,,,,,,,,,,,,,,,,
```

https://truckmanualshub.com/

```
64,2,,172168-71850,,SHAFT,2,2,,,,,,,,,,,,,,,,
65,2,,172168-71870,,BALL,2,2,,,,,,,,,,,,,,,,
66,2,,172168-71880,,"BLOCK, CYLINDER",2,2,,,,,,,,,,,,,,,,
67,2,,172168-71890,,SPRING,2,2,,,,,,,,,,,,,,,,
68,2,,172168-71900,,"SEAT,SPRING",2,2,,,,,,,,,,,,,,,,
69,2,,172168-71910,,PIN,6,6,,,,,,,,,,,,,,,,
70,2,,172168-71920,,"HOLDER,RETAINER",2,2,,,,,,,,,,,,,,,,
71,2,,172168-71930,,"PLATE, RETAINER",2,2,,,,,,,,,,,,,,,,
72,2,,172168-71940,,PISTON,18,18,,,,,,,,,,,,,,,,
73,2,,172168-71950,,SPRING,4,4,,,,,,,,,,,,,,,,
74,2,,172168-71960,,PLATE,2,2,,,,,,,,,,,,,,,,
75,2,,172168-71970,,"PLUNGER W/BARREL",2,2,,,,,,,,,,,,,,,,
76,3,,172147-70420,,PLUNGER,2,2,,,,,,,,,,,,,,,,
77,3,,172122-70430,,"VALVE, CHECK",4,4,,,,,,,,,,,,,,,,
78,3,,172147-70430,,PLUG,4,4,,,,,,,,,,,,,,,,
79,3,,172122-70440,,SPRING,4,4,,,,,,,,,,,,,,,,
80,2,,172168-71980,,"BLOCK ASSY.,RELIEF",2,2,,,,,,,,,,,,,,,,
81,3,,172148-70350,,BOLT,8,8,,,,,,,,,,,,,,,,
82,3,,172162-70690,,"VALVE ASSY, RELIEF",4,4,,,,,,,,,,,,,,,,
83,4,,172153-70140,,"GUIDE, SPRING",4,4,,,,,,,,,,,,,,,,
84,4,,172162-70750,,PISTON,4,4,,,,,,,,,,,,,,,,
85,4,,24315-000090,,"O-RING 1B P- 9.0",4,4,,,,,,,,,,,,,,,,
86,3,,172168-71990,,"VALVE BODY",2,2,,,,,,,,,,,,,,,,
87,3,,23871-020000,,"PLUG PT1/4,SCREW",4,4,,,,,,,,,,,,,,,,
88,2,,172638-73330,,PLATE,2,2,,,,,,,,,,,,,,,,
89,2,,172312-74790,,ORIFICE,8,8,,,,,,,,,,,,,,,,
90,2,,24101-060024,,"BALL BEARING",2,2,,,,,,,,,,,,,,,,
91,2,,24101-060040,,"BALL BEARING",2,2,,,,,,,,,,,,,,,,
92,1,,26013-120302,,"BOLT W/WASHER M12X30",18,18,,,,,,,,,,,,,,,,
```

Fig. 28 TRAVEL MOTOR

https://truckmanualshub.com/

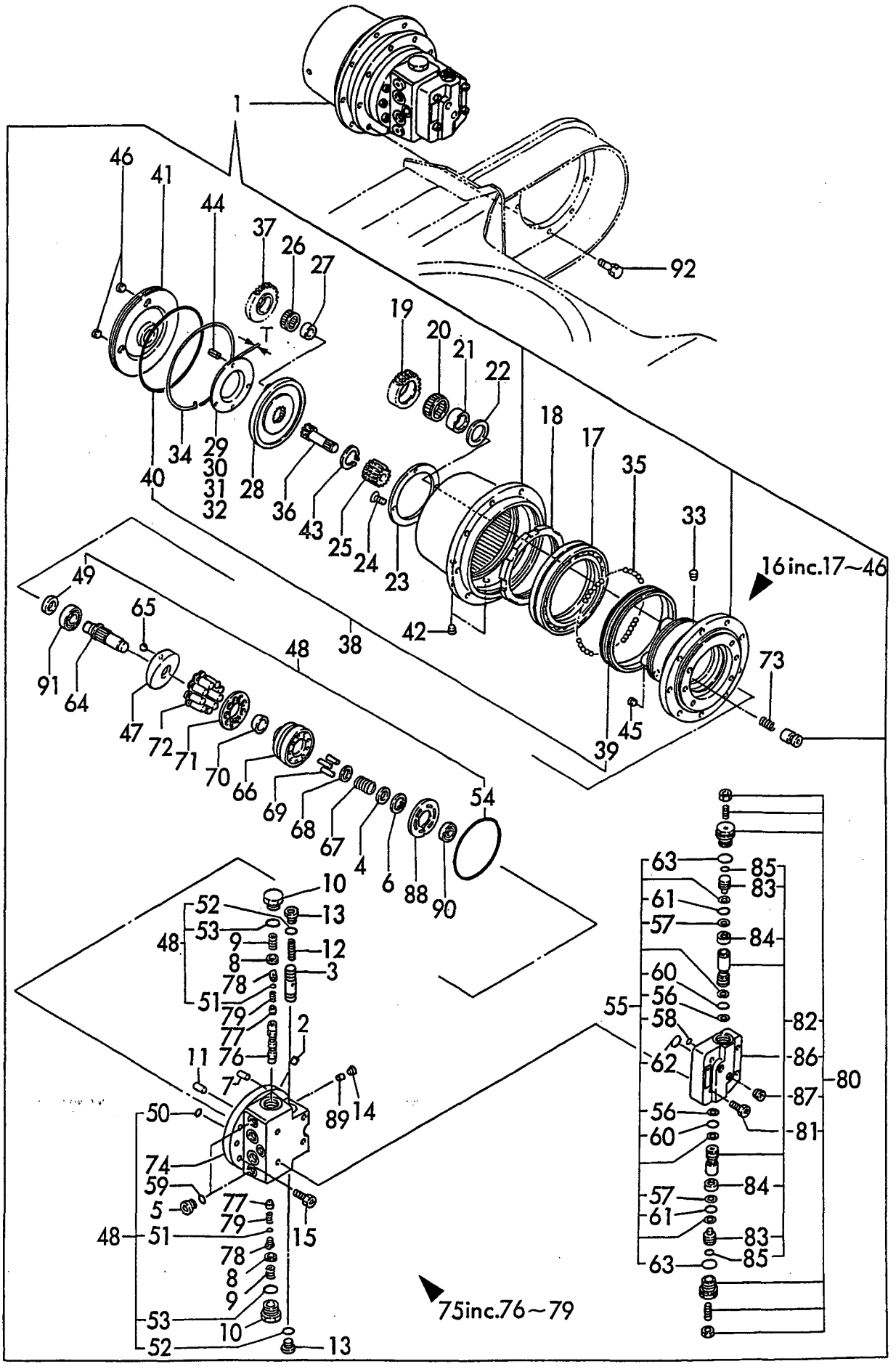

https://truckmanualshub.com/

```
1,1,,172171-73311,,"MOTOR ASSY, SWING",1,1,,,,,,,,,,,,,,,,,
2,2,,172171-73321,,"VALVE CMP.",1,1,,,,,,,,,,,,,,,,,
3,3,,172168-73360,,"SEAL KIT",1,1,,,,,,,,,,,,,,,,,
4,3,,172171-73350,,"CARTRIDGE ASSY",2,2,,,,,,,,,,,,,,,,,
5,3,,172168-73340,,"VALVE BODY",1,1,,,,,,,,,,,,,,,,,
6,3,,172168-73370,,BOLT,6,6,,,,,,,,,,,,,,,,,
7,2,,172171-73401,,"MOTOR ASSY,SWING",1,1,,,,,,,,,,,,,,,,,
8,3,,172171-73420,,PINION,1,1,,,,,,,,,,,,,,,,,
9,3,,172171-73430,,"BALL BEARING",1,1,,,,,,,,,,,,,,,,,
10,3,,172171-73440,,"BALL BEARING",1,1,,,,,,,,,,,,,,,,,
11,3,,172171-73410,,HOUSING,1,1,,,,,,,,,,,,,,,,,
12,3,,172171-73460,,"RETAINING RING",1,1,,,,,,,,,,,,,,,,,
13,3,,172171-73481,,"PLATE,WEAR",1,1,,,,,,,,,,,,,,,,,
14,3,,172137-70490,,PLUG,1,1,,,,,,,,,,,,,,,,,
15,3,,172148-73350,,"PLATE, VALVE",1,1,,,,,,,,,,,,,,,,,
16,3,,172137-70600,,VALVE,1,1,,,,,,,,,,,,,,,,,
17,3,,172137-70590,,PLATE,1,1,,,,,,,,,,,,,,,,,
18,3,,172137-70580,,SPRING,2,2,,,,,,,,,,,,,,,,,
19,3,,172137-70570,,PIN,2,2,,,,,,,,,,,,,,,,,
20,3,,172171-73491,,DRAIVE,1,1,,,,,,,,,,,,,,,,,
21,3,,172141-77250,,ROLLER,1,1,,,,,,,,,,,,,,,,,
22,3,,172141-77260,,"VALVE DRIVE",1,1,,,,,,,,,,,,,,,,,
23,3,,172171-73501,,"HOUSING, VALVE",1,1,,,,,,,,,,,,,,,,,
24,3,,172168-73580,,BALL,2,2,,,,,,,,,,,,,,,,,
25,3,,172168-73590,,PLAG,2,2,,,,,,,,,,,,,,,,,
26,3,,172168-73600,,SPRING,2,2,,,,,,,,,,,,,,,,,
27,3,,172171-73511,,BOLT,4,4,,,,,,,,,,,,,,,,,
28,3,,172137-70490,,PLUG,1,1,,,,,,,,,,,,,,,,,
29,3,,172171-73521,,"SEAL KIT",1,1,,,,,,,,,,,,,,,,,
30,1,,22217-120000,,"WASHER 12,SPRING",4,4,,,,,,,,,,,,,,,,,
31,1,,26116-120402,,"BOLT M12X 40",4,4,,,,,,,,,,,,,,,,,
```

Fig. 29 TURNING MOTOR

https://truckmanualshub.com/

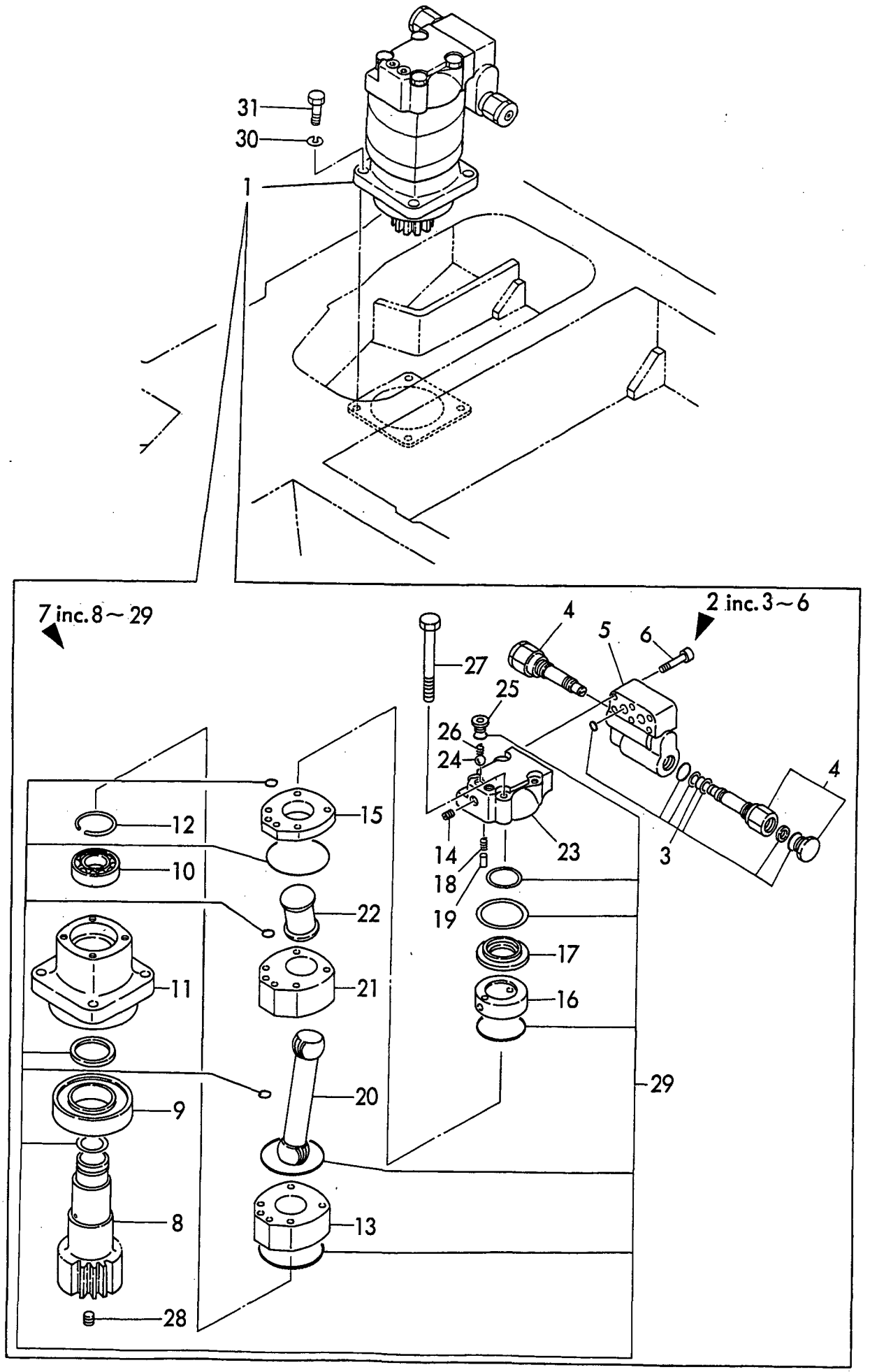

https://truckmanualshub.com/

```
1,1,,172148-73800,,"JOINT, SEIVEL",1,1,,,,,,,,,,,,,,,,,
2,2,,172148-73810,,"SHAFT, SWIVEL",1,1,,,,,,,,,,,,,,,,,
3,2,,172148-73830,,"FLANGE, SWIVEL",1,1,,,,,,,,,,,,,,,,,
4,2,,172148-73840,,"HUB, SWIVEL",1,1,,,,,,,,,,,,,,,,,
5,2,,172137-73860,,"SPACER, SWIVEL",1,1,,,,,,,,,,,,,,,,,
6,2,,172148-73880,,"SEAL KIT, SWIVEL",1,1,,,,,,,,,,,,,,,,,
7,3,,172148-73860,,"SEAL STK",7,7,,,,,,,,,,,,,,,,,
8,3,,172148-73870,,"LING EL, BUCK UP",1,1,,,,,,,,,,,,,,,,,
9,3,,24311-000750,,"O-RING 1A P-75.0",1,1,,,,,,,,,,,,,,,,,
10,3,,172142-73800,,"O-RING 55.76X5.7",1,1,,,,,,,,,,,,,,,,,
11,3,,24321-000700,,"O-RING 1A G-70.0",1,1,,,,,,,,,,,,,,,,,
12,2,,22242-000451,,"CIRCLIP   45",1,1,,,,,,,,,,,,,,,,,
13,2,,23871-020000,,"PLUG PT1/4,SCREW",7,7,,,,,,,,,,,,,,,,,
14,2,,26013-100352,,"BOLT M10X 35",3,3,,,,,,,,,,,,,,,,,
15,1,,26013-100302,,"BOLT M10X 30",4,4,,,,,,,,,,,,,,,,,
```

Fig. 30 SWIVEL JOINT

https://truckmanualshub.com/

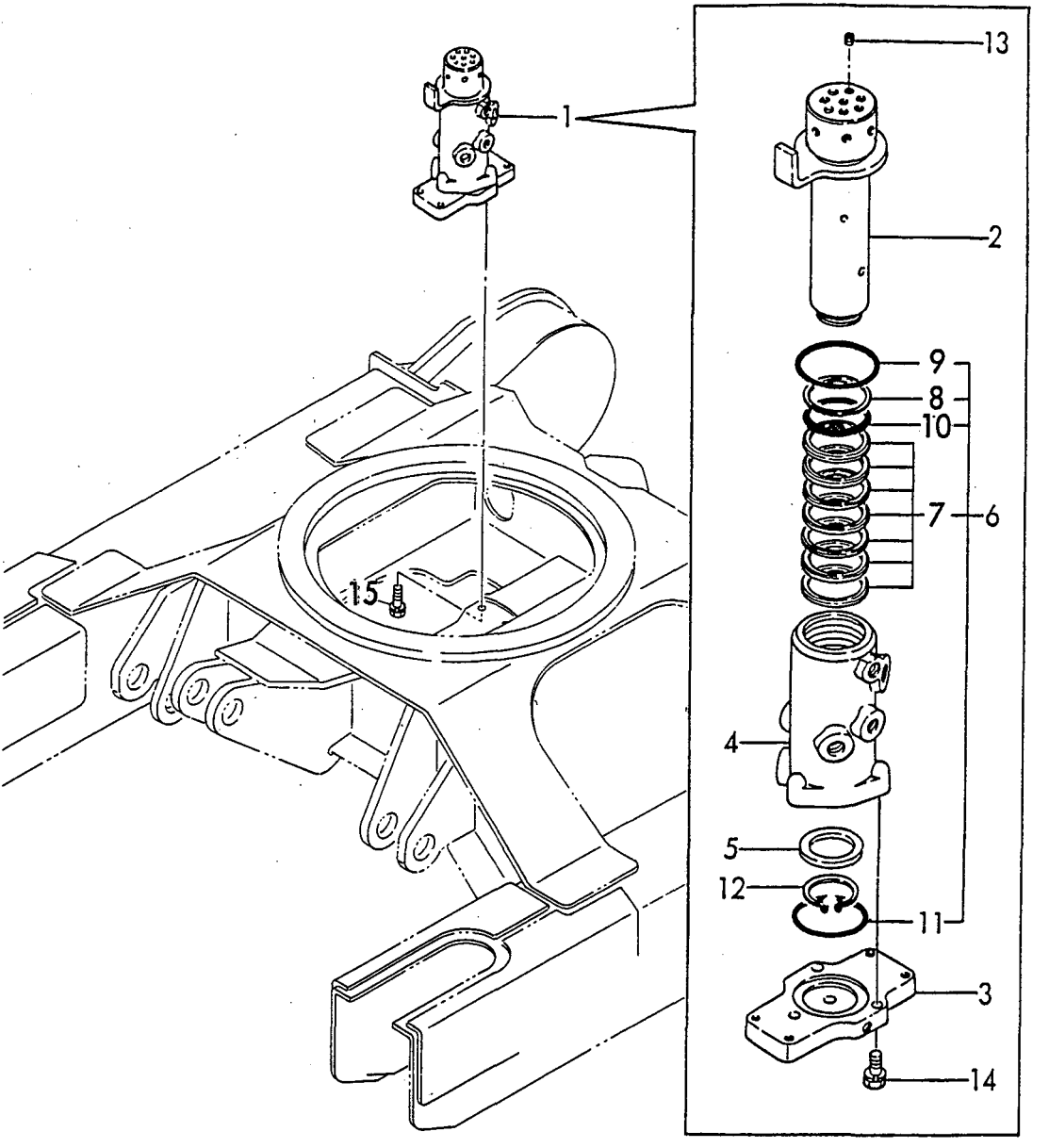

https://truckmanualshub.com/

```
1,1,,172165-45490,,CUSHION,5,5,,,,,,,,,,,,,,,,
2,1,,172168-45400,,"PLATE ASSY, LINK",1,1,,,,,,,,,,,,,,,,
2-1,1,,172174-45600,,"PLATE ASSY, LINK",1,1,,,,,R,,72174AMA-1,M910001,72174AMA-
1,M910001,,,,,,,
3,1,,22252-000280,,"CIRCLIP   28",5,5,,,,,,,,,,,,,,,,
4,1,,26106-100352,,"BOLT M10X 35 PLATED",5,5,,,,,,,,,,,,,,,,
5,1,,26013-100302,,"BOLT M10X 30",3,3,,,,,,,,,,,,,,,,
6,1,,26716-100002,,"NUT M10",1,1,,,,,,,,,,,,,,,,
7,1,,172171-74120,,"VALVE ASSY,CONTROL",1,1,,,,,,,,,,,,,,,,
8,2,,26716-080002,,"NUT M 8",4,4,,,,,,,,,,,,,,,,
9,2,,172151-74110,,TIE-ROD,2,2,,,,,,,,,,,,,,,,
10,2,,26716-100002,,"NUT M10",2,2,,,,,,,,,,,,,,,,
11,2,,172151-74120,,TIE-ROD,1,1,,,,,,,,,,,,,,,,
12,2,,172171-72500,,"SECTION KIT,INLET",1,1,,,,,,,,,,,,,,,,
13,3,,172122-74520,,"SECTION, INLET",1,1,,,,,,,,,,,,,,,,
14,4,,172122-74590,,"HOUSING, INLET",1,1,,,,,,,,,,,,,,,,
15,4,,933171-80590,,O-RING,1,1,,,,,,,,,,,,,,,,
16,3,,172171-72630,,"VALVE 175/25,RELIEF",1,1,,,,,,,,,,,,,,,,
17,4,,172116-74150,,O-RING,1,1,,,,,,,,,,,,,,,,
18,3,,172116-74320,,PLUG,1,1,,,,,,,,,,,,,,,,
19,3,,172116-74150,,O-RING,1,1,,,,,,,,,,,,,,,,
20,2,,172168-72620,,"SECTION ASSY.,SPACER",1,1,,,,,,,,,,,,,,,,
21,3,,172122-73430,,PLUG,1,1,,,,,,,,,,,,,,,,
22,2,,172171-72700,,"SECTION KIT,SPACER",1,1,,,,,,,,,,,,,,,,
23,3,,172146-74680,,"SECTION ASSY, SPACER",1,1,,,,,,,,,,,,,,,,
24,4,,172146-74750,,SPACER,1,1,,,,,,,,,,,,,,,,
25,4,,933171-80590,,O-RING,1,1,,,,,,,,,,,,,,,,
26,4,,172122-73430,,PLUG,1,1,,,,,,,,,,,,,,,,
27,4,,23871-030000,,"PLUG PT3/8,SCREW",1,1,,,,,,,,,,,,,,,,
28,3,,172171-72630,,"VALVE 175/25,RELIEF",1,1,,,,,,,,,,,,,,,,
29,4,,172116-74150,,O-RING,1,1,,,,,,,,,,,,,,,,
30,3,,172146-74720,,"VALVE ASSY, SHUT-OFF",1,1,,,,,,,,,,,,,,,,
31,4,,24311-240100,,"O-RING 1A P-10A",1,1,,,,,,,,,,,,,,,,
32,4,,172116-74150,,O-RING,1,1,,,,,,,,,,,,,,,,
33,2,,172171-72510,,"SECTION KIT,INLET",1,1,,,,,,,,,,,,,,,,
34,3,,172122-74520,,"SECTION, INLET",1,1,,,,,,,,,,,,,,,,
35,4,,172122-74590,,"HOUSING, INLET",1,1,,,,,,,,,,,,,,,,
36,4,,933171-80590,,O-RING,1,1,,,,,,,,,,,,,,,,
37,3,,172171-72640,,"VALVE 160/24,RELIEF",1,1,,,,,,,,,,,,,,,,
38,4,,172116-74150,,O-RING,1,1,,,,,,,,,,,,,,,,
39,2,,172112-06480,,PLUG,2,2,,,,,,,,,,,,,,,,
40,2,,172112-06490,,O-RING,2,2,,,,,,,,,,,,,,,,
41,2,,172116-74320,,PLUG,1,1,,,,,,,,,,,,,,,,
42,2,,172116-74150,,O-RING,1,1,,,,,,,,,,,,,,,,
```

Fig.31 CONTROL VALVE (P PORT)

https://truckmanualshub.com/

CONTROL VALVE ASSY
(172171-74120)
Fig.31 Ref.No.7
INC Fig.31 Ref.No.8~42
Fig.32 Ref.No.1~22
Fig.33 Ref.No.1~56
Fig.34 Ref.No.1~34
Fig.35 Ref.No.1~25

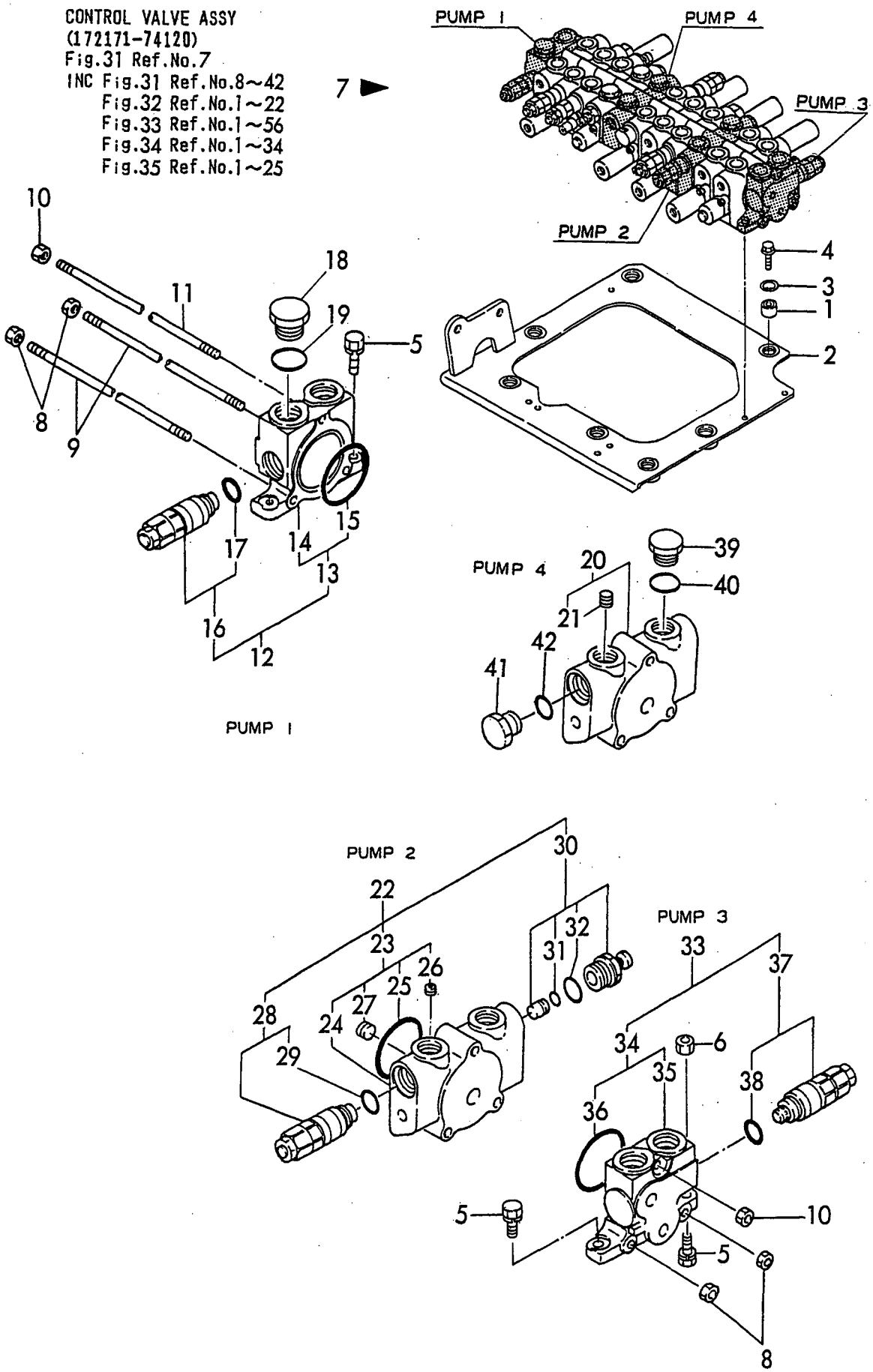

```
1,2,,172171-72580,,U-NUT,1,1,,,,,,,,,,,,,,,,,
2,3,,172116-74190,,"PLATE, SEAL",2,2,,,,,,,,,,,,,,,,,
3,3,,933171-80610,,O-RING,2,2,,,,,,,,,,,,,,,,,
4,3,,933166-80520,,WIPER,2,2,,,,,,,,,,,,,,,,,
5,3,,933166-80530,,CAP,1,1,,,,,,,,,,,,,,,,,
6,3,,933171-80510,,"SEAT, SPRING",2,2,,,,,,,,,,,,,,,,,
7,3,,933166-80550,,"SCREW, CAP",1,1,,,,,,,,,,,,,,,,,
8,3,,172122-74050,,SPRING,1,1,,,,,,,,,,,,,,,,,
9,3,,933171-80590,,O-RING,1,1,,,,,,,,,,,,,,,,,
10,3,,172116-74220,,SCREW,2,2,,,,,,,,,,,,,,,,,
11,3,,172151-74060,,"BOLT, SOCKET HEAD",2,2,,,,,,,,,,,,,,,,,
12,2,,172171-72610,,"SECTION ASSY.,SPOOL",1,1,,,,,,,,,,,,,,,,,
13,3,,172116-74190,,"PLATE, SEAL",2,2,,,,,,,,,,,,,,,,,
14,3,,933171-80610,,O-RING,2,2,,,,,,,,,,,,,,,,,
15,3,,933166-80520,,WIPER,2,2,,,,,,,,,,,,,,,,,
16,3,,933166-80530,,CAP,1,1,,,,,,,,,,,,,,,,,
17,3,,933171-80510,,"SEAT, SPRING",2,2,,,,,,,,,,,,,,,,,
18,3,,933166-80550,,"SCREW, CAP",1,1,,,,,,,,,,,,,,,,,
19,3,,172122-74050,,SPRING,1,1,,,,,,,,,,,,,,,,,
20,3,,933171-80590,,O-RING,1,1,,,,,,,,,,,,,,,,,
21,3,,172116-74220,,SCREW,2,2,,,,,,,,,,,,,,,,,
22,3,,172151-74060,,"BOLT, SOCKET HEAD",2,2,,,,,,,,,,,,,,,,,
```

Fig. 32 CONTROL VALVE (TRAVEL)

https://truckmanualshub.com/

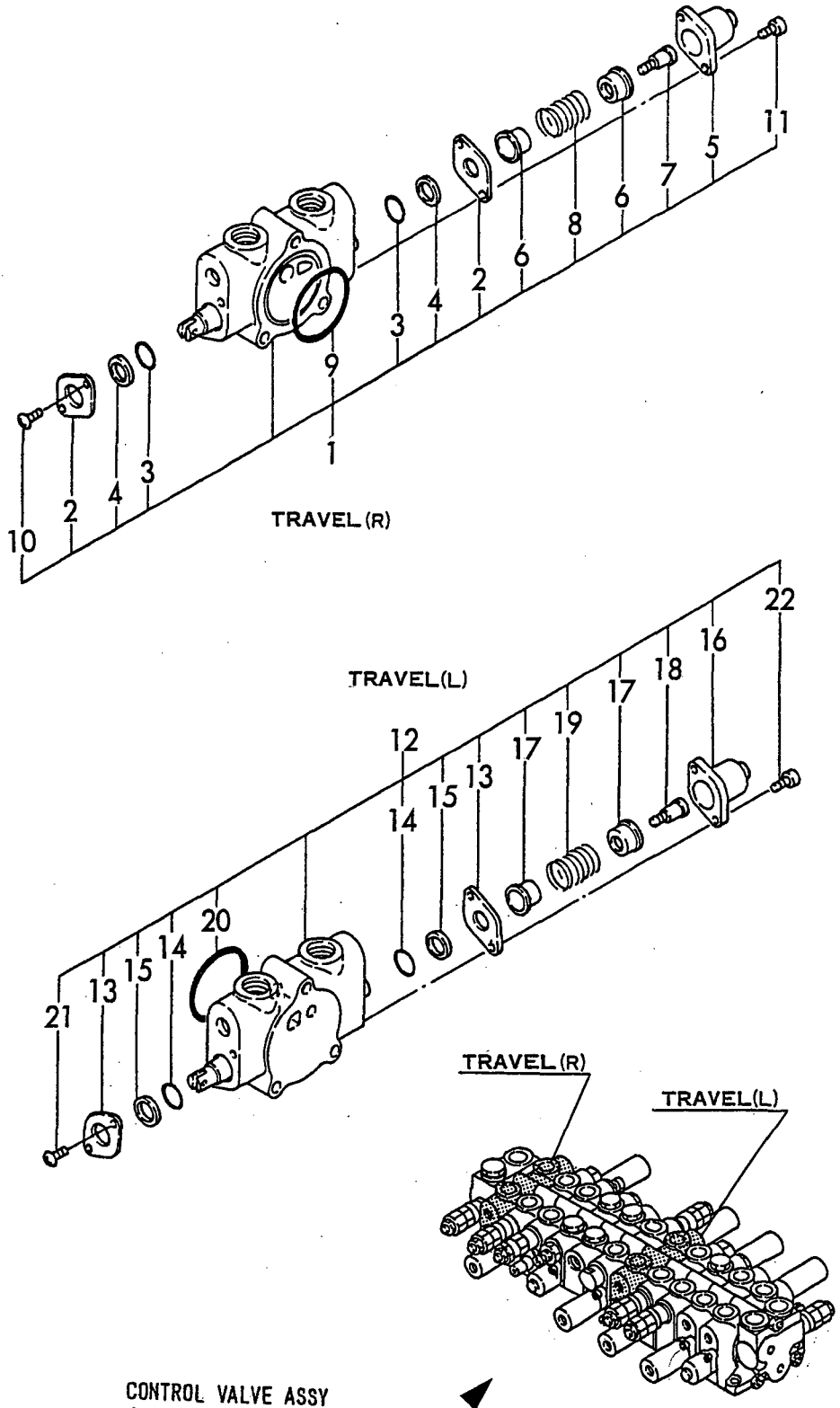

CONTROL VALVE ASSY
(172171-74120)
Fig.31 Ref.No.7
INC Fig.31 Ref.No.8~42
Fig.32 Ref.No.1~22
Fig.33 Ref.No.1~56
Fig.34 Ref.No.1~34
Fig.35 Ref.No.1~25

```
1,2,,172171-72670,,"SECTION KIT, SPOOL",1,1,,,,,,,,,,,,,,,,
2,3,,172168-72800,,"SECTION ASSY.,SPOOL",1,1,,,,,,,,,,,,,,,,,
3,4,,172168-72900,,CAP,1,1,,,,,,,,,,,,,,,,
4,4,,172168-72850,,"END, SPOOL",1,1,,,,,,,,,,,,,,,,
5,4,,933171-80510,,"SEAT, SPRING",1,1,,,,,,,,,,,,,,,,
6,4,,172168-72880,,SPRING,1,1,,,,,,,,,,,,,,,,
7,4,,172168-72860,,"SEAT,SPRING",1,1,,,,,,,,,,,,,,,,
8,4,,172151-74320,,O-RING,2,2,,,,,,,,,,,,,,,,
9,4,,172168-72890,,CAP,1,1,,,,,,,,,,,,,,,,
10,4,,172151-74060,,"BOLT, SOCKET HEAD",4,4,,,,,,,,,,,,,,,,
11,4,,172122-74130,,POPPET,1,1,,,,,,,,,,,,,,,,
12,4,,172168-72750,,"SPRING,CHECK VALVE",1,1,,,,,,,,,,,,,,,,
13,4,,933171-80590,,O-RING,1,1,,,,,,,,,,,,,,,,
14,3,,172171-72660,,"VALVE 210/25,RELIEF",1,1,,,,,,,,,,,,,,,,
15,4,,172116-74150,,O-RING,1,1,,,,,,,,,,,,,,,,
16,3,,172310-79180,,VALVE,1,1,,,,,,,,,,,,,,,,
17,4,,172116-74150,,O-RING,1,1,,,,,,,,,,,,,,,,
18,2,,172171-72530,,"SECTION KIT, SPOOL",1,1,,,,,,,,,,,,,,,,
19,3,,172171-72590,,"SECTION ASSY.,SPOOL",1,1,,,,,,,,,,,,,,,,
20,4,,172116-74190,,"PLATE, SEAL",2,2,,,,,,,,,,,,,,,,
21,4,,933171-80610,,O-RING,2,2,,,,,,,,,,,,,,,,
22,4,,933166-80520,,WIPER,2,2,,,,,,,,,,,,,,,,
23,4,,933166-80530,,CAP,1,1,,,,,,,,,,,,,,,,
24,4,,933171-80510,,"SEAT, SPRING",2,2,,,,,,,,,,,,,,,,
25,4,,933166-80550,,"SCREW, CAP",1,1,,,,,,,,,,,,,,,,
26,4,,172122-74050,,SPRING,1,1,,,,,,,,,,,,,,,,
27,4,,172122-74130,,POPPET,1,1,,,,,,,,,,,,,,,,
28,4,,172168-72750,,"SPRING,CHECK VALVE",1,1,,,,,,,,,,,,,,,,
29,4,,933171-80590,,O-RING,1,1,,,,,,,,,,,,,,,,
30,4,,172116-74220,,SCREW,2,2,,,,,,,,,,,,,,,,
31,4,,172151-74060,,"BOLT, SOCKET HEAD",2,2,,,,,,,,,,,,,,,,
32,4,,172146-74740,,WASHER,1,1,,,,,,,,,,,,,,,,
33,3,,172146-74730,,"VALVE ASSY",1,1,,,,,,,,,,,,,,,,
34,4,,172116-74150,,O-RING,1,1,,,,,,,,,,,,,,,,
35,3,,172146-74720,,"VALVE ASSY, SHUT-OFF",1,1,,,,,,,,,,,,,,,,
36,4,,24311-240100,,"O-RING 1A P-10A",1,1,,,,,,,,,,,,,,,,
37,4,,172116-74150,,O-RING,1,1,,,,,,,,,,,,,,,,
38,2,,172168-72540,,"SECTION KIT, SPOOL",1,1,,,,,,,,,,,,,,,,
39,3,,172168-72610,,"SECTION ASSY, SPOOL",1,1,,,,,,,,,,,,,,,,
40,4,,172116-74190,,"PLATE, SEAL",2,2,,,,,,,,,,,,,,,,
41,4,,933171-80610,,O-RING,2,2,,,,,,,,,,,,,,,,
42,4,,933166-80520,,WIPER,2,2,,,,,,,,,,,,,,,,
43,4,,933166-80530,,CAP,1,1,,,,,,,,,,,,,,,,
44,4,,933171-80510,,"SEAT, SPRING",2,2,,,,,,,,,,,,,,,,
45,4,,933166-80550,,"SCREW, CAP",1,1,,,,,,,,,,,,,,,,
46,4,,172168-72760,,"SPRING, SPOOL",1,1,,,,,,,,,,,,,,,,
47,4,,172122-74130,,POPPET,1,1,,,,,,,,,,,,,,,,
48,4,,172168-72750,,"SPRING,CHECK VALVE",1,1,,,,,,,,,,,,,,,,
49,4,,933171-80590,,O-RING,1,1,,,,,,,,,,,,,,,,
50,4,,172116-74220,,SCREW,2,2,,,,,,,,,,,,,,,,
51,4,,172151-74060,,"BOLT, SOCKET HEAD",2,2,,,,,,,,,,,,,,,,
52,3,,172146-74720,,"VALVE ASSY, SHUT-OFF",2,2,,,,,,,,,,,,,,,,
53,4,,24311-240100,,"O-RING 1A P-10A",2,2,,,,,,,,,,,,,,,,
54,4,,172116-74150,,O-RING,2,2,,,,,,,,,,,,,,,,
55,3,,172112-06480,,PLUG,2,2,,,,,,,,,,,,,,,,
56,3,,172112-06490,,O-RING,2,2,,,,,,,,,,,,,,,,
```

Fig.33 CONTROL VALBE (ARM & SWING)

https://truckmanualshub.com/

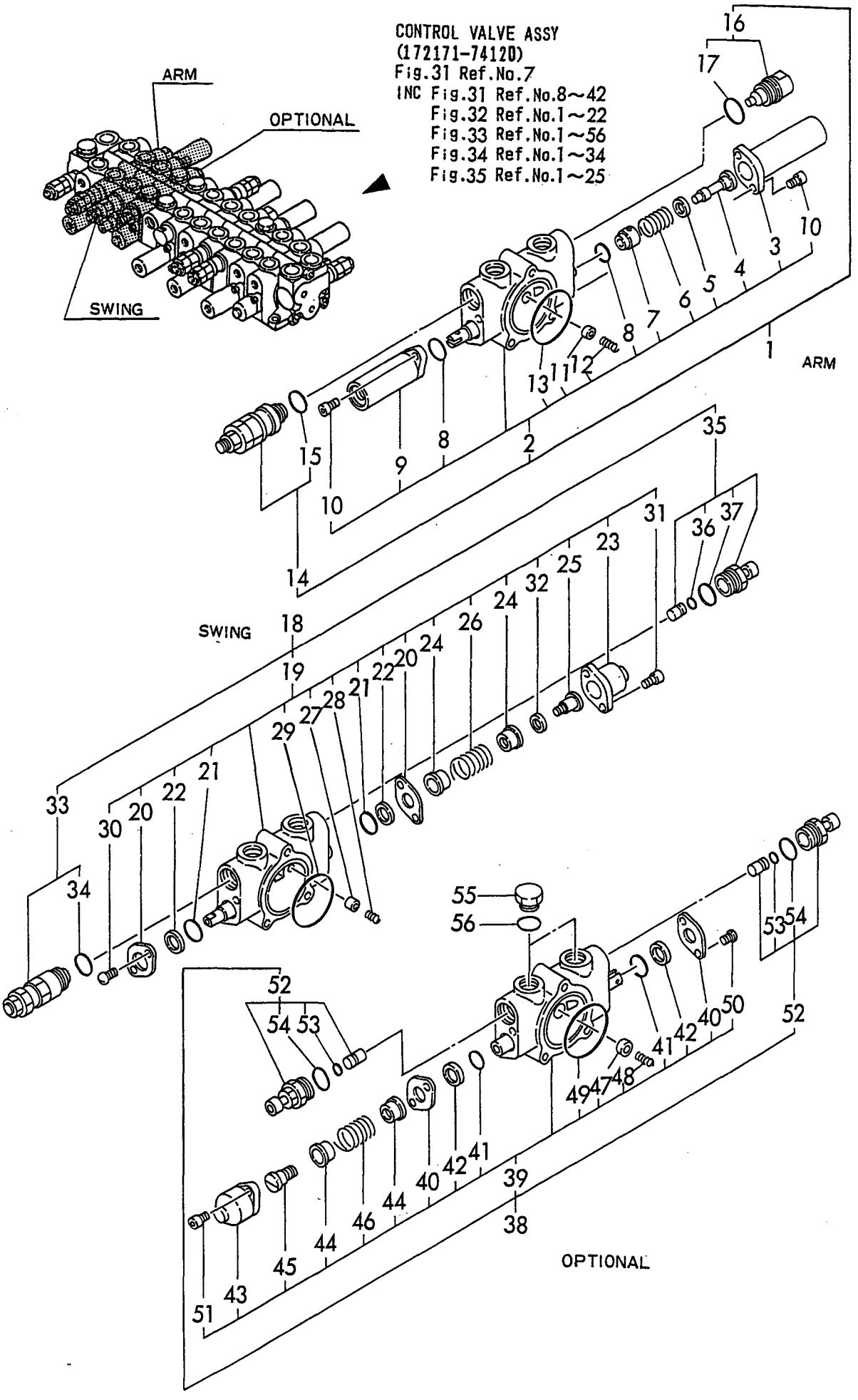

```
1,2,,172171-72680,,"SECTION KIT, SPOOL",1,1,,,,,,,,,,,,,,,,
2,3,,172171-72690,,"SECTION ASSY.,SPOOL",1,1,,,,,,,,,,,,,,,,,
3,4,,172168-72900,,CAP,1,1,,,,,,,,,,,,,,,,
4,4,,172168-72850,,"END, SPOOL",1,1,,,,,,,,,,,,,,,,
5,4,,933171-80510,,"SEAT, SPRING",1,1,,,,,,,,,,,,,,,,
6,4,,172168-72880,,SPRING,1,1,,,,,,,,,,,,,,,,
7,4,,172168-72860,,"SEAT,SPRING",1,1,,,,,,,,,,,,,,,,
8,4,,172151-74320,,O-RING,2,2,,,,,,,,,,,,,,,,
9,4,,172168-72890,,CAP,1,1,,,,,,,,,,,,,,,,
10,4,,172151-74060,,"BOLT, SOCKET HEAD",4,4,,,,,,,,,,,,,,,,
11,4,,172122-74130,,POPPET,1,1,,,,,,,,,,,,,,,,
12,4,,172168-72750,,"SPRING,CHECK VALVE",1,1,,,,,,,,,,,,,,,,
13,4,,933171-80590,,O-RING,1,1,,,,,,,,,,,,,,,,
14,3,,172171-72650,,"VALVE 210/25,RELIEF",1,1,,,,,,,,,,,,,,,,,
15,4,,172116-74150,,O-RING,1,1,,,,,,,,,,,,,,,,
16,3,,172310-79180,,VALVE,1,1,,,,,,,,,,,,,,,,
17,4,,172116-74150,,O-RING,1,1,,,,,,,,,,,,,,,,
18,2,,172168-72790,,"SECTION KIT, SPOOL",1,1,,,,,,,,,,,,,,,,
19,3,,172168-72820,,"SECTION ASSY.,SPOOL",1,1,,,,,,,,,,,,,,,,,
20,4,,172168-72900,,CAP,1,1,,,,,,,,,,,,,,,,
21,4,,172168-72850,,"END, SPOOL",1,1,,,,,,,,,,,,,,,,
22,4,,933171-80510,,"SEAT, SPRING",1,1,,,,,,,,,,,,,,,,
23,4,,172168-72880,,SPRING,1,1,,,,,,,,,,,,,,,,
24,4,,172168-72860,,"SEAT,SPRING",1,1,,,,,,,,,,,,,,,,
25,4,,172151-74320,,O-RING,2,2,,,,,,,,,,,,,,,,
26,4,,172168-72890,,CAP,1,1,,,,,,,,,,,,,,,,
27,4,,172151-74060,,"BOLT, SOCKET HEAD",4,4,,,,,,,,,,,,,,,,
28,4,,172122-74130,,POPPET,1,1,,,,,,,,,,,,,,,,
29,4,,172168-72750,,"SPRING,CHECK VALVE",1,1,,,,,,,,,,,,,,,,
30,4,,933171-80590,,O-RING,1,1,,,,,,,,,,,,,,,,
31,3,,172168-72730,,"VALVE 260/33,RELIEF",1,1,,,,,,,,,,,,,,,,,
32,4,,172116-74150,,O-RING,1,1,,,,,,,,,,,,,,,,
33,3,,172310-79180,,VALVE,1,1,,,,,,,,,,,,,,,,
34,4,,172116-74150,,O-RING,1,1,,,,,,,,,,,,,,,,
```

Fig.34 CONTROL VALVE (BOOM & BUCKET)

https://truckmanualshub.com/

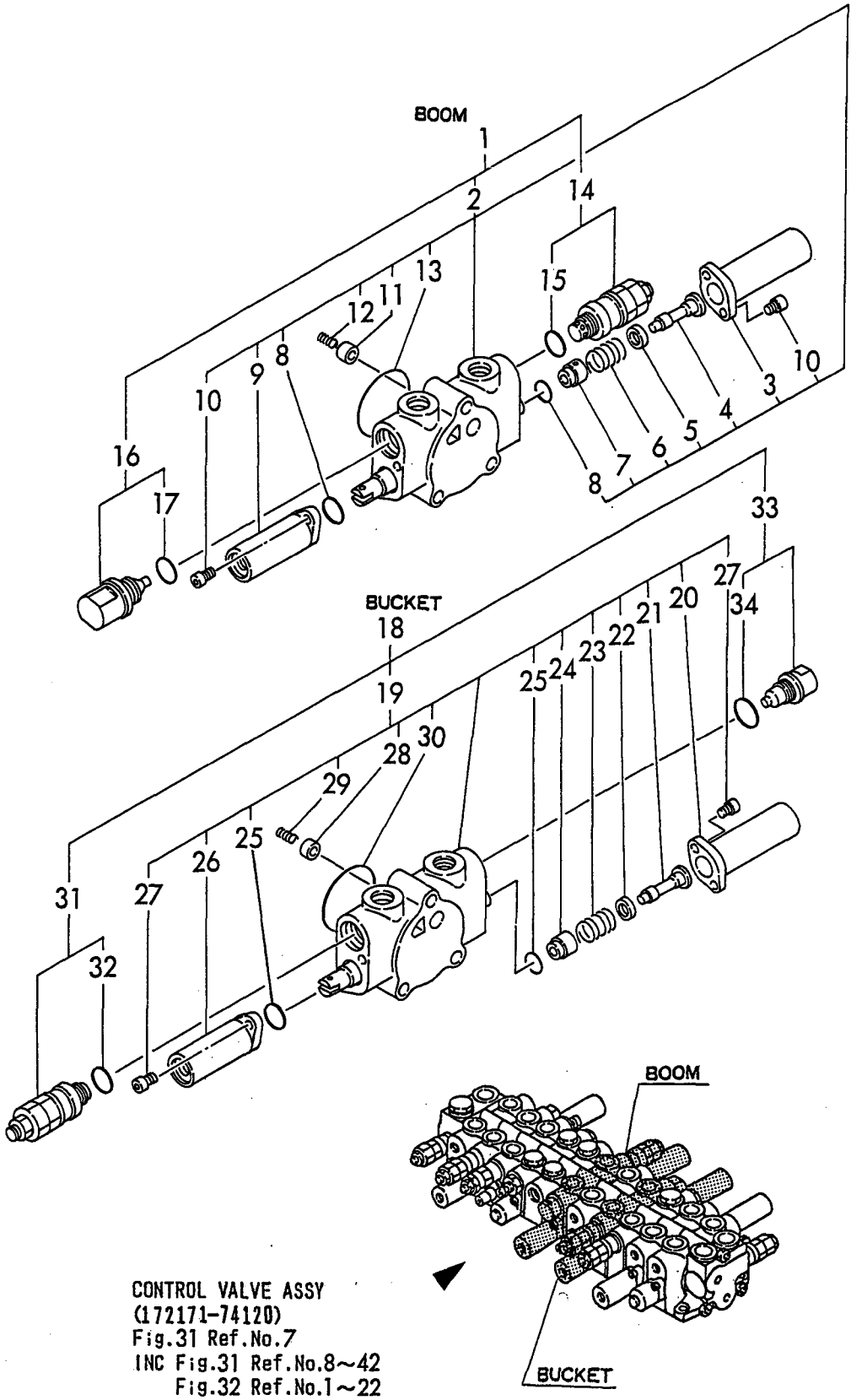

CONTROL VALVE ASSY
(172171-74120)
Fig.31 Ref.No.7
INC Fig.31 Ref.No.8~42
Fig.32 Ref.No.1~22
Fig.33 Ref.No.1~56
Fig.34 Ref.No.1~34
Fig.35 Ref.No.1~25

https://truckmanualshub.com/

```
1,2,,172168-72830,,"SECTION KIT, SPOOL",1,1,,,,,,,,,,,,,,,,
2,3,,172168-72840,,"CAP, FILLER",1,1,,,,,,,,,,,,,,,,
3,3,,172168-72850,,"END, SPOOL",1,1,,,,,,,,,,,,,,,,
4,3,,933171-80510,,"SEAT, SPRING",1,1,,,,,,,,,,,,,,,,
5,3,,172151-74340,,SPRING,1,1,,,,,,,,,,,,,,,,
6,3,,172168-72860,,"SEAT,SPRING",1,1,,,,,,,,,,,,,,,,
7,3,,172151-74320,,O-RING,2,2,,,,,,,,,,,,,,,,
8,3,,172168-72870,,CAP,1,1,,,,,,,,,,,,,,,,
9,3,,172151-74060,,"BOLT, SOCKET HEAD",4,4,,,,,,,,,,,,,,,,
10,3,,172122-74130,,POPPET,1,1,,,,,,,,,,,,,,,,
11,3,,172168-72750,,"SPRING,CHECK VALVE",1,1,,,,,,,,,,,,,,,,
12,3,,933171-80590,,O-RING,1,1,,,,,,,,,,,,,,,,
13,2,,172171-72620,,"SECTION ASSY.,SPOOL",1,1,,,,,,,,,,,,,,,,
14,3,,172116-74190,,"PLATE, SEAL",2,2,,,,,,,,,,,,,,,,
15,3,,933171-80610,,O-RING,2,2,,,,,,,,,,,,,,,,
16,3,,933166-80520,,WIPER,2,2,,,,,,,,,,,,,,,,
17,3,,933166-80530,,CAP,1,1,,,,,,,,,,,,,,,,
18,3,,933171-80510,,"SEAT, SPRING",2,2,,,,,,,,,,,,,,,,
19,3,,933166-80550,,"SCREW, CAP",1,1,,,,,,,,,,,,,,,,
20,3,,172122-74050,,SPRING,1,1,,,,,,,,,,,,,,,,
21,3,,172122-74130,,POPPET,1,1,,,,,,,,,,,,,,,,
22,3,,172168-72750,,"SPRING,CHECK VALVE",1,1,,,,,,,,,,,,,,,,
23,3,,933171-80590,,O-RING,1,1,,,,,,,,,,,,,,,,
24,3,,172116-74220,,SCREW,2,2,,,,,,,,,,,,,,,,
25,3,,172151-74060,,"BOLT, SOCKET HEAD",2,2,,,,,,,,,,,,,,,,
```

Fig.35 CONTROL VALVE (TURNING & BLADE)

https://truckmanualshub.com/

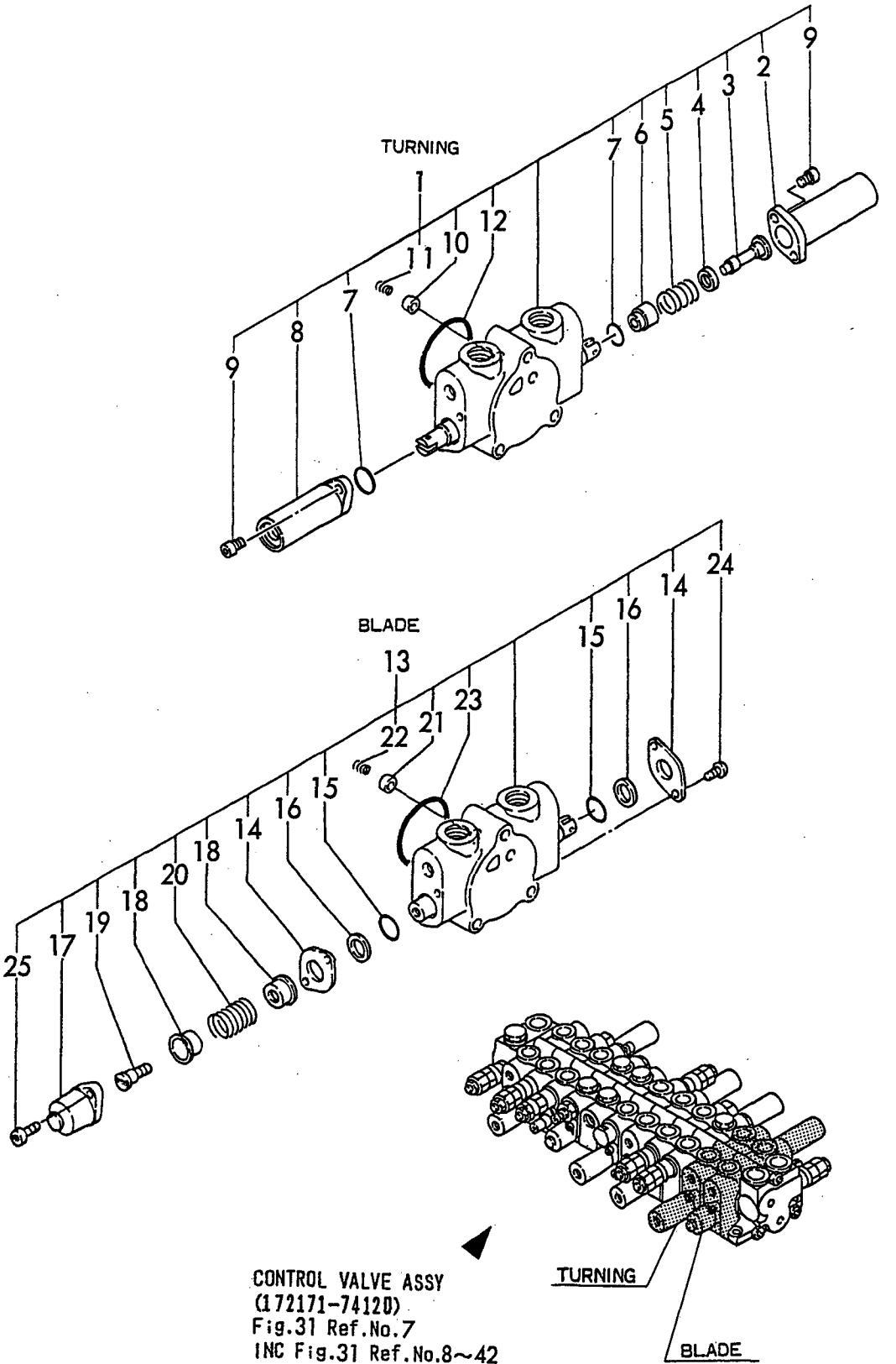

CONTROL VALVE ASSY
(172171-74120)
Fig.31 Ref.No.7
INC Fig.31 Ref.No.8~42
Fig.32 Ref.No.1~22
Fig.33 Ref.No.1~56
Fig.34 Ref.No.1~34
Fig.35 Ref.No.1~25

https://truckmanualshub.com/

```
1,1,,172165-74300,,"JOY-STICK L.H.",1,1,,,,,,,,,,,,,,,,
3,2,,172151-73350,,"PLATE, PORT",1,1,,,,,,,,,,,,,,,,
4,2,,172151-73370,,BUSH,1,1,,,,,,,,,,,,,,,,
5,2,,172151-73380,,PLATE,1,1,,,,,,,,,,,,,,,,
7,2,,172151-73400,,PLUG,4,4,,,,,,,,,,,,,,,,
8,2,,172165-74320,,ROD,4,4,,,,,,,,,,,,,,,,
9,2,,172151-73430,,WASHER,8,8,,,,,,,,,,,,,,,,
10,2,,172151-73440,,RETAINER,4,4,,,,,,,,,,,,,,,,
11,2,,172151-73450,,WASHER,4,4,,,,,,,,,,,,,,,,
12,2,,172151-73460,,SPRING,4,4,,,,,,,,,,,,,,,,
13,2,,172165-74330,,SPRING,4,4,,,,,,,,,,,,,,,,
14,2,,172151-73480,,JOINT,1,1,,,,,,,,,,,,,,,,
15,2,,172151-73490,,PLATE,1,1,,,,,,,,,,,,,,,,
16,2,,172165-74340,,"HANDLE, SUB",1,1,,,,,,,,,,,,,,,,
19,3,,172151-73530,,"HANDLE, CAP",1,1,,,,,,,,,,,,,,,,
27,2,,172151-73620,,BELLOWS,1,1,,,,,,,,,,,,,,,,
28,2,,172151-73630,,"SEAL KIT, SUB",1,1,,,,,,,,,,,,,,,,
29,3,,172151-73360,,"SEAL WASHER",2,2,,,,,,,,,,,,,,,,
30,3,,172151-73420,,SEAL,4,4,,,,,,,,,,,,,,,,
31,3,,24315-000200,,"O-RING 1B P-20.0",4,4,,,,,,,,,,,,,,,,
32,3,,24341-000900,,"O-RING 1A S-90.0",1,1,,,,,,,,,,,,,,,,
33,2,,172151-73650,,"NUT, ADJUST",1,1,,,,,,,,,,,,,,,,
34,2,,22351-050010,,"SPRING PIN 5X10",1,1,,,,,,,,,,,,,,,,
35,2,,26450-080302,,"BOLT M 8X 30",2,2,,,,,,,,,,,,,,,,
36,2,,26756-140002,,"LOCK NUT M14 PLATED",1,1,,,,,,,,,,,,,,,,
37,1,,26013-060252,,"BOLT M 6X 25",4,4,,,,,,,,,,,,,,,,
```

Fig. 36 REMOTE CONTROL VALVE (LEFT)

https://truckmanualshub.com/

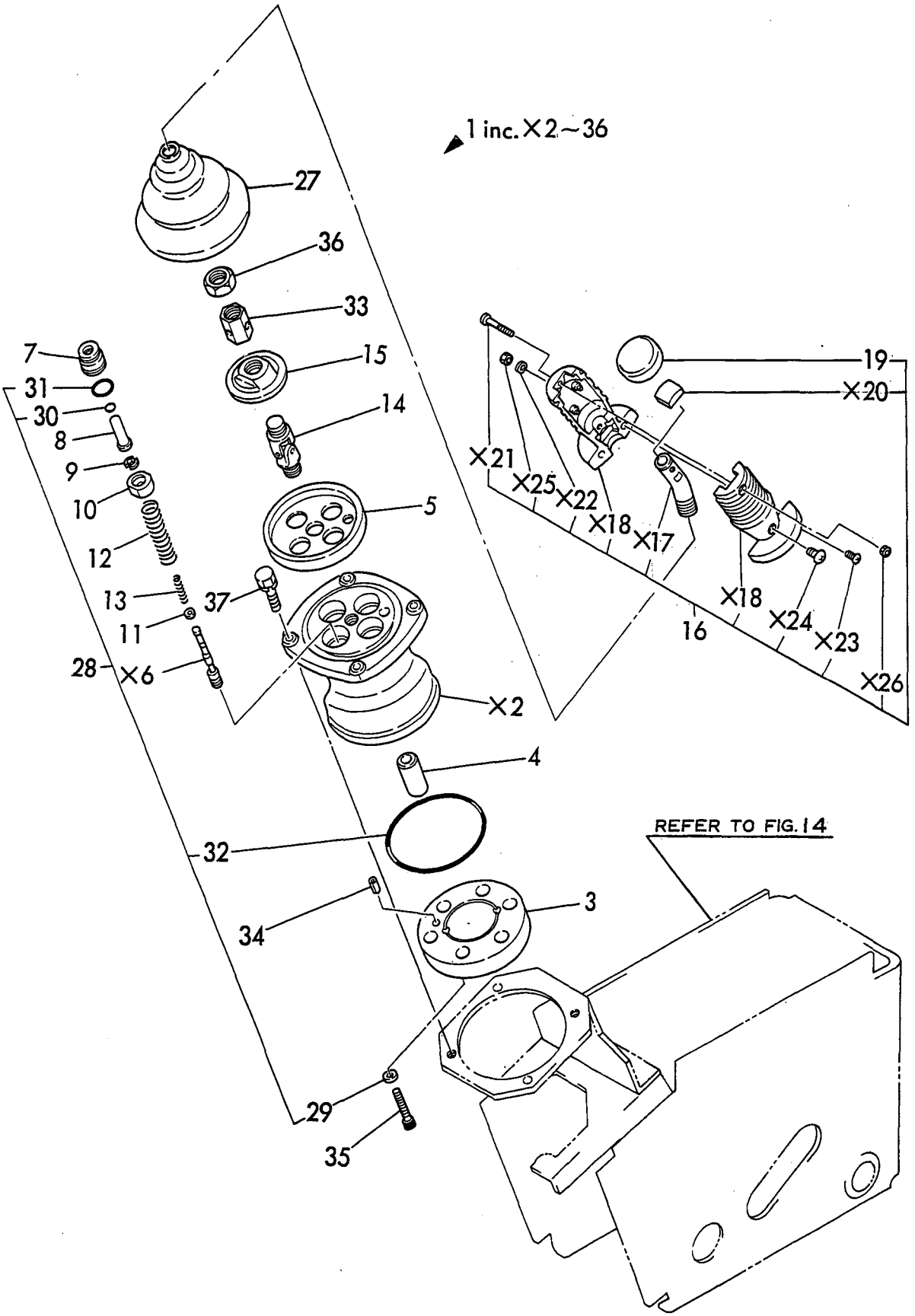

× MARK PARTS: NOT SOLD SEPARATELY.

https://truckmanualshub.com/

```
1,1,,172165-74310,,"JOY-STICK R.H.",1,1,,,,,,,,,,,,,,,,
3,2,,172151-73350,,"PLATE, PORT",1,1,,,,,,,,,,,,,,,,
4,2,,172151-73370,,BUSH,1,1,,,,,,,,,,,,,,,,
5,2,,172151-73380,,PLATE,1,1,,,,,,,,,,,,,,,,
7,2,,172151-73400,,PLUG,4,4,,,,,,,,,,,,,,,,
8,2,,172165-74320,,ROD,4,4,,,,,,,,,,,,,,,,
9,2,,172151-73430,,WASHER,8,8,,,,,,,,,,,,,,,,
10,2,,172151-73440,,RETAINER,4,4,,,,,,,,,,,,,,,,
11,2,,172151-73450,,WASHER,4,4,,,,,,,,,,,,,,,,
12,2,,172151-73460,,SPRING,4,4,,,,,,,,,,,,,,,,
13,2,,172165-74330,,SPRING,4,4,,,,,,,,,,,,,,,,
14,2,,172151-73480,,JOINT,1,1,,,,,,,,,,,,,,,,
15,2,,172151-73490,,PLATE,1,1,,,,,,,,,,,,,,,,
16,2,,172151-73500,,"NUT, ADJUST",1,1,,,,,,,,,,,,,,,,
17,2,,172165-74350,,"HANDLE, SUB",1,1,,,,,,,,,,,,,,,,
20,3,,172151-73530,,"HANDLE, CAP",1,1,,,,,,,,,,,,,,,,
33,2,,172151-73590,,BUSH,1,1,,,,,,,,,,,,,,,,
34,2,,172151-73610,,TERMINAL,2,2,,,,,,,,,,,,,,,,
35,2,,172151-73620,,BELLOWS,1,1,,,,,,,,,,,,,,,,
36,2,,172151-73630,,"SEAL KIT, SUB",1,1,,,,,,,,,,,,,,,,
37,3,,172151-73360,,"SEAL WASHER",2,2,,,,,,,,,,,,,,,,
38,3,,172151-73420,,SEAL,4,4,,,,,,,,,,,,,,,,
39,3,,24315-000200,,"O-RING 1B P-20.0",4,4,,,,,,,,,,,,,,,,
40,3,,24341-000900,,"O-RING 1A S-90.0",1,1,,,,,,,,,,,,,,,,
41,2,,22351-050010,,"SPRING PIN 5X10",1,1,,,,,,,,,,,,,,,,
42,2,,26450-080302,,"BOLT M 8X 30",2,2,,,,,,,,,,,,,,,,
43,2,,26756-140002,,"LOCK NUT M14 PLATED",1,1,,,,,,,,,,,,,,,,
44,1,,26013-060252,,"BOLT M 6X 25",4,4,,,,,,,,,,,,,,,,
```

Fig. 37 REMOTE CONTROL VALVE (RIGHT)

https://truckmanualshub.com/

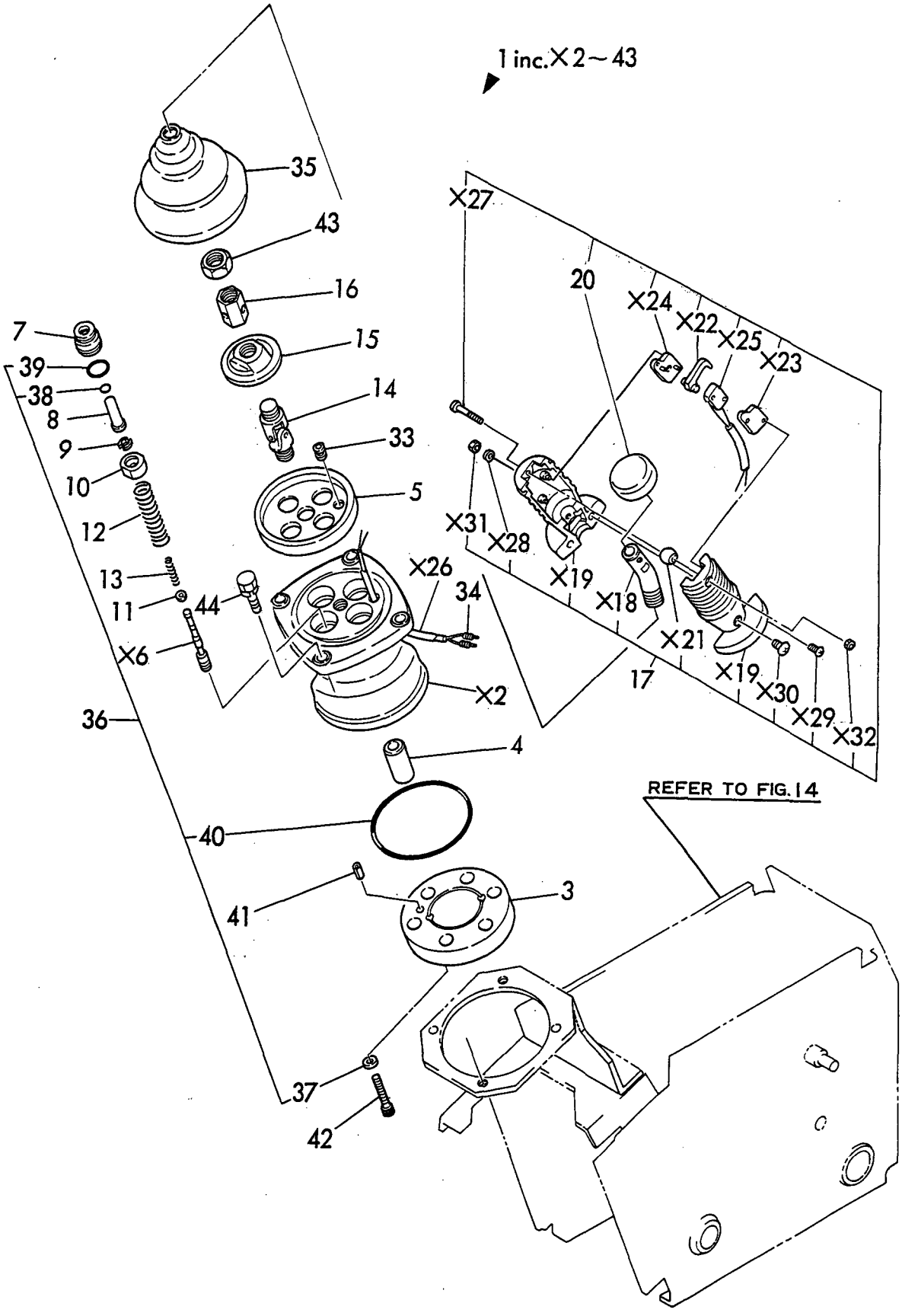

× MARK PARTS: NOT SOLD SEPARATELY.

https://truckmanualshub.com/

```
1,1,,172165-74703,,"VALVE ASSY, LOW-HIGH",1,1,,,,,,,,,,,,,,,,,
1-1,1,,172165-74704,,"VALVE ASSY, LOW-
HIGH",1,1,,,,,N,,72165387,*1993.06,72165387,*1993.06,,,,,,,,,I
2,2,,172151-74420,,"BOLT M 4X 10",3,3,,,,,,,,,,,,,,,,,,,
3,2,,172165-74710,,SOLENOID,1,1,,,,,,,,,,,,,,,,,,,
4,2,,172165-74720,,"BOLT M5X16,HEX.SCKT.",2,2,,,,,,,,,,,,,,,,,,,
5,2,,172165-74730,,"BOLT M5X8,HEX.SCKT.",2,2,,,,,,,,,,,,,,,,,,,
6,2,,172165-74740,,SPRING,1,1,,,,,,,,,,,,,,,,,,,
7,2,,172165-74760,,SPRING,1,1,,,,,,,,,,,,,,,,,,,
8,2,,172165-74770,,PACKING,2,2,,,,,,,,,,,,,,,,,,,
9,2,,172165-74780,,PLATE,2,2,,,,,,,,,,,,,,,,,,,
10,2,,172165-74790,,COVER,1,1,,,,,,,,,,,,,,,,,,,
11,2,,24311-000160,,"O-RING 1A P-16.0",1,1,,,,,,,,,,,,,,,,,,,
12,2,,23871-010000,,"PLUG
PT1/8,SCREW",1,1,,,,,W,,72165387,*1993.06,72165387,*1993.06,,,,,,,,,I
13,1,,26013-080162,,"BOLT W/WASHER M8X16",2,2,,,,,,,,,,,,,,,,,,,
```

Fig. 38 LOW-HIGH VALVE

https://truckmanualshub.com/

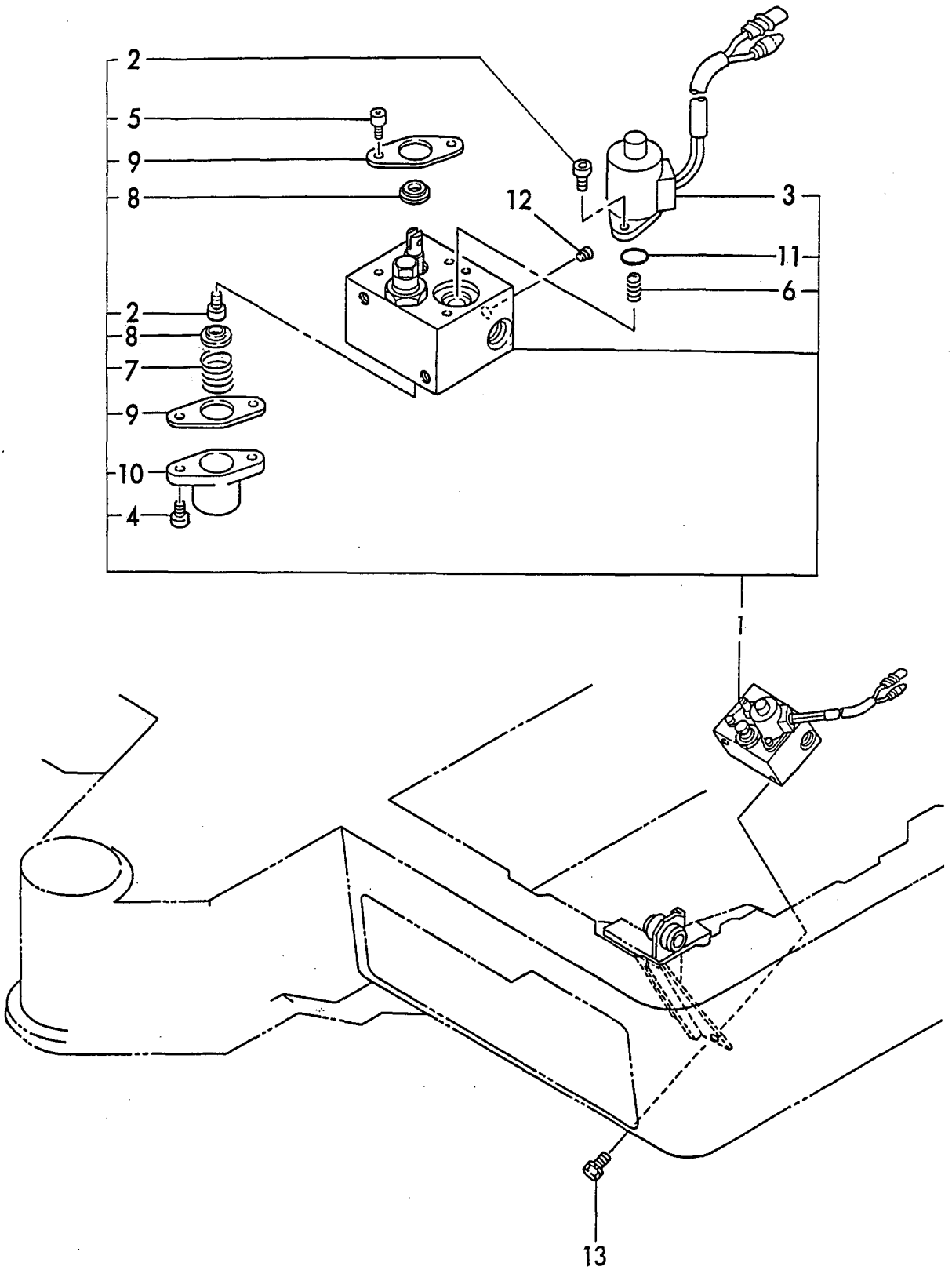

https://truckmanualshub.com/

```
1,1,,172168-74710,,"VALVE ASSY,PTO",1,1,,,,,,,,,,,,,,,,
2,2,,26716-080002,,"NUT M 8",4,4,,,,,,,,,,,,,,,,
3,2,,172614-74410,,TIE-ROD,2,2,,,,,,,,,,,,,,,,
4,2,,26716-100002,,"NUT M10",2,2,,,,,,,,,,,,,,,,
5,2,,172168-74820,,"ROD, TIE",1,1,,,,,,,,,,,,,,,,
6,2,,172168-74810,,"SECTION ASSY.,INLET",1,1,,,,,,,,,,,,,,,,
7,2,,933171-80420,,"SECTION, OUTLET",1,1,,,,,,,,,,,,,,,,
8,2,,172168-74800,,"SECTION SET, SPOOL",1,1,,,,,,,,,,,,,,,,
9,3,,172116-74190,,"PLATE, SEAL",2,2,,,,,,,,,,,,,,,,
10,3,,933171-80610,,O-RING,2,2,,,,,,,,,,,,,,,,
11,3,,933166-80520,,WIPER,2,2,,,,,,,,,,,,,,,,
12,3,,933166-80530,,CAP,1,1,,,,,,,,,,,,,,,,
13,3,,172168-74830,,SPACER,1,1,,,,,,,,,,,,,,,,
14,3,,172168-74840,,PIN,1,1,,,,,,,,,,,,,,,,
15,3,,172168-74850,,SLEEVE,1,1,,,,,,,,,,,,,,,,
16,3,,933171-80590,,O-RING,1,1,,,,,,,,,,,,,,,,
17,3,,172168-74860,,"BOLT, SOCKET HEAD",2,2,,,,,,,,,,,,,,,,
18,3,,172151-74290,,"BOLT, SOCKET HEAD",2,2,,,,,,,,,,,,,,,,
19,3,,172168-74870,,"BALL,STAINLESS STEEL",2,2,,,,,,,,,,,,,,,,
20,3,,172168-74880,,SPRING,1,1,,,,,,,,,,,,,,,,
21,3,,172312-74220,,SPACER,2,2,,,,,,,,,,,,,,,,
22,3,,172312-74230,,O-RING,2,2,,,,,,,,,,,,,,,,
23,1,,172168-74750,,"BRACKET COMPL.",1,1,,,,,,,,,,,,,,,,
23-1,1,,172174-74750,,"BRACKET ASSY",1,1,,,,R,,72174AMA-1,M910001,72174AMA-
1,M910001,,,,,,
24,1,,26013-100162,,"BOLT M10X 16",3,3,,,,,,,,,,,,,,,,
25,1,,26013-100302,,"BOLT M10X 30",3,3,,,,,,,,,,,,,,,,
```

Fig. 39 P. T. O. VALVE

https://truckmanualshub.com/

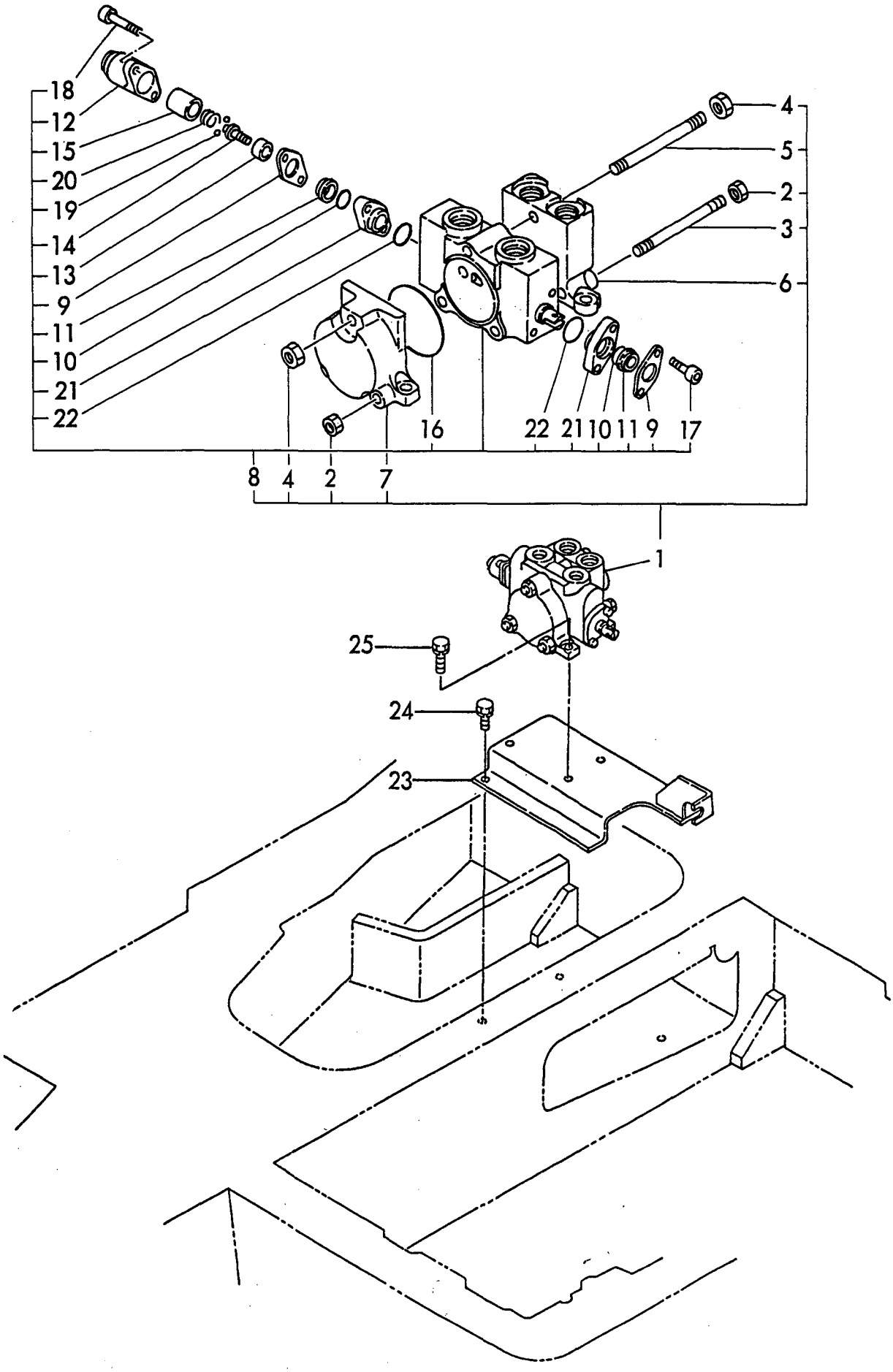

https://truckmanualshub.com/

```
1,1,,772171-75100,,"RESERVOIR ASSY",1,1,,,,,,,,,,,,,,,,
1-1,1,,772174-75100,,"RESERVER ASSY",1,1,,,,R,,72174AMA-1,M910001,72174AMA-
1,M910001,,,,,,
2,2,,172137-73700,,"FILTER, SUCTION",1,1,,,,,,,,,,,,,,,,
3,2,,172124-73700,,"BAR,FILTER SUPPORT",1,1,,,,,,,,,,,,,,,,
3-1,2,,172174-73700,,"ROD ASSY,FTR.SUPPORT",1,1,,,,R,,72174AMA-
1,M910001,72174AMA-1,M910001,,,,,,
4,2,,172141-73750,,"FILTER ASSY, RETURN",1,1,,,,,,,,,,,,,,,,
5,3,,172141-73760,,ELEMENT,1,1,,,,,,,,,,,,,,,,
6,3,,172141-73770,,"VALVE ASSY, BYPASS",1,1,,,,,,,,,,,,,,,,
7,2,,172112-75780,,"SPRING, STRAINER",1,1,,,,,,,,,,,,,,,,
7-1,2,,172159-73780,,"SPRING, SIDE CLUTCH",1,1,,,,R,,72174AMA-
1,M910001,72174AMA-1,M910001,,,,,,
8,2,,26716-100002,,"NUT M10",1,1,,,,,,,,,,,,,,,,
9,2,,933152-02710,,"SPRING, SIDE CLUTCH",1,1,,,,,,,,,,,,,,,,
9-1,2,,172159-73700,,"SPRING, SIDE CLUTCH",1,1,,,,R,,72174AMA-
1,M910001,72174AMA-1,M910001,,,,,,
11,2,,172171-75210,,"COVER CMP.,RESERVOIR",1,1,,,,,,,,,,,,,,,,
11-1,2,,172174-75210,,"COVER, RESRVER",1,1,,,,R,,72174AMA-1,M910001,72174AMA-
1,M910001,,,,,,
12,2,,172141-75430,,"COVER, INTAKE",1,1,,,,,,,,,,,,,,,,
12-1,2,,172159-75430,,"COVER, INTAKE",1,1,,,,R,,72174AMA-1,M910001,72174AMA-
1,M910001,,,,,,
13,2,,172122-75600,,"GAUGE, OIL LEVEL",1,1,,,,,,,,,,,,,,,,
14,3,,172122-75620,,BOLT,2,2,,,,,,,,,,,,,,,,
15,3,,172122-75630,,GASKET,4,4,,,,,,,,,,,,,,,,
16,2,,172116-75850,,"PLUG, OIL FEED",1,1,,,,,,,,,,,,,,,,
16-1,2,,172159-75850,,"PLUG, OIL FEED",1,1,,,,R,,72174AMA-1,M910001,72174AMA-
1,M910001,,,,,,
17,2,,22134-240000,,"WASHER 24",1,1,,,,,,,,,,,,,,,,
18,2,,22417-200160,,"COTTER PIN 2.0X16",1,1,,,,,,,,,,,,,,,,
19,2,,24311-000380,,"O-RING 1A P-38.0",1,1,,,,,,,,,,,,,,,,
20,2,,24321-001050,,"O-RING 1A G-105.0",1,1,,,,,,,,,,,,,,,,
21,2,,26013-080202,,"BOLT W/WASHER M8X20",6,6,,,,,,,,,,,,,,,,
22,2,,933171-23042,,MAGNET,1,1,,,,,,,,,,,,,,,,
22-1,2,,172159-75550,,MAGNET,1,1,,,,R,,72174AMA-1,M910001,72174AMA-
1,M910001,,,,,,
23,2,,933171-23062,,"PLUG 24, DRAIN",1,1,,,,,,,,,,,,,,,,
23-1,2,,172159-75720,,"PLUG 24, DRAIN",1,1,,,,R,,72174AMA-1,M910001,72174AMA-
1,M910001,,,,,,
24,2,,172165-75450,,PLATE,1,1,,,,,,,,,,,,,,,,
24-1,2,,172174-75450,,PLATE,1,1,,,,R,,72174AMA-1,M910001,72174AMA-
1,M910001,,,,,,
25,2,,172165-75460,,GASKET,1,1,,,,,,,,,,,,,,,,
26,2,,172165-75480,,ELEMENT,1,1,,,,,,,,,,,,,,,,
26-1,2,,172165-
75481,,ELEMENT,1,1,,,,N,,72164068,*1993.07,72164068,*1993.07,,,,,,,,I
27,2,,22137-080000,,"WASHER 8, POLISHED",6,6,,,,,,,,,,,,,,,,
28,2,,24321-001150,,"O-RING 1A G-115.0",1,1,,,,,,,,,,,,,,,,
29,2,,26022-050102,,"SCREW M 5X 10",3,3,,,,,,,,,,,,,,,,
30,1,,172126-16540,,"CLAMP 10X70",1,1,,,,,,,,,,,,,,,,
31,1,,124766-59050,,"CLAMP 12",1,1,,,,,,,,,,,,,,,,
32,1,,172165-75490,,HOSE,1,1,,,,,,,,,,,,,,,,
32-1,1,,172174-75490,,HOSE,1,1,,,,R,,72174AMA-1,M910001,72174AMA-
1,M910001,,,,,,
33,1,,22137-140000,,"WASHER 14,POLISHED",4,4,,,,,,,,,,,,,,,,
34,1,,22217-140000,,"SPRING WASHER 14",4,4,,,,,,,,,,,,,,,,
35,1,,26116-140302,,"BOLT M14X 30 PLATED",2,2,,,,,,,,,,,,,,,,
36,1,,26116-140452,,"BOLT M14X 45 PLATED",2,2,,,,,,,,,,,,,,,,
```

Fig. 40 HYD. OIL TANK

https://truckmanualshub.com/

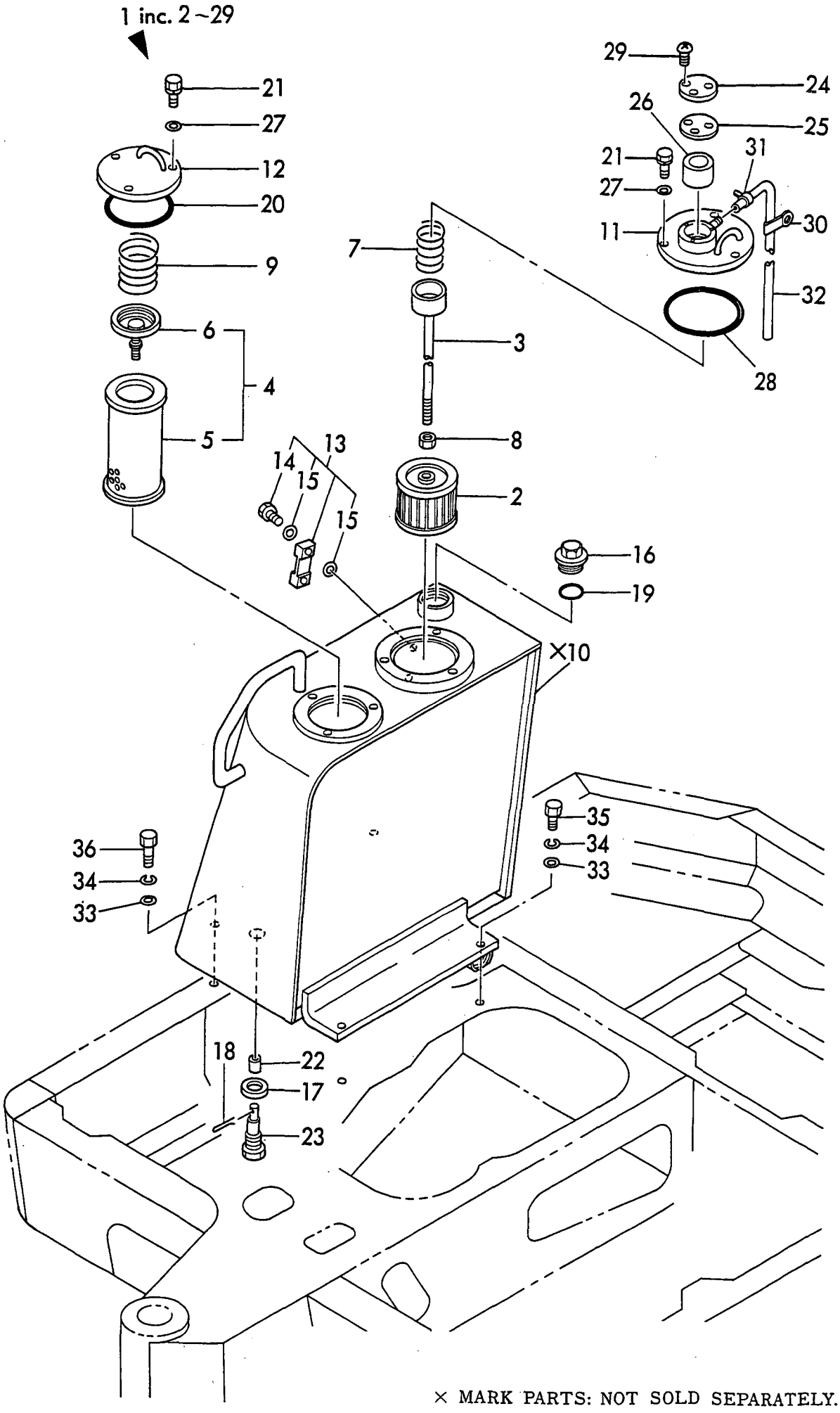

× MARK PARTS: NOT SOLD SEPARATELY.

https://truckmanualshub.com/

```
1,1,,172142-76100,,CONNECTOR,1,1,,,,,,,,,,,,,,,,
1-1,1,,172161-76080,,"JOINT 3/4",1,1,,,,,R,,72174AMA-1,M910001,72174AMA-
1,M910001,,,,,,,
2,1,,172168-76100,,"FLANGE 32.5,ROUND",1,1,,,,,,,,,,,,,,,,
2-1,1,,172174-76100,,"FLANGE 32.5,ROUND",1,1,,,,,R,,72174AMA-1,M910001,72174AMA-
1,M910001,,,,,,,
3,1,,172142-76130,,"JOINT 7/8UN-1/4",1,1,,,,,,,,,,,,,,,,
3-1,1,,172174-76140,,"JOINT 7/8UN-1/4",1,1,,,,,R,,72174AMA-1,M910001,72174AMA-
1,M910001,,,,,,,
4,1,,172168-76160,,"CONNECTOR PF1/2-3/8",1,1,,,,,,,,,,,,,,,,
4-1,1,,172174-76200,,"CONNECTOR PF1/2-3/8",1,1,,,,,R,,72174AMA-
1,M910001,72174AMA-1,M910001,,,,,,,
5,2,,24315-000140,,"O-RING 1B P-14.0",1,1,,,,,,,,,,,,,,,,
6,1,,172168-76620,,"ELBOW,90ßADJUSTABLE",2,2,,,,,,,,,,,,,,,,
6-1,1,,172174-77100,,"CONNECTOR 1/2",2,2,,,,,R,,72174AMA-1,M910001,72174AMA-
1,M910001,,,,,,,
6A,2,,24315-000180,,"O-RING 1B P-18.0",2,2,,,,,,,,,,,,,,,,
7,1,,172165-76780,,BODY,2,2,,,,,,,,,,,,,,,,
7-1,1,,172174-77110,,BODY,2,2,,,,,R,,72174AMA-1,M910001,72174AMA-
1,M910001,,,,,,,
8,1,,172165-76790,,"CONNECTOR 1/4X1/2",2,2,,,,,,,,,,,,,,,,
8-1,1,,172174-77120,,"CONNECTOR 1/4X1/2",2,2,,,,,R,,72174AMA-1,M910001,72174AMA-
1,M910001,,,,,,,
9,1,,172112-77360,,"CONNECTOR PF1/2PF1/2",1,1,,,,,,,,,,,,,,,,
9-1,1,,172174-76370,,"CONNECTOR PF1/2PF1/2",1,1,,,,,R,,72174AMA-
1,M910001,72174AMA-1,M910001,,,,,,,
10,1,,22137-100000,,"WASHER 10,POLISHED",4,4,,,,,,,,,,,,,,,,
11,1,,23391-040000,,"JOINT RGI 1/2",2,2,,,,,,,,,,,,,,,,
12,1,,172168-76240,,"CONNECTOR UN7/8PF1/2",1,1,,,,,,,,,,,,,,,,
12-1,1,,172174-76260,,"CONNECTOR UN7/8PF1/2",1,1,,,,,R,,72174AMA-
1,M910001,72174AMA-1,M910001,,,,,,,
13,1,,24315-000180,,"O-RING 1B P-18.0",1,1,,,,,,,,,,,,,,,,
14,1,,24315-000240,,"O-RING 1B P-24.0",1,1,,,,,,,,,,,,,,,,
15,1,,24321-000400,,"O-RING 1A G-40.0",1,1,,,,,,,,,,,,,,,,
16,1,,26013-100252,,"BOLT W/WASHER M10X25",4,4,,,,,,,,,,,,,,,,
17,1,,933152-07400,,"O-RING (A)",1,1,,,,,,,,,,,,,,,,
17-1,1,,172159-76350,,"O-RING (A)",1,1,,,,,R,,72174AMA-1,M910001,72174AMA-
1,M910001,,,,,,,
18,1,,933152-07400,,"O-RING (A)",1,1,,,,,,,,,,,,,,,,
18-1,1,,172159-76350,,"O-RING (A)",1,1,,,,,R,,72174AMA-1,M910001,72174AMA-
1,M910001,,,,,,,
19,1,,933152-24120,,"O-RING (B)",1,1,,,,,,,,,,,,,,,,
19-1,1,,172161-76200,,"O-RING B",1,1,,,,,R,,72174AMA-1,M910001,72174AMA-
1,M910001,,,,,,,
20,1,,933166-24140,,CONNECTOR,1,1,,,,,,,,,,,,,,,,
20-1,1,,172174-76390,,"CONNECTOR PF1/2",1,1,,,,,R,,72174AMA-1,M910001,72174AMA-
1,M910001,,,,,,,
21,1,,172168-76500,,TUBE,1,1,,,,,,,,,,,,,,,,
21-1,1,,172174-76640,,TUBE,1,1,,,,,R,,72174AMA-1,M910001,72174AMA-
1,M910001,,,,,,,
22,1,,26013-100202,,"BOLT W/WASHER M10X20",2,2,,,,,,,,,,,,,,,,
23,1,,172168-78100,,"HOSE 44.5X57.5",1,1,,,,,,,,,,,,,,,,
23-1,1,,172174-78100,,HOSE,1,1,,,,,R,,72174AMA-1,M910001,72174AMA-
1,M910001,,,,,,,
24,1,,172171-78110,,"HOSE G820YY035",1,1,,,,,,,,,,,,,,,,
24-1,1,,172174-78110,,"HOSE G816YY035",1,1,,,,,R,,72174AMA-1,M910001,72174AMA-
1,M910001,,,,,,,
25,1,,172171-78120,,"HOSE G816YY039",1,1,,,,,,,,,,,,,,,,
25-1,1,,172174-78120,,"HOSE G816YY039",1,1,,,,,R,,72174AMA-1,M910001,72174AMA-
1,M910001,,,,,,,
26,1,,172171-78140,,"HOSE G608BY037S",1,1,,,,,,,,,,,,,,,,
26-1,1,,172174-78140,,"HOSE G608BY037S",1,1,,,,,R,,72174AMA-1,M910001,72174AMA-
1,M910001,,,,,,,
```

https://truckmanualshub.com/

```
27,1,,172171-78150,,"HOSE G208CV125S",2,2,,,,,,,,,,,,,,,,
28,1,,172171-78160,,"HOSE G208CV115",1,1,,,,,,,,,,,,,,,,
29,1,,23000-022000,,"CLAMP 22",2,2,,,,,,,,,,,,,,,,
30,1,,23000-041000,,"CLAMP 41",4,4,,,,,,,,,,,,,,,,
31,1,,23000-048000,,"CLAMP 48",4,4,,,,,,,,,,,,,,,,
32,1,,23000-070000,,"CLAMP 70",4,4,,,,,,,,,,,,,,,,
33,1,,172122-79890,,"CLAMP 350",1,1,,,,,,,,,,,,,,,,
33-1,1,,172159-45160,,"CLAMP 350",1,1,,,,,R,,72174AMA-1,M910001,72174AMA-
1,M910001,,,,,,,
```

Fig. 41 HYD. OIL PIPING (TANK ~ PUMP ~ VALVE)

https://truckmanualshub.com/

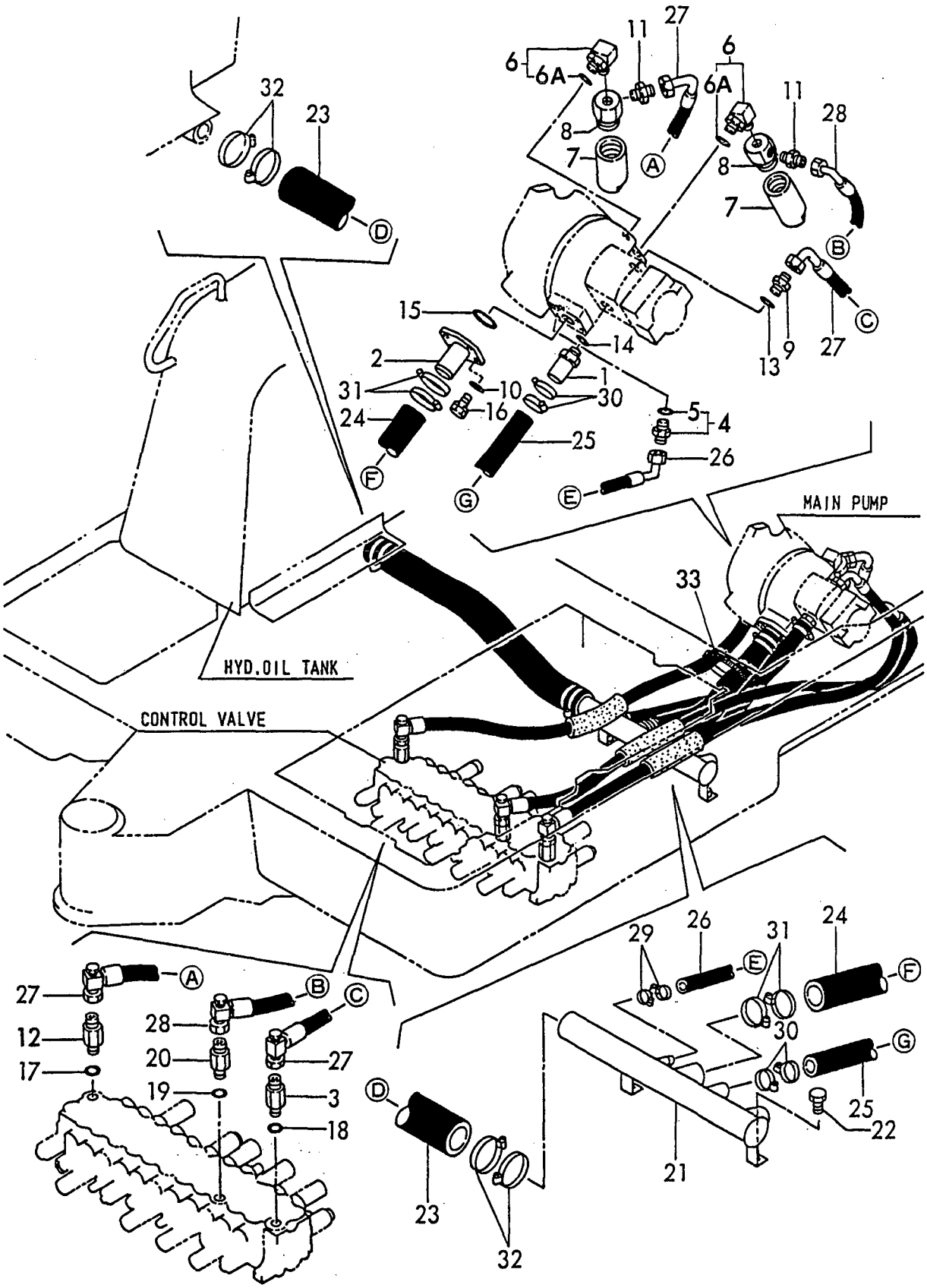

https://truckmanualshub.com/

```
1,1,,172730-75140,,ADAPTOR,2,2,,,,,,,,,,,,,,,,
1-1,1,,172161-76070,,"CONNECTOR PF3/8",2,2,,,,,R,,72174AMA-1,M910001,72174AMA-
1,M910001,,,,,,,
2,1,,172168-76130,,"CONNECTOR UN3/4PF3/8",1,1,,,,,,,,,,,,,,,,,,
2-1,1,,172174-76150,,"CONNECTOR UN3/4PF3/8",1,1,,,,,R,,72174AMA-
1,M910001,72174AMA-1,M910001,,,,,,,
3,2,,933152-24120,,"O-RING (B)",1,1,,,,,,,,,,,,,,,,,,
3-1,2,,172161-76200,,"O-RING B",1,1,,,,,R,,72174AMA-1,M910001,72174AMA-
1,M910001,,,,,,,
4,1,,24315-000140,,"O-RING 1B P-14.0",2,2,,,,,,,,,,,,,,,,,,
5,1,,933152-24120,,"O-RING (B)",4,4,,,,,,,,,,,,,,,,,,
5-1,1,,172161-76200,,"O-RING B",4,4,,,,,R,,72174AMA-1,M910001,72174AMA-
1,M910001,,,,,,,
6,1,,933152-24120,,"O-RING (B)",3,3,,,,,,,,,,,,,,,,,,
6-1,1,,172161-76200,,"O-RING B",3,3,,,,,R,,72174AMA-1,M910001,72174AMA-
1,M910001,,,,,,,
7,1,,933155-08481,,"CONNECTOR (A)",4,4,,,,,,,,,,,,,,,,,,
7-1,1,,172161-76240,,"CONNECTOR 3/8",4,4,,,,,R,,72174AMA-1,M910001,72174AMA-
1,M910001,,,,,,,
8,1,,172171-78500,,HOSE,1,1,,,,,,,,,,,,,,,,,,
9,1,,172171-78510,,HOSE,1,1,,,,,,,,,,,,,,,,,,
10,1,,172171-78520,,HOSE,1,1,,,,,,,,,,,,,,,,,,
11,1,,172171-78530,,HOSE,1,1,,,,,,,,,,,,,,,,,,
12,1,,172171-78540,,HOSE,1,1,,,,,,,,,,,,,,,,,,
13,1,,172171-78550,,HOSE,1,1,,,,,,,,,,,,,,,,,,
14,1,,172168-78700,,"SUPPORT ASSY, HOSE",1,1,,,,,,,,,,,,,,,,,,
14-1,1,,172174-78700,,SUPPORT,1,1,,,,,R,,72174AMA-1,M910001,72174AMA-
1,M910001,,,,,,,
15,1,,172168-78740,,"COVER ASSY",1,1,,,,,,,,,,,,,,,,,,
15-1,1,,172174-78740,,"COVER ASSY",1,1,,,,,R,,72174AMA-1,M910001,72174AMA-
1,M910001,,,,,,,
16,2,,172168-78760,,RUBBER,1,1,,,,,,,,,,,,,,,,,,
16-1,2,,172174-78760,,"RUBBER, HOSE SUPPORT",1,1,,,,,R,,72174AMA-
1,M910001,72174AMA-1,M910001,,,,,,,
17,1,,172168-78920,,"HOSE P208CC080S",1,1,,,,,,,,,,,,,,,,,,
17-1,1,,172174-78620,,"HOSE P208CC080S",1,1,,,,,R,,72174AMA-1,M910001,72174AMA-
1,M910001,,,,,,,
18,1,,172168-78960,,"HOSE P206BC080S",1,1,,,,,,,,,,,,,,,,,,
18-1,1,,172174-78600,,"HOSE P206BC080S",1,1,,,,,R,,72174AMA-1,M910001,72174AMA-
1,M910001,,,,,,,
19,1,,22217-100000,,"SPRING WASHER 10",2,2,,,,,,,,,,,,,,,,,,
20,1,,26013-100202,,"BOLT W/WASHER M10X20",2,2,,,,,,,,,,,,,,,,,,
21,1,,26116-100652,,"BOLT M10X 65 PLATED",2,2,,,,,,,,,,,,,,,,,,
22,1,,172142-76160,,"JOINT 3/4UN-3/8",3,3,,,,,,,,,,,,,,,,,,
22-1,1,,172174-76190,,"JOINT 3/4UN-3/8",3,3,,,,,R,,72174AMA-1,M910001,72174AMA-
1,M910001,,,,,,,
23,1,,172165-78150,,GROMMET,1,1,,,,,,,,,,,,,,,,,,
24,1,,172171-78900,,COVER,6,6,,,,,,,,,,,,,,,,,,
24-1,1,,172174-78930,,"COVER, HOSE",6,6,,,,,R,,72174AMA-1,M910001,72174AMA-
1,M910001,,,,,,,
25,1,,23000-025000,,"CLAMP 25",6,6,,,,,,,,,,,,,,,,,,
26,1,,172122-79920,,CLAMP,6,6,,,,,,,,,,,,,,,,,,
26-1,1,,172159-78080,,CLAMP,6,6,,,,,R,,72174AMA-1,M910001,72174AMA-
1,M910001,,,,,,,
```

Fig. 42 HYD. OIL PIPING (VALVE ~ MOTOR, BOOM)

https://truckmanualshub.com/

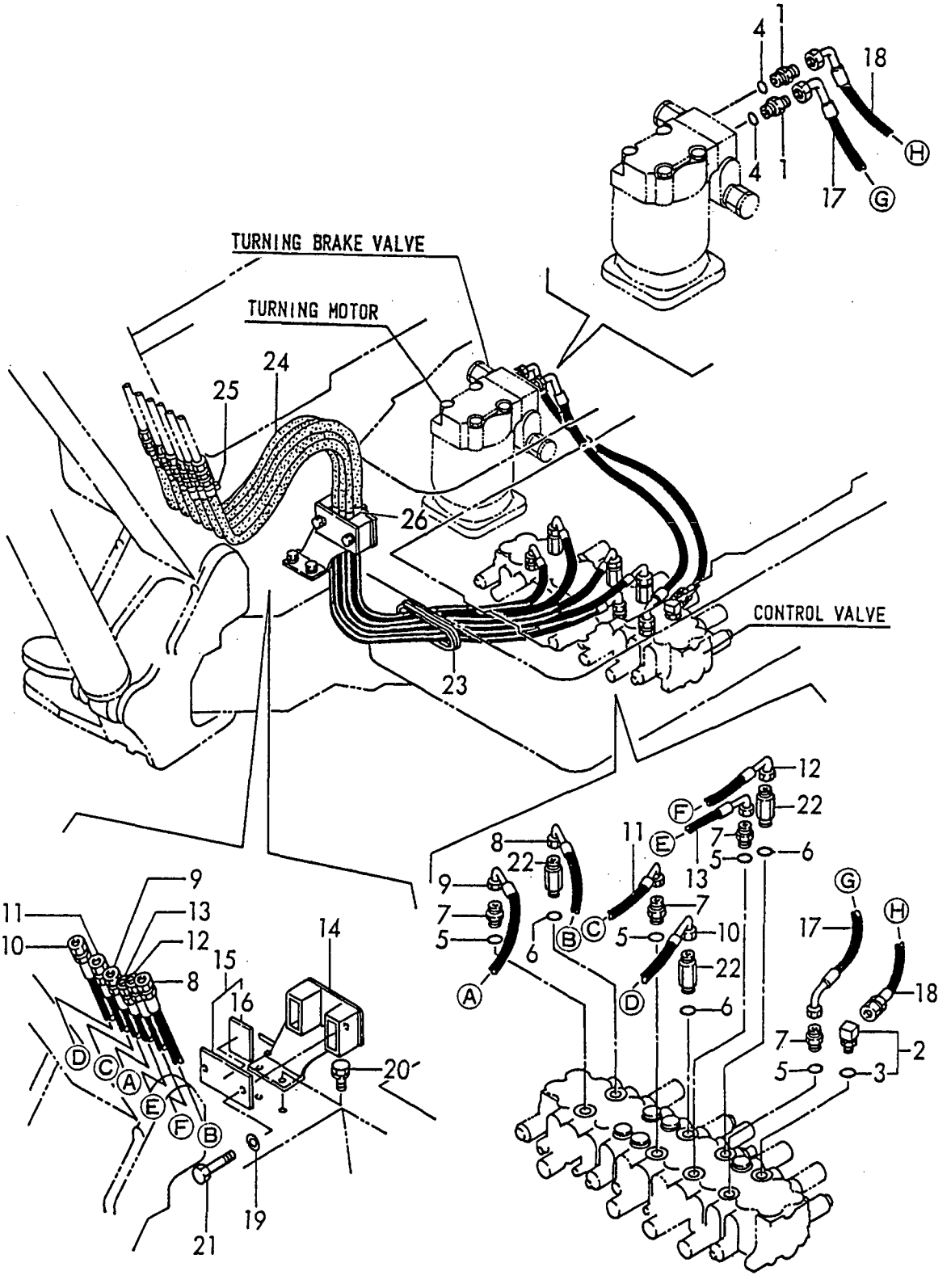

https://truckmanualshub.com/

```
1,1,,172168-76130,,"CONNECTOR UN3/4PF3/8",2,2,,,,,,,,,,,,,,,,
1-1,1,,172174-76150,,"CONNECTOR UN3/4PF3/8",2,2,,,,,R,,72174AMA-
1,M910001,72174AMA-1,M910001,,,,,,,
2,2,,933152-24120,,"O-RING (B)",2,2,,,,,,,,,,,,,,,,,
2-1,2,,172161-76200,,"O-RING B",2,2,,,,,R,,72174AMA-1,M910001,72174AMA-
1,M910001,,,,,,,
3,1,,172312-76220,,"CONNECTOR 1/4-3/4UN",3,3,,,,,,,,,,,,,,,,,
3-1,1,,172161-76230,,"CONNECTOR 3/4-1/4",3,3,,,,,R,,72174AMA-1,M910001,72174AMA-
1,M910001,,,,,,,
4,1,,23391-020000,,"JOINT RGI1/4",2,2,,,,,,,,,,,,,,,,,
5,1,,23393-020000,,"JOINT 90RGI1/4",2,2,,,,,,,,,,,,,,,,,
6,1,,23393-030000,,"JOINT 90RGI 3/8",4,4,,,,,,,,,,,,,,,,,
7,1,,933152-24120,,"O-RING (B)",2,2,,,,,,,,,,,,,,,,,
7-1,1,,172161-76200,,"O-RING B",2,2,,,,,R,,72174AMA-1,M910001,72174AMA-
1,M910001,,,,,,,
8,1,,933152-24120,,"O-RING (B)",3,3,,,,,,,,,,,,,,,,,
8-1,1,,172161-76200,,"O-RING B",3,3,,,,,R,,72174AMA-1,M910001,72174AMA-
1,M910001,,,,,,,
9,1,,933155-08481,,"CONNECTOR (A)",2,2,,,,,,,,,,,,,,,,,
9-1,1,,172161-76240,,"CONNECTOR 3/8",2,2,,,,,R,,72174AMA-1,M910001,72174AMA-
1,M910001,,,,,,,
10,1,,172171-78180,,"HOSE P204BE127S",1,1,,,,,,,,,,,,,,,,,
10-1,1,,172174-78180,,"HOSE P204BB127S",1,1,,,,,R,,72174AMA-1,M910001,72174AMA-
1,M910001,,,,,,,
11,1,,172168-78190,,"HOSE P204BC195S",1,1,,,,,,,,,,,,,,,,,
11-1,1,,172174-78290,,"HOSE P204BC195S",1,1,,,,,R,,72174AMA-1,M910001,72174AMA-
1,M910001,,,,,,,
12,1,,172141-78240,,HOSE,1,1,,,,,,,,,,,,,,,,,
12-1,1,,172174-78430,,HOSE,1,1,,,,,R,,72174AMA-1,M910001,72174AMA-
1,M910001,,,,,,,
13,1,,172168-78980,,"HOSE P204BC100S",2,2,,,,,,,,,,,,,,,,,
13-1,1,,172174-78570,,HOSE,2,2,,,,,R,,72174AMA-1,M910001,72174AMA-
1,M910001,,,,,,,
14,1,,172131-78600,,HOSE,1,1,,,,,,,,,,,,,,,,,
14-1,1,,172174-78470,,HOSE,1,1,,,,,R,,72174AMA-1,M910001,72174AMA-
1,M910001,,,,,,,
15,1,,172168-78900,,"HOSE P206BC070S",1,1,,,,,,,,,,,,,,,,,
15-1,1,,172174-78900,,"HOSE P206BC070S",1,1,,,,,R,,72174AMA-1,M910001,72174AMA-
1,M910001,,,,,,,
16,1,,172168-78940,,"HOSE P206BC089S",1,1,,,,,,,,,,,,,,,,,
16-1,1,,172174-78650,,"HOSE P206BC089S",1,1,,,,,R,,72174AMA-1,M910001,72174AMA-
1,M910001,,,,,,,
17,1,,172168-76140,,"CONNECTOR UN3/4PF1/4",1,1,,,,,,,,,,,,,,,,,
17-1,1,,172174-76160,,"CONNECTOR UN3/4PF1-4",1,1,,,,,R,,72174AMA-
1,M910001,72174AMA-1,M910001,,,,,,,
18,2,,933152-24120,,"O-RING (B)",1,1,,,,,,,,,,,,,,,,,
18-1,2,,172161-76200,,"O-RING B",1,1,,,,,R,,72174AMA-1,M910001,72174AMA-
1,M910001,,,,,,,
19,1,,23393-020000,,"JOINT 90RGI1/4",1,1,,,,,,,,,,,,,,,,,
20,1,,172168-78280,,"HOSE P204BE135",1,1,,,,,,,,,,,,,,,,,
21,1,,172123-76120,,"CONNECTOR PF1/4",1,1,,,,,,,,,,,,,,,,,
21-1,1,,172159-76120,,"CONNECTOR PF1/4",1,1,,,,,R,,72174AMA-1,M910001,72174AMA-
1,M910001,,,,,,,
22,1,,24315-000110,,"O-RING 1B P-11.0",1,1,,,,,,,,,,,,,,,,,
```

Fig. 43 HYD. OIL PIPING (VALVE ~ SWIVEL, SWING)

https://truckmanualshub.com/

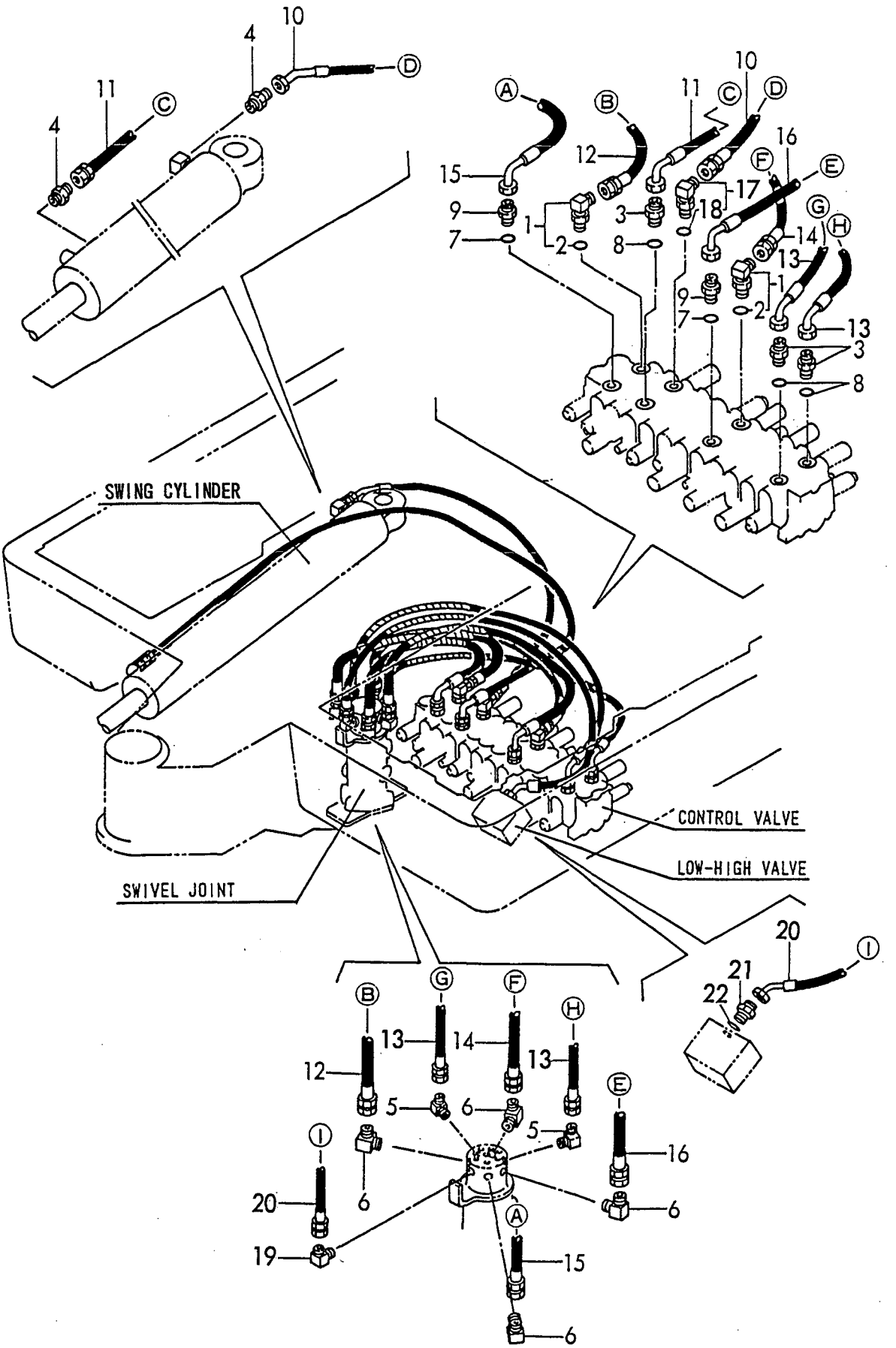

https://truckmanualshub.com/

```
1,1,,172168-76150,,"CONNECTOR UN7/8PF1/2",2,2,,,,,,,,,,,,,,,,
1-1,1,,172174-76180,,"CONNECTOR UN7/8PF1/2",2,2,,,,,R,,72174AMA-
1,M910001,72174AMA-1,M910001,,,,,,,
2,2,,933152-07400,,"O-RING (A)",2,2,,,,,,,,,,,,,,,,,
2-1,2,,172159-76350,,"O-RING (A)",2,2,,,,,R,,72174AMA-1,M910001,72174AMA-
1,M910001,,,,,,,
3,1,,172141-76220,,NIPPLE,1,1,,,,,,,,,,,,,,,,,
3-1,1,,172161-76220,,NIPPLE,1,1,,,,,R,,72174AMA-1,M910001,72174AMA-
1,M910001,,,,,,,
4,1,,23391-060000,,"JOINT RGI 3/4",1,1,,,,,,,,,,,,,,,,,
5,1,,23871-040000,,"PLUG PT1/2,SCREW",1,1,,,,,,,,,,,,,,,,,
6,1,,172168-76170,,"CONNECTOR 12,ROUND",1,1,,,,,,,,,,,,,,,,,
6-1,1,,172174-76220,,"CONNECTOR 12,ROUND",1,1,,,,,R,,72174AMA-
1,M910001,72174AMA-1,M910001,,,,,,,
7,1,,933171-24901,,CONNECTOR,1,1,,,,,,,,,,,,,,,,,
7-1,1,,172174-76400,,CONNECTOR,1,1,,,,,R,,72174AMA-1,M910001,72174AMA-
1,M910001,,,,,,,
8,2,,933152-07400,,"O-RING (A)",1,1,,,,,,,,,,,,,,,,,
8-1,2,,172159-76350,,"O-RING (A)",1,1,,,,,R,,72174AMA-1,M910001,72174AMA-
1,M910001,,,,,,,
9,1,,172168-78240,,"HOSE G612BY165S",1,1,,,,,,,,,,,,,,,,,
9-1,1,,172174-78240,,"HOSE G612BY165S",1,1,,,,,R,,72174AMA-1,M910001,72174AMA-
1,M910001,,,,,,,
10,1,,172168-78260,,"HOSE G608BY112S",1,1,,,,,,,,,,,,,,,,,
10-1,1,,172174-78360,,"HOSE G608BY112S",1,1,,,,,R,,72174AMA-1,M910001,72174AMA-
1,M910001,,,,,,,
11,1,,172168-78251,,"HOSE G608BC078S",1,1,,,,,,,,,,,,,,,,,
11-1,1,,172174-78341,,"HOSE G608BC078S",1,1,,,,,R,,72174AMA-1,M910001,72174AMA-
1,M910001,,,,,,,
12,1,,23000-022000,,"CLAMP 22",1,1,,,,,,,,,,,,,,,,,
13,1,,23000-035000,,"CLAMP 35",1,1,,,,,,,,,,,,,,,,,
14,1,,172168-76160,,"CONNECTOR PF1/2-3/8",1,1,,,,,,,,,,,,,,,,,
14-1,1,,172174-76200,,"CONNECTOR PF1/2-3/8",1,1,,,,,R,,72174AMA-
1,M910001,72174AMA-1,M910001,,,,,,,
15,2,,24315-000140,,"O-RING 1B P-14.0",1,1,,,,,,,,,,,,,,,,,
16,1,,172165-76220,,NIPPLE,1,1,,,,,,,,,,,,,,,,,
16-1,1,,172174-77140,,NIPPLE,1,1,,,,,R,,72174AMA-1,M910001,72174AMA-
1,M910001,,,,,,,
```

Fig. 44 HYD.OIL PIPING(RETURN)

https://truckmanualshub.com/

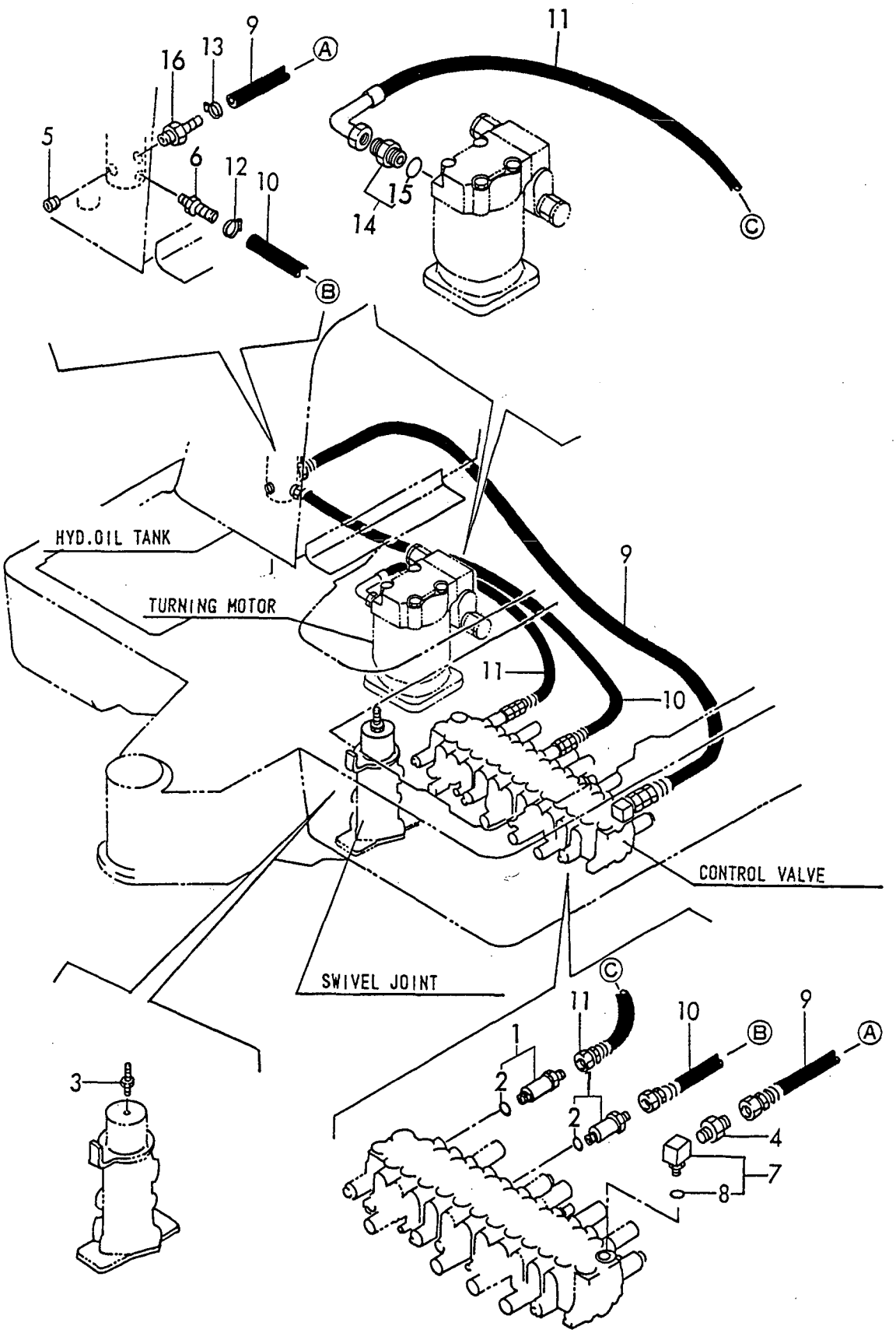

https://truckmanualshub.com/

```
1,1,,172142-76130,,"JOINT 7/8UN-1/4",1,1,,,,,,,,,,,,,,,,,
1-1,1,,172174-76140,,"JOINT 7/8UN-1/4",1,1,,,,,R,,72174AMA-1,M910001,72174AMA-
1,M910001,,,,,,,
2,1,,172168-76130,,"CONNECTOR UN3/4PF3/8",2,2,,,,,,,,,,,,,,,,,
2-1,1,,172174-76150,,"CONNECTOR UN3/4PF3/8",2,2,,,,,R,,72174AMA-
1,M910001,72174AMA-1,M910001,,,,,,,
3,2,,933152-24120,,"O-RING (B)",2,2,,,,,,,,,,,,,,,,,
3-1,2,,172161-76200,,"O-RING B",2,2,,,,,R,,72174AMA-1,M910001,72174AMA-
1,M910001,,,,,,,
4,1,,172633-76160,,"ADAPTER 1/2-3/4",1,1,,,,,,,,,,,,,,,,,
4-1,1,,172174-76210,,"CONNECTOR 3/4-1/2",1,1,,,,,R,,72174AMA-1,M910001,72174AMA-
1,M910001,,,,,,,
5,1,,172168-76180,,"CONNECTOR UN3/4PT1/2",1,1,,,,,,,,,,,,,,,,,
5-1,1,,172174-76230,,"CONNECTOR UN3/4PT1/2",1,1,,,,,R,,72174AMA-
1,M910001,72174AMA-1,M910001,,,,,,,
6,2,,933152-24120,,"O-RING (B)",1,1,,,,,,,,,,,,,,,,,
6-1,2,,172161-76200,,"O-RING B",1,1,,,,,R,,72174AMA-1,M910001,72174AMA-
1,M910001,,,,,,,
7,1,,172168-76300,,"JOINT, 3RD",1,1,,,,,,,,,,,,,,,,,
7-1,1,,172174-76290,,"JOINT, 3RD",1,1,,,,,R,,72174AMA-1,M910001,72174AMA-
1,M910001,,,,,,,
8,1,,172124-76350,,"CONNECTOR 1/2",1,1,,,,,,,,,,,,,,,,,
8-1,1,,172174-76300,,"CONNECTOR 1/2",1,1,,,,,R,,72174AMA-1,M910001,72174AMA-
1,M910001,,,,,,,
9,2,,933152-07400,,"O-RING (A)",1,1,,,,,,,,,,,,,,,,,
9-1,2,,172159-76350,,"O-RING (A)",1,1,,,,,R,,72174AMA-1,M910001,72174AMA-
1,M910001,,,,,,,
10,1,,23391-040000,,"JOINT RGI 1/2",1,1,,,,,,,,,,,,,,,,,
11,1,,23391-060000,,"JOINT RGI 3/4",1,1,,,,,,,,,,,,,,,,,
12,1,,23393-040000,,"JOINT 90RGI 1/4",1,1,,,,,,,,,,,,,,,,,
13,1,,23871-030000,,"PLUG PT3/8,SCREW",1,1,,,,,,,,,,,,,,,,,
14,1,,23871-040000,,"PLUG PT1/2,SCREW",1,1,,,,,,,,,,,,,,,,,
15,1,,26013-100202,,"BOLT W/WASHER M10X20",2,2,,,,,,,,,,,,,,,,,
16,1,,933152-07400,,"O-RING (A)",1,1,,,,,,,,,,,,,,,,,
16-1,1,,172159-76350,,"O-RING (A)",1,1,,,,,R,,72174AMA-1,M910001,72174AMA-
1,M910001,,,,,,,
17,1,,933152-24120,,"O-RING (B)",2,2,,,,,,,,,,,,,,,,,
17-1,1,,172161-76200,,"O-RING B",2,2,,,,,R,,72174AMA-1,M910001,72174AMA-
1,M910001,,,,,,,
18,1,,933166-24120,,"CONNECTOR PF1/2-10",2,2,,,,,,,,,,,,,,,,,
18-1,1,,172174-76380,,"CONNECTOR PF1/2-10",2,2,,,,,R,,72174AMA-
1,M910001,72174AMA-1,M910001,,,,,,,
19,1,,172130-78220,,HOSE,1,1,,,,,,,,,,,,,,,,,
19-1,1,,172174-78420,,"HOSE P208BC077S",1,1,,,,,R,,72174AMA-1,M910001,72174AMA-
1,M910001,,,,,,,
20,1,,172168-78230,,"HOSE P206BB070",2,2,,,,,,,,,,,,,,,,,
20-1,1,,172174-78330,,"HOSE P206BB070",2,2,,,,,R,,72174AMA-1,M910001,72174AMA-
1,M910001,,,,,,,
21,1,,172168-78330,,"HOSE G608BC058",1,1,,,,,,,,,,,,,,,,,
21-1,1,,172174-78210,,"HOSE G608BC058",1,1,,,,,R,,72174AMA-1,M910001,72174AMA-
1,M910001,,,,,,,
22,1,,172168-78340,,"HOSE G212BC068",1,1,,,,,,,,,,,,,,,,,
22-1,1,,172174-78230,,"HOSE G212BC065",1,1,,,,,R,,72174AMA-1,M910001,72174AMA-
1,M910001,,,,,,,
23,1,,172168-78370,,"HOSE G208BC127",1,1,,,,,,,,,,,,,,,,,
23-1,1,,172174-78170,,"HOSE G208BC127",1,1,,,,,R,,72174AMA-1,M910001,72174AMA-
1,M910001,,,,,,,
24,1,,172168-76130,,"CONNECTOR UN3/4PF3/8",1,1,,,,,,,,,,,,,,,,,
24-1,1,,172174-76150,,"CONNECTOR UN3/4PF3/8",1,1,,,,,R,,72174AMA-
1,M910001,72174AMA-1,M910001,,,,,,,
25,2,,933152-24120,,"O-RING (B)",1,1,,,,,,,,,,,,,,,,,
25-1,2,,172161-76200,,"O-RING B",1,1,,,,,R,,72174AMA-1,M910001,72174AMA-
1,M910001,,,,,,,
```

https://truckmanualshub.com/

```
26,1,,172312-76180,,"NIPPLE 1/2X3/8",1,1,,,,,,,,,,,,,,,,,,
26-1,1,,172174-76240,,"NIPPLE 1/2X3/8",1,1,,,,,R,,72174AMA-1,M910001,72174AMA-
1,M910001,,,,,,,
```

Fig. 45 HYD. OIL PIPING (P. T. O. VALVE, FRAME)

https://truckmanualshub.com/

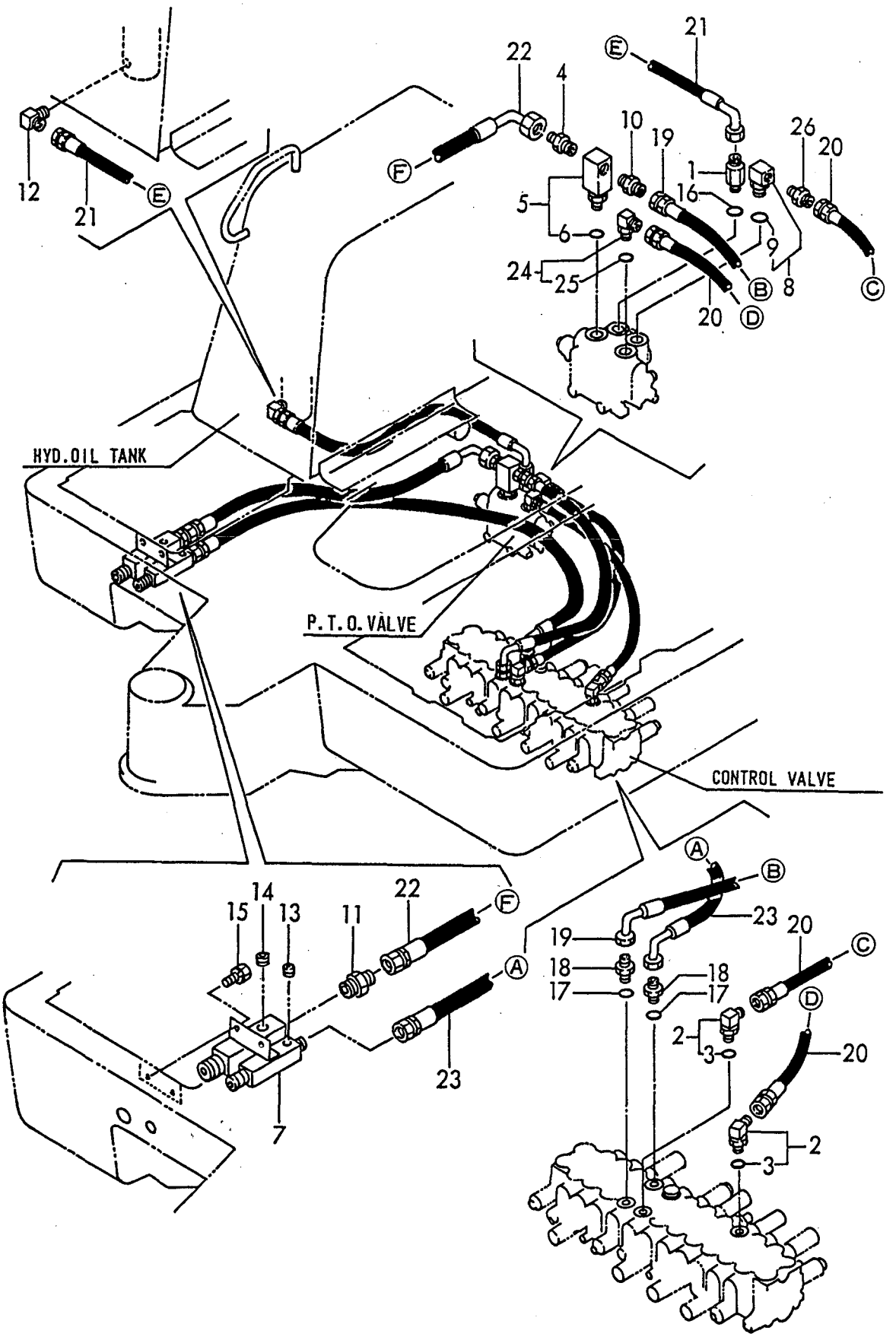

https://truckmanualshub.com/

```
1,1,,933160-01370,,"CONNECTOR PF1/2-3/8",4,4,,,,,,,,,,,,,,,,,
1-1,1,,172174-76530,,"CONNECTOR PF1/2-3/8",4,4,,,,,R,,72174AMA-
1,M910001,72174AMA-1,M910001,,,,,,,
2,1,,23391-030000,,"JOINT RGI 3/8",2,2,,,,,,,,,,,,,,,,,
3,1,,23391-020000,,"JOINT RGI1/4",2,2,,,,,,,,,,,,,,,,,
4,1,,23394-020000,,"JOINT 45RGI1/4",2,2,,,,,,,,,,,,,,,,,
5,1,,24315-000180,,"O-RING 1B P-18.0",4,4,,,,,,,,,,,,,,,,,
6,1,,23394-030000,,"JOINT 45RGI 3/8",2,2,,,,,,,,,,,,,,,,,
7,1,,172168-78200,,"HOSE P204AB043",2,2,,,,,,,,,,,,,,,,,
8,1,,172141-78460,,HOSE,2,2,,,,,,,,,,,,,,,,,
8-1,1,,172161-78460,,"HOSE P204AB051W",2,2,,,,,R,,72174AMA-1,M910001,72174AMA-
1,M910001,,,,,,,
9,1,,172141-78470,,HOSE,2,2,,,,,,,,,,,,,,,,,
9-1,1,,172161-78470,,"HOSE P206BB085W",2,2,,,,,R,,72174AMA-1,M910001,72174AMA-
1,M910001,,,,,,,
10,1,,172141-78480,,HOSE,2,2,,,,,,,,,,,,,,,,,
10-1,1,,172161-78480,,"HOSE P206BC090W",2,2,,,,,R,,72174AMA-1,M910001,72174AMA-
1,M910001,,,,,,,
11,1,,172171-78850,,"HOSE P204BB085W",2,2,,,,,,,,,,,,,,,,,
11-1,1,,172174-78690,,"HOSE P204BB085W",2,2,,,,,R,,72174AMA-1,M910001,72174AMA-
1,M910001,,,,,,,
12,1,,172171-78860,,"HOSE G704BB080W",2,2,,,,,,,,,,,,,,,,,
12-1,1,,172174-78090,,"HOSE G704BB080W",2,2,,,,,R,,72174AMA-1,M910001,72174AMA-
1,M910001,,,,,,,
13,1,,23394-020000,,"JOINT 45RGI1/4",2,2,,,,,,,,,,,,,,,,,
14,1,,172123-76120,,"CONNECTOR PF1/4",4,4,,,,,,,,,,,,,,,,,
14-1,1,,172159-76120,,"CONNECTOR PF1/4",4,4,,,,,R,,72174AMA-1,M910001,72174AMA-
1,M910001,,,,,,,
15,1,,24315-000110,,"O-RING 1B P-11.0",4,4,,,,,,,,,,,,,,,,,
```

Fig. 46 HYD. OIL PIPING (TRAVEL)

https://truckmanualshub.com/

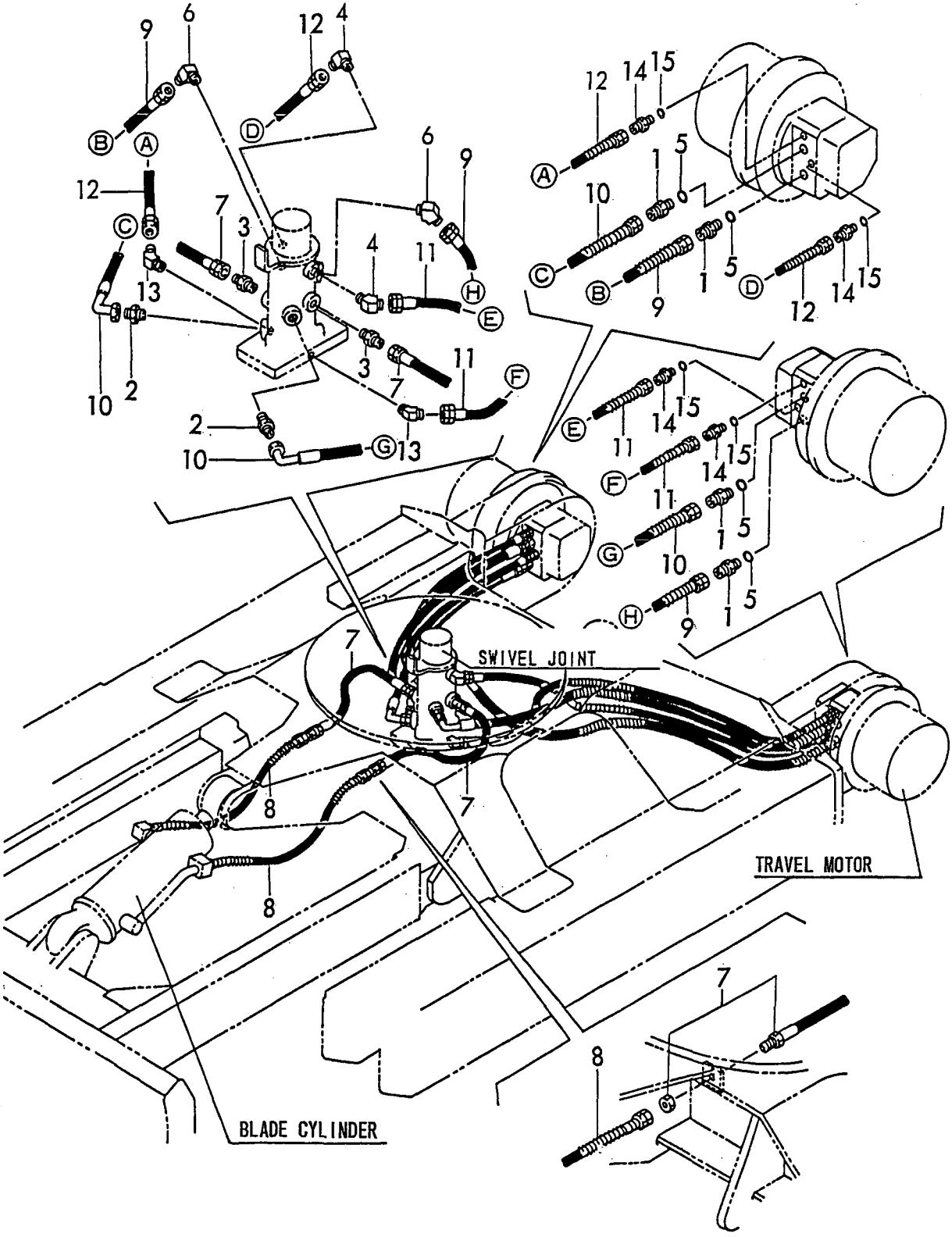

https://truckmanualshub.com/

```
1,1,,172171-78870,,"HOSE G206AB078W",1,1,,,,,,,,,,,,,,,,,
1-1,1,,172174-78680,,"HOSE G206AB078W",1,1,,,,,R,,72174AMA-1,M910001,72174AMA-
1,M910001,,,,,,,
2,1,,172142-76500,,"PIPE(A), BOOM",1,1,,,,,,,,,,,,,,,,,
2-1,1,,172174-76620,,"PIPE(A), BOOM",1,1,,,,,R,,72174AMA-1,M910001,72174AMA-
1,M910001,,,,,,,
3,1,,172142-76520,,"PIPE(B), BOOM",1,1,,,,,,,,,,,,,,,,,
3-1,1,,172174-76820,,"PIPE(B), BOOM",1,1,,,,,R,,72174AMA-1,M910001,72174AMA-
1,M910001,,,,,,,
4,1,,172171-76540,,"PIPE(L), ARM",1,1,,,,,,,,,,,,,,,,,
4-1,1,,172174-76540,,"PIPE(L), ARM",1,1,,,,,R,,72174AMA-1,M910001,72174AMA-
1,M910001,,,,,,,
5,1,,172171-76560,,"PIPE(R), ARM",1,1,,,,,,,,,,,,,,,,,
5-1,1,,172174-76560,,"TUBE R COMP.,ARM",1,1,,,,,R,,72174AMA-1,M910001,72174AMA-
1,M910001,,,,,,,
6,1,,172171-76580,,"PIPE(L), BUCKET",1,1,,,,,,,,,,,,,,,,,
6-1,1,,172174-76580,,"PIPE(L), BUCKET",1,1,,,,,R,,72174AMA-1,M910001,72174AMA-
1,M910001,,,,,,,
7,1,,172171-76600,,"PIPE(R), BUCKET",1,1,,,,,,,,,,,,,,,,,
7-1,1,,172174-76600,,"PIPE(R), BUCKET",1,1,,,,,R,,72174AMA-1,M910001,72174AMA-
1,M910001,,,,,,,
8,1,,172141-76670,,"CLAMP, PIPE(A)",7,7,,,,,,,,,,,,,,,,,
9,1,,172141-76680,,"CLAMP, PIPE(B)",2,2,,,,,,,,,,,,,,,,,
9-1,1,,172161-76680,,"CLAMP,TUBE B COMP.",2,2,,,,,R,,72174AMA-
1,M910001,72174AMA-1,M910001,,,,,,,
10,1,,22217-080000,,"SPRING WASHER  8",4,4,,,,,,,,,,,,,,,,,
11,1,,26013-100352,,"BOLT M10X 35",7,7,,,,,,,,,,,,,,,,,
12,1,,26717-080002,,"NUT 8",4,4,,,,,,,,,,,,,,,,,
13,1,,172312-78270,,HOSE,2,2,,,,,,,,,,,,,,,,,
13-1,1,,172174-78440,,HOSE,2,2,,,,,R,,72174AMA-1,M910001,72174AMA-
1,M910001,,,,,,,
14,1,,172141-78440,,HOSE,1,1,,,,,,,,,,,,,,,,,
14-1,1,,172161-78440,,"HOSE P206AB070W",1,1,,,,,R,,72174AMA-1,M910001,72174AMA-
1,M910001,,,,,,,
15,1,,172141-78400,,HOSE,1,1,,,,,,,,,,,,,,,,,
15-1,1,,172161-78400,,"HOSE P206AB035",1,1,,,,,R,,72174AMA-1,M910001,72174AMA-
1,M910001,,,,,,,
16,1,,172141-78410,,HOSE,1,1,,,,,,,,,,,,,,,,,
16-1,1,,172161-78410,,"HOSE P206AB042",1,1,,,,,R,,72174AMA-1,M910001,72174AMA-
1,M910001,,,,,,,
17,1,,172171-78910,,COVER,2,2,,,,,,,,,,,,,,,,,
17-1,1,,172174-78940,,COVER,2,2,,,,,R,,72174AMA-1,M910001,72174AMA-
1,M910001,,,,,,,
18,1,,172137-79970,,COVER,1,1,,,,,,,,,,,,,,,,,
18-1,1,,172161-79970,,"COVER 16X370,HOSE",1,1,,,,,R,,72174AMA-
1,M910001,72174AMA-1,M910001,,,,,,,
19,1,,23000-025000,,"CLAMP 25",8,8,,,,,,,,,,,,,,,,,
20,1,,172143-79800,,"COVER, HOSE",1,1,,,,,,,,,,,,,,,,,
20-1,1,,172161-79800,,"COVER 16X400,HOSE",1,1,,,,,R,,72174AMA-
1,M910001,72174AMA-1,M910001,,,,,,,
```

Fig. 47 HYD. OIL PIPING (BOOM)

https://truckmanualshub.com/

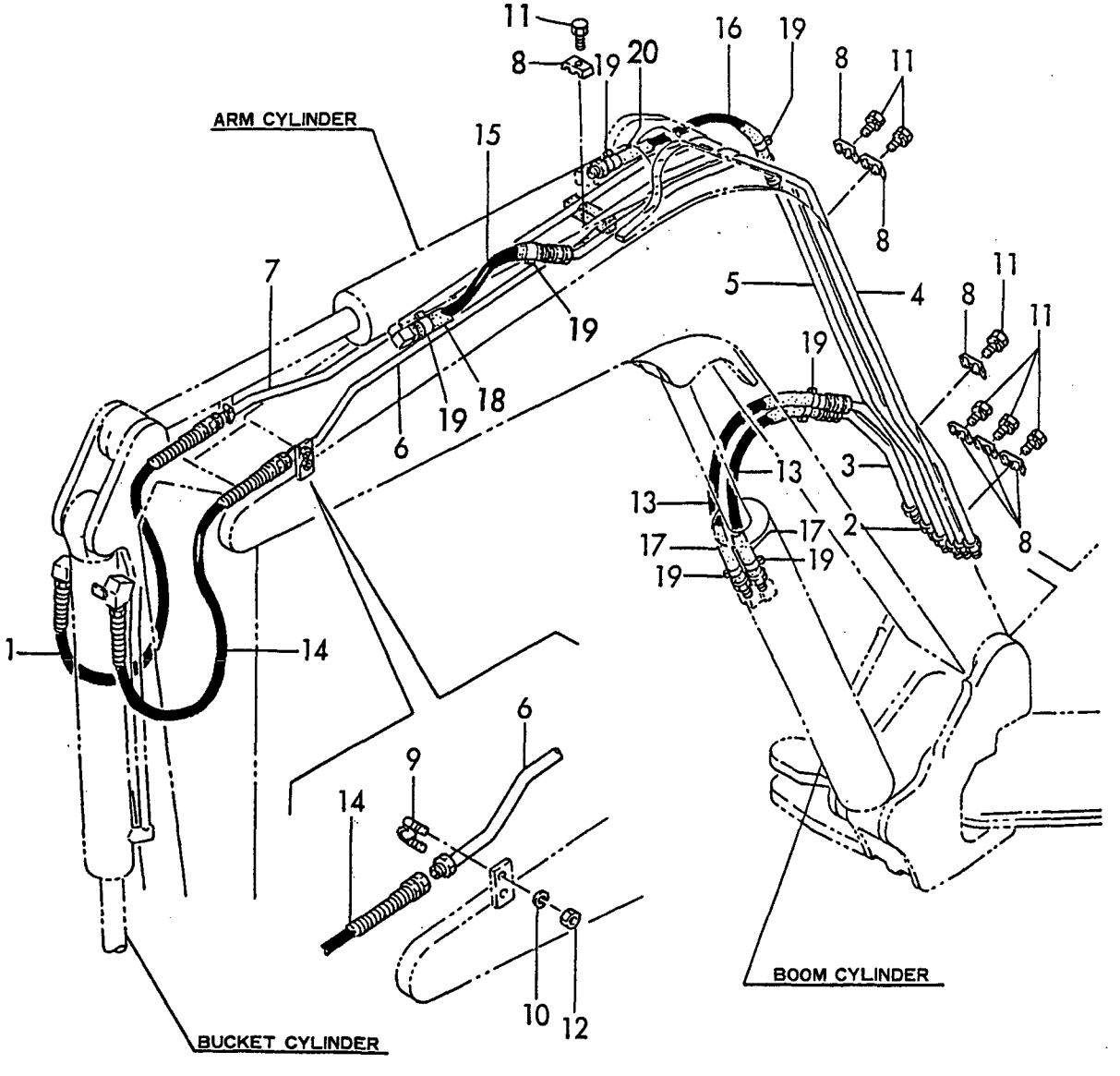

https://truckmanualshub.com/

```
1,1,,172171-76700,,"JOINT, 3RD",1,1,,,,,,,,,,,,,,,,
1-1,1,,172174-76700,,"JOINT, 3RD",1,1,,,,,R,,72174AMA-1,M910001,72174AMA-
1,M910001,,,,,,
2,1,,172142-76270,,"JOINT 1/2, SWIVEL",1,1,,,,,,,,,,,,,,,,
2A,2,,172142-77040,,"SEAL
SET",1,1,,,,,W,,72142389,*1996.02,72142389,*1996.02,,,,,,,,,I
3,1,,172142-76280,,"JOINT 3/4, SWIVEL",1,1,,,,,,,,,,,,,,,,
3A,2,,172142-77050,,"SEAL
SET",1,1,,,,,W,,72142389,*1996.02,72142389,*1996.02,,,,,,,,,I
4,1,,172171-76830,,"TUBE B COMP.,3RD",1,1,,,,,,,,,,,,,,,,
4-1,1,,172174-76040,,"TUBE B COMP.,3RD",1,1,,,,,R,,72174AMA-1,M910001,72174AMA-
1,M910001,,,,,,
5,1,,172171-76800,,"TUBE A COMP.,3RD",1,1,,,,,,,,,,,,,,,,
5-1,1,,172174-76060,,"TUBE A COMP.,3RD",1,1,,,,,R,,72174AMA-1,M910001,72174AMA-
1,M910001,,,,,,
6,1,,172137-79950,,COVER,1,1,,,,,,,,,,,,,,,,
6-1,1,,172161-79950,,"COVER 24X650,HOSE",1,1,,,,,R,,72174AMA-1,M910001,72174AMA-
1,M910001,,,,,,
7,1,,172125-76900,,CLAMP,2,2,,,,,,,,,,,,,,,,
8,1,,172141-76850,,"SPACER, CLAMP",2,2,,,,,,,,,,,,,,,,
8-1,1,,172161-76850,,"SPACER,CLAMP",2,2,,,,,R,,72174AMA-1,M910001,72174AMA-
1,M910001,,,,,,
9,1,,22217-120000,,"WASHER 12,SPRING",2,2,,,,,,,,,,,,,,,,
10,1,,23394-060000,,"JOINT 45RGI3/4",1,1,,,,,,,,,,,,,,,,
11,1,,23871-040000,,"PLUG PT1/2,SCREW",1,1,,,,,,,,,,,,,,,,
12,1,,23871-060000,,"PLUG PT3/4,SCREW",1,1,,,,,,,,,,,,,,,,
13,1,,26013-100252,,"BOLT W/WASHER M10X25",2,2,,,,,,,,,,,,,,,,
14,1,,26116-120552,,"BOLT M12X 55 PLATED",2,2,,,,,,,,,,,,,,,,
15,1,,23000-035000,,"CLAMP 35",6,6,,,,,,,,,,,,,,,,
16,1,,172168-78450,,"HOSE G308BC092",1,1,,,,,,,,,,,,,,,,
16-1,1,,172174-78270,,"HOSE G308BC092",1,1,,,,,R,,72174AMA-1,M910001,72174AMA-
1,M910001,,,,,,
17,1,,172142-78500,,HOSE,1,1,,,,,,,,,,,,,,,,
17-1,1,,172174-78450,,HOSE,1,1,,,,,R,,72174AMA-1,M910001,72174AMA-
1,M910001,,,,,,
18,1,,172142-78510,,HOSE,1,1,,,,,,,,,,,,,,,,
18-1,1,,172174-78460,,HOSE,1,1,,,,,R,,72174AMA-1,M910001,72174AMA-
1,M910001,,,,,,
19,1,,172142-78850,,HOSE,1,1,,,,,,,,,,,,,,,,
19-1,1,,172174-78850,,"HOSE G312BC082",1,1,,,,,R,,72174AMA-1,M910001,72174AMA-
1,M910001,,,,,,
20,1,,172142-78950,,"CLAMP(A), HOSE",1,1,,,,,,,,,,,,,,,,
20-1,1,,172174-78950,,"CLAMP(A), HOSE",1,1,,,,,R,,72174AMA-1,M910001,72174AMA-
1,M910001,,,,,,
21,1,,172142-78960,,"CLAMP(B), HOSE",1,1,,,,,,,,,,,,,,,,
22,1,,22217-120000,,"WASHER 12,SPRING",1,1,,,,,,,,,,,,,,,,
23,1,,26116-120602,,"BOLT M12X 60 PLATED",1,1,,,,,,,,,,,,,,,,
24,1,,172142-78780,,"COVER, HOSE",1,1,,,,,,,,,,,,,,,,
24-1,1,,172174-78970,,"COVER, HOSE",1,1,,,,,R,,72174AMA-1,M910001,72174AMA-
1,M910001,,,,,,
25,1,,23000-041000,,"CLAMP 41",6,6,,,,,,,,,,,,,,,,
26,1,,172142-78810,,"COVER 24-400, HOSE",1,1,,,,,,,,,,,,,,,,
26-1,1,,172174-78980,,"COVER 24-400, HOSE",1,1,,,,,R,,72174AMA-
1,M910001,72174AMA-1,M910001,,,,,,
27,1,,172142-78820,,"COVER 24-780, HOSE",1,1,,,,,,,,,,,,,,,,
27-1,1,,172174-78990,,"COVER 24-780, HOSE",1,1,,,,,R,,72174AMA-
1,M910001,72174AMA-1,M910001,,,,,,
28,1,,172151-79410,,HOSE,1,1,,,,,,,,,,,,,,,,
28-1,1,,172174-78890,,"COVER, HOSE",1,1,,,,,R,,72174AMA-1,M910001,72174AMA-
1,M910001,,,,,,
29,1,,172142-78790,,"COVER 20-600, HOSE",1,1,,,,,,,,,,,,,,,,
29-1,1,,172161-79790,,"COVER 20X600,HOSE",1,1,,,,,R,,72174AMA-
1,M910001,72174AMA-1,M910001,,,,,,
```

Fig. 48 HYD. OIL PIPING (P. T. O. VALVE, BOOM)

https://truckmanualshub.com/

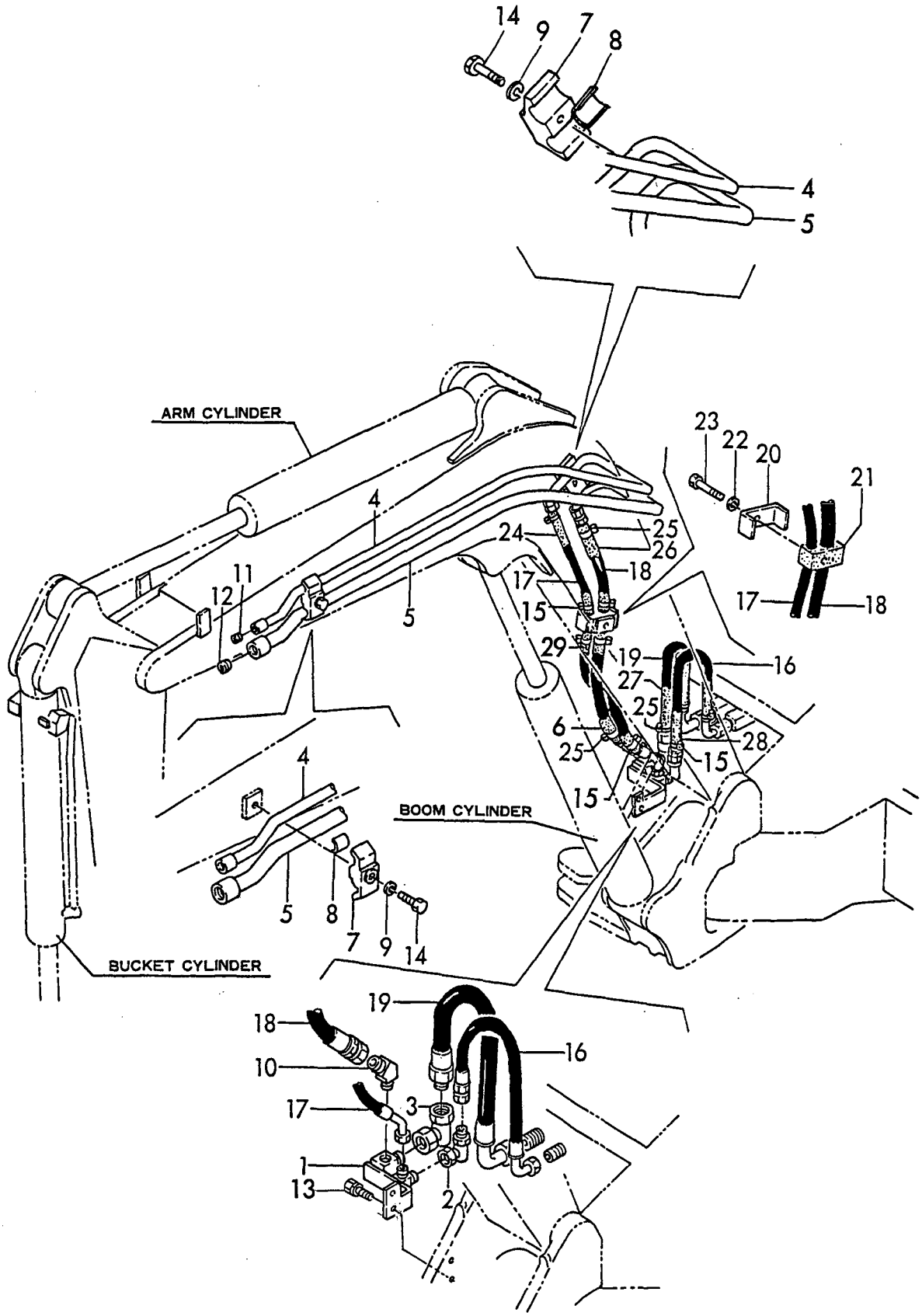

https://truckmanualshub.com/

1,1,,172156-76100,,"JOINT PF1/2-19",1,1,,,,,,,,,,,,,,,,
1-1,1,,172174-76090,,"JOINT PF1/2-19",1,1,,,,R,,72174AMA-1,M910001,72174AMA-1,M910001,,,,,,
2,1,,172148-76110,,"JOINT, HOSE",1,1,,,,,,,,,,,,,,,,
2-1,1,,172174-76080,,"JOINT, HOSE",1,1,,,,R,,72174AMA-1,M910001,72174AMA-1,M910001,,,,,,
3,1,,172168-76110,,"JOINT ASSY",1,1,,,,,,,,,,,,,,,,
3-1,1,,172174-76110,,"JOINT COMPL.",1,1,,,,R,,72174AMA-1,M910001,72174AMA-1,M910001,,,,,,
4,1,,172123-76120,,"CONNECTOR PF1/4",1,1,,,,,,,,,,,,,,,,
4-1,1,,172159-76120,,"CONNECTOR PF1/4",1,1,,,,R,,72174AMA-1,M910001,72174AMA-1,M910001,,,,,,
5,1,,172157-76150,,"CONNECTOR 3/8-1/4",1,1,,,,,,,,,,,,,,,,
5-1,1,,172174-76170,,"CONNECTOR 3/8-1/4",1,1,,,,R,,72174AMA-1,M910001,72174AMA-1,M910001,,,,,,
6,1,,172157-76150,,"CONNECTOR 3/8-1/4",1,1,,,,,,,,,,,,,,,,
6-1,1,,172174-76170,,"CONNECTOR 3/8-1/4",1,1,,,,R,,72174AMA-1,M910001,72174AMA-1,M910001,,,,,,
7,1,,172168-76150,,"CONNECTOR UN7/8PF1/2",1,1,,,,,,,,,,,,,,,,
7-1,1,,172174-76180,,"CONNECTOR UN7/8PF1/2",1,1,,,,R,,72174AMA-1,M910001,72174AMA-1,M910001,,,,,,
8,2,,933152-07400,,"O-RING (A)",1,1,,,,,,,,,,,,,,,,
8-1,2,,172159-76350,,"O-RING (A)",1,1,,,,R,,72174AMA-1,M910001,72174AMA-1,M910001,,,,,,
9,1,,172168-76160,,"CONNECTOR PF1/2-3/8",1,1,,,,,,,,,,,,,,,,
9-1,1,,172174-76200,,"CONNECTOR PF1/2-3/8",1,1,,,,R,,72174AMA-1,M910001,72174AMA-1,M910001,,,,,,
10,2,,24315-000140,,"O-RING 1B P-14.0",1,1,,,,,,,,,,,,,,,,
11,1,,172165-76270,,NIPPLE,1,1,,,,,,,,,,,,,,,,
12,1,,23391-020000,,"JOINT RGI1/4",1,1,,,,,,,,,,,,,,,,
13,1,,23393-020000,,"JOINT 90RGI1/4",1,1,,,,,,,,,,,,,,,,
14,1,,23393-030000,,"JOINT 90RGI 3/8",1,1,,,,,,,,,,,,,,,,
15,1,,23871-020000,,"PLUG PT1/4,SCREW",1,1,,,,,,,,,,,,,,,,
16,1,,24315-000110,,"O-RING 1B P-11.0",1,1,,,,,,,,,,,,,,,,
17,1,,24315-000140,,"O-RING 1B P-14.0",1,1,,,,,,,,,,,,,,,,
18,1,,172141-76220,,NIPPLE,1,1,,,,,,,,,,,,,,,,
18-1,1,,172161-76220,,NIPPLE,1,1,,,,R,,72174AMA-1,M910001,72174AMA-1,M910001,,,,,,
19,1,,24315-000140,,"O-RING 1B P-14.0",1,1,,,,,,,,,,,,,,,,
20,1,,24315-000180,,"O-RING 1B P-18.0",1,1,,,,,,,,,,,,,,,,
21,1,,26013-100202,,"BOLT W/WASHER M10X20",2,2,,,,,,,,,,,,,,,,
22,1,,172165-76220,,NIPPLE,1,1,,,,,,,,,,,,,,,,
22-1,1,,172174-76250,,NIPPLE,1,1,,,,R,,72174AMA-1,M910001,72174AMA-1,M910001,,,,,,
23,1,,172171-78130,,"HOSE G812YY035",1,1,,,,,,,,,,,,,,,,
23-1,1,,172174-78130,,"HOSE G812YY035",1,1,,,,R,,72174AMA-1,M910001,72174AMA-1,M910001,,,,,,
24,1,,172168-78170,,"HOSE P204CE140",1,1,,,,,,,,,,,,,,,,
24-1,1,,172174-78770,,"HOSE P204CE140",1,1,,,,R,,72174AMA-1,M910001,72174AMA-1,M910001,,,,,,
25,1,,172148-78190,,HOSE,1,1,,,,,,,,,,,,,,,,
25-1,1,,172174-78800,,HOSE,1,1,,,,R,,72174AMA-1,M910001,72174AMA-1,M910001,,,,,,
26,1,,172168-78270,,"HOSE G608BB026",1,1,,,,,,,,,,,,,,,,
26-1,1,,172174-78810,,"HOSE G608BB026",1,1,,,,R,,72174AMA-1,M910001,72174AMA-1,M910001,,,,,,
27,1,,172168-78400,,"HOSE G803BY050",1,1,,,,,,,,,,,,,,,,
27-1,1,,172174-78820,,"HOSE G803BY050",1,1,,,,R,,72174AMA-1,M910001,72174AMA-1,M910001,,,,,,
28,1,,172168-78890,,"HOSE G804EY050",1,1,,,,,,,,,,,,,,,,
28-1,1,,172174-78880,,"HOSE G804EY050",1,1,,,,R,,72174AMA-1,M910001,72174AMA-1,M910001,,,,,,
29,1,,23000-016000,,"CLAMP 16",1,1,,,,,,,,,,,,,,,,

https://truckmanualshub.com/

```
30,1,,23000-035000,,"CLAMP 35",4,4,,,,,,,,,,,,,,,,
31,1,,23010-014000,,"CLAMP 14",3,3,,,,,,,,,,,,,,,,
32,1,,23010-014000,,"CLAMP 14",1,1,,,,,,,,,,,,,,,,
33,1,,23010-014000,,"CLAMP 14",1,1,,,,,,,,,,,,,,,,
34,1,,172168-78300,,"HOSE G704YY025",1,1,,,,,,,,,,,,,,,,
34-1,1,,172174-78280,,"HOSE G704YY025",1,1,,,,,R,,72174AMA-1,M910001,72174AMA-
1,M910001,,,,,,,
35,1,,172126-11510,,"BAND 300",2,2,,,,,,,,,,,,,,,,
```

Fig. 49 CONTROL PIPING (PUMP ~ LOW-HIGH V ~ RETURN)

https://truckmanualshub.com/

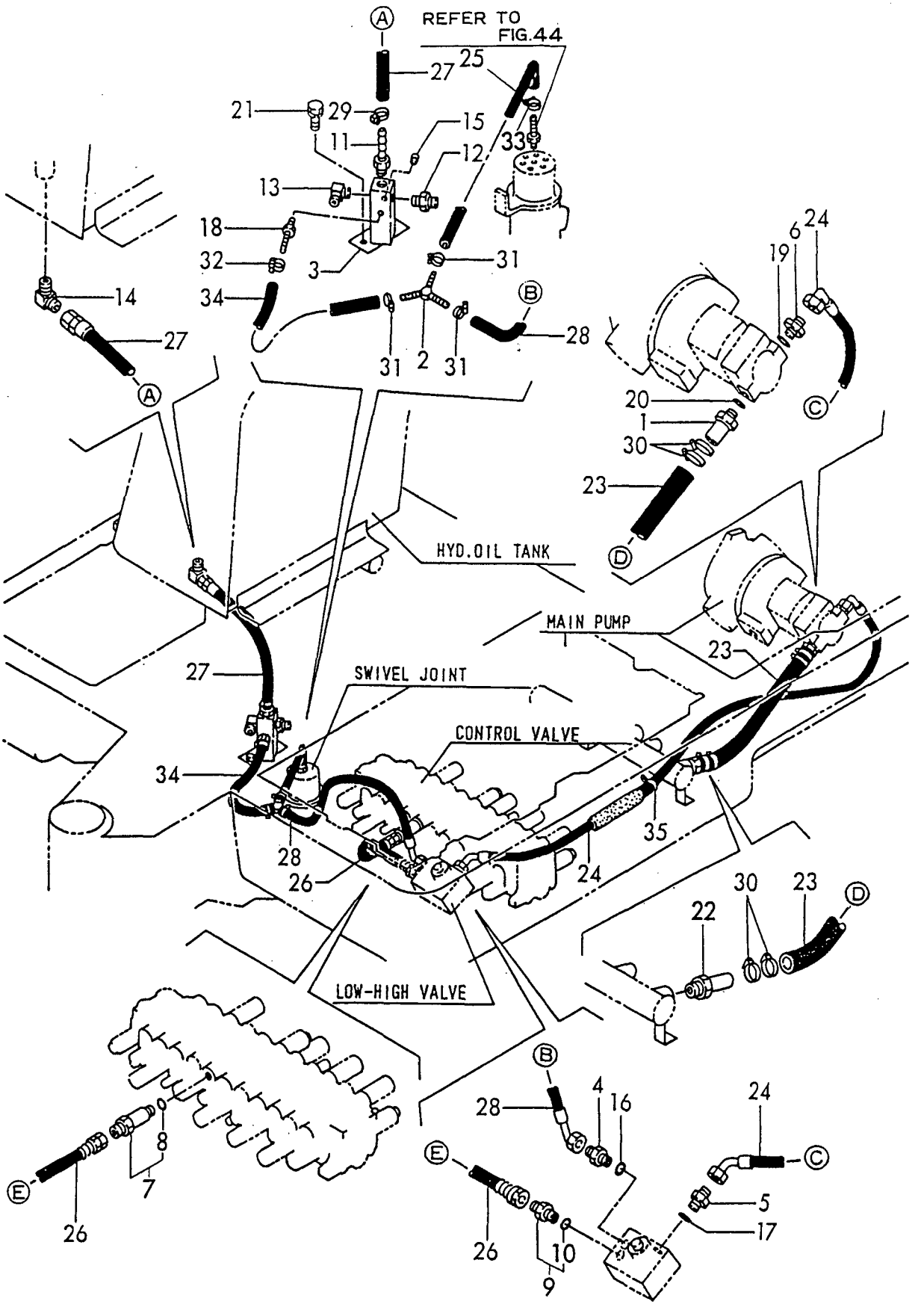

https://truckmanualshub.com/

```
1,1,,172123-76120,,"CONNECTOR PF1/4",12,12,,,,,,,,,,,,,,,,,
1-1,1,,172159-76120,,"CONNECTOR PF1/4",12,12,,,,,R,,72174AMA-1,M910001,72174AMA-
1,M910001,,,,,,,
2,1,,172123-76120,,"CONNECTOR PF1/4",5,5,,,,,,,,,,,,,,,,,
2-1,1,,172159-76120,,"CONNECTOR PF1/4",5,5,,,,,R,,72174AMA-1,M910001,72174AMA-
1,M910001,,,,,,,
3,1,,172165-76550,,CONNECTOR,1,1,,,,,,,,,,,,,,,,,
3-1,1,,172174-76310,,"CONNECTOR PT3/8PF1/4",1,1,,,,,R,,72174AMA-
1,M910001,72174AMA-1,M910001,,,,,,,
4,2,,24315-000110,,"O-RING 1B P-11.0",1,1,,,,,,,,,,,,,,,,,
5,1,,172168-76550,,"JOINT PF1/4-0.9",1,1,,,,,,,,,,,,,,,,,
5-1,1,,172174-77130,,"JOINT PF1/4-0.9",1,1,,,,,R,,72174AMA-1,M910001,72174AMA-
1,M910001,,,,,,,
6,1,,172165-76560,,ADAPTOR,1,1,,,,,,,,,,,,,,,,,
7,1,,172165-76570,,ELBOW,1,1,,,,,,,,,,,,,,,,,
8,1,,172162-76770,,"JOINT PF1/4",2,2,,,,,,,,,,,,,,,,,
8-1,1,,172174-76360,,"JOINT PF1/4",2,2,,,,,R,,72174AMA-1,M910001,72174AMA-
1,M910001,,,,,,,
9,1,,24315-000110,,"O-RING 1B P-11.0",12,12,,,,,,,,,,,,,,,,,
10,1,,24315-000110,,"O-RING 1B P-11.0",8,8,,,,,,,,,,,,,,,,,
11,1,,172122-79920,,CLAMP,6,6,,,,,,,,,,,,,,,,,
11-1,1,,172159-78080,,CLAMP,6,6,,,,,R,,72174AMA-1,M910001,72174AMA-
1,M910001,,,,,,,
11-2,1,,172159-45160,,"CLAMP
350",6,6,,,,,N,,72174016,*1993.03,72174016,*1993.03,,,,,,,,,I
12,1,,172122-79890,,"CLAMP 350",4,4,,,,,,,,,,,,,,,,,
12-1,1,,172159-45160,,"CLAMP 350",4,4,,,,,R,,72174AMA-1,M910001,72174AMA-
1,M910001,,,,,,,
12-2,1,,172174-79930,,"BAND
250",4,4,,,,,,,72174016,*1993.03,72174016,*1993.03,,,,,,,,,I
13,1,,172151-78980,,"SPONGY HOSE",2,2,,,,,,,,,,,,,,,,,
13-1,1,,172174-78560,,"SPONGY HOSE",2,2,,,,,R,,72174AMA-1,M910001,72174AMA-
1,M910001,,,,,,,
14,1,,172165-79220,,HOSE,1,1,,,,,,,,,,,,,,,,,
14-1,1,,172174-79220,,HOSE,1,1,,,,,R,,72174AMA-1,M910001,72174AMA-
1,M910001,,,,,,,
15,1,,172165-79290,,HOSE,1,1,,,,,,,,,,,,,,,,,
15-1,1,,172174-79290,,"HOSE G604BB175S",1,1,,,,,R,,72174AMA-1,M910001,72174AMA-
1,M910001,,,,,,,
16,1,,172165-79300,,HOSE,1,1,,,,,,,,,,,,,,,,,
16-1,1,,172174-79300,,HOSE,1,1,,,,,R,,72174AMA-1,M910001,72174AMA-
1,M910001,,,,,,,
17,1,,172165-79310,,HOSE,1,1,,,,,,,,,,,,,,,,,
17-1,1,,172174-79310,,"HOSE G604BC175S",1,1,,,,,R,,72174AMA-1,M910001,72174AMA-
1,M910001,,,,,,,
18,1,,172165-79340,,HOSE,1,1,,,,,,,,,,,,,,,,,
18-1,1,,172174-79340,,"HOSE G604BB120",1,1,,,,,R,,72174AMA-1,M910001,72174AMA-
1,M910001,,,,,,,
19,1,,172165-79350,,HOSE,1,1,,,,,,,,,,,,,,,,,
19-1,1,,172174-79350,,"HOSE G604BC175S",1,1,,,,,R,,72174AMA-1,M910001,72174AMA-
1,M910001,,,,,,,
20,1,,172165-79360,,HOSE,1,1,,,,,,,,,,,,,,,,,
20-1,1,,172174-79360,,"HOSE G604BB120",1,1,,,,,R,,72174AMA-1,M910001,72174AMA-
1,M910001,,,,,,,
21,1,,172165-79370,,HOSE,1,1,,,,,,,,,,,,,,,,,
21-1,1,,172174-79370,,"HOSE G604BC175S",1,1,,,,,R,,72174AMA-1,M910001,72174AMA-
1,M910001,,,,,,,
22,1,,172165-79600,,HOSE,1,1,,,,,,,,,,,,,,,,,
22-1,1,,172174-79600,,HOSE,1,1,,,,,R,,72174AMA-1,M910001,72174AMA-
1,M910001,,,,,,,
23,1,,172165-79620,,HOSE,2,2,,,,,,,,,,,,,,,,,
23-1,1,,172174-79620,,HOSE,2,2,,,,,R,,72174AMA-1,M910001,72174AMA-
1,M910001,,,,,,,
```

https://truckmanualshub.com/

```
24,1,,172165-79640,,HOSE,1,1,,,,,,,,,,,,,,,,,,
24-1,1,,172174-79640,,HOSE,1,1,,,,,R,,72174AMA-1,M910001,72174AMA-
1,M910001,,,,,,,
25,1,,172165-79820,,COVER,2,2,,,,,,,,,,,,,,,,,,
25-1,1,,172174-79820,,"COVER, HOSE",2,2,,,,,R,,72174AMA-1,M910001,72174AMA-
1,M910001,,,,,,,
```

Fig. 50 CONTROL PIPING (DIRECT)

https://truckmanualshub.com/

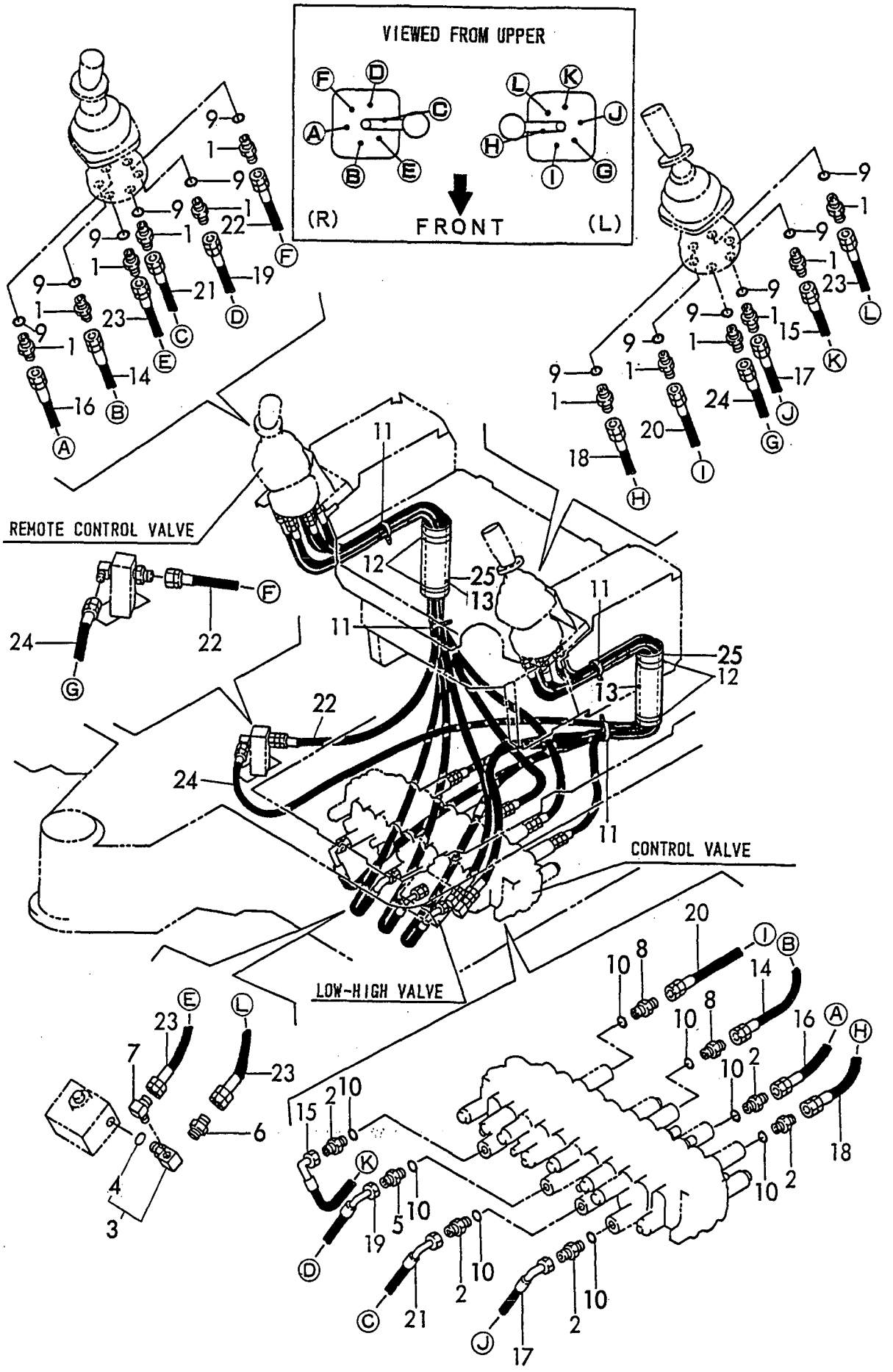

https://truckmanualshub.com/

```
1,1,,172112-77580,,"JOINT 1/8",1,1,,,,,,,,,,,,,,,,,
1-1,1,,172174-77580,,"JOINT 1/8",1,1,,,,,R,,72174AMA-1,M910001,72174AMA-
1,M910001,,,,,,,
2,1,,172141-77800,,"JOINT, GREASE",4,4,,,,,,,,,,,,,,,,,
2-1,1,,172159-77800,,"JOINT, GREASE",4,4,,,,,R,,72174AMA-1,M910001,72174AMA-
1,M910001,,,,,,,
3,1,,172142-77811,,HOSE,2,2,,,,,,,,,,,,,,,,,
3-1,1,,172174-77600,,HOSE,2,2,,,,,R,,72174AMA-1,M910001,72174AMA-
1,M910001,,,,,,,
4,1,,172312-77820,,"FITTING, GREASE",1,1,,,,,,,,,,,,,,,,,
4-1,1,,172159-76140,,"FITTING, GREASE",1,1,,,,,R,,72174AMA-1,M910001,72174AMA-
1,M910001,,,,,,,
5,1,,172149-78500,,HOSE,1,1,,,,,,,,,,,,,,,,,
5-1,1,,172174-77590,,HOSE,1,1,,,,,R,,72174AMA-1,M910001,72174AMA-
1,M910001,,,,,,,
6,1,,24761-020000,,"NIPPLE PT1/8,GREASE",3,3,,,,,,,,,,,,,,,,,
```

Fig. 51 GREASING

https://truckmanualshub.com/

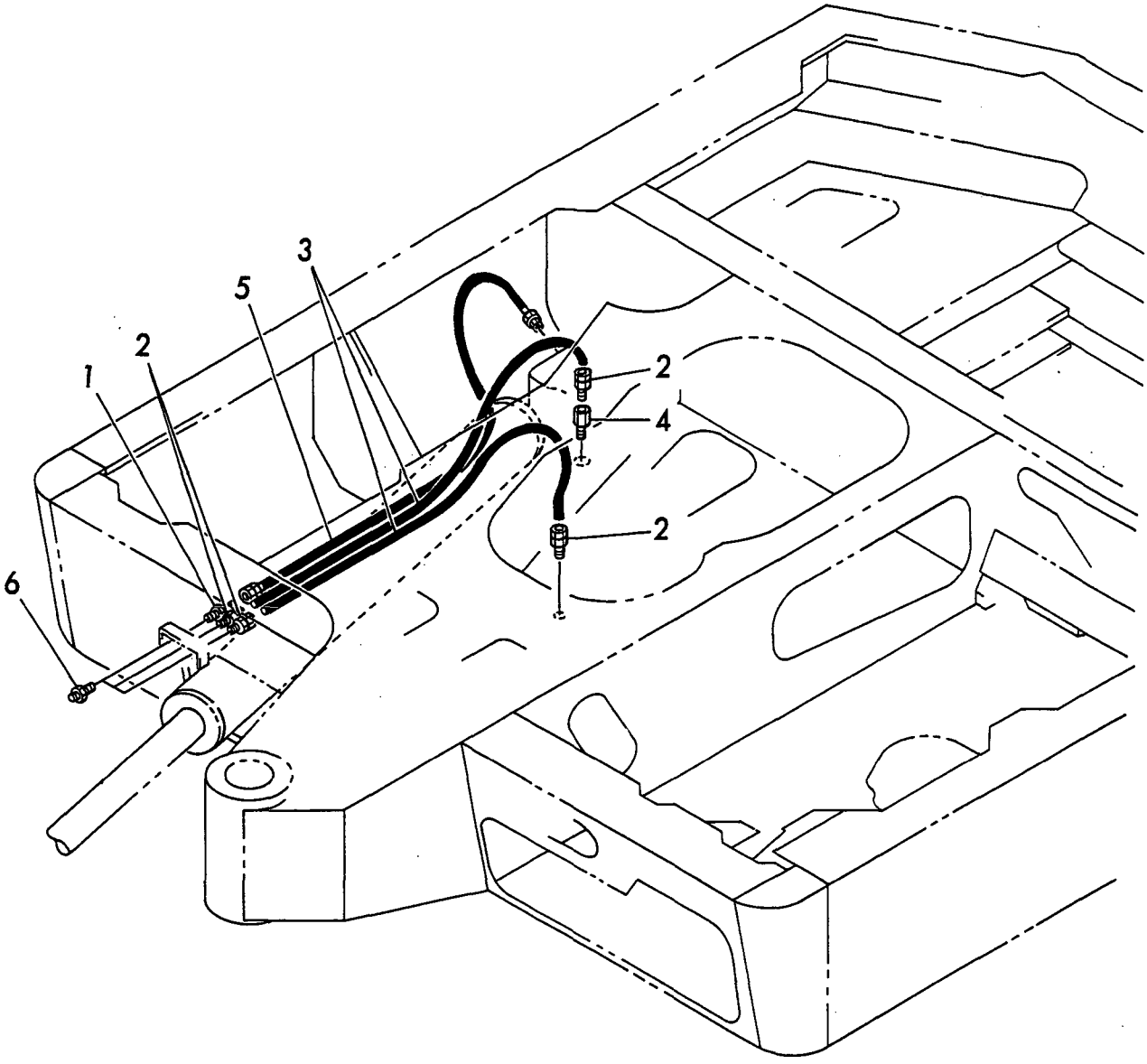

https://truckmanualshub.com/

```
1,1,,22217-160000,,"SPRING WASHER 16",2,2,,,,,,,,,,,,,,,,
2,1,,172171-81350,,"BOOM (3RD",1,1,,,,,,,,,,,,,,,,
2-1,1,,172174-81100,,"BOOM W/BUSH",1,1,,,,,R,,72174AMA-1,M910001,72174AMA-
1,M910001,,,,,,,
3,2,,172116-82400,,"PIN BUSH 38X55",2,2,,,,,,,,,,,,,,,,
3-1,2,,172161-81540,,"BUSH 38X55,PIN",2,2,,,,,R,,72174AMA-1,M910001,72174AMA-
1,M910001,,,,,,,
4,2,,172122-82290,,"SEAL, DUST",2,2,,,,,,,,,,,,,,,,
4-1,2,,172174-81290,,"SEAL,DUST 38X48X4",2,2,,,,,R,,72174AMA-1,M910001,72174AMA-
1,M910001,,,,,,,
5,1,,172141-81400,,"PIN 38-160",1,1,,,,,,,,,,,,,,,,
5-1,1,,172161-81400,,"PIN 38X160 COMPL.",1,1,,,,,R,,72174AMA-1,M910001,72174AMA-
1,M910001,,,,,,,
6,1,,172141-81420,,"PIN 38-115",2,2,,,,,,,,,,,,,,,,
6-1,1,,172161-81420,,"PIN 38X115 COMPL.",2,2,,,,,R,,72174AMA-1,M910001,72174AMA-
1,M910001,,,,,,,
7,1,,172171-82510,,"SHIM 39X75 COMP",2,2,,,,,,,,,,,,,,,,
7-1,1,,172174-82510,,"SHIM 38X75 ASSY.",2,2,,,,,R,,72174AMA-1,M910001,72174AMA-
1,M910001,,,,,,,
8,1,,22417-800500,,"COTTER PIN 8.0X50",3,3,,,,,,,,,,,,,,,,
9,1,,24761-050000,,"NIPPLE C,GREASE",1,1,,,,,,,,,,,,,,,,
10,1,,933171-29750,,"SHIM SET, PIN 38",4,4,,,,,,,,,,,,,,,,
10-1,1,,172159-83220,,"SHIM SET, PIN 38",4,4,,,,,R,,72174AMA-1,M910001,72174AMA-
1,M910001,,,,,,,
11,1,,172171-81270,,O-RING,2,2,,,,,,,,,,,,,,,,
11-1,1,,172174-81270,,O-RING,2,2,,,,,R,,72174AMA-1,M910001,72174AMA-
1,M910001,,,,,,,
12,1,,172141-82102,,"ARM ASSY(1080)",1,1,,,,,,,,,,,,,,,,
12-1,1,,172161-82101,,"ARM ASSY(1080)",1,1,,,,,R,,72174AMA-1,M910001,72174AMA-
1,M910001,,,,,,,
13,2,,172141-82270,,"BUSH 35 45",2,2,,,,,,,,,,,,,,,,
13-1,2,,172159-81480,,"BUSH 38 45, PIN",2,2,,,,,R,,72174AMA-1,M910001,72174AMA-
1,M910001,,,,,,,
14,2,,172141-82280,,"BUSH 38 45, PIN",2,2,,,,,,,,,,,,,,,,
14-1,2,,172161-82280,,"BUSH 38X45,PIN",2,2,,,,,R,,72174AMA-1,M910001,72174AMA-
1,M910001,,,,,,,
15,2,,172171-81261,,"BUSH 35X50",2,2,,,,,,,,,,,,,,,,
15-1,2,,172174-81260,,"BUSH 35X50",2,2,,,,,R,,72174AMA-1,M910001,72174AMA-
1,M910001,,,,,,,
16,2,,172171-81280,,"SEAL 35X45X4",4,4,,,,,,,,,,,,,,,,
16-1,2,,172174-81280,,"SEAL 35X45X4,DUST",4,4,,,,,R,,72174AMA-
1,M910001,72174AMA-1,M910001,,,,,,,
17,2,,172122-82290,,"SEAL, DUST",2,2,,,,,,,,,,,,,,,,
17-1,2,,172174-81290,,"SEAL,DUST 38X48X4",2,2,,,,,R,,72174AMA-
1,M910001,72174AMA-1,M910001,,,,,,,
18,1,,172141-82300,,"PIN 38-86",1,1,,,,,,,,,,,,,,,,
18-1,1,,172161-82300,,"PIN 35X86 COMPL.",1,1,,,,,R,,72174AMA-1,M910001,72174AMA-
1,M910001,,,,,,,
19,1,,172141-82330,,"PIN 38-86",1,1,,,,,,,,,,,,,,,,
19-1,1,,172161-82330,,"PIN 38X86 COMPL.",1,1,,,,,R,,72174AMA-1,M910001,72174AMA-
1,M910001,,,,,,,
20,1,,172141-84600,,"SHIM 35",1,1,,,,,,,,,,,,,,,,
20-1,1,,172159-81500,,"SHIM 35",1,1,,,,,R,,72174AMA-1,M910001,72174AMA-
1,M910001,,,,,,,
21,1,,22417-800500,,"COTTER PIN 8.0X50",1,1,,,,,,,,,,,,,,,,
22,1,,22417-800450,,"COTTER PIN 8.0X45",1,1,,,,,,,,,,,,,,,,
23,1,,24761-040000,,"NIPPLE B,GREASE",1,1,,,,,,,,,,,,,,,,
24,1,,933171-29750,,"SHIM SET, PIN 38",1,1,,,,,,,,,,,,,,,,
24-1,1,,172159-83220,,"SHIM SET, PIN 38",1,1,,,,,R,,72174AMA-1,M910001,72174AMA-
1,M910001,,,,,,,
25,1,,172141-84401,,"LINK W/BUSH, BUCKET",1,1,,,,,,,,,,,,,,,,
25-1,1,,172161-84401,,"LINK W/BUSH, BUCKET",1,1,,,,,R,,72174AMA-
1,M910001,72174AMA-1,M910001,,,,,,,
```

26,2,,172141-82270,,"BUSH 35 45",2,2,,,,,,,,,,,,,,,,
26-1,2,,172159-81480,,"BUSH 38 45, PIN",2,2,,,,,R,,72174AMA-1,M910001,72174AMA-1,M910001,,,,,,,
27,2,,172141-72561,,"BUSH 35 40 A, PIN",2,2,,,,,,,,,,,,,,,,,,
27-1,2,,172161-72561,,"BUSH 35X40A,PIN",2,2,,,,,R,,72174AMA-1,M910001,72174AMA-1,M910001,,,,,,,
28,2,,172171-81280,,"SEAL 35X45X4",6,6,,,,,,,,,,,,,,,,,,
28-1,2,,172174-81280,,"SEAL 35X45X4,DUST",6,6,,,,,R,,72174AMA-1,M910001,72174AMA-1,M910001,,,,,,,
29,1,,172141-84500,,"ARM(L), BUCKET",1,1,,,,,,,,,,,,,,,,,,
29-1,1,,172161-84500,,"ARM L COMP.,BUCKET",1,1,,,,,R,,72174AMA-1,M910001,72174AMA-1,M910001,,,,,,,
30,1,,172141-84510,,"ARM(R), BUCKET",1,1,,,,,,,,,,,,,,,,,,
30-1,1,,172161-84510,,"ARM,BUCKET",1,1,,,,,R,,72174AMA-1,M910001,72174AMA-1,M910001,,,,,,,
31,1,,172141-99470,,"KIT, ARM PIN",1,1,,,,,,,,,,,,,,,,,,
31-1,1,,772161-81300,,"KIT, ARM PIN",1,1,,,,,R,,72174AMA-1,M910001,72174AMA-1,M910001,,,,,,,
32,2,,172141-84550,,"PIN 35-152",2,2,,,,,,,,,,,,,,,,,,
32-1,2,,172161-84550,,"PIN 35X152 COMPL.",2,2,,,,,R,,72174AMA-1,M910001,72174AMA-1,M910001,,,,,,,
33,2,,24761-020000,,"NIPPLE PT1/8,GREASE",2,2,,,,,,,,,,,,,,,,,,
34,2,,933110-86600,,"NUT M24, NYLON",2,2,,,,,,,,,,,,,,,,,,
34-1,2,,172161-84580,,"NUT M24X24,NYLON",2,2,,,,,R,,72174AMA-1,M910001,72174AMA-1,M910001,,,,,,,
35,2,,933171-29760,,WASHER,2,2,,,,,,,,,,,,,,,,,,
35-1,2,,172161-84590,,WASHER,2,2,,,,,R,,72174AMA-1,M910001,72174AMA-1,M910001,,,,,,,
36,1,,24761-020000,,"NIPPLE PT1/8,GREASE",2,2,,,,,,,,,,,,,,,,,,
37,1,,172141-99460,,"PIN KIT, BUCKET",1,1,,,,,,,,,,,,,,,,,,
37-1,1,,772161-81450,,"PIN KIT,BUCKET",1,1,,,,,R,,72174AMA-1,M910001,72174AMA-1,M910001,,,,,,,
38,2,,172141-84600,,"SHIM 35",1,1,,,,,,,,,,,,,,,,,,
38-1,2,,172159-81500,,"SHIM 35",1,1,,,,,R,,72174AMA-1,M910001,72174AMA-1,M910001,,,,,,,
39,2,,172141-86251,,"PIN 35-188 CMP",2,2,,,,,,,,,,,,,,,,,,
39-1,2,,172161-86250,,"PIN 35X188 COMPL.",2,2,,,,,R,,72174AMA-1,M910001,72174AMA-1,M910001,,,,,,,
40,2,,22417-800450,,"COTTER PIN 8.0X45",2,2,,,,,,,,,,,,,,,,,,
41,2,,24761-020000,,"NIPPLE PT1/8,GREASE",2,2,,,,,,,,,,,,,,,,,,
42,1,,172141-81400,,"PIN 38-160",1,1,,,,,,,,,,,,,,,,,,
42-1,1,,172161-81400,,"PIN 38X160 COMPL.",1,1,,,,,R,,72174AMA-1,M910001,72174AMA-1,M910001,,,,,,,
43,1,,172141-83290,,BRACKET,1,1,,,,,,,,,,,,,,,,,,
43-1,1,,172174-83290,,"BRACKET ASSY.,BOOM",1,1,,,,,R,,72174AMA-1,M910001,72174AMA-1,M910001,,,,,,,
45,2,,172141-83330,,"BUSH 50X45",2,2,,,,,,,,,,,,,,,,,,
45-1,2,,172174-82340,,"BUSH 50X45",2,2,,,,,R,,72174AMA-1,M910001,72174AMA-1,M910001,,,,,,,
46,1,,172171-82310,,"PIN 50X292",1,1,,,,,,,,,,,,,,,,,,
46-1,1,,172174-82310,,"PIN 50X292",1,1,,,,,R,,72174AMA-1,M910001,72174AMA-1,M910001,,,,,,,
47,1,,172141-83340,,"PIN 38-223",1,1,,,,,,,,,,,,,,,,,,
47-1,1,,172161-83340,,"PIN 38X223 COMPL.",1,1,,,,,R,,72174AMA-1,M910001,72174AMA-1,M910001,,,,,,,
48,1,,172141-83371,,"PIN 38-97",1,1,,,,,,,,,,,,,,,,,,
48-1,1,,172161-83370,,"PIN 38X97 COMPL.",1,1,,,,,R,,72174AMA-1,M910001,72174AMA-1,M910001,,,,,,,
49,1,,172141-83390,,"PLATE, PIN LOCK",1,1,,,,,,,,,,,,,,,,,,
49-1,1,,172161-83390,,"PLATE,PIN LOCKING",1,1,,,,,R,,72174AMA-1,M910001,72174AMA-1,M910001,,,,,,,
50,1,,172141-94260,,"PIN 38-130",1,1,,,,,,,,,,,,,,,,,,

https://truckmanualshub.com/

```
50-1,1,,172161-94260,,"PIN 38X130",1,1,,,,,R,,72174AMA-1,M910001,72174AMA-
1,M910001,,,,,,,
51,1,,22242-000500,,"CIRCLIP   50",1,1,,,,,,,,,,,,,,,,,,
52,1,,22417-800500,,"COTTER PIN 8.0X50",3,3,,,,,,,,,,,,,,,,,,
53,1,,26013-100252,,"BOLT W/WASHER M10X25",2,2,,,,,,,,,,,,,,,,,,
54,1,,26116-160402,,"BOLT M16X 40 PLATED",2,2,,,,,,,,,,,,,,,,,,
55,1,,933171-29750,,"SHIM SET, PIN 38",2,2,,,,,,,,,,,,,,,,,,
55-1,1,,172159-83220,,"SHIM SET, PIN 38",2,2,,,,,R,,72174AMA-1,M910001,72174AMA-
1,M910001,,,,,,,
56,1,,172141-83400,,PLATE,1,1,,,,,,,,,,,,,,,,,,
56-1,1,,172161-83400,,PLATE,1,1,,,,,R,,72174AMA-1,M910001,72174AMA-
1,M910001,,,,,,,
```

Fig. 52 BOOM & ARM

https://truckmanualshub.com/

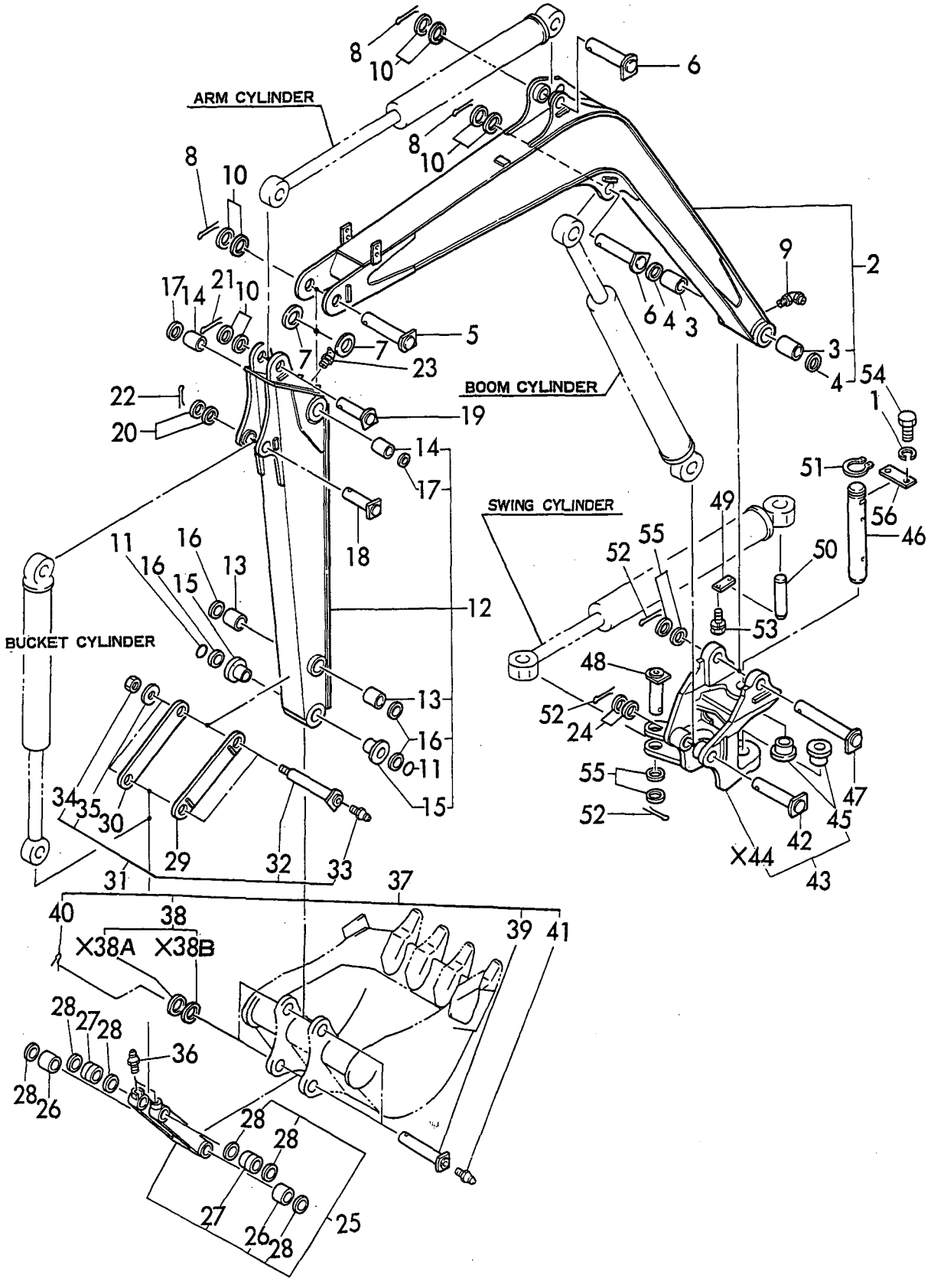

× MARK PARTS: NOT SOLD SEPARATELY.

https://truckmanualshub.com/

```
1,1,,172141-94102,,"BLADE ASSY, 850",1,1,,,,,,,,,,,,,,,,,
1-1,1,,172161-94102,,"BLADE 850 COMPL.",1,1,,,,,R,,72174AMA-1,M910001,72174AMA-
1,M910001,,,,,,,
2,2,,172168-81270,,"SEAL,DUST 38X50X4",4,4,,,,,,,,,,,,,,,,,
2-1,2,,172174-94150,,"SEAL 35X50X4,DUST",4,4,,,,,R,,72174AMA-1,M910001,72174AMA-
1,M910001,,,,,,,
3,1,,172141-94260,,"PIN 38-130",2,2,,,,,,,,,,,,,,,,,
3-1,1,,172161-94260,,"PIN 38X130",2,2,,,,,R,,72174AMA-1,M910001,72174AMA-
1,M910001,,,,,,,
4,1,,172141-94270,,"PIN 38-90",2,2,,,,,,,,,,,,,,,,,
4-1,1,,172161-94270,,"PIN 38X90 COMPL.",2,2,,,,,R,,72174AMA-1,M910001,72174AMA-
1,M910001,,,,,,,
5,1,,172124-94310,,"PLATE, LOCK",2,2,,,,,,,,,,,,,,,,,
5-1,1,,172161-94310,,"PLATE,LOCK",2,2,,,,,R,,72174AMA-1,M910001,72174AMA-
1,M910001,,,,,,,
6,1,,22417-800560,,"COTTER PIN 8.0X 56",2,2,,,,,,,,,,,,,,,,,
7,1,,24761-020000,,"NIPPLE PT1/8,GREASE",2,2,,,,,,,,,,,,,,,,,
8,1,,24761-040000,,"NIPPLE B,GREASE",2,2,,,,,,,,,,,,,,,,,
9,1,,26013-100252,,"BOLT W/WASHER M10X25",4,4,,,,,,,,,,,,,,,,,
10,1,,933171-29750,,"SHIM SET, PIN 38",2,2,,,,,,,,,,,,,,,,,
10-1,1,,172159-83230,,"SHIM SET, PIN 38",2,2,,,,,R,,72174AMA-1,M910001,72174AMA-
1,M910001,,,,,,,
```

Fig. 53 BLADE

https://truckmanualshub.com/

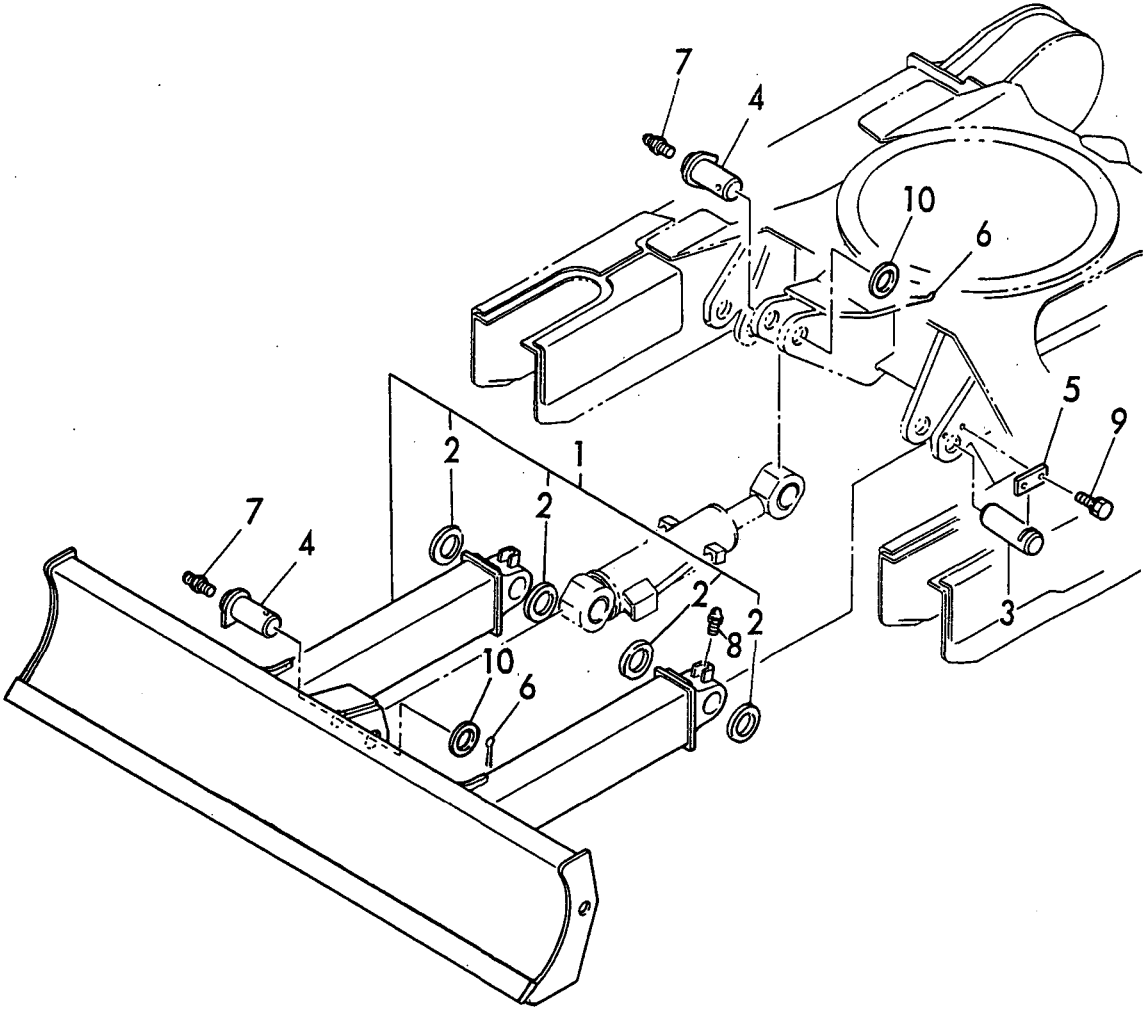

https://truckmanualshub.com/

```
Y00S3351,"Construction equipment",Excavator,B
[Info]
PcNo=Y00S3351
PcName=B22-2(AY)(B4741)
JpnUse=0
JpnSec1=
JpnSec2=
JpnSec3=
JpnPreface=0
EngUse=1
EngSec1=CONSTRUCTION
EngSec2=EXCAVATOR (B)
EngSec3=B
EngPreface=1
```

https://truckmanualshub.com/

```
0,Y00S3351
1,001,,"VEHICLE B22-2(AY)"
2,1,,LABEL(CABIN),"B22-2 C(R)AY","B22-2 P(R)AY",,
2,2,,LABEL(CANOPY),"B22-2 C(R)AY","B22-2 P(R)AY",,
2,3,,"INLET HOUSE & EXHAUST PIPE","B22-2 C(R)AY","B22-2 P(R)AY",,
2,4,,ACCELERATOR,"B22-2 C(R)AY","B22-2 P(R)AY",,
2,5,,"ENGINE MOUNT","B22-2 C(R)AY","B22-2 P(R)AY",,
2,6,,"RADIATOR & MOUNT","B22-2 C(R)AY","B22-2 P(R)AY",,
2,7,,"FUEL TANK & FUEL PIPE","B22-2 C(R)AY","B22-2 P(R)AY",,
2,8,,BATTERY,"B22-2 C(R)AY","B22-2 P(R)AY",,
2,9,,"ELECTRIC PART","B22-2 C(R)AY","B22-2 P(R)AY",,
2,10,,"WORK LAMP","B22-2 C(R)AY","B22-2 P(R)AY",,
2,11,,HEATER,"B22-2 C(R)AY","B22-2 P(R)AY",,
2,12,,"ROLLER & ADJUST","B22-2 C(R)AY","B22-2 P(R)AY",,
2,13,,CRAWLER,"B22-2 C(R)AY","B22-2 P(R)AY",,
2,14,,"CONTROL EQUIP.(LEVER STAND)","B22-2 C(R)AY","B22-2 P(R)AY",,
2,15,,"CONTROL EQUIPMENT(TRAVEL)","B22-2 C(R)AY","B22-2 P(R)AY",,
2,16,,"CONTROL EQUIPMENT(SWING)","B22-2 C(R)AY","B22-2 P(R)AY",,
2,17,,"CONTROL EQUIPMENT(BLADE)","B22-2 C(R)AY","B22-2 P(R)AY",,
2,18,,"CONTROL EQUIP.(CUT OFF LEVER &","B22-2 C(R)AY","B22-2 P(R)AY",,
2,19,,"CONTROL EQUIP.(P.T.O.CONTROL)","B22-2 C(R)AY","B22-2 P(R)AY",,
2,20,,"FRAME & TURNING BEARING","B22-2 C(R)AY","B22-2 P(R)AY",,
2,21,,"FRAME COVER(CABIN)","B22-2 C(R)AY","B22-2 P(R)AY",,
2,22,,"FRAME COVER(CANOPY)","B22-2 C(R)AY","B22-2 P(R)AY",,
2,23,,"SEAT MOUNT & STEP","B22-2 C(R)AY","B22-2 P(R)AY",,
2,24,,BONNET,"B22-2 C(R)AY","B22-2 P(R)AY",,
2,25,,CANOPY,"B22-2 C(R)AY","B22-2 P(R)AY",,
2,26,,"HYD. OIL PUMP & JOINT","B22-2 C(R)AY","B22-2 P(R)AY",,
2,27,,"BOOM CYLINDER & SWING CYLINDER","B22-2 C(R)AY","B22-2 P(R)AY",,
2,28,,"TRAVEL MOTOR","B22-2 C(R)AY","B22-2 P(R)AY",,
2,29,,"TURNING MOTOR","B22-2 C(R)AY","B22-2 P(R)AY",,
2,30,,"SWIVEL JOINT","B22-2 C(R)AY","B22-2 P(R)AY",,
2,31,,"CONTROL VALVE(P PORT)","B22-2 C(R)AY","B22-2 P(R)AY",,
2,32,,"CONTROL VALVE(TRAVEL)","B22-2 C(R)AY","B22-2 P(R)AY",,
2,33,,"CONTROL VALVE(ARM & SWING)","B22-2 C(R)AY","B22-2 P(R)AY",,
2,34,,"CONTROL VALVE(BOOM & BUCKET)","B22-2 C(R)AY","B22-2 P(R)AY",,
2,35,,"CONTROL VALVE(TURNING & BLADE)","B22-2 C(R)AY","B22-2 P(R)AY",,
2,36,,"REMOTE CONTROL VALVE(LEFT)","B22-2 C(R)AY","B22-2 P(R)AY",,
2,37,,"REMOTE CONTROL VALVE(RIGHT)","B22-2 C(R)AY","B22-2 P(R)AY",,
2,38,,"LOW-HIGH VALVE","B22-2 C(R)AY","B22-2 P(R)AY",,
2,39,,P.T.O.VALVE,"B22-2 C(R)AY","B22-2 P(R)AY",,
2,40,,"HYD. OIL TANK","B22-2 C(R)AY","B22-2 P(R)AY",,
2,41,,"HYD.OIL PIPING(TANK-PUMP-VALVE","B22-2 C(R)AY","B22-2 P(R)AY",,
2,42,,"HYD.OIL PIPING(VALVE-MOTOR,BOO","B22-2 C(R)AY","B22-2 P(R)AY",,
2,43,,"HYD.OIL PIPING(VALVE-SWIVEL,SW","B22-2 C(R)AY","B22-2 P(R)AY",,
2,44,,"HYD.OIL PIPING(RETURN)","B22-2 C(R)AY","B22-2 P(R)AY",,
2,45,,"HYD.OIL PIPING(P.T.O.VALVE,FRA","B22-2 C(R)AY","B22-2 P(R)AY",,
2,46,,"HYD.OIL PIPING(TRAVEL)","B22-2 C(R)AY","B22-2 P(R)AY",,
2,47,,"HYD.OIL PIPING(BOOM)","B22-2 C(R)AY","B22-2 P(R)AY",,
2,48,,"HYD.OIL PIPING(P.T.O.VALVE,BOO","B22-2 C(R)AY","B22-2 P(R)AY",,
2,49,,"CONTROL PIPING(PUMP-LOW-HIGH V","B22-2 C(R)AY","B22-2 P(R)AY",,
2,50,,"CONTROL PIPING(DIRECT)","B22-2 C(R)AY","B22-2 P(R)AY",,
2,51,,GREASING,"B22-2 C(R)AY","B22-2 P(R)AY",,
2,52,,"BOOM & ARM","B22-2 C(R)AY","B22-2 P(R)AY",,
2,53,,BLADE,"B22-2 C(R)AY","B22-2 P(R)AY",,
```