https://truckmanualshub.com/

MANITOU

ACCESS PLATFORM

160 ATJ & 180 ATJ

OPERATOR'S MANUAL

THIS INSTRUCTION LEAFLET MUST BE KEPT PERMANENTLY ON THE ACCESS PLATFORM AND BE READ AND UNDERSTOOD BY THE OPERATORS.

https://truckmanualshub.com/

1st DATE OF ISSUE	28 / 06 / 04

DATE OF ISSUE	OBSERVATIONS
28 / 06 / 2004	First edition
09 / 11 / 2004	Change of title page following the change of MANITOU logo
15 / 11 / 2004	Update
16 / 09 / 2005	Update: ch.2 following program developments ch.3 following production of the MAINTENANCE SCHEDULE.
05 / 07 / 2006	Corrections: Ch.2 - 4 add backup pump power fuse. Ch.3 corrections to MAINTENANCE SCHEDULE. Ch.5 ajout de l'option : Roues 20" + Panier large sur 180 ATJ.
22 / 11 / 2006	Corrections: Ch.2 - 20, 2 - 22, 2 - 23, 2 - 27 and 3 - 5 following replacement of the diesel gauge with a proportional gauge. From machine N°511335 - 180 ATJ From machine N° 511231 - 160 ATJ.

https://truckmanualshub.com/

TABLE OF CONTENTS

1 - INSTRUCTIONS 1 - 1

– GENUINE SPARE PARTS 1 - 3

– INSTRUCTIONS TO THE COMPANY MANAGER 1 - 4

– INSTRUCTIONS FOR THE OPERATOR 1 - 4

– MAINTENANCE INSTRUCTIONS OF THE ACCESS PLATFORM 1 - 14

– IF THE PLATFORM IS NOT TO BE USED FOR A LONG TIME 1 - 16

– IDENTIFICATION OF THE ACCESS PLATFORM 1 - 18

– BEFORE STARTING UP A PLATFORM FOR THE 1ST TIME 1 - 20

2 - DESCRIPTION 2 - 1

– CHARACTERISTICS 2 - 4

– DIMENSIONS 2 - 8

– REMINDER 2 - 12

– INSTRUMENTS AND CONTROLS 2 - 14

– USE OF THE ACCESS PLATFORM 2 - 40

– RESCUE PROCEDURE 2 - 43

3 - MAINTENANCE 3 - 1

– FILTERS CARTRIDGES AND BELTS 3 - 3

– LUBRICANTS 3 - 5

– MAINTENANCE SCHEDULE 3 - 6

A : Every day or every 10 hours of operation 3 - 8
B : Every 50 hours of operation 3 - 10
C : Every 250 hours of operation 3 - 12
D : Every 500 hours of operation 3 - 18
E : Every 1000 hours of operation 3 - 24
F : Every 3000 hours of operation 3 - 28
G : Occasional maintenance 3 - 29

4 - ELECTRICITY 4 - 1

5 - OPTIONAL ACCESSORIES FOR THE RANGE 5 - 1

6 - MAINTENANCE HANDBOOK 6 - 1

https://truckmanualshub.com/

1 - OPERATING AND SAFETY INSTRUCTIONS

https://truckmanualshub.com/

GENUINE SPARE PARTS

ALL MAINTENANCE ON OUR ACCESS PLATFORM MUST BE CARRIED OUT USING ORIGINAL PARTS.

BY ALLOWING NON-ORIGINAL PARTS TO BE USED,

YOU RUN THE RISK

- Legally, of being liable in the event of an accident.
- Technically, of causing breakdowns to occur or of reducing your access platform's service life.

Using counterfeit parts or components not approved by the manufacturer may put an end to contract warranty terms and lead the maker to withdraw the machine's certificate of compliance.

BY USING ORIGINAL PARTS DURING MAINTENANCE OPERATIONS,

YOU ARE LEGALLY COVERING YOURSELF

- Any user who procures parts from another quarter does so at his own risk.
- Any user who modifies his access platform or has it modified by a service company, must consider that a new item of equipment has been brought onto the market and therefore takes liability for it.
- Any user who copies original parts or has them copied is taking a risk from the legal viewpoint.
- The certificate of compliance only binds the maker for parts chosen or produced under the maker's control.
- The practicalities of maintenance terms are set out by the maker. The maker is in no way liable in the event of the user not complying with such terms.

YOU GET THE BENEFIT OF THE MANUFACTURER'S KNOW-HOW

THE MANUFACTURER BRINGS TO THE USER,

- His know-how and skill.
- Guaranteed quality work.
- Original replacement parts.
- Help with preventive maintenance.
- Effective help with diagnosing faults.
- Enhancements gained from feedback.
- Training for operating staff.
- Only the manufacturer knows the details of the access platform design and therefore has the best technological capability to carry out maintenance.

ORIGINAL REPLACEMENT PARTS ARE DISTRIBUTED EXCLUSIVELY BY MANITOU AND ITS DEALER NETWORK.

You can obtain the list of dealers by phoning the spare parts department on 02 40 09 10 21

https://truckmanualshub.com/

INSTRUCTIONS TO THE COMPANY MANAGER

PREAMBLE

WHENEVER YOU SEE THIS SYMBOL IT MEANS :

WARNING ! BE CAREFUL ! YOUR SAFETY OR THE SAFETY OF THE PLATFORM IS AT RISK.

THE OPERATOR

- Only qualified, authorized personnel can use the platform. This authorization is given in writing by the appropriate person in the establishment with respect to the use of platform and must be carried permanently by the operator.

On the basis of experience, there are a number of possible situations in which operating the platform is contra-indicated. Such foreseeable abnormal uses, the main ones being listed below, are strictly forbidden.

- *The foreseeable abnormal behaviour resulting from ordinary neglect, but does not result from any wish to put the machinery to any improper use.*
- *The reflex reactions of a person in the event of a malfunction, incident, fault, etc. during operation of the platform.*
- *Behaviour resulting from application of the "principle of least action" when performing a task.*
- *For certain machines, the foreseeable behaviour of such persons as : apprentices, teenagers, handicapped persons, trainees tempted to drive a platform, operator tempted to operate a truck to win a bet, in competition or for their own personal experience.*

The person in charge of the equipment must take these criteria into account when assessing whether or not a person will make a suitable driver.

***OBTAIN INFORMATION ON** :*

- *How to behave when there is a fire.*
- *The location of the nearest first aid kit and fire extinguisher.*
- *The emergency telephone numbers for calling (the doctors, ambulance, hospital and fire brigade).*

THE PLATFORM

A - THE PLATFORM'S SUITABILITY FOR USE

- MANITOU has ensured that this platform is suitable for use under the standard operating conditions defined in this operator's manual, with an overload test coefficient of 1,25 and an operational test coefficient of 1,1, as stipulated in standardised norm **EN 280** for **MPLP (Mobile Personnel Lifting Platforms)**.
- Before commissioning, the company manager must make sure that the platform is appropriate for the work to be done, and perform certain tests (in accordance with current legislation).

B - ADAPTATING THE PLATFORM TO THE USUAL ENVIRONMENTAL CONDITIONS

- In addition to series equipment mounted on your platform, many options are available, such as : flashing light, working headlight, etc.
  Contact your dealer.
- Take into account climatic and atmospheric conditions of the site of utilisation.
  . Protection against frost (see : 3 - MAINTENANCE : LUBRICANTS AND FUEL).
  . Adaptation of lubricants (ask your dealer for information).
  . I.C. engine filtration (see : 3 - MAINTENANCE : FILTERS CARTRIDGES AND BELTS).

https://truckmanualshub.com/

For operation under average climatic conditions, i.e. : between -15 °C and + 35 °C, correct levels of lubricants in all the circuits are checked in production. For operation under more severe climatic conditions, before starting up, it is necessary to drain all the circuits, then ensure correct levels of lubricants using lubricants properly suited to the relevant ambient temperatures. It is the same for the cooling liquid.

- A platform operating in an area without fire extinguishing equipment must be equipped with an individual extinguisher. There are solutions, consult your dealer.

Your platform is designed for outdoor use under normal atmospheric conditions and indoor use in suitably aerated and ventilated premises. It is prohibited to use the platform in areas where there is a risk of fire or which are potentially explosive (e.g. Refineries, fuel or gas depots, stores of inflammable products…). For use in these areas, specific equipment is available (ask your dealer for information).

C - MODIFYING THE PLATFORM

- For your safety and that of others, you must not change the structure and settings of the various components used in your platform (hydraulic pressure, calibrating limiters, I.C. engine speed, addition of extra equipment, addition of counterweight, unapproved attachments, alarm systems, etc.) yourself. In this event, the manufacturer cannot be held responsible.

THE INSTRUCTIONS

- The operator's manual must always be in good condition and kept in the place provided on the platform and in the language used by the operator.
- You must necessarily replace the instructions manual, as well as any plates or stickers, if they are no longer legible or are missing or damaged.

THE MAINTENANCE

- Maintenance or repairs other than those detailed in part : 3 - MAINTENANCE must be carried out by qualified personnel (consult your dealer) and under the necessary safety conditions to maintain the health of the operator and any third party.

Your patform must be inspected periodically to ensure that it remains in compliance. The frequency of this inspection is defined by current legislation in the country in which the platform is used.

https://truckmanualshub.com/

INSTRUCTIONS FOR THE OPERATOR

PREAMBLE

WHENEVER YOU SEE THIS SYMBOL IT MEANS :

WARNING ! BE CAREFUL ! YOUR SAFETY OR THE SAFETY OF THE PLATFORM IS AT RISK.

The risk of accident while using, servicing or repairing your platform can be restricted if you follow the safety instructions and safety measures detailed in these instruction.

- Only the operations and manœuvres described in these operator's manual must be performed. The manufacturer cannot predict all possible risky situations. Consequently, the safety instructions given in the operator's manual and on the platform itself are not exhaustive.
- At any time, as an operator, you must envisage, within reason, the possible risk to yourself, to others or to the platform itself when you use it.

Failure to respect the safety and operating instructions, or the instructions for repairing or servicing your platform may lead to serious, even fatal accident.

GENERAL INSTRUCTIONS

A - OPERATOR'S MANUAL

- Carefully read and understand the operator's manual.
- The operator's manual must always be kept in the place provided for it on the platform and be written in the language used by the operator.
- Any operations or manoeuvres not described in the operator's manual must necessarily be forbidden right from the start.
- Follow the safety advice and the instructions on the platform.
- Ypu must necessarily replace the operator's manual, as well as any plates or stickers, if they are no longer legible or are damaged.
- A second operator must necessaily be present on the ground as a safety measure when using the platform.
- Familiarise yourself with the platform on the terrain it has to travel over.
- The machine must also be used in accordance with good engineering practice.
- Do not use the platform if the wind speed is over 45 km/h. The platform's arms must not be subjected to a lateral force of more than 40 kg (platforms for indoor use must not be used outside the building).

B - AUTHORIZATION FOR USE IN FRANCE
(or see current legislation in other countries)

- Only qualified, authorized personnel may use the platform. This authorization is given in writing by the appropriate person in the company, in charge of using the platform, and must be permanently carried by the operator.
- The operator is not competent to authorise the driving of the platform by another person.

https://truckmanualshub.com/

C - MAINTENANCE

- The operator must immediately advise his superior if his platform is not in good working order or does not comply with the safety notice.
- The operator is prohibited from carrying out any repairs or adjustments himself, unless he has been trained for this purpose. He must keep the platform properly cleaned if this is among his responsibilities.
- The operator must carry out daily maintenance (see : 3 - MAINTENANCE : A - DAILY OR EVERY 10 HOURS SERVICE).
- The operator must ensure tyres are adapted to the nature of the ground (see area of the contact surface of the tyres in the chapter : 2 - DESCRIPTION : CHARACTERISTICS). There are optional solutions, consult your dealer.

Do not use the platform if the tyres are damaged or excessively worn, because this could put your own safety or that of others at risk, or cause damage to the platformk itself.

- In the case of electric platforms, the operator must ensure that:

- *The batteries are not replaced with lighter ones (compromising stability).*
- *Safety goggles are always worn when charging the batteries.*
- *The batteries are not charged in an explosive environment.*
- *There is no smoking and no naked flame directed towards the batteries whe they are being handled (during removal, re-installation and checking the levels) .*

D - MODIFYING THE PLATFORM

- For your safety and that of others, you must not change the structure and settings of the various components used in your platform yourself:
  - hydraulic pressure,
  - calibrating limiters,
  - I.C. engine speed,
  - addition of extra equipment,
  - addition of counterweight,,
  - unapproved attachments,
  - alarm systems, etc...

  In this event, the manufacturer cannot be held responsible.

E - PLATFORM AXLES

- Standard axles:

The chassis is rigid, so the platform can have a ground reach on only three wheels.

- Oscillating axle (if the option is available):

An oscillating axle enables the platform, when in transport position, to have a ground reach on four wheels.
When moving in working position over uneven terrain, the oscillating axle is locked (the chassis is rigid) so the platform can have a ground reach on only three wheels.

https://truckmanualshub.com/

DRIVING INSTRUCTIONS

A - BEFORE STARTING THE PLATFORM

- Ensure that the intermediate rail is fully in the locked position before operating the platform from the basket.
- If the platform is new, see the Chapter : BEFORE STARTING THE PLATFORM FOR THE FIRST TIME in Section : 1 - SAFETY ADVICE AND INSTRUCTIONS.
- Carry out daily maintenance (see : 3 - MAINTENANCE : A - DAILY OR EVERY 10 HOURS SERVICE).
- Before starting the platform, check the levels :

• IC PLATFORMS :	• ELECTRIC PLATFORMS :
• IC engine oil	• Hydraulic reservoir oil.
• Hydraulic reservoir oil.	• Battery charge level.
• Fuel.	
• Coolant.	

- Whatever his experience, the operator is advised to familiarize himself with the position and operation of all the controls and instruments before operating the platform.
- The platform must be in transport position (arms fully folded or scissors in the low position) before you climb onto the platform.
- Make sure the horn works.

B - DRIVER'S OPERATING INSTRUCTIONS

- Wear suitable clothing for driving the platform, do not wear baggy clothes.
- Make sure you have the appropriate protective equipment for the job to be done.
- Prolonged exposure to high noise levels may cause hearing problems. It is recommended to wear ear muffs to protect against excessive noise.
- Always pay attention when using the platform. Do not listen to the radio or music using headphones or earphones
- For increased comfort, adopt the correct position in the driver's cab.
- The operator must always be in his normal position in the driver's seat : extending arms or legs (or, in general, any part of the body), outside the basket is forbidden.
- Safety helmets must be worn.
- MANITOU recommends a safety harness in the operator's size be provided when the platform is in use (for the harness attachement in the basket , see 2 - DESCRIPTION : INSTRUMENTS AND CONTROLS).
- The control units must never in any event be used for any other than their intended purposes (e.g. climbing onto or down from the platform, portmanteau, etc.).
- In the case of scissors-type platforms, it is forbidden to use the platform without the guardrails in place.
- Suspending a load under the basket or on any part of the lifting apparatus is strictly forbidden.
- The operator must not climb into or get down from the basket unless it is at ground level (with the lifting system folded).
- The platform must not be fitted with any accessory increasing the machine's wind profile.
- Do not use a ladder or any improvised constructions in the basket to reach greater heights.
- Do not climb on the sides of the basket to reach greater heights.

C - ENVIRONMENT

- Comply with site safety regulations.
- The platform can be manoeuvred from the ground: ensure that you forbid access.
- If you have to use the platform in a dark area or at night, make sure it is equipped with working lights.
- The platforms may not be used as cranes or elevators for the permanent transport of people or materials, nor as jacks or supports.
- When operating, ensure that there is no one or anything impeding the platform's progress ans operation.
- When raising the platform, ensure that no one or anything inpedes the platform's operation and do not perform any inappropriate manœuvres.

https://truckmanualshub.com/

- Do not allow anybody to come near the working area of the platform or pass beneath an elevated load. To do this, mark your operating area with warning signs.
- Travelling on a longitudinal slope :
  - Ensure that you adapt the platform's travelling speed by controlling the speed with the travelling manipulator.
- Take into account the platform's dimensions and its load before trying to negotiate a narrow or low passageway.
- Never move onto a loading platform without having first checked :
  - That it is suitably positioned and made fast.
  - That the unit to which it is connected (wagon, lorry, etc.) will not shift.
  - That this platform is prescribed for the size and the total weight of the platform.
  - That the slope is not greater than the platform's maximum authorised slope.
- Never move onto a foot bridge, floor or freight lift, without being certain that they are prescribed for the weight and size of the platform to be loaded and without having checked that they are in sound working order.
- Be careful in the area of loading bays, trenches, scaffolding, soft land and manholes.
- Ensure that the ground or floor under the wheels and/or the stabilizers is stable and firm before raising the basket. If necessary, add sufficient wedging under the stabilizers.
- Do not attempt any operations outside the plarform's capabilities.
- Ensure that the materials on the platform (pipes, cables, containers, etc ...) cannot slip off and fall. Do not heap up these materials to the pint where you have to step over them.

If the basket must remain stationary over a structure for a long period, there is a risk that the basket will rest on this structure because of the oil cooling in the cylinders or a minor leak in the cylinder locking system.

To eliminate this risk :

- Regularly check the distance between the basket and the structure and re-adjust if necessary.

- If possible use the platform at an oil temperature as close as possible to ambient temperature.

- In the case of work near aerial lines, ensure that the safety distance is sufficient between the working area of the platform and the aerial line.

You must consult your local electrical agency. You could be electrocuted or seriously injured if you operate or park the platform too close to power cables.

If the platform comes into contact with electric wires, press the Emergency Stop button.
If you can, jump from the basket without simultaneously being in contact with the basket and the ground.
If not, call for help, wam people not to touch the basket and to switch off the power supply to the wires or have it switched off.

If the wind is in excess of 45Km/h, do not make any movements putting the platform's stability at risk.

D - VISIBILITY

- Maintain permanently good visibility throughout the route. To increase your visibility, you can move forwards with the pendular arm slightly raised (pay attention to the risk of falls in the basket from knocking into a low doorway, overhead electric wires, travelling cranes, highway bridges, tracks or any obstacle in the area in front of the platform). In reverse, look directly behind you. In any case, avoid reversing over long distances.
- If visibility of your road is inadequate, ask someone to help, standing outside the area in which the platform will be moving, and make sure you always have a good view of this person.

https://truckmanualshub.com/

E - STARTING THE PLATFORM

PLATFORMS WITH IC ENGINES

SAFETY NOTICE

- Never try to start the platform by pushing or towing it. Such operation may cause severe damage to the transmission. In case of necessity, towing requires the platform to be set for free-wheeling (see : 3 - MAINTENANCE).
- If using an emergency battery for start-up, use a battery with the same characteristics and respect battery polarity when connecting it. Connect at first the positive terminals before the negative terminals.

Failure to respect polarity between batteries can cause serious damage to the electrical circuit. The electrolyte in the battery may produce an explosive gas. Avoid flames and generation of sparks close to the batteries.
Never disconnect a battery while it is charging.

INSTRUCTIONS

- Check the closing and locking of the hood(s).
- Turn the ignition key to notch I to switch on the electrical power, which automatically starts the pre-heating system (all the bars must be displayed), the message “OK” is displayed.
- Check that everything is operating correctly by ensuring that no fault pages are displayed on the screen and no warning about the fuel level (a pump icon is present on the screen) (see : 2 - DESCRIPTION : INSTRUMENTS AND CONTROLS).
- Turn the ignition key to notch II to start.
- Release the ignition key and let the engine run at tick-over speed.

NB : In very cold weather (see: 2 - DESCRIPTION : INSTRUMENTS AND CONTROLS).

- Do not engage the starter motor for more than 15 seconds and carry out the preheating for 10 seconds between unsuccessful attempts.
- Check all control instruments when the I.C. engine is warm and at regular intervals during use, so as to quickly detect any faults and to be able to correct them without any delay.
- If any faults are displayed on the screen, stop the engine and immediately take the necessary measures.

ELECTRIC PLATFORMS

SAFETY NOTICE

- Do not use the platform if the battery is discharged to the point that movements are slowed down. In certain cases, the platform may stop (see : 3 - MAINTENANCE : EVERY DAY OR EVERY 5 HOURS FOR OPERATION, for the minimum permissible charge level).

INSTRUCTIONS

- Set the battery cut-out to the ON position.
- Check the closing and locking of the hood(s).
- Turn the ignition key to the basket position.
- Check that everything is operating correctly by ensuring that no error messages are displayed on the screen and that the machine maintenance light is not flashing (see : 2 - DESCRIPTION : INSTRUMENTS AND CONTROLS).

NB: For machines not fitted with a display or a maintenance warning light, faults can be identified from the light directly on the variable speed drive unit (to access: open the cowl on the control size, remove the casing from the variable speed drive and see whether the light is flashing).

https://truckmanualshub.com/

- If any error messages are constantly displayed or the machine maintenance light is flashing, return the key to the neutral position.
- Set the battery cut-off to the OFFposition.
- Immediately take the necessary measures.

F - DRIVING THE PLATFORM

SAFETY NOTICE

Operators should be aware of the risks connected with using the platform, notably:
- Risk of losing control.
- Risk of losing lateral and frontal stability of the platform.

The operator must remain in control of the platform.

- Do not carry out operations which exceed the capacities of your platform.
- Familiarise yourself with the platform on the terrain where it will be used.
- Ensure that the brakes work efficiently when stopping a travelling movement, taking into account the braking distances.
- Drive smoothly at an appropriate speed for the operating conditions (land configuration, load in the basket).
- take extreme care if manoeuvring the platform with the basket in the high position. Ensure you have adequate visibility.
- Take bends slowly.
- In all circumstances make sure you are in control of your speed.
- Travel slowly on damp, slippery or uneven terrain or on truck ramps.
- Always remember that the hydraulic form of steering is very sensitive to movements.
- Never leave the I.C. engine on when the platform is unattended.
- Look where you are going and always make sure you have good visibility along the route.
- Drive round obstacles.
- Never drive on the edge of a ditch or steep slope.
- Whatever your travelling speed, you must reduce the speed as much as possible before stopping.

INSTRUCTIONS

- When moving the platform a long distance, always travel with the arms folded or the scissors in the low position.
- Engage the appropriate gear (see : 2 - DESCRIPTION : INSTRUMENTS AND CONTROLS).

https://truckmanualshub.com/

G - STOPPING THE PLATFORM

SAFETY NOTICE

- Never leave the ignition key in the platform during the operator's absence.
- Make sure that the platform is not stopped in any position that will interfere with the traffic flow and at less than one meter from the track of a railway.
- In the event of prolonged parking on a site, protect the platform from bad weather, particularly from frost (check the level of antifreeze), close and lock all the platform accesses (cowls…).

INSTRUCTIONS

PLATFORMS WITH IC ENGINES

- Before stopping the platform after a long working period, leave the I.C. engine idling for a few moments, to allow the coolant liquid and oil to lower the temperature of the I.C. engine and transmission

Do not forget this precaution, in the event of frequent stops or warm stalling of the I.C. engine, or else the temperature of certain parts will rise significantly due to the stopping of the cooling system, with the risk of badly damaging such parts.

- Stop the I.C. engine with the ignition switch.
- Remove the ignition key.
- Check that all the accesses on the platform are closed and locked (cowls…).

ELECTRIC PLATFORMS

- Remove the ground/platform control selection key.
- Check that all the accesses on the platform are closed and locked (cowls…).
- Set the battery cut-out to the OFF position (ELECTRIC PLATFORM).

https://truckmanualshub.com/

INSTRUCTIONS FOR WELDING AND BLOW TORCH WORK ON THE EXTERNAL STRUCTURE

Ensure that there are no hydraulic or electrolyte leaks on the platform.

When welding, work in the opposite direction
from the control console to avoid sparks damaging it .

Any welding and cutting (blow torch) work from the basket on a building's metallic structures requires the following precautions to be taken:

A - WITH ELECTRIC WELDING EQUIPMENT

- It is essential that the machine has a discharge braid connecting the platform's chassis to the ground.
- It is also essential that the external structure to be welded is connected to the earth. If the above conditions are observed, the platform can, in this case, be in contact with the structure or the elements to be welded without damaging the electronic components.
- The power supply to the welding equipment must be via an earthed socked and any extension required just also be earthed.
- In all cases, ensure that there are no electrical arcs in the basket or on the platform (contact between the brazing rod or the torch and the welding equipment's earth). To ensure this, at any time the welding equipment's earth must not be positioned on the platform's basket but instead only as close as possible to the element to be welded.
- Switch off the welding equipment before disconnecting the earth clamp from the element or elements to be welded.

B - WITH A BLOW TORCH

- Attach the blow torch's bottles to the basket's handrails.
- instructions for welding and blow torch work on the external structure
- Do not set the blow torch down on the lip of the basket while it is still operating or point it towards the control console or its power cables.

https://truckmanualshub.com/

PLATFORM MAINTENANCE INSTRUCTIONS

GENERAL INSTRUCTIONS

- Ensure the area is sufficiently ventilated before starting the platform.
- Wear clothes suitable for the maintenance of the platform, avoid wearing jewellery and loose clothes. Tie and protect your hair, if necessary.
- Stop the engine before conducting any work on the platform, remove the ignition key and disconnect the “Minus” battery terminal.
- Set the battery cut-out to the OFF position (ELECTRIC PLATFORM).
- Read the operator's manual carefully.
- Carry out all repairs immediately, even if the repairs concerned are minor.
- Repair all leaks immediately, even if the leak concerned is minor.
- Make sure that the disposal of process materials and of spare parts is carried out in total safety and in a ecological way.
- Be careful of the risk of burning and splashing (exhaust, radiator, I.C. engine, etc.).

MAINTENANCE

- Perform the periodic service (see : 3 - MAINTENANCE) to keep your platform in good working conditions. Failure to perform the periodic service may cancel the contractual guarantee.

LUBRICANT AND FUEL LEVELS

- Use the recommended lubricants (never use contaminated lubricants).
- Do not fill the fuel tank when the I.C. engine is running.
- Only fill up the fuel tank in areas specified for this purpose.
- Do not fill the fuel tank to the maximum level.
- Do not smoke or approach the platform with a flame, when the fuel tank is open or is being filled.

LEVEL OF ELECTROLYTE IN THE BATTERY

- Check the level of the battery or batteries.

When doing this, ensure you take all the safety precautions (See: 3 - MAINTENANCE).

HYDRAULIC

- Make any repairs and fix any leaks, including minor ones, immediately.
- Do not attempt to loosen unions, hoses or any hydraulic component with the circuit under pressure.

BALANCING VALVE : It is dangerous to change the setting and remove the balancing valves or safety valves which may be fitted to your platform cylinders. These operations must only be performed by approved personnel (consult your dealer).

https://truckmanualshub.com/

Ensure that all consumables and replacement parts are disposed of safety, in an environmentally friendly manner.

ELECTRICITY

- Do not drop metallic items on the battery (between the “Plus” and “Minus terminals”).
- Disconnect the battery or batteries before working on the electrical circuit.
- The electrical box must only be opened by authorized personnel.

WELDING ON THE ACCESS PLATFORM

- Disconnect the battery or batteries before welding on the platform.
- When carrying out electric welding work on the platform, connect the negative cable from the equipment directly to the part being welded, so as to avoid high tension current passing through the alternator or the live ring.
- If the platform is equipped with an electronic control unit, disconnect this before starting to weld, to avoid the risk of causing irreparable damage to electronic components.

WASHING THE PLATFORM

- Clean the platform or at least the area concerned before any intervention.
- Remember to close and lock all accesses to the platform (cowls…).
- When cleaning with a pressure washer, avoid the articulation joints, and the electrical components and connections.
- If necessary, protect components likely to be damaged, and in particular the electrical components (variable speed drive, charger) and connections and the injection pump from penetration by water, steam or cleaning products.
- Dry the electrical components.
- Clean the platform of any fuel, oil or grease trace.
- Grease the shafts.

FOR ANY INTERVENTION OTHER THAN REGULAR MAINTENANCE, CONSULT YOUR DEALER.

https://truckmanualshub.com/

IF THE PLATFORM IS NOT TO BE USED FOR A LONG TIME

INTRODUCTION

The following recommendations are intended to prevent the platform from being damaged when it is withdrawn from service for an extended period.
For these operations, we recommend the use of a MANITOU protective product, reference 603726.
Instructions for using the product are given on the packaging.

Procedures to follow if the platform is not to be used for a long time and for starting it up again afterwards must be performed by your dealership.

PREPARING THE PLATFORM

- Clean the platform thoroughly.
- Check and repair any leakage of fuel, oil, water or air.
- Replace or repair any worn or damaged parts.
- Wash the painted surfaces of the platform in clear and cold water and wipe them.
- Touch up the paintwork if necessary.
- Shut down the platform (see : OPERATING INSTRUCTIONS UNLADEN AND LADEN).
- Make sure the cylinder rods are all in retracted position.
- Release the pressure in the hydraulic circuits.

PROTECTING THE I.C. ENGINE

- Fill the tank with fuel (see : 3 - MAINTENANCE).
- Empty and replace the cooling liquid (see : 3 - MAINTENANCE).
- Leave the I.C. engine running at idling speed for a few minutes, then switch off.
- Replace the I.C. engine oil and oil filter (see : 3 - MAINTENANCE).
- Add the protective product to the engine oil.
- Run the I.C. engine for a short time so that the oil and cooling liquid circulate inside.
- Disconnect the battery and store it in a safe place away from the cold, after charging it to a maximum.
- Remove the injectors and spray the protective product into each cylinder for two seconds with the piston in low neutral position.
- Turn the crankshaft once slowly and refit the injectors (see I.C. engine REPAIR MANUAL).
- Remove the intake hose from the manifold or turbocharger and spray the protective product into the manifold or turbocharger.
- Cap the intake manifold hole with waterproof adhesive tape.
- Remove the exhaust pipe and spray the protective product into the exhaust manifold.
- Refit the exhaust pipe and block the outlet with waterproof adhesive tape..
  NOTE : The spray time is noted on the product packaging.
- Open the filler plug, spray the protective product around the rocker arm shaft and refit the filler plug.
- Cap the fuel tank using waterproof adhesive tape.
- Remove the drive belts and store them in a safe place.
- Disconnect the engine cut-off solenoid on the injection pump and carefully insulate the connection.

https://truckmanualshub.com/

CHARGING THE BATTERIES

- In the case of electric platforms, in order to preserve the batteries'life and their capacity, check them periodically and keep the charge level constant (see : 3 - MAINTENANCE).

PROTECTING THE PLATFORM

- Protect cylinder rods which will not be retracted, from corrosion.
- Wrap the tyres.
  NOTE : If the platform is to be stored outdoors, cover it with a waterproof tarpaulin.

BRINGING THE PLATFORM BACK INTO SERVICE

- Remove the waterproof adhesive tape from all the holes.
- Refit the intake hose.
- Reconnect the engine cut-off solenoid.
- Refit and reconnect the battery.
- Remove the protection from the cylinder rods.
- Perform the daily service (see : 3 - MAINTENANCE
- Empty and replace the fuel and replace the fuel filter (see : 3 - MAINTENANCE).
- Refit and set the tension in the drive belts (see : 3 - MAINTENANCE).
- Turn the I.C. engine using the starter, to allow the oil pressure to rise.
- Lubricate the platform completely (see : 3 - MAINTENANCE : TABLEAU D'ENTRETIEN).

Make sure the area is adequately ventilated before starting up the platform.

- Start up the platform, following the safety instructions and regulations (see : OPERATING INSTRUCTIONS).
- Carry out all the lifting system's hydraulic movements right up to the limit switches for each cilinder.

https://truckmanualshub.com/

IDENTIFICATION OF THE ACCESS PLATFORM

As our policy is to promote a constant improvement of our products, our range of access platforms may undergo certain modifications, without obligation for us to advise our customers.

When you order parts, or when you require any technical information, always specify :

***NOTE** : For the owner's convenience, it is recommended that a note of these numbers is made in the spaces provided, at the time of the delivery of the access platform.*

A

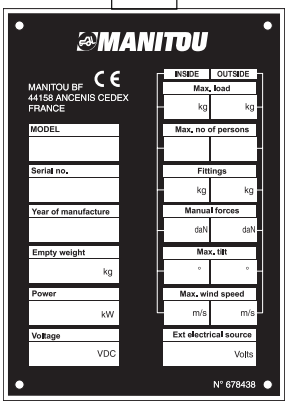

PLATE MANUFACTURER OF THE ACCESS PLATFORM (FIG. A)

- Model _____
- Serial Nr _____
- Year of manufacture _____

B

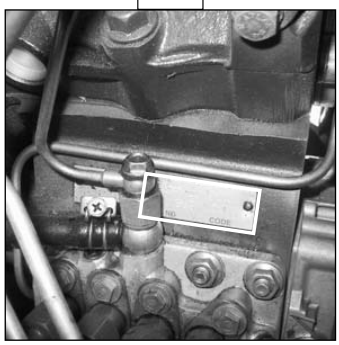

I.C. ENGINE (FIG. B)

- Engine Nr _____

C

HYDROSTATIC PUMP (FIG. C)

- Pump Nr _____
- Codification type _____
- Manufacturer's Nr _____
- Year of manufacture _____

D

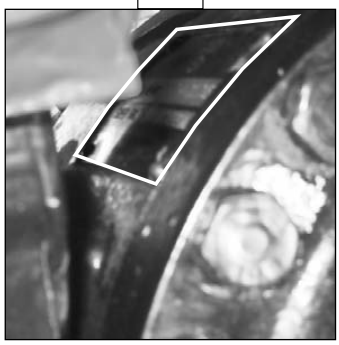

FRONT AXLE ASSEMBLY (FIG. D)

- Axle type _____
- Serial Nr _____
- Maker's N° _____

https://truckmanualshub.com/

REAR AXLE ASSEMBLY (FIG. E)

- Axle type _____
- Serial Nr _____
- Maker's N° _____

E

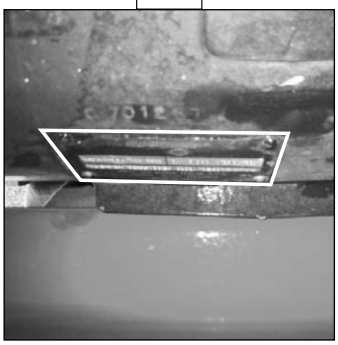

https://truckmanualshub.com/

BEFORE STARTING UP A PLATFORM FOR THE 1ST TIME

INTRODUCTION

- Our access platforms have been designed for easy handling by the operator and maximum maintenance easiness for the mechanic.

- However, before commencing to operate the access platform, the user should carefully read and understand the various chapters of this manual which has been provided to solve driving and maintenance problems. By following these instructions the user will be able to take full advantage of the versatility of this access platform.

- The operator must familiarize himself with the positions and functions of all the controls and instruments before operating the access platform.

Do not attempt to start a new access platform before the following checks have been carried out :

LUBRICATION

- Check that all the correct grades of oils and greases that are required are available (See chapter : SERVICING SCHEDULE) and top up if necessary.

For operation under average climatic conditions, i.e. : between - 15°C and + 35°C, correct levels of lubricants in all the circuits are ensured in works. For operation under more severe climatic conditions, before starting up, it is necessary to drain all the circuits, then ensure correct levels of lubricants using lubricants properly suited to the relevant ambient temperatures. It is the same for the cooling liquid (Contact your dealer for information, if necessary.)

AIR FILTER

- Ensure that the air filter is undamaged and not choked.
- Tighten the fastening devices if necessary.

Never use the platform with no air filter or with a damaged air filter.

COOLING SYSTEM

- Never start up the platform without first checking the level of the cooling liquid or when the fan belt is damaged or broken.

HYDRAULIC SYSTEM

- Check by a visual examination that there are no leaks or oil oozing in the hoses, connections and unions. If necessary, tighten or control the defective connections.
- Also check that the tank oil level is correct.

https://truckmanualshub.com/

TYRES

- Make sure that the wheel nuts are correctly tightened (See chapter : SERVICING SCHEDULE - B EVERY 3 MONTHS OR EVERY 150 WORKING HOURS SERVICE)

FUEL SYSTEM

- Check that all fuel lines are secured.
- If necessary drain the fuel filter and bleed the fuel system of air.

ELECTRICAL CIRCUIT

- Check the level and the density of the electrolyte in the battery.
- Check the components of the electrical system, the connections and fastening devices.

IF NECESSARY, CONSULT YOUR DEALER.

https://truckmanualshub.com/

2 - DESCRIPTION

https://truckmanualshub.com/

https://truckmanualshub.com/

CHARACTERISTICS

ENGINE

- Type	**PERKINS 404C22 atmospheric diesel**
- No. of cylinders	4 in line
- Number of phases	4
- Injection system	Direct injection
- Firing sequence	1.3.4 2
- Cubic capacity	2216 cc
- Bore	84 mm
- Stroke	100 mm
- Volume ratio	23.3 : 1
- Nominal revs	2480 rpm
- Tick-over	1300 rpm
- Max revs empty	2590 rpm
- Power ISO/TR 14396	34.1 kw
- Max. torque	143 Nm at 1800 rpm

COOLING CIRCUIT

- Type	Water
- Fan	Suction
• No. of blades	6
• Diameter	390 mm
- Thermostat	
• Start opening	82°C
• Fully open	95°C

ELECTRICAL CIRCUIT

- Earth	Negative
- Battery	12 V - 105 A
- Alternator	14 V - 55 A
- Voltage regulator	Incorporated into the alternator
- Starter	12 V - 2 kw

HYDROSTATIC TRANSMISSION

HYDROSTATIC PUMP	
- Type	**A10VG45** with variable cubic capacity and automatic power regulation.
- Direction reverser	Electromagnetic 12 V
- Main pump	
• Max. cubic capacity	45 cc
• Min. cubic capacity	0 cc
• Max flow	110 L/min
• Operating pressure	350 Bar
- Boost pump	
• Cubic capacity	8,4 cc
• Max. flow	20,10 L/min
• Boost pressure at max flow	25 Bar (transmission in Neutral).
- Filtration	
• Suction	20 Microns
HYDROSTATIC MOTOR	
- Type	**A2FM80** with fixed cubic capacity

https://truckmanualshub.com/

AUXILIARY HYDRAULIC CIRCUIT

- Pump type	Gear pump
• Cubic capacity	19 cc
- Lifting, tilting, telescope, steering, rotation circuit	
• Flow at max revs empty	47 L/min
• Pressure	200 Bar
- Filtration	
• Pressure	10 Microns

CONNECTION BOX FUSES

- F1	7.5 A
- F2	20 A
- F3	20 A
- F4	20 A
- F5	5 A
- F6	30 A
- F7	60 A

BACKUP PUMP FUSE (POWER)*

- F8	250 A

** : See 5 - ELECTRICITY for their location*

https://truckmanualshub.com/

160 ATJ

SPECIFICATIONS

- Use	Interior or exterior
- Capacity	230 Kg i.e. 2 people
- Weight of the equipment that can be loaded :	
• With one person in the basket	150 kg
• With two people in the basket	70 kg
- Hydrostatic transmission	4 wheel drive 4 wheel steer
- Turret rotation: 160 ATJ standard:	350°
160 ATJ (continuous rotation option):	continuous
- Operating speed	0,8 km/h
- Travel speed: Tortoise	1.7 km/h
Ramp	2 km/h
Hare	6 km/h
- Operating height	16 210 mm
- Floor height	14 210 mm
- Max offset	9040 mm
- Weight of platform	
• Empty	7450 Kg
• With nominal load	7680 Kg
- No. of gears	4
- Traversable slope	40%
- Clearance under chassis	425 mm
- Clearance under door	325 mm
- Max permitted wind speed	45 km/h
- Max permitted tilt	5° or 9%
- Max permitted manual horizontal force	40 daN
- 1 daN = 1kg	

FRONT - REAR TYRES

DIMENSIONS	TYRES FILLING	LOAD PER TYRE EMPTY F	LOAD PER TYRE EMPTY R	UNDER MAX LOAD + OFFSET ON 1 WHEEL F / R	FLOOR AREA SUPPORTING 1 WHEEL	PRESSURE
18” (12,5-18)	FOAM	1505 KG	2220 KG	4600 KG	449 CM^2	10,24 DAN/CM^2

VIBRATION LEVEL

- Vibrations perceived by the hands-arms and body overall :	
-Mean quadratic values for the upper limbs :	< 2.5 m/s^2
-Mean quadratic values for the body :	< 0.5 m/s^2

https://truckmanualshub.com/

180 ATJ

SPECIFICATIONS

- Use	Interior or exterior
- Capacity	230 Kg i.e. 2 people
- Weight of the equipment that can be loaded :	
• With one person in the basket	150 kg
• With two people in the basket	70 kg
- Hydrostatic transmission	4 wheel drive 4 wheel steer
- Turret rotation: 180 ATJ standard:	350°
180 ATJ (continuous rotation option):	continuous
- Operating speed	0,8 km/h
- Travel speed: Tortoise	1.7 km/h
Ramp	2 km/h
Hare	6 km/h
- Operating height	17 635 mm
- Floor height	15 635 mm
- Max offset	10 540 mm
- Weight of platform	
• Empty	8090 Kg
• With nominal load	8320 Kg
- No. of gears	4
- Traversable slope	40%
- Clearance under chassis	425 mm
- Clearance under door	325 mm
- Max permitted wind speed	45 km/h
- Max permitted tilt	5° or 9%
- Max permitted manual horizontal force	40 daN
- 1 daN = 1kg	

FRONT - REAR TYRES

DIMENSIONS	TYRES FILLING	LOAD PER TYRE EMPTY F	LOAD PER TYRE EMPTY R	UNDER MAX LOAD + OFFSET ON 1 WHEEL F / R	FLOOR AREA SUPPORTING 1 WHEEL	PRESSURE
18” (12,5-18)	FOAM	1655 KG	2395 KG	5400 KG	465 CM^2	11,61 DAN/CM^2

VIBRATION LEVEL

- Vibrations perceived by the hands-arms and body overall :	
-Mean quadratic values for the upper limbs :	< 2.5 m/s^2
-Mean quadratic values for the body :	< 0.5 m/s^2

https://truckmanualshub.com/

DIMENSIONS 160 ATJ

	160 ATJ
A	7025
A1	5020
B	2200
C	2370
C1	2530
D	2300
E	425
F	325
G	1325
H	3665
I	3820
J	6215
K	2730
L1	3201
L2	4120
L3	8540
L4	7665
M1	14210
M2	12790
M3	7150
M4	305

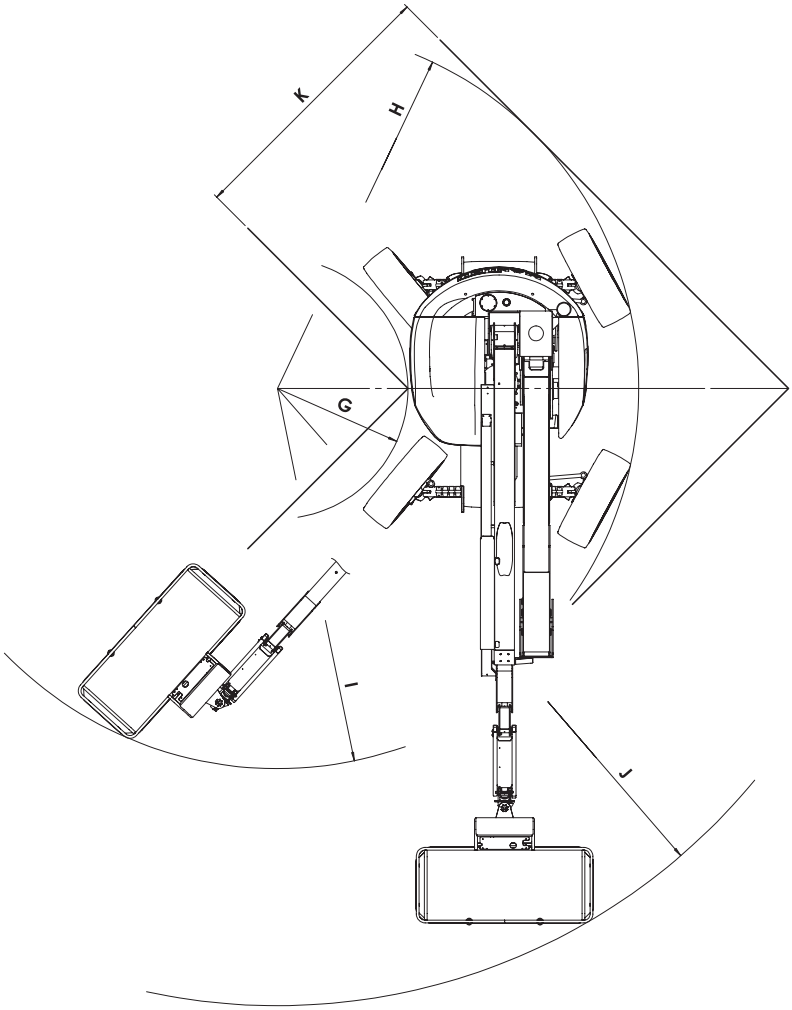

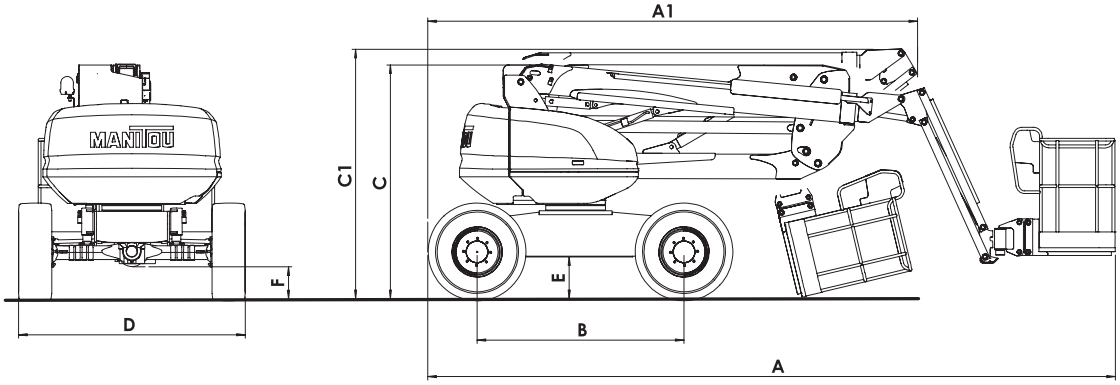

https://truckmanualshub.com/

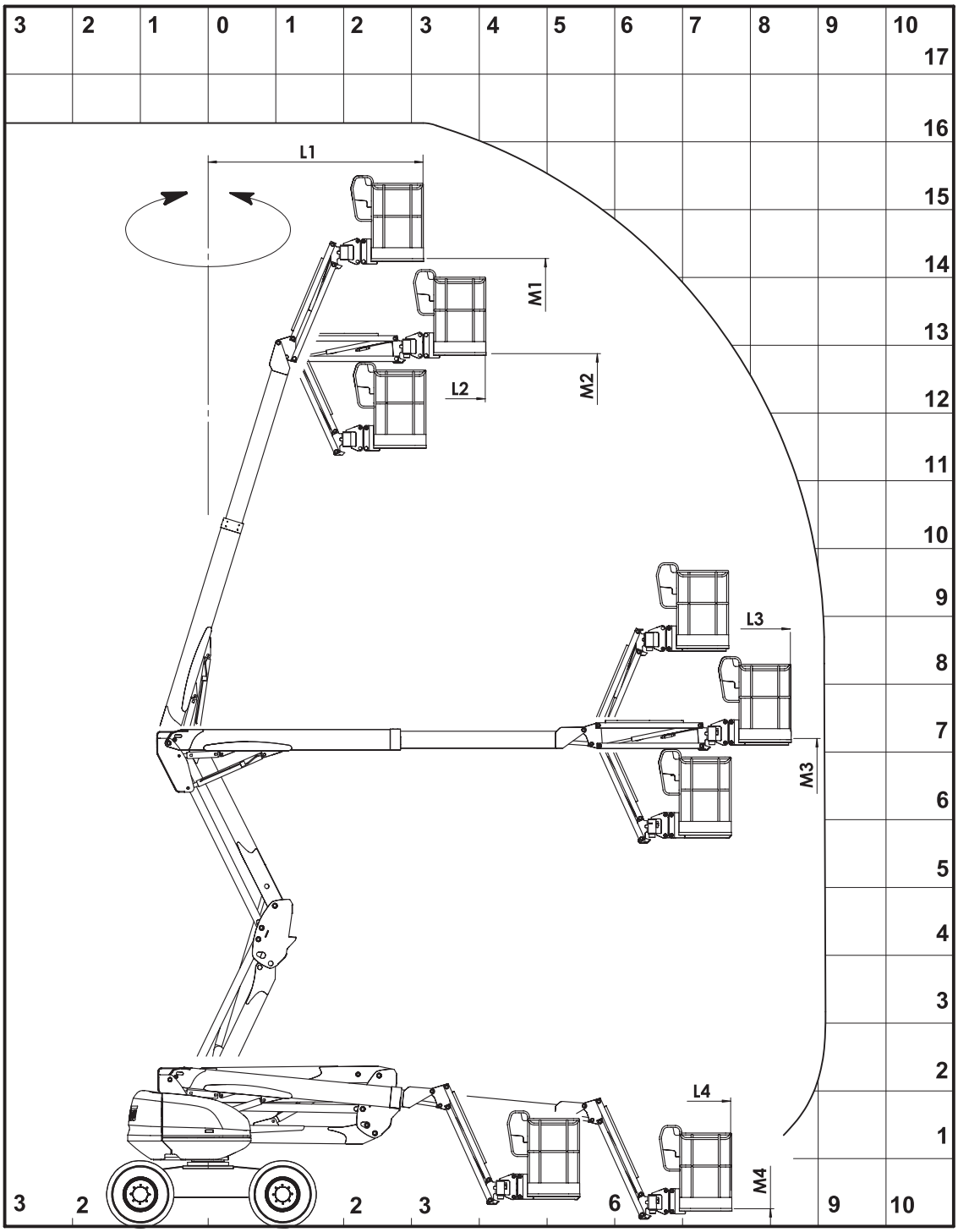

https://truckmanualshub.com/

DIMENSIONS 180 ATJ

	180 ATJ
A	7775
A1	5770
B	2200
C	2370
C1	2560
D	2300
E	425
F	325
G	1325
H	3665
I	4530
J	6875
K	2730
L1	3660
L2	4580
L3	10040
L4	9160
M1	15635
M2	14250
M3	7150
M4	120

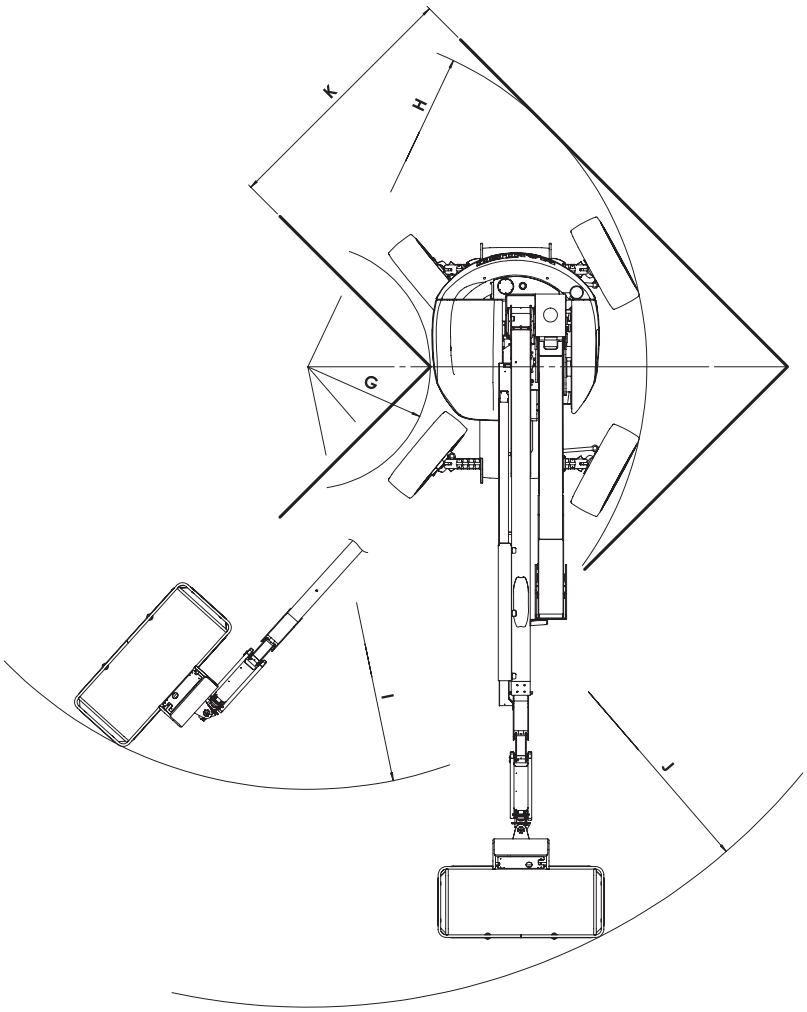

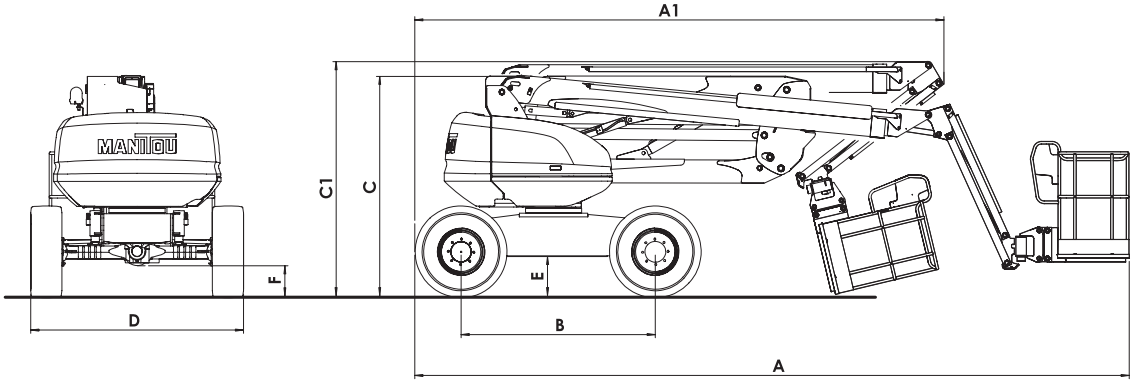

https://truckmanualshub.com/

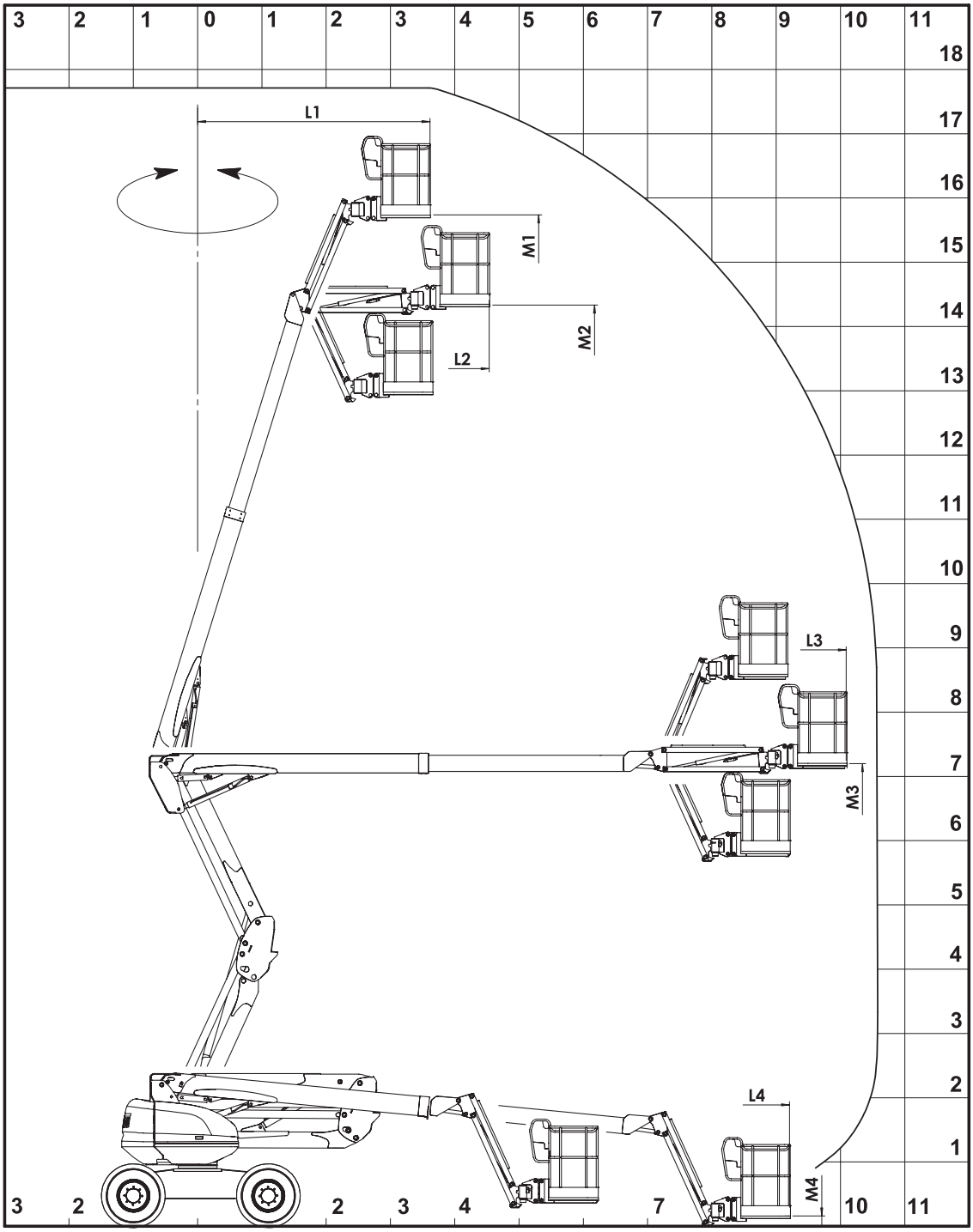

https://truckmanualshub.com/

REMINDER

MAXIMUM AUTHORISED TILT OR SLOPE AND MAXIMUM AUTHORISED LOAD

160 ATJ ET 180 ATJ

- Maximum authorised tilt or slope: 9% or 5°
- Maximum authorised load: 230 kg, i.e. two people.

https://truckmanualshub.com/

INSTRUMENTS AND CONTROLS

A - FLOOR CONTROL STATION

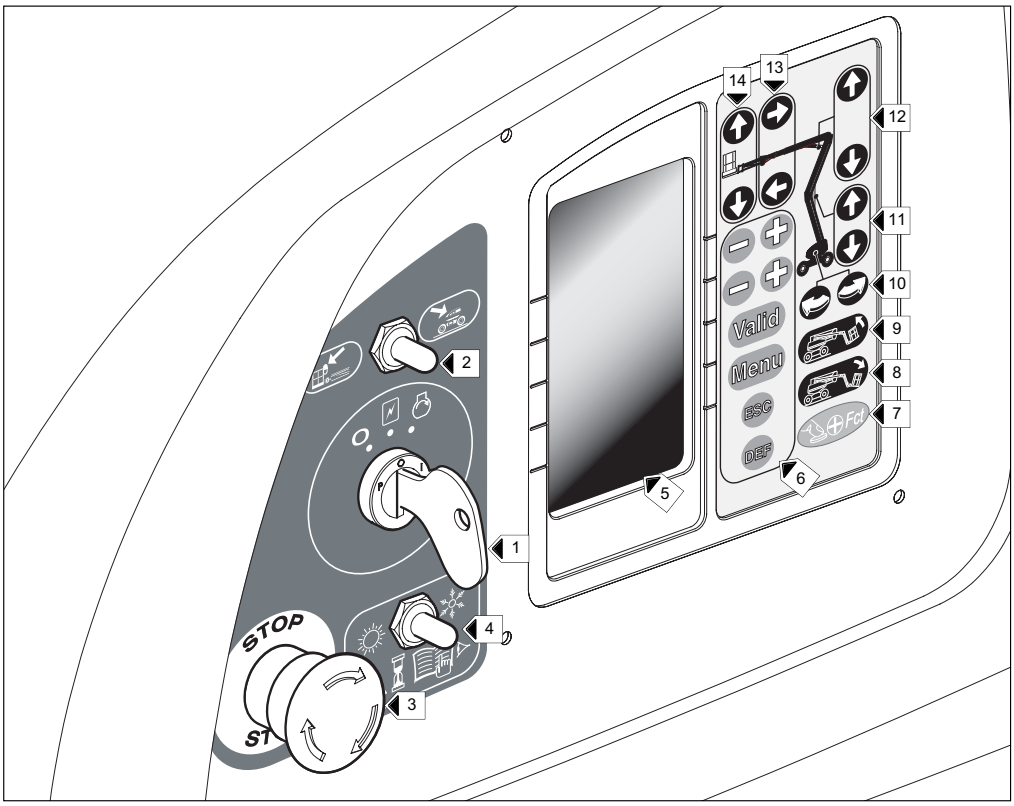

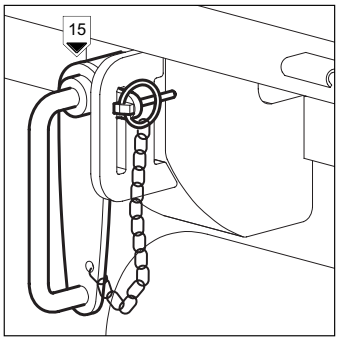

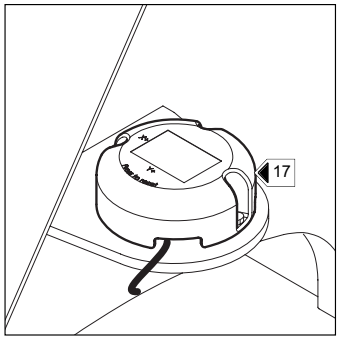

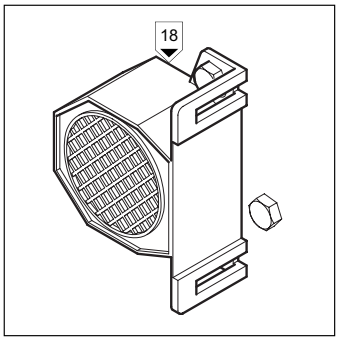

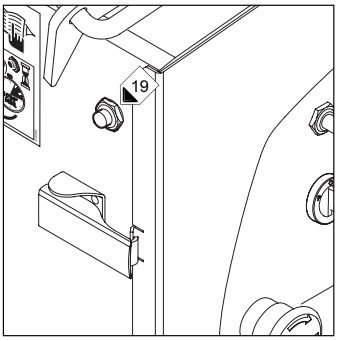

https://truckmanualshub.com/

A - FLOOR CONTROL STATION

1 - IGNITION SWITCH

2 - FLOOR / PLATFORM CONTROL SELECTOR SWITCH

3 - EMERGENCY STOP

4 - ENGINE STARTING ASSISTANCE IN THE EVENT OF COLD TEMPERATURES

5 - INTERFACE SCREEN

6 - SCREEN INFORMATION VALIDATION BUTTONS

7 - "DEAD MAN'S" BUTTON

8 - BASKET DOWNWARD TILT BUTTON

9 - BASKET UPWARD TILT BUTTON

10 - TURRET ROTATION BUTTONS

11 - LOWER ARM RAISING / LOWERING BUTTONS

12 - UPPER ARM RAISING / LOWERING BUTTONS

13 - TELESCOPE EXTENSION / RETRACTION BUTTONS

14 - PENDULAR ARM RAISING / LOWERING BUTTONS

15 - TURRET ROTATION LOCK

16 - REVOLVING LIGHT

17 - TILT SENSOR

18 - AUDIBLE ALARM

19 - EMERGENCY PUMP BUTTON

https://truckmanualshub.com/

B - PLATFORM CONTROL STATION

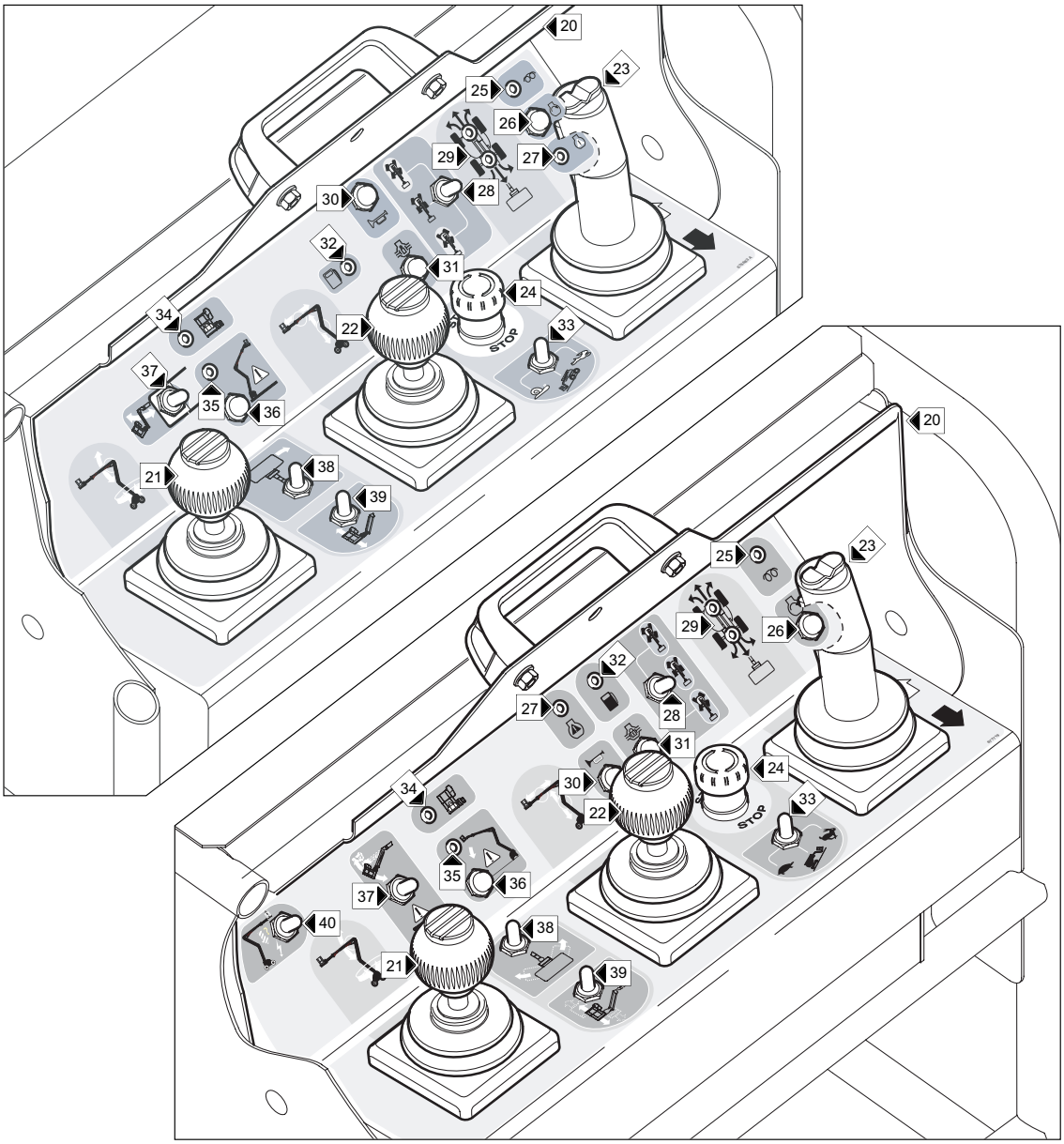

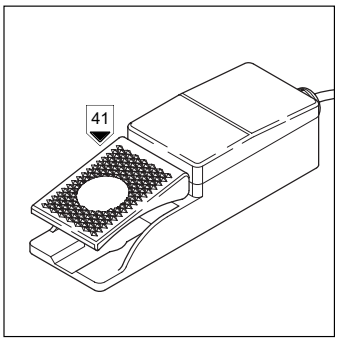

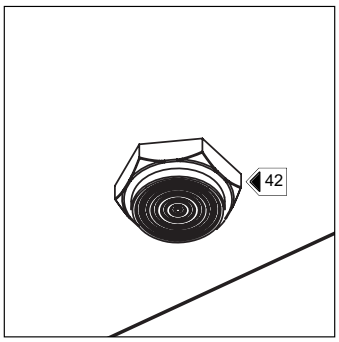

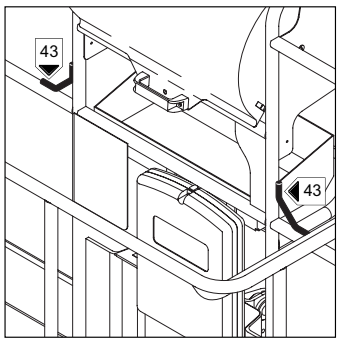

https://truckmanualshub.com/

B - PLATFORM CONTROL STATION

20 - CONSOLE PROTECTIVE COVER

21 - UPPER ARM RAISING & LOWERING AND TURRET ROTATION CONTROL LEVER

22 - LOWER ARM RAISING & LOWERING AND TELESCOPE EXTENSION & RETRACTION CONTROL LEVER

23 - PLATFORM FORWARD / REVERSE MOVEMENT CONTROL LEVER

24 - EMERGENCY STOP

25 - "PRE-HEATING" INDICATOR LIGHT

26 - START CONTROL BUTTON

27 - "ENGINE FAULT" INDICATOR LIGHT

28 - DIRECTION MODE SELECTOR

29 - AXLE ALIGNMENT LEDS

30 - AUDIBLE ALARM CONTROL BUTTON

31 - DIFFERENTIAL LOCKING CONTROL BUTTON

32 - LOW FUEL INDICATOR

33 - TRAVELLING SPEED SELECTOR SWITCH

34 - "OVERLOAD" INDICATOR LIGHT

35 - "TILT" INDICATOR LIGHT

36 - "USE ON SLOPE" BUTTON

37 - BASKET TILTING SWITCH

38 - BASKET ROTATION SWITCH

39 - BASKET PENDULAR ARM SWITCH

40 - “EMERGENCY PUMP” BUTTON

41 - "DEAD MAN'S" PEDAL

42 - BUZZER UNDER THE BASKET CONTROL DESK

43 - SAFETY HARNESS ATTACHEMENT POINTS

***NB** : The terms "Right-Left-Front-Rear" mean with respect to an operator facing forwards when located on the platform in transport position.*

https://truckmanualshub.com/

1 - IGNITION SWITCH

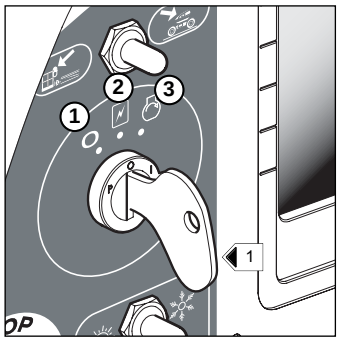

This key-operated switch has three positions.

POSITION 1
- Stops the IC engine.

POSITION 2
- Powers and automatically pre-heats the engine.

POSITION 3
- Starts the engine.

2 - FLOOR / PLATFORM CONTROL SELECTOR SWITCH

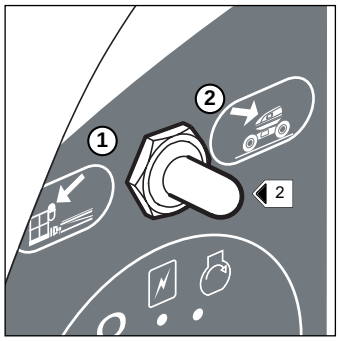

This switch has two positions.

POSITION 1
- The equipment is controlled from inside the platform (basket control).

POSITION 2
- The equipment is controlled from the ground (basic control).

3 - EMERGENCY STOP

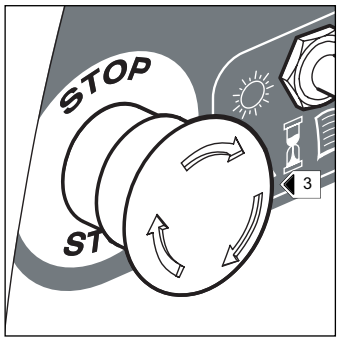

This switch cuts off all movement by the machine in the event of an anomaly or any danger arising.

- Press the knob to cut off all movement.
- Turn the knob a quarter of a turn to the right to deactivate it (the switch returns to its original position automatically).

This control button takes priority in all cases, even when movement is being controlled from the platform.

4 - HELP IN STARTING THE ENGINE, WHEN THE TEMPERATURE IS LOW.

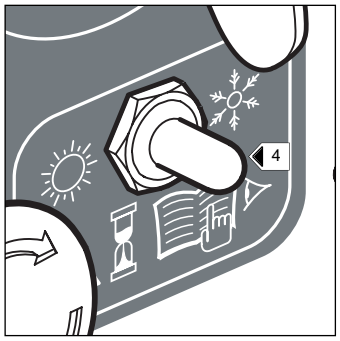

- Normal position (Sun), temperature exceeding + 5°C, start the engine and leave ticking over.

- If the temperature is less than about + 5°C, put the selector to the position (Snow) before starting. The engine will be kept at maximum rate. (only when starting for the first time in the day).

- Leave the engine running at this rate for 30 to 60 seconds, depending on the temperature. During this time no movement is possible.

- Change the selector from the position (Snow) to the position (Sun), with the engine ticking over (normal position, motor hot).

https://truckmanualshub.com/

5 - INTERFACE SCREEN

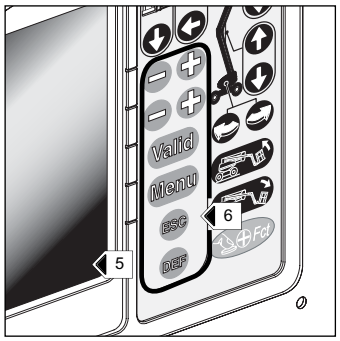

This screen enables you to see all the start-up, parametering, maintenance and platform fault steps.

***NB** : the current system time is displayed at the top of each page.*

6 - SCREEN INFORMATION VALIDATION BUTTONS

- These buttons enable you to validate the various data on the screens.

FUNCTIONS OF THE KEYPAD KEYS :

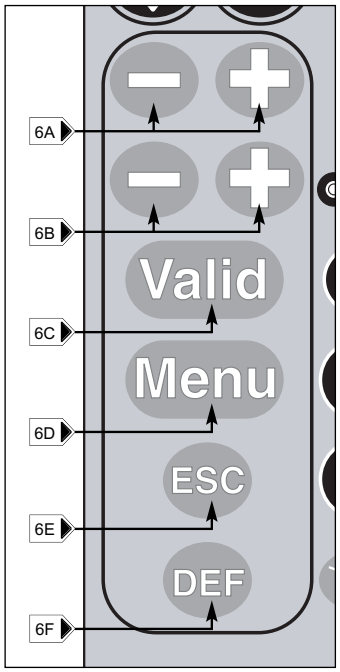

6A: Keys for selecting proposals from the Menu pages.

6B: Keys for selecting proposals from the Sub-menu pages.

6C: This "OK" key has two functions :
- "OK" key for selections made by the plus or minus keys,
- Fault acknowledgement key: this enables you to make the screen disappear without resolving the fault).

6D: This "Menu" button has two functions:
- It is used to open the "Access code" page
- Enter the code to reach the desired menu (This code will remain in memory as long as the platform is switched on).
- It enables you to exit and return to the Operating screen page.

6E: The "ESC" key has two functions
- It cancels a validation in progress.
- It enables you to return to the previous level in the menu.

6F: The "DEF" key enable you to display the platform faults stored in memory.

DESCRIPTION OF SCREEN FUNCTION SEE FOLLOWING PAGES:

CONTENTS:

1 SCREEN DISPLAY DIAGRAM **20**
. **1A - DIAGRAM OF SCREEN DISPLAY for program W678600-001 (no date on the bar)** 20
. **2A - DIAGRAM OF SCREEN DISPLAY for program W678600-001 (with date on the bar)** 22
2 INTRODUCTION PAGE **24**
3 PRE-HEATING PAGES **24**
4 DESCRIPTION UNDER NORMAL USE (WITH NO FAULTS DISPLAYED ON THE SCREEN) **25**
5 OPERATING PAGES **27**
6 FAULTS PAGES **28**
7 ACCESS CODE PAGE **31**
8 MENU PAGE **31**

https://truckmanualshub.com/

1A - SCREEN DISPLAY DIAGRAM

LEVEL 1

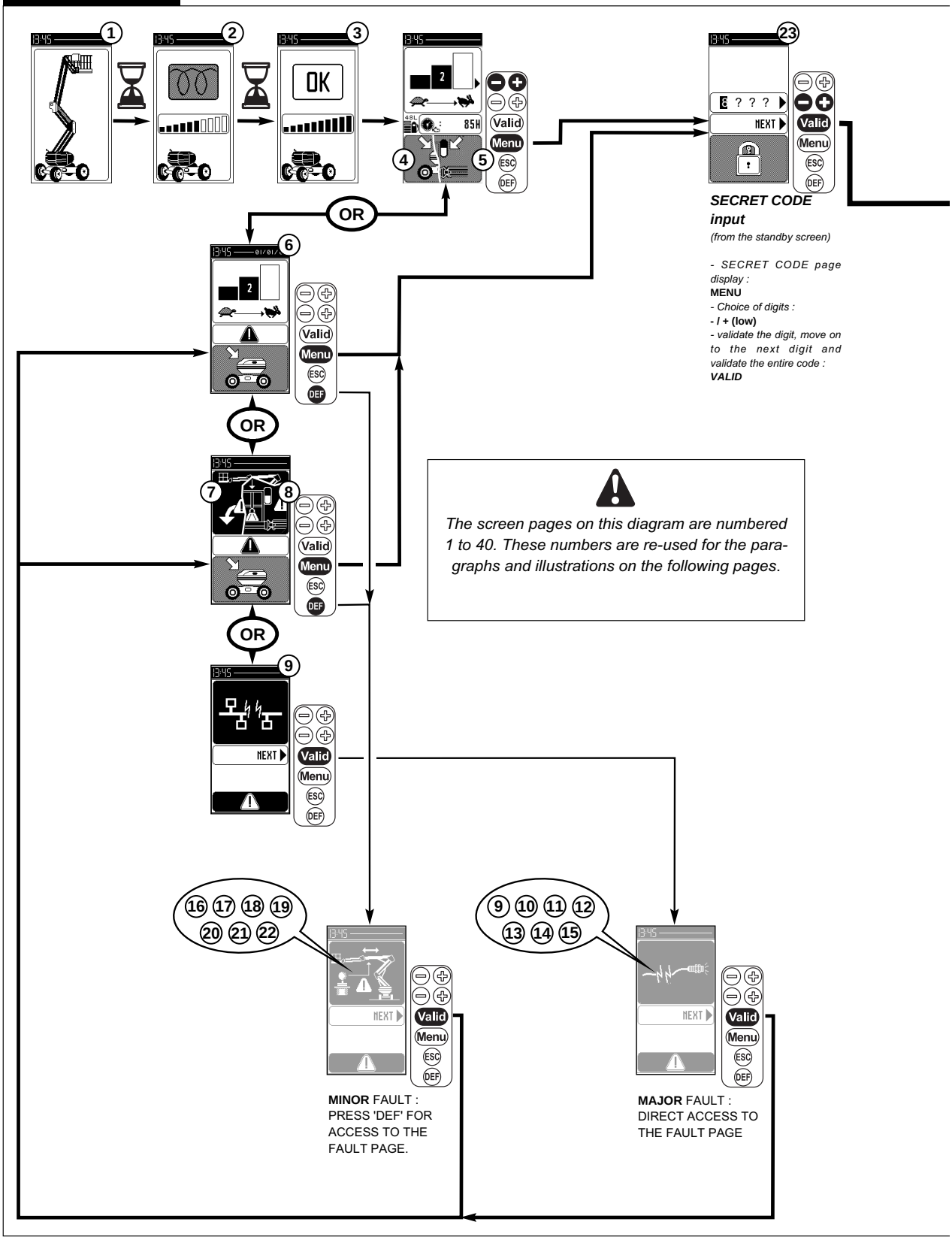

https://truckmanualshub.com/

LEVEL 2 and 3

PROGRAM W678600-001

NOTE: In the submenus, press 'MENU' to return to the main menu page and press 'ESC' to return to the previous submenu.

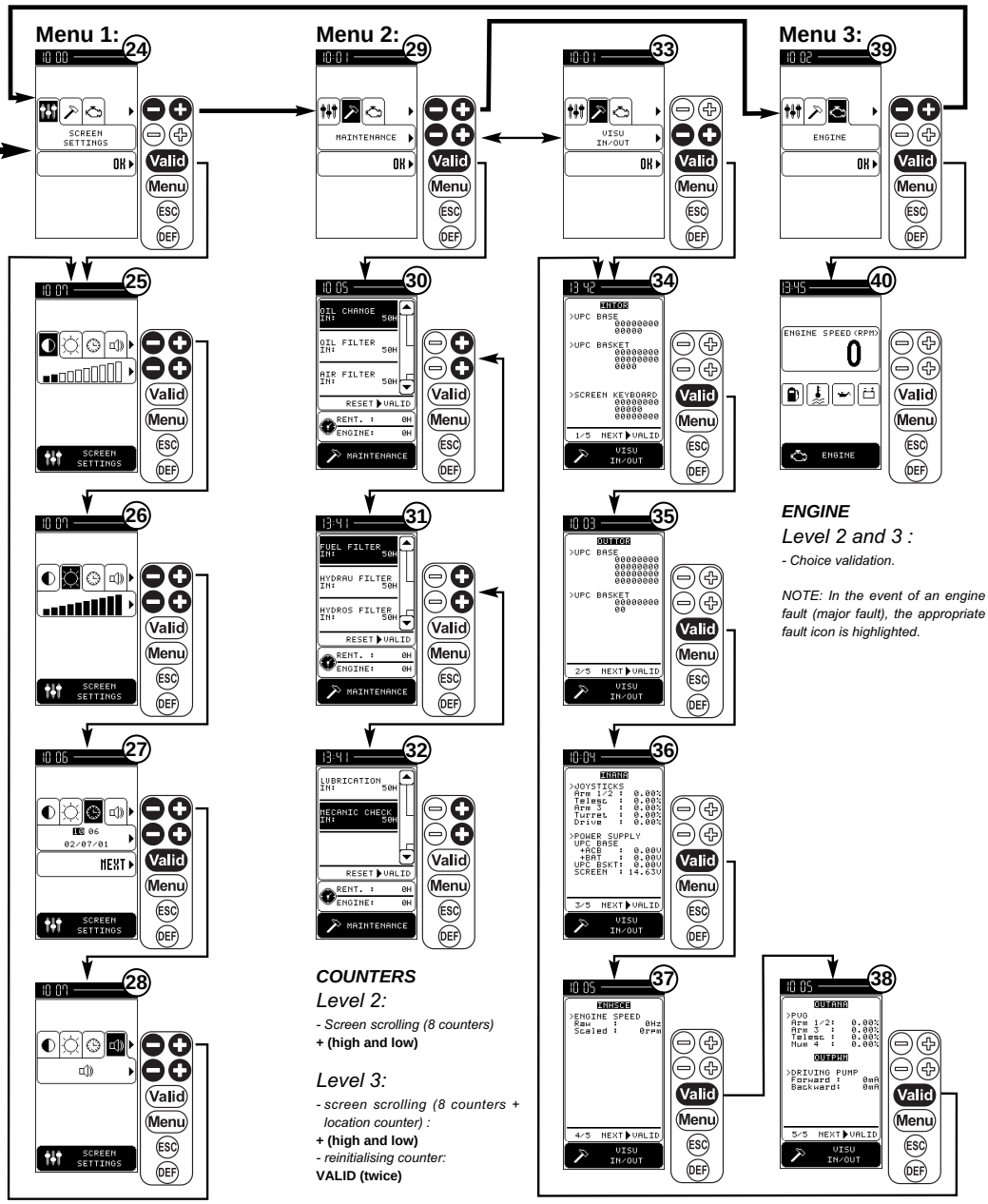

SCREEN PARAMETERS

Level 2 and 3:

- Choice of parameter (4 pages):
- / + (haut)
- Modifying setting / settings :
- / + (bas)
- Changing parameters (TIME / DATE page only) :
VALID

COUNTERS

Level 2:

- Screen scrolling (8 counters)
+ (high and low)

Level 3:

- screen scrolling (8 counters + location counter) :
+ (high and low)
- reinitialising counter:
VALID (twice)

DISPLAYING INPUTS AND OUTPUTS

Level 2 and 3 :

- Displaying the statuses of various electronic components.

ENGINE

Level 2 and 3 :

- Choice validation.

NOTE: In the event of an engine fault (major fault), the appropriate fault icon is highlighted.

https://truckmanualshub.com/

1B - SCREEN DISPLAY DIAGRAM

User level

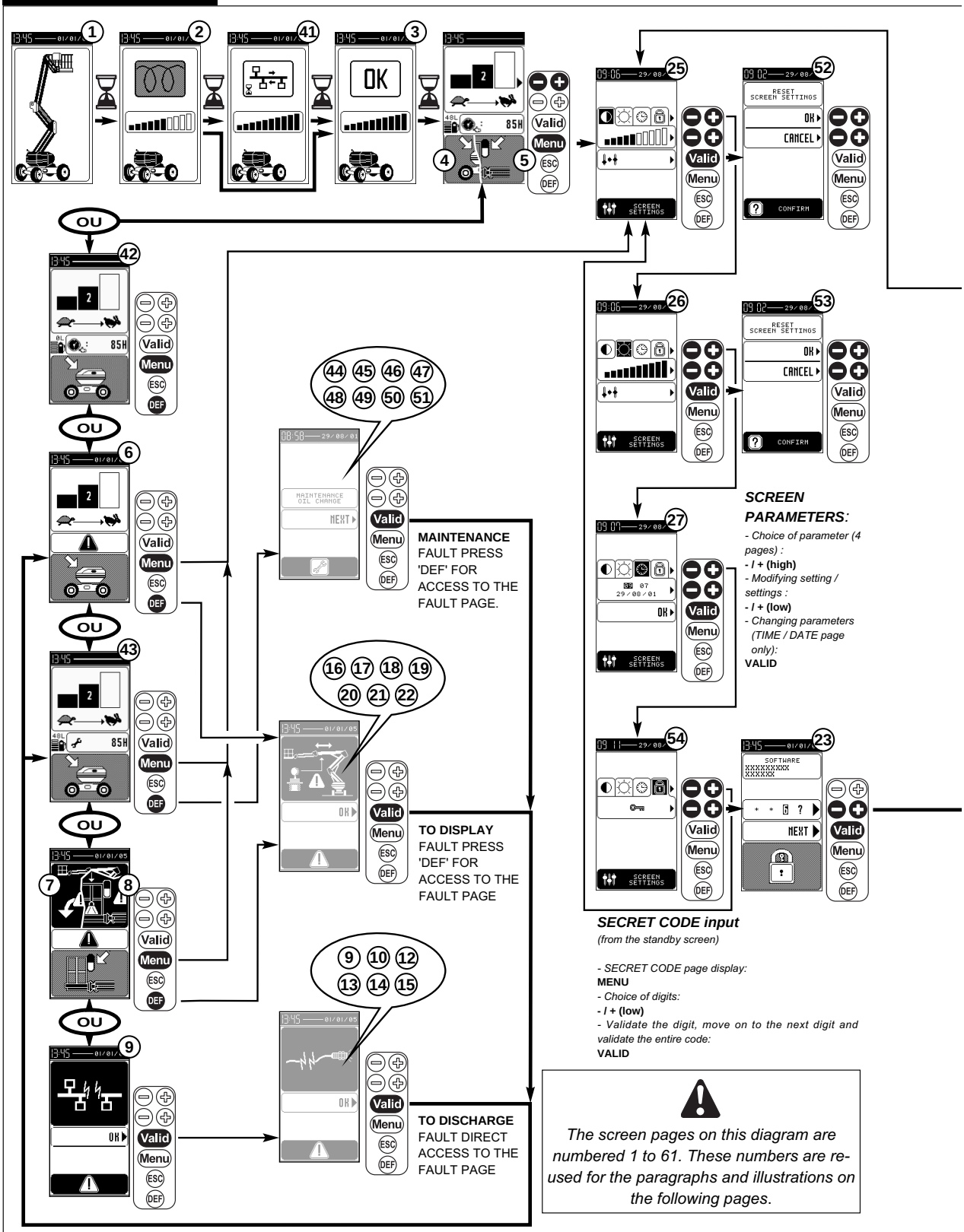

https://truckmanualshub.com/

Dealer / Lessor level

PROGRAM W678600-002

NOTE: In the submenus, press 'MENU' to return to the main menu page and press 'ESC' to return to the previous submenu.

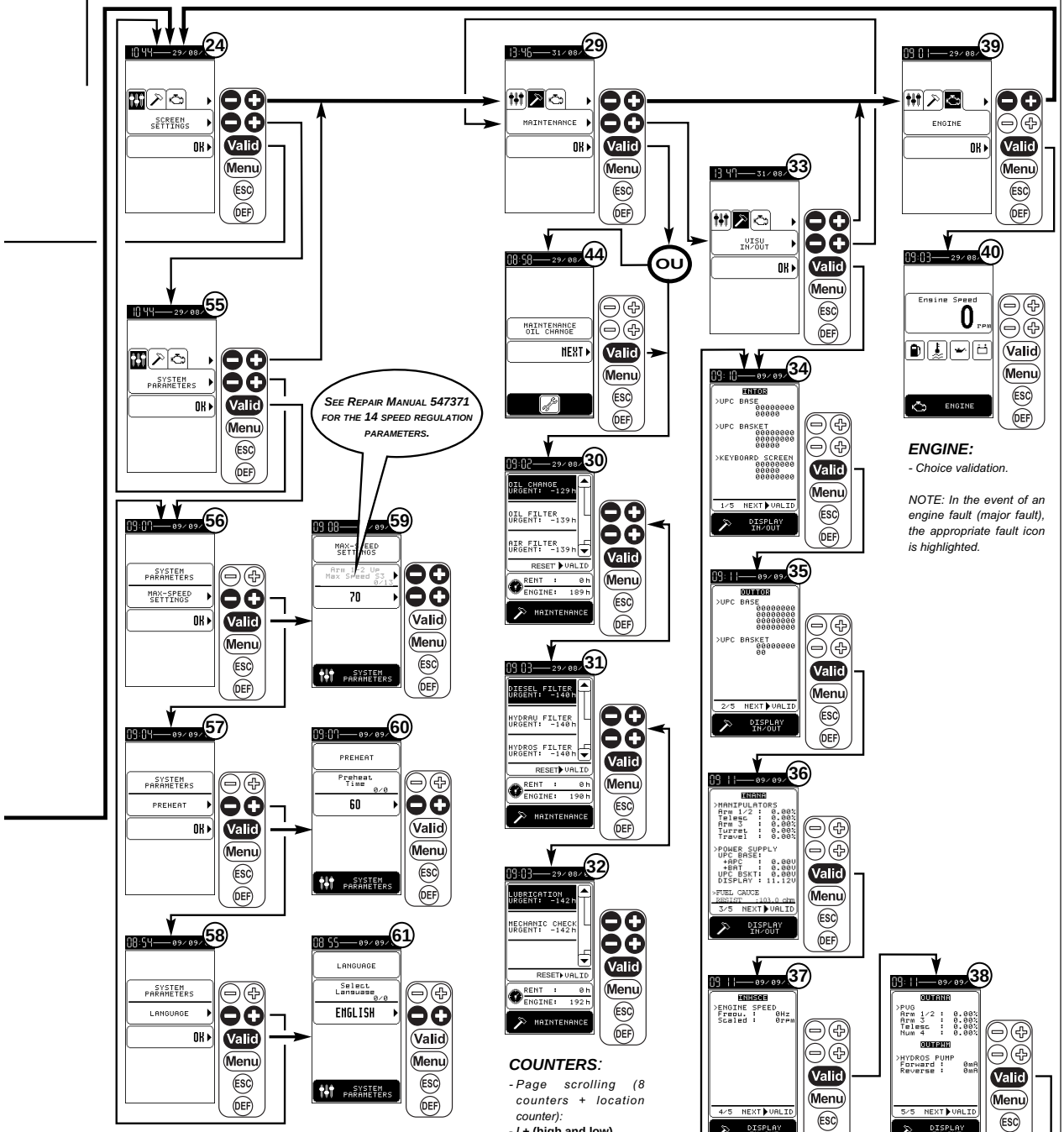

SYSTEM PARAMETERS

- Choosing the parameter group (3 pages):
- / + (low)
- Choice validation:
VALID
- Choosing the parameter (16 parameters):
- / + (high)
- Modifying setting:
- / + (low)

COUNTERS:

- Page scrolling (8 counters + location counter):
- / + (high and low)

- Reinitialising servicing counters and location counter zero reset:
VALID (twice)

ENGINE:

- Choice validation.

NOTE: In the event of an engine fault (major fault), the appropriate fault icon is highlighted.

DISPLAYING INPUTS AND OUTPUTS:

- Displaying the statuses of various electronic components.

https://truckmanualshub.com/

2 - INTRODUCTION PAGE

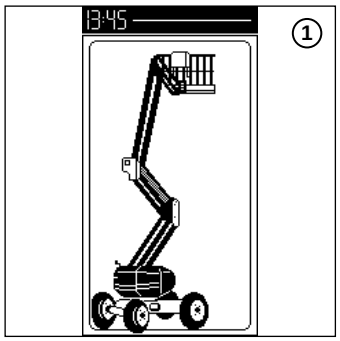

(1) - **INTRODUCTION PAGE** :
When the machine is switched on, an Initialisation page appears briefly on the screen and the Pre-heating page is displayed.

3 - PRE-HEATING PAGES

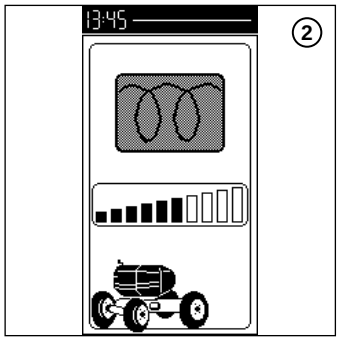

(2) - **PRE-HEATING PAGES :**
The pre-heating page is displayed during pre-heating and the bar graph increases proportionally to the lapsed pre-heating time.

(41) - **CONTROL / CAN TRANSFER PAGE :**
Control / system update time needed is in excess of preheating time.

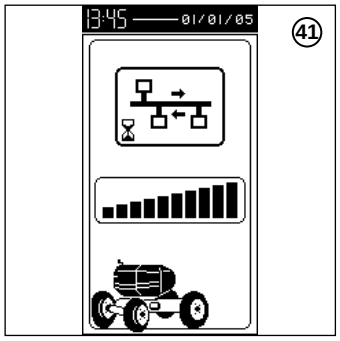

(3) - **START-UP PAGE :**
When the pre-heating time has lapsed (when the bar graph is full), the message "OK" appears and then the Operating page is displayed (or, if necessary, the Faults page).

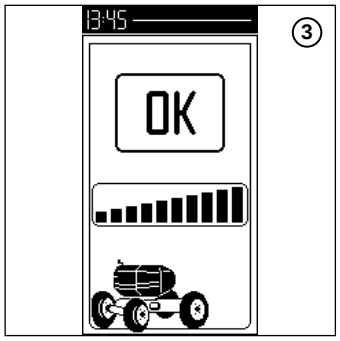

https://truckmanualshub.com/

4 - DESCRIPTION UNDER NORMAL USE (WITH NO FAULTS DISPLAYED ON THE SCREEN)

7 - "DEAD MAN'S" BUTTON

Press this button at the same time as the Raising and Rotation buttons.

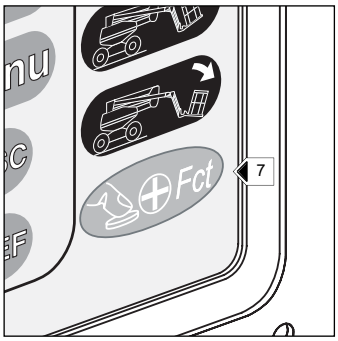

8 - BASKET DOWNWARD TILT BUTTON

9 - BASKET UPWARD TILT BUTTON

- These buttons enable you to correct the basket level or to fold the basket completely in transport position.

CORRECTING THE BASKET DOWNWARDS
- Press 8.

CORRECTING THE BASKET UPWARDS
- Press 9.

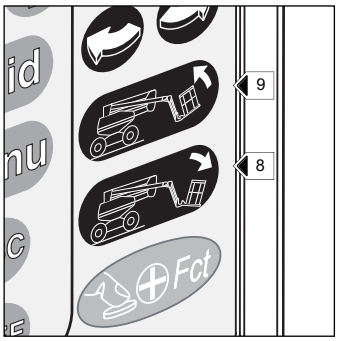

10 - TURRET ROTATION BUTTONS

- These buttons enable you to rotate the turret.

LEFT ROTATION
- Press 1.

RIGHT ROTATION
- Press 2.

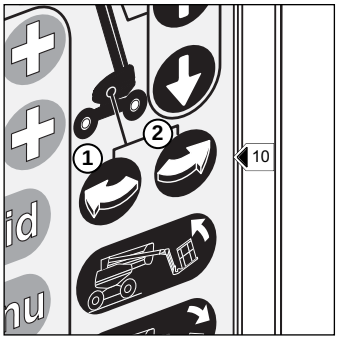

https://truckmanualshub.com/

11 - Lower arm raising / lowering buttons

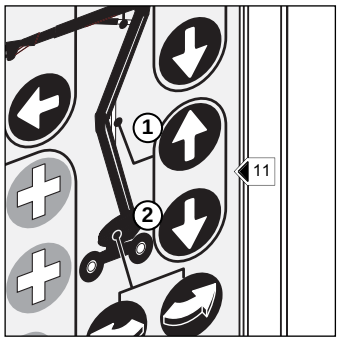

- These buttons enable you to raise and lower the lower arms.

RAISING THE LOWER ARMS
- Press 1

LOWERING THE LOWER ARMS
- Press 2.

12 - Upper arm raising / lowering buttons

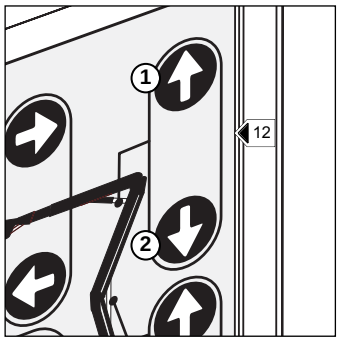

- These buttons are used for raising and lowering the upper arm.

RAISING THE UPPER ARM
- Press 1.

LOWERING THE UPPER ARM
- Press 2.

13 - Telescope extension / retraction buttons

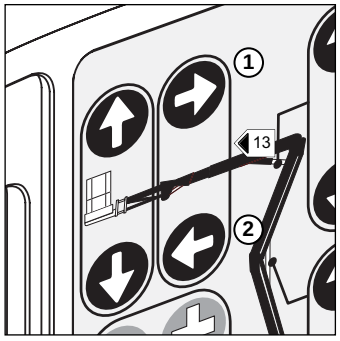

- These buttons are used to extend and retract the telescope.

RETRACTING THE TELESCOPE
-Press 1.

EXTENDING THE TELESCOPE
-Press 2.

14 - Pendular arm raising / lowering buttons

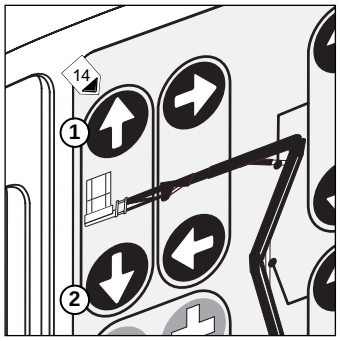

- These buttons enable you to raise and lower the pendular arm.

RAISING THE PENDULAR ARM
-Press 1.

LOWERING THE PENDULAR ARM
-Press 2.

https://truckmanualshub.com/

5 - OPERATING PAGES

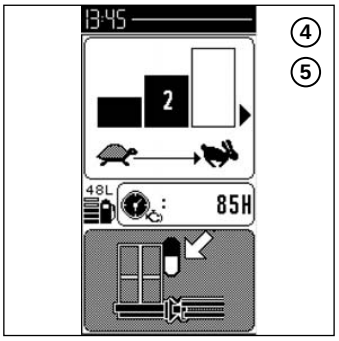

(4) - **WORKING FROM THE BASE PAGE (NO FAULT PRESENT)**

(5) - **OPERATING PAGE FROM THE BASKET (WITH NO FAULTS PRESENT)**

- Selection of speed **1, 2** or **3**, corresponding to the arm raising and lowering speeds from the basket.

1: Slow speed
2: Medium speed
3: High speed

NB *: The speed from the base unit is always speed **2**.*
Only the engine-hour indicator is visible when there is no fault or maintenance symbol in the system.

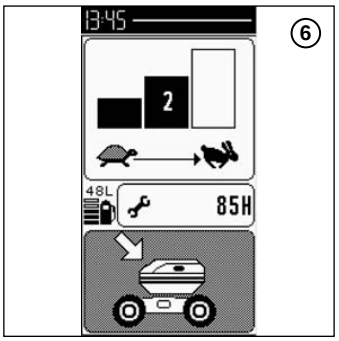

(6) - **WORKING FROM THE BASE PAGE (at least one fault TO DISPLAY present or all types of faults validated except SLOPE and OVERLOAD FAULTS)**

NOTA *: The warning triangle may be displayed during the work session.*

(7) - **OPERATING PAGE FROM THE BASE UNIT WITH A TILT FAULT PRESENT**

(8) - **OPERATING PAGE FROM THE BASE UNIT WITH AN OVERLOAD FAULT PRESENT**

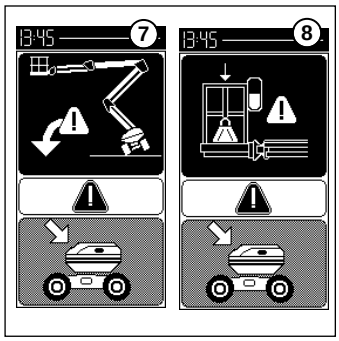

(42) - **WORKING FROM THE BASE PAGE WITH LOW DIESEL LEVEL FAULT ACTIVE, the pump logo flashes.**

(43) - **WORKING FROM THE BASE PAGE WITH MAINTENANCE FAULT, the wrench logo flashes. One or more maintenance operations need to be done.**

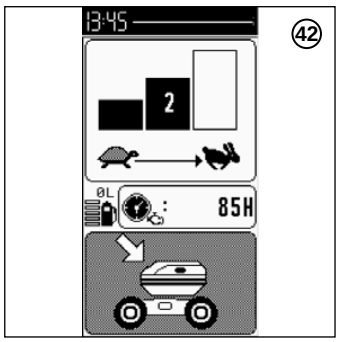

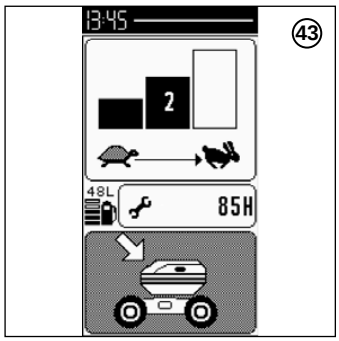

https://truckmanualshub.com/

6 - FAULTS PAGES

THE MAJOR FAULTS POSSIBLE ARE AS FOLLOWS :

(9) - **CAN BUS FAULT PAGE**

(10) - **LOW POWER SUPPLY FAULT PAGE**

(11) - **LOW DIESEL LEVEL FAULT PAGE**

***NB** : PROGRAM W678600-002, SCREEN PAGE DELETED.*

(12) - **ENGINE WATER TEMPERATURE FAULT PAGE**

(13) - **ENGINE OIL PRESSURE FAULT PAGE**

(14) - **BATTERY CHARGE FAULT PAGE**

(15) - **ARM POSITIONAL FAULT SENSOR (OPERATING / TRANSPORT SPEED)**

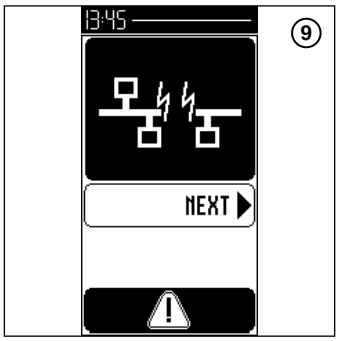

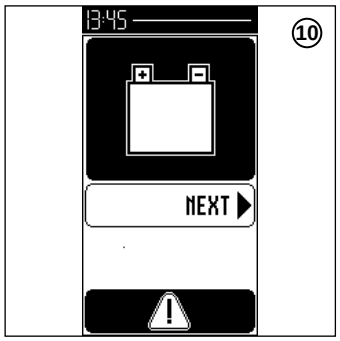

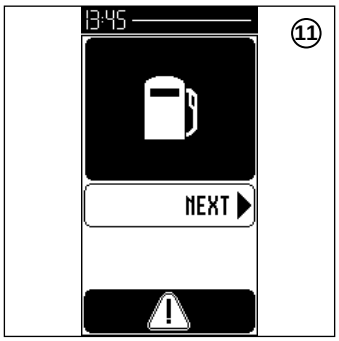

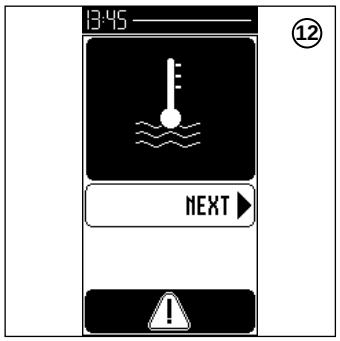

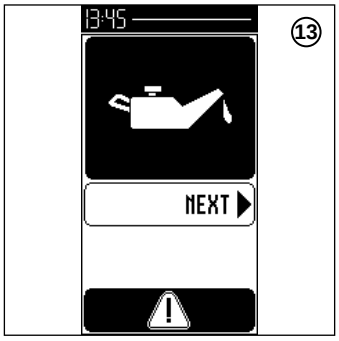

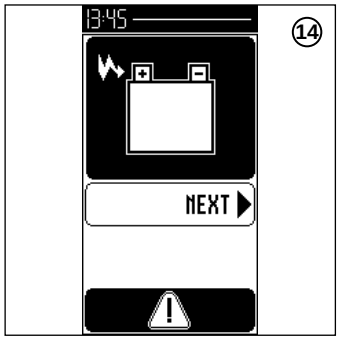

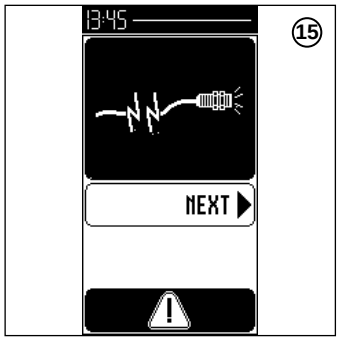

https://truckmanualshub.com/

THE MINOR FAULTS POSSIBLE ARE AS FOLLOWS:

(16) - **TURRET ROTATION MANIPULATOR FAULT PAGE**

(17) - **OVERLOAD FAULT PAGE**

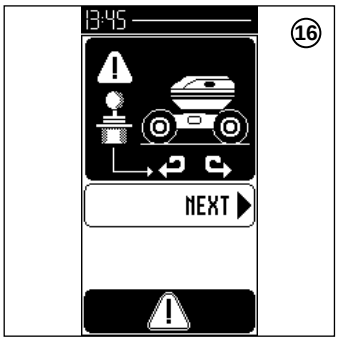

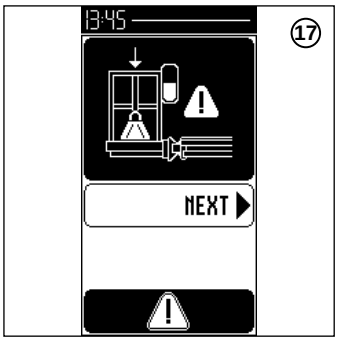

(18) - **TILT DEFAULT PAGE**

(19) - **MANIPULATOR FORWARD FAULT PAGE**

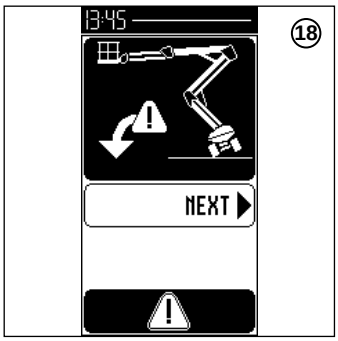

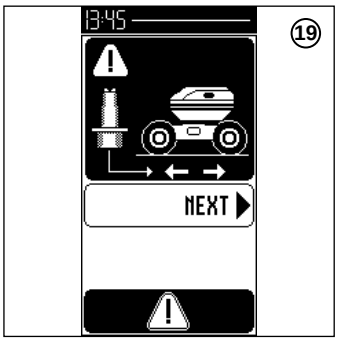

(20) - **LOWER ARMS MANIPULATOR FAULT PAGE**

(21) - **UPPER ARMS MANIPULATOR FAULT PAGE**

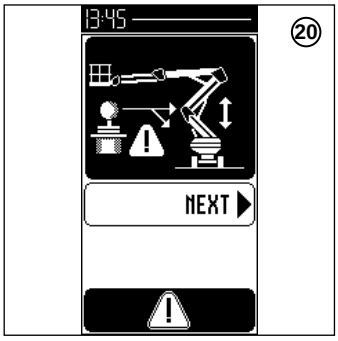

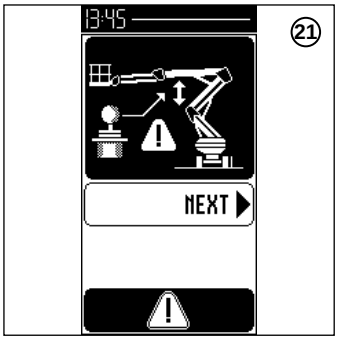

(22) - **TELESCOPE MANIPULATOR FAULT PAGE**

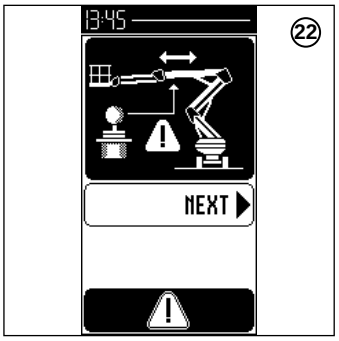

https://truckmanualshub.com/

THE FOLLOWING MAINTENANCE FAULTS ARE POSSIBLE:

***NB** : PROGRAM W678600-002*

These pages are displayed on the screen 10 hours before the period between two maintenance operations ends.

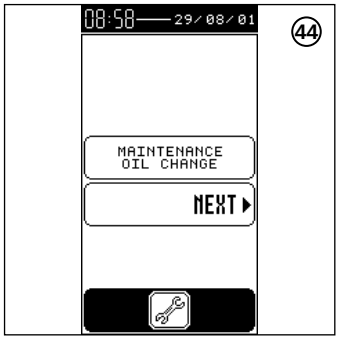

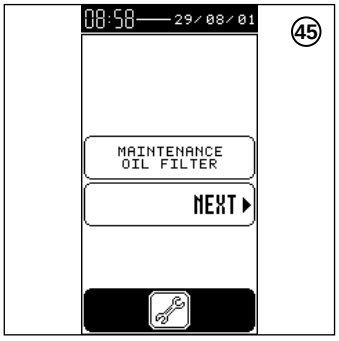

(44) - **OIL CHANGE MAINTENANCE FAULT PAGE**

(45) - **OIL FILTER MAINTENANCE FAULT PAGE**

(46) - **AIR FILTER MAINTENANCE FAULT PAGE**

(47) - **DIESEL FILTER MAINTENANCE FAULT PAGE**

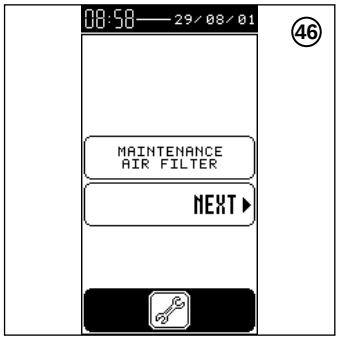

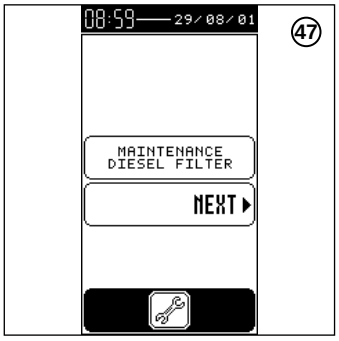

(48) - **HYDRAULIC FILTER MAINTENANCE FAULT PAGE**

(49) - **HYDROSTATIC FILTER MAINTENANCE FAULT PAGE**

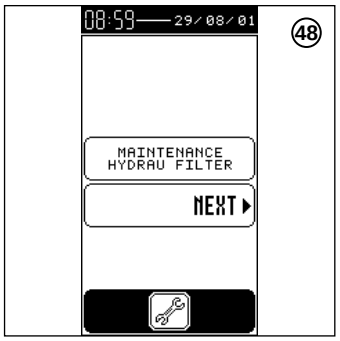

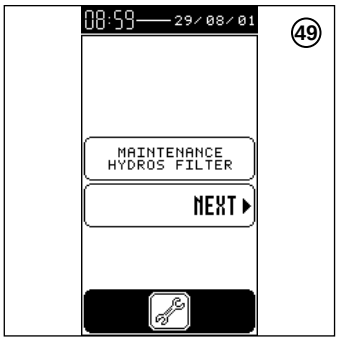

(50) - **LUBRICATION MAINTENANCE FAULT PAGE**

(51) - **MECHANICAL SERVICE MAINTENANCE FAULT PAGE**

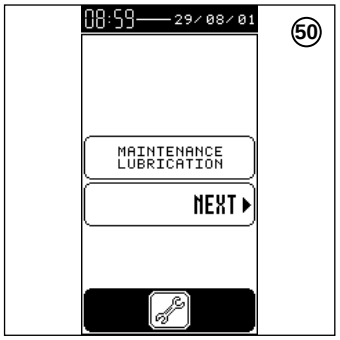

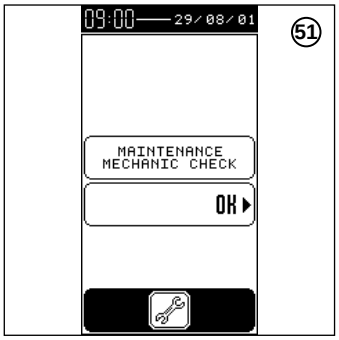

https://truckmanualshub.com/

7 - ACCESS CODE PAGE

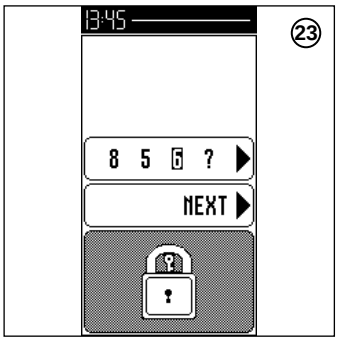

(16) - **ACCESS CODE PAGE** :
This page enables you to enter the code authorising access to the menu.
(Enter the SECRET CODE, see diagram).

8 - MENU PAGE

LEVEL 2 or DEALER / LESSOR access

A particular menu is selected by pressing the upper PLUS and MINUS keys.
A sub-menu is selected (if necessary) by pressing the lower PLUS and MINUS keys.
A menu (and its associated sub-menu) is confirmed by pressing the OK button.

The various menus available are :

- SETTINGS PAGES

(24) - The setting menu '' gives access to submenus :
(25) : setting screen contrast.
(26) : setting screen luminosity.
(27) : setting time and date.

***NB** : PROGRAM W678600-002:*
- The parameters on pages (25) and (26) can be reinitialised as default parameters. See pages (52) and (53) .

For this version of the program, the setting menu '' gives access to submenus :
(55) : 'systems parameters' gives access to the following pages
(56) : Max. speed management (14 pages)
(57) : Preheating time (1 page)
(58) : User language (11 languages)

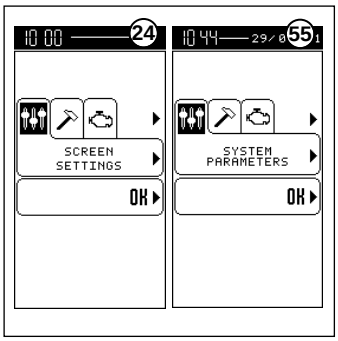

- MAINTENANCE PAGES

- The maintenance menu '' gives access to:
(29) - Maintenance page, submenus:
(30) (31) (32) - Displaying and maintaining counters (see Chapter 3 : SERVICING SCHEDULE)
(33) - Displaying system input and output statuses, submenus:
(34) (35) (36) (37) (38) - Input and Output pages (see Repair Manual for statuses)

***NB** : PROGRAM W678600-002:*
- Maintenance pages (44) to (51) (if) maintenance operations to be performed (validated after startup) they appear before the counter display.

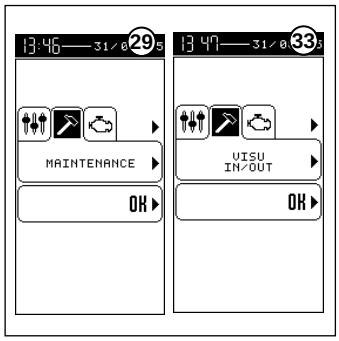

https://truckmanualshub.com/

- **ENGINE PAGE**

(39) - The engine instrument panel menu '|⚙' , gives access to the submenu:

(40):'engine' : - Engine speed

- ' ': low diesel level fault
- ' ': engine water temperature fault
- ' ': engine oil pressure fault
- ' ': battery charge fault.

A fault is indicated by a greyed-out display of the corresponding icon.

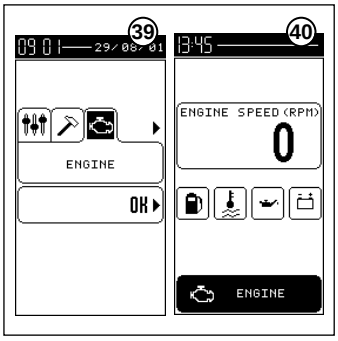

15 - BLOCKING THE TURRET FROM ROTATING

- This pin must be used when the platform is being transported by truck or some other means of transport (Train, etc…), to stop the turret from rotating.

- Remove the “clip”, and swivel the pin to the left.
- Push the pin into the hole in the turret provided for this purpose.
- Swivel the pin to the right and engage the bolt in the opening.
- Bolt it in position by re-inserting the clip.

Do not forget to remove it when using the platform.

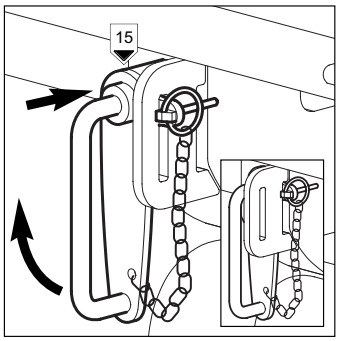

16 - REVOLVING LIGHT

- The revolving light illuminates automatically when the platform is travelling or making a movement (raising, rotating, etc.).

17 - TILT SENSOR

- This sensor signals the buzzer (18) when the platform is at the maximum authorised tilt. The buzzer sounds intermittently (see chapter on “SAFETY SYSTEMS”).

REMINDER: SEE PAGE 2-12

18 - AUDIBLE ALARM

- This alarm is activated when you press the button 30 on the basket's console.

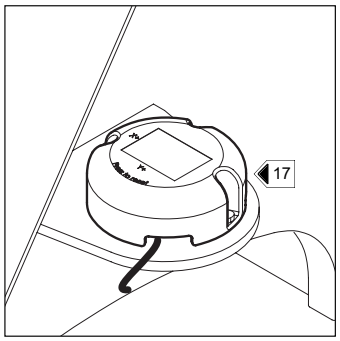

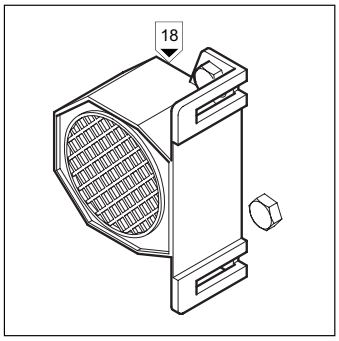

https://truckmanualshub.com/

19 - EMERGENCY PUMP BUTTON

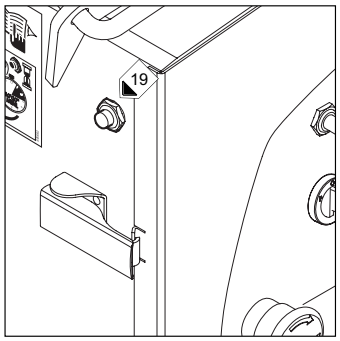

This button is used to perform all basket movements for a return to the ground in the event of breakdown (see chapter on “RESCUE PROCEDURE”).

To be used only in the event of internal combustion engine or electrical system breakdown.

20 - CONSOLE PROTECTIVE COVER

Once opened, this retractable casing protects the control panel from bad weather and flying particles from various types of work.

After each day of platform use or during work where there is a risk of flying particles, close the protective casing.

21 - UPPER ARM RAISING & LOWERING AND TURRET ROTATION CONTROL LEVER

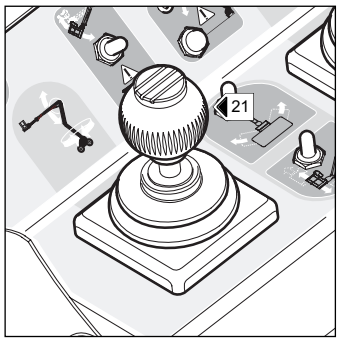

- This lever (21) enables you to raise the upper arm and rotate the turret.

***NB** : This lever operates under proportional control enabling precision when approaching. It must be handled smoothly without sudden jerks.*

RAISING THE UPPER ARM
- Push the lever upwards.

LOWERING THE UPPER ARM
- Push the lever downwards.

ROTATING RIGHT
- Push the lever to the right.

ROTATING LEFT
- Push the lever to the left.

https://truckmanualshub.com/

22 - LOWER ARM RAISING & LOWERING AND TELESCOPE EXTENSION & RETRACTION CONTROL LEVER

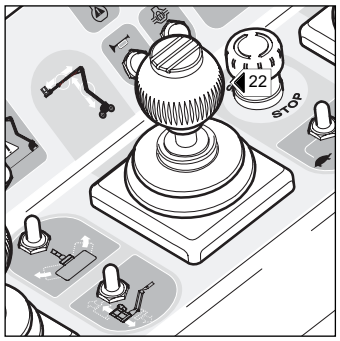

- This lever (22) enables you to raise the platform's lower and middle arms and extend and retract the telescope.

***NB** : This lever operates under proportional control enabling precision when approaching. It must be handled smoothly without sudden jerks.*

RAISING THE LOWER ARMS
- Push the lever upwards.

LOWERING THE LOWER ARMS
- Push the lever downwards.

EXTENDING THE TELESCOPE
- Push the lever to the left.

RETRACTING THE TELESCOPE
- Push the lever to the right.

23 - PLATFORM FORWARD / REVERSE MOVEMENT CONTROL LEVER

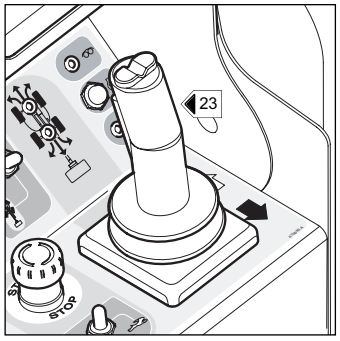

- This lever (23) enables you to move the platform.
- You must press trigger A and the dead man's pedal (41) to make any movements via the platform's control box.
- No commands are possible when the pedal or the trigger A is released.

***NB** : This lever operates under proportional control enabling precision when approaching. It must be handled smoothly without sudden jerks.*

FORWARD TRAVEL
- Push the lever forwards.

REVERSE TRAVEL
- Push the lever backwards.

STEERING RIGHT
- Press button D.

STEERING LEFT
- Press button G.

When the turret – arm assembly structure rotates more than 90° relative to the chassis, the travelling controls are reversed. Identify the direction of movement by looking at the arrows on the chassis and basket control panel.

https://truckmanualshub.com/

24 - EMERGENCY STOP

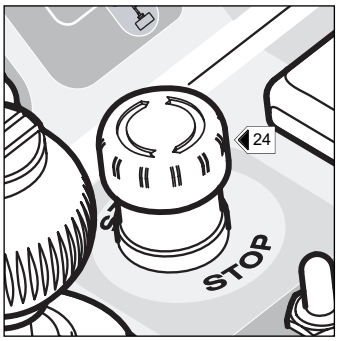

This switch enables you to cut off all movement in the machine in the event of an anomaly or danger arising.

- Press the knob to cut off all movement.
- Turn the knob a quarter turn to the right to deactivate (the switch automatically returns to its initial position).

In all cases, this instruction takes priority.

25 - "PRE-HEATING" INDICATOR LIGHT

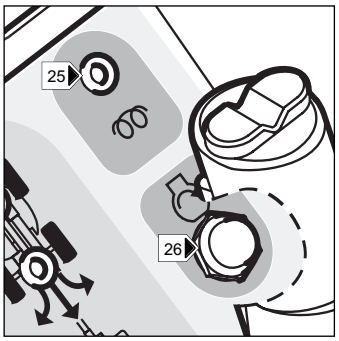

This indicator light illuminates when the machine is switched on:
- Or turn the ignition key on the base (time identical to bargraph evolution on the screen).
- Or by re-arming the Emergency Stop on the basket's console on the platform.

26 - START CONTROL BUTTON

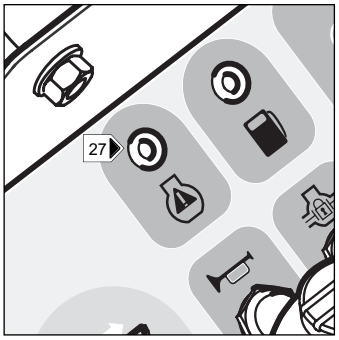

- Wait for the "Pre-heating" light to go out and then press button 25 to start the platform from the basket console.

27 - "ENGINE FAULT" INDICATOR LIGHT

This light illuminates when the Fault screens (11), (12), (13) (see the screen display diagram on Pages 2-20 and 2-23) are displayed on the base unit.

- Stop the IC engine immediately.

28 - DIRECTION MODE SELECTOR

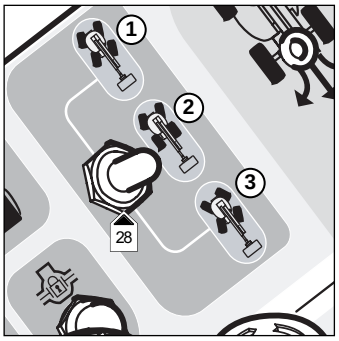

This contactor has 3 positions.

POSITION 1
- Sideways movement.

POSITION 2
- 2-wheel drive movement.

POSITION 3
- 4-wheel drive movement.

https://truckmanualshub.com/

29 - AXLE ALIGNMENT LEDS

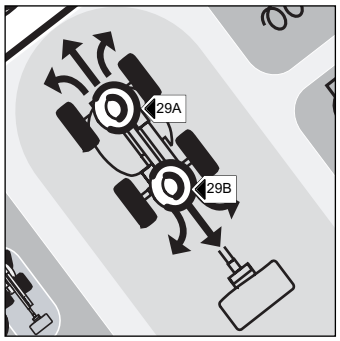

29A FRONT WHEEL ALIGNMENT

- This indicator light illuminates when the front wheels are correctly aligned with the axis of the machine.

29B REAR WHEEL ALIGNMENT

- This indicator light illuminates when the rear wheels are correctly aligned with the axis of the machine.

Before changing the steering mode (selection 1: sideways; selection 2: 2-wheel drive; selection 3: 4-wheel drive), you must align the wheels correctly with the machine's axis.
Align the front wheels first: selection 1 or 3.
Then align the rear wheels: selection 2.

30 - AUDIBLE ALARM CONTROL BUTTON

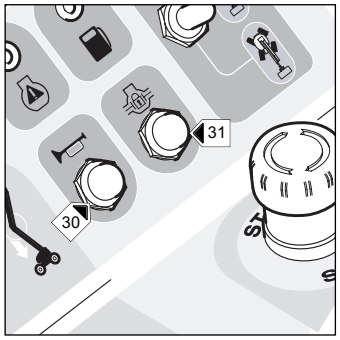

When you press button 30, the audible alarm (18) sounds.

31 - DIFFERENTIAL LOCKING CONTROL BUTTON

***NB** : This command must only be used during travel*

The differential lock enables the 4 driven wheels to turn at the same speed.

- To use this, press button 31: to disconnect it, release the button and note a stop in travel.

- Preferably use the differential lock when keeping the wheels in the machine's axis.

32 - LOW FUEL INDICATOR

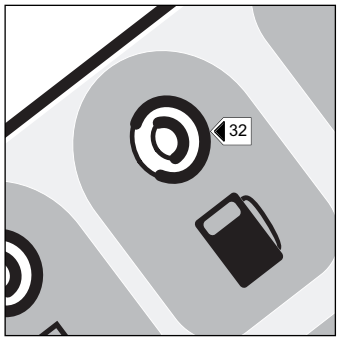

This indicator light illuminates when the fuel level is low.

***NB :** When the signal light comes on, there are about 5 hours of autonomy remaining.*

Downloaded from www.Manualslib.com manuals search engine

https://truckmanualshub.com/

33 - TRAVELLING SPEED SELECTOR SWITCH

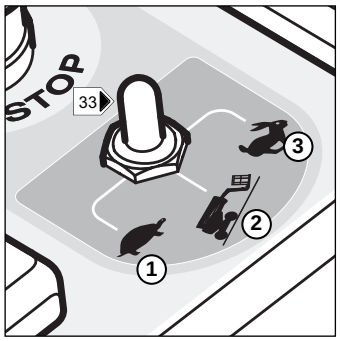

This contactor has 3 positions.
POSITION 1 : TORTOISE (SLOW SPEED)
POSITION 2 : RAMP (SLOW SPEED WITH FULL POWER)
POSITION 3 : HARE (HIGH SPEED), only with the **direction mode selector set to 1** (ref.28: Crabwise movement) or **2** (ref.28: Movement with 2 wheel drive).

***NB** : If **position 3** is selected when the machine is in **direction mode 3** (ref.28: 4 wheel drive), this automatically changes to **position 2**.*

34 - "OVERLOAD" INDICATOR LIGHT

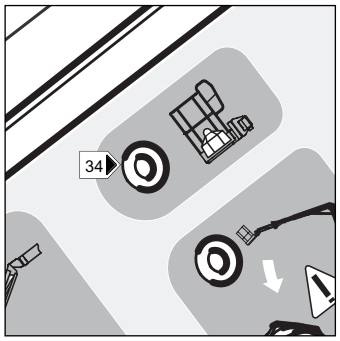

This indicator light illuminates when the basket is overloaded.

35 - "TILT" INDICATOR LIGHT

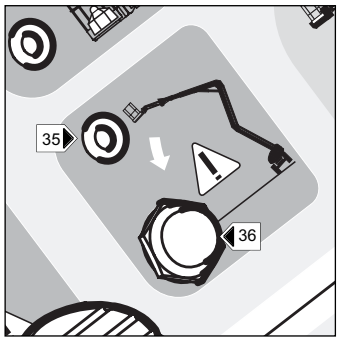

This LED is lit and any raising movement of the arms is blocked when the platform reaches the maximum authorised tilt.

36 - "USE ON SLOPE" BUTTON

This button enables you to neutralise the blocks on movement when the platform is tilted (see the "SAFETY" section).

37 - BASKET TILTING SWITCH

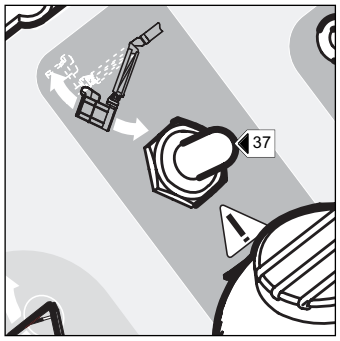

- This contactor enables you to correct the basket level or fold down the basket completely in transport position.

CORRECTING THE BASKET UPWARDS
- Push the contactor upwards.

CORRECTING THE BASKET DOWNWARDS
- Pull the contactor downwards.

https://truckmanualshub.com/

38 - Basket rotation switch

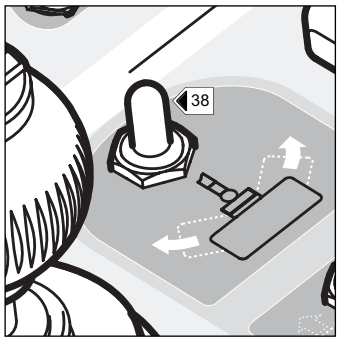

- This contactor enables you to rotate the basket right and left

RIGHT ROTATION
- Push the contactor to the right.

LEFT ROTATION
- Push the contactor to the left.

39 - Basket pendular arm switch

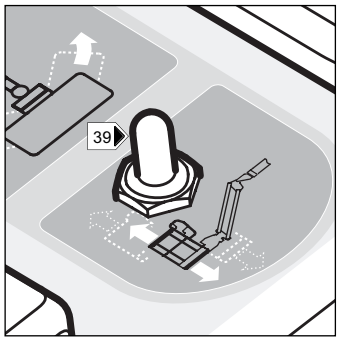

- This contactor enables you to raise and lower the pendular arm.

RAISING THE PENDULAR ARM
- Push the contactor forwards.

LOWERING THE PENDULAR ARM
- Pull the contactor backwards.

40 - “Emergency pump” Button

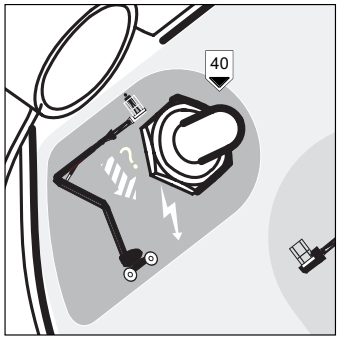

This button enables all the basket’s movements to be performed to bring it back to the ground if a breakdown occurs. (See the “RESCUE PROCEDURE” section).

To be used only in the event of internal combustion engine or electrical system breakdown.

41 - "Dead man's" pedal

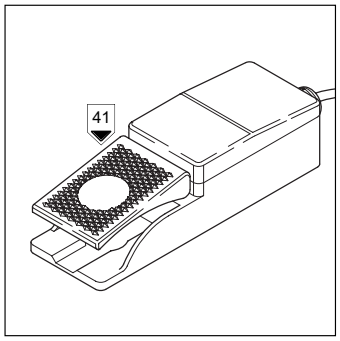

This pedal is fixed to the floor of the platform.

- You must press on this pedal to make movements from the basket console.
- When the pedal is released, no commands are possible.

https://truckmanualshub.com/

42 - BUZZER

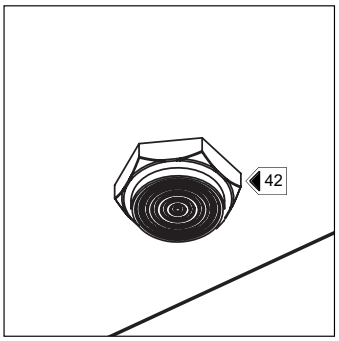

- This buzzer is activated when the machine has reached the maximum authorised tilt or is overloaded.
- If intermittent: when the maximum authorised tilt threshold is crossed, all movements are blocked, except for lowering the arms, thereby enabling the machine to return to an acceptable level.
- If continuous: when the platform is overloaded, all movements are blocked. The load in the machine must be relieved before it can manoeuvre.

REMINDER: SEE PAGE 2-12

43 - SAFETY HARNESS ATTACHMENT POINTS

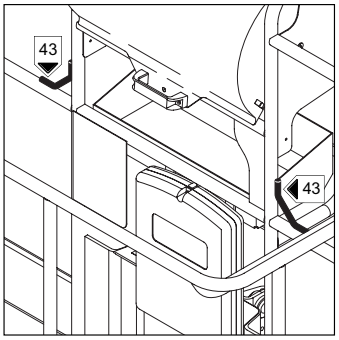

- These fixings are used for attaching the harness lanyards when the operators are in the basket.

https://truckmanualshub.com/

USE OF THE ACCESS PLATFORM

A

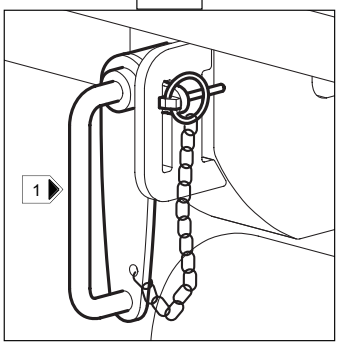

B

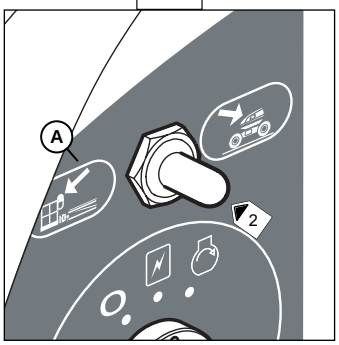

C

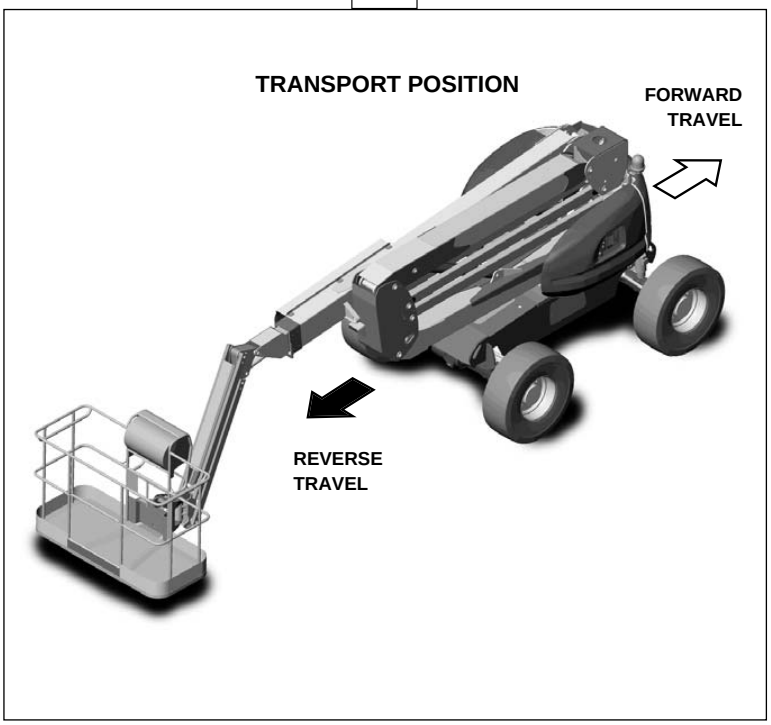

BEFORE STARTING THE PLATFORM

- Check the following levels :
  - The IC motor's oil.
  - The hydraulic oil reservoir.
  - The coolant.
- Close the battery cut-out.

STARTING THE PLATFORM

- Turn the ignition switch to position 2 to switch on the electrical systems and engine pre-heating.
- Turn the ignition switch to position 3 to start the IC engine.

Do not operate the starter for more than 30 seconds and pre-heat between all fruitless attempts to start.

- Release the ignition switch and let the engine idle.

Never try to push or pull the platform to start it. This type of manoeuvre would cause severe damage to the transmission.

https://truckmanualshub.com/

TRAVELLING

Before moving and using the machine, release the turret lock, if necessary, by removing pin 1 (see Fig. A).

The platform can only be travelled from the control unit located on the platform.

Contactor 2 (Fig. B) must be in position A (transfer of control to the platform).
- Check the fuel level (low diesel level fault page not displayed, mark 11 on diagrams P 2-20 to 2-23).
  The platform can move in every position. However, it is preferable to set the platform in transport position for long journeys (see Fig. C). (The arms are folded down fully (see the note below) and the telescope is retracted).
  In transport position, you have:
  - The most secure position (tilt, slope)
  - Maximum travel speed
  - Maximum power to the drive wheels.

***NB** : You must use ramp speed (full power with the speed restricted to 2 km/h) to cross steep slopes or move over very broken terrain. This can prove to be the most practical mode when, for example, you must use an access ramp to fit the platform on a truck's flat bed.*

If the slope is steep, remove all load from the basket; use reverse gear.

SETTING UP AT THE WORK SITE

It is important to clear the platform's operating area.

- Bring the platform to the work site.
- If necessary, load the equipment to be carried (arrange it so that the operator is not inconvenienced and so as to avoid anything falling).
- Climb onto the platform.

It is mandatory to wear a safety helmet and harness.

- Press the "Dead Man's" pedal and start to manoeuvre to bring the platform into operating position.

***NB** : When the platform is free of the chassis, it switches automatically to slow speed*
- Only the pendular arm can be raised fully while retaining transport speed.

While manoeuvring the platform (raising, rotating, etc.), look all around and above you. Pay particular attention to any electrical cables and any objects in the platform's operating area.

SAFETY SYSTEMS

When the platform is overloaded, the buzzer is activated and sounds continuously. All movement is blocked except for retracting the telescope.
- Solution: remove the load

https://truckmanualshub.com/

When the platform reaches the maximum authorised tilt or inclination. The buzzer sounds intermittently.:

- Return to a non-tilted, safe position.

The platform is tilted in the operating position: only the following movements are possible :

- Lowering of arms 1, 2 and 3
- Retraction of the telescope
- Turret rotation
- Raising / lowering of the pendular arm
- Tilting / inclination

Any other movements are prohibited: (if necessary, or for particular applications), you can make these movements by proceeding as follows:

- Press and hold down the tilt unlocking button on the console and press the desired command at the same time.

Beeping remains activated even after engaging the tilt unlocking button.

Take care not to increase the platform's offset. There is a risk of overturning.

REMINDER: SEE PAGE 2-12

LOWERING

When the work is complete: retract the telescope and then lower the arms to bring the platform to transport position.

Be careful of any people present on the ground when lowering the arms.

STOPPING THE PLATFORM

When the platform is not being used, switch off the electrical power supply using the key switch and the battery cut-out. Remove the key to prevent unauthorised use.

Switch off the IC engine.

Before leaving the platfrom unattended, ensure that you have performed the operations for stopping the platform correctly: this for your own safety and that of others.

https://truckmanualshub.com/

RESCUE PROCEDURE

IF THE OPERATOR SHOULD BECOME ILL

If the operator should become ill or find himself incapable of manoeuvring, the person on the ground can take back control of the platform.
Proceed as follows:
- Turn the key switch to position A (Fig. A) to take back control of the platform's movements.
- Proceed to lower the platform.

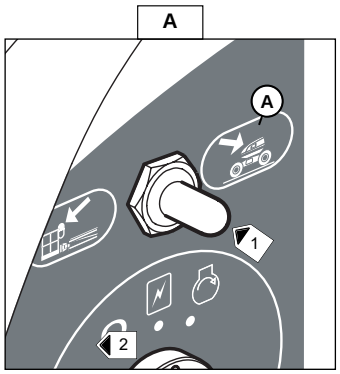

Beware of any obstructions or any objects on the platform.

IN THE EVENT OF AN ACCIDENT OR BREAKDOWN

ELECTRICAL FAILURE

When an accident or a breakdown occurs making the electrical control boxes unusable, the machine has manual systems for performing all the platform's movements.

- Lift the turret's right-hand cover.

- Grasp control level 2 (Fig. B) and set it on one of the elements to produce the desired movement (Figs.D-E-F-G).

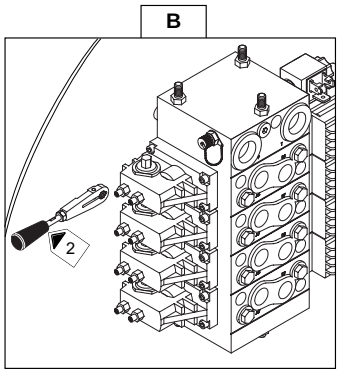

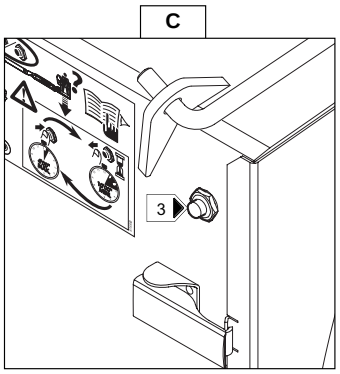

To raise and lower the lower arms (position the lever on I).

- Press button 3 (Fig. C) to provide power to the distributor and simultaneously push the lever (Fig. D) to:

  A - Lower the lower arms
  B - Raise the lower arms

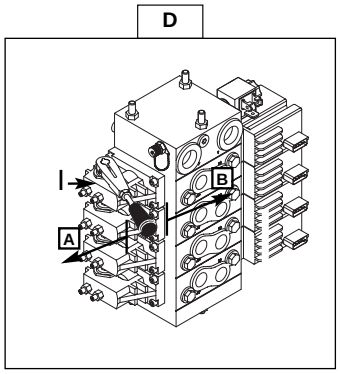

https://truckmanualshub.com/

To extend and retract the telescope (set the lever to II).

- Press button 3 (Fig. C) to provide power to the distributor and simultaneously pull the lever (Fig. E) to:

  A - Retract the telescope
  B - Extend the telescope

E

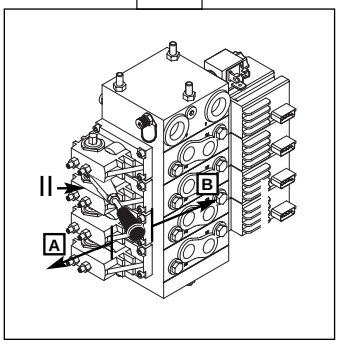

To raise and lower the upper arm (set the lever to III).

- Press button 3 (Fig. C) to provide power to the distributor and simultaneously push the lever (Fig. F) to :

  A - Lower the upper arm
  B - Raise the upper arm

F

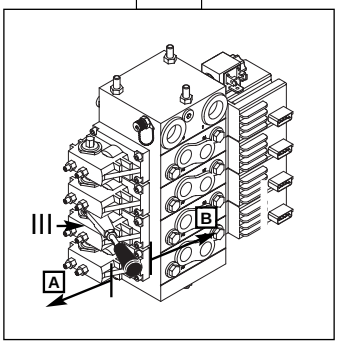

To rotate the turret left (set the lever to IV).

- Set valve 4 (Fig.H) .
- Press button 3 (Fig.C) to supply the distributor and simultaneously pull the lever (Fig.G) towards B.
- Reset valve 4 (Fig.H) 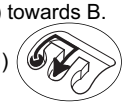 .

To rotate the turret right (set the lever to IV).

- Set valve 4 (Fig.H) .
- Press button 3 (Fig.C) to supply the distributor and simultaneously pull the lever (Fig.G) towards B.
- Reset valve 4 (Fig.H) .

G

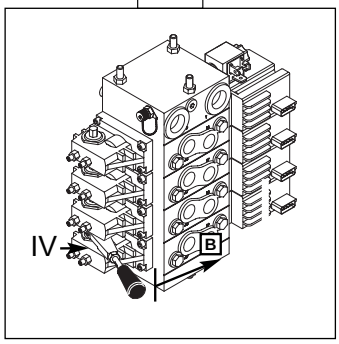

To raise the pendular arm (set the lever to IV).

- Set valve 5 (Fig.H) .
- Press button 3 (Fig.C) to supply the distributor and simultaneously pull the lever (Fig.G) towards B.
- Reset valve 5 (Fig.H) .

To lower the pendular arm (set the lever to IV).

- Set valve 5 (Fig.H) .
- Press button 3 (Fig.C) to supply the distributor and simultaneously pull the lever (Fig.G) towards B.
- Reset valve 5 (Fig.H) .

H

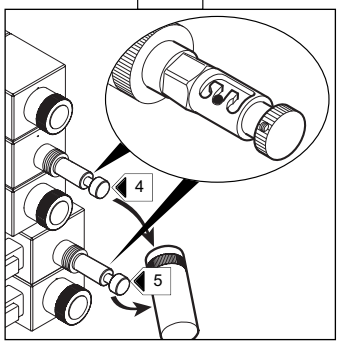

https://truckmanualshub.com/

TROUBLESHOOTING FROM THE BASKET

- Press button 6 (Fig.I) to supply the distributor and simultaneously ***operate the basket controls.***

(See the “CONTROL INSTRUMENTS B - CONTROL STATION ON THE PLATFORM” section)

Only to be used to enable return to the ground if the IC engine breaks down.

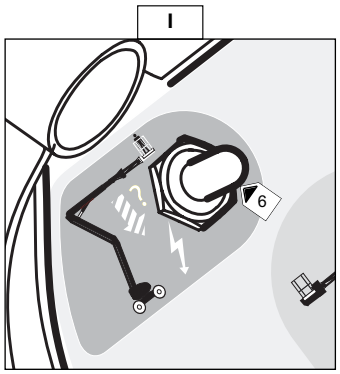

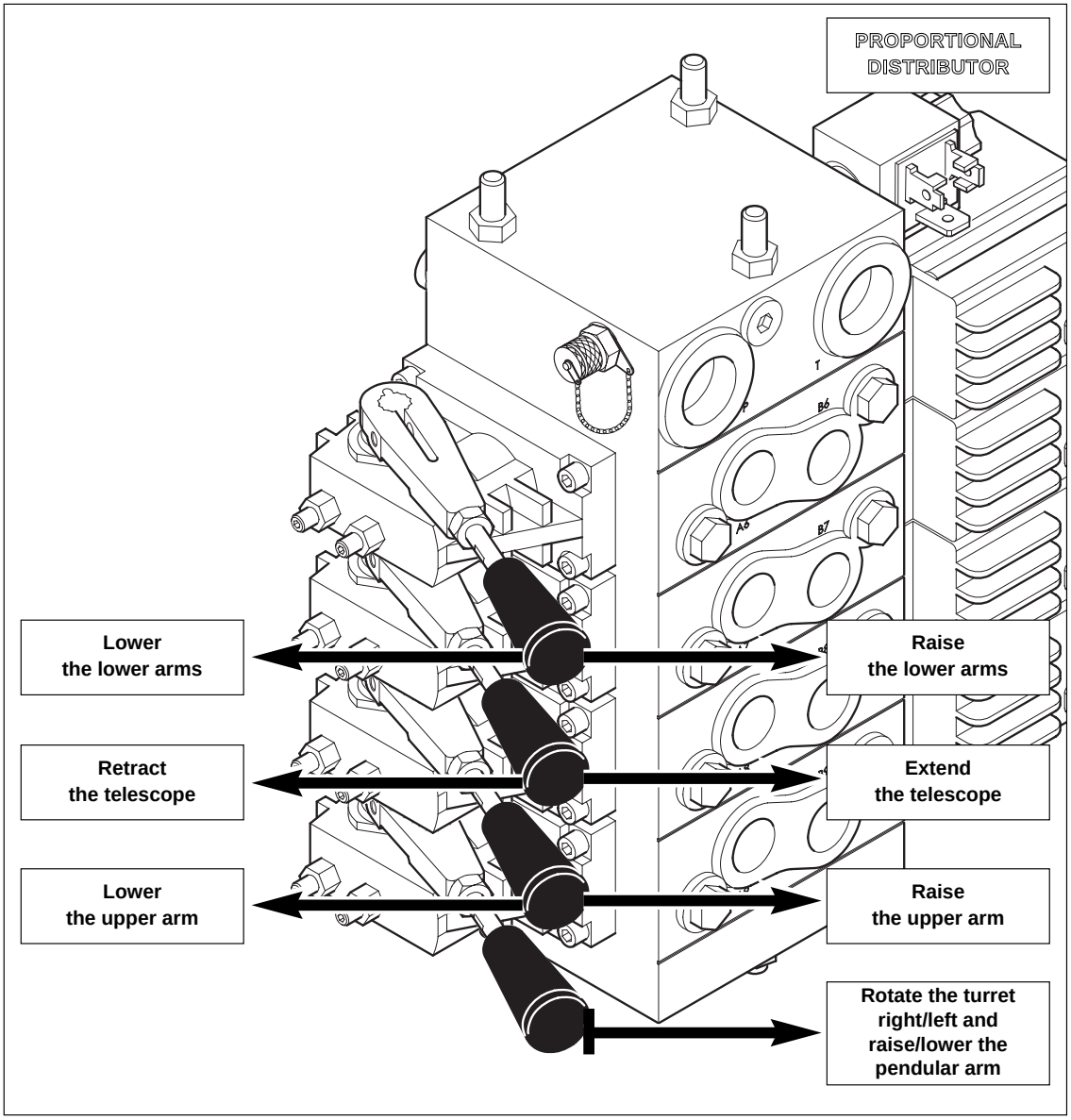

https://truckmanualshub.com/

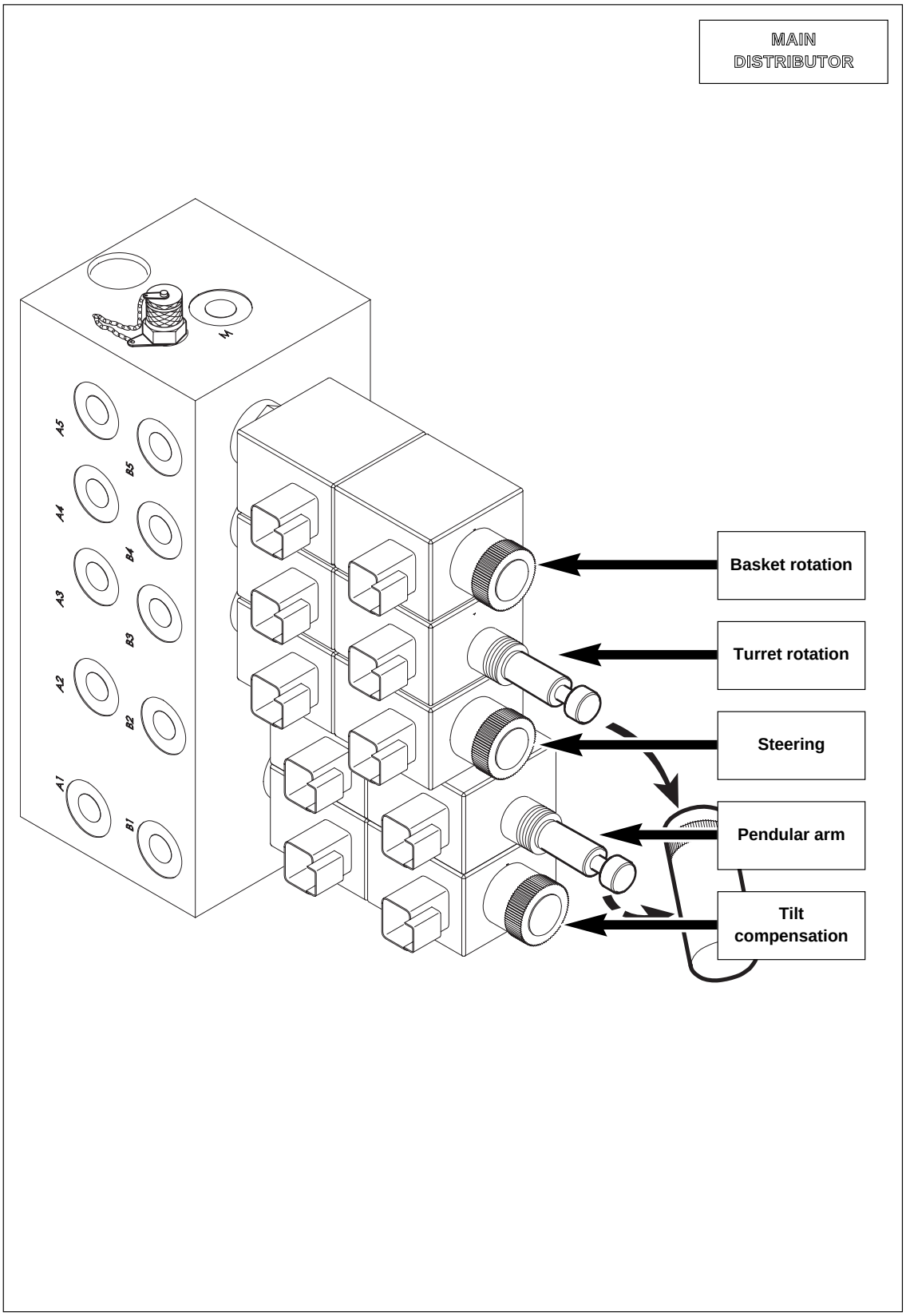

https://truckmanualshub.com/

3 - MAINTENANCE

https://truckmanualshub.com/

FILTER CARTRIDGES AND BELTS

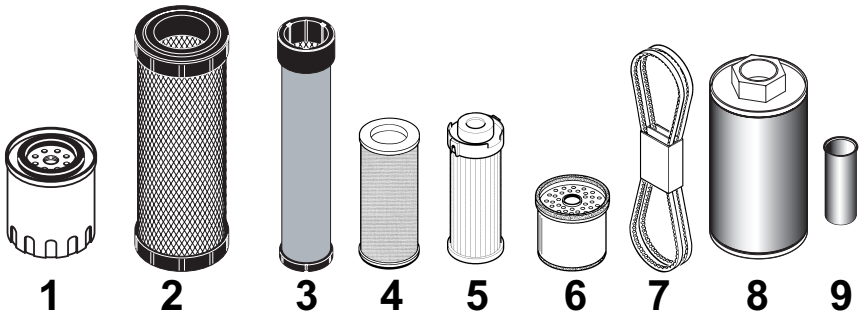

DESIGNATION	REFERENCE	CLEANING	REPLACEMENT
1 - IC engine oil filter	702577		500 H
2 - Dry air filter cartridge	227959	250 H	500 H
3 - Dry air filter safety cartridge	227960		1000 H
4 - Hydrostatic transmission oil filter cartridge	518250		500 H
5 - Auxiliary hydraulic oil filter cartridge	518251		500 H
6 - Fuel filter cartridge	109401		500 H
7 - Fan belt	702738		
8 - Hydraulic reservoir suction strainer	19910	1000 H	
9 - Hydraulic reservoir filling sieve	599523		

https://truckmanualshub.com/

LUBRICANTS

COMPONENTS TO BE LUBRICATED	CAPACITY	RECOMMENDATION	CONDITIONNEMENT	REFERENCE
IC ENGINE	7.3 L.	MANITOU Moteur SAE 15W/40 engine oil	5 L. 25 L. 56 L. 215 L.	485 297 161 584 490 013 485 165
FRONT AXLE DIFFERENTIAL	4.8 L.	TRACTELF SF3 axle oil	5 L. 20 L. 209 L.	545 97 582 391 546 222
REAR AXLE DIFFERENTIAL	4 L.	TRACTELF SF3 axle oil	5 L. 20 L. 209 L.	545 976 582 391 546 222
TRANSFER BOX	0.75 L.	TRACTELF SF3 axle oil	5 L. 20 L. 209 L.	545 976 582 391 546 222
FRONT & REAR WHEEL REDUCERS	0.8 L.	SHELL SPIRAX A 90 oil	20 L. 209 L.	661 950 662 000
TURRET GEAR MOTOR REDUCTION BRAKE	1,5 L.	MANITOU SAE 80W90 mechanical transmission oil for axles and boxes	2 L. 25 L. 56 L. 215 L.	499 237 161 585 466 238 490 208
HYDRAULIC OIL RESERVOIR	55 L.	MANITOU ISO 46 Hydraulic oil	25 L. 56 L. 215 L.	161 588 453 265 485 227
GENERAL LUBRICATION TURRET BEARING RING LUBRICATION		MANITOU grease	Cartridge 400 Gr.	479 330
TURRET GEAR WHEEL LUBRICATION		SHELL MALLEUS GL 205 oil	Aerosol	545 834
COOLING CIRCUIT	8 L.	Coolant (Protection level : - 30°C) Coolant (Protection level : - 25°C)	2 L. 5 L. 20 L. 210 L. 2 L. 5 L. 20 L. 210 L.	473 076 470 077 470 078 470 079 554 002 554 003 554 004 554 005
FUEL TANK	45 L.	Diesel		

DIAGNOSTIC ANALYSIS OF OILS

If a service or maintenance contract has been organized with the dealer, a diagnostic analysis of engine, transmission and axleoils may be requested depending on the rate of use.

https://truckmanualshub.com/

MAINTENANCE SCHEDULE

A = ADJUST	N = CLEAN
C = CHECK	P = PURGE
D = DESCALE	R = REPLACE
G = GREASE	V = EMPTY

	After the first 50 hours	Day	50 hours or 1 month*	250 hours or 6 month*	500 hours or 1 year*	1000 hours or 2 years*	3000 hours or 4 years*	PAGE
INTERNAL COMBUSTION ENGINE								
I.C. engine oil level	V/R	C	◀◀	◀◀	V/R	◀◀	◀◀	3-8 / 3-18
I.C. engine oil filter	R				R	◀◀	◀◀	3-18
Cooling liquid level		C	◀◀	◀◀	◀◀	V/R	◀◀	3-8 / 3-24
Fuel level		C	◀◀	◀◀	◀◀	◀◀	◀◀	3-8
Dry air filter cartridge				N	R	◀◀	◀◀	3-12 / 3-19
Radiator harness				N	◀◀	◀◀	◀◀	3-12
Alternator/Ventilator/Crankshaft belt tension	A			A	◀◀	◀◀	◀◀	3-13
Fuel filter cartridge	R				R	◀◀	◀◀	3-19
Fuel tank						V/N	◀◀	3-25
Dry air filter safety cartridge						R	◀◀	3-25
I.C. engine silent blocks						C**	◀◀	3-27
I.C. engine running speeds						C**	◀◀	3-27
Valve clearance							C/A**	3-28
Injectors					C**	◀◀	◀◀	3-19
Radiator						C/D**	◀◀	3-27
Water pump and thermostat							C**	3-28
Alternator and starter							C**	3-28
Empty the fuel filter				V	◀◀	◀◀	◀◀	3-12
TRANSMISSION								
Hydrostatic hydraulic oil filter cartridge	R				R	◀◀	◀◀	3-20
Axle assemblies	G		G	◀◀	◀◀	◀◀	◀◀	3-11
Tightening cardan bolts				C	◀◀	◀◀	◀◀	3-22
Braking		C	◀◀	◀◀	C	◀◀	◀◀	3-9 / 3-23
Front and rear axle differential oil levels	C			C	◀◀	V/R	◀◀	3-13 / 3-26
Front and rear wheel reducer oil levels	C			C	◀◀	V/R	◀◀	3-14 / 3-26
Hydrostatic transmission circuit pressure						C**	◀◀	3-27
Start of hydrostatic transmission regulations						C/A**	◀◀	3-27
TYRES								
Tightening wheelnuts				C	◀◀	◀◀	◀◀	3-14
Condition of wheels and tyres		C**	◀◀	◀◀	◀◀	◀◀	◀◀	3-9
Change a wheel								3-30
HYDRAULICS								
Auxiliary hydraulic oil filter cartridge	R				R	◀◀	◀◀	3-20
Hydraulic oil level		C	◀◀	◀◀	◀◀	◀◀	◀◀	3-9
Hydraulic oil					V/R	◀◀	◀◀	3-21
Hydraulic circuit strainer						N	◀◀	3-27
Backup pump	C			C	◀◀	◀◀	◀◀	3-14
Turret motor brake reducer				C	V/R	◀◀	◀◀	3-15 / 3-22
Hydraulic oil tank							N**	3-28
Condition of hoses	C				C	◀◀	◀◀	3-21
ELECTRICITY								
Density of battery electrolyte	C			C	◀◀	◀◀	◀◀	3-23
Battery electrolyte level	C		C	◀◀	◀◀	◀◀	◀◀	3-10
Condition of manipulator boots		C	◀◀	◀◀	◀◀	◀◀	◀◀	3-9
FRAME								
Access platform slew ring	G			G	◀◀	◀◀	◀◀	3-15
Tightening screws on the turret slew ring	C				C	◀◀	◀◀	3-23
Shafts				G	◀◀	◀◀	◀◀	3-16
Tightening axle assembly mounting screws on the frame				C	◀◀	◀◀	◀◀	3-17
LIFTING FRAME								
Locking the telescope				C	◀◀	◀◀	◀◀	3-14
Basket overload and rotation								
Tightening turret rotation motor bolts					C	◀◀	◀◀	3-22

https://truckmanualshub.com/

A = ADJUST	**N = CLEAN**
C = CHECK	**P = PURGE**
D = DESCALE	**R = REPLACE**
G = GREASE	**V = EMPTY**

	After the first 50 hours	Day	50 hours or 1 month*	250 hours or 6 month*	500 hours or 1 year*	1000 hours or 2 years*	3000 hours or 4 years*	PAGE
SAFETY COMPONENTS								
Arm position sensors	C			C	◀◀	◀◀	◀◀	3-17
Slope sensor	C			C	◀◀	◀◀	◀◀	3-17
Overload sensor	C			C	◀◀	◀◀	◀◀	3-17
Machine stickers	C**			C**	◀◀	◀◀	◀◀	3-17
ACCESS PLATFORM								
Purge the fuel supply circuit								3-29
Attach a sling to the platform								3-32
Transport the platform on a skid								3-34
Set to Free wheel								3-35
Maintenance stay								3-36

*: At the first period reached
**: Consult your dealer

https://truckmanualshub.com/

A - EVERY DAY OR EVERY 10 HOURS OF OPERATION

A1 - I.C. ENGINE OIL LEVEL

CHECK

Set the platform on a horizontal surface, with the IC engine stopped, and let the oil gather in the casing.

- Open the left-hand cover.
- Remove gauge 1 (Fig. A1/1)
- Wipe the gauge and check the level is between the two upper marks.
- Add oil if necessary (see the LUBRCANTS section) via the filling hole 2 (Fig. A1/2).

A1/1

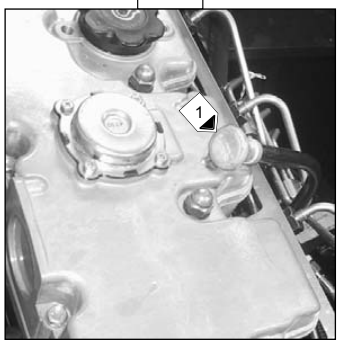

A2 - COOLING LIQUID OIL LEVEL

CHECK

Set the platform on a horizontal surface, with the IC engine stopped, and let the engine cool down.

- Open the left-hand cover.
- Slowly turn the radiator cap 4 (Fig A2) up to the safety stop.
- Let the pressure and the steam escape.
- Press the cap down and turn it to remove it.
- Add coolant via the filling hole 5 (Fig. A2).
- Lightly grease the filling hole to assist in removing and replacing the radiator cap.

A1/2

To avoid any risk of spraying or burning, wait until the I.C. engine has cooled down before removing the cooling circuit filler plug. If the cooling liquid is very hot, add only hot cooling liquid (80°C). In an emergency, you can use water as a cooling liquid, then change the cooling circuit liquid as soon as possible (see : 3 - MAINTENANCE : F1 - COOLING LIQUID).

A2

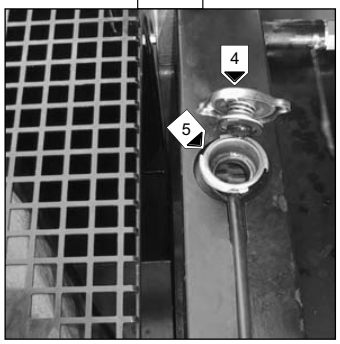

A3 - FUEL LEVEL

CHECK

Keep the fuel tank full as much as possible in order to reduce condensation due to atmospheric conditions to a minimum.

- Remove the cap 1 (Fig. A3)
- Fill the tank with clean diesel fuel, filtered through a strainer or a clean, non-fluffy cloth, via the filling hole.

Never smoke or approach with a naked flame when filling or when the tank is open. Never fill up while the engine is running.

A3

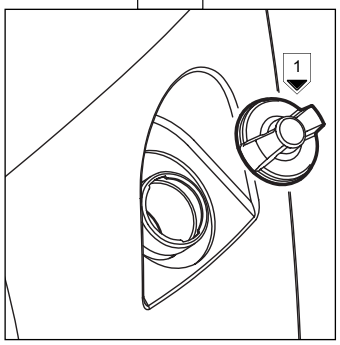

https://truckmanualshub.com/

The fuel tank is degassed via the filler plug. When changing it, always use an original part, with degassing hole.

A4 - BRAKING

CHECK

Check that the cotter pin 1 (Fig. A4/1) and 2 (Fig. A4/2) is present on the rear axle.

If this cotter pin is missing,
THE MACHINE HAS NO BRAKES.

A4/1

A4/2

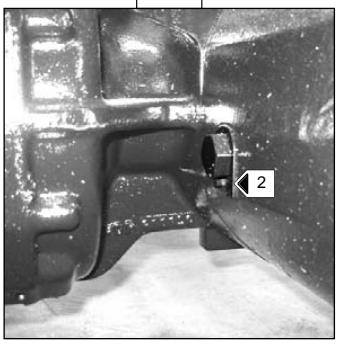

A5 - HYDRAULIC OIL LEVEL

CHECK

Set the platform in transport position on a horizontal surface with the engine stopped.

- The oil level must be in the middle of the indicator 1 (Fig. A5)
- Add oil if necessary (see the LUBRICANTS section) via filling hole 2 (Fig. A5).

A5

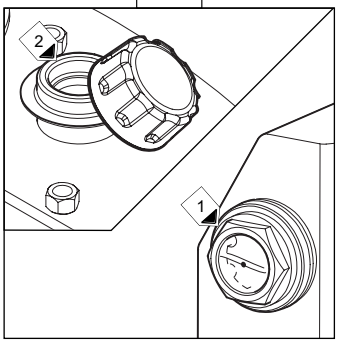

A6 - CONDITION OF MANIPULATOR BOOTS

CHECK

For this operation, get into the basket with the internal combustion engine off.

- Check the condition of the manipulator rubber boots 1 (Fig. A6) by moving them as if during a normal movement.

The boots must not be split or cracked ; risk of water infiltrating which would prevent the machine from working properly.

A6

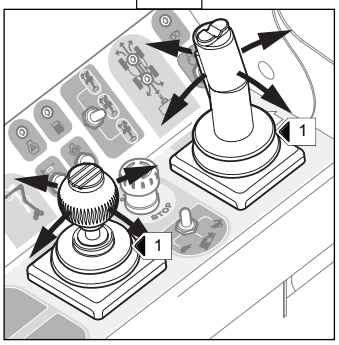

A7 - CONDITION OF WHEELS AND TYRES

CHECK

https://truckmanualshub.com/

B - EVERY 50 HOURS OF OPERATION

Perform the operations described previously as well as the following operations.

B1 - BATTERY ELECTROLYTE LEVEL

CHECK

Check the level of the electrolyte in each battery element.
If the ambient temperature is high, check the level more frequently than every 50 hours of operation.

- Unscrew the two nuts holding the battery casing in place.
- Remove battery casing 1 (Fig. B1/1).
- Remove battery mount 2 (Fig. B1/2).
- Release the two caps 3 (Fig. B1/3) from the components.
- The level must be 1 cm above the battery plates.
- If necessary, top up with clean distilled water, stored in a glass container.
- Clean and dry the two caps 3 (Fig. B1/3) and put them back in place.
- Check the lugs and apply Vaseline to prevent oxidation.
- Reinstall the battery mount 2(Fig. B1/2).
- Reposition the battery casing .
- Tighten the two battery casing nuts.

Handling and servicing a battery can be dangerous, take the following precautions:
- Wear protective goggles.
- Handle batteries horizontally.
- Never smoke or work near a naked flame.
- Work in a well-ventilated area.
- In the event of electrolyte being spilled onto the skin or splashed in the eyes, rinse thoroughly with cold water for 15 minutes and call a doctor.

B1/1

B1/2

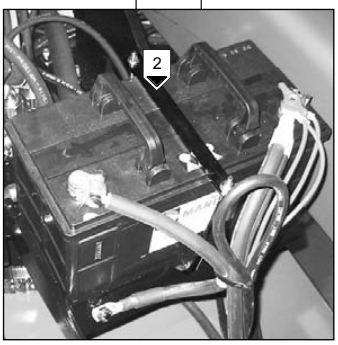

B1/3

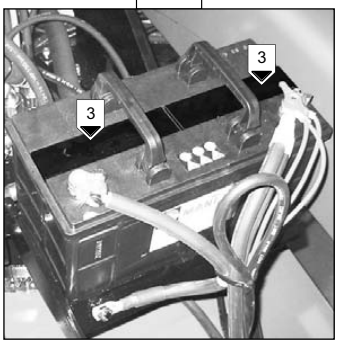

https://truckmanualshub.com/

B2 - AXLE ASSEMBLIES

GREASE

- **GREASE POINT FOR THE PIVOTS ON THE FRONT AND REAR WHEEL REDUCERS 1 (FIG. B2/1) AND 2 (FIG. B2/2)** (8 grease points).

B2/1

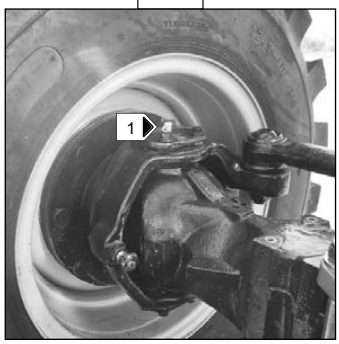

B2/2

- **GREASE POINTS FOR THE FRONT AXLE OSCILLATING SHAFT 3 (FIG. B2/3) AND 4 (FIG. B2/4)** (2 grease points).

B2/3

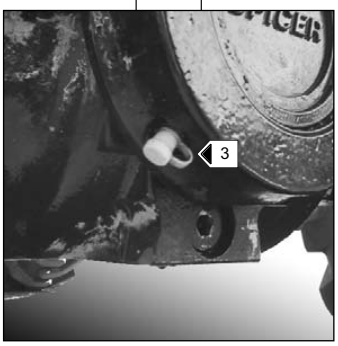

B2/4

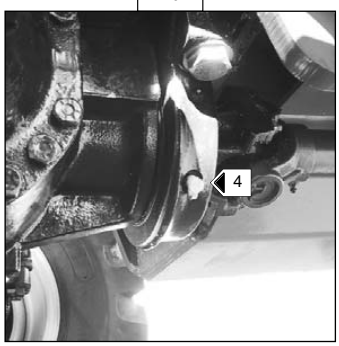

- **CARDAN TRANSMISSION GREASE NIPPLES : FRONT AXLE 5-6 (FIG. B2/5) AND TRANSFER GEARBOX/REAR AXLE 7 (FIG. B2/6).**

B2/5

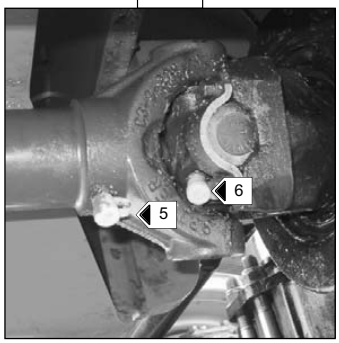

B2/6

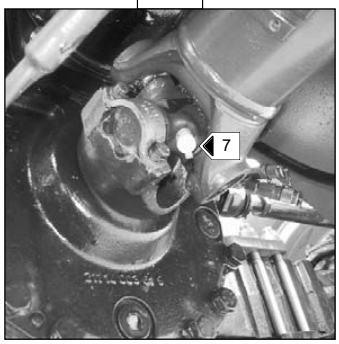

https://truckmanualshub.com/

C - EVERY 250 HOURS OF OPERATION

Perform the operations described previously as well as the following operations

C1 - DRY AIR FILTER CARTRIDGE

CLEAN

C1/1

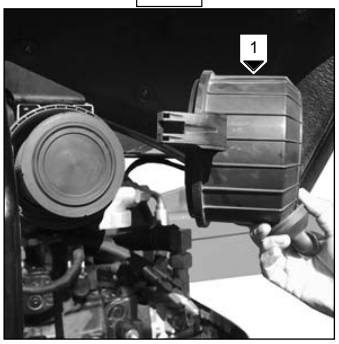

If the atmosphere is very dusty, reduce this interval and refer to the FILTER ELEMENTS AND BELTS section.
- Open the left-hand cover.
- Unclip the lid 1 (Fig. C1/1)
- Pull out the filter cartridge 2 (Fig C1/2)
- Leave the safety cartridge 3 (Fig. C1/2) in place
- Use a jet of compresses air to clean the filter cartridge, working only from the inside outwards.

Respect the safety distance of 30 mm between the air jet and the cartridge to avoid tearing or making a hole in the cartridge. The cartridge must not be blown anywhere near the air filter box. Never clean the cartridge by tapping it against a hard surface. Your eyes must be protected during this intervention.

C1/2

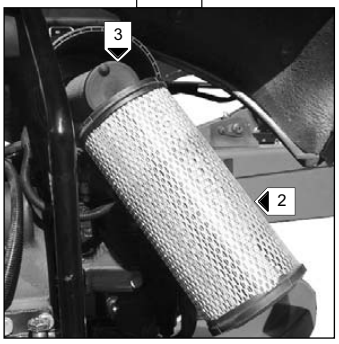

- Clean the inside of the filter with a clean, damp, non-fluffy cloth
- Check the cartridge's condition and change it if necessary
- Then refit the cartridge and the lid.

Never wash a dry air filter cartridge. Under no circumstances, clean the safety cartridge situated inside the filter cartridge: replace it with a new one if it is clogged or damaged.

C2 - FUEL FILTER

EMPTY

C2

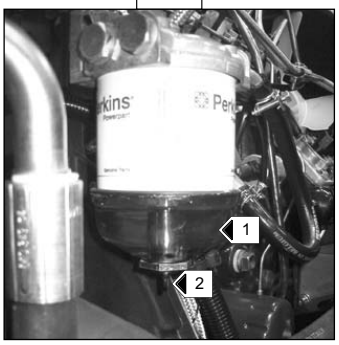

Open the bonnet.
- Check visually to make sure there is water in bowl 1 (Fig. C2) and empty it if necessary.
- Place a container under the bowl and release drain plug 2 (Fig. C2) by two or three turns
- Let the diesel flow out free of impurities and water.
- Tighten the drain plug while the diesel is flowing.

C3 - RADIATOR HARNESS

CLEAN

C3

Open the bonnet.
To avoid the radiator core becoming clogged, clean it with a jet of compressed air from front to back (Fig. B8). This is the only effective method of removing any impurities.

Clean the radiator core every week when the platform is being used in a very dusty area.

https://truckmanualshub.com/

C4 - ALTERNATOR / FAN / CRANKSHAFT BELT TENSION

ADJUST

- Open the left-hand cover.
- Check the tension of the belt between the fan and alternator pulleys.
- When pressed normally with your thumb (45N), the tension should be around 10mm.
- Adjust the belt if necessary.
- Loosen the screws 1 (Fig. C4) two or three turns.
- Pivot the alternator assembly to achieve the required belt tension.
- Retighten the screws 1 (Fig. C4) (tightening torque 22Nm).
- Check the belt's condition for signs of wear or cracking and replace it if necessary.

If the alternator belt has to be changed, check the tension again after the first 20 hours of operation.

C4

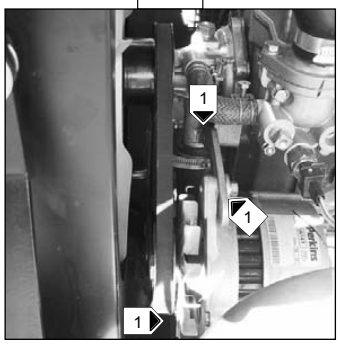

C5/1

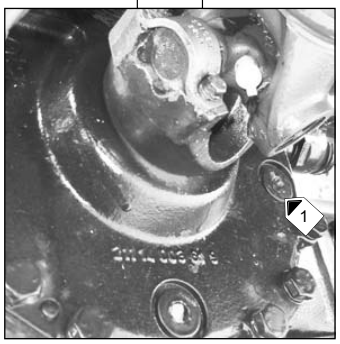

C5 - OIL LEVEL IN FRONT AND REAR WHEEL REDUCERS

CHECK

Set the platform on a horizontal surface with the engine stopped.

DIFFERENTIAL :

- Remove the plug 1 (Fig C5/1). The oil level must be flush with the hole.
- Add oil if necessary (see the LUBRICANTS section) through the same hole.
- Re-insert and tighten the plug 1 (Fig. C5/1) (tightening torque 6 daNm).

AXLES :

- Remove the plug 2 (Fig C5/2: front axle) (Fig. C5/3: rear axle). The oil level must be flush with the hole.
- Add oil if necessary (see the LUBRICANTS section) through the same hole
- Re-insert and tighten the plug 2 (Fig C5/2: front axle) (Fig. C5/3: rear axle) (tightening torque 6 daNm).

C5/2

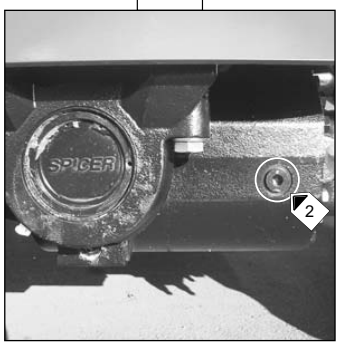

C5/3

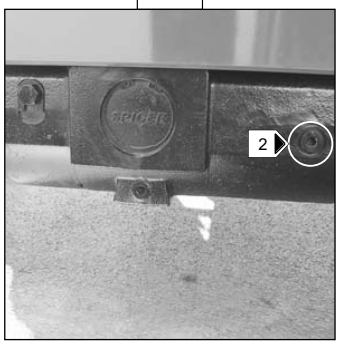

https://truckmanualshub.com/

C6 - OIL LEVEL IN FRONT AND REAR WHEEL REDUCERS

CHECK

Set the platform on a horizontal surface with the engine stopped.

- Check the level on each of the front wheel reducers.
- Set the plug 1 (Fig. C6) horizontal.
- Remove the plug. The oil should be flush with the hole.
- Add oil if necessary (see the LUBRICANTS section) through the same hole.
- Re-insert and tighten the plug 1 (Fig. C6) (tightening torque 8 daNm).
- Repeat the operation for each rear wheel reducer.

C6

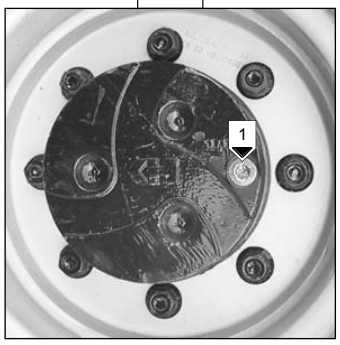

C7 - TIGHTENING WHEELNUTS

CHECK

- Check the tightness of the wheel nuts (Fig. C7)

Failure to do this can cause the wheel pins to deteriorate and break and the wheels to deform.

C7

WHEEL TORQUE NUTS LOADING	
FRONT WHEEL	34 daN.m ± 15 %
REAR WHEEL	34 daN.m ± 15 %

C8 - BACKUP PUMP

CHECK

- Stop the I.C. engine

Make sure the backup pump is working properly by pressing the switch beside the base control box or the basket control box.
- Perform an arm lowering movement (example…)

You must not use the platform if the pump is not working.

C9/1

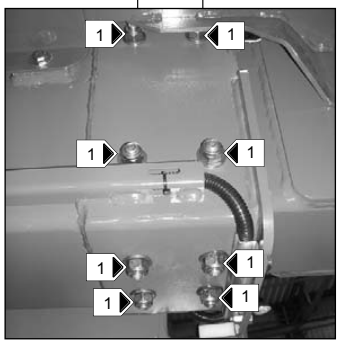

C9 - LOCKING THE TELESCOPE

CHECK

- Make sure the 16 nuts on telescope 1 wear pads are tight (Fig. C9/1 and C9/2).

Failure to follow this instruction may lead to the pads being lost and the telescope could be damaged.

C9/2

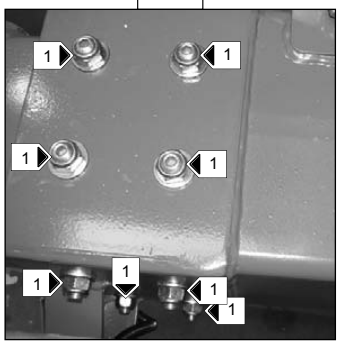

https://truckmanualshub.com/

C10 - TURRET REDUCING GEAR BRAKE REDUCER LEVEL

CHECK

Set the platform on a horizontal surface with the engine stopped.

- Remove the turret's interior cover.

- The gear motor is revealed with the valve block facing to the back.

- Remove the filling-breather cap 1 (Fig. C10).

- The level is correct when the breather is full of oil.

- If necessary, restore the level with a syringe by filling the reducer via the filling-breather cap. The oil capacity is 1.3 litres.

- Re-insert the filling-breather cap 1 (Fig. C10).

C9

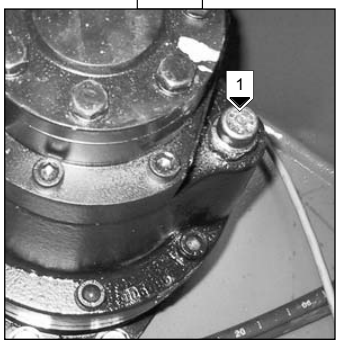

C11 - ACCESS PLATFORM SLEW RING

GREASE

- The bearings and the gears must be greased every 250 hours of operation and before and after a long standstill period.

- Grease to use: see the LUBRICANTS section.

- Remove the left-hand casing on the chassis (See Fig. C11/1).

- Find the 4 grease points 1 (Fig C11/2) and grease the ring thoroughly while turning the turret.

- Put back the left-hand casing on the chassis (See Fig. C11/1).

C10/1

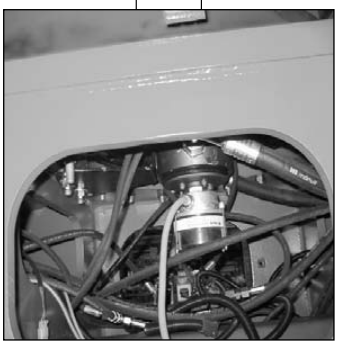

C10/2

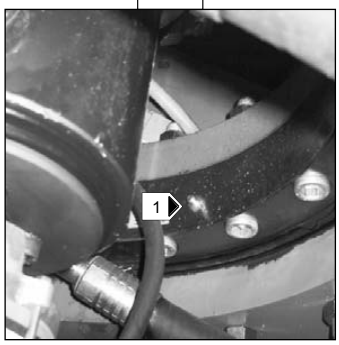

- Apply lubricant to the crown and pinion gears using a paintbrush. (Fig. C11/3).

- Lubricant to use: see the LUBRICANTS section.

C10/3

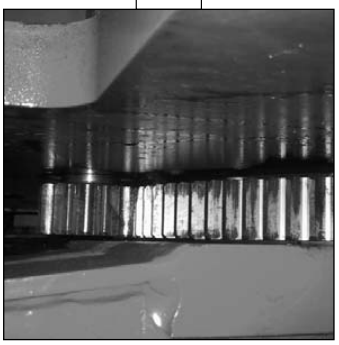

https://truckmanualshub.com/

GREASE

Clean and then grease the following points (see the LUBRICANTS section) and remove any surplus grease

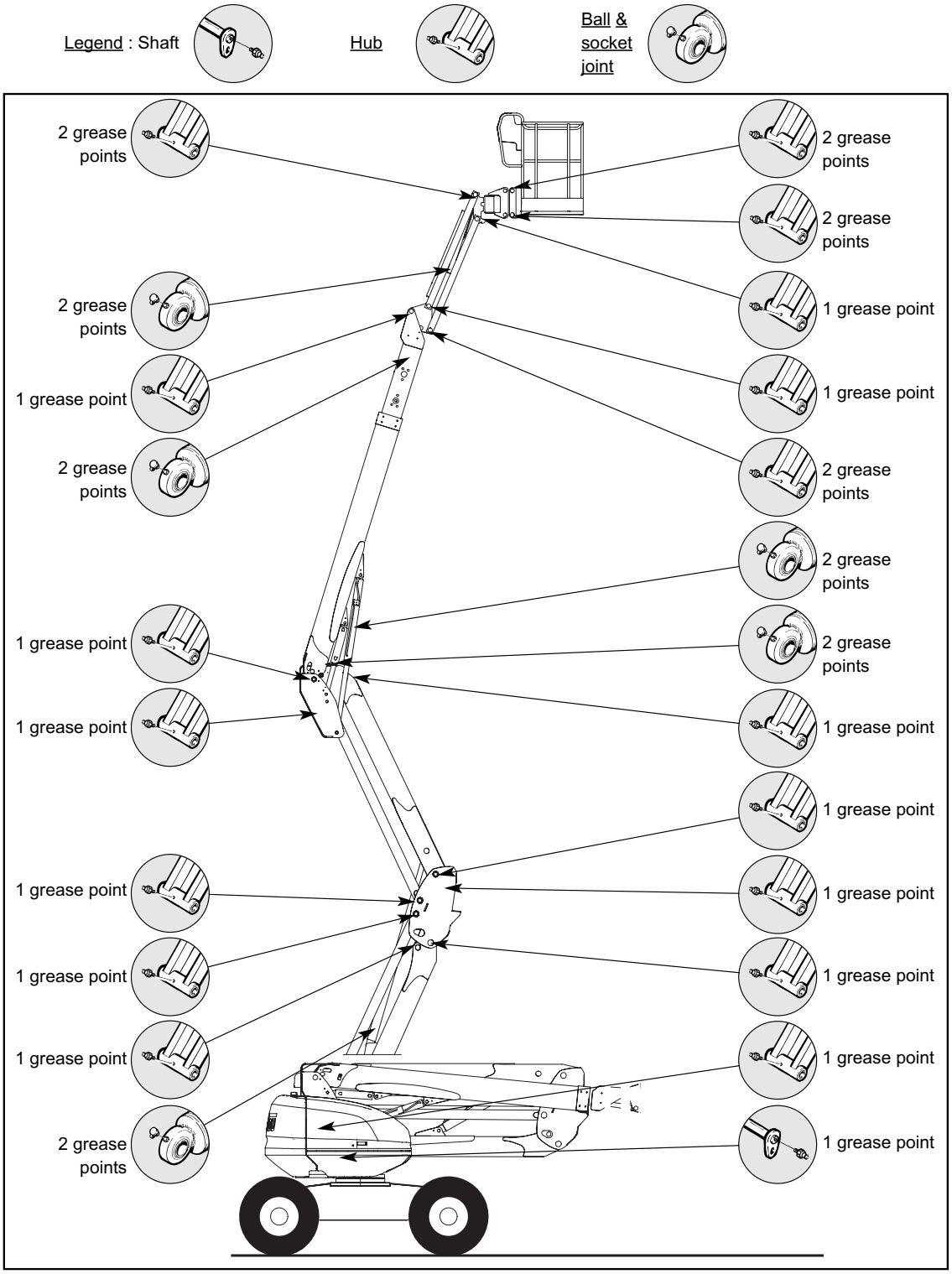

https://truckmanualshub.com/

C13 - TIGHTENING AXLE ASSEMBLY MOUNTING SCREWS ON THE FRAME

CHECK

- The bolts must be checked for tightness at the latest after 50 hours of operation. You must then repeat this check after every 250 hours of operation.
- The tightening torque is 28.5 daN.m ± 10%
- 1 daN = 1 Kg.

C14 - ARM POSITION SENSORS

CHECK

For this operation, fold the arms into transport position.
- Perform a travelling at transport speed
- Raise the arms or extend the telescope
- Move forward
- The platform should change to working speed.

In the event of dysfunction, forbid use of the platform.
Consult your dealer.

C15 - SLOPE SENSOR

CHECK

For this operation, extend the arms.
- Position the platform on a steeper slope than is authorised (see : 2 - DESCRIPTION : SPECIFICATIONS).
- Movements to extend the telescope and raise the arms must be locked (the slope signal light is on in the basket, the buzzer sounding intermittently in the basket).

In the event of dysfunction, forbid use of the platform.
Consult your dealer.

C16 - OVERLOAD SENSOR

CHECK

For this operation, fold the arms into transport position.
- Place a heavier weight than is indicated in the basket (see : 2 - DESCRIPTION : SPECIFICATIONS).
- Movements to extend the telescope and raise the arms must be locked (the overload signal light is on in the basket, the buzzer sounding continuously in the basket).

In the event of dysfunction, forbid use of the platform.
Consult your dealer.

C17 - MACHINE STICKERS

CHECK

(CONSULT YOUR DEALER)

https://truckmanualshub.com/

D - EVERY 500 HOURS OF OPERATION

Perform the operations described previously as well as the following operations

D1 - I.C. ENGINE OIL

EMPTY - REPLACE

D2 - I.C. ENGINE OIL FILTER

REPLACE

- Set the platform on a horizontal surface and let the engine run for a few minutes, then stop it.

DRAINING THE OIL

- Open the left-hand cover.
- Place a receptacle on the ground.
- Loosen the drain plug 1 (Fig. D1/1).
- Remove the filling plug 2 (Fig. D1/2) to ensure good drainage.
- When drainage is complete, re-tighten the drain plug.

Dispose of the oil in an environmentally friendly manner.

REPLACING THE FILTER

- Remove the engine's oil filter 3 (Fig. D1/3) and dispose of it, together with its seal.
- Clean the filter support with a clean, non-fluffy cloth
- Lightly oil the new seal
- Refit the oil filter in its support.

Only tighten the oil filter by hand and then use the filter spanner to lock it with a quarter turn.

FILLING WITH OIL

- Ensure that the drain plug 1 (Fig. D1/1) is in place and tight.
- Fill full of oil (see the LUBRICANTS section) through the filling hole 4 (Fig. D1/2).
- Wait a few minutes to allow the oil to flow into the casing.
- Check the level with the gauge 5 (Fig. D1/4).
- Start the engine and let it run for a few minutes.
- Check for any leaks around the drain plug and the engine oil filter.
- Stop the engine, wait a few minutes and then check the level is between the two upper marks on the gauge 5 (Fig. D1/4).
- Fine tune the oil level if necessary.

D1/1

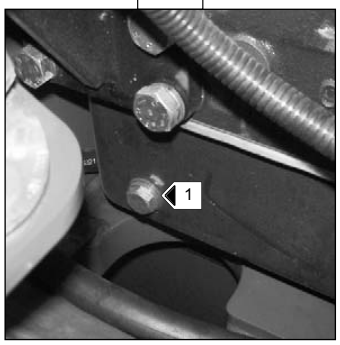

D1/2

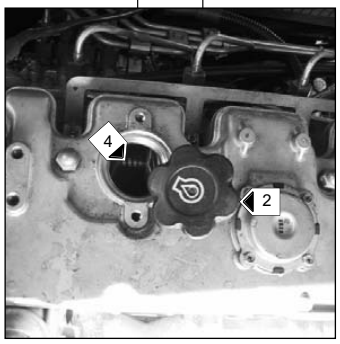

D1/3

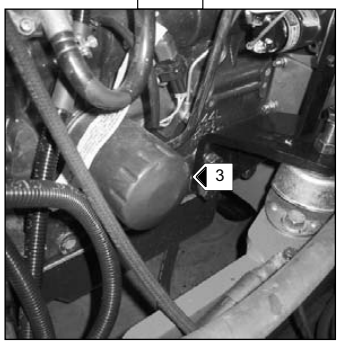

D1/4

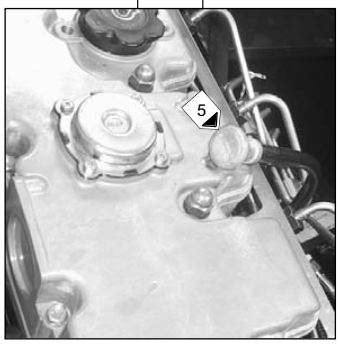

https://truckmanualshub.com/

D3 - DRY AIR FILTER CARTRIDGE

REPLACE

The air used for combustion is purified via a dry air filter. It is therefore forbidden to use the platform with a damaged cartridge or if it has been removed.

- Open the left-hand cover.
- Release the clips 1 (Fig. D3/1) and remove the cover 2 (Fig. D3/1).
- Pull the filter cartridge 3 (Fig. D3/2) to release it and dispose of it.
- Leave the safety cartridge 4 (Fig. D3/2) in place.
- Clean the inside of the filter support with a clean, damp, non-fluffy cloth.
- Then fit the new filter and the cover.

If using the machine in a very dusty atmosphere, see the FILTER ELEMENTS AND BELTS section.

D3/1

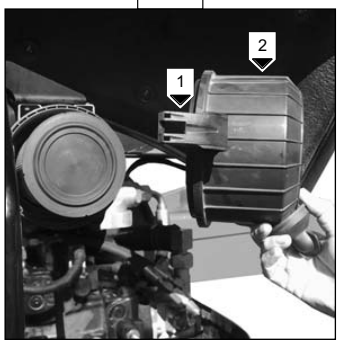

D3/2

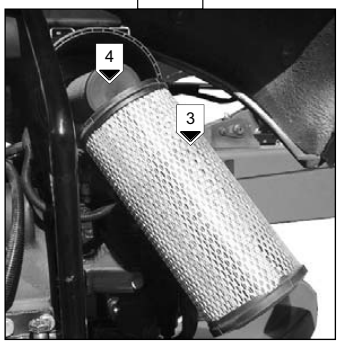

D4 - FUEL FILTER CARTRIDGE

REPLACE

- Open the left-hand cover.
- Carefully clean the exterior of the filter and its support to prevent any dust from penetrating into the system.
- Loosen the retaining screw 1 (Fig. D4/1).
- Remove the tank 2 (Fig. D4/2) (beware of any diesel leaks) and dispose of the cartridge 3 (Fig. D4/2) and its seals.
- Clean the inside of the filter head and the tank using a paintbrush impregnated with clean diesel fuel.
- Refit the assembly with a new filter and new seals.

If necessary, purge the fuel supply circuit (see section G1).

D4/1

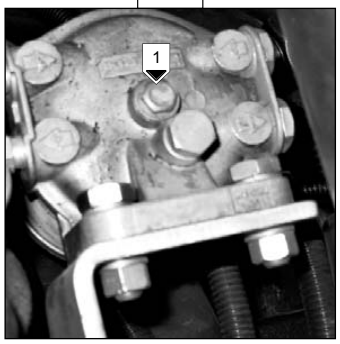

D5 - INJECTORS

(CONSULT YOUR DEALER)

D4/2

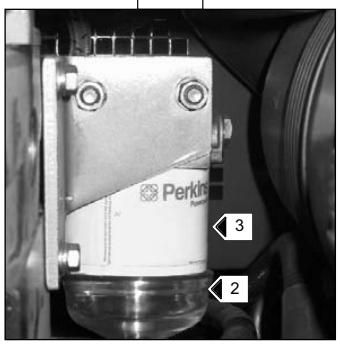

https://truckmanualshub.com/

D6 - HYDROSTATIC TRANSMISSION OIL FILTER CARTRIDGE

REPLACE

D6

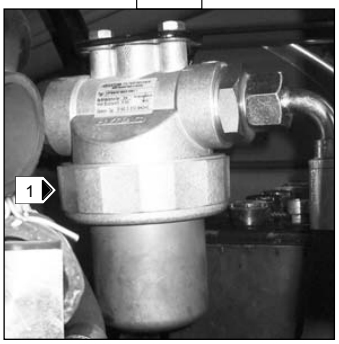

REPLACING THE HYDROSTATIC TRANSMISSION OIL FILTER CARTRIDGE

- Stop the engine.

- Remove the engine cover.

- Unscrew the filter body 1 (Fig. D6).

- Remove the hydrostatic transmission oil filter cartridge and replace it with a new one.

- Ensure that the cartridge is correctly positioned and refit the cover.

Do not operate the platform without a cartridge. This can immediately cause damage to the transmission's hydraulic circuit and the hydrostatic pump.

CLEANING THE HYDRAULIC CIRCUIT

- Let the engine run for 5 minutes without using the platform.

D7 - AUXILIARY HYDRAULIC OIL FILTER CARTRIDGE

REPLACE

D7

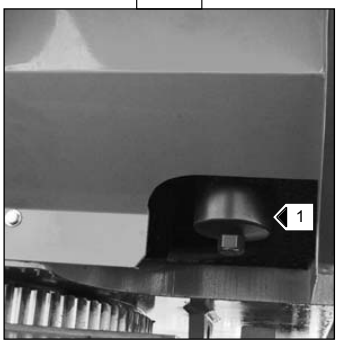

- Machine stopped; battery cut-out in the OFF position.

- Loosen the filter body 1 (Fig. D7).

- Remove the filter cartridge and replace it with a new one (see the FILTER ELEMENTS section).

***NB** : Pay attention to the direction in which you fit the filter.*

- Refit the filter body 1 (Fig. D7).

Thoroughly clean the outside of the filter and its surroundings before any intervention in order to prevent any risk of polluting the hydraulic circuit.

https://truckmanualshub.com/

D8 - HYDRAULIC OIL

EMPTY - REPLACE

- Set the platform on a horizontal surface with the engine stopped.

EMPTYING THE OIL

- Set a receptacle under the drain plug 1 (Fig. D8/1) and loosen the collar 2 (Fig. D8/1).

- Remove the drain plug 1 (Fig. D8/1).

- Remove the filling cap 3 (Fig D8/2) to assist drainage.

CLEANING THE SIEVE

- Remove the sieve 5 (Fig. D8/2) by pulling it upwards and clean it with a jet of compressed air.
- Re-insert the sieve.

FILLING WITH OIL

Use a receptacle and a very clean funnel and clean the top of the oilcan before filling.

- Re-insert and tighten the drain plug 1 (Fig. D8/1).
- Fill the reservoir completely with hydraulic oil (see the LUBRICANTS section) through the filling hole 4 (Fig. D8/2).
- The oil level should be above the red mark on the gauge 6 (Fig. D8/3).

Dispose of the drained oil in an environmentally friendly manner.

D8/1

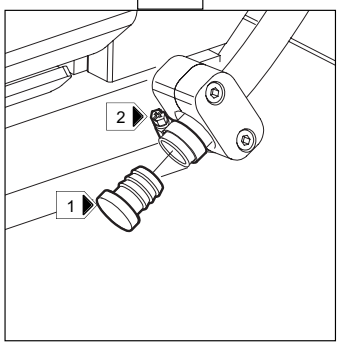

D8/2

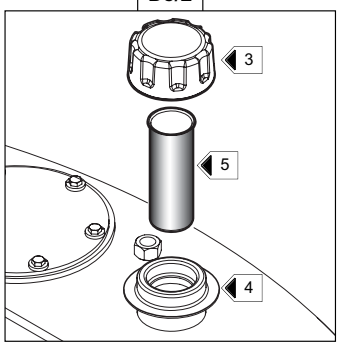

D8/3

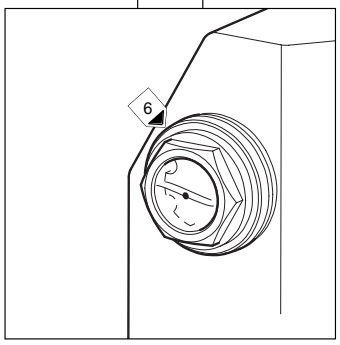

D9 - CONDITION OF HOSES

CHECK

- Check the visible condition (splitting) of the hoses, subject to thermal stress and UV. Their technical characteristics may be altered (porosity).

BE CAREFUL OF LEAKS
Hydraulic oil escaping at high pressure can penetrate the skin and cause serious lesions. In the event of injury caused by a jet of pressurized oil, consult a doctor immediately.

If in doubt as to the presence of a leak, do not search for it with your hand, but use a piece of cardboard and protect your hands and body.

For your own safety, replace worn hoses.

https://truckmanualshub.com/

D10 - TIGHTENING TURRET ROTATION MOTOR BOLTS

CHECK

Set the platform on a horizontal surface with the engine stopped.

- Check the tightness of the nine bolts 1 (Fig. D10).

- The tightening torque for the bolts is 8 daN.m ± 10%.
- 1 daN = 1 Kg

D10

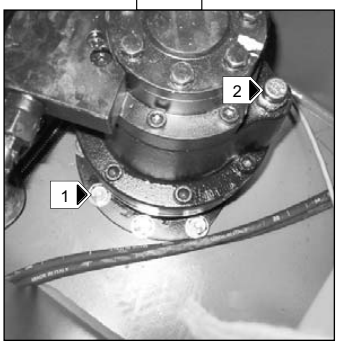

D11 - TURRET MOTOR BRAKE REDUCER

EMPTY - REPLACE

Set the platform on a horizontal surface with the engine stopped.

- Remove the turret's interior cover.

- The gear motor is revealed with the valve block facing to the back.

- Remove the filling-breather cap 2 (Fig. D10) to ensure good drainage.

- Mark the drain plug 3 located on the bottom of the reducer unit on the right-hand side (Fig. D11).

- Place a small receptacle to catch the oil.

- Loosen the drain plug.

D11

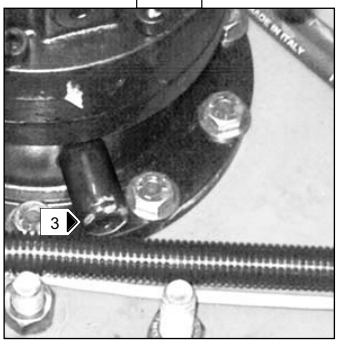

Dispose of the oil in an environmentally friendly manner

- Use a syringe to fill the reducer via the filling-breather cap 2 (Fig. D10). The oil capacity is 1.3 litres and the level is correct when the breather is full of oil.

- Re-insert the filling-breather cap 2 (Fig. D10).

D12/1

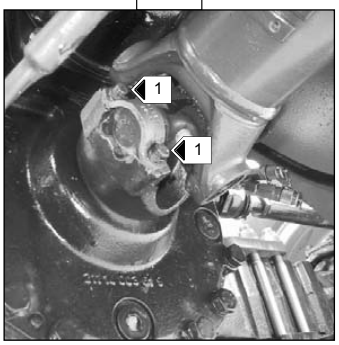

D12 - TIGHTENING CARDAN BOLTS

CHECK

Set the platform on a horizontal surface with the engine stopped.

- Check the tightness of the eight bolts (four on each end) 1 (Fig. D12/1) and 2 (Fig. D12/2).

- The tightening torque for the bolts is 8 daN.m ± 10%.
- 1 daN = 1 Kg

D12/2

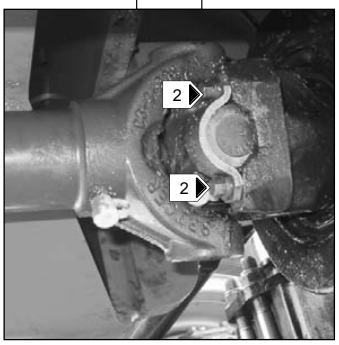

https://truckmanualshub.com/

D13 - DENSITY OF BATTERY ELECTROLYTE

CHECK

D13

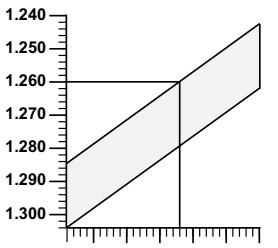

The electrolyte's density varies according to the temperature but a minimum density of 1260 at 16°c must be maintained.

In the hatched area (Fig. D13), the battery is normally charged.
Above this area, the battery must be recharged.
The density must not vary by 0.025 of a unit between one battery element and another.

- Open the battery cover.
- Check the density of the electrolyte in each battery element using an acid densimeter.
- Do not carry out this check immediately after topping up with distilled water. Recharge the battery for at least an hour before checking the battery electrolyte density.

Handling and servicing a battery can be dangerous, take the following precautions:
- Wear protective goggles.- Handle batteries horizontally
- Never smoke or work near a naked flame.
- Work in a well-ventilated area.
- In the event of electrolyte being spilled onto the skin or splashed in the eyes, rinse thoroughly with cold water for 15 minutes and call a doctor.

D14 - TIGHTENING SCREWS ON THE TURRET SLEW RING

CHECK

- The screws must be checked for tightness at the latest after 50 hours of operation. You must then repeat this check after every 500 hours of operation.

- The tightening torque is 27 daN.m ± 10%
- 1 daN = 1 Kg.

D15 - BRAKING

CHECK

D15

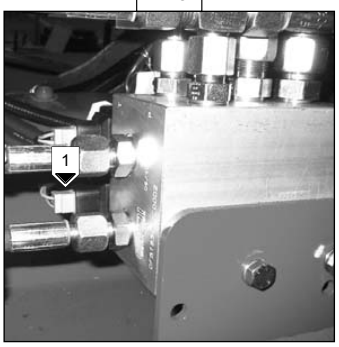

- Check the braking system by disconnecting the coil 1 (Fig. D15) from the hydraulic unit on the chassis (to access the unit, remove the left-hand casing from the chassis) and make a travel movement.

THE PLATFORM MUST NOT GO FORWARDS

- Reconnect the coil after the test.

https://truckmanualshub.com/

E - EVERY 1000 HOURS OF OPERATION

Perform the operations described previously as well as the following operations.

E1 - COOLING LIQUID

EMPTY - REPLACE

This series of operations is performed as required and once a year as winter approaches.
Set the platform on a horizontal surface with the engine stopped and cold.

DRAINING THE COOLANT

- Open the left-hand cover.
- Loosen the radiator purge screw 1 (Fig. E1/1).
- Loosen the drain plug 2 (Fig. E1/2) on the engine block.
- Remove the radiator filling cap 3 (Fig. E1/3).
- Let the cooling circuit drain completely, ensuring that the holes are not obstructed.
- Check the condition of the hoses and the fixings and replace the hoses if necessary.
- Rinse out the circuit with clean water and use a cleaning product if necessary.

FILLING WITH COOLANT

- Retighten the purge screw 1 (Fig. E1/1).
- Retighten the drain plug 2 (Fig. E1/2) (tightening torque 0.8 to 1.2 daN.m).
- Prepare the coolant (Fig. E1/4).
- Slowly fill the cooling circuit completely via the filing hole 4 (Fig. E1/3).
- Let the engine tick over for a few minutes.
- Check for any leaks.
- Check the level and fine tune it if necessary.
- Refit the filling cap 3 (Fig. E1/3).

The IC engine contains no anti-corrosion elements and must be filled every year with a minimum mixture of 25% ethylene glycol-based anti-freeze.

E1/1

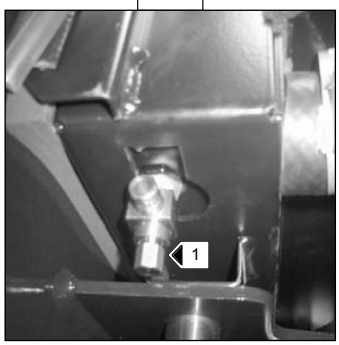

E1/2

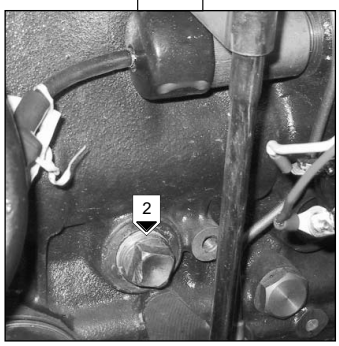

E1/3

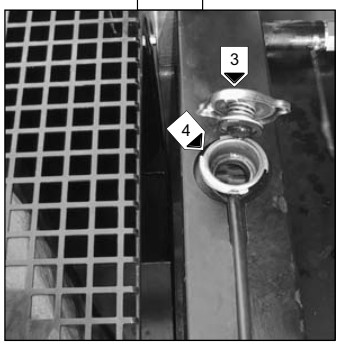

E1/4

FREEZING POINT IN FUNCTION OF THE ANTI-FREEZE %	
ANTI-FREEZE 5110 NF	TEMPERATURE
30 %	-16° C
33 %	-18° C
40 %	-25° C
50 %	-37° C

https://truckmanualshub.com/

E2 - FUEL TANK

EMPTY - CLEAN

Never smoke or approach the tank with a naked flame during this operation.

Set the platform on a horizontal surface, rotate 90° so that the drain plug is not over the chassis and stop the engine.

- Inspect visually and by touch the parts liable to have leaks on the fuel circuit and the tank.
- **In the event of a leak, contact your dealer.**

Never attempt to weld or carry out any other operation yourself. This can cause an explosion or a fire.

- Place a receptacle under the drain plug 1 (Fig. E2/1) and unscrew the drain plug.
- Let the diesel flow out and rinse with ten litres of clean diesel via the filling hole 2 (Fig. E2/2).
- Refit the drain plug 1 (Fig. E2/1) and tighten it down (tightening torque 3 to 4 daN.m).
- Fill the fuel tank with clean diesel filtered through a strainer or a clean, non-fluffy cloth and refit the filling cap (Fig. E2/2).

E2/1

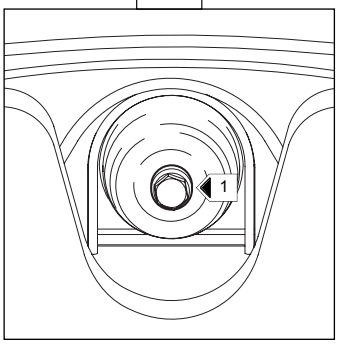

E2/2

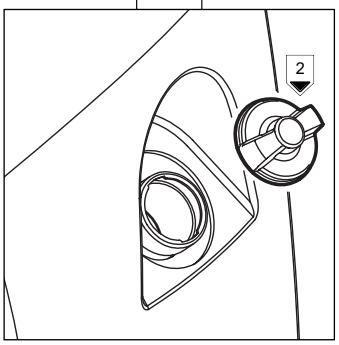

E3 - DRY AIR FILTER SAFETY CARTRIDGE

REPLACE

- Open the left-hand cover.
- Remove the dry air filter cartridge (see section C1).
- Remove the dry air filter's safety cartridge 1 (Fig. E3) and replace it with a new one.
- Refit everything (see section C1).

E3

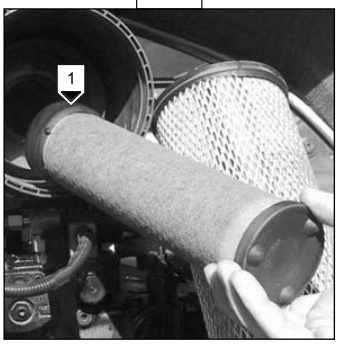

https://truckmanualshub.com/

E4 - FRONT AND REAR AXLE DIFFERENTIAL OIL

EMPTY - REPLACE

Set the platform on a horizontal surface with the engine stopped and the differential's oil already warm.

- Place a receptacle under the drain plugs 1 (Fig. E4/1: front axle) (Fig. E4/2: rear axle).
- Remove the filling cap 2 (Fig. E4/1: font axle) (Fig. E4/2: rear axle) to ensure good drainage.
- Place a receptacle under drain plug 4 (Fig. E4/3: differential).

Dispose of the drained oil in an environmentally friendly manner..

- Re-insert the drain plugs 1 (Fig. E4/1: front axle) (Fig. E4/2: rear axle) and tighten them (tightening torque 8 daN.m) and (Fig. E4/3: differential (tightening torque 8 daN.m)).
- Fill completely with oil (see the LUBRICANTS section) through the filling hole 2 (Fig. E4/1: front axle) (Fig. E4/2: rear axle) and 4 (Fig. E4/3: differential).
- The level is correct when the oil is flush with the hole.
- Check for any leaks around the drain plugs.
- Reinsert and tighten the filling cap 2 (Fig. E4/3: front axle) (Fig. E4/2: rear axle) and 4 (Fig. E4/3: differential) (tightening torque 6 daN.m).

E4/1

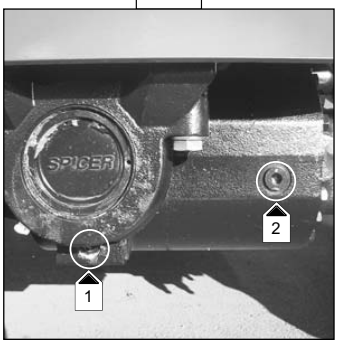

E4/2

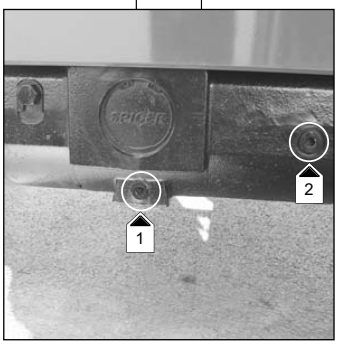

E5 - FRONT AND REAR WHEEL REDUCER OIL

EMPTY - REPLACE

Set the platform on a horizontal surface with the engine stopped and the oil in the reducers warm.

- Drain and replace the oil in each reducer on the front wheels.
- Set the drain plug 1 (Fig. E5) in position A.
- Place a receptacle under the drain plug and unscrew it.
- Let the oil drain completely.

Dispose of the drained oil in an environmentally friendly manner.

- Set the drain hole in position B, i.e. to level-checking hole.
- Fill completely with oil (see the LUBRICANTS section) through the filling hole 1 (Fig. E5).
- The level is correct when the oil is flush with the hole.
- Reinsert and tighten the drain plug 1 (Fig. E5) (tightening torque 8 daN.m).
- Repeat the same operation for each reducer on the rear wheels.

E4/3

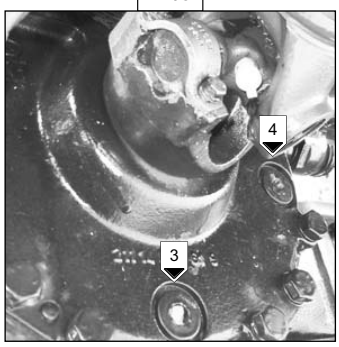

E5

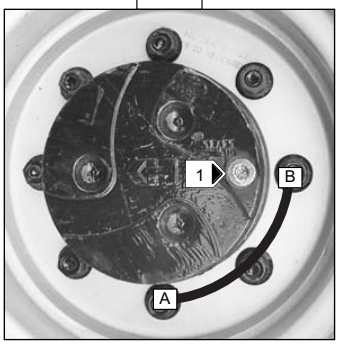

https://truckmanualshub.com/

E6 - HYDRAULIC CIRCUIT STRAINER

CLEAN

- Oil change (see chapter D8)
- Loosen the six fixing screws 1 (Fig. E6/1) on the locking plate 2 (Fig. E6/1).
- Unscrew the strainer 3 (Fig. E6/2) from the tank and clean it with a jet of compressed air.
- Re-insert the strainer in the tank and refit the locking plate 2 (Fig. E6/1).
- Fill up with hydraulic oil (see chapter D7)(See "LUBRICANTS" chapter)

E6/1

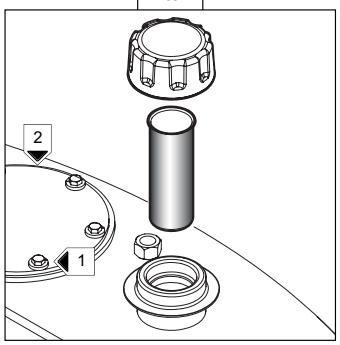

E6/2

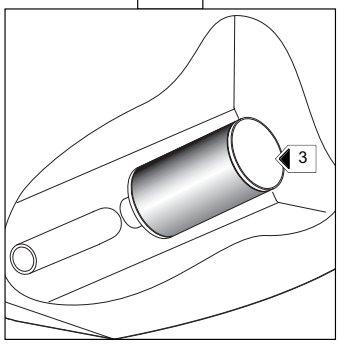

E7 - I.C. ENGINE SILENT BLOCKS (*)

CHECK

E8 - I.C. ENGINE RUNNING SPEEDS (*)

CHECK

E9 - RADIATOR (*)

CHECK - DESCALE

E10 - HYDROSTATIC TRANSMISSION CIRCUIT PRESSURE (*)

CHECK

E11 - START OF HYDROSTATIC TRANSMISSION REGULATIONS (*)

CHECK - ADJUST

(CONSULT YOUR DEALER)

https://truckmanualshub.com/

F - EVERY 3000 HOURS OF OPERATION

Perform the operations described previously as well as the following operations.

F1 - VALVE CLEARANCE (*)

CHECK - ADJUST

F2 - WATER PUMP AND THERMOSTAT (*)

CHECK

F3 - ALTERNATOR AND STARTER (*)

CHECK

F4 - HYDRAULIC OIL TANK (*)

CLEAN

(CONSULT YOUR DEALER)

https://truckmanualshub.com/

G - OCCASIONAL MAINTENANCE

G1 - FUEL SUPPLY CIRCUIT

PURGE

This series of operations should only be performed in the following case:

- A component in the supply circuit has been replaced or drained.

Ensure that there is enough fuel in the tank and turn the ignition key to position 2 to switch on the electrical systems.

- Open the left-hand cover.

G1/1

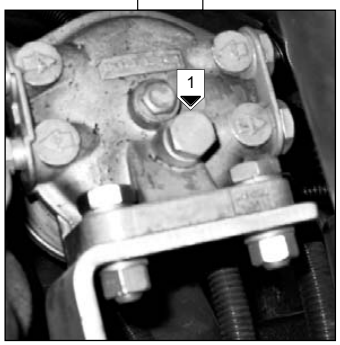

PURGING THE FUEL FILTER

- Loosen the purge screw 1 (Fig. G1/1)
- Operate the priming bulb 2 (Fig. G1/2) until the fuel flows air-free from the purge scre
- Tighten the purge screw 1 (Fig. G1/1) while the fuel is still flowing.

G1/2

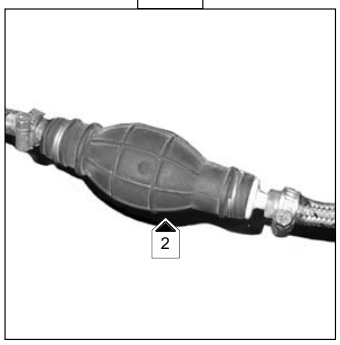

PURGING THE INJECTORS

- Loosen the hose connections 3 (Fig. G1/3) on one of the injectors.
- Press the starter until the diesel flows air-free from the hose connections 3 (Fig. G1/3).
- Tighten the hose connections while the fuel is still flowing

Do not engage the starter motor on a continual basis for more than 30 seconds and let it cool between unsuccessful attempts.

G1/3

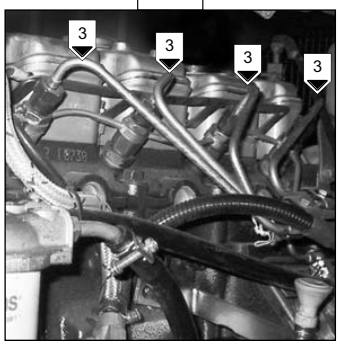

- The engine is now ready to be started.
- Turn the I.C. engine over slowly for 5 minutes immediately after bleeding the fuel feed circuit, in order to ensure that the injection pump has been bled thoroughly.

NOTE : *If the I.C. engine functions correctly for a short time then stops or functions irregularly, check for possible leaks in the low pressure circuit. If in doubt, contact your dealer.*

https://truckmanualshub.com/

G2 - WHEEL

CHANGE

For this operation, we recommend you to use the MANITOU hydraulic jack Reference 505507 and the MANITOU safety axle stand Reference 554772.

- If possible, stop the platform on firm, horizontal ground.
- Stop the platform (see : 1 - INSTRUCTIONS AND SAFETY REGULATIONS : OPERATING INSTRUCTIONS EMPTY AND LOADED).
- Lock the platform in both directions on the axle opposite the wheel to be changed.
- Loosen the nuts on the wheel to be changed until they can be easily removed.
- Place the jack under the axle housing, as close to the wheel as possible and adjust the jack (fig. G2/1).
- Lift the wheel slightly until it leaves the ground and set the safety axle stand under the axle (fig. G2/2).

A wheel weighs 210 Kg.

- Loosen the wheelnuts fully and remove them.
- Remove the wheel using a to and fro movement and roll it to the side.
- Slide the new wheel onto the hub.
- Tighten the nuts by hand, lubricating them if necessary.
- Remove the safety axle stand and lower the platform using the jack.
- Tighten the wheelnuts using a torque wrench (see: 3. MAINTENANCE: B - EVERY 250 HOURS OF OPERATION for the torque to apply).

G2/1

G2/2

https://truckmanualshub.com/

G4 - PLATFORM ON A SKID

TRANSPORT

Check that the safety instructions regarding the flat bed are being correctly followed before loading the platform and ensure that the vehicle's driver has been informed of the platform's dimensional characteristics and its weight (See : DESCRIPTION : CHARACTERISTICS).

Ensure that the flat bed is large enough and has a sufficient load-bearing capability to transport the platform. Also check the flat bed's permissible ground contact pressure with relation to the platform.

LOADING THE PLATFORM

- Lock the flat bed's wheels (Fig. G4/1).

- Fix loading ramps to the flat bed so as to achieve the lowest angle possible for loading the platform.

- Use ramp speed.

Do not try to cross steep inclines with a heavy load in the basket. In this case, attack the incline in reverse gear.

- Load the platform in the flat bed's axis.

- Stop the platform (see the CONTROL INSTRUMENTATION section, IGNITION SWITCH sub-section).

- Lock the platform's turret rotation using the pin 1 (Fig. G4/3) (see the CONTROL INSTRUMENTATION section, TURRET ROTATION LOCK sub-section).

TYING DOWN THE PLATFORM

- Fit wedges on the flat bed under each front and rear wheel (Fig. G4/1).

- Also fit wedges on the flat bed on the inside of each tyre (Fig. G4/2).

- Tie the platform onto the flat bed with sufficiently strong ropes (see Fig. G4/4).

- Tension the ropes.

G4/1

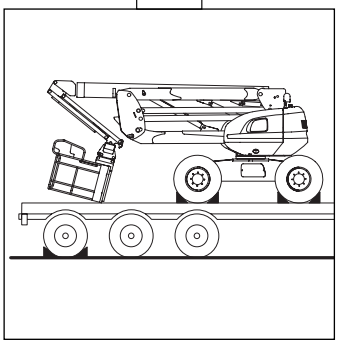

G4/2

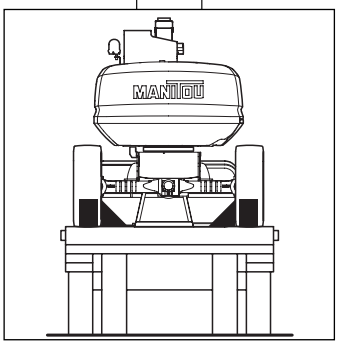

G4/3

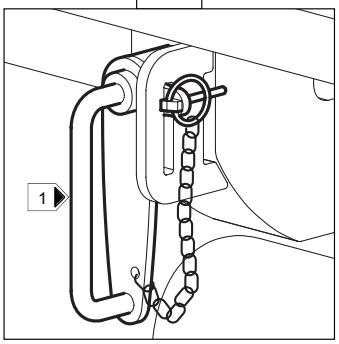

G4/4

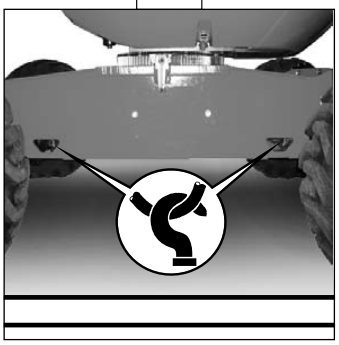

https://truckmanualshub.com/

G5 - FREE WHEELS

SWITCH ON

If the platform must be towed, follow the instructions below.

The platform may only be towed a short distance and compulsorily by a vehicle with adequate braking and towing capacity. A rigid link bar must be used bewteen the two vehicles.

1 - Wedge the platform.

2 - Hydrostatic release.

Warning: before performing this operation, take the necessary precautions because the machine will have no brakes.

- Remove the engine cover.

- Screw the HP relief valves 1 (Fig. G5/1) on the hydrostatic pump up to the hard point plus 1½ turns (with a No. 13 flat and No. 6 hex spanner).

G5/1

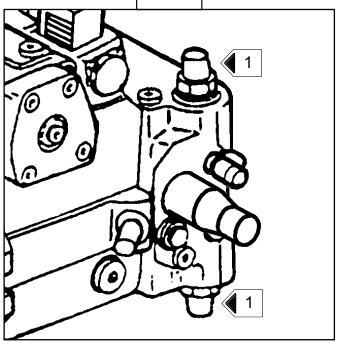

3 - Mechanically releasing the rear axle

- Loosen the screw 1 (Fig. G5/2) without removing it.

- Remove the cotter pin 2 (Fig. G5/2).

- Tighten the screw 1 (Fig. G5/2).

- Loosen the screw 1 (Fig. G5/3) without removing it.

- Remove the cotter pin 2 (Fig. G5/3).

- Tighten the screw 1 (Fig. G5/3).

G5/2

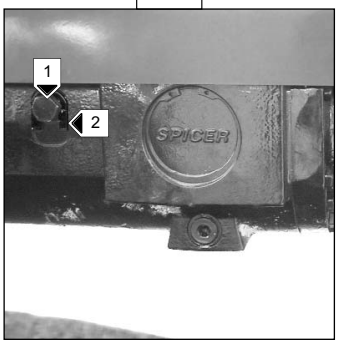

Warning: after this operation, do not forget to remove the mechanical braking release system.

G5/3

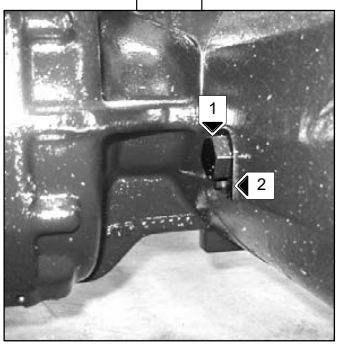

https://truckmanualshub.com/

G6 - MAINTENANCE STAY

USE

If you have to perform operations on the arms, turret or engine...
Follow the instructions given below:

- From the basic control desk, raise the lower arms until the upper joint is 1 m above the counterweight (Fig. G6/1).

MACHINES WITHOUT MAINTENANCE STAY

- Place a sling connected to a pulley at the height of upper joint 1 (Fig. G6/1).
- From the basic control desk, lower the lower arms until the strap pulls tight: release the controls at that point.
- Switch off the internal combustion engine and switch off the platform via the battery disconnect.
- Make the necessary repairs...

MACHINES WITH MAINTENANCE STAY

- Remove lockpin 2 (Fig. G6/2).
- Climb onto the front of the frame (counterweight side), lift maintenance foot 3 (Fig. G6/3) manually and insert holding foot 4 (Fig. G6/3), being careful to lock it in place (Fig. G6/4).
- From the basic control desk, lower the lower arms until the upper joint comes into contact with the maintenance foot (Fig. G6/4): release the controls at that point.
- Switch off the internal combustion engine and switch off the platform via the battery disconnect.
- Make the necessary repairs...

After operations, apply the following instructions :

MACHINES WITHOUT MAINTENANCE STAY

- From the basic control desk, raise the lower arms until the strap loosens: release the controls.
- Remove the sling from the upper joint, put the platform in transport position and switch off the internal combustion engine.

MACHINES WITH MAINTENANCE STAY

- From the basic control desk, raise the lower arms 20 cm: release the controls.
- Climb onto the chassis, release the foot holding the maintenance foot and then lower it (Fig. G6/3).
- Put the platform in transport position and switch off the internal combustion engine.

G6/1

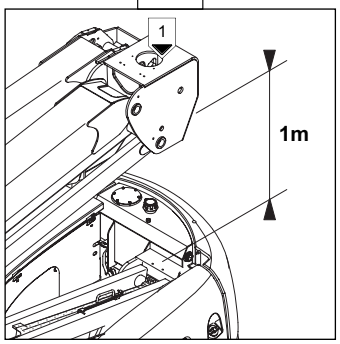

G6/2

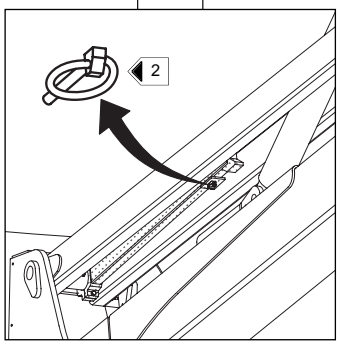

G6/3

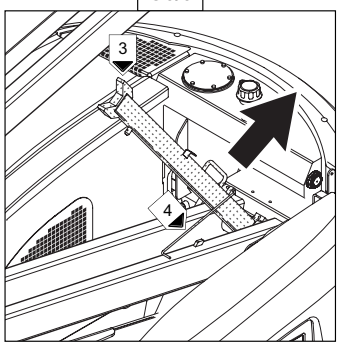

G6/4

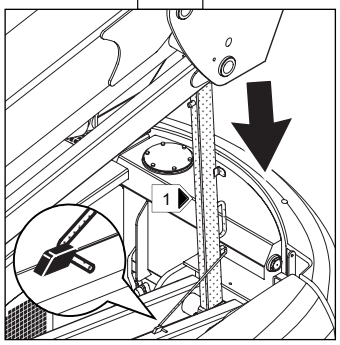

https://truckmanualshub.com/

4 - ELECTRICITY

https://truckmanualshub.com/

FUSES

DESCRIPTION AND REPLACEMENT OF THE FUSES

The fuses are located in the connection box (Fig. A1) fastened to the turret inside the base control box.

To access the fuses, open the door 1 (Fig. A2) to the box and remove the panel 2 (Fig. A2).

Unlock the two catches 1 (Fig. A1).

Remove the casing 3 (Fig. A2) sliding it upwards.

Inspect the defective fuses (Fig. A3 - A4 - A5):

F1: Emergency pump supply . . . . . 7,5 Amps
F2: Base unit supply . . . . . 20 Amps
F3: Base unit supply . . . . . 20 Amps
F4: Basket unit supply. . . . . 20 Amps
F5: "Plus" supply after contact . . . . . 5 Amps
F6: BRC box power supply . . . . . 30 Amps
F7: Preheating power supply . . . . . 60 Amps

F8: Backup pump supply (power) . . . . . 250 Amps

When one of the fuses blows, one of the four LEDs light up (Fig. A3):

- Emergency Pump fuse status LED 1
- Base supply fuse status LED 2
- Basket supply fuse status LED 3
- “Plus” after contact fuse status LED 4

A1

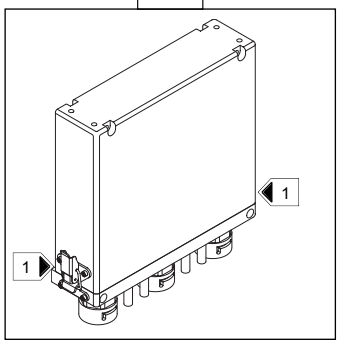

A2

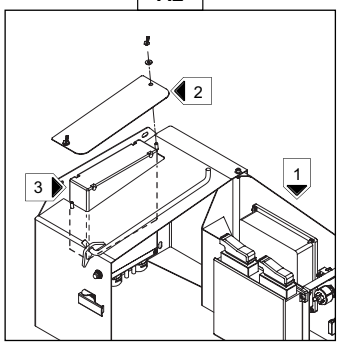

A4

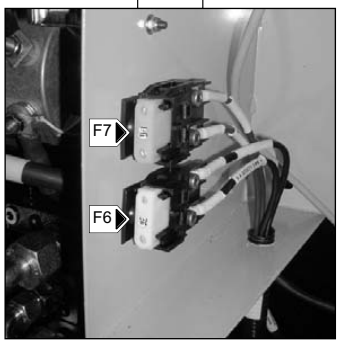

A3

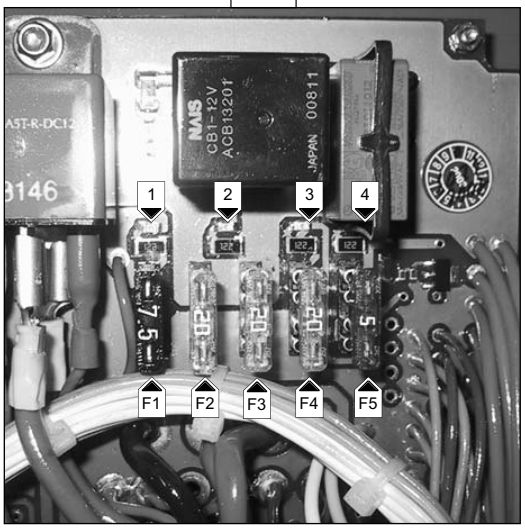

A5

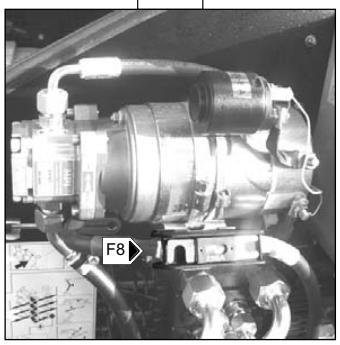

https://truckmanualshub.com/

5 - OPTIONAL ACCESSORIES FOR THE RANGE

https://truckmanualshub.com/

ACCESSORIES

GENERATOR OPTION

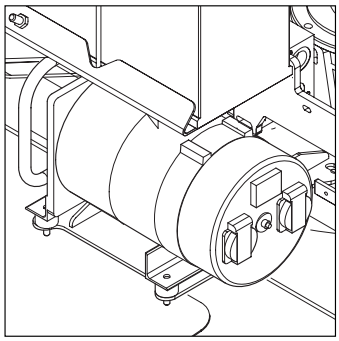

Precautions for use, for users of access platforms equipped with this option :

Do not connect electrical devices not equipped with switches.
When starting up the generator,
voltage surges may occur.

https://truckmanualshub.com/

2 - 20" WHEEL OPTION
+ WIDE BASKET OPTION ON 180 ATJ

Warning for users of access platforms equipped with these two options concerning loads and dimensions modified relative to a standard 180ATJ.

SPECIFICATIONS

- Operating height	17 670 mm
- Floor heigh	15 670 mm
- Weight of platform:	
Empty	8465 Kg
With nominal load	8695 Kg

FRONT - REAR TYRES

DIMENSIONS	TYRES FILLING	LOAD PER TYRE EMPTY F	LOAD PER TYRE EMPTY R	UNDER MAX LOAD + OFFSET ON 1 WHEEL F / R	FLOOR AREA SUPPORTING 1 WHEEL	PRESSURE
20” (405/70)	FOAM	KG	KG	KG	CM^2	DAN/CM^2

On the dimension drawing opposite, you will find only the modified dimensions ;
for other dimensions (See 2 - DESCRIPTION : DIMENSIONS 180 ATJ).

https://truckmanualshub.com/

	180 ATJ 20" + Wide basket option
A	7800
A1	5795
C	2413
C1	2595
D	2300
E	460
F	360
N	50

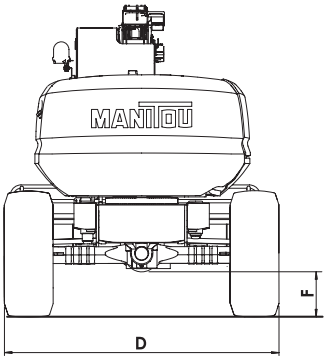

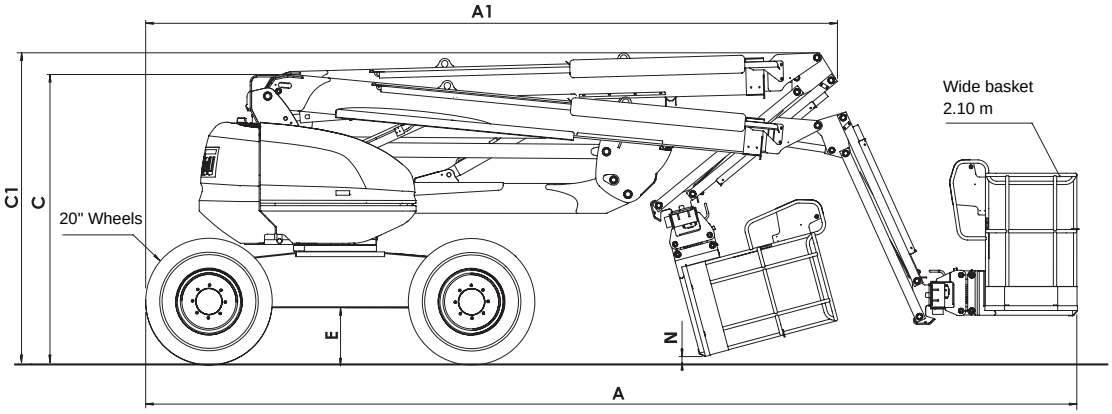

https://truckmanualshub.com/

6 - MAINTENANCE HANDBOOK

https://truckmanualshub.com/

MAINTENANCE HANDBOOK

- This maintenance handbook is supplied by your MANITOU dealer at the time of commissioning the machine.

- It will accompany the machine throughout the contractual warranty period and thereafter will enable regular monitoring of maintenance operations in accordance with MANITOU recommendations.

- Maintenance of the equipment will ensure it remains available and profitable.

- For this purpose, your MANITOU dealer can offer you a variety of maintenance contracts to suit your various needs so as to guarantee maximum efficiency through his skill and use of original MANITOU parts.

- We recommend that this MAINTENANCE HANDBOOK be kept throughout the lifetime of your machine and in particular passed on to the new owner in the event of its being resold.

50 HOURS	DATE	ACTUAL No. OF HOURS	MECHANIC'S SIGNATURE
			DEALER'S STAMP
COMMENTS:			

100 HOURS	DATE	ACTUAL No. OF HOURS	MECHANIC'S SIGNATURE
			DEALER'S STAMP
COMMENTS:			

150 HOURS	DATE	ACTUAL No. OF HOURS	MECHANIC'S SIGNATURE
			DEALER'S STAMP
COMMENTS:			

200 HOURS	DATE	ACTUAL No. OF HOURS	MECHANIC'S SIGNATURE
			DEALER'S STAMP
COMMENTS:			

https://truckmanualshub.com/

250 HOURS	DATE	ACTUAL No. OF HOURS	MECHANIC'S SIGNATURE
			DEALER'S STAMP
COMMENTS:			

300 HOURS	DATE	ACTUAL No. OF HOURS	MECHANIC'S SIGNATURE
			DEALER'S STAMP
COMMENTS:			

350 HOURS	DATE	ACTUAL No. OF HOURS	MECHANIC'S SIGNATURE
			DEALER'S STAMP
COMMENTS:			

400 HOURS	DATE	ACTUAL No. OF HOURS	MECHANIC'S SIGNATURE
			DEALER'S STAMP
COMMENTS:			

450 HOURS	DATE	ACTUAL No. OF HOURS	MECHANIC'S SIGNATURE
			DEALER'S STAMP
COMMENTS:			

500 HOURS	DATE	ACTUAL No. OF HOURS	SIGNATURE DU MECANICIEN
			DEALER'S STAMP
COMMENTS:			