https://truckmanualshub.com/

WORK SHOP MANUAL

15LD series engines, p.no. 1-5302-467

15 LD 225
15 LD 315
15 LD 350
15 LD 400
15 LD 440

6th Edition

SERVICE

COMPILER TECCARTI	REG. CODE	MODEL N°	DATE OF ISSUE	REVISION 05	DATE	ENDORSED	
	1-5302-467	50707	06-95		22.12.2003		1

Downloaded from www.Manualslib.com manuals search engine

https://truckmanualshub.com/

LOMBARDINI

FOREWORD

We have done all in our power to give up to date and accurate technical information in this manual. Lombardini engines are, however, constantly developing thus the data in this publication may be liable to modification without prior notice.

The information in this manual is the exclusive property of Lombardini. Neither partial nor total duplications or reprints are therefore permitted without the express authorization of Lombardini.

The information in this manual is given on the assumption that:

1- the persons who service Lombardini engines have been adequately trained and outfitted to safely and professionally carry out the necessary tasks;

2- the persons who service Lombardini engines possess the necessary skills and special Lombardini tools to safely and professionally carry out the necessary tasks;

3- the persons who service Lombardini engines have read the specific information concerning the above mentioned Service operations and that they have clearly understood the operations required.

GENERAL SERVICE NOTES

1 - Only use genuine Lombardini spare parts. Use of spurious spares may lead to incorrect performance and shorten the life of the engines.
2 - The metric system is used to express all data, i.e. the dimensions are given in millimeters (mm), torque is expressed in Newton-meters (Nm), weight in kilograms (Kg), volume in liters or cubic centimeters (cc) and pressure in barometric units (bar).

LOMBARDINI SERVICE

Downloaded from www.Manualslib.com manuals search engine

https://truckmanualshub.com/

WARRANTY CERTIFICATE

The products manufactured by Lombardini Srl are warranted to be free from conformity defects for a period of 24 months from the date of delivery to the first end user.
For engines fitted to stationary equipment, working at constant load and at constant and/or slightly variable speed within the setting limits, the warranty covers a period up to a limit of 2000 working hours, if the above mentioned period (24 months) is not expired.
If no hour-meter is fitted , 12 working hours per calendar day will be considered.
For what concerns the parts subject to wear and deterioration (injection/feeding system, electrical system, cooling system, sealing parts, non-metallic pipes, belts) warranty covers a maximum limit of 2000 working hours, if the above mentioned period (24 months) is not expired.
For correct maintenance and replacement of these parts, it is necessary to follow the instructions reported in the documentation supplied with each engine.
To ensure the engine warranty is valid, the engine installation, considering the product technical features, must be carried out by qualified personnel only.
The list of the Lombardini authorized dealers is reported in the “Service” booklet, supplied with each engine.
Special applications involving considerable modifications to the cooling/lubricating system (for ex.: dry oil sump), filtering system, turbo-charged models, will require special written warranty agreements.
Within the above stated periods Lombardini Srl directly or through its authorized network will repair and/or replace free of charge any own part or component that, upon examination by Lombardini or by an authorized Lombardini agent, is found to be defective in conformity, workmanship or materials.
Any other responsibility/obligation for different expenses, damages and direct/indirect losses deriving from the engine use or from both the total or partial impossibility of use, is excluded.
The repair or replacement of any component will not extend or renew the warranty period.

Lombardini warranty obligations here above described will be cancelled if:

- Lombardini engines are not correctly installed and as a consequence the correct functional parameters are not respected and altered.
- Lombardini engines are not used according to the instructions reported in the “Use and Maintenance” booklet supplied with each engine.
- Any seal affixed to the engine by Lombardini has been tampered with or removed.
- Spare parts used are not original Lombardini.
- Feeding and injection systems are damaged by unauthorized or poor quality fuel types.
- Electrical system failure is due to components, connected to this system, which are not supplied or installed by Lombardini.
- Engines have been disassembled, repaired or altered by any part other than an authorized Lombardini agent.

Following expiration of the above stated warranty periods and working hours, Lombardini will have no further responsibility for warranty and will consider its here above mentioned obligations for warranty complete.
Any warranty request related to a non-conformity of the product must be addressed to the Lombardini Srl service agents.

Downloaded from www.Manualslib.com manuals search engine

https://truckmanualshub.com/

INDEX

This manual contains pertinent information regarding the repair of LOMBARDINI water-cooled, indirect injection Diesel engines type **15LD225, 15LD315, 15LD350, 15LD400, 15LD440:** updated November 15, 2003.

TABLE OF CONTENTS

I TROUBLESHOOTING — **Page 7**

II SAFETY DECALS - SAFETY INSTRUCTIONS — **" 8-9**

III MODEL NUMBER AND IDENTIFICATION — **" 11**

IV TECHNICAL DATA — **" 12-13**

V CHARACTERISTIC CURVES — **" 14-15**

VI OVERALL DIMENSIONS — **" 16-17**

VII MAINTENANCE- RECOMMENDED OIL TYPE - REFILLING — **" 18-19**

VIII DISASSEMBLY / REASSEMBLY — **Page 20**

Automatic decompression . . . 41
Availability of bearings . . . 38
Cam height (mm) . . . 39
Camshaft . . . 39
Camshaft – Antireverse system . . . 40
Camshaft end play . . . 41
Camshaft journals and bore . . . 39
Camshaft timing . . . 40
Clearance . . . 34
Connecting rod . . . 36
Connecting rod alignement . . . 36
Connecting rod, piston pin . . . 36
Crankshaft - journal diameter (mm) . . . 38
Crankshaft end play . . . 36
Cylinder . . . 31
Cylinder head . . . 27
Cylinder roughness . . . 31
Dimensions and clearance between guides and valve stems (mm) . . . 30
Dimensions of camshaft journals and bore (mm) . . . 39
Dimensions of pistons and cylinders, Logo . . . 31
Dinamic balancer timing . . . 43
Drive shaft - Main bearing inside diameter, connecting rod big end, crankshaft bearing and timing control gear and balancer - Clearance and interference between the corresponding journals . . . 38
Drive shaft oil seals . . . 37
Drive shaft, connection radius . . . 37
Drive shaft, lubrication ducts, bore thread on flywheel side and p.t.o. . . . 37
Drive shaft, main journal/crankpin diameter, gear cover bearing inside diameter on timing side . . . 37
Dry air cleaner for 15LD 225 . . . 20
Dry air cleaner for 15LD 315 and 15 LD 350 . . . 20
Dry air cleaner for 15LD 400-440 . . . 21
Dynamic balancer (on request) . . . 41
Flywheel . . . 26
Fuel filter 15 LD 225-400-440 (version with internal filter) . . . 25
Fuel filter for 15 LD 225 - 315 - 350 - 400 - 440 (version with external filter) . . . 25
Hydraulic tappets 15 LD 400-440 . . . 24
Injector projection . . . 27
Muffler . . . 22
Oil-bath air cleaner (optional) . . . 22

Downloaded from www.Manualslib.com manuals search engine

https://truckmanualshub.com/

Piston . . . . . Page 31
Piston - Refitting 34
Piston protrusion check 35
Piston rings, assembly order 34
Piston rings, distance between the tips (mm) 33
Piston rings, play between the slots (mm) 34
Prefilter for dry air filter 21
Re-coil starting 26
Refitting gear cover on timing side 45
Rocker arm cover - Breather ricirculation 23
Rocker arm cover breather system 22
Shroud 26
Speed governor 45
Speed governor removal 45
Tank 25
Timing angles for inspection (0.65-0.70 valve play). 44
Timing angles for operation (0.15 valve play). 44
Valve seat lapping 30
Valve timing check 43
Valve, springs 28
Valve/rocker arm clearance (15 LD 225-315-350) 23
Valves - Disassembly 28
Valves - Oil seal in valve guide 28
Valves seats and valve seat bores 30
Valves, characteristics 29
Valves, guide insertion 29
Valves, guides and housings 29

IX LUBRICATION SYSTEM . . . . . **Page 46**

15 LD 225 - 315 - 350 LUBRICATION SYSTEM 46
15 LD 400-440 LUBRICATION SYSTEM 47
Calibrated 49
Internal strainer 48
Oil filter 49
Oil pressure check 49
Oil pressure curve at full speed 50
Oil pressure curve at idle speed 50
Oil pressure regulation valve 48
Oil pump 48
Oil pump - Clearance between rotors 48

X FUEL SYSTEM . . . . . **Page 42**

Feed pump (optional) 52
Fuel filter 15 LD 225-315-350-400-440 52
Fuel filter 15LD 225 (version with internal filter in tank) 52
Fuel pump, drive rod protrusion 53
Fuelling/injection circuit for 15 LD 315-350-400-440 51
Fuelling/injection circuit for 15LD 225 51
Injection advance adjustment 58
Injection pump 53
Injection pump components and disassembly 54
Injection pump delivery check on test bench 56
Injection pump fitting in the crankcase 53
Injection pump non-return valve 55
Injection pump refitting 54
Injection pump, body, plunger and delivery valve 54
Injection pump, Rilsan tube refitting 55
Injection pump, Rilsan tube removal 55
Injector 58
Injector calibration 59
Nozzles 59
References on the flywheel 57
Static injection lead test on flywheel 57
Static injection timing 56

Downloaded from www.Manualslib.com manuals search engine

https://truckmanualshub.com/

INDEX

XI ELECTRICAL SYSTEM — Page 61

12V electric ignition layout with motor protection (optional) 63
12V electric starter diagram with voltage regulator built into the ignition panel 63
12V, 12A electric ignition diagram 61
12V, 30A alternator battery recharging curve 62
24V, 9A alternator battery recharging curve 62
Alternator 61
Alternator battery charger graph (12V, 12A) 61
Characteristic curves for starting motor type DW (L) 12V, 1.1 KW 65
Characteristic curves of Bosch starter motor type DW (L) 12V, 0.9 kW 66
Characteristic curves of Bosch starter motor type DW (L) 24V, 1.6 kW 66
Diagram of electric starter motor protection with sole self-winding starter - without battery - (optional) 64
Ignition switch positions 66
Starting motor 65
Testing voltage regulator for proper operation 65
Voltage regulator 62

XII SETTINGS ADJUSTEMENTS — Page 67

ADJUSTMENTS - 15 LD 315-350 67
ADJUSTMENTS - 15 LD 225 68
Full speed setting in no-load conditions (standard) 67
Idle speed adjustment, for small car versions 67
Idling speed setting in no-load conditions (standard) 67
Injection pump delivery limiting and torque adapter (standard) 68
Injection pump delivery setting 69
Injection pump flow rate adjustment for 15LD 225-315-350 68
No-load idling adjustment (standard) 68
No-load top rate adjustment (standard) 68

XIII STORAGE — Page 70

Temporary protection (1/6 months) 70
Permanent protection (over 6 months) 70
How to prepare the engine for operation 70

XIV TORQUE SPECIFICATIONS — Page 71

Main torque specifications 71
Use of sealant 71

XV TORQUE SPECIFICATIONS — Page 72

Standard bolt torque specifications 72

Downloaded from www.Manualslib.com manuals search engine

https://truckmanualshub.com/

POSSIBLE CAUSES AND TROUBLE SHOOTING

The following table contains the possible causes of some failures which may occur during operation. Always perform these simple checks before removing or replacing any part.

	POSSIBLE CAUSE	TROUBLE									
		Engine does not start	Engine starts but stops	No acceleration	Non-uniform speed	Black smoke	White smoke	Too low oil pressure	Increase oil level	Excessive oil consumption	oil and fuel dripping from exhaust
FUEL CIRCUIT	Clogged pipes	●		●							
	Clogged fuel filter	●	●	●			●				
	Air inside fuel circuit	●	●	●	●		●				
	Clogged tank breather hole	●	●	●							
	Faulty fuel pump	●	●								
	Injector jammed	●									
	Jammed injection pump delivery valve	●									
	Wrong injector setting					●					●
	Excessive plunger blow-by	●				●			●		
	Jammed injection pump delivery control	●		●	●						
	Wrong injection pump setting		●	●	●	●					
LUBRICATION	Oil level too high				●		●			●	
	Jammed pressure relief valve							●			
	Worn oil pump							●			
	Air inside oil suction pipe							●			
	Faulty pressure gauge or switch							●			
	Clogged oil suction pipe							●			
ELECTRIC SYSTEM	Battery discharged	●									
	Wrong or inefficient cable connection	●									
	Defective ignition switch	●									
	Defective starter motor	●									
MAINTE-NANCE	Clogged air filter	●		●		●				●	
	Excessive idle operation						●			●	●
	Incomplete running-in						●			●	●
	Engine overloaded	●	●	●		●					
SETTINGS/REPAIRS	Advanced injection	●									
	Delayed injection	●				●	●				
	Incorrect governor linkage adjustment	●			●						
	Broken or loose governor spring		●	●							
	Idle speed too low		●		●						
	Worn or jammed piston rings						●			●	●
	Worn or scored cylinders						●			●	●
	Worn valve guides						●			●	●
	Jammed valves	●									
	Worn bearings							●			
	Governor linkage not free to slide	●	●		●						
	Drive shaft not free to slide					●					
	Damaged cylinder head gasket	●									

Downloaded from www.Manualslib.com manuals search engine

https://truckmanualshub.com/

SAFETY AND WARNING DECALS

DANGER	CAUTION
Failure to comply with the instructions could result in damage to persons and property	**Failure to comply with the instructions could lead to technical damage to the machine and/or system**

SAFETY INSTRUCTIONS

- Lombardini Engines are built to supply their performances in a safe and long-lasting way. To obtain these results, it is essential for users to comply with the servicing instructions given in the relative manual along with the safety recommendations listed below.
- The engine has been made according to a machine manufacturer's specifications and all actions required to meet the essential safety and health safeguarding requisites have been taken, as prescribed by the current laws in merit. All uses of the engine beyond those specifically established cannot therefore be considered as conforming to the use defined by Lombardini which thus declines all liability for any accidents deriving from such operations.
- The following indications are dedicated to the user of the machine in order to reduce or eliminate risks concerning engine operation in particular, along with the relative routine maintenance work.
- The user must read these instructions carefully and become familiar with the operations described. Failure to do this could lead to serious danger for his personal safety and health and that of any persons who may be in the vicinity of the machine.
- The engine may only be used or assembled on a machine by technicians who are adequately trained about its operation and the deriving dangers. This condition is also essential when it comes to routine and, above all, extraordinary maintenance operations which, in the latter case, must only be carried out by persons specifically trained by Lombardini and who work in compliance with the existing documentation.
- Variations to the functional parameters of the engine, adjustments to the fuel flow rate and rotation speed, removal of seals, demounting and refitting of parts not described in the operation and maintenance manual by unauthorized personnel shall relieve Lombardini from all and every liability for deriving accidents or for failure to comply with the laws in merit.
- On starting, make sure that the engine is as horizontal as possible, unless the machine specifications differ. In the case of manual start-ups, make sure that the relative actions can take place without the risk of hitting walls or dangerous objects, also considering the movements made by the operator. Pull-starting with a free cord (thus excluding self-winding starting only), is not permitted even in an emergency.
- Make sure that the machine is stable to prevent the risk of overturning.
- Become familiar with how to adjust the rotation speed and stop the engine.
- Never start the engine in a closed place or where there is insufficient ventilation. Combustion creates carbon monoxide, an odourless and highly poisonous gas. Lengthy stays in places where the engine freely exhausts this gas can lead to unconsciousness and death.

Downloaded from www.Manualslib.com manuals search engine

https://truckmanualshub.com/

- The engine must not operate in places containing inflammable materials, in explosive atmospheres, where there is dust that can easily catch fire unles specific, adequate and clearly indicated precautions have been taken and have been certified for the machine.
- To prevent fire hazards, always keep the machine at least one meter from buildings or from other machinery.
- Children and animals must be kept at a due distance from operating machines in order to prevent hazards deriving from their operation.
- Fuel is inflammable. The tank must only be filled when the engine is off. Thoroughly dry any spilt fuel and move the fuel container away along with any rags soaked in fuel or oil. Make sure that no soundproofing panels made of porous material are soaked in fuel or oil. Make sure that the ground or floor on which the machine is standing has not soaked up any fuel or oil.
- Fully tighten the tank plug each time after refuelling. Do not fill the tank right to the top but leave an adequate space for the fuel to expand.
- Fuel vapour is highly toxic. Only refuel outdoors or in a well ventilated place.
- Do not smoke or use naked flames when refuelling.
- The engine must be started in compliance with the specific instructions in the operation manual of the engine and/or machine itself. Do not use auxiliary starting aids that were not installed on the original machine (e.g. Startpilot').
- Before starting, remove any tools that were used to service the engine and/or machine. Make sure that all guards have been refitted.
- During operation, the surface of the engine can become dangerously hot. Avoid touching the exhaust system in particular.
- Before proceeding with any operation on the engine, stop it and allow it to cool. Never carry out any operation whilst the engine is running.
- The coolant fluid circuit is under pressure. Never carry out any inspections until the engine has cooled and even in this case, only open the radiator plug or expansion chamber with the utmost caution, wearing protective garments and goggles. If there is an electric fan, do not approach the engine whilst it is still hot as the fan could also start operating when the engine is at a standstill. Only clean the coolant system when the engine is at a standstill.
- When cleaning the oil-cooled air filter, make sure that the old oil is disposed of in the correct way in order to safeguard the environment. The spongy filtering material in oil-cooled air filters must not be soaked in oil. The reservoir of the separator pre-filter must not be filled with oil.
- The oil must be drained whilst the engine is hot (oil T ~ 80°C). Particular care is required to prevent burns. Do not allow the oil to come into contact with the skin.
- Make sure that the drained oil, the oil filter and the oil it contains are disposed of in the correct way in order to safeguard the environment.
- Pay attention to the temperature of the oil filter when the filter itself is replaced.
- Only check, top up and change the coolant fluid when the engine is off and cold. Take care to prevent fluids containing nitrites from being mixed with others that do not contain these substances since "Nitrosamine", dangerous for the health, can form. The coolant fluid is polluting and must therefore be disposed of in the correct way to safeguard the environment.
- During operations that involve access to moving parts of the engine and/or removal of rotating guards, disconnect and insulate the positive wire of the battery to prevent accidental short-circuits and to stop the starter motor from being energized.
- Only check belt tension when the engine is off.
- Only use the eyebolts installed by Lombardini to move the engine. These lifting points are not suitable for the entire machine; in this case, the eyebolts installed by the manufacturer should be used.

Downloaded from www.Manualslib.com manuals search engine

https://truckmanualshub.com/

NOTE

Downloaded from www.Manualslib.com manuals search engine

https://truckmanualshub.com/

MODEL NUMBER

ENGINE IDENTIFICATION

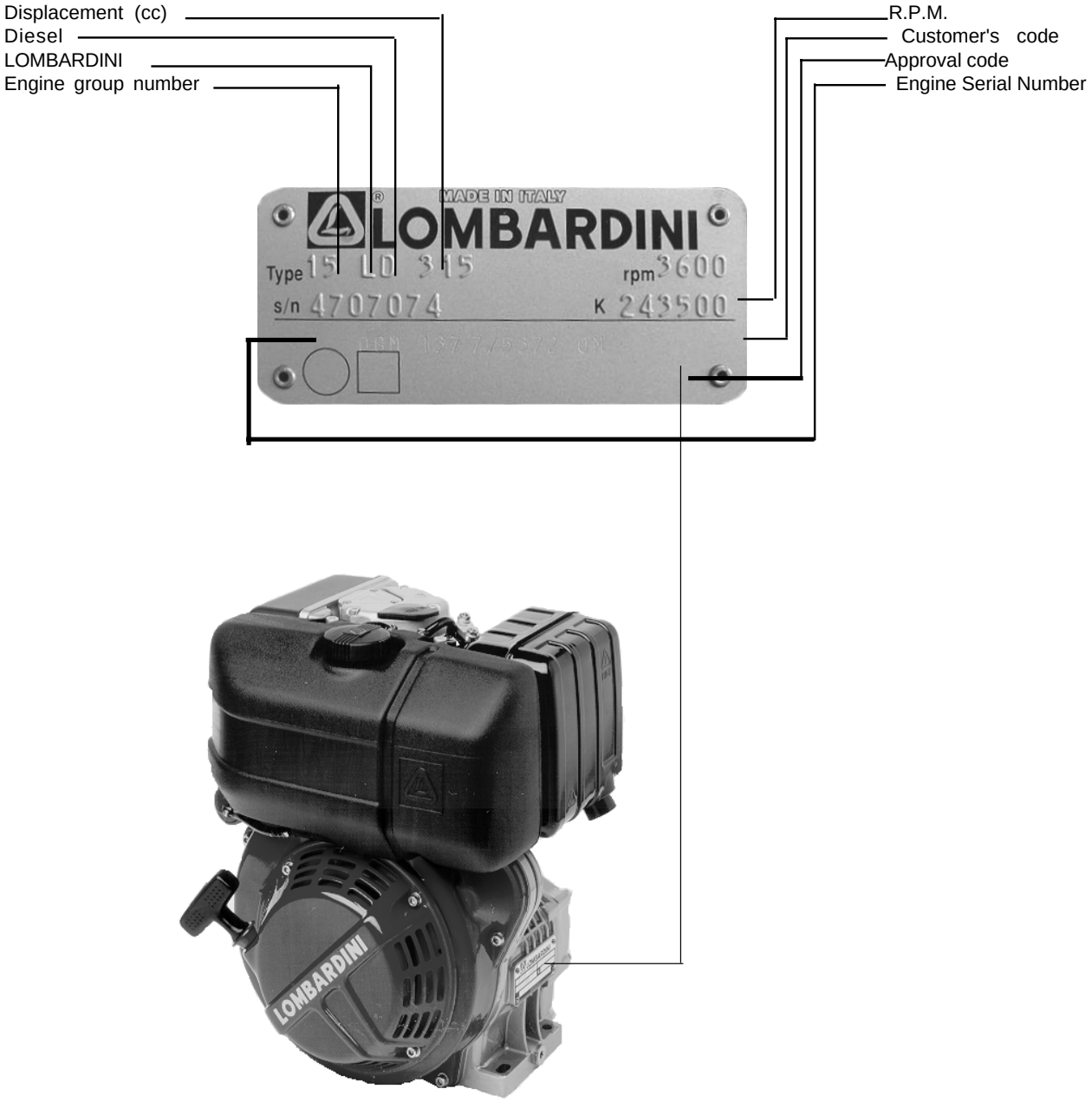

Downloaded from www.Manualslib.com manuals search engine

https://truckmanualshub.com/

CHARACTERISTICS 15 LD 225, 15 LD 315, 15 LD 350

TIPO MOTORE			15LD 225	15LD 315	15LD 350
Number of cylinders		N.	1	1	1
Bore		mm	69	78	82
Stroke		mm	60	66	66
Swept volume		Cm^3	224	315	349
Compression ratio			21:1	20,3:1	20,3:1
R.P.M.			3600	3600	3600
Power kW (HP)	N 80/1269/EEC-ISO 1585		3,5(4,8)	5,0(6,8)	5,5(7,5)
	NB ISO 3046 - 1 IFN		3,3(4,5)	4,6(6,2)	5,1(7,0)
	NA ISO 3046 - 1 ICXN		3,1(4,2)	4,1(5,6)	4,7(6,4)
Max. torque *		Nm	10,4@2400	15@2400	16,6@2400
Fuel consumption **		g/kW.h	267	262	260
Oil consumption		l/h	0,0021	0,0035	0,0038
Capacity of standard oil sump		lt	0,9	1,2	1,2
Recommended battery		V/Ah	12/36	12/44	12/44
Dry weight		kg	28	33	33
Combustion air volume at 3600 r.p.m.		l./min	350	480	540
Cooling air volume at 3600 r.p.m.		l./min	3800	5000	5000
Max.permissible driving shaft axial load in both directions		kg.	150	200	200
Max. inclination	continuous service for up to 30 min.		25°	25°	25°
	discontinuous service for about 1 min.		35°	35°	35°
	permanent service		***	***	***

* Referred to N power
** Referred to NB power
*** Depending on the application

15 LD 225

15 LD 315

15 LD 350

Downloaded from www.Manualslib.com manuals search engine

https://truckmanualshub.com/

CHARACTERISTICS 15 LD 400, 15 LD 440

TIPO MOTORE			15LD 400	15LD 440
Number of cylinders		N.	1	1
Bore		mm	82	86
Stroke		mm	76	76
Swept volume		Cm^3	401	442
Compression ratio			20,3:1	20,3:1
R.P.M.			3600	3600
Power kW (HP)	N 80/1269/EEC-ISO 1585		7,0(9,5)	7,7(10,5)
	NB ISO 3046 - 1 IFN		6,4(8,7)	7,0(9,6)
	NA ISO 3046 - 1 ICXN		5,8(7,9)	6,4(8,7)
Max. torque *		Nm	21,3@2400	23,5@2400
Fuel consumption **		g/kW.h	262	260
Oil consumption		l/h	0,005	0,0055
Capacity of standard oil sump		lt	1,5	1,5
Recommended battery		V/Ah	12/44	12/44
Dry weight		kg	45	45
Combustion air volume at 3600 r.p.m.		l./min	580	635
Cooling air volume at 3600 r.p.m.		l./min	5500	5500
Max.permissible driving shaft axial load in both directions		kg.	200	200
Max. inclination	continuous service for up to 30 min.		25°	25°
	discontinuous service for about 1 min.		35°	35°
	permanent service		***	***

* Referred to N power
** Referred to NB power
*** Depending on the application

15 LD 400

15 LD 440

Downloaded from www.Manualslib.com manuals search engine

https://truckmanualshub.com/

CHARACTERISTICS POWER, TORQUE AND SPECIFIC FUEL CONSUMPTION CURVES

15 LD 225

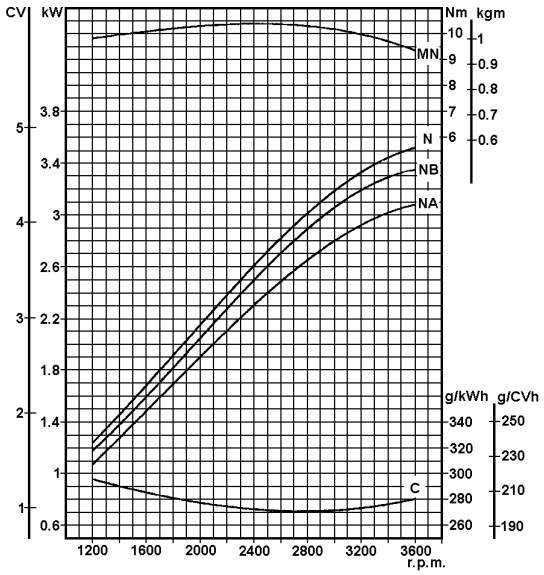

15 LD 315

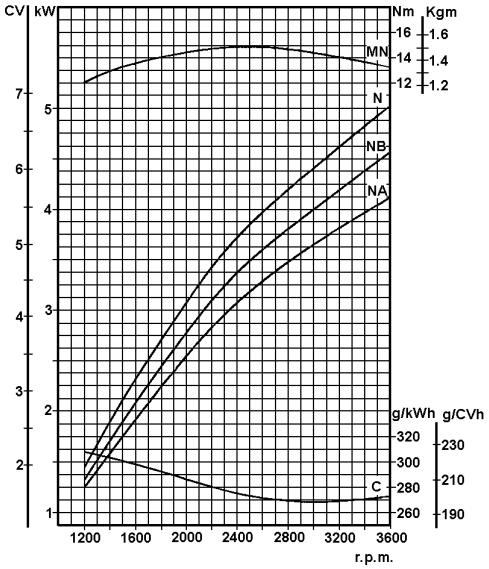

15 LD 350

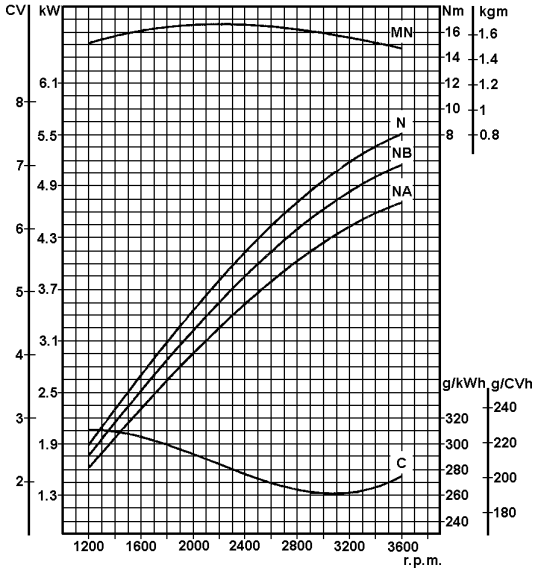

N (80/1269/EEC - ISO 1585) AUTOMOTIVE RATING : Intermittent operation with variable speed and variable load.
NB (ISO 3046 - 1 IFN) RATING WITH NO OWERLOAD CAPABILITY: continuos ligth duty operation with constant speed and variable load.
NA (ISO 3046 - 1 ICXN) CONTINUOS RATING WITH OVERLOAD CAPABILITY: continuos heavy duty with constant speed and constant load.
MN Torque at **N** power.
C Specific fuel consumption at **NB** power.

The above power values refer to an engine fitted with air cleaner and standard muffler, after testing and at the environmental conditions of 20°C and 1 bar.
Max. power tolerance is 5%.
Power decreases by approximately 1% every 100 m di altitude and by 2% every 5°C above 25°C.

Note: Consult LOMBARDINI for power, torque curves and specific consumptions at rates differing from those given above.

Downloaded from www.Manualslib.com manuals search engine

https://truckmanualshub.com/

CHARACTERISTICS POWER, TORQUE AND SPECIFIC FUEL CONSUMPTION CURVES

15 LD 400

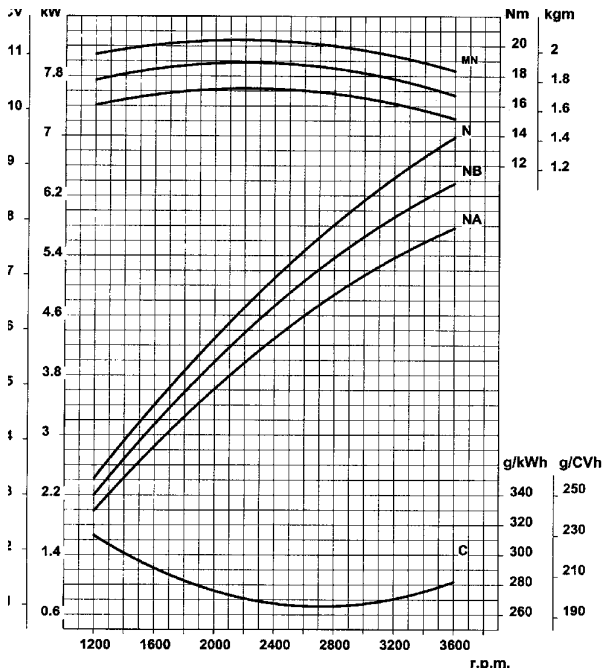

15 LD 440

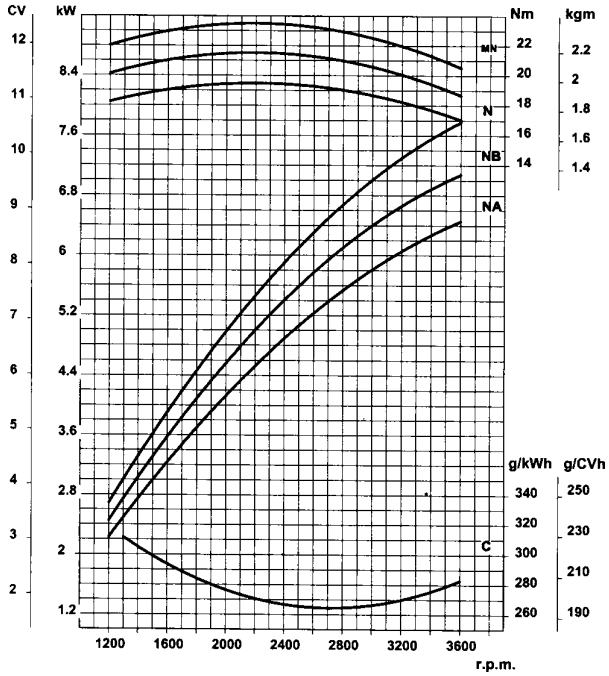

N (80/1269/EEC - ISO 1585) AUTOMOTIVE RATING : Intermittent operation with variable speed and variable load.
NB (ISO 3046 - 1 IFN) RATING WITH NO OWERLOAD CAPABILITY: continuos ligth duty operation with constant speed and variable load.
NA (ISO 3046 - 1 ICXN) CONTINUOS RATING WITH OVERLOAD CAPABILITY: continuos heavy duty with constant speed and constant load.
MN Torque at **N** power.
C Specific fuel consumption at **NB** power.

The above power values refer to an engine fitted with air cleaner and standard muffler, after testing and at the environmental conditions of 20°C and 1 bar.
Max. power tolerance is 5%.
Power decreases by approximately 1% every 100 m di altitude and by 2% every 5°C above 25°C.

Note: Consult LOMBARDINI for power, torque curves and specific consumptions at rates differing from those given above.

Downloaded from www.Manualslib.com manuals search engine

https://truckmanualshub.com/

15 LD 225

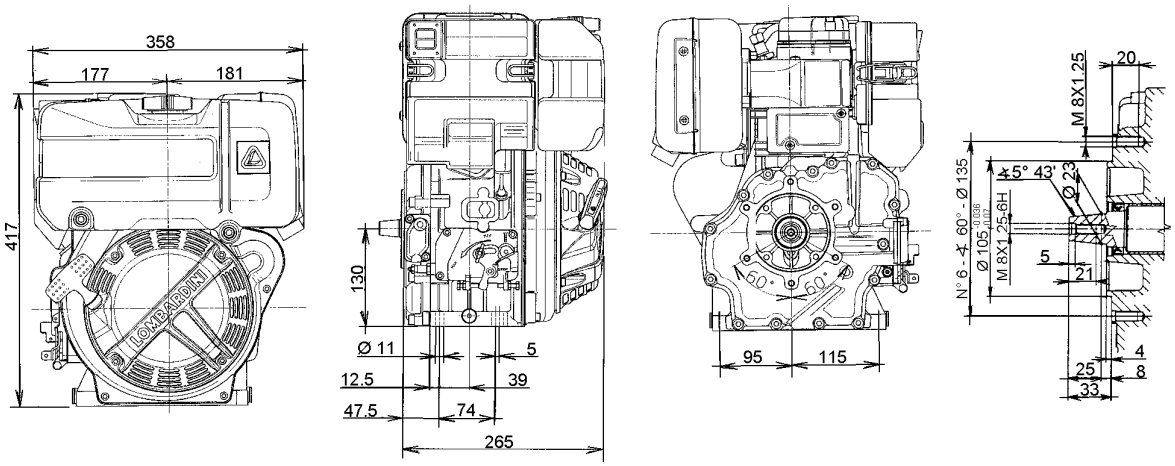

15 LD 315

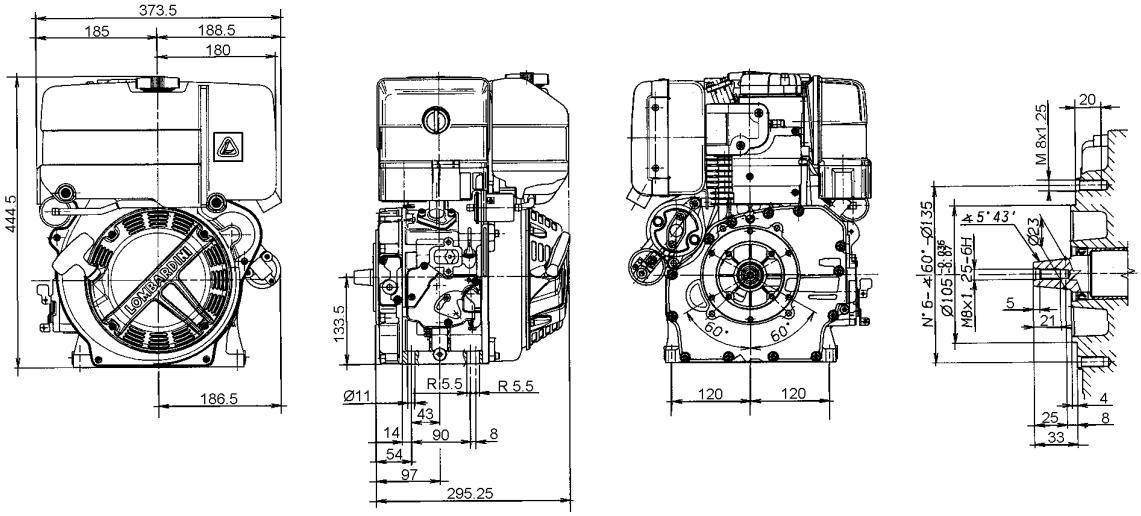

15 LD 350

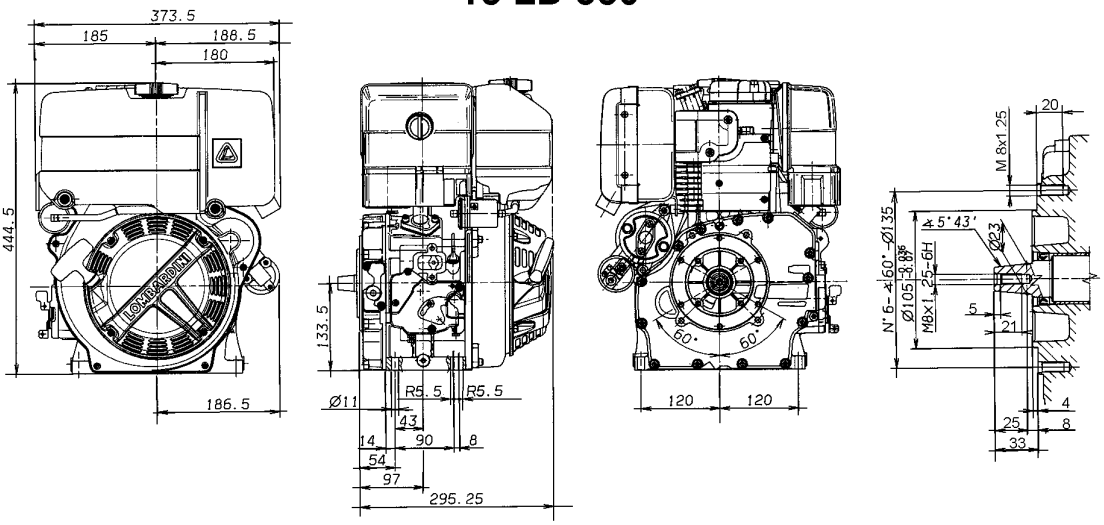

Downloaded from www.Manualslib.com manuals search engine

https://truckmanualshub.com/

15 LD 400

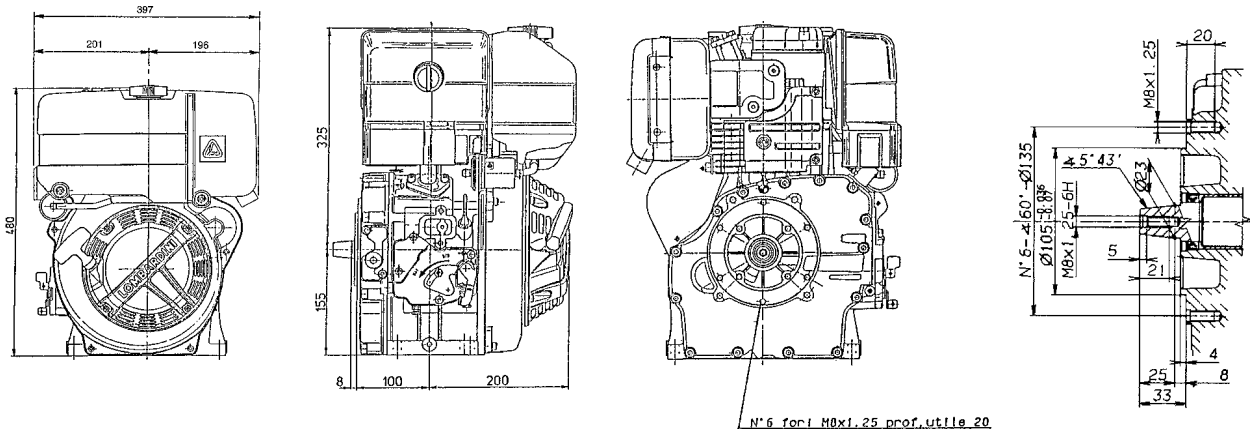

15 LD 440

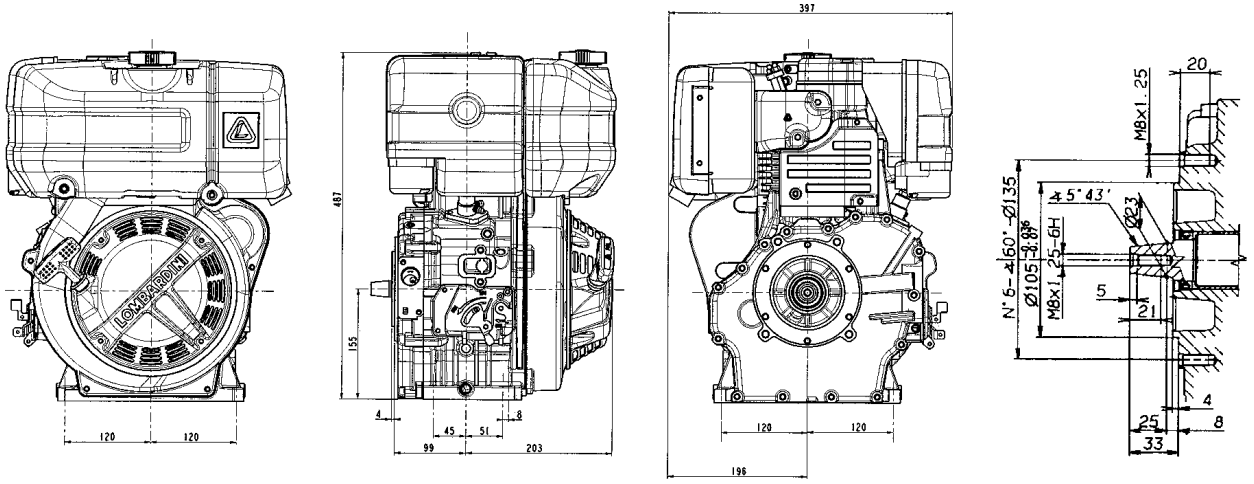

Downloaded from www.Manualslib.com manuals search engine

https://truckmanualshub.com/

Failure to carry out the operations described in the table may lead to technical damage to the machine and/or system

MAINTENANCE

OPERATION	COMPONENT		INTERVAL (HOURS)				
				10	50	250	500
CLEANING	OIL-BATH AIR CLEANER		(*)	●			
	HEAD AND CYLINDER FINS		(*)				●
	INJECTOR						●
CHECK	LEVEL	AIR CLEANER OIL	(**)		●		
		OIL SUMP		●			
	VALVE/ROCKER ARM CLEARANCE						●
	INJECTOR SETTING						●
REPLACEMENT		AIR CLEANER	(**)				
		SUMP	(***)			●	
	OIL FILTER CARTRIDGE						●
	FUEL FILTER CARTRIDGE						●
	DRY AIR CLEANER CARTRIDGE		(°)				

(*) Under severe working conditions, clean daily.
(**) Under extremely dusty conditions, change every 4-5 hours.
(***) See recommended oil type.
(°) After the polyurethane prefilter has been serviced 6-10 times (see fig. 2 for 315-350 engines), when the clogging indicator (if installed) signals that the part must be replaced, or if it is irreparably clogged.

To avoid explosions or fire outbreaks, do not smoke or use naked flames during the operations. Fuel vapours are highly toxic. Only carry out the operations outdoors or in a well ventilated place. Keep your face well away from the plug to prevent harmful vapours from being inhaled. Dispose of fuel in the correct way and do not litter as it is highly polluting.

FUEL

When refuelling, it is advisable to use a funnel to prevent fuel from spilling out. The fuel should also be filtered to prevent dust or dirt from entering the tank.
Use the same type of diesel fuel as used in cars. Use of other types of fuel could damage the engine. The cetane rating of the fuel must be higher than 45 to prevent difficult starting. Do not use dirty diesel fuel or mixtures of diesel fuel and water since this would cause serious engine faults.

The capacity of the standard tank is:

15 LD 225 = l. 3.0
15 LD 315 = l. 4.3
15 LD 350 = l. 4.3
15 LD 400 = l. 5.0
15 LD 440 = l. 5.0

Downloaded from www.Manualslib.com manuals search engine

https://truckmanualshub.com/

The engine could be damaged if allowed to operate with insufficient oil. It is also dangerous to add too much oil as its combustion could sharply increase the rotation speed.
Use a suitable oil in order to protect the engine.
The lubrication oil influences the performances and life of the engine in an incredible way.
The risk of piston seizure, jammed piston rings and rapid wear of the cylinder liner, the bearings and all moving parts increases if oil whose characteristics differ from the recommended type is used, or if the oil is not regularly changed. All this notably reduces engine life.
Oil viscosity must suit the ambient temperature in which the engine operates.

Old oil can cause skin cancer if repeatedly left in contact with the skin and for long periods of time. If contact with the oil is inevitable, you are advised to thoroughly wash your hands with soap and water as soon as possible.
Appropriate protective gloves etc should be wore during this operation.
Old oil is highly polluting and must be disposed of in the correct way. Do not litter.

RECOMMENDED OIL

AGIP SUPERDIESEL MULTIGRADE 15W40 specifications API CF-4/SG ACEA E2,B2 MIL-L-46152 D/E. ESSO SPECIAL PKW-UNIFLO DIESEL 15W40 specifications API CF-4/SG ACEA E2,B2 MIL-L-46152 D/E. In the countries where AGIP and ESSO products are not available, use oil API SJ/CF for Diesel engines or oil corresponding to the military specification MIL-L-46152 D/E.

GRADE

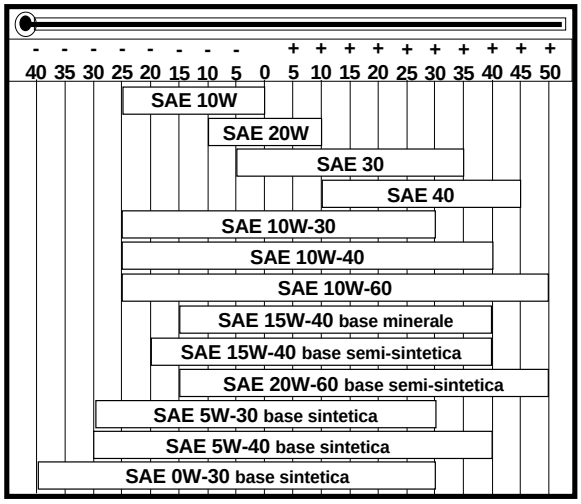

OIL SUPPLY (liters) 15 LD 225
Standard oil sump

filter included **0.9**

OIL SUPPLY (liters) 15 LD 315
Standard oil sump

filter included **1.2**

OIL SUPPLY (liters) 15 LD 350
Standard oil sump

filter included **1.2**

OIL SUPPLY (liters) 15 LD 400 - 440
Standard oil sump

filter included **1.5**

DIESEL | **BENZINA - ESSENCE - PETROL BENZIN - GASOLINA**

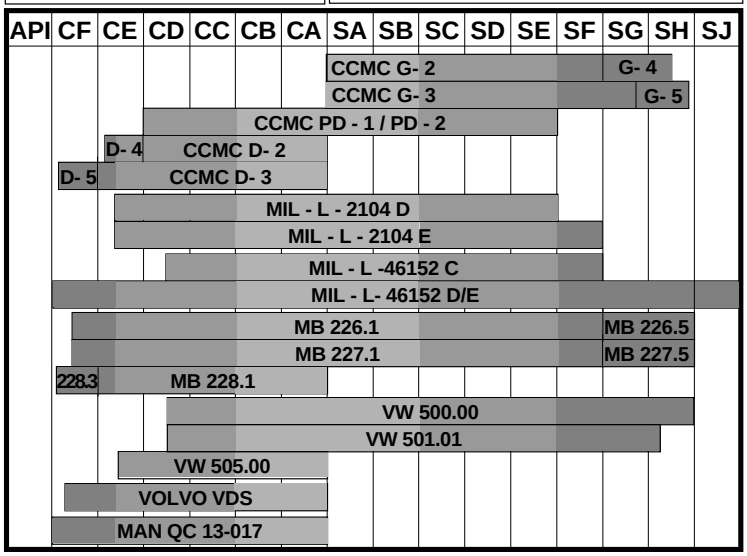

ACEA SEQUENCES

A = Gasoline (Petrol)
B = Light Diesel fuels
E = Heavy Diesel fuels

Required levels :

A1-96
A2-96
A3-96

B1-96
B2-96
B3-96

E1-96
E2-96
E3-96

Downloaded from www.Manualslib.com manuals search engine

https://truckmanualshub.com/

WARNINGS!

! During repair operations, when using compressed air, wear eye protection.

DISASSEMBLY AND REASSEMBLY

Besides disassembly and reassembly operations this chapter also includes checking and setting specifications, dimensions, repair and operating instructions. Always use original LOMBARDINI spare parts for repair operations.

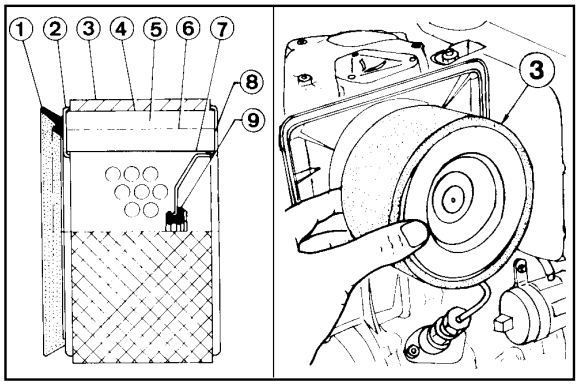

1 2

! Clean the filtering element with air blast. Air must be blown from inside to outside the cartridge at a distance of at least 15 cm from the paper.
Lightly and repeatedly tap the element on a hard surface to eliminate all excess dirt.

Dry air cleaner for 15LD 315 and 15 LD 350

Cartridge components:

1 Seal
2 Metallic body
3 Polyurethane prefilter
4 outer mesh
5 Filter media
6 Blade
7 Inside envelope
8 Metallic body
9 Inner seal

Cartridge characteristics:
media porosity 7 µm, useful filtering area 1960 cm^2.
Polyurethane pre-filter characteristic:
porosity 60 p.p.i., front area 207 cm^2.

Note: Pre-filter **3** can undergo maintenance operations; if dirty, wash with soap and water and dry (maximum 10 cleanings). See page 18 for cartridge replacement.

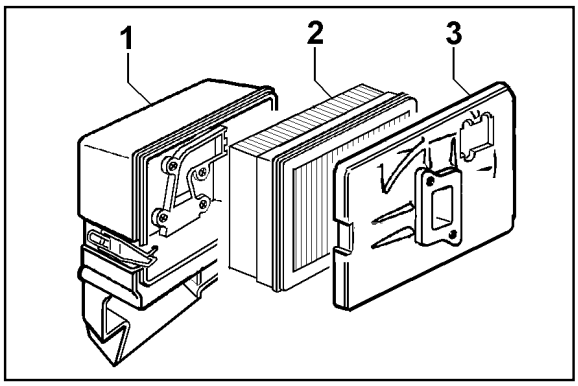

3

! Clean the filtering element with air blast. Air must be blown from inside to outside the cartridge at a distance of at least 15 cm from the paper.
Lightly and repeatedly tap the element on a hard surface to eliminate all excess dirt. Replace if irreparably clogged.

Dry air cleaner for 15LD 225

Cartridge components:

1 Complete cover
2 Filtering material
3 Support

Characteristics of the filtering material:
paper porosity : 3 µm
filtering area : 4400 cm²
outer ring in open-cell polyurethane

See page 18 for the frequency with which the filtering material must be changed.

Downloaded from www.Manualslib.com manuals search engine

https://truckmanualshub.com/

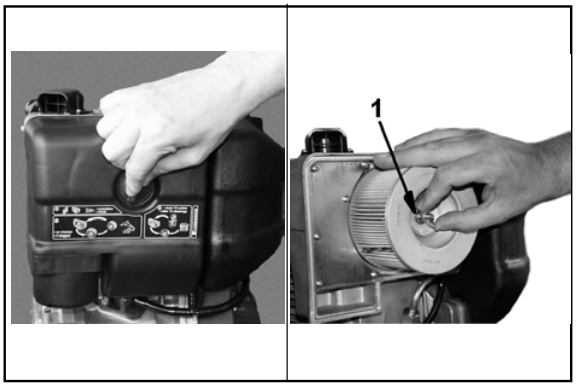

4 4a

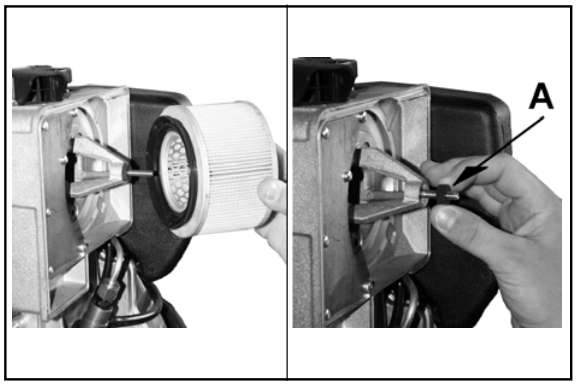

5 5a

! Clean the filtering element with air blast. Air must be blown from inside to outside the cartridge at a distance of at least 15 cm from the paper.
Lightly and repeatedly tap the element on a hard surface to eliminate all excess dirt.

Dry air cleaner for 15LD 400-440

Open air cleaner (fig. 4).
Unscrew the wing nut **1** (fig. 4a) and remove the filter element (fig. 5).
Check the rubber seal is undamaged **A** (fig. 5a)
Clean the filtering element with air blast.
If the filtering element has been already cleaned other times, or if it is irreparably clogged, throw it away and replace .
Refit the air filter and make sure the seal **A** is properly inserted, then tighten the wing nut **1**.

! Make sure that the filter is mounted in the correct way otherwise dust and other impurities could ilfiltrate into the intake ducts.

6

Prefilter for dry air filter

Remove and clean the pre-filter if clogged.

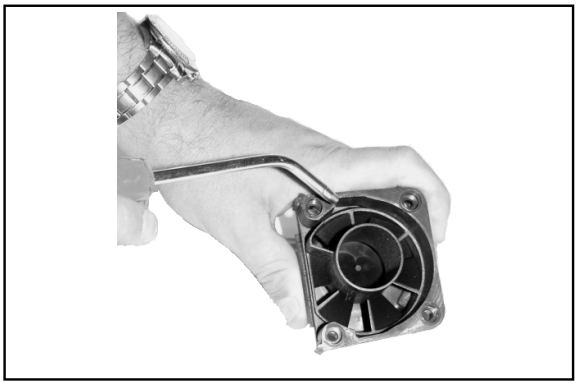

7

Downloaded from www.Manualslib.com manuals search engine

https://truckmanualshub.com/

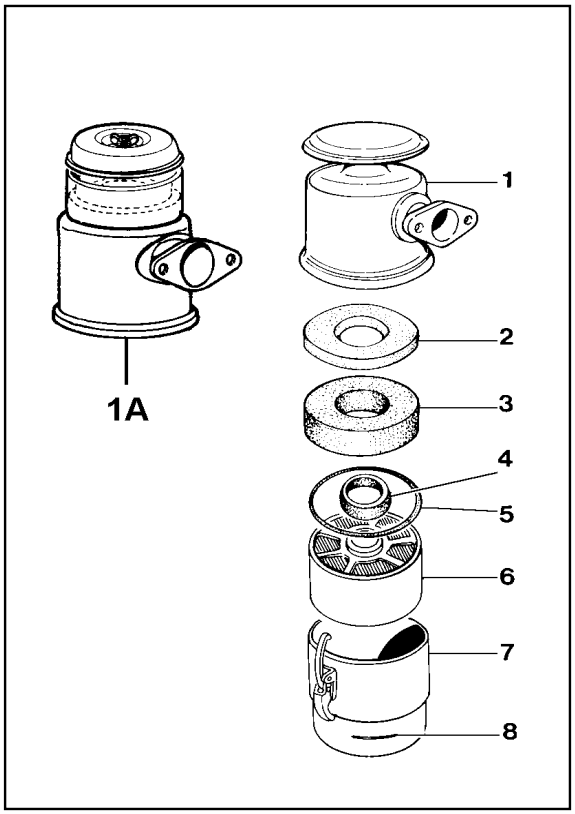

8

Never clean the filtering element **6** using solvents with a low flash point. This could cause an explosion !

Make sure that the retention rings **4 - 5** are in a good condition and replace them if they are damaged.

Oil-bath air cleaner (optional)

Components:
1 Upper shell
1A Upper unit with separator pre-filter
2 Secondary filter element
3 Primary polyurethane
4 Internal seal ring
5 External rubber gasket
6 Lower metal filter element
7 Lower cup
8 Oil level gauge

Characteristics of filter element 2:
made of Viledon synthetic fabric, porosity 120 gr/m^2, resin-covered.

Characteristics of filter element 3:
open-celled polyurethane foam; porosity 45 P.P.I..
Both filter elements can be washed with soap and water for a maximum of 10 times.
Wash the metal filter **6** with Diesel fuel Blow out excess fuel with compressed air. See pages 14 and 15 for periodic maintenance details and oil replacement.

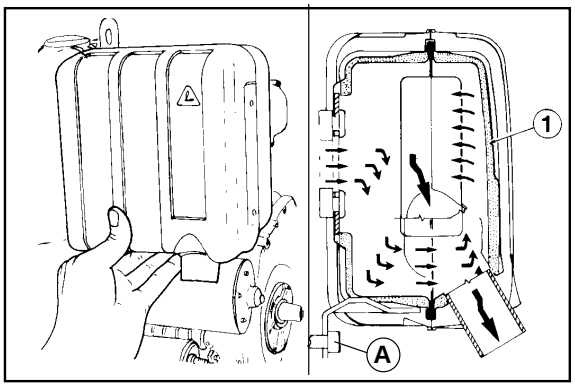

9 10

Allow the exhaust manifold to cool before demounting it in order to prevent scorching and burns.

Muffler

When reassembling replace the exhaust manifold gaskets.
Tighten nuts to 25 Nm.
The muffler design includes internal sound absorbing panels.
Tighten the bearing nuts and screw **A** to a 25 Nm torque value.

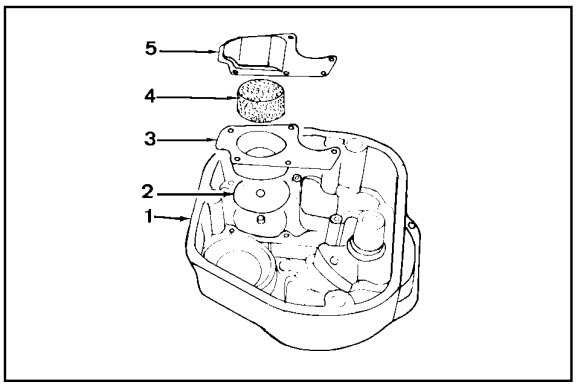

11

Rocker arm cover breather system

The crankcase breather system is located inside the rocker arm cover. Check that diaphragm **2** is intact ; wash with Diesel oil and blow through the small mesh element **4** with compressed air.
When reassembling fix box **3** with Loctite " Form-a- gasket No. 6" and screw plate **5**. Also see below.

Downloaded from www.Manualslib.com manuals search engine

https://truckmanualshub.com/

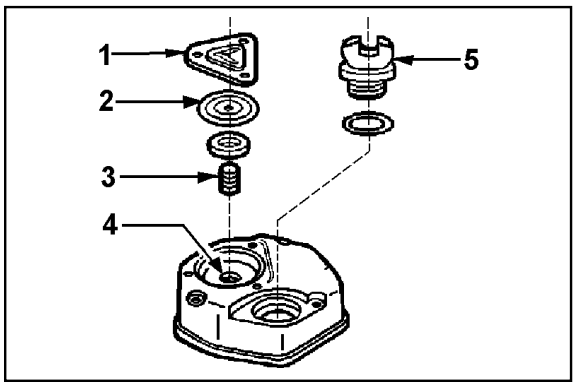

12

Always check the the spring and valve to make sure they are in a good conditions.

Rocker arm cover - Breather ricirculation

Crankcase vapor recirculation occurs through duct **4.**
If the air filter clogs, the increased intake vacuum could suck oil through duct 4 into the combustion chamber, causing the engine to operate at a runaway rate. This is prevented by valcuum valve **2** which, when the vacuum increases, overcomes the resistance of spring **3** and shuts the duct **4**.
Make sure that oil plug **5** is correctly closed.
Refit cover **1** and tighten rocker arm cover to 10 Nm.

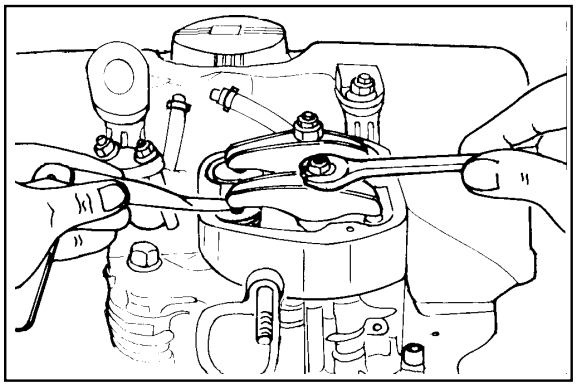

13

Valve/rocker arm clearance (15 LD 225-315-350)

Set valve/rocker arm clearance when the engine is cold: bring piston to top dead center on the compression stroke and set clearance at 0.10-0.15 mm using a thickness gauge. Tighten lock nut.

N.B.: Since an automatic decompression device is available on the exhaust lobe, manualy rotate the engine until the tappets are at lowest point.

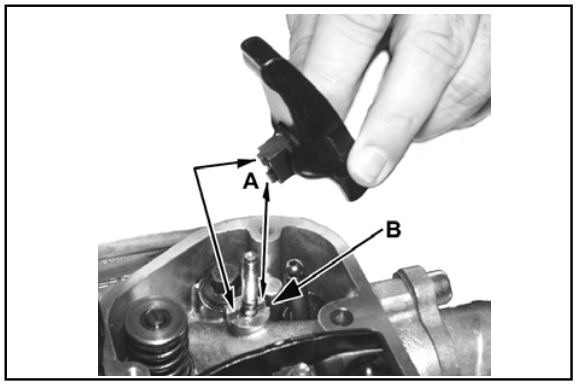

13a

The engines 15 LD 400 and 440 have hydraulic tappets, therefore no adjustment is required.

When replacing the rocket arms, position the piston at the bottom dead centre and tighten the fixing screw gradually to adjust the hydraulic tappets.
While tightening, make sure that **A** fits correctly into **B** (fig. 13a).
The adjusting screw pin should be tightened to 20 Nm.

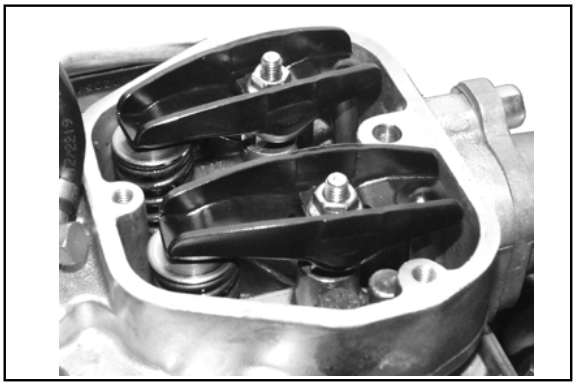

13b

Do not start the engine for approximately 4 hours to allow the hydraulic tappets to settle completely.

Once the tappets have settled, tighten the bolt to 10Nm.

Downloaded from www.Manualslib.com manuals search engine

https://truckmanualshub.com/

Hydraulic tappets 15 LD 400-440

Distribution uses hydraulic tappets for automatic adjustment of valve clearance.
The figure shows the tappet used in 15 LD 400 engines.

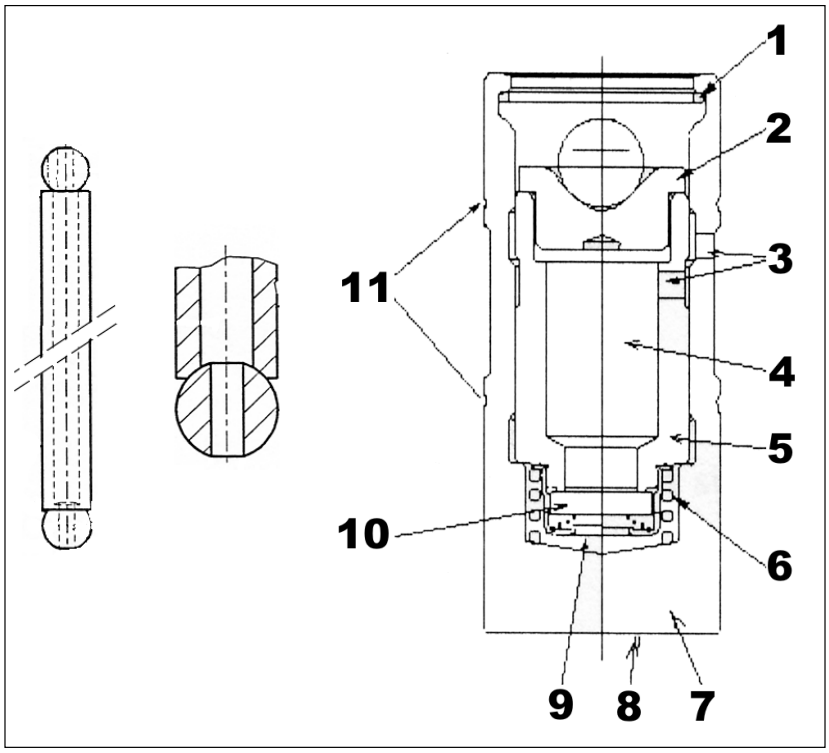

Caption

1- Lock ring
2- Upper collar
3- Oil inlet holes
4- Low-pressure chamber
5- Piston
6- Play-recovery spring
7- Case
8- Area to be lubricated
9- High-pressure chamber
10- Check valve
11- Identification marks

Fill the low-pressure chamber through the oil inlet holes.
If clearance occurs while running, as the tappet returns to the base of the camshaft, the play-recovery spring stretches out, keeping all timing system parts close together.
While the play-recovery spring is stretching, the check valve lets oil into the high-pressure chamber from the low-pressure chamber, to recover the increase in volume in the high-pressure chamber, caused by the stretching spring. In this way, since oil is practically uncontrollable, when the valve is next opened, play will be completely recovered.
During each cycle a small amount of oil is drawn from the high-pressure chamber into the piston coupling wall with the case and then, passing through the internal inlet hole, flows into the low-pressure chamber.
The tappet is shortened by less than 0.1mm each cycle. This allows the tappet to make up the reduction in play while the engine is running.
It is not necessary for the oil to reach the tappet on the downward stroke: light pressure is enough to ensure that air bubbles do not form.
The tappet may be supplied with the high-pressure chamber full or empty. The low-pressure chamber is always empty.
The tappet should always be handled in an upright position to prevent the high-pressure chamber from emptying.
The surface that comes into contact with the cam should be lubricated generously during assembly using AS COMPUND 40 type MOLYSLIP (see figure). This operation is important to ensure correct lubrication right from the start.
The distribution system is assembled as follows:

a) Make sure that the piston is between the Bottom Dead Centre and the halfway point
b) Insert the rods into position on the tappets
c) Mount the rocker arm and the joint block, then tighten the fixing nut to the specified torque
d) DO NOT START THE ENGINE FOR AT LEAST 4 HOURS AFTER TIGHTENING THE ROCKER ARMS because the valve-piston contact may be put at risk.

The tappet is unloaded when it is possible to shift the internal part by 3.5÷4 mm using a force of 30 Nm.
If the tappets are loaded (for example if they have been left in a horizontal position) the engine will be noisy during the first few minutes after switching on, until the air has been completely drained out of the inside of the tappets themselves.

Downloaded from www.Manualslib.com manuals search engine

https://truckmanualshub.com/

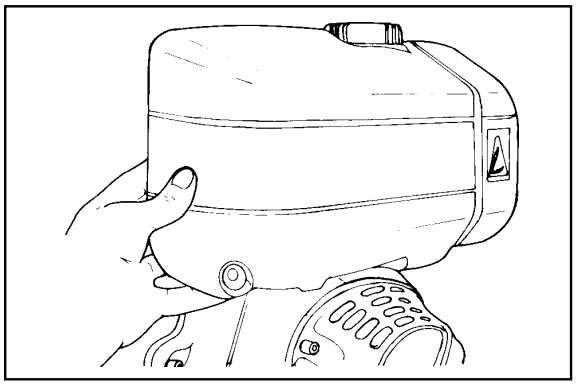

14

To avoid explosions or fire outbreaks, do not smoke or use naked flames during the operations.
Fuel vapours are highly toxic. Only carry out the operations outdoors or in a well ventilated place.
Keep your face well away from the plug to prevent harmful vapours from being inhaled. Dispose of fuel in the correct way and do not litter as it is highly polluting.

Tank

Unscrew the upper and lower studs and remove the washers, which otherwise might make removal of the tank difficult. Next disconnect the fuel and air bleeding tubes.
Completely empty the tank to make sure that no impurities remain.
When reassembling tighten the upper nuts to 15 Nm.

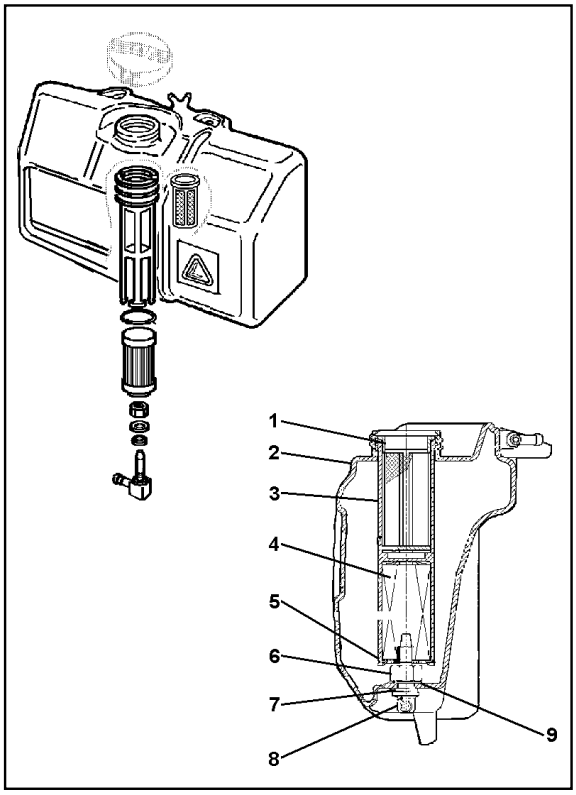

15

Fuel filter 15 LD 225-400-440 (version with internal filter)

1 Fuel filter
2 Fuel tank
3 Filter sleeve
4 Filter cartridge
5 Flush ring
6 Nut
7 Union seal
8 Diesel fuel outlet union
9 Flat washer

See page 18 for the frequency with which the fuel filter must be replaced.
See fig. 99 for the dimensions.

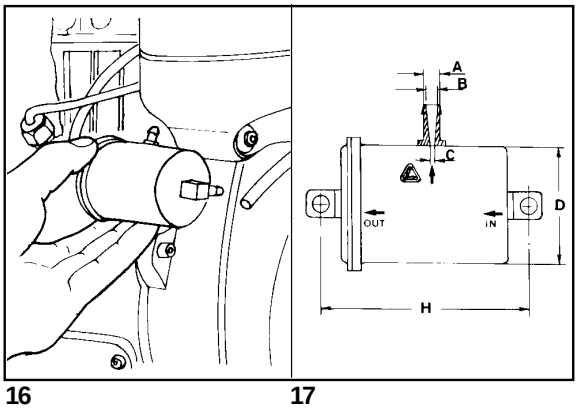

16 17

Fuel filter for 15 LD 225 - 315 - 350 - 400 - 440 (version with external filter)

Loosen the clamps and disconnect the hoses.

Characteristics

Filtering area ≥ 390 cm^2
Paper porosity ≤ 7 µ m.
See page 18 for replacement
See fig. 98 for dimensions.

Downloaded from www.Manualslib.com manuals search engine

https://truckmanualshub.com/

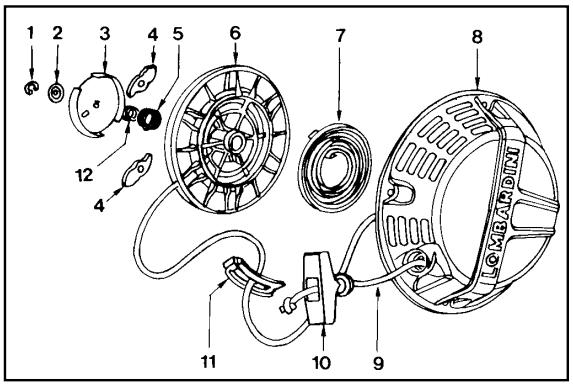

18

Re-coil starting

Operation:
When pulling handle **10,** thanks to the action of friction spring **12,** teeth **4** protrude from cap **3.** After starting these teeth go back to the initial position because the cap rotates. Rope **9** is re-wound around pulley **6** by means of spring **7**.

Components:

1 Retainer	**7** Spring
2 Washer	**8** Guard
3 Cap	**9** Rope
4 Flyweights	**10** Handle
5 Spring	**11** Rope guide
6 Pulley	**12** Spring

Note: there are two kinds of guards **8**, one for engines with an rpm above 2000 and one with fewer cooling channels for engines with a lower rpm

On reassembly, tighten the screws to 10Nm.

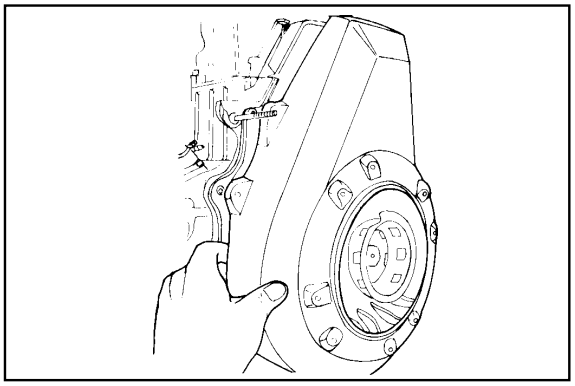

19

Shroud

The shroud and the metal sheeting outside the cylinder are made of special material (ANTIPHON) which absorbs noise, thus reducing total engine sound pressure levels.
When refitting tighten shroud screws to 10 Nm.

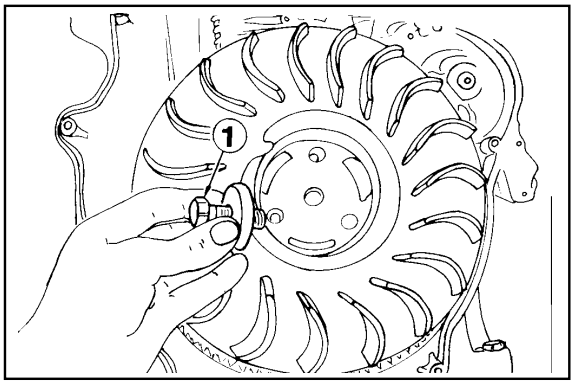

20

During the demounting phases, pay particular attention to prevent the flywheel from dropping as this could seriously injure the operator.
Wear protective goggles when removing the flywheel ring.

Flywheel

Unscrew bolt **1** in a clockwise direction.
Remove the flywheel with a puller.
Make sure that the tapered surface that couples to the drive shaft is not damaged.
To remove the starter rim, it is advisable to cut it into several parts with a hacksaw and to then use a chisel. To replace, slowly heat for 15-20 minutes to a temperature of 300°C max.
Fit the rim into the flywheel housing. make sure that it rests evenly against the support of the housing itself.
Allow it to slowly cool.
When refitting tighten bolt **1** to 150 Nm.
See pages 34 and 35 for injection timing reference marks.

Downloaded from www.Manualslib.com manuals search engine

https://truckmanualshub.com/

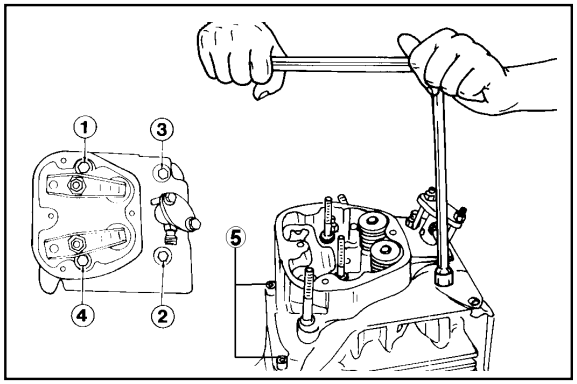

21

! Do not demount when hot or the part could become deformed.

Cylinder head

If the surface of the cylinder head is deformed, flatten it by removing 0.2 mm of material at most.
Always replace the seal. See figs 46-47-48-49-50 when selecting the thickness. The bolts must be tightened in different phases for the various engines, in compliance with the order shown in the figure:

First tighten the 4 screws M10, then the 2 side screws M6.
Lubricate the shanks of the bolts, under their heads and the washers with engine oil. Do not use too much oil. Oil that deposits in the threaded hole on the cylinder block could become pressurized during the tightening phase, sensibly diminishing the driving force. Always make sure that the holes on the cylinder block are dry and clean.

Engine 15 LD 225 1st phase: tighten all the bolts to a 30 Nm torque value in a crossed fashion. 2nd phase: unscrew all the bolts by 180°. 3rd phase: tighten all the bolts to a 20 Nm torque value in a crossed fashion. 4th phase: make a 52° turn in the same order as the 3rd phase. 5th phase: tighten the 2 side bolts (5) to a 10 Nm torque value.	**Engine 15 LD 350** 1st phase: tighten all the bolts to a 30 Nm torque value in a crossed fashion. 2nd phase: unscrew all the bolts by 180°. 3rd phase: tighten all the bolts to a 20 Nm torque value in a crossed fashion. 4th phase: make a 60° turn in the same order as the 3rd phase. 5th phase: tighten the 2 side bolts (5) to a 10 Nm torque value
Engine 15 LD 315 1st phase: tighten all the bolts to a 30 Nm torque value in a crossed fashion. 2nd phase: unscrew all the bolts by 180°. 3rd phase: tighten all the bolts to a 20 Nm torque value in a crossed fashion. 4th phase: make a 72° turn in the same order as the 3rd phase. 5th phase: tighten the 2 side bolts (5) to a 10 Nm torque value.	**For 15 LD 400 and 400 engines** 1st phase: tighten all screws crosswise to 20Nm. 2nd phase: tighten the screws in the same order to 40Nm. 3rd phase: tighten all screws in the same order to 50Nm. 4th phase: following the same order as in phase 3, rotate 60°. 5th phase: following the same order as in phase 4, rotate 60°. 6th phase: tighten the 2 side screws (5) to 10 Nm

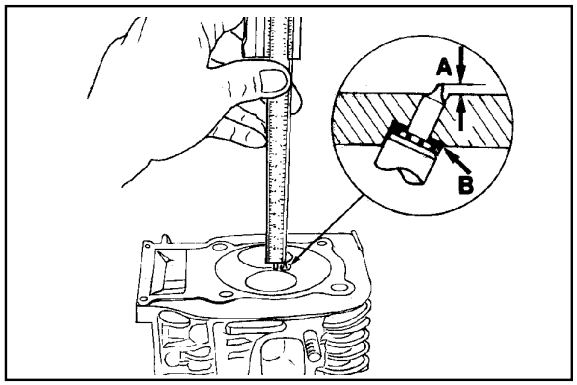

22

Injector projection

The end of nozzle **A** should project 2,5 mm for 15 LD 225-315-350 and 3,0÷3,5 mm for 15 LD 400-440 from the cylinder head plane.
Adjust with copper gaskets **B** with thickness of 0.5, 1 and 1.5 mm

Downloaded from www.Manualslib.com manuals search engine

https://truckmanualshub.com/

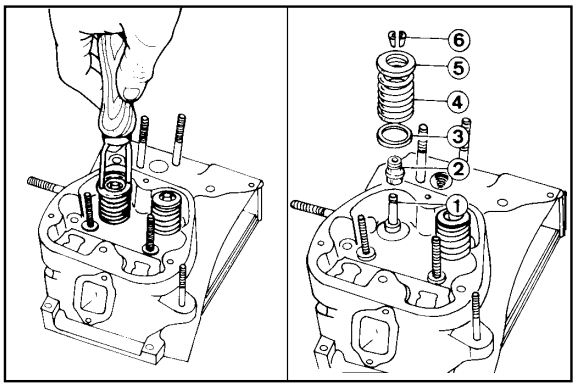

23 24

Valves - Disassembly

Components:
1 Valve stem
2 Oil seal
3 Spring washer/set
4 Spring
5 Cap
6 Half collets

Note: To remove half collets place a suitable plate under the valve head and press down firmly as indicated in the figure.

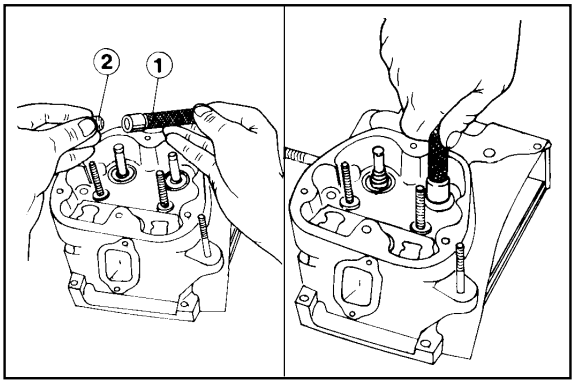

25 26

Valves - Oil seal in valve guide

To prevent seal **2** from being deformed when the valve guide is mounted, fit it into tool **1** serial N° 7107-1460-047 after having thoroughly lubricated it, then proceed as indicated in the figure.

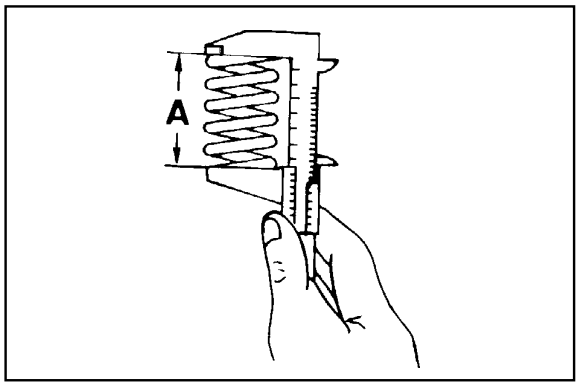

27

Valve, springs

Measure the free length with a caliper.

Engine 15 LD 225-315-350

Free length **A** = 33.72

Engine 15 LD 400-440

Free length **A** = 34,88

Note: Replace the spring if the free length **A** is 1 mm less than specified.

Downloaded from www.Manualslib.com manuals search engine

https://truckmanualshub.com/

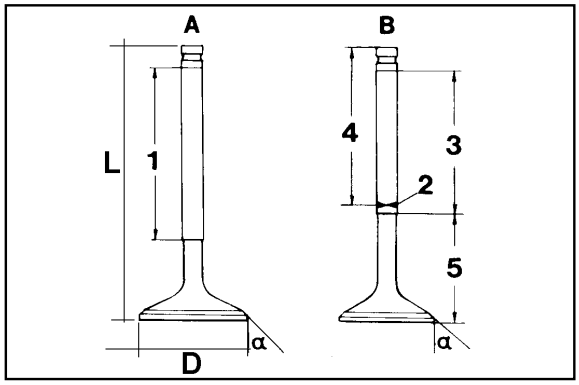

28

Valves, characteristics

Intake valve A

	15 LD 225	15 LD 315-350	15 LD 400-440
Portion made of	X 45 Cr Si 8 uni 3992		
1	Chromium-plated portion		
D	31,6 -0-0,2	36 -0-0,2	37,8 -0-0,2
L	81,8	91	92,2 -0,2+0,2
α	45° 35' ÷ 45 65'		

Exhaust valve B - Stem and head are of two different materials

	15 LD 225	15 LD 315	15 LD 350	15 LD 400	15 LD 440
2	Tronçon soudé				
3	Chromium-plated portion				
4	Portion made of --> X 45 Cr Si 8 UNI 3992				
5	Portion made of --> X 70 Cr Mn Ni N21.6 UNI 3992				
α	45° 35' ÷ 45 65'				

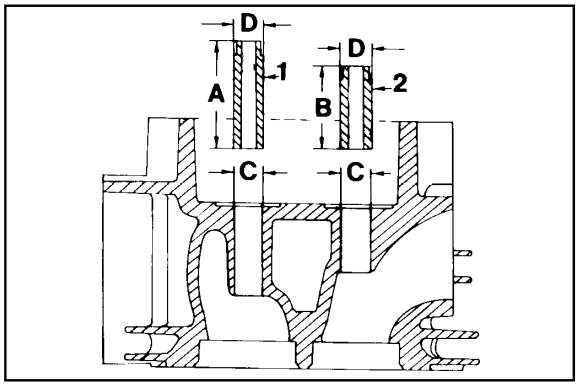

29

Valves, guides and housings

1 Intake guide
2 Exhaust guide

Dimensions (mm) for 15 LD 315-350-400-440
A = 40
B = 31
C = 11.000-11.018
D = 11.040-11.055

Dimensions (mm) for 15 LD 225

A = 35
B = 30
C = 10.000-10.020
D = 10.040-10.055

Note: Valve guides with outer diameters increased by 0.5 mm are also available as spares. In this case, housing **C** must be increased by 0.5 mm for assembly purposes.

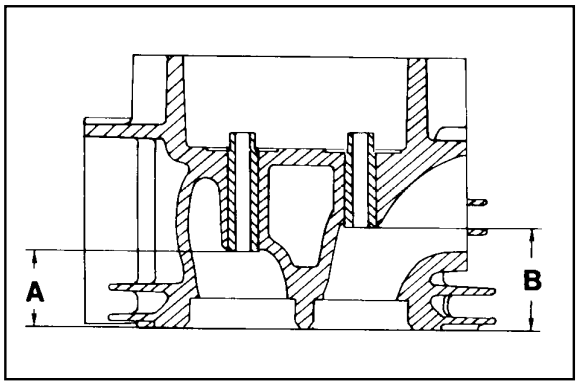

30

Valves, guide insertion

Heat the block to a temperature of 160°-180°
Force the guides, considering distance **A** and **B** in relation to the block surface.

Dimensions (mm) for 15 LD 315-350-400-440

A = 25.8-26.2
B = 34.8-35.2

Dimensions (mm) for 15 LD 225

A = 23.8-24.2
B = 28.8-29.2

Downloaded from www.Manualslib.com manuals search engine

https://truckmanualshub.com/

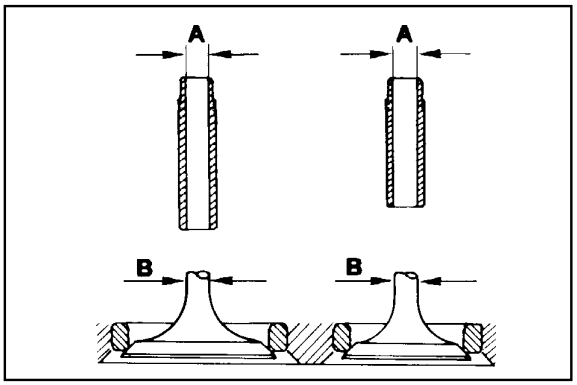

31

Dimensions and clearance between guides and valve stems (mm)

	15 LD 225	15 LD315-350	15 LD 400-440
A	6,020÷6,035	7,025÷7,040	
B	5,985÷6,000	6,985÷7,000	6,985÷7,000
(A-B)	0,020÷0,050	0,025÷0,055	
(A-B) limite	0,14		

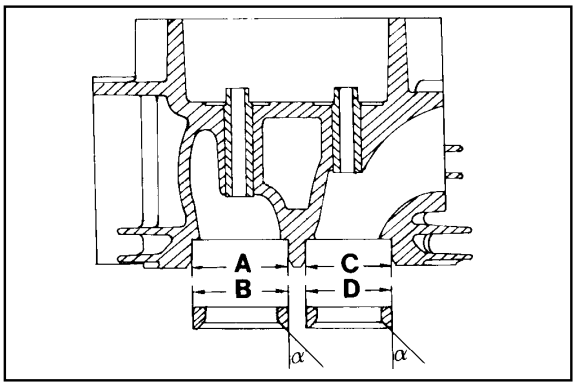

32

Valves seats and valve seat bores

Dimensions (mm)

	15 LD 225	15 LD315-350	15 LD 400-440
A	32,50÷32,51	37,00÷37,01	39,00÷39,01
B	32,60÷32,62	37,10÷37,12	39,10÷39,12
C	28,50÷28,51	33,00÷33,01	35,00÷35,01
D	28,60÷28,62	33,10÷33,12	35,10÷35,12

Note : Since the seats are supplied pre-finished, they must not be machined after having been inserted.

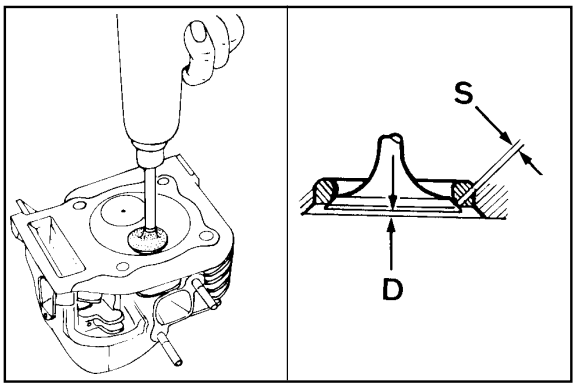

33 34

Valve seat lapping

After cutting valve seats, lap valve seats with fine lapping compound.
The sealing surface **S** should not exceed 2 mm.
Lowering valve for 15 LD 225-315-350 (D = 0.55÷0.85 mm).
Lowering valve for 15 LD 400-440 (D = 0.35÷0.65 mm).
Wear limit 1.5 mm.

Downloaded from www.Manualslib.com manuals search engine

https://truckmanualshub.com/

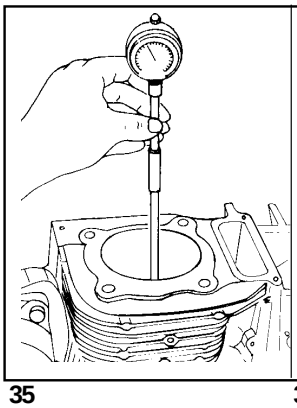

35

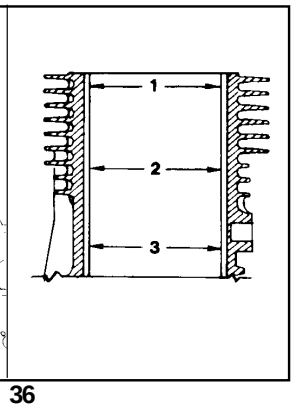

36

Cylinder

Set a bore gauge to zero with a calibrated ring.
Check diameter at **1, 2** and **3**; repeat the operation at the same points after turning the bore gauge 90°.
If wear exceeds the max. given value by 0.05, bore the cylinder and fit oversize piston and rings.
See fig. 40 and 41 for cylinder diameter values.

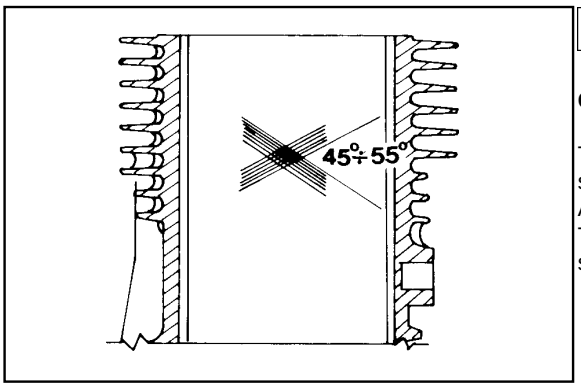

37

! Do not manually hone the cylinder bore surfaces with emery cloth or other means.

Cylinder roughness

The cross-hatch pattern should be at an angle of 45°-55°; lines should be uniform and clear in both directions.
Average roughness must range between 0.5 mm 1 µm.
The cylinder surface which comes into contact with piston rings should be machined with the plateau method.

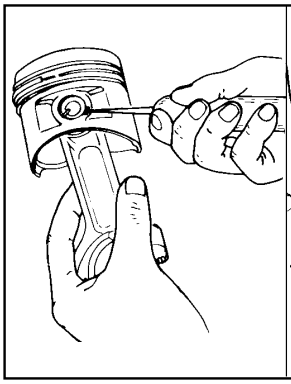

38

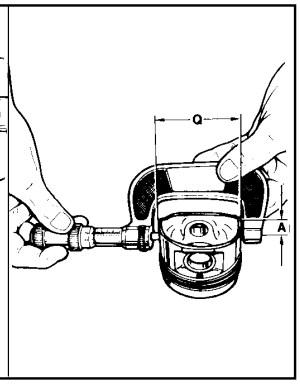

39

Piston

Being of low expansion type, the piston allows small clearances between piston and cylinder and, thus, oil consumption is reduced.
Remove circlips and piston pin.
Remove piston rings and clean grooves.
Measure diameter **Q** at the **A** distance from the skirt bottom (**A** = 12 mm).
Replace the piston and piston rings if wear on the diameter is 0.05 mm more than the minimum value given (see table in fig. 40-41).

Note: Oversize pistons of 0.50 and 1.00 mm are available.

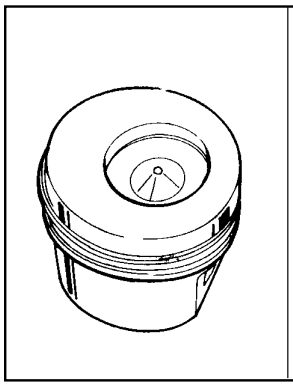

40

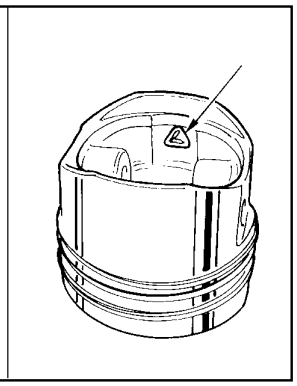

41

Dimensions of pistons and cylinders, Logo

Logo can be found inside the piston

Pistons and cylinder dimensions (mm)			
	Ø Cilinders	Ø Piston	Clearance
15 LD 225	69.00÷69,015	68,955÷68,970	0.03÷0.06
15 LD 315	78.00÷78.15	77.955÷77.970	0.03÷0.06
15 LD 350	82.00÷82.015	81.955÷81.970	0.03÷0.06
15 LD 400	82,00÷82,015	81,955÷81,970	0.03÷0.06
15 LD 440	86,00÷86,015	85,955÷85,970	0.03÷0.06

Downloaded from www.Manualslib.com manuals search engine

https://truckmanualshub.com/

Downloaded from www.Manualslib.com manuals search engine

https://truckmanualshub.com/

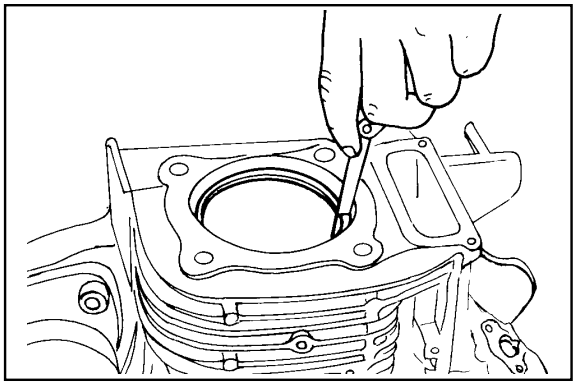

42

Piston rings, distance between the tips (mm)

Fit the piston ring into the top part of the cylinder and measure the distance between the tips.

Engine	Piston rings	Value		
		GOETZE (stamped GOE)	BUZULUK (stamped KO)	NR (stamped N)
15 LD 225	1st piston ring (nitrided)	0.20÷0.40		
	2nd piston ring	1.00÷1.50	0,30÷0,50	
	3rd piston ring, oil scraper (nitred)	0.25÷0.50		
15 LD 315	1st piston ring (chromated)	0.30÷0.50		
	2nd piston ring (torsional)	0.30÷0.50		
	3rd piston ring, oil scraper	0.25÷0.50		
15 LD 350	1st piston ring (nitrided)	0.20÷0.35		
	2nd piston ring	1.00÷1.50	0,30÷0,50	
	3rd piston ring, oil scraper (nitred)	0.25÷0.50		
15 LD 400	1st piston ring (nitrided)	0.20÷0.35		
	2nd piston ring	1.00÷1.50	0,30÷0,50	
	3rd piston ring, oil scraper (nitred)	0.25÷0.50		
15 LD 440	1st piston ring (chromated)		0.20÷0.35	
	2nd piston ring (torsional)		0.30÷0.50	
	3rd piston ring, oil scraper		0.20÷0.40	

Wear limit 1 mm - for the 2nd piston ring of 15 LD 225 and 15 LD 350 engines, the wear limit is 2.0 mm.

Downloaded from www.Manualslib.com manuals search engine

https://truckmanualshub.com/

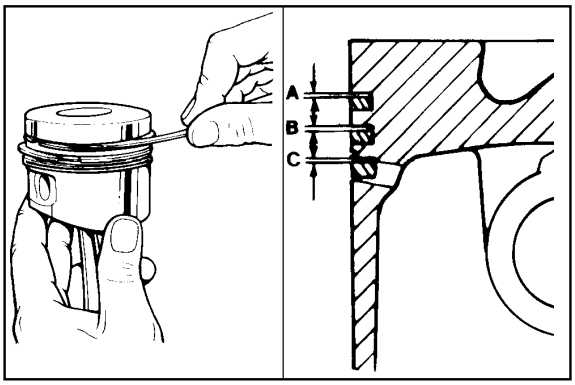

43 44

Piston rings, play between the slots (mm)

	15 LD 225	15 LD 315	15 LD 350 - 400	15 LD 440
A	0.07÷0.115	0.07÷0.10	0.035÷0.11	0,07÷0,11
B	0.04÷0.08	0.05÷0.08	0.050÷0.09	0,05÷0,09
C	0.03÷0.07	0.04÷0.075	0.030÷0.087	0,03÷0,07

Replace the piston or piston rings if the value exceeds the maximum limit.

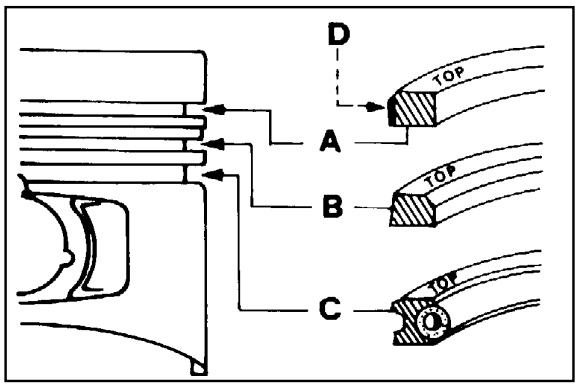

45

Piston rings, assembly order

A = 1st Chromium plated piston ring (nitrided for 225-350-400)
B = 2nd piston ring (torsional)
C = 3rd piston ring (oil scraper) (nitrided for 225-350-400)
D = Chromium plated zone

Note: If a word (top, or some other word) is written on the surface of a piston ring, mount that surface upwards.
Before inserting the piston into the cylinder, oil and turn the piston rings so that the cuts are staggered 120° to each other.
In 15 LD 350 and 15 LD 225 engines, the second piston ring is not torsional, while the first and third piston rings do not have chromium plated zones but are nitrided.

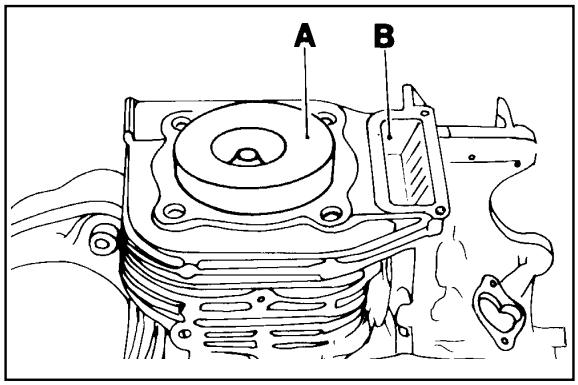

46

! Lubricate the following parts with oil before mounting: the piston pin, the piston, the cylinder and the big-end bearing

Piston - Refitting

Connect piston to connecting rod, lubricate piston pin and introduce it into the piston/connecting rod assembly by exerting pressure with your thumb.
Fit both piston pin circlips and check that they are well seated.
When introducing both the connecting rod and the piston into the cylinder make sure that the larger crown surface **A** (if compared to the combustion chamber) is on the same side as the pushrod opening **B**.

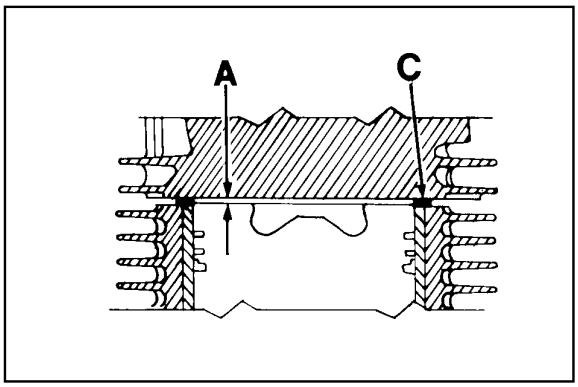

47

Clearance

A = Clearance
C = Head gasket
The thickness of gasket **C** determines the clearance **A**, which must be 0.45-0.55 mm for 15 LD 315 with injection pump serial N° 6590-259; it is 0.50-0.60 mm with injection pump serial N° 6590-281.
The clearance is 0.45-0.55 mm for 15 LD 225 in all cases.
The clearance is 0.50-0.60 mm for 15 LD 350-400-440 in all cases.
For the correct thickness of gasket **C** see table in fig. 49÷50.
There are gaskets with inner diameters oversized by 1 mm for 15 LD 315 and 15 LD 350, required if the cylinders are ground.

Downloaded from www.Manualslib.com manuals search engine

https://truckmanualshub.com/

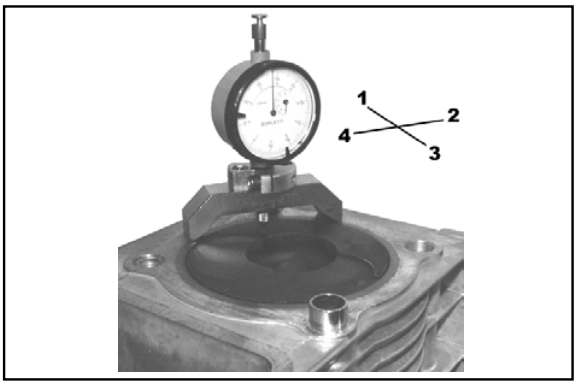

48

Piston protrusion check

To calculate the right thickness for the gasket, the protrusion between the piston and the cylinder head surface must be measured.
Use a dial indicator with base plate. Reset to zero while resting on a surface plate, then position against the cylinder head base plane as shown in the diagram, so that the dial indicator rod rests against the piston. Now take the reading.
Repeat the operation in the other three points (going crosswise) and take the readings.
Calculate the average of these four readings to get the precise measurement of the protrusion between the piston and the cylinder head base plane.
Choose the appropriate gasket according to the following table.

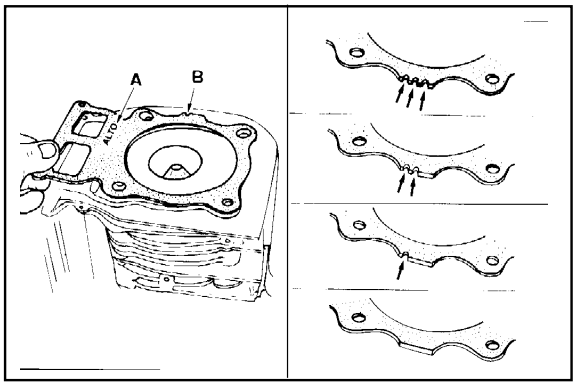

49 50

! Only remove the head gasket from its protective wrapping just before assembly.

See page 26 when tightening the cylinder head

Having chosen the required thickness, mount the gasket as shown in the figure (see letter **A**).
Find the number of notches in zone **B** to find the thickness of the gasket when the cylinder head is mounted.
The gasket thickness given in the table is the one obtained with the gasket mounted and the head torqued.

Head gasket (mm)

For 15 LD 225		
Piston protusion	Gasket Thickness	Number of notches
0,351÷0,450	0,9	0
0,450÷0,550	1	1 notch
0,550÷0,650	1,1	2 notches
0,650÷0,750	1,2	3 notches
For 15 LD 315 with injection pump P.no. 6590.259		
Piston protusion	Gasket Thickness	Number of notches
0,365÷0,450	0,9	0
0,450÷0,550	1	1 notch
0,550÷0,650	1,1	2 notches
0,650÷0,750	1,2	3 notches
For 15 LD 315 with injection pump P.no. 6590.281		
Piston protusion	Gasket Thickness	Number of notches
0,365÷0,400	0,9	0
0,400÷0,500	1	1 notch
0,500÷0,600	1,1	2 notches
0,600÷0,700	1,2	3 notches

For 15 LD 350		
Piston protusion	Gasket Thickness	Number of notches
0,365÷0,500	1	0
0,500÷0,600	1,1	1 notch
0,600÷0,700	1,2	2 notches
For 15 LD 400		
Piston protusion	Gasket Thickness	Number of notches
0,410÷0,500	1	0
0,510÷0,600	1,1	1 notch
0,610÷0,700	1,2	2 notches
For 15 LD 440		
Piston protusion	Gasket Thickness	Number of notches
0,410÷0,500	1	0
0,510÷0,600	1,1	1 notch
0,610÷0,700	1,2	2 notches

Downloaded from www.Manualslib.com manuals search engine

https://truckmanualshub.com/

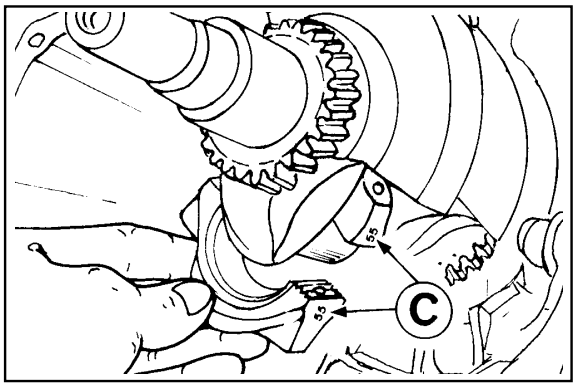

51

! When remounting the big-end bearings, remember to thoroughly clean the parts and generously lubricate them to prevent seizure when the engine is started up for the first time

Connecting rod

Demount the connecting rod and proceed with the following inspections.
The big-end cap and big-end bear the same numbers.
When remounting, mount the cap from the same side as in **C** of the figure.
Tighten the 15 LD 225 bolts to a 23 Nm torque value.
Tighten the bolts to a 30 Nm torque value for 15 LD 315-350-400-440.

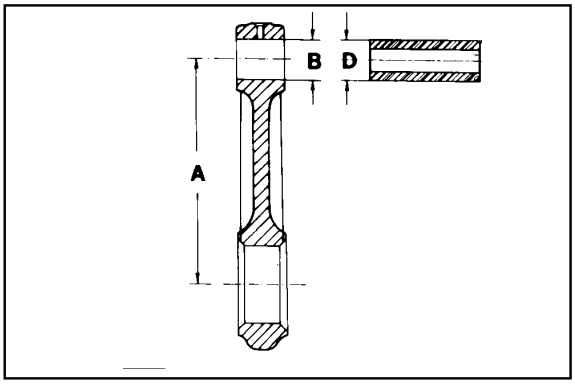

52

Connecting rod, piston pin

	15 LD 225	15 LD 315	15 LD 350	15 LD 400-440
A	99,970÷100,03	109,970÷110,03	109,97÷110,03	124,97÷125,03
B	20,010÷20,020	20,010÷20,020	22,010÷22,020	23,010÷23,020
D	19,995÷20,000	19,995÷20,000	21,995÷22,000	22,995÷23,000
(B-D)	0,010÷0,025	0,010÷0,025	0,010÷0,025	0,010÷0,025
(B-D) limite	0,05	0,05	0,05	0,05

Note: The connecting rod has no insert bearings. See fig. 62 for connecting rod big end diameter.

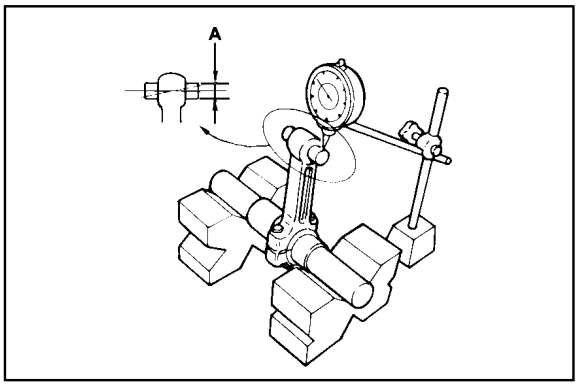

53

Connecting rod alignement

Use a dial gauge as shown in the figure.
Check that axes are aligned using the piston pin; axial misalignment **A** = 0.015; limit 0.03 mm.

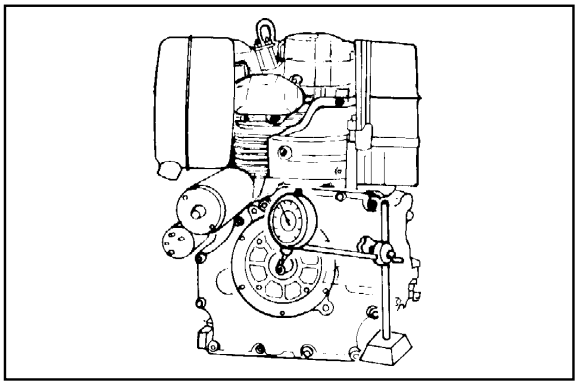

54

Crankshaft end play

Secure the engine to a metal base or table. Use a dial indicator with column and magnetic base plate. Place the stylus on the crankshaft. Move the driving shaft back and forth on the flywheel side.
End play should be 0.05 - 0.25 mm; it is not adjustable.

Downloaded from www.Manualslib.com manuals search engine

https://truckmanualshub.com/

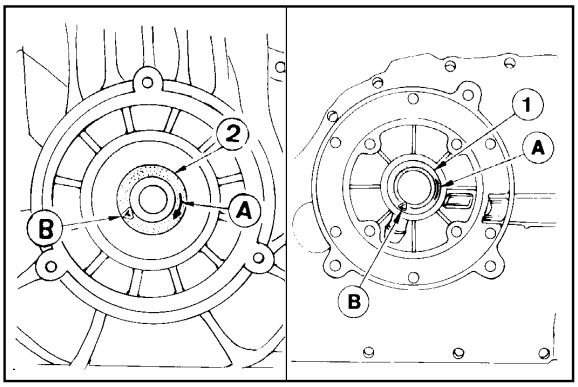

55 56

! A warped oil retainer may allow the introduction of air into the engine thus causing crankcase ventilation problems.
Use genuine oil retainers with the LOMBARDINI logo (see **B**).

Drive shaft oil seals

Oil retainer **1** is located in the gear cover on the timing side while retainer **2** is located in the crankcase on the flywheel side.
Arrows a point to the crankshaft direction of rotation.
Press them into their seats by exerting uniform pressure throughout their front surface.

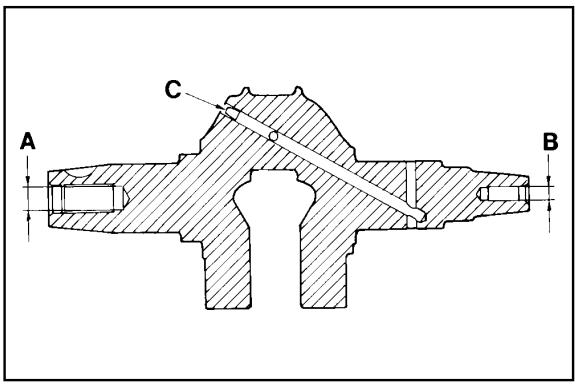

57

Drive shaft, lubrication ducts, bore thread on flywheel side and p.t.o.

Remove plug **C** and check that the lubrication duct is perfectly clean.
Close with a new plug checking for proper sealing.
A = M14x1.5 (turn counterclockwise)
B = M8x1.25 (with standard shaft)

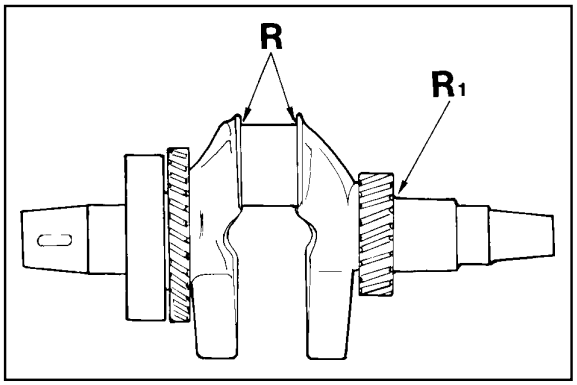

58

! When the crankpin and main journal are ground, values **R** and $\mathbf{R_1}$ must be obtained again to prevent the drive shaft from breaking.

Drive shaft, connection radius

Radius **R** that joins the crankpin to the supports is 2.8-3.2 mm.
Radius $\mathbf{R_1}$ that joins the main journal to the timing gear is 0.5 mm.

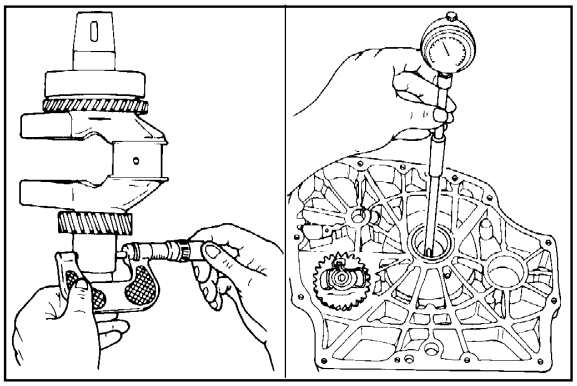

59 60

Drive shaft, main journal/crankpin diameter, gear cover bearing inside diameter on timing side

Use an outside micrometer for the main journal and an inside bore gauge for the gear cover bearing on the timing side.

Downloaded from www.Manualslib.com manuals search engine

https://truckmanualshub.com/

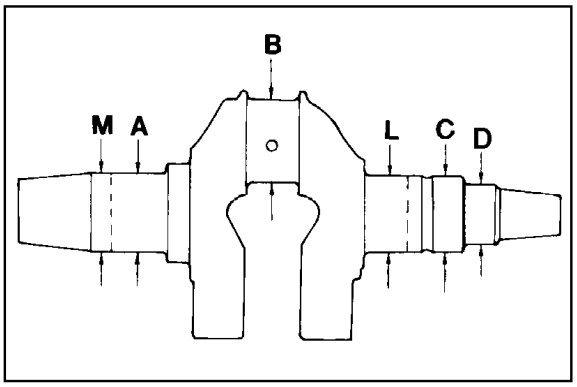

61

Crankshaft - journal diameter (mm)

	15 LD 225	15 LD 315-350	15 LD 400-440
M oil seal working area	34,959÷34,975	34,959÷34,975	39,959÷39,975
A	35,002÷35,013	35,002÷35,013	40,002÷40,013
B	33,984÷34,000	37,984÷38,000	39,984÷40,000
L	35,240÷35,256	35,240÷35,256	40,240÷40,256
C	34,984÷35,000	34,984÷35,000	39,984÷40,000
D oil seal working area	27,967÷28,000	27,967÷28,000	29,967÷30,000

The undersizes for the crankpin and main journal are 0.25, 0.50 and 1 mm.

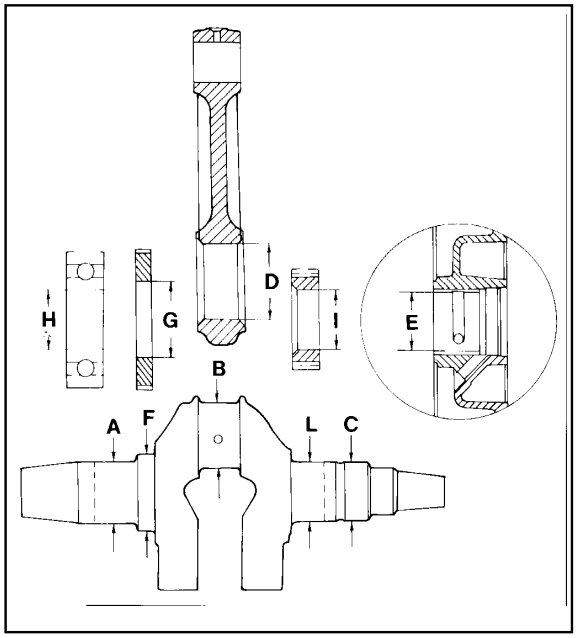

62

! The gears must be mounted with the right tools so that they can be correctly timed.
The gears should not therefore be demounted.
Only the complete shaft is available as a spare.

Drive shaft - Main bearing inside diameter, connecting rod big end, crankshaft bearing and timing control gear and balancer - Clearance and interference between the corresponding journals

Dimensions (mm) (see also fig. 61)

	15 LD 225	15 LD 315-350	15 LD 400-440
D	34,030÷34,046	38,030÷38,046	40,030÷40,046
E	35,030÷35,050	35,030÷35,050	40,030÷40,050
G	45,000÷45,016	45,000÷45,016	53,000÷53,019
H	34,988÷35,000	34,988÷35,000 35,184÷35,200	39,988÷40,000
I	35,200÷35,216	35,200÷35,216	40,200÷40,216

Clearance (mm)

	15 LD 225	15 LD 315-350	15 LD 400-440
(D-B)	0,03÷0,062	0,030÷0,062	0,0300,062
(D-B) limite	0,120	0,120	0,120
(E-C)	0,03÷0,066	0,030÷0,066	0,0300,066

Interference (mm)

	15 LD 225	15 LD 315-350	15 LD 400-440
(A-H)	0,002÷0,025	0,002÷0,024	0,002÷0,024
(F-G)	0,015÷0,056	0,015÷0,056	0,015÷0,056
(L-I)	0,024÷0,056	0,024÷0,056	0,024÷0,056

Availability of bearings

Main bearings are available at their nominal value or undersized 0.25 , 0.50 and 1.0 mm.
Connecting rods are available with big end at nominal value or undersized 0.25 and 0.50 mm.

Downloaded from www.Manualslib.com manuals search engine

https://truckmanualshub.com/

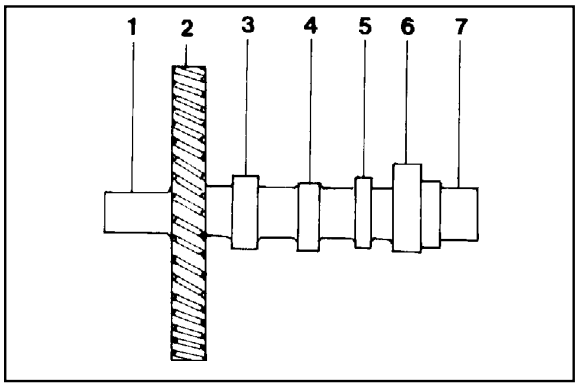

63

Camshaft

Components:
1 Journal, gear cover on timing side
2 Gear
3 Exhaust lobe
4 Injection lobe
5 Fuel pump eccentric
6 Intake lobe
7 Journal, crankcase side

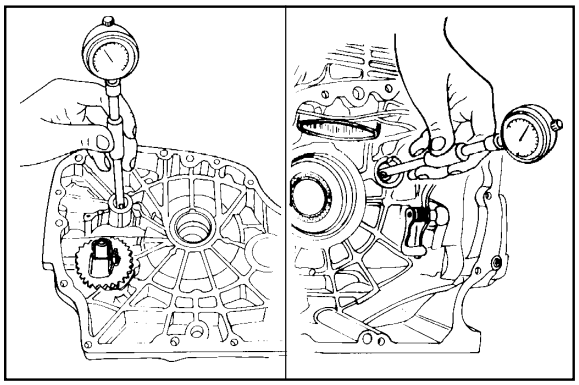

64 65

Camshaft journals and bore

Use a comparator for interiors

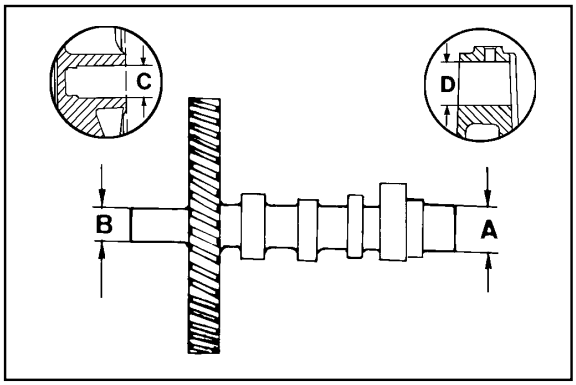

66

Dimensions of camshaft journals and bore (mm)

	15 LD 225	15 LD 315-350	15 LD 400-440
A	19,459÷19,474	21,959÷21,980	17,966÷17,984
B	15,957÷15,984	15,957÷15,984	
C	16,000÷16,018	16,000÷16,018	
D	19,500÷19,521	22,000÷22,021	18,00÷18,018
(D-A)	0,026÷0,062	0,020÷0,062	0,016÷0,052
(D-A) limite	0,120	0,120	0,100
(C-B)	0,016÷0,061	0,016÷0,061	
(C-B) limite	0,120	0,120	

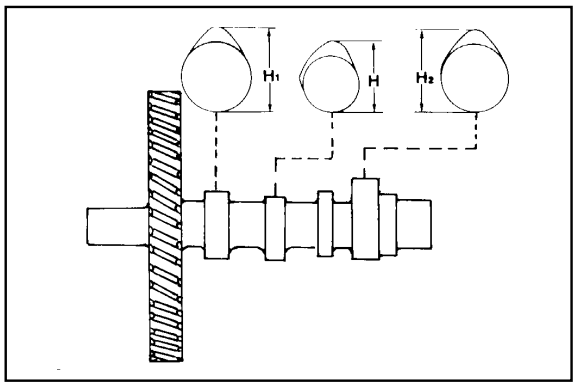

67

Cam height (mm)

	15 LD 225	15 LD 315-350	15 LD 400-440
H	30,25÷30,30	30,25÷30,30	32,00÷32,05
H_1	35,75÷35,80	35,75÷35,80	36,10÷36,15
H_2	33,65÷33,70	35,05÷35,10	35,10÷35,15

Note: Replace camshaft if cam wear exceeds the minimum given value of H, H1 and H2 by 0.1 mm.

Downloaded from www.Manualslib.com manuals search engine

https://truckmanualshub.com/

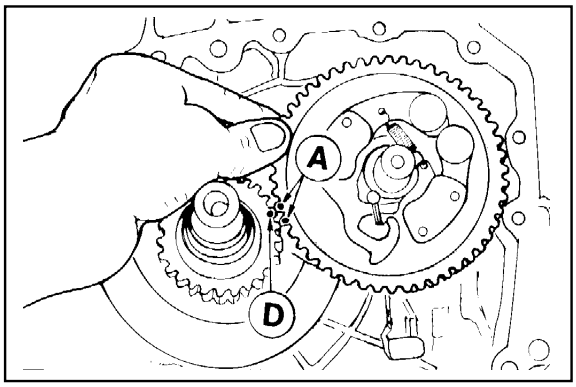

68

Camshaft timing

Fit camshaft by aligning marks' **A** with mark **D** on the crankshaft.

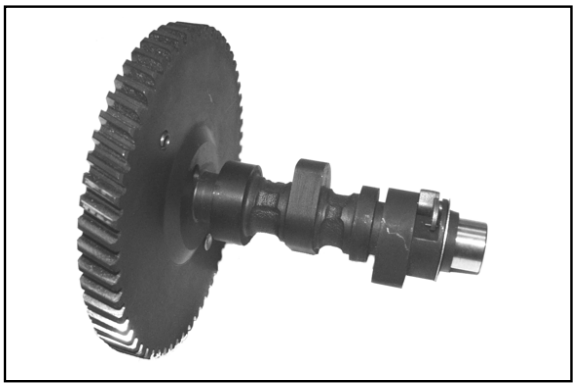

68a

Camshaft – Antireverse system 15 LD 400-440

it consists of a device on the camshaft which lifts the intake valve in case of a startup in reverse direction with respect to normal rotation.

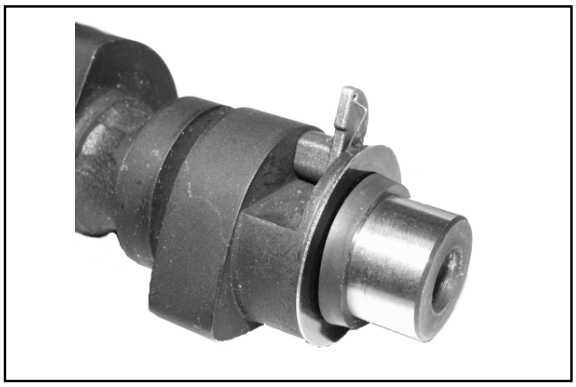

68b

During normal operation, the tappet overcomes the spring resistance while passing on the system and decompression does not operate.

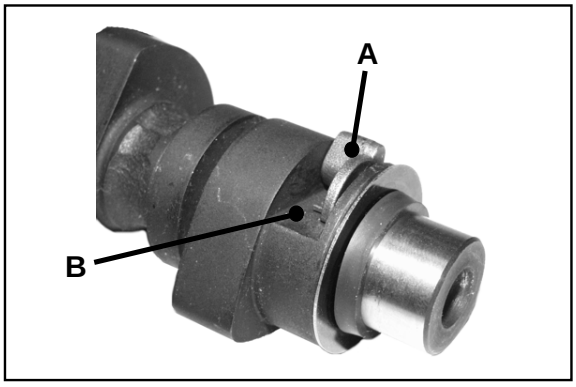

68c

In case of a startup in reverse direction, the antireverse system lifts the valve as the tappet passes by. Startup is thus inhibited.

Note: Check the antireverse system for wear, and make sure it is kept in the rest position by the return spring, as shown in picture 68c. Verify that in this condition the clearance between weight A and surface B is 1 mm.

Downloaded from www.Manualslib.com manuals search engine

https://truckmanualshub.com/

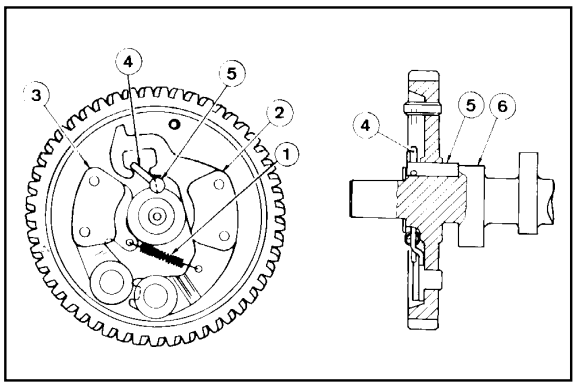

69 70

Automatic decompression

With the engine at a standstill and up to a rate of about 300 RPM, spring **1**, acting on weights **2** and **3** via lever **4** and pin **5**, keeps the exhaust valve open during the compression phase also.
Once the engine exceeds the 300 RPM rate, weights **1** and **2** keep pin **5** in the hold position owing to the action of the centrifugal force. In this position, cam **6** can regularly control the exhaust valve thanks to a ridge on the pin itself.
Since there is then no compression in the cylinder, the engine will easily start when the self-winder is used.

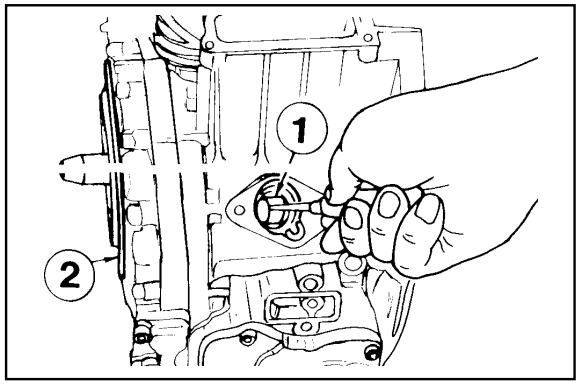

71

Camshaft end play

Perform this check before fitting cylinder head and tappets including the injection tappets.
Temporarily fit camshaft **1** complete with washer; tighten gear cover **2** to 25 Nm.
Check end play by moving the camshaft back and forth using a suitable tool; the end play value is 0.10÷0.25 mm and is not adjustable.

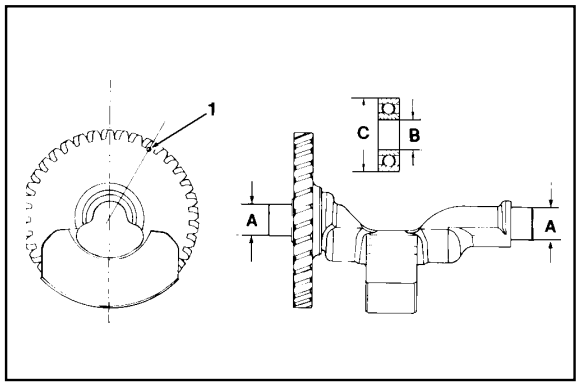

72

Dynamic balancer (on request)

The dynamic balancer is supported by two identical ball bearings housed in the crankcase and in the gear cover on the timing side respectively.
1 is the reference point for timing with the cranksaft gear (see below).

Dimensions (mm):
A = 14.983-14.994
B = 14.99-15.00
C = 34.89-35.00
D = 34.958-34.983 (bearing housing diameter on crankcase and gear cover on timing side).

Downloaded from www.Manualslib.com manuals search engine

https://truckmanualshub.com/

NOTE

Downloaded from www.Manualslib.com manuals search engine

https://truckmanualshub.com/

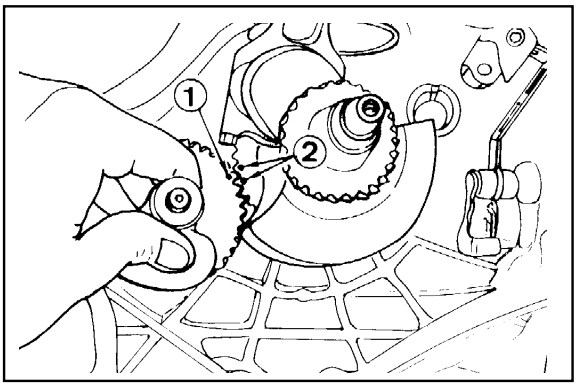

73

Dinamic balancer timing

Position crankshaft as shown in the figure.
Introduce the dynamic balancer so that timing mark **1** engages between teeth **2** of the crankshaft gear.

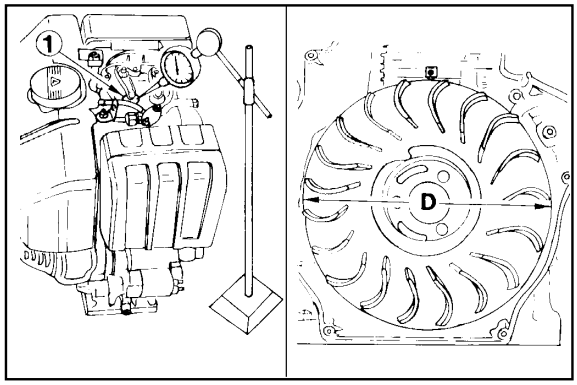

74 75

Valve timing check

Remove the tank and conveyor to access the flywheel.
Carry out the inspections on the drive shaft. The values given are measured on the circumference of the flywheel.
Adjust the valve play as indicated on the next page.
Reset the comparator on the cap of intake valve **1**. Turn the drive shaft in the spinning direction and find α (point at which the intake valve starts to open in relation to top dead center **A**) and β (point at which the intake valve shuts after bottom dead center **B**) see fig. 77-78.
Proceed in a similar way with the exhaust valve, checking γ (point at which the exhaust valve opens) and δ (point at which the exhaust valve shuts).

Downloaded from www.Manualslib.com manuals search engine

https://truckmanualshub.com/

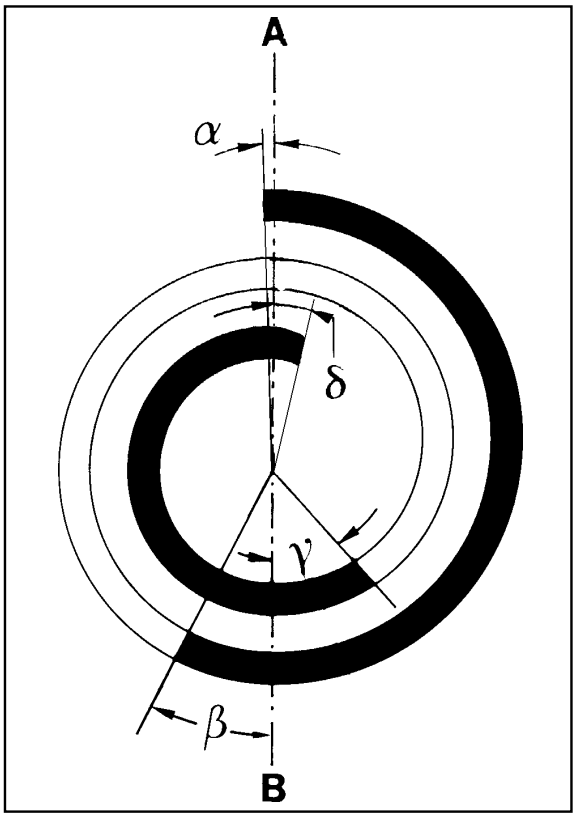

77

Timing angles for operation (0.15 valve play).

For 15 LD 225

α = 6° before **A** corresponding to 12 mm
β = 22° after **B** corresponding to 44 mm
γ = 58° before **B** corresponding to 116 mm
δ = 10° after **A** corresponding to 20 mm.

Values measured on the circumference of the flywheel D = 230 (one degree corresponds to 2 mm).

For 15 LD 315 - 350

α = 10° before **A** corresponding to 20.09 mm
β = 42° after **B** corresponding to 87.78 mm
γ = 58° before **B** corresponding to 121.22 mm
δ = 10° after **A** corresponding to 20.9 mm.

Values measured on the circumference of the flywheel D = 240 (one degree corresponds to 2.09 mm).

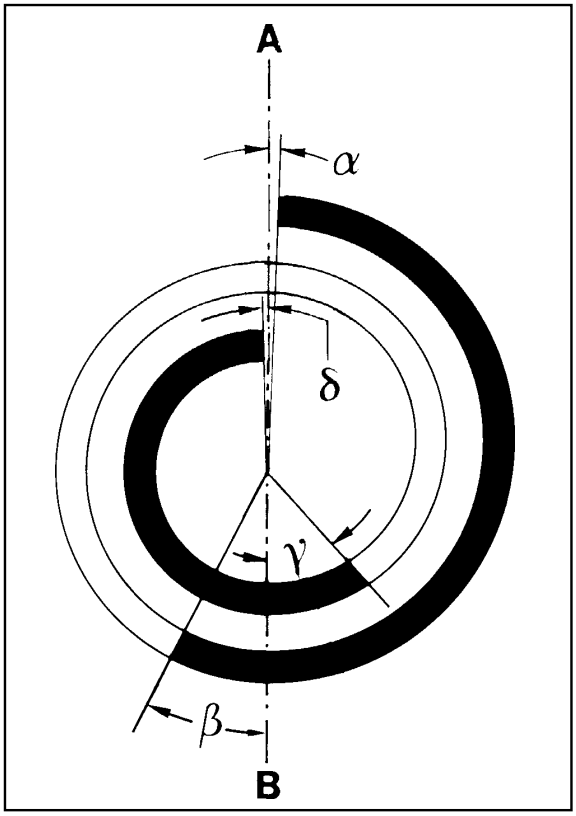

78

Timing angles for inspection (0.65-0.70 valve play).

For 15 LD 225

α = 7° after **A** corresponding to 14 mm
β = 9° after **B** corresponding to 18 mm
γ = 45° before **B** corresponding to 90 mm
δ = 3° before **A** corresponding to 6 mm.

Values measured on the circumference of the flywheel D = 230 (one degree corresponds to 2 mm).

For 15 LD 315 - 350

α = 1° after **A** corresponding to 2.09 mm
β = 31° after **B** corresponding to 64.79 mm
γ = 45° before **B** corresponding to 94.05 mm
δ = 3° before **A** corresponding to 6.27 mm.

Values measured on the circumference of the flywheel D = 240 (one degree corresponds to 2.09 mm).

Downloaded from www.Manualslib.com manuals search engine

https://truckmanualshub.com/

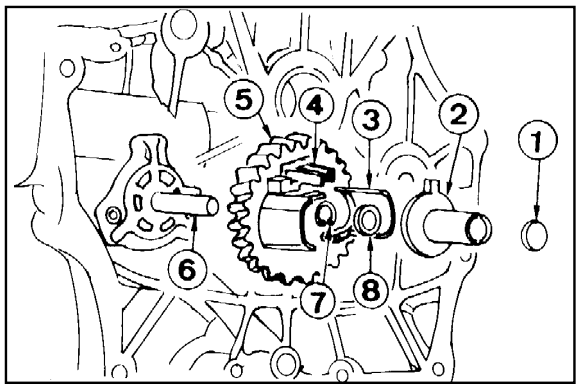

79

Speed governor

Components:
1 Spool spacer
2 Spool
3 Weights
4 Spool guide
5 Gear
6 Oil pump driving shaft
7 Circlip
8 Thrust ring

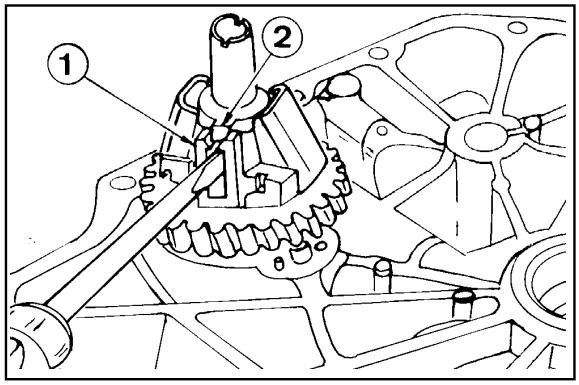

80

Speed governor removal

Spool guide **1** has retainers one end which prevent spool **2** from slipping out.
To remove the speed governor use a suitable tool to slightly widen the two teeth.

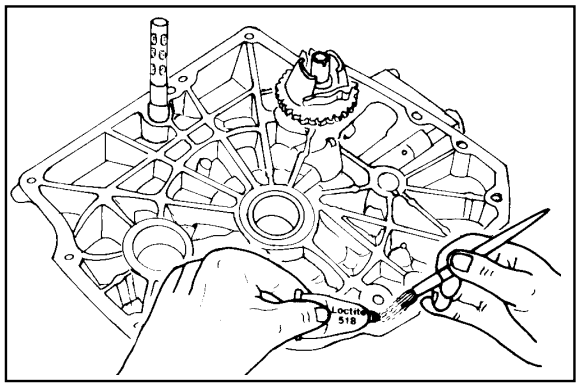

81

Refitting gear cover on timing side

Proper sealing between gear cover and crankcase is ensured by the liquid sealant "Loctite 5205". Carefully clean the two sealing surfaces and spread the sealant uniformly.
Tighten screws to 23 Nm.

! Wait **3** hours before starting the engine.

Downloaded from www.Manualslib.com manuals search engine

https://truckmanualshub.com/

The engine can be damaged if allowed to operate with insufficient oil. It is also dangerous to add too much oil because its combustion may lead to a sharp increase in the rotation speed.
Use suitable oil in order to protect the engine.
Nothing more than lubrication oil can influence the performances and life of an engine.
Use of an inferior quality oil or failure to regularly change the oil will increase the risk of piston seizure, will cause the piston rings to jam and will lead to rapid wear on the cylinder liner, the bearings and all other moving parts. Engine life will also be notably reduced.
The oil viscosity must suit the ambient temperature in which the engine operates.

Old engine oil can cause skin cancer if repeatedly left in contact with the skin and for long periods of time. Wear protective gloves to avoid touching used oil. If contact with the oil is unavoidable, you are advised to wash your hands with soap and water as soon as possible. Dispose of old oil in the correct way as it is highly polluting.

15 LD 225 - 315 - 350 LUBRICATION SYSTEM AND BREATHER RECIRCULATION SYSTEM

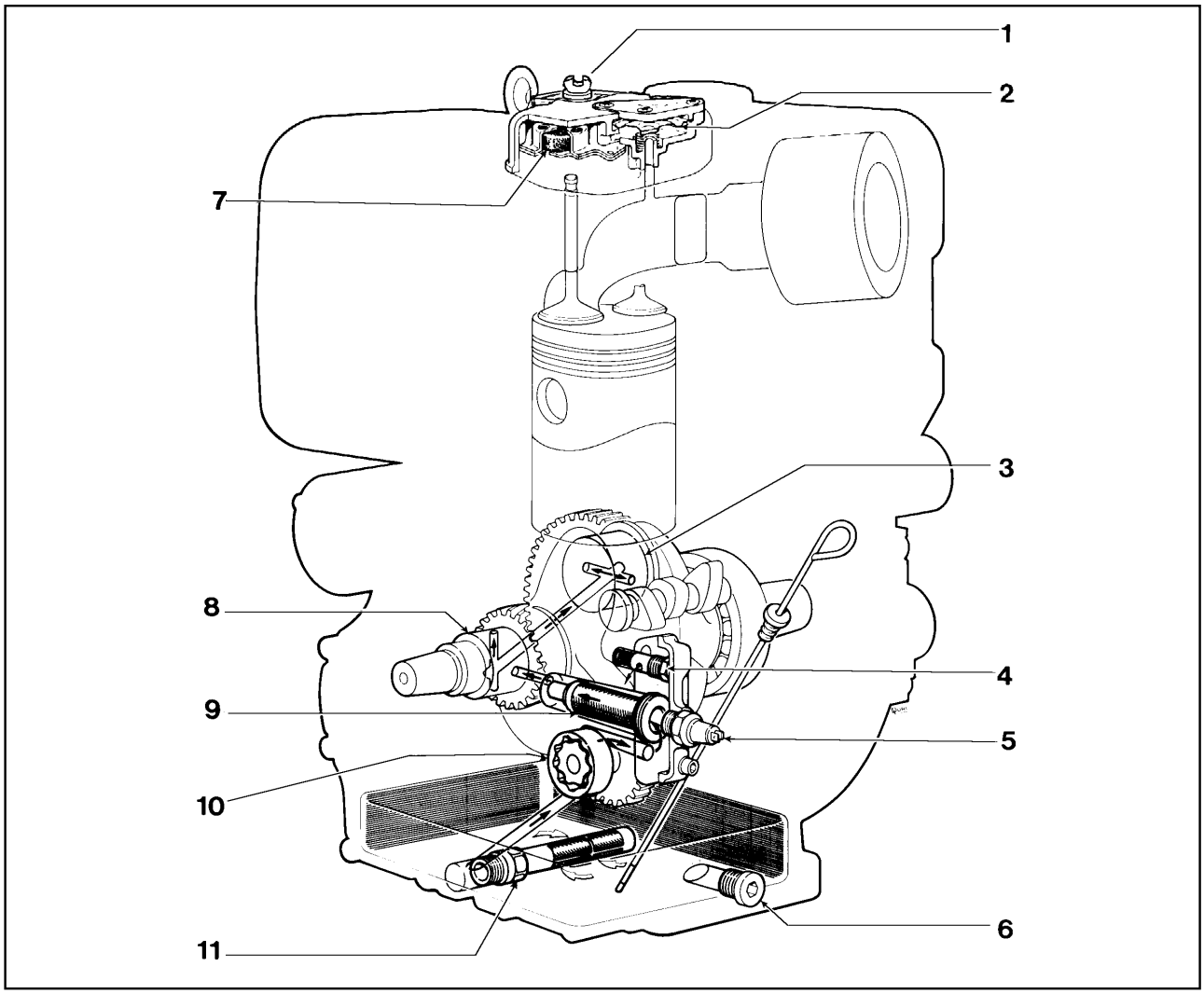

82

Components:

1) Oil fill cap
2) Safety valve
3) Rod journal
4) Pressure control valve
5) Pressure switch
6) Oil drain plug
7) Metal filter element
8) Main journal
9) Oil filter
10) Oil pump
11) Oil intake filter

Downloaded from www.Manualslib.com manuals search engine

https://truckmanualshub.com/

15 LD 400-440 LUBRICATION SYSTEM AND BREATHER RECIRCULATION SYSTEM

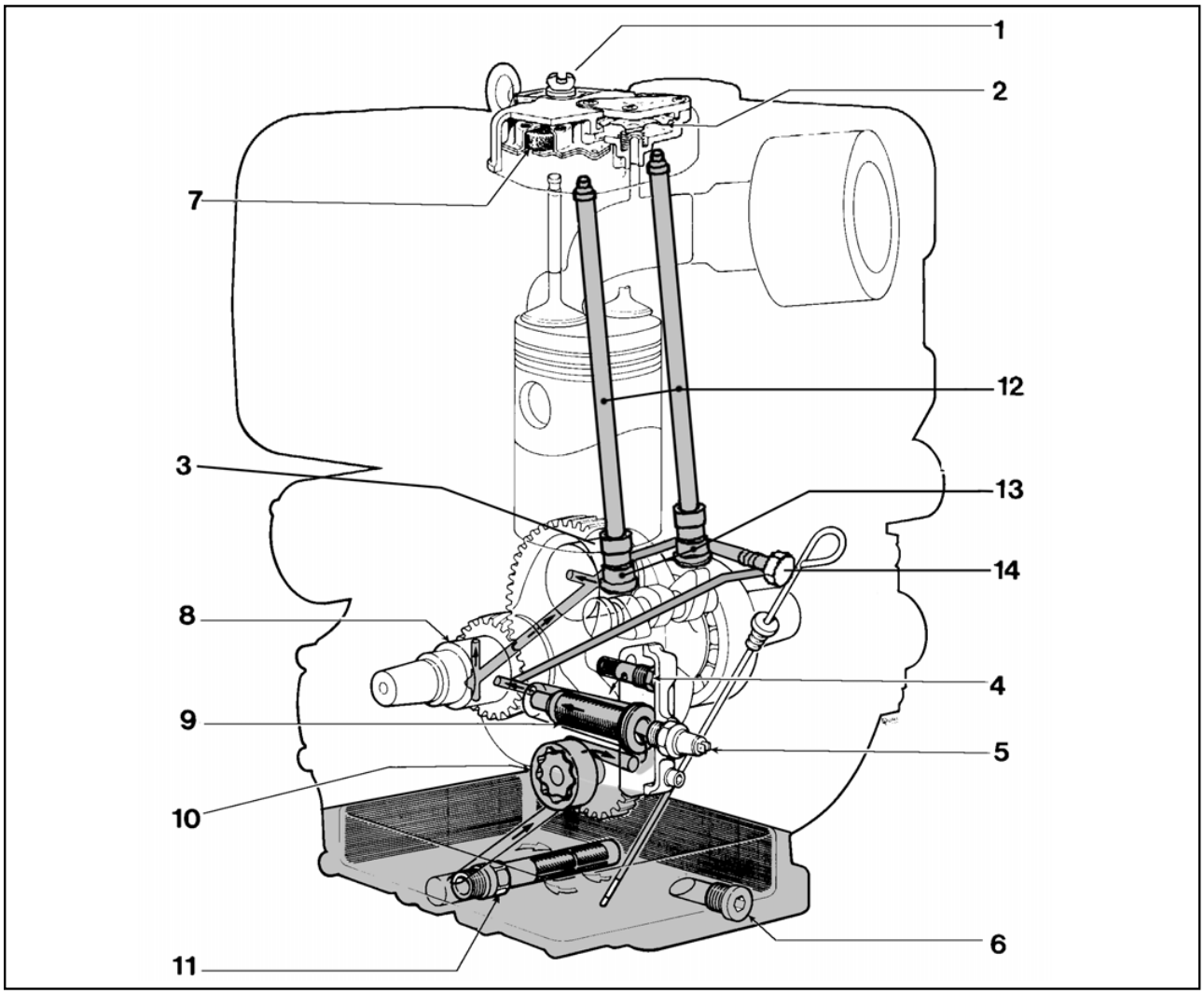

83

Components:

1) Oil fill cap
2) Safety valve
3) Rod journal
4) Pressure control valve
5) Pressure switch
6) Oil drain plug
7) Metal filter element
8) Main journal
9) Oil filter
10) Oil pump
11) Oil intake filter
12) Pushrods
13) Hydraulic tappets
14) Calibrated union

Downloaded from www.Manualslib.com manuals search engine

https://truckmanualshub.com/

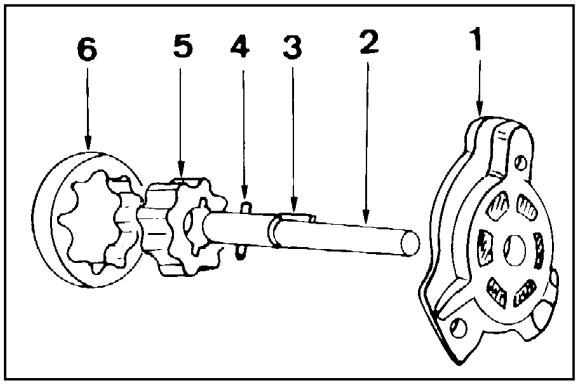

84

Oil pump

Components:

1 Cover
2 Shaft
3 Key
4 Pin
5 Internal rotor
6 External rotor

Oil pump delivery at 3000 rpm is 5.8 l/min.

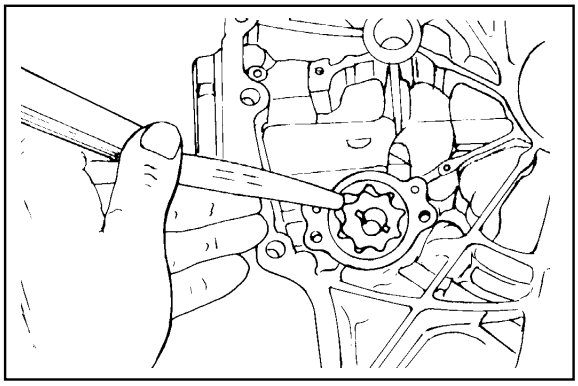

85

Oil pump - Clearance between rotors

Measure clearance as shown in the figure; the max. value is 0.13 mm; wear limit 0.25 mm.

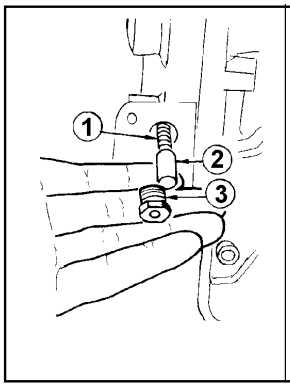

86

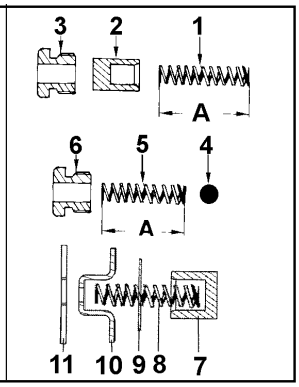

87

Oil pressure regulation valve

Components for 15 LD 315 and 15 LD 350:
1 Spring **2** Valve **3** Plug
Free length **A** of the spring is 27.50-27.75 mm.

Components for 15 LD 225:
4 Ball **5** Spring **6** Plug
Free length **A** of the spring is 23.50-24.50 mm.

Components for 15 LD 400-440:
7 Plunger **8** Spring **9** Washer
10 Cup **11** Snap ring
Free length **A** of the spring is 25,50÷25,75 mm.

Note: If **A** is 1 mm less than the given value, replace the valve.
Valve setting is not adjustable.

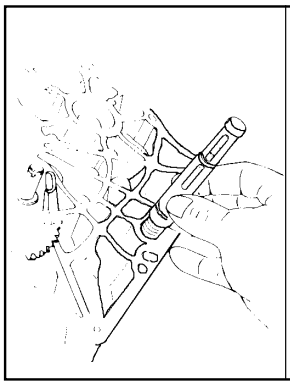

88

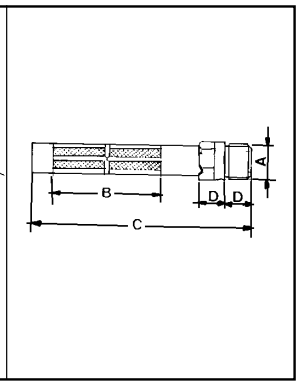

89

Internal strainer

The oil pick-up strainer is made of nylon 66. Its degree of filtration is 500 µm.

Dimensions (mm):
A = M16x1.5
B = 64
C = 102
D = 12

Downloaded from www.Manualslib.com manuals search engine

https://truckmanualshub.com/

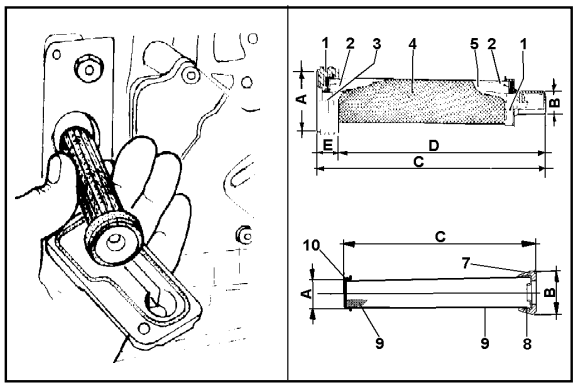

90 91

Oil filter

Filter components: **15 LD 315/350**

1 Seal
2 Adhesive
3 End cap
4 Filtering material
5 Plate

Dimension mm: **A** = 26.5 **B** = 18 **C** = 88.5 **D** = 67.5 **E** = 8.5

Characteristics:
Useful filtering area = 75 cm^2
Degree of filtration = 50 µm.
The by-pass valve is set at 0.6-0.8 bar.

Filter components: **15 LD 225**

7 Rubber pad
8 Upper cover
9 Filter element
10 Lower cover

Dimension mm: **A** = 19.0-19.3 **B** = 12.5 **C** = 83.0-83.5

Characteristics:
Useful filtering area ≥ 75 cm^2
Degree of filtration = 40-60 µm.

See page 18 for the replacement frequencies.

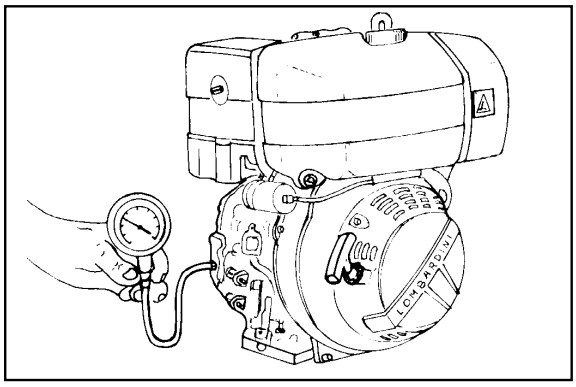

92

Oil pressure check

When assembly operations are completed fill engine with oil and fuel; connect a 10 bar pressure gauge to the oil filter fitting.
Start the engine and check pressure as a function of the oil temperature (see below).

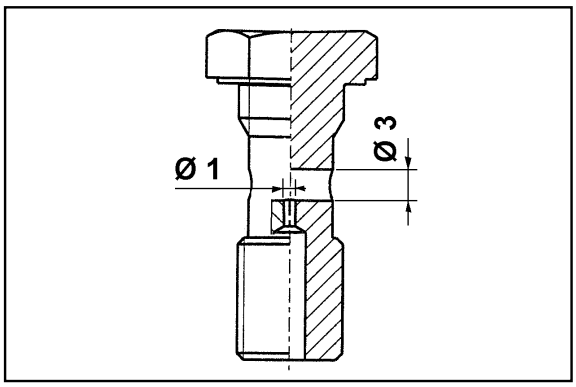

93

Calibrated pipe for lubrication of hydraulic tappets

The pipe is fitted to the hydraulic tappets oil line (see fig. 83, detail 11).
If the calibrated hole is clogged, the tappets are not sufficiently lubricated, valve clearance is therefore increased and the engine may be noisier.
If the diameter of the calibrated pipe is larger than the ones given in picture 93, the pressure exerted by the hydraulic tappets may cause the valves to remain open even during the compression phase.

Downloaded from www.Manualslib.com manuals search engine

https://truckmanualshub.com/

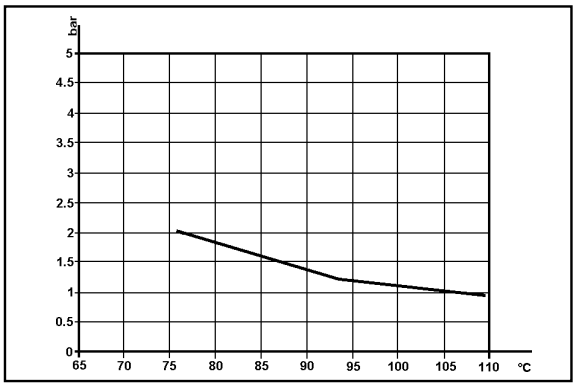

94

Oil pressure curve at idle speed

The curve is obtained at the oil filter port with engine running at a constant speed of 1200 r.p.m. in no-load conditions; pressure is given in bar and temperature in centigrades.
The curve represents the minimum pressure value while the maximum value is 5 bar.

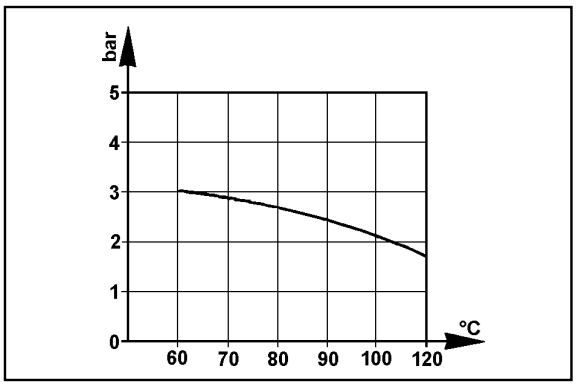

95

Oil pressure curve at full speed

The curve is obtained at the oil filter port with engine running at 3000 r.p.m. at the **N** power; pressure is given in bar and temperature in centigrades.
The curve represents the minimum pressure value while the maximum value is 5 bar.

Note: After the running-in period the lube max. temperature should be less than the room temperature +95°C.

Downloaded from www.Manualslib.com manuals search engine

https://truckmanualshub.com/

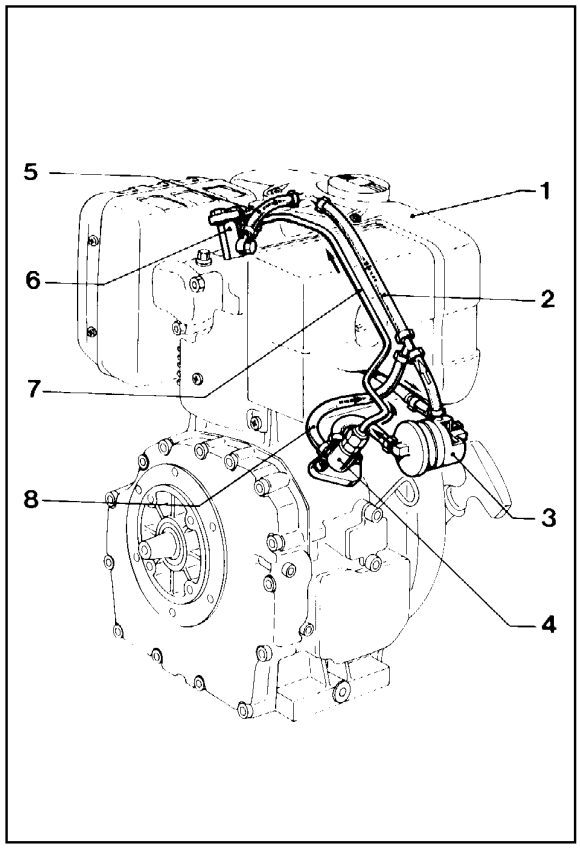

96

Fuelling/injection circuit for 15 LD 315-350-400-440

Components:

1 Tank
2 Return tube
3 Fuel filter
4 Injection pump
5 Injector leak-off line
6 Injector
7 High pressure line
8 Return tube

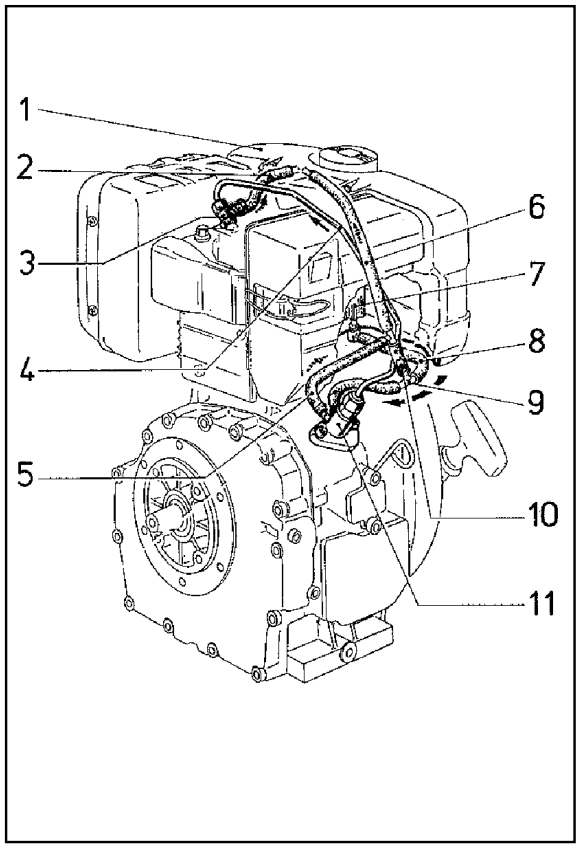

97

Fuelling/injection circuit for 15LD 225

1 Tank
2 Injector leak-off line
3 Injector
4 High pressure line
5 Return tube
6 Return tube
7 Diesel fuel filter
8 Fuel pipe
9 T-connector
10 Reduction
11 Injection pump

Downloaded from www.Manualslib.com manuals search engine

https://truckmanualshub.com/

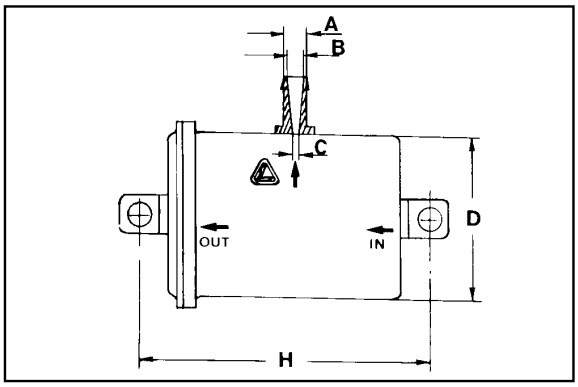

98

Fuel filter 15 LD 225-315-350-400-440

A = 7.3
B = 3.8
C = 1.5
D = 42
H = 75

Characteristics:
Filtering area ≥ 390 cm²
Filtration level ≤ 7 µm
See page 18 for fuel filter replacement

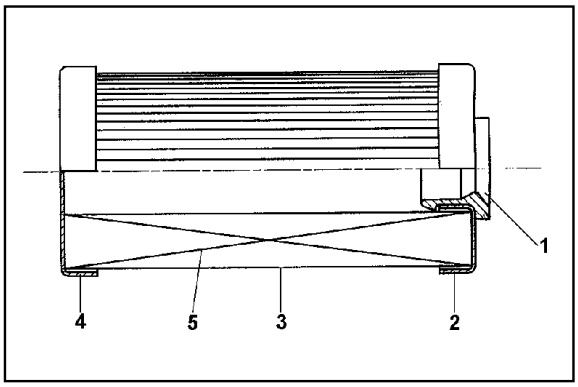

99

Fuel filter 15LD 225 (version with internal filter in tank)

1 Rubber retention ring
2 PRV cover
3 SCP radial unit
4 PRV cover
5 Segment

Characteristics:
Filtering area 215 cm²
Filtration level 7 µm
See page 18 for fuel filter replacement

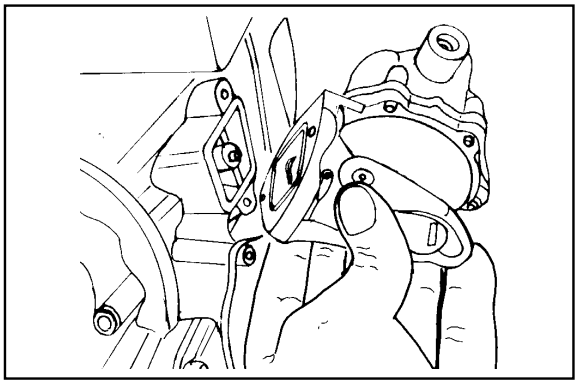

100

Feed pump (optional)

A feed pump is usually requested when the tank is not supplied in conjunction with the engine.
The pump is the diaphragm type and is operated by a camshaft eccentric through a drive rod.
Tighten screws to 15 Nm.

Characteristics: At 2000 rpm of the camshaft, the minimum delivery is 40 l/h, while the automatic adjustment pressure is 0.5 ÷ 0.7 bars.

Downloaded from www.Manualslib.com manuals search engine

https://truckmanualshub.com/

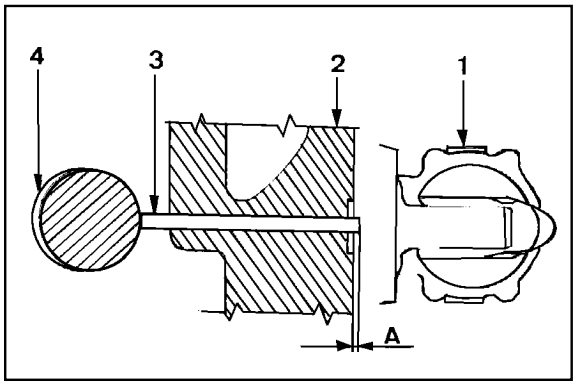

101

Fuel pump, drive rod protrusion

Components:

1 Fuel pump
2 Crankcase
3 Drive rod
4 Eccentric

Check while eccentric **4** is at rest (lowest point of travel).
Protrusion **A** of drive rod 3 is 1.5-1.9 mm; it is not adjustable.

Drive rod length = 58-58.2 mm for 15 LD 225
Drive rod length = 65.8-66.0 mm for 15 LD 315/350
Drive rod length = 61,4÷61,6 mm for 15 LD 400/440

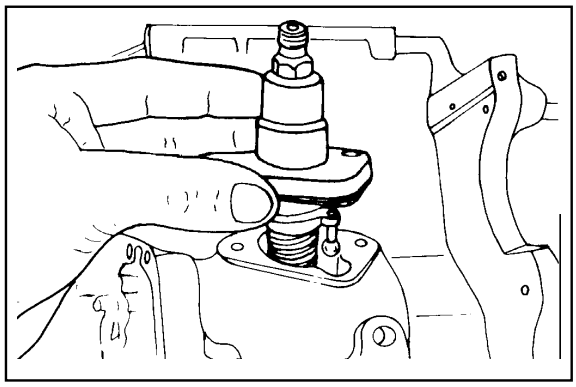

102

Injection pump

This is of the simplified QLC type; it is housed in the crankcase and is controlled by the camshaft via tappets.

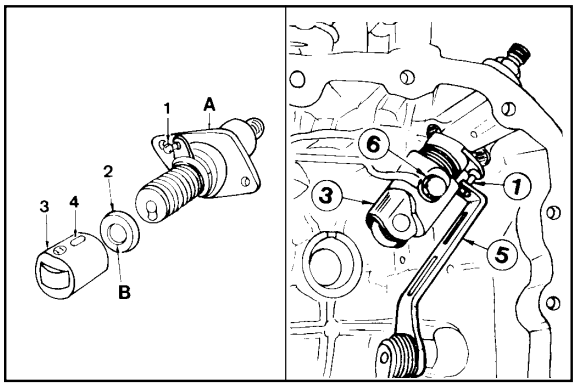

103 104

Injection pump fitting in the crankcase

Fit tappets **3** so that screw **6** is introduced into guide **4**.
Tighten screw **6** to 9 Nm and check that the tappet is free to move downwards.
Fit pad **2** into the tappet so that recess **B** points downwards as shown in the figure.
Fit the injection pump into the crankcase complete with gasket (**C**) position8ing flow control **1** in the fork of lever **5** which should be in the maximum flow position.

! When removing the injection pump from its housing make sure that spacer **2** is not dropped into the oil sump; injection pump operation will be impaired uf the spacer is not installed.

Downloaded from www.Manualslib.com manuals search engine

https://truckmanualshub.com/

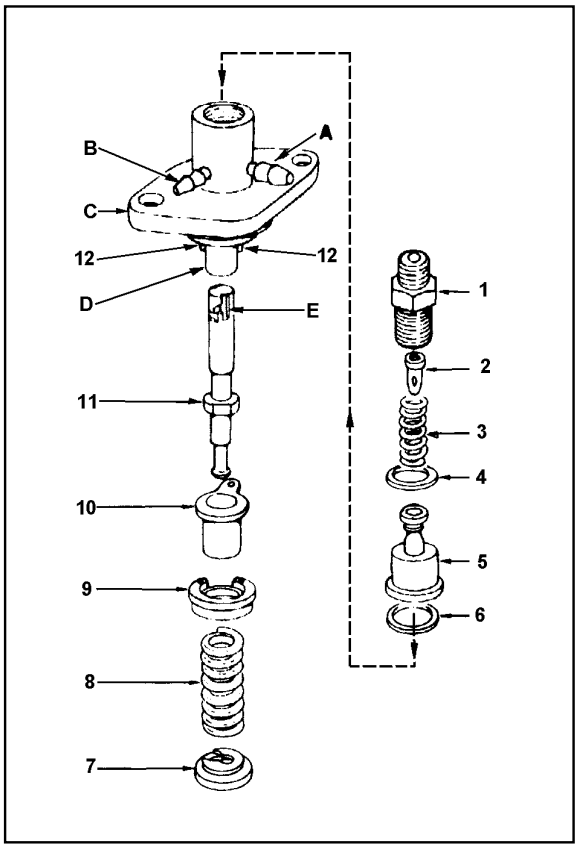

105

Injection pump components and disassembly

1 Delivery union
2 Filler
3 Spring
4 Gasket
5 Valve
6 Gasket
7 Spring retainer
8 Spring
9 Spring plate
10 Rack
11 Plunger
12 Pin

A = Fuel outlet union
B = Fuel intake union
C = Fastening
D = Barrel
E = RH helix

Demount in compliance with the numeric order.
Plate **9** is held firm by pins **12**. Lever up by inserting a tool between the plate and the body of the pump.
The volume shifted by delivery valve **5** is 15 mm³ in the pump of 15 LD 315-350 and 25 mm³ in the pump of 15 LD 225 is 21 mm³ in the pump of 15 LD 400/440

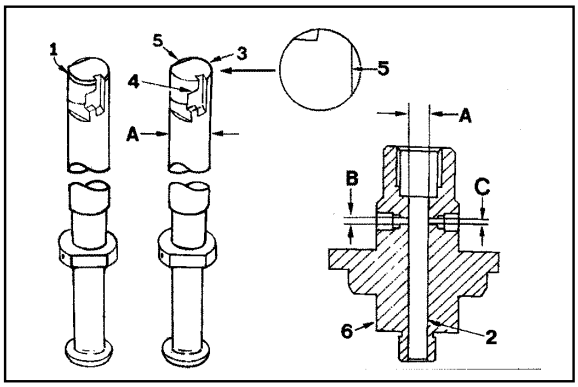

106

Injection pump, body, plunger and delivery valve

Components:
1 Delivery valve
2 Barrel
3 Plunger
4 Right helix
5 Delay notch
6 Pump body
7 Collar

Dimensions mm:
A = 5.50 (nominal diam.) 225-315-350
A = 7,00 (nominal diam.) 400-440
A = 6,00 (nominal diam.) 315-350 EPA
B = 2.00 / 2.03
C = 1.50 /1.53

Note: The injection pump installed in engines for small vehicles, soundproof generating sets, EPA and 15 LD 400-440 engines, are characterised by the inclusion of a collar **1** which contributes to noise-reduction.

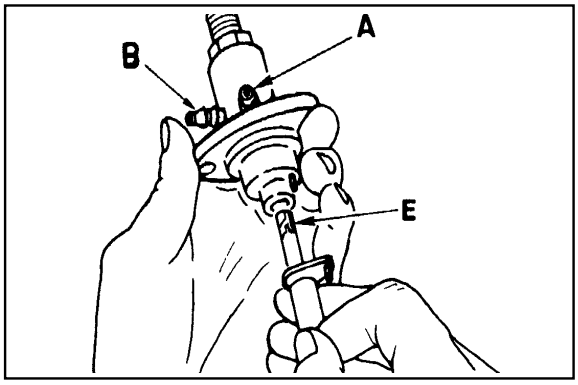

107

Injection pump refitting

The plunger is fitted with helix **E** facing towards the outlet union **A**; if it is mistakenly fitted with the helix facing the intake coupling **B** the injection pump no longer operates (there is no danger of engine runaway); complete refitting following fig. 107.

Downloaded from www.Manualslib.com manuals search engine

https://truckmanualshub.com/

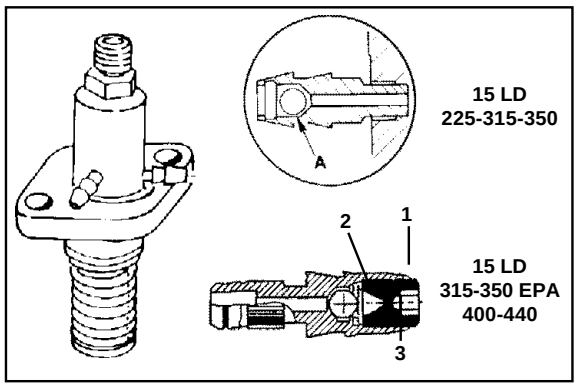

108

Injection pump non-return valve

The exhaust union has a non-return valve **A**. The purpose of this valve is to improve the injection phase by expelling the air in the fuel and preventing it from being sucked in by the pump during the intake phase. This also ensures that the engine stops promptly as soon as the stopping device is activated by means of the solenoid valve.

Outlet fitting components for 315-350 EPA E 400-440 engines

1) Outlet fitting
2) Ball Ø1/8"
3) Threaded dowel

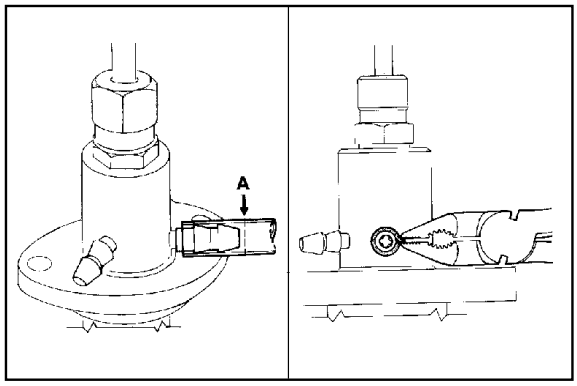

109 110

! Do not cut the tube longitudinally because you might damage the union.

Injection pump, Rilsan tube removal

Cut nylon tube at **A.**
Remove the portion of the tube which is still connected to the union using common pliers. Pinch the nylon tube without impairing the sealing properties of union (see figure).
Re-cycle the same feeding tube if the remaining length allows it; replace if not.

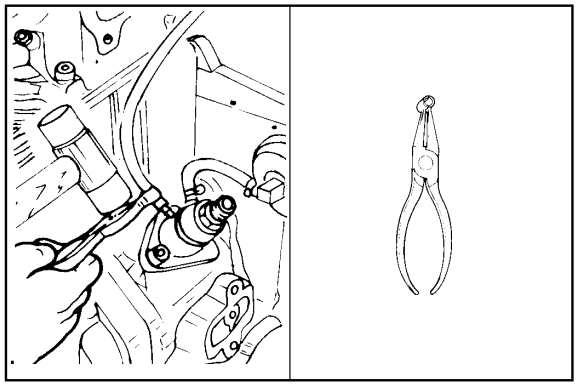

111 112

Injection pump, Rilsan tube refitting

The outlet tube is made of nylon type Rilsan; it is connected to the suitable injection pump union by means of special pliers (Ser.No. 7104-1460-023) and a plastic-head hammer (see figure).

Downloaded from www.Manualslib.com manuals search engine

https://truckmanualshub.com/

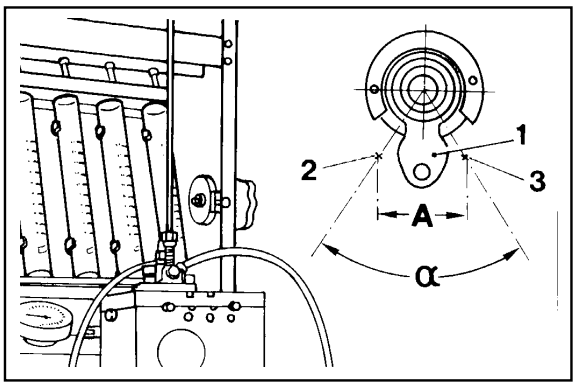

113

Injection pump delivery check on test bench

1 Delivery control rack rod
2 Rack rod **1** in stop position
3 Rack rod 1 in max. delivery position
A = 18-19 mm (max.rack rod stroke)
α = 66°

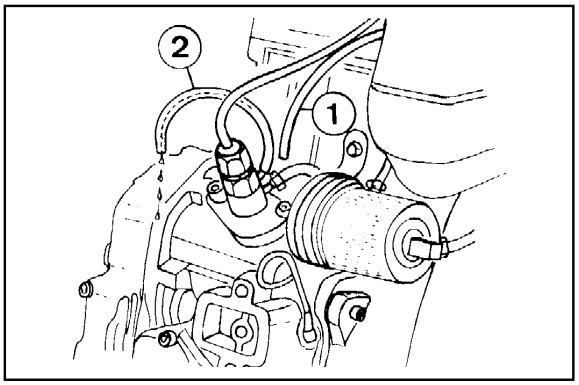

114

Static injection timing

Disconnect pipe **1** from injection pump and close it, to avoid fuel leakages.
Mount in its place a nylon pipe **2** as shown in the picture. Insert in this pipe an iron wire and let it project by approximately 10 mm: in this way any drop in fuel can easily be checked.

Downloaded from www.Manualslib.com manuals search engine

https://truckmanualshub.com/

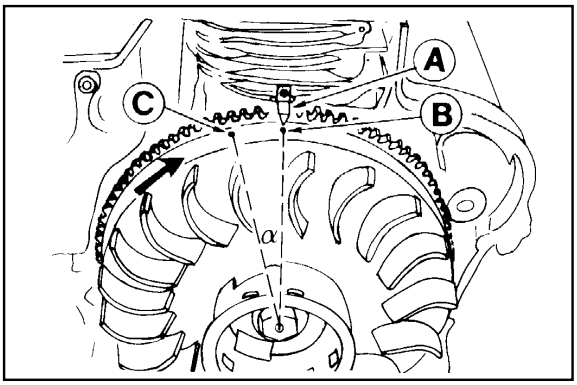

115

Static injection lead test on flywheel

Fill the tank and make sure that the fuel is not more than 10-15 cm above the tester. Set the flow governor lever of the injection pump in the stop position and lock it there.
Turn the flywheel in the engine rotation direction. proceed slowly during the compression phase. The fuel that flows from tube **2** will tend to diminish. Stop as soon as it creases to drip (one drop of fuel every 30-40 seconds is tolerated): this is the static injection lead. Make sure that **B** coincides with **A**.
See fig. 117-118 if **B** does not coincide with **A**.

! Use a temporary tank if the engine is not fitted with one. Here again, it is essential to make sure that the fuel level is no more than 10-15 cm above the injectionm pump.

References on the flywheel
A = Reference of fixed TDC on crankcase
B = Injection lead reference on the flywheel
C = TDC reference on flywheel
α = Reference in degrees between **B** and **C**.
When **B** coincides with **A**, the piston is in the static injection lead position. When **C** coincides with **A,** the piston is at top dead center.

Motor type	B/C mm				α
	with external Ø flywheel 220	with external Ø flywheel 230	with external Ø flywheel 240	with external Ø flywheel 260	
15 LD 225 standard	40÷44	42÷46			21÷23
15 LD 225 recorded up to 1500 [rpm]	29÷32,5	30÷34			15÷17
15 LD 225 recorded from 1500 to 2200 [rpm]	34,5÷38	36÷40			18÷20
15 LD 315/350 standard and minivecture		46÷50	48÷52		23÷25
15 LD 315/350 Soundproof generating sets		40÷44	42÷46		20÷22
15 LD 315/350 recorded to 1500 [rpm]		36÷40	38÷42		18÷20
15 LD 400 recorded to 3600 [rpm]				29,48	13
15 LD 400 recorded to 3000 [rpm]				24,95	11
15 LD 400 EPA recorded to 3600 [rpm]				28,35	12,5
15 LD 400 EPA recorded to 3000 [rpm]				24,95	11
15 LD 440 recorded to 3600 [rpm]				31,75	14
15 LD 440 recorded to 3000 [rpm]				27,21	12

Downloaded from www.Manualslib.com manuals search engine

https://truckmanualshub.com/

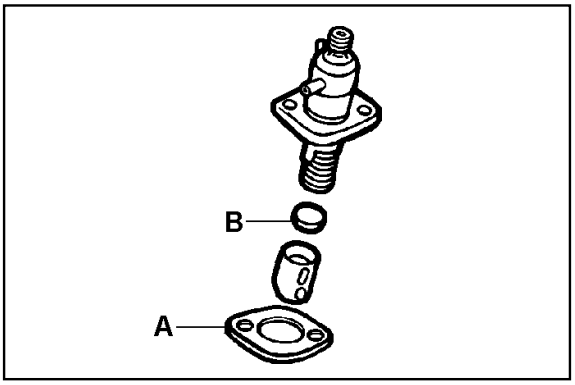

116

Injection advance adjustment

Injection advance beyond the thickness of gasket **A** is determined by the thickness of the pad inside the injection tappet.
To alter the value of injection advance the pad must be replaced with another of a suitable thickness (see fig. 117-118).
To extract pad **B**, use a rod with a suction cap or magnet at one end.
The replacement pads supplied have 10 different thicknesses (between 4.0 and 4.9mm).
To alter the value of injection advance the pad must be replaced with another of a suitable thickness (see fig. 117-118).

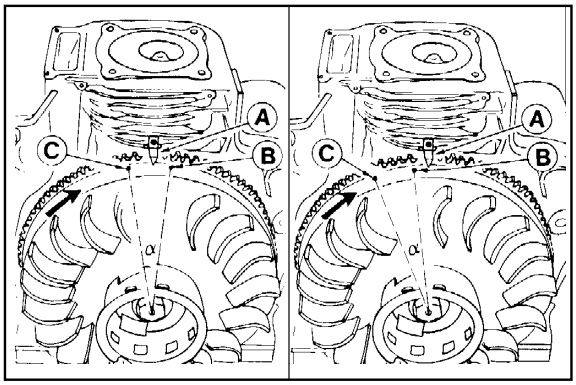

117 118

If reference point **B** does not coincide with **A** follow the examples in fig. 117-118.

1) Example of delayed injection advance (fig. 117): to make **B** match up with **A**, replace the pad with a thicker one (fig. 116).

2) Example of early injection advance (fig. 118): to make **B** match up with **A**, replace the pad with a thinner one (fig. 116).

Note: When the thickness of the pad varies by 0.1mm under the pump, **B** is delayed or brought forward by 1° on the flywheel.

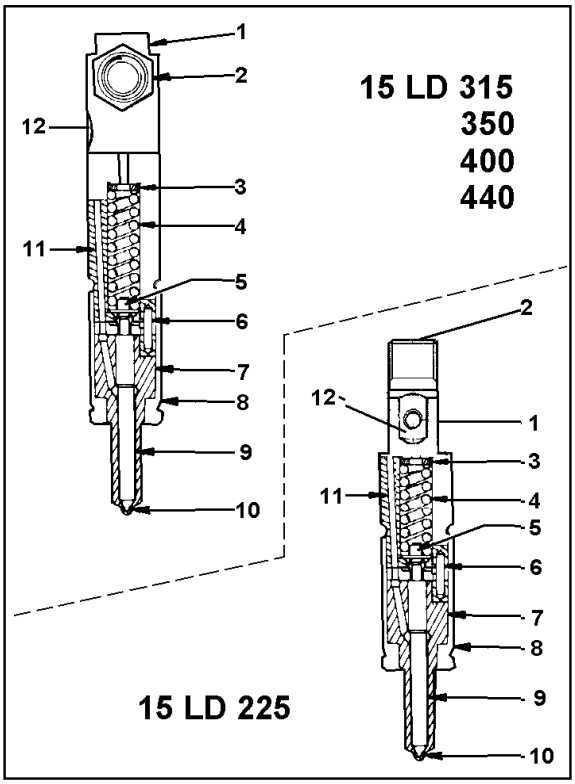

119

Injector

Components:

1 Body
2 Union
3 Adjusting shim
4 Spring
5 Pressure rod
6 Pin
7 Nozzle
8 Nozzle cup
9 Needle valve
10 Tip
11 Duct
12 Return hole

After re-assembly, tighten ring nut **8** to a 50 Nm torque value.

Downloaded from www.Manualslib.com manuals search engine

https://truckmanualshub.com/

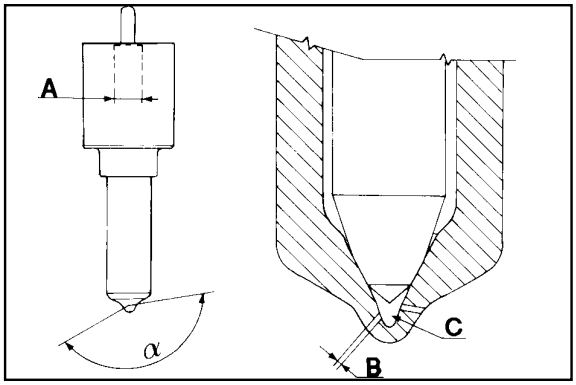

120

Nozzles

The set-up between the needle and the guide must leave the needle free to fall and merely as a result of its own weight, when lifted 7mm from its seat and rotated in different directions, with the nozzle kept at a 45° angle.
Rotation of the needle must be completely smooth and uninhibited by obstacles and malformations.
Moreover, on being squeezed against its seat, it must fall freely, when the nozzle is inverted.
The test must be carried out after rinsing both the needle and nozzle with trichloroethane and wetting with filtered SHELL CALIBRATION FLUID “C” oil.

	15 LD 225	15 LD 315	15 LD 315 EPA	15 LD 350	15 LD 350 EPA	15 LD 400	15 LD 400 EPA	15 LD 440
A	4,5	4,5	4,5	4,5	4,5	4,5	4,5	4,5
B (N° and diam. of holes	4 x 0,17	4 x 0,20	5 x 0,141	4 x 0,22	5 x 0,150	5 x 0,159	5 x 0,150	5 x 0,166
hole length	0,5	0,6	0,8	0,6	0,8	0,5	0,8	0,5
α	160°	160°	155°	160°	155°	160°	160°	160°
pin height	0,10÷0,15	0,10÷0,15	0,175÷0,225	0,125÷0,175	0,175÷0,225	0,375÷0,425	0,375÷0,425	0,375÷0,425
C sump volume	0,36 mm³	0,36 mm³	0 mm³	0,36 mm³	0 mm³	0,19 mm³	0 mm³	0,19 mm³
Pressure (bar) *	214 ± 4	214 ± 4	240 ± 6	214 ± 4	240 ± 6	200 ± 4	259 ± 4	200 ± 4

***** These values apply to new injector and allow for loosening of up to10% after breaking-in period

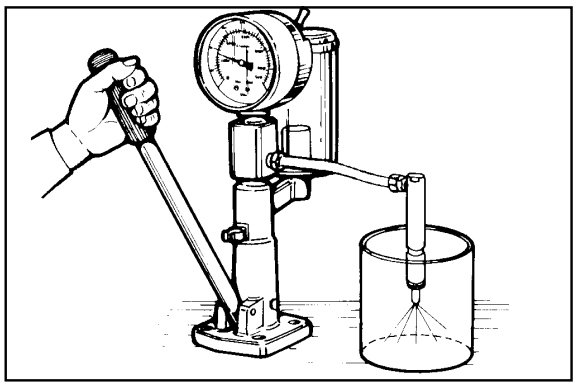

121

Injector calibration

Connect the injector to a hand pump and adjust if necessary, modifying the thickness above the spring.
When the spring is replaced, calibration must be carried out at a pressure higher than 10 bars to counterbalance adjustments while running.

Spraying and opening pressure

With the pressure gauge closed, press hard on the hand pump at least 10 times.
Open the pressure gauge and press down on the pump once every second, while keeping a check on the spraying process and pressure.
The opening pressure must lie between the two values given in the table. Jets must be uniform and well distributed.

Leakage time (waste)

Pressure must drop from 150 to 100 bars in a span of not less than 8 seconds and not more than 30.

Seat seal

Nozzle tip wet.
Pressure must be kept 20 bars below the opening pressure for 10 seconds.
After this time, dampness on the nozzle tip is acceptable, and may be identified by touching with a dry finger. Only a drop of dampness is acceptable and not a large thick patch which would indicate a leak.

Downloaded from www.Manualslib.com manuals search engine

https://truckmanualshub.com/

-	NOTE

Downloaded from www.Manualslib.com manuals search engine

https://truckmanualshub.com/

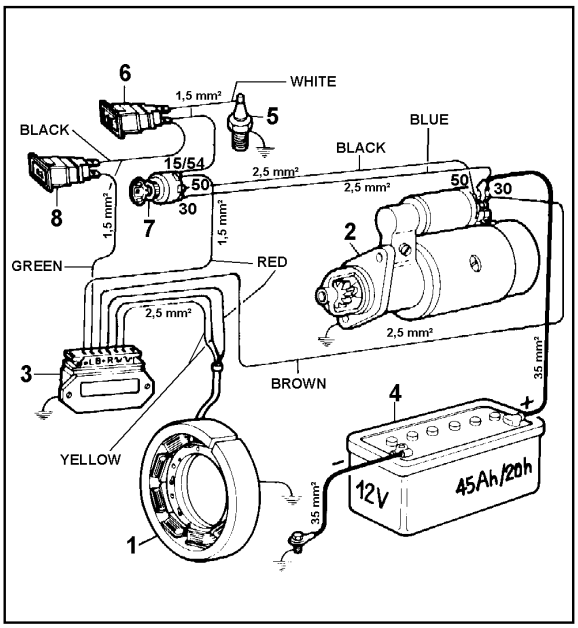

122

12V, 12A electric ignition diagram

Components:
1 Alternator
2 Starter motor
3 Voltage regulator
4 Battery
5 Pressure switch
6 Oil pressure light
7 Key switch
8 Battery charging light

Note: The battery, which is not supplied by LOMBARDINI, should have 12V nominal voltage rating and a capacity of not less than 44 Ah / 210 Amp. of fast discharge intensity.

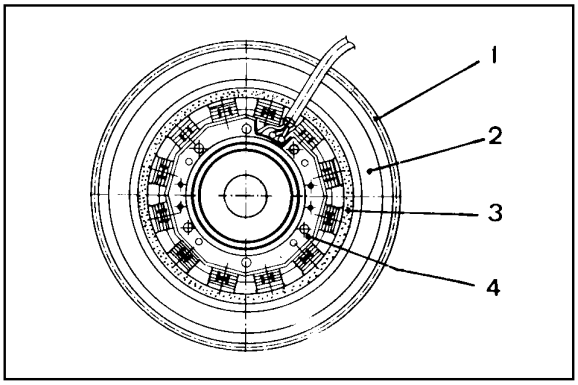

123

Alternator

Components:
1 Ring gear
2 Flywheel
3 Rotor
4 Stator

Fixing screws must be tightened to 1.2 Nm.

Note: The rotor is made up by a plastoferrite ring which is fixed to flywheel while the stator is mounted on the crankcase.

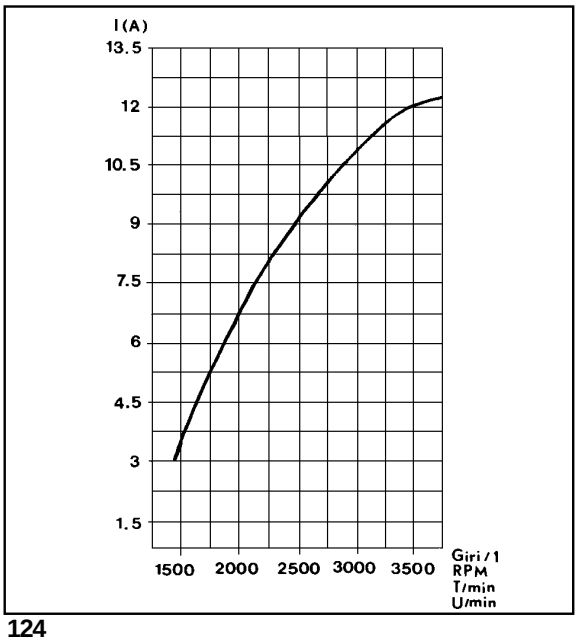

124

Alternator battery charger graph (12V, 12A)

This test has been carried out after thermal stabilization at 20°C for 2 minutes at 3000 r.p.m. with constant battery voltage of 12.5V.
The value of the power supplied with reference to the curve may change in a range between +10% and -5%.

Downloaded from www.Manualslib.com manuals search engine

https://truckmanualshub.com/

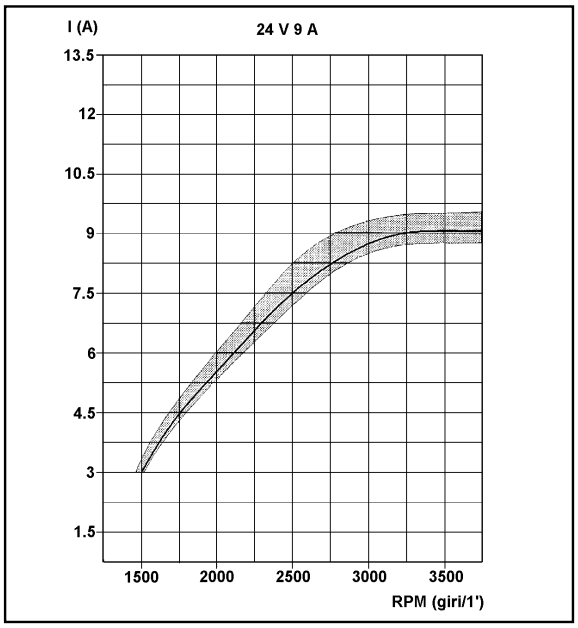

24V, 9A alternator battery recharging curve

125

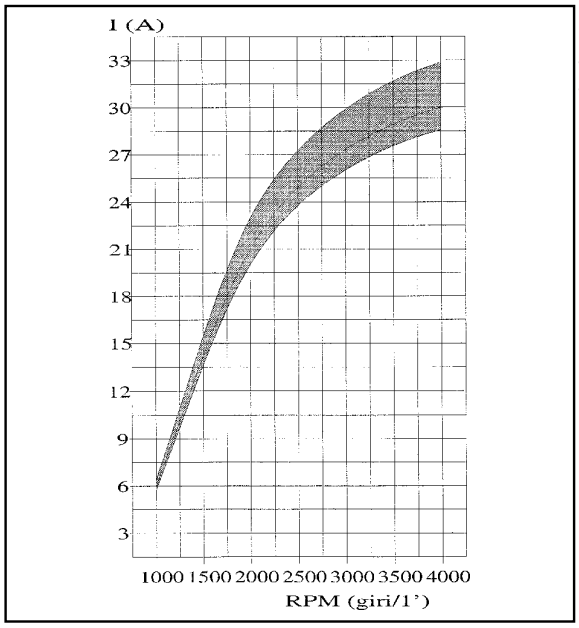

12V, 30A alternator battery recharging curve

The test was conducted after heat stabilizing at 20°C.
The value of the current delivered in relation to the curve may be subjected to a variation of between +10 % and -5%.

126

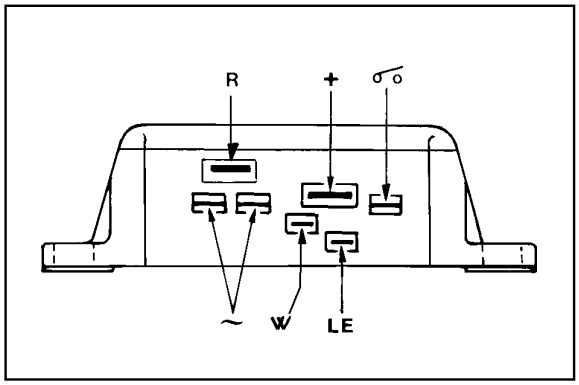

Voltage regulator

12V, 12A: for standard alternators with 3 output wires
12V, 30A: for 12V, 20A alternators with 2 output wires
24V, 9A: for 24V, 9A alternators with two output wires

The tabs are in different sizes to prevent incorrect connections.

Tab dimensions mm		
	Width	Thickness
~	6.35	0.80
R	9.50	1.12
+	9.50	1.12
LE	4.75	0.50
o/o	6.35	0.80
W	4.75	0.50

127

Downloaded from www.Manualslib.com manuals search engine

https://truckmanualshub.com/

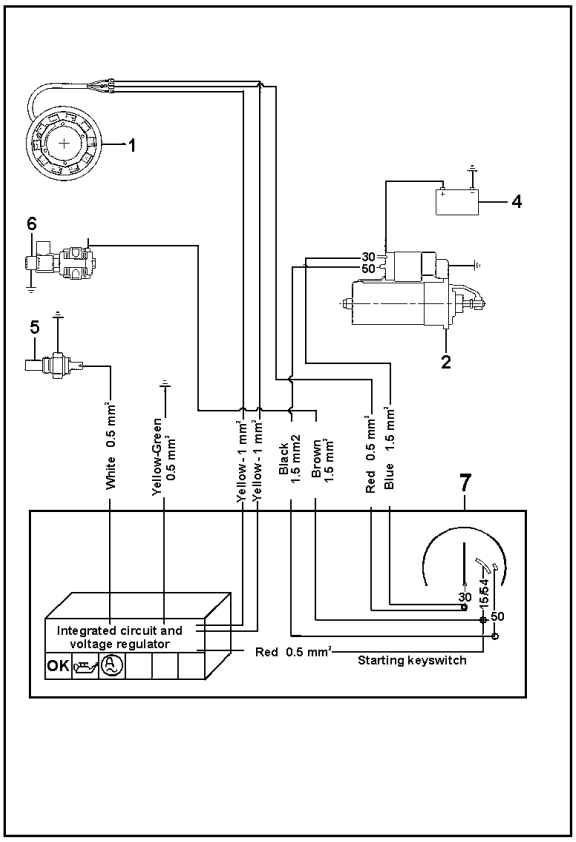

128

12V electric starter diagram with voltage regulator built into the ignition panel

Components:

1 Alternator
2 Starter motor
4 Battery
5 Pressure switch
6 Solenoid valve
7 Ignition switch

Note: The battery, which is not supplied by LOMBARDINI, should have 12V nominal voltage rating and a capacity of not less than 44 Ah / 210 Amp. of fast discharge intensity.

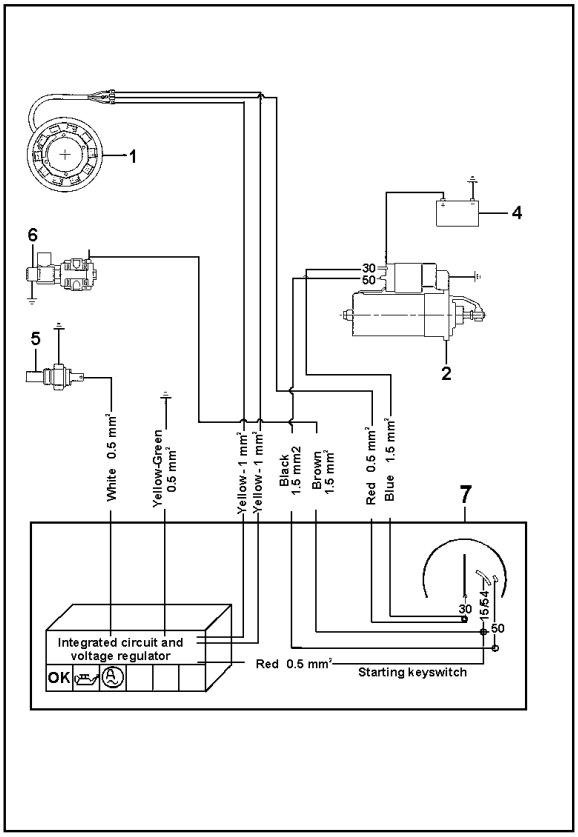

129

12V electric ignition layout with motor protection (optional)

Components:

1 Alternator
2 Starter motor
4 Battery
5 Pressure switch
6 Solenoid valve
7 Ignition switch
8 Panel

Note: The battery, which is not supplied by LOMBARDINI, should have 12V nominal voltage rating and a capacity of not less than 44 Ah / 210 Amp. of fast discharge intensity.

Downloaded from www.Manualslib.com manuals search engine

https://truckmanualshub.com/

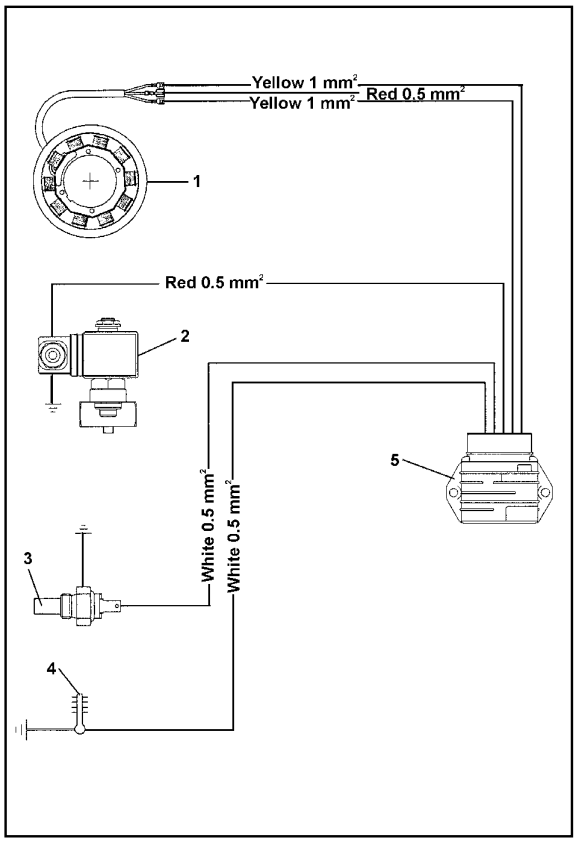

130

Diagram of electric starter motor protection with sole self-winding starter - without battery - (optional)

Components:

1 Alternator
2 Solenoid valve
3 Pressure switch
4 Thermostat
5 A.c. motor stop device

Downloaded from www.Manualslib.com manuals search engine

https://truckmanualshub.com/

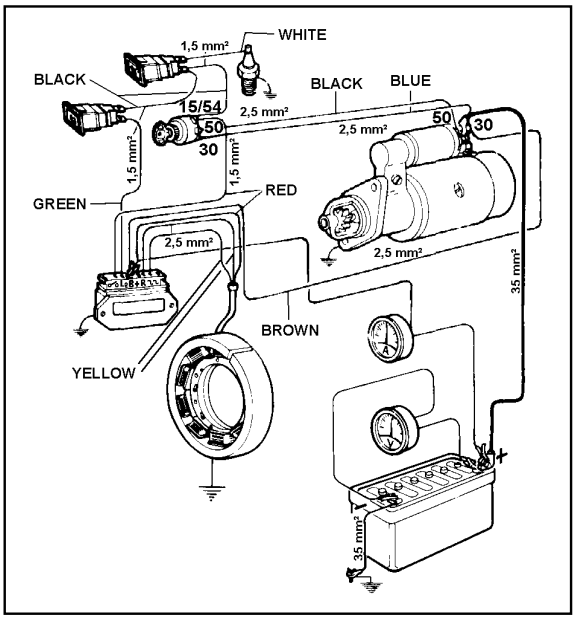

131

Testing voltage regulator for proper operation

Check that connections correspond to the schematic.
Disconnect the terminal from the battery positive pole.
Connect a d.c. voltmeter between the battery poles.
Fit an ammeter between the positive pole and the **B+** on voltage regulator.
Start and stop the engine a several times until battery voltage drops below 13V.
When battery voltage reaches 14.5V the ammeter current should suddenly drop down to almost zero.
Replace regulator if recharge current is zero with voltage below 12,5V.

! When the engine is running do not disconnect battery cables or switch key to "off" position.
Keep regulator away from heat sources above 75°C.
Do no electric welding on engine or application.

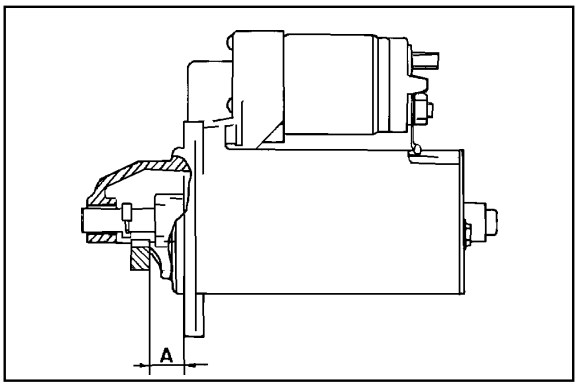

132

Starting motor

Bosch type DW (L) 12V, 1.1 KW for 15 LD 315-350-400-440
Bosch type DW (L) 12V, 0.9 KW for 15 LD 225

Anti-clockwise rotation direction (viewed from pinion side)
A = 17.5-19.5 mm (distance from flywheel rim surface to starter motor flange surface)

Note: Contact Bosch service centers for repair operations.

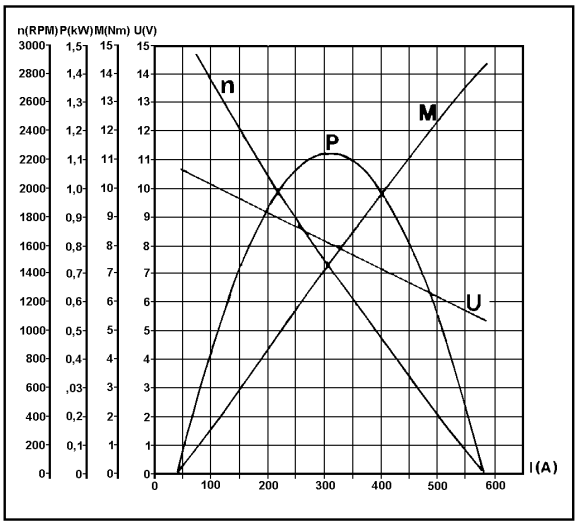

133

Characteristic curves for starting motor type DW (L) 12V, 1.1 KW

The curves were obtained at a temperature of -20°C with 66 Ah battery.

U = Motor terminal voltage in Volts
n = Motor speed in r.p.m.
M = Torque in Nm
J(A) = Absorbed current in Ampere.

Downloaded from www.Manualslib.com manuals search engine

https://truckmanualshub.com/

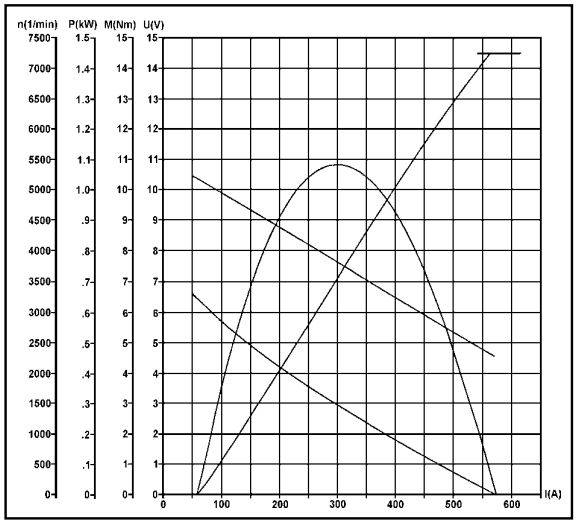

134

Characteristic curves of Bosch starter motor type DW (L) 12V, 0.9 kW

The curves were measured at a temperature of -20°C with a 55 Ah battery.

U = Voltage on motor terminals in Volts.
n = Motor speed in rpm
M = Torque in Nm
I (A) = Power draw in Amperes.

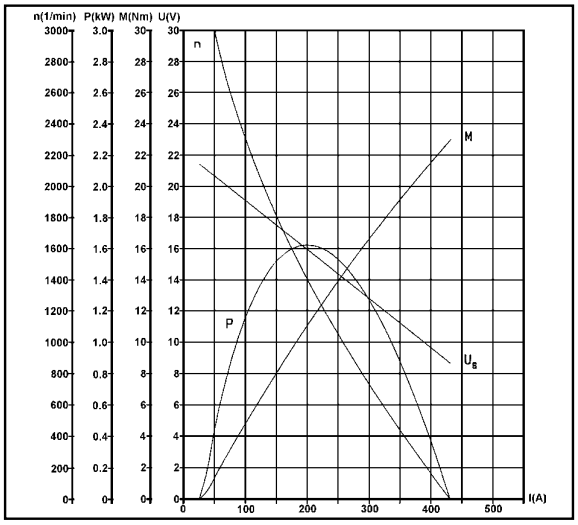

135

Characteristic curves of Bosch starter motor type DW (L) 24V, 1.6 kW

The curves were measured at a temperature of -20°C with a 36 Ah battery.

U = Voltage on motor terminals in Volts.
n = Motor speed in rpm
M = Torque in Nm
I (A) = Power draw in Amperes..

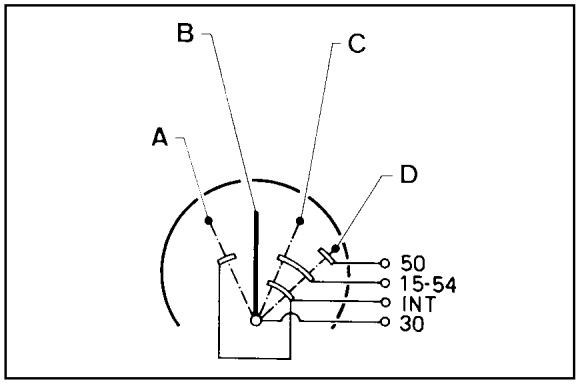

136

Ignition switch positions

A = Accessory
B = Off
C = On
D = Start

Downloaded from www.Manualslib.com manuals search engine

https://truckmanualshub.com/

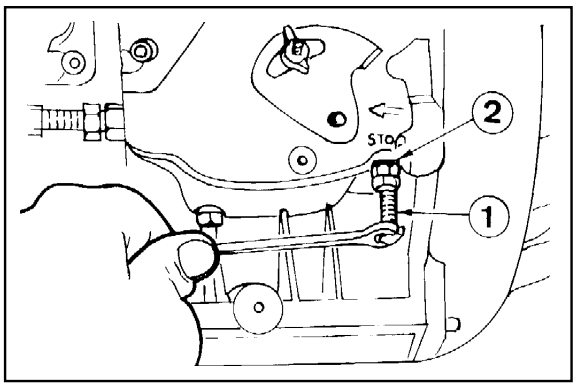

137

ADJUSTMENTS - 15 LD 315-350

Idling speed setting in no-load conditions (standard)

After filling with oil and fuel, start the engine and let it warm up for 10 minutes.
Adjust idling speed to 1000-1250 rpm by turning set screw **1**; then tighten lock nut.
Washer **2** assures sealing and prevents possible oil leaks.

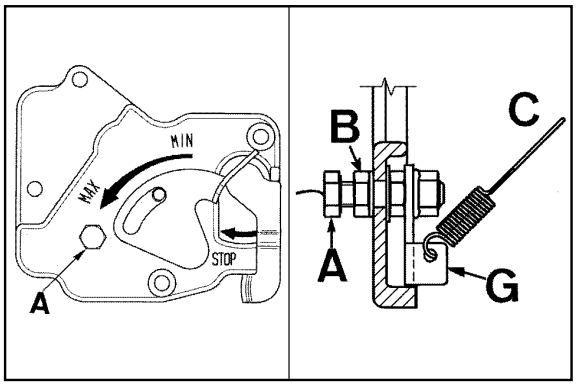

138 139

Idle speed adjustment, for small car versions

The idle speed adjusting spring (**C**) for small cars must be hooked in the speed governor lever hole **D** (fig.140).
Completely unscrew the std idle speed adjusting screw **1** (fig.137).
Loosen nut **B** by one half of a turn.
Turn the screw **A** anticlockwise until lever **G** touches cover.
Start the engine: turning clockwise screw **A ,** set idle speed at 1050 rpm ; tighten the lock nut **B** tighten the screw **1** (fig. 137) until touching lever **H** (fig. 141); when the screw touches the lever, the speed increases; at this point unloose screw 1/4 of a turn and lock the lock nut of screw **1.**

The controls cover screws must be tightened to 10Nm.

Note: By this way idle speed on hot engine could diminish of 80 rpm max.

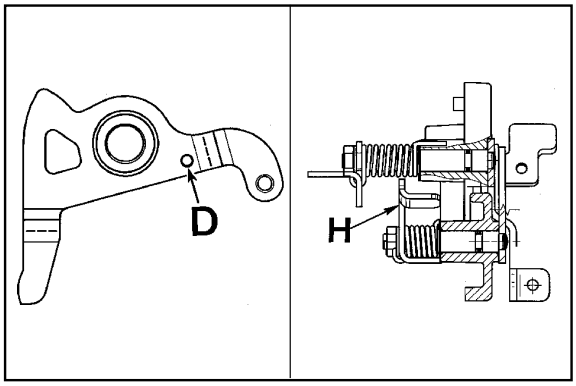

140 141

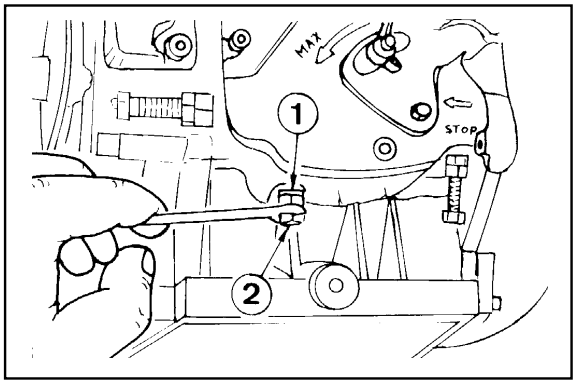

142

Full speed setting in no-load conditions (standard)

After setting idle speed turn screw **2** and set full speed in no-load conditions at 3800 rpm; then tighten lock nut.
Washer **1** assures sealing and prevents possible oil leaks.

Downloaded from www.Manualslib.com manuals search engine

https://truckmanualshub.com/

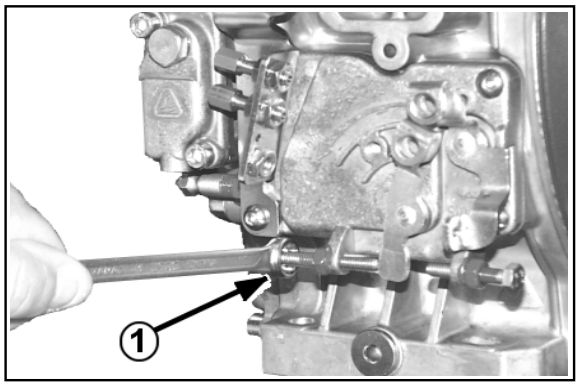

143

ADJUSTMENTS - 15 LD 225-400-440

No-load idling adjustment (standard)

After having filled the engine with oil and fuel, start it and allow it to warm up for 10 minutes.
Using adjuster screw **1**, regulate the idling rate at 1000-1250 rpm.
Tighten the check nut.

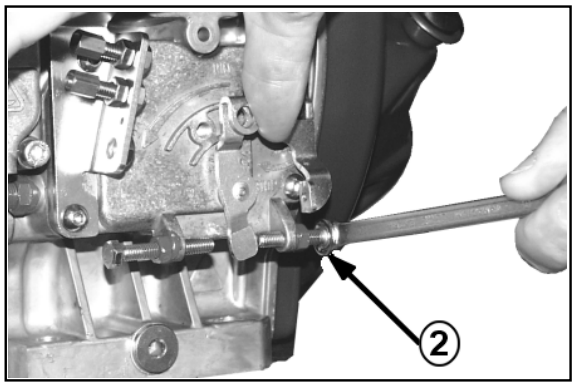

144

No-load top rate adjustment (standard)

After having adjusted the idling rate, use screw **2** and regulate the top rate at 3800 rpm (for engines set at 3600 rpm on load).
Tighten the check nut.

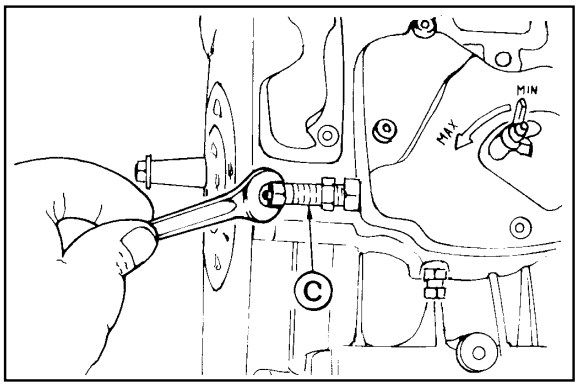

145

Injection pump flow rate adjustment for 15LD 225-315-350-400-440

This regulation must be carried out by means of a water brake, otherwise the adjustment will be approximate. proceed in the following way.
Loosen flow rate limiter **C** by 5 turns.
Accelerate the engine to no-load top rate, i.e. to 3800 rpm.
Re-tighten limiter **C** until the engine tends to decelerate.
Loosen limiter **C** by one and a half turns.
Tighten the check nut.

Note: Tighten **C** if the engine produces an excessive amount of exhaust in the maximum load condition; loosen **C** if no smoke is exhausted and if the engine is unable to develop its maximum power.

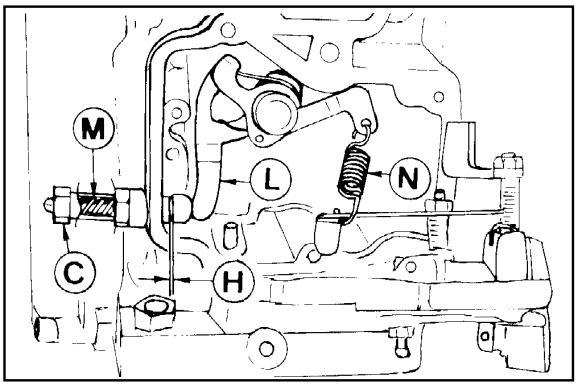

146

Injection pump delivery limiting and torque adapter (standard)

Delivery limiting device **C** has the function of limiting the injection pump max. delivery.
The same device also acts as torque adapter. The speed governor spring acts on lever **L** with standing the resistance opposed by spring **M** inside the cylinder.
The stroke **H** allowed by the torque device to lever **L** is 0.20 / 0.25 mm.
As a result of this pump delivery increases and torque reaces its peak value.

Note: In generator sets and power welders, the torque setting device acts as a delivery limiter only.

Downloaded from www.Manualslib.com manuals search engine

https://truckmanualshub.com/

147

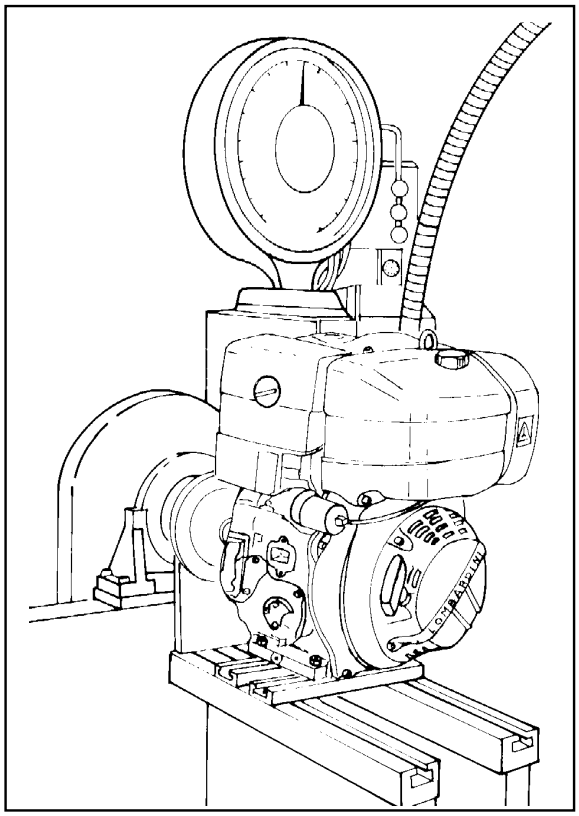

148

Injection pump delivery setting

1) Bring engine to idling speed
2) Unscrew delivery limiting device **C** (see fig. 145)
3) Bring the engine to the power and rpm required by the manufacturer of the device.
4) Check that fuel consumption falls within the table specifications (see below).
   If consumption is not as indicated change balance conditions at the torque dynamometer by varying the load and adjusting the governor.Under stable engine conditions check consumption again.
5) Tighten limiting device **C** until the engine rpm decreases.
   Lock the limiting device by means of lock nut.
6) Release brake completely and check at what speed the engine becomes stable
   Speed governor should comply with the requirements of the class indicated by the manufacturer of the device.
7) Stop the engine.
8) Check valve clearance when engine has cooled down.

Required settings (the most common ones)

Engine	R.P.M.	Power kW	Specific fuel consumption	
			Time (sec) per 100 cc	g/kW.h
15 LD 225	3600	3,50	298	287
	3000	3,0	357	280
15 LD 315	3600	5,0	242	275
	3000	4,5	283	265
15 LD 350	3600	5,5	198	275
	3000	4,9	235	260
15 LD 400	3600	7,3	151	275
	3000	6,3	184	260
15 LD 440	3600	8,0	137	275
	3000	7,2	160	260

Downloaded from www.Manualslib.com manuals search engine

https://truckmanualshub.com/

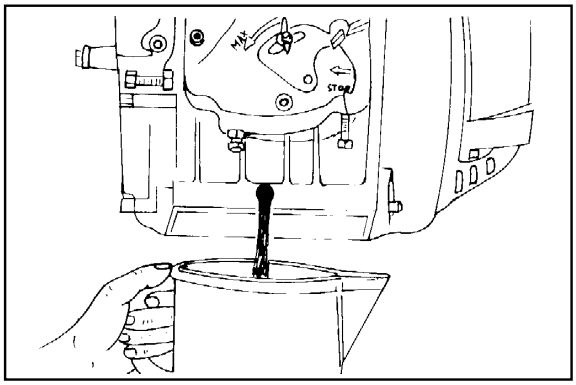

149

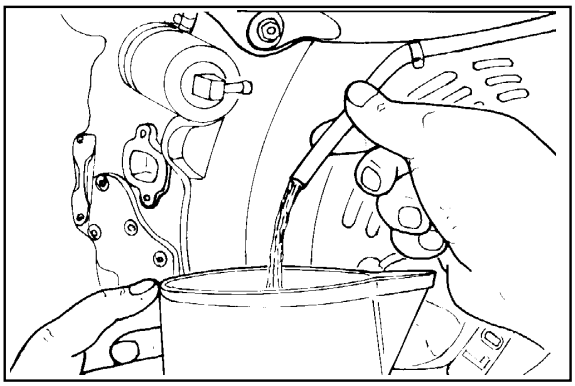

150

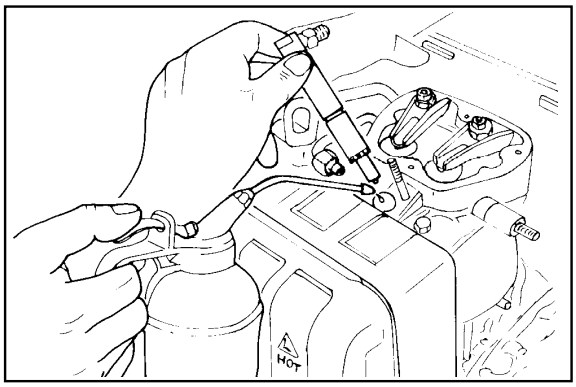

151

Storage

Prepare engines as follows for storage over 30 days

Temporary protection (1/6 months)

- Let engine run at idling speed in no-load conditions for 15 minutes.
- Fill crankcase with protection oil MIL-1-644-P9 and let engine run at 3/4 full speed for 5/10 minutes.
- When engine is warm empty oil pan and fill with standard new oil.
- Remove fuel tube and empty the tank
- Remove fuel filter, replace cartridge if dirty and refit.
- Carefully clean cylinder fins, heads and fan.
- Seal all openings with tape.
- Remove injectors, pour a spoonful of oil type SAE 30 into the cylinders and rotate manualy to distribute the oil. Refit injectors.
- Spray oil type SAE 10W into exhaust and intake manifolds, rocker arms, valves, tappet etc. Grease all unpainted parts.
- Loosen belt
- Wrap the engine in a plastic film.
- Store in a dry place, if possible not directly on the soil and far from high voltage electric lines.

Permanent protection (over 6 months)

The following is recommended apart from the above instructions:

- For the lubrication and injection system as well as for moving parts use rustproof oil type MIL-L-21260 P10 grade 2, SAE 30 (Ex. ESSO RUST - BAN 623 - AGIP, RUSTIA C. SAE 30) Let the engine run with rustproof oil and drain any excess.
- Coat external unpainted surfaces with antirust type MIL-C-16173D - grade 3 /Ex. ESSO RUST BAN 398 - AGIP, RUSTIA 100/F).

How to prepare the engine for operation

- Clean engine outside
- Remove protections and covers
- Remove antirust with an appropriate solvent or degreaser.
- Remove injector, fill with standard oil, turn crankshaft by a few revolutions, remove oil pan and drain the protective oil.

Downloaded from www.Manualslib.com manuals search engine

https://truckmanualshub.com/

MAIN TORQUE SPECIFICATIONS

POSITION	Reference (fig. N° and page)	Diam. and pitch (mm)	Torque (Nm) 225	Torque (Nm) 315-350	Torque (Nm) 400-440
Re-coil starting	fig. 18 - p. 25	6x1	10	10	10
Connecting rod	fig. 51 - p. 36	8x1 (315-350) 7x1 (225)	23 -	30 -	30 -
Rocker arm adjusting screw lock nut	fig. 13 - p. 23	6x0,5	7	10	10
Rocker arm adjusting screw pin	fig. 13 - p. 23	8x1,25	20	20	20
Shroud	fig. 19 - p. 25	6x1	10	10	10
Rocker arm cover	fig. 12 - p. 23	6x1	10	10	10
Control arm cover	-	6x1	10	10	10
Enhanced engine oil sump	-	10x1,5	-	-	40
Exhaust manifold	-	8x1,25	-	-	25
Air cleaner support	fig. 3 - p. 20	8x1,25	25	25	25
Oil filter head	fig. 90 - p. 49	6x1	10	10	10
Injection tappet guide screw	fig. 103-104 - p 53	6x1	9	9	9
Injector fixing onto the head	-	6x1	12	9	9
Muffler on manifold	fig. 9-10 - p. 22	8x1,25	25	25	25
Fuel pump	fig. 100 - p. 52	8x1,25	15	15	15
Injection pump union	-	14x1,5	40	40	40
Injection pump fastening screws	fig. 102 - p. 53	6x1	15	10	10
Oil pump support	fig. 84 - p. 48	6x1	10	10	10
Gear cover, timing side	fig. 81 - p. 45	8x1,25	23	23	23
Calibrated fitting for hydraulic tappet lubrication	-	10x1,5	-	-	15
Injection pump delivery union	fig. 105 - p. 54	14x1,5	-	-	40
Fuel tank bottom lower fixing	fig. 14 - p. 24	8x1,25	15	15	15
Enhanced sump half-shells	-	8x1,25	-	-	15
Fuel tank top fixing	-	14x1,5	20	20	20
Oil drain plug	fig. 21 - p. 26	-	-	-	-
Cylinder head (*)	fig. 21 - p. 26	6x1	10	10	10
Flywheel pulley fixing screws	-	8x1,25	-	-	25
Flywheel	fig. 20 - p. 25	14x1,5 sinistra	150	150	150

USE OF SEALANT

POSITION	TYPE OF SEALANT
Locking of adjustment lever box	Loctite 648 BV
Air valve case	Loctite “Form-a-gasket N.6”
M6 fixing screw for fuel filter	Loctite 222
M8 fixing screw for muffler bracket	Loctite 222
M8 fixing screws for fuel supply pump	Loctite 222
M16 fixing screw for oil intake filter and cover	Loctite 222
M6 finxing screws for air shroud	Loctite 222
M6 stud bolt for dry air filter cover	Loctite 222
M6 fixing screws for side oil refilling union	Loctite 270
M6 screw for injection tappet guide	Loctite 270
M8 STEI screw for closing oil intake hole cover	Loctite 270
M8 STEI screw for closing crankcase lubrication hole	Loctite 270
M8 fixing screws for air filter support and intake manifold	Loctite 270
Rocker arm fulcrum screws	Loctite 270
Stator screws	Loctite 270
M8 stud bolts for tank	Loctite 270
Plastoferrite on flywheel	Loctite 480
Base coupling surface - cover	Loctite 5205
Coupling surface for enhanced engine oil sump	Loctite 5205
Coupling surface for enhanced oil sump half-shells	Loctite 5205
Hydraulic tappet contact - cam	MOLYSLIP AS COMPOUND 40

Downloaded from www.Manualslib.com manuals search engine

https://truckmanualshub.com/

STANDARD BOLT TORQUE SPECIFICATIONS

STANDARD BOLT TORQUE SPECIFICATIONS						
DESCRIPTION						
Diameter per pitch (mm)	R ≥ 800 N/mm²		R ≥ 1000 N/mm²		R ≥ 1200 N/mm²	
	Nm	Kgm	Nm	Kgm	Nm	Kgm
4x0,70	3,6	0,37	5,1	0,52	6	0,62
5x0,80	7	0,72	9,9	1,01	11,9	1,22
6x1,00	12	1,23	17	1,73	20,4	2,08
7x1,00	19,8	2,02	27,8	2,84	33	3,40
8x1,25	29,6	3,02	41,6	4,25	50	5,10
9x1,25	38	3,88	53,4	5,45	64.2	6,55
10x1,50	52,5	5,36	73,8	7,54	88.7	9,05
13x1,75	89	9,09	125	12,80	150	15,30
14x2,00	135	13,80	190	19,40	228	23,30
16x2,00	205	21,00	289	29,50	347	35,40
18x2,50	257	26,30	362	37,00	435	44,40
20x2,50	358	36,60	504	51,50	605	61,80
22x2,50	435	44,40	611	62,40	734	74,90
24x3,00	557	56,90	784	80,00	940	96,00

Downloaded from www.Manualslib.com manuals search engine

https://truckmanualshub.com/

Downloaded from www.Manualslib.com manuals search engine

https://truckmanualshub.com/

42100 Reggio Emilia – Italia - ITALY
Via Cav. del Lavoro Adelmo Lombardini, 2 - Cas. Post. 1074
Tel. (+39) 0522 3891 - Telex 530003 Motlom I – Telegr.: Lombarmotor
R.E.A. 227083 - Reg. Impr. RE 10875
Cod. fiscale e Partita IVA 01829970357 - CEE Code IT 01829970357
E-MAIL: atl@lombardini.it
Internet: http://www.lombardini.it

La Lombardini si riserva il diritto di modificare in qualunque momento i dati contenuti in questa pubblicazione.
Lombardini se rèserve le droit de modifier, à n'importe quel moment, les données reportées dans cette publication.
Data reported in this issue can be modified at any time by Lombardini.
Lombardini vorbehält alle Rechte, diese Angabe jederzeit verändern.
La Lombardini se reserva el derecho de modificar sin previo aviso los datos de esta publicación.

Downloaded from www.Manualslib.com manuals search engine