https://truckmanualshub.com/

KATO

INSTRUCTION MANUAL

Applicable serial No.··· HD514MR-7: 5102—
HD514MRLC-7: 5102—

REGZAA
HYDRAULIC EXCAVATOR

HD514MR-7

WARNING

- You must read and understand this manual before operating or servicing this machine.
  If you do not do so, you may cause serious injury or death including damage to the equipment etc.
- All people who come into contact with this machine must read and be familiar with the contents of this manual.
  Keep it in the machine so it will be available to anybody who needs it.
- If you need a copy of this manual in another language, ask your authorised KATO dealer.

218621

背厚 13 mm （中）

https://truckmanualshub.com/

KATO

HD514MR-7

INSTRUCTION MANUAL 218621

https://truckmanualshub.com/

1. Introduction (T218081-001-0E)

Thank you for choosing KATO.
Correct operation and handling of this machine is essential for maximum safety and performance and will help to improve working efficiency and work rate.
We have prepared this manual to help you to do just that. Do not start using this machine before you have read this manual thoroughly and understood its contents.

⚠ WARNING

(1) Using this machine
The country in which you are using this machine may require alterations to its specifications or to the safety devices fitted.
Be sure to investigate the standards and regulations in the country concerned before you start to use the machine.
If alteration is required before you can use the machine, you should use it according to the standards and regulations.

(2) Modifications
If you modify the machine from the state in which it left our factory, you may impair its safety or performance.
If you wish to make modifications, we urge you to consult your authorised KATO dealer.
KATO bears no responsibility for accidents or malfunctions which arise as a result of unauthorised modifications.

(3) Optional parts and attachments
Refer to the instruction manuals provided when you install genuine optional parts and designated attachments.
Attachments not designated by KATO may impair safety or performance. They may cause tip-over accidents or have an adverse effect on the lifespan of the machine.
KATO bears no responsibility for accidents or malfunctions which arise as a result of the fitting of unauthorised attachments.

(01EE-0002-0E)

AdBlue® is a registered trademark of VDA (Verband der Automobilindustrie).

2. Designated operations for this machine (01E0-0003-0E)

Use this machine for the following main types of work.

- Digging
- Trench digging
- Side channel cutting
- Ground leveling
- Loading

https://truckmanualshub.com/

3. How to use this manual (01EE-0004-1E)

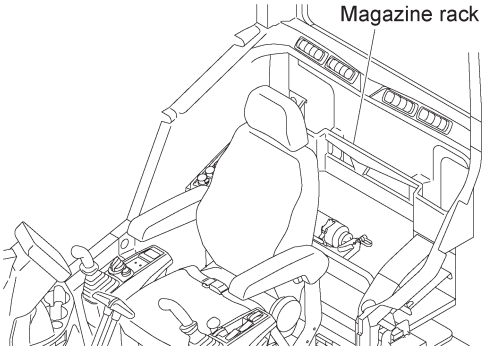

I218081-400-0E

- You must read this manual fully and understand its contents before you operate, inspect or service this machine.
  This manual is intended to be a guide to safe operation and regular servicing, so it should be kept in the magazine rack on the left rear of the operation cab available to all those who use the machine.
- The sections in this manual and safety signs on this machine include safety information.
  The labels "⚠ DANGER", "▲ WARNING" and "⚠ CAUTION" are used in this manual and safety signs on this machine so that you can understand the important items for safety operations and procedures fully.
  Read them fully and understand them before you operate, inspect or service this machine.

> ⚠ **DANGER**
>
> Indicates warnings concerning direct risks of serious injury or death.

(01E0-0005-0E)

> ▲ **WARNING**
>
> Indicates warnings concerning potential risks of serious injury or death.

(01E0-0006-0E)

> ⚠ **CAUTION**
>
> Indicates warnings concerning potential risks of injury or major damage to the machine.

(01E0-0007-0E)

- If this manual is lost or seriously damaged, order a replacement immediately from your authorised KATO dealer.
- When the user changes through resale or other circumstances, the instruction manuals must be transferred together with the machine.
- This manual has been written as a standard for general handling in specified operations.
  It is not intended to cover its handling under special conditions and unusual circumstances. Before attempting any operations not covered by this manual or when you are unsure of any aspect of its contents, contact your authorised KATO dealer.
- We are unable to predict every hazard which may accompany traveling, operation, inspection and servicing in any kind of environment.
  Therefore the danger, warning and other safety labels which appear in this manual and on the machine itself do not cover every eventuality.
  If you travel, operate, inspect or service this machine in ways not covered in this manual, you are fully responsible for all safety considerations.
  If you have any questions about traveling, operation, inspection and servicing, or if any points are unclear, contact your authorised KATO dealer.
- The illustrations in this manual are intended to attract attention and supplement the main text. They do not give a full and detailed account of the content of the text.
- Any operations which do not conform to the contents of this manual are at the operator's own risk and responsibility. KATO will bear no responsibility for any accident or damage which occurs as a result.

https://truckmanualshub.com/

- If you intend to use the machine in operations or conditions other than those designated, consult your authorised KATO dealer.
- In addition to the contents of this manual, further safety information and requirements are to be found on the safety signs on the machine and are contained in laws, regulations, ordinances, insurance conditions and other sources. You must also adhere to these conditions.
  Further observe the safety regulations and laws of the country where the machine is used.
- Please also refer to the separate instruction manuals.

https://truckmanualshub.com/

4. Inspection and servicing (01EE-0008-0E)

The inspection and servicing operations listed in this manual are a guide for extending the lifespan of the machine, improving its work rate and running it safely. Carry out the regular inspection and servicing tasks on the basis of this manual and regulations of the country where the machine is used without fail.
This manual details the procedures for preoperational, monthly and yearly inspection and servicing.
Record the results of each inspection and servicing measures taken in the "Inspection Sheet".
Refer to the separate "Service Manual" for servicing procedures for breakdowns and disassembly.

5. Product identification number and engine serial number (01E0-0009-1E)

The product identification number and engine serial number will assist in smooth administrative processing of orders for parts and servicing from your authorised KATO dealer, so please provide these numbers when ordering.

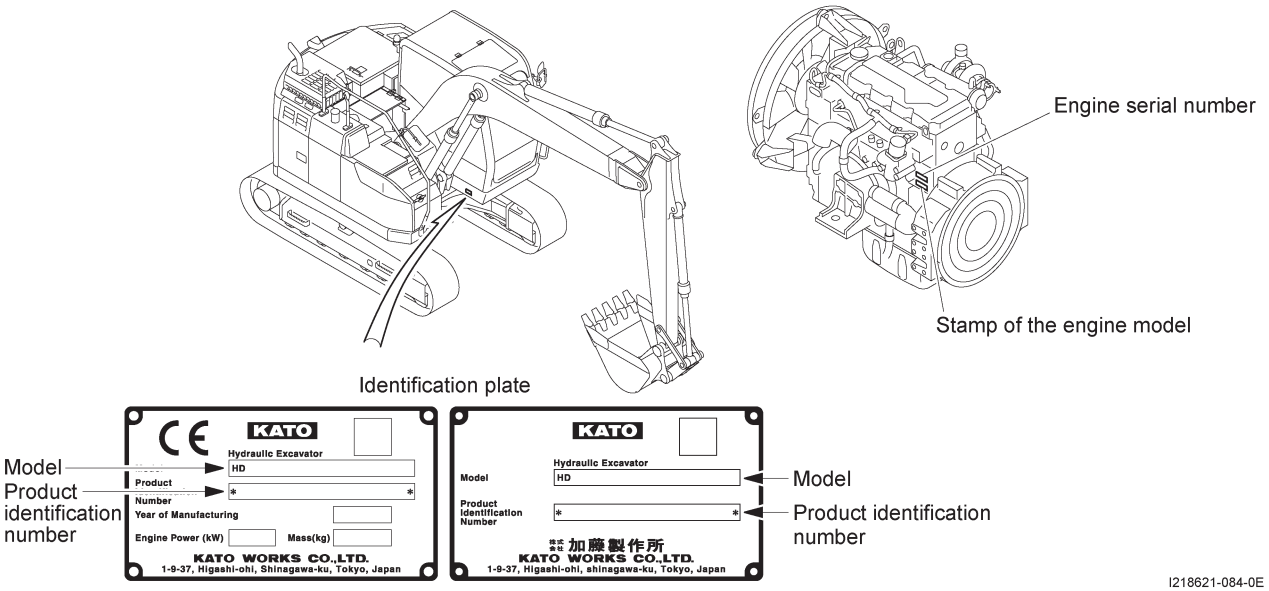

When you take delivery of the machine, make a record of its product identification number, engine serial number and delivery date.

Product identification number	
Engine serial number	
Delivery date	

(01E0-0010-1E)

6. Operation qualifications (01EE-0011-0E)

⚠ WARNING

- Before operating this machine, make sure you have obtained all necessary qualifications.
- You must not operate without these qualifications.

(01EE-0012-0E)

https://truckmanualshub.com/

7. Safety parts for periodic replacement (T218341-001-0E)

For the long-term safe operation of the machine, we ask you to inspect and service it regularly. However it is difficult to evaluate the lifespan of parts by external visual inspection, so certain important parts such as the parts related to a fire should be replaced at set intervals regardless of their apparent condition. If inspection and servicing reveals any abnormality whatever in these parts, replace them even before their regulation time.
Ask your authorised KATO dealer to carry out the replacement of these safety parts.

Fuel system: Every 2 years or 4000 hours of operation, whichever reaches sooner.
- Fuel hose (fuel tank – fuel filter – engine – fuel tank, fuel pump related)

Hydraulic system: Every 2 years or 4000 hours of operation, whichever reaches sooner.
- Pump suction hose (oil reservoir — hydraulic pump)
- Pump discharge hose (hydraulic pump — control valve)
- Line hose for swing motor (control valve — swing motor)
- Line hose for boom cylinder (control valve — boom cylinder)
- Line hose for arm cylinder (control valve — boom piping, boom piping — arm cylinder)
- Line hose for bucket cylinder (control valve — boom piping, boom piping — bucket cylinder)
- Engine oil remote hose
- Additional attachment hose

Cooling system: Every 2 years or 4000 hours of operation, whichever reaches sooner.
- Heater hose (engine — air conditioner unit)

Inside the engine compartment: Every 5 years
- Sound absorbing material

Others: Every 3 years
- Seatbelt

You must also inspect hydraulic hoses and fuel hoses during the following regular inspections.

Inspection interval	Inspection item
Preoperational inspection	• Oil leakage from the joints and caulked sections of fuel or hydraulic hoses
Monthly inspection	• Oil leakage from the joints and caulked sections of fuel or hydraulic hoses • Damage to fuel or hydraulic hoses (cracks, wear, tearing)
Yearly inspection	• Oil leakage from the joints and caulked sections of fuel or hydraulic hoses • Interference, collapse, deterioration, twisting, damage (cracks, wear, tearing) to fuel or hydraulic hoses

(01EE-0018-0E)

⚠ CAUTION

1. Replace O-rings, gaskets etc. at the same time as you replace hoses.
2. If you find deformation or cracking of hose clamps when you inspect or replace hoses, you should also replace the affected clamps.

(01E0-0019-0E)

https://truckmanualshub.com/

8. Specifications (01E0-0020-0E)

8-1 External views (01E0-0021-0E)

HD514MR-7

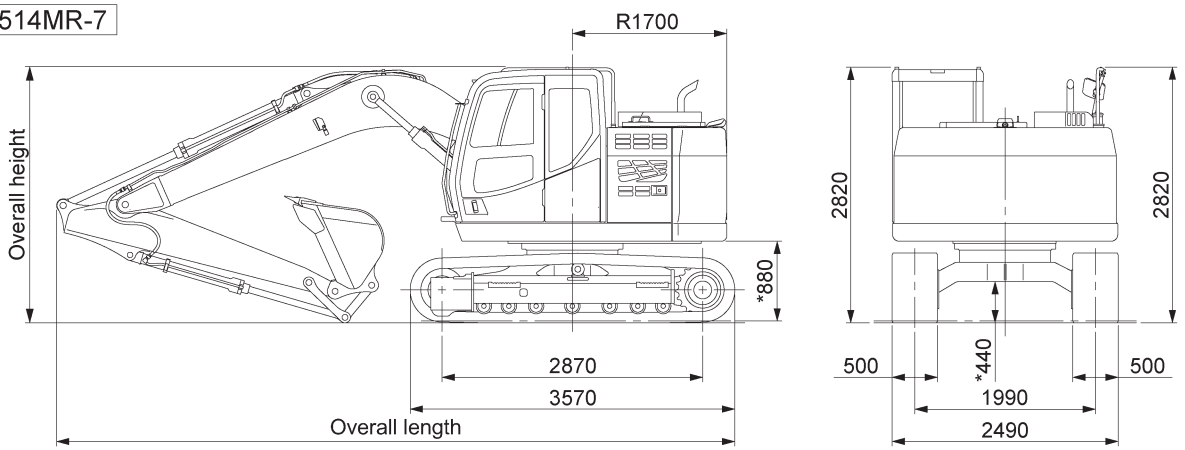

*These dimensions do not include the grouser height.

I218601-002-0E

HD514MRLC-7

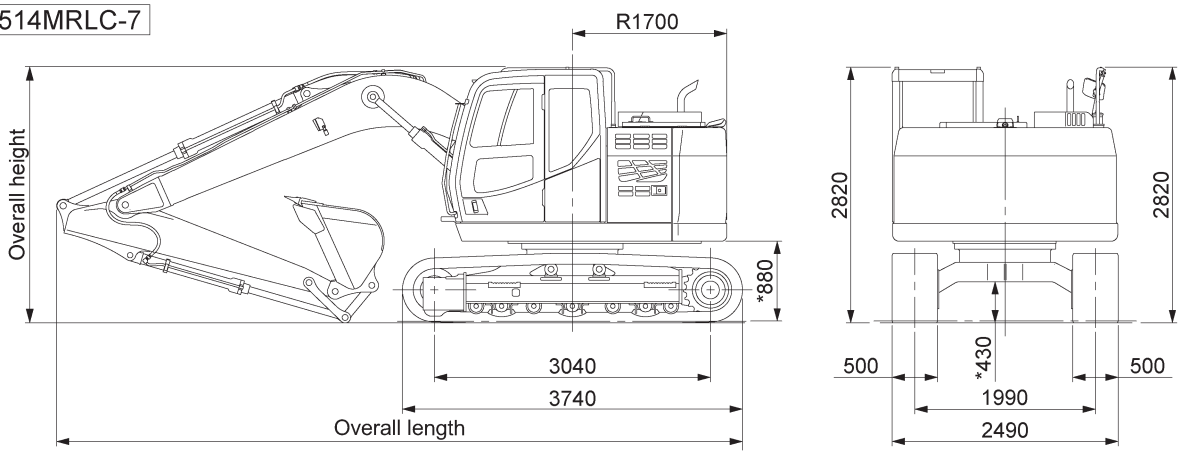

*These dimensions do not include the grouser height.

I218601-095-0E

	Standard arm (2.50m)		Long arm (3.00m)	
	HD514MR-7	HD514MRLC-7	HD514MR-7	HD514MRLC-7
Overall height (mm)	2820	2820	*2820	*2820
Overall length (mm)	7470	7550	*7460	*7540
Minimum ground clearance (mm)	440	430	440	430

*When the long arm is in the transport position

(T218601-002-0E)

https://truckmanualshub.com/

8-2 General data (01E0-0023-0E)

Model	HD514MR-7	HD514MRLC-7	HD514MR-7
Specification	Standard specification	LC specification	Dozer specification
Machine weight	14,100kg	14,500kg	15,100kg
Bucket capacity	$0.25m^3$ — $0.60m^3$ (Standard bucket $0.50m^3$)		

■Engine

Model	ISUZU 4JJ1X type, diesel engine
Rated output	76.4kW (104PS) / 2,000min^{-1}
Max torque	367N•m (37.4kgf•m) / 1,800min^{-1}

■Key dimensions

Overall length (as shipped)	7,470mm	7,550mm	8,140mm
Overall height (as shipped)	2,820mm		
Overall width	2,490mm		
Minimum ground clearance	* 440mm	* 430mm	* 440mm
Tail swing radius	1,700mm		
Track shoe length	3,570mm	3,740mm	3,570mm
Track shoe width	500mm		

■Traveling and swing performance

Traveling speed	5.8/3.3km/h		
Swing speed	13.0min^{-1}		
Grade ability	70%		
Ground pressure	44kPa (0.45kgf/cm^2)	43kPa (0.44kgf/cm^2)	48kPa (0.48kgf/cm^2)

■Digging performance

Bucket digging force	94kN (9.6tonf) [98kN (10tonf) in high-power mode]
Arm digging force	69kN (7.0tonf) [72kN (7.3tonf) in high-power mode]

■Hydraulic system

Hydraulic pump	Variable piston pump×2 + gear pump	Variable piston pump×2 + gear pump + gear pump [dozer]
Swing motor	Fixed capacity piston motor	
Traveling motor	Variable capacity piston motor×2	
Control valve	3-way + 4-way multiple control valve [including 1 spare circuit]	3-way + 4-way multiple control valve [including 1 spare circuit] + control valve for dozer
Set pressure	31.4MPa (320kgf/cm^2) [32.9MPa (335kgf/cm^2) in high-power mode and during driving]	31.4MPa (320kgf/cm^2) [32.9MPa (335kgf/cm^2) in high-power mode and during driving] Dozer 20.6MPa (210kgf/cm^2)

■Tank

Oil reservoir	156L [total oil capacity]	161L [total oil capacity]
Fuel tank	220L	
DEF tank	55L [tank capacity 46L]	

(Note) Indicated bucket capacity and digging force values conform to new JIS standards.

* Excluding the grouser height.

Units are displayed in the international unit system (SI). The values in parentheses () are reference values displayed in conventional units (non-SI units).

I218601-003-0E

https://truckmanualshub.com/

8-3 Standard back-hoeing range (01E0-0025-0E)

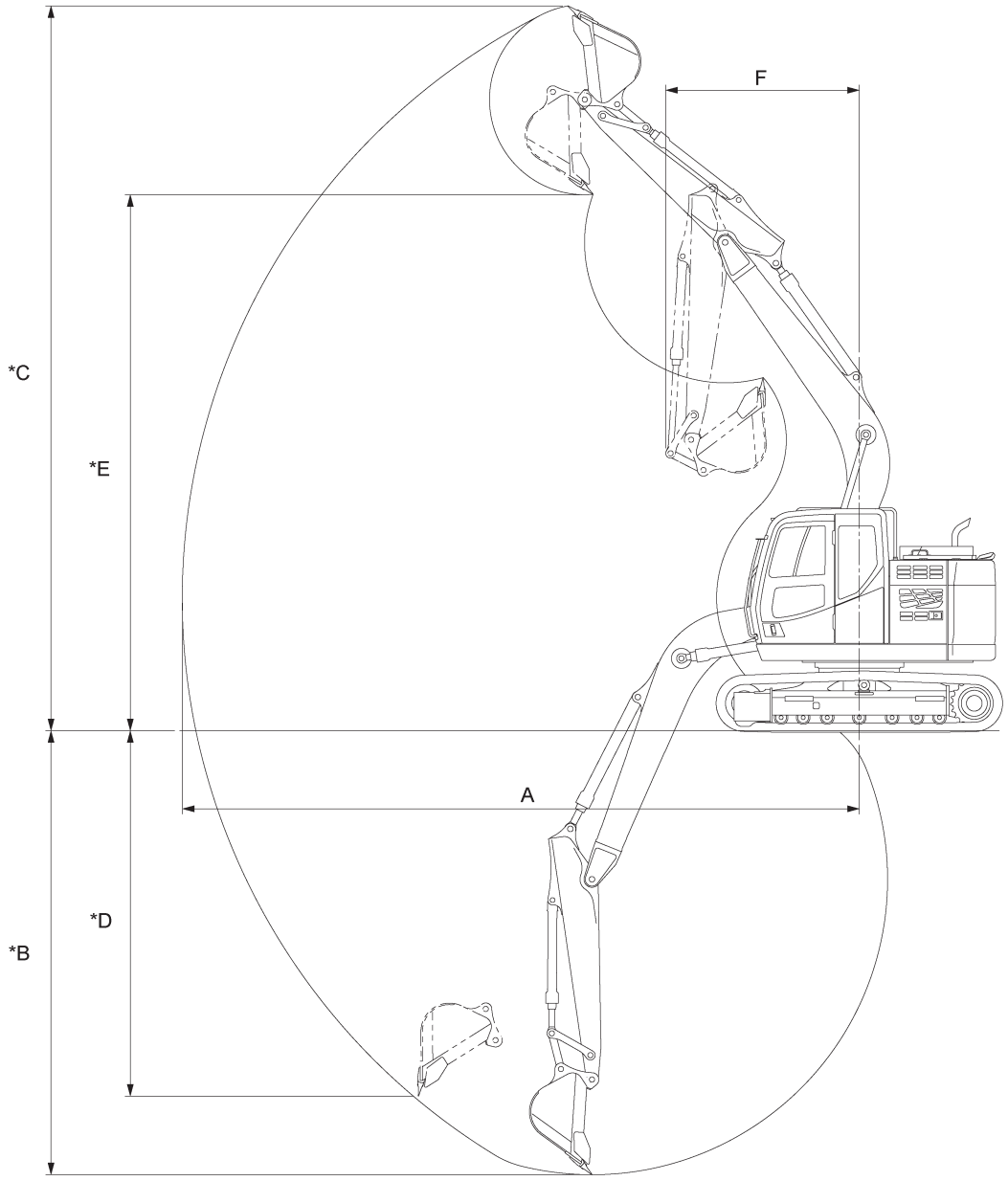

*These dimensions do not include the grouser height.

I218601-004-0E

		Standard arm (2.50 m)	Long arm (3.00 m)
A	Maximum digging radius (mm)	8450	8910
*B	Maximum digging depth (mm)	5540	6040
*C	Maximum digging height (mm)	9050	9380
*D	Maximum vertical wall (mm)	4560	5000
*E	Maximum dumping height (mm)	6690	7030
F	Front minimum swing radius (mm)	2410	2770

Long arm range is in the digging position.

(T218601-004-0E)

https://truckmanualshub.com/

9. Noise and vibration information (T218621-002-0E)

(1) Noise level for enclosed cab

The operator noise pressure level for this machine with a properly installed and maintained closed cab configuration is 70dB(A).

Measurement is obtained on a dynamic machine with the procedures and cab conditions as described in ISO 6396.

(2) Vibration level

Measurement is obtained on a representative machine.

Hands/Arms: The root-mean-square accelerations applied to the hands and shoulder joints must not exceed 2.5m/S^2.

Whole body: The root-mean-square accelerations applied to the whole body must not exceed 0.5m/S^2.

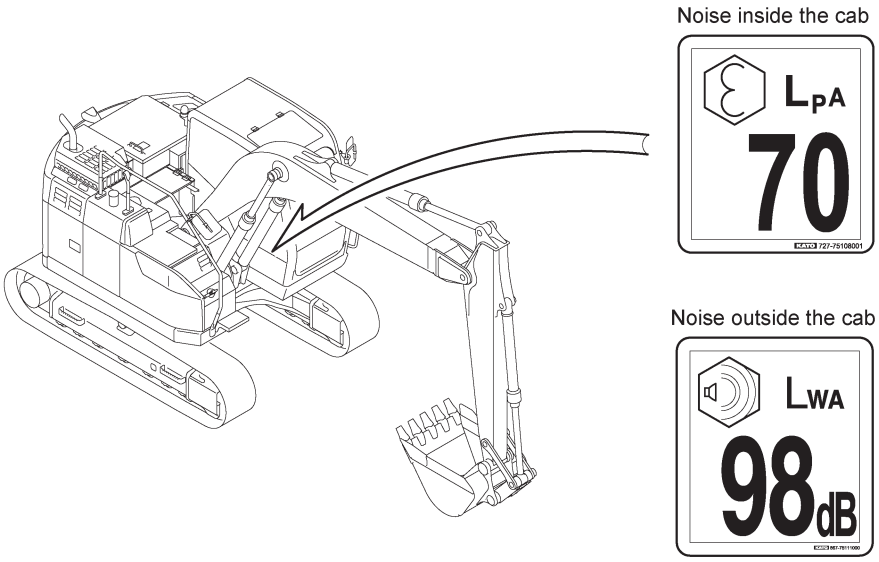

I218621-001-0E

https://truckmanualshub.com/

MEMO

https://truckmanualshub.com/

Table of Contents

(T218621-003-0E)

1. Introduction ..... [1]
2. Designated operations for this machine ..... [1]
3. How to use this manual ..... [2]
4. Inspection and servicing ..... [4]
5. Product identification number and engine serial number ..... [4]
6. Operation qualifications ..... [4]
7. Safety parts for periodic replacement ..... [5]
8. Specifications ..... [6]
9. Noise and vibration information ..... [9]

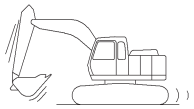

05E0-00060

Operation

1. For safe operation 1
2. Part names and terms 39
3. Explanation of the operation devices 43
4. Precautions on handling a new machine 81
5. Preoperational checks 82
6. Operation 83
7. Monitor 102
8. Lifting a load 131
9. Bucket replacement and reversal procedure 138
10. Handling under special conditions 144
11. Long-term storage 148
12. Towing 150
13. Transportation 151
14. Machine hoisting procedure 155
15. Cab protective structure 156

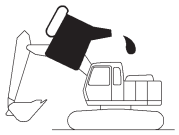

05E0-00070

Inspection and servicing

1. Precautions on inspection and servicing 157
2. Inspection and servicing table 165
3. Lubrication 175
4. Inspection and servicing of each part 184

https://truckmanualshub.com/

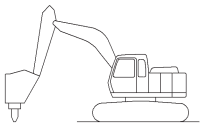

05E0-00080

Optional equipment

1. Handling a machine fitted with attachment pipes 247
2. Hydraulic breaker operation 252
3. Crusher operation 256
4. Precautions when working with optional attachments 260
5. Specifications and compatibility of bucket models 263
6. Track shoe selection 264
7. Track shoe types and applications 265
8. Procedures for multi-position lever operation 266
9. Procedures for selector lever operation 268
10. Procedures for selector lever operation 270

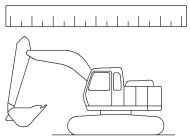

05E0-00090

Data file

1. Tightening torque table 273
2. Dimensions and weight 280
3. Consumable parts guide 284
4. Hydraulic circuit diagram 295
5. Electrical circuit diagram 296
6. Inspection sheet 299

01E0-00110

Index (in alphabetical order)

Index 301

https://truckmanualshub.com/

(T218621-004-0E)

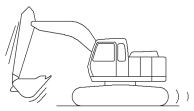

05E0-00060

Operation

1. For safe operation 1
- 1-1 Preoperational precautions 1
- 1-2 Precautions during operation 12
- 1-3 Precautions after operation 21
- 1-4 Safety signs 23
- 1-5 Precautions on getting on and off the machine 33
- 1-6 Precautions when filling with fuel 34
- 1-7 Precautions when replenishing the DEF 36

2. Part names and terms 39
- 2-1 Terms 39
- 2-2 Part names 39

3. Explanation of the operation devices 43
- 3-1 Inside the cab 43
- 3-2 Control levers 55
- 3-3 Control panel 60
- 3-4 Switch panel 62
- 3-5 Backup switch panel 63
- 3-6 Radio 65
- 3-7 Handling the SCR system 67
- 3-8 Escape mode 69
- 3-9 Purge (Rinse) of the SCR system 70
- 3-10 Outside the cab 74

4. Precautions on handling a new machine 81

5. Preoperational checks 82

6. Operation 83
- 6-1 Starting the engine 83
- 6-2 Warm-up running 85
- 6-3 Traveling operation 87
- 6-4 Swing operation 93
- 6-5 Working procedure 95
- 6-6 Dozer operation (optional) 98
- 6-7 Stopping the engine 100
- 6-8 Phenomena peculiar to the hydraulic excavator 101

https://truckmanualshub.com/

7. Monitor 102
7-1 Touch panel display 103

8. Lifting a load 131
8-1 Precautions on lifting 131
8-2 Operation control 136
8-3 Inspection of wire ropes and chains 136

9. Bucket replacement and reversal procedure 138
9-1 Bucket replacement procedure 138
9-2 Reversal procedure 141
9-3 Adjustment method of bucket play 143

10. Handling under special conditions 144
10-1 Handling in cold conditions 144
10-2 Handling under extreme heat 145
10-3 Handling under a dusty or sandy environment 146
10-4 Handling near the sea shore 147
10-5 Handling in mud, rain, snow, zones of high humidity, on soft ground 147
10-6 Handling in rocky ground 147

11. Long-term storage 148

12. Towing 150

13. Transportation 151
13-1 Preparations for transportation 152
13-2 Using the transport brackets 153
13-3 Loading and unloading the machine 154

14. Machine hoisting procedure 155

15. Cab protective structure 156

https://truckmanualshub.com/

1. For safe operation (01EE-0029-1E)

- This section lists precautions you should observe when operating this machine.
- Make sure you fully understand these points before you start operation and observe them to operate safely.
- In this section, pictures which illustrate dangerous situations or working practices are marked with a large "×".
- The illustrations in this section are intended to attract attention and supplement the main text. They do not give a full and detailed account of the content of the text.
- Further precautions may be necessary due to the attachments in use or the conditions of the operating site.
- Observe the safety regulations and laws of the country where the machine is used.

1-1 Preoperational precautions (01E0-0030-0E)

1-1-1 General precautions (T218341-006-0E)

(1) Carrying any licenses and certificates required

Always carry any licenses and certificates required under the laws and regulations of the country where the machine is used.

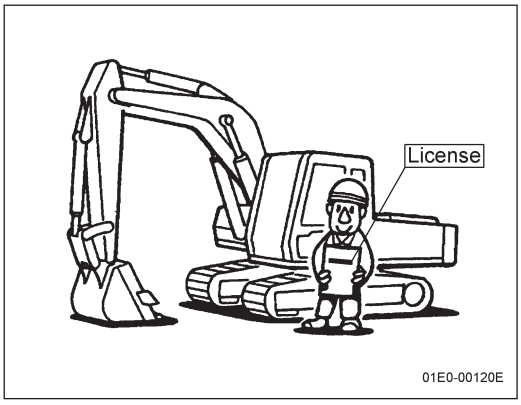

(2) Wearing protective clothing and equipment

- When operating the machine, do not wear clothing which might catch on control levers or mechanical parts.
- Wear a helmet, protective goggles, safety boots, a mask, gloves etc. as necessary.

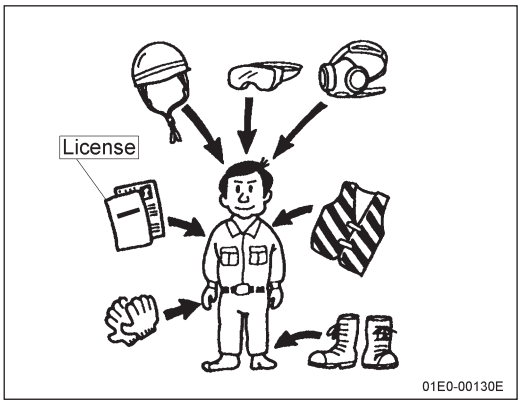

(3) We urge you to carry a fire extinguisher and first aid kit

- Fit a fire extinguisher to guard against fire and read its instructions on the label before you need it.
- You are advised to carry a first aid kit. Decide its position and make sure everyone knows where it is.
- Note down the telephone number to call in the event of an emergency and decide how to contact it.

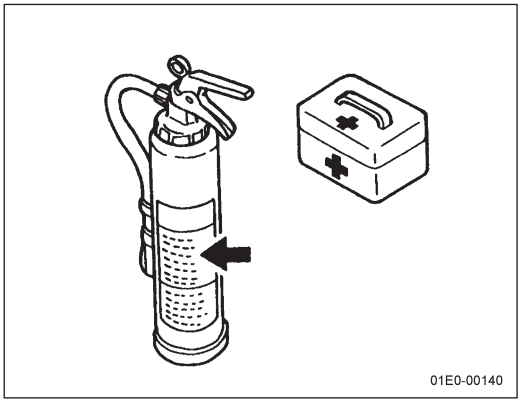

https://truckmanualshub.com/

(4) How to handle fuel and oil

If you smoke or use fire near fuel, oil, Long Life Coolant or battery, there is the risk that it could ignite.

- Extinguish all fires and potential sources of ignition when handling these flammable materials and do not allow them nearby.
- Switch off the engine before refueling and check that there are no fires or potential sources of ignition nearby.
- After refueling or inspections, fasten all fuel and oil caps securely and wipe off any spillage.
- Refuel and charge oil in a well-ventilated work area.

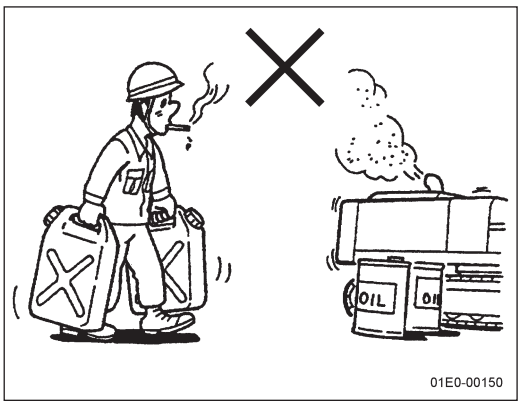

(5) Do not work when you are unwell

Do not attempt to operate the machine when you are sick, excessively fatigued or otherwise unwell.

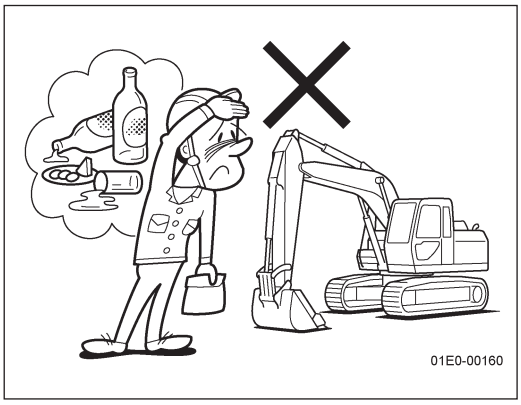

(6) Do not leave tools, shovels, wire ropes, points, rags etc. out of the toolbox.

If oil or fuel spills on hot surfaces, rags etc., they can be ignited by short-circuit sparks or other cause and start a fire.

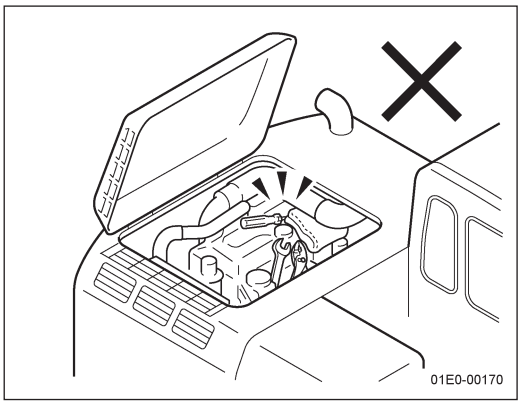

(7) Read the instruction manual thoroughly and understand it.

Incorrect operation, inspection or servicing can damage the machine or cause accident and injury. Read the manual thoroughly before you start work and be sure you fully understand the methods of operation, inspection and servicing. Do not attempt to work with the machine before you fully understand it.

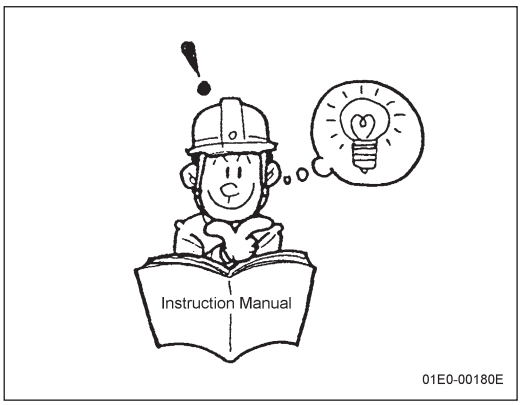

https://truckmanualshub.com/

(8) Do not put flammable items in the toolbox

Do not put aerosol spray cans, paint thinner, or other dangerous combustibles in the toolbox.

They could cause a fire.

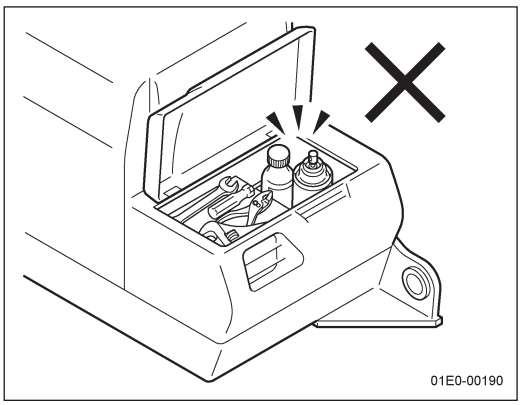

(9) Keep the safety signs clean

- If a safety sign is dirty

  Use water or a neutral cleaner to remove the dirt. Do not use gasoline or organic solvents.
- If it is not possible to remove the dirt, or if a safety sign is damaged or peeling, replace the safety sign with new.

  Refer to the parts list on the machine and order a new sign from your authorised KATO dealer to replace the safety sign.
- When you replace a safety sign, always check that it is identical to the original.

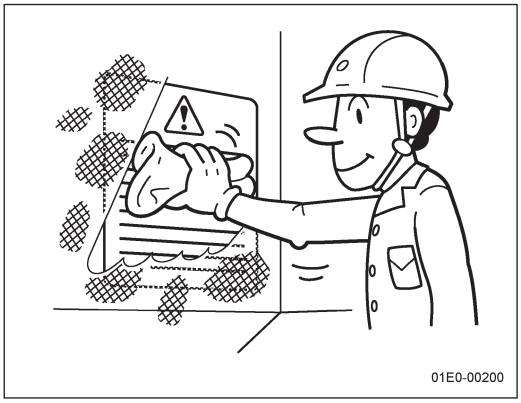

(10) Noise hazard

Working for extended periods in the vicinity of loud noise can cause hearing damage.

- Wear earplugs or ear protection before working on the engine or otherwise being exposed to loud noises for long periods.

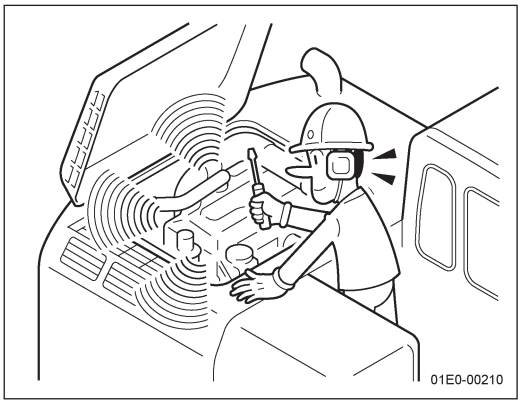

https://truckmanualshub.com/

(11) Precautions inside the cab

Always keep the cab clean and organized.

- Remove any dirt or oils from the bottom of shoes before entering the cab.

  Not doing so could cause shoes to slip on the pedals, which could cause an accident.
- Do not leave parts or tools around the operator's seat.
- Do not leave clear beverage bottles inside the cab or attach suction cups to windows. These can act as lenses and cause a fire.
- Do not listen to music on headphones, use a cell phone, or do anything else that could impair operating ability while working inside the cab.
- Do not bring flammable, explosive, or other dangerous materials into the cab.
- Make sure cigarettes and matches are completely extinguished before closing the lid.
- Do not leave cigarette lighters in the cab.

  High temperatures inside the cab could cause them to explode.

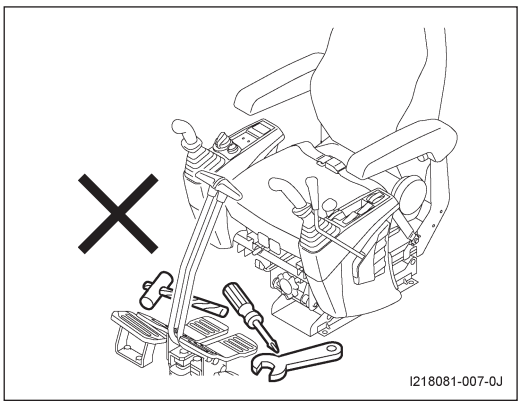

(12) Adjusting the operator's seat

Adjust the operator's seat to fit you before you start the engine.

- Adjust the seat so that you can reach all control levers and pedals comfortably with your back resting on the seat-back.

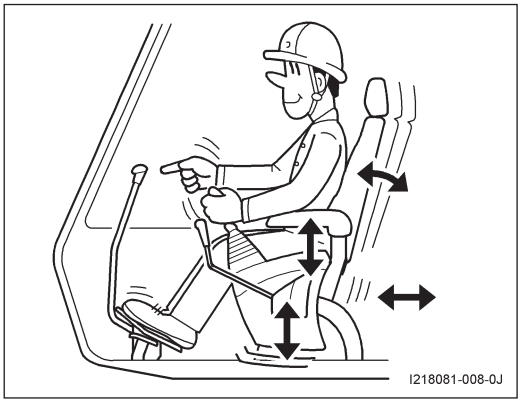

(13) Using the seatbelt

Tipping the machine over can cause serious injury or death, such as by a severe impact inside the cab, being thrown from the cab, or being trapped underneath the machine.

- When operating the machine, always sit in the operator's seat and wear the seatbelt.
- When sitting down, check the seatbelt webbing, buckle, and mounting hardware to make sure they function properly. If not, replace the seatbelt.

  Replace the seatbelt every 3 years, whether it is damaged or not.

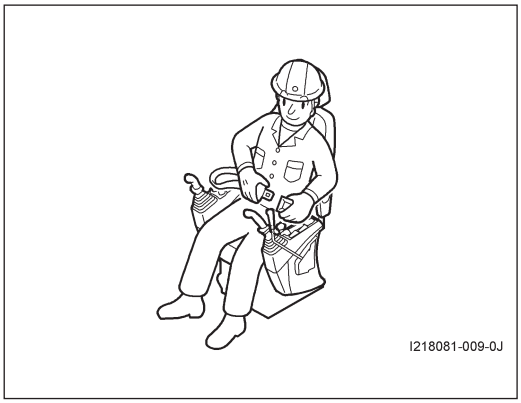

https://truckmanualshub.com/

(14) Escaping in a fire

- Fires can cause major injury or death.
- If a fire occurs while operating the machine, escape from the machine by the following method.
  - Shut off the engine by turning the starter switch to "OFF".
  - Open the door and determine an escape route, then escape from the machine using handrails and steps.
  - If time allows, use a fire extinguisher to begin fighting the fire.

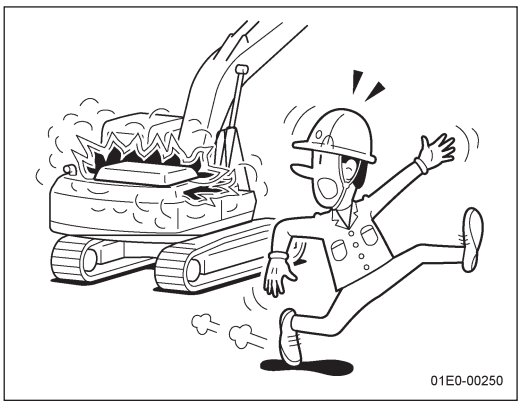

(15) Flying debris hazard

- Flying dirt, rocks fragments, metal debris, or other matter can be extremely dangerous if it hits the eyes or other parts of the body. These can cause a serious accident.
  - Wear a helmet, protective eyewear, safety shoes, a mask, and gloves in locations where dirt or rock fragments could be thrown, or when pins are inserted or removed.
  - Make sure all others are away from the machine when in operation.

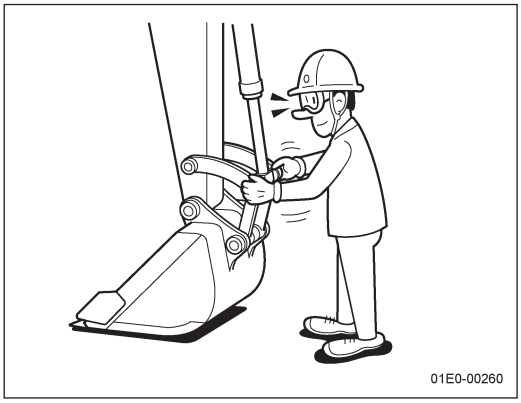

(16) Attaching a head guard

Always attach a head guard when working in locations exposed to the risk of falling rocks or other objects.

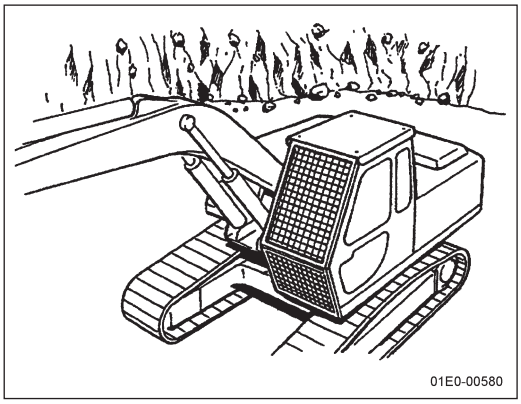

(17) Precautions about the SCR system

1) Engine intake/exhaust system cannot be modified because exhaust gas aftertreatment system failure or engine stop may be caused.

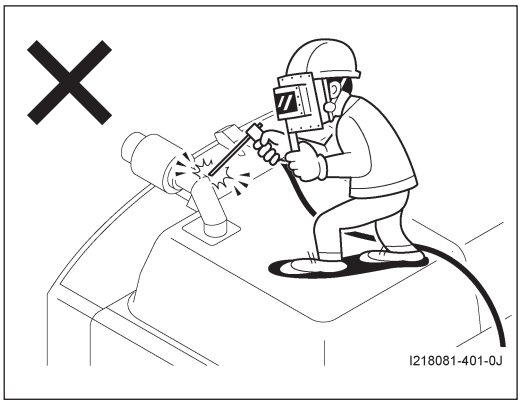

https://truckmanualshub.com/

2) Only use the DEF in accordance with International Organization for Standardization (ISO). Do not use any brands other than DEF/AdBlue®. Do not dilute the DEF/AdBlue® or add any additives. Doing so could not only result in worse gas emissions, but also could cause the machine to fail.

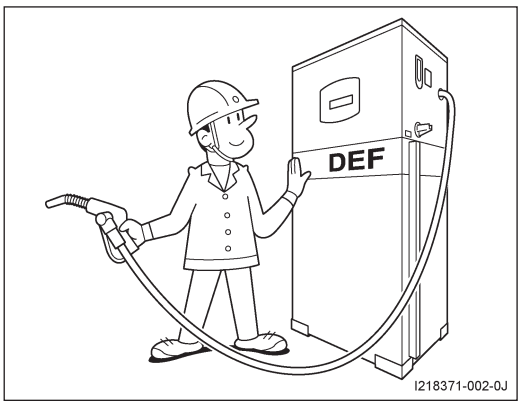

3) Use ultra-low-sulfur diesel fuel with sulfur content of 10ppm or less.
If not, engine stop may be caused.
Do not use any type of water remover.

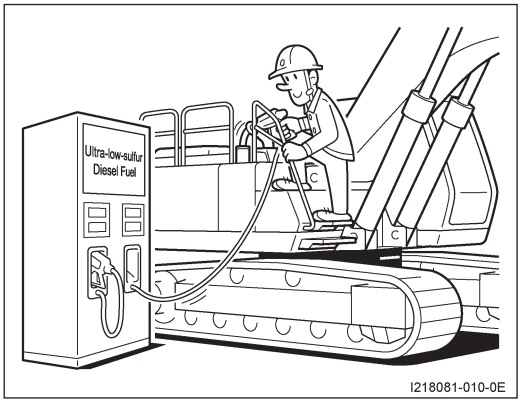

4) Exhaust gases will get significantly hot during SCR system purging. Therefore, be careful not to park near flammable substances.

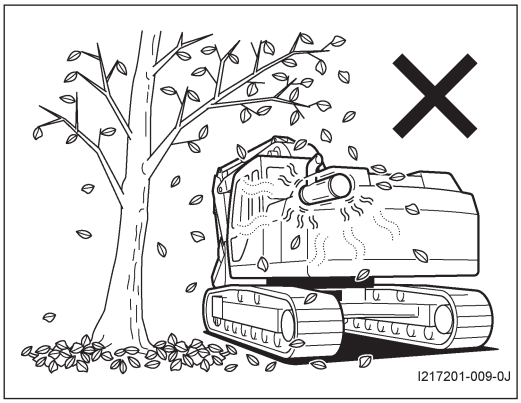

5) Use low-ash engine oil that meets "API standard CJ-4 or JASO standard DH-2".

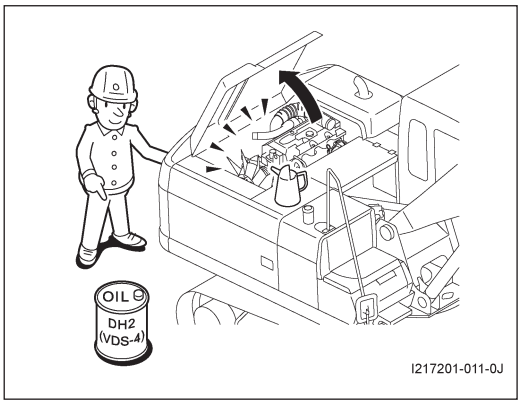

https://truckmanualshub.com/

6) If fuel would mix in engine oil and exceed the specified value, engine failure or engine stop might be caused. Service the machine periodically.

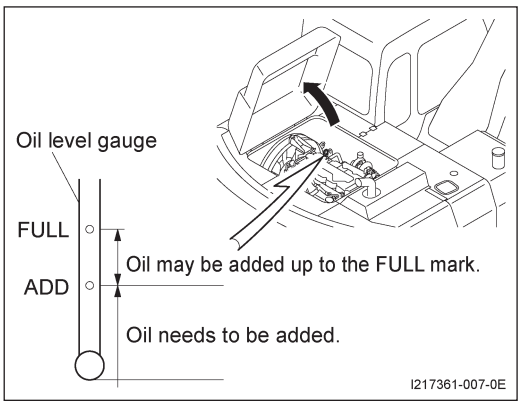

7) Do not install a spark arrester because it adversely affects the SCR system and engine.

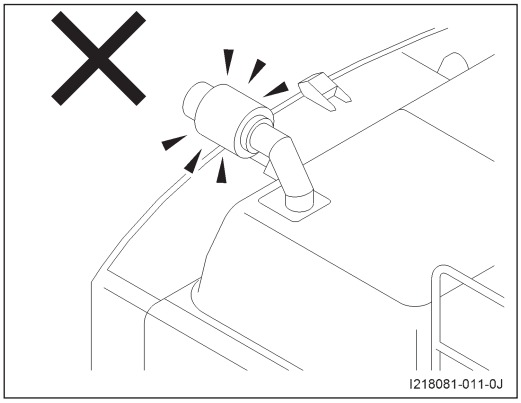

(18) Operator protective structure

The cab and cab guard have an operator protective structure. Alteration of them such as welding, drilling, etc. will deteriorate the function for a protective structure, so never alter them. Damage or deformation on them might also deteriorate the function. Contact your authorised KATO dealer.

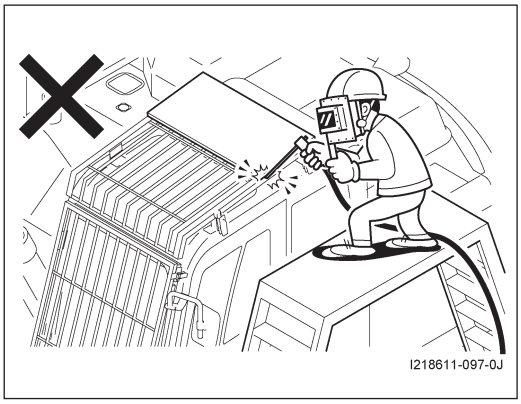

1-1-2 Precautions on working environment (01E0-0032-1E)

(1) Always discuss the work plan with all those involved before you start.

When you arrive at a site, discuss the work plan thoroughly with the site foreman before you start work.

A full knowledge of what the job involves and a proper work plan will ensure safety and increase your working efficiency.

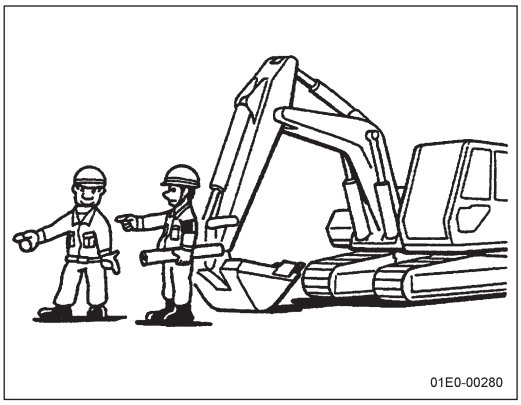

https://truckmanualshub.com/

(2) Check for the working position, roads and the presence of obstructions.

- Investigate the soil strata and quality in advance and give some thought to the best working method.
- If the working area is sloped, make it as level as possible before going on with the job.

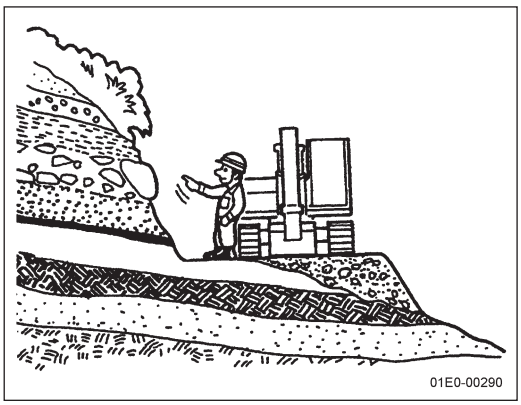

(3) Beware of buried objects

Before you start work, check with the firm in charge of the site for the existence and location of buried objects such as water and gas mains and high-voltage cable ducts.

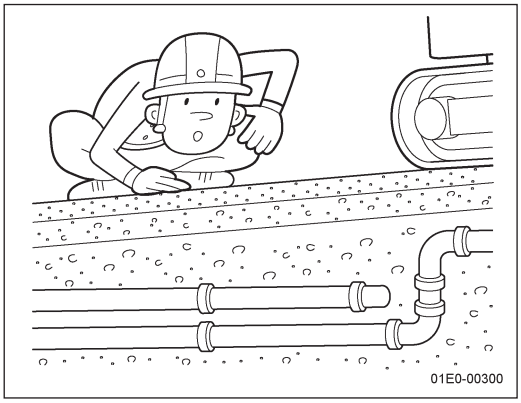

(4) No entry into the working area

People, objects etc. should be absolutely prohibited from entering into the machine working area.

Always be aware of your surroundings while you work.

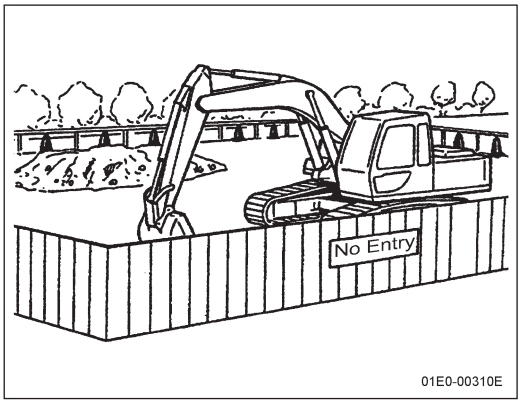

(5) Keeping good visibility

1) When you need to swing or reverse in areas of restricted visibility, place a guide and a signaler and do as they instruct you.

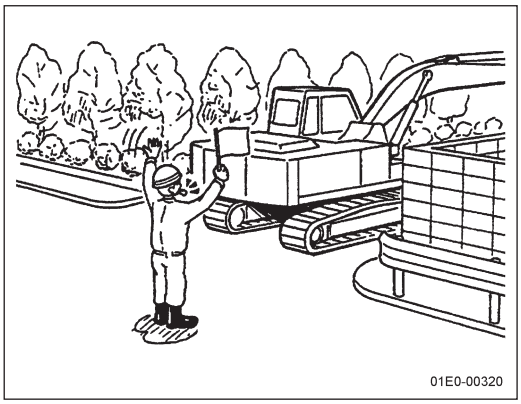

https://truckmanualshub.com/

2) Always keep the cab windows, mirrors, wiper, working lamps, and rear view camera clean and have them serviced.

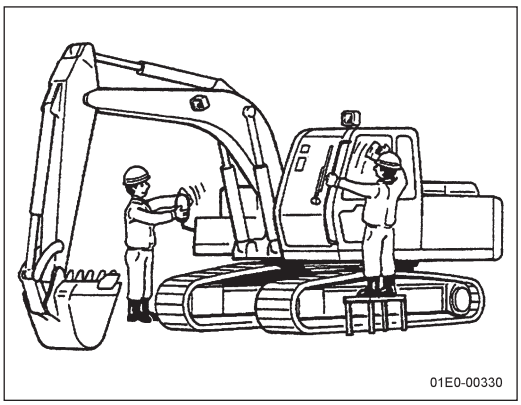

(6) Precautions on working in the public road

Position a guide in the road and erect fences etc. to ensure the safety of passing vehicles and pedestrians.

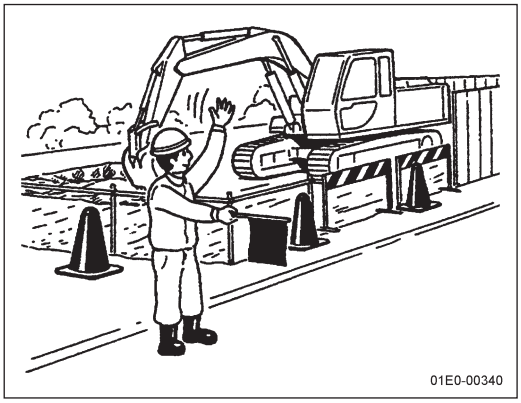

(7) Maintain a good work site and environment for the machine.

Clear away all objects which hinder operation. Make sure there is enough space, not just for the swing radius on the counterweight side but also within the bucket movement area.

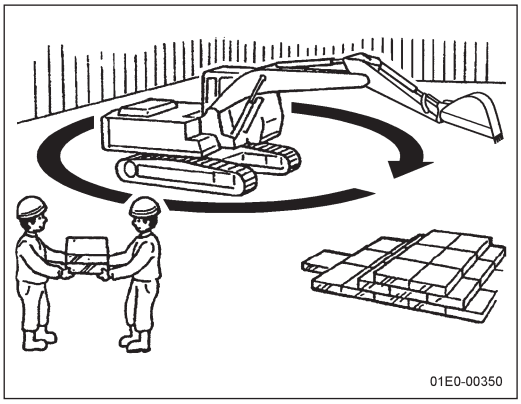

(8) Precautions when working near power cables

If you are working close to power cables, you can receive a shock even if the machine does not actually touch the cables.

When you are working near power cables, strictly observe the following precautions.

1) Safety measures

・Contact the managing company in advance and fit protective devices such as tubular coverings and warning signs.

・Post a conductor to supervise.

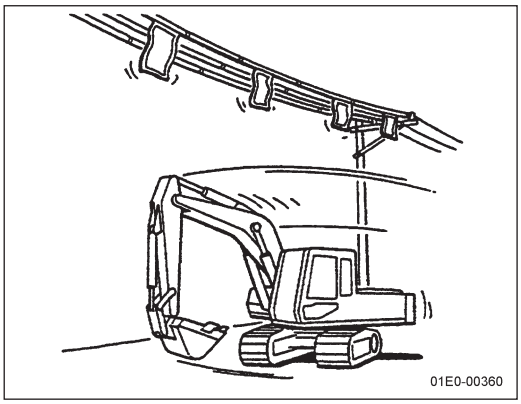

https://truckmanualshub.com/

・Keep a safe distance between the machine and the power cables. Before you start work, the electricity company should be consulted on the location and voltage of cables on the site and the necessary safe distance.

・When working near power cables, do not allow the machine to approach other people.

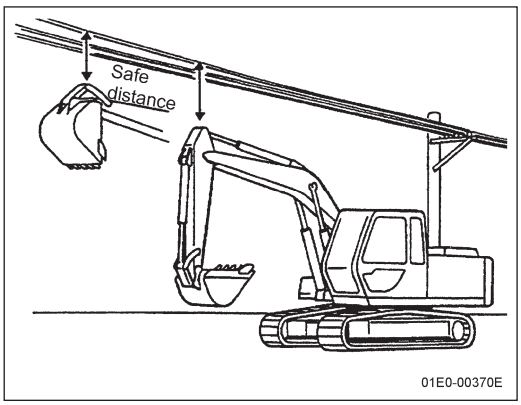

2) Electric shock accidents

If an electric shock accident occurs, stay seated. Do not attempt to leave the operation cab, as doing so could cause operator electrocution and increase the scope of damage.

・Contact the power company

Contact the electricity company or other relevant company to have them shut off the power or receive instructions for appropriate emergency measures.

・Evacuate others away from the machine

Evacuate workers and other relevant site personnel away from the machine to prevent any secondary disasters.

If anyone becomes electrocuted, let them escape on their own. Attempting to help them may cause secondary disaster to spread from the electrocuted victim.

3) After the incident, be sure to have all equipment inspected by your authorised KATO dealer before operating the machine again.

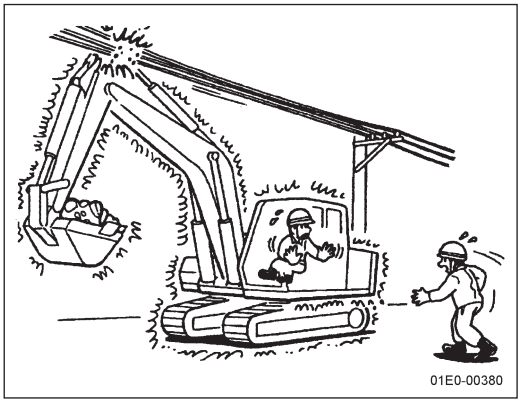

1-1-3 Precautions before you start work (01E0-0033-0E)

(1) Do not let anyone other than the operator ride

Before and during work, do not let anyone other than the operator ride on the operator's seat or the machine itself.

Passengers may collide with obstructions or be thrown off the machine, or they may cause a hazard by obstructing the operator's field of view.

https://truckmanualshub.com/

(2) Strictly observe preoperational checks

When you have finished preparing the work site, carry out preoperational checks.

Refer to the section on preoperational checks.

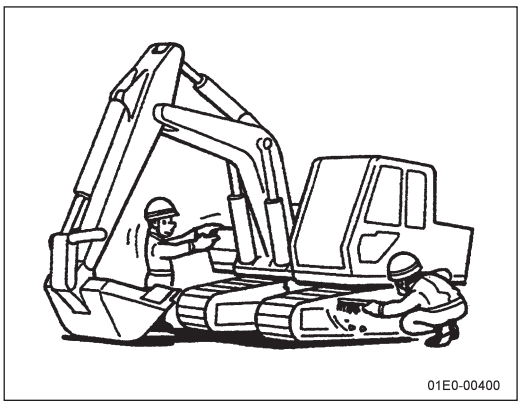

(3) Detached attachments

Place attachments which have been replaced and detached in a safe, stable position where they cannot topple over.

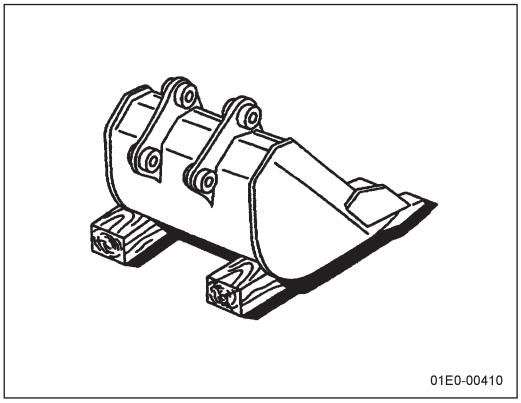

https://truckmanualshub.com/

1-2 Precautions during operation (01E0-0034-0E)

1-2-1 Precautions when starting the engine (01E0-0035-0E)

(1) Precautions when starting the engine indoors

If you need to start the engine indoors, open the windows and doors to ensure good ventilation.

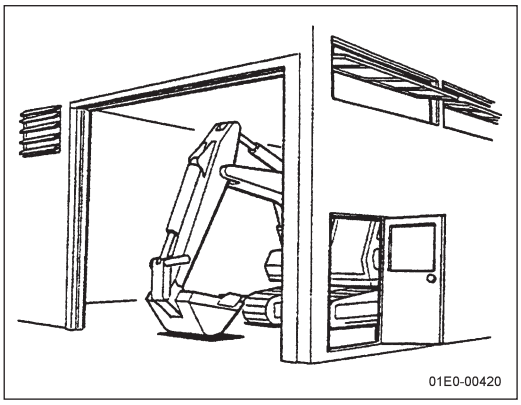

(2) Keeping the surroundings of the engine clean and tidy

Do not leave tools, rags etc. lying around in the engine compartment.

Clean everything away as soon as you finish inspection or servicing.

Cleanly wipe away any spilled oil or fuel.

Check that paper scraps or other flammable materials are not scattered about or piled up near the engine.

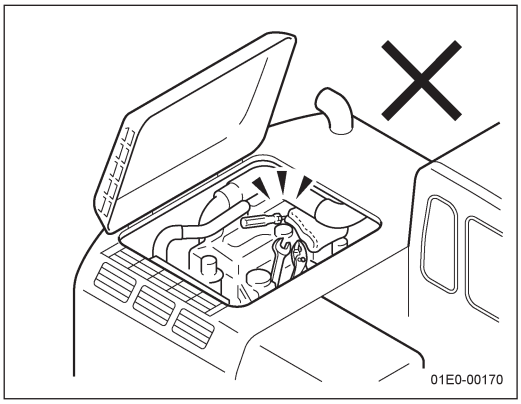

(3) Start the engine from the operator's seat

- Always start the engine while seated in the operator's seat.
  If you are not in the operator's seat when you start the engine, you will not know the positions of the control levers or the condition of the monitor display, so this is a dangerous practice.
- Do not start the engine by shorting the starter circuit.
  This is dangerous and can damage the electrical system.

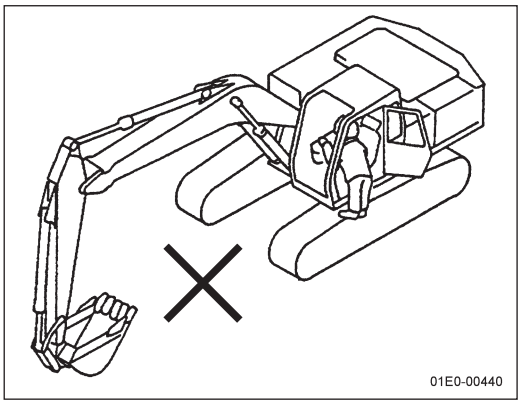

(4) Do not operate the machine if it has a warning tag attached.

If there is a warning tag on the control lever, the machine is in the process of inspection and servicing, so do not start the engine.

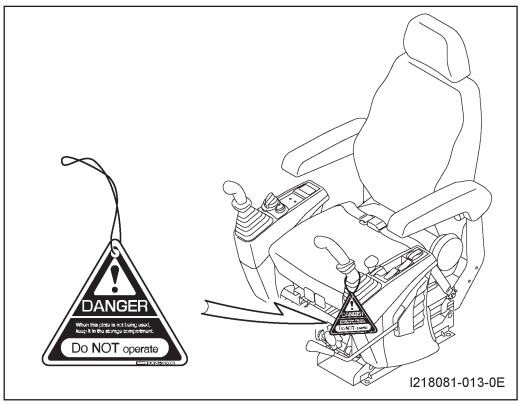

https://truckmanualshub.com/

(5) Check safety before you start the engine

- Before you board the machine, check that there is nobody nearby.
- When you are about to start the engine, sound the horn to warn people nearby.

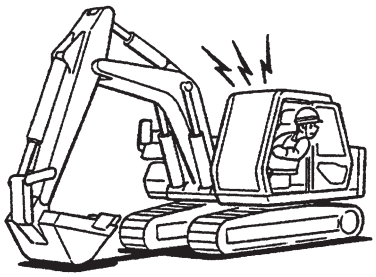

01E0-00460

(6) Operation of the safety lock lever

When you are about to start the engine, check that the safety lock lever has been set to the lock position.

After you stop the engine, set the safety lock lever to the lock position before you leave the cab.

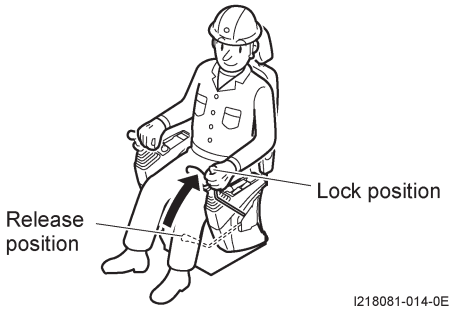

I218081-014-0E

1-2-2 Precautions on operation (01EE-0036-1E)

(1) Prohibition of operations other than those designated

You are forbidden to attempt operations other than those designated in the instruction manual.

01E0-00480E

(2) Prohibition of unreasonable operations

Familiarize yourself with the machine specifications and never attempt operations which you know to be beyond the capacity of the machine.

You may cause damage to the machine or serious accidents including tip-over.

You should always operate within the range of the machine's capacity.

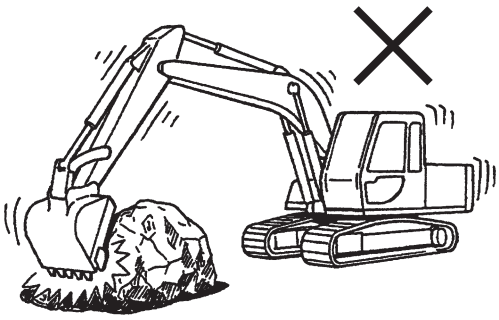

01E0-00490

https://truckmanualshub.com/

(3) Do not use the bucket etc. for anything other than excavation.
Use of the bucket or other front attachments for purposes other than excavation are prohibited.

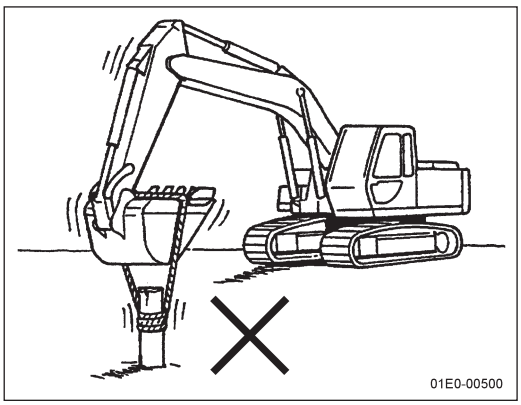

(4) Sit in the operator's seat while you operate the machine
Always sit in the operator's seat while you operate the machine.
It is dangerous to operate the machine while leaning out of the cab or anywhere other than in the seat.

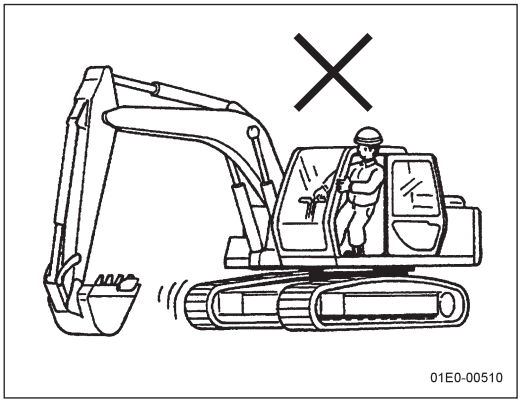

(5) Riding on the bucket or hook is prohibited
You must not allow anyone to ride in the bucket or hoist on the hook.

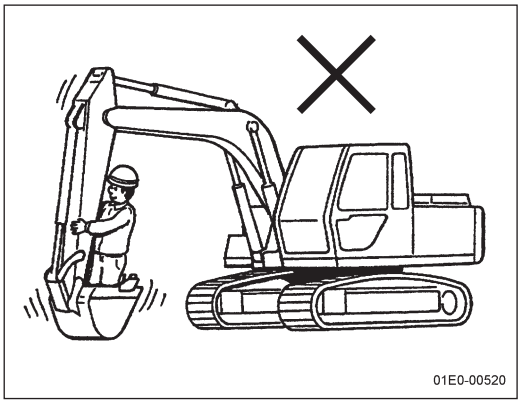

(6) Making the work site safe
1) Unstable ground surfaces increase the chance of tip-over.
Slopes, road shoulders and the edges of deep ditches are unstable, so you should reinforce them before traveling over them.
If the weight and vibration of the machine cause the ground to crumble, there is the risk that the machine can fall or tip-over. In particular beware of wet roads after rain and ground surfaces after blasting which are prone to loosening.

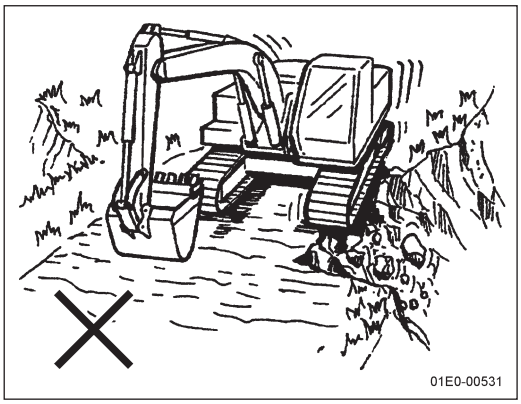

https://truckmanualshub.com/

2) Working on inclined ground

- The greatest risk when working on inclined ground is losing balance and tipping over while swinging. Swinging on a slope with the bucket filled with earth toward the down slope increases this risk considerably.
- If there is no alternative to working on a slope, use embankment to make the working position as level as possible.

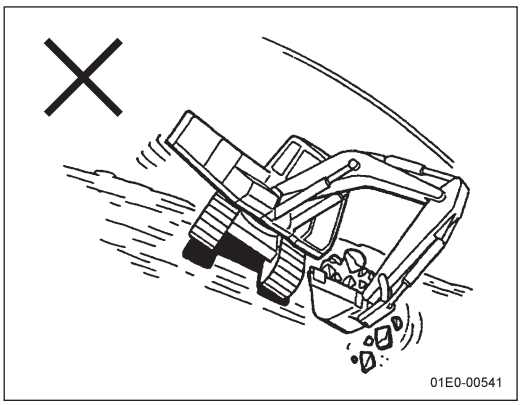

3) Prohibition of dangerous operations

- Undercutting cliffs is dangerous because it causes earth to fall.
- Do not dig so deeply that the machine is undercut. This makes the ground unstable and risks the machine falling.

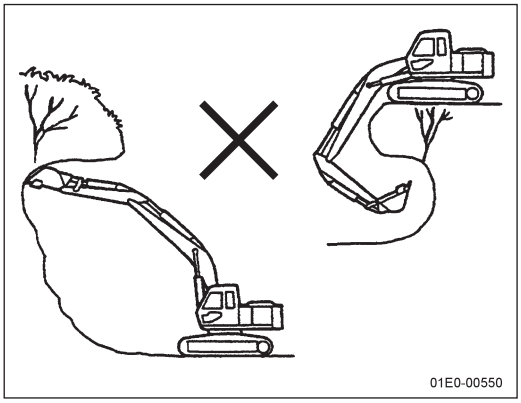

4) Keeping adequate visibility

- When working in dark places, switch on the working lamps and place further illumination where necessary.
- When visibility is bad due to fog, snow, rain or other conditions, stop work and do not start again until conditions have cleared enough to no longer reduce visibility.

5) Ground near the dug ditches or on the top of embankments is unstable and the machine may tilt due to the combination of its weight and vibration.

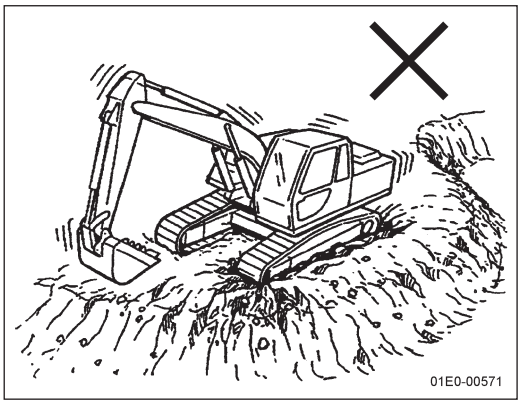

https://truckmanualshub.com/

6) When working in an area where there is the risk of falling stones, fit a head guard with the machine and proceed with caution.

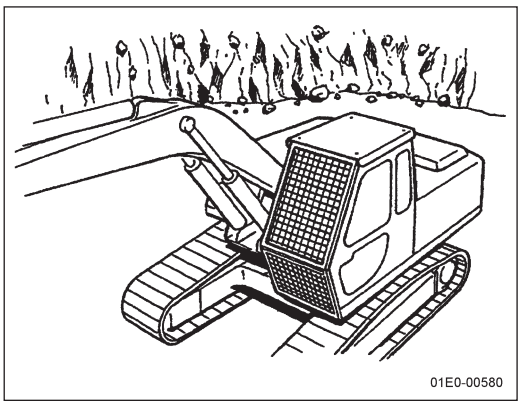

7) Caution near cliffs and road shoulders
Align the lower structure at right angles to the edge with the traveling motors to the rear to allow easy extrication from the edge.

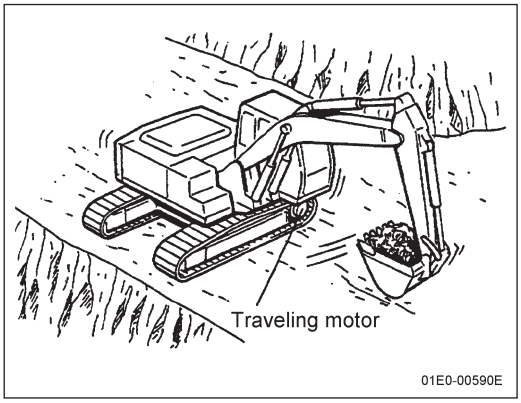

8) Beware of loose ground after rain, earthquakes or blasting
Take care to avoid crumbling cliffs and road shoulders or falling stones.
Always check whether there are any explosive charges which have not detonated yet.

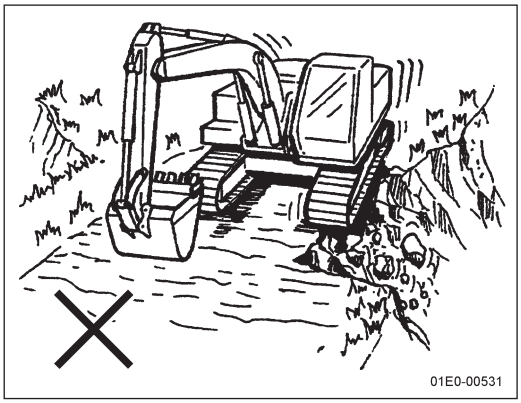

(7) Prohibition of hoisting operations
The practice of fitting a wire rope to the bucket or other front attachment and using it for hoisting is prohibited.
When hoisting, you may need a special hoist hook and safety devices, so before proceeding check the machine's specifications and the regulations in the country concerned.

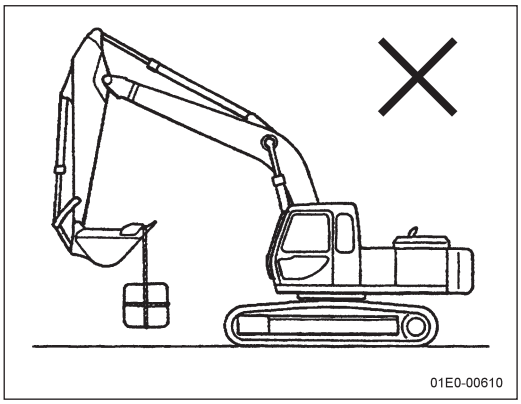

https://truckmanualshub.com/

(8) Precautions when snow has settled

- When snow has settled and frozen, the least inclination of a road surface can lead to sliding.
  When traveling, avoid sudden acceleration, braking or turns.
- When clearing snow, you may be unable to see the road shoulder or standing objects, so work with care.

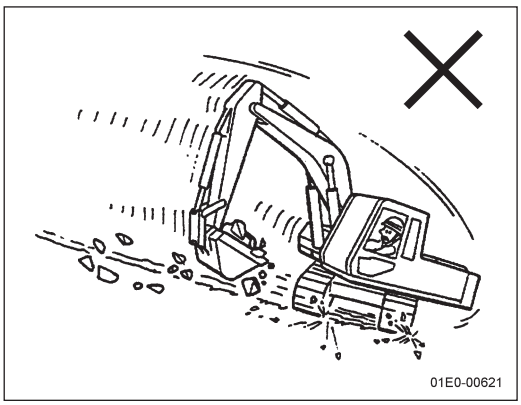

(9) Check that nobody is near the machine when it swings

- Always check that nobody is in the front and rear swing ranges.
- Before swing, sound the horn to warn people nearby.

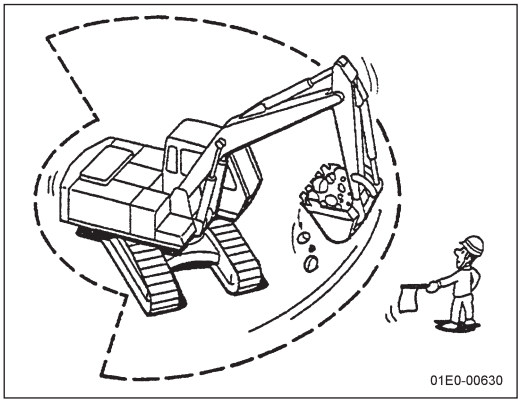

(10) Do not allow the machine to hit anything

Take care that the boom, arm etc. do not hit anything when working under a tunnel, bridge or power cables, or where there are limits on headroom in car park entrances etc. or on front or rear swing radius.

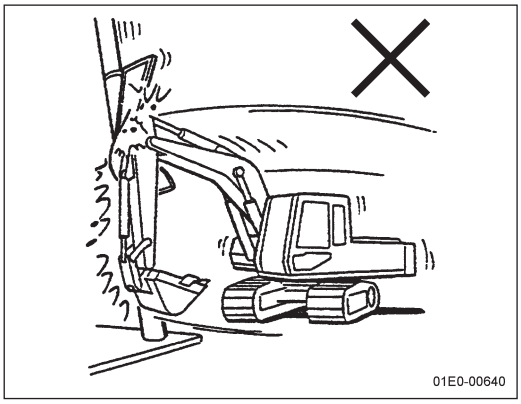

(11) Determine a signaler for joint operations

If two or more machines are working together on a site, determine the signaler and the signals in advance and follow the signaler's instructions.

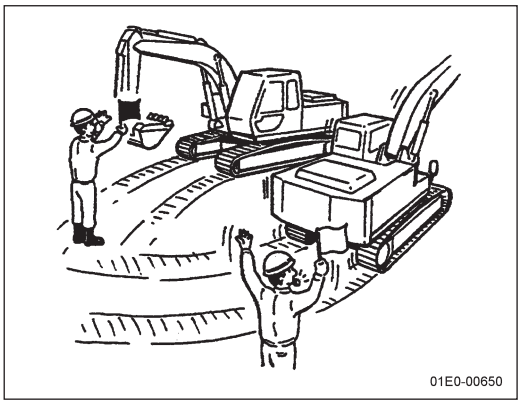

https://truckmanualshub.com/

(12) Do not pass the bucket above the dump truck or worker

Do not pass the bucket over the head of the worker or over the truck's cab.

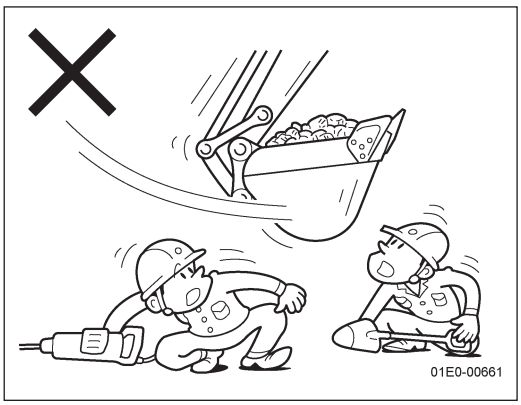

(13) Exhaust gas hazard

Engine exhaust gases contain toxic substances that may be harmful to humans. Prolonged breathing of exhaust gases can be detrimental to health or result in death.

If starting the engine or operating the machine indoors, in a tunnel, underground, or other enclosed space, extend the exhaust pipe outdoors or ensure there is adequate air exchange by opening doors or windows to allow in plenty of exterior air.

1-2-3 Dangerous operations which can damage the machine (01E0-0037-3E)

(1) Use of traction for digging is forbidden

Do not work by digging the bucket into the ground and traveling backward as this puts unreasonable loads on the machine.

If you apply unreasonable loads in the swing direction, you may damage the machine.

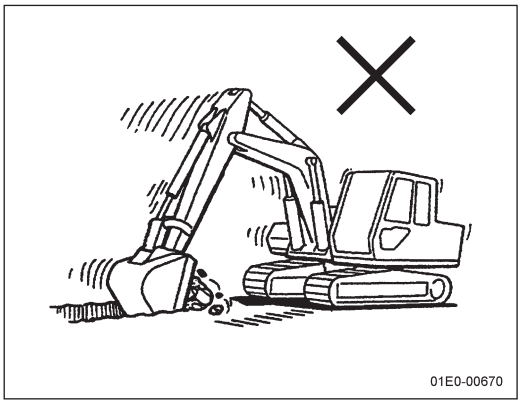

(2) Use of swing force for digging is forbidden

Never use swing force to push projections, embankments, stones etc. with the side of the bucket.

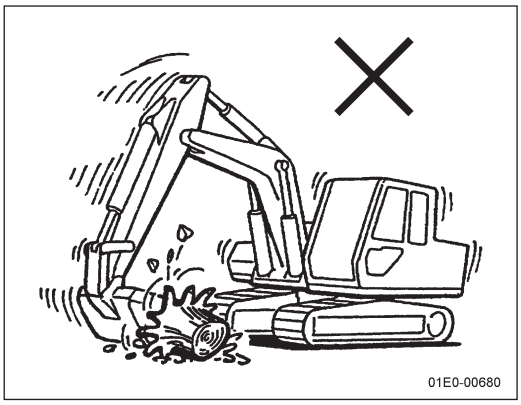

https://truckmanualshub.com/

(3) Operation to the end of a hydraulic cylinder's stroke is prohibited

When working the control levers, leave some margin before the stroke end of the cylinders.

If you use the full stroke of a cylinder to stroke end, it can apply an unreasonable load which may damage the cylinder, boom or arm.

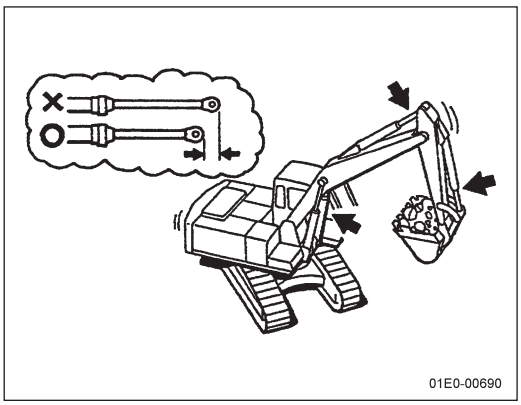

(4) Use of the machine weight to assist in digging is prohibited.

Never knock the bucket into the ground and use the weight of the machine to assist in digging. This can damage the machine body or tip over the machine.

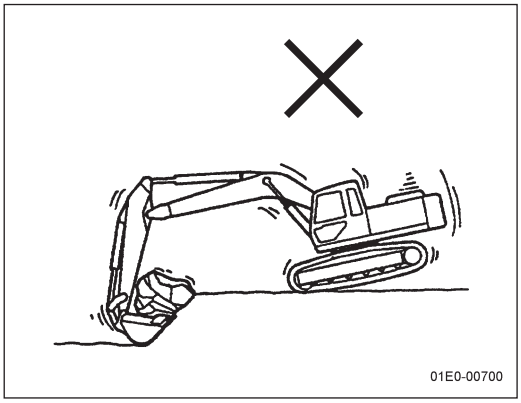

(5) Hammering is prohibited

Never use the bucket for hammering of pile driving operation. This can damage the bucket and front attachments and it is also dangerous.

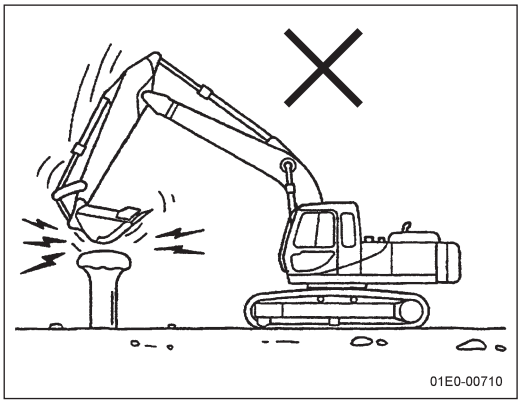

(6) Beware of digging diagonally

If you dig with the upper structure at an angle to the lower structure, the bucket teeth can hit the track shoes, so work with extreme care. If you are digging deeply at an angle, the boom etc. may hit the track shoes.

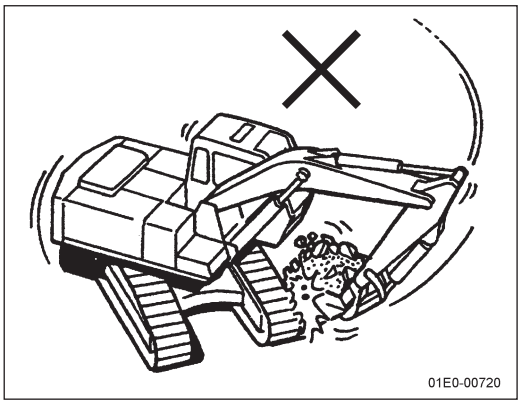

https://truckmanualshub.com/

(7) When digging sideways, make the ground under the machine level before starting work.
Projections under the track shoes cause high point loads which can bend them.

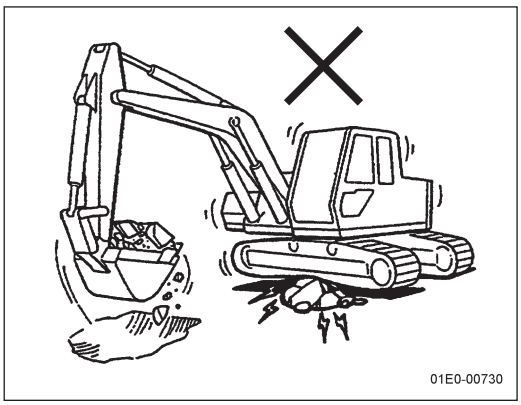

(8) Reckless operation will damage the machine.

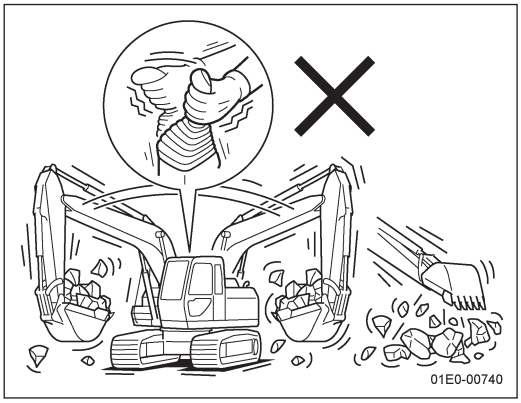

https://truckmanualshub.com/

1-3 Precautions after operation (01E0-0038-1E)

(1) When you park the machine, choose a level and firm place and lower the front attachment such as a bucket to rest on the ground.

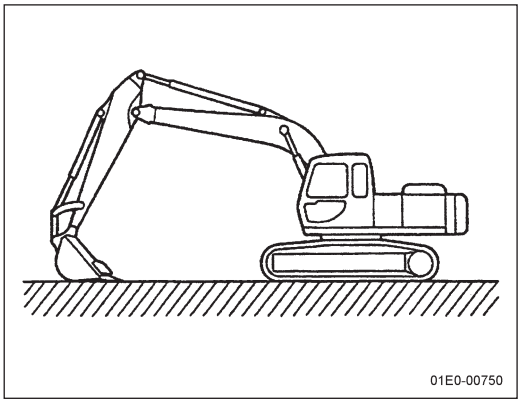

(2) If you stop or park the machine on an incline, it could start to run away dangerously. Do not stop or park the machine on an incline. If there is no alternative to parking on an incline, use chocks so that the machine cannot move, and dig the bucket into the ground.

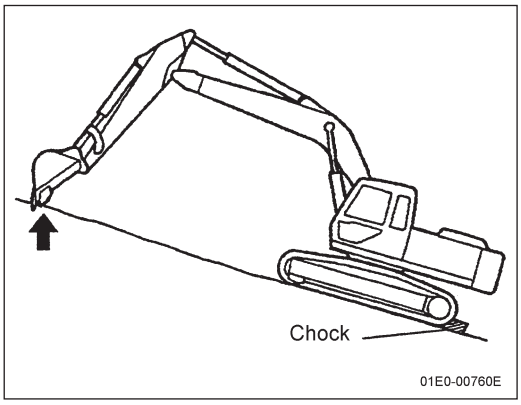

(3) If you park the machine on a public road, place warning signs so that the machine can be clearly distinguished from other vehicles.
Particularly at night you should place lights and signs for night use.

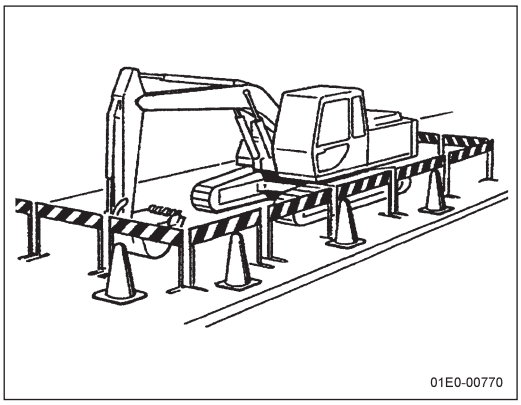

(4) Before leaving the cab after parking the machine, place the bucket firmly against the ground, switch off the engine, move the safety lock lever to the lock position and engage all locks.

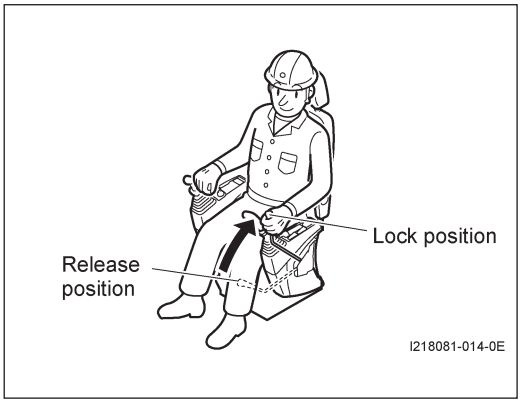

https://truckmanualshub.com/

(5) Postoperational checks

After you have finished work, check all its parts and add lubricants and fuel as required.

If you find any defective parts, repair them immediately.

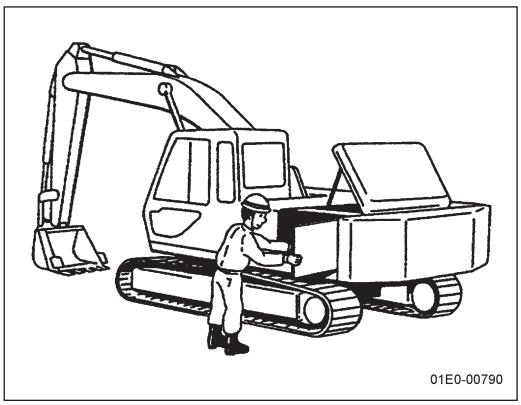

https://truckmanualshub.com/

1-4 Safety signs (T218621-005-0E)

The safety signs are stuck on in the places shown in the diagram. Check all of them before you start to travel or operate the machine.

Keep the safety signs clean at all times so that they are clearly visible and easy to read.

> ⚠ **CAUTION**
>
> - If a safety sign is dirty, use water or a neutral cleaner to remove the dirt. Do not use gasoline or organic solvents.
> - If it is not possible to remove the dirt, or if a safety sign is damaged or peeling, replace the safety sign with new.
> Refer to this section and parts list on the machine and order a new sign from your authorised KATO dealer to replace the safety sign.
> - When you replace a safety sign, always check that it is identical to the original.

(01E0-0040-1E)

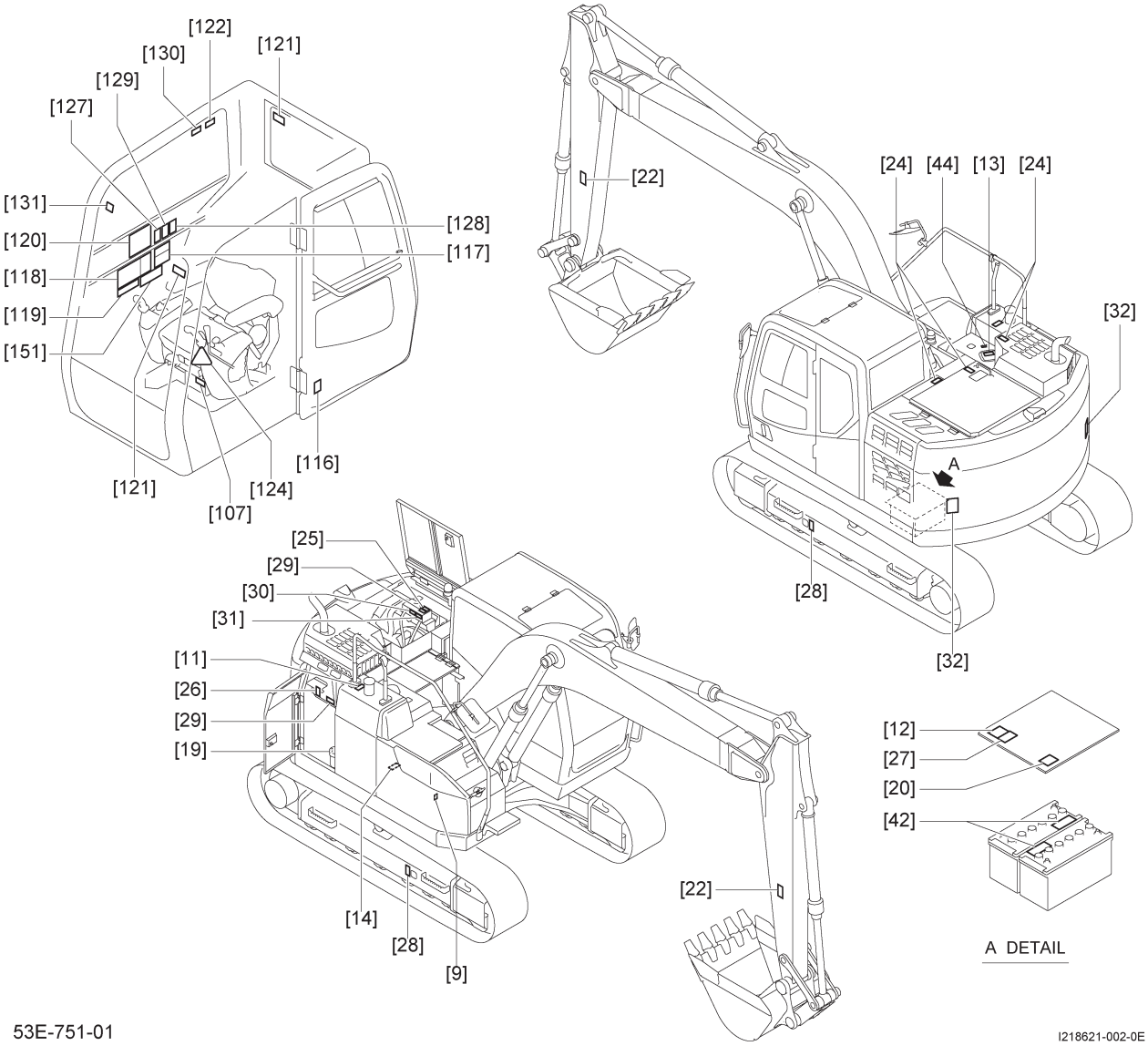

https://truckmanualshub.com/

[9]

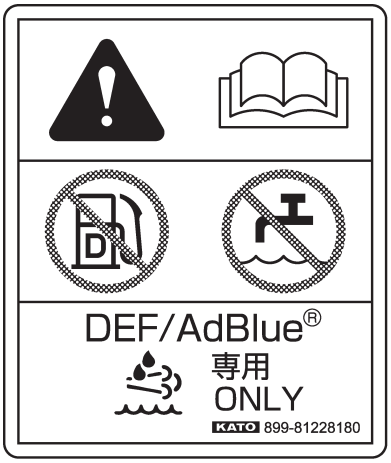

899-81228180a

Content: Only use the specified DEF/AdBlue®. Do not add diesel fuel.

Location: Right-front machine compartment (frame)

Part No.: 899-81228180

[11]

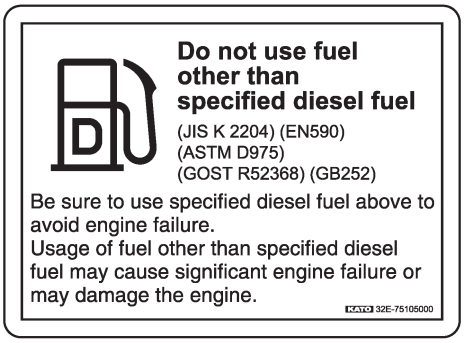

32E-75105000a

Content: Do not use fuel other than specified diesel fuel.

Location: Beside the oil filler port

Part No.: 32E-75105000

[12]

707-75112002a

Content: Precautions on handling the battery

Location: Left machine compartment (battery cover)

Part No.: 707-75112002

[13]

767-75107001a

Content: Precaution on removing the return filter cap

Location: Top surface of the oil reservoir

Part No.:767-75107001

https://truckmanualshub.com/

[14]

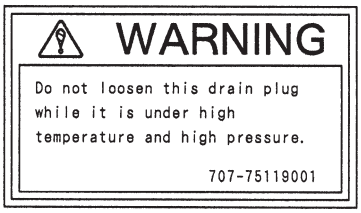

707-75119001a

Content: Warning when handling the drain cock
Location: Lowermost part of the oil reservoir
Part No.: 707-75119001

[19]

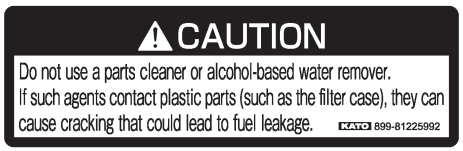

899-81225992a

Content: Precautions on handling the fuel filter.
Location: Right machine compartment (fuel pre-filter)
Part No.: 899-81225992

[20]

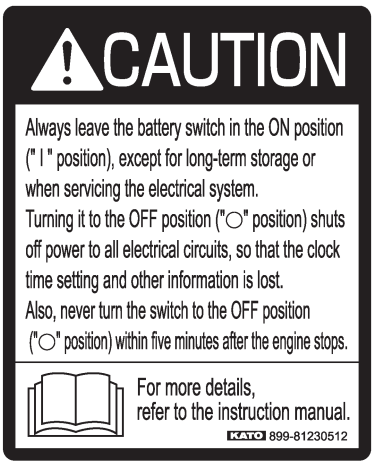

899-81230512a

Content: Precautions when using the battery disconnect switch
Location: Left machine compartment (battery cover)
Part No.: 899-81230512

[22]

001-81302022a

Meaning: There is a danger of injury from being hit and thrown by the attachments.
Stay away from the machine.
Location: Both sides of the arm
Part No.: 001-81302022

https://truckmanualshub.com/

[24]

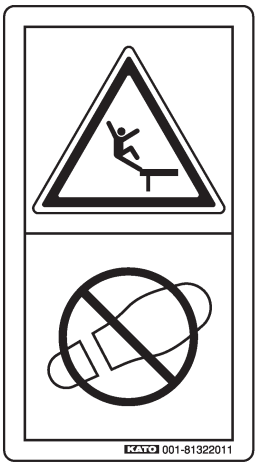

001-81322011a

Meaning: Beware of falling.

Location: Top surfaces of the engine hood, left machine compartment, and fuel tank

Part No.: 001-81322011

[25]

001-81332002a

Meaning: If the cap is opened when the radiator is still hot, there is a danger the high temperature coolant might be ejected and cause a burn injury.

Do not open the cap when the radiator is hot.

Location: Top surface of the radiator expansion tank

Part No.: 001-81332002

[26]

001-81322004a

Meaning: There is a danger of being injured due to an explosion.

Do not drill, weld, hit, or disassemble the muffler, or put it near any flame.

Location: Right machine compartment (muffler cover)

Part No.: 001-81322004

[27]

001-81322006a

Meaning: There is a danger of shock when handling the battery cables.

Read the instruction manual and take the proper measures.

Location: Left machine compartment (battery cover)

Part No.: 001-81322006

https://truckmanualshub.com/

[28]

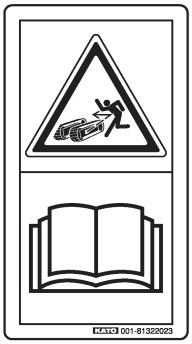

001-81322023a

Meaning: The plug might fly off and cause injury.
Read the instruction manual and handle the plug properly.

Location: Both sides of the lower frame

Part No.: 001-81322023

[29]

001-81332003a

Meaning: If you touch the high temperature part (such as the engine, motor, muffler, etc.) while the engine is running or immediately after it has stopped, you could get burned. Do not touch the high temperature part.

Location: Right machine compartment (muffler cover) and top surface of the radiator expansion tank

Part No.: 001-81332003

[30]

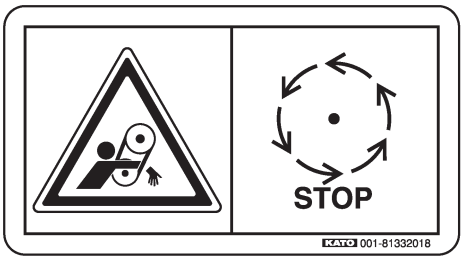

001-81332018a

Meaning: There is a danger of getting caught in rotating equipment, such as belts, and being injured.
Stop rotation completely before inspecting or servicing those parts.

Location: Side of the radiator expansion tank

Part No.: 001-81332018

[31]

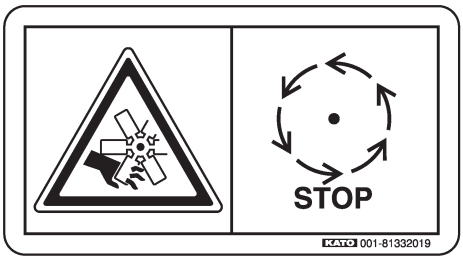

001-81332019a

Meaning: There is a danger of getting caught in rotating equipment, such as fans, and being injured.
Stop rotation completely before inspecting or servicing those parts.

Location: Side of the radiator expansion tank

Part No.: 001-81332019

https://truckmanualshub.com/

[32]

001-81302015a

Meaning: There is a danger your body might get caught in the upper structure when the machine swings.
Do not allow anyone to enter the swing range.

Location: Left and right edges of the counterweight

Part No.: 001-81302015

[42]

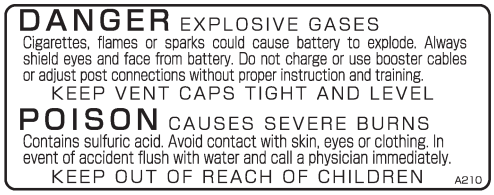

707-75122001a

Content: Precautions on the battery electrolyte and explosive gas

Location: Right machine compartment (upper side of the battery)

Part No.: 707-75122001

[44]

047-74903001a

Content: Add hydraulic oil only. Any other type of oil could cause a malfunction or fire.

Location: Top surface of the oil reservoir

Part No.: 047-74903001

[107]

54E-75115000a

Meaning: Be careful not to pinch your hand in the seat moving part.

Location: Seat stand area (optional)

Part No.: 54E-75115000

https://truckmanualshub.com/

[116]

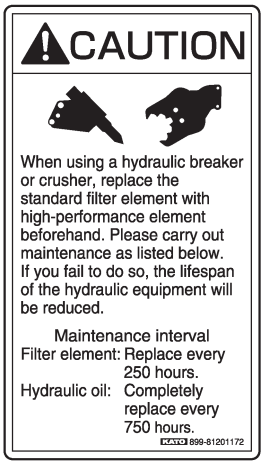

899-81201172a

Content: Precaution for maintenance when the attachment is used

Location: Left side inside the cab (inside of the door)

Part No.: 899-81201172

[117]

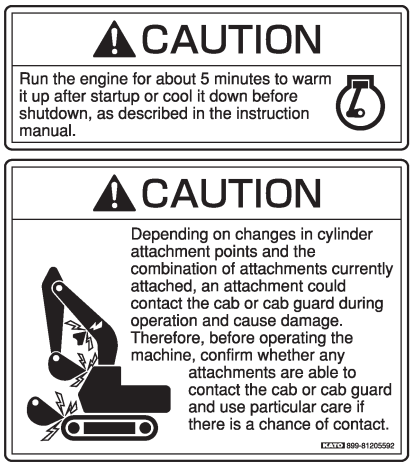

899-81205592a

Content: Precaution on starting and stopping the engine and precaution against attachment contact

Location: Cab right window

Part No.: 899-81205592

[118]

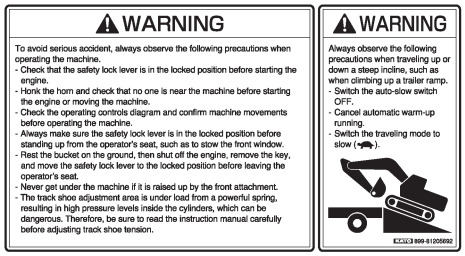

899-81205692a

Content: Matters to be strictly observed when you handle the machine, and travel down a steep incline and climb up or down the trailer ramps

Location: Cab right window

Part No.: 899-81205692

[119]

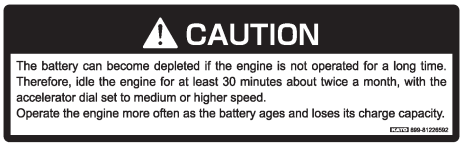

899-81226592a

Content: Precaution against battery depletion when the engine is not operated for a long time.

Location: Cab right window

Part No.: 899-81226592

https://truckmanualshub.com/

[120]

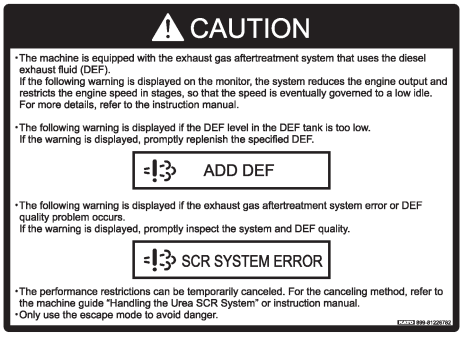

899-81226782a

Content: Precaution for the SCR system

Location: Cab right window

Part No.: 899-81226782

[121]

867-75008000a

Meaning: Emergency exit position

Location: Front window and rear window

Part No.: 867-75008000

[122]

707-75108002a

Content: Precaution on opening and closing the front window

Location: Cab right window

Part No.: 707-75108002

[124]

707-75118001a

Meaning: Operation prohibition during inspection and servicing

Hang this sign on the control lever during inspection and servicing not to allow any other worker to start the engine or operate the machine.

Part No.: 707-75118001

https://truckmanualshub.com/

[127]

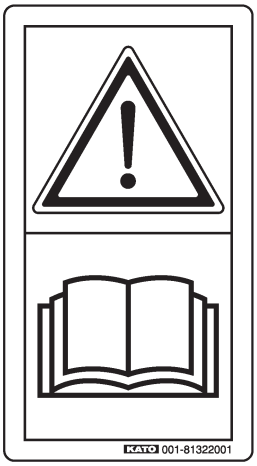

001-81322001a

Content: Be sure to read the instruction manual before operating, servicing or transporting the machine.

Location: Cab right window

Part No.: 001-81322001

[128]

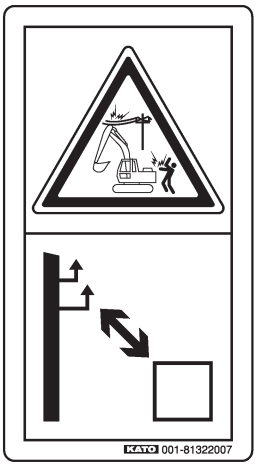

001-81322007a

Meaning: Moving the machine too close to electrical wires could cause a shock.
Maintain a safe distance from electrical wires.

Location: Cab right window

Part No.: 001-81322007

[129]

001-81322016a

Meaning: There is a danger the parked machine might move accidentally, causing injury due to being struck or caught between moving parts.
Before leaving the machine, lower attachments to the ground, use the safety lock lever to lock the control levers, and remove the engine key.

Location: Cab right window

Part No.: 001-81322016

https://truckmanualshub.com/

[130]

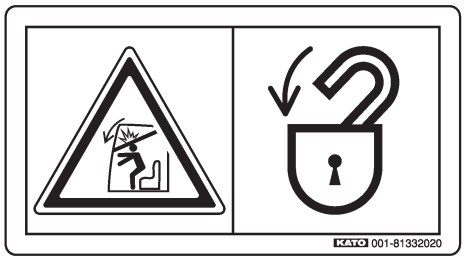

001-81332020a

Meaning: The stowed front window might slip down and cause injury.
Lock the window securely in the stowage position.

Location: Cab right window

Part No.: 001-81332020

[131]

54E-75134000a

Content: Be careful of the lock lever position for opening/closing the front window.

Location: Front window

Part No.: 54E-75134000

[151]

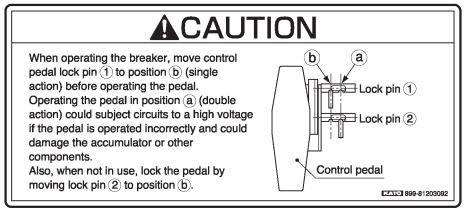

899-81203092a

Content: Precaution on breaker operation (optional)

Location: Cab right window

Part No.: 899-81203092

https://truckmanualshub.com/

1-5 Precautions on getting on and off the machine (01E0-0041-0E)

⚠ CAUTION

- When you get on and off the machine, face toward it and use the hand grips, steps and track shoes to support yourself. Keep at least three points of support at all times on the hand grips, steps and track shoes.
  Do not use any other than the hand grips to hold on to.
- Do not jump onto or off the machine.
  Do not get on or off the machine while it is in motion.
- The floor, hand grips, steps, track shoes etc. are slippery when they have mud, oil or snow on them, so wipe them clean before you get on or off the machine.
- If the hand grips or steps are damaged, repair them. If the attachment bolts are loose, tighten them securely before you get on or off the machine.

(01E0-0042-0E)

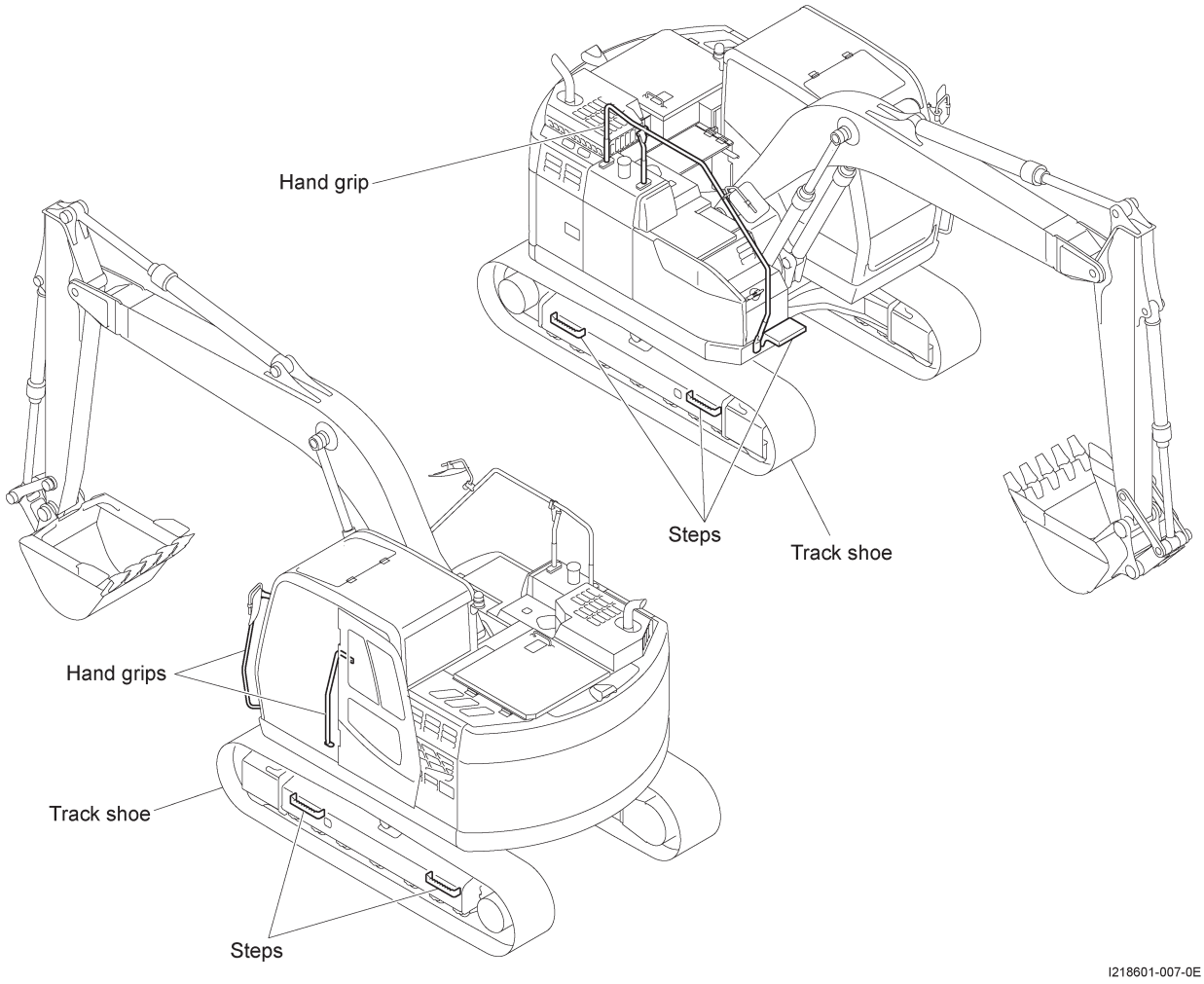

https://truckmanualshub.com/

1-6 Precautions when filling with fuel (T216731-007-0E)

Strictly observe the following precautions when filling with fuel.

⚠ DANGER

- Always fill with fuel of the designated type and grade. If you use a non-recommended fuel, performance will be impaired and a major accident could result.
- Stop the engine and turn the starter switch to OFF before you start filling.
- Park the machine in a well-ventilated place and check that there is nobody inside before you start filling.
- Do not allow any fire or source of ignition nearby.
- Take care not to spill fuel on hot areas. If any fuel spills, wipe it up immediately.
- Take care to ensure that no dirt or water gets into the fuel tank when you fill with fuel.
- Watch the level gauge of the fuel tank while you fill with fuel so that the fuel does not pour out of the filler port on the fuel tank.
- Clean the cap strainer when you fill with fuel.
- After filling with oil, refasten the oil cap.
- Extra caution is required when inspecting or servicing the fuel system.
- Fuel leakage from fuel hoses, the injection pump, fuel filter, or connections can cause a fire. If any fuel leakage is discovered, repair it immediately.
- Do not use alternative fuels, which may reduce performance or cause a fire.

(01E0-0044-1E)

Note

Fuel for filling ····· Diesel fuel

Fuel tank capacity ····· 220L

If you use an optional electric fuel supply pump, refer to the separate "instruction manual".

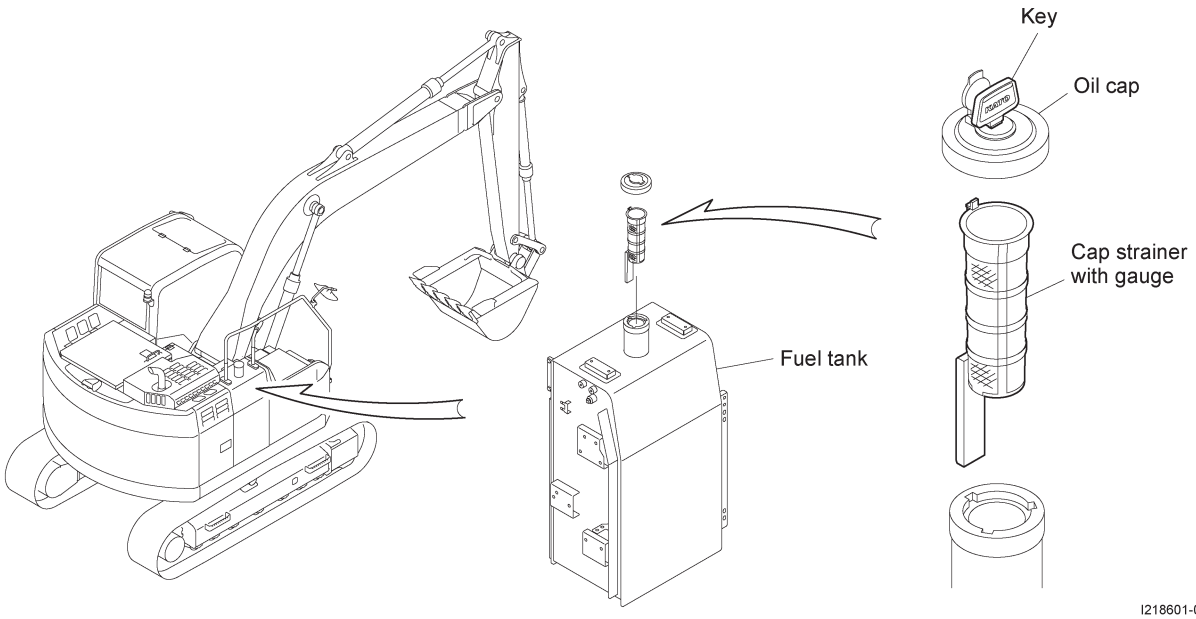

I218601-008-0E

https://truckmanualshub.com/

(1) Engine fuel and filter maintenance

Only use specified fuel.

Using anything other than the specified fuel is not covered by the warranty, of course, but also could cause a major malfunction. In addition, the appropriate fuel filter element for this engine has been specified as well, so it is important to use genuine KATO fuel elements.

(2) Fuel

1) Selecting fuel

Diesel engine fuel should satisfy the following criteria.

① Does not contain even fine dust

② Has adequate viscosity

③ Has a high cetane number

④ Has good low-temperature flowability

⑤ Has low sulfur content (10ppm or less)

⑥ Has low carbon residue

Use standard automotive diesel fuels that meet the requirements above.

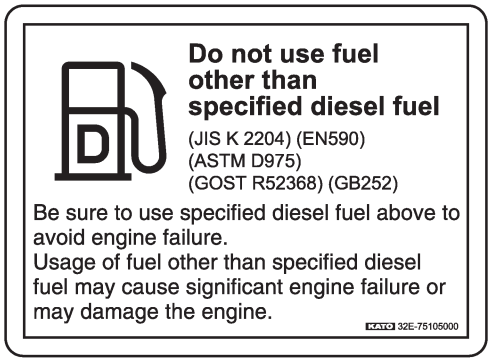

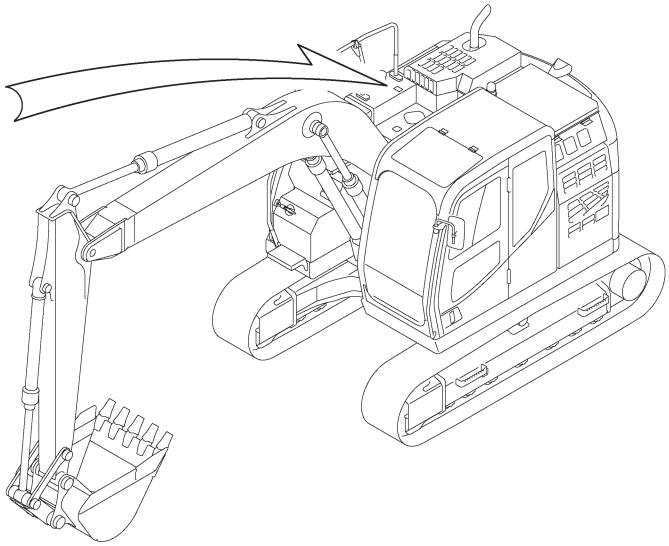

I218621-003-0E

⚠ WARNING

Never use diesel fuel that does not meet the requirements. Doing so may prevent maximizing the functionality and performance of the engine and may cause engine malfunction or failure.

Any malfunction or failure resulting from using non-specified fuel is not covered by the warranty.

(01E0-0045-0E)

https://truckmanualshub.com/

1-7 Precautions when replenishing the DEF (T218621-006-0E)

This machine is equipped with an SCR (Selective Catalytic Reduction) system, that treats exhaust gases after they are emitted from the engine, to reduce the level of toxic NOx gases in exhaust emissions. The SCR system sprays exhaust gases with the DEF (Diesel Exhaust Fluid) to convert the toxic NOx gases into harmless water and nitrogen. To ensure the SCR system continues to function properly, be careful to monitor the DEF (urea solution) level regularly and replenish the specified DEF (urea solution).

(1) Type of the DEF/AdBlue® to Use

Only use the DEF in accordance with International Organization for Standardization (ISO). Do not use any brands other than DEF/AdBlue®.

Only use the DEF/AdBlue® in accordance with the following standards.

International Organization for Standardization (ISO) … ISO 22241

Do not dilute the DEF/AdBlue® or add any additives. Doing so could not only result in worse gas emissions, but also could cause the machine to fail.

(2) How to Store the DEF/AdBlue®

Store the DEF/AdBlue® in a sealed container kept in a well-ventilated location away from direct sunlight.

⚠ CAUTION

- Be careful to prevent any dust or other matter from contaminating the DEF/AdBlue®. Contamination could cause blockage in the DEF/AdBlue® pump, flow lines, or dosing module, which could result in malfunction or failure.
- The quality of the DEF/AdBlue® will decrease significantly at high temperatures (above 40˚C). Therefore, as much as possible, store it at temperatures below 30˚C.
- Store the DEF/AdBlue® in specialized containers (made of polyethylene or stainless steel).
  * The DEF can dissolve the metal in containers made of aluminum, copper, or steel, except for stainless steel. Using such that DEF could cause system malfunction or failure.
- The DEF/AdBlue® freezes at -11˚C. Expansion caused by freezing could damage the container.

(T217921-089-1E)

https://truckmanualshub.com/

(3) Filling the DEF/AdBlue® Tank

Remove the cap from the DEF/AdBlue® tank and fill it with the specified DEF/AdBlue®. Tightly secure the cap after filling the DEF/AdBlue® tank.

NOTE

DEF for filling ·····DEF/AdBlue® in accordance with International Organization for Standardization (ISO)

DEF tank capacity ·····46L

* As a general guideline, replenish the DEF every fourth or fifth time fuel is added.

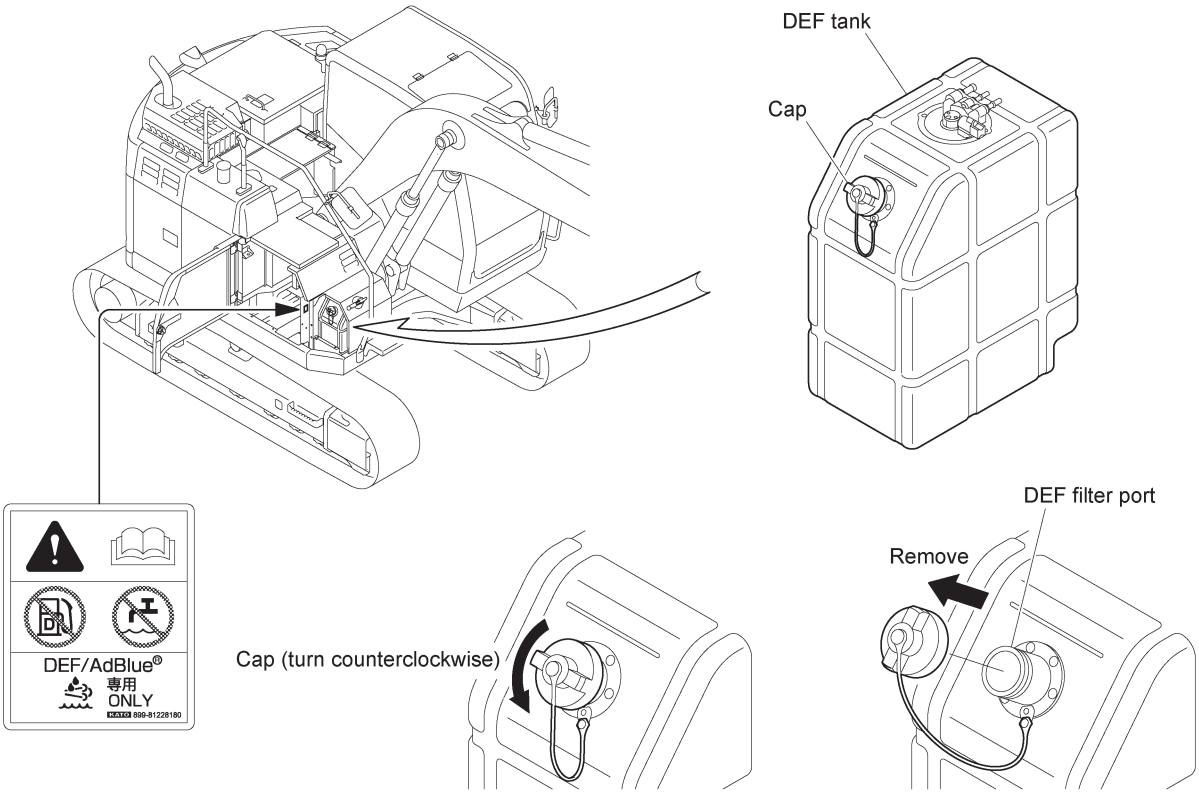

Watch the DEF level meter on the monitor inside the cab while you replenish the DEF.

If the needle of the DEF level meter reaches "F", do not replenish the DEF more.

https://truckmanualshub.com/

CAUTION

- Only use the DEF in accordance with in accordance with International Organization for Standardization (ISO). Do not use any DEF other than the brand specified.
- Do not dilute the DEF or add any additives. Doing so could not only result in worse gas emissions, but also could cause the machine to fail.
- Be careful to prevent any dust or other matter from entering the DEF tank when you replenish the DEF. Contamination could cause blockage in the DEF pump, flow lines, or dosing module, which could result in malfunction or failure.
- Once the DEF has been removed from the DEF tank, its purity cannot be guaranteed. Do not pour it back into the DEF tank.
- If any DEF splashes onto the machinery, then wipe it up immediately. If left unremoved, the urea components could crystallize, making it difficult to remove.
- If the cap is difficult to tighten due to crystallized urea around the filler port of the DEF tank, remove it with a cloth or other means, rather than forcing the cap closed.
- Vaporized ammonia might leak out when the cap is removed from the DEF tank. Vaporized ammonia has an intense odor and especially irritates the skin, mucous membrane, and eyes. Therefore, fill the tank with the DEF in a well-ventilated location.
- Be careful not to get the DEF on the skin, in the eyes, or on clothing. If that occurs, immediately rinse the area with water. If it contacts the eyes or skin, immediately rinse it with clean water and then consult a medical doctor.
- Do not fill the DEF tank beyond the tank replenishing amount.
  The DEF could pour out of the tank or the SCR system could be damaged when the DEF freezes.

(T218081-209-0E)

https://truckmanualshub.com/

2. Part names and terms (01E0-0046-0E)

2-1 Terms (T218341-008-0E)

The following names and terms are used frequently in this manual and they are defined as follows.

- Upper structure ····· The section which swings by swing operation; it includes the cab, slewing table, and power mechanism which is located in its upper part.
- Lower structure ····· The traveling section which bears the upper structure and propels the machine. The machine turns the traveling motors and travels using the track shoes.
- Front attachment ····· A tool fitted to the front of the upper structure to suit the work in hand. Available attachments include the boom, arm, and bucket.
- Front and rear, left and right, forward and reverse ····· The end of the lower structure with the front idlers is defined as the front and the end with the traveling motors and driving tumblers is defined as the rear. Left and right are determined accordingly.
  Therefore whichever direction the upper structure is facing, pushing the traveling control levers will move the machine forward (in the direction of the front) and pulling them will move the machine to the rear, so before traveling always check the positions of front, rear, left and right.
- APC system ····· This is an abbreviation for Automatic Power Control system.
  It is the general name for the computerized control system.

2-2 Part names (01E0-0048-0E)

2-2-1 Exterior (01E0-0049-0E)

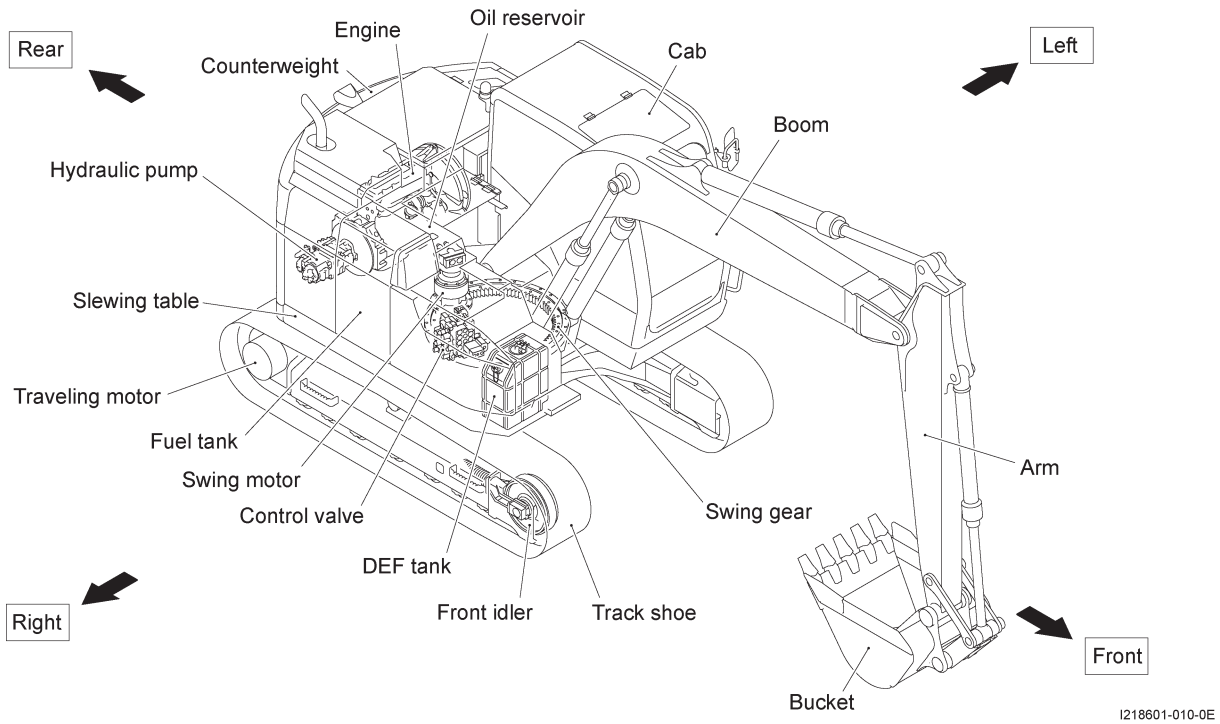

https://truckmanualshub.com/

2-2-2 Inside the cab (01E0-0050-1E)

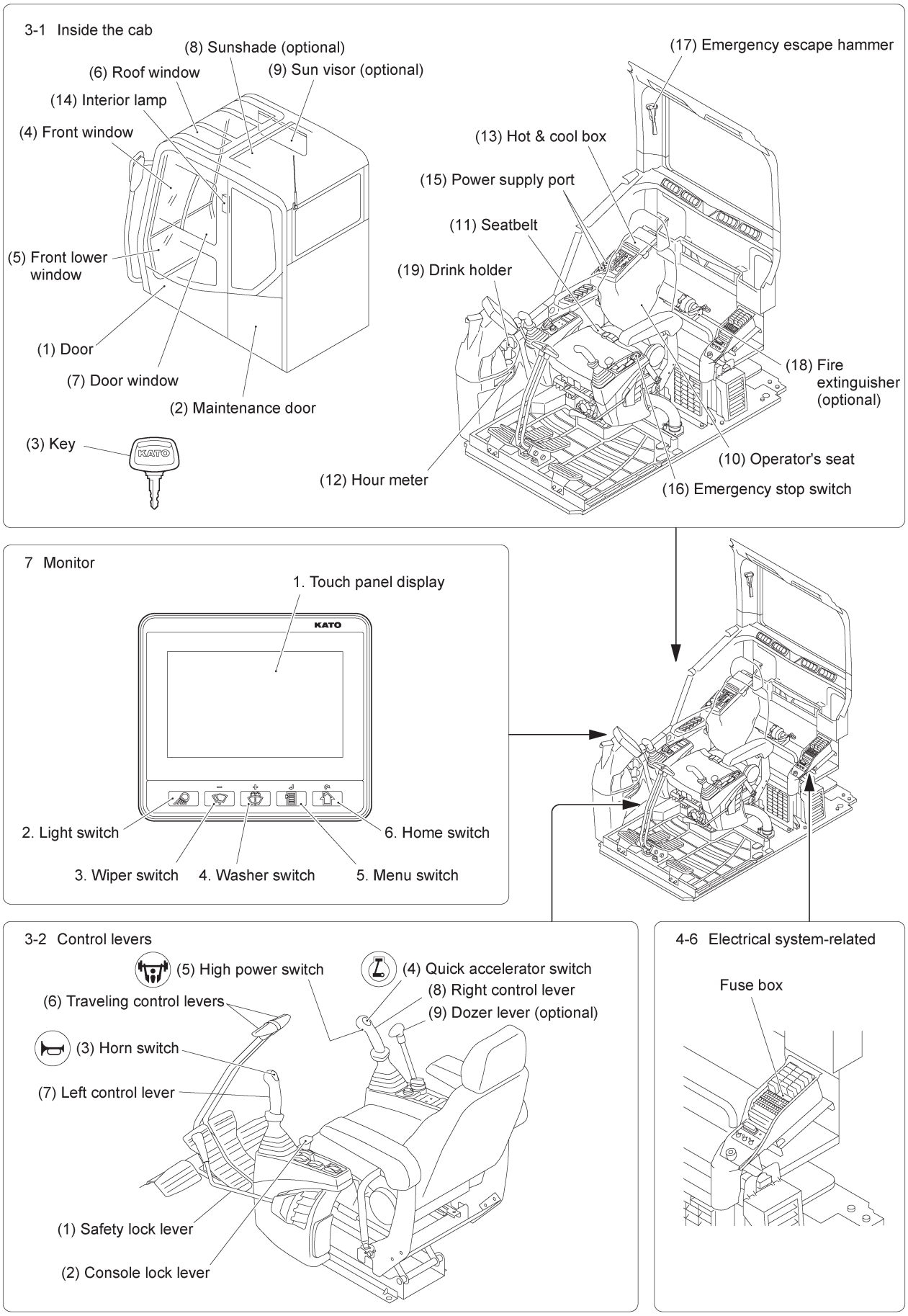

https://truckmanualshub.com/

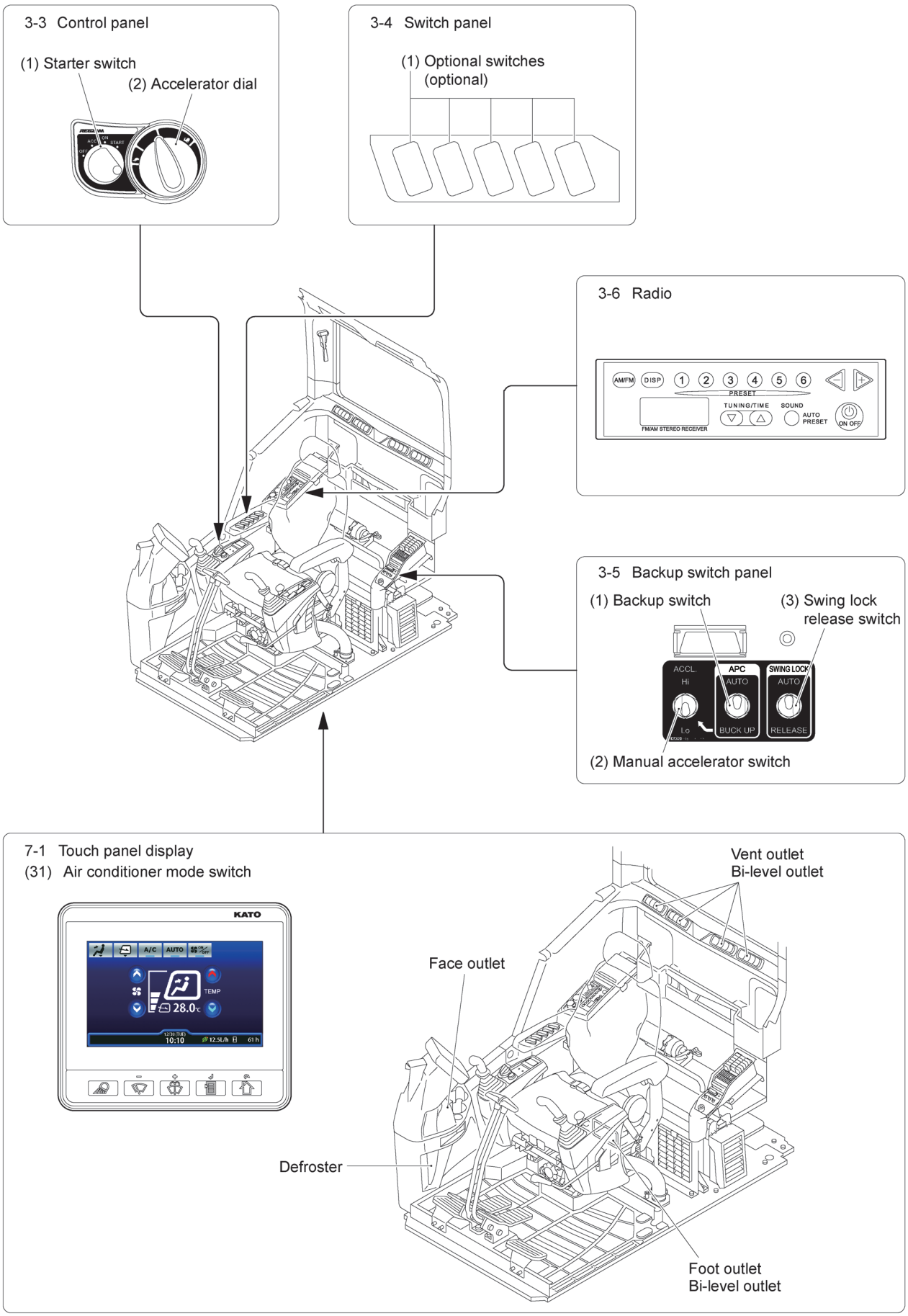

I218621-004-0E

https://truckmanualshub.com/

2-2-3 Outside the cab (01E0-0051-1E)

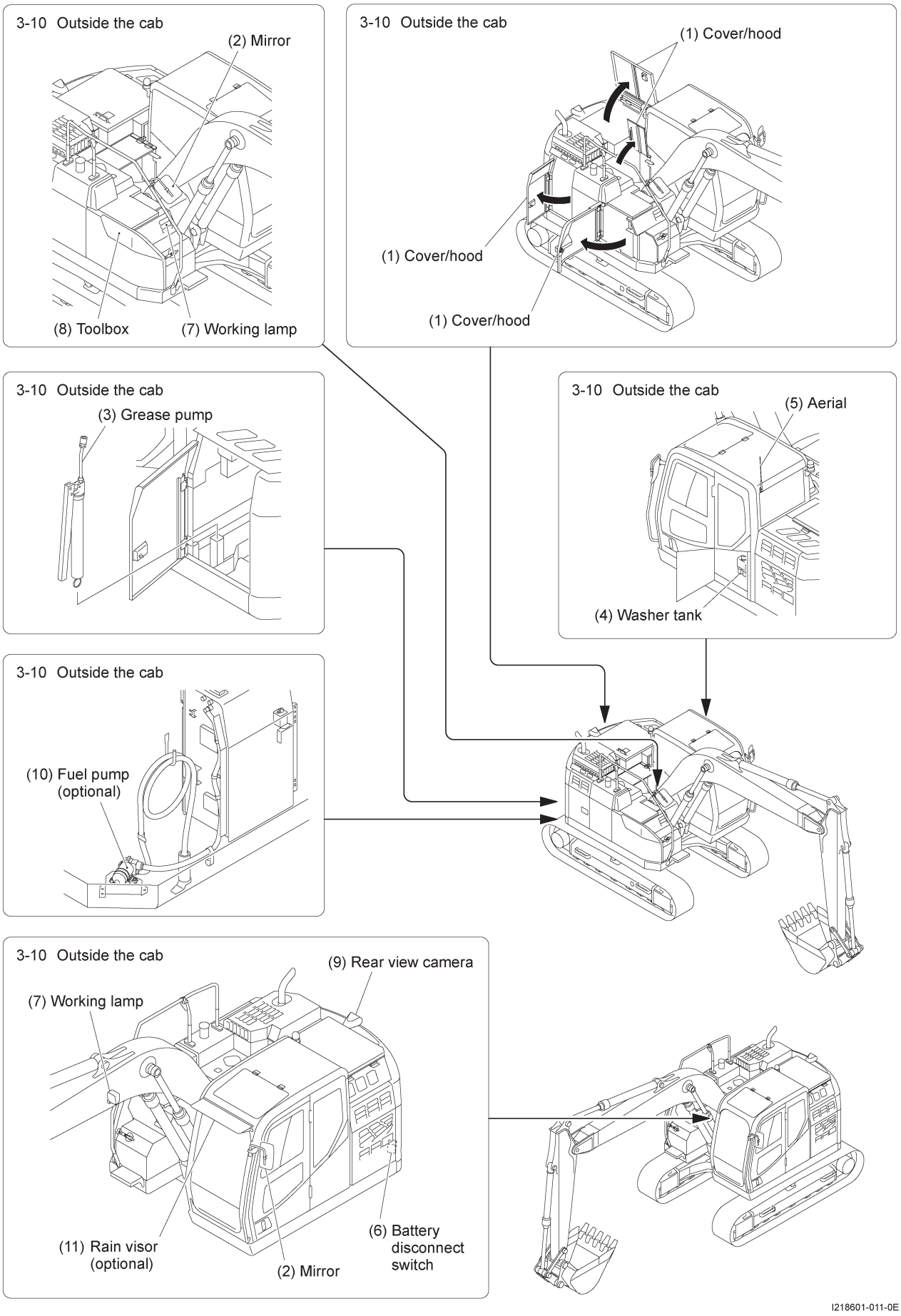

https://truckmanualshub.com/

3. Explanation of the operation devices (01E0-0086-0E)

3-1 Inside the cab (T218601-010-0E)

⚠ WARNING

If you are going to handle any device other than for travel and operation, always move the safety lock lever to the lock position.
If you touch a control lever when the safety lock lever is not locked, the machine could move unexpectedly and cause a major accident.
Refer to the "Control levers" section for an explanation of the safety lock lever.

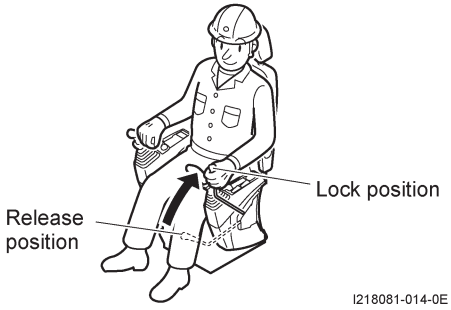

(01E0-0088-0E)

(1) Door

To open the cab door from the outside, pull the door lever to release the lock.

To open the cab door from the inside, grip the lever on the door inner handle to release the lock.

To hold the door open, fix the door to the door lock securely.

To close the door, release the lock using the "door lock release lever", then close the door. Make sure it is securely closed.

Use a "key" to lock or unlock the door.

Open the door.

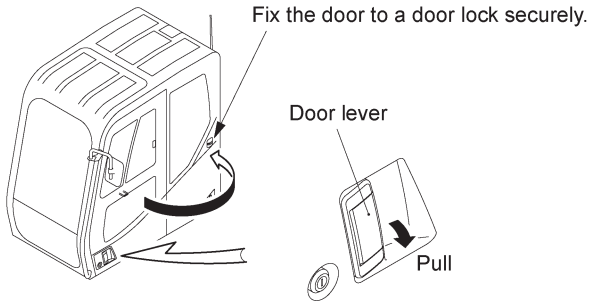

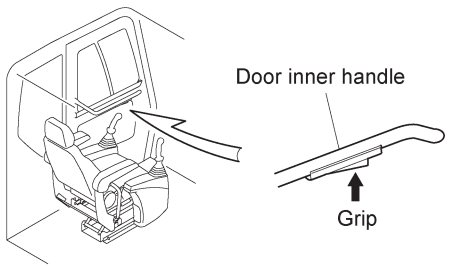

Close the door.

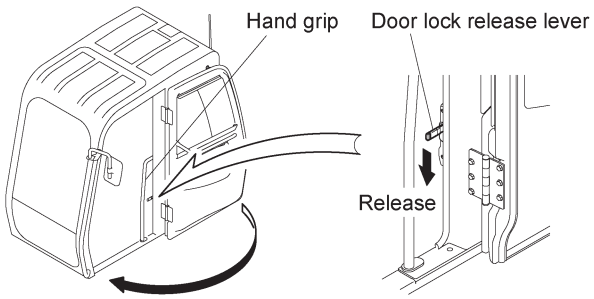

Lock and release the door.

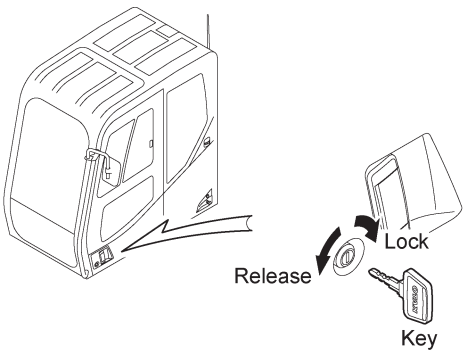

I218081-021-0E

⚠ CAUTION

The pressure in the cab is raised to prevent the dust entering the cab, so close the door a little strongly and check that the door is not ajar.

(T218081-131-0E)

https://truckmanualshub.com/

⚠ WARNING

- If the door is open but the door is not fixed to the cab door lock, it could slam suddenly in strong winds or on slopes or while swinging. Check that the door is securely fixed when the door is open.
- If you push the door lock release lever down to release the door lock while the machine is on a slope, the door could slam suddenly, trapping your fingers between the door and the hand grip. Only work the door lock release lever on level ground.
- Do not extend your hand or face through the door or window while opening or closing the door.
- If you need to extend your hand or face through the door or window, check that the surrounding area is safe, and then move the safety lock lever to the lock position. At this time, take great care about a falling object.

(T218081-016-0E)

⚠ CAUTION

- If the door is shut when the door key is in the lock position, then the door will lock. At this time, be careful not to leave the key inside the cab.
- A partially locked position is provided for safety when closing the door.
  However, the door is not completely sealed in this position and can allow rain to enter the cab. Make sure the door is completely locked when raining.

(01E0-0090-0E)

(2) Maintenance door

To open the maintenance door, unlock the door with the key and pull on the door stopper. To close the maintenance door, lightly press against the door and lock the door with the key.

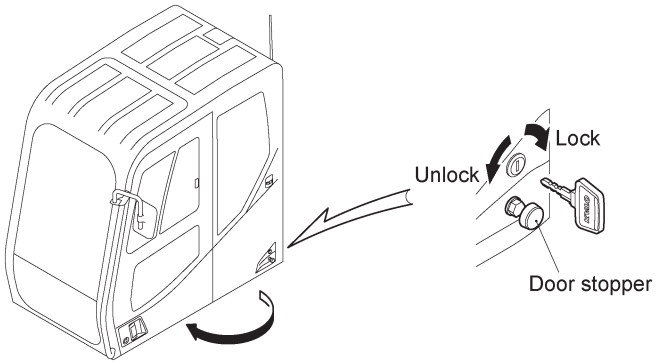

I218081-022-0E

⚠ CAUTION

Opening the door with the maintenance door key inserted could damage the door. Be sure remove the key after opening the maintenance door.

(T218081-017-0E)

https://truckmanualshub.com/

(3) Key

Locks are fitted to the cab, engine hood, left and right machine compartment side covers, toolbox cover, maintenance door, and fuel tank filler cap. A key is required to open and close them.

After you have finished work, keep the key.

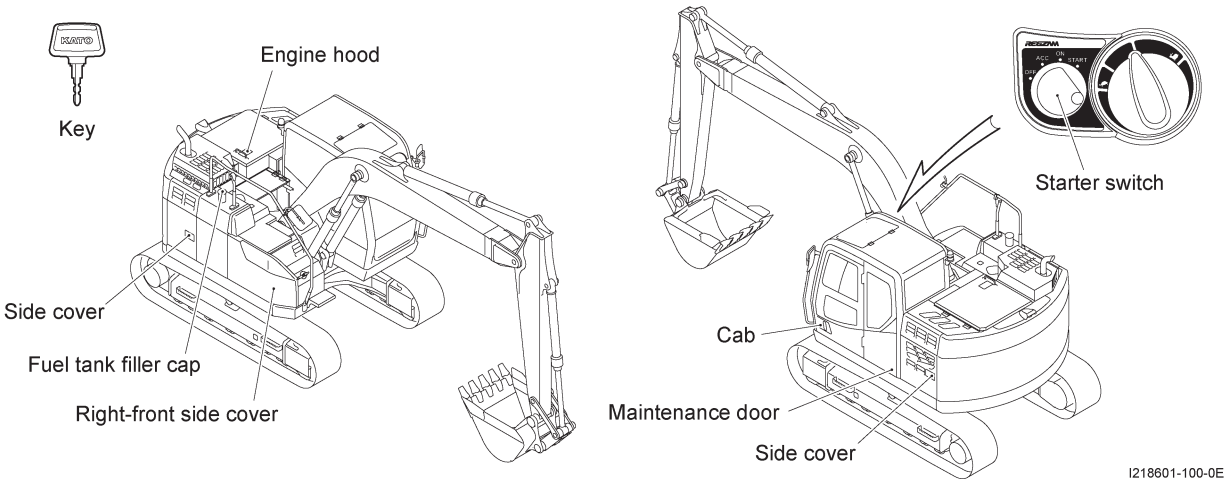

⚠ CAUTION

- Push the key firmly in as far as the shoulder and then turn it. If you turn the key before it is fully inserted, you could damage it.
- Do not push the key strongly sideways while it is inserted as it could be bent.

(01E0-0092-1E)

(4) Front window

The front window can be opened and stowed against the ceiling.

1) How to open the front window

① Unlock the window by pulling the unlocking lever while holding the grip handle at the top of the front window. Confirm that the lock pin is in the unlocked position (⇧) .

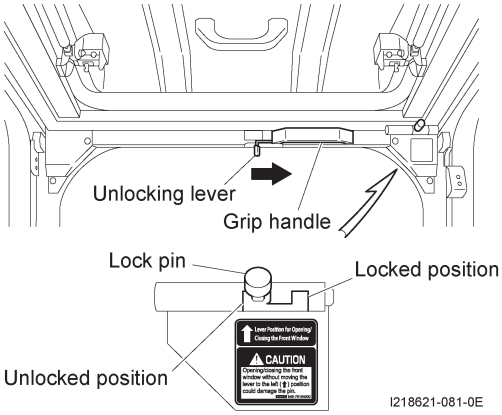

② Hold both the upper and lower front window grip handles to lift the window and slide it upward.

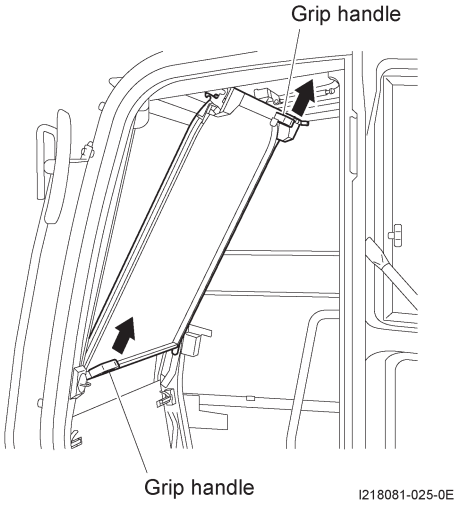

https://truckmanualshub.com/

③ Lift it upward toward the rear until the auto-lock engages. Then engage the lock pin located toward the right-rear.

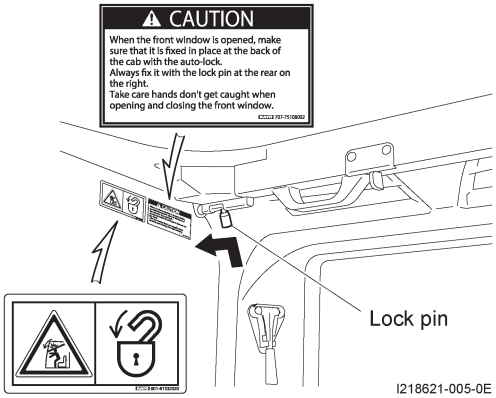

2) How to close the front window

① Close the window by disengaging the lock pin located toward the right-rear, while using both hands to hold both the upper and lower front window grip handles, and then releasing the auto-lock by pulling the unlocking lever.

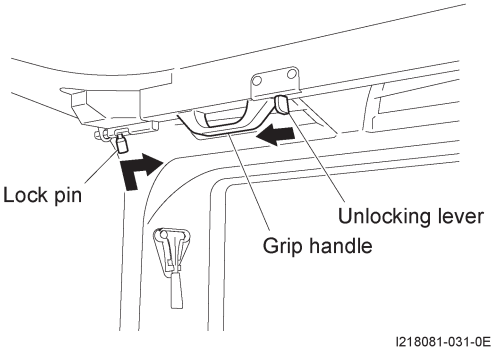

② Keep holding both the upper and lower front window grip handles while slowly sliding the window downward.

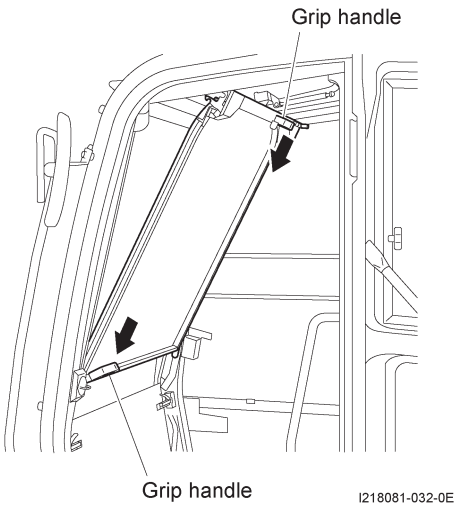

③ Push forward on the grip handle at the top of the front window to lock the window in place.

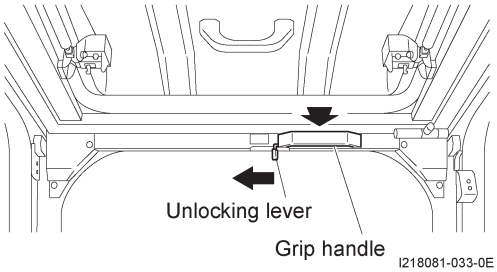

https://truckmanualshub.com/

⚠ CAUTION

- Park the machine in a level place before opening or closing the front window. Opening or closing the front window on sloped ground could cause an injury from the front window sliding unexpectedly.
- Always engage the lock pin toward the right-rear when the front window is stowed against the ceiling. If the lock pin is not engaged, there is a risk of the front window falling due to the auto-lock not being fully engaged or the auto-lock becoming disengaged because of severe vibration, for example.
- To prevent pin damage, confirm that the lock pin is in the unlocked position (⇧) when opening or closing the front window. Also, be sure to use the designated grip handles for the operation. Attempting to open or close the window by holding someplace other than the designated grip handles could result in pinching a hand.
- If the operator seat position is toward the front or high, then the front window could hit the operator's head when closing or opening the window. If so, carefully open or close the window slowly.

(T218081-018-0E)

(5) Front lower window

With the front window stowed against the ceiling, the front lower window can be removed and stowed in the holders located on the left rear of the cab.

1) Lower the levers locking the front lower window on the left and right sides and then remove the window.

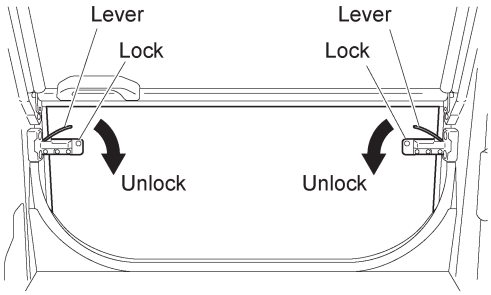

I218081-034-0E

2) Place the front lower window onto the holders on the left rear side, with the right side of the window oriented downward, and lock it in place with the holder lock at the top.

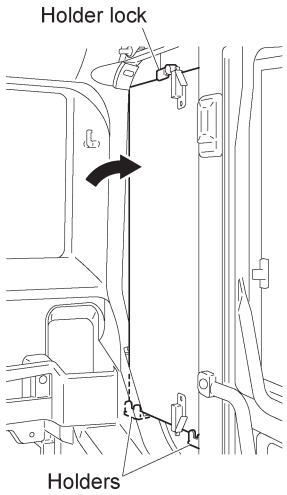

I218081-035-0E

https://truckmanualshub.com/

⚠ CAUTION

- When stowing the front lower window in the holders on the left rear side, make sure the glass and other parts are not wet. Electronic equipment is located below the stowage place, which could be damaged if water leaks on it.
- Be sure to stow the detached front lower window in the holders on the left rear side and engage the lock.
  If you put it anywhere other than the place where it is intended to be stowed, it may break during operation.
  Check that the lock is engaged. If it is stowed unlocked, the window may fall down during operation.

(T218081-019-1E)

(6) Roof window

The roof window can be opened by pulling the locks on the left and right sides toward the interior, holding the grip, and pushing the window upward.

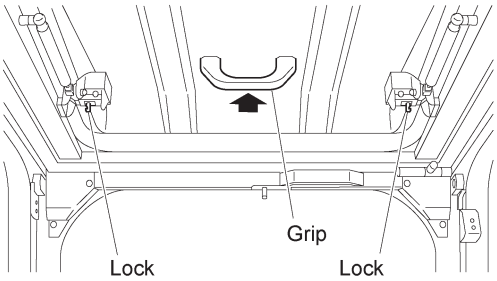

I218081-036-0E

⚠ CAUTION

After you finish work, close this window until it locks securely.

(01E0-0098-0E)

(7) Door window

Grip and pull out the lock to slide open this window.

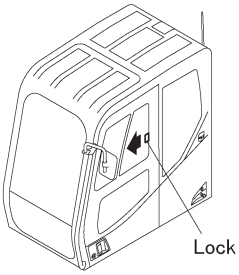

I218081-037-0E

⚠ CAUTION

- After you finish work, always close the window firmly until it locks.
- If the window is open when the machine is on sloping ground, it could slide, so keep it shut on the slope.
- If you slide the window very rapidly, you could break the lock, so slide it slowly.

(01E0-0099-0E)

(8) Sunshade (optional, or included standard on models with a polycarbonate hatch)

To open the sunshade, pull the sunshade handles toward the rear.

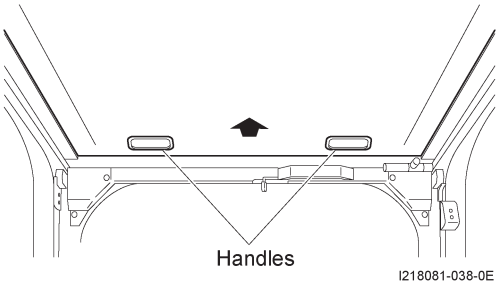

I218081-038-0E

https://truckmanualshub.com/

(9) Sun visor (optional)

To use the sun visor on the front side, disconnect the sun visor rod from the upper right holder and connect it to the left-front holder. Reverse the process to stow the visor.

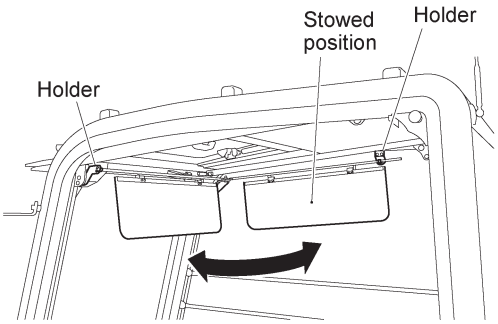

I218081-039-0E

⚠ CAUTION

Move the sun visor to the stowed position and securely fasten the visor rod to the holder before stowing the front window. Not doing so could cause damage from interference with front window.

(T218081-020-0E)

(10) Operator's seat

Adjust the seat to easiest position for you to operate the pedals and levers.

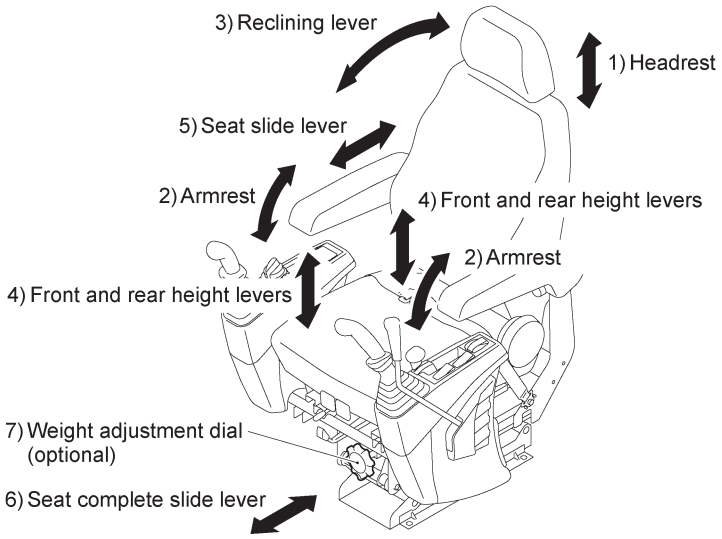

I218341-014-0E

⚠ CAUTION

- Do not adjust the seat while you are operating the levers because this is dangerous.
- Move the safety lock lever to the lock position while adjusting the seat.
- When you work the seat complete slide, the seat slide and the height control, move all parts slowly so you do not trap your fingers or anything else in the slide rails or height adjuster device.

(01E0-0101-0E)

https://truckmanualshub.com/

1) Headrest

Adjust the height of the headrest while you are sitting in the seat.

Press the knob while adjusting for height.

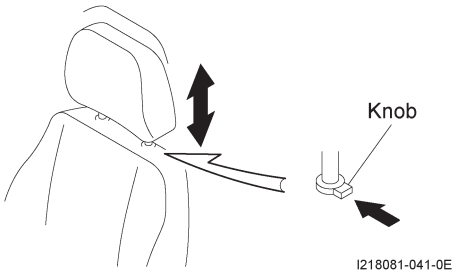

2) Armrest

Adjust the angle of the armrest.

Turn the dial while adjusting for angle.

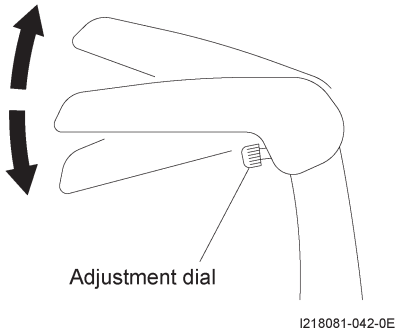

3) Reclining lever

Sit in the seat and adjust the reclining angle of the seat-back.

Pull the reclining lever and adjust using your body weight until the angle is right.

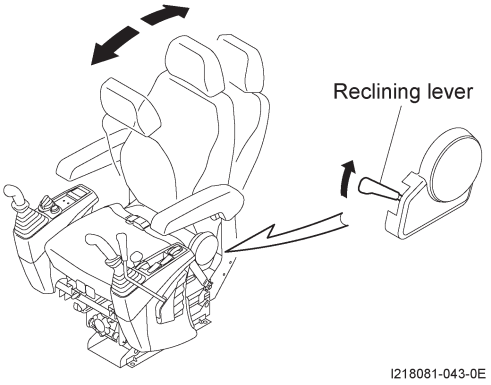

4) Front and rear height levers

You can adjust the height of the front or rear of the seat base independently.

Pull either of the levers and use your body weight to adjust the corresponding height, front or back, to the right level.

① Front height lever

The front edge rises or lowers, pivoting about the rear of the seat.

② Rear height lever

The rear edge rises or lowers, pivoting about the front of the seat.

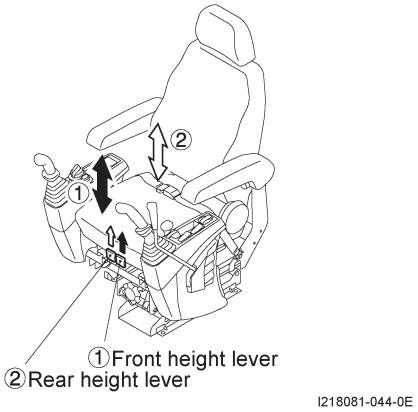

https://truckmanualshub.com/

5) Seat slide lever

Move the seat slide lever to the right to disengage the lock then slide the seat forward or backward.

The seat position only can be adjusted forward or backward (not including the left and right control levers).

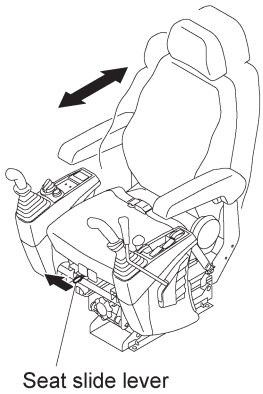

I218081-045-0E

6) Seat complete slide lever

Move the seat complete slide lever to the right to disengage the lock then slide the entire seat unit forward or backward.

You can adjust the position of the seat complete forward and backward without changing the positional relationship between the seat and the left/right control levers.

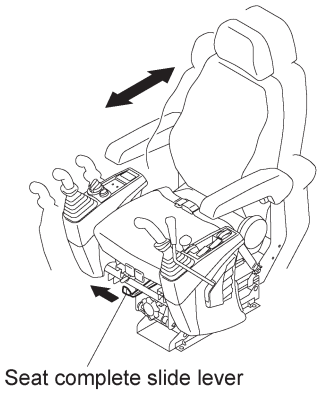

I218081-046-0E

7) Weight adjustment dial (optional)

Turn the dial to adjust the suspension firmness, using the weight markings located to the side of the dial as a guideline (between 50 kg and 150 kg).

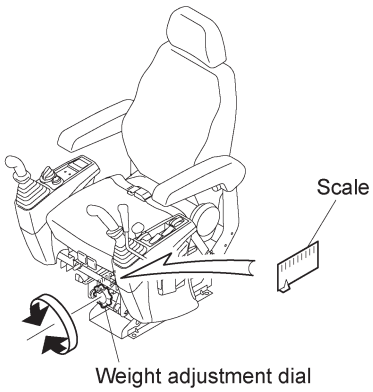

I218081-047-0E

https://truckmanualshub.com/

(11) Seatbelt

Always fasten the seatbelt for safety while operating the machine.

1) How to put on the seatbelt

Pull the belt slowly as far as your hip and put it across your waist, then insert the tang into the buckle and push until it clicks.

2) How to remove the seatbelt

Press the button on the buckle and remove the belt.

I218081-048-0E

⚠ WARNING

- Before you fasten your seatbelt, check that the belt attachment bracket and belt are not defective in any way. Replace it if it is worn or damaged.
- Do not put on the seatbelt twisted.

(01E0-0103-0E)

(12) Hour meter

This operates while the engine is running and indicates the cumulative total number of hours the machine has been running.

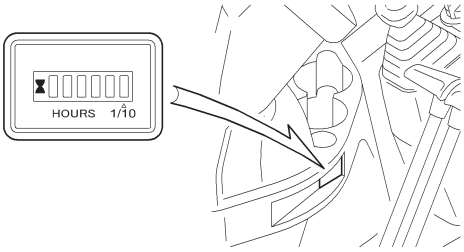

I218081-271-0J

(13) Hot & cool box

The hot & cool box can keep contents heated or cooled using the temperature setting switches of the air conditioning system.

How to open the box

Unlock the cover by pressing where "PUSH" is indicated. Then insert a finger under the grip to slowly lift the cover.

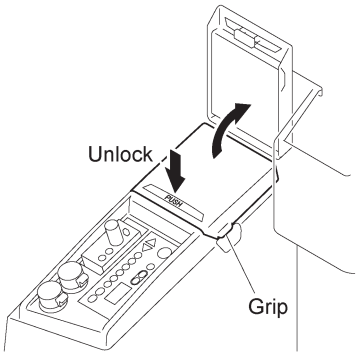

I218081-274-0E

⚠ CAUTION

Do not warm carbonated drinks in the box.

(01E0-0105-0E)

https://truckmanualshub.com/

(14) Interior lamp

Set the switch for the way you want to use the lamp.

ON ····· The lamp is switched on.

Door····· The lamp is linked to the door and lit when the door is open.

OFF ····· The lamp is switched off.

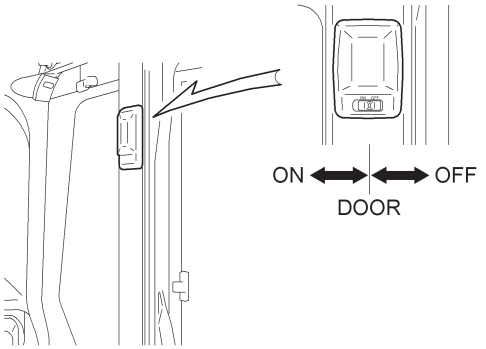

I218081-273-0J

(15) Power supply port

1) 24 V power supply

The capacity of power supply is 100 W (4.2 A at 24 V).

2) 12 V power supply (optional)

The capacity of power supply is 120 W (10 A at 12 V).

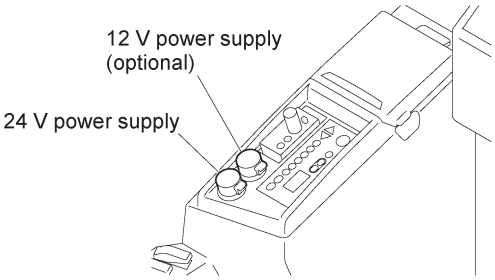

I218081-268-0E

⚠ CAUTION

Confirm the power supply rating of the device before using the power supply ports. Using a device that is not suitable for the power supply could cause a malfunction.

Do not use it to power the cigarette lighter.

(T218341-130-0E)

(16) Emergency stop switch

If the engine cannot be shut off using the starter switch, shut the engine off by pressing the stop side of the emergency stop switch. Once the engine has stopped, switch the emergency stop switch back to the normal side.

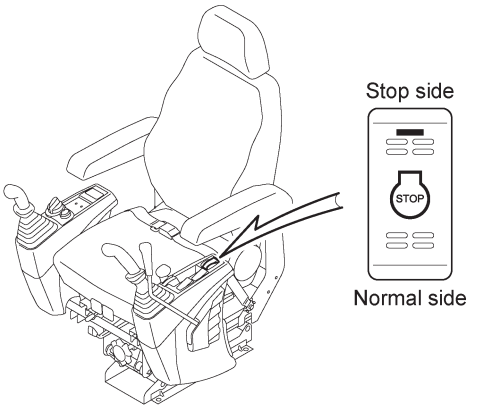

I218081-287-0E

⚠ WARNING

To shut down the engine in the event of an emergency or other problem, such as a malfunction, shut the engine off by turning the starter switch to the "OFF" position. If the engine cannot be shut off using the starter switch, shut off the engine by pressing the stop side of the emergency stop switch.

(01E0-0553-1E)

https://truckmanualshub.com/

(17) Emergency escape hammer

In an emergency, such as if the door and front window cannot be opened, the emergency escape hammer, located to the right-rear of the cab, can be used to escape by breaking the front window or rear window.

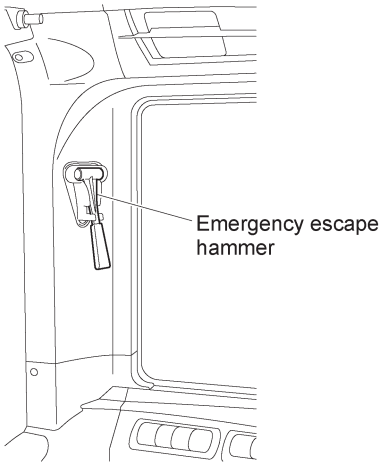

I218081-269-0E

⚠ CAUTION

- Be careful of flying glass fragments generated from breaking the glass with the hammer.
- Be careful of the broken glass fragments when escaping.

(T218081-022-0E)

(18) Fire extinguisher (optional)

It is possible to mount a fire extinguisher behind the operator's seat.

Contact your authorised KATO dealer for installation.

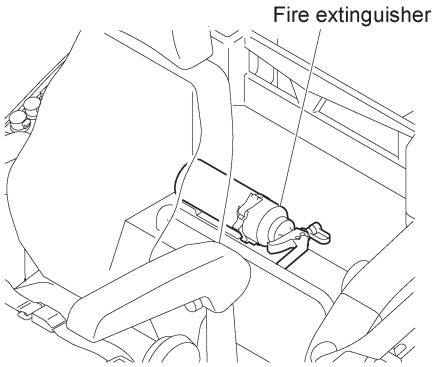

I218081-275-0E

(19) Drink holder

The holder features a soft material that helps minimize swaying of cans and plastic bottles due to vibration and can hold a smartphone or other device securely without worry.

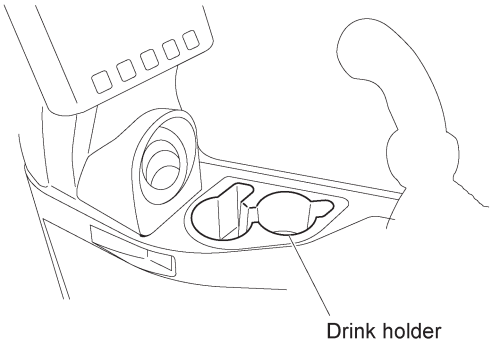

I218081-270-0E

⚠ CAUTION

Placing both a beverage and smartphone or other electronic device in the holder could cause electronic device failure, due to spillage or condensation.

(T218081-022-0E)

https://truckmanualshub.com/

3-2 Control levers (T218341-111-0E)

(1) Safety lock lever

Pull back on the lever to "lock" it and push it forward to "release" the lock. When the safety lock lever is in the lock position, the machine is disabled even if the control levers are operated while the engine is running. Move the lever to the "release" position when working but when you are getting on or off the cab, during your breaks or after the work, the lever should be in the "lock" position to prevent accidental operation.

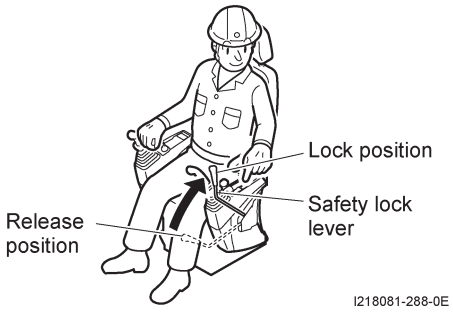

⚠ WARNING

- Move the safety lock lever securely into the lock or release position. Do not operate the machine with the lever in an intermediate position.
- Take care not to touch the control levers when getting on or off the cab.
- Do not use the safety lock lever as a hand grip when getting on or off the cab.
- Do not touch the control levers while moving the safety lock lever.

(01E0-0110-0E)

(2) Console lock lever

Before starting work, check that the console lock lever is in the lock position. It is dangerous to operate with the console unlocked.

Do the following things before you get out of your seat and leave the cab.

① Move the safety lock lever to the lock position.

② Pull the console lock lever toward you and raise the left console (left control lever).

⚠ WARNING

Do not use the console lock lever as a hand grip when getting on or off the cab.

(T218081-024-0E)

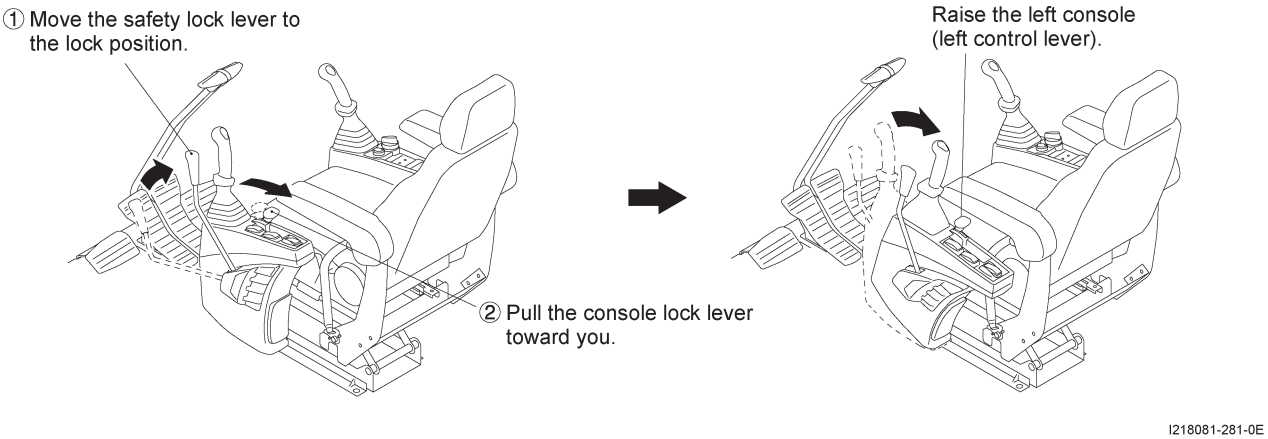

https://truckmanualshub.com/

(3) Horn switch

The horn sounds for as long as you press the switch down.

When you are about to start the engine or move the machine, sound the horn to warn people nearby.

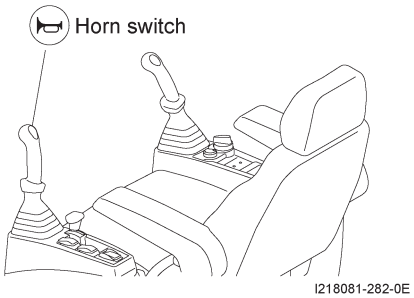

(4) Quick accelerator switch

Use this switch to turn auto-slow mode on and off and when cancelling warm-up running.

Refer to the sections "Engine warm-up runnning" and "Auto-slow mode settings" for instructions on how to use this switch.

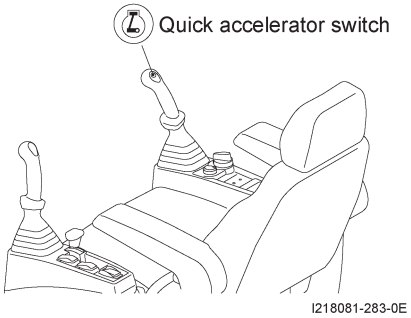

(5) High power switch

Use this switch to work the machine at high power. Refer to the section "High power mode setting" for instructions on how to use this switch.

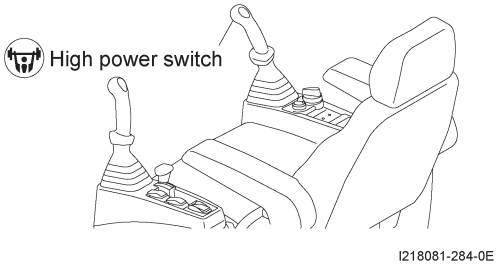

⚠ CAUTION

Do not use the high power switch when working with the arm longer than the standard (long arm) or with an extension arm or with exchangeable kit mounted.

(01E0-0112-1E)

https://truckmanualshub.com/

(6) Traveling control levers

Travel is controlled using the traveling control levers or pedals.

▲Push the left and right traveling control levers simultaneously to move the machine forward.

▽Pull the left and right traveling control levers simultaneously to move the machine in reverse.

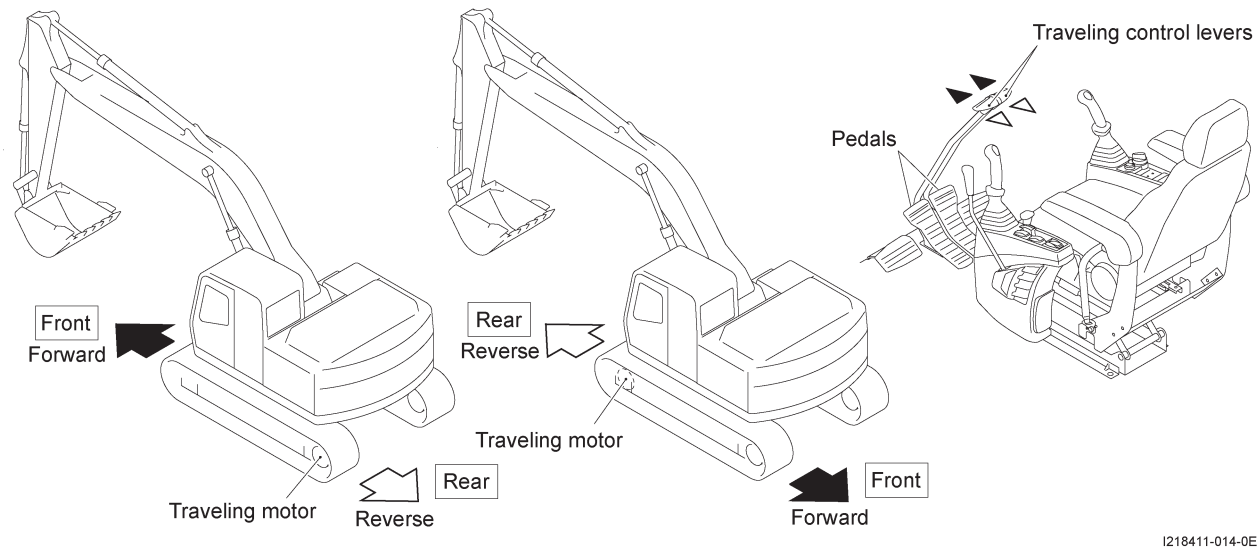

⚠ WARNING

- Be sure of the positions of the traveling motors when traveling.
  When the traveling motors are turned to the front, the directions of operation of the traveling control levers are reversed.
- Before moving off, check that the surrounding area is safe and sound the horn regardless of whether you are going to move forward or in reverse.

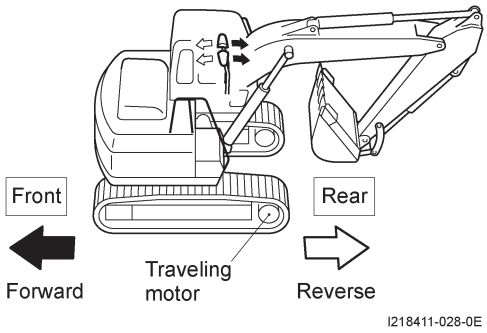

(01E0-0113-0E)

https://truckmanualshub.com/

(7) Left control lever

(8) Right control lever

⚠ WARNING

- Before beginning operation, always beware of the safety of your surroundings, move each lever slowly to check that the operation pattern on the label matches the movements of the machine.
- If the movements do not match the label but you continue work, you risk causing serious accidental injury.
- If the label does not match the actual machine, replace it with a label that correctly matches the machine functionality.

(01EE-0114-0E)

⚠ CAUTION

The fuel injection volume at engine low speed is restricted to a certain level so that the engine which is mounted on this machine can keep the ingredient of the exhaust gas below the regulation level. If you move the control lever suddenly for relief etc. at engine low idling speed, the engine could stall.

Avoid sudden lever operation at engine low idling speed. If you cannot avoid sudden lever operation absolutely, use the accelerator dial to raise the engine speed slightly before you move the control lever suddenly.

Always fill with diesel fuel.

If you use different fuel, proper performance of gas ingredients, horsepower etc. will not be produced.

(01EE-0115-0E)

When you release each control lever, it should spring back to the neutral position and the movement of each attachment should stop.

You can perform multiple operations at the same time.

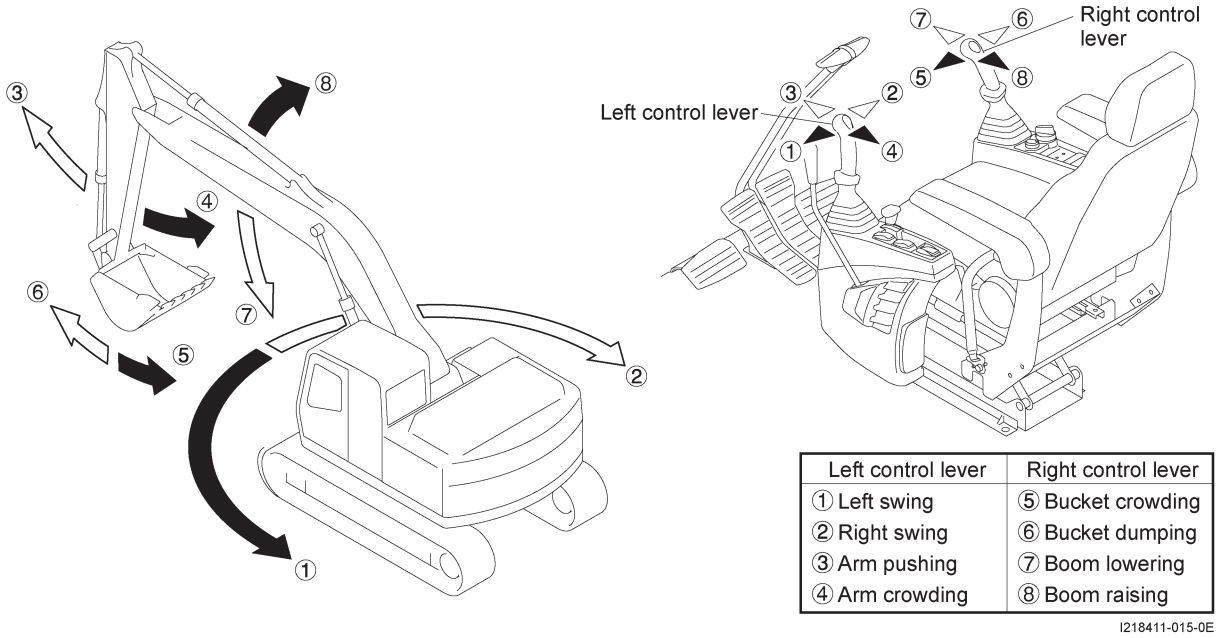

Left control lever	Right control lever
① Left swing	⑤ Bucket crowding
② Right swing	⑥ Bucket dumping
③ Arm pushing	⑦ Boom lowering
④ Arm crowding	⑧ Boom raising

I218411-015-0E

https://truckmanualshub.com/

(9) Dozer lever (optional)

Push the lever forward to lower the dozer blade and pull it back to raise the blade.

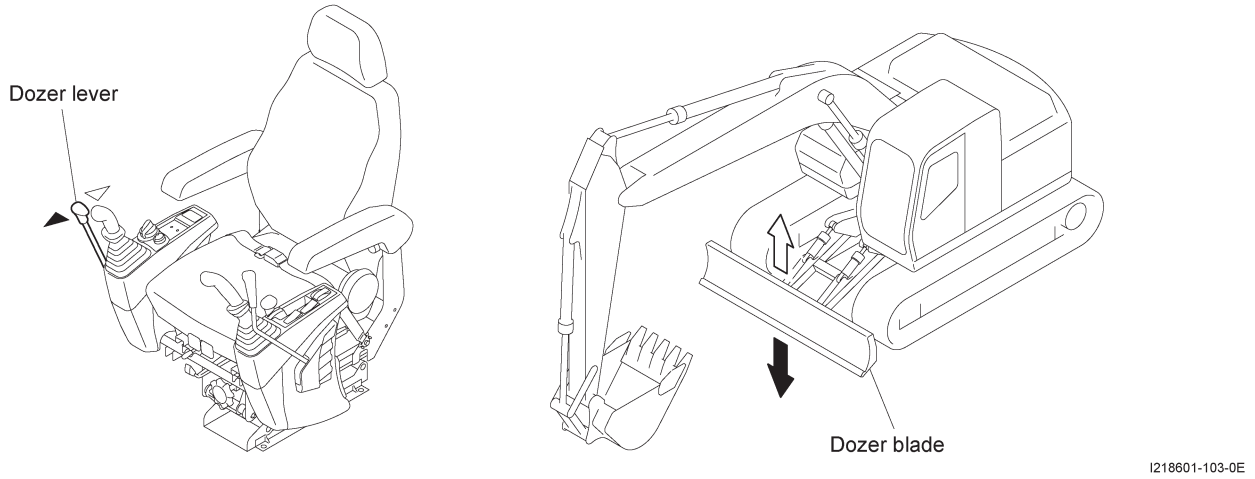

⚠ CAUTION

The dozer blade is mainly used while the machine is in traveling, so always draw in the arm and bucket before you use it in this way.

(08E0-0017-0E)

⚠ CAUTION

If you are backhoeing while the dozer blade is in front, work with caution because the bucket could hit the blade if you move it while the arm is fully drawn in.

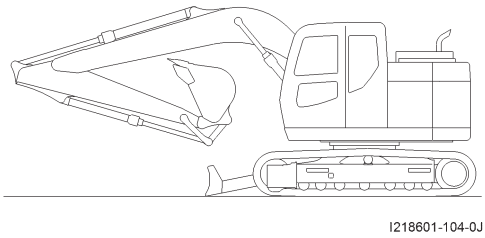

(08E0-0018-0E)

⚠ CAUTION

If you perform the compound operation including the dozer operation at low idling, the engine could stall.

Use the accelerator dial to raise the engine speed to a medium speed or higher (about 1400min^{-1}) before you perform the compound operation.

(T218601-011-0E)

https://truckmanualshub.com/

3-3 Control panel (T218081-024-0E)

(1) Starter switch

OFF: In this position you can slide the key in and out.
You can still use the interior lamp and the horn.

ACC: The engine stops.
You can use the radio, accessory socket, horn, and interior lamp.

ON: This position switches on the APC.
In this position the engine is running after starting.

START: The engine start position.
Once the engine has started, release the key and it will automatically return to the "ON" position.

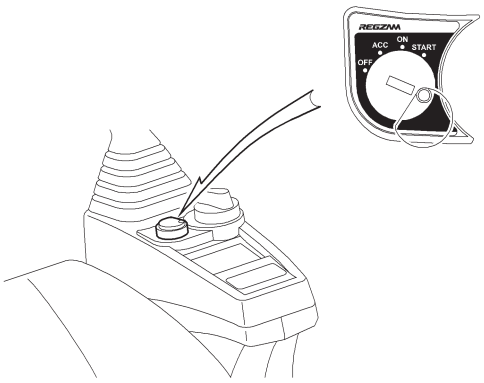

I218081-289-0J

⚠ CAUTION

When moving the key between the various positions, take care of the following points.

- OFF ····· When you turn the key to the "OFF" position to stop the engine, it takes a few seconds for the monitor to go out, even if the engine has stopped. This is for circuit protection and is quite normal.
  When you leave the operator's seat, take the key with you.
- ACC····· If you use the radio or other accessories for long periods while the engine is stopped, the battery will run down. Do not use the radio etc. for long periods.
- ON ····· The APC system runs self-diagnostic checks for approximately 4 seconds in which time a logo is displayed on the monitor display, switches are illuminated and the buzzer sounds.
  Do not leave the key in this position for long periods when the engine is not running as this can run down the battery.

(T218081-025-0E)

(2) Accelerator dial

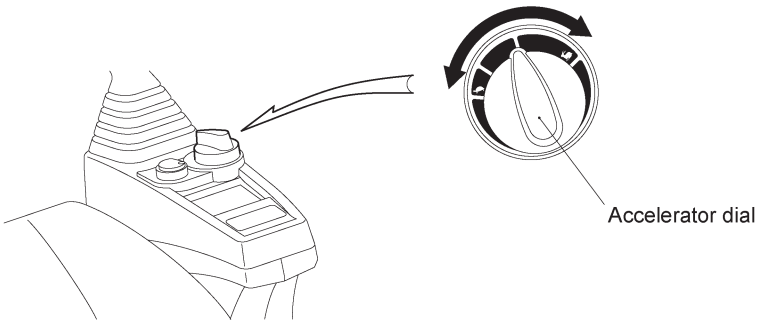

I218081-290-0E

1) When in the P mode

In the "🐢" position the engine speed is at idling. Turning the dial to the right gradually increases the engine speed until the maximum revolutions are reached at the "🐇" position.

https://truckmanualshub.com/

2) When in A and E modes

Turning the dial to the right from the "🐢" position gradually increases the engine speed but once the maximum revolutions set for each mode in use is reached, the engine speed will not rise further even if the dial is turned further.

NOTE

If the auto-slow, one-touch slow or automatic warm-up functions is working, the engine speed is predetermined without reference to the accelerator dial position.

⚠ CAUTION

Set the accelerator dial to the "🐢" position when starting or stopping the engine.

(01E0-0120-0E)

https://truckmanualshub.com/

3-4 Switch panel (T218081-026-0E)

(1) Optional switches (optional)

Space for the switches is available on the panel for use with optional equipment.

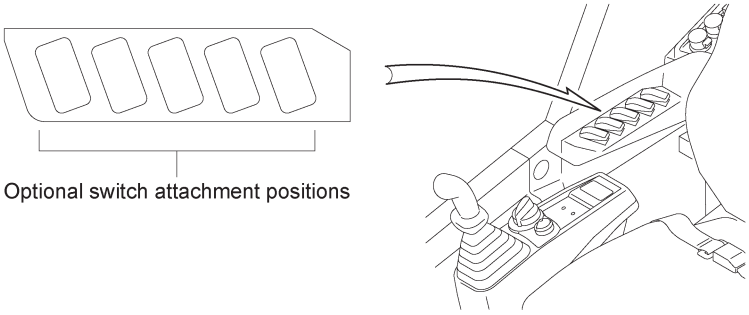

I218081-291-0E

1) Horn selection switch (optional)

If this switch is set to "OP", the horn switch on the left control lever sounds the optional horn.

I218081-292-0J

2) Swing warning lamp switch (optional)

If this switch is set to "ON", the swing warning lamps will light when in swing operation.

I218081-293-0J

3) Travel link alarm switch (optional)

If this switch is set to "ON", the buzzer sounds whenever you operate traveling controls.

I218081-294-0J

4) Accessory USB power supply port (optional)

The USB power supply port can be used for device that requires 5V power. (1.2 A×2 ports).

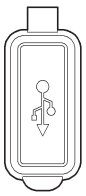

I218081-402-0J

⚠ CAUTION

- Only type-A USB connectors can be connected. Do not attempt to connect any other type of connector.
- Only use the ports for devices that require up to 1.2 A of power per port, or up to a total of 2.4 A via both ports.
  Check power consumption of the device before using the ports, such as by referring to the device instruction manual.
- KATO will not provide warranty repairs for malfunctions/failures to devices used or for damage or data loss.

(T218081-148-0E)

https://truckmanualshub.com/

3-5 Backup switch panel (T218081-027-0E)

(1) Backup switch

If the hydraulic pump and accelerator can no longer be controlled by the APC system, the error message appears on the display.

When the "USE BACK UP SWITCH" message also appears, switch the "backup switch" to the "BACK UP" position to temporarily continue operations.

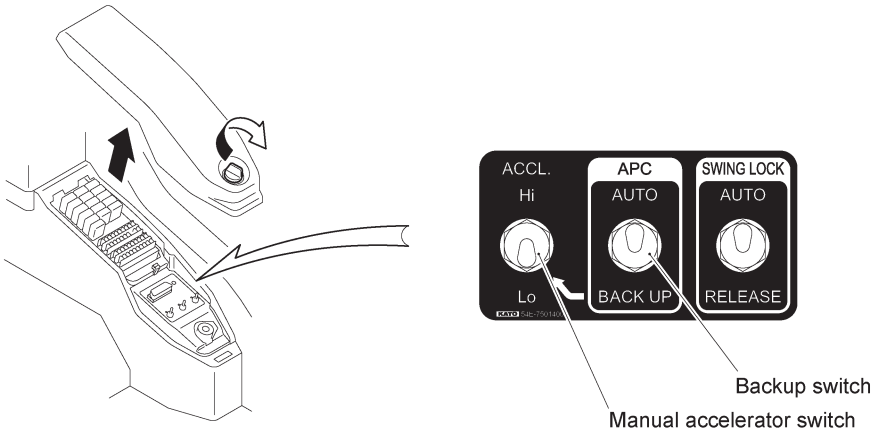

I218081-052-1E

Message displayed when the error occurs

Message displayed when the backup switch is switched to "BACK UP"

I218621-006-0E

> ⚠ **CAUTION**
>
> - Switching the "backup switch" to the "BACK UP" position disables control of the pump and control of the engine speed using the accelerator dial, regardless of the type of malfunction.
> - When operating in the backup mode, the engine may stall or produce black smoke more often than usual.
> - If the "backup switch" is used as instructed on the monitor, be sure to contact your authorised KATO dealer.
> - Normally, confirm that the switch is in the "AUTO" position and close the cover.

(T218081-028-0E)

(2) Manual accelerator switch

You can use the manual accelerator switch when the backup switch is set to the "BACK UP" position.

Select the Hi (about 1700min^{-1}) or Lo (low idle) mode.

> ⚠ **CAUTION**
>
> Normally, confirm that the switch is in the "Lo" position and close the cover.

(T218081-029-0E)

https://truckmanualshub.com/

(3) Swing lock release switch

The swing lock on this machine is released automatically when you begin swing operation and is reapplied automatically a few seconds after you return the lever to its neutral position.

If this swing lock system malfunctions and slewing operations can no longer be performed properly, a message will appear on the monitor display.

If this message appears, switch the "swing lock release switch" to the "RELEASE" position and contact your authorised KATO dealer.

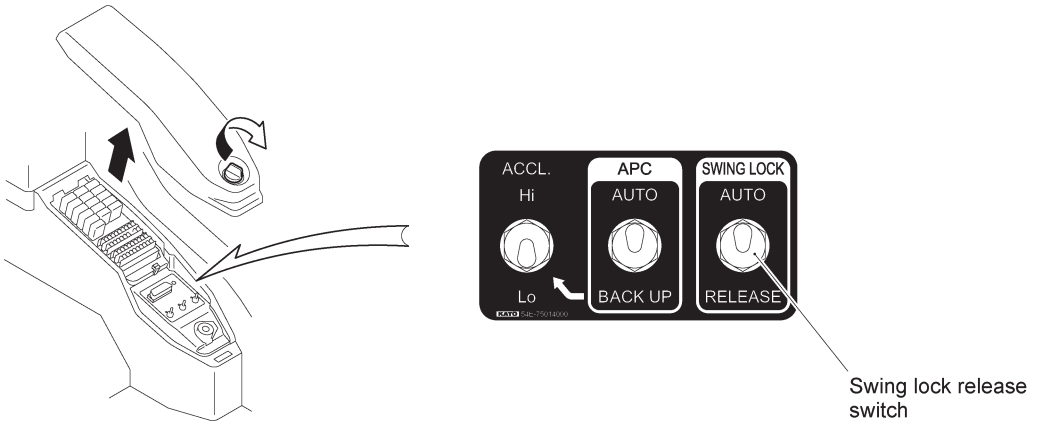

I218081-054-1E

Message displayed when the swing lock system error occurs

Message displayed when the swing lock release switch is switched to "RELEASE"

I218621-007-0E

⚠ WARNING

When the swing lock system is normal, never set the swing lock release switch to the "release" position. It is dangerous because the swing lock system does not operate on a slope.

(01E0-0126-0E)

https://truckmanualshub.com/

3-6 Radio (08EE-0021-2E)

(1) Names of buttons

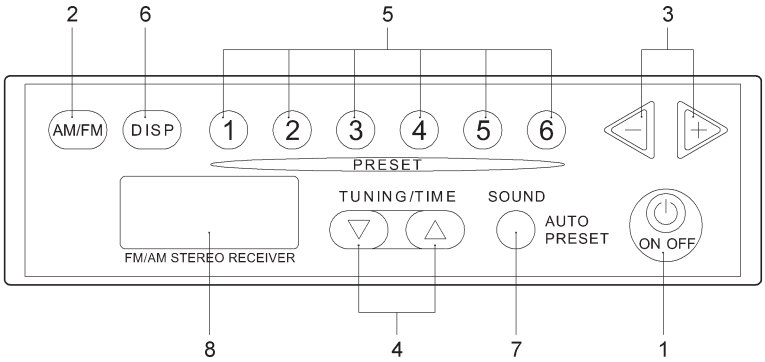

719-320-01/719-321-01

16EE-01450

	Name	Function
1	[PWR] button	Switches the radio ON or OFF
2	[AM/FM] button	Switches between AM, FM1, and FM2 bands
3	[VOL+] [VOL-] buttons	Adjusts the volume up or down
4	[UP] [DOWN] buttons	Used to switch frequencies, adjust steps for adjusting the sound, and adjust the clock
5	[PRESET] buttons	Recalls or registers preset frequencies
6	[DISP] button	Switches between display modes (frequency or clock)
7	[SOUND] button	Adjusts the sound (balance, bass, and treble)
8	LCD display	Displays the frequency, clock, etc.

(16EE-0111-1E)

(2) LCD display

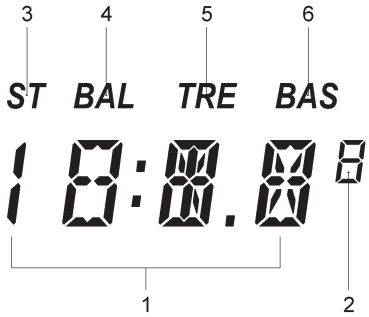

16EE-01460

	Name	Function
1	Segment display (large)	Displays the band name, frequency, clock, and other alphanumeric information
2	Segment display (small)	Displays frequency during FM 50 kHz step mode
3	ST indicator	Illuminates to indicate stereo signal reception when FM1 or FM2 band is selected
4	BAL indicator	Illuminates during sound adjustment when the balance is being adjusted
5	TRE indicator	Illuminates during sound adjustment when the treble level is being adjusted
6	BAS indicator	Illuminates during sound adjustment when the bass level is being adjusted

(16EE-0112-1E)

https://truckmanualshub.com/

(3) Operating buttons

1) Operations with the power "ON"

		Radio ON (Normal status)	Clock adjustment
[PWR]	Short press	Switches power OFF (clock display)	Switches power OFF
	Long press	—	—
[AM/FM]	Short press	Switches between bands (FM1→ FM2 → AM → FM1 etc.)	Switches between bands (FM1 → FM2→ AM → FM1 etc.)
	Long press	—	—
[VOL+] [VOL-]	Short press	Adjusts volume 1 step up or down	Adjusts volume 1 step up or down
	Long press	Adjusts volume in continuous steps up or down	Adjusts volume 1 step up or down
[UP] [DOWN]	Short press	Adjusts frequency 1 step up or down	Adjusts clock 1 step up or down
	Long press	Activates auto-seek up or down	Adjusts clock 1 step up or down
[PRESET]	Short press	Recalls preset frequency	—
	Long press	Registers current frequency as preset frequency	—
[SOUND]	Short press	Switches to sound adjustment mode	Switches to sound adjustment mode
	Long press	Starts auto-preset function	Starts auto-preset function
[DISP]	Short press	Switches between display modes (frequency → clock → frequency etc.)	Switches adjustment parameter (hours → minutes→ enter)
	Long press	Switches to clock adjustment mode (only if clock is displayed)	—

		Sound adjustment
[PWR]	Short press	Switches power OFF
	Long press	—
[AM/FM]	Short press	Switches between bands (FM1 → FM2 → AM → FM1 etc.)
	Long press	—
[VOL+] [VOL-]	Short press	Adjusts volume 1 step up or down
	Long press	Adjusts volume in continuous steps up or down
[UP] [DOWN]	Short press	Adjusts setting value 1 step up or down
	Long press	—
[PRESET]	Short press	—
	Long press	—
[SOUND]	Short press	Switches adjustment parameter (BAL → TRE→ BAS → cancel)
	Long press	—
[DISP]	Short press	—
	Long press	—

(16EE-0113-1E)

2) Operations with the power "OFF"

		OFF (clock display)	Clock adjustment
[PWR]	Short press	Switches power ON (radio ON)	Switches power ON (radio ON)
	Long press	—	—
[AM/FM]	Short press	—	—
	Long press	—	—
[VOL+] [VOL-]	Short press	—	—
	Long press	—	—
[UP] [DOWN]	Short press	—	Adjusts clock 1 step up or down
	Long press	—	—
[PRESET]	Short press	—	—
	Long press	—	—
[SOUND]	Short press	—	—
	Long press	—	—
[DISP]	Short press	—	Switches adjustment parameter (hours → minutes → enter)
	Long press	Switches to clock adjustment mode	—

(16EE-0114-1E)

https://truckmanualshub.com/

3-7 Handling the SCR system (T218621-007-0E)

In order to comply with exhaust emission EPA/CARB Tier 4. EC stage 4, the machine is equipped with an SCR system that uses the DEF (Diesel Exhaust Fluid) to clean the exhaust gas emissions. The SCR system adds the DEF to the exhaust emission gases, so that the fluid reacts with the gases to reduce the levels of NOx (nitrogen oxides) contained in the emission gases.

The engine output will decrease if the system is not used properly. Therefore, read this section carefully to ensure the system is operated correctly.

(1) SCR system status display

The status of the SCR system can be confirmed based on the DEF level meter, DEF indicator, check engine lamp, and message display.

I218621-008-0E

⚠ WARNING

If the above warning message is displayed on the monitor, the engine output and speed will be successively restricted in stages, and the engine speed will be eventually fixed at a low-idle speed. Promptly take necessary actions to remedy the situation.

- If the low DEF level warning is displayed
  This is displayed when the DEF level is too low in the DEF tank.
  If the warning is displayed, promptly replenish the specified DEF.
- If the SCR system error warning is displayed
  This is displayed if an SCR system error or DEF quality error occurs.
  If the warning is displayed, contact your authorised KATO dealer.

(T218081-031-0E)

https://truckmanualshub.com/

(2) Waning display

If the DEF level is too low or an SCR system error occurs, operating restrictions will be applied.

The status of the operating restrictions can be confirmed based on the warning display in the table below.

1) If the DEF level is too low

Operating restriction	Indicator level	DEF indicator	Warning message	Note
—		White	—	Normal
Warning		White	1/1 ADD DEF	—
Low operating restriction		Yellow	1/1 ADD DEF OUTPUT RESTRICTED OK	The engine output is restricted.
Severe operating restriction		Red	1/1 ADD DEF NO OUTPUT. RPM RESTRICTED. OK	The engine output is restricted, and the engine speed is fixed at a low-idle speed.

I218621-009-0E

2) If an SCR system error or DEF quality error occurs

Operating restriction	Time	DEF indicator	Check engine lamp	Warning message	Note
—	—	White	—	—	Normal
Warning	Error occurs	White		1/1 SCR SYSTEM ERROR	—
Low operating restriction	After 180 minutes after error occurs	Yellow		1/1 SCR SYSTEM ERROR OUTPUT RESTRICTED OK	The engine output is restricted.
Severe operating restriction	After 210 minutes after error occurs	Red		1/1 SCR SYSTEM ERROR NO OUTPUT. RPM RESTRICTED. OK	The engine output is restricted, and the engine speed is fixed at a low-idle speed.

I218621-010-0E

NOTE

If the error is detected again within 40 hours after eliminating the error, the switching time to severe operating restrictions will be shortened to 30 minutes.

⚠ CAUTION

The warning alarm beeps whenever the warning stage changes.

(T218081-138-0E)

https://truckmanualshub.com/

3-8 Escape mode (T218341-010-0E)

To avoid danger when the operating restrictions are applied due to low DEF level or SCR system error warning, the escape mode can be used to temporarily disable the output restrictions.

How to activate the escape mode

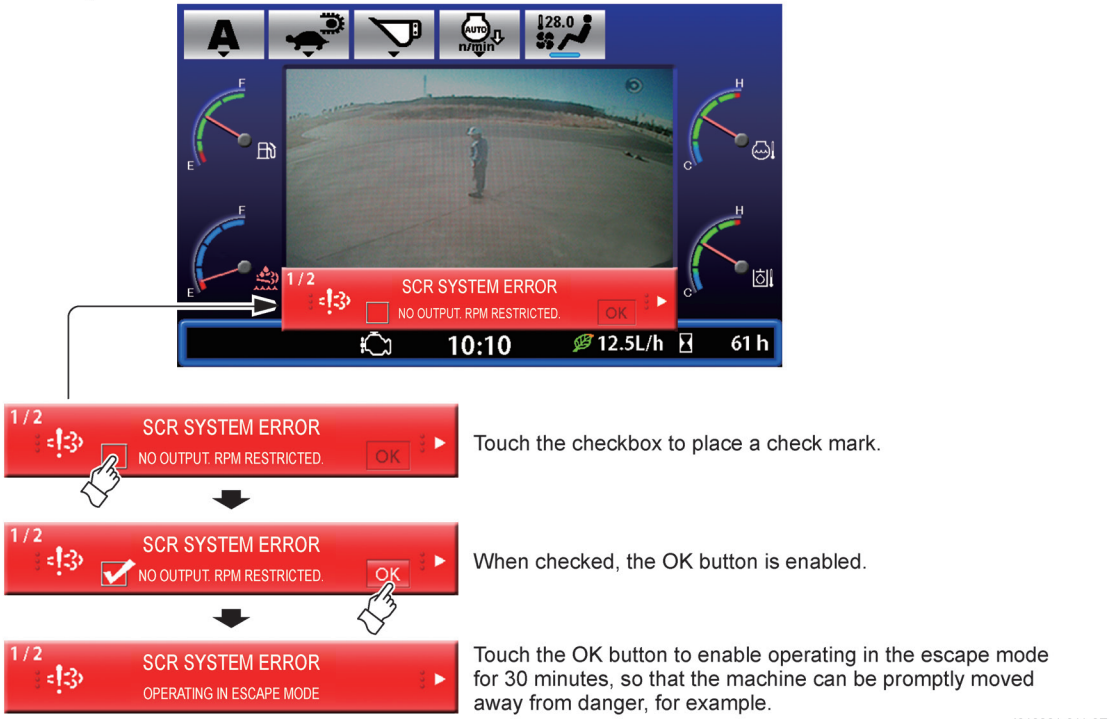

I218621-011-0E

NOTE

- The escape can be used a maximum of 3 times (only once when severe operating restrictions are applied). However, the number of times differs depending on the remaining time before the severe operating restrictions will be applied.
- Once the escape mode is activated, it is continued for 30 minutes, and it cannot be stopped.
  If the starter switch is turned "OFF" and then turned "ON", the system will activate the escape mode for the remaining time.

https://truckmanualshub.com/

3-9 Purge (Rinse) of the SCR system (T218341-011-0E)

To maintain proper performance, the SCR system installed in the machine includes a purge control function that temporarily raises the exhaust temperature.

Both automatic purge and manual purge control modes are available, which result in different machine behavior. Therefore, read this section carefully to ensure the system is operated correctly.

⚠ WARNING

- During purging, white smoke or ammonia odor may be temporarily emitted from the tail pipe, but that is normal.
- Avoid operating the machine at a place where ventilation is insufficient.

(T218341-012-0E)

3-9-1 Automatic purge control (T218341-013-0E)

(1) During automatic purging

The automatic purging cycle occurs automatically approximately every 30 hours.

No other special operations are required during automatic purging, so normal operations can be performed as usual.

The following message is displayed during automatic purging.

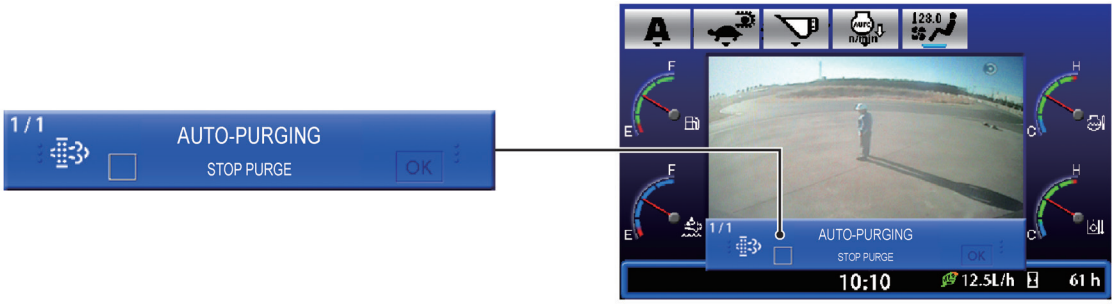

I218621-012-0E

⚠ WARNING

- During automatic purging, an auxiliary control system functions to ensure purging can be finished efficiently.
  Consequently, the operating feel may be different than normal, but that is normal.
- An engine speed limit function prevents the speed from dropping below a medium engine speed, even if the accelerator dial is operated.
- Due to the increased exhaust pipe temperatures, make sure there is nothing flammable near the exhaust pipe outlet.

(T218341-014-0E)

When automatic purging is finished, the message will disappear and, depending on the accelerator dial position, the engine speed might decrease.

https://truckmanualshub.com/

(2) How to stop automatic purging

If the purge process must be stopped due to the given operating environment during automatic purging, the following method can be used to stop purging.

Touch the checkbox to place a check mark.

When checked, the OK button is enabled.

I218621-013-0E

The following message is displayed while automatic purging is stopped.

I218621-014-0E

Use the same operations to resume purging as for stopping purging, as described below.

I218621-015-0E

⚠ CAUTION

If the engine water temperature falls during automatic purging, the message will disappear, and it will be impossible to resume purging.

After that, if the engine water temperature rises, the "AUTO-PURGING STOPPED" message will be displayed again to enable resuming.

(T218341-015-0E)

(3) Automatic purging requested

Automatic purging normally occurs automatically approximately every 30 hours, but sometimes it does not occur, depending on the water temperature and engine speed status.

If no purging has occurred for a certain period of time, the warning alarm may beep with the following message displayed.

Note: The message disappears after a fixed time.

I218621-016-0E

⚠ CAUTION

- Automatic purging is enabled by using the accelerator dial to increase engine speed above medium speed (about 1400min^{-1}).
  If the water temperature is low, warm up the engine until the water temperature gauge is above the position shown to the right (about 70℃) before purging.
- If a message indicating that automatic purging is requested is displayed several times, eventually manual purging is requested.

I218081-137-0J

(T218341-016-0E)

https://truckmanualshub.com/

3-9-2 Manual purge control (T218341-017-0E)

(1) Manual purging requested

If automatic purging is not finished within 8 hours (with the engine running), the warning alarm beeps and manual purging is requested.

The following message is displayed while manual purging is requested.

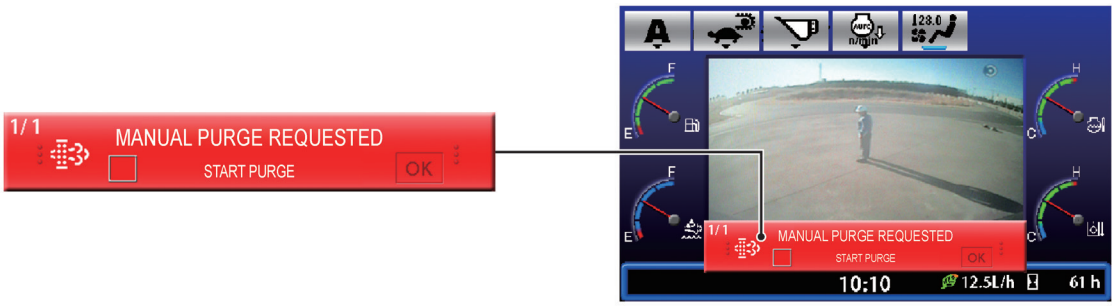

I218621-017-0E

(2) Start manual purging.

Move the machine to a safe location and move the safety lock lever to the lock position.

> **⚠ WARNING**
>
> Due to the increased exhaust pipe temperatures after starting manual purging, make sure there is nothing flammable near the exhaust pipe outlet.

(T218341-018-0E)

Perform screen operations according to the following procedure.

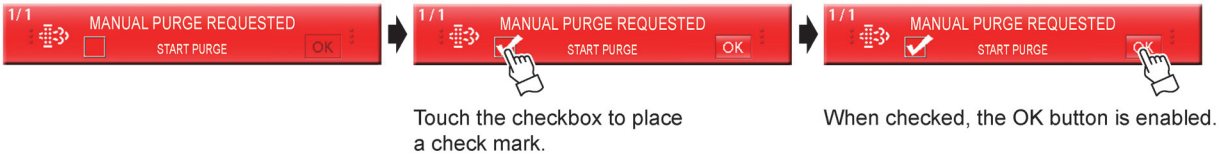

I218621-018-0E

The following message is displayed during manual purging.

I218621-019-0E

During manual purging, the engine speed is fixed at a medium speed regardless of the accelerator dial position.

Manual purging takes about 16 minutes to finish. (Note: Purging time may vary depending on the external air temperature and other factors.)

> **⚠ CAUTION**
>
> - If the engine water temperature or hydraulic oil temperature is low, the engine will automatically warm itself up by fixing the engine speed at a high speed.
> If the engine warms up automatically, it will take longer to finish purging.
> - Operating a control lever will cancel manual purging and display the "MANUAL PURGE REQUESTED" message again.

(T218341-019-0E)

When manual purging is finished, the message will disappear, and the engine speed will return to the speed corresponding to the accelerator dial position.

https://truckmanualshub.com/

(3) Purge control error

If manual purging is not finished within 10 hours (with the engine running) after it is requested, purge control error will occur.

⚠ CAUTION

- If automatic purging is not finished within the specified time, the following message may be displayed for a moment (for 1 minute), but that is normal. After that, the manual purging will be requested. Purge the system manually according to the section "3-9-2 Manual purge control".
- Regardless of the above, if "PURGE CONTROL ERROR" message is displayed, then purging is not possible.
  If that occurs, promptly contact your authorised KATO dealer.

I218621-020-0E

(T218341-020-0E)

NOTE

During purging or after purging is finished, the engine sound may be changed, but that is normal.

https://truckmanualshub.com/

3-10 Outside the cab (T218601-012-0E)

(1) Cover/hood

For inspection and servicing, park the machine on the level ground to open each cover and engage the stopper securely. Completely open the hood and toolbox cover.

⚠ CAUTION

- If you open the cover of the machine on a slope or in a strong wind, the cover could close unexpectedly, causing injury.
- Always close each cover and lock it before you start to travel or operate the machine.
- Never travel or operate the machine with the cover open.

(01E0-0142-0E)

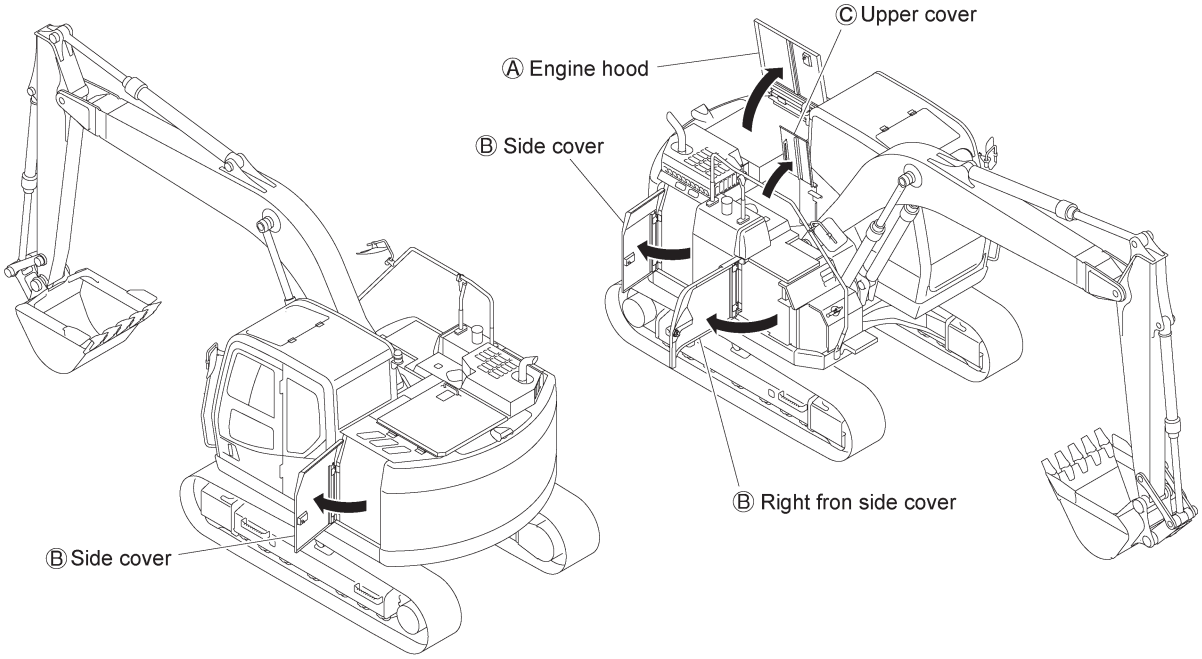

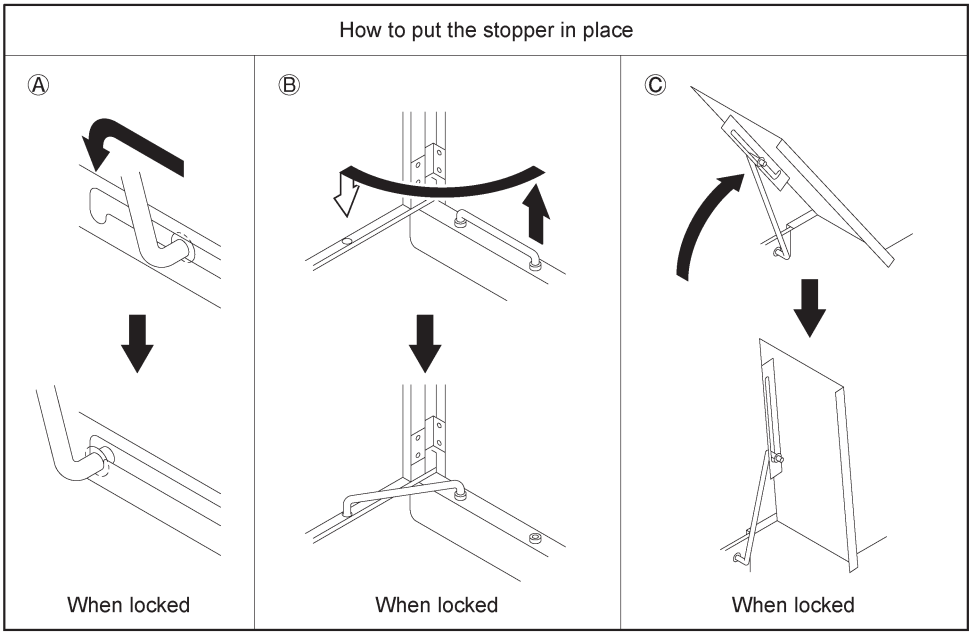

I218601-012-0E

https://truckmanualshub.com/

(2) Mirror

Adjust the mirrors to enable confirming safety to the left, right, and behind the machine from the seated position.

> ⚠ CAUTION
>
> Stow the mirrors when transporting the machine.

(T218081-193-0E)

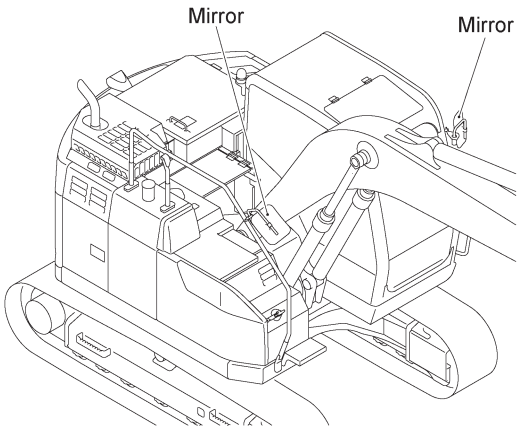

I218601-013-0E

(3) Grease pump

The grease pump can be stowed in the left machine compartment.

Put the lever into the holder to stow the pump.

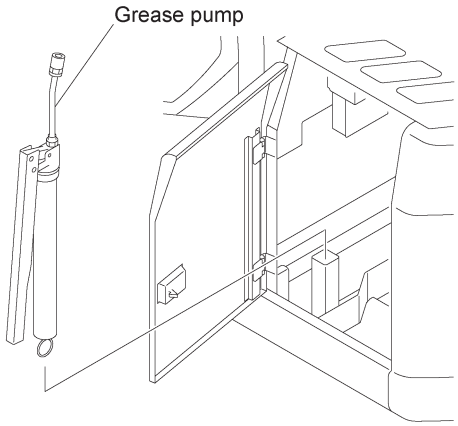

I218601-014-0E

> ⚠ CAUTION
>
> When stowing the grease pump, make sure it does not contact the battery terminals. Doing so may short the battery.

(01E0-0562-0E)

https://truckmanualshub.com/

(4) Washer tank

This is mounted inside the maintenance door of the cab. It has a capacity of 1.5L. Use washer fluid for automobiles.

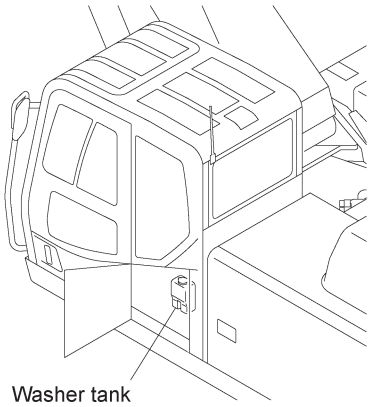

I218341-034-0E

⚠ CAUTION

- Beware of freezing washer fluid at night or in winter.
- If you press the washer switch while the washer fluid is frozen, you will damage the pump.
- Always check that there is enough fluid in the washer tank.
  If you press the washer switch while the tank is empty or continue to hold the switch down for a long period, you could cause the pump to break down, so refill the tank before it becomes empty.

(01E0-0144-0E)

(5) Aerial

During transport, rotate the aerial obliquely downward to the stowed position.

To use the radio, rotate the aerial upward to the deployed position.

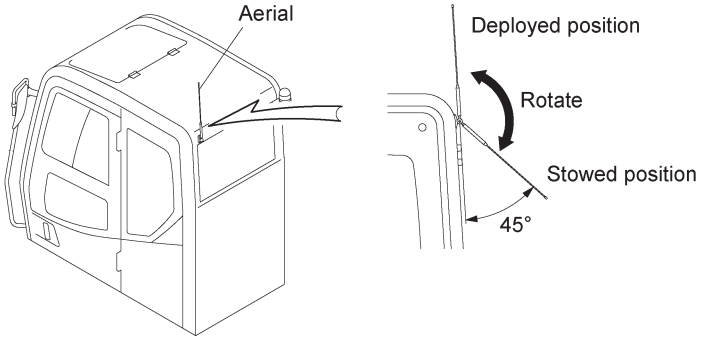

I218601-015-0E

⚠ CAUTION

- The aerial can only be rotated in the prescribed forward or rearward directions. Forcibly rotating the aerial in the lateral direction could damage the aerial.
- Hold the aerial near its base when rotating the aerial.

(T218081-0134-0E)

https://truckmanualshub.com/

(6) Battery disconnect switch

This switch should be held at the ON position "|" except during long-term storage and when the electrical system is serviced. When you turn the switch to the OFF position "○", all electric circuits are cut off, and the time information of the clock and the tuning information of the radio are lost.

Also, do not turn the switch to the OFF position "○" within 5 minutes after the engine stops.

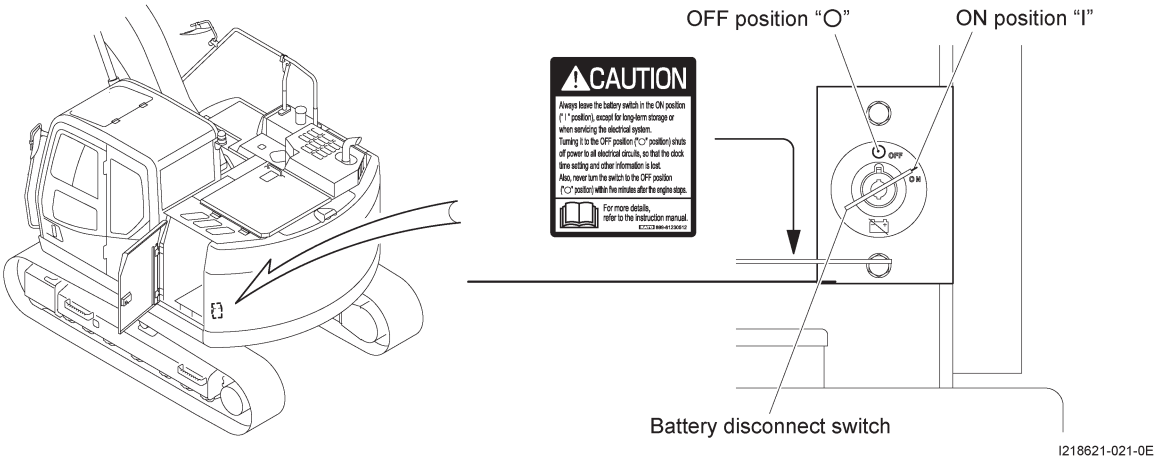

⚠ CAUTION

- Before starting the engine, make sure that the switch is located at the ON position "|".
- Never turn the switch to the OFF position "○" when the engine is running.
  Otherwise, the electrical system may get damaged.
- Do not turn the switch to the OFF position "○" within 5 minutes after the engine stops.
  Otherwise, the exhaust gas aftertreatment system may get damaged.

(T218341-022-0E)

https://truckmanualshub.com/

(7) Working lamp

There are working lamps on the machine right side and boom left side. They can be angled up or down as required to adjust the light direction for work in hand. Further working lamps are available as options for the boom right side and cab top. Fit these if required.

The working lamp on the cab top must be folded down for transportation to reduce the overall height of the machine.

When the direction of the working lamp is changed, retighten the swivel section bolt. The working lamp might angle down during operation when working with the bolt untightened.

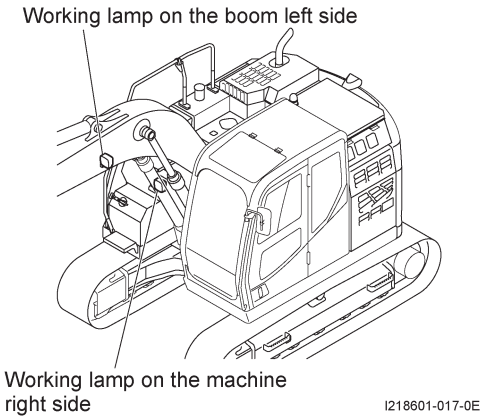

NOTE

Tightening torque: 16.7 − 18.6N･m (170 − 190kgf･cm)

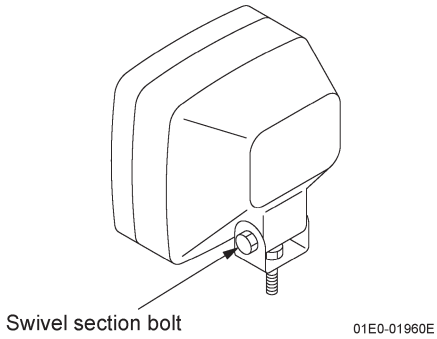

(8) Toolbox

The toolbox is not waterproof or dustproof. Rain water, dust, sand, or other matter can get inside the box. Therefore, do not store anything in the box that should not get wet or dirty.

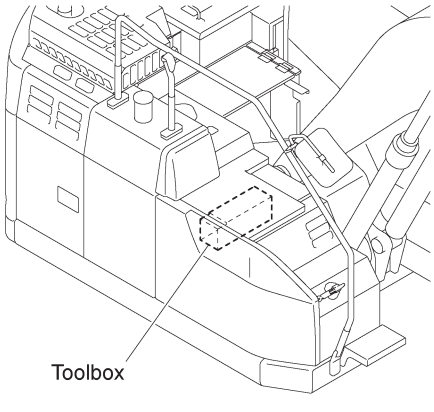

⚠ CAUTION

- Do not travel or perform machine operations with the right-front side cover open.
- Close the right-front side cover and lock it with a key before starting operations.
- Be careful not to pinch hands or fingers when closing the cover.

(T218601-036-1E)

https://truckmanualshub.com/

(9) Rear view camera

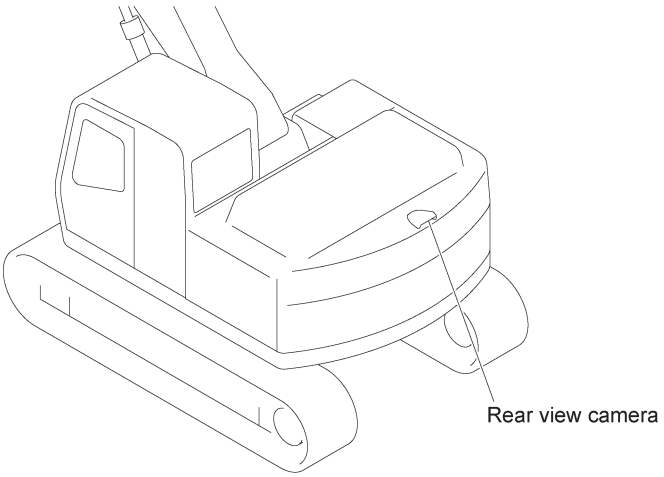

I218411-024-0E

(10) Fuel pump (optional)

Fuel can be added from a drum can etc.

1) Remove the fuel supply hose from the hose hanger and insert the fuel supply port into the drum can etc.
2) Fuel will be pumped when the fuel pump switch is turned to "ON".
3) When the fuel tank becomes full, turn the fuel pump switch to "OFF".
4) Wipe the fuel off the fuel supply hose with a rag etc., and check whether any fuel is left inside the fuel supply hose.
5) Hang the fuel supply hose back on the hose hanger and stow the fuel supply port.

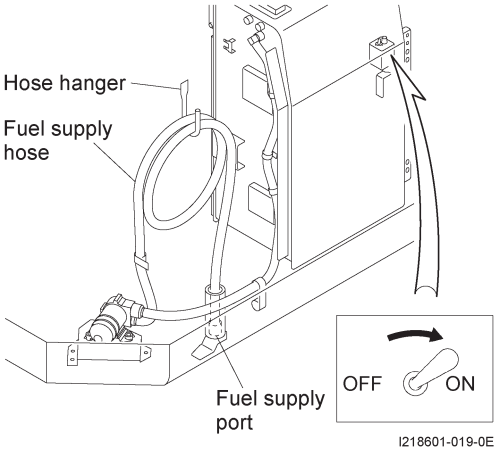

I218601-019-0E

NOTE

Before you start filling, open the oil cap so that you can check the level gauge on the fuel tank.

NOTE

Refer to the separate fuel pump instruction manual regarding the specifications, performance, etc.

⚠ DANGER

- Always fill with fuel of the designated type and grade. If you use a non-recommended fuel, performance will be impaired and a major accident could result.
- Stop the engine and turn the starter switch to OFF before you start filling.
- Park the machine in a well-ventilated place and check that there is nobody inside before you start filling.
- Do not allow any fire or source of ignition nearby.
- Take care not to spill fuel on hot areas. If any fuel spills, wipe it up immediately.
- Take care to ensure that no dirt or water gets into the fuel tank when you fill with fuel.
- Watch the level gauge of the fuel tank while you fill with fuel so that the fuel does not pour out of the filler hole on the fuel tank.
- As soon as you finish filling, close the filler cap and lock it.

(T218081-136-0E)

https://truckmanualshub.com/

(11) Rain visor (optional)

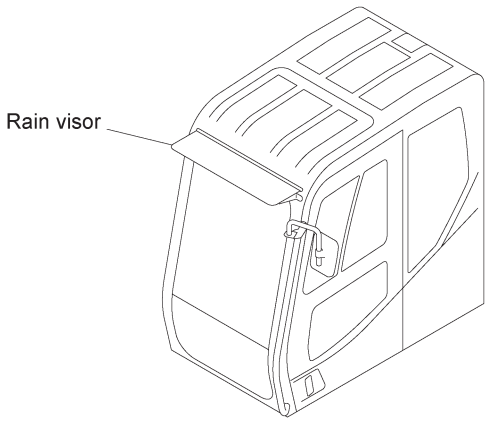

I218081-305-0E

⚠ CAUTION

Depending on the combination of attachments used, the attachments could contact the rain visor and cause damage. Be especially careful to confirm that there is no interference between attachments and the rain visor before staring operations.

(T218081-034-0E)

https://truckmanualshub.com/

4. Precautions on handling a new machine (01E0-0146-0E)

This machine is painstakingly inspected before we ship it, but when new, it requires extra preoperational checks and warming-up running.

(1) Carry out running-in

In a new machine, all the working parts have not had the chance to wear in fully to fit each other, so you should allow a running-in period of 50 hours in which you do not overload the machine (i.e. do not run it at more than 80% of full capacity).

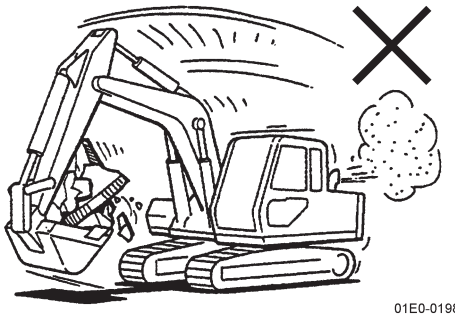

01E0-01980

> ⚠ CAUTION
>
> If you apply full load without an initial running-in period, it can cause seizures, chafing and other ill effects which can severely reduce the lifespan of the machine.

(01E0-0147-0E)

(2) Initial replacement of lubricants and filter elements

Replace the lubricants and filter elements listed below.

Refer to the relevant sections for precautions and procedures for replacement.

Inspection location and service task	Task	Initial replacement interval	Oils and part to change	Reference section	Notes
Return filter	Replace	100h	Element	Inspection and servicing section 4-2-4	After initial replacement, replace every 1000 hours
Drain filter	Replace	100h	Cartridge	Inspection and servicing section 4-2-8	After initial replacement, replace every 1000 hours
Traveling motor reduction gear oil	Replace	500h	Gear oil	Inspection and servicing section 4-3-3	After initial replacement, replace every 1000 hours
Swing motor reduction gear oil	Replace	250h	Gear oil	Inspection and servicing section 4-4-1	After initial replacement, replace every 1000 hours

(T218621-008-0E)

> ⚠ CAUTION
>
> - The intervals stated in the inspection and servicing table are based on the elapsed time indicated by the hour meter.
> Follow both the passage of dates and of hours of operation and carry out each inspection item when one of the times is reached, whichever occurs sooner.
> - For the inspection and replacement methods for the engine, refer to the separate engine manual.
> - The inspection intervals for this machine are based on standard operations and working conditions.
> Under severe conditions, the inspection and replacement intervals should be shortened accordingly.
> - If any method or interval of inspection and servicing is unclear, contact your authorised KATO dealer.

(01E0-0149-0E)

https://truckmanualshub.com/

5. Preoperational checks (01E0-0150-1E)

The purpose of preoperational checks is to ensure safe and efficient work.

Before operating the machine, always inspect the machine as described below and record the inspection status by referring to the "KATO hydraulic excavator preoperational check sheet", included in the "Inspection sheet" of this manual.

If a malfunction, the need to add fluids, or other problem is discovered during the inspection, refer to the corresponding sections in the "Inspection and servicing".

⚠ CAUTION

- Set the machine level for the preoperational checks.
- If you discover any damage, breakdown or malfunction, repair it immediately. Do not leave it for later and do not start work before it is repaired.
- For the inspection and replacement methods for the engine, refer to the separate engine manual.
- The inspection intervals for this machine are based on standard operations and working conditions.
  Under severe conditions, the inspection and replacement intervals should be shortened accordingly.
- If any method or interval of inspection and servicing is unclear, contact your authorised KATO dealer.

(01E0-0151-0E)

https://truckmanualshub.com/

6. Operation (01E0-0155-0E)

6-1 Starting the engine (01E0-0156-0E)

6-1-1 Preparations for operation (01E0-0157-0E)

(1) Go through the preoperational checks (checks before starting the engine) with the engine stopped.

(2) Check that everything is secure around the operator's seat.

(3) Sit in the operator's seat and lock the console lock lever.

(4) Adjust the operator's seat if necessary and fasten your seatbelt.

(5) Check that each control lever is in the neutral position and that the safety lock lever is in the lock position.

6-1-2 Engine start procedure (T217201-093-0E)

⚠ CAUTION

- If the battery is flat and cannot start the engine unaided, use the booster cables to start the engine referring to "How to start the engine using the booster cables" in the section "Inspection and servicing". Recharge the flat battery before using it again.
- If the safety lock lever is in the release position, you cannot start the engine.
- If the message "ENG. EMERGENCY STOPPED" appears on the display, press the normal side of the emergency stop switch.

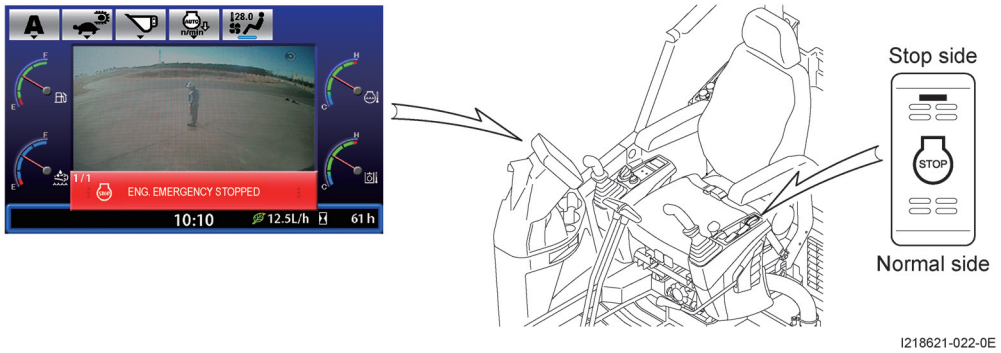

(T218081-143-0E)

(1) Insert the key into the starter switch and turn it to the "ON" position. A buzzer sounds and the APC system begins its self-diagnostic check.

I218621-023-0E

⚠ CAUTION

If, after the self-diagnostic check, there are any items other than "CHECK SEATBELT." and "CHECK SAFETY LEVER." remaining on the display, suspend the engine start and investigate the cause before restarting the engine start operation.

(T218081-037-0E)

https://truckmanualshub.com/

(2) Check that there is nobody nearby and sound the horn.

(3) When you turn the starter key further round to the "START" position, the starter motor turns and starts the engine. Once the engine has started, release the key. It will automatically return to the "ON" position.

> ⚠ **CAUTION**
>
> - If the engine has not started after you have held the key in the "START" position for 15 seconds or more, wait for 1 — 2 minutes before trying again. If you run the starter motor for 15 seconds or more, you may burn out the starter motor.
> - If you fail to start the engine, turn the starter key to the "OFF" position before trying again.

(01E0-0161-0E)

NOTE

If you don't turn the starter key back to the "OFF" position before restarting the engine, the engine speed control will become unstable.

NOTE

Even after the engine warming period is over, the engine will run at medium speed for a few seconds.

(4) When there are no problems in the APC system and there are no messages to be displayed, the message shown in the right will be displayed.

I218081-088-0J

(5) Engine emergency stop procedure

If the monitor displays a message notifying you of some abnormality after you start the engine, move the starter switch back to the "OFF" position to stop the engine and contact your authorised KATO dealer.

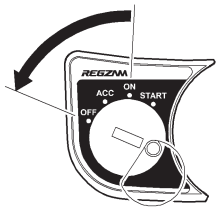

I218081-089-0J

https://truckmanualshub.com/

6-2 Warm-up running (T218081-139-0E)

(1) Engine warm-up running

When the coolant temperature is too low, the engine speed will automatically be raised and a warm-up period set. The time remaining in this warm-up period is displayed.

- How to cancel engine warm-up running

1) Press the quick accelerator switch with the levers in neutral.
2) Turn the accelerator dial to medium speed or above and move the levers.

I218621-024-0E

> ⚠ **CAUTION**
>
> - Do not move any control levers including for the traveling or put any load on any system during the engine warm-up running period.
> - If engine noise becomes a nuisance during warm-up running or in other unavoidable situations, it is possible to cancel engine automatic warm-up running, but you should continue the warm-up process at a lower speed which will not cause a noise nuisance.

(T218341-024-0E)

(2) Warm-up running for hydraulic oil

When the engine warm-up running period has been either completed or canceled but the hydraulic oil was not sufficiently heated, the message "HYD. OIL LOW TEMP." is displayed on the monitor.

If this message is displayed on the monitor, follow the procedure below for hydraulic oil warm-up running.

I218621-025-0E

> ⚠ **CAUTION**
>
> - You must pay particular attention to warm-up running in winter and cold regions.
> Excessively cold hydraulic oil can have an adverse effect on hydraulic equipment. If you start work before the hydraulic oil is adequately warmed up, the machine's response to control lever operations will be poor and may not match the operator's intentions, so never start work without an adequate warm-up period. This is particularly important in cold weather.
> In addition to the immediate benefits, a full warm-up every time will prolong the life of the machine.
> - Watch the display during warm-up running to see that there is no malfunction. If any message warning of a malfunction is displayed on the monitor during warm-up running, stop the engine and investigate the cause before restarting the warm-up process.
> - The message is removed from the screen automatically once warm-up running is complete and you can then begin work.

(T218081-140-0E)

https://truckmanualshub.com/

① Turn the accelerator dial to medium speed or higher and move the arm (bucket) all the way to stroke end.
Do not continue operation for 30 seconds or more.

② Work the arm (bucket) control lever slowly and return it to the neutral position.

③ Repeat steps ① and ② until the "HYD. OIL LOW TEMP." message disappears from the screen.

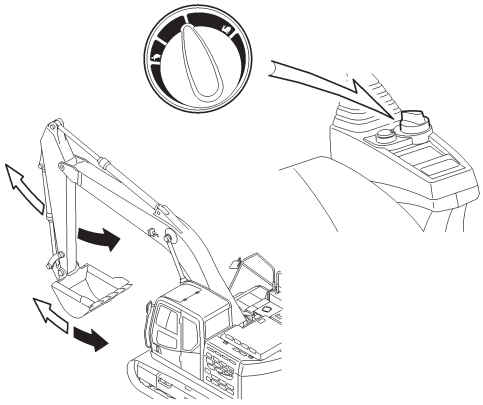

I218411-133-0J

⚠ CAUTION

On the first warm-up operation do not move anything other than the arm and bucket.

(01E0-0167-0E)

④ Go slowly through each of the following operations 3 － 5 times to confirm that each works correctly.

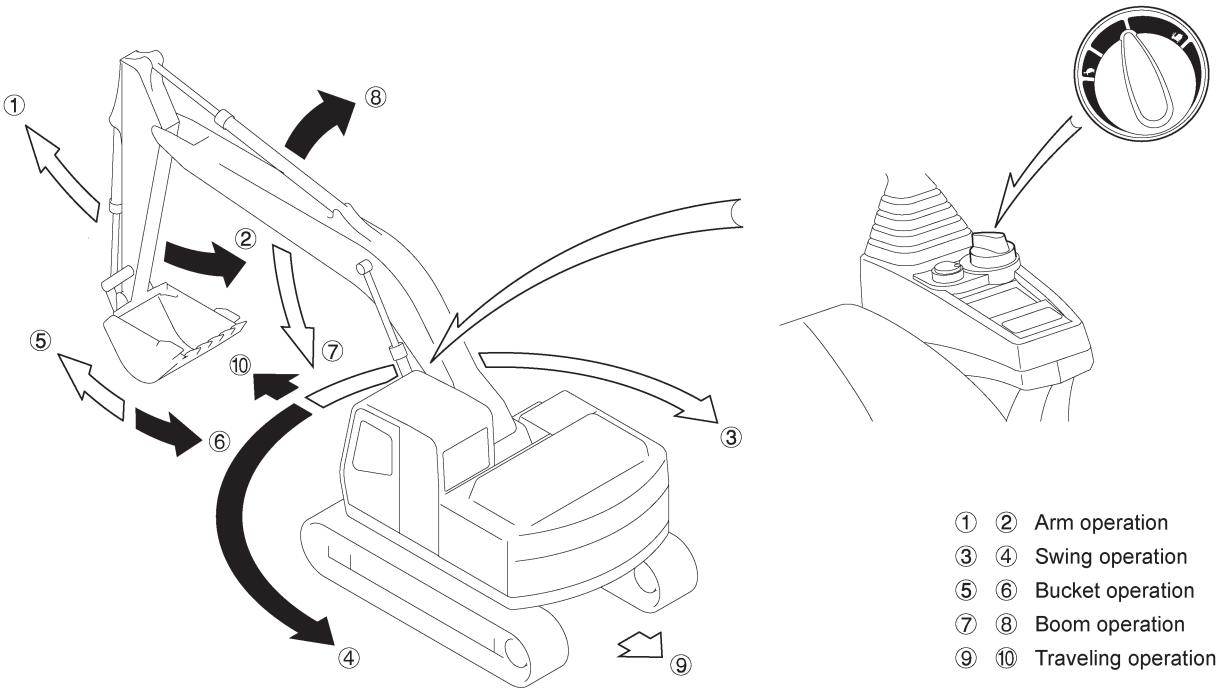

I218411-026-0E

NOTE

If you do not work through all of the above operations, there may be lags in starting and stopping them later.

https://truckmanualshub.com/

6-3 Traveling operation (01E0-0176-0E)

6-3-1 Traveling operation procedure (01E0-0177-1E)

Set the traveling mode to suit the site you are working on.

You can use the traveling control levers or the pedals to control traveling.

In forward or backward movement the distance you move the levers or depress the pedals controls the traveling speed.

When you return the control levers and pedals to their neutral positions, the brakes engage automatically to stop the machine.

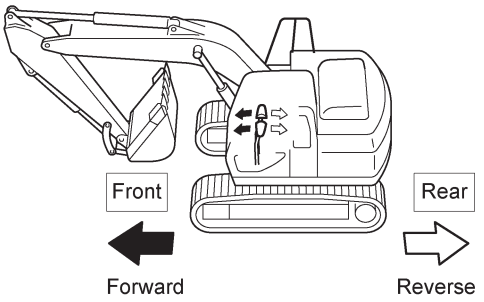

I218411-027-0E

⚠ WARNING

- Be sure of the position of the traveling motors when traveling.
  When the traveling motors are turned to the front, the directions of operation of the traveling control levers are reversed.
- Before moving off, check that the surrounding area is safe and sound the horn regardless of whether you are going to move forward or in reverse.
- Do not move the control levers suddenly (i.e. sudden moving off or stopping, reversing levers). These can cause the machine to tip over, particularly on sloping roads or uneven ground.

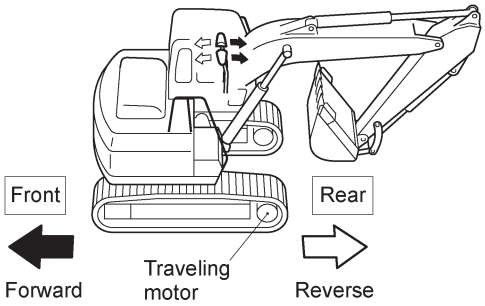

I218411-028-0E

(01E0-0178-0E)

(1) Forward and reverse traveling

1) Raise the boom sufficiently to allow seeing all mirrors on the right side. If there are any obstructions above, lower the boom appropriately.

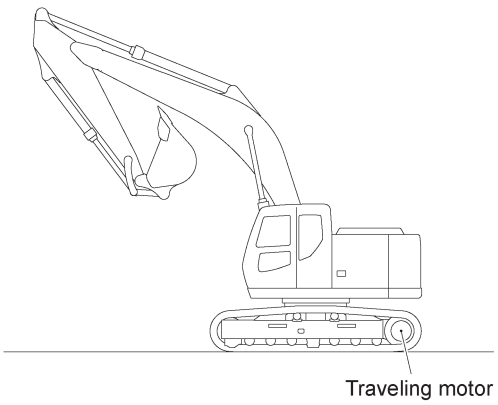

I218411-029-0E

2) When you move the left and right traveling control levers (or pedals) simultaneously in the forward or reverse direction, the machine starts to travel in that direction.

https://truckmanualshub.com/

(2) Pivot turn

This method changes direction by moving only one track shoe.

Use either of the left and right traveling control levers (or pedals).

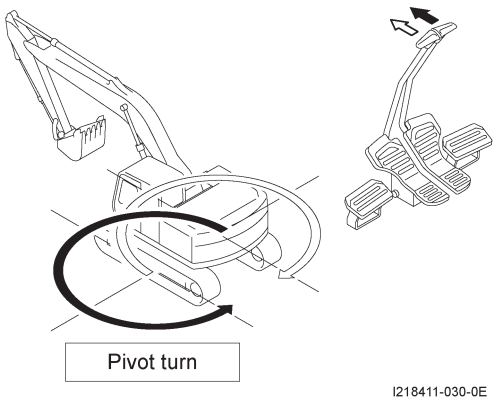

I218411-030-0E

(3) Spin turn

This method changes direction on the spot by moving both track shoes simultaneously but in opposite directions.

Operate one traveling control lever (or pedal) for forward motion and the other for reverse at the same time.

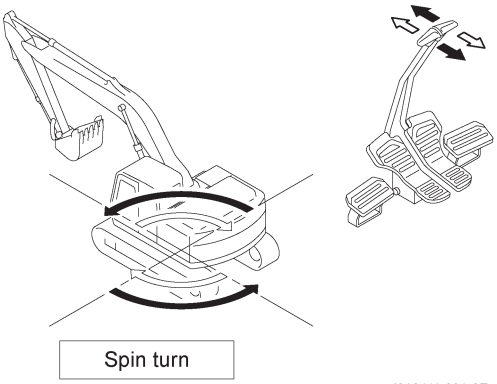

I218411-031-0E

> ⚠ **CAUTION**
>
> Come to a stop momentarily before beginning a spin turn.

(01E0-0179-0E)

6-3-2 Precautions on traveling (01E0-0180-0E)

(1) When traveling, always try to steer in the largest possible curves. Avoid rapid spin and pivot turns and similar maneuvers because they have adverse effects on the rollers, track links and the frame etc. In narrow places or rocky ground make many tacks to complete maneuvers.

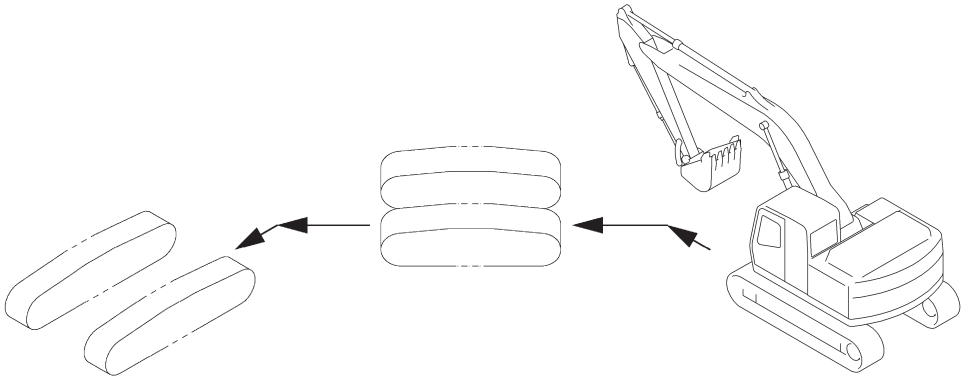

I218411-032-0J

(2) When traveling over long distances, do not travel at the machine's own power as possible as you can.

If you travel (under the machine's own power) continuously for long periods, the oil temperature in the reduction gears becomes abnormally high, which can cause damage to the motors.

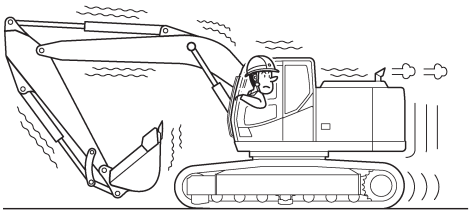

I218411-033-0J

https://truckmanualshub.com/

6-3-3 Precautions when traveling in water (01E0-0181-3E)

> ⚠ **CAUTION**
>
> When traveling in water, take care that water does not splash on the electrical parts.
> When they are immersed in water, contact your authorised KATO dealer to order inspection.
> If water splashes on the electrical parts, they could malfunction.

(01E0-0182-0E)

(1) This machine can travel in water up to the middle level of the carrier rollers.

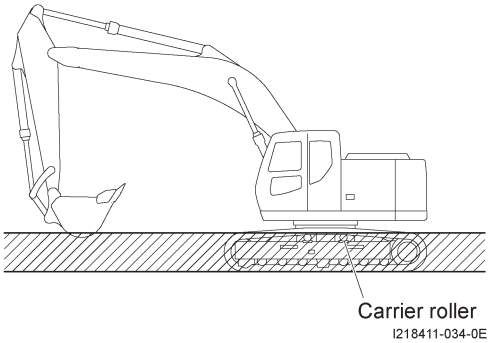

(2) When climbing out of water at a steep angle, 15 degrees or steeper, the back end of the upper structure can become immersed in water, causing the radiator fan to splash the water.
If the fan splashes the water, it can damage the fan by bending the blades.
Be very careful of the water level when climbing out of water.

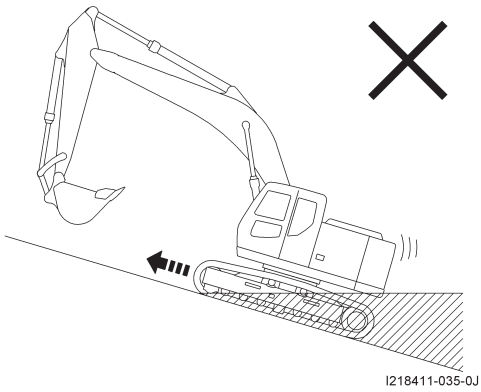

(3) If water reaches the level of the swing gear bearing section, inject grease into the bearing until old grease is forced out to the outside of the swing gear bearing section.

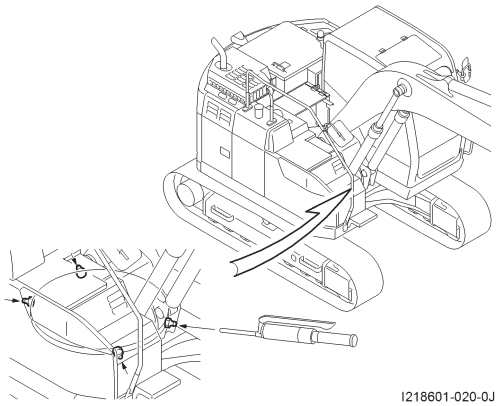

(4) In some cases on soft ground, the machine can gradually sink into the ground. Be sure to stay aware of the surrounding water level and be careful of sinking.

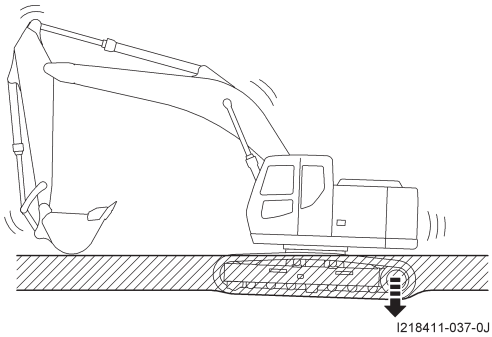

https://truckmanualshub.com/

(5) Check the inner teeth of the swing gear through the inspection window. If any water is present, drain it out through the water drain plug on the traveling frame.

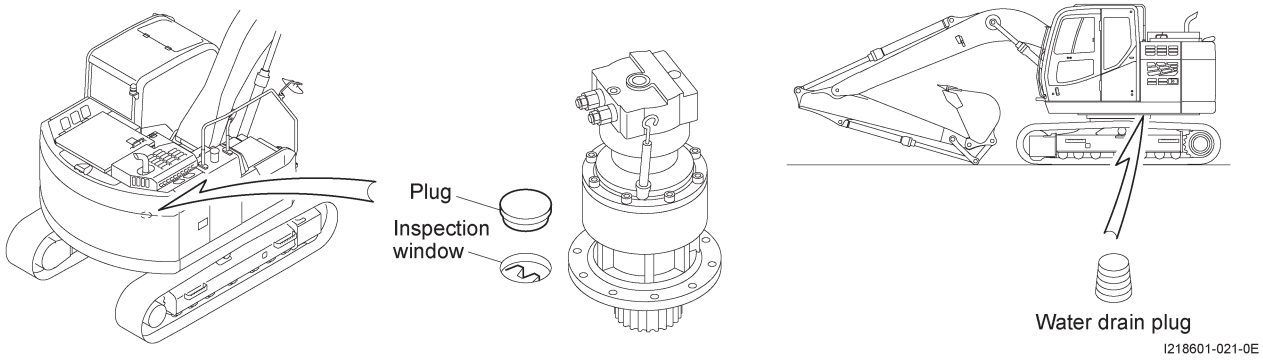

(6) If the swing gear ever becomes completely immersed, replace the swing gear grease.

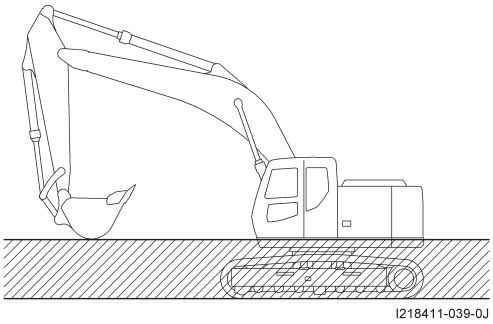

(7) If the machine becomes immobilized on soft ground due to buildup of mud on the underbelly or mud and stones clogged around the travel system such as the track shoes etc., jack up each side in turn slightly and remove the mud and stones. Running the lifted track shoe alternately forward and backward is a simple way to remove mud and stones.

NOTE

Refer to the section "Jack-up procedure" for the correct way to jack up the machine.

6-3-4 Precautions on traveling on unfirm ground surfaces (T218081-152-0E)

When you are traveling on unfirm ground surfaces such as sand and pebbles, set the traveling mode selection switch to slow speed and move slowly. If you travel fast, you may well cause rapid wear of the travel system such as the track shoes etc. and loosening of bolts, so travel with a reduced engine speed.

⚠ CAUTION

Never travel on pebbles or other unfirm ground surface when the machine is fitted with wide shoes.

(01E0-0184-0E)

https://truckmanualshub.com/

6-3-5 Jack-up procedure (01E0-0185-1E)

⚠ DANGER

- Never get under the jacked up machine. If there is no alternative, you must first support the machine with blocks or other secure supports for safety.
- If you are jacking up with the bucket in the reversed position, take care not to press the bucket tip down onto the ground surface. This is dangerous as it would impose excessive forces throughout the front attachment.

(01E0-0186-0E)

To jack up the machine, press the flat portion of the bucket's base slowly against the ground. When doing so, keep the angle between the arm and the boom in the range of 90 — 110°.

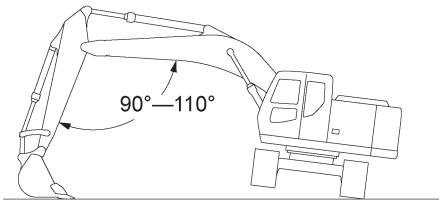

I218411-040-0E

⚠ WARNING

- After jacking up, always place a block or other secure support under the traveling frame for safety to support the machine.
- Place the front attachment in a stable position, stop the engine and move the safety lock lever to the lock position.

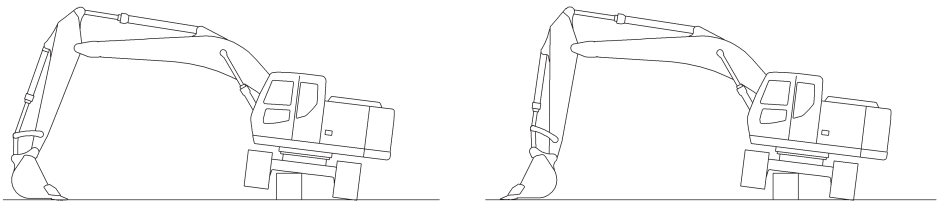

I218411-041-0J

- If you are jacking up with the bucket in the reversed position, take care not to press the point tip down onto the ground surface. This is dangerous as it would impose excessive forces throughout the front attachment and damage the machine.

(01E0-0187-0E)

https://truckmanualshub.com/

6-3-6 Precautions on climbing or descending slopes (01E0-0188-0E)

(1) When moving up or down sloped roads, travel with the front idlers to the front (relative to the direction of motion).

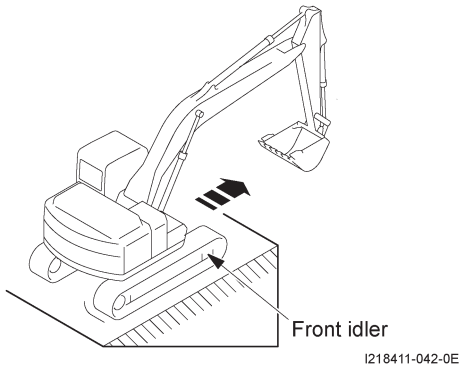

(2) Keep the bucket 20 — 30cm above the ground when traveling on sloped roads or inclined surfaces, and keep to moving straight ahead wherever possible.

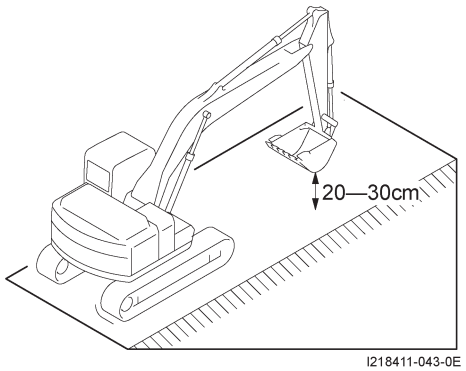

(3) Avoid turning while moving up or down a slope if at all possible. Never change direction on sloping ground or attempt to traverse along the slope. Descend to flat ground and make a detour in order to travel safely.

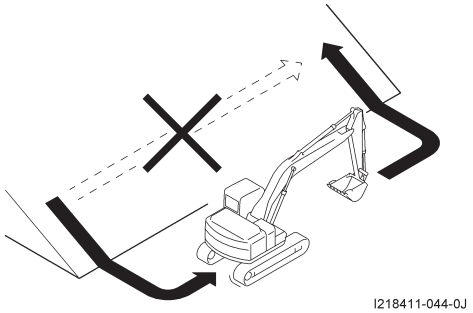

(4) This machine is fitted with a parking brake on each of the traveling motors but if you have no alternative but to park the machine on a slope and leave it unattended, always dig the bucket into the ground and place chocks.

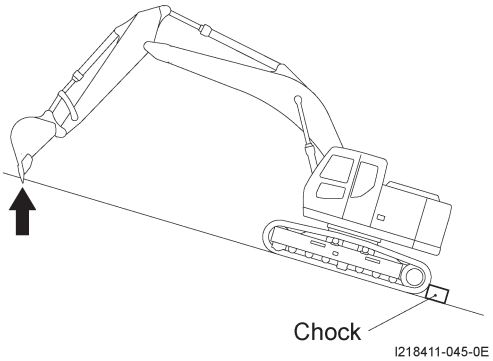

https://truckmanualshub.com/

6-4 Swing operation (01E0-0189-0E)

⚠ CAUTION

Precautions on swing operation

- Inertia when stopping swing
  When you stop swing, inertia may cause the upper structure to keep turning even after you have returned the control lever to the neutral position. You should stop the swing operation early to allow for the stopping distance.
- Attention to your surroundings
  Before you start to swing, always sound your horn and pay attention to bystanders and obstructions in the area.
- Precaution when changing swing direction
  When you change swing direction, first return the control lever to the neutral position and wait until swing has completely ceased before moving the lever in the opposite direction.
- Use of swing strength for excavation is prohibited
  Never use swing force to push projections, embankments, stones etc. with the side of the bucket. Doing so could damage the machine.
- Precaution when swinging on a slope
  Avoid swinging on sloped ground because you risk tipover or lateral sliding.
  In particular, inertia acts when swinging towards the bottom of a slope with a full bucket.
  When working on a slope, make the ground beneath the machine level before you start work.
- If the machine is tilted, any front attachment operation other than swing will release the swing lock automatically, which may cause the upper structure to drift downward.

(01E0-0190-0E)

6-4-1 Swing operation procedure (T218081-137-0E)

(1) Check that the display does not indicate the message "UNLOCKING SWING LOCK".

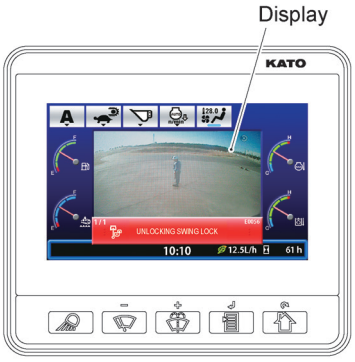

I218621-026-0E

⚠ CAUTION

When the message "USE "SWING LOCK RELEASE" SWITCH" is displayed, set the swing lock release switch to the "release" position and contact your authorised KATO dealer.

(T218081-038-0E)

https://truckmanualshub.com/

(2) Move the safety lock lever to the "release" position.

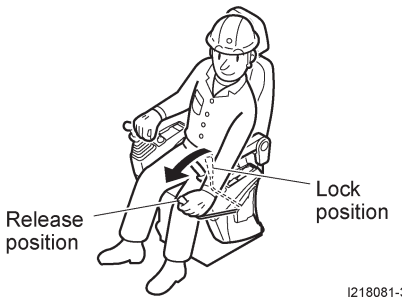

(3) Sound the horn to warn the people nearby.

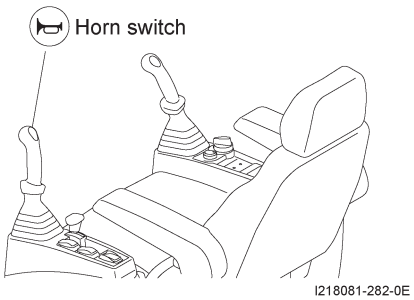

(4) Check the safety of your surroundings and then begin to swing.

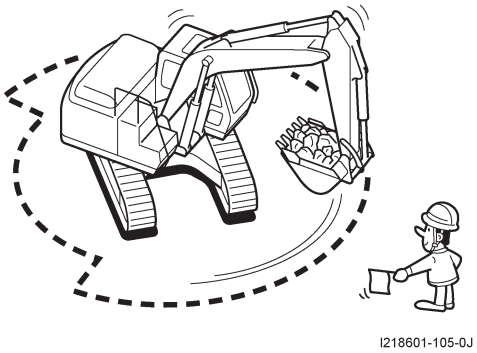

(5) When you stop swinging, return the control lever to its neutral position.

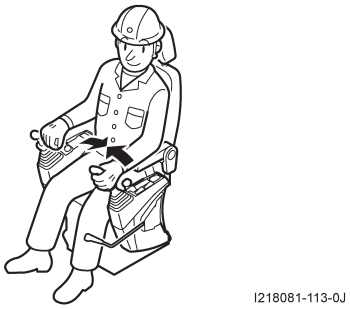

https://truckmanualshub.com/

6-5 Working procedure (01E0-0193-0E)

6-5-1 Digging (01E0-0194-1E)

This applies to excavating from a position below the machine.

(1) Digging power is at its greatest when the bucket cylinder and side links are at 90° and so are the arm cylinder and arm.

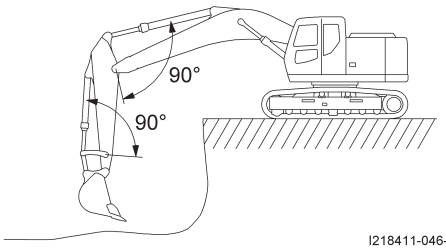

(2) When digging using the arm, the most efficient range is with the arm angle between 45° forward and 30° towards the machine.

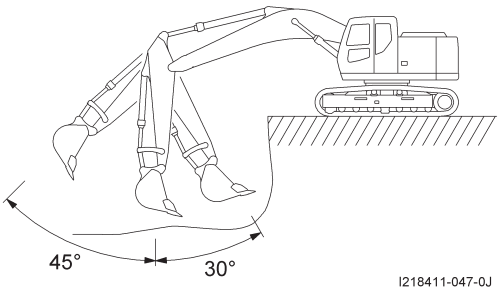

(3) Work with the arm when digging.
If you operate the arm and the bucket enters the ground, operate the bucket cylinder so that the bucket points move parallel with the ground surface. If the action of the arm becomes sluggish due to resistance to digging, lift the boom slightly.

(4) Move the bucket points horizontally so that the bucket scrapes off the ground surface. Then lift the bucket up.

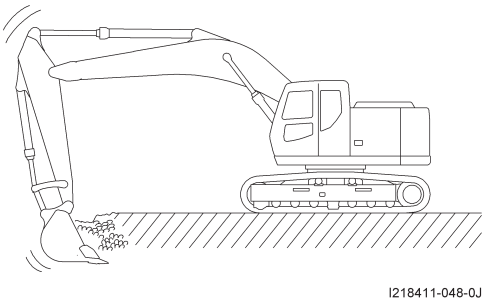

https://truckmanualshub.com/

6-5-2 Trench digging and side channel cutting (01E0-0195-0E)

When digging a ditch, align the travel direction with the direction of the ditch and alternate between excavating and reversing.

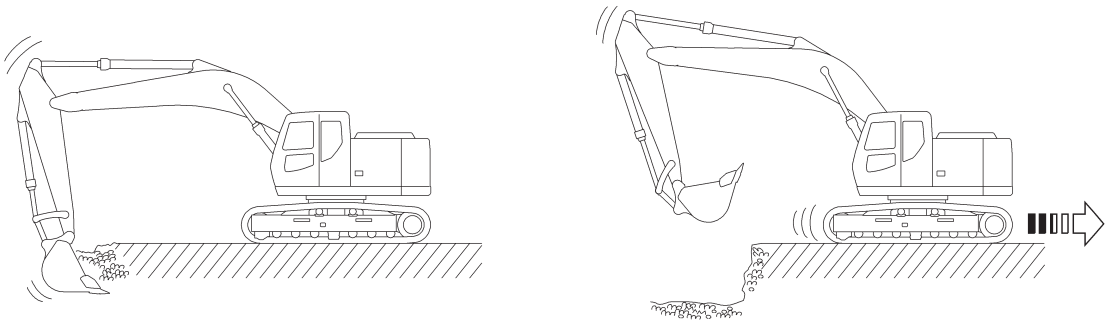

I218411-049-0J

6-5-3 Ground leveling (01E0-0196-1E)

(1) When backfilling after digging or when leveling ground, move the bucket forward and backward on the level.

(2) When leveling ground drawing the arm in from a forward position, draw the arm in gently while raising the boom slightly, and when the arm goes past the vertical position, lower the boom slowly so that the bucket moves horizontally.

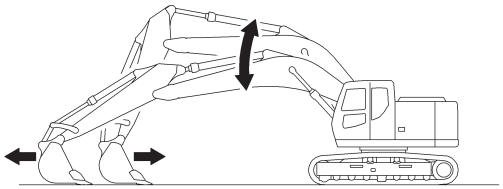

I218411-050-0J

⚠ CAUTION

- Never use swing for ground leveling because it is harmful to the boom and arm.
- Do not level ground by traveling about and pressing the bucket repeatedly down onto the earth. This method puts a great load on the machine and can cause a breakdown.

(01E0-0197-1E)

6-5-4 Loading (01E0-0198-0E)

(1) When filling a dump truck, work from behind the bed of the truck to avoid swing above the truck's cab or over other workers.

(2) It is more efficient to start filling the dump truck from the front of the bed and work towards the back.

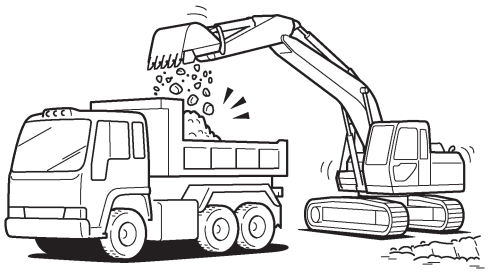

01E0-02470

https://truckmanualshub.com/

6-5-5 Shovel work (01E0-0199-1E)

Shovel work involves digging by pushing the bucket away from the machine rather than by pulling it closer as in backhoe work.

⚠ CAUTION

- In shovel work, the controls are reversed from the orientation for backhoe operation.

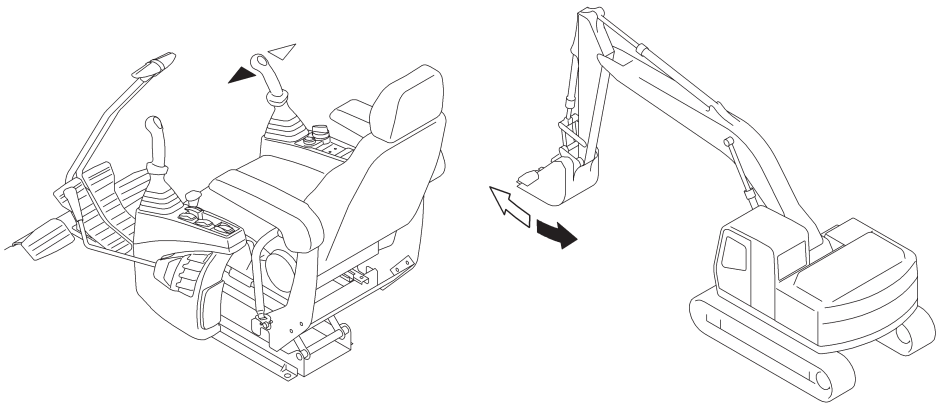

- In shovel work, the bucket is able to catch on the cab, so watch its position carefully.

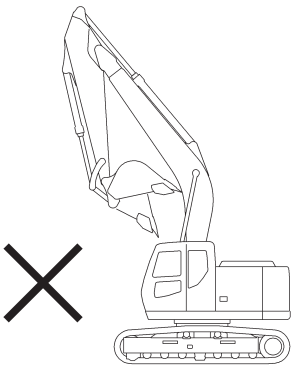

(01E0-0200-0E)

(1) Refer to the "Bucket replacement and reversal" section when switching the bucket arrangement between shovel and backhoe work.

(2) During shovel work, dig so that the arm cylinder is used to scrape off material. Do not dig deep at one time but do as scraping off the face thinly.

(3) In areas prone to the inflow of groundwater, a slope of 2 — 3° is convenient for drainage.

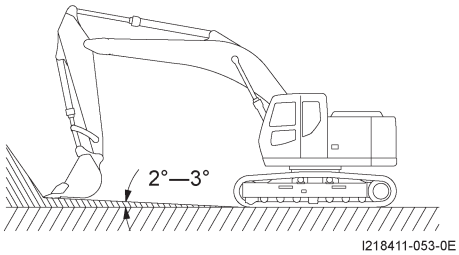

NOTE

The digging power during shovel work is lower than that during backhoe work for structural reasons of the hydraulic cylinders.

https://truckmanualshub.com/

6-6 Dozer operation (optional) (08E0-0026-0E)

(1) Lever operation

Pull the dozer lever toward you to raise the dozer blade. Push the dozer lever forward to lower the dozer blade.

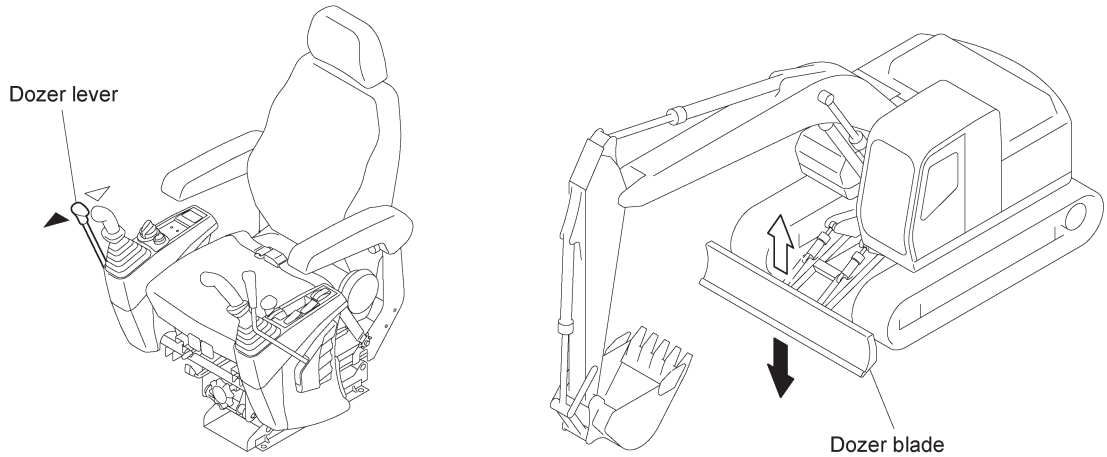

I218601-103-0E

⚠ CAUTION

If you perform the compound operation including the dozer operation at low idling, the engine could stall.

Use the accelerator dial to raise the engine speed to a medium speed or higher (about 1400min^{-1}) before you perform the compound operation.

(T218601-013-0E)

(2) Precautions on using the dozer blade

1) Watch out for collisions against the dozer blade

Impact against the dozer blade can break it or the attached cylinder, so beware of collisions with rocks and other obstacles.

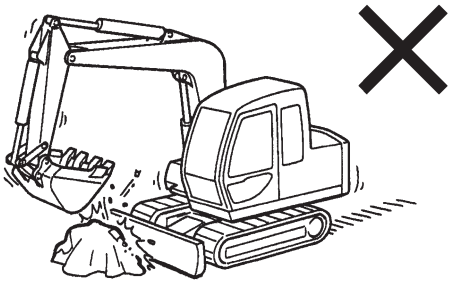

02E0-00650

2) Precautions on using the dozer as a jack

- When you use the dozer blade as a jack, it must be evenly supported, not from one end only.
- Never use the dozer blade as a support, which could cause tip-over etc.

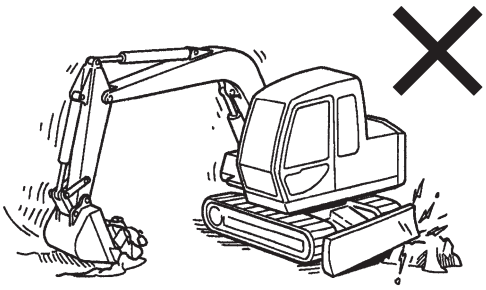

02E0-00660

https://truckmanualshub.com/

3) Take care not to damage the boom cylinder during deep excavation.
If you are making a deep excavation while the dozer blade is in front, work carefully to avoid damaging the boom against the dozer blade.

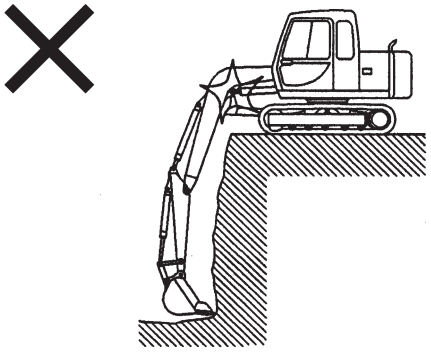

02E0-00670

4) Do not hit the bucket against the dozer blade when the dozer blade is in front.

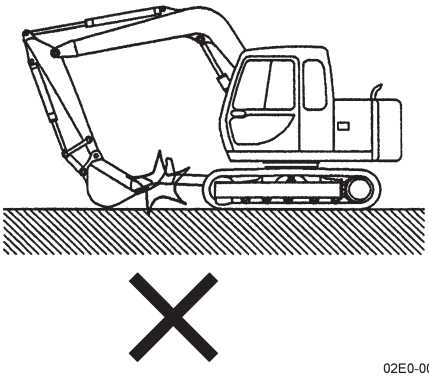

02E0-00680

https://truckmanualshub.com/

6-7 Stopping the engine (T218081-141-0E)

This machine is fitted with a turbocharged engine, so take care of the following points when stopping the engine.

(1) Rest the bucket on the ground then move the safety lock lever to the lock position, use the accelerator dial to lower engine speed to low speed and run the engine for 5 minutes unloaded to cool down.

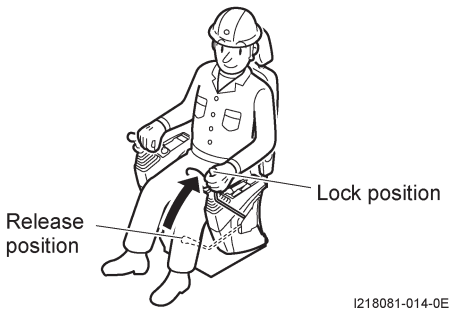

(2) Move the starter switch to the "OFF" position to shut off the engine.
After the engine comes to a complete stop, pull out the key from the starter switch.
If the engine cannot be shut off after above step, stop the engine by pressing the stop side of the emergency stop switch. Return the emergency stop switch back to the normal side after the engine has completely stopped.

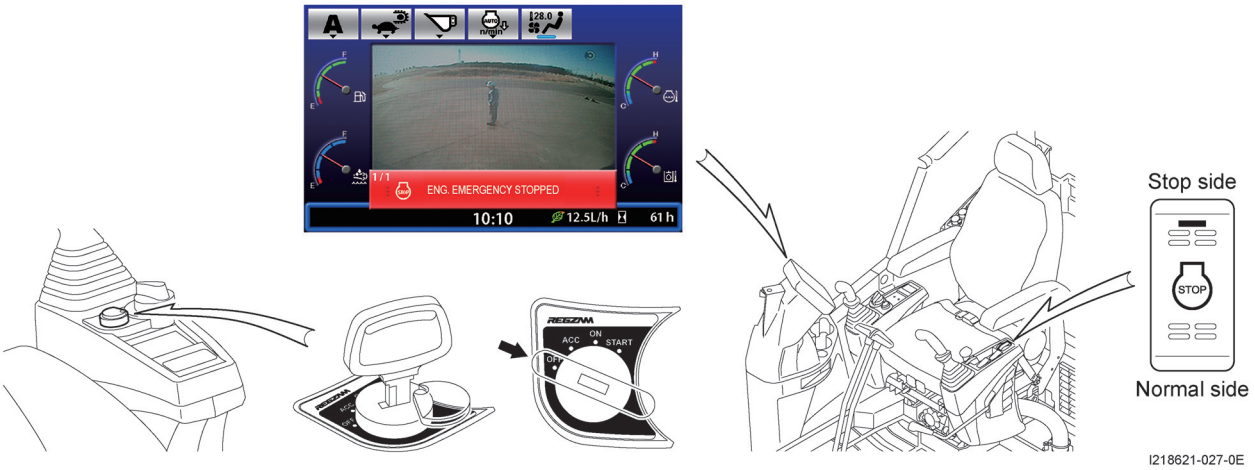

⚠ CAUTION

- If you stop the engine while the turbo system is hot, oil residues will be carbonized which will cause wear to bearings and impair lubrication and may damage the turbo system.
- When you have turned the starter switch to the "OFF" position to stop the engine, the indicator lamps will remain lit for a few seconds after the engine stops in order to protect circuits. This is not a malfunction.

(01E0-0202-0E)

https://truckmanualshub.com/

6-8 Phenomena peculiar to the hydraulic excavator (01E0-0203-1E)

The following phenomena are peculiarities of the hydraulic excavator and are not breakdowns or malfunctions.

(1) The brake valves may make a noise when you start or stop swing but this is the normal noise of their operation.

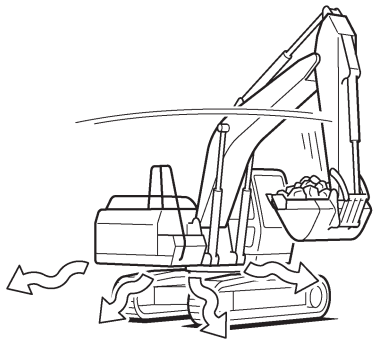

01E0-02530

(2) The control valves may make a noise when you operate the boom or arm but this is the normal noise of their operation.

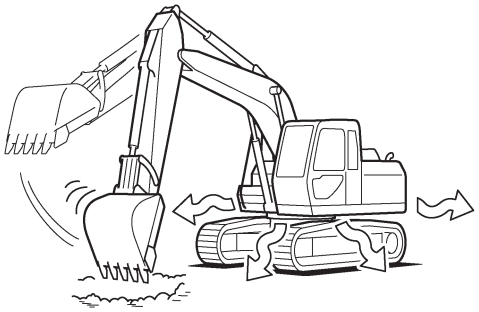

01E0-02540

(3) Vibration of the machine body may become strong when you start the engine or when the engine is near idling speed, but if you raise the engine speed slightly, this resonant vibration will cease.

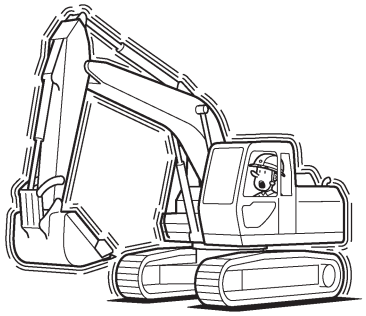

01E0-02550

(4) When the engine is idling and you operate the arm or bucket lever, the arm or bucket may move and swing idly.

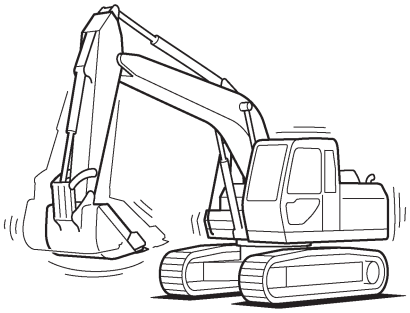

01E0-02560

https://truckmanualshub.com/

7. Monitor (01E0-0116-0E)

⚠ CAUTION

Precautions on using the monitor

- Press the switches and touch panel display with the pad of the fingers. Do not use fingernails, a ballpoint pen, or other pointed object to press them.
- When you clean the touch panel display, use a soft cloth moistened with water or an anti-static cleaner to wipe it gently. Do not use organic solvents, thinners, etc.
  If wiping causes static electrical build-up in the touch panel display, it will not function correctly.
- The monitor is accurately adjusted.
  Humidity or dust may cause a malfunction, so never take it apart or otherwise open the case.
- If the display section shows a warning message indicating a malfunction during work or the preoperational checks, follow the instructions and, if necessary, contact your authorised KATO dealer for advice on how to proceed.
- The display is not intended to guarantee the condition of the machine. If you notice anything abnormal, investigate the cause and contact your authorised KATO dealer if necessary.
- If you ignore the above precautions, your warranty will not cover any breakdowns or accidents which result.

(T218081-039-0E)

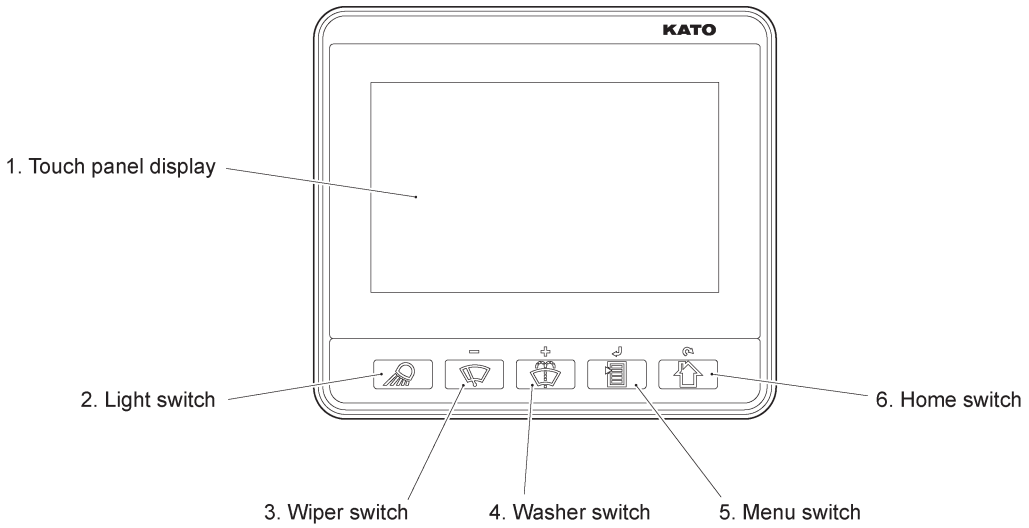

I218081-123-0E

https://truckmanualshub.com/

7-1 Touch panel display (T218341-025-0E)

(1) Switching ON the display

Turn the starter switch to the "ON" position to illuminate the monitor switches, emit a startup sound, and display the startup screen on the touch panel display. Then the standard screen is displayed. However, the crane mode screen is displayed if the crane mode was specified as the default mode after startup (only when equipped with a crane).

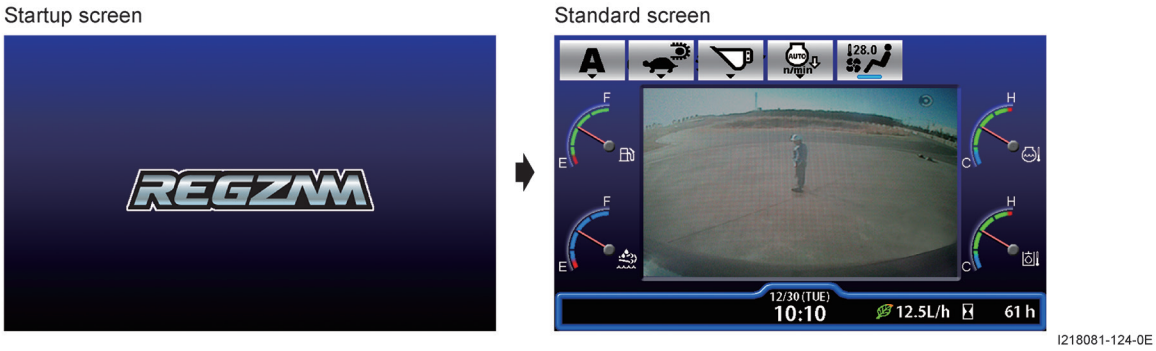

(2) Standard screen display

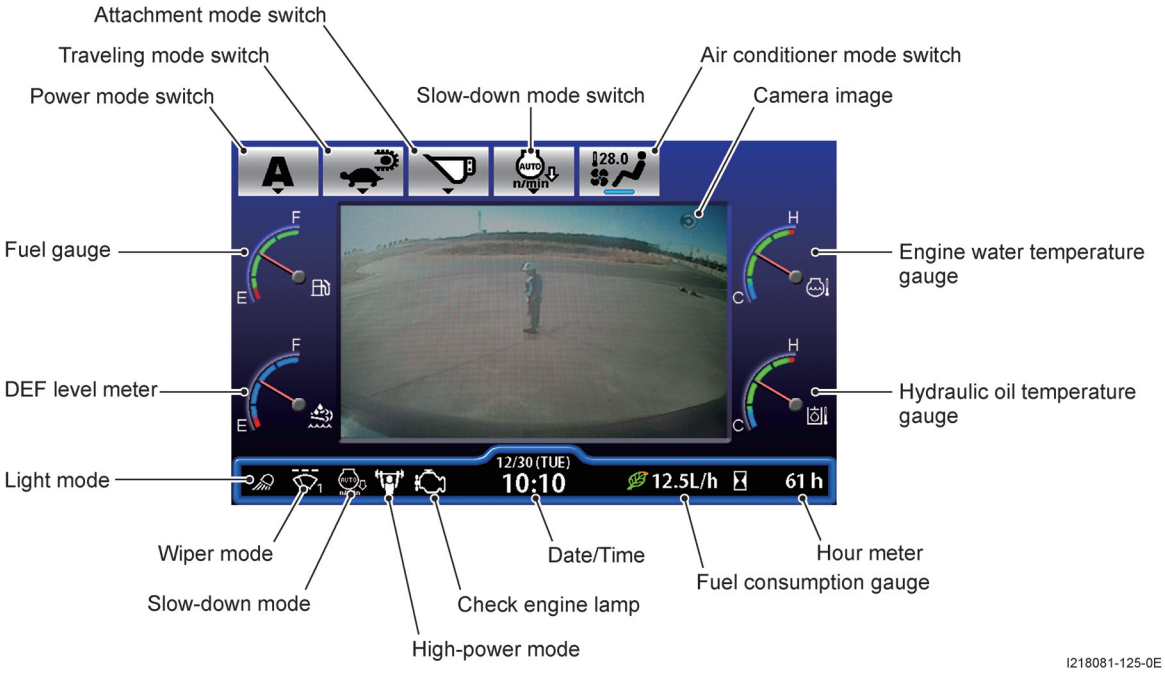

NOTE

Holding down the home switch results in the power mode switch being selected, so that the wiper, washer, menu, and home membrane switches can be selected or executed.

When the membrane switches are enabled, each press of the home switch changes the selected switch, in the following sequence: power mode switch → traveling mode switch → attachment mode switch → slow-down mode switch → air conditioner mode switch. Each mode switch setting can be changed by pressing the wiper or washer switch and executed by pressing the menu switch.

https://truckmanualshub.com/

(3) Power mode switch

This switch can be used to confirm or change the power mode status.

Select the power mode appropriate for the operation to be performed.

1) How to change the power mode

① Touch the power mode switch.

② The selectable candidate power modes are displayed.

③ Touch the desired power mode (P mode, for example).

④ The power mode switch indicator changes.

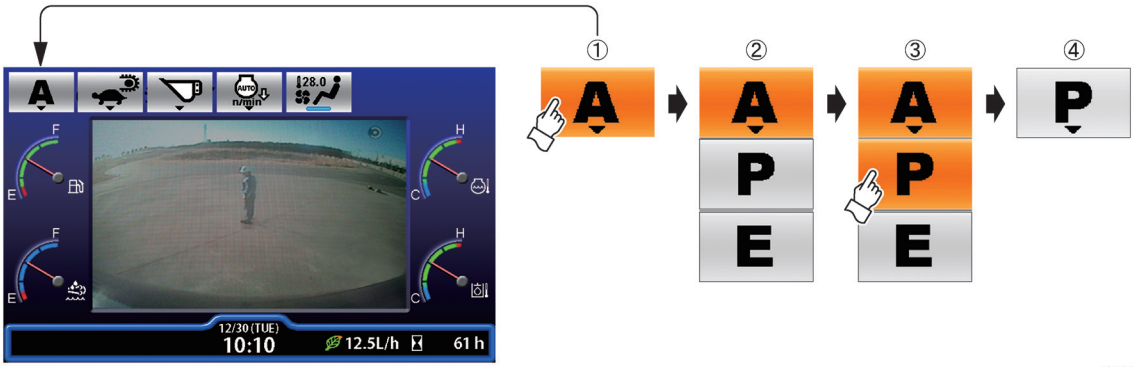

I218081-126-0J

2) Power mode types and characteristics

- A mode …… Ideal for general operations, it provides a good balance between operability and fuel economy.
- P mode …… Prioritizes operability and is suitable for experienced operators.
- E mode …… Prioritizes fuel economy.

NOTE

Given default settings, the A mode is automatically selected when the system is started up. To change the power mode or to specify starting up with the same power mode setting as the previous time the key switch was turned OFF, touch "Menu" and then "Startup Mode".

(4) Traveling mode switch

This switch can be used to check the traveling mode status or switch between two travel speed levels, either fast or slow.

- Turtle …… Slow mode
- Rabbit …… Fast mode

1) How to change the traveling mode

① Touch the traveling mode switch.

② The selectable candidate traveling modes are displayed.

③ Touch the desired traveling mode (fast mode, for example).

④ The traveling mode switch indicator changes.

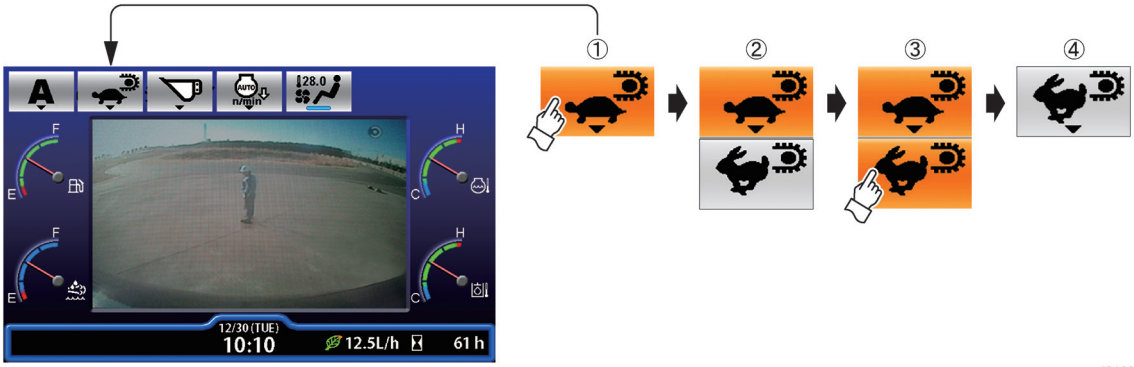

I218081-127-0J

https://truckmanualshub.com/

NOTE

In the fast mode, the mode will automatically switch to the slow mode if power is required, such as when traveling through muddy ground or up a hill.

However, the traveling mode switch will continue to indicate the fast mode.

> ⚠ CAUTION
>
> Do not change the traveling mode switch setting during travel. Be sure to only operate the switch while stopped.

(T218081-041-0E)

(5) Attachment mode switch

This switch can be used to confirm or change the attachment mode status.

Select an attachment mode suitable for the given attachment being used.

1) How to change the attachment mode

① Touch the attachment mode switch.

② The selectable candidate attachment modes are displayed.

③ Touch the desired attachment mode (such as the breaker mode).

④ The attachment mode switch indicator changes.

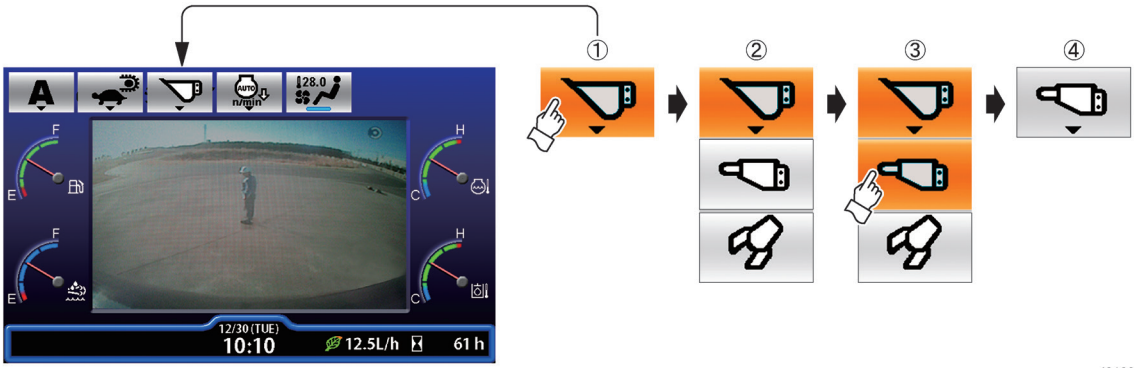

I218081-128-0J

2) Attachment mode types and characteristics

- Bucket mode … This mode is suitable for digging operations.
- Breaker mode … This mode switches the hydraulic oil flowrate to the flowrate specified during breaker operations.
- Crusher mode … This mode switches hydraulic circuits to those suitable for crusher operations.

NOTE

- The breaker and crusher modes are disabled if the hydraulic lines or other equipment for a breaker or crusher attachment are not installed.
- If an error occurs, so that safety processes are functioning, attachment modes other than the bucket mode cannot be selected.
- When the machine is started up, the mode that was selected the last time the key was turned OFF is specified automatically. To fix the mode specified on startup, the mode can be changed by touching "Menu" and then "Startup Mode".

> ⚠ CAUTION
>
> Be sure to select an appropriate attachment mode whenever an attachment is attached.
>
> Also, check the attachment setting. An inappropriate setting could cause attachment damage.

(T218081-042-0E)

https://truckmanualshub.com/

(6) Slow-down mode switch

This switch can be used to confirm or change the slow-down mode status.

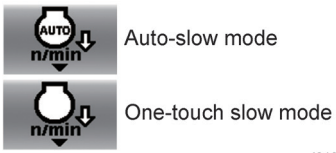

I218081-129-0E

1) How to change the slow-down mode

① Touch the slow-down mode switch.

② The selectable candidate slow-down modes are displayed.

③ Touch the desired slow-down mode (one-touch slow mode, for example).

④ The slow-down mode switch indicator changes.

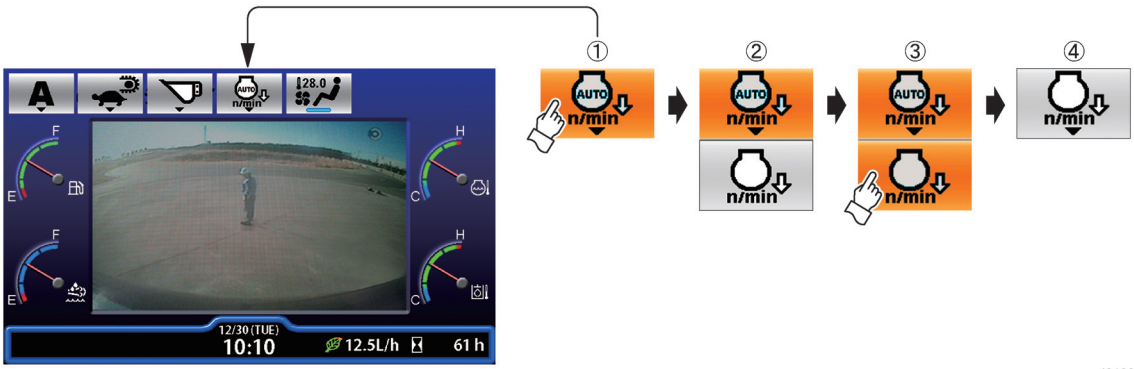

I218081-130-0J

2) Auto-slow mode

When control levers are returned to the neutral position, after a few seconds the engine speed will decrease to the auto-slow speed.

When an operation is performed, then the engine speed increases back to the speed when the engine speed decreased to the auto-slow speed. (It increases to the speed set using the accelerator dial). When the auto-slow mode is active, an auto-slow icon is displayed where the slow-down icon is displayed.

I218081-131-0J

NOTE

- Be sure the accelerator dial is set to a speed higher than the auto-slow speed whenever the auto-slow mode is specified.
- The auto-slow mode is canceled if the accelerator dial is turned to a position below the auto-slow speed.
- After levers are returned to the neutral position, the auto-slow mode can be activated immediately by pressing the quick accelerator switch on the right control lever.
- The speed setting for the auto-slow mode can be changed by touching "Menu" and then "Auto-Slow". Systems are shipped from the factory with the auto-slow speed setting set to the low-idle speed.

https://truckmanualshub.com/

3) One-touch slow-down mode

The engine speed can be decreased immediately by pressing the quick accelerator switch on the right control lever.

The engine speed can be decreased to a preset user-specified engine speed by single-clicking the quick accelerator switch.

The engine speed can be decreased to a low-idle speed by double-clicking the quick accelerator switch.

Pressing the quick accelerator switch again restores the engine speed back to the setting specified using the accelerator dial.

When the one-touch slow mode is active, the following icon is displayed where the slow-down icon is displayed.

NOTE

The speed setting for the one-touch slow mode (single-click) can be changed by touching "Menu" and then "One-Touch Slow". Initially the speed is set to the low-idle speed when shipped from the factory, so that either single or double-clicking changes the speed to the low-idle speed.

(7) High-power mode

Digging force can be increased for about 10 seconds by pressing the high power switch.

The high-power mode automatically switches OFF after about ten seconds, even if the high power switch is held down.

When the high-power mode is active, the high-power icon is displayed in the high-power mode icon position.

(8) Fuel gauge

This gauge has a needle that indicates the fuel level in the fuel tank.

It cautions the operator to check the fuel level before it reaches E.

Add fuel before the level reaches E.

I218081-134-0J

https://truckmanualshub.com/

(9) DEF level meter

This meter has a needle that indicates the DEF (diesel exhaust fluid) level in the DEF tank.

In the red range, it displays a warning to add the DEF.

Add the DEF before the needle reaches the red range. If the DEF level decreases even further, engine output and speed control restrictions are activated.

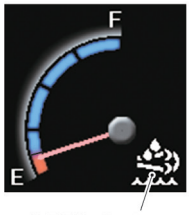

DEF indicator

I218081-135-0E

(10) DEF indicator

If the following conditions occur, the DEF indicator color changes and various restrictions are applied.

- The DEF level in the DEF tank is too low.
- A DEF quality problem is detected.
- A problem occurred in the SCR system.

(White) No restrictions

(Yellow) Engine output restricted.

(Red) Engine output and speed restricted.

I218081-136-0E

For more details, see the section on operating restrictions.

(11) Engine water temperature gauge

This gauge indicates the engine coolant temperature. The temperature is normal when the needle is in the green zone during operation.

The engine coolant temperature is low when the needle is in the blue zone. The warm-up mode starts automatically after starting the engine, but if the engine coolant temperature is still too low after the automatic warm-up mode is canceled, then warm up the engine.

The engine coolant temperature is high when the needle is in the red zone. If the engine overheat warning is displayed, reduce the engine speed to a medium speed and wait for the coolant temperature to decrease.

I218081-137-0J

(12) Hydraulic oil temperature gauge

This gauge indicates the hydraulic oil temperature. The temperature is normal when the needle is in the green zone during operation.

The hydraulic oil temperature is low when the needle is in the blue zone. If the low hydraulic oil temperature message is displayed, warm up the engine.

The hydraulic oil temperature is high when the needle is in the red zone. If the hydraulic oil overheat warning is displayed, reduce the engine speed to a medium speed and wait for the hydraulic oil temperature to decrease.

I218081-138-0J

(13) Date/Time

This displays the date, day of the week, and time.

To adjust the display, touch "Menu" and then "Time".

I218081-139-0J

https://truckmanualshub.com/

(14) Fuel consumption gauge/Leaf indicator

This gauge indicates the approximate the fuel consumption rate.

If the fuel consumption rate is high, the leaf indicator will change to orange.

I218081-140-0J

(15) Hour meter (Monitor)

Whenever the engine is running, the hour meter displays the cumulative number of hours the machine has been operated.

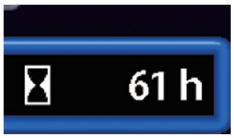

I218081-141-0J

⚠ CAUTION

The value indicated on the hour meter (monitor) is only approximate. For the official number of operating hours, refer to the hour meter shown on the right.

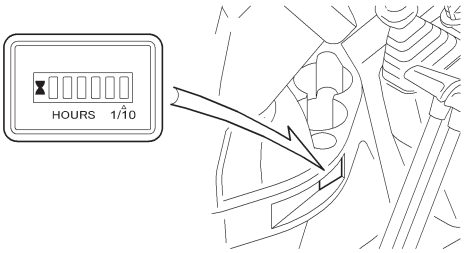

I218081-271-0J

(T218081-043-0E)

(16) Camera images

This shows the images from the attached cameras.

Images from two cameras can be displayed simultaneously (optional).

An indicator displayed on the screen indicates the image signal is normal.

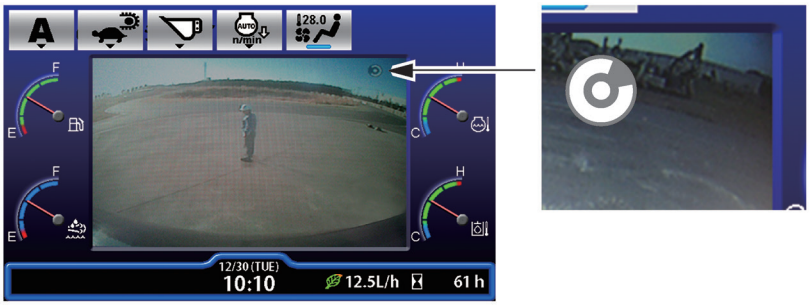

I218081-143-0J

If the full screen mode is specified by touching "Menu" and then "Camera Image", the camera image appears as shown below.

1) How to cancel the full screen mode

① Press the full screen cancel switch in the upper right corner of the screen.

② Press the home switch.

③ Cancel the full screen mode by touching "Menu" and then "Camera Image".

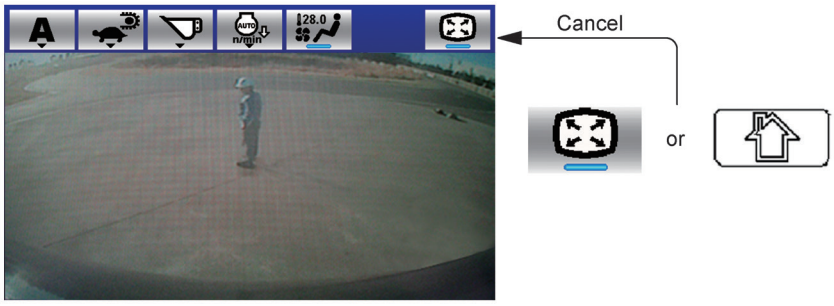

I218081-144-0E

https://truckmanualshub.com/

2) The full screen mode is canceled automatically under the following conditions.

- Information is displayed.
- The operating mode was changed to the crane mode (only on models with settings configured for being equipped with a crane).
- When the starter switch is turned OFF.

NOTE

If two cameras are mounted, touch "Menu" and then "Camera Image" to switch between the camera images.

⚠ CAUTION

Camera images shown on the display are only intended for supplemental purposes.
Be sure to carefully check the surrounding area before moving or operating the machine.

(T218081-142-0E)

(17) Light switch

This switch illuminates the working lamps.

The light mode changes each time the light switch is pressed, in the sequence OFF → Light 1 → Light 2 → OFF.

The working lamp illumination status changes based on the light mode.

Light mode 1: The working lamp on the right side of the machine is illuminated.

Light mode 2: The working lamps on the right side of the machine, on the left side of the boom, and on the cab top (optional) are illuminated.

Light mode: Switching the light mode to OFF switches OFF all working lamps.

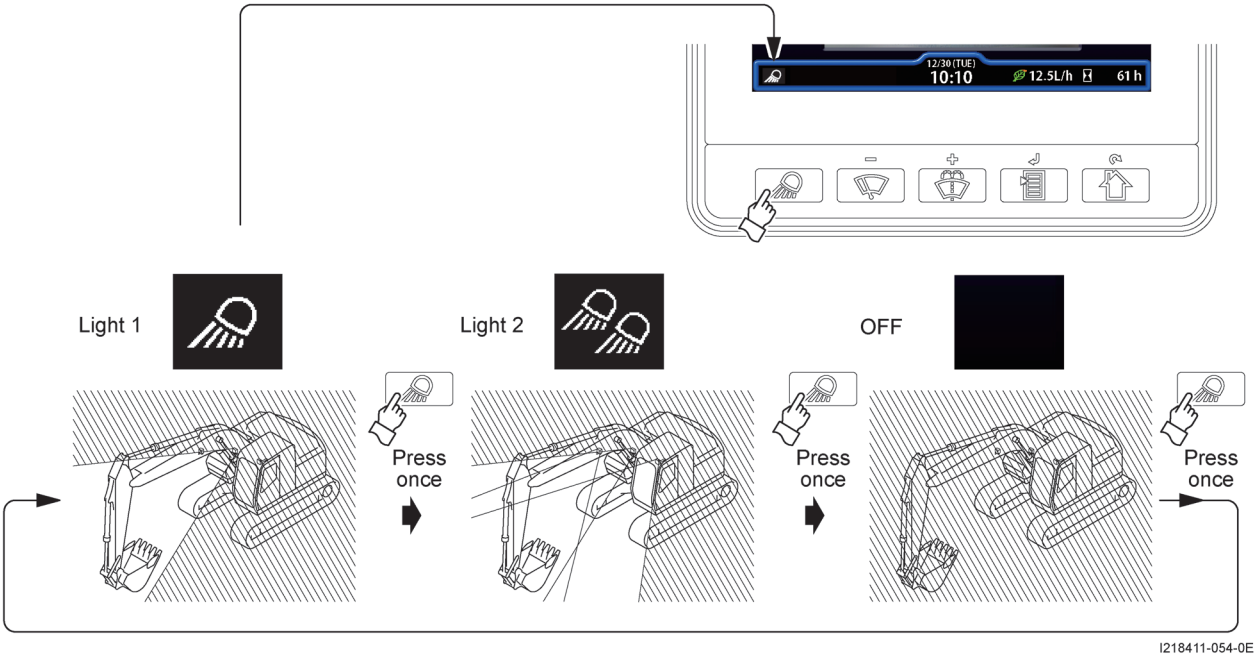

NOTE

The brightness of the touch panel display also changes depending on the light mode.

The touch panel brightness can be adjusted by touching "Menu" and then "Brightness".

https://truckmanualshub.com/

(18) Wiper switch

The wiper switch operates the front window wiper.

Each press of the wiper switch changes the wiper operating mode in the sequence OFF → Intermittent 1 → Intermittent 2 → Continuous → OFF.

The wiper action changes depending on the wiper operating mode.

Intermittent 1 wiper mode: Wipes the window once every 3.5 seconds.

Intermittent 2 wiper mode: Wipes the window once every 1.5 seconds.

Continuous wiper mode: Wipes the window continuously.

OFF wiper mode: Stops wiping the window.

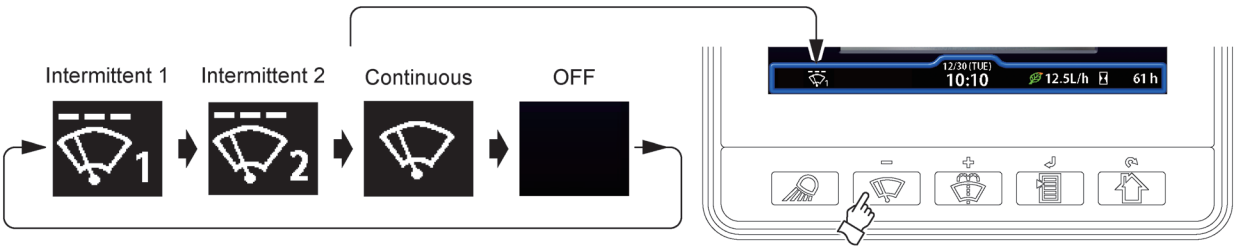

I218081-146-0E

NOTE

Wiper actions are disabled when the front window is open.

If the window is accidentally opened while the wiper is operating, the wiper will stop. To resume wiper operation, close the front window and press the wiper switch again.

⚠ CAUTION

If you work the wiper while the front window is dry, muddy, or frosted, the wiper could be damaged and the fuse might blow.

(T218081-044-0E)

(19) Washer switch

Washer fluid is sprayed onto the front window and the wiper operates continuously as long as the washer switch is pressed.

The wiper will continue to wipe a few times after the switch is released.

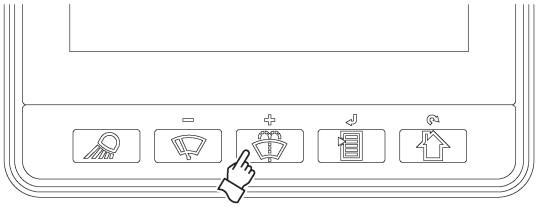

I218081-147-0J

⚠ CAUTION

- Always make sure the front window is shut before you use the washer. Washer actions are disabled when the front window is open.
- Always check that there is enough fluid in the washer tank. If you press the washer switch while the tank is empty or continue to hold the switch down for a long period, you could cause the pump to break down, so refill the tank before it becomes empty.

(T218081-045-0E)

https://truckmanualshub.com/

(20) Menu screen

The various menu switches are displayed by pressing the menu switch.

About 15 seconds of operation are required before the standard screen is displayed again.

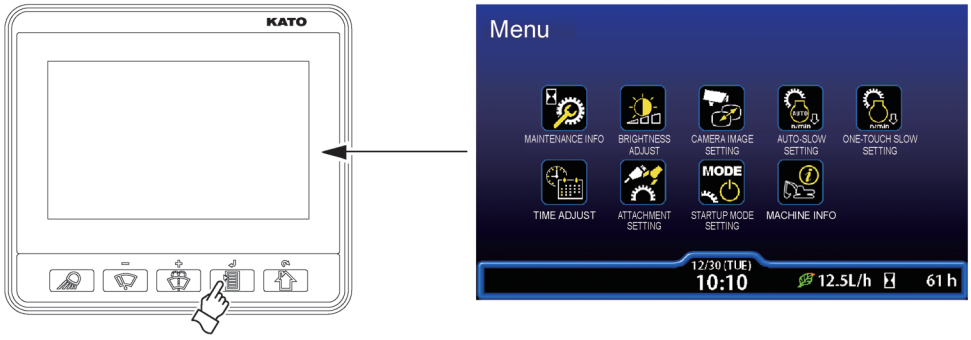

I218621-028-0E

Pressing one of the following menu switches displayed on the menu screen displays the corresponding menu.

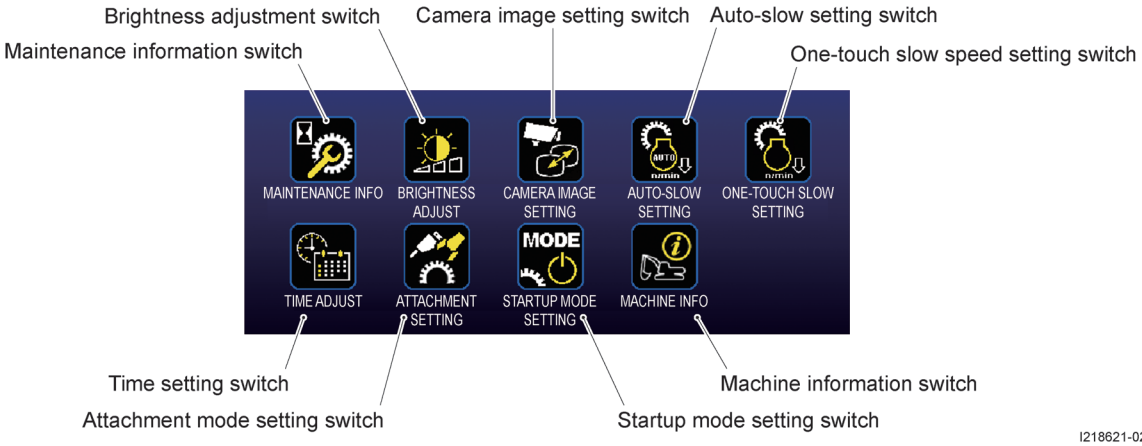

I218621-029-0E

NOTE

By holding down a menu switch when the menu screen is displayed, menus can be selected by pressing the wiper, washer, or menu switches.

- Wiper or washer switch: Changes the selected menu switch.
- Menu switch: Executes the selected menu switch.

https://truckmanualshub.com/

(21) Maintenance information

Displays how long various filters and oils have been used and when to replace them.

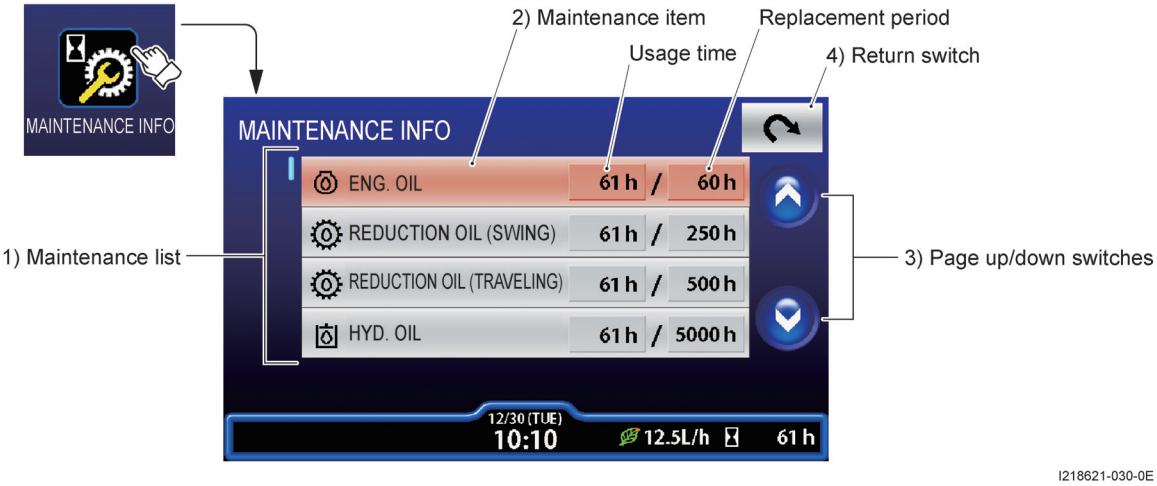

1) Maintenance list

Lists maintenance items that require regular replacement.

A red background indicates the usage hours have exceeded the replacement period.

2) Maintenance items

Lists items that require maintenance.

3) Page up/down switches

Scrolls up or down through the list to display hidden items.

4) Return switch

Returns to displaying the menu screen.

(22) Usage time

Displays the cumulative time since the last time it was reset.

The value can be reset after replacing the corresponding filter or oil by pressing the switch in the usage time display area.

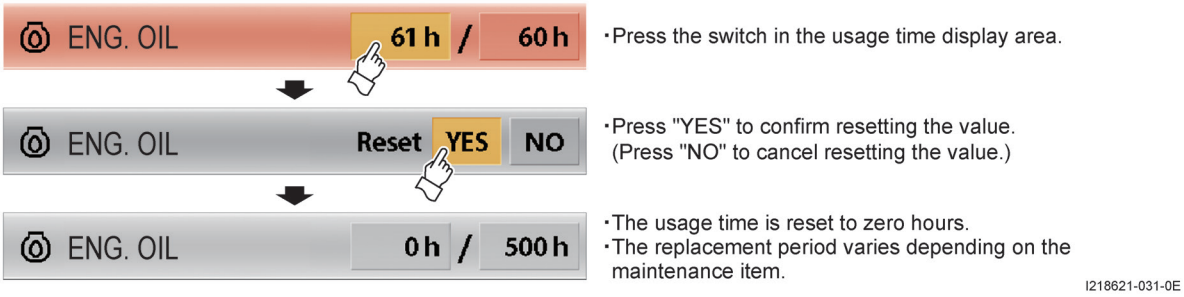

https://truckmanualshub.com/

(23) Replacement period

- Displays the replacement period given typical operations.
- Initial replacement period values are specified when shipped from the factory.
- If the usage time is reset, the replacement period is automatically changed to the replacement period for subsequent replacements.

Maintenance item	Replacement period (h)	
	Initial	Thereafter
Engine oil	500	500
Swing gear oil	250/1000	1000
Traveling gear oil	500	1000
Hydraulic oil	5000	5000
Engine oil filter	500	500
Fuel pre-filter	500	500
Main fuel filter	500	500
Return filter	100	1000
Drain filter	100	1000
Pilot line filter	1000	1000
Air cleaner	1000	1000
Air breather	1000	1000
DEF filter	3000/4500	3000/4500
Service meter A	Not specified	Not specified
Service meter B		
Service meter C		

(T218341-026-0E)

⚠ CAUTION

The swing gear oil and DEF filter replacement periods vary depending on the model.
For the swing gear oil replacement period, refer to "3-4 Greasing chart". For DEF filter replacement periods, refer to "4-1-5 DEF pump filter" and "4-1-6 DEF tank suction filter".

(T218341-027-0E)

- The replacement period value can be changed by pressing the switch in the replacement period area. However, a replacement period longer than the recommended period cannot be specified.

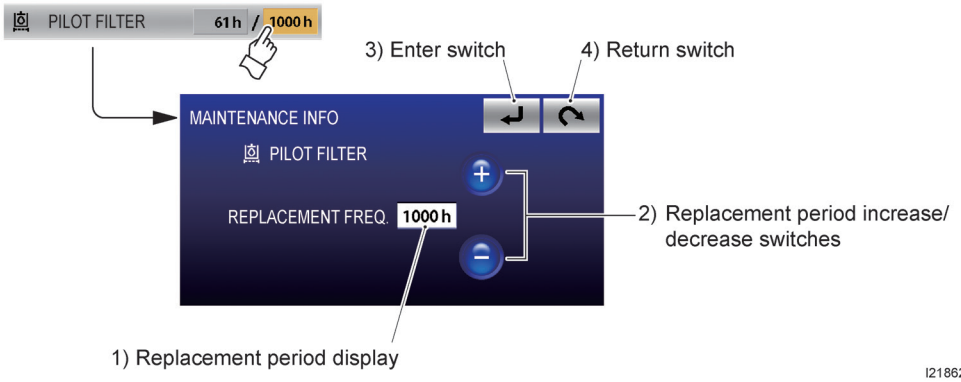

I218621-032-0E

1) Replacement period display
   Indicates when to replace the item.
2) Replacement period increase/decrease switches
   The replacement period value can be changed.
3) Enter switch
   Enters the specified replacement period value.
4) Return switch
   Returns to the maintenance information screen without entering changes to the replacement period.

https://truckmanualshub.com/

(24) Brightness adjustment

The brightness of the touch panel display can be adjusted to eight levels.

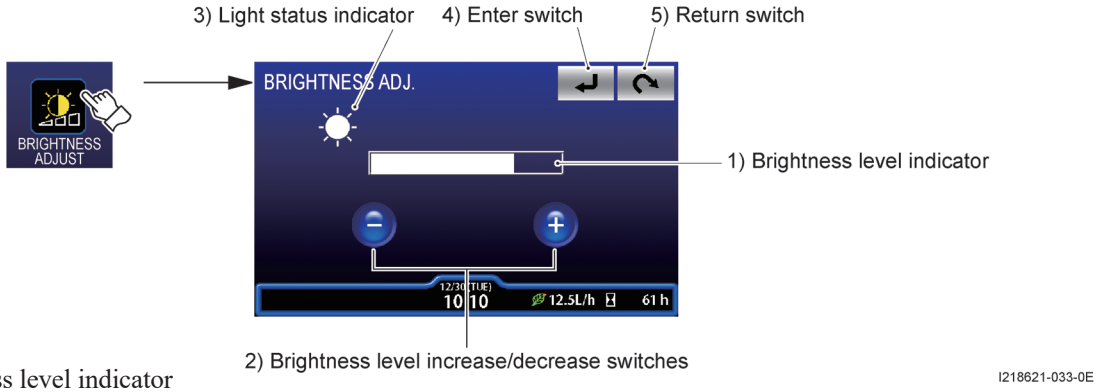

1) Brightness level indicator

Indicates the current brightness of the touch panel display unit.

2) Brightness level increase/decrease switches

Can be used to change the brightness level. (Brightness can also be changed using the wiper or washer switches.)

3) Light status indicator

Indicates the working lamp status (ON or OFF). Brightness can be specified for each working lamp status.

4) Enter switch

Enters the specified brightness value.

5) Return switch

Returns to displaying the menu screen without entering changes to the brightness.

NOTE

If the touch panel display seems too bright when working at night, then use the light switch to adjust the brightness with the working lamps illuminated. The changes will not affect monitor brightness when the working lamps are not illuminated.

(25) Camera image settings

The image displayed in the camera image display area can be changed.

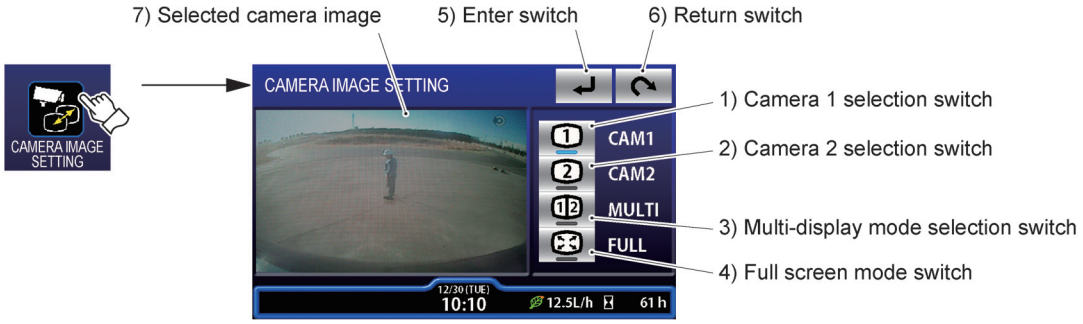

1) Camera 1 selection switch

Displays the image from camera 1.

2) Camera 2 selection switch

Displays the image from camera 2 (optional). It is not displayed unless the camera is specified.

3) Multi-display mode selection switch

Simultaneously displays images from cameras 1 and 2. An image from camera 2 is not displayed if camera 2 is not specified.

4) Full screen mode switch

Displays the image from camera 1, camera 2, or the multi-display image in the full screen mode.

5) Enter switch

Enters the specified camera image display setting.

6) Return switch

Returns to displaying the menu screen without entering changes to the camera image setting.

https://truckmanualshub.com/

7) Selected camera image

Outputs the selected camera image.

NOTE

The displayed image can also be changed by touching the camera image.

One camera image displayed (from CAM1 or CAM2)

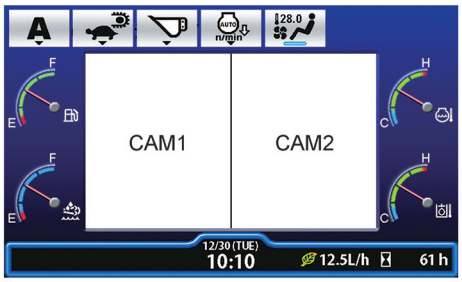

Touching anywhere on the screen switches the display to the multi-display mode.

Switches from multi-display mode to CAM1 image

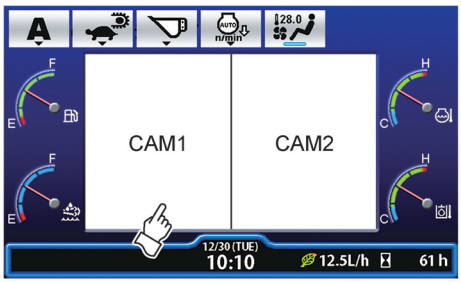

Touching the CAM1 image displays a single image from only CAM1.

Switches from multi-display mode to CAM2 image

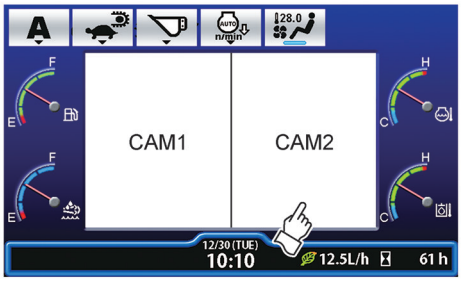

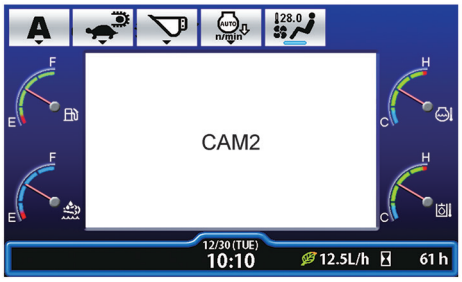

Touching the CAM2 image displays a single image from only CAM2.

I218341-191-0E

https://truckmanualshub.com/

(26) Auto-slow mode setting

The engine speed used during the auto-slow mode can be selected from three preset engine speeds.

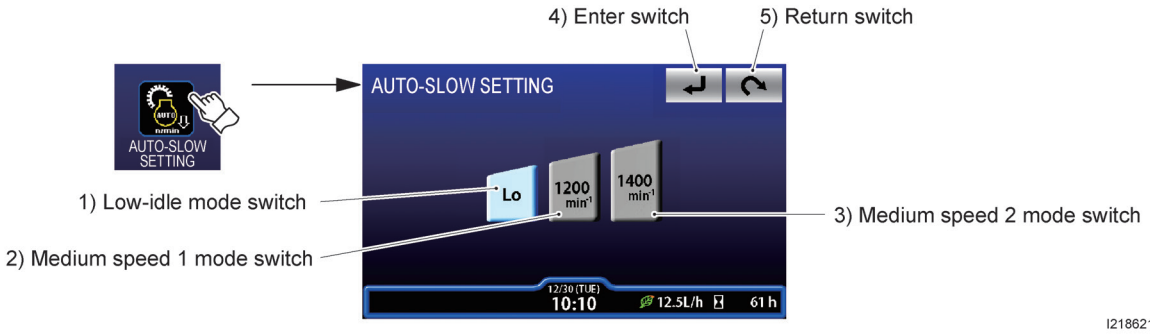

I218621-035-0E

1) Low-idle mode switch

Sets the speed for the low idle auto-slow mode.

2) Medium speed 1 mode switch

Sets the speed for the medium speed 1 auto-slow mode.

3) Medium speed 2 mode switch

Sets the speed for the medium speed 2 auto-slow mode.

4) Enter switch

Enters the specified auto-slow speed value.

5) Return switch

Returns to displaying the menu screen without entering changes to the auto-slow speed value.

> ⚠ **CAUTION**
>
> The medium 1 and 2 speed levels differ depending on the model.

(T218081-145-0E)

(27) One-touch slow setting

The engine speed for the one-touch (single-click) slow mode can be changed to any speed value.

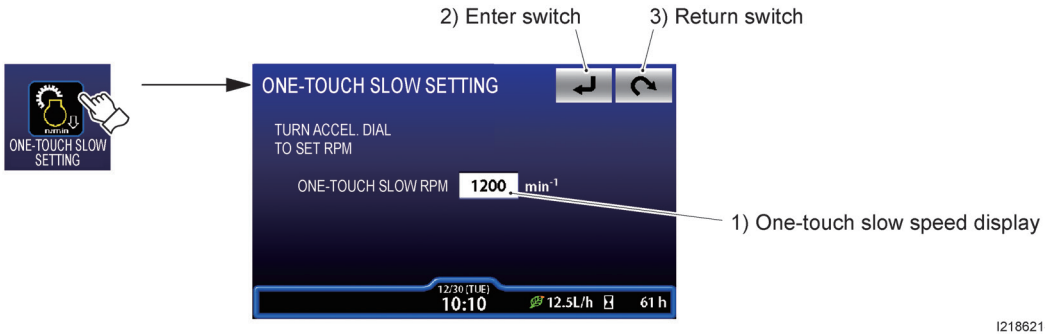

I218621-036-0E

1) One-touch slow speed display

This displays the engine speed for the one-touch (single-click) slow mode.

Any speed can be specified by operating the accelerator dial to change the value.

I218621-037-0E

https://truckmanualshub.com/

2) Enter switch

This enters the displayed one-touch slow speed as the speed for the one-touch (single-click) slow mode.

3) Return switch

Returns to displaying the menu screen without entering changes to the one-touch slow (single-click) speed.

NOTE

The speed will vary depending on the accelerator dial position.

Use the enter switch to enter the desired speed.

(28) Time setting

This can be used to change the date and time settings.

Be sure to adjust the time setting if an incorrect time is displayed.

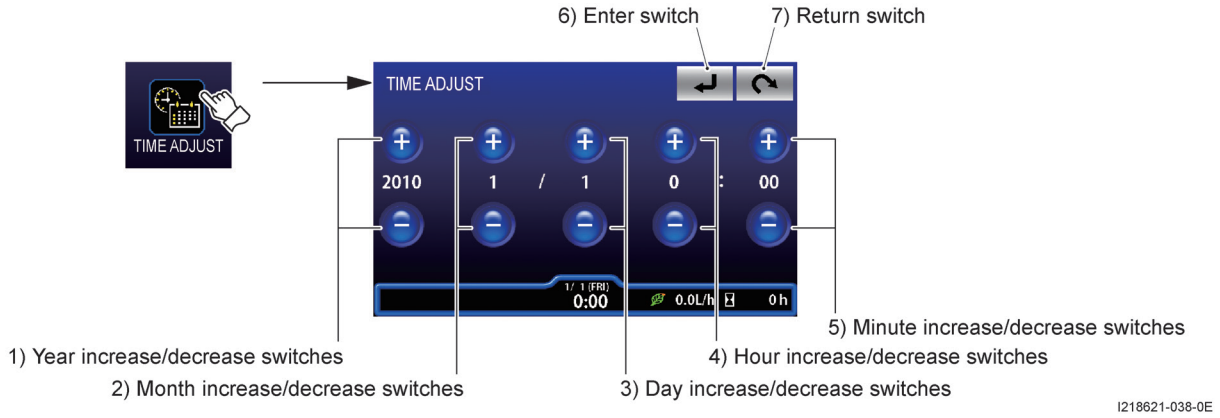

- Adjust the time setting by pressing the corresponding increase/decrease switches. Press "+" to increase or "-" to decrease the setting.

  Press the enter switch to enter the time setting.
- Press the return switch to cancel any setting changes and return to the menu screen.
- The displayed date/time is updated after pressing the enter switch.

(29) Attachment settings

The attachment settings enable the hydraulic oil supply flowrate and pressure to the attachment to be changed based on the type of attachment attached, such as a breaker or crusher.

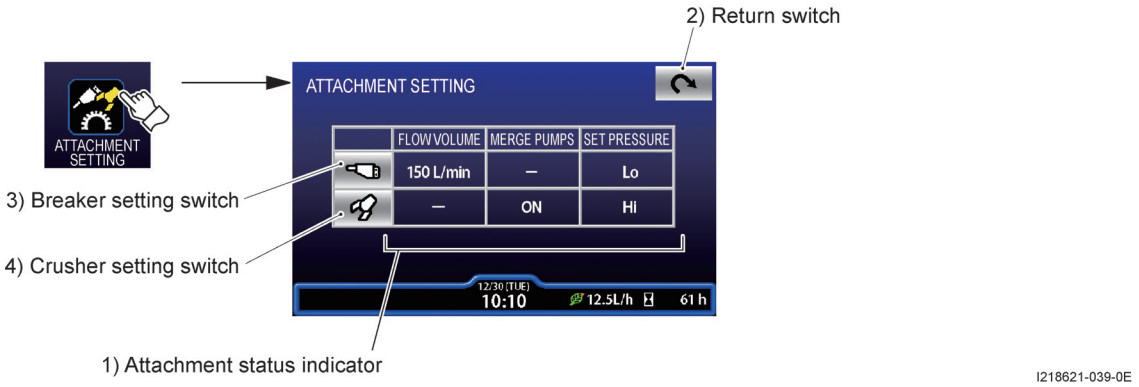

https://truckmanualshub.com/

1) Attachment status indicator

Displays the setting status for respective attachments.

2) Return switch

Returns to displaying the menu screen.

> ⚠ **CAUTION**
>
> - If performing operations with a breaker or crusher attached, make sure appropriate flowrate and pressure settings are specified. Selecting an inappropriate setting could cause malfunction, machine damage, or attachment damage.
> - Some attachments may require changing the supply pressure setting. Check the attachment specifications and then contact your authorised KATO dealer.

(T218081-047-0E)

3) Breaker mode settings can be changed

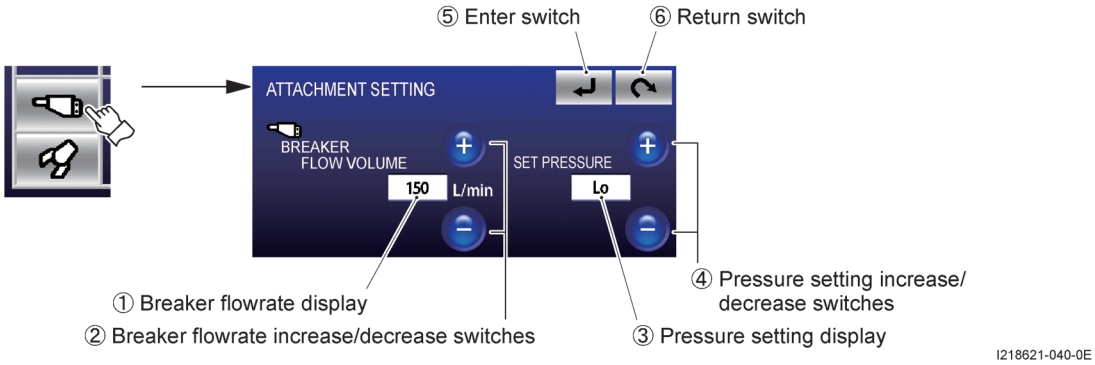

① Breaker flowrate display

Displays the specified flowrate value. The indicated flowrate differs depending on the model.

② Breaker flowrate increase/decrease switches

Increases or decreases the flowrate. The maximum flowrate, minimum flowrate, and amount of change differ depending on the model.

③ Pressure setting display

Displays the specified relief valve pressure setting.

④ Pressure setting increase/decrease switches

The pressure setting value can be changed.

⑤ Enter switch

Enters the specified flowrate and pressure setting values.

⑥ Return switch

Cancels any setting changes and returns to the menu screen.

NOTE

A separate option is required to change the pressure setting.

For more details, contact your authorised KATO dealer.

https://truckmanualshub.com/

4) Crusher mode settings can be changed

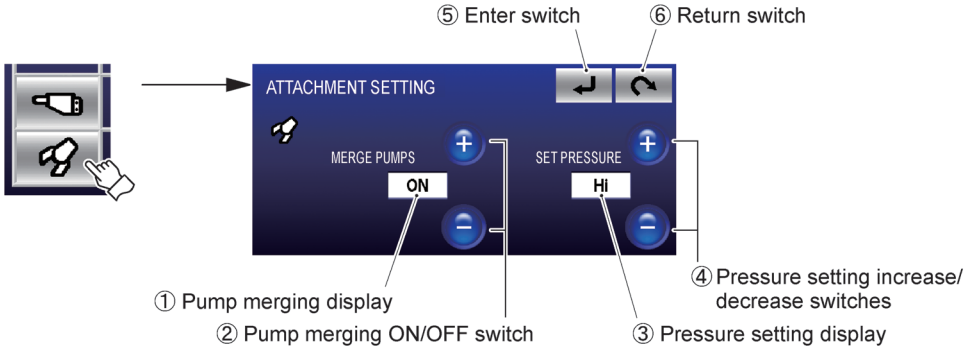

① Pump merging display

Indicates whether the pump merging circuit is ON or OFF.

② Pump merging ON/OFF switch

Enables the pump merging circuit to be switched ON or OFF.

③ Pressure setting display

Displays the specified relief valve pressure setting.

④ Pressure setting increase/decrease switches

The pressure setting value can be changed.

⑤ Enter switch

Enters the pump merging circuit mode and pressure settings.

⑥ Return switch

Cancels any setting changes and returns to the menu screen.

NOTE

A separate option is required to change the pump merging circuit mode or pressure setting.

For more details, contact your authorised KATO dealer.

5) Startup mode settings

These settings can be used to change the mode specified for after turning the starter key switch ON.

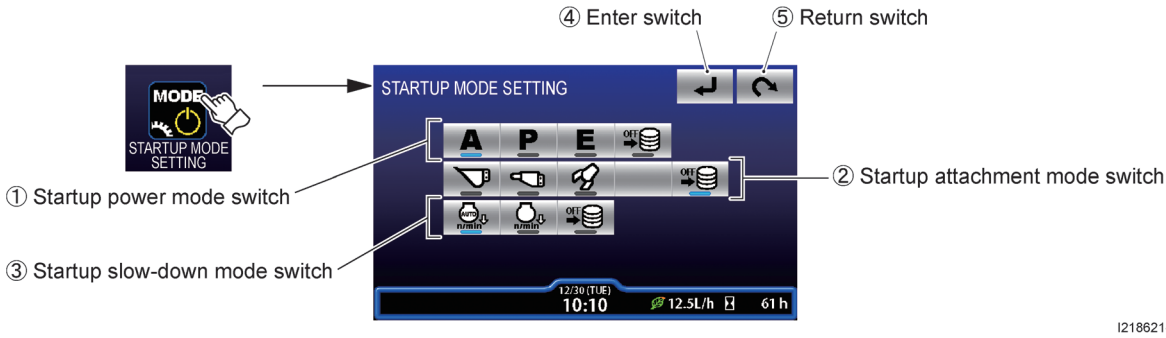

① Startup power mode switch

This can be used to select the power mode specified for after startup.

For a description of each mode, refer to "2) Power mode types and characteristics" in section 7-1 (3).

② Startup attachment mode switch

This can be used to change the attachment mode specified for after startup.

For a description of each mode, refer to "2) Attachment mode types and characteristics" in section 7-1 (5).

③ Startup slow-down mode switch

This can be used to change the slow-down mode specified for after startup.

https://truckmanualshub.com/

④ Enter switch

Enters the illumination status switch setting as the mode after startup.

⑤ Return switch

Cancels any setting changes and returns to the menu screen.

NOTE

To specify the same mode for after startup as was active the last time the starter key switch was turned OFF, illuminate the switch shown to the right.

I218081-161-0J

(30) Machine information

Displays respective machine information.

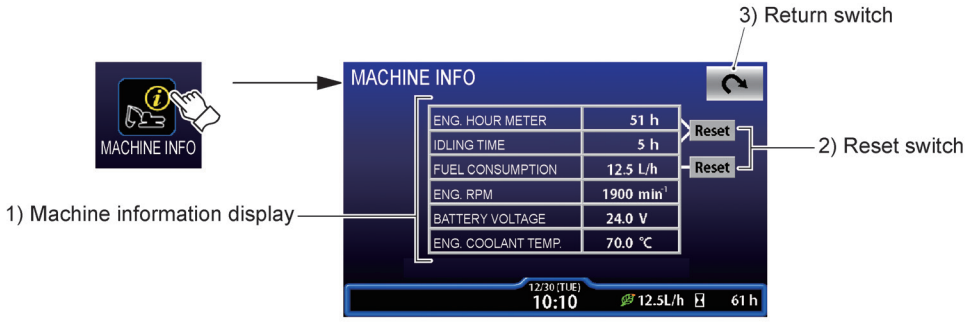

I218621-043-0E

1) Machine information display

The following machine information is displayed.

① Engine hour meter ····· Indicates the cumulative number of hours the engine has been operated since the setting was last reset.

② Idling time ····· Indicates the cumulative number of hours the engine was running without a control lever being operated since the setting was last reset.

③ Fuel consumption ····· Indicates the average fuel consumption rate since the setting was last reset.

④ Engine rpm ····· Indicates the actual speed of the engine.

⑤ Battery voltage ····· Indicates the battery voltage.

⑥ Engine coolant temperature····· Indicates the engine coolant temperature.

2) Reset switch

Holding down the switch (for 2 seconds) resets all data.

3) Return switch

Returns to displaying the menu screen.

https://truckmanualshub.com/

(31) Air conditioner mode switch

This switch is used to display the air conditioner operation screen.

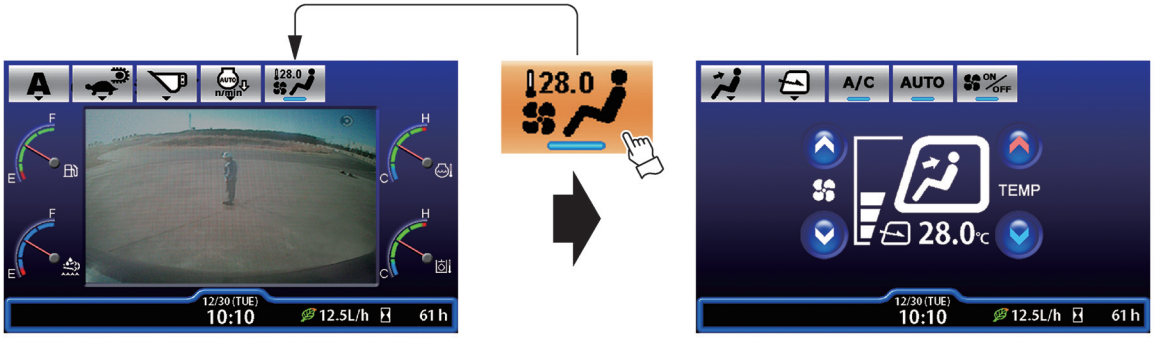

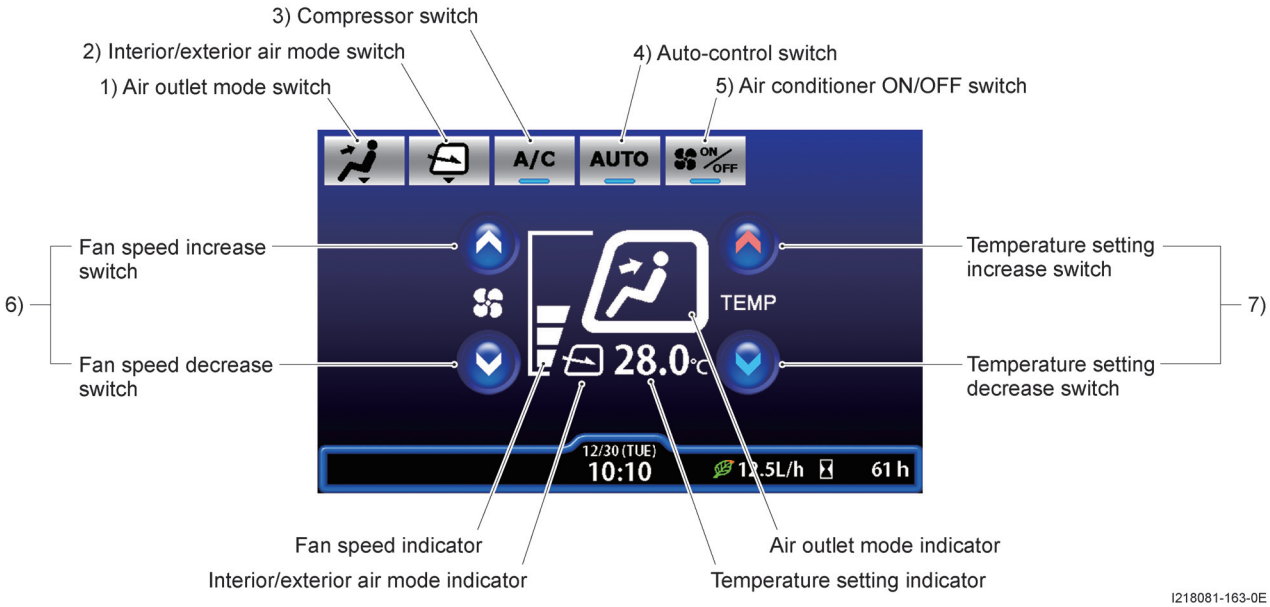

1) Air outlet mode switch

This switch can be used to change the air outlet location.

① Touch the air outlet mode switch.

② The selectable air outlet modes are displayed.

③ Touch the desired air outlet mode (bi-level, for example).

④ The air outlet mode switch indicator changes.

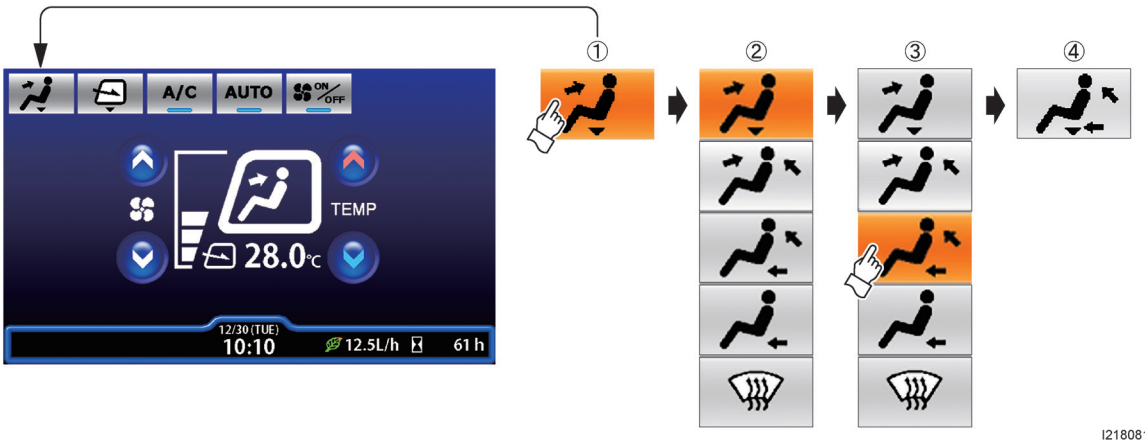

https://truckmanualshub.com/

- The air outlet mode switch can be used to change the air outlet mode to the following modes.

Mode	Icon	Air outlet location
Face		1
Vent		1 and 2
Bi-Level		2 and 3
Foot		3
Defroster		4

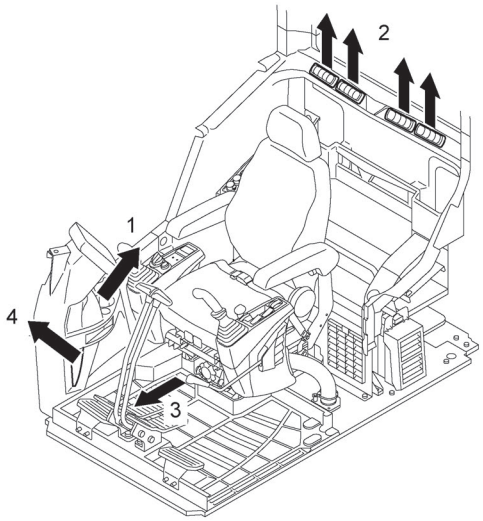

I218081-165-0E

- The air outlet mode changes automatically during auto-control.
- Changing the air outlet mode setting also changes the air outlet mode indicator.

I218081-166-0J

NOTE

Auto-control is canceled if the air outlet mode is changed.

2) Interior/exterior air mode switch

This switch can be used to switch between recirculating the interior air or intaking exterior air.

① Touch the interior/exterior air mode switch.
② The selectable candidate modes are displayed.
③ Touch the desired mode (interior air mode, for example).
④ The interior/exterior air mode switch indicator changes.

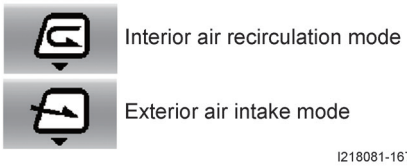

I218081-167-0E

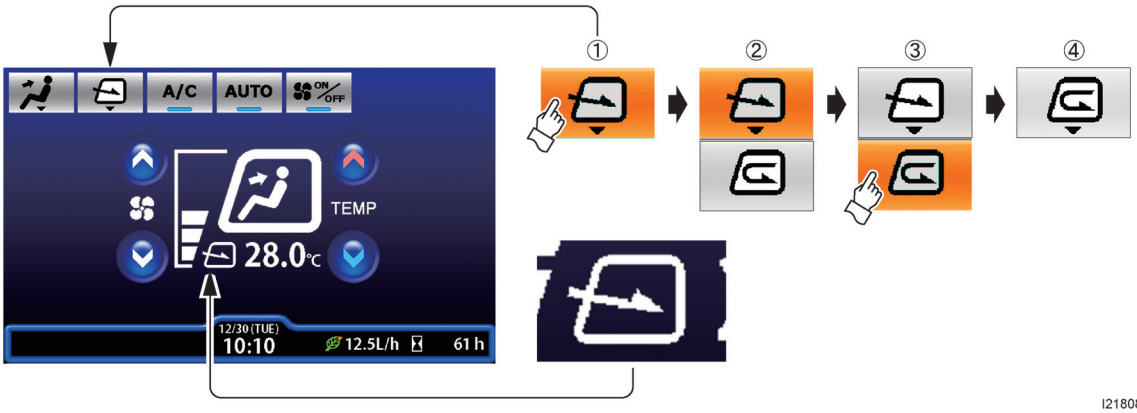

I218081-168-0J

- Switching between the interior/exterior air mode settings also changes the interior/exterior air mode indicator.

https://truckmanualshub.com/

3) Compressor switch

This switch is used for cooling or dehumidification heating.

Switch it ON for cooling or dehumidification heating.

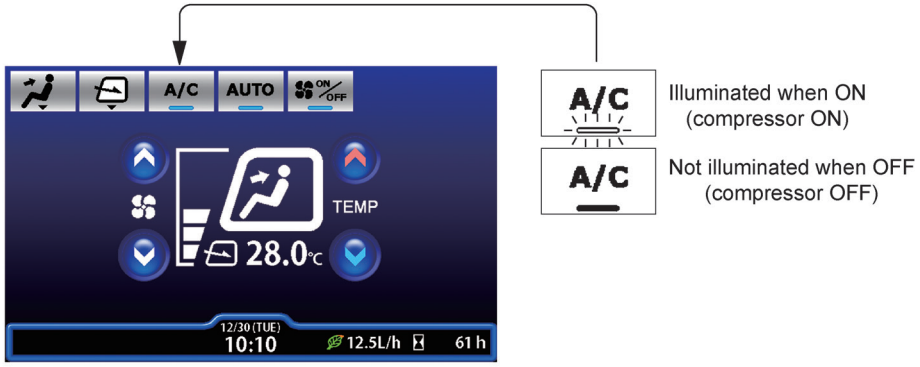

I218081-169-0E

4) Auto-control switch

This switch is operated to operate the air conditioner in automatic mode.

When ON, the auto-control mode automatically adjusts the fan speed and air outlet mode.

When OFF, the air conditioner is controlled manually.

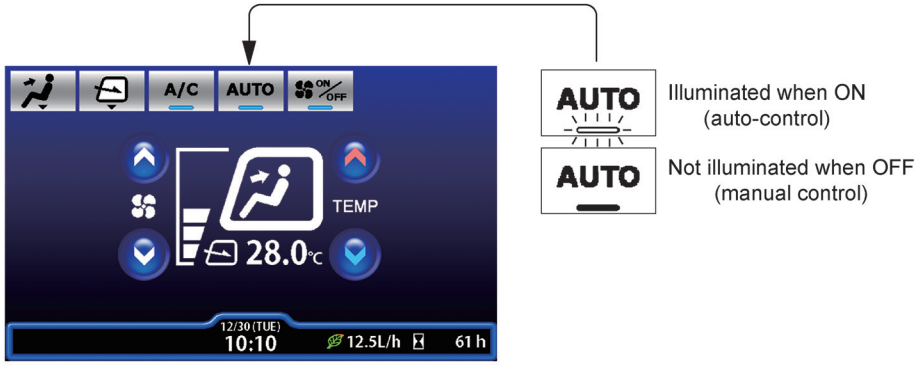

I218081-170-0E

5) Air conditioner ON/OFF switch

This switch is operated to switch the air conditioner ON or OFF.

The air conditioner operation is enabled when ON.

When switched ON, the air conditioner operating mode is set to the same mode that was specified when the air conditioner was last switched OFF.

If the switch is OFF, air conditioner operation is started when the auto-control switch is switched ON or the fan speed increase switch is pressed.

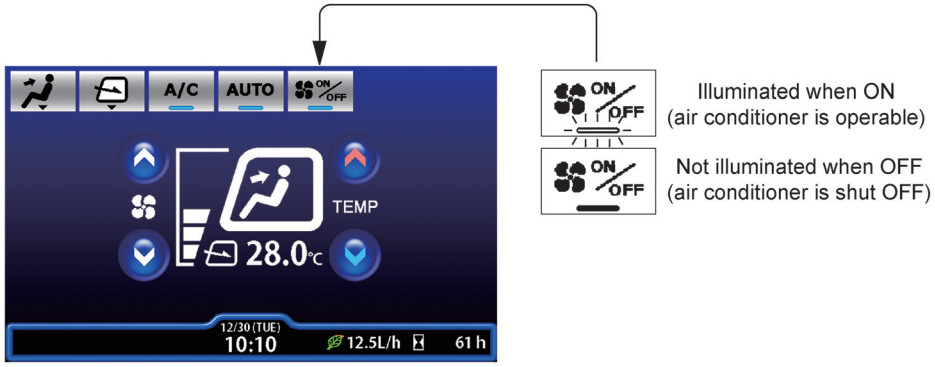

I218081-171-0E

https://truckmanualshub.com/

6) Fan speed increase/decrease switches

The fan speed can be changed by pressing these switches.

Each press of the fan speed increase switch increases air flowrate.

Each press of the fan speed decrease switch decreases air flowrate.

The fan speed can be changed continuously by holding down these switches.

If the fan speed increase or decrease switch is pressed during the auto-control mode, control switches to manual control.

If the fan speed increase switch is pressed when the air conditioner is stopped, the air conditioner will start operating in manual mode (fan speed level Lo).

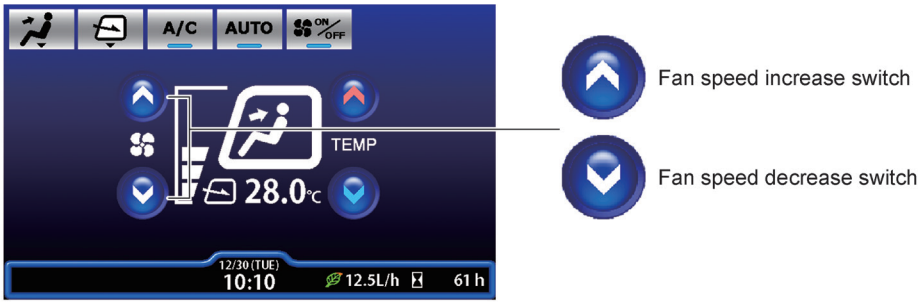

I218081-172-0E

The fan speed level is indicated as shown below.

Level	Stopped	Lo	M1	M2	M3	M4	Hi
Display							

I218081-173-0E

7) Temperature setting increase/decrease switches

The cab temperature can be specified by pressing these switches.

Each press of the temperature setting increase switch increases the temperature setting by 0.5˚C.

Each press of the temperature setting decrease switch decreases the temperature setting by 0.5˚C.

The temperature setting can be changed continuously by holding down the switches.

The temperature setting can be set between 18.0˚C and 32.0˚C.

If the fan speed increase switch is pressed when the air conditioner is stopped, the air conditioner will start operating in manual mode (fan speed level Lo).

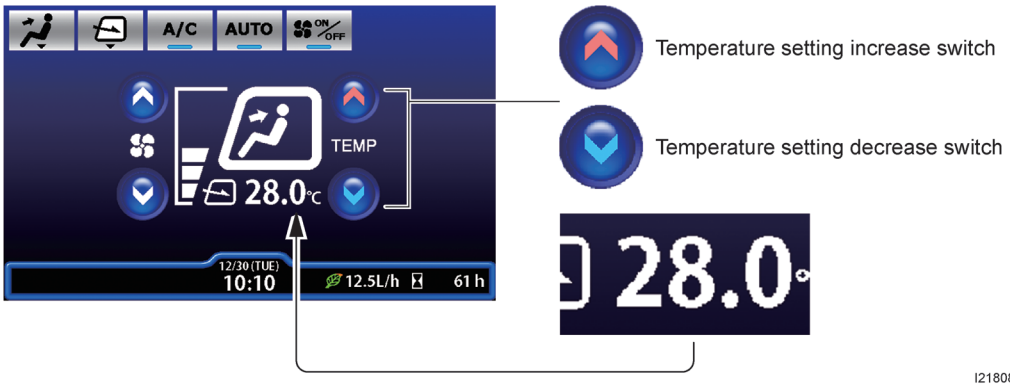

I218081-174-0E

NOTE

Changing the temperature setting also changes the temperature setting indicator.

https://truckmanualshub.com/

(32) Message display

Various messages are displayed in the locations shown below, depending on the machine status.

I218621-044-0E

Messages include the following elements.

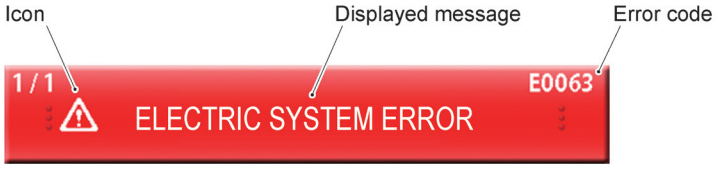

I218621-045-0E

If multiple messages are generated, they can be viewed by pressing the next or previous page arrows.

The message page number and total number of pages are displayed.

A maximum of eight messages can be displayed.

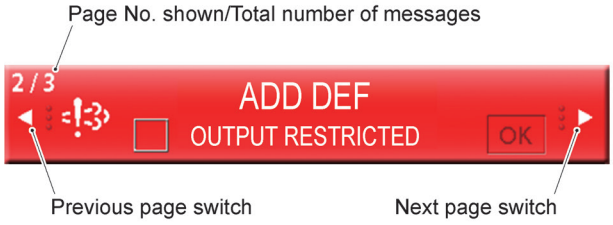

I218621-046-0E

Some measures require an operation after reading the message.

For such messages, a checkbox is displayed that must be checked to enable the OK button.

Pressing the OK button executes various actions.

I218621-047-0E

https://truckmanualshub.com/

Error message list

Icon displayed	Message displayed	Description	Notes	Actions	Applicability
	DISPLAY MALFUNCTION	Displayed when a monitor failure occurs.		Contact your authorised KATO dealer.	
	COMMUNICATION ERROR	Displayed when a communication error occurs, such as between the APC controller and monitor.		Contact your authorised KATO dealer.	
	CHECK SEATBELT	Displayed for 3 seconds after the key switch is turned ON.			
	CHECK SAFETY LEVER ENG. STARTABLE IN LOCK POSITION	Displayed for 3 seconds after the seatbelt confirmation indicator switches OFF.			
APC	APC ERROR	Displayed when part of the APC system malfunctions, which disables some control functionality.		Contact your authorised KATO dealer.	
APC	APC ERROR BACKING UP	Displayed when an APC system error occurs and the backup switch is switched to the backup position.		Contact your authorised KATO dealer.	
APC	APC ERROR USE BACKUP SWITCH	Displayed when an APC system error occurs and control by the APC is disabled.	Switch the backup switch to the backup position to temporarily enable operations.	Contact your authorised KATO dealer.	
STOP	ENG. EMERGENCY STOPPED	Displayed when the engine emergency stop switch is in the stop position or an ECU error occurs.	If the engine emergency stop switch was operated even though the engine status is normal, move the switch back to the normal position.	If the message does not disappear after restoring the switch or if the engine does not shut OFF, contact your authorised KATO dealer.	
	ENG. OIL PRESSURE ERROR STOP ENG. !	Displayed when an abnormal engine oil pressure occurs during engine operation.	An alarm sound is emitted if this screen is displayed. The alarm will continue to sound until the starter switch is turned to the OFF position.	Stop the engine. Contact your authorised KATO dealer.	
	ENG. OVERHEATED ☑ STOP ALARM OK	The engine has overheated.	An alarm sound is emitted if this screen is displayed. The engine will not shut OFF until the engine water temperature decreases below a specified temperature. The alarm sound can be shut OFF by checking the checkbox and pressing the OK switch.	・Run the engine at medium speed and stop it once it has cooled. ・Check for the coolant volume and blockages in the radiator and for the tension of the fan belt. ・Contact your authorised KATO dealer as necessary.	
	ENG. COOLANT LEVEL LOW	Displayed when the engine coolant level is below the specified level.	This screen remains displayed until the engine coolant level is filled above the specified level.	・Stop the engine. ・Inspect the coolant level and, if low, add coolant to the specified level.	
	UNLOCKING SWING LOCK	Displayed when the swing lock release switch is switched to the release mode. The swing lock is released while the engine is running.	Even if functioning normally, if the swing lock release switch is set to the release position, switch it back to the auto position.		
	COMMUNICATION ERROR USE "SWING LOCK RELEASE" SWITCH	Displayed when a communication error occurs between the APC controller and ECU.	The message prevents the swing lock from functioning normally, so switch the swing lock release switch to the release position. The swing lock is released while the engine is running.	Contact your authorised KATO dealer.	
	ACCEL. CONTROL ERROR USE "SWING LOCK RELEASE" SWITCH	Displayed when an accelerator control error occurs.	The message prevents the swing lock from functioning normally, so switch the swing lock release switch to the release position. The swing lock is released while the engine is running.	Contact your authorised KATO dealer.	

https://truckmanualshub.com/

Icon displayed	Message displayed	Description	Notes	Actions	Applicability
	ELECTRIC SYSTEM ERROR USE "SWING LOCK RELEASE" SWITCH	Displayed when an open or short circuit occurs in an important circuit.	The message prevents the swing lock from functioning normally, so switch the swing lock release switch to the release position. The swing lock is released while the engine is running.	Contact your authorised KATO dealer.	
	COMMUNICATION ERROR USE BACKUP SWITCH	Displayed when a communication error occurs between the APC controller and ECU.	Switch the backup switch to the backup side. This temporarily enables digging operations.	Contact your authorised KATO dealer.	
	ACCEL. CONTROL ERROR USE BACKUP SWITCH	Displayed when an accelerator control error occurs.	Switch the backup switch to the backup side. This temporarily enables digging operations.		
	ELECTRIC SYSTEM ERROR USE BACKUP SWITCH	Displayed when an open or short circuit occurs in an important circuit.	Switch the backup switch to the backup side. This temporarily enables digging operations.		
	COMMUNICATION ERROR BACKING UP	Displayed if a communication error occurs and the backup switch is switched to the backup position.			
	ACCEL. CONTROL ERROR BACKING UP	Displayed if an accelerator control error occurs and the backup switch is switched to the backup position.			
	ELECTRIC SYSTEM ERROR BACKING UP	Displayed if an open or short circuit occurs in an important circuit and the backup switch is switched to the backup position.			
	BACKUP SWITCH "ON"	Displayed when the backup switch is switched to the backup position.	When functioning properly, if the backup switch is in the backup position, switch it back to the auto position.		
	FAILED TO STOP ENG. USE EMERGENCY STOP SWITCH	Displayed if the engine does not shut off when the starter switch is turned OFF.	After shutting the engine off, move the emergency stop switch back to the normal position.	・Use the emergency stop switch to shut the engine off. ・Contact your authorised KATO dealer.	
	SCR SYSTEM ERROR OPERATING IN ESCAPE MODE	Displayed if the escape mode is enabled when a DEF quality error or SCR system error is active.		Contact your authorised KATO dealer.	
	ADD DEF OPERATING IN ESCAPE MODE	Displayed if the escape mode is enabled when the DEF level is low.		Replenish the DEF.	
	SCR SYSTEM ERROR NO OUTPUT. RPM RESTRICTED. OK	Displayed if a DEF quality error or SCR system error occurred. Severe operating restrictions are applied.	The maximum engine output is restricted and engine speed is set to low idle. Restrictions can be temporarily overridden in the escape mode. If this screen is displayed, an alarm sound is emitted several times.	Contact your authorised KATO dealer.	
	ADD DEF NO OUTPUT. RPM RESTRICTED. OK	Displayed if the DEF level is too low. Severe operating restrictions are applied.	The maximum engine output is restricted and engine speed is set to low idle. Restrictions can be temporarily overridden in the escape mode. If this screen is displayed, an alarm sound is emitted several times.	Replenish the DEF.	
	SCR SYSTEM ERROR RPM. OUTPUT RESTRICTED OK	Displayed if a DEF quality error or SCR system error occurred. Severe operating restrictions are applied.	The maximum engine output and engine speed are restricted. Restrictions can be temporarily overridden in the escape mode. If this screen is displayed, an alarm sound is emitted several times.	Contact your authorised KATO dealer.	

https://truckmanualshub.com/

Icon displayed	Message displayed	Description	Notes	Actions	Applicability
	ADD DEF RPM. OUTPUT RESTRICTED OK	Displayed if the DEF level is too low. Severe operating restrictions are applied.	The maximum engine output and engine speed are restricted. Restrictions can be temporarily overridden in the escape mode. If this screen is displayed, an alarm sound is emitted several times.	Replenish the DEF.	
	SCR SYSTEM ERROR OUTPUT RESTRICTED OK	Displayed if a DEF quality error or SCR system error occurs. Low operating restrictions are applied.	The maximum engine output is restricted. Restrictions can be temporarily overridden in the escape mode. If this screen is displayed, an alarm sound is emitted several times.	Contact your authorised KATO dealer.	
	ADD DEF OUTPUT RESTRICTED OK	Displayed if the DEF level is too low. Low operating restrictions are applied.	The maximum engine output is restricted. Restrictions can be temporarily overridden in the escape mode. If this screen is displayed, an alarm sound is emitted several times.	Replenish the DEF.	
	SCR SYSTEM ERROR	・Displayed if a DEF quality error or SCR system error occurs. ・Displayed if attempting to switch to the escape mode failed.	If this screen is displayed due to a DEF quality error or SCR system error, an alarm sound is emitted several times.	Contact your authorised KATO dealer.	
	ADD DEF	Displayed if the DEF level is too low.	If this screen is displayed, an alarm sound is emitted several times.	Replenish the DEF.	
	ECU ERROR BACKING UP	Displayed if an ECU error occurs and engine speed and output are restricted.		Contact your authorised KATO dealer.	
	PURGE CONTROL ERROR	Displayed if a purge control error occurs.		Contact your authorised KATO dealer.	
	MANUAL PURGE REQUESTED START PURGE OK	Displayed if manual purging is required.		Promptly purge manually.	
	OPENING FRONT WINDOW	Displayed if the wiper or washer switch is operated when the front window is open.		Close the front window and try the operation again.	
	FUEL LEVEL LOW STOP ALARM OK	Displayed if the fuel level is too low.	An alarm sound is emitted after this screen is displayed for five minutes. The alarm sound can be shut OFF by checking the checkbox and pressing the OK switch.	Refuel.	
	BATTERY NOT CHARGING	Displayed when there is a malfunction in the battery charge circuit and the battery is not charged normally.		Check the batteries, battery charge circuit, fan belt, etc. Contact your authorised KATO dealer as necessary.	
	HYD. OIL OVERHEATING	Displayed when the hydraulic oil has overheated.	This screen is displayed until the hydraulic oil has cooled to the rated level or below.	・Run the engine at medium speed and stop it once it has cooled. ・Check for blockages in the oil cooler and for the tension of the fan belt. ・Contact your authorised KATO dealer as necessary.	
	HYD. OIL FILTER BLOCKED	Displayed the return filter element for the hydraulic oil is blocked.	This screen may also be displayed when the hydraulic oil temperature is low. Warm the hydraulic oil until its temperature is adequate.	Inspect the return filter element. If it is blocked, refer to the inspection and servicing section to replace it.	

https://truckmanualshub.com/

Icon displayed	Message displayed	Description	Notes	Actions	Applicability
	ENG. AIR FILTER BLOCKED	Displayed when the air cleaner is blocked.	This screen is displayed until the air cleaner blockage is cleared.	Clean or replace the air cleaner element.	
	AUTO-PURGING STOP PURGE OK	Displayed during automatic purging.	If automatic purging must be canceled due to the given operating environment, automatic purging can be stopped by checking the checkbox and pressing OK.		
	PREHEATING	Displayed during engine preheating.	If the starter key is turned to ON during cold weather, the engine is preheated.	Wait until the display disappears and then start the engine.	
–	WARMING UP ! 9 min. 59 sec. RELEASE: QUICK-ACCEL. SWITCH	When the engine needs warming up, it automatically starts warming up the engine and displays the remaining time required for warm-up.	When the remaining time required for warm-up is displayed, the warm-up mode can be canceled as follows. ・Press the quick accelerator switch. ・Turn the accelerator dial to a medium speed or higher and move the levers.		
	ELECTRIC SYSTEM ERROR	Displayed if an open or short circuit occurs in a switch or other such circuit. Various modes do not function normally.		Contact your authorised KATO dealer.	
	ECU ERROR	Displayed if an ECU error occurs.		Contact your authorised KATO dealer.	
	MANUAL PURGING	Displayed during manual purging.	Do not operate any levers during manual purging. Operating a lever will cancel the purging process.		
	A/C SYSTEM ERROR	Displayed if an error occurs in the air conditioner system.		Contact your authorised KATO dealer.	
	HYD. OIL LOW TEMP.	Displayed when the hydraulic oil needs warming.		Use warm-up running as described in the section "Warm-up running" to warm the hydraulic oil.	
	AUTO-PURGING STOPPED RESUME PURGE OK	Automatic purging stopped.	To resume automatic purging, check the checkbox and press OK.		
	AUTO PURGE REQUESTED CHECK ENG. COOLANT TEMP & RPM	Displayed if automatic purging is required.		Automatic purging can be started by increasing the engine speed above 1400 min^{-1} and the water temperature above 70˚C.	

(T218621-009-0E)

https://truckmanualshub.com/

8. Lifting a load (01EE-0601-0E)

8-1 Precautions on lifting (01EE-0602-0E)

8-1-1 Precautions on lifting a load using the hydraulic excavator (T218621-010-0E)

(1) HD514MR-7

LIFTING CAPACITIES

A : REACH FROM SWING CENTERLINE
B : BUCKET HOOK HEIGHT
C : LIFTING CAPACITIES
: OVER FRONT
: OVER SIDE OR 360°

KATO WORKS CO.,LTD.
HD514MR-7
BOOM : 4.65m ARM : 2.50m
BUCKET : 0.5m³ (430kg)
SHOE WIDTH : 500mm
COUNTERWEIGHT : 3040kg

UNIT : kg

LIFT POINT HEIGHT B(m)	LIFT POINT RADIUS A(m) 1.5		3.0		4.5		6.0		AT MAXIMUM LIFT POINT RADIUS		
											RADIUS (m)
6.0									*2150	*2150	5.35
4.5					*2250	*2250	*2400	2050	*1710	1530	6.92
3.0			*4310	*4310	*3190	3180	*2790	1940	*1750	1300	7.37
1.5			*5060	*5060	*4360	2880	2760	1810	*1890	1210	7.49
0			*4740	*4740	4180	2660	2650	1710	1940	1230	7.30
-1.5	*5090	*5090	*4750	*4750	4090	2580	2600	1660	2170	1390	6.76
-3.0	*4770	*4770	*4950	*4950	4130	2610			2810	1810	5.77
-4.5			*5910	5350					*4600	3380	4.00

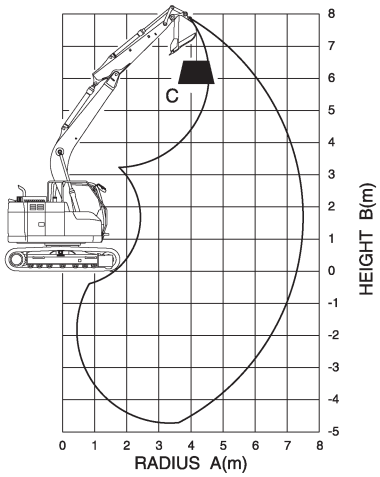

NOTE :
1. Lifting capacities are based on ISO 10567.
2. Lifting capacities shown do not exceed 87% of machine hydraulic capacity or 75% of minimum tipping load.
3. Capacities marked with an asterisk (*) are limited by hydraulic capacities.
4. Lifting capacities are based on machine standing on firm, uniform supporting surface.
User must make allowances for job conditions such as soft or uneven ground.
5. Lifting capacities shown should not be exceeded. Weight of all lifting accessories must be deducted from the above lifting capacities.
6. Capacities apply only to the machine as originally manufactured and equipped by KATO WORKS CO., LTD.
7. The operator should be fully acquainted with the instruction manual before operating the machine.

KATO 53E-75143000

53E-75143000a

LIFTING CAPACITIES

A : REACH FROM SWING CENTERLINE
B : BUCKET HOOK HEIGHT
C : LIFTING CAPACITIES
: OVER FRONT
: OVER SIDE OR 360°

KATO WORKS CO.,LTD.
HD514MR-7
BOOM : 4.65m ARM : 2.50m
BUCKET : 0.5m³ (430kg)
SHOE WIDTH : 600mm
COUNTERWEIGHT : 3040kg

UNIT : kg

LIFT POINT HEIGHT B(m)	LIFT POINT RADIUS A(m) 1.5		3.0		4.5		6.0		AT MAXIMUM LIFT POINT RADIUS		
											RADIUS (m)
6.0									*2150	*2150	5.35
4.5					*2250	*2250	*2400	2080	*1710	1560	6.92
3.0			*4310	*4310	*3190	*3190	*2790	1980	*1750	1330	7.37
1.5			*5060	*5060	*4360	2920	2810	1840	*1890	1240	7.49
0			*4740	*4740	4250	2710	2700	1740	1970	1260	7.30
-1.5	*5090	*5090	*4750	*4750	4160	2630	2650	1690	2210	1410	6.76
-3.0	*4770	*4770	*4950	*4950	4200	2660			2860	1840	5.77
-4.5			*5910	5430					*4600	3430	4.00

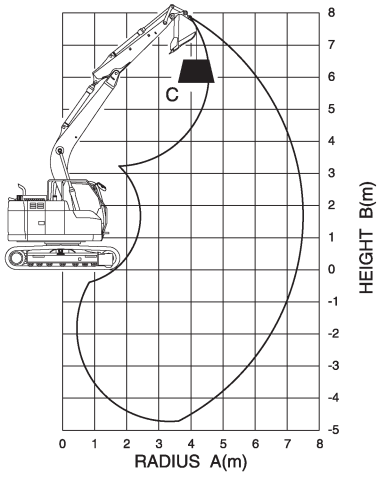

NOTE :
1. Lifting capacities are based on ISO 10567.
2. Lifting capacities shown do not exceed 87% of machine hydraulic capacity or 75% of minimum tipping load.
3. Capacities marked with an asterisk (*) are limited by hydraulic capacities.
4. Lifting capacities are based on machine standing on firm, uniform supporting surface.
User must make allowances for job conditions such as soft or uneven ground.
5. Lifting capacities shown should not be exceeded. Weight of all lifting accessories must be deducted from the above lifting capacities.
6. Capacities apply only to the machine as originally manufactured and equipped by KATO WORKS CO., LTD.
7. The operator should be fully acquainted with the instruction manual before operating the machine.

KATO 53E-75144000

53E-75144000a

https://truckmanualshub.com/

LIFTING CAPACITIES

A : REACH FROM SWING CENTERLINE
B : BUCKET HOOK HEIGHT
C : LIFTING CAPACITIES
: OVER FRONT
: OVER SIDE OR 360˚

KATO WORKS CO.,LTD.
HD514MR-7
BOOM : 4.65m ARM : 2.50m
BUCKET : 0.5m³ (430kg)
SHOE WIDTH : 700mm
COUNTERWEIGHT : 3040kg

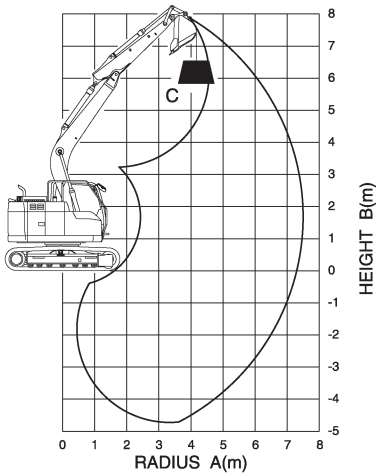

UNIT : kg

LIFT POINT HEIGHT B(m)	LIFT POINT RADIUS A(m) 1.5		3.0		4.5		6.0		AT MAXIMUM LIFT POINT RADIUS		
											RADIUS (m)
6.0									*2150	*2150	5.35
4.5					*2250	*2250	*2400	2130	*1710	1600	6.92
3.0			*4310	*4310	*3190	*3190	*2790	2030	*1750	1370	7.37
1.5			*5060	*5060	*4360	3000	2890	1900	*1890	1280	7.49
0			*4740	*4740	4360	2780	2770	1790	2030	1300	7.30
-1.5	*5090	*5090	*4750	*4750	4270	2700	2720	1740	2280	1460	6.76
-3.0	*4770	*4770	*4950	*4950	4310	2730			2940	1900	5.77
-4.5			*5910	5560					*4600	3520	4.00

NOTE :
1. Lifting capacities are based on ISO 10567.
2. Lifting capacities shown do not exceed 87% of machine hydraulic capacity or 75% of minimum tipping load.
3. Capacities marked with an asterisk (*) are limited by hydraulic capacities.
4. Lifting capacities are based on machine standing on firm, uniform supporting surface. User must make allowances for job conditions such as soft or uneven ground.
5. Lifting capacities shown should not be exceeded. Weight of all lifting accessories must be deducted from the above lifting capacities.
6. Capacities apply only to the machine as originally manufactured and equipped by KATO WORKS CO., LTD.
7. The operator should be fully acquainted with the instruction manual before operating the machine.

KATO 53E-75145000

53E-75145000a

(2) HD514MR LC-7

LIFTING CAPACITIES

A : REACH FROM SWING CENTERLINE
B : BUCKET HOOK HEIGHT
C : LIFTING CAPACITIES
: OVER FRONT
: OVER SIDE OR 360˚

KATO WORKS CO.,LTD.
HD514MR LC-7
BOOM : 4.65m ARM : 2.50m
BUCKET : 0.5m³ (430kg)
SHOE WIDTH : 500mm
COUNTERWEIGHT : 3040kg

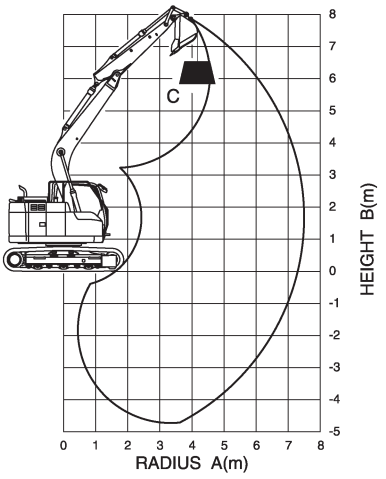

UNIT : kg

LIFT POINT HEIGHT B(m)	LIFT POINT RADIUS A(m) 1.5		3.0		4.5		6.0		AT MAXIMUM LIFT POINT RADIUS		
											RADIUS (m)
6.0									*2150	*2150	5.35
4.5					*2250	*2250	*2400	2120	*1710	1590	6.92
3.0			*4310	*4310	*3190	*3190	*2790	2020	*1750	1360	7.37
1.5			*5060	*5060	*4360	2980	2870	1880	*1890	1270	7.49
0			*4740	*4740	4330	2770	2750	1780	2020	1290	7.30
-1.5	*5090	*5090	*4750	*4750	4240	2680	2700	1730	2260	1450	6.76
-3.0	*4770	*4770	*4950	*4950	4280	2720			2920	1890	5.77
-4.5			*5910	5530					*4600	3500	4.00

NOTE :
1. Lifting capacities are based on ISO 10567.
2. Lifting capacities shown do not exceed 87% of machine hydraulic capacity or 75% of minimum tipping load.
3. Capacities marked with an asterisk (*) are limited by hydraulic capacities.
4. Lifting capacities are based on machine standing on firm, uniform supporting surface. User must make allowances for job conditions such as soft or uneven ground.
5. Lifting capacities shown should not be exceeded. Weight of all lifting accessories must be deducted from the above lifting capacities.
6. Capacities apply only to the machine as originally manufactured and equipped by KATO WORKS CO., LTD.
7. The operator should be fully acquainted with the instruction manual before operating the machine.

KATO 53E-75146000

53E-75146000a

https://truckmanualshub.com/

8-1-2 Ensuring safe work (01EE-0224-0E)

(1) Never attempt to lift more than the maximum load. Strictly obey the safety signs stuck on the wall in the cab.
The working position brings the risk that the wire rope suspension ring could come out of the hook, so pay close attention to ensure that the hook angle does not risk dropping the ring.

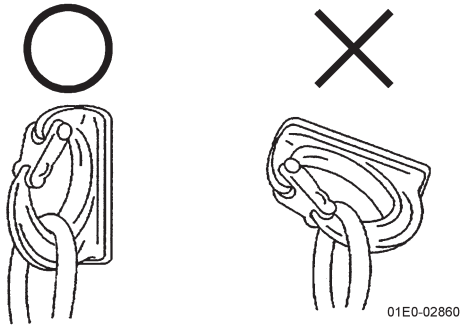

> **⚠ WARNING**
>
> When lifting a load with the bucket hook, be careful not to let the sling wire rope etc. contact the bucket etc.
> If the wire rope contacts the bucket when lifting a load, it can lead to wire rope damage resulting in a major accident.

(01E0-0225-0E)

(2) Determine signals for the lifting operation, designate a signaler and follow the instructions of that signaler.

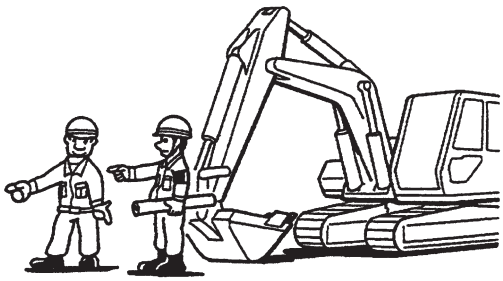

(3) Set the machine level on the firm ground before you lift a load.

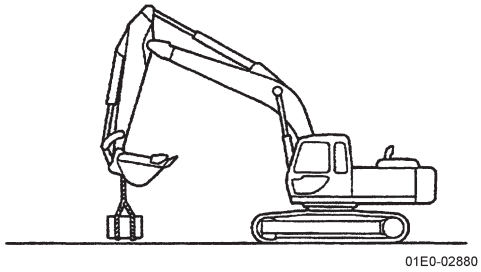

(4) Lifting on sloping ground risks tipping the machine over. Always ensure the ground is flat before you start lifting a load.

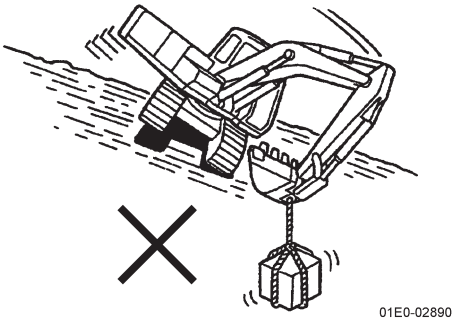

https://truckmanualshub.com/

(5) Take measures to exclude people from the area so that nobody can pass under the suspended load.

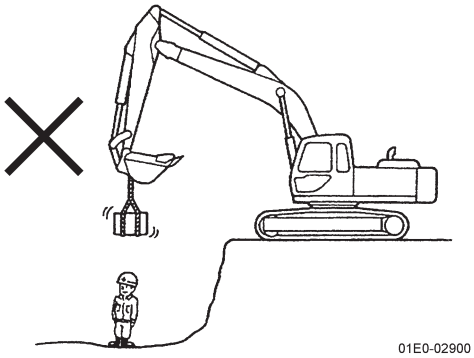

(6) Do not lift loads outside the specifications. Excessive loads will tip over or otherwise damage the machine.

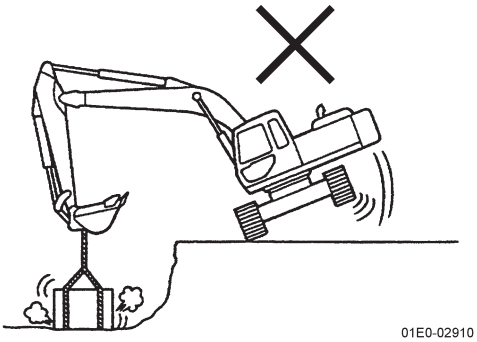

(7) If you must travel with the load suspended, keep the engine speed low and set the traveling mode button to slow speed. While traveling, keep the position of the load as low as possible.

1) If you travel with the load suspended, carry the load in front.
2) Carry the load at a height where the bottom is not more than 0.3m above the ground.
3) Keep traveling speed less than 3.0km/h (0.84m/s).
4) Confirm that the travel surface is flat (1% or less) and firm.
5) If you travel with the load suspended, travel in a manner that minimizes load swing and, if any problem occurs, stop traveling and set the load on the ground.

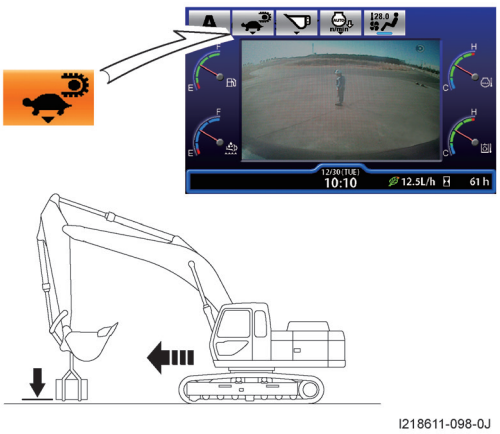

(8) If you move the front attachment or swing while traveling with a load suspended, the load can swing dangerously, so continue in the same position.

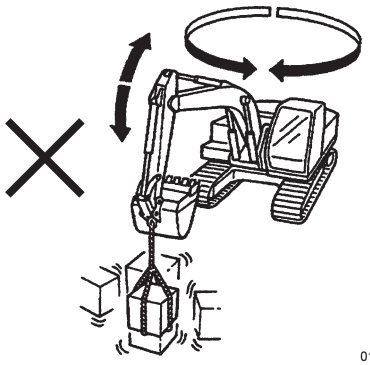

https://truckmanualshub.com/

(9) Before you swing with a suspended load, check that there are no people or obstructions within the swing radius and sound the horn as a warning to avoid hitting anybody etc. with the load and try to swing slowly.

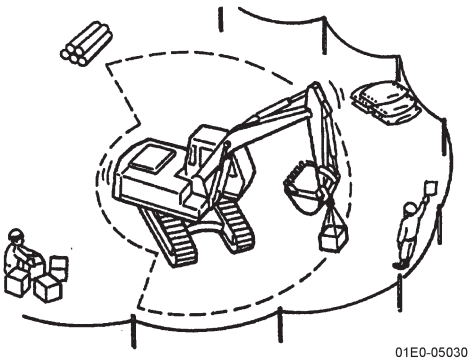

(10) If you attach a hook after taking delivery of the machine, contact your authorised KATO dealer.

https://truckmanualshub.com/

8-2 Operation control (01E0-0227-0E)

Reduce the engine speed to low speed and work slowly.

8-3 Inspection of wire ropes and chains (01E0-0228-0E)

8-3-1 Wire rope (01E0-0229-1E)

(1) A wire rope used for lifting must have a factor of safety of at least six (6).

(2) Replace the wire rope in any of the conditions below.

1) When 10% or more of the component wires (excluding filler wires) in one pitch are broken.

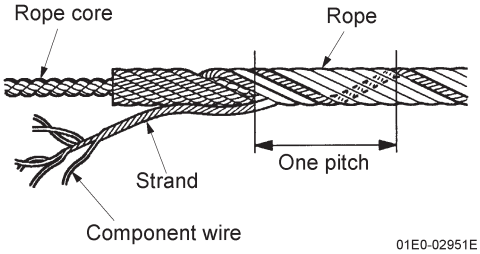

2) When the diameter has reduced by 7% or more of the nominal diameter.

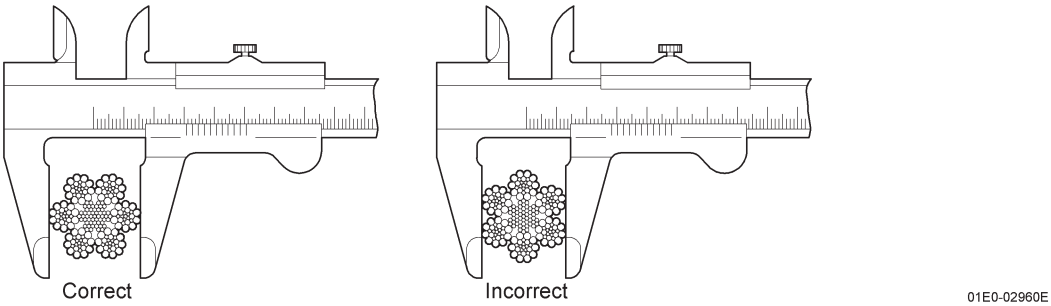

3) When the wire rope has twisted into a kink.

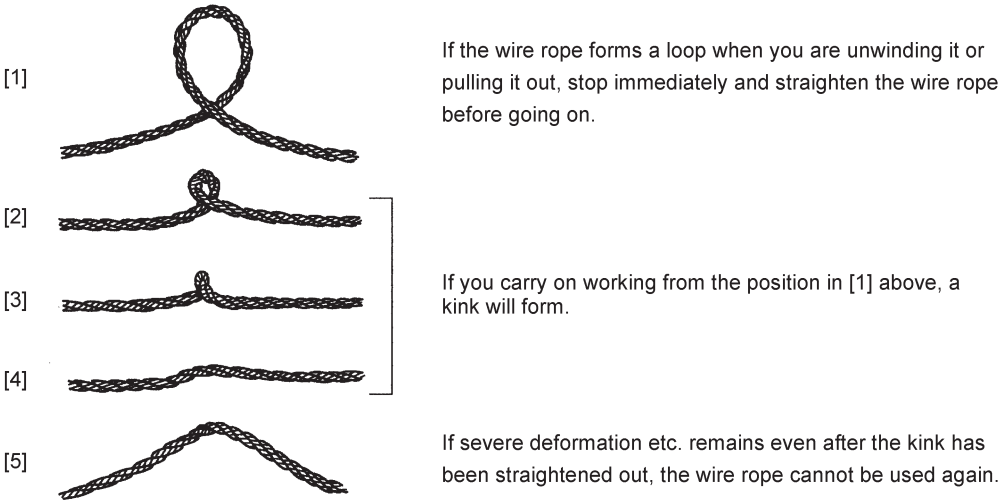

https://truckmanualshub.com/

4) When there is severe deformation so that the core rope protrudes, a birdcage shape is formed, or when there is corrosion.

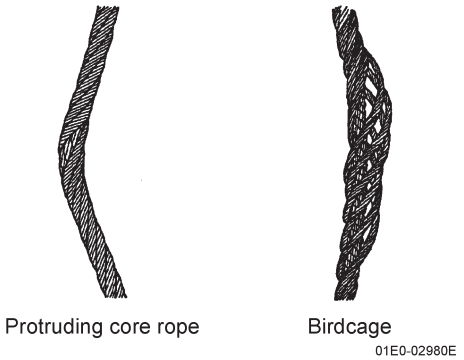

5) When electricity or gas welding sparks have affected the wire rope.
6) When the wire rope has been affected by high temperatures.

8-3-2 Chain (01E0-0230-0E)

A chain used for lifting must satisfy the requirements below.

(1) It must have a factor of safety of at least five (5).
(2) Stretching of the lifting chain must be less than 5% of the chain length at the time of manufacture.
(3) The reduction of diameter of the cross section of the lifting chain link must be less than 10% of the diameter at the time of manufacture.
(4) There must not be any cracks.

8-3-3 Inspection (01E0-0231-0E)

(1) Inspect the wires, chains and other lifting accessories and confirm that there is nothing abnormal about them before you lift a load.
(2) In periodic independent inspections, examine the wires, chains and other lifting accessories and record any abnormalities to preserve.

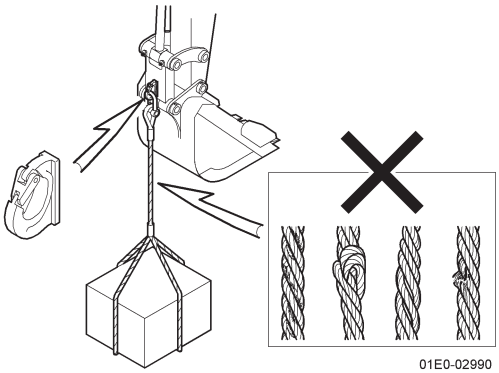

⚠ CAUTION

Inspect the wire ropes and chains with great care and immediately replace any which requires replacement for any reason.
Any delay in replacing a defective wire rope or chain could cause a severe accident.

(01E0-0232-0E)

https://truckmanualshub.com/

9. Bucket replacement and reversal procedure (01E0-0233-0E)

9-1 Bucket replacement procedure (01E0-0234-0E)

⚠ WARNING

- When you hit a pin with a hammer, metal splinters can fly off which could cause severe eye injuries. Before you start work, always put on protective goggles, helmet, gloves etc.
- Store the detached bucket so that it cannot fall over and place barriers so that no unauthorised personnel can approach it.
- Carry out the replacement/reversal process in a workplace with secure footing.
- When carrying out team operations such as pin insertion and cylinder extension/retraction, take care to work safely with good exchange of signals and communication between all those concerned.

(01E0-0235-1E)

9-1-1 Removal (01E0-0236-1E)

(1) Rest the bucket to be replaced on firm, level ground. (Fig. ①)

NOTE

When you are extracting the pins, make sure that the bucket is only resting lightly on the ground. If it is pressed strongly against the ground, the resistance on the pins will be increased making them harder to extract.

(2) Roll the pin seal O-rings onto the bosses of the bucket. (Fig. ②)

(3) Remove the retaining nuts and bolts and extract bucket pins [A] and [B]. (Fig. ③)

(4) Raise the boom slightly and separate the bucket from the arm. (Fig. ④)

(5) Remove the pin seal O-rings.

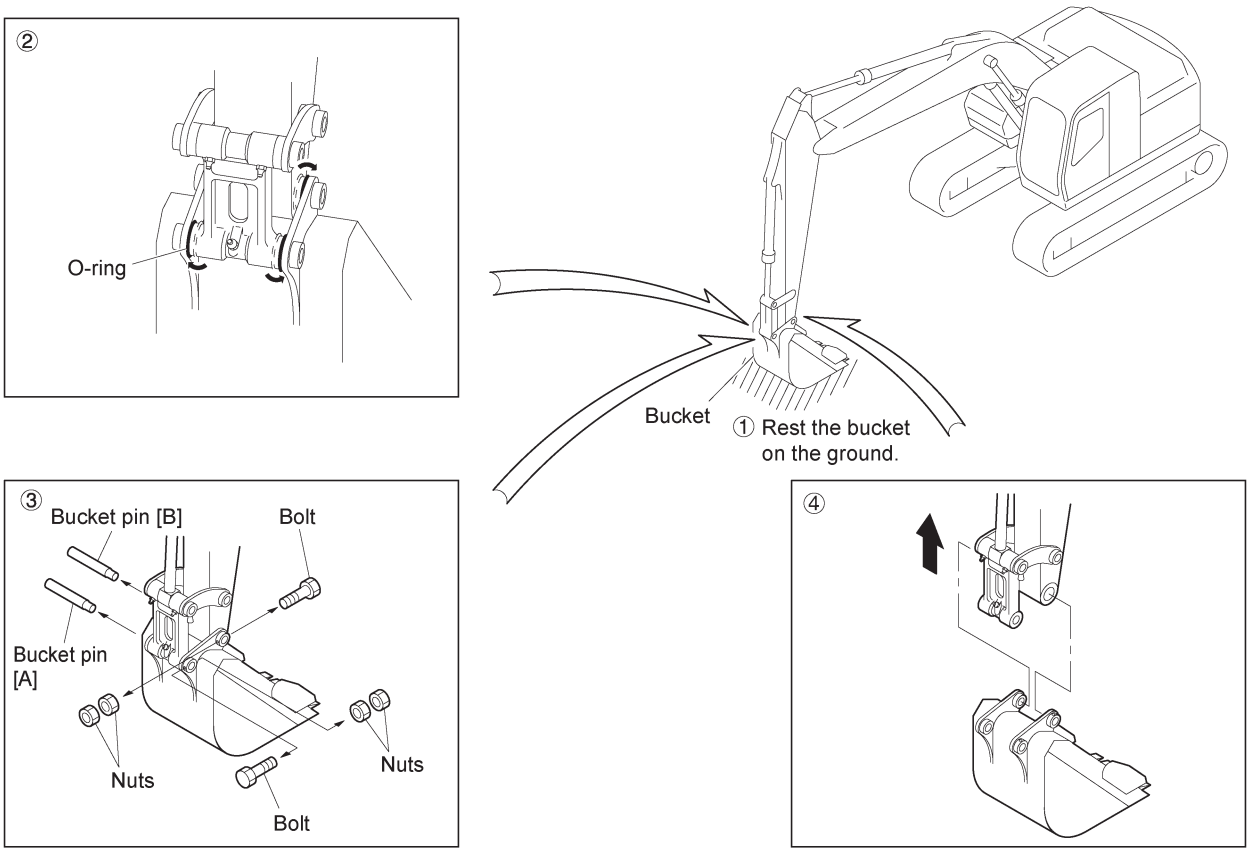

I218411-055-0E

https://truckmanualshub.com/

> ⚠ **CAUTION**
>
> - Take care not to get grit or mud on the extracted pins.
> - Thoroughly wipe the grease, grit and mud off the extracted O-rings. If any O-ring is damaged, deformed or hardened, replace it.
> - The arm tip and tipping link have dust seals fitted on both ends, so take care not to damage them. Damaging the dust seals could allow sand, dirt, or other matter to get inside and cause premature wear to the pins or bushes.

(01E0-0237-2E)

9-1-2 Mounting (01E0-0238-1E)

(1) Ready the bucket for mounting.

(2) Clean and grease all pins and holes.

(3) Start the engine and leave it at idling speed.

(4) Fit the pin seal O-rings onto the inside of the bosses of bucket holes ⓑ, and insert the steel bushes into the holes. Line the arm tip holes up with the bucket holes ⓑ which have the steel bushes inside and insert bucket pin [B]. (Fig. ①)

NOTE

- The fit is good enough to ensure that the pin can be inserted as long as the centers of the holes are aligned, so do not hit the pin or otherwise apply excessive force.
- Line the pin up with the rotation stopper hole and check the pin's orientation before you insert it.

(5) Fit the pin seal O-rings onto the inside of the bosses of bucket holes ⓐ, and raise the boom or the arm to lift the bucket. Then adjust the cylinders so that bucket pin [A] can be easily inserted into the bucket holes ⓐ. (Fig. ②)

(6) After inserting each pin, line them up with their rotation stopper holes and fasten the bolts in place. (Fig. ③)

(7) Set the pin seal O-rings in the "V" grooves. (Fig. ④)

(8) Adjust the play on the bucket.

(9) Grease each pin and stop the engine. Bucket attachment is complete.

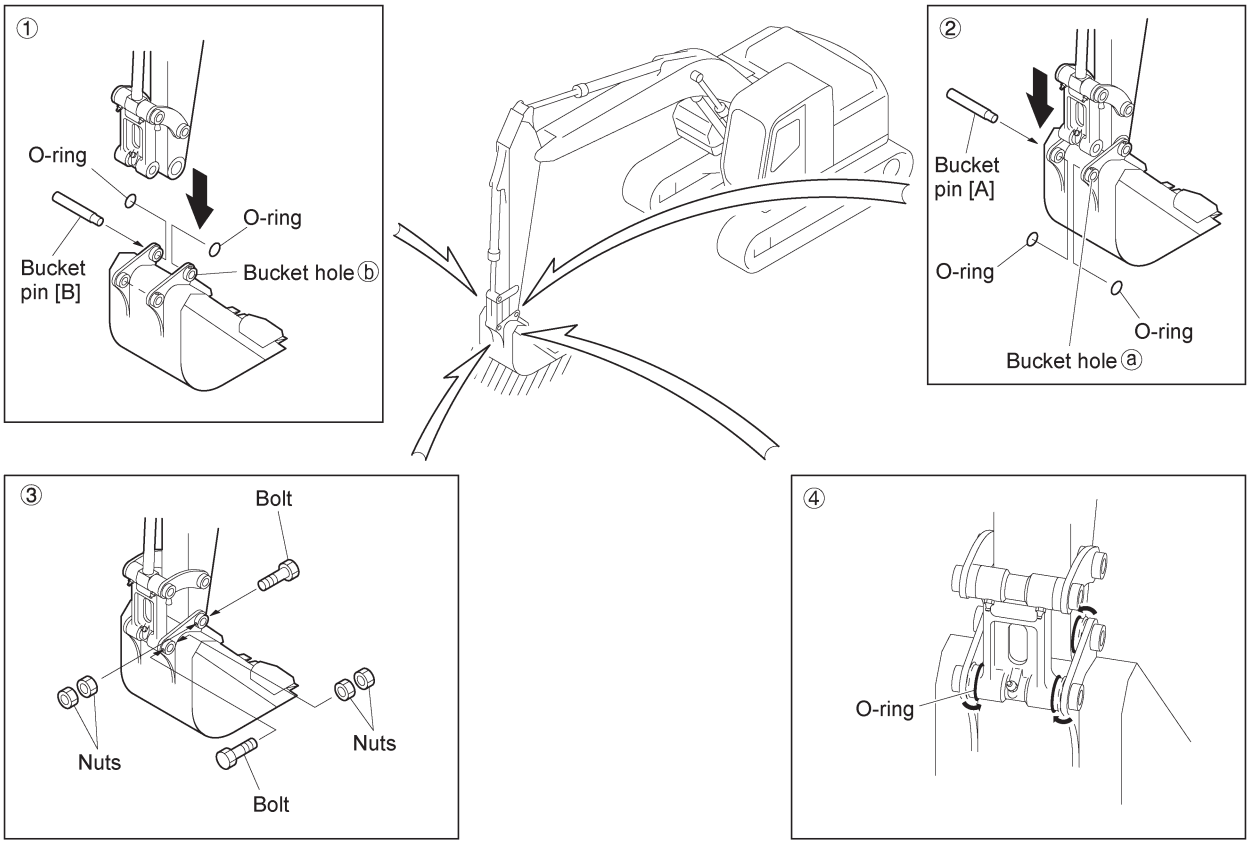

I218411-056-0E

https://truckmanualshub.com/

WARNING

When aligning the pin holes, do not put your hand or fingers into the holes. If the bucket moves, your hand or finger could be severed.

(01E0-0239-0E)

CAUTION

- When mounting the bucket, check to ensure that the steel bushes are fitted in place.
- The arm tip and tipping link have dust seals fitted on both ends, so take care not to damage them when inserting the pin.
- When attaching the locknuts, leave a gap of 2mm.

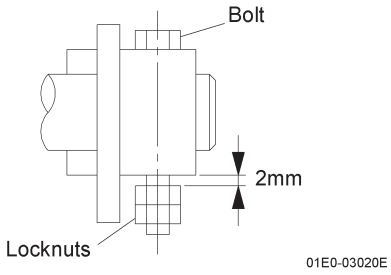

(01E0-0240-2E)

https://truckmanualshub.com/

9-2 Reversal procedure (01E0-0241-0E)

> ⚠ **CAUTION**
>
> If the bucket with the arm internally reinforced is reversed, such as that on the machine specified for heavy-duty digging, be careful extending the bucket cylinder. Fully extending the bucket cylinder will cause the back of the bucket to hit the arm.

(01E0-0242-1E)

9-2-1 Removal (01E0-0243-1E)

(1) Rest the bucket on firm, level ground. (Fig. ①)

NOTE

When you are extracting the pins, make sure that the bucket is only resting lightly on the ground. If it is pressed strongly against the ground, the resistance on the pins will be increased making them harder to extract.

(2) Roll the pin seal O-rings onto the bosses of the bucket. (Fig. ②)

(3) Remove the retaining nuts and bolts and extract bucket pins [A] and [B]. (Fig. ③)

(4) Raise the boom slightly and separate the bucket from the arm. (Fig. ④)

(5) Remove the pin seal O-rings.

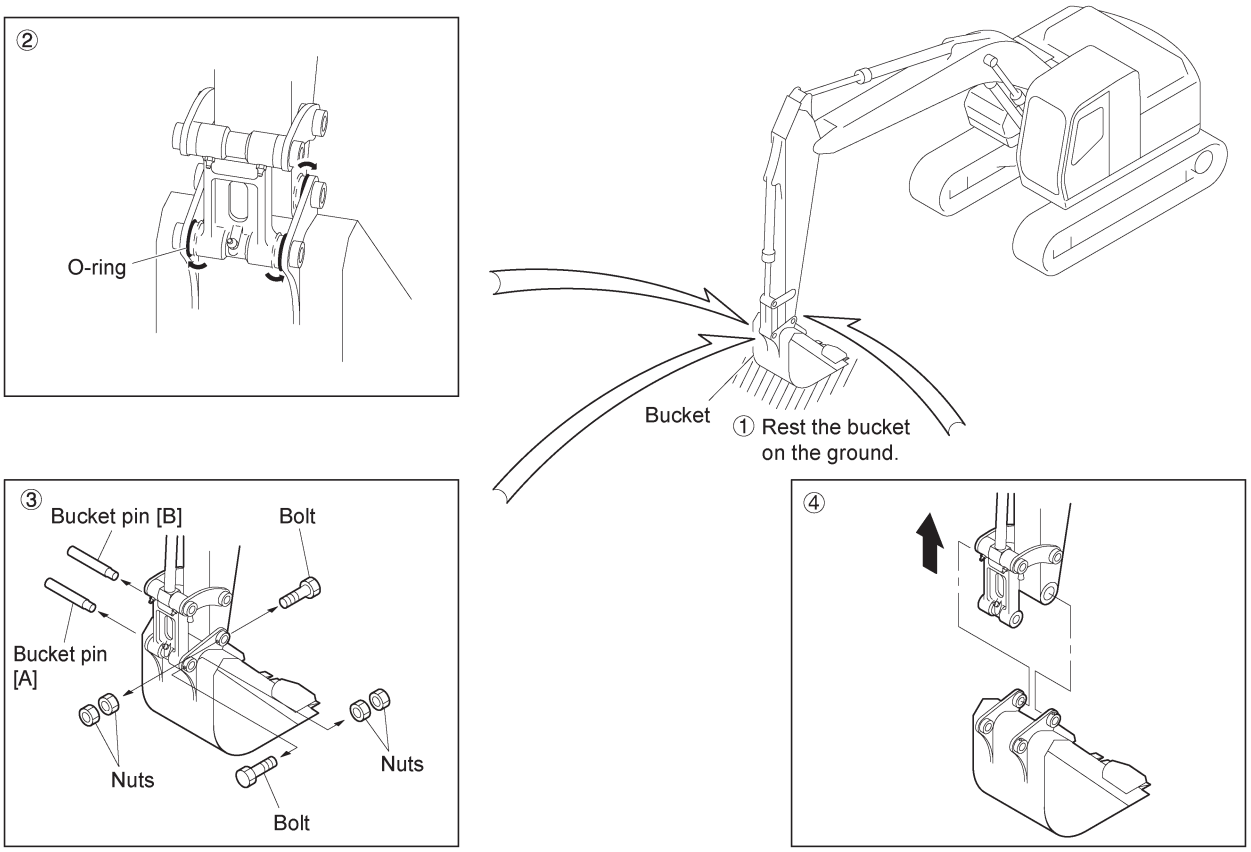

I218411-055-0E

> ⚠ **CAUTION**
>
> - Take care not to get grit or mud on the extracted pins.
> - Thoroughly wipe the grease, grit and mud off the extracted O-rings. If any O-ring is damaged, deformed or hardened, replace it.
> - The arm tip and tipping link have dust seals fitted on both ends, so take care not to damage them. Damaging the dust seals could allow sand, dirt, or other matter to get inside and cause premature wear to the pins or bushes.

(01E0-0237-2E)

https://truckmanualshub.com/

9-2-2 Mounting (01E0-0245-0E)

(1) Use an assistant crane to turn the bucket round.

(2) Clean and grease all pins and holes.

(3) Start the engine and leave it at idling speed.

(4) Fit the pin seal O-rings onto the inside of the bosses of bucket holes ⓐ. Line the arm tip holes up with the bucket holes ⓐ and insert bucket pin [B]. (Fig. ①)

NOTE

- The fit is good enough to ensure that the pin can be inserted as long as the centers of the holes are aligned, so do not hit the pin or otherwise apply excessive force.
- Line the pin up with the rotation stopper hole and check the pin's orientation before you insert it.

(5) Fit the pin seal O-rings onto the inside of the bosses of bucket holes ⓑ, insert the steel bushes into the holes and raise the boom or the arm to lift the bucket. Then adjust the cylinders so that bucket pin [A] can be easily inserted into the bucket holes ⓑ which have the steel bushes inside. (Fig. ②)

(6) After inserting each pin, line them up with their rotation stopper holes and fasten the bolts in place. (Fig. ③)

(7) Set the pin seal O-rings in the "V" grooves. (Fig. ④)

(8) Adjust the play on the bucket.

(9) Grease each pin and stop the engine. Bucket attachment is complete.

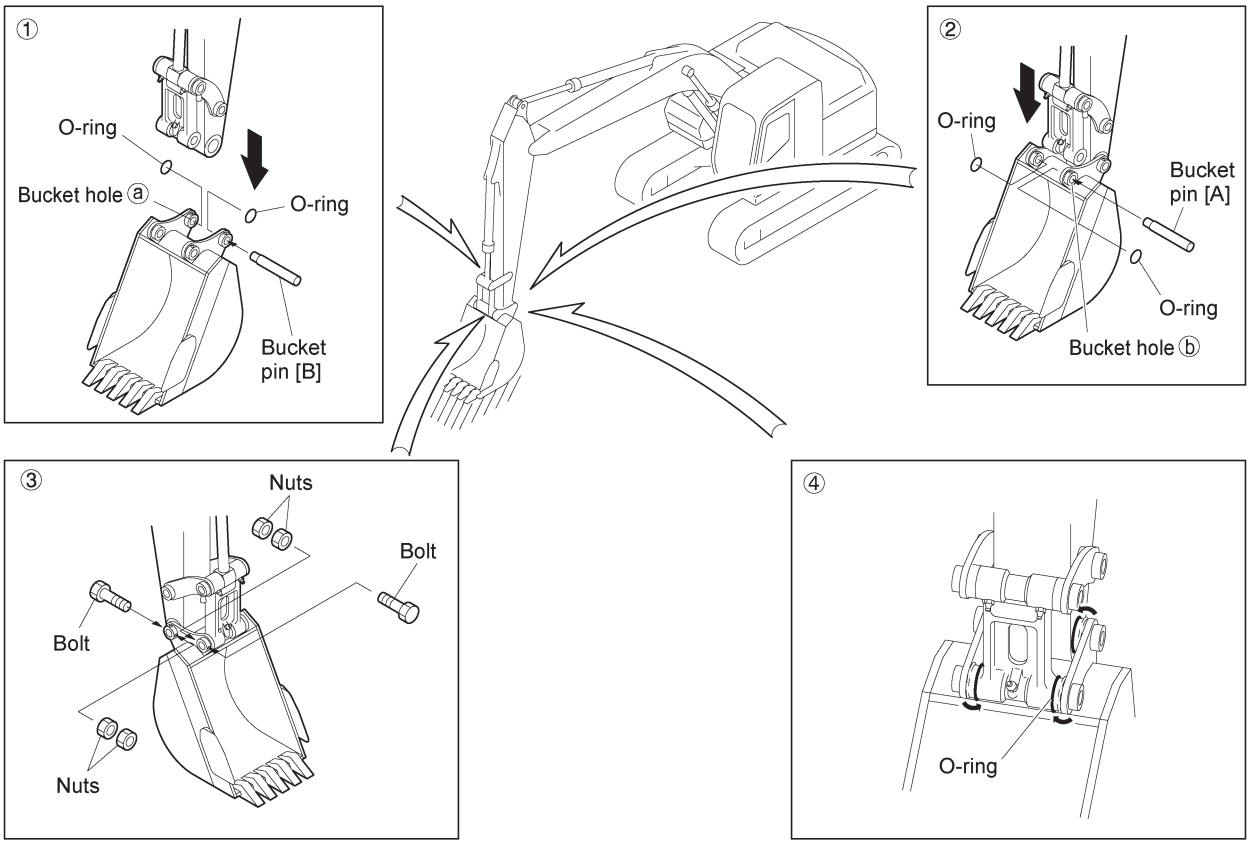

I218411-058-0E

https://truckmanualshub.com/

⚠ WARNING

When aligning the pin holes, do not put your hand or fingers into the holes. If the bucket moves, your hand or finger could be severed.

(01E0-0239-0E)

⚠ CAUTION

- When mounting the bucket, check to ensure that the steel bushes are fitted in place.
- The arm tip and tipping link have dust seals fitted on both ends, so take care not to damage them when inserting the pin.
- When attaching the locknuts, leave a gap of 2mm.

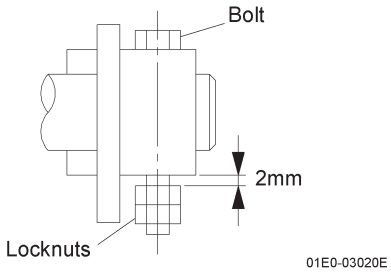

(01E0-0240-2E)

9-3 Adjustment method of bucket play (T218341-030-0E)

This machine is equipped with a mechanism for adjusting play on the bucket. (This mechanism uses the successive insertion of shims to eliminate the play in the connection between the arm and the bucket which builds up due to wear.)
This has the multiple effect of maintaining the sealing condition of the O-rings and delaying the advance of wear, increasing the longevity of bushes, pins etc.

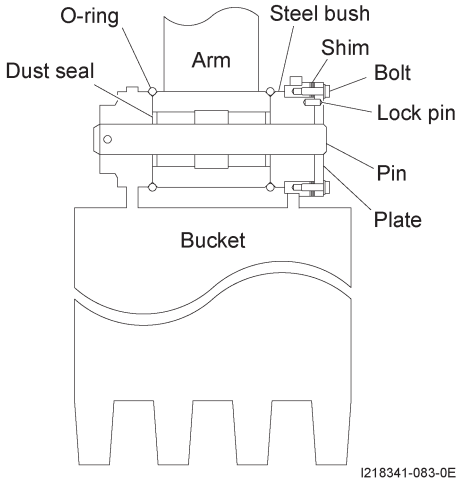

(1) Adjustment method

Unscrew the bolts and remove the plate. Remove shim(s) to equal the amount of play (the amount of wear) in the connection and fix the plate back into place using the bolts.

NOTE

- Removing shim(s) pushes to the steel bushes and reduces the amount of play in the connection.
- Play of 1.2 mm or less is suitable.

https://truckmanualshub.com/

10. Handling under special conditions (01E0-0247-0E)

10-1 Handling in cold conditions (01E0-0248-1E)

10-1-1 Preparations for low temperatures (T218081-190-0E)

When the outside air temperature in winter drops to 0°C or below, the ability of the engine to start and the performance of lubrication in all parts deteriorates and falling air temperatures bring a variety of other ill effects, so adequate advance preparation is necessary.

Refer to the sections below and make adequate preparations for winter.

(1) Fuel

Use a diesel fuel with a fluidity point 5°C lower than the outside temperature. For example, if the outside air temperature falls to −15°C, use diesel fuel which remains fluid at −20°C.

⚠ WARNING

Using a non-specified fuel can not only adversely affect performance, but could also cause a serious accident. Such problems are not subject to guarantee.

(01E0-0251-1E)

(2) Lubricant

Replace the lubricant used in respective equipment with low viscosity lubricant.

Refer to "3-3 Recommended lubricants table" in the inspection and servicing section regarding specified viscosities.

(3) Long Life Coolant

To prevent the water freezing during shipping for delivery, Long Life Coolant in accordance with the freezing temperature specifications as shown below is added in the coolant regardless of the season when leaving the factory.

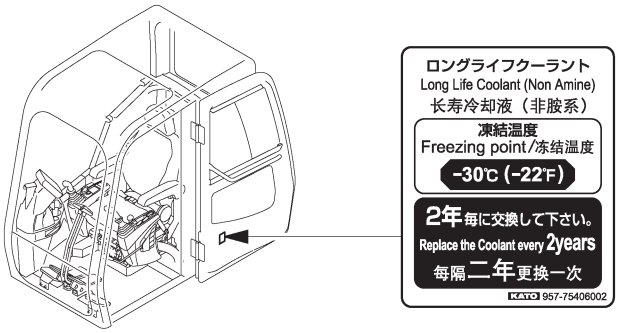

I218601-107-0J

⚠ CAUTION

- Use Long Life Coolant at 50% concentration.
  If the concentration is lower, engine failure may be caused.
- Do not mix with other types or brands of antifreeze or anti-corrosion additives.

(T218341-112-0E)

(4) Battery

Normally battery electrolyte does not freeze in cold weather, but if the battery charge is low, some freezing is possible. A battery which has frozen is permanently unusable, so take precautions to maintain the battery temperature.

https://truckmanualshub.com/

10-1-2 Precautions after operation (T218341-031-0E)

(1) Remove mud and water from the body and park the machine on concrete or hard dry ground. This is to avoid trouble the following day from the travel system such as the track shoes etc. freezing to the ground.

(2) Thoroughly wipe away drops of water or mud from the piston rod surfaces of the hydraulic cylinders. Frozen water drops can damage the seals.

(3) Open the drain cock of the fuel tank and drain plug of the fuel filter to drain out accumulated water from them. Water in fuel pipes can freeze and create blockages.

(4) If you have no alternative but to use tap water only as radiator coolant, you must drain all water from the engine and radiator at the end of work. Place a clear sign to warn "No coolant" to avoid problems the next morning.

(5) If there is water on the part of the key which you insert into the lock of the toolbox or elsewhere, it could freeze overnight and jam the lock. Always wipe water off the part for the key.

10-2 Handling under extreme heat (T218081-210-1E)

When using this machine under extreme heat, inspect and monitor the cooling system with great care to avoid any reduction of cooling efficiency.

(1) Always keep the coolant up to the rated level and check that the cooling system is not leaking.

(2) Check for blockages in the protector net and cooling fins of the oil cooler and the radiator.

① Remove the wing bolts from the protector net to take off the protector net.

② Check that nothing is clogging the cooling fins of the radiator, the oil cooler and the intercooler.

③ Clean dust and debris off the protector net.

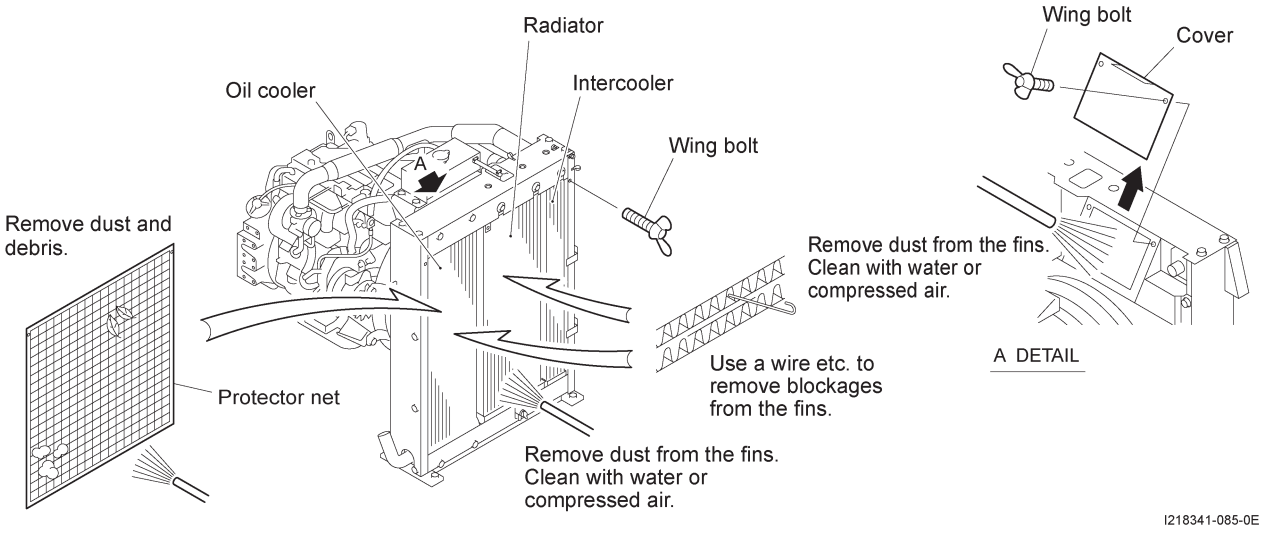

https://truckmanualshub.com/

(3) Check the battery electrolyte level before you start the engine. If the level is low, add it and measure the specific gravity.

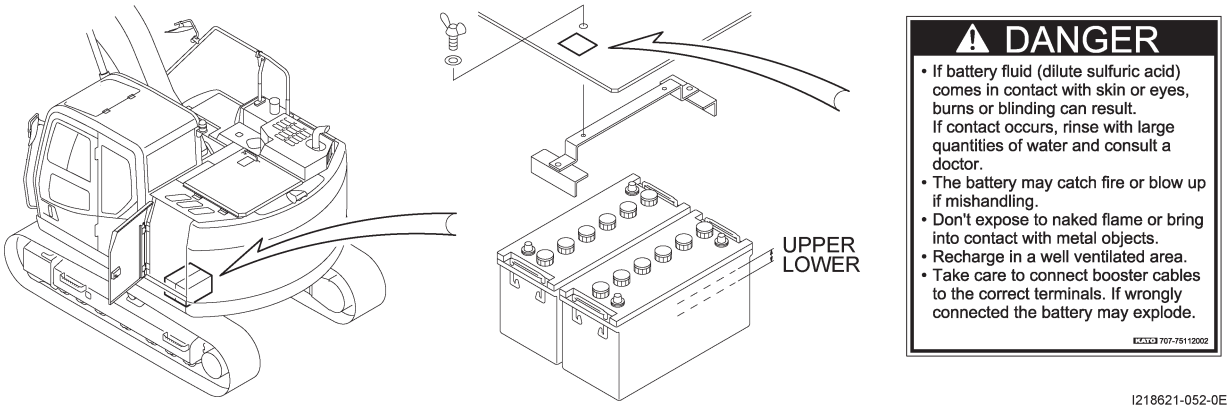

(4) Watch the water temperature gauge while you work. If the warning message indicating overheating appears on the display, stop work immediately and inspect the cooling system.

10-3 Handling under a dusty or sandy environment (T218081-051-0E)

(1) After using the machine in a dusty or sandy environment, check for blockages in the air cleaner element more frequently than the usual inspection interval, and wash or replace the element early.

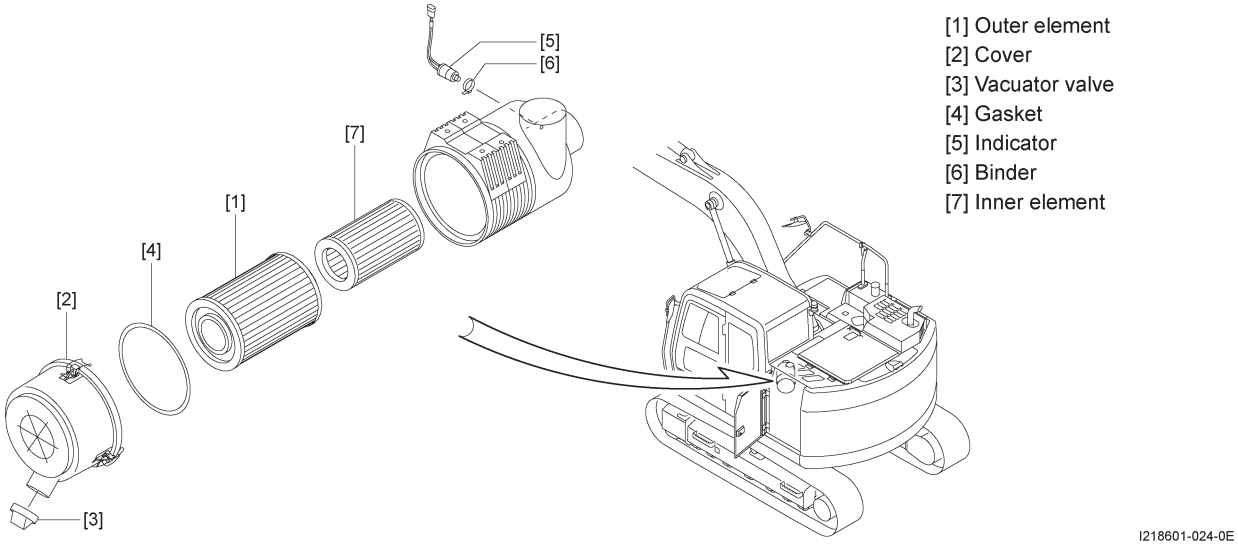

(2) Always keep the hydraulic oil and fuel filler caps securely closed so that dust and sand cannot enter the hydraulic equipment.

(3) Keep the pins, bushes and other greased parts clean and wipe dust, sand etc. away from the grease nipples before you grease them.

(4) Check for blockages in the protector net and cooling fins of the intercooler, the oil cooler and the radiator.

https://truckmanualshub.com/

10-4 Handling near the sea shore (T217361-030-0E)

(1) Preparations for operation
Check that all plugs, cocks, caps and bolts etc. are correctly tightened so that salt cannot enter.

(2) Treatment after operation
After work, wash the machine carefully to remove salt, paying particular attention to the care of electrical devices and hydraulic cylinders, to prevent corrosion. Also grease with care.

10-5 Handling in mud, rain, snow, zones of high humidity, on soft ground

(01E0-0257-0E)

Humidity and mud attack paint, wiring and metal parts causing corrosion. When working under site conditions such as these, keep the machine as dry as possible and grease it thoroughly and carefully.

10-6 Handling in rocky ground (01E0-0258-0E)

(1) Be alert for cracks, wear, breakage and loose bolts in the travel system such as the track shoes etc. Adjust the track shoes to be slacker than usual.

(2) Do not use wide track shoes.

https://truckmanualshub.com/

11. Long-term storage (T218081-052-0E)

If the machine is to be stored for a long period of a month or more, pay attention to the following points to avoid reduced performance the next time the machine is used.

(1) Washing

Thoroughly wash the machine and inspect for any abnormalities in the travel system such as the track shoes etc. Repair any that are found.

(2) Lubrication of each part

After washing the machine, lubricate each part as required.

Apply anti-corrosion oil to those parts, such as exposed parts of the cylinder piston rods, which are particularly prone to corrosion.

Inspect the hydraulic oil and the gear oil of each reduction gear for level and contamination.

Replace these oils if they are contaminated, top them up if their levels are low.

> ⚠ **CAUTION**
>
> Hydraulic oil deteriorates naturally over time even if unused. If the replacement interval expires during an idle period, replace the hydraulic oil even if the actual hours of use are low at the time of your operation.

(01E0-0260-0E)

(3) Battery

Keep the battery disconnect switch to the OFF position "○".

> ⚠ **CAUTION**
>
> When you turn the battery disconnect switch to the OFF position "○", all electric circuits are cut off, and the time information of the clock and the tuning information of the radio are lost.

(T216801-067-0E)

(4) Coolant

If there is any risk of the coolant freezing, mix it with antifreeze.

Normally the coolant is mixed with Long Life Coolant, so no change should be required.

(5) Storage position

Set the machine in the following position to reduce corrosion of the piston rods for a long-term storage.

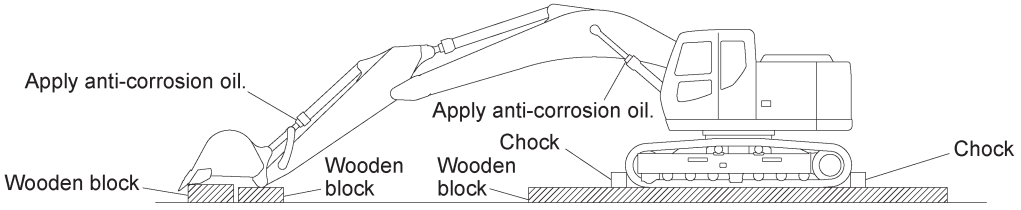

I218411-061-0E

- Store the machine indoors in a dry place. If there is no alternative to outside storage, park it on wooden blocks placed on firm, level ground and cover with a tarpaulin.
- Fully retract the exposed parts of the cylinder piston rods.
- Always lower the bucket to the ground and place chocks against the track shoes.
- Move the safety lock lever to the lock position.

(6) Run the machine occasionally during storage for lubrication purposes.

If the film of oil over a part breaks and corrosion results, the corrosion can cause abnormal wear next time the machine is run. Once a month you should start the machine and move its parts to circulate the hydraulic oil.

- If the battery disconnect switch is kept at the OFF position "○", turn it to the ON position "|".

https://truckmanualshub.com/

- Before you start the engine, check the levels of engine oil and coolant and top them up if necessary.
- Thoroughly wipe the anti-corrosion oil off the cylinder piston rods.
- After starting the engine and running it for an adequate warm-up period, go through the motions of traveling, swing and digging several times until each part moves smoothly.

https://truckmanualshub.com/

12. Towing (T218621-011-0E)

If the machine cannot get out of soft ground etc. by its own traction, observe the following procedure strictly.

⚠ WARNING

- Do not use the brackets at the front and rear of the traveling frame when towing this machine.
- During the towing operation nobody should stand between the towing and the towed machines.
- Take care that towing does not impose sudden or intermittent loads.
- Always use the shackle for towing. Connect the shackle horizontally and straight against the traveling frame.
- Set the traveling mode selection switch of the towed machine to "slow speed".

(T218081-211-0E)

(1) Towing method

When the machine cannot get out of soft ground etc. by its own traction, or for towing heavy loads, attach wire ropes of adequate strength to the traveling frame and pull.

Place wooden blocks between the wire ropes and the traveling frame to prevent chafing damage to either side.

Perform towing operation slowly at 1 km/h or less within a few meters.

Allowable towing force: 109000 N (11100 kg)

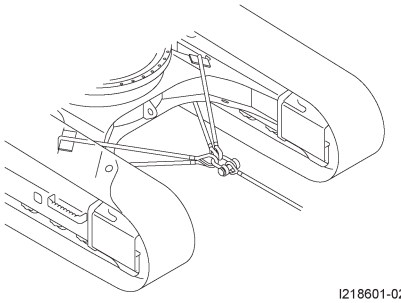

I218601-025-1J

(2) How to tow light objects

Use the brackets at the front and rear of the traveling frame when towing light objects using this machine.

Allowable towing load: 57200 N (5800 kg) or less

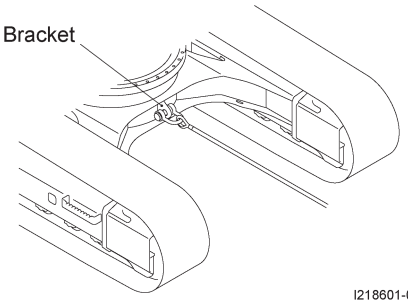

I218601-026-1E

(3) Do not use the transport brackets when towing.

Do not use the transport brackets provided at the front and rear of the traveling frame when towing.

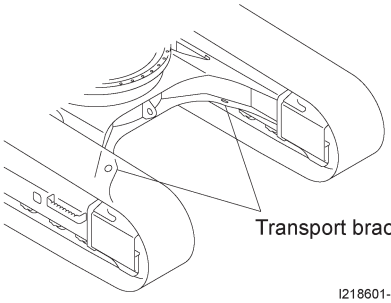

I218601-027-0E

⚠ CAUTION

Always use the shackle when towing.

If you tow diagonally or use the brackets to tow heavy objects, you will damage the brackets and the frame.

(01E0-0263-0E)

https://truckmanualshub.com/

13. Transportation (01EE-0264-0E)

Always use ramps when loading and unloading the machine. Keep the angle of the ramps to 15° or less.
In rain and other slippery conditions apply material for improved traction to the ramps.
Place wooden blocks or sleepers against the track shoes to guard against forward or backward movement or sideways sliding due to the vibration of the trailer under transportation and secure the machine well to the flatbed with wire ropes.

⚠ WARNING

Precautions on loading and unloading the machine

- Never use the front attachment to jack up the machine for loading and unloading the machine as this is extremely dangerous.
- Keep the angle of the ramps to 15° or below. Arrange the gap between them so the center line of the machine will lie on that of the trailer and that the track shoes of the machine will pass along the center of each one.

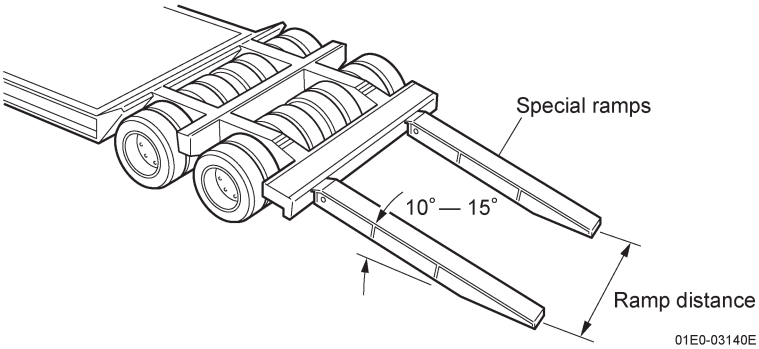

- Use ramps which have an ample margin of strength for the task.

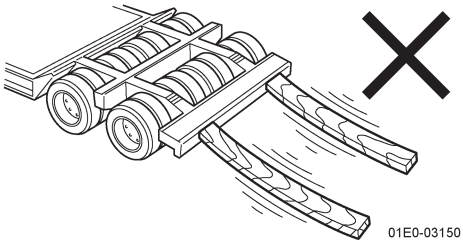

- In rain and other slippery conditions apply material for improved traction to the ramps.

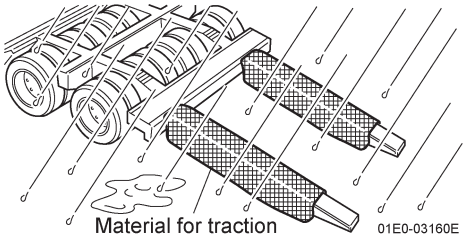

- If you dismount the front attachment before loading or unloading the machine, remember that the center of gravity will move towards the rear, so proceed with the counterweight on the upper end of the ramps.

(01E0-0265-0E)

https://truckmanualshub.com/

13-1 Preparations for transportation (01EE-0266-1E)

(1) Confirmation of specifications

Be sure to confirm the laws, regulations, etc. of the country where the machine is transported.

Before transporting the machine, refer to the section "Dimensions and weight" to check its operating weight and overall height, width and length.

(2) Points to investigate and confirm

Be sure to confirm the laws, regulations, etc. of the country where the machine is transported.

Before you leave, investigate the road widths, bridges, road surfaces, traffic volumes and other conditions along your intended route.

In particular check limitations on the operating weight and height of the machine imposed by bridges, tunnels etc.

(3) Selection of the truck and trailer

Choose a truck or trailer that is suitable for the operating weight and overall height, width and length of the machine.

(4) Position for transportation

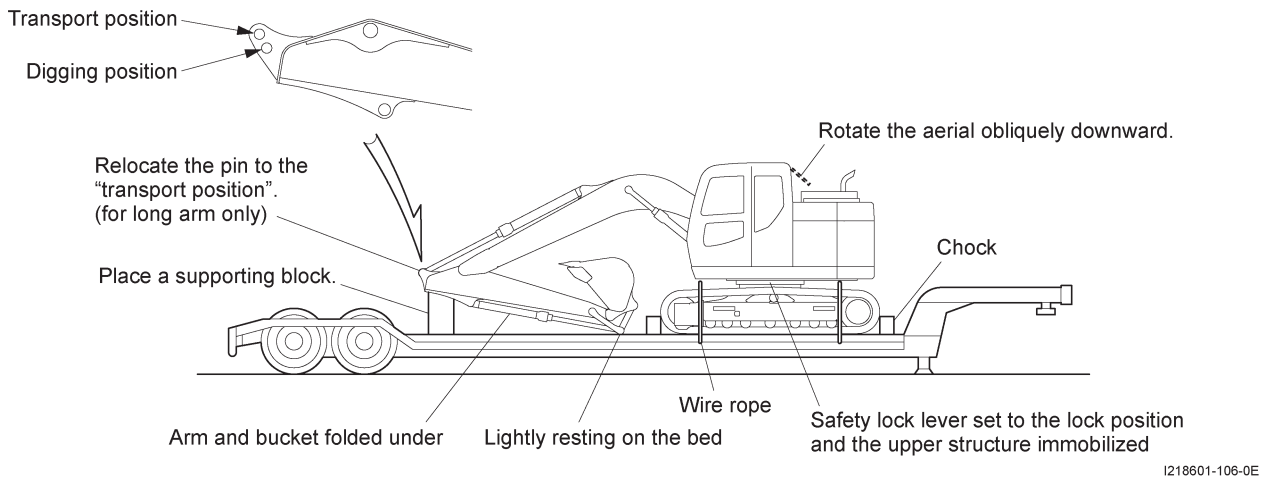

⚠ CAUTION

Always rotate the aerial obliquely downward before transporting the machine so that it does not protrude from the top surface of the cab.

The working lamp (optional) on top of the cab must be folded forward to reduce the overall height.

The side-view mirror which extends beyond the width of the truck or trailer should de removed from the stay and stored safely inside the cab etc.

(T218601-033-0E)

https://truckmanualshub.com/

13-2 Using the transport brackets (T218601-034-0E)

(1) Confirm the machine operating weight, overall height, overall width, overall length, and other information before transporting the machine.
(2) Confirm that the given weight, height, width, and length are not a problem for the chosen method of transport.

Use the wire rope and the transport brackets provided at the front and rear of the lower structure, specified on the nameplate indicated below, to secure the machine on the trailer or truck bed during transport.

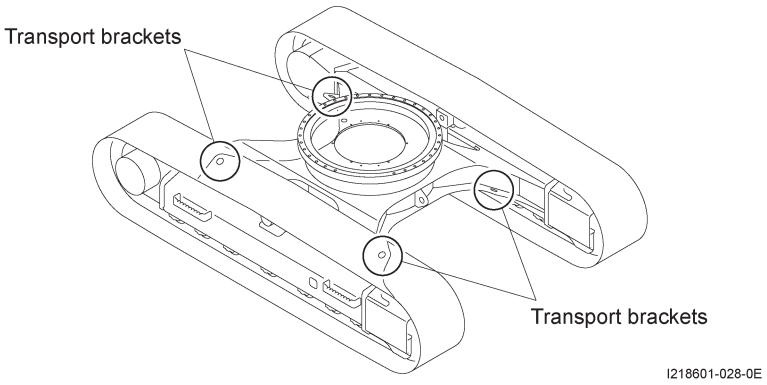

Only use the transport brackets for shipping weights less than 16.5 tons.
Adjust the wire rope positions for securing the machine within the range indicated below.
Use four wire ropes of the same length.

Use a shackle that meets or exceeds JIS B 2801 SB38 standards (minimum operating load capacity of 88.3 kN) in four locations.
Use wire ropes with a nominal diameter of at least 31.5 mm (minimum breaking strength of 672 kN), as specified in JIS G 3525 IWRC6×Fi(29), in combination with appropriately sized thimbles.

Configuration	Standard lower structure configuration	LC lower structure configuration
	Dimensions (mm)	Dimensions (mm)
500mm shoe	W=2490 A=1250 ~ 1450 * L=8720 ~ 8920	W=2490 A=1200 ~ 1350 * L=8800 ~ 9000
600mm shoe	W=2590 A=1250 ~ 1450 * L=8720 ~ 8920	W=2590 A=1200 ~ 1350 * L=8800 ~ 9000
700mm shoe	W=2690 A=1250 ~ 1450 * L=8720 ~ 8920	Not specified

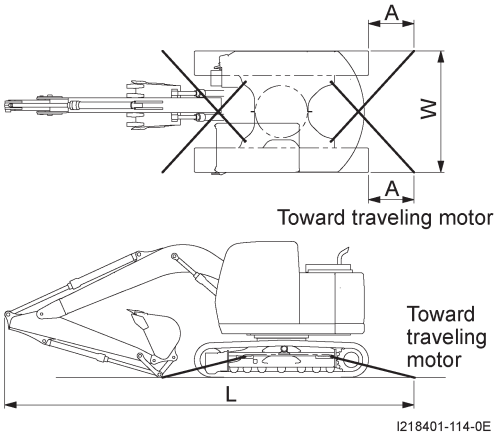

NOTE
* The indicated dimensions assume a 2.5 m arm.

(T218601-015-0E)

https://truckmanualshub.com/

13-3 Loading and unloading the machine (T218601-016-0E)

(1) Apply the trailer brakes securely and place chocks against the tyres so they cannot move.

(2) Carry out loading and unloading the machine on level ground.

(3) When moving the machine onto or off the trailer, always use ramps.

(4) Go through the following steps before loading or unloading the machine.

1. Accelerator dial ·····medium speed or less
   (Set to a medium speed for the machine with the dozer blade mounted.)
2. Traveling mode selection switch ··· slow speed (🐢)
3. Automatic warm-up running ····· disabled
4. Auto-slow mode ····· OFF

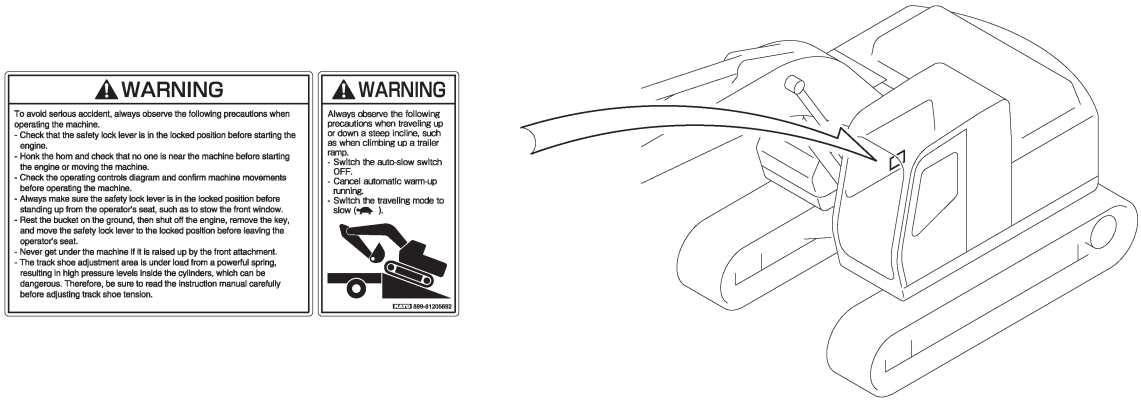

I218621-053-0E

(5) Before climbing the ramps, check their direction and position.

> **⚠ WARNING**
>
> - If you attempt to turn or swing while on the ramps, there is a strong danger that the machine will fall off. If turning or swing is required, retreat to level ground, turn or swing as necessary, then climb the ramps.
> - Check that the door is locked in place, whether it is open or closed.
> Do not open or shut the door while the machine is on the ramps.

(01E0-0269-0E)

(6) Take care when moving over the edge between the ramps and the trailer because the machine's center of gravity will shift suddenly.

NOTE

For security use the bucket as an extra prop so the machine is supported in three places.

(7) Once the machine is loaded in position, turn the starter key to "OFF".

(8) Place chocks against the track shoes and protective wooden blocks on corners to prevent chafing damage. Tie it securely in place with wire ropes or chains.

https://truckmanualshub.com/

14. Machine hoisting procedure (01E0-0270-1E)

You must strictly observe the following procedure and precautions when using a crane to hoist this machine.

⚠ DANGER

- Before hoisting, check the weight and dimensions etc. against the specifications.
- Never hoist the machine while anybody is on it or inside it.
- Use only wire ropes which are strong enough to support the weight of the machine.
- The machine must be in the specified hoisting position before you start.
- Move the safety lock lever to the lock position and stop the engine before you start.
- Do not stand near or under the machine while it is off the ground. Do not allow anyone else to do so.

(01E0-0271-0E)

(1) Start the engine and set the machine to the specified hoisting position.
(2) Move the safety lock lever to the lock position.
(3) Stop the engine, check around the operator's seat for safety and then leave the machine. Close the front window, side window and door.
(4) Check that the engine hood and machine compartments are securely closed.
(5) Attach wire ropes to the designated positions on the traveling frame.
(6) Hoist the crane wire rope until the wire ropes are taut, then stop hoisting and check that the hook position is directly above the center of gravity of the machine.
(7) Once the machine has been hoisted clear of the ground, check that there is no leakage from the hydraulic circuit at the bottom end of the boom cylinder which would alter the hoisting position. Then proceed to hoist the machine while closely watching its state of balance.

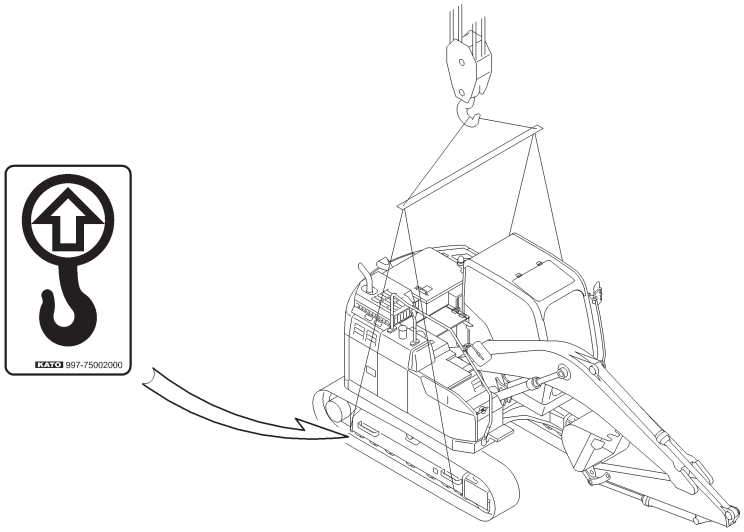

I218601-101-0J

https://truckmanualshub.com/

15. Cab protective structure (T218611-017-0E)

The cab (excluding the demolition cab) conforms to ISO 12117-2 (ROPS) and ISO 10262 top guard (FOPS) level I, without the cab guard installed.

> ⚠ **CAUTION**
>
> When the cab guard is installed on the demolition cab, it conforms to ISO 10262 top guard (FOPS) standards.

(T218611-020-0E)

https://truckmanualshub.com/

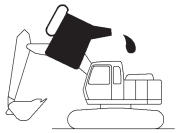

05E0-00070

Inspection and servicing

1. Precautions on inspection and servicing 157

2. Inspection and servicing table 165

3. Lubrication 175

3-1 Precautions on lubrication 175

3-2 Lubricants added at the factory 177

3-3 Recommended lubricants table 179

3-4 Greasing chart 181

3-5 Oiling chart 183

4. Inspection and servicing of each part 184

4-1 Engine-related 185

4-2 Hydraulic system-related 213

4-3 Travel-related 226

4-4 Swing-related 229

4-5 Front attachment-related 230

4-6 Electrical system-related 232

4-7 Air conditioner-related 238

4-8 Cab and control system 245

https://truckmanualshub.com/

1. Precautions on inspection and servicing (T218341-033-0E)

Inspection and servicing are as important as lubrication as they have a great influence on the lifespan of the machine and are highly significant in maintaining safety. Inspect and service the machine regularly to keep yourself aware of its condition and preserve its safety and economic performance.
Refer to the inspection and servicing points and methods described below and observe them correctly.

(1) Regular independent inspection
Draw up an inspection and servicing schedule and implement it.

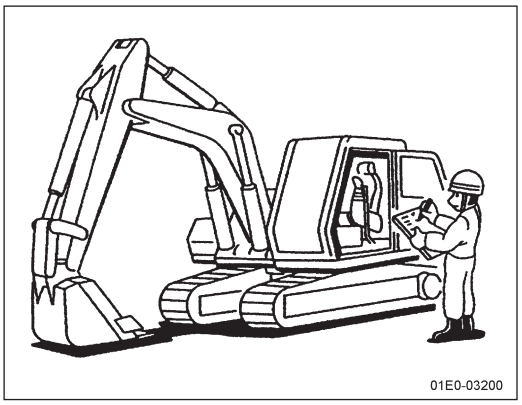

(2) Keeping independent inspection records
The regular independent inspection must be carried out, the results recorded and preserved.

(3) Repair of broken or malfunctioning parts
- If you discover a breakdown or malfunction during an independent inspection or preoperational check, it must be repaired immediately.
- Operation with such problems unrepaired is highly dangerous. Never start work before all repairs are complete.

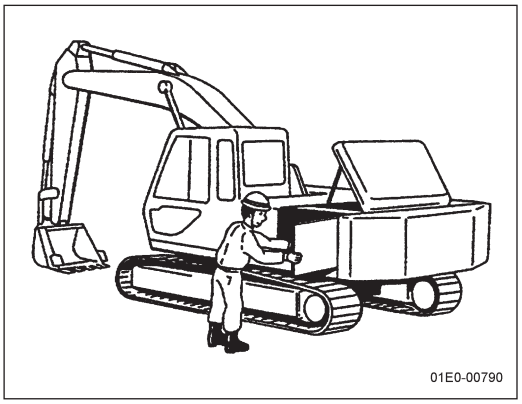

https://truckmanualshub.com/

(4) Park the machine on level ground for inspection and servicing
- Choose a work site which is firm, level and free of hazards.
- Always lower the bucket to rest on the ground.
- If the machine is fitted with a dozer blade, it should be resting on the ground.
- Stop the engine and remove the key.
- Put the warning tag.
- Place chocks to immobilize the track shoes.

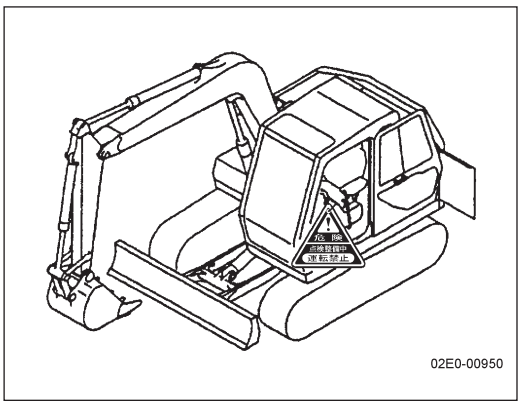

(5) Each piece of equipment is rigorously tested and tuned before shipping. Tuning outside your authorised KATO dealer is forbidden.

(6) Repairs to the boom and arm require special techniques.
Contact your authorised KATO dealer.

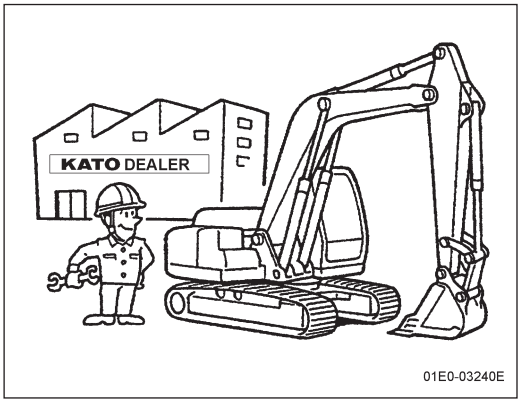

(7) Wear protective clothing and equipment
- Wear a helmet, protective goggles, safety boots, gloves etc. when inspecting and servicing the machine.
- Metal splinters can fly off when you are using a hammer or grinder, so always wear proper protective clothing and equipment when using these tools.

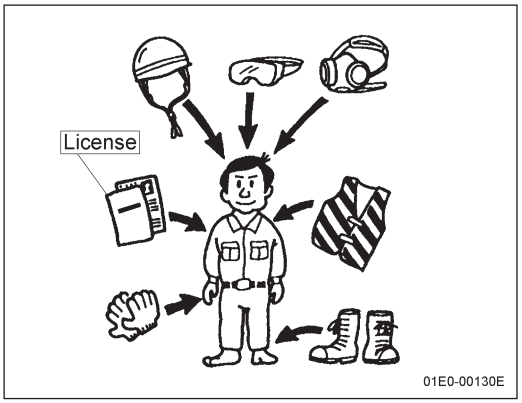

(8) Supporting attachments
- Always rest the attachment on the ground during inspection and servicing.
- It is dangerous to replace or repair hydraulic hoses, joints or other hydraulic equipment while the attachment is raised in the air.
It must be lowered to the ground.

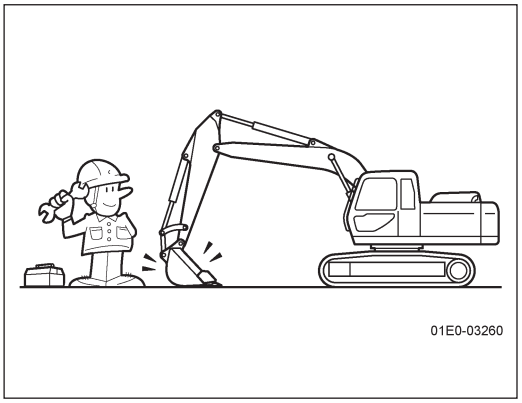

https://truckmanualshub.com/

(9) Relieve hydraulic pressure

- After stopping the engine, set the starter switch to the "ON" position, move the safety lock lever to the "release" position, and move the control levers for one or two minutes to relieve pressure.
- It is dangerous to replace or repair hydraulic hoses, joints and equipment without relieving pressure first.

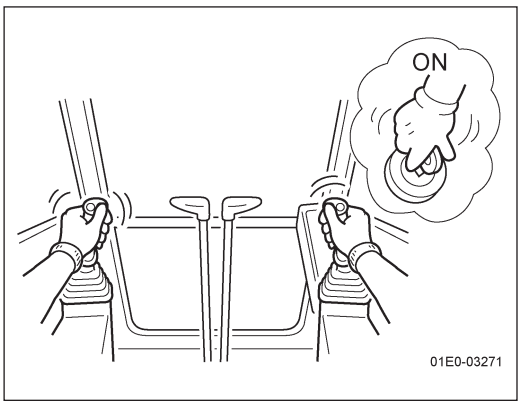

(10) Beware of highly pressurized oil

- Hydraulic oil or reduction gear oil at high pressure can cause serious skin and eye injuries.
  Before cutting or opening a hydraulic pipe, always relieve the pressure inside it.
- Oil leakage may not be visible to the eye, so check with thick paper or wood-shavings. Do not detect oil leakage by naked hand or finger.
- Wear protective goggles to protect your eyes.
- If oil penetrates your skin, consult a doctor well experienced immediately.

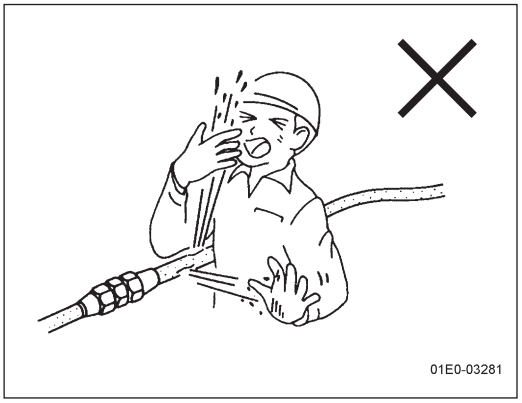

(11) Precautions on replacing seals etc.

- After you remove an O-ring or other seal, wash the surfaces on which it was fitted before you fit the replacement.
- Before you fit an O-ring or other seal, check that it is undamaged and cover it with a film of oil. If you find a defective seal of any kind, do not use it because it could cause oil leakage.

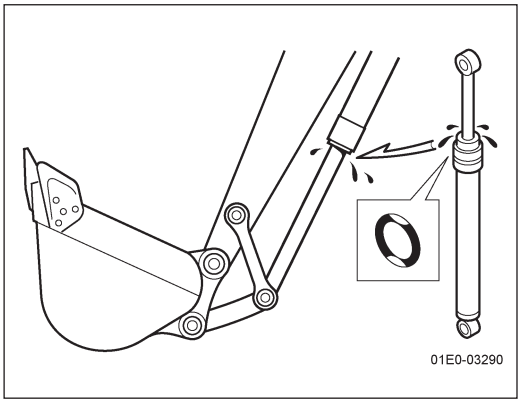

(12) Be careful when you open the radiator cap

- When the radiator coolant is hot, it could spray out dangerously when you take the radiator cap off, possibly causing burns.
- If you have to take the radiator cap off, wait until the coolant has had time to cool and slowly loosen the cap to allow pressure to dissipate before you remove it.

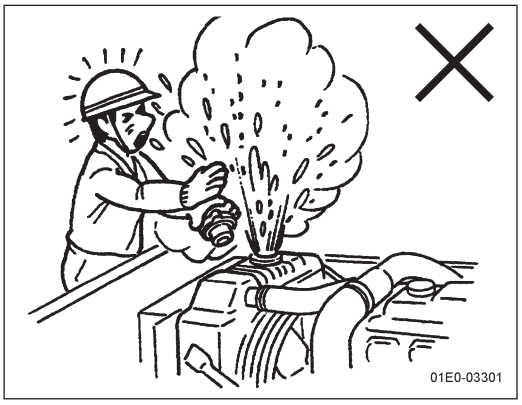

https://truckmanualshub.com/

(13) Do not allow water to enter when you top up with oil

When you replenish fuel or DEF/AdBlue® or replenish or replace hydraulic oil or coolant, take care to avoid the entry of water or dust. If water gets in, it will cause corrosion and breakdowns.

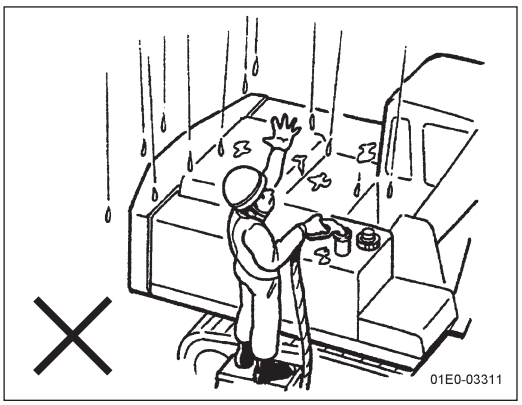

(14) Use genuine KATO or KATO-approved lubricants and filters

- When you add or replace lubricants or replace parts such as filters etc., always use genuine KATO or KATO-approved products.
- If you use any products which are not made or approved by KATO, we will not be in any way liable for resultant accidents or breakdowns.

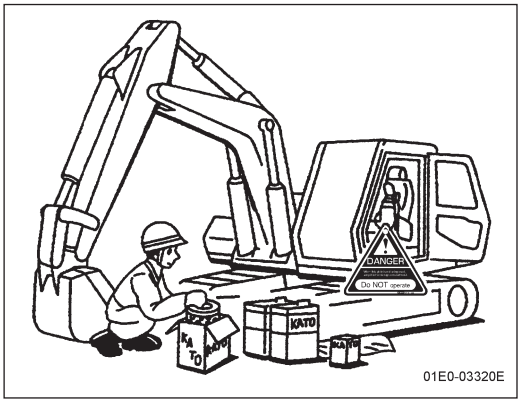

(15) Dispose of waste oil carefully

- If you dispose of waste oil, used filters and other waste products of the machine carelessly, you will cause environmental pollution.
- When you drain waste oil from the hydraulic equipment or oil reservoir, catch it in a proper container.
  Waste oil is environmentally harmful. Dispose of it thoughtfully.
- Never allow it to pour onto the ground or dump it in streams, rivers or wetlands.
- Follow the relevant regulations when you dispose of oil, fuel, DEF/AdBlue®, coolant, solvents, filters, batteries, or any other hazardous or potentially hazardous materials.

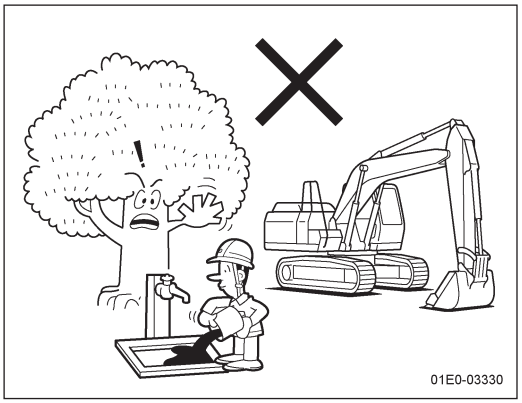

(16) Always keep cleanliness in mind when you handle the hydraulic equipment, engine or electrical parts.

The hydraulic equipment, engine and electrical parts are precisely adjusted. Always do your best to work cleanly.

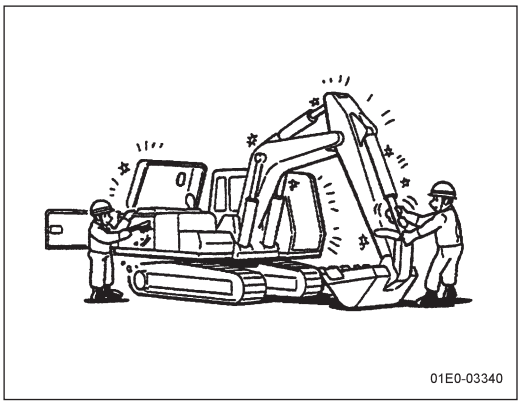

https://truckmanualshub.com/

(17) Precautions when washing the machine

- While washing the machine, you may lose your footing and fall down, so wear slip-resistant boots while washing the machine. If you are using high-pressure steam for cleaning, the jet can cut your skin and mud etc. can splash back into your eyes. Therefore, whenever washing the machine, with high-pressure steam or otherwise, always wear protective wear. Coming in contact with the steam or high pressure water could cause burns or other injury.
- If you spray water on electrical equipment during washing, it could break down or malfunction, so work carefully to avoid wetting the electrical equipment.

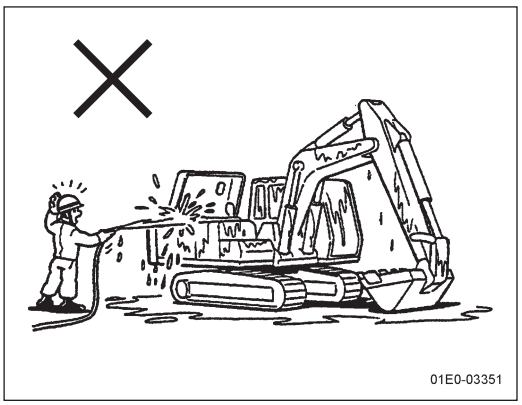

(18) Precautions when working in high places

- When you are working in high places, take precautions to avoid falling off.
  Keep the area you are standing on tidy (no tools scattered around) and clean (wipe off any spilled oil or grease), and walk carefully to avoid slipping.
- When climbing and descending, use the hand grips and platforms and always keep yourself adequately supported on at least three points at any time. Wear a safety harness and other safety equipment as necessary.

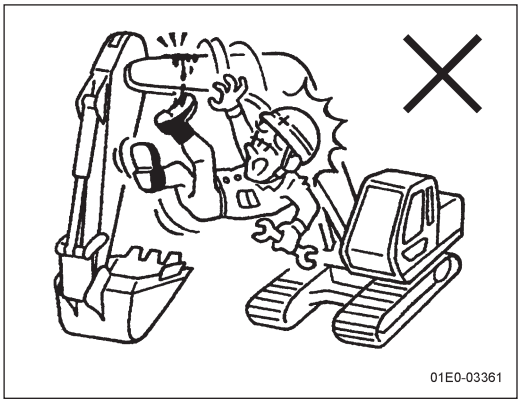

(19) Precaution when climbing on the machine

Always step on the areas with a non-slip treatment.

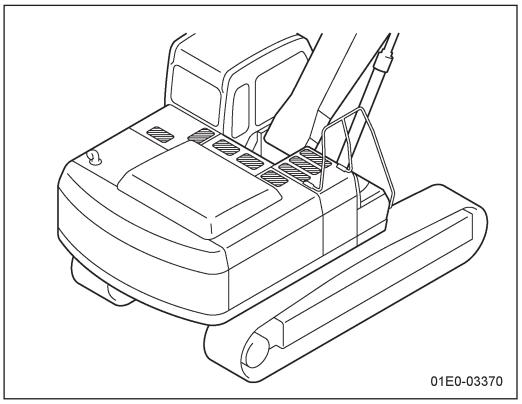

(20) Stop the engine before inspection and servicing

- It is dangerous to inspect and service the machine while it is moving.
- Always stop the engine before you start work unless the task you are about to perform needs the machine to be moving.

https://truckmanualshub.com/

(21) Servicing with the engine running is a job for two people

- Avoid servicing the machine while it is working if at all possible.
- If it is unavoidable, work with at least two people. One of you must be in the operator's seat to be able to stop the engine at any time and all those involved must be in constant contact.
- If you work near rotating parts, take care not to be trapped or dragged in.

(22) Precautions when welding

- There is a risk of fire when welding due to possible damage to electrical equipment or generation of gas from hot paint.
- Employ a qualified welder for the job and carry it out in a properly equipped place.

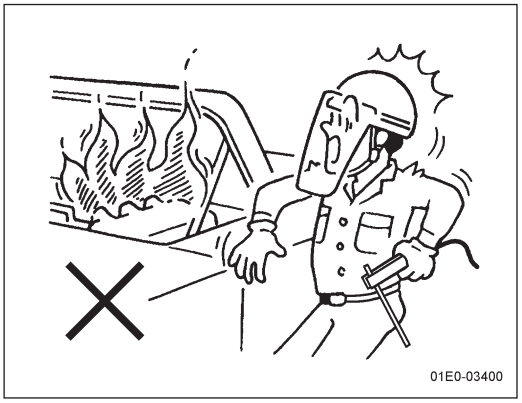

(23) Basic precautions before welding

- Turn the starter switch to OFF.
- Turn the battery disconnect switch to the OFF position "○".
- Cut away the paint from the area to be welded so that it cannot produce gas.
- Attach an earth connection within one meter of the weld point with no O-rings or bearings between the weld and earth points.
- Always wear protective equipment and make sure the ventilation is adequate.
- Remove flammable materials and place a fire extinguisher nearby.
- If you don't turn the starter switch to OFF and turn the battery disconnect switch to OFF before welding, the electrical or electronic equipment could malfunction or the batteries could explode dangerously.

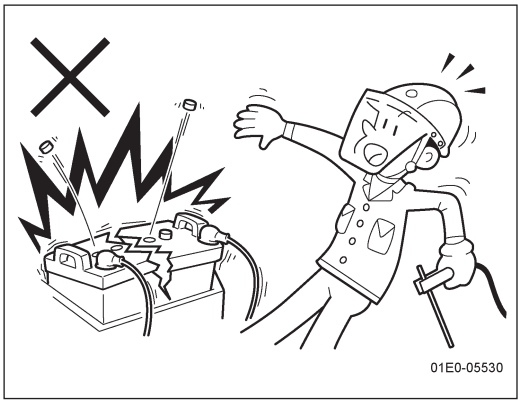

https://truckmanualshub.com/

(24) Turn the battery disconnect switch to OFF.

- When servicing any part of the electrical system or when welding, there is the risk that a short circuit could occur and place load on the batteries. The batteries generate flammable gas causing the risk of an explosion. The battery electrolyte is dilute sulfuric acid which will burn skin on contact.
- Damage to the batteries is extremely dangerous, so always turn the battery disconnect switch to the OFF position "○" before servicing any part of the electrical system or welding.
- The DEF pump continues to operate for 5 minutes after the engine stops. Do not turn the battery disconnect switch to the OFF position "○". Doing so could cause the DEF pump to malfunction. Before you turn the battery disconnect switch to the OFF position "○", wait for at least 5 minutes after the starter switch is set to the "OFF" position.

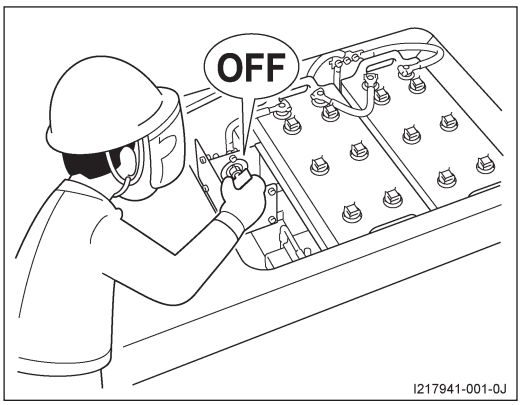

(25) The equipments are hot immediately after the engine stops

- The equipments are hot immediately after the engine stops, so you could be burned if you touch them. In particular the engine, silencer, oil reservoir, coolant, radiator, sliding parts, hydraulic equipment, pipes etc. will be very hot.
- Wait for all parts to cool before you begin inspection and servicing.

(26) Illumination

- If you are working in poor light, you cannot see well enough what you are doing, so you could injure yourself.
  Before operation, prepare illumination enough to light the working place.
- Do not use a lighter or other flame in place of a lamp to light dark places. You could start a fire or cause an explosion by igniting gas generated by the battery.
- Use an explosion-preventive type of lamp when looking at the battery or fuel.
- The power socket for the lighter on the dashboard in the cab can be used as the 24V power source for up to 10A.

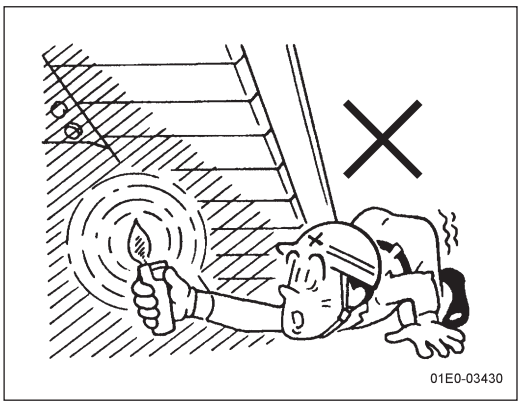

https://truckmanualshub.com/

(27) Do not heat hydraulic equipment or pipes

- If you heat hydraulic equipment or pipes or areas near them, it could generate and ignite flammable vapour or smoke.
  Avoid welding, soldering or heating with a torch near hydraulic equipment or pipes.
- If you directly heat pressurized pipes or rubber hoses, they may rupture suddenly.

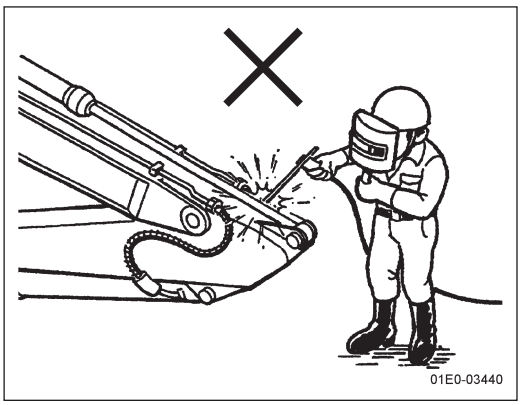

(28) Lock all inspection covers

- If you leave the inspection covers open, they can swing shut suddenly when the wind blows and trap fingers etc.
- When you open an inspection cover or cab door, always use the stopper to lock it securely in the fully open position.
  When there is a strong wind, do not open the door or covers.

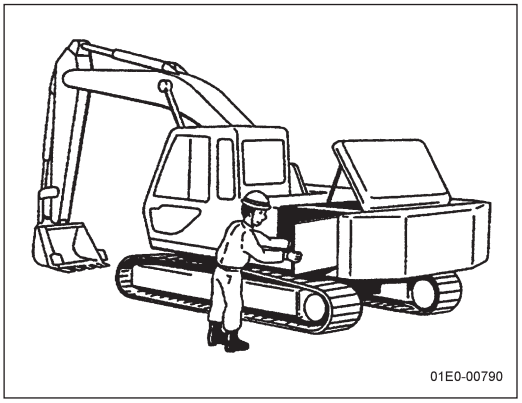

(29) Prevent flying parts

- The grease inside the adjuster cylinder is under high pressure. Ignoring the following precautions could cause serious injury or death.
- Do not remove the drain plug.
- Keep your face and other body parts away from the plug, which could be ejected.

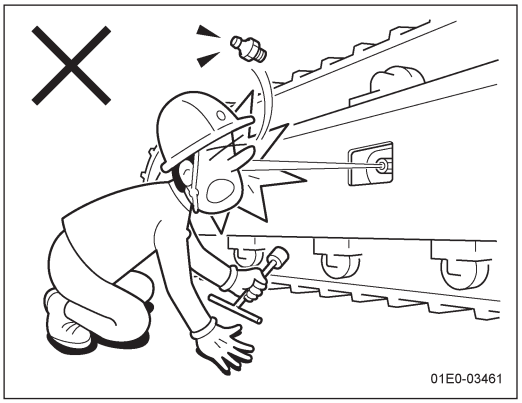

https://truckmanualshub.com/

2. Inspection and servicing table (T217381-070-0E)

Follow the "Inspection and servicing table" to carry out the correct inspection and appropriate servicing necessary for safe and efficient work.

⚠ CAUTION

- The intervals stated in the inspection and servicing table are based on the elapsed time indicated by the hour meter.
  Follow both the passage of dates and of hours of operation and carry out each inspection item when one of the times is reached, whichever occurs sooner.
- If you discover any damage, breakdown or malfunction, repair it immediately. Do not leave it for later and do not start work before it is repaired.
- For the inspection and replacement methods for the engine, refer to the separate engine manual.
- The inspection intervals for this machine are based on standard operations and working conditions.
  Under severe conditions, the inspection and replacement intervals should be shortened accordingly.
- If any method or interval of inspection and servicing is unclear, contact your authorised KATO dealer.

(01EE-0275-0E)

https://truckmanualshub.com/

2. Inspection and servicing table

(1) Part names for inspection and servicing

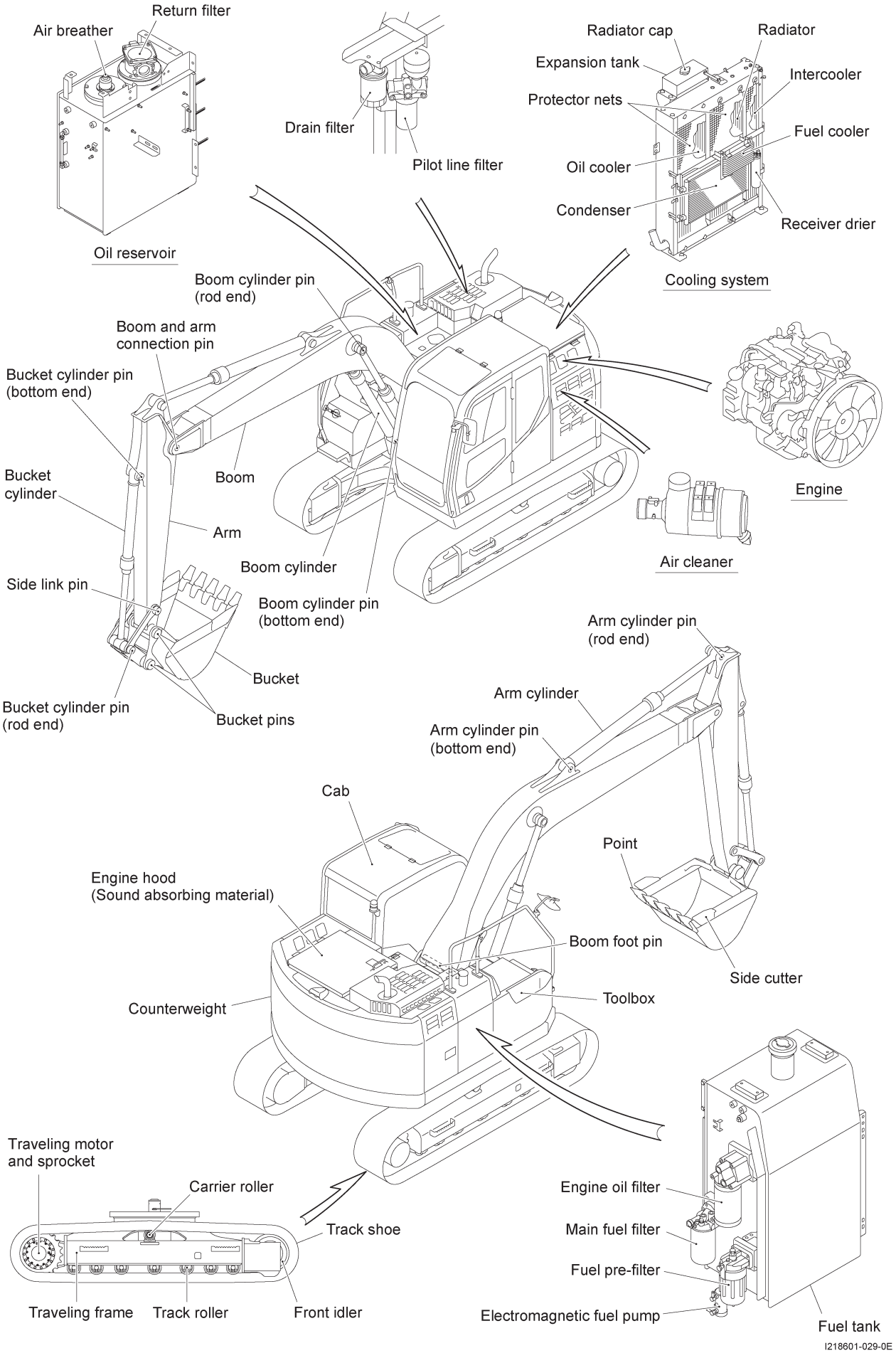

https://truckmanualshub.com/

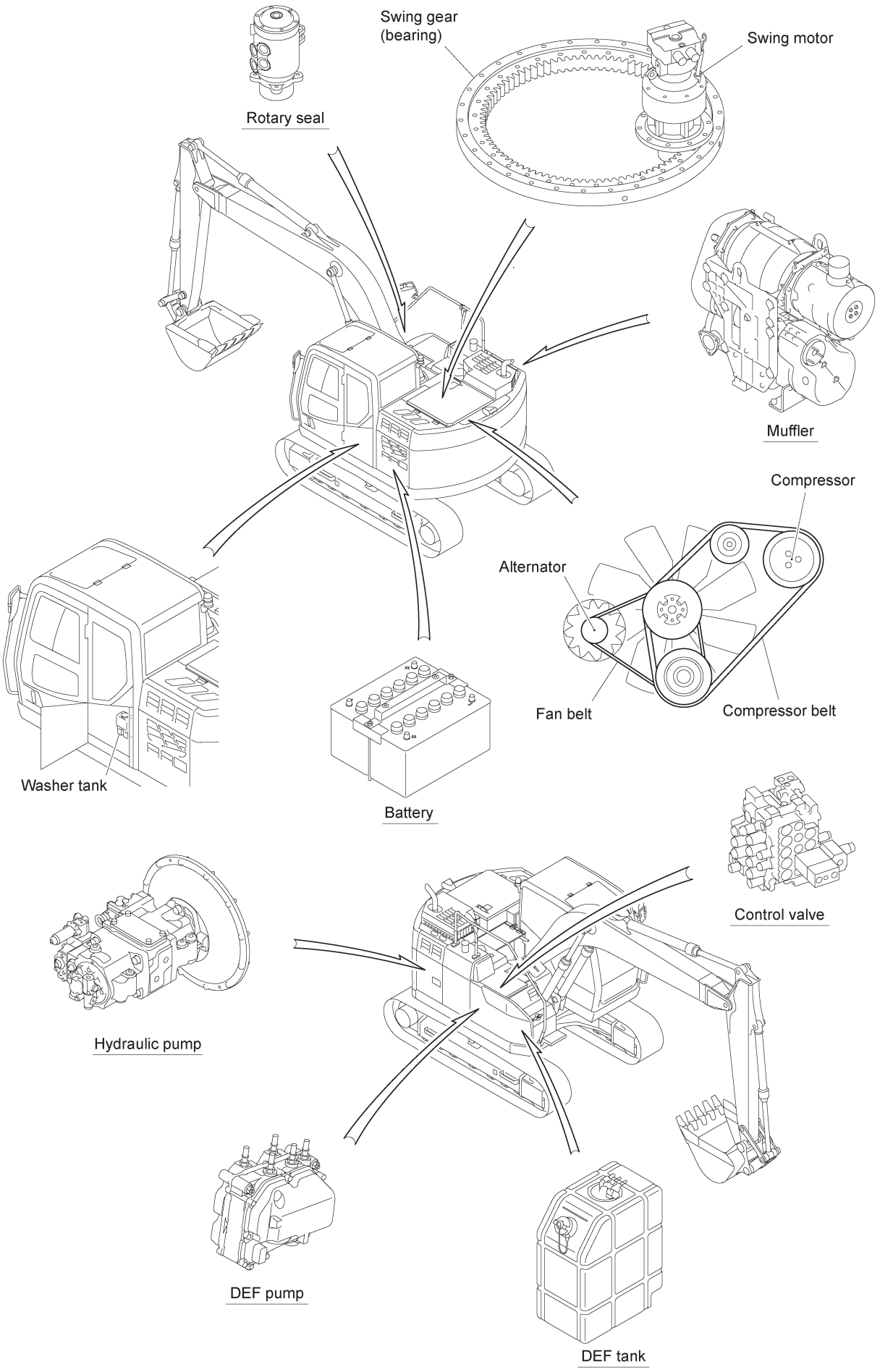

I218601-030-0E

https://truckmanualshub.com/

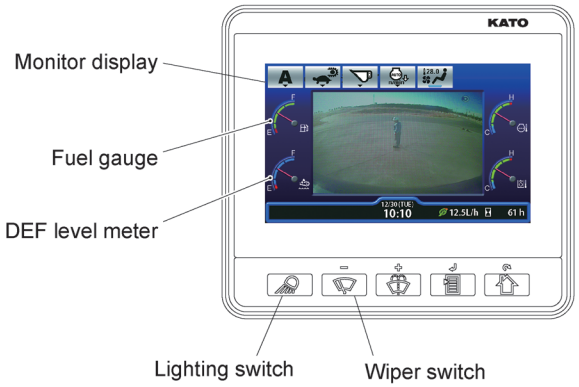

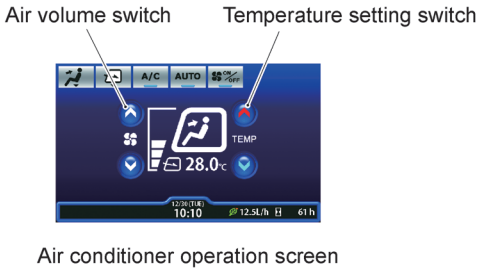

Air conditioner operation screen

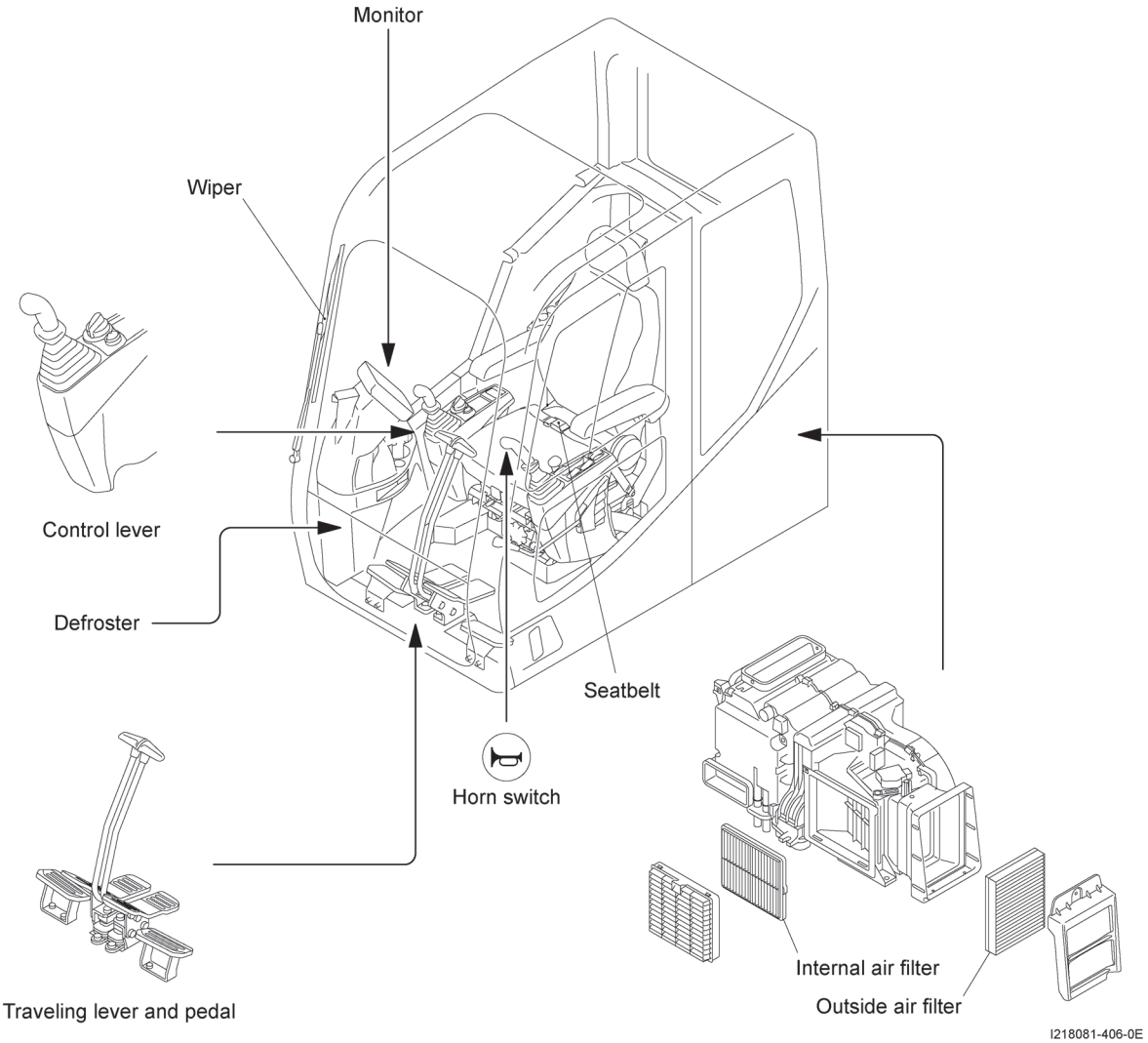

https://truckmanualshub.com/

☆ ····· First oiling/inspection/replacement after delivery of a new machine
○ ····· Normal operation
∗1 ····· Every 2 years
∗2 ····· When using KATO recommended hydraulic oil: Every 2000 hours of operation
When using JXTG Nippon oil & Energy Corporation HYRANDO WIDE KV32, KV46 or KV68: Every 5000 hours of operation
When operating the breaker or crusher: Every 750 hours of operation
∗3 ····· When replacing the hydraulic oil
∗4 ····· Every 5 years
∗5 ····· Every 4500 hours of operation or 3 years
∗6 ····· First 50 hours of operation after delivery of a new machine
∗7 ····· When operating the breaker or crusher
∗8 ····· Every 250 hours of operation depending on the fuel management condition
EO ····· Engine oil
GO ····· Gear oil
EG ····· Extreme-pressure bearing grease
SG ····· Chassis grease

	Part	Inspection location and service task	Task	When defective	Daily		Weekly or 60h	Monthly or 100h	Every 250h	Every 6 months or 500h	Yearly or 1000h	Oil Part to change	Reference section	
					Pre-operationa								Operation section	Inspection and servicing section
General appearance	External dents or damage		Inspect	○								—	—	4
	External damage of devices and equipment		Inspect	○								—	—	4
	Looseness of bolts and nuts		Inspect	○								—	—	4
	Looseness, short circuit, or damage of the wiring		Inspect	○								—	—	4
Engine-related	Engine and engine mounting	Does the engine start well?	Inspect		○							—	3-3 6-1	—
		Idling and acceleration (rated) status	Inspect				○					—	3-3 6-1	—
		Exhaust gas color	Inspect		○							—	Separate engine manual	
		Exhaust status	Inspect		○							—	Separate engine manual	
		Abnormal noise on starting, running or stopping	Inspect		○							—	3-3 6	—
		Stopping behavior	Inspect		○							—	3-3 6-7	—
		Slack in the exhaust pipe or muffler	Inspect		○							—	—	4-1-4
		Loose wires, short circuits, breakage	Inspect		○							—	—	4
		Loose or missing attachment bolts	Inspect		○							—	—	4
		Valve clearance	Inspect Adjustment								○	—	Separate engine manual	
		Compression pressure	Inspect								○	—	Separate engine manual	
		Alternator electricity generation	Inspect		○							—	7	—
		Sound absorbing material	Inspect		○							—	—	2
			Replace	○							∗4	—	—	2
		Rotation status of the turbocharger	Inspect								∗5	—	Separate engine manual	

https://truckmanualshub.com/

2. Inspection and servicing table

	Part		Inspection location and service task	Task	When defective	Daily: Pre-operationa	Weekly or 60h	Monthly or 100h	Every 250h	Every 6 months or 500h	Yearly or 1000h	Oil Part to change	Reference section: Operation section	Reference section: Inspection and servicing section
Engine-related	Lubrication system		Engine oil	Check for dirt and check oil level		○						—	—	4-1-2
				Replace						○		EO	—	4-1-2
			Oily grime on each part (including check for damage or deterioration to hoses)	Inspect		○						—	—	4-1-2
			Oil filter	Replace						○		Filter element	—	4-1-3
	Cooling system		Slack, tension, crack, or damage of the fan belt	Inspect		○						—	—	4-7-4
				Replace	○							V-belt	Separate engine manual	
			Radiator and intercooler cores, fins, expansion tank, and reserve tank	Inspect and clean		○						—	—	4-1-14
			Coolant	Check for dirt and check oil level		○						—	—	4-1-14
				Replace							＊1	Coolant	—	4-1-14
			Radiator cap function	Inspect						○		—	—	4-1-14
			Water leakage from each part (including check for damage or deterioration to hoses)	Inspect		○						—	—	4-1-14
			Fan damage and attachment status	Inspect						○		—	—	2
	Air intake system	Air cleaner element (outer)		Inspect		○						—	—	4-1-13
				Clean					○			—	—	4-1-13
				Replace							○	Element	—	4-1-13
		Air cleaner element (inner)		Replace							○	Element	—	4-1-13
	Fuel system	Fuel tank		Check oil level		○						—	1-6 7-1	2
				Drain water and settled particles						○		—	—	4-1-12
				Clean the cap strainer		During oil feeding						—	1-6	—
		Main fuel filter		Replace					＊8	○		Cartridge	—	4-1-9
		Fuel pre-filter		Inspect		○						—	—	4-1-8
				Drain water and settled particles	○							—	—	4-1-8
				Replace					＊8	○		Element	—	4-1-8
		Electromagnetic pump filter		Clean					＊8	○		—	—	4-1-11
		Feed pump strainer		Clean					＊8	○		—	—	4-1-10
				Replace	○							Strainer	—	4-1-10

https://truckmanualshub.com/

	Part		Inspection location and service task	Task	When defective	Daily	Weekly or 60h	Monthly or 100h	Every 250h	Every 6 months or 500h	Yearly or 1000h	Oil Part to change	Reference section	
						Pre-operationa							Operation section	Inspection and servicing section
Engine-related	Fuel system	Oil leakage from each part (including check for damage or deterioration to hoses)		Inspect			○					—	—	4-1-7
		Injector		Inspect and clean							＊5	—	Separate engine manual	
	SCR system	DEF/AdBlue®		Check DEF level		○						—	1-7 7-1	—
		DEF/AdBlue® or cooling water leakage from each part (including check for damage or deterioration to hoses)		Inspect		○						—	—	4-1-4
		DEF pump filter		Replace							＊5	Element	—	4-1-5
		DEF tank suction filter		Replace							＊5	Filter	—	4-1-6
		SCR system		Inspect							＊5	—	Separate engine manual	
	Exhaust system	Device to prevent diversion of carbon monoxide and other gases	EGR valve	Inspect and wash							＊5	—	Separate engine manual	
			EGR cooler	Inspect and wash							＊5	—	Separate engine manual	
Hydraulic system-related	Oil reservoir		Hydraulic oil	Check for contami-nation				○				—	—	4-2-1 4-2-5
				Check oil level		○						—	—	4-2-1 4-2-5
				Replace							＊2	Hydraulic oil	—	4-2-5
			Suction strainer	Clean							＊3	—	—	4-2-7
				Replace	○							Strainer, O-ring	—	4-2-7
			Return filter	Replace				☆	＊7		○	Element	—	4-2-4
	Pipe and hose		Oil leakage, swelling, perishing, injuries	Inspect		○						—	—	4-2-1
	Drain filter			Replace				☆			○	Cartridge	—	4-2-8
	Pilot line filter			Replace							○	Cartridge	—	4-2-9
	Air breather		Element	Replace							○	Element	—	4-2-6
	Cylinder		Oil leakage	Inspect		○						—	—	4-2-1
			Responsivity	Inspect		○						—	—	4-2-1
			Internal leakage	Measure						○		—	—	4-2-1
	Hydraulic pump		Oil leakage	Inspect		○						—	—	4-2-1
			Abnormal noise or heat	Inspect		○						—	—	4-2-1
			Attachment bolt	Inspect			○					—	—	4-2-1
			Air extraction	Inspect	○							—	—	4-2-1
	Oil cooler		Oil leakage	Inspect		○						—	—	4-2-1

https://truckmanualshub.com/

2. Inspection and servicing table

	Part	Inspection location and service task	Task	When defective	Daily: Pre-operationa	Weekly or 60h	Monthly or 100h	Every 250h	Every 6 months or 500h	Yearly or 1000h	Oil Part to change	Reference section: Operation section	Reference section: Inspection and servicing section
Hydraulic system-related	Rotary seal	Oil leakage	Inspect		○						—	—	4-2-1
	Hydraulic valve	Oil leakage	Inspect		○						—	—	4-2-1
		Relief valve and brake valve function	Inspect				○				—	—	2
		Control valve function	Inspect				○				—	—	2
Travel-related	Carrier roller	Wear, deformation	Inspect		○						—	—	2
		Attachment bolt	Inspect		○						—	—	2
		Oil leakage	Inspect		○						—	—	2
	Track roller	Wear, deformation	Inspect		○						—	—	2
		Attachment bolt	Inspect		○						—	—	2
		Oil leakage	Inspect		○						—	—	2
	Sprocket	Wear, deformation	Inspect		○						—	—	2
		Attachment bolt	Inspect		○						—	—	2
	Track shoe	Tension	Inspect and adjust		○						SG	—	4-3-2
		Cracked links	Inspect				○				—	—	2
		Worn pins	Inspect				○				—	—	2
		Loose bolts	Inspect		○						—	—	2
	Traveling motor reduction gear	Abnormal noise on traveling	Inspect		○						—	—	4-2-1
		Oil leakage	Inspect		○						—	—	4-2-1
		Reduction gear oil	Check oil level					○			—	—	4-3-3
			Replace						☆	○	GO	—	4-3-3
	Front idler	Wear	Inspect				○				—	—	2
		Oil leakage	Inspect		○						—	—	4-3-1
			Oil	○							EO	—	4-3-1
	Brake action	While traveling	Inspect		○						—	—	—
		While parked	Inspect		○						—	—	—
	Traveling frame	Cracks and damage	Inspect				○				—	—	2
Swing-related	Swing motor reduction gear: Reduction gear oil		Check oil level					○			—	—	4-4-1
			Replace					☆		○	GO	—	4-4-1
	Swing motor reduction gear: Reduction gear grease		Grease					☆		○	EG	—	3-4

https://truckmanualshub.com/

	Part		Inspection location and service task	Task	When defective	Daily (Pre-operationa)	Weekly or 60h	Monthly or 100h	Every 250h	Every 6 months or 500h	Yearly or 1000h	Oil Part to change	Reference section: Operation section	Reference section: Inspection and servicing section
Swing-related	Swing gear	Bearing	Abnormal noise on swinging	Inspect		○						—	—	2
			Ball contact surface	Grease				○				EG	—	3-4
		Gear tooth surface	Wear, damage	Inspect							○	—	—	3-4-1
			Pinion	Grease						○		EG	—	3-4-1
	Swing brake action			Inspect		○						—	6-4	—
Front attachment-related	Bucket		Bucket pin	Grease		✻6			○			EG	—	3-4
			Cylinder pin (bottom end)	Grease		✻6				○		EG	—	3-4
			Cylinder pin (rod end)	Grease		✻6			○			EG	—	3-4
			Deformation, cracks	Inspect		○						—	—	2
			Worn points	Inspect		○						—	—	4-5-1
				Replace	○							Point	—	4-5-1
			Wear and looseness of the side cutters	Inspect		○						—	—	4-5-2
				Replace	○							Side cutter	—	4-5-2
	Boom		Bending, cracks	Inspect		○						—	—	2
			Foot pin	Grease		✻6				○		EG	—	3-4
			Cylinder pin (rod and bottom ends)	Grease		✻6				○		EG	—	3-4
	Arm		Bending, cracks	Inspect		○						—	—	2
			Boom and arm connection pin	Grease		✻6				○		EG	—	3-4
			Cylinder pin (rod and bottom ends)	Grease		✻6				○		EG	—	3-4
	Side link		Side link pin	Grease		✻6			○			EG	—	3-4
	Damage or loss of the bolts and nuts which stop the pins			Inspect				○				—	—	2
Dozer-related optional	Blade			Inspect		○		○				—	—	—
	Cylinder (rod and bottom)			Grease				○				EG	—	3-4
Electrical system-related	Battery			Check electrolyte volume		○						Battery electrolyte	—	4-6-1
				Measure specific gravity					○			—	—	4-6-1
				Clean terminals					○			—	—	4-6-1

https://truckmanualshub.com/

2. Inspection and servicing table

	Part	Inspection location and service task		Task	When defective	Daily	Weekly or 60h	Monthly or 100h	Every 250h	Every 6 months or 500h	Yearly or 1000h	Oil Part to change	Reference section	
						Pre-operationa							Operation section	Inspection and servicing section
Electrical system-related	Inside the cab	Horn		Inspect		○						—	3-2	—
		Working lamp		Inspect		○						—	7-1	—
				Replace	○							Bulb	—	4-6-3
		Interior lamp		Inspect		○						—	3-1	4-6-3
				Replace	○							LED	—	4-6-3
		Wiper		Inspect		○						—	7-1	—
				Replace	○							Blade	—	4-6-6
	Electrical wiring	Condition of insulation and slack		Inspect		○						—	—	—
	Fuse			Replace	○							Fuse	3-1	4-6-4
	High current fuse			Replace	○							High current fuse	—	4-6-5
Cab control system	Control lever and pedal	Actions, play, force for operation		Inspect		○						—	3-2	4-8-1
	Monitor display			Inspect		○						—	6-1 7-1	—
	Meter etc.			Check action		○						—	7-1	—
	Mirror			Adjust and inspect		○						—	3-10	—
	Seatbelt			Inspect		○						—	3-1	—
				Replace							Every 3 years	Belt	3-1	—
	Washer fluid			Inspect		○						—	7-1	—
				Add	○							Washer fluid	3-10	—
	Action of the door and cover locks			Inspect		○						—	3-1	—
Air conditioner and heater-related	Air conditioner	Cooling and heating		Inspect		○						—	7-1	—
		Defroster		Inspect		○						—	7-1	—
		Simplified inspection	Refrigerant volume	Inspect				*Every 3 months				—	—	4-7-6
			Looseness or damage of each part, or refrigerant leakage	Inspect				*Every 3 months				—	—	4-7-5
		Crack or damage of the compressor belt		Inspect		○						—	—	4-7-4
		Condenser		Inspect		○						—	—	4-7-5
				Clean				○				—	—	4-7-5
		Internal air filter and outside air filter		Clean and inspect		○						—	—	4-7-5
				Replace							＊1	Filter	—	4-7-5
		Receiver drier		Replace							＊1	Receiver drier	—	4-7-5

* If laws or regulations in the country where the machine is operated specifies how often chlorofluorocarbon gases must be inspected, then comply with such requirements. If not, then inspection every 3 months is recommended.

https://truckmanualshub.com/

3. Lubrication (01E0-0277-1E)

Lubrication is essential to ensure safety operation and to increase the lifespan of the machine.
Regular lubrication, done properly, preserves the safety and economic performance of hydraulic equipments, smooth operation of each part and reduces wear on rotating and sliding parts.

3-1 Precautions on lubrication (01E0-0278-1E)

The value of lubrication is greatly reduced if it is not applied correctly. Observe the following precautions strictly and use correct procedure.

(1) Always follow KATO's instructions and specifications for lubrication. The interval for lubrication is based on the length of time the machine has been in use or the actual hours of operation as indicated by the hour meter inside the cab, whichever interval elapses sooner.
However, the lubrication interval specified by KATO is a guideline based on standard hydraulic excavator operating conditions. If the machine is used in harsh conditions, consult your authorised KATO dealer to determine a suitably-reduced lubrication interval.

(2) Correct lubrication requires application of the right lubricant in the right quantity for each point that requires lubrication. Choose the lubricant you are going to use from among the types and brands recommended by KATO for each point and make sure the oil number you select agrees with our selection criteria for the outside temperatures common in the operating region.

(3) Before filling/injecting with any lubricant, clean around the grease nipple, filler hole etc. to avoid the entry of dirt, moisture, etc. with the lubricant.

(4) Work in a clean, dry workplace so that dirt, moisture, etc. do not enter the machine during the lubrication process.

(5) Always add the same brand of lubricant. Mixing different brands could be detrimental, due to chemical reactions or other effects.
For various reasons, the recommended lubricants listed in this manual are subject to change without notice. Before using a product not listed in this manual, contact your authorised KATO dealer.

(6) If you use lubricants which have not been recommended by KATO or which do not match the selection criteria, or if you do not observe the lubrication intervals, KATO will not bear any responsibility whatsoever for any resulting failures.

3-1-1 Precautions on greasing (01E0-0279-1E)

Greasing reduces wear to sliding and rotating parts, thus prolonging the lifespan of the machine, and it is also essential for their smooth action.
Correctly grease each point as necessary, following the precautions listed below.
Refer to the relevant instruction manuals for details of how to grease the engine-related and attachment-related parts.

(1) When greasing bushes and bearings, expel the old grease and fill completely with new grease.

(2) After greasing the boom, arm and bucket cylinder pin sections, operate each part several times to spread the grease evenly over the entire surface of the pins.

(3) Grease each part with the type of grease specified by KATO for that part.

(4) The specified greasing intervals only apply where the grease types specified by KATO are applied in the appropriate locations correctly. If you have no choice but to use a non-recommended grease, consult your authorised KATO dealer to determine a suitably-reduced greasing interval.

https://truckmanualshub.com/

3-1-2 Precautions on oiling (01E0-0280-0E)

Observe the following precautions when oiling.

(1) Replace the oil in each device which requires oiling at the interval specified for each device.
The first oil replacement is particularly important when the machine is new and if this oil change is missed, the lifespan of the device will be drastically reduced. Even more serious consequences such as rapid breakdowns could also result.

(2) Check the oil level in each device which requires oiling at the interval specified by KATO.
If any oil level is too low, top it up with oil of the same type as that currently in use.

(3) When hydraulic oil has been replaced, extract the air from the pump and wait until all bubbles have disappeared from the oil reservoir then run the pump unladen at low speed to expel the air from inside the pipes. If there are air bubbles mixed with the hydraulic oil when you operate the machine, damage to the pump and various other problems will result.

(4) Replace the air breather element and clean the strainer of the suction strainer at the same time as you change the hydraulic oil. If the element or strainer is dirty, the hydraulic equipment will be damaged.

(5) When you have changed or added oil, always wipe away any spilled oil or other residues, then test run the engine and look for any fresh oil leakage.

(6) Order disposal of old oil from a reputable waste disposal company.

https://truckmanualshub.com/

3-2 Lubricants added at the factory (T218341-035-0E)

(1) Hydraulic oil

The type of hydraulic oil added at the factory is determined by contractual agreement. The hydraulic oil brand and ISO VG number is indicated on a label applied to the top of the oil reservoir.

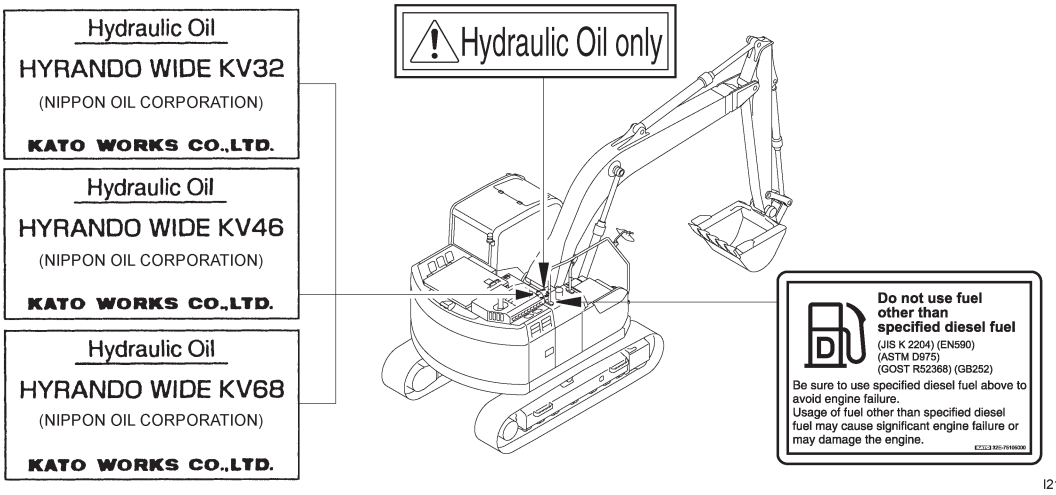

I218621-054-0E

(2) Engine oil

The following engine oil is added at the factory, as determined by contractual agreement.

Name	Code	Type added at the factory	Standard
Engine	EO	Engine oil DH-2 or equivalent 10W-40	SAE: 10W-40 JASO: DH2

(T218341-109-0E)

(3) Long Life Coolant

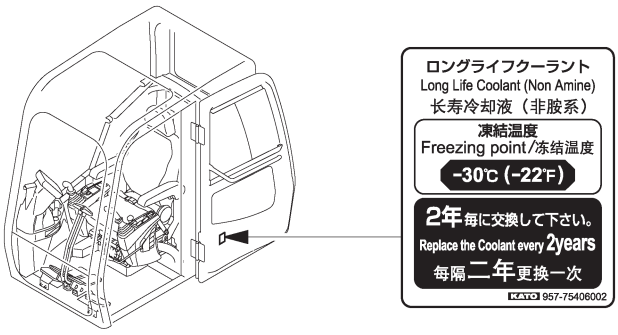

I218601-107-0J

https://truckmanualshub.com/

(4) Gear oil

The following gear oil is added at the factory.

1) Upper structure

Name	Code	Type added at the factory	Standard
Swing reduction gear	GO	JXTG Nippon Oil & Energy Corporation Gear Oil GL-4 #90	SAE: #90 GL-4

(T218341-036-0E)

2) Lower structure

Name	Code	Type added at the factory	Standard
Traveling reduction gear	GO	Gear oil SAE#90 GL-4, or GL-5 or equivalent	SAE: #90 GL-4, GL-5

(T218341-037-0E)

(5) Grease

The following greases are applied at the factory.

Greasing location	Process	Code	Type added at the factory
Boom cylinder pin (rod end)	Grease	EG	Showa Shell Sekiyu Alvania EP Grease 2
Arm cylinder pin (bottom end)	Grease	EG	Showa Shell Sekiyu Alvania EP Grease 2
Arm cylinder pin (rod end)	Grease	EG	Showa Shell Sekiyu Alvania EP Grease 2
Boom cylinder pin (bottom end)	Grease	EG	Showa Shell Sekiyu Alvania EP Grease 2
Bucket cylinder pin (rod end)	Grease	EG	Showa Shell Sekiyu Alvania EP Grease 2
Bucket cylinder pin (bottom end)	Grease	EG	Showa Shell Sekiyu Alvania EP Grease 2
Boom and arm connection pin	Grease	EG	Showa Shell Sekiyu Alvania EP Grease 2
Boom foot pin	Grease	EG	Showa Shell Sekiyu Alvania EP Grease 2
Swing gear (tooth surface)	Grease	EG	Showa Shell Sekiyu Alvania EP Grease 2
Swing gear (bearing)	Grease	EG	Showa Shell Sekiyu Alvania EP Grease 2
Swing motor reduction gear	Grease	EG	Showa Shell Sekiyu Alvania EP Grease 2
Side link pin	Grease	EG	Showa Shell Sekiyu Alvania EP Grease 2
Bucket pin	Grease	EG	Showa Shell Sekiyu Alvania EP Grease 2
Adjuster cylinder	Grease	SG	JXTG Nippon Oil & Energy Corporation Epinock Grease AP-1

(T218081-066-0E)

https://truckmanualshub.com/

3-3 Recommended lubricants table (T218081-067-0E)

(1) Hydraulic oil

1) Selection of hydraulic oil

Select the hydraulic oil based on the local outside temperature and the rated maximum operating temperature of the hydraulic oil itself, where the upper limit is determined by the maximum operating temperature and the lower limit by the minimum outside temperature (see table below).

Note that even if a hydraulic oil with a ISO VG number appropriate for the outside temperature is selected, the operating temperature could exceed the upper operating temperature limit, depending on the operation. In such cases, select a hydraulic oil with a higher VG number.

Oil	Hydraulic oil (HO)		
Specification (Outside temperature °C)	ISO VG 32 (−20 — 20°C)	ISO VG 46 (−10 — 30°C)	ISO VG 68 (0 — 40°C)
Max. appropriate operating temperature (Oil temperature °C)	70	80	90

(01E0-0283-0E)

2) Hydraulic oil operating temperature

The operating temperature has a great impact on hydraulic equipment, so if for example you are using hydraulic oil displaying an ISO viscosity grade number of VG46 listed in the "Recommended lubricants table", pay attention to the following temperature range.

Operating conditions	Temperature range (hydraulic oil)	Action
Hazardous start temperature	−10°C or less	Use oil for cold regions.
Starting and preparation temperature	−10°C — +10°C	Warm-up running
Appropriate operating temperature	30°C — 80°C	
Maximum operating temperature	95°C	Stop the engine to cool it.

(01E0-0284-0E)

⚠ CAUTION

A message will appear on the monitor if the oil temperature is below 10°C or 95°C or higher. If the oil temperature is low, be sure to sufficiently warm up the machine.

(01E0-0285-0E)

(2) Selection of the gear oil

Select the gear oil with reference to the ambient air temperature where the machine will be used.

Oil	Gear oil (GO)	
Specification (Outside temperature °C)	API service GL-4 or higher	
	SAE90 (below 30°C)	SAE140 (30°C or higher)

(01E0-0286-0E)

(3) Grease

Always select the type of grease specified for each location.

- EG……Extreme-pressure bearing grease (lithium type)
- SG……Chassis grease (lithium type)

https://truckmanualshub.com/

(4) Engine oil (EO)

1) Selection of the engine oil

Use the engine oil specified below or the equivalent. If you use the engine oil other than the specified oil, contact your authorised KATO dealer.

Engine oil (EO)	API	JASO
Besco Clean Super (10W-40)	—	DH-2
Low-ash engine oil	CJ-4	DH-2

(T218341-038-0E)

2) Viscosity of the engine oil

The viscosity of the engine oil (SAE) can have a major influence on startability, performance, and oil consumption.

Using the engine oil with inappropriate oil viscosity could cause premature wear or seizure of the engine or an accident. Select the engine oil with the viscosity that is appropriate for the given outside air temperatures from the chart below.

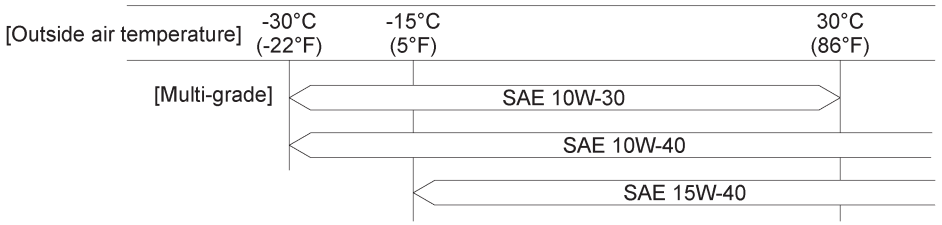

I217361-091-0E

https://truckmanualshub.com/

3-4 Greasing chart (01E0-0289-0E)

⚠ CAUTION

- For the first 50 hours after the machine is new, grease all front attachment pins every 10 hours of operation or daily.
- If using any attachment besides the original KATO bucket (breaker, crusher, etc.), grease the attachment pins every 10 hours of operation or daily. (The attachment pins are the four pins at the end of the arm, which include the rod-end bucket cylinder pin.)
- If digging in water, after finishing operations each day, grease all parts that were under water.

(01E0-0561-4E)

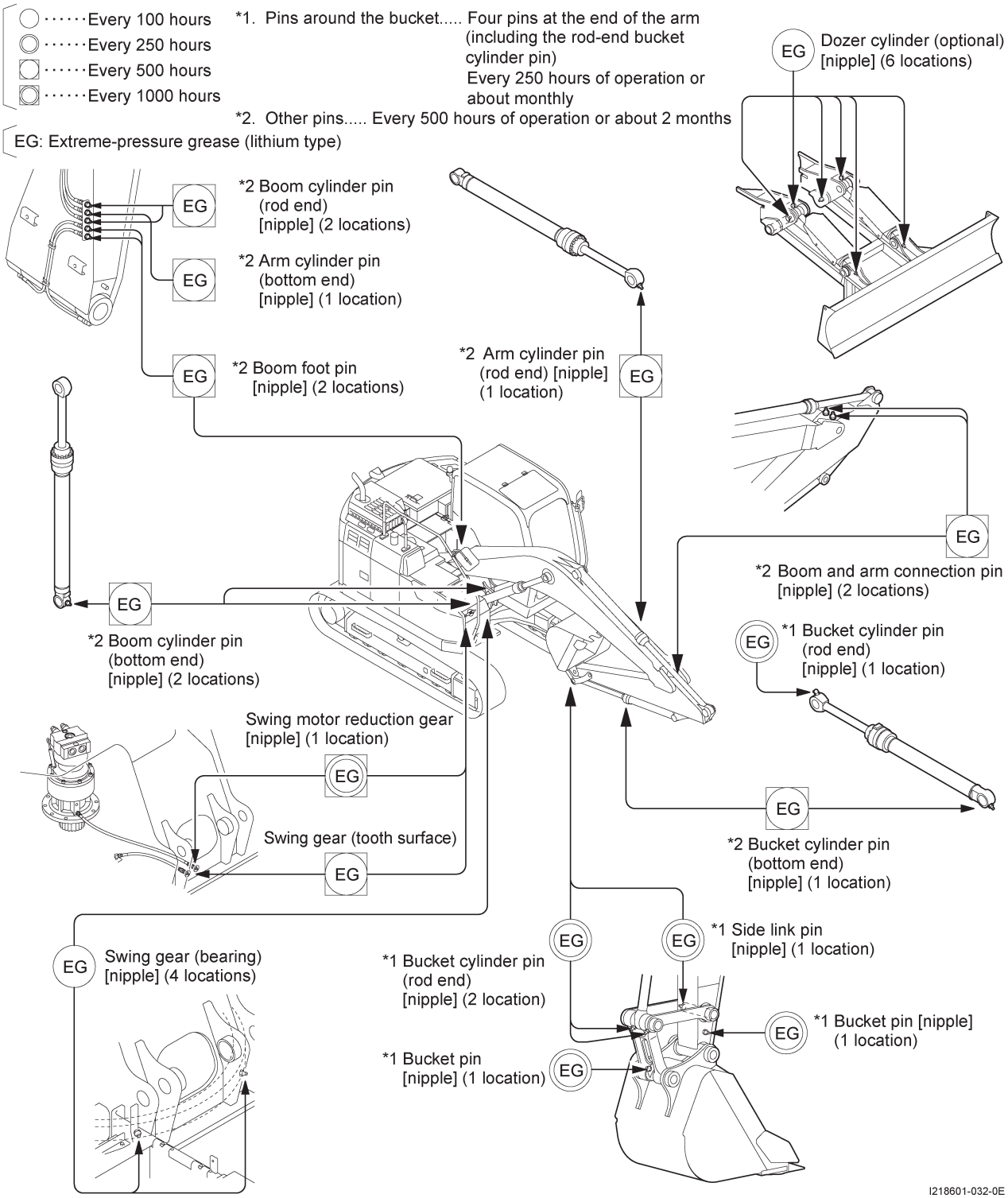

https://truckmanualshub.com/

3-4-1 Swing gear (tooth surface) greasing procedure (T218601-018-0E)

(1) Check the condition of the teeth and the grease through the inspection window.

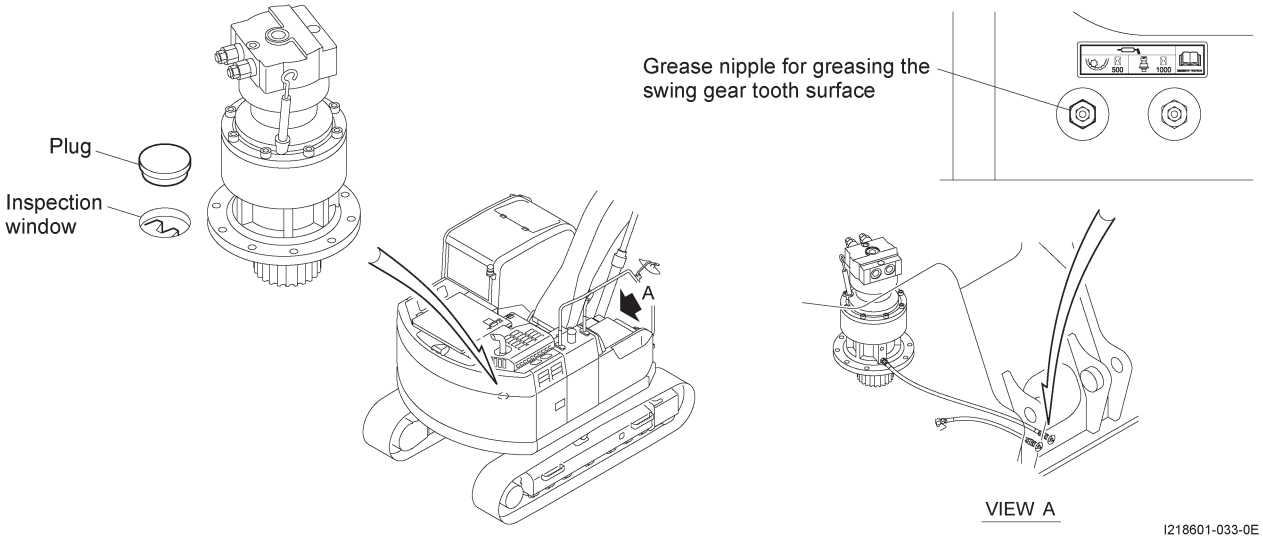

(2) If the grease is insufficient, grease the entire swing gear through the grease nipple for greasing the swing gear tooth surface while turning the upper structure. Use bearing grease (EG).

> **⚠ WARNING**
>
> When swinging the upper structure, check that there are no obstructions nearby.

(01E0-0291-0E)

3-4-2 Swing motor reduction gear greasing procedure (T218341-039-0E)

Use bearing grease (EG).

Approx. 0.5 L of Showa Shell Sekiyu Alvania EP Grease 2 is supplied at the factory.

For topping up or changing of grease, use the equivalent of the above grease.

Greasing interval …… Every 1000 hours of operation or yearly

After delivery of a new machine, grease should be injected after 250 hours of operation.

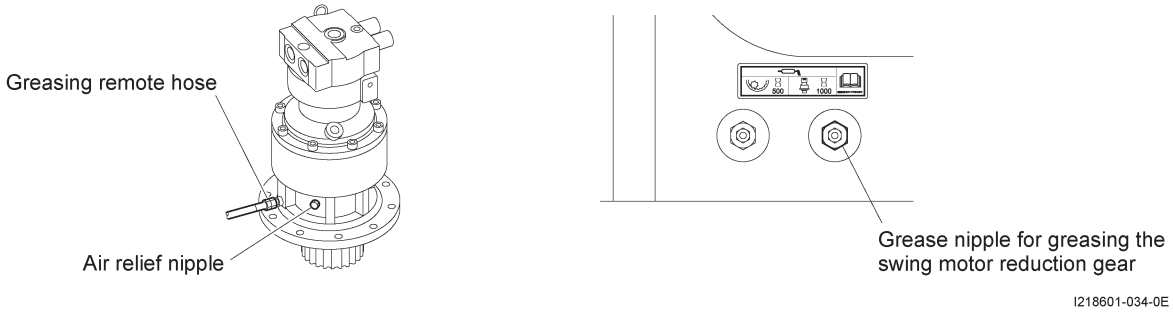

NOTE

Inject grease until it is discharged from the air relief nipple.

However, do not inject more than the initial volume, even if no grease is discharged.

・ Initial grease volume … 0.5L

https://truckmanualshub.com/

3-5 Oiling chart (01E0-0293-0E)

GO	Gear oil
HO	Hydraulic oil
EO	Engine oil

□	Inspection and topping up
○	Replacement for a new machine
◎	Replacement

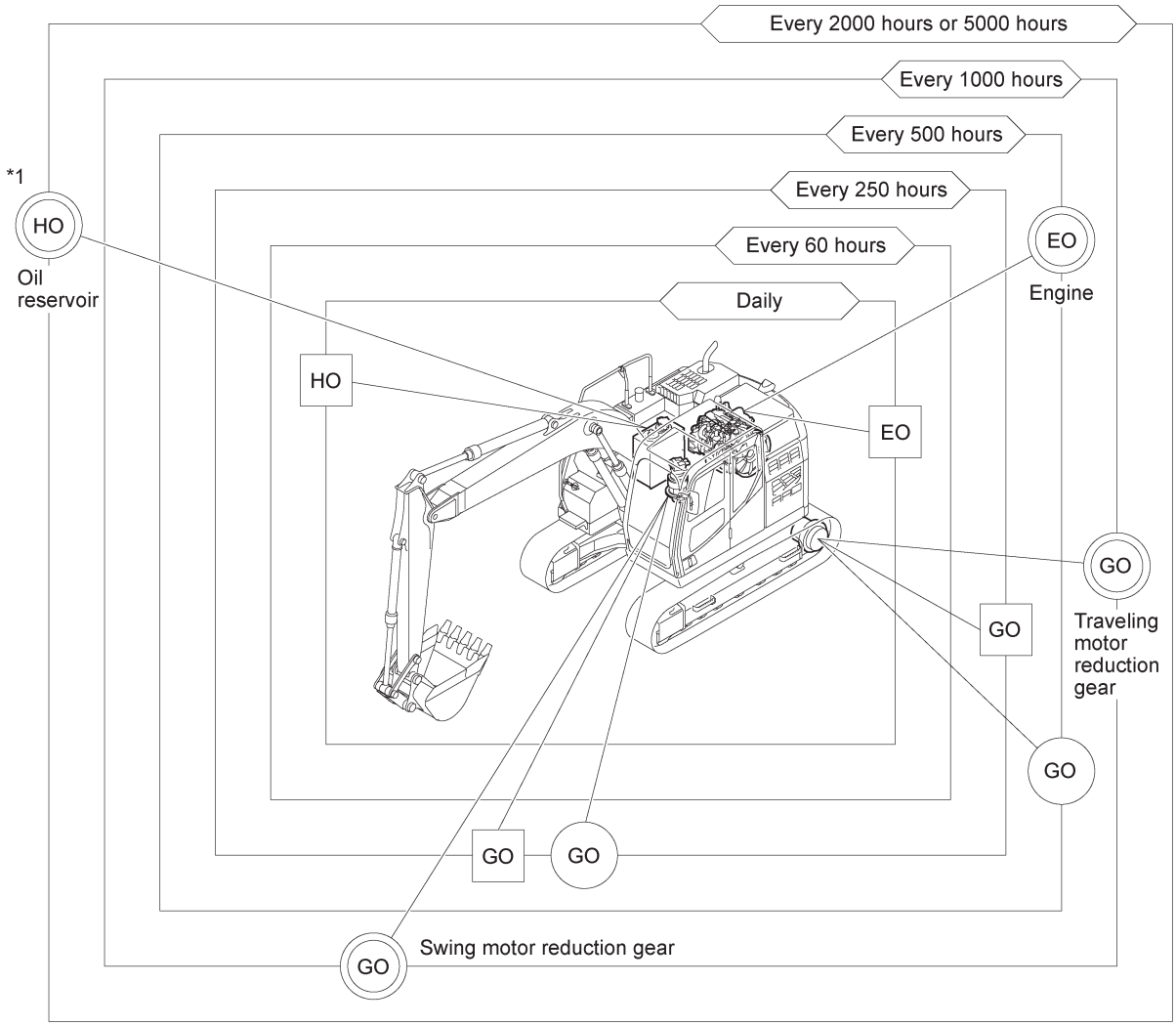

*1 When using KATO recommended hydraulic oil: Every 2000 hours of operation
When using JXTG Nippon oil & Energy Corporation HYRANDO WIDE KV32, KV46 or KV68: Every 5000 hours of operation
When operating the breaker or crusher: Every 750 hours of operation

I218601-035-0E

https://truckmanualshub.com/

4. Inspection and servicing of each part (T218081-153-0E)

Before starting the day's work, make a habit of looking all over the excavator to inspect the exterior.

Start the engine according to the correct procedure then make another exterior inspection to check for leaks of oil or water.

(1) Inspection of the exterior

1) Dents or damage of covers etc.
2) External damage of devices and equipment
3) Looseness of bolts and nuts
4) Looseness, short circuit, or damage of the wiring

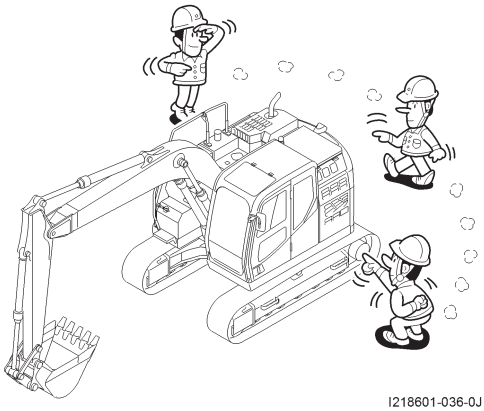

I218601-036-0J

⚠ CAUTION

- If you notice abnormal noise or vibration from any covers etc., stop the engine immediately and investigate the cause.
- If you notice a smell of burning, scorching or fuel after starting the engine, stop the engine immediately and investigate the cause.

(T218081-154-0E)

https://truckmanualshub.com/

4-1 Engine-related (01E0-0295-0E)

4-1-1 Engine inspection and servicing (01E0-0296-1E)

(1) Take the engine inspection points from the "Inspection and servicing table".

(2) Take the engine inspection methods from the separate engine manual.

(3) Consumable part number

Refer to the "Consumable parts guide".

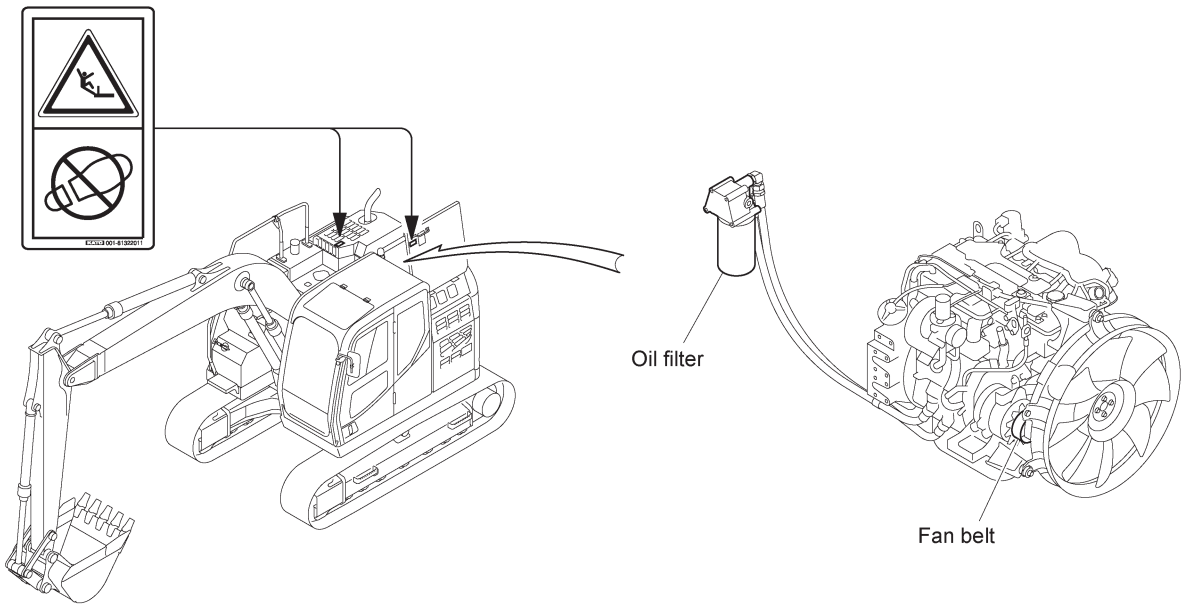

I218621-080-0E

WARNING

- Always stop the engine before inspecting it.
  If you inspect and service the engine while it is running, you risk severe injury by trapping your hands etc. in the cooling fan or fan belt.
- Always open the engine hood completely and engage the stopper when you open it.
- Immediately after the engine stops each part will be very hot and you risk burns if you touch it. If you are going to open the engine hood to inspect the engine, check that it has cooled sufficiently.
- The sound absorbing material in the engine compartment is designated as a safety part for periodic replacement.
  Inspect it at regular intervals and if any damaged is discovered, then replace it even if it is before the scheduled replacement time. If it falls off, it could cause a fire.

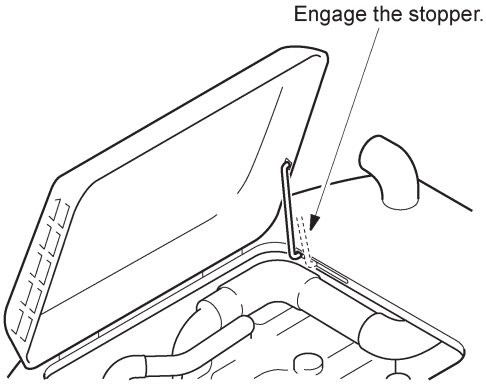

01E0-03551E

01E0-03560

(01E0-0297-1E)

https://truckmanualshub.com/

4-1-2 Inspection and replacement of the engine oil (T218601-019-0E)

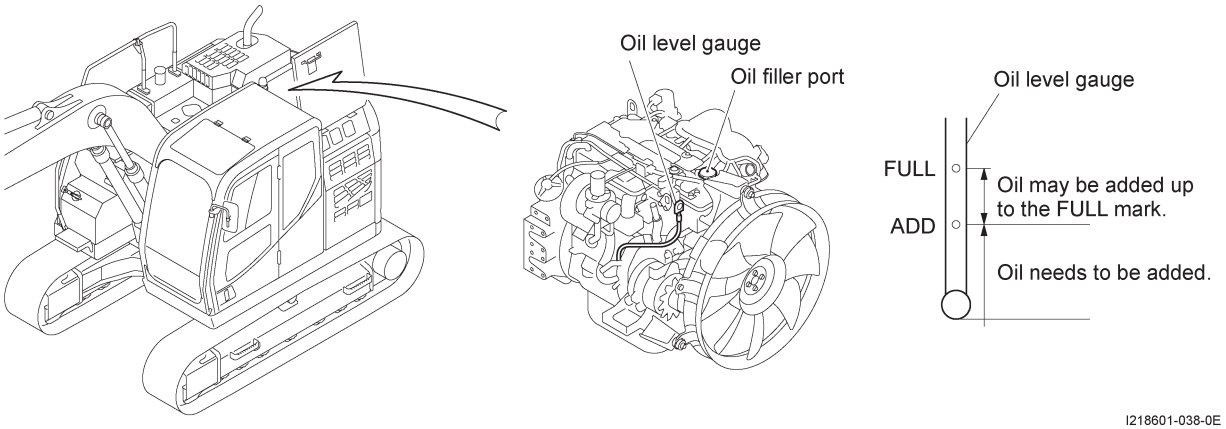

(1) Inspection procedure

WARNING

After the engine has been running for a long time, the engine oil will be extremely hot, so allow the engine to cool adequately.

(01E0-0299-1E)

CAUTION

- If the engine oil is extremely dirty or if the machine is working under severe conditions, shorten the oil replacement interval appropriately.
- The machine should be on level ground when you check the oil level.
- After stopping the engine, wait for 10 to 20 minutes before checking the oil level.
- Clean around the oil filler port before you add oil so that no dirt etc. will enter with the oil.
- Choose the right engine oil for the outside air temperature in the region.
- Insert the oil level gauge carefully to prevent bending it. Bending the oil level gauge could cause it to deform.
- Spilled engine oil can cause fire, so wipe it away immediately.

(T218601-042-0E)

1) Pull out the oil level gauge and wipe off the oil.
2) Reinsert the gauge all the way in and then gently pull it out. The oil level should be between the FULL and ADD marks. Also inspect the contamination and viscosity level of the oil.
3) If the oil level is below the ADD mark, add oil up to the FULL mark.
4) Insert the oil level gauge securely after inspection.

https://truckmanualshub.com/

(2) Replacement procedure

⚠ WARNING

- Do not replace the engine oil immediately after operating the machine. Doing so when the engine oil is hot could cause a burn injury. Wait until the oil has cooled adequately before replacing the oil.
- Be careful not to spill any engine oil on exhaust pipes or other potentially hot surfaces. Doing so could cause a fire. If engine oil is spilled, wipe it up thoroughly.

(01E0-0564-0E)

⚠ CAUTION

- Be careful to prevent debris or other matter from entering the oil filler port when adding oil. Foreign debris could damage the engine.
- Adding oil too quickly, such as by inserting a funnel in the oil filler port, could cause oil inside the head cover to overflow from the breather port. Therefore, add oil slowly.
- Adding oil above the FULL mark on the oil level gauge could cause the engine to run poorly. After adding oil, wait for at least 10 minutes before double-checking the oil level on the oil level gauge.
- Add oil carefully. Spilling engine oil on the alternator drive belt during filling could damage the belt or even cause an accident.

(T218601-043-0E)

1) Clean the area around the oil filler cap to prevent debris from getting in the oil. Remove the oil filler cap.
2) Place an oil catch pan under the oil pan and oil filter.
3) Loosen and remove the oil drain cock cap. Fasten the oil drain hose provided with the oil drain cock all the way on to the cock to drain the oil.
4) When the oil is finished draining, disconnect the oil drain hose and wipe off any excess oil from the drain cock.
5) Securely fasten the oil drain cock cap.
   (Tighten it an additional about 60 to 90 degrees after the cap is lightly seated.)

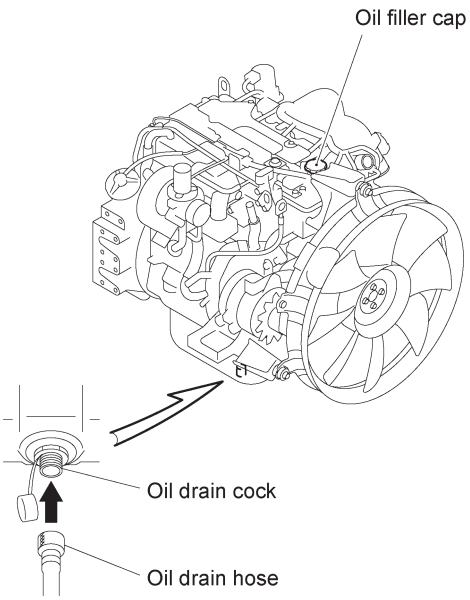

I218341-106-0E

⚠ CAUTION

Be sure to wipe off any contamination from the drain cock.

(T217361-073-0E)

https://truckmanualshub.com/

6) Pull out the oil level gauge and slowly add the specified engine oil via the oil filler port.

7) Install the oil level gauge and filler cap.

⚠ CAUTION

- Whenever the engine oil is replaced, also replace the engine oil filter at the same time.
- Do not race the engine rapidly. Doing so could damage the engine.
- Adding oil above the FULL mark on the oil level gauge could cause the engine to run poorly. Therefore, be sure to check the oil level using the oil level gauge.
- If the oil level drops below the ADD mark on the oil level gauge, engine failure could be caused. Therefore, be sure to check the oil level using the oil level gauge.
- Dispose or process drained oil in accordance with the methods specified in regulations.

(T218341-042-0E)

8) At least 10 minutes after adding engine oil, set the accelerator dial to the "🐢" position, start the engine, and let it idle for 5 minutes.
   Do not operate any levers or dials during that time.
   Also check the drain cock and other areas for any engine oil leakage.

9) Shut off the engine and let it rest for at least 20 minutes. Then check the oil level using the oil level gauge. If the oil level is too low, add oil.

(3) Inspection and replacement intervals

Inspection interval ····· At the time of preoperational checks

Replacement interval ····· Every 500 hours of operation

NOTE

- For oil change and replenishment procedures, see the engine instruction manual separately available.
- Total capacity for engine oil ····· 19.6 liters
  In the engine: 17 liters
  Oil filter, etc.: 2.6 liters

https://truckmanualshub.com/

4-1-3 Engine oil filter (T218341-043-0E)

(1) Replacement procedure

⚠ CAUTION

- Make sure the gasket is not pinched improperly when installing the oil filter, which could cause oil leakage.
- Be sure to wipe off any contamination from the cock before installing the filter.
- Do not race the engine rapidly. Doing so could damage the engine.
- Do not reuse the element.
- Only replace the element with new genuine parts from KATO. Also, do not use the element beyond the specified replacement interval.
- When replacing the element, be careful not to let any foreign matter enter the oil.
- Perform a trial operation of the engine after replacing the filter to check for any oil leakage from around the filter.

(T218341-044-0E)

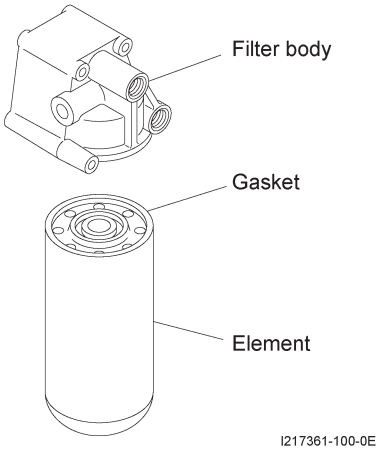

1) Clean the area around the oil filler cap to prevent debris from getting in the oil. Remove the oil filler cap.
2) Place an oil catch pan under the oil pan and oil filter.
3) Remove the oil pan drain cock to drain the oil.
4) Remove the element using a specialized oil filter wrench.
5) Apply a thin coat of clean engine oil on the gasket of the new element.
6) Install the new element. Screw in the element until the gasket contacts the seal surface. Then use a specialized oil filter wrench to tighten it an additional one revolution.
7) Confirm that the oil pan drain cock is securely tightened.
8) Pull out the oil level gauge and slowly add the specified engine oil via the oil filler port.
9) Install the oil level gauge and filler cap. Then at least 10 minutes after adding the oil, startup the engine and let it idle for at least 5 minutes. During that time, inspect the areas around the oil filter and drain cock to check for any oil leakage.
10) Shut off the engine and wait at least 20 minutes. Then check the oil level on the oil level gauge.

https://truckmanualshub.com/

NOTE

Be sure to dispose of the element in accordance with local laws and regulation where the machine is used. If it cannot be disposed of properly on your own, consult a service provider for the engine manufacturer.

(2) Replacement interval

Every 500 hours of operation

(3) Consumable part number

Refer to the "Consumable parts guide".

https://truckmanualshub.com/

4-1-4 Inspection of the exhaust pipe, muffler, and SCR system (T218341-045-0E)

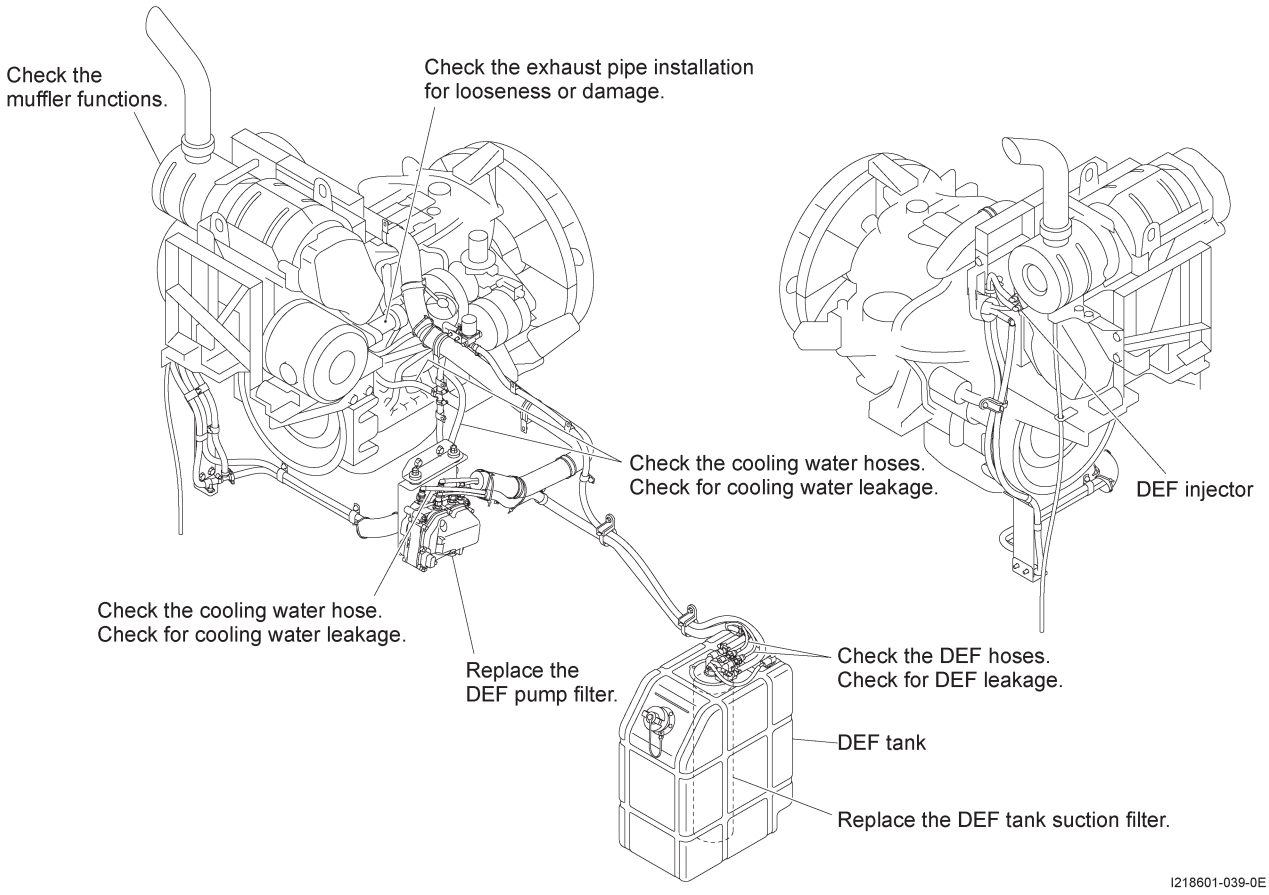

(1) Inspection intervals for the exhaust pipe and muffler

1) Looseness or damages on the installation section ·····At the time of preoperational checks

2) Exhaust gas color and exhaust status ·····At the time of preoperational checks

3) Muffler functions ·····Every 4500 hours of operation or 3 years

NOTE

Refer to the separate engine manual for the exhaust color and exhaust status.

(2) Inspection of the SCR system

Check that the DEF hoses and cooling water hoses are connected securely and that there is no crack, bending, or damage on them.

Check that the DEF/AdBlue® or cooling water is not leaking from the DEF tank, DEF pump, DEF injector, DEF hoses, or cooling water hoses.

1) Inspection of the DEF hoses and cooling water hoses ·····At the time of preoperational checks

2) Inspection for DEF/AdBlue® or cooling water leakage ·····At the time of preoperational checks

⚠ WARNING

Immediately after stopping operation, the exhaust pipe, muffler, and cooling water are very hot. They can cause burns, so perform work after the temperature has been allowed to drop.

(T218081-196-1E)

https://truckmanualshub.com/

4-1-5 DEF pump filter (T218601-045-0E)

(1) Replacement procedure

⚠ WARNING

Do not replace the DEF pump filter immediately after stopping operation. The cooling water is hot enough to cause burns, so perform work after the temperature has been allowed to drop.

(T218341-047-0E)

⚠ CAUTION

- The SCR system continues to operate for about 5 minutes after the starter switch is set to the "OFF" position. Wait for at least 5 minutes before inspection or repair.
- Do not reuse the discharged DEF (AdBlue® or equivalent). Doing so could cause SCR system failure.
- Dispose of the discharged DEF (AdBlue® or equivalent) using the prescribed method.
- Do not use compressed air to blow away any debris or other matter. Use a clean cloth to wipe it off.
  If debris or other matter enters the DEF lines with compressed air, the SCR system could malfunction.

(T218341-048-0E)

1) Set the starter switch to the "OFF" position and wait for at least 5 minutes until the pump operation is stopped.
   At that time, do not turn the battery disconnect switch to the OFF position "○" or remove the battery cable. Doing so could cause blockage in the DEF lines.
2) After placing a pan under the DEF pump, loosen the cover to remove the filter element and equalizing element together.
3) Install the new filter element and equalizing element.
4) Tighten the cover to the specified torque.
   - Cover tightening torque: 20 — 25N・m
5) Start up the engine and inspect for any fuel leakage.

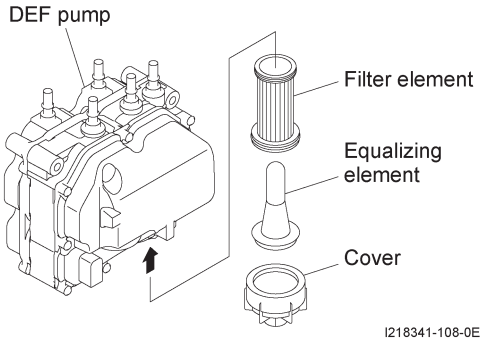

⚠ CAUTION

Do not reuse the filter element.

(T218341-049-0E)

NOTE

Be sure to dispose of the element in accordance with local laws and regulation where the machine is used. If it cannot be disposed of properly on your own, consult a service provider for the engine manufacturer.

(2) Replacement interval

Every 4500 hours of operation

(3) Consumable part number

Refer to the "Consumable parts guide".

https://truckmanualshub.com/

4-1-6 DEF tank suction filter (T218341-050-0E)

(1) Replacement procedure

Contact your authorised KATO dealer to replace the suction filter at the bottom of the head unit assembly.

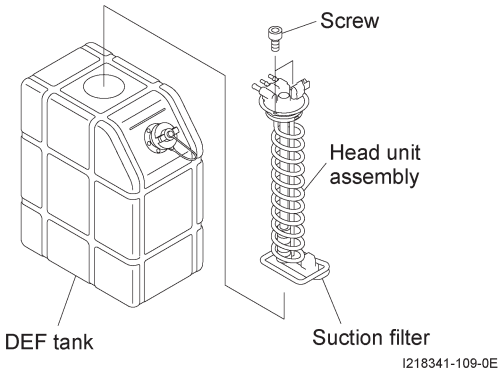

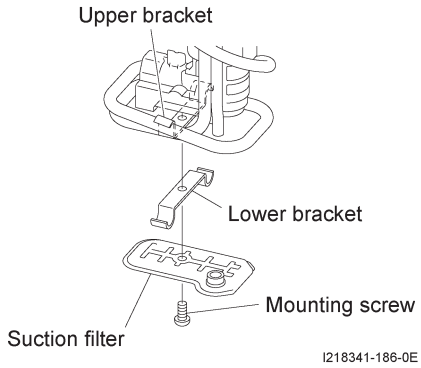

> ⚠ **CAUTION**
>
> Do not replace the DEF tank suction filter immediately after stopping operation. The cooling water is hot enough to cause burns, so perform work after the temperature has been allowed to drop.

(T218601-035-0E)

(2) Replacement interval

Every 4500 hours of operation

(3) Consumable part number

Refer to the "Consumable parts guide".

https://truckmanualshub.com/

4-1-7 Fuel system (T218081-072-0E)

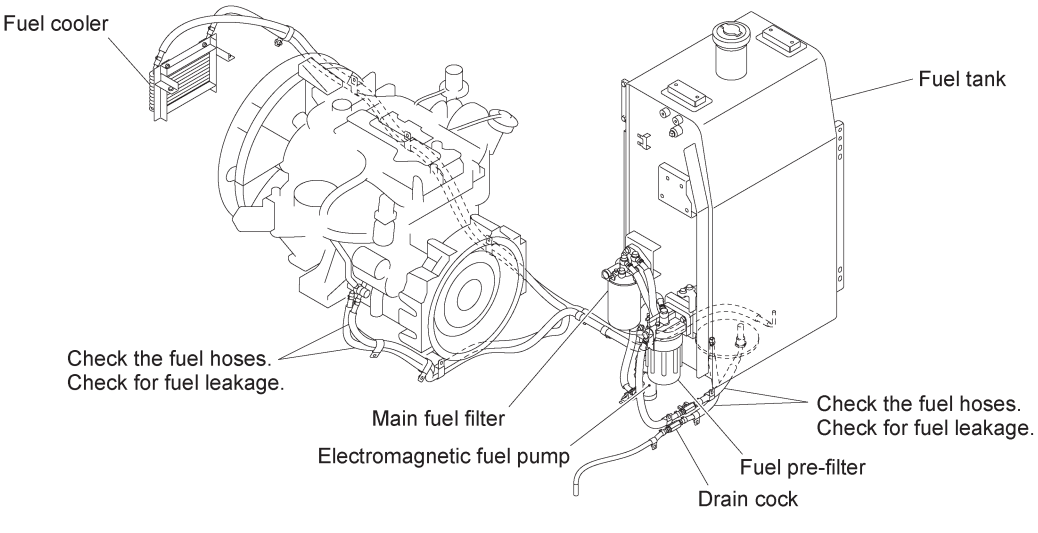

(1) Inspection and replacement intervals for the fuel system

1) Inspection for fuel leakage and fuel hoses ····· Every 60 hours of operation or weekly

2) Discharge of water and deposits from the fuel tank ····· Every 500 hours of operation or 6 months

(2) Consumable part number

Refer to the "Consumable parts guide".

https://truckmanualshub.com/

4-1-8 Fuel pre-filter (T218341-052-1E)

(1) Inspection procedure

Check whether the float contacts the filter. If water is accumulated in the fuel pre-filter, remove water through the drain plug.

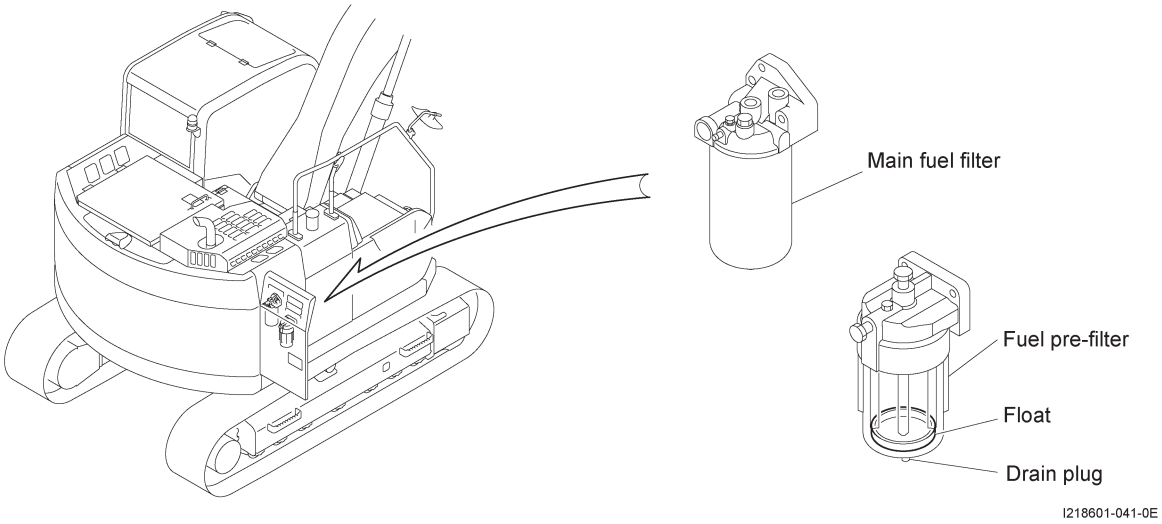

(2) Water draining procedure

⚠ WARNING

Due to risk of fire, never smoke, use a cigarette lighter, or use any other ignition source while draining water.
Always shut off the engine as well.

(01E0-0574-2E)

⚠ CAUTION

- Do not drain water from the fuel pre-filter immediately after stopping operation. The fuel pre-filter is hot enough to cause burns, so perform work after the temperature has been allowed to drop.
- Be careful not to spill any fuel. If fuel is spilled, thoroughly wipe it up.
- Do not scratch or otherwise damage the filter case, which could cause fuel leakage.
- Do not use a parts cleaner or alcohol-based water remover. If such agents contact plastic parts (such as the filter case), they can cause cracking that could lead to fuel leakage.

(T218341-053-0E)

1) Place a container under the fuel pre-filter to catch any fuel spillage.
2) Loosen the air bleeder plug at the upper portion of the fuel pre-filter. Then loosen the drain plug at the lower portion of the case to drain water accumulated in the case.
3) Tighten the air bleeder plug and drain plug.
   - Tightening torque for the air bleeder plug: 10±2N·m
   - Tightening torque for the drain plug: 2.5±0.5N·m

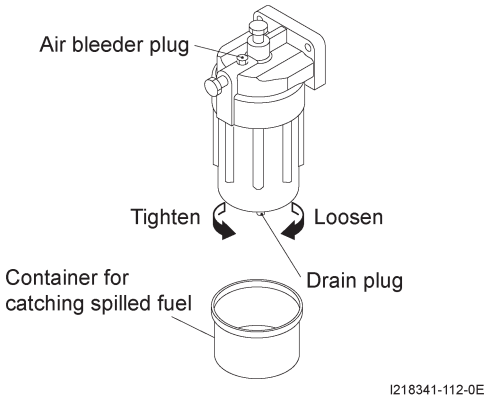

https://truckmanualshub.com/

4) Bleed the fuel system of air. See "4-1-8 (4) Bleeding the system of air".

5) Start up the engine and inspect for any fuel leakage.

> **⚠ WARNING**
>
> Make sure there is no fuel leaking around the filter case. Leaking fuel could cause a fire.

(01E0-0573-0E)

(3) Inspection and water drainage intervals

Inspection interval …… At the time of preoperational checks

Water drainage interval …… As required

> **⚠ CAUTION**
>
> Some fuel will be drained along with the water. To avoid the risk of fire, thoroughly wipe off any spilled fuel from surrounding surfaces.

(T218341-055-0E)

(4) Bleeding the system of air

> **⚠ WARNING**
>
> Due to risk of fire, never smoke, use a cigarette lighter, or use any other ignition source while bleeding the fuel system of air. Always shut off the engine as well.

(01E0-0577-0E)

> **⚠ CAUTION**
>
> ・Be careful not to spill any fuel. If fuel is spilled, thoroughly wipe it up.
> ・Do not scratch or otherwise damage the filter case, which could cause fuel leakage.
> ・Do not use a parts cleaner or alcohol-based water remover. If such agents contact plastic parts (such as the filter case), they can cause cracking that could lead to fuel leakage.

(T218341-054-0E)

Air trapped in the fuel system could lead to "poor starting" or "engine out of order".

Whenever the engine is "emptied" or after water is removed from the fuel or the filter element is replaced with a new one, be sure to "bleed the system of air".

・Bleeding the system of air

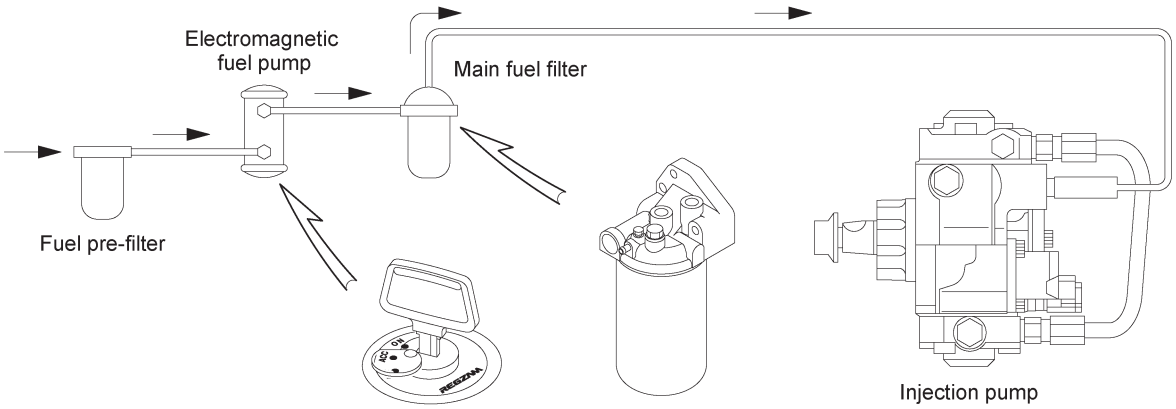

I218341-113-0E

https://truckmanualshub.com/

1) Place the starter switch in the "ON" position to make the electromagnetic fuel pump ready.

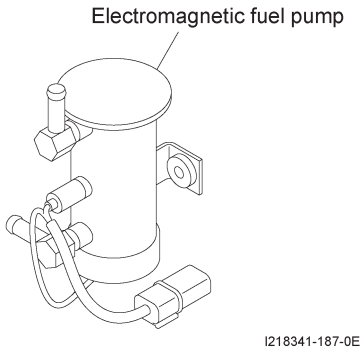

2) Thoroughly loosen the air bleeder plug of the main fuel filter.
3) If the fuel comes out of the air bleeder plug, tighten the plug firmly and wipe off any spilled fuel from surrounding surfaces.
   - Tightening torque for the air bleeder plug: 8 — 12N•m
4) Start up the engine without operating the engine speed. If the engine does not start at this time, start over the procedure starting with step 1).
5) After the engine is started, let it run at idle for 5 seconds.
6) Slowly increase the engine speed and hold that condition for 3 minutes.
7) Let the engine run at its maximum speed. Repeat these steps several times.
8) Check for any fuel leakage.

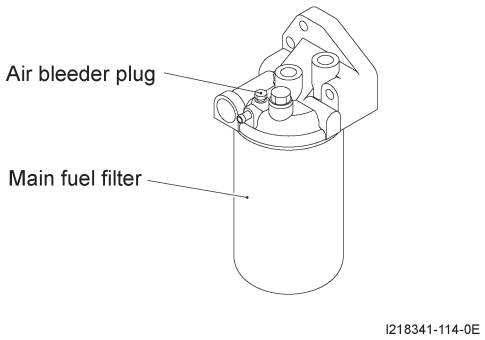

⚠ WARNING

Make sure there is no fuel leaking around the filter case. Leaking fuel could cause a fire.

(01E0-0573-0E)

NOTE

The fuel comes out of the air bleeder plug while bleeding the fuel system of air. You can prevent fuel splashing on parts or other surfaces in the surrounding area if you attach a hose (8 mm of inner diameter) to the air bleeder plug and use a container for catching spilled fuel. It is easy to check air bubbles with transparent hose.

- Attach a hose (8 mm of inner diameter) to the air bleeder plug of the main fuel filter.
- Loosen the air bleeder plug of the main fuel filter.

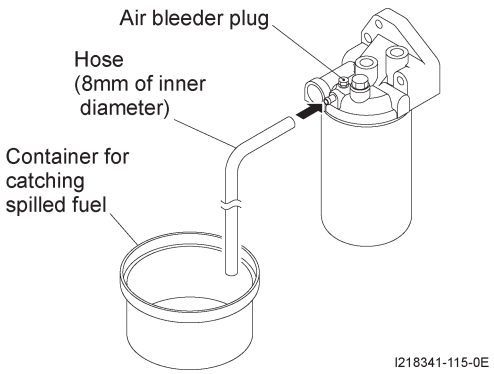

https://truckmanualshub.com/

(5) Replacement procedure

WARNING

Due to risk of fire, never smoke, use a cigarette lighter, or use any other ignition source while replacing the fuel pre-filter.
Always shut off the engine as well.

(T218341-056-0E)

CAUTION

- Do not replace the fuel pre-filter immediately after stopping operation. The fuel pre-filter is hot enough to cause burns, so perform work after the temperature has been allowed to drop.
- Be careful not to spill any fuel. If fuel is spilled, thoroughly wipe it up.
- Do not scratch or otherwise damage the filter case, which could cause fuel leakage.
- Do not use a parts cleaner or alcohol-based water remover. If such agents contact plastic parts (such as the filter case), they can cause cracking that could lead to fuel leakage.

(T218341-057-0E)

1) Loosen the drain plug and air bleeder plug and discharge fuel from the inside of the filter.

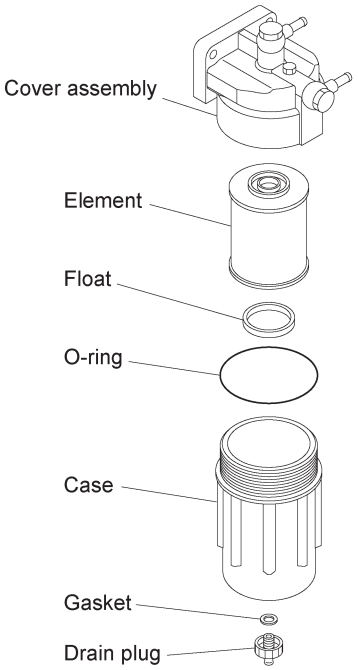

I218341-116-0E

CAUTION

Use a receiving pan or the like to receive fuel that is discharged to thereby prevent the engine from being splashed with it.

(02E0-0041-0E)

https://truckmanualshub.com/

2) Using a special tool filter wrench, remove the case.

3) Replace the case and drain plug packings with new ones. Install a new element in the case, apply a thin coat of fuel to the packing, and tighten the case in position.

When the packing comes into contact with the sealing surface, use the special tool filter wrench to tighten the case further.

- Case tightening torque: 30±2N·m (3±0.2kgf·m)
- Tightening torque for the drain plug: 2.5±0.5N·m (0.25±0.05kgf·m)

> ⚠ **CAUTION**
>
> Note that the cartridge contains fuel in it. During removal, use care not to allow the surrounding area to be dirtied with the fuel and be careful about an open flame.

(02E0-0042-0E)

4) Bleed the system of air. See "4-1-8 (4) Bleeding the system of air".

(6) Replacement procedure

1) Place a container under the fuel filter for catching spilled fuel.

2) Close the tab of the fuel cut valve.

3) Turn the drain plug counterclockwise to loosen it, thereby discharging fuel from the case. After the fuel is discharged, turn the drain plug clockwise to tighten it.

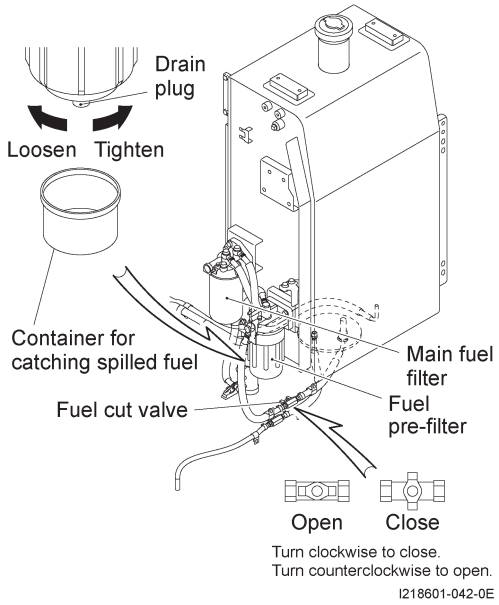

4) Using the special tool (provided), turn the case counterclockwise and remove it.

Discharge any fuel left in the case.

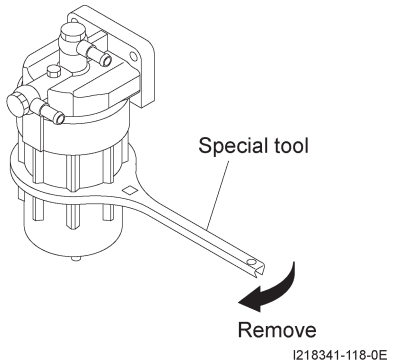

https://truckmanualshub.com/

5) Remove the element and drain plug.

6) Remove the O-ring. Then, clean the surface of the cover assembly on which the O-ring abuts and O-ring groove in the case.

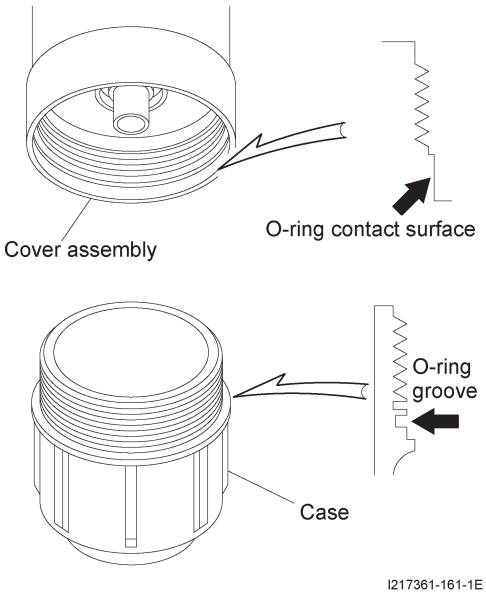

7) Replace the O-ring with a new one.
Apply a thin coat of engine oil to the new O-ring and fit the O-ring to the case.

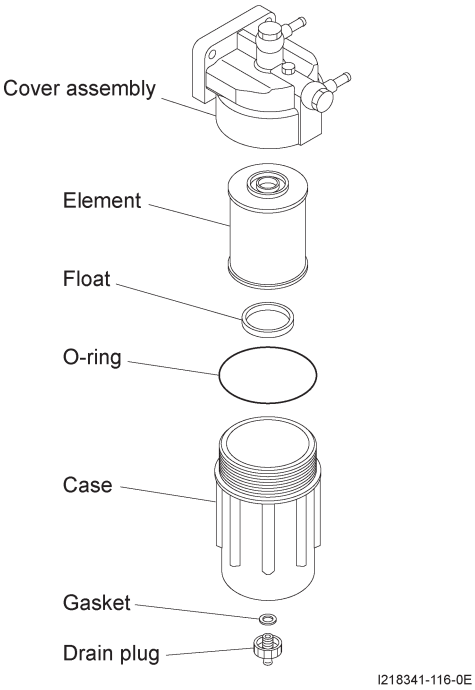

> ⚠ **CAUTION**
>
> Use the O-ring provided with the new filter element.

(01E0-0596-0E)

8) Install a new "genuine element" from KATO, with the hole facing upward.

> ⚠ **CAUTION**
>
> - Be careful not to damage the O-ring by twisting it when installing the filter case.
> - Do not reuse the filter element.

(01E0-0571-0E)

9) Install the filter case by turning it to the right.

https://truckmanualshub.com/

10) Use a special tool (provided) with a torque wrench to tighten the filter case.
Tightening torque: 30±2N•m (3±0.2kgf•m)

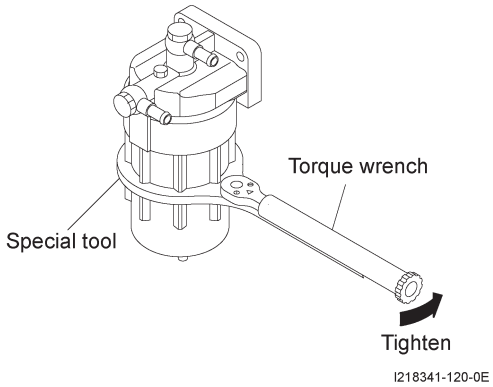

⚠ CAUTION

Do not over tighten the filter case. Doing so could damage the case.

(01E0-0572-0E)

11) Open the fuel cut valve.
12) Bleed the fuel system of air. See "4-1-8 (4) Bleeding the system of air".
Start up the engine and inspect for any fuel leakage.

⚠ WARNING

Make sure there is no fuel leaking from around the filter case. Leaking fuel could cause a fire.

(01E0-0573-0E)

NOTE

Though the element is constructed of materials designed to minimize the impact on the environment (paper, plastic, etc.), always dispose of elements in accordance with local laws and regulations. If it cannot be disposed of properly on your own, consult a service provider for the engine manufacturer.

⚠ CAUTION

- Only replace the element with new genuine parts from KATO. Do not use the element beyond the specified replacement period. Doing so could cause the fuel injection system to malfunction.
- When replacing the element, be careful to not let any foreign matter enter the fuel system. Doing so could cause the fuel injection system to malfunction.

(01E0-0586-0E)

(7) Replacement interval …… Every 500 hours of operation

⚠ CAUTION

When the engine power has decreased, you should replace the element cartridge even if it is not yet the scheduled time.

(01E0-0610-0E)

(8) Consumable part number
Refer to the "Consumable parts guide".

https://truckmanualshub.com/

4-1-9 Main fuel filter (T218341-115-0E)

(1) Replacement procedure

WARNING

Due to risk of fire, never smoke, use a cigarette lighter, or use any other ignition source while replacing the main fuel filter.
Always shut off the engine as well.

(T218341-058-0E)

CAUTION

- Do not replace the main fuel filter immediately after stopping operation. The main fuel filter is hot enough to cause burns, so perform work after the temperature has been allowed to drop.
- Be careful not to spill any fuel. If fuel is spilled, thoroughly wipe it up.

(T218341-059-0E)

1) Use a wrench to remove the cartridge.
2) Apply a thin coat of engine oil to the gasket groove in the cartridge before installing it. When installing the cartridge, turn the cartridge further through 2/3 of a turn or tighten it to the specified torque after the gasket comes into contact with sealing surface.
   - Cartridge tightening torque: 25N・m
3) Bleed the fuel system of air. See "4-1-8 (4) Bleeding the system of air".
4) Start up the engine and inspect for any fuel leakage.

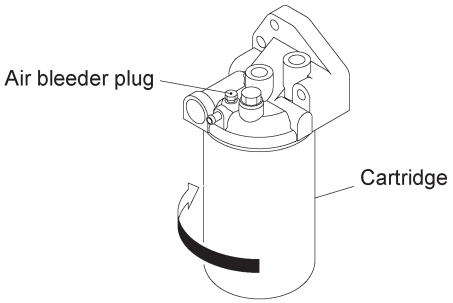

I218341-121-0E

WARNING

Make sure there is no fuel leaking around the main fuel filter. Leaking fuel could cause a fire.

(T218341-060-0E)

NOTE

Be sure to dispose of the cartridge in accordance with local laws and regulation where the machine is used. If it cannot be disposed of properly on your own, consult a service provider for the engine manufacturer.

CAUTION

- Do not reuse the cartridge.
- Only replace the cartridge with new genuine parts from KATO. Also, do not use the cartridge beyond the specified replacement interval. Doing so could cause the fuel infection system to malfunction.
- When replacing the cartridge, be careful not to let any foreign matter enter the fuel system. Doing so could cause the fuel infection system to malfunction.

(T218341-061-0E)

https://truckmanualshub.com/

(2) Replacement interval

Every 500 hours of operation

> ⚠ **CAUTION**
>
> When the engine power has decreased, you should replace the element cartridge even if it is not yet the scheduled time.

(T218341-062-0E)

(3) Consumable part number

Refer to the "Consumable parts guide".

4-1-10 Supply pump strainer (T218601-046-0E)

(1) Inspection of the supply pump strainer

If loss of power occurs or the engine stops and the problem is not resolved by replacing the fuel filter element, then replace the supply pump strainer (integrated with the joint bolt).

・Joint bolt tightening torque: 14.6 — 24.6N・m

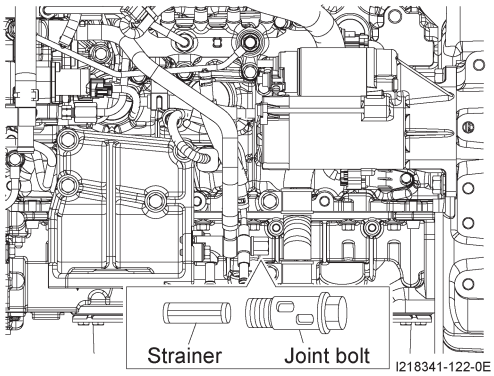

> ⚠ **CAUTION**
>
> ・The supply pump strainer is built into the joint bolt that is installed in the supply pump inlet. Do not attempt to remove the internal strainer. The integrated joint bolt cannot be disassembled.
>
> ・Be sure to install new replacement copper gasket whenever the fuel pipe is removed.
>
> ・Install it so that its angle aligns with the fuel return pipe and tighten it to the specified torque. Tightening torque: 14.6 — 24.6N・m

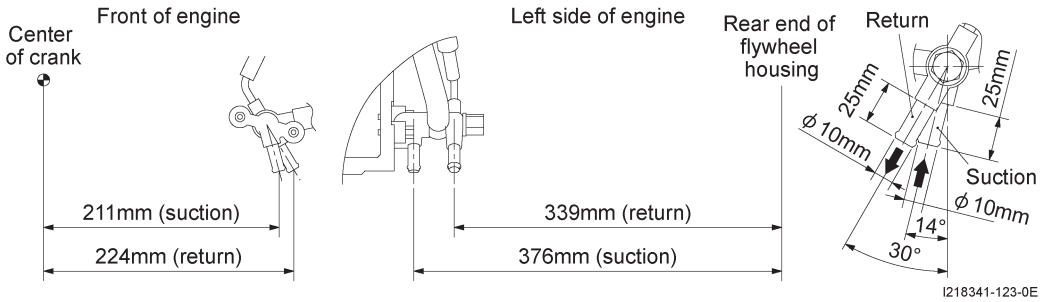

(T218601-047-0E)

https://truckmanualshub.com/

4-1-11 Electromagnetic fuel pump (T218341-065-0E)

(1) Cleaning the filter

Clean the filter element inside the fuel pump every 500 hours of operation.

1) Disconnect the wires from the pump cover and use a wrench to screw off the cover.

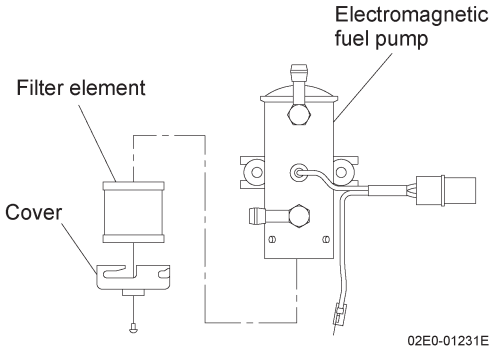

⚠ CAUTION

- Be sure to replace the gasket and clean the magnet area on the interior side of the cover whenever the filter is removed.
- Use a container to carefully catch the fuel that spills out from the pump during disassembly and prevent it from spilling on the engine, for example. Also, be careful of ignitions sources.

(T218341-134-0E)

2) Use diesel fuel to clean the filter element removed and use compressed air to blow away any debris or other matter.

3) Install the cover. Use a wrench to tighten it all the way.

⚠ CAUTION

- Be sure to verify that the cover properly sealed after installation.
- The replacement and cleaning intervals can be shortened depending on the fuel management and replenishment situation.

(T218341-135-0E)

(2) Consumable part number

Refer to the "Consumable parts guide".

https://truckmanualshub.com/

4-1-12 Draining water from the fuel tank (01E0-0313-0E)

(1) Water drainage procedure

Open the drain cock in the bottom of the fuel tank to drain water out.

Close the drain cock after draining the water.

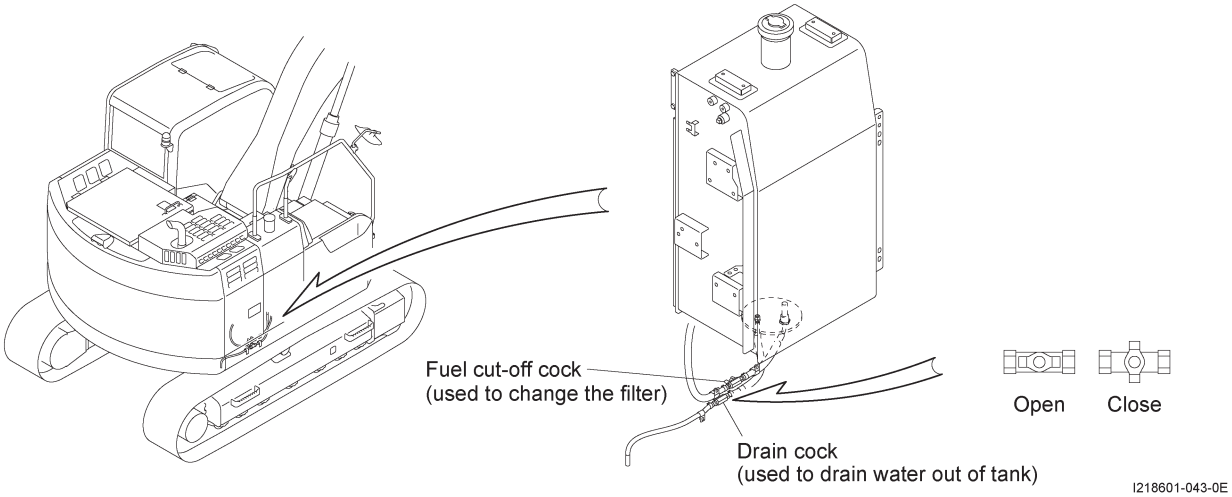

(2) Water drainage interval

Water drainage interval …… Every 500 hours of operation or 6 months

⚠ WARNING

Diesel fuel is used in this machine as fuel. It is highly flammable and therefore very dangerous, so handle with care.

(01E0-0314-0E)

https://truckmanualshub.com/

4-1-13 Cleaning and replacement of the air cleaner element (T218341-066-0E)

(1) Cleaning and replacement procedure

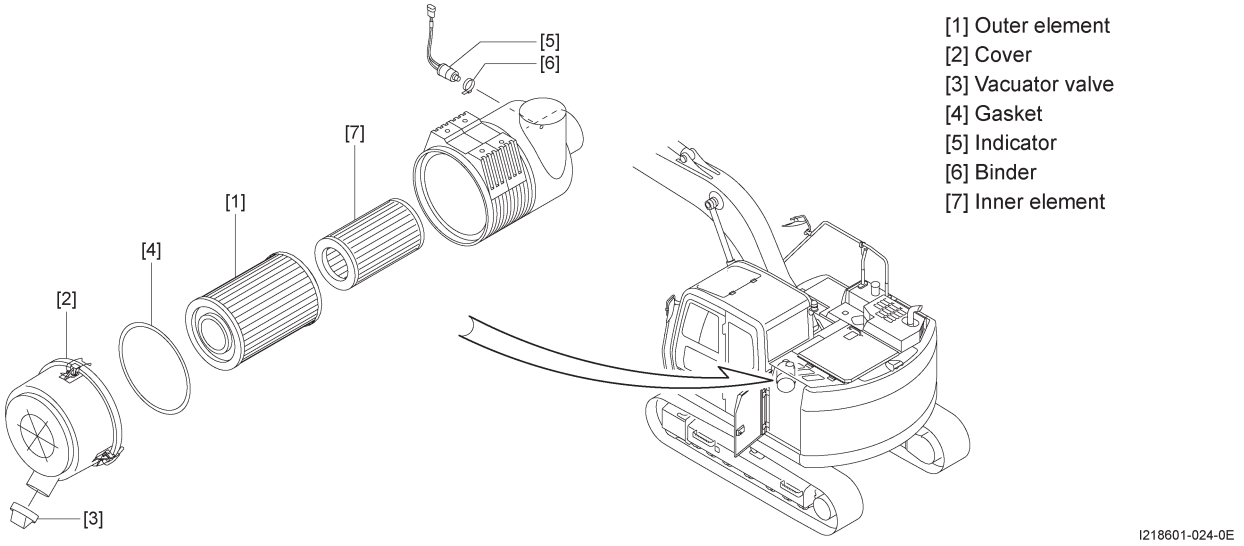

1) Cleaning the outer element [1]

Remove the cover [2] and take the outer element [1] out and clean it using the method described below.

Blow clean, dry compressed air from the inside of the element to the outside along the folds up and down to blow dust off. Keep the nozzle away from the element 50mm or more and keep the pressure at the nozzle below 0.2MPa (2kgf/cm^2). Inspect the filter paper lighting it from the inner side of the element. Replace the element if there is any damage, pinholes or extremely thinner part is observed on the paper. Also replace it when the packing is damaged.

2) After cleaning, put the outer element [1] back in place and attach the cover [2] with the valve [3] facing directly downward.

⚠ CAUTION

- Wear protective goggles when using compressed air.
- When using this machine under severe conditions, shorten the cleaning and replacement intervals accordingly.
- If the message indicating air cleaner blockage is displayed on the monitor, you should clean the element even if it is not yet the scheduled time.
- Always stop the engine before cleaning and replacing the element, otherwise foreign bodies could be drawn in, causing a breakdown or damage.
- Always use a genuine KATO or KATO-approved element.
- Only remove the inner element when you replace it.
  Do not clean and reuse the inner element.

(T217201-098-0E)

(2) Cleaning and replacement intervals

Cleaning interval ····· Every 250 hours of operation or when called for by the monitor display

Replacement interval ····· Every 1000 hours of operation or yearly

(3) Consumable part number

Refer to the "Consumable parts guide".

https://truckmanualshub.com/

4-1-14 Cooling system (T218601-048-0E)

As the engine runs, corrosion and water scale build up in the water jacket and the radiator, reducing their cooling efficiency and leading to overheating problems etc. It can also reduce the antifreeze effect of the Long Life Coolant added to the coolant, risking engine damage due to freezing. It is very important to regularly clean the cooling system and replace the coolant using the procedure described below.

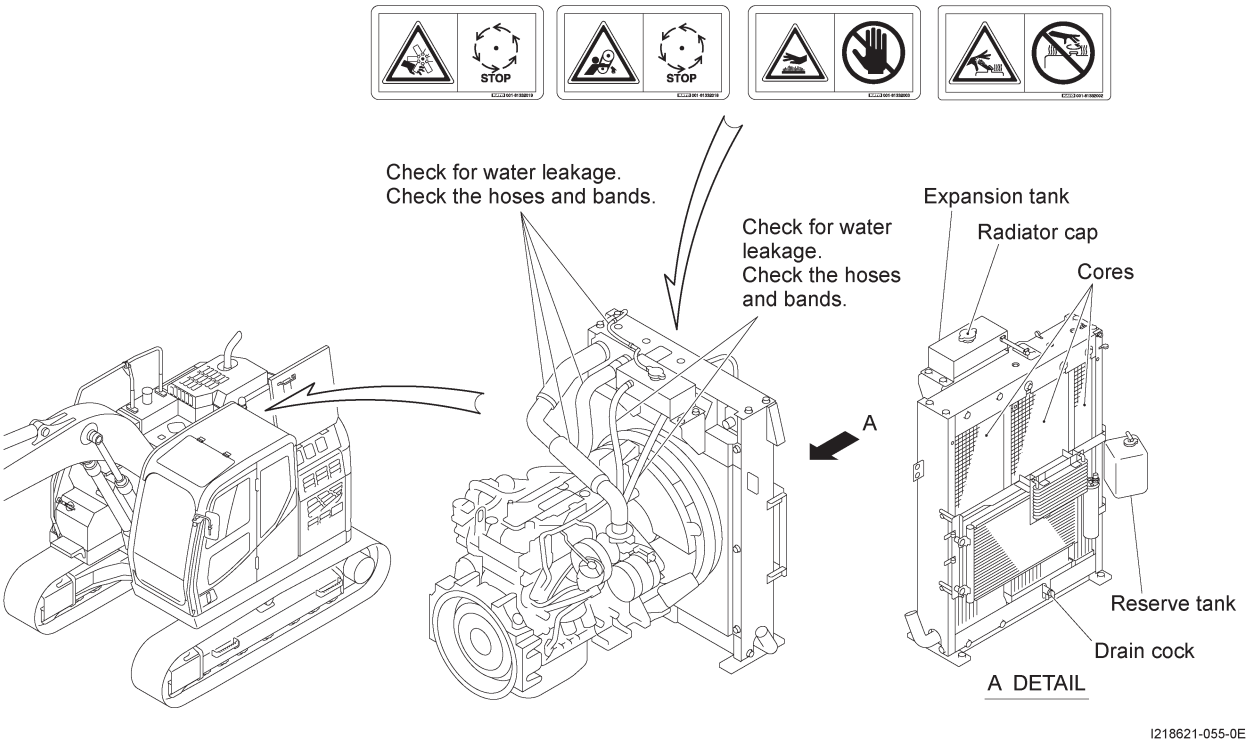

(1) Intervals for inspection and cleaning of the cooling system and replacement of the coolant

1) Water leakage, damage on the hoses, or looseness on the bands ··· At the time of preoperational checks
2) Coolant level inspection ····· At the time of preoperational checks
3) Coolant replacement ····· Every 2 years
4) Cooling system cleaning ····· Every time the coolant is replaced.
5) Long Life Coolant ····· KATO Diesel Long Life Coolant (non-amine)
6) Long Life Coolant addition volume ····· Add KATO Diesel Long Life Coolant at 50% concentration.
7) Coolant adding ····· Add the coolant through the filler cap on the top of the reserve tank.
8) Water for coolant ····· Use tap water (soft water).
9) Radiator core cleaning ····· Monthly or every 100 hours of operation

(2) Adding the coolant

Always check the coolant volume before starting the engine and check that the volume exceeds the "LOW" level of the reserve tank. Add the coolant if the level is low.

KATO Diesel Long Life Coolant is used in this machine. When adding the coolant, use KATO Diesel Long Life Coolant and avoid using plain water.

⚠ WARNING

When you add the coolant, check that it has cooled sufficiently.

(01E0-0306-0E)

https://truckmanualshub.com/

(3) Replacement of the coolant

⚠ WARNING

- Removing the radiator cap when the coolant in the radiator is hot could cause burn injuries from hot coolant being ejected.
- Wait until the coolant has cooled adequately, then gradually loosen the radiator cap to relieve the pressure before removal. Use the reserve tank to check or replenish the coolant level.

(T217361-040-0E)

1) Draining of coolant

① Remove the radiator filler cap. Then, open the drain cock on the bottom of the radiator and let out coolant from inside the radiator.

② Loosen the water drain plug located on the left side of the cylinder block, and drain coolant from the engine.

③ Close the drain cock and the water drain plug.

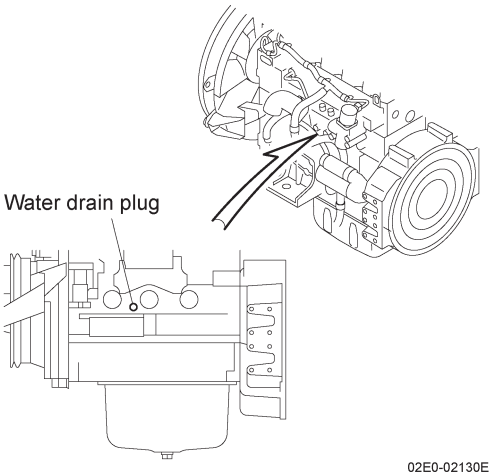

02E0-02130E

2) Cleaning coolant flow lines

① Fill the radiator with tap water up to the lip of the filler port through the filler port on the top of the expansion tank.

② Inspect and clean the radiator cap. If there is any problem with the cap, replace it.

③ Securely install the radiator cap.

④ Add tap water to the reserve tank until the water level reaches the specified level.

⑤ Close the cap on the reserve tank.

⑥ Start up the engine and let it idle for 20 minutes. Then shut off the engine and, after it has cooled sufficiently, drain the water.

3) Adding coolant

① Close the radiator drain cock and the engine water drain plug.

② Fill the expansion tank with coolant until the coolant level reaches the lip of the filler port and reserve tank until it reaches the "FULL" mark.
Add the coolant slowly to avoid air entrainment.
Total coolant volume ··· About 22L

③ Slowly add additional coolant to the expansion tank filler port until the coolant level reaches the lip of the filler port. Add the coolant water slowly to avoid air entrainment.

④ Push on the upper radiator hose several times to bleed the air from inside the hose. If the coolant level at the radiator cap decreases, add more coolant to raise the level back up to the lip of the radiator cap filler hole.
Repeat the above steps until the coolant level no longer decreases.

⑤ Securely install the radiator cap.

⑥ Add additional coolant to the reserve tank until the level reaches the specified level and then close the cap on the reserve tank.

https://truckmanualshub.com/

⚠ CAUTION

- Be careful not to spill coolant onto any exhaust system components.
- Be sure to wipe off any coolant spillage, which could cause a fire or other problems.
- Inspect the rubber seal before installing the radiator cap. If it is warped, cracked, or otherwise damaged, be sure to replace it with a new seal.

(T217361-076-0E)

⑦ Bleed the coolant piping connected to the DEF injector of air.
After removing one side of the coolant piping connected to the DEF injector, check that the coolant flows out of the piping, and reconnect the piping.

⑧ Wipe off any coolant spillage.

⑨ Start up the engine and let it idle for about 5 minutes. Then shut it off.

⑩ After confirming that the coolant has cooled, slowly remove the radiator cap. If the water level has decreased, then add coolant up to the lip of the radiator filler hole.

⑪ Securely install the radiator cap and start up the engine. Let it idle until it is warmed up. Air must be bled from the air conditioner heater circuit as well. Set the temperature setting and blower fan to their maximum settings. Also warm up the engine at about 1500rpm or higher, until the water temperature indicator stabilizes (coolant water temperature of about 90°C). If the water temperature does not increase, confirm that air has been bled from the heater lines, such as by having someone watch the radiator to check for warm air being discharged from the radiator.

⑫ With the engine still running, confirm that the thermostat valve opened by touching the upper hose to confirm that it is warm. If the hose is not warm, go back to step ⑪ and repeat the process.

⑬ Let the engine idle for about 5 minutes and then shut it off.

⑭ After confirming that the coolant has cooled, slowly remove the radiator cap. If the water level has decreased, then add coolant up to the lip of the radiator filler hole. If the coolant level has decreased significantly, check for any coolant leaks. Then securely install the radiator cap.

⑮ Add additional coolant up to the FULL level in the reserve tank and then close the reserve tank cap.

⚠ CAUTION

The next morning, check the water level in the radiator and reserve tank. If the water level lowers, add coolant up to the FULL level.

(T218341-136-0E)

https://truckmanualshub.com/

(4) Addition of Long Life Coolant and calculation of its concentration

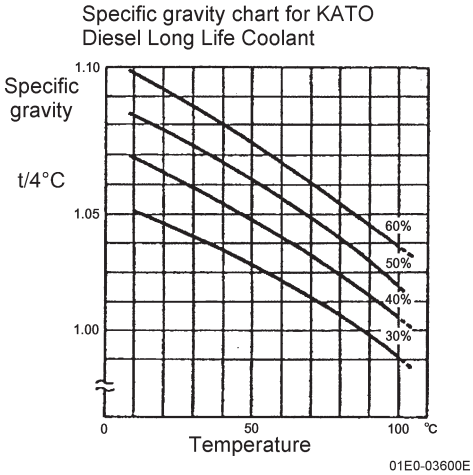

Coolant freezing temperature against addition volume of the Long Life Coolant

Freezing temperature	(℃)	-30	-40
Long Life Coolant concentration	(%)	50	55
Long Life Coolant addition volume	(L)	11	12.1
Water volume	(L)	11	9.9
Total coolant volume	(L)	22	

(Using KATO Diesel Long Life Coolant)

(T218341-068-0E)

Once you have finished adjusting the Long Life Coolant concentration, start the engine and allow it to mix the coolant fully, then use a hydrometer or concentration gauge to check the actual concentration.

⚠ CAUTION

- Use only genuine "KATO Diesel Long Life Coolant". Other brands could cause corrosion of copper and aluminum components and reduce their lifespan. The freezing temperature might be different, leaving the risk of freezing and engine damage.
- Use the Long Life Coolant within the concentration range between 50 — 60%. If it is 60% or more, the freezing temperature becomes higher.
  If the Long Life Coolant concentration is too high, the reduced cooling ability can cause overheating. Adjust the concentration to an appropriate level for the outside temperature.
  Long Life Coolant is added at 50% concentration when shipped from the KATO factory.
- If you top up the coolant level with water or repair coolant leakage, always recheck the Long Life Coolant concentration. An inappropriate concentration of Long Life Coolant can cause damage to the radiator or engine.

(T218341-069-0E)

(5) Precautions on handling Long Life Coolant

1) No fire near Long Life Coolant

Long Life Coolant is a hazardous substance and must not be handled near fire or other source of ignition.

⚠ CAUTION

Long Life Coolant is flammable, so beware of fire.

(01E0-0309-0E)

2) Do not drink Long Life Coolant

Long Life Coolant is poisonous. Never allow it into your mouth even when diluted. If you drink it by accident, make yourself vomit immediately and consult a doctor.

https://truckmanualshub.com/

3) Never leave Long Life Coolant unattended or improperly stored

If you decant Long Life Coolant into smaller containers for storage, seal the container and clearly label the lid "COOLANT" respectively. Store them out of direct sunlight and out of the reach of children.

⚠ WARNING

- If you accidentally get Long Life Coolant in your eye, wash the affected area immediately in large amounts of clean water and consult a doctor.
- When you add or replace the coolant, check that it has cooled sufficiently.

(01E0-0310-0E)

(6) Consumable part number

Refer to the "Consumable parts guide".

(7) Radiator core cleaning procedure

If dust or dead plants build up on the radiator core, oil cooler core or intercooler core, their cooling effect is drastically reduced and this can cause overheating.

1) Detach the protector net to clean any dust from the front side of it using 0.2MPa (2kgf/cm^2) or less of water or compressed air, from a distance of 20 — 30mm away, and keeping it as perpendicular as possible.
2) If dead plants etc. are wedged between the fins of the core, use a thin wire to remove them, taking care not to damage the fins.

   Also clean dust or debris off the protector net.
3) Reattach each cover to their original positions.

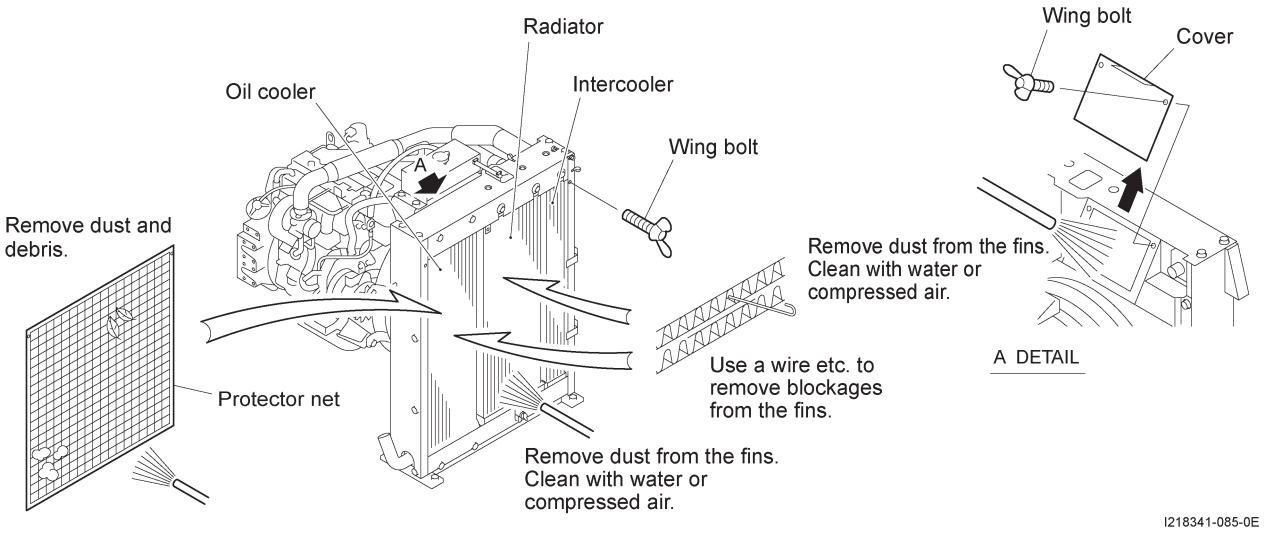

⚠ CAUTION

- Always wear protective goggles when cleaning.
- If you clean using water or compressed air at high pressure, the radiator fins can be deformed, blocking the flow of air and defeating the object of cooling. Keep an adequate distance between the nozzle and the core.

(01E0-0311-0E)

https://truckmanualshub.com/

(8) Procedure for cleaning the cooling system

When replacing the coolant because its antifreeze performance has declined, always clean the cooling system at the same time.

Refer to the separate engine manual for the method of cleaning the cooling system.

⚠ WARNING

- When the radiator coolant is hot, it could spray out dangerously when you take the radiator cap off, possibly causing burns.
- If you have to take the radiator cap off, wait until the coolant has had time to cool and slowly loosen the cap to allow pressure to dissipate before you remove it. Check the coolant level and top up with the coolant from the reserve tank.

(01E0-0312-0E)

https://truckmanualshub.com/

4-2 Hydraulic system-related (01E0-0315-0E)

4-2-1 Maintenance of hydraulic devices (01E0-0316-0E)

This machine is hydraulically powered and uses high-precision hydraulic equipment. Therefore if it is not operated and maintained correctly, its performance will be reduced and its lifespan shortened with an increased risk of malfunction. Always carry out the following daily inspections.

⚠ WARNING

- Always relieve pressure on the oil reservoir before you inspect or service any hydraulic part or system.
- Never interfere with the pump regulator setting and relief settings of the control valve and brake valve.
- The bolts holding hydraulic equipment in place are under an extremely high force, so they are tightened to the right torque. In case of trouble, contact your authorised KATO dealer.
  Special bolts are used for attachment of hydraulic equipment, so you should not use normal commercially available ones which might cause breakdowns.
- If the hydraulic oil is hot, wait for it to cool before carrying out inspection and servicing.
  If you start work while the oil is hot, you risk severe burns.
- When you have replaced the hydraulic device, return filter or hydraulic oil, you should allow a running-in period of approximately 10 minutes at engine low speed with the control levers in their neutral positions (with no load applied).

(01E0-0317-0E)

(1) Daily inspection of hydraulic devices

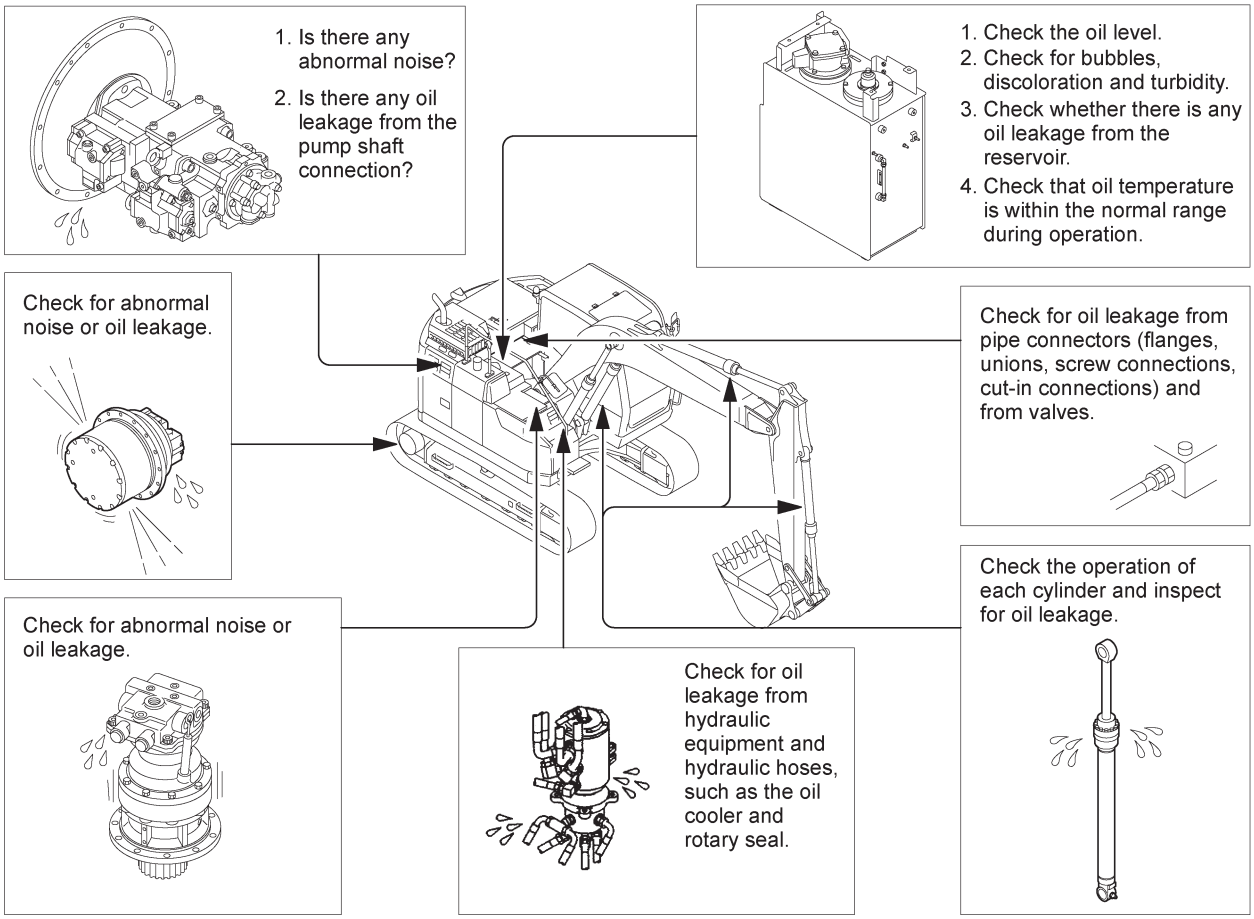

I218601-046-0E

https://truckmanualshub.com/

4-2-2 Reduction of pressure in the oil reservoir (T218341-079-0E)

When taking apart hydraulic piping or changing hydraulic oil, stop the engine and press on the air breather rubber cap. Start work after pressure has been completely relieved. When you refill with hydraulic oil, remove the cover from the return filter.

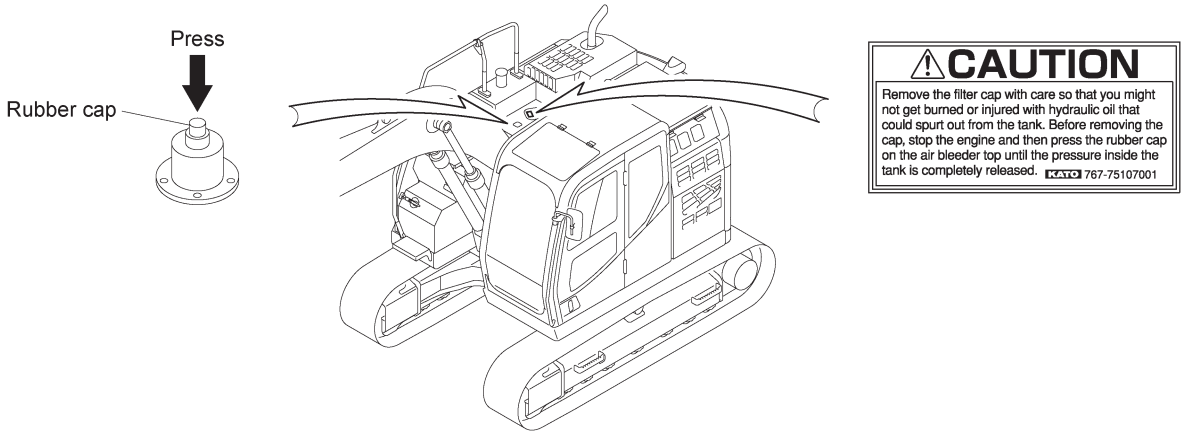

I218621-056-0E

4-2-3 Extraction of air from the hydraulic pump (01E0-0318-0E)

If you have replaced hydraulic oil or the hydraulic pump itself or removed the pump suction hose, you must go through the following air extraction procedure to extract air from the pump casing before starting the engine.

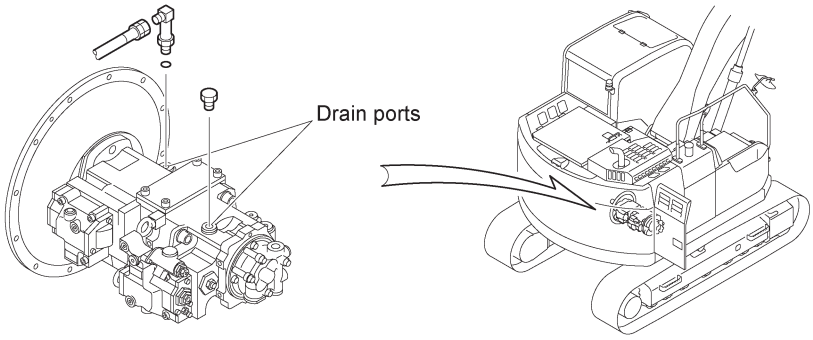

I218601-048-0E

(1) Air extraction procedure

1) Fill the oil reservoir with hydraulic oil to the regulation level.
2) Open the drain ports on the top of the pump.
3) Pour hydraulic oil in through both ports to fill the pump casing.
4) Tighten both joints and hoses, and run the pump unloaded at engine low speed.
5) Loosen both joints and hoses a little and extract the air from the pump casing.
6) After confirming that the air is out, tighten both joints and hoses.

⚠ CAUTION

- The pump will be damaged if it is run with air inside the casing. If you have replaced hydraulic oil or the pump itself or removed the pump suction hose, you must extract air from the pump casing.
- Air extraction from the pump casing and hydraulic circuits must always be done with the pump unloaded at engine low speed. At engine medium speed or more or with the pump under load, air can enter the pump and damage it.

(01E0-0319-0E)

https://truckmanualshub.com/

4-2-4 Replacement of the return filter element (T218081-080-0E)

(1) Structure of the KATO return filter

The structure of the KATO return filter is as shown in the diagram to the right. The hydraulic oil flows from the inside to the outside of the element to collect the captured dirt into the element, so the dirt does not flow into the oil reservoir structurally when the element is replaced to remove the dirt.

If the element is replaced carelessly, the dirt may get in the hydraulic circuit. Follow the correct procedure and replace the element with care.

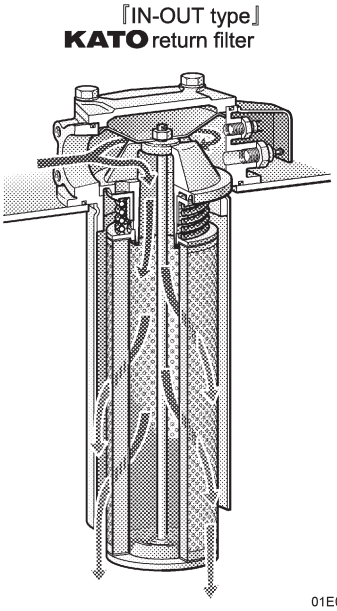

(2) Preparation

Prepare the following for element replacement.

1) Genuine KATO element

> ⚠ **CAUTION**
>
> The size and number of the filter vary with the type of the machine. If you use the breaker, be sure to use the high-performance filter. Always use the genuine KATO filter element. An imitation element is not guaranteed for performance and durability. If the worst comes to the worst, it could be damaged early and have an adverse effect on the hydraulic equipment. If an imitation filter is used, the hydraulic equipment is not guaranteed.

(01E0-0328-0E)

2) Clean tray which is already washed: (300mm × 450mm or equivalent)

3) Clean paper or cloth: with no nap

4) Hydraulic oil (cleaning fluid): the same new hydraulic oil as the machine is using

5) Ratchet wrench

6) 19mm box wrench

7) O-ring (for the cover)

(3) Operation before replacement

Before replacing the element, run the engine at medium speed (1000 — 1200min^{-1}) and perform traveling, swing, bucket, arm and boom operation in that order for two minutes respectively to collect the dirt into the return filter from the hydraulic circuit. Then stop the engine.

https://truckmanualshub.com/

(4) Reduction of pressure in the oil reservoir

Press the top of the rubber cap to relieve pressurized air in the reservoir.

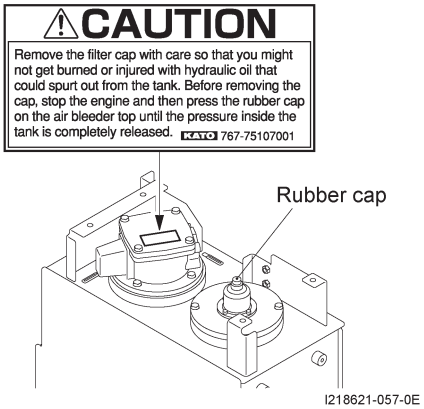

(5) Disassembly procedure

1) Unscrew the four bolts on the filter cover to remove the cover and O-ring from the filter case.

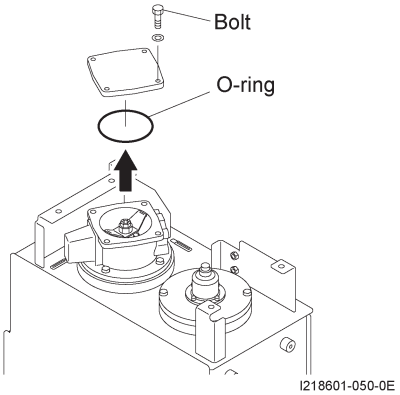

2) Pull the element assembly out of the filter case.

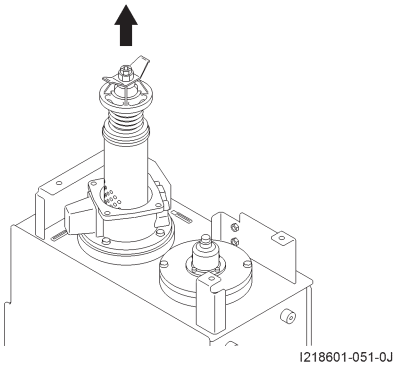

> ⚠ CAUTION
>
> Hold the spring and put the underside of the element on the inside flange of the filter case for about ten minutes to drain the oil from the filter assembly.

(01E0-0329-0E)

3) After pulling out the element assembly, put the removed cover onto the filter case to prevent entry of dirt or dust into the reservoir.

> ⚠ CAUTION
>
> Do not replace the element in a dusty workplace.
> The wind contains dust, so take an appropriate action for protection against the wind in a windy workplace before replacing the element.

(01E0-0330-0E)

https://truckmanualshub.com/

4) Put the element assembly from which the oil is drained onto the tray.

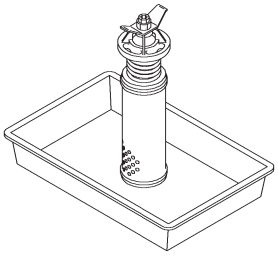

08E0-02830

> ⚠ **CAUTION**
>
> Use the washed tray. If the tray is dirty, it makes the lower part of the center bolt of the element assembly dirty. If the tray is not washed thoroughly, the hydraulic oil could be contaminated by the dirt, so caution is required.

(01E0-0331-0E)

5) Extract the snap pin from the center bolt on the top of the element assembly.

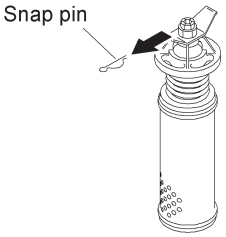

13EE-00430E

6) Unscrew the castle nut to remove the spring from the center bolt.

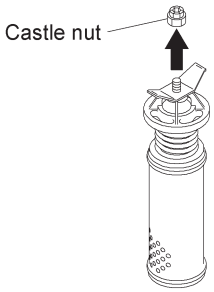

08E0-02850E

7) Extract the safety valve from the center bolt.

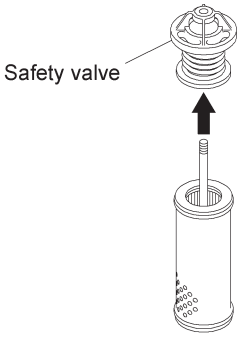

08E0-02860E

https://truckmanualshub.com/

8) Remove the center bolt from the element.

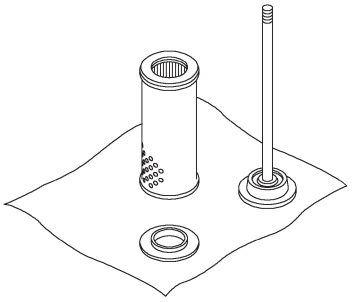

08E0-02870

(6) Cleaning and inspection

1) Thoroughly clean the component parts of the element assembly except the element using the new hydraulic oil which is prepared in advance.

2) Cover the washed parts with a cloth etc. which is prepared in advance to prevent dirt adhesion.

3) Check the O-ring. If it is damaged or stretched, replace it with new one.

(7) Assembly of the element assembly

Follow the procedure below to assemble the new element.

1) Prepare the clean paper or cloth for element assembly.

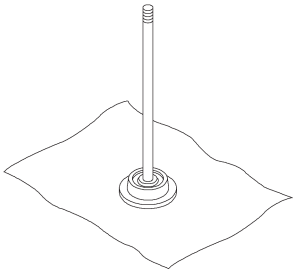

08E0-02880

2) Assemble the element to the center bolt.

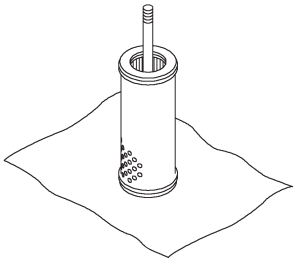

08E0-02890

3) Attach the safety valve to the element.

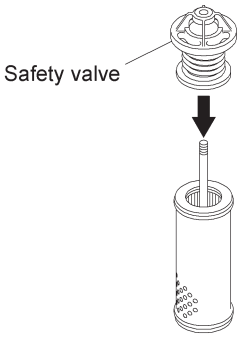

08E0-02900E

https://truckmanualshub.com/

4) Attach the plate spring onto the safety valve. Tighten the castle nut to the center bolt to the regulation torque.
Tightening torque: 10 — 15N•m (1.0 — 1.5kgf•m)

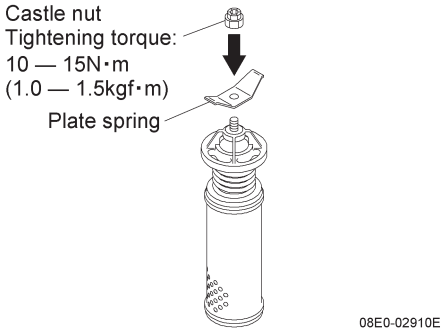

> ⚠ **CAUTION**
>
> If the tightening force on the castle nut is insufficient, the filter can not work efficiently.
> Tighten it to the regulation torque.

(01EE-0333-0E)

5) Insert the snap pin into the center bolt.

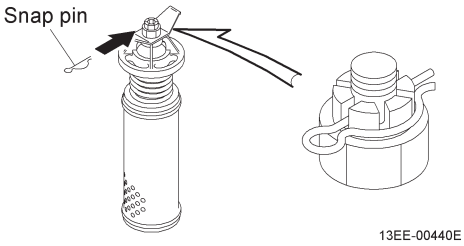

6) Hold the plate spring and store the element assembly into the filter case.

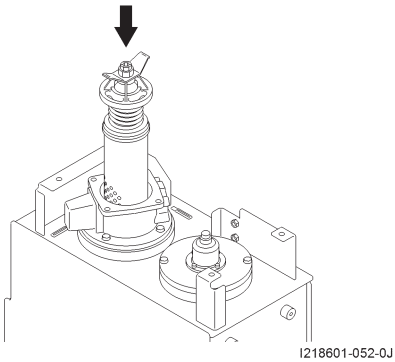

> ⚠ **CAUTION**
>
> When storing the element assembly into the filter case, keep the element not to come into contact with the other parts so that the element do not get dirty.

(01E0-0334-0E)

https://truckmanualshub.com/

7) Check the O-ring for damage again. Then attach the O-ring in place and put the cover onto the filter case.
8) Attach the washers to the four bolts and tighten the cover to the filter case to the regulation torque.
Tightening torque: 20 — 34N•m (2.0 — 3.5kgf•m)

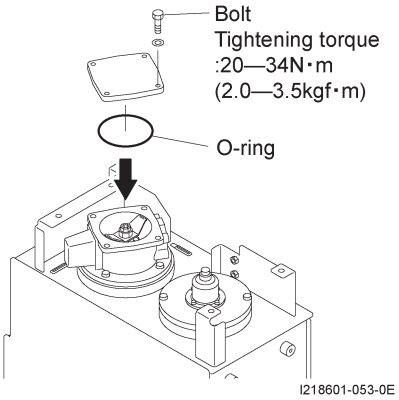

(8) Element replacement interval
Replacement interval …… 100 hours of operation after delivery of a new machine
Every 1000 hours of operation or yearly (standard spec.)
Every 250 hours of operation (when operating the breaker or crusher)
When you change the hydraulic oil

(9) Consumable part number
Refer to the "Consumable parts guide".

⚠ CAUTION

- You cannot wash the return filter element and reuse it. Always use a new, genuine KATO, filter element.
- If you are using the hydraulic breaker or crusher, replace the standard filter element with a high-performance type as described in the "Optional equipment".
- When you have replaced the return filter, you should allow a running-in period of approximately 10 minutes at engine low speed with the control levers in their neutral positions (with no load applied).

(01E0-0335-0E)

4-2-5 Hydraulic oil replacement (T218341-070-0E)

(1) Oil level check
Check the level of hydraulic oil every day.
The level of oil in the oil reservoir varies with the extension and retraction of the cylinders, so to check the oil level, first fully retract the arm cylinder and fully extend the bucket cylinder as shown in the diagram and place the bucket on level ground.

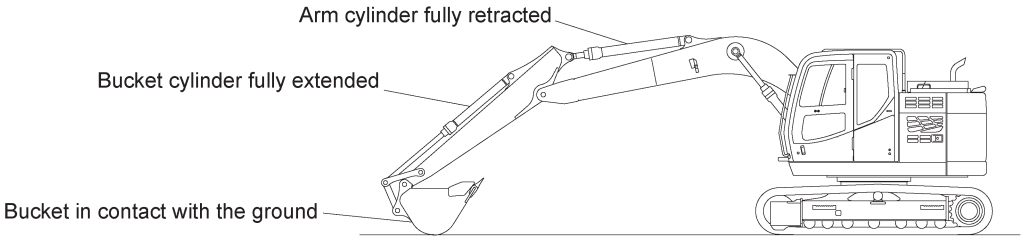

Hydraulic oil level inspection and filling position

I218601-054-0E

⚠ CAUTION

If you overfill with hydraulic oil, there will be insufficient air space in the oil reservoir, so when the oil level rises, the pressure in the oil reservoir will rise excessively, possibly causing breakage in the pipe system. Keep to the regulation volume.

(01E0-0321-0E)

https://truckmanualshub.com/

(2) Hydraulic oil replacement procedure

NOTE

If the return filter element is replaced at the same time, follow the procedure in "4-2-4 Replacement of the return filter element, (2) Preparation and (3) Operation before replacement" before replacing hydraulic oil according to the replacement procedure.

1) Park the machine on firm, level ground in the hydraulic oil filling position and relieve pressure in the oil reservoir.
2) Drain hydraulic oil through the drain plug and clean the suction strainer before closing the drain plug.
3) Remove the return filter cover and fill with hydraulic oil to the regulation level on the level gauge while pressing on the air breather rubber cap.
4) Fit the return filter cover.
5) Extract air from the pump.
6) The oil contains air, so run the engine at idling speed and operate the machine gently for 10 — 15 minutes, moving the cylinders evenly, then put the machine in hydraulic oil filling position and recheck the level.
   The oil level should lie between the H and L lines on the level gauge. Do not top it up beyond the H level. Do top it up if it is below the L level.

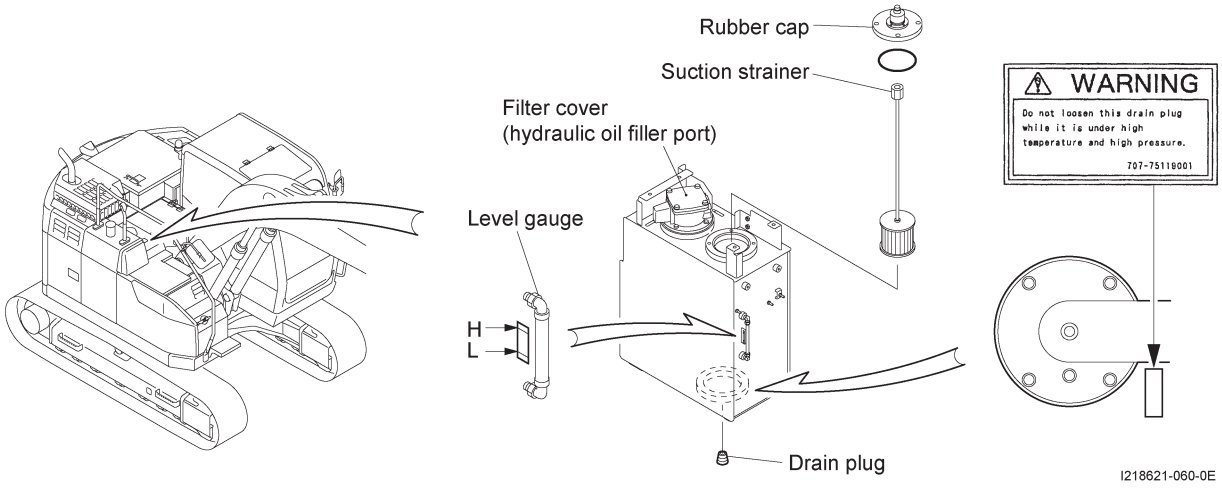

CAUTION

- Always top up with new oil of the exact same brand and name. Do not mix with other oil products.
- Always extract air from the pump after changing hydraulic oil.
- When you have replaced hydraulic oil, you should allow a running-in period of approximately 10 minutes at engine low speed with the control levers in their neutral positions (with no load applied).

(01E0-0322-0E)

(3) Inspection and replacement intervals

Inspection interval …… At the time of preoperational checks

Replacement interval … When using KATO recommended hydraulic oil: Every 2000 hours of operation or yearly
When using JXTG Nippon Oil & Energy Corporation HYRANDO WIDE KV32, KV46 or KV68: Every 5000 hours of operation
When operating the breaker or crusher: Every 750 hours of operation

Oil filling volume …… 78L

Total oil volume …… 156L

https://truckmanualshub.com/

⚠ CAUTION

Hydraulic oil will deteriorate naturally even if the machine is not being operated, so if the machine is stored for a long period, thoroughly inspect the condition of the hydraulic oil, and replace it if necessary, before starting to work.

(01E0-0323-1E)

4-2-6 Replacement of the air breather element (01E0-0324-4E)

⚠ WARNING

- Relieve pressure in the oil reservoir before you start to replace the air breather element.
- The hydraulic oil will be hot immediately after the engine stops, so wait until it cools to 40°C and less before you start work.

(01E0-0325-0E)

(1) Replacement procedure

1) Press on the rubber cap to extract the pressurised air inside the reservoir.
2) Turn the cover about 90° clockwise and remove the cap turning counterclockwise.
   Then turn the cover counterclockwise to remove and detach the element.
3) Place a new element and fastepn the cover turning clockwise until it touches the element inside. Further turn the cover 90° to fasten.
4) Finally fasten the cap tightly by hand.

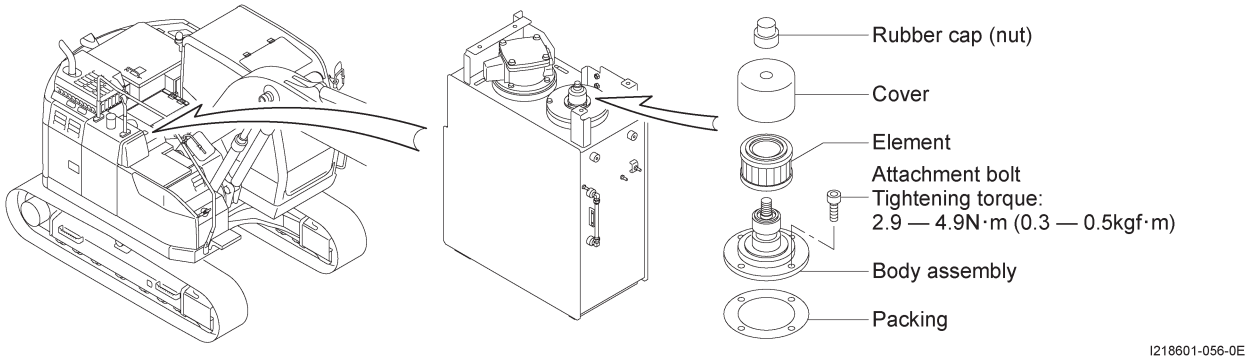

(2) Replacement interval

Replacement interval …… At the time of hydraulic oil change and every 1000 hours of operation or yearly

(3) Consumable part number

Refer to the "Consumable parts guide".

https://truckmanualshub.com/

4-2-7 Cleaning and replacement of the suction strainer (01E0-0326-1E)

(1) Cleaning and replacement procedure

1) Relieve pressure from the oil reservoir.
2) Remove the strainer from inside the oil reservoir.
3) Clean the strainer with a clean, non-flammable solvent and dry it thoroughly.
4) Inspect the strainer and O-ring and replace them if they are damaged.

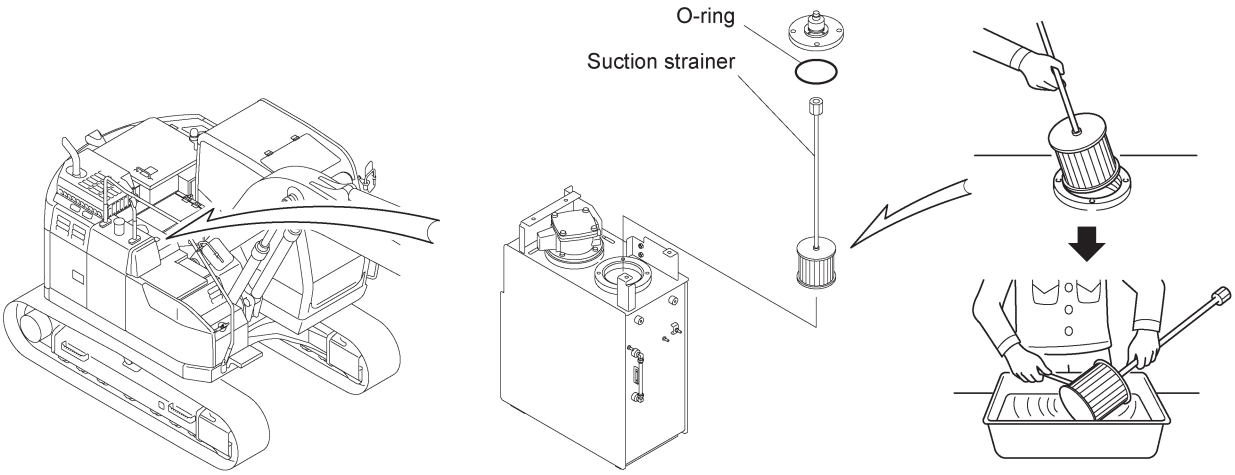

I218601-057-0E

(2) Cleaning and replacement intervals

Cleaning interval ····· When you change the hydraulic oil

Replacement interval ····· When defective

(3) Consumable part number

Refer to the "Consumable parts guide".

4-2-8 Replacement of the drain filter cartridge (01E0-0336-3E)

(1) Cartridge replacement procedure

1) Relieve air pressure in the reservoir.
2) Use the specified wrench to remove the cartridge [1].
3) When fitting a new cartridge, coat the packing surface with clean hydraulic oil and turn the cartridge through approximately 2/3 of a turn after the packing contacts the seal surface.
4) Start the engine and check that no oil leaks through the seal surface.

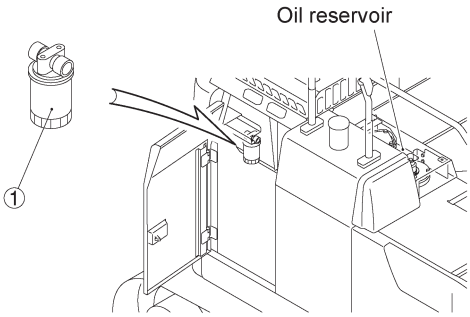

I218601-058-0E

(2) Cartridge replacement interval

Replacement interval ····· Every 1000 hours of operation or yearly

After delivery of a new machine, the cartridge should be replaced after 100 hours of operation.

(3) Consumable part number

Refer to the "Consumable parts guide".

⚠ CAUTION

- You cannot wash the cartridge and reuse it.
- Always use a new, genuine KATO, filter cartridge.

(01E0-0337-1E)

https://truckmanualshub.com/

4-2-9 Replacement of the pilot line filter cartridge (04E0-0031-2E)

(1) Cartridge replacement procedure

1) Relieve air pressure in the reservoir.
2) Use the specified wrench to remove the cartridge [1].
3) When fitting a new cartridge, coat the packing surface with clean hydraulic oil and turn the cartridge through approximately 2/3 of a turn after the packing contacts the seal surface.
4) Start the engine and check that no oil leaks through the seal surface.
   Tightening torque for the cartridge: 29.4 — 39.2N•m (3.0 — 4.0kgf•m)

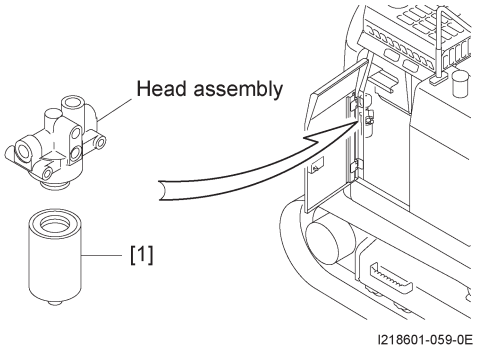

⚠ CAUTION

- You cannot wash the cartridge and reuse it.
- Always use a new, genuine KATO, filter cartridge.

(01E0-0337-1E)

(2) Element replacement interval
   Replacement interval …… Every 1000 hours of operation or yearly

(3) Consumable part number
   Refer to the "Consumable parts guide".

4-2-10 Extraction of air from each cylinder (01E0-0341-0E)

Run the engine at low speed and stroke each cylinder four or five times, stopping before full stroke, then gently to full stroke more than five times.

https://truckmanualshub.com/

4-2-11 Accumulator handling (T218341-132-0E)

⚠ WARNING

In this machine fitted with an accumulator, the front attachment will fall under its own weight when the control lever is moved for the attachment to lower within one or two minutes after the engine has stopped if the starter switch is set to the "ON" position and the safety lock lever is moved to the "release" position.

After the engine has stopped, move the safety lock lever to the lock position and lock the optional attachment control pedal with its lock pin.

High-pressure nitrogen gas is sealed into the accumulator, so any inappropriate handling is potentially highly dangerous. Strictly observe the following points.

- Never pierce the accumulator or bring it near a fire or other source of heat.
- Do not weld a boss etc. onto the accumulator.
- When disposing of the accumulator, the enclosed gas must be released. Contact your authorised KATO dealer.

(T218341-133-0E)

An accumulator is fitted in the control circuit as a pressure-accumulation device. If the starter switch is set to the "ON" position and the safety lock lever is moved to the "release" position, it allows the control circuit to go on functioning for one or two minutes after the engine has stopped.

Therefore if you move the control lever to lower the front attachment, it is able to move down under its own weight.

You can also release residual pressure in each circuit (boom, bucket, arm) by moving the control levers in this condition.

The accumulator is fitted as shown below.

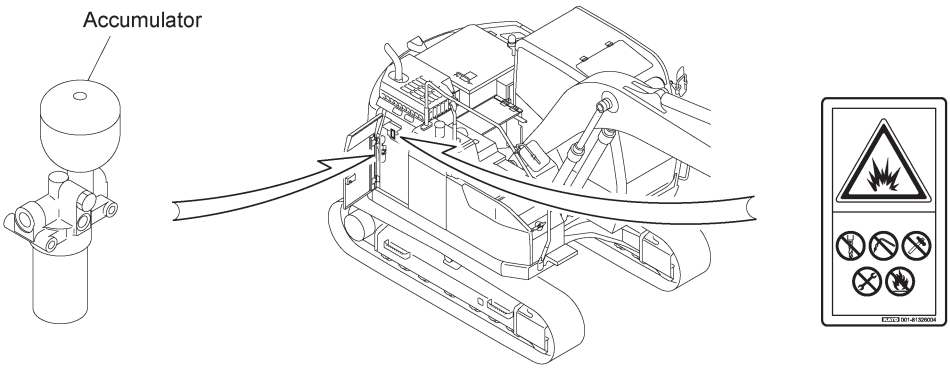

I218621-062-0E

https://truckmanualshub.com/

4-3 Travel-related (01E0-0344-0E)

⚠ WARNING

- After jacking up, always place a block or other secure support under the traveling frame for safety to support the machine.
- Place the front attachment in a stable position, stop the engine and move the safety lock lever to the lock position.

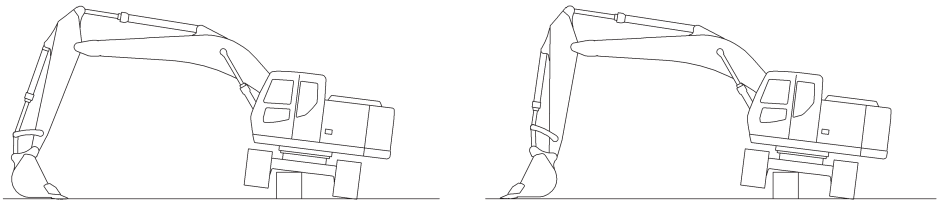

I218411-041-0J

(01E0-0345-0E)

4-3-1 Front idler inspection (T218341-071-0E)

Check to make sure no oil is leaking from the front idlers. If any oil is leaking, have your authorised KATO dealer add oil. Operating the machine with oil leaking from the front idler could damage the travel system.

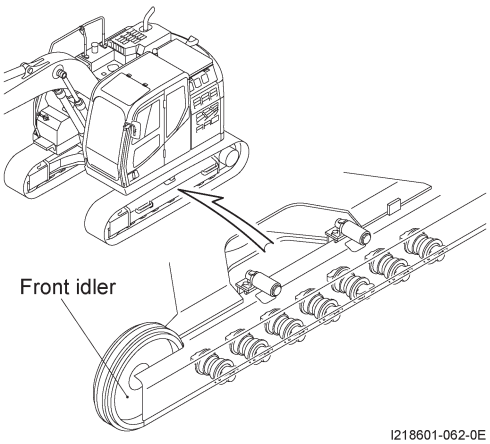

I218601-062-0E

4-3-2 Track shoe tension inspection and adjustment (T218341-072-0E)

- Check that the there is no too much slack or tension in the track shoes.
- Track shoes are adjusted by using the adjuster cylinders to move the front idlers backward or forward.

(1) Measuring the amount of slack

When you are adjusting track shoe tension, jack up each side separately and slightly drive the jacked up side shoe to measure the amount of slack. Adjust so that the amount of dimension A between the underside of the traveling frame and the top of the track shoes is 270mm.

If you are working on ground which is likely to clog around the track links and pins, make the volume of slack slightly greater so that there is no tension on the track links.

NOTE

Turn the track links backward and measure with the upper track shoes under tension.

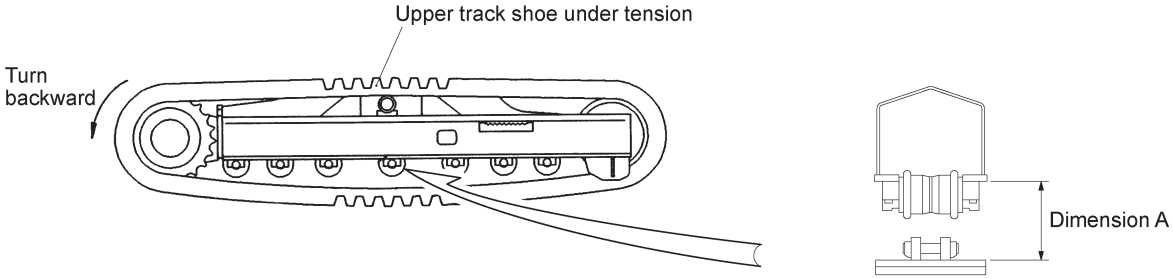

I218341-140-0E

https://truckmanualshub.com/

(2) Adjustment procedure

1) To increase track shoe tension

Use a high-pressure grease pump to inject grease into the adjuster cylinder through the grease nipple in the adjustment window on the outside front of the lower structure.

2) To reduce track shoe tension

Unscrew the grease drain plug of the adjustment window by turning it to the left. Grease will escape under its own pressure, increasing slack on the track shoe. After adjustment, screw the drain plug in.

(Tightening torque: 196N･m (20kgf･m))

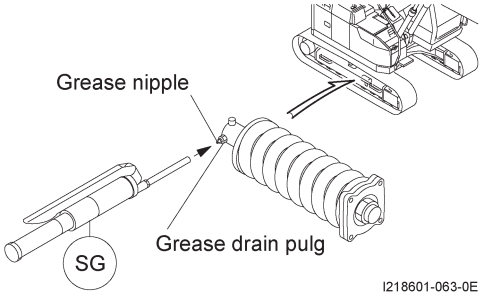

WARNING

- If you loosen the plug too much, it could fly under the high pressure of the grease inside. Do not unscrew the plug by more than one turn.
- Do not face towards the plug as you fit it.
- If the track shoe did not loosen, order a repair from your authorised KATO dealer.

(01E0-0348-0E)

(3) To check whether the track shoe tension is correct, travel the machine forward and backward and then re-inspect the track link tension.

CAUTION

When dimension A falls below the limit of use, the length of adjuster cylinder rod remaining inside the cylinder becomes too short, risking damage to the seal of the adjuster cylinder.

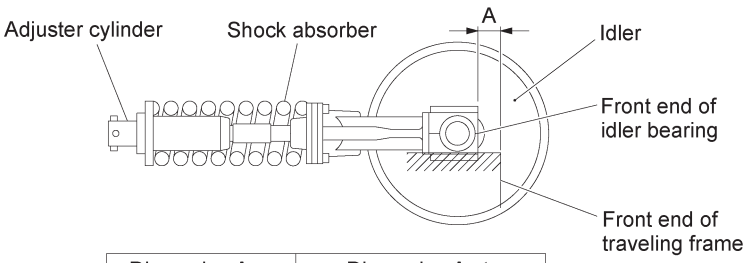

Dimension A on new machine	Dimension A at limit of use
60	0

(01E0-0349-1E)

https://truckmanualshub.com/

4-3-3 Oiling and inspecting the traveling motor reduction gear (T218341-073-0E)

⚠ WARNING

- Immediately after the traveling motor has stopped, the motor, shoes and other parts are hot, so do not start to work before all parts have cooled sufficiently.
- Residual pressure inside the traveling motor reduction gear may cause the plug or oil to fly out. Loosen the plug slowly to relieve pressure before proceeding.

(01E0-0351-0E)

⚠ CAUTION

If you replace the traveling motor reduction gear oil and the drained oil contains the metal dust etc., the reduction gear may need to be overhauled. Contact your authorised KATO dealer.

(01E0-0352-0E)

(1) Oiling method

1) Place the traveling motor reduction gear as shown in the diagram
2) Remove the level plug.
3) Pour gear oil in through the oil filler hole until it pours out from the level hole.
4) Screw the plugs back in to prevent oil leakage.
   Tightening torque: 98.1±19.6N·m (10±2kgf·m)

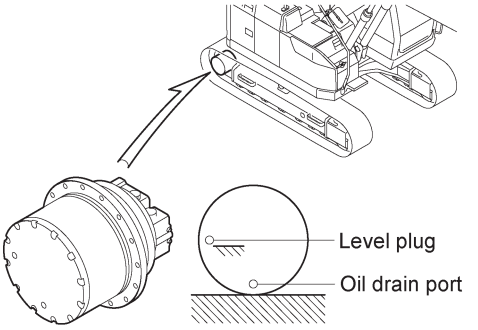

I218601-064-0E

NOTE

- Refer to the recommended lubricants table for the brand of gear oil.
- Allow at least ten minutes after traveling before you measure the oil volume.
- You may use any brand of gear oil, but you should use one brand consistently and avoid mixing different brands.
- The standard temperature of the reduction gear casing is normal hydraulic oil temperature + 20℃ in continuous operation.

(2) Inspection and replacement intervals

Inspection interval …… Every 250 hours of operation
Replacement interval …… Every 1000 hours of operation or yearly
After delivery of a new machine, the gear oil should be replaced after 500 hours of operation.
Oil volume (per traveling motor reduction gear) … 2.1L

https://truckmanualshub.com/

4-4 Swing-related (04E0-0034-0E)

4-4-1 Oiling the swing motor reduction gear (T218341-074-0E)

⚠ WARNING

Immediately after operating the machine, the swing motor, reduction gear and other parts are hot, so do not start to work before all parts have cooled sufficiently.

(01E0-0355-0E)

⚠ CAUTION

If you replace the swing motor reduction gear oil and the drained oil contains the metal dust etc., the reduction gear may need to be overhauled. Contact your authorised KATO dealer.

(01E0-0356-0E)

(1) Oiling method

1) Remove the level gauge, pour gear oil in through the oil filler port and use the level gauge to check that oil is at regulation level.

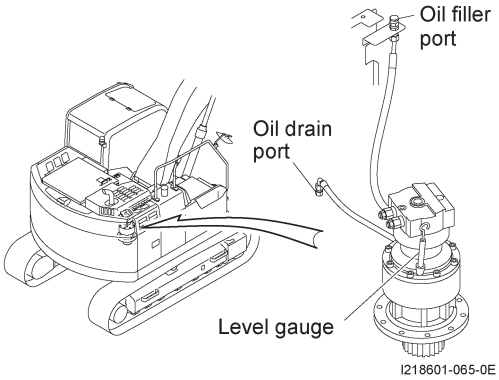

NOTE

- Refer to the recommended lubricants table for the brand of gear oil.
- You may use any brand of gear oil, but you should use one brand consistently and avoid mixing different brands.

(2) Inspection and replacement intervals

Inspection interval ····· Every 250 hours of operation

Replacement interval ····· Every 1000 hours of operation or yearly

After delivery of a new machine, the gear oil should be replaced after 250 hours of operation.

Oil volume ····· 2.5L

https://truckmanualshub.com/

4-5 Front attachment-related (01E0-0357-0E)

> ⚠ **CAUTION**
>
> Metal fragments can fly off and cause injuries, so always wear protective clothing including protective goggles and a helmet.

(01E0-0358-0E)

4-5-1 Bucket point inspection and replacement procedure (01E0-0359-0E)

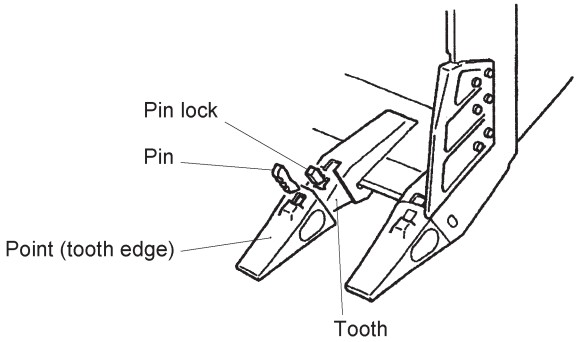

01E0-04000E

(1) Inspection procedure

The diagrams below show the limit of wear. The limit is reached when a small hole appears in the point.

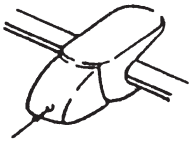

State of wear (limit of use)

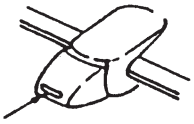

State of wear (beyond limit of use)

01E0-04010E

(2) Replacement procedure

Use a punch or similar tool to push the pin out, then remove the point and clean the tooth.

Then insert the pin lock into the tooth, fit the new point and insert the pin to complete fitting.

> ⚠ **CAUTION**
>
> The pin lock is made of rubber so replace it each time. If you use the same one repeatedly, the point may drop off.

(01E0-0360-0E)

NOTE

- The pin can be inserted easily from above or below.
- After inserting the pin, knock the point up, down, left and right several times with a hammer. If the pin is not properly in place, it will drop out, so reinsert it properly.
- If the point is worn on one side, you can change it from left to right or its orientation between up and down. This makes wear even and improves digging efficiency.
- If the points do not wear equally, you can improve digging efficiency by selecting points which are equally worn for use.

https://truckmanualshub.com/

4-5-2 Inspection and replacement of the side cutters (02E0-0051-0E)

(1) Inspection procedure

The limit of use is as shown in the diagram.

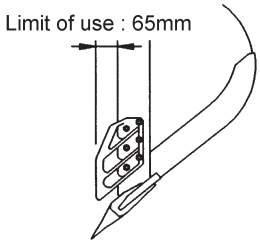

I217361-164-0E

(2) Replacement procedure

1) Clean away any earth etc. which is stuck around the attachment bolts.

2) Unscrew the attachment bolts and remove the side cutters. If the bolts are corroded in place and cannot be removed, melt them away to cut down.

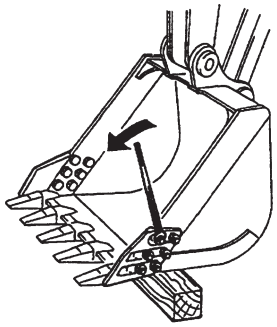

01E0-04030

3) Clean and smooth the attachment surfaces and attach new side cutters. Use new bolts, nuts and spring washers.

NOTE

Side cutter attachment bolt tightening torque:

423N•m (43.2kgf•m)

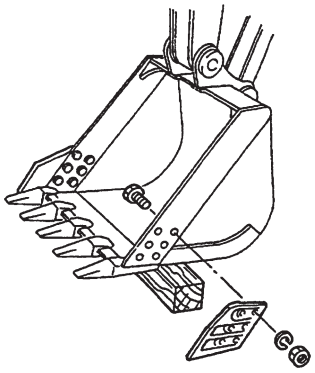

01E0-04040

4-5-3 Lifting hook inspection (optional) (01E0-0362-0E)

Inspect the hook for wear, cracks and deformation, the hook mounting for cracks, the rope retainer (latch, spring, pin, spring pin) for damage, and check the overall function.

If the hook has any problem, repair or replace it.

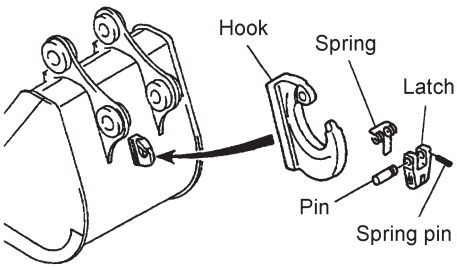

01E0-04050E

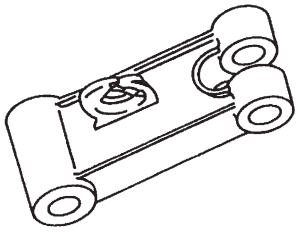

01E0-04060

https://truckmanualshub.com/

4-6 Electrical system-related (01E0-0363-0E)

4-6-1 Battery handling (T218341-075-0E)

This machine uses two 12V batteries connected in series with a 24V negative earth. Observe the following precautions when handling the batteries.

⚠ WARNING

1) When handling the battery system, wear a protective eyewear, protective gloves, and long-sleeved working clothes.
2) The battery electrolyte used is dilute sulfuric acid, so keep it away from your eyes, skin, clothing and any metal components. If it comes into contact with any of them, wash it away with large amounts of water. (In case of personal contact, consult a doctor after washing.)
3) The batteries generate flammable hydrogen, so do not use flame or other source of ignition near the batteries.
   In particular take care when welding.
4) Before inspecting/servicing the batteries or servicing the electric system, be sure to turn off the starter switch and turn the battery disconnect switch to the OFF position "○" for safety operation.
5) Before welding, be sure to turn off the starter switch and turn the battery disconnect switch to the OFF position "○" for safety operation. Failure to do so could cause the electronic device to malfunction.
6) The DEF pump continues to operate for 5 minutes after the engine stops. Do not turn the battery disconnect switch to the OFF position "○" or remove the battery cable. Doing so could cause blockage in the DEF lines. Before you turn the battery disconnect switch to the OFF position "○" or remove the battery cable, wait for at least 5 minutes after the starter switch is set to the "OFF" position.
7) When detaching the battery cable, always begin with the negative terminal and when reattaching the battery cable, begin with the positive terminal. Take care to connect the terminals correctly.
8) Handle the batteries with care. In particular do not charge them near flame or a source of ignition and do not dispose of them in fire as an explosion could result.
9) Never take the batteries apart or make holes in the casing.
   Any resulting leakage could cause dangerous corrosion and personal injury.
10) When recharging the batteries, dismount them from the machine, remove all bungs and place them in a well-ventilated area.

(T218341-076-0E)

NOTE

This excavator is equipped with the machine management system. Because the system unit operates continuously using the power supply circuit, it is continuously consuming power from the battery.

Consequently, it can deplete the battery if the engine has not been operated for a long time. Therefore, about twice a month, idle the engine for at least 30 minutes, with the accelerator dial set to medium or higher speed.

Run the engine more often as the battery ages, due to the diminished charge capacity.

https://truckmanualshub.com/

(1) Battery electrolyte level inspection

> ⚠ **CAUTION**
>
> When performing the preoperational checks, be sure to check the batteries for the electrolyte level and refill if they are insufficient. If the electrolyte level is below "LOWER", the battery could explode when starting the engine.

(01E0-0366-0E)

The battery electrolyte level should be between the "UPPER" and "LOWER" level lines.
If it is below the "LOWER" level, top it up with battery electrolyte or distilled water to the "UPPER" level.
Do not top up beyond the UPPER level.

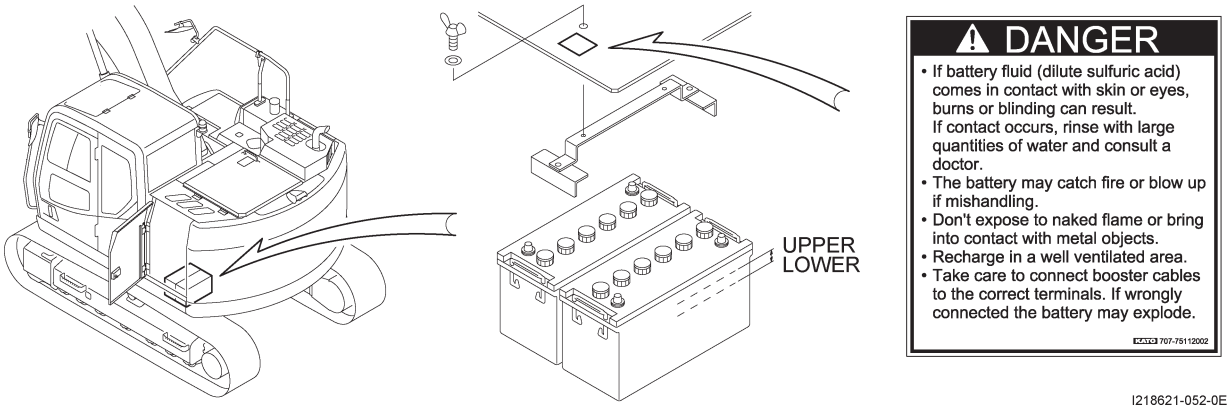

I218621-052-0E

(2) Battery terminal inspection

Check for loose terminals and clean away dirt and corrosion.

1) If the terminals are covered with whitish powdery corrosion, wash it with away with boiling water.
   If corrosion is severe, use a wire brush or sandpaper to scrape it away.
2) After cleaning the terminals, coat them in a thin layer of grease.
3) Specific gravity inspection
   Full charge 1.28 (at 20°C)
   Half charge 1.22
   You must recharge the battery if the specific gravity is at or below 1.22.

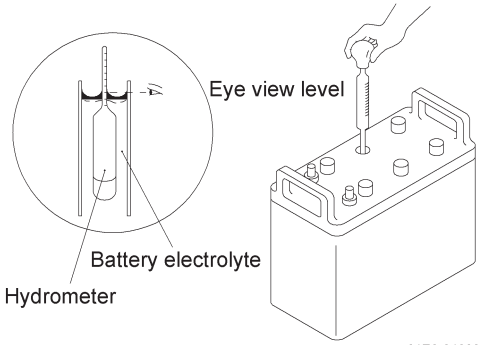

01E0-04080E

(3) Inspection and cleaning intervals for the batteries

Battery electrolyte level inspection …… At the time of preoperational checks
Specific gravity inspection …… Every 250 hours of operation
Terminal cleaning …… Every 250 hours of operation

https://truckmanualshub.com/

4-6-2 How to start the engine using the booster cables (T218601-044-0E)

⚠ WARNING

Precautions to observe when using the booster cables to start the engine

- When you are going to start the engine, refer to the section "Battery handling" in order to handle the battery correctly.
- Always wear protective goggles when you start the engine.
- Confirm the procedure for attaching the booster cables.
  Incorrect booster cable attachment can cause accidents and breakdowns such as battery explosion or shorting in the electrical system.
- When you connect the booster cables, never connect the positive and negative terminals to each other.
- This machine uses 24V battery capacity. The assisting machine should have the same specifications of the battery (voltage, capacity) as the broken-down machine has. Also use the right booster cables and clips for the battery capacity. If you use high-voltage sources such as those for welding equipment, or if you use a battery of a different voltage, you will damage the electrical equipment.
- When you are trying to start the engine, switch off all lights and accessories on the machine which has failed to start.
  It is dangerous to operate any accessories while the outside power supply is connected.
- Park the assisting machine so it is not in contact with the broken-down machine. If they do touch, a short circuit will result, possibly damaging electrical equipment.
- In order to prevent the electrical components of the failed machine from getting damaged, turn the battery disconnect switch to the OFF position "○" before installing the booster cable.
- When you detach the booster cables, do not allow the clips to touch each other or the machine.

(T218081-085-1E)

https://truckmanualshub.com/

(1) How to start the engine using booster cables

1) Stop the engines of the assisting machine.

2) Turn the battery disconnect switch of the broken-down machine to the OFF position "○".

3) Connect one end ① of the red booster cable to the positive battery terminal of the broken-down machine and the other end ② to the positive battery terminal of the assisting machine.

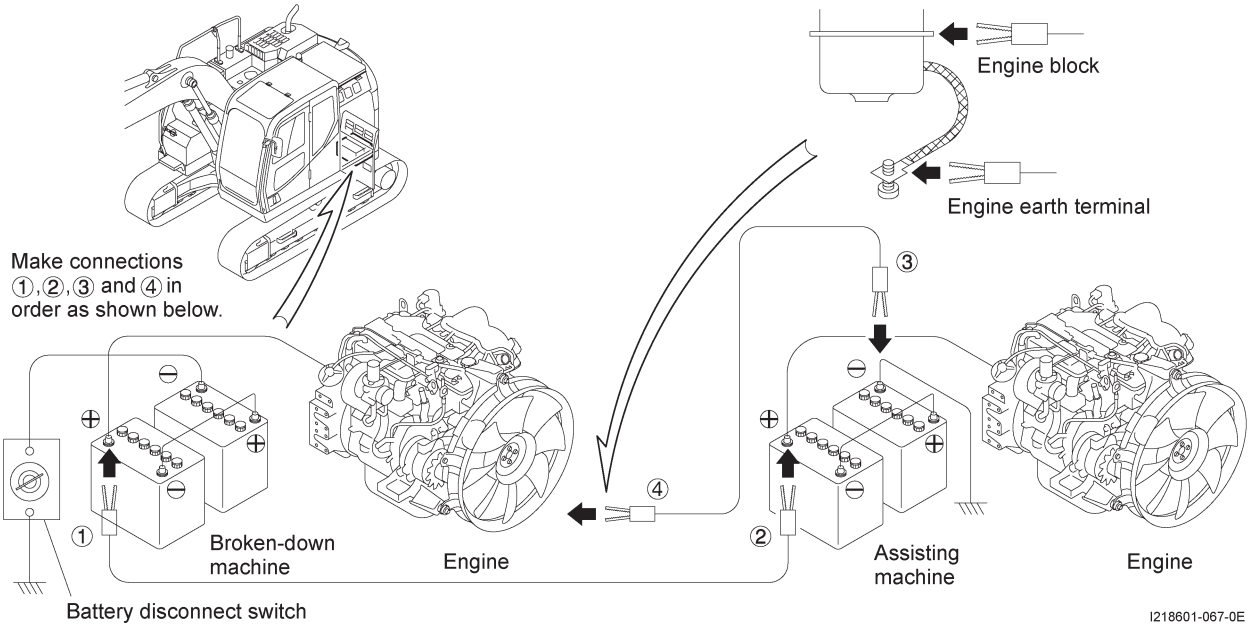

4) Connect one end ③ of the black booster cable to the negative battery terminal of the assisting machine.
Turn the battery disconnect switch of the broken-down machine to the ON position "|", and connect the other end ④ of the booster cable to the engine block or engine earth terminal of the broken-down machine.

5) Check the connections of the booster cables then start the engine of the assisting machine and increase its speed.

6) Start the engine of the broken-down machine. If it does not start, wait at least two minutes and try again.

(2) Booster cable disconnection procedure

1) Disconnect one end ④ of the black booster cable from the engine block or the engine earth terminal of the broken-down machine. Disconnect the other end ③ from the negative battery terminal of the assisting machine.

2) Disconnect one end ② of the red booster cable from the positive battery terminal of the assisting machine. Disconnect the other end ① from the positive battery terminal of the broken-down machine.

(3) If anything abnormal occurs during or after starting the engine, turn the starter key to the "OFF" position to stop the engine and contact your authorised KATO dealer.

https://truckmanualshub.com/

4-6-3 Replacement of bulbs and LED lights (T218081-201-0E)

Always switch the starter switch and lamp switches "OFF" before you start to replace the bulb or LED light.

Only use bulbs and LED lights of the correct rated voltage and wattage.

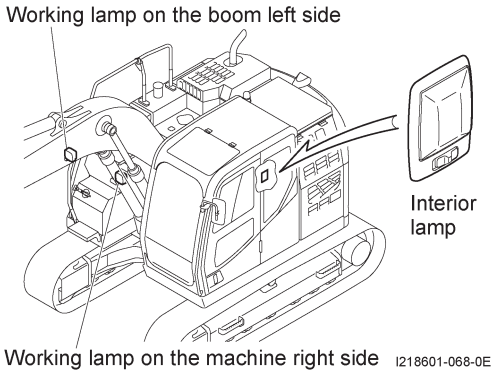

> ⚠ **CAUTION**
>
> Always replace the bulb or LED light with that of the specified capacity. If you use the bulb or LED light in excess of the rated capacity, the excess power consumption will cause accidents by blowing the fuse, burning to damage the relay or igniting electrical insulation.

(T218081-202-0E)

(1) Consumable part number

Refer to the "Consumable parts guide".

4-6-4 Fuse replacement (T218081-179-0E)

The fuse box is located on the left rear of the cab.

If a fuse blows, investigate the cause and repair the problem before replacing the blown fuse with another of the same related capacity. Use the fuse extractor on the rear side of the fuse box to extract the old fuse.

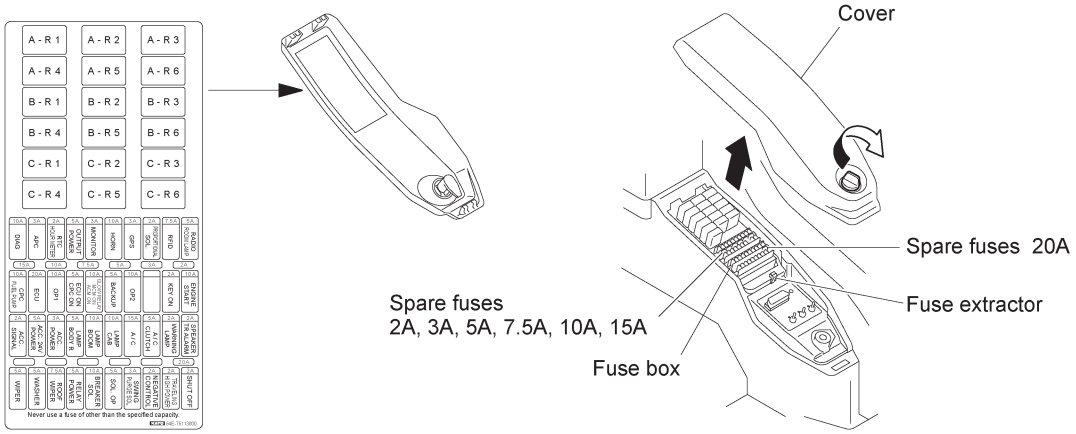

> ⚠ **CAUTION**
>
> - Never use fuses of other than the rated capacity, or wire etc.
> In the event of a power surge the wiring and electrical devices will not be protected from burning out.
> - Whenever you repair a failed part, turn the battery disconnect switch to the OFF position "○".
> If you do not turn the switch to OFF, it is dangerous because voltage is always applied to the fuses for some parts.

(T218081-086-0E)

(1) Consumable part number

Refer to the "Consumable parts guide".

https://truckmanualshub.com/

4-6-5 High current fuse replacement (01E0-0373-1E)

> ⚠ **CAUTION**
>
> - Before detaching a high current fuse, be sure to turn the battery disconnect switch to the OFF position "○".
> If you do not turn the switch to OFF, it is dangerous because the battery voltage is always applied to the high current fuses for some parts.
> - When the fuse has blown, investigate the cause carefully and repair the problem completely before attaching the fuse.
> - Be sure to use the fuse with the designated ampere.

(T218081-087-0E)

High current fuses are placed to blow and protect the circuit if a large current flows in the circuit between the batteries and the fuse box due to a short circuit or other problem.
If there is no abnormality in the fuses and a problem occurs in the electrical system, the high current fuse has blown. Contact your authorised KATO dealer and replace the high current fuse after the problem has been repaired.

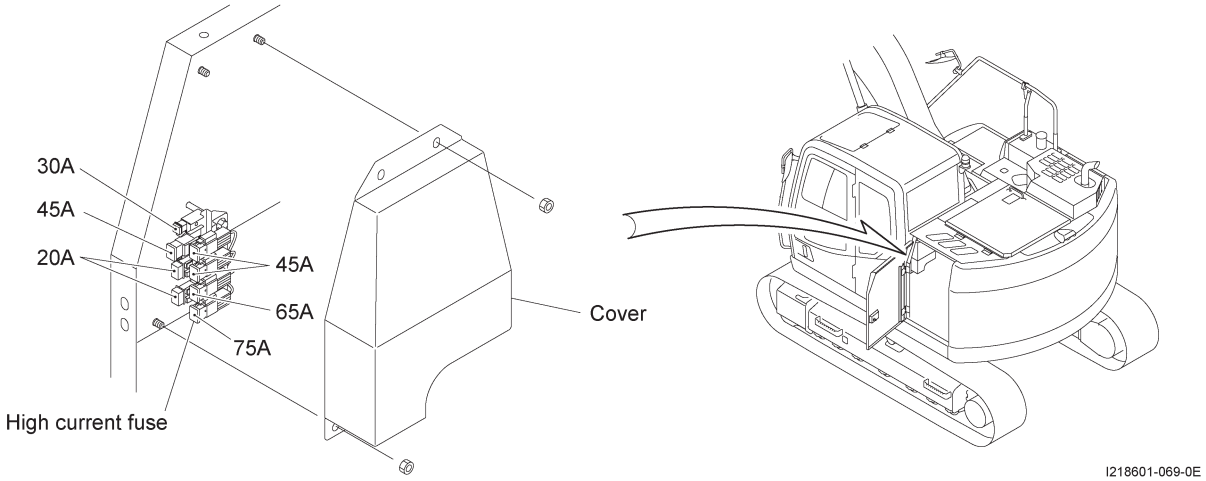

(1) Consumable part number
Refer to the "Consumable parts guide".

4-6-6 Inspection and replacement of the wiper blade (T218081-203-0E)

Work the windscreen wiper switch to check that the wiper works and that it switches normally between intermittent and continuous actions. Also check that the wiper blade is not damaged. Replace the wiper blade if it is worn or damaged.

(1) Consumable part number
Refer to the "Consumable parts guide".

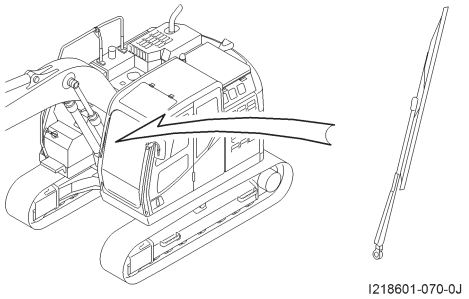

https://truckmanualshub.com/

4-7 Air conditioner-related (T218621-015-0E)

Have the air conditioner inspected and serviced regularly to maintain it at full performance.

⚠ CAUTION

- If the air conditioner malfunctions, switch it OFF and contact your authorised KATO dealer.
- Filling with refrigerant (gas) and other service tasks require special tools and instruments and should only be attempted in a properly equipped KATO dealer.
- The refrigerant used for this air conditioner is HFC-134a. The classification number of the refrigerant (chlorofluorocarbon) and the amount of refrigerant filled in at the time of factory shipment are shown on the label attached on the cover behind the operator's seat.
  Always have air conditioner repairs performed by your authorised KATO dealer. Always have it disposed of by a reputable waste disposal company.
- If laws or regulations in the country where the machine is operated specifies how chlorofluorocarbon gases must be used or managed, then comply with such requirements.

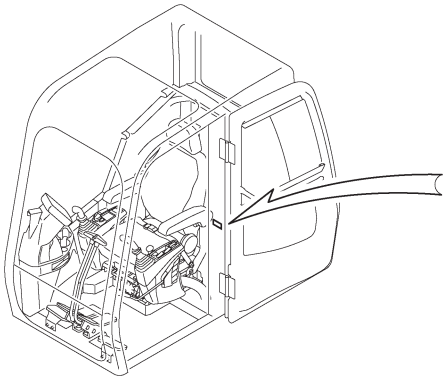

Fluorinated greenhouse gases

Air conditioner gas contains fluorinated greenhouse gases.

Industrial designation	Quantity (kg)	CO_2 equivalent (ton)	GWP
HFC-134a	1.0	1.43	1430

(Global warming Potential:GWP)

KATO 54E-75119000

I218621-066-0E

(T218401-057-0E)

NOTE

Even in seasons when the air conditioner is not used, run it with the automatic control switch turned OFF (manual control) and compressor switch turned ON for a few minutes two or three times per month to circulate oil to all parts of the compressor and maintain their oil coating.

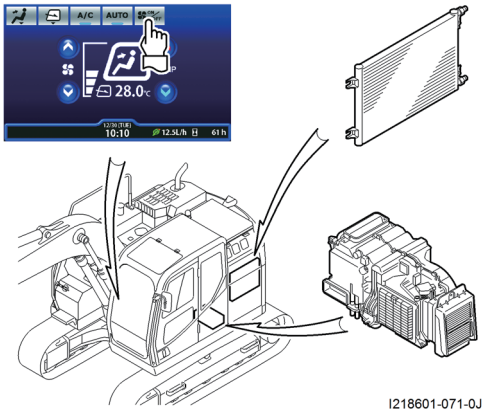

I218601-071-0J

https://truckmanualshub.com/

4-7-1 Inspection and servicing list (T218621-016-0E)

(1) Intervals for inspection, cleaning, and replacement

1) Inspection of the internal air filter and outside air filter ····· At the time of preoperational checks
2) Replacement of the internal air filter and outside air filter ····· Every 2000 hours of operation or 2 years
3) Inspection of the condenser ····· At the time of preoperational checks
4) Cleaning of the condenser····· Every 100 hours of operation or monthly
5) Crack or damage on the compressor belt ·····At the time of preoperational checks
6) Inspection of the refrigerant volume ·····* Every 3 months (See 4-7-6.)
7) Looseness, damage, or gas leakage of the connection piping ·····* Every 3 months (See 4-7-5.)
8) Replacement of the receiver drier ·····Every 2000 hours of operation or 2 years

NOTE

If laws or regulations in the country where the machine is operated specifies how often chlorofluorocarbon gases must be inspected, then comply with such requirements. If not, then inspection every 3 months is recommended.

4-7-2 Filter inspection, cleaning, and replacement (T218081-088-1E)

The air conditioner unit includes filters to prevent dust, debris, or other matter from accumulating on the evaporator or heater core. Periodically remove the filters to inspect them and clean them by lightly hitting them, to the extent it does not damage the plastic frame. If filter blockage is not resolved by cleaning or there is significant deterioration or damage, install a new replacement filter.

(1) Removing and installing filters

1) Internal air filter (location: behind the seat)

Removal: 1. Unlock the internal air filter.
2. Remove the internal air filter element from the unit frame.

Installation: 1. Align the bottom of the internal air filter with the bottom of the unit frame.
2. Lock the filter lock so that it presses the filter against the unit frame.

2) Outside air filter (location: inside the external maintenance door)

Removal: 1. Unlock the outside air filter cover by pulling the lock.
2. Remove the outside air filter cover and remove the outside air filter from the outside air filter box.

Installation: Install the filter by reversing the removal steps.

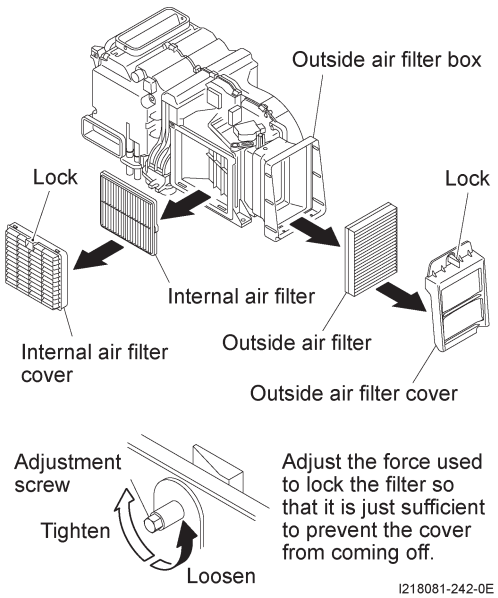

⚠ CAUTION

- The filters cannot be washed with water. Also, blowing them with compressed air could damage the filter fibers, which would result in a drop in dust filtering performance.
- Do not place tools or other items in front of the outside air filter. Doing so could damage the outside air filter or decrease air conditioner capacity due to inadequate air intake.

(T218081-089-0E)

(2) Consumable part number

Refer to the "Consumable parts guide".

https://truckmanualshub.com/

4-7-3 Belt inspection (01E0-0383-0E)

Check that the compressor belt and fan belt are not slack or worn. If the compressor belt is loose and slips, cooling performance will be reduced. If the fan belt is loose, it can cause overheating and battery depletion.

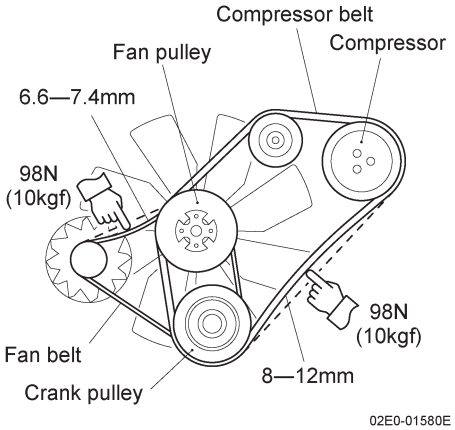

4-7-4 Inspection for blockage in the radiator and condenser (T218341-116-0E)

If the radiator and condenser are clogged with mud, insects etc., the passage of air will be obstructed, causing overheating and reduced cooling performance. Clean them regularly according to the section "4-1-14 Cooling system, (7) Radiator core cleaning procedure".

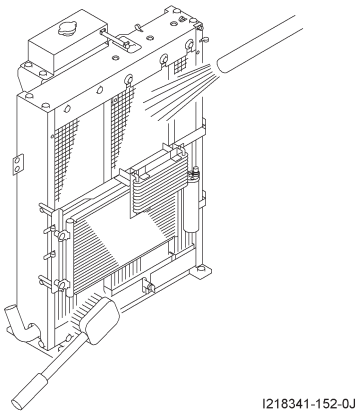

https://truckmanualshub.com/

4-7-5 Inspection of each part for operating status, damage, corrosion, or oozing of oil

(T218621-017-0E)

If laws or regulations in the country where the machine is operated specifies how chlorofluorocarbon gases must be used or managed, then comply with such requirements.
If not, then regular inspection is recommended.

Main inspection items

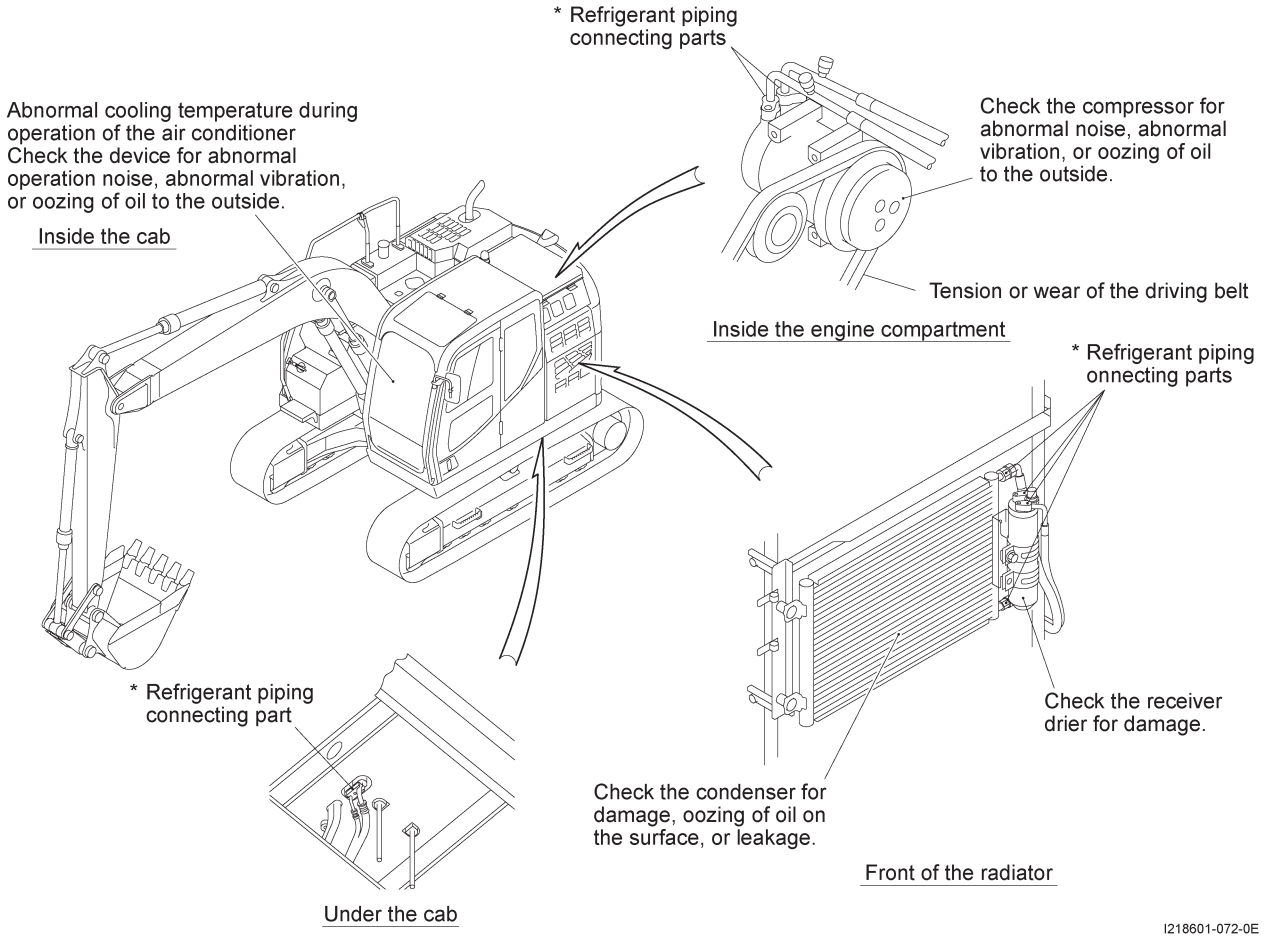

The refrigerant piping connecting parts (marked with *) are connections between each device and refrigerant hoses or piping. Check them for leakage or damage intensively.

If laws or regulations in the country where the machine is operated specifies how you must deal with chlorofluorocarbon gas leakage, then comply with such requirements.

https://truckmanualshub.com/

4-7-6 Inspection of refrigerant (gas) volume (T218621-018-0E)

The refrigerant for this air conditioner is HFC-134a. Never fill the air conditioner with any other refrigerant.

1) Conditions for evaluating refrigerant volume

Engine speed:	Low idling
Air volume switch:	Strong
Temperature setting switch:	Maximum cooling
Pressure on high-pressure side:	1.41 — 1.61MPa (14.4 — 16.4kgf/cm^2) (Block the front of the condenser by the right amount to produce a pressure in this range.)
Door:	Fully open
Windows:	Fully open

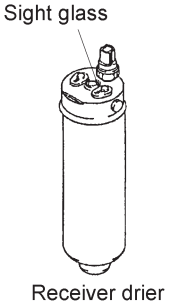

01E0-04170E

2) Evaluation guidelines

Compare the state of bubbling visible through the sight glass with the diagrams below.

Refrigerant volume	Status seen from the sight glass	Action
○ Correct	After the air conditioner is turned on, a very small amount of bubbling is visible, becoming transparent and then slightly milky.	
× Incorrect	After the air conditioner is turned on, bubbles are continuously visible.	Have your authorised KATO dealer check and refill with refrigerant.

(Explanation of refrigerant flow illustrations)

- Bubbling: Refrigerant is liquid with extensive mixing of vapour and liquid phases.
- Bubbles have disappeared: As all the refrigerant becomes liquid, it turns transparent.
- Milky: Oil and refrigerant separate to produce a slight milkiness.

541D-00810E

3) Filling volume of refrigerant at the time of factory shipment: 1.0 kg

⚠ WARNING

- The air conditioner circuit is filled with gas at high pressure. Use the appropriate equipment to release gas before you undo pipes or compressor parts.
- Filling with refrigerant gas and other service tasks require special tools and instruments and should only be attempted in a properly equipped KATO dealer.

(541D-0098-1E)

⚠ CAUTION

- Running the air conditioner when it does not contain refrigerant gas will harm the compressor.
- Filling with too much refrigerant (overcharging) will reduce cooling effect and can cause dangerously high pressures in the circuit, so be sure to fill with the right volume of refrigerant.
- In winter when the air conditioner is not used for cooling over a long period, run it with the automatic control switch turned OFF (manual control) and compressor switch turned ON for a few minutes two or three times per month to prevent gas leakage through the seals of the compressor.

(T218401-046-0E)

https://truckmanualshub.com/

4-7-7 Electrical circuit diagram for the air conditioner (01EE-0607-0E)

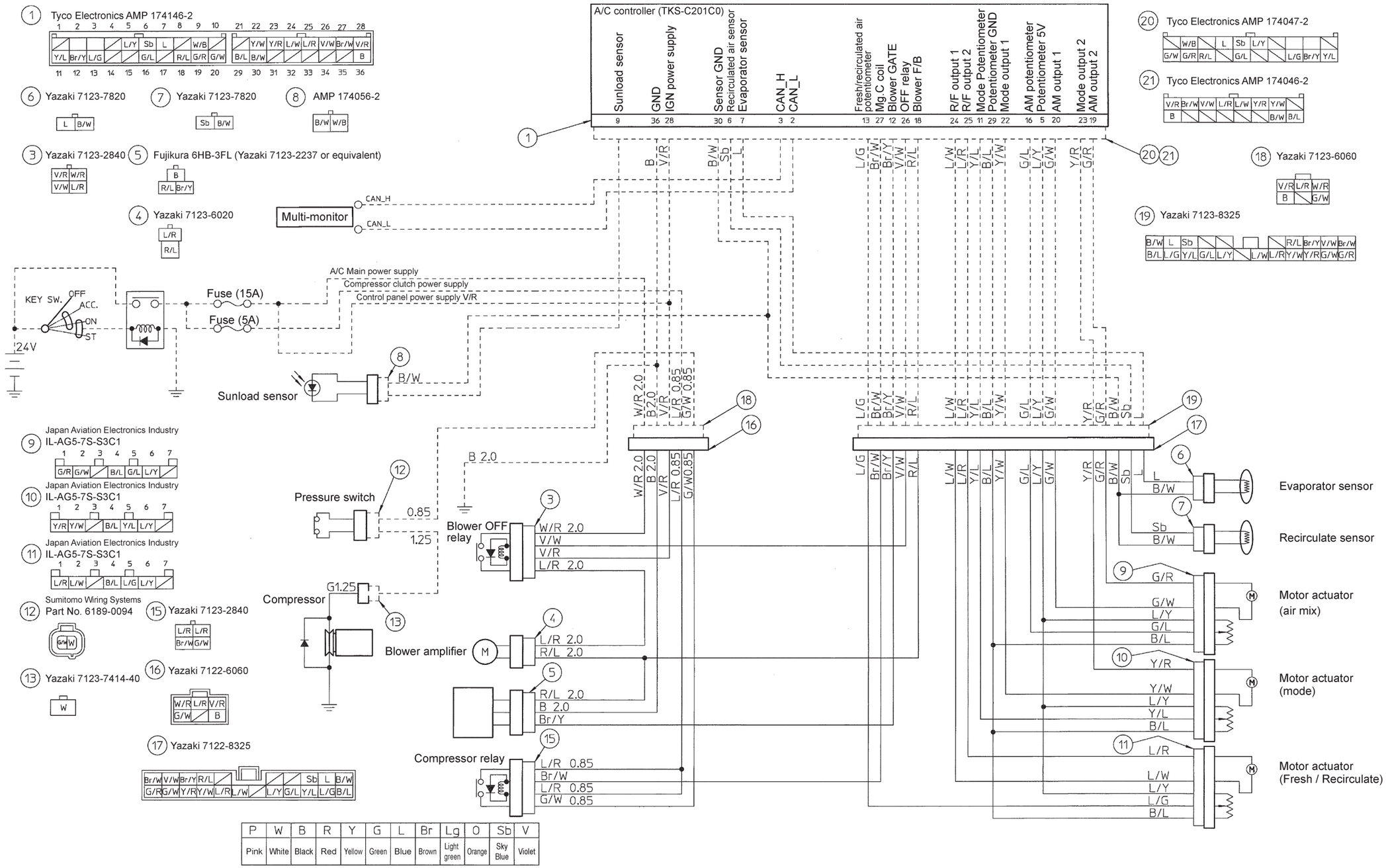

P	W	B	R	Y	G	L	Br	Lg	O	Sb	V
Pink	White	Black	Red	Yellow	Green	Blue	Brown	Light green	Orange	Sky Blue	Violet

Notes: 1. The diameter without direction is 0.5mm².
2. Broken lines indicate vhicle side wiring.
3. Indicate terminal colors are viewed from housing connecting fronts.
4. This drawing applies to Tier 4 STD power shovel.

I218621-068-0E

https://truckmanualshub.com/

MEMO

https://truckmanualshub.com/

4-8 Cab and control system (T218081-182-0E)

4-8-1 Inspection of the control levers and pedals (T218081-183-0E)

(1) Inspection procedure

1) Check that each control lever and pedal is in the neutral position when the engine is not running.
2) After starting the engine, slowly operate each lever and pedal independently to inspect the resulting movement of the corresponding components.

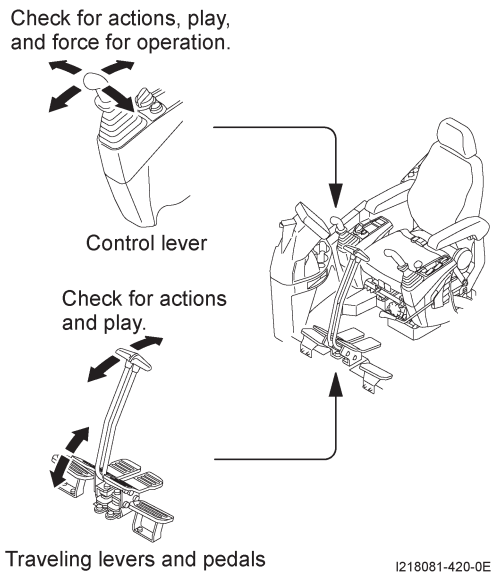

> ⚠ **CAUTION**
>
> - If a control lever or pedal is tilted, rather than in the neutral position, adjust it before starting operations.
> - If the machine moves differently than the operated direction of each control lever or pedal, then immediately shut off the engine and contact your authorised KATO dealer.

(T218081-184-0E)

4-8-2 Mirror (T218081-205-0E)

Sit in the operator's seat and ensure good visibility by adjusting the mirrors and cleaning them if they are dirty.

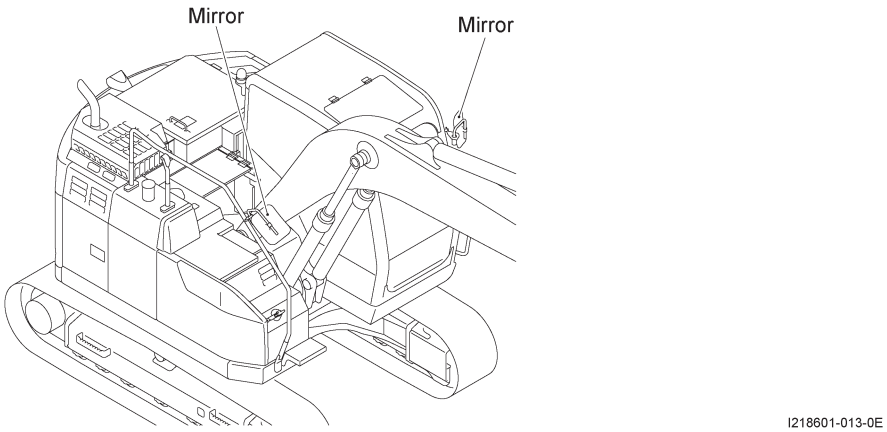

https://truckmanualshub.com/

4-8-3 Rear view camera (T218341-078-0E)

Check if the rear view camera lens is dirty. If dirty, clean the lens to ensure a sharp image.

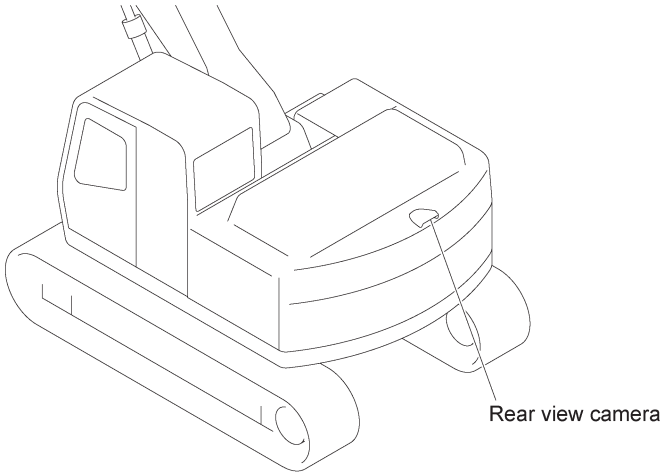

I218411-024-0E

https://truckmanualshub.com/

(T218621-019-0E)

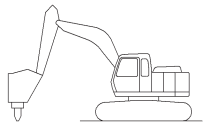

05E0-00080

Optional equipment

1. Handling a machine fitted with attachment pipes 247
1-1 Attachment mode settings 247
1-2 Operation procedure 248
1-3 Explanation of operation devices 249
1-4 Attachment mounting and dismounting procedure 251

2. Hydraulic breaker operation 252
2-1 Precautions on mounting the hydraulic breaker 252
2-2 Precautions on hydraulic breaker operation 253

3. Crusher operation 256
3-1 Precautions on crusher operation 256

4. Precautions when working with optional attachments 260
4-1 Grab fork 260
4-2 Stranger bucket 262

5. Specifications and compatibility of bucket models 263

6. Track shoe selection 264
6-1 Track shoe selection method 264

7. Track shoe types and applications 265

8. Procedures for multi-position lever operation 266
8-1 Procedures for multi-position shifting 266
8-2 Replacing the operating pattern label 267

9. Procedures for selector lever operation 268
9-1 Procedures for selector lever shifting 268
9-2 Replacing the operating pattern label 269

10. Procedures for selector lever operation 270
10-1 Procedures for selector lever shifting 270
10-2 Replacing the operating pattern label 271

https://truckmanualshub.com/

1. Handling a machine fitted with attachment pipes (T218081-091-0E)

1-1 Attachment mode settings (T218081-185-0E)

Move the switch to the mode corresponding to the attachment being used.

(1) Bucket mode

Mode best suited for digging operations.

(2) Breaker mode

Switches the hydraulic oil flow rate to the flow rate specified for breaker operations.

(3) Crusher mode

Switches to hydraulic circuits best suited to crusher operations.

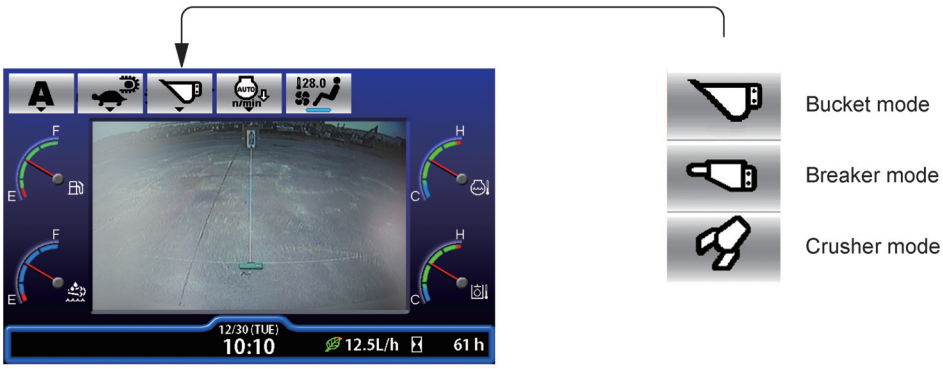

I218081-245-0E

https://truckmanualshub.com/

1-2 Operation procedure (T218341-081-0E)

(1) When using the hydraulic breaker

1) Make sure that the stop valves [A] on the both sides of the arm and the stop valve [B] on the body are in the "ON" position.
2) Use the attachment mode switch to select the breaker [ ] mode.
3) Move the control pedal lock pin ② to ⓐ (free) position and lock pin ① to ⓑ position, then press the pedal forward to operate the hydraulic breaker.

(2) When using the crusher and other general attachments

1) Make sure that the stop valves [A] on the both sides of the arm are in the "ON" position and that the stop valve [B] on the body is in the "OFF" position.
2) Use the attachment mode switch to select the crusher [ ] mode.
3) Move the control pedal lock pin ② to ⓐ (free) position and lock pin ① to ⓐ position, then press the pedal forward or backward to operate the attachment.

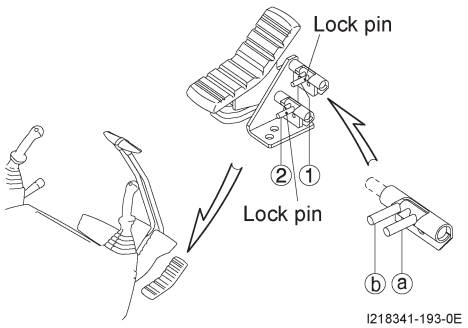

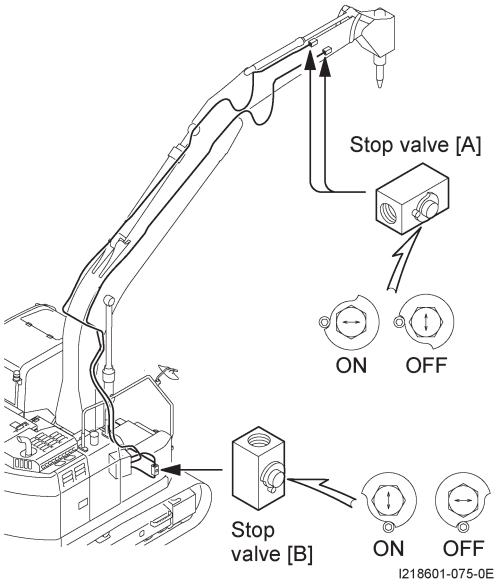

Stop valve open/closed and attachment mode switch combinations for each operation

Operation	Mode switch	Stop valve A (End of arm)	Stop valve B (Direct return)
Bucket		OFF	OFF
Breaker		ON	ON
Crusher		ON	OFF

(T218601-050-0E)

⚠ CAUTION

Switch the stop valve and mode switch based on the attachment mounted. Using a stop valve and mode switch configuration that is inappropriate for the given operation could damage the machine.

(T218401-047-0E)

https://truckmanualshub.com/

1-3 Explanation of operation devices (02E0-0055-1E)

(1) Control pedal

1) Lock pin

Pin ① at position ⓐ

·····For double-action operations (crusher etc.)

Pin ① at position ⓑ

·····For single-action operations (hydraulic breaker etc.)

Pin ② at position ⓐ (free position)

·····Set to the free position when the pedal is in use.

Pin ② at position ⓑ (lock position)

·····When the pedal is not in use, move this pin to the lock position and use the pedal as a footrest.

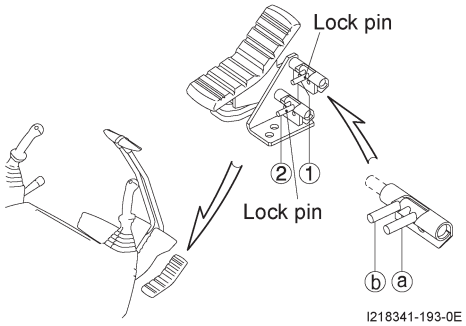

(2) Stop valve

This valve blocks the flow of hydraulic oil.

One stop valve [A] is installed to each side of the arm and one stop valve [B] on the body.

ON: Hydraulic oil flows.

OFF: Hydraulic oil stops.

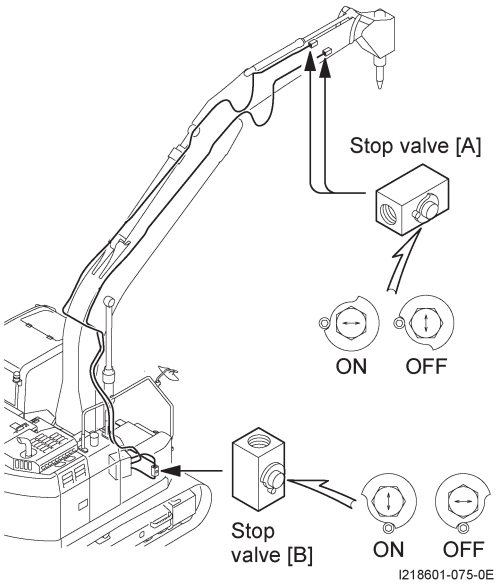

(3) When the hydraulic breaker unit is mounted

The control pedal lock pin positions should be pin ① to ⓑ, pin ② to ⓐ.

When you press the pedal forward, the oil flow path follows the arrows in the diagram on the right and the breaker operates.

Make sure that all the stop valves ([A] and [B]) are in the "ON" position.

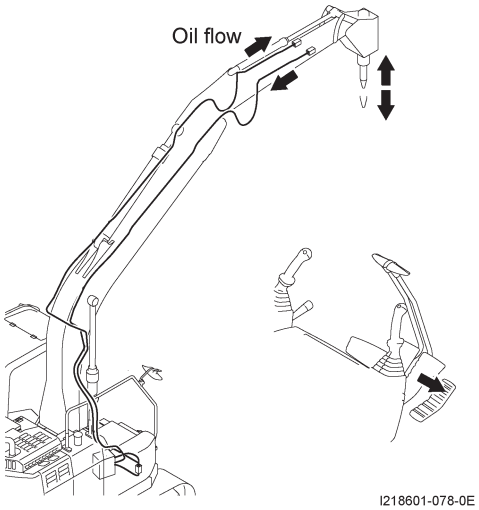

⚠ CAUTION

When you operate the control pedal lock pin and stop valve, stop the engine and move the safety lock lever to the "lock" position.

https://truckmanualshub.com/

(4) When the crusher is mounted

The control pedal lock pin positions should be pin ① to ⓐ, pin ② to ⓐ.

When you press the pedal forward, the oil flow path follows the black arrows in the diagram on the right. When it is pressed backward, the oil path follows the white arrows.

Make sure that the stop valves [A] are in the "ON" position and that the stop valve [B] is in the "OFF" position.

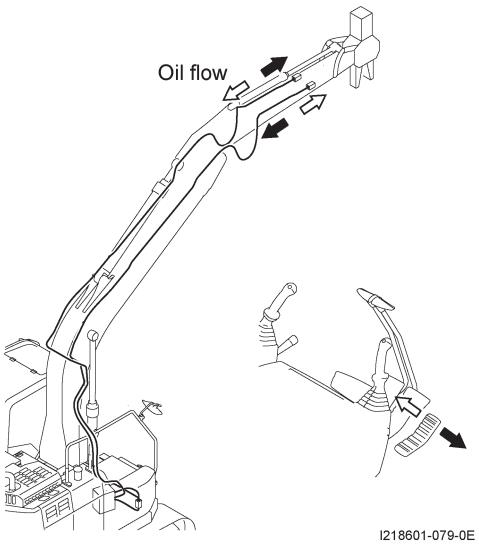

⚠ DANGER

When you have finished working with the attachment, take your foot off the pedal.

If you rest your foot on the pedal, you could inadvertently press it and move the attachment in a dangerous way.

When the lock pin is in the free position (ⓐ position), put your foot on the pedal only when you are going to operate the attachment.

(01E0-0390-0E)

https://truckmanualshub.com/

1-4 Attachment mounting and dismounting procedure (01E0-0391-0E)

> ⚠ **CAUTION**
>
> - When you have replaced the hydraulic attachment, you should allow a running-in period of approximately 10 minutes at engine medium speed with the control levers in their neutral positions (with no load applied).
> - When mounting or dismounting the attachment, take special care to avoid the entry of dust or dirt into the hoses and pipe ends.

(01E0-0392-0E)

1-4-1 Changing from the bucket to the hydraulic attachment (T218621-020-0E)

(1) Rest the bucket on the ground and stop the engine.

(2) Move each control lever forward, backward, left and right two or three times to relieve residual pressure in the hydraulic circuit while the starter switch is set to the "ON" position and the safety lock lever is moved to the "release" position.

(3) Switch the stop valves [A] which are mounted on the pipes of the arm sides to the "OFF" positions. Check at this stage that the hydraulic oil temperature has cooled to a safe level.

(4) Remove the plugs from each pipe and hose.

(5) Extract attachment pins A and B and mount the hydraulic attachment.

(6) Switch the stop valves [A] which are mounted on the pipes of the arm sides to the "ON" positions.

(7) Start the engine and check that there is no oil leakage or abnormal vibration before you start work.

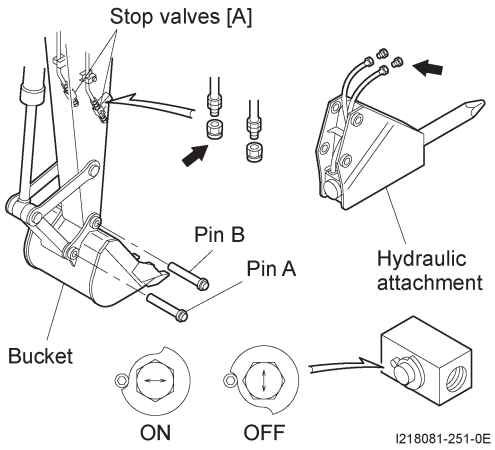

1-4-2 Changing from the hydraulic attachment to the bucket (T218601-022-0E)

(1) Rest the hydraulic attachment on the ground and stop the engine.

(2) Move each control lever forward, backward, left and right two or three times to relieve residual pressure in the hydraulic circuit while the starter switch is set to the "ON" position and the safety lock lever is moved to the "release" position.

(3) Operate the stop valves [A] and [B] into the "OFF" position. At this point, check that the hydraulic oil temperature has been lowered enough.

(4) Extract attachment pins A and B and dismount the hydraulic attachment.

(5) Plug each pipe and hose.

(6) Remount the bucket with reference to the section "Bucket replacement and reversal procedure".

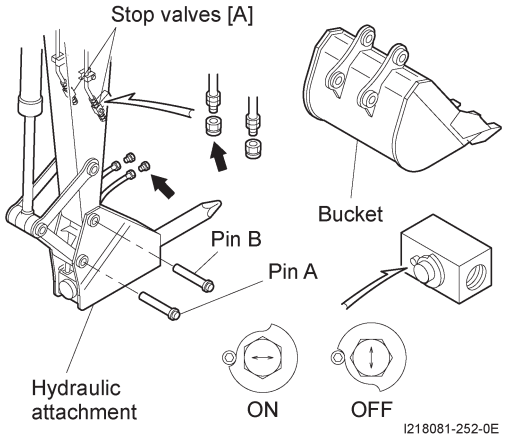

1-4-3 Preventing dangers, such as attachments tipping over (T217391-018-0E)

To prevent attachments from falling, tipping, or causing other dangers when mounting or removing attachments, use a replacement stand that allows holding the attachment in a stable position

https://truckmanualshub.com/

2. Hydraulic breaker operation (01E0-0396-0E)

2-1 Precautions on mounting the hydraulic breaker (T218081-094-0E)

(1) Selection of the hydraulic breaker

Choose a hydraulic breaker unit or a crusher which is suitable to be mounted on the machine.

Consult your authorised KATO dealer when choosing optional attachments.

(2) Precautions before using the hydraulic breaker

- If you arrange pipes or add arm reinforcement for the mounting of a hydraulic breaker unit after the machine has left our factory, contact your authorised KATO dealer.
- Refer to the section 7-1 (29) in the "Operation" for the hydraulic breaker flow volume setting.
- Before you use the hydraulic breaker, read the instruction manual for the hydraulic breaker unit thoroughly and be sure you fully understand its contents.
- The machine's specification (stability, working range, transport height etc.) is altered when an optional attachment is mounted. Contact your authorised KATO dealer for details.

(3) Beware of contamination with impurities

When the hydraulic breaker is not mounted, the pipe adapters on the arm tip and the hose ends on the hydraulic breaker unit must be securely plugged to exclude dust, moisture etc.

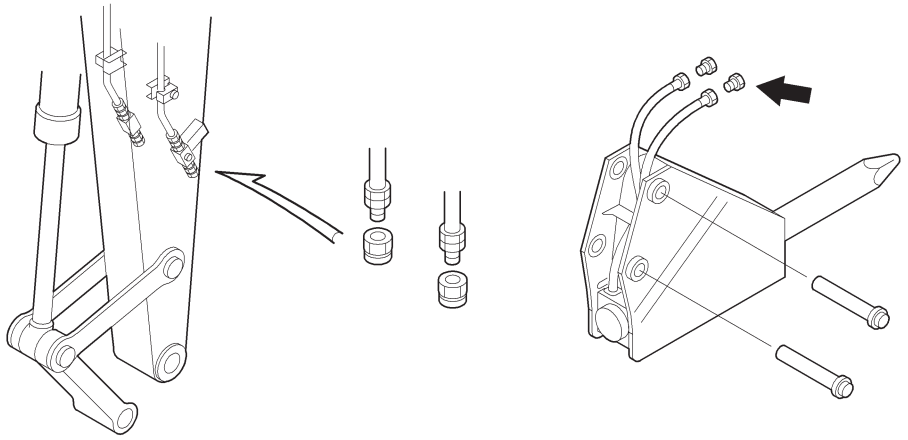

01E0-04290

⚠ CAUTION

- When using a hydraulic breaker or crusher, replace the standard filter element with the high-performance element. If you fail to do so, the lifespan of the hydraulic equipment will be reduced.
- Replace the filter element every 250 hours of operation.
  High-performance filter element part No.……689-33310001
- Completely replace the hydraulic oil every 750 hours of operation.

(T218341-082-0E)

https://truckmanualshub.com/

2-2 Precautions on hydraulic breaker operation (T218081-095-0E)

This section is a compilation of notes and precautions concerning the use of the hydraulic breaker.
Before you start to use the hydraulic breaker, read this section thoroughly and understand its contents so that you can work safely.

(1) Mount protective equipment
Impacts of the breaker scatter fragments, so the front guard and head guard should be mounted to protect the operator and the front window should always be closed.
Wear a helmet and goggles when using the hydraulic breaker.

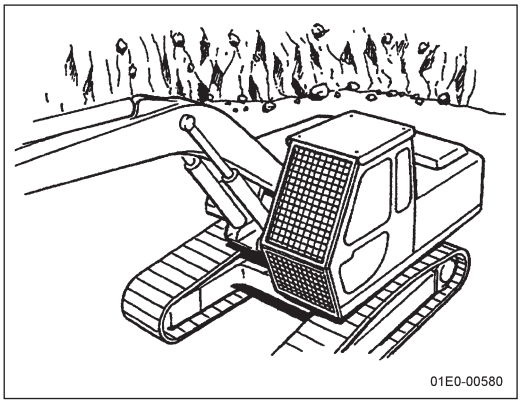

(2) Never use the hydraulic breaker for anything other than its original purpose
Do not use the hydraulic breaker for anything other than breaking materials.
The main applications of the hydraulic breaker are demolition of concrete structures, breaking of paved road surfaces for roadworks, breaking rocks, and small-scale digging in mines and quarries.

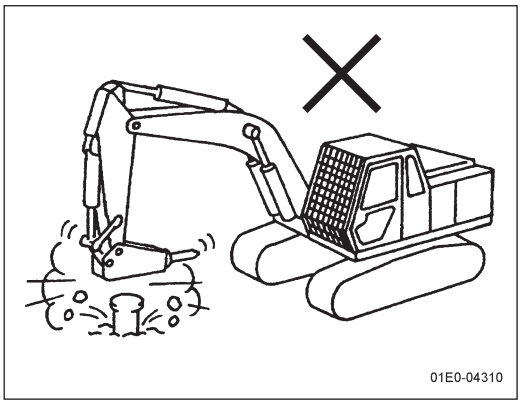

(3) Never use the chisel for gouging
Gouging can damage or break the hydraulic breaker itself and the structure of the excavator, so it should be avoided.

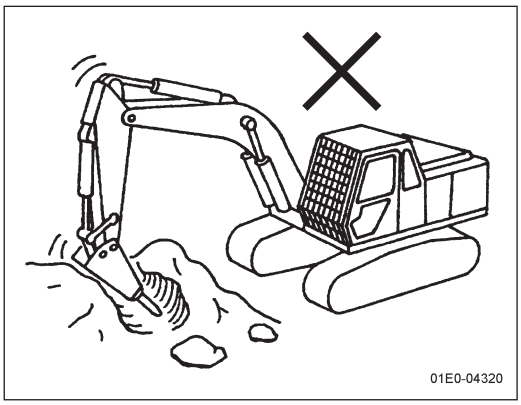

(4) Never work at the stroke end of any hydraulic cylinder
Try to work with some spare before the stroke end of any cylinder.
At stroke end forces are applied to the structure of the cylinder itself and machine body which shortens its lifespan.

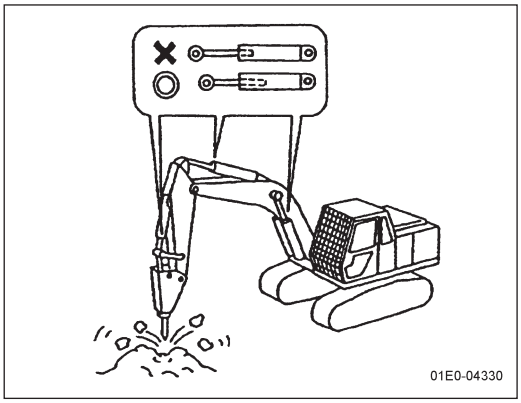

https://truckmanualshub.com/

(5) Stop work if any hydraulic hose is vibrating abnormally

If any hydraulic hose starts vibrating while you are using the hydraulic breaker, stop work immediately and inspect.

Probable causes are damage or reduced gas pressure in the accumulator.

If you continue to work without fixing the problem, the hydraulic shocks will increase, causing breakdowns in the hydraulic pump and elsewhere.

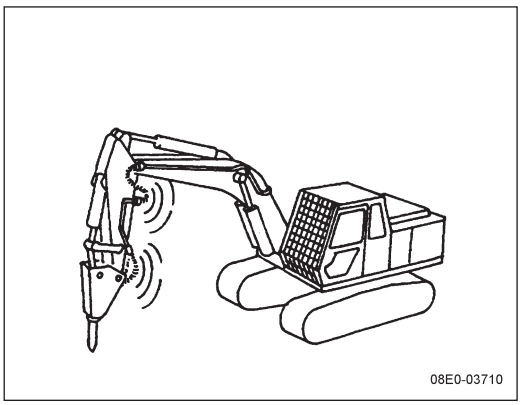

(6) Limit continuous impacts to one minute

If one minute of continuous impacts in one place fails to break an object, try again from a different impact point.

If you continue striking without a break, the oil temperature will rise causing accumulator malfunction and deterioration of the cylinder seals, so take care to observe this time limit.

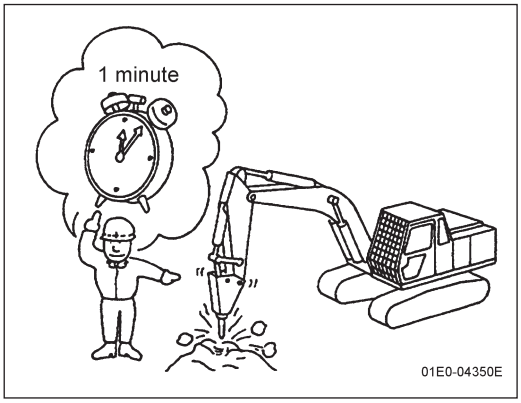

(7) Never use swing force to push or strike objects

Do not use the breaker to move rubble.

This could damage the swing equipment, breaker, arm and boom.

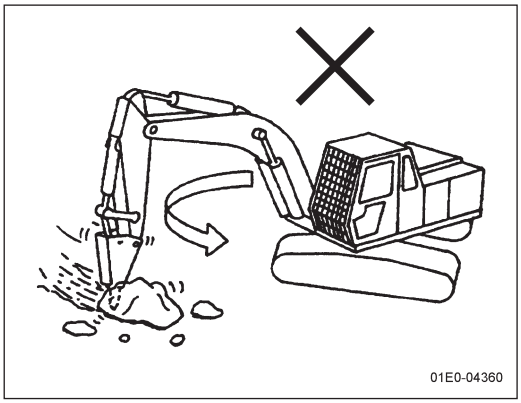

(8) Take care to keep the chisel clear of the boom

Be particularly careful when folding it inward for transportation.

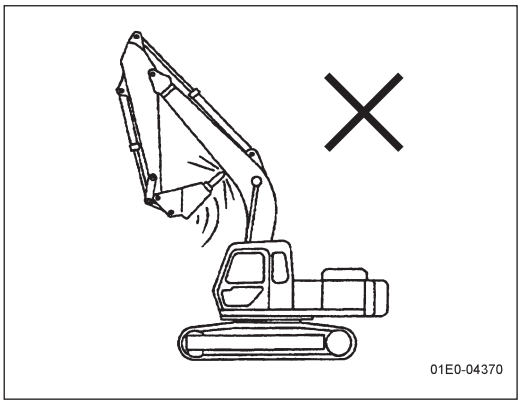

https://truckmanualshub.com/

(9) Never use the breaker to lift objects

This practice could break the breaker.

It is dangerous to use the breaker for anything other than its original purpose.

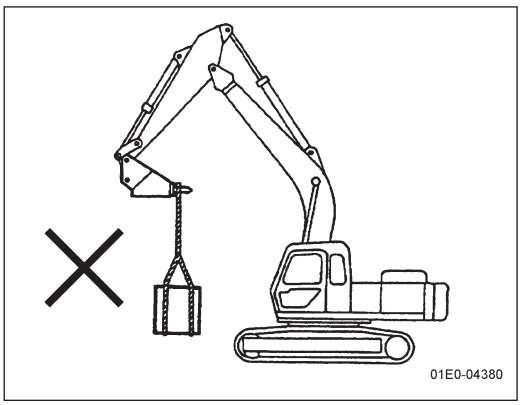

(10) Never work in water

Use of the standard breaker underwater will damage the hydraulic equipment and should be avoided.

Corrosion will result which will damage seals and allow water to enter and contaminate the hydraulic oil, causing further damage to the hydraulic equipment.

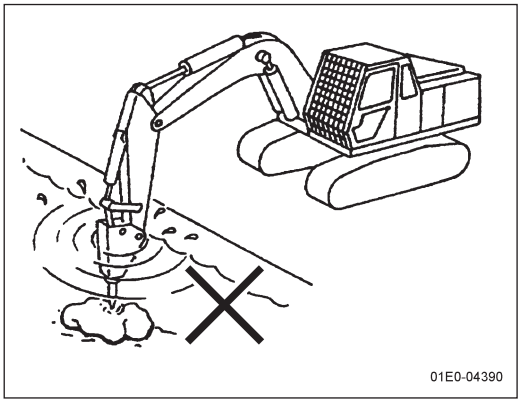

(11) We urge you to use the breaker in front of or behind the machine.

Use of the breaker to the sides will shorten the lifespan of the travel system such as the track shoes etc.

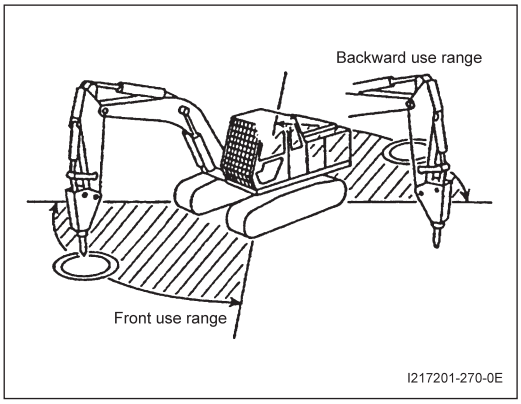

(12) Never use downward stabbing force to stab the breaker into the target

The breaker is heavier than a bucket and will fall faster, so caution is required.

If you stab the breaker downward into the target, the breaker and the machine itself will be damaged.

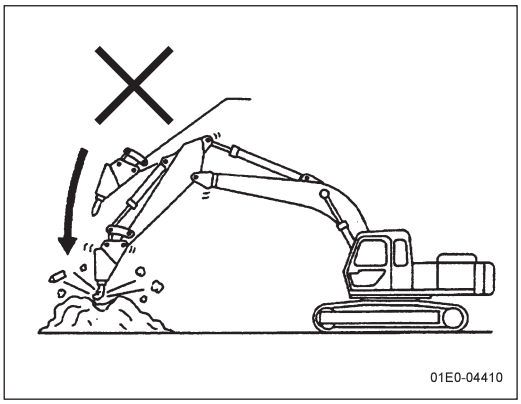

https://truckmanualshub.com/

3. Crusher operation (T217201-122-0E)

Observe the following points when working with a crusher mounted on a hydraulic excavator.

> ⚠ **DANGER**
>
> If you arrange pipes or add arm reinforcement for the mounting of a crusher unit after the machine has left our factory, contact your authorised KATO dealer.
>
> - When mounting a crusher, choose the type most suitable for that machine.
> - The varieties of crusher which may be mounted vary depending on the model of machine, so consult your authorised KATO dealer.
> - Before you start working with a crusher, read this section of this manual as well as the separate crusher instruction manual.

(01E0-0401-1E)

3-1 Precautions on crusher operation (T218081-096-0E)

(1) Mount protective equipment

Impacts of the crusher scatter fragments, so the front guard and head guard should be mounted to protect the operator and the front window should always be closed.

Wear a helmet and goggles when using the crusher.

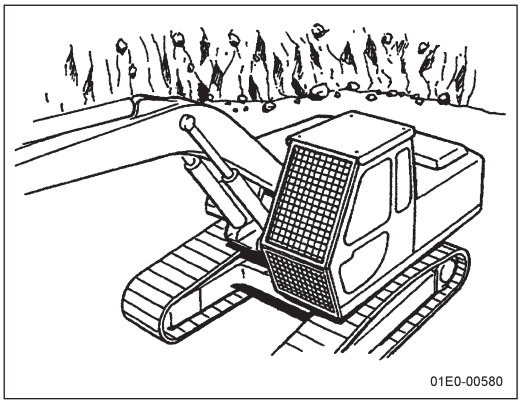

(2) Never use the crusher for anything other than its original purpose

Do not use the crusher for anything other than breaking materials.

The main applications of the crusher are demolition and small-scale rock breaking.

Never use it for moving or loading rubble.

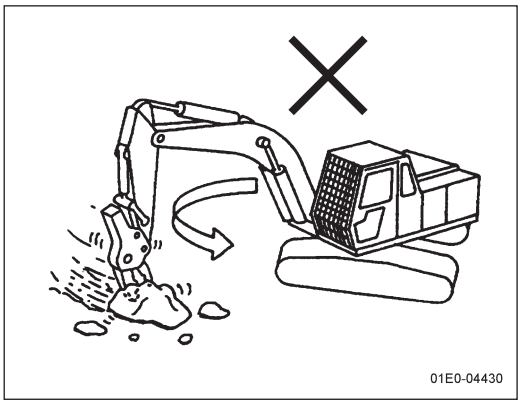

(3) Never work at the stroke end of any hydraulic cylinder

Try to work with some spare before the stroke end of any cylinder.

Damage is particularly likely if the bucket cylinder is fully extended.

Take particular care when using the crusher to break foundations.

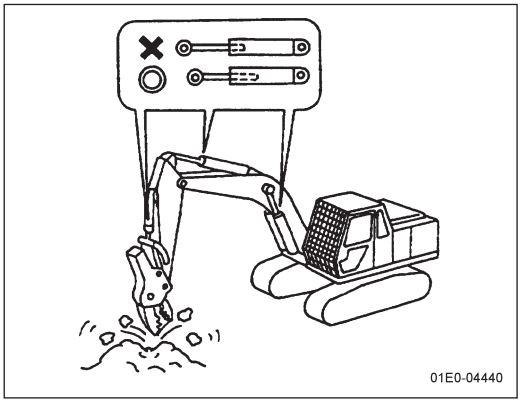

https://truckmanualshub.com/

(4) We urge you to use the crusher in front of or behind the machine.
Use of the crusher to the sides will shorten the lifespan of the travel system such as the track shoes etc.

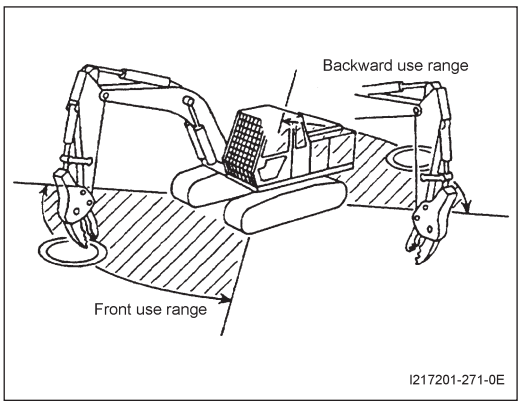

(5) Precautions when breaking ceilings or in other high places
Work with care to avoid rubble falling onto the machine.

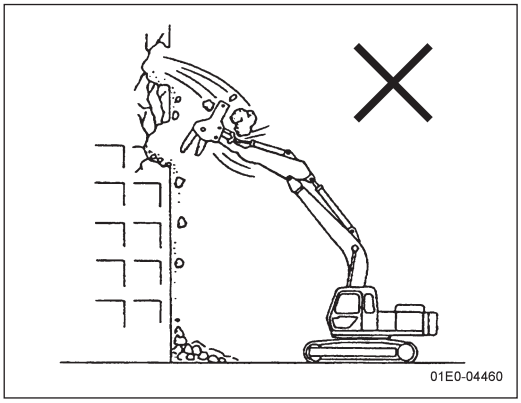

(6) Precautions when working on the floors of buildings and other structures
Confirm that the floor is strong enough before you start work.
Remember that in some operations the load on the floor can exceed the weight of the machine.

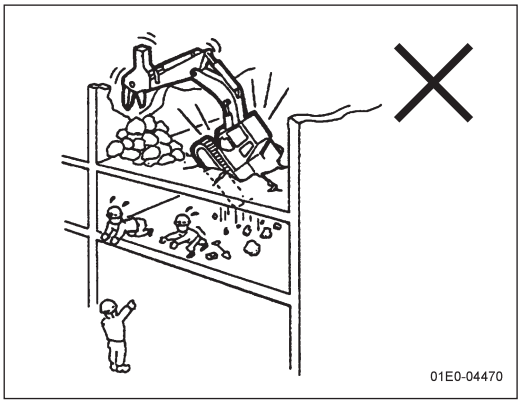

(7) Keep the machine on level ground
Ensure that the machine is standing on flat ground before you start work.
Do not drive up onto rubble or work on sloping ground.

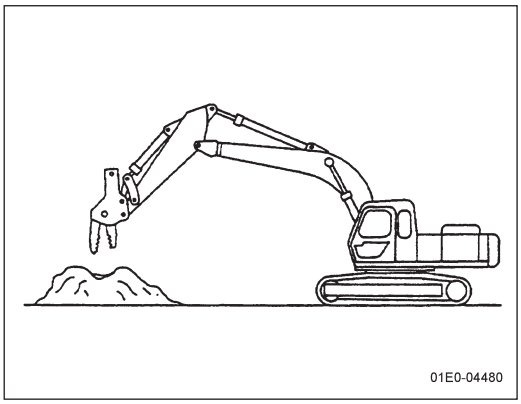

https://truckmanualshub.com/

(8) Dismount the crusher when transporting the machine

The crusher is heavier than a bucket, so to prevent damage to it due to shocks etc. under transportation, it should be dismounted and transported separately.

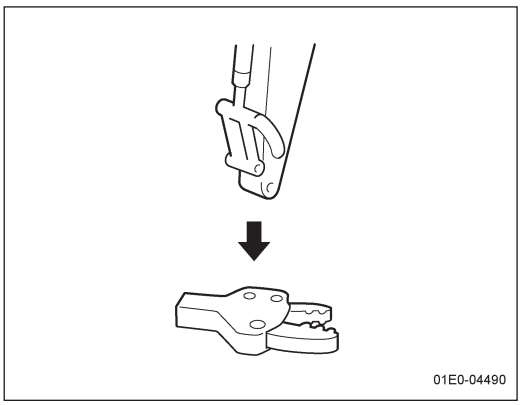

(9) Management of the hydraulic oil and return filter

If you change attachments frequently, the oil will become dirty more quickly than usual.

Observe the condition of the hydraulic oil regularly and change it and the filter more frequently than usual if necessary.

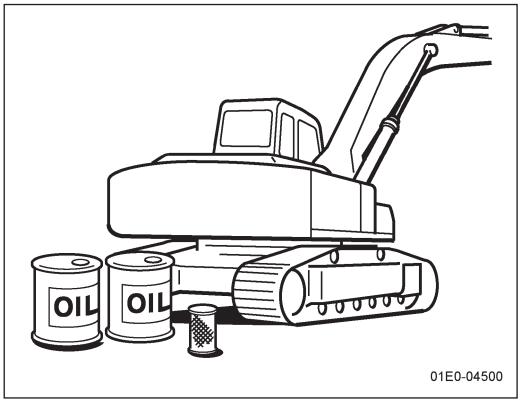

(10) Dangerous operation leading to damage the machine

Do not work with the following methods which can cause the accident or damage to the machine itself. Take special care of the safety when working.

1) One-sided support crushing

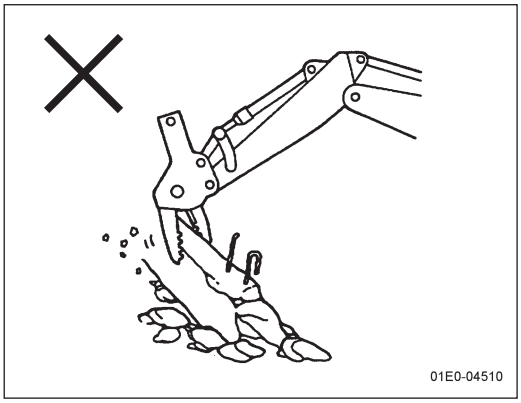

2) Striking

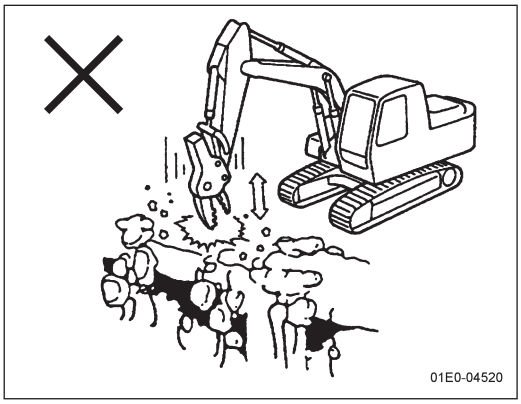

https://truckmanualshub.com/

3) Gouging using the cylinder stroke end

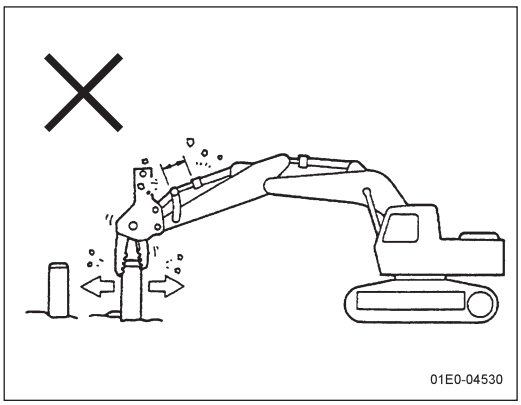

4) Rough and harsh crushing

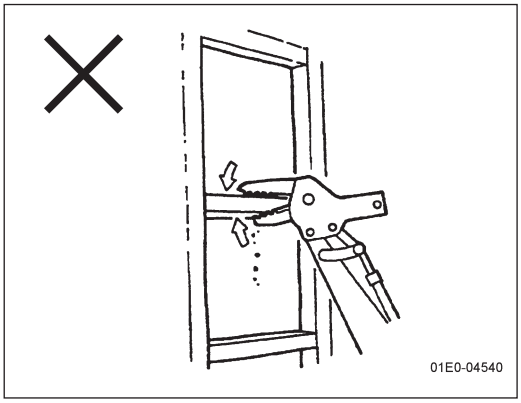

https://truckmanualshub.com/

4. Precautions when working with optional attachments

(01E0-0403-0E)

4-1 Grab fork (01E0-0404-0E)

(1) Main applications
- Industrial waste processing
- Demolition-related processes

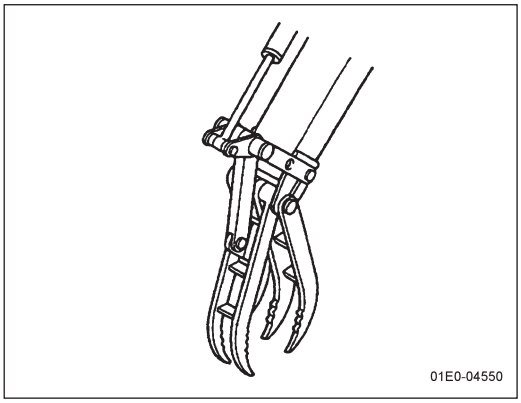

(2) Do not move the cylinder all the way to the end of its stroke. Stop a little before the end of the stroke.

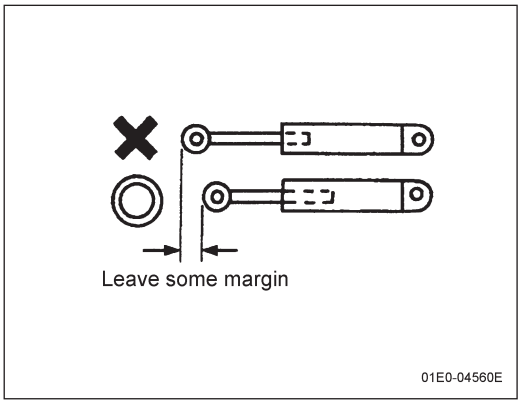

(3) Never use swing force to strike and break objects
Using swing force to strike and break objects will break the grab fork and the machine.

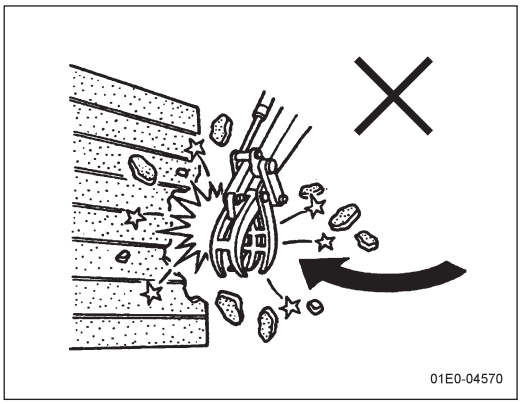

(4) Never grip with only one side of the fork.

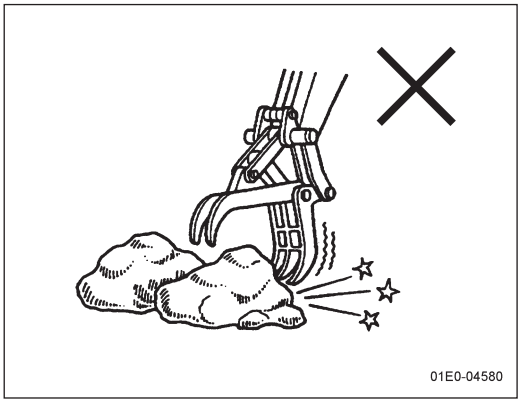

https://truckmanualshub.com/

(5) Never push the fork into the ground to lift the machine and change direction.

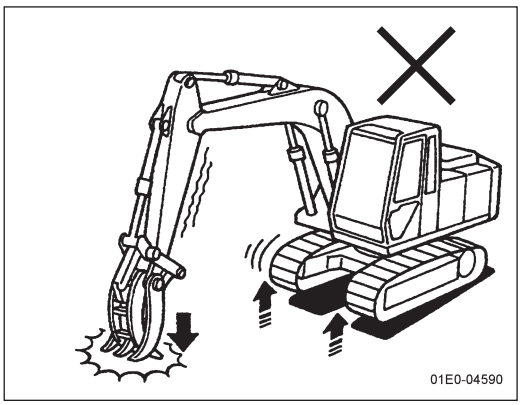

(6) Striking is prohibited

Do not use the grab fork to strike blows against the ground or anything else because the impact could break the grab fork or the body of the excavator.

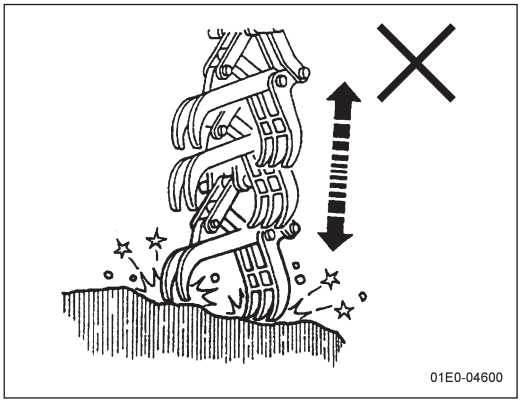

https://truckmanualshub.com/

4-2 Stranger bucket (T218621-022-0E)

(1) Main applications

- Demolition
- Industrial waste processing

(2) Incorrect use

To preserve safety and the lifespan of the machine, do not work with the following methods.

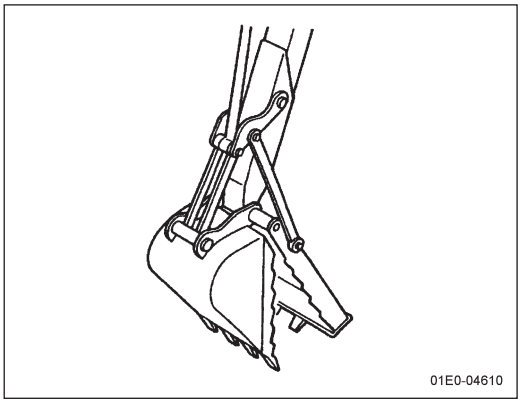

1) Working with swing force

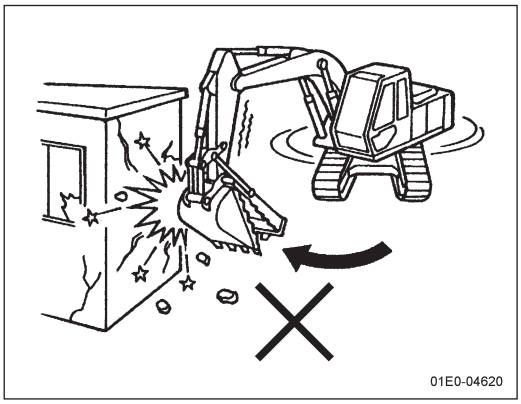

2) Closing the sub-bucket with the boom and arm fully extended

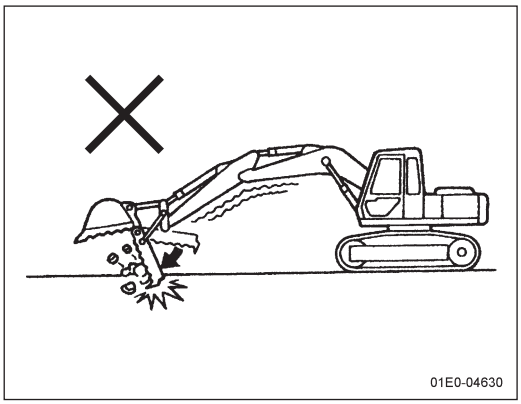

3) Striking

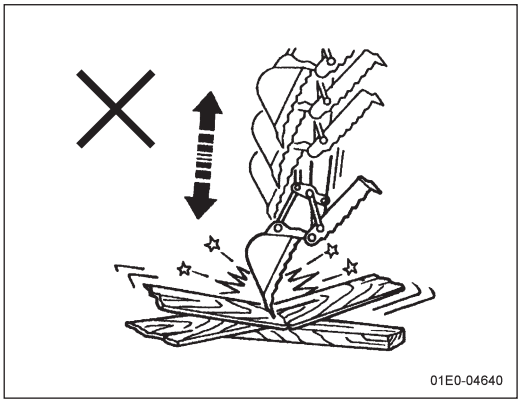

https://truckmanualshub.com/

5. Specifications and compatibility of bucket models (01E0-0411-0E)

⚠ CAUTION

- When using the arm other than of standard (short arm, long arm, extension arm), the bucket teeth could hit the cab or boom, so take care when you operate the machine.
- If you mount the bucket that does not suit the machine, the safety cannot be preserved and the boom, arm etc. could be damaged due to excessive acting force.

● For general digging (digging and loading of sand, gravel, clay and normal soil)

▲ For light digging (digging and loading of loose, dry soil and mud. The density of material for loading should not exceed the guideline value of 1600kg/m^3.)

□ For loading only (loading of loose, dry soil. The density of material for loading should not exceed the guideline value of 1100kg/m^3.)

○ Usable (within warranty)

× Unusable (outside warranty)

(02E0-0098-0E)

ISO standards apply to bucket capacity

Name	Bucket capacity (m^3)	Bucket width (mm)		Boom	
		Without side cutters	With side cutters	Standard arm	Long arm
Backhoe bucket	0.25	540	630	●	●
	0.35	695	785	●	●
	0.40	745	835	●	●
	0.45	875	965	●	▲
	0.50	890	980	●	▲
	0.55	965	1,055	▲	×
	0.60	1,090	1,180	□	×
Skeleton bucket	—	1,000	—	○	×

(T218621-023-0E)

https://truckmanualshub.com/

6. Track shoe selection (01E0-0413-0E)

Select appropriate track shoes for the working conditions in which they will be used.

6-1 Track shoe selection method (01E0-0414-0E)

Select the track shoes from the lower table below after checking their classification by application from the upper table.
If you use the track shoes which are wider than necessary, the load on them is increased, causing problems such as track shoe distortion, link cracking, pin breakage and track shoe bolt loosening.
Classification B and C below are wide shoes which restricts their use. Check the notes and precautions on their use and study the conditions of use thoroughly to reach a suitable choice of track shoes.
When choosing track shoe width, always take the narrowest track shoes that will not present problems of subsidence and ground pressure.

Classification	Application	Practical precautions
A	Rocky ground, rivers, normal ground	・When using these track shoes on extremely rough ground with large obstacles such as loose stones and fallen trees, set the traveling speed to slow ( ) .
B	Normal or soft soil	・Not usable on extremely rough ground with large obstacles such as loose stones and fallen trees. ・Fast speed ( ) and slow speed may only be used on firm, level ground. If it is absolutely necessary to traverse obstacles, reduce the traveling speed to around half of slow speed ( ) .
C	Extremely soft soil (wetlands)	・Only use these shoes in places where A and B are unusable because they would sink into the ground. ・Not usable on extremely rough ground with large obstacles such as loose stones and fallen trees. ・Fast speed ( ) and slow speed may only be used on firm, level ground. If it is absolutely necessary to traverse obstacles, reduce the traveling speed to around half of slow speed ( ) .
D	Paved road surface	・These shoes are flat, so beware of their poor slope climbing performance.

(T217361-055-0E)

	Specifications	Classification
Standard	500mm triple grouser shoe	A
Optional	600mm triple grouser shoe	B
Optional	700mm triple grouser shoe	C
Optional	700mm triangular shoe	C
Optional	Additional pad shoe for triple grouser shoe	D

(T218601-023-0E)

https://truckmanualshub.com/

7. Track shoe types and applications (01E0-0417-0E)

HD514MR-7

Type			Triple grouser shoes			Triangular shoes
Track shoe width			500	600	700	700
Application			General soil (standard)	Soft soil (optional)	Soft soil (optional)	Soft soil (optional)
Body specifications	Operating weight	(kg)	14100	14300	14600	14600
	Body weight	(kg)	11700	11900	12200	12100
	Cab height	(mm)	2820	2820	2820	2880
	Minimum ground clearance	(mm)	*440	*440	*440	*440
	Overall track shoe length	(mm)	3570	3570	3570	3670
	Overall track shoe width	(mm)	2490	2590	2690	2690
	Ground pressure	kPa	44	38	33	32
		kgf/cm^2	0.45	0.38	0.34	0.33

(T218601-024-0E)

HD514MRLC-7

Type			Triple grouser shoes	
Track shoe width			500	600
Application			General soil (standard)	Soft soil (optional)
Body specifications	Operating weight	(kg)	14500	14600
	Body weight	(kg)	12100	12200
	Cab height	(mm)	2820	2820
	Minimum ground clearance	(mm)	*430	*430
	Overall track shoe length	(mm)	3740	3740
	Overall track shoe width	(mm)	2490	2590
	Ground pressure	kPa	43	36
		kgf/cm^2	0.44	0.37

(T218601-025-0E)

⚠ CAUTION

1. These figures are for the machine when mounted with the following front attachments.
   4.65m boom + 2.5m arm + $0.5m^3$ (large load) bucket
2. Other than the 500mm grouser shoe, these shoes must never be used on rough ground (on ground with large amounts of stones and gravel).
   Traveling or digging on rough ground will bend the track shoes, loosen the bolts and may also damage other travel-related parts (links, rollers etc.)
3. Dimension with * mark does not include the grouser height.

(T217361-058-0E)

https://truckmanualshub.com/

8. Procedures for multi-position lever operation (T217201-053-0E)

Shifting the multi-position lever allows the operator to easily change between four operating patterns.

> ⚠ **DANGER**
>
> For multi-position shifting, when the bucket is on the ground, move the safety lock lever to the "lock" position and turn off the engine.

(T217201-054-0E)

8-1 Procedures for multi-position shifting (T217201-055-1E)

(1) When the machine has come to a halt, turn off the engine and move the safety lock lever to the "lock" position.
(2) Loosen the wing bolt ①, and shift the lever ② to the desired operating pattern position.
(3) After setting the operating pattern, retighten the wing bolt ① by hand to secure the lever ②. (Do not use a wrench.)
(4) Switch to the desired operating pattern, and operate the attachment to confirm that operation corresponds to the desired operating pattern.

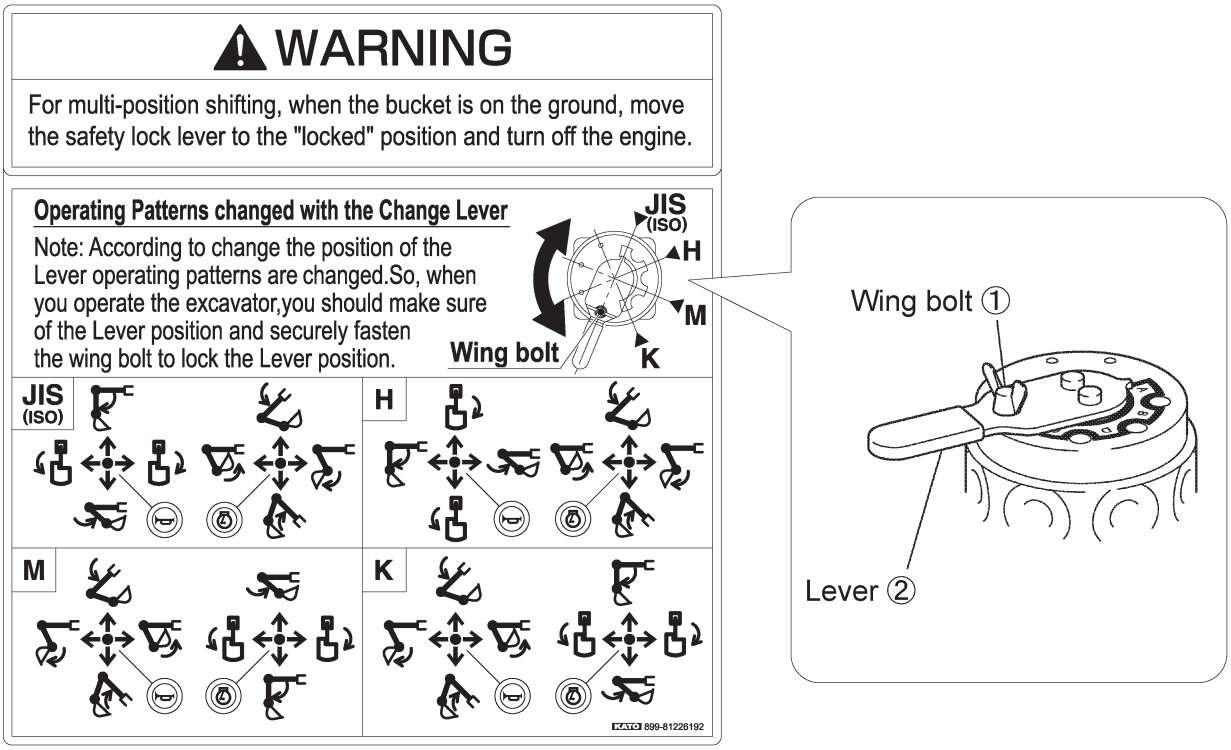

I218621-070-0E

https://truckmanualshub.com/

8-2 Replacing the operating pattern label (T217201-056-0E)

⚠ WARNING

- Before operating the machine, confirm that each machine action corresponds to the operation assigned to each lever. Failure to do so may result in extreme danger from incorrect operation. Be sure to confirm that the lever inputs correspond to the machine outputs.
- If the machine action does not correspond to the operation assigned to each lever, continued operation is likely to result in serious physical injury.
- If the machine actions do not correspond to the lever operations, either replace the operating pattern label with the appropriate label, or shift the multi-position lever such as to bring the machine operation into conformity with the description on the operating pattern label.

(T217201-057-0E)

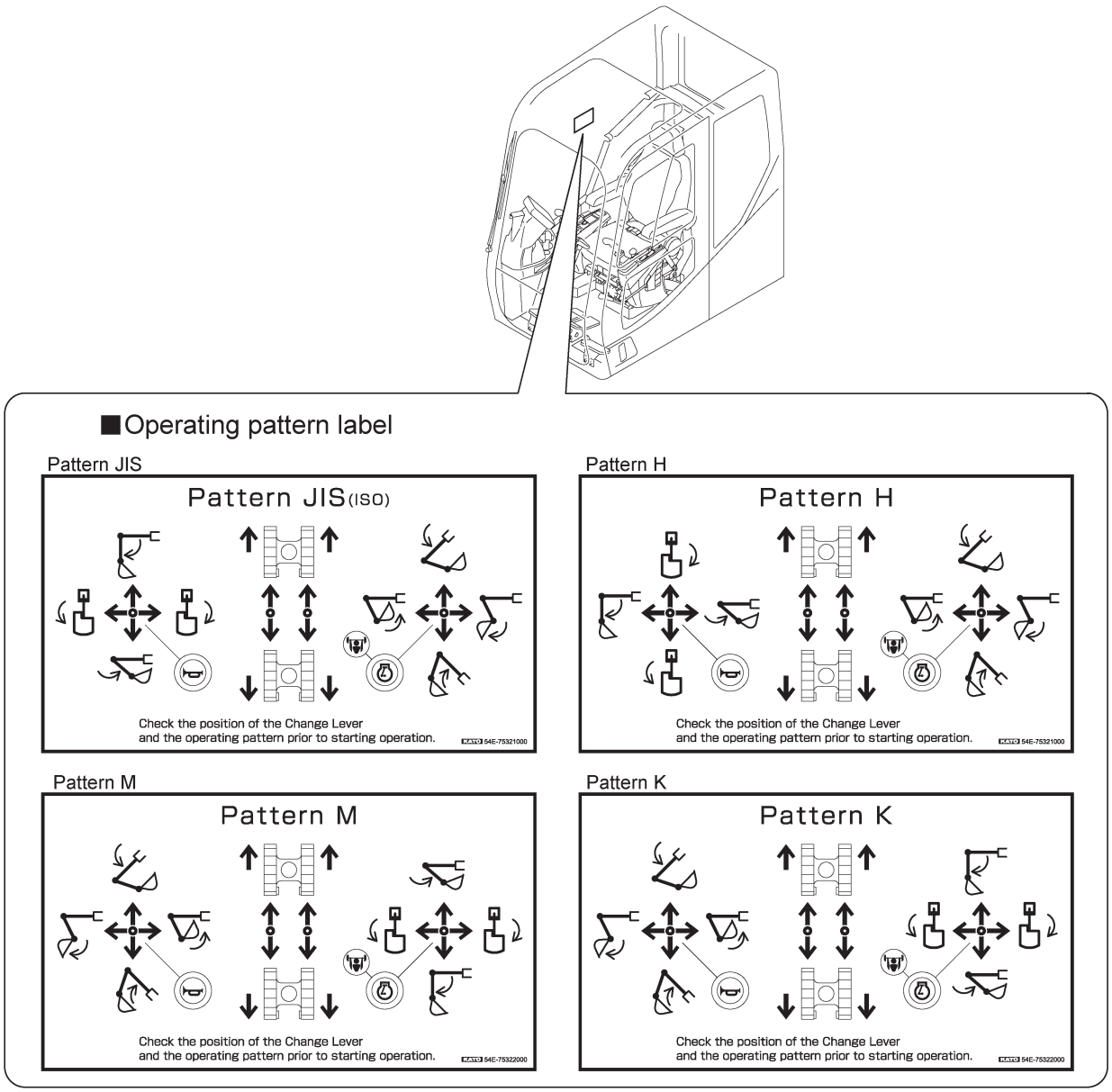

I218621-071-0E

https://truckmanualshub.com/

9. Procedures for selector lever operation (T217451-076-0E)

Shifting the selector lever allows the operator to easily change between two operating patterns.

> ⚠ **DANGER**
>
> For selector lever shifting, when the bucket is on the ground, move the safety lock lever to the "lock" position and turn off the engine.

(T217451-077-0E)

9-1 Procedures for selector lever shifting (T217451-078-0E)

(1) When the machine has come to a halt, turn off the engine and move the safety lock lever to the "lock" position.
(2) Pull the lever lock ① and shift the lever ② to the desired operating pattern position.
(3) After setting the operating pattern, release the lever lock ① and secure the lever ②.
(4) Switch to the desired operating pattern, and operate the attachment to confirm that operation corresponds to the desired operating pattern.

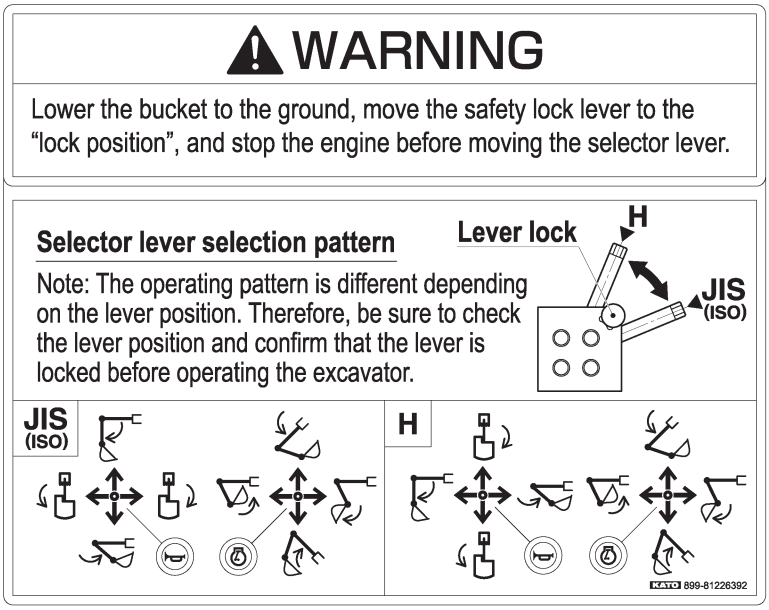

I218621-085-0E

https://truckmanualshub.com/

9-2 Replacing the operating pattern label (T217201-056-0E)

⚠ WARNING

- Before operating the machine, confirm that each machine action corresponds to the operation assigned to each lever. Failure to do so may result in extreme danger from incorrect operation. Be sure to confirm that the lever inputs correspond to the machine outputs.
- If the machine action does not correspond to the operation assigned to each lever, continued operation is likely to result in serious physical injury.
- If the machine actions do not correspond to the lever operations, either replace the operating pattern label with the appropriate label, or shift the selector lever such as to bring the machine operation into conformity with the description on the operating pattern label.

(T217451-079-0E)

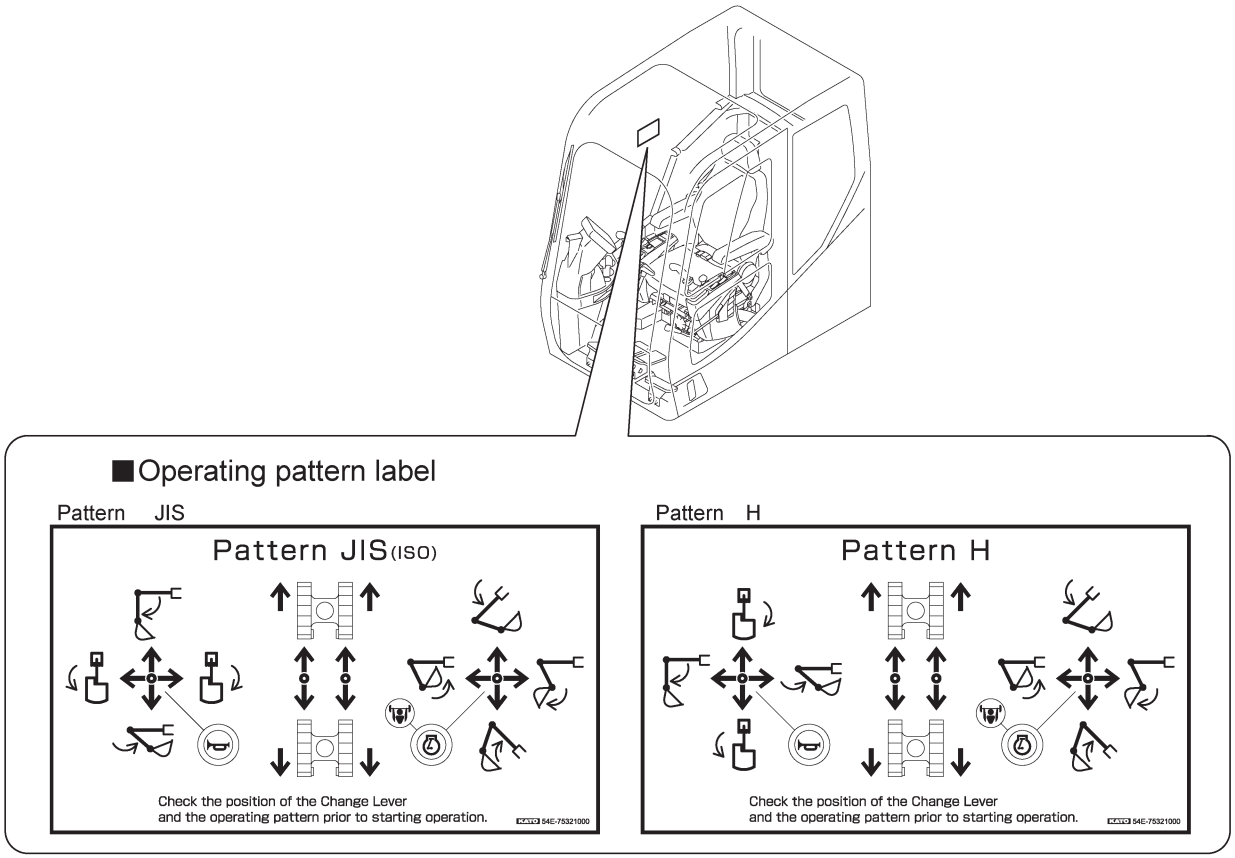

I218621-073-0E

https://truckmanualshub.com/

10. Procedures for selector lever operation (T217451-076-0E)

Shifting the selector lever allows the operator to easily change between two operating patterns.

> ⚠ **DANGER**
>
> For selector lever shifting, when the bucket is on the ground, move the safety lock lever to the "lock" position and turn off the engine.

(T217451-077-0E)

10-1 Procedures for selector lever shifting (T217451-078-0E)

(1) When the machine has come to a halt, turn off the engine and move the safety lock lever to the "lock" position.
(2) Loosen the wing bolt ①, and shift the lever ② to the desired operating pattern position.
(3) After setting the operating pattern, retighten the wing bolt ① by hand to secure the lever ②. (Do not use a wrench.)
(4) Switch to the desired operating pattern, and operate the attachment to confirm that operation corresponds to the desired operating pattern.

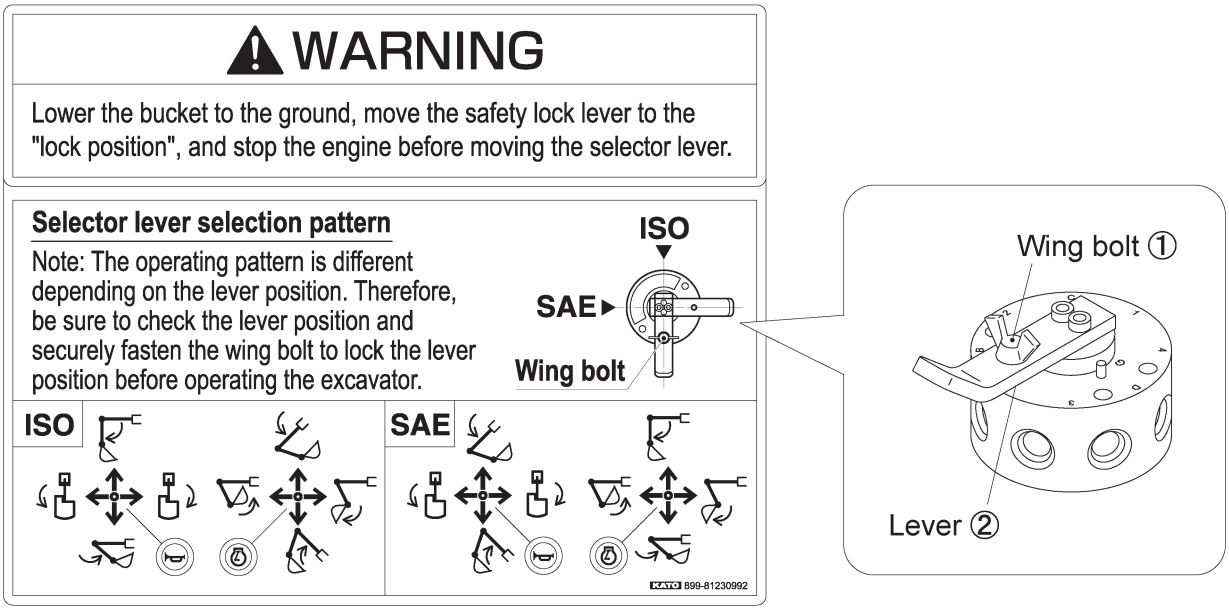

I218621-082-0E

https://truckmanualshub.com/

10-2 Replacing the operating pattern label (T217201-056-0E)

⚠ WARNING

- Before operating the machine, confirm that each machine action corresponds to the operation assigned to each lever. Failure to do so may result in extreme danger from incorrect operation. Be sure to confirm that the lever inputs correspond to the machine outputs.
- If the machine action does not correspond to the operation assigned to each lever, continued operation is likely to result in serious physical injury.
- If the machine actions do not correspond to the lever operations, either replace the operating pattern label with the appropriate label, or shift the selector lever such as to bring the machine operation into conformity with the description on the operating pattern label.

(T217451-079-0E)

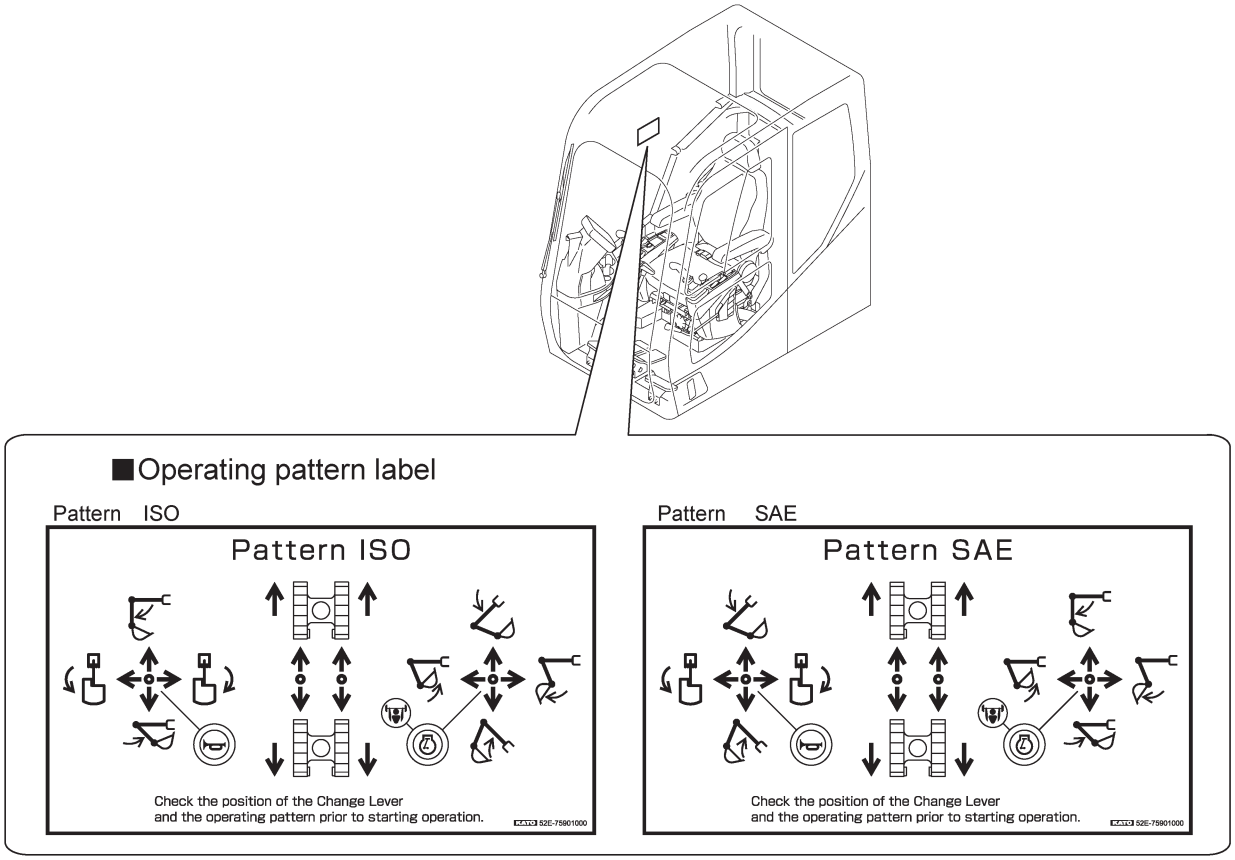

I218621-083-0E

https://truckmanualshub.com/

MEMO

https://truckmanualshub.com/

(T218621-024-0E)

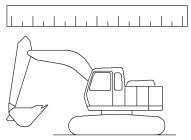

05E0-00090

Data file

1. Tightening torque table 273
1-1 Tightening torque for meter screw standard bolt 273
1-2 Tightening torque for designated bolt 274
1-3 Tightening torques for hydraulic and pneumatic related joints 274

2. Dimensions and weight 280

3. Consumable parts guide 284
3-1 Genuine lubricants table 284
3-2 Replacement parts 286

4. Hydraulic circuit diagram 295

5. Electrical circuit diagram 296

6. Inspection sheet 299
6-1 Hydraulic excavator preoperational check sheet 299
6-2 Hydraulic excavator monthly voluntary inspection sheet 300

https://truckmanualshub.com/

1. Tightening torque table (01E0-0508-0E)

1-1 Tightening torque for meter screw standard bolt (01E0-0509-0E)

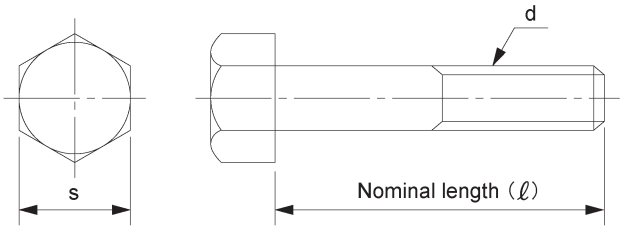

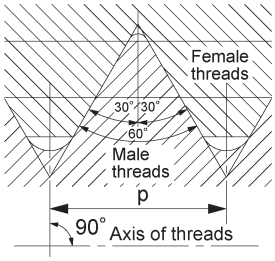

01ES-02030E

[Standard] Units: N·m (kgf·m)

Nominal thread size (d)	Standard dimension (s)	Pitch (p)	Strength classification				
			4.6	7T (reference)	8.8	10.9	12.9
M6	10	1.00	4 (0.4)	8 (0.8)	10 (1.0)	15 (1.5)	17 (1.7)
M8	13	1.25	9 (0.9)	18 (1.9)	24 (2.5)	35 (3.6)	41 (4.2)
M10	17	1.50	18 (1.8)	37 (3.7)	48 (4.9)	73 (7.5)	85 (8.7)
M12	19	1.75	31 (3.2)	67 (6.8)	87 (8.9)	127 (13.0)	149 (15.2)
M14	22	2.00	52 (5.3)	106 (10.9)	139 (14.2)	204 (20.8)	238 (24.3)
M16	24	2.00	81 (8.3)	166 (16.9)	217 (22.1)	318 (32.5)	371 (37.9)
M18	27	2.50	112 (11.4)	228 (23.3)	298 (30.4)	438 (44.7)	512 (52.2)
M20	30	2.50	159 (16.2)	324 (33.0)	423 (43.2)	621 (63.4)	725 (74.0)
M24	36	3.00	274 (28.0)	560 (57.1)	731 (74.6)	1073 (109.5)	1254 (127.9)
M27	41	3.00	404 (41.2)	824 (84.0)	1076 (109.7)	1580 (161.2)	1846 (188.2)
M30	46	3.50	546 (55.8)	1116 (113.8)	1456 (148.6)	2139 (218.2)	2498 (254.9)

[Fine] Units: N·m (kgf·m)

Nominal thread size (d)	Standard dimension (s)	Pitch (p)	Strength classification	
			7T (reference)	8.8
—	—	—	—	—
M8	13	1.00	20 (2.0)	26 (2.7)
M10	17	1.25	38 (3.9)	54 (5.5)
M12	19	1.25	74 (7.5)	96 (9.8)
M14	22	1.50	116 (11.8)	151 (15.4)
M16	24	1.50	179 (18.2)	233 (23.8)
M18	27	1.50	260 (26.5)	339 (34.6)
M20	30	1.50	363 (37.1)	474 (48.4)
M24	36	2.00	617 (62.9)	805 (82.1)
M27	41	2.00	896 (91.3)	1169 (119.3)
M30	46	2.00	1248 (127.3)	1629 (166.3)

(01E0-0510-2E)

https://truckmanualshub.com/

1-2 Tightening torque for designated bolt (T218401-048-0E)

(1) Regarding tightening torques for the bolts related to the track shoe, swing gear, engine mounting and counterweight, abide by the values shown below.

Track shoe	N•m (kgf•m)		412 (42)
Swing gear	N•m (kgf•m)		318 (32.5)
Engine mounting	N•m (kgf•m)	Front	217 (22)
		Rear	
Counterweight	N•m (kgf•m)		1289 (131.5)

(T218401-049-0E)

(2) Regarding tightening torques for the SEMS bolts except the engine cover and under cover, abide by the values shown below.

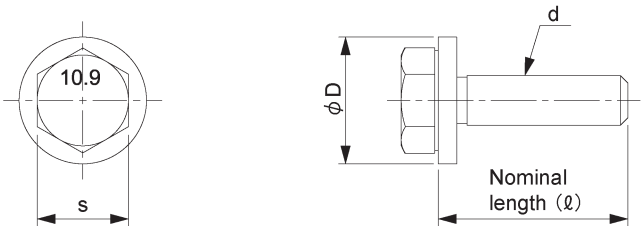

I308741-078-0E

[Standard] Units: N•m (kgf•m)

Nominal thread size (d)	Standard dimension (s)	Pitch (p)	Washer diameter (φD)	Tightening torque
M10	17	1.50	24	48 (4.9)
M12	19	1.75	28	87 (8.9)

(T308741-047-0E)

1-3 Tightening torques for hydraulic and pneumatic related joints (T218081-104-0E)

(1) The tolerance for the torque values is ±10%.

(2) The unit for the torque values is N•m (kgf•m).

(3) Never allow oil to adhere on the threads or the rotating section of the nut.

(4) When tightening, secure the socket with a spanner so that it does not rotate along with the joint with the female thread. The torque values are based on the screw sizes regardless of difference in the width across faces.

(5) Joint with O-ring (made of steel)

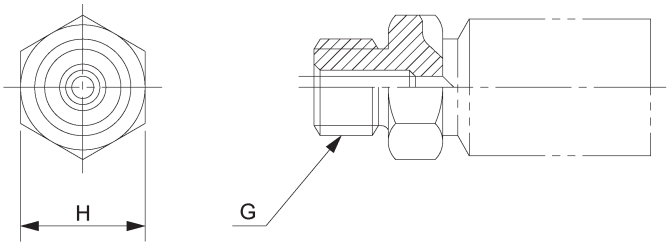

01ES-02040

Units: N•m (kgf•m)

Screw size (G)		1/8	1/4	3/8	1/2	3/4	1	1 1/4	1 1/2	2
Width across faces (H) (mm)		14	19 (17)	22	27	36 (32)	41	50	55 (60)	70
Tightening torque (Seating surface material)	Steel	25 (2.5)	39 (4)	64 (6.5)	98 (10)	167 (17)	206 (21)	255 (26)	294 (30)	588 (60)
	Aluminum	15 (1.5)	25 (2.5)	49 (5)	59 (6)	118 (12)	137 (14)	153 (16)	176 (18)	352 (36)

(T218081-105-0E)

https://truckmanualshub.com/

(6) Taper pipe screw (reference values)

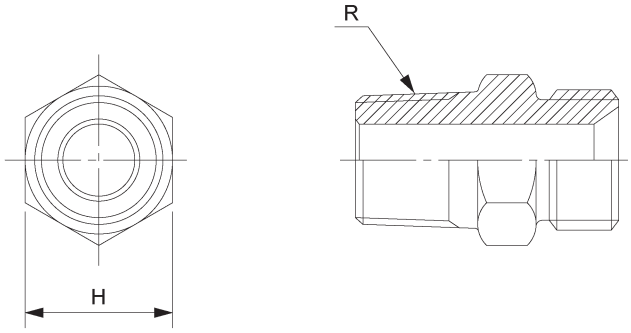

01ES-02050

Units: N•m (kgf•m)

Screw size (R)		1/8	1/4	3/8	1/2	3/4	1	1 1/4	1 1/2	—
Width across faces (H) (mm)		14	19	22	27	36	41	50	55 (60)	—
Tightening torque (Seating surface material)	Steel	22 (2.2)	36 (3.6)	59 (6)	88 (9)	157 (16)	196 (20)	225 (23)	255 (26)	—
	Aluminum	15 (1.5)	25 (2.5)	49 (5)	59 (6)	118 (12)	137 (14)	146 (15)	165 (17)	—

(01E0-0515-2E)

(7) Hose joint (Type C, R)

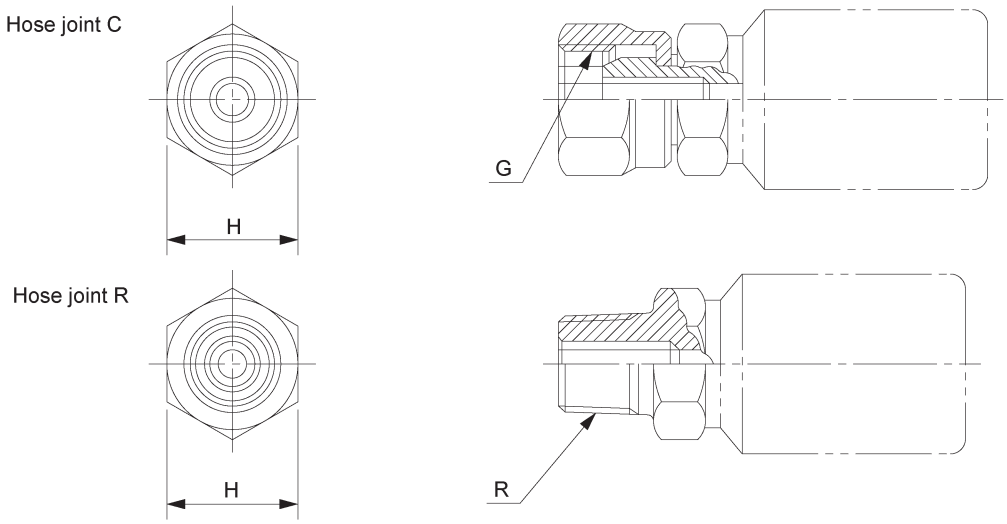

01ES-02060E

Units: N•m (kgf•m)

Screw size (G)			1/8	1/4	3/8	1/2	3/4	1	1 1/4	1 1/2	2
Width across faces (H) (mm)			14	19	22	27	36	41	50	55 (60)	70
Tightening torque (Seating surface material)	Steel	Note 1	34.5MPa				27.5MPa	20.5MPa	17.0MPa	10.5MPa	
		Note 2	15 (1.5)	25 (2.5)	34 (3.5)	64 (6.5)	132 (13.5)	196 (20)	225 (23)	255 (26)	316 (32)
					49 (5)		157 (16)				412 (42)
	Brass	Note 3	10.5MPa				—	—	—	—	—
			9 (0.9)	13 (1.3)	21 (2.1)	33 (3.4)					

[Note 1] Indicates the application pressure (based on the maximum pressure to be used for the joint provided in JIS B 8363).

[Note 2] The values in the lower row indicate the torque values stipulated for HD models (corresponding to the maximum pressure to be used 34.5MPa).

[Note 3] Indicates the application pressure.

(01E0-0516-2E)

https://truckmanualshub.com/

(8) Type ORS

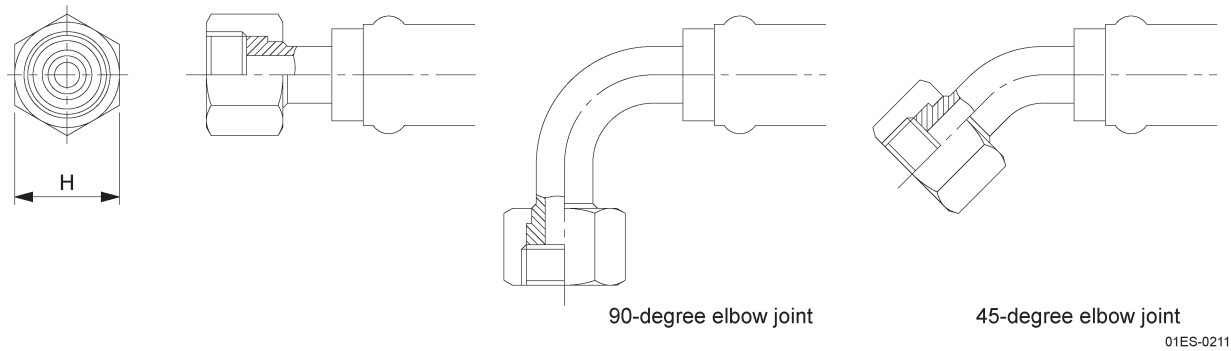

Units: N•m (kgf•m)

Screw unification	9/16-18	11/16-16	13/16-16	1-14	1 12/16 -12	1 7/16-12	1 11/16 -12	2-12
Hose size	1/4	3/8	1/2	5/8	3/4	1	1 1/4	1 1/2
Width across faces (H) (mm)	19	22	27	30/32	36	41	50	60
Recommendable pressure to be used	34.5MPa						27.5MPa	20.5MPa
Tightening torque	25	34	64	118	132	196	225	255

(01E0-0598-1E)

(9) Adapterless piping (rolled screw type)

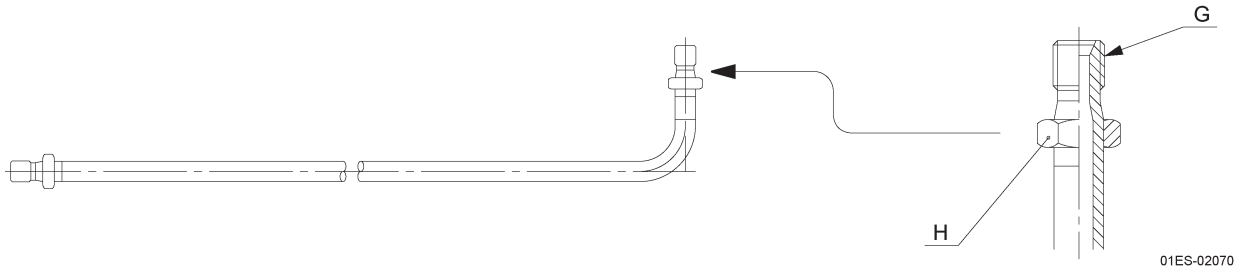

Units: N•m (kgf•m)

Screw size (G)		1/4	3/8	1/2	3/4	1
Width across faces (H) (mm)		12	15	19	24	30
Tightening torque	Schedule 80	25 (2.5)	49 (5)	59 (6)	118 (12)	137 (14)
	Schedule 40	23 (2.3)	44 (4.5)	54 (5.5)	108 (11)	137 (14)

(01E0-0517-1E)

https://truckmanualshub.com/

(10) Flare nut (made of steel)

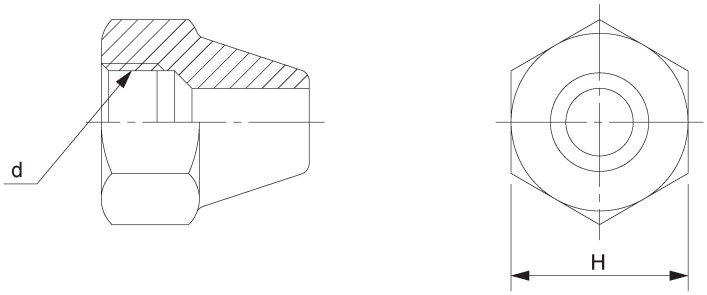

01ES-02080

Units: N•m (kgf•m)

Outer diameter of tube (mm)		4.76	6.35	8.0	10.0	12.0
Screw size (d)		M10×1.0	M12×1.0	M14×1.5	M16×1.5	M20×1.5
Width across faces (H) (mm)		14	17	19	22	27
Tightening torque (Seating surface material)	Steel	16 (1.6)	20 (2)	34 (3.5)	44 (4.5)	69 (7)
	Brass	9 (0.9)	12 (1.2)	25 (2.5)	33 (3.4)	52 (5.3)

(01E0-0518-1E)

(11) Split flange (flange head joint)

1) SAE standard (Type I)

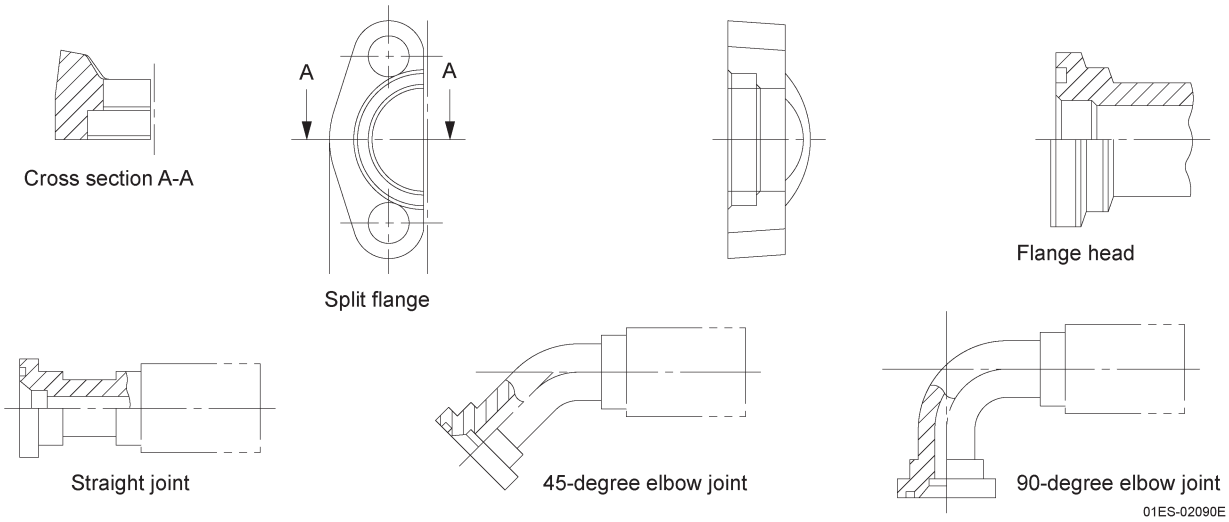

01ES-02090E

Units: N•m (kgf•m)

Inner diameter indication		08	12	16	20	24	32
Hose size		1/2	3/4	1	1 1/4	1 1/2	2
Inner diameter of hose (mm)		12.7	19.0	25.4	31.8	38.1	50.8
Recommendable pressure to be used MPa (kgf/cm^2)	Type I	34.5 (350)			24.0 (245)	20.5 (210)	
Tightening torque N•m (kgf•m)		24 (2.5)	48 (4.9)	48 (4.9)	48 (4.9)	87 (8.9)	87 (8.9)
Bolt to be used		M8×1.25	M10×1.5	M10×1.5	M10×1.5	M12×1.75	M12×1.75

(01E0-0519-2E)

https://truckmanualshub.com/

2) SAE high pressure (Type Ⅱ, Ⅲ)

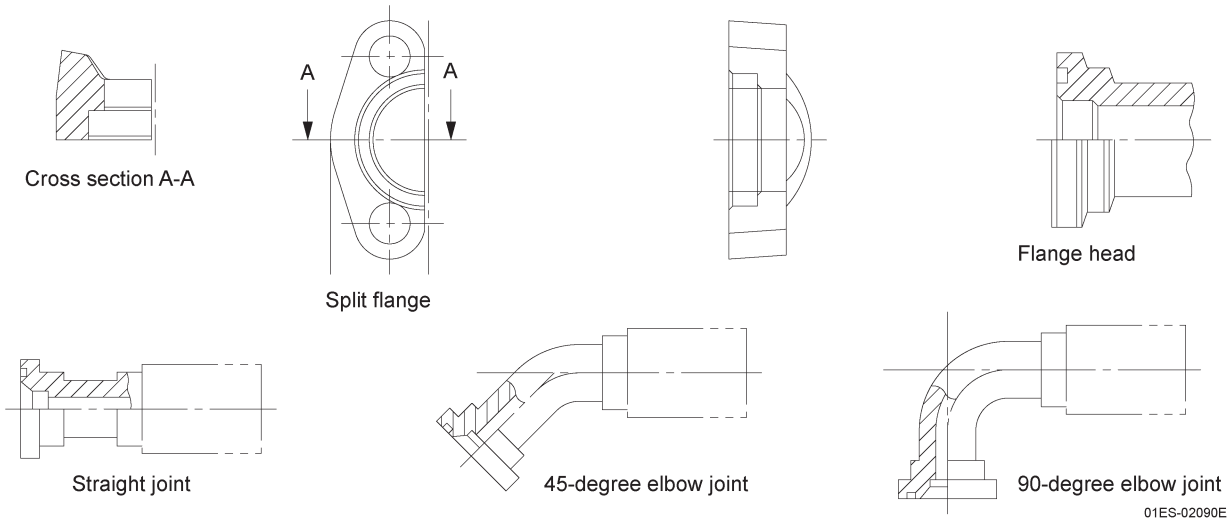

Units: N·m (kgf·m)

Inner diameter indication		08	12	16	20	24	32
Hose size		1/2	3/4	1	1 1/4	1 1/2	2
Inner diameter of hose (mm)		12.7	19.0	25.4	31.8	38.1	50.8
Recommendable pressure to be used MPa (kgf/cm^2)	Type Ⅱ	34.5 (350)			—	—	—
	Type Ⅲ	—	—	—	34.5 (350)		
Tightening torque N·m (kgf·m)		24 (2.5)	48 (4.9)	48 (4.9)	87 (8.9)	217 (22.1)	298 (30.4)
Bolt to be used		M8×1.25	M10×1.5	M10×1.5	M12×1.75	M16×2.0	M18×2.5

(01E0-0520-2E)

(12) Piping flange

Units: N·m (kgf·m)

Bolt to be used (001-105)		M8×1.25	M10×1.5	M12×1.75	M16×2.0
Tightening torque (Seating surface material)	Steel	23 (2.3)	59 (6)	88 (9)	167 (17)
	Aluminum Note 1	—	—	3.4 (3.5)	—

[Note 1] Refers to the attachment flange of the return filter.

(01E0-0521-0E)

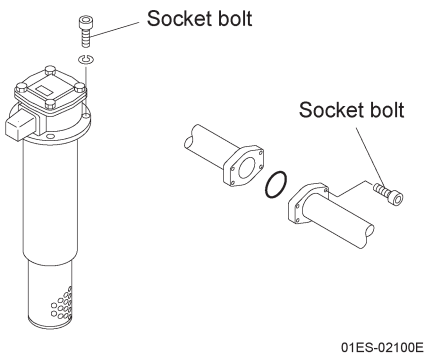

https://truckmanualshub.com/

(13) Attachment for hydraulic and pneumatic equipments

Units: N·m (kgf·m)

Screw size	M6	M8	M10	M12	M14	M20
Tightening torque	10 (1)	23 (2.3)	59 (6)	78 (8)	167 (17)	275 (28)

(01E0-0522-0E)

⚠ CAUTION

- After the first 50 hours of use of a new machine and every month thereafter inspect and retighten the bolts.
- When tightening, clean off any corrosion, earth and debris.

(01E0-0523-0E)

https://truckmanualshub.com/

2. Dimensions and weight (01E0-0524-0E)

(1) Machine body

	Standard specification	LC specification
Overall length (L) × overall height (H) × overall width (W) (mm)	7470×2820×2490	7550×2820×2490
Operating weight (kg)	14100	14500

(T218601-026-0E)

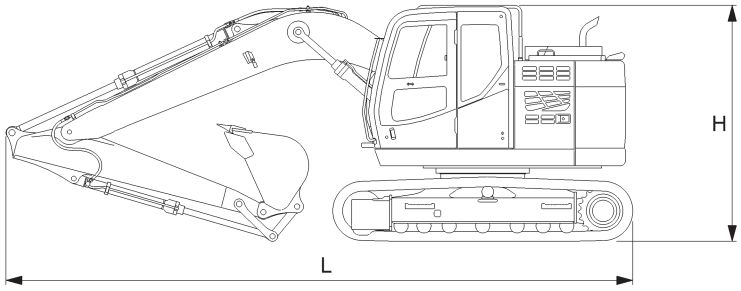

I218601-088-0J

(2) Upper structure＋lower structure

	Standard specification	LC specification
Overall length (L) × overall height (H) × overall width (W) (mm)	3570×2820×2490	3740×2820×2490
Base machine weight (kg)	11700	12100

(T218601-038-0E)

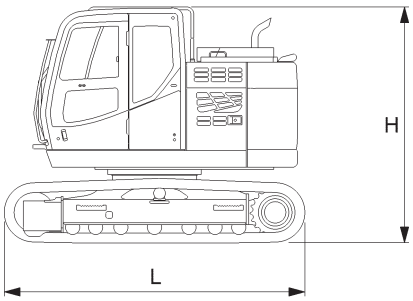

I218601-089-0J

(3) Upper structure

Overall length (L) × overall height (H) × overall width (W) (mm)	3140×1950×2480
Weight (kg)	7400

(T218601-027-0E)

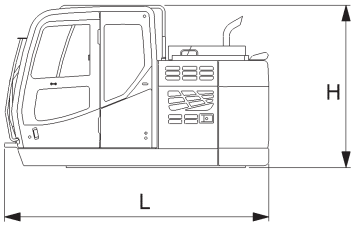

I218601-090-0J

https://truckmanualshub.com/

(4) Lower structure

	Standard specification	LC specification
Overall length (L) × overall height (H) × overall width (W) (mm)	3570×1030×2490	3740×1040×2490
Weight (kg)	4300	4700

(T218601-039-0E)

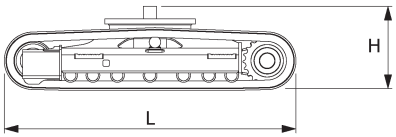

I218341-176-0J

(5) Arm + bucket dimensions and weight

Combination	2.50m arm + 0.50m^3 bucket	3.00m arm + 0.40m^3 bucket
Overall length (L) × overall height (H) × overall width (W) (mm)	4380×860×980	4930×860×830
Weight (kg)	1030	1070

(T218601-029-0E)

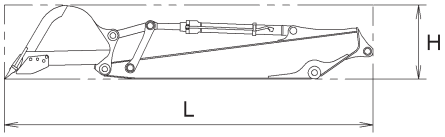

02E0-02050

(6) Boom dimensions and weight

	4.65m boom
Overall length (L) × overall height (H) × overall width (W) (mm)	4820×1360×580
Weight (kg)	1050

(02E0-0071-1E)

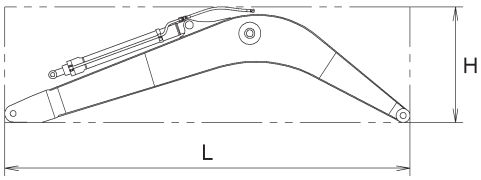

I218341-198-0J

https://truckmanualshub.com/

(7) Arm dimensions and weight

Arm length	2.50m	3.00m
Overall length (L) × overall height (H) × overall width (W) (mm)	3270×630×350	3810×660×370
Weight (kg)	590	680

(T218601-030-0E)

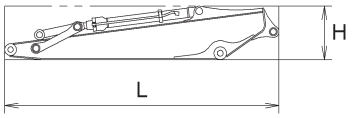

02E0-02070

(8) Dimensions and weight of optional attachments

[ ]: Reinforced type

Type	Backhoe bucket		
Overall length (L) × overall height (H) × overall width (W) (mm)	1260×990×630	1260×990×790	1220×1020×840
Weight (kg)	290	360	380
Bucket capacity (m^3)	0.25	0.35	0.40
Type	Backhoe bucket		
Overall length (L) × overall height (H) × overall width (W) (mm)	1260×990×970	1220×1020×980	1220×1020×1050
Weight (kg)	400 [450]	430 [490]	450 [520]
Bucket capacity (m^3)	0.45	0.50	0.55
Type	Backhoe bucket	Skeleton bucket	Skeleton bucket (cross-pin)
Overall length (L) × overall height (H) × overall width (W) (mm)	1220×1030×1180	1230×1040×1000	1220×1040×1000
Weight (kg)	480	480	490
Bucket capacity (m^3)	0.60	—	—

(T218601-031-0E)

・Backhoe bucket
・Skeleton bucket

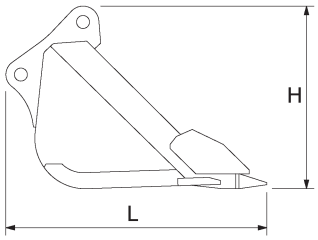

I218341-201-0E

https://truckmanualshub.com/

(9) Data for front attachment mounting

① Rated pressure: 31.4MPa (320kgf/cm^2) 32.9MPa (335kgf/cm^2) (high power)

② Maximum output flow: 126L/min

③ Bucket cylinder

Bore diameter:	ϕ95mm	Rod diameter:	ϕ70mm
Full retraction length:	1470mm	Stroke:	995mm
Rod pin diameter:	ϕ65mm	Rod boss width:	98mm
Rod boss outside diameter:	ϕ120mm		

④ Side link length: 553mm

⑤ Tipping link length: 460mm

⑥ Dimensions for each location

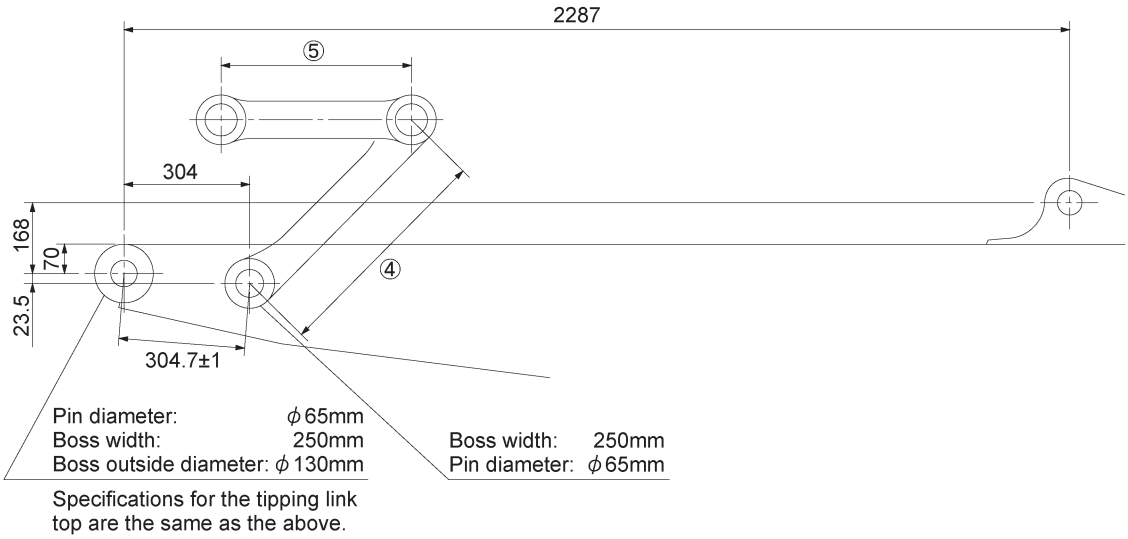

I218341-202-0E

https://truckmanualshub.com/

3. Consumable parts guide (01E0-0534-0E)

3-1 Genuine lubricants table (01E0-0587-0E)

(1) Grease

Classification	Name	Part number	Quantity	
Lithium-type bearing grease (BG)	Alvania EP grease 2	779-70113100	16kg	
Lithium-type bearing grease (EG)	Grease cartridge Li	999-00000070	0.4kg	99900000070
	Grease cartridge Li	999-00200070	0.4kg×20	

(01E0-0588-0E)

(2) Oil

Classification	Name	Part number	Quantity	Standard
Reduction gear oil (GO)	Gear oil	779-70831010	20L	API: GL-4 SAE: #90
Hydraulic oil (HO)	Hydraulic oil (KV32)	779-70511010	200L	
	Hydraulic oil (KV46)	779-70521010 779-70521020	200L 20L	
	Hydraulic oil (KV68)	779-70531010	200L	

(01E0-0589-1E)

(3) Long Life Coolant

Name	Part number	Quantity	
KATO Diesel Long Life Coolant	999-32053020	200L	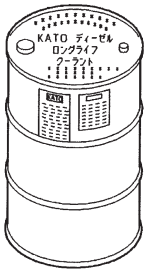 99932053020
KATO Diesel Long Life Coolant	999-32053010	18L	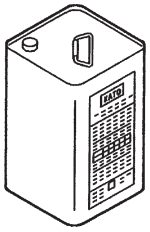 99932053010

(01E0-0590-0E)

https://truckmanualshub.com/

(4) DEF/AdBlue®

Name	Part number	Quantity	
KATO recommended DEF/AdBlue®	779-71100400	10L×2	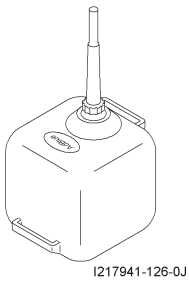 I217941-126-0J

(T218371-027-1E)

https://truckmanualshub.com/

3-2 Replacement parts (01E0-0591-0E)

[Inspection and servicing section]	4-1-3	[Consumable part name]	Oil filter

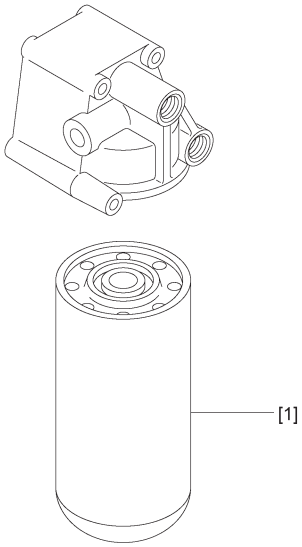

[1] Element
119-52401001

Oil filter: 119-52400001

119524001E

[Inspection and servicing section]	4-1-5	[Consumable part name]	DEF pump filter

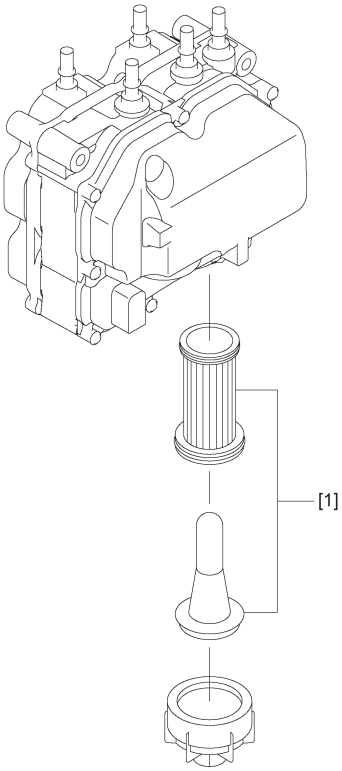

[1] Filter kit
119-11145000

DEF pump: 119-11101001

119111010E

(T218341-118-0E)

https://truckmanualshub.com/

[Inspection and servicing section] 4-1-6 [Consumable part name] DEF tank suction filter

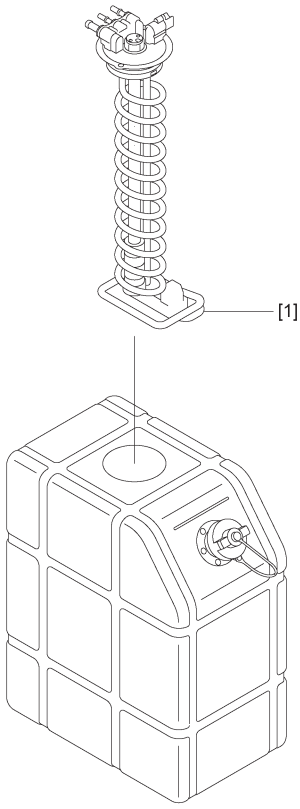

[1] Filter kit
51E-11030000

DEF tank: 51E-11011000

51E11011000E

[Inspection and servicing section] 4-1-8 [Consumable part name] Fuel pre-filter

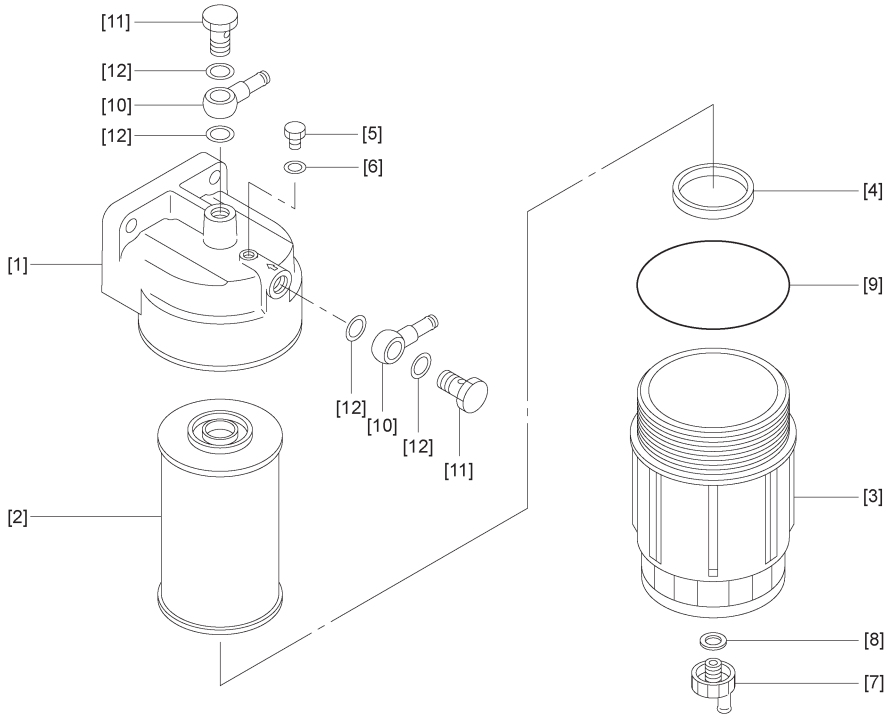

Element kit
119-54890001
[1] Head assembly
[2] Element assembly
119-54802001
[3] Case
[4] Water level ring
[5] Air plug
[6] Gasket
[7] Drain plug
[8] Gasket
[9] O-ring
[10] Swivel joint
[11] Connection bolt
[12] Gasket

Fuel filter : 119-54800001

119548010E

(T218341-119-0E)

https://truckmanualshub.com/

[Inspection and servicing section]	4-1-9	[Consumable part name]	Main fuel filter

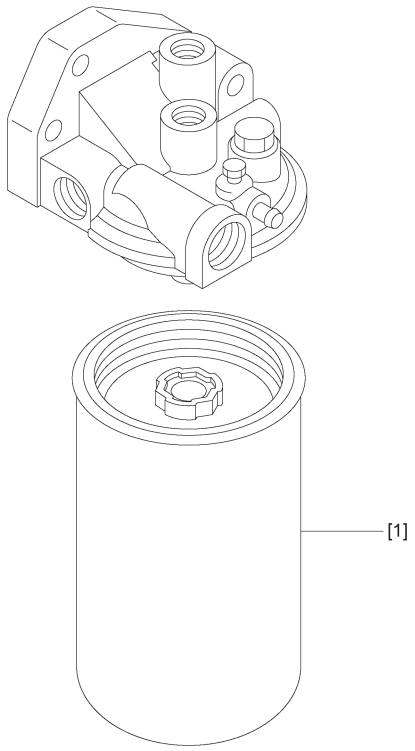

[1] Cartridge
119-58601000

Fuel filter: 119-58600000

119586001E

[Inspection and servicing section]	4-1-13	[Consumable part name]	Air cleaner element

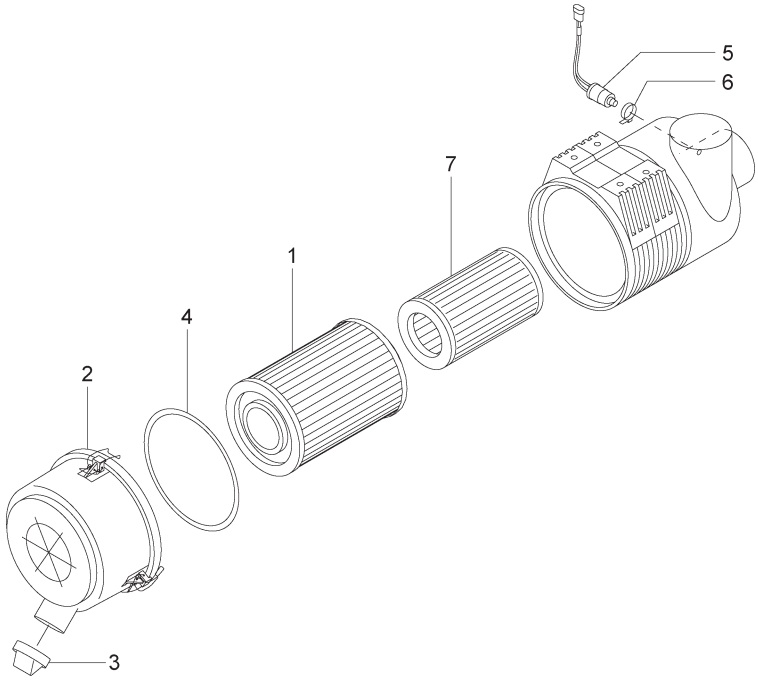

1. Outer element
   119-72601000
2. Cover
3. Vacuator valve
4. Gasket
5. Indicator
6. Binder
7. Inner element
   119-72608000

Air cleaner : 119-73700001

119737010E

(T218341-120-0E)

https://truckmanualshub.com/

[Inspection and servicing section] 4-2-4 [Consumable part name] Return filter element

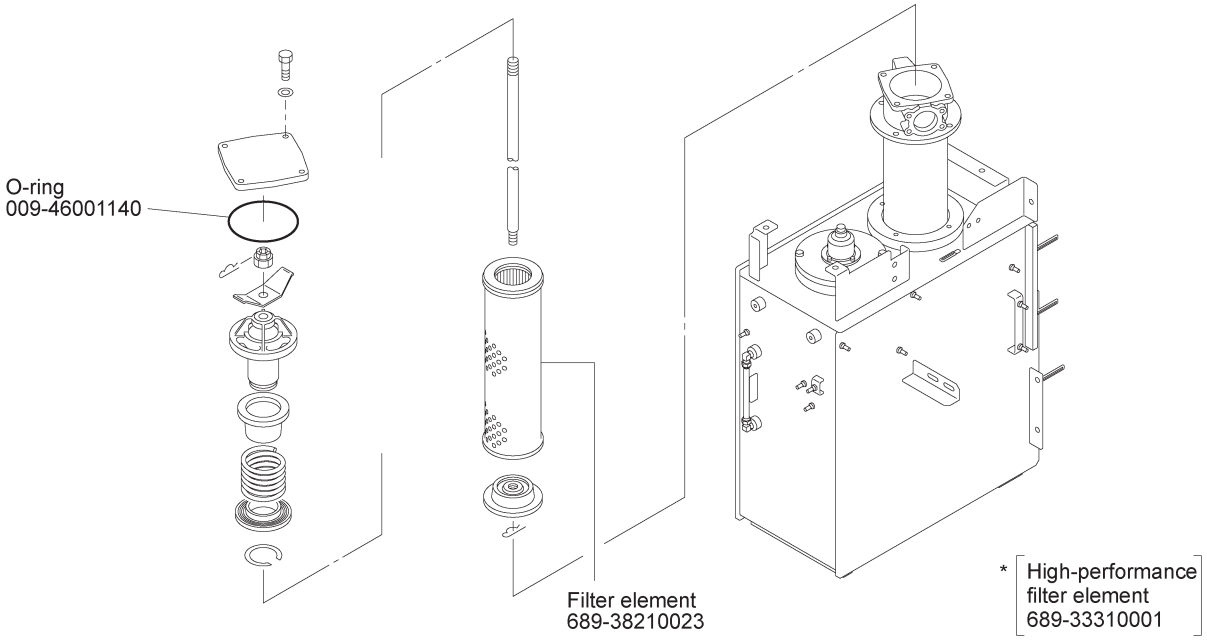

Return filter assembly: 689-43000002

I218601-091-0E

[Inspection and servicing section] 4-2-6 [Consumable part name] Air breather element

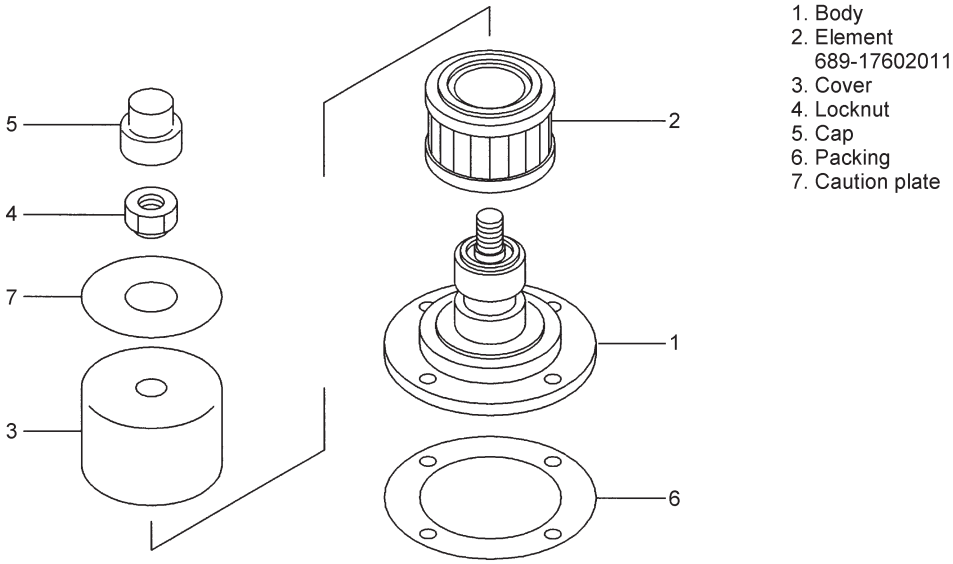

Air breather assembly: 689-17600012

689176120E

(T218341-121-0E)

https://truckmanualshub.com/

[Inspection and servicing section] 4-2-7	[Consumable part name] Suction strainer

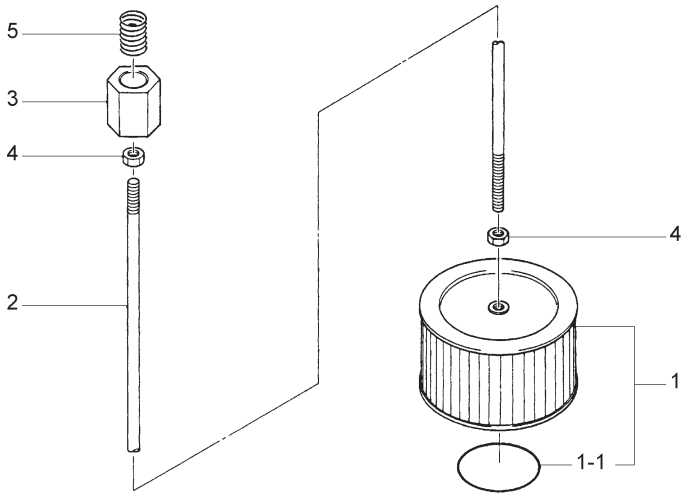

1. Strainer
   689-13500101
1-1 O-ring
   001-36110750
2. Center bolt
3. Holder guide
4. Nut
5. Spring

Suction strainer assembly: 689-13500002

689135020E

[Inspection and servicing section] 4-2-8	[Consumable part name] Drain filter cartridge

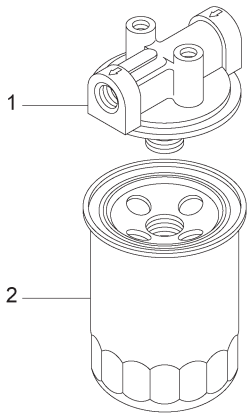

1. Head
2. Cartridge
   689-35703034

Pilot line filter assembly: 689-25100003

689251030E

(T218341-122-0E)

https://truckmanualshub.com/

[Inspection and servicing section] 4-2-9 [Consumable part name] Pilot line filter cartridge

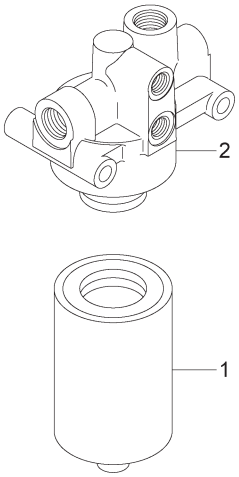

1. Cartridge
   689-29201000
2. Head
   689-29202001

Pilot line filter assembly: 689-00105002

689001002E

[Inspection and servicing section] 4-6-3 [Consumable part name] Bulb and LED light

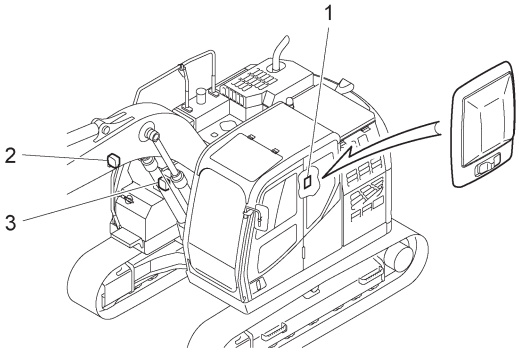

No.	Type of lamp	Assembly No.	Bulb/lamp No.	Bulb capacity	Q'ty	Notes
1	Interior lamp	719-35700000	719-35702000	24V	1	LED
2	Working lamp	709-31600002	709-23906000	24V/70W	1	H3
3	Working lamp	719-38600000	709-23906000	24V/70W	1	H3

I218601-092-0E

(T218341-123-0E)

https://truckmanualshub.com/

[Inspection and servicing section] 4-6-4 [Consumable part name] Fuse

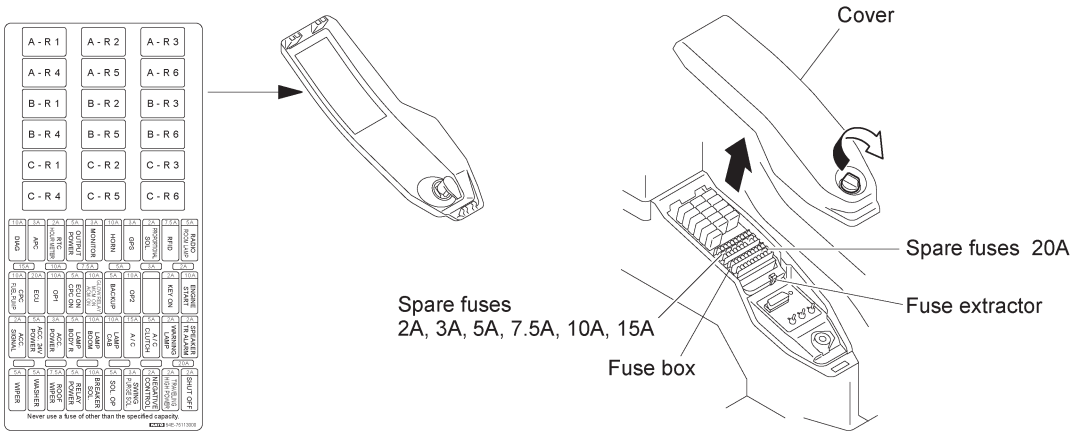

Fuse part No. 2A: 719-10985000
3A: 719-10986000
5A: 719-10988000
7.5A: 719-10989000
10A: 719-10990000
15A: 719-10991000
20A: 719-10992000

I218621-075-0E

[Inspection and servicing section] 4-6-5 [Consumable part name] High current fuse

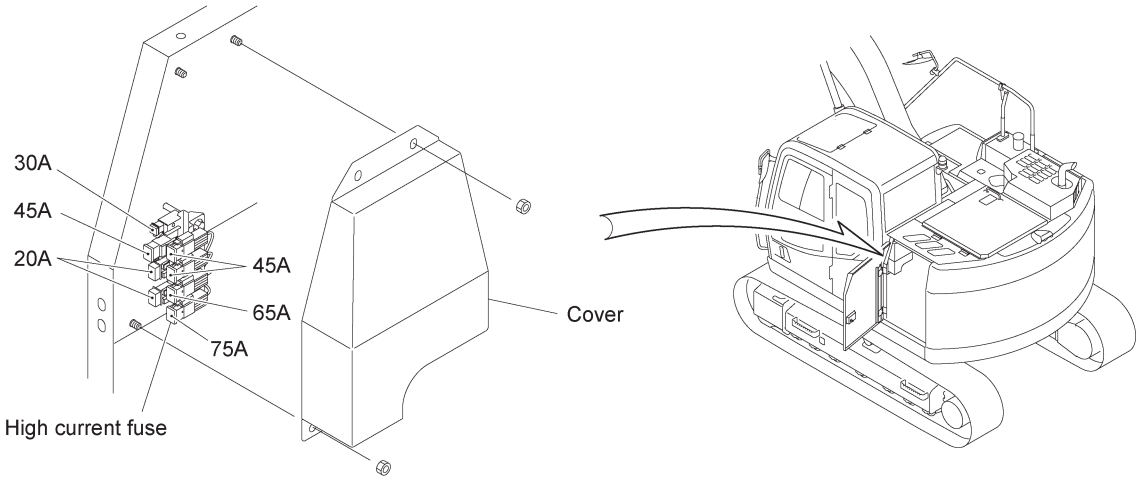

High current fuse 20A: 719-11036001
30A: 719-11045001
45A: 719-11046001
65A: 719-11047001
75A: 719-11048001

I218601-093-0E

(T218341-124-0E)

https://truckmanualshub.com/

[Inspection and servicing section]	4-6-6	[Consumable part name]	Wiper blade

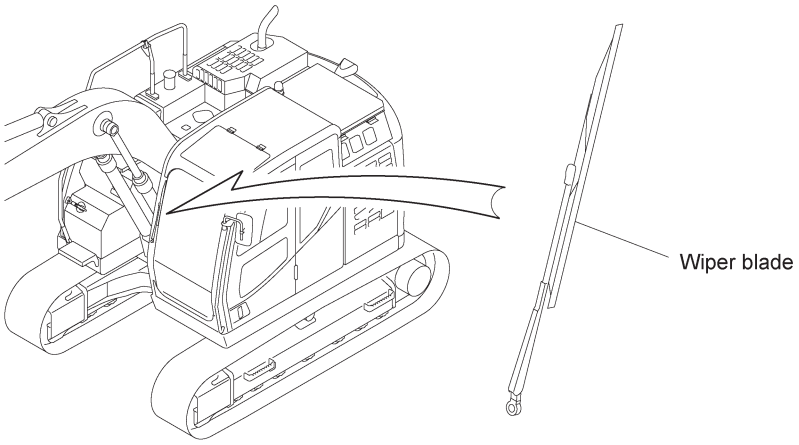

Wiper blade: 719-70301000

I218601-094-0E

[Inspection and servicing section]	4-7-2	[Consumable part name]	Internal air filter and outside air filter

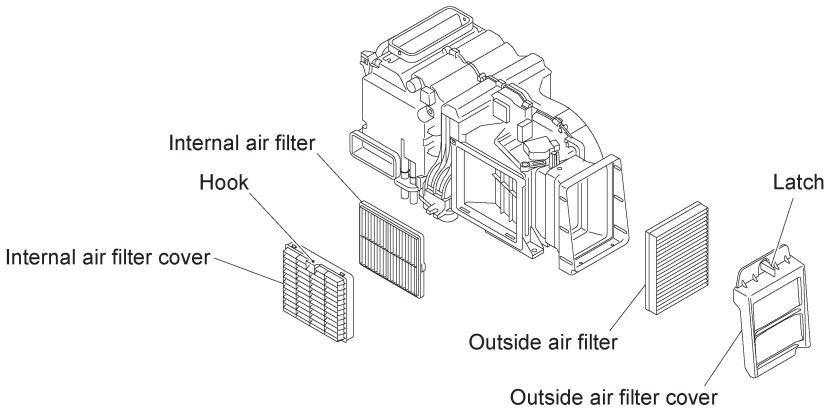

Internal air filter: 709-82909000
Outside air filter: 54E-76116000

I218081-267-0E

(T218341-125-0E)

https://truckmanualshub.com/

[Inspection and servicing section]	4-7-3	[Consumable part name]	V-belt

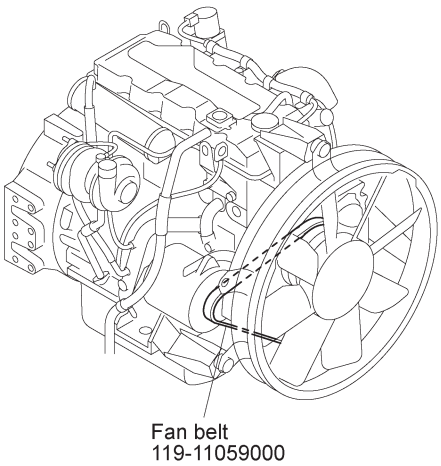

11911059000E

[Inspection and servicing section]	4-7-6	[Consumable part name]	Receiver drier

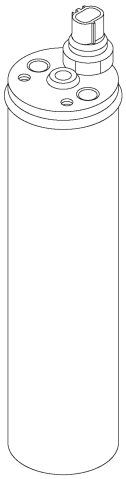

Receiver drier: 709-84800002

709848020E

(T218341-126-0E)

https://truckmanualshub.com/

4. Hydraulic circuit diagram (01EE-0608-0E)

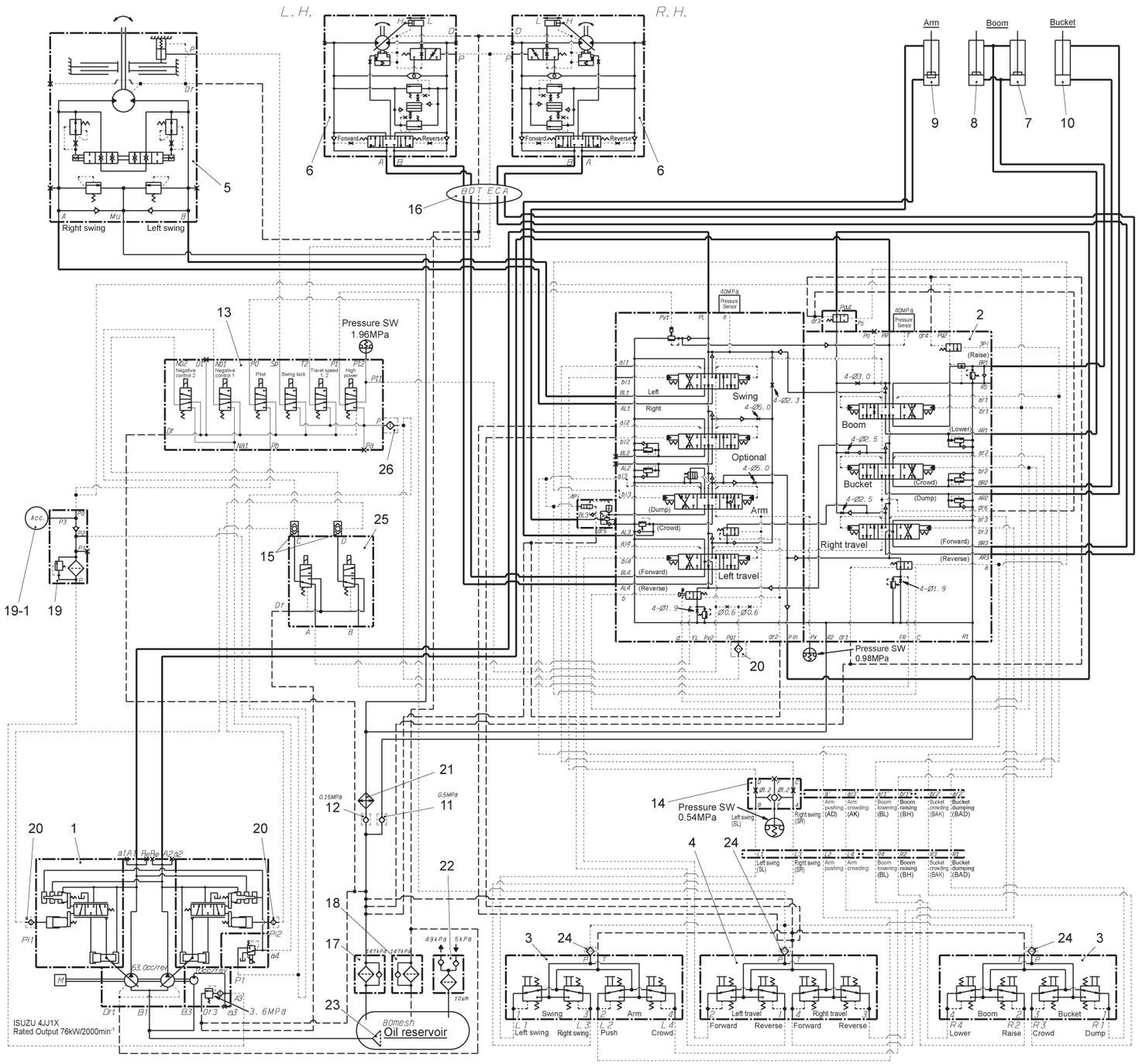

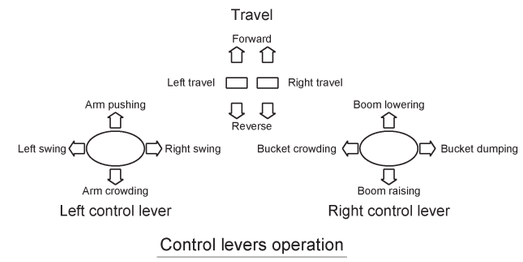

Control levers operation

Main relief valve set pressure	High pressure	$32.8^{+0.5}_{0}$MPa at 95L/min
	Low pressure	$31.4^{+0.5}_{0}$MPa at 110L/min
Port relief valve set pressure	AM, BM BKT, OPT	$34.3^{+0.5}_{0}$MPa at 15L/min
Foot relief valve set pressure		$2.82^{+0.5}_{0}$MPa at 40L/min

Ref. No.	Part name	Q'ty
1	Pump	1
2	Control valve	1
3	Pilot valve	2
4	Pilot valve	1
5	Swing Reduction	1
6	Traveling Reduction	2
7	Boom cylinder (R)	1
8	Boom cylinder (L)	1
9	Arm cylinder	1
10	Bucket cylinder	1
11	Check valve	1
12	Check valve	1
13	Solenoid valve	1
14	Shuttle valve	1
15	Shuttle valve	2
16	Rotary seal	1
17	Return filter	1
18	Drain filter	1
19	Pilot filter	1
19-1	Accumulator	1
20	Filter	3
21	Oil cooler	1
22	Air breather	1
23	Suction strainer	1
24	Filter	3
25	Solenoid valve	1
26	Filter	1

53E-60100000

I218621-076-0E

https://truckmanualshub.com/

5. Electrical circuit diagram (01EE-0609-0E)

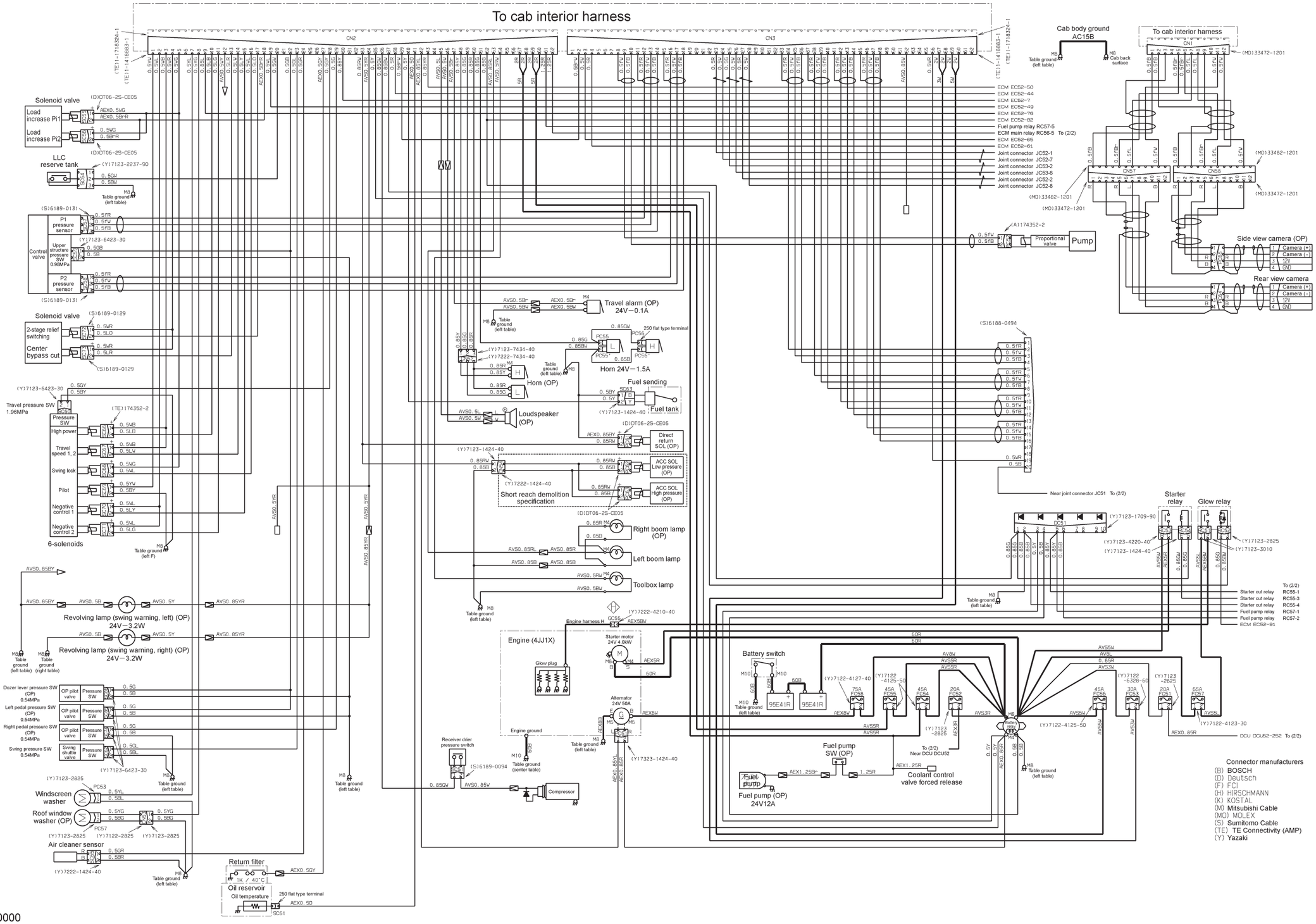

53E-77200000

I309202-010-0E

https://truckmanualshub.com/

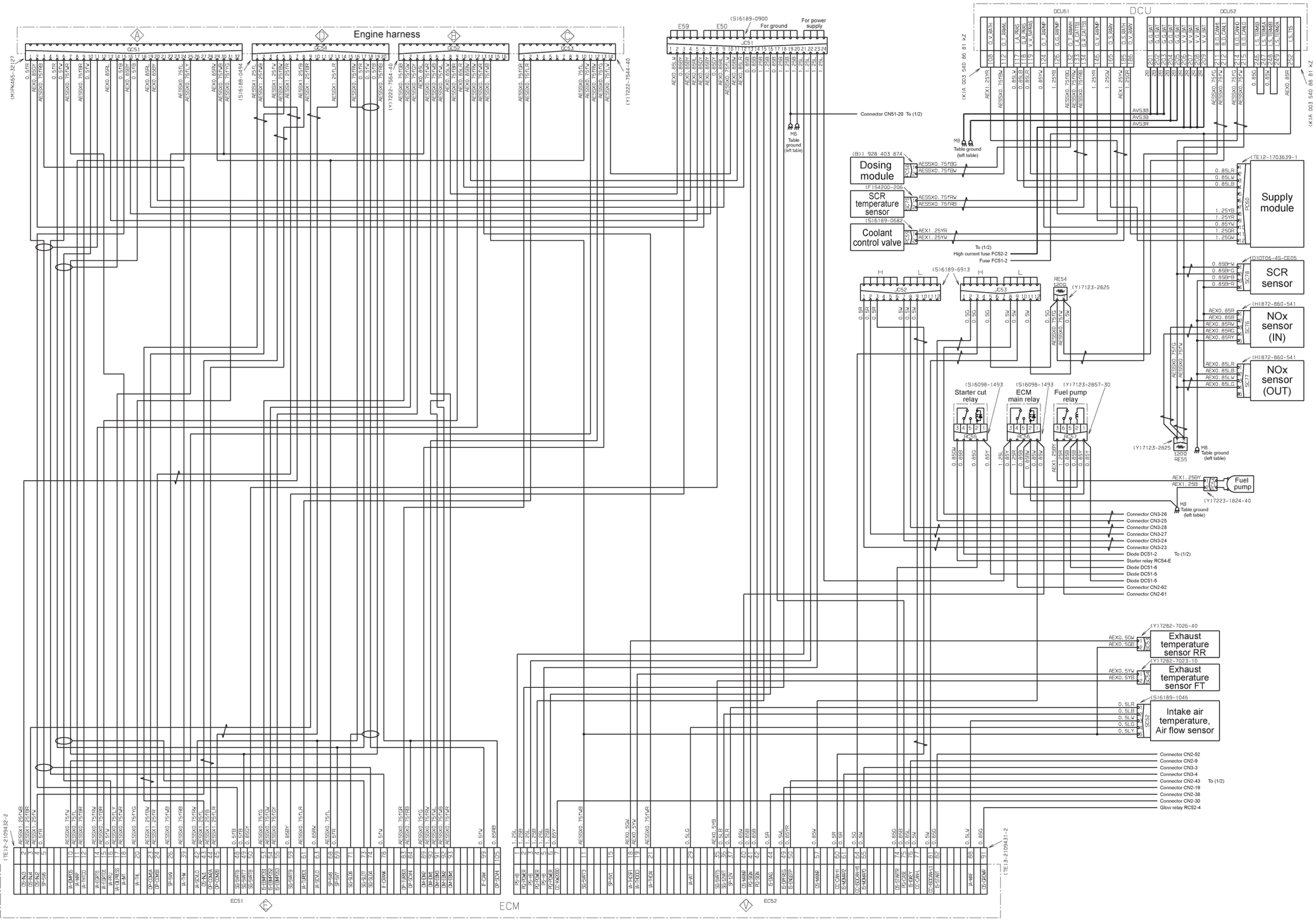

https://truckmanualshub.com/

MEMO

https://truckmanualshub.com/

6. Inspection sheet (01E0-0543-0E)

6-1 Hydraulic excavator preoperational check sheet (01E0-0544-0E)

Date: / / Weather: Clear/Cloudy/Rain/Snow

Model Serial No Hour meter Hr.

Inspection location

KATO Hydraulic Excavator Preoperational Check Sheet

Inspected by:

Approved by:	Dept.:

	Item inspected	Inspection parameters	Status	Result
General appearance	Exterior	Dents, damage, actuation of door lock		
	Device, Equipment	External damage		
	Bolt, Nut	Looseness		
	Wiring	Looseness, short circuit, damage		
Engine	Radiator, Expansion tank	Coolant level, dirtiness, water leaks		
	Engine oil	Oil level, oil leaks		
	Air cleaner	Dirtiness		
	Fan belt	Tension, cracking, damage		
	Fuel tank, Fuel filter, Water separator	Water level, fuel level		
	Engine	Startup/shutdown status, unusual noises, exhaust gas color		
	Exhaust pipe, Muffler	Looseness		
	SCR system	DEF leaks, water leaks, DEF level		
Hydraulic equipment	Oil cooler	Oil leaks		
	Hydraulic oil	Oil level, dirtiness		
	Pump	Oil leaks, unusual noise, abnormal heat		
	Motor, Valve	Oil leaks, unusual noise, abnormal heat, movement/actuation, brake actuation		
	Cylinder	Oil leaks, damage, actuation		
	Control valve	Oil leaks, actuation, maintaining neutral		
	Piping, Hose	Oil leaks, kinks/constrictions, damage		

	Item inspected	Inspection parameters	Status	Result
Upper structure	APC combination monitor	Errors displayed, operating status		
	Monitor switch, Gauge	Errors displayed		
	Switch, Warning alarm, Working lamp	Lighting, warning, actuation status		
	Lever, Pedal	Presence of abnormal play, vibration, adhesion		
	Boom, Arm, Bucket	Cracking, deformation, wear		
	Battery	Electrolyte level		
	Air conditioner	Operating status, dirtiness		
	Seatbelt	Wear, damage		
	Washer fluid	Fluid level		
Lower structure	Track shoe	Tension level, cracking, loose bolts		
	Drive wheel, Idler wheel	Wear, oil leaks, loose bolts		
	Upper/lower roller	Oil leaks, loose bolts		
Crane equipment (optional)	Load meter, Angle meter	Proper operation		
	Safety valve	Oil leaks, function		
	Warning alarm	Proper operation		
	Wiring, Piping	Open circuit, short circuit, kinks/constrictions, oil leaks		
	Hook	Deformation, damage, looseness of thrust bearing		
	Rope or chain retainer	Deformation, damage		
	Link, Rope	Deformation, wear, damage		
	Level confirming of level gauge			

Remarks			
	Starting time (hh: mm)	Fuel quantity added	Hydraulic oil quantity added
	Finishing time (hh: mm)	Engine oil quantity added	Other

Symbols: "V" indicates "very good", "A" indicates "adjustment" is required, "X" indicates replacement is required, "P" indicates repair is required, "T" indicates additional "tightening" is required, "C" indicates "cleaning" is required, a "+" (plus symbol) indicates more needs to be added, and "O" indicates maintenance is finished.

https://truckmanualshub.com/

6-2 Hydraulic excavator monthly voluntary inspection sheet (01E0-0545-0E)

KATO Hydraulic excavator monthly voluntary inspection sheet

Inspector Certificate No.	

Company	Equipment manager	Model	Serial No.	Hour meter Hr.
Inspection date / /	Inspection site	Inspecting company	Inspector	

	Item inspected	Status	Result		Item inspected	Status	Result
Engine-related	Engine startup/shutdown status, running status, and unusual noises			Hydraulic equipment	Dirtiness of hydraulic oil		
	Engine exhaust color, exhaust sound, and leakage from exhaust pipes, etc				Leakage, unusual noise, excess heat, or abnormal vibration from hydraulic pump		
	Dirtiness or clogging of oil or fuel filter				Leakage, unusual noise, excess heat, or abnormal vibration from any hydraulic motor		
	Cleanliness of air cleaner, and dirtiness, deformation, or looseness of element				Oil leakage and functionality of control valve		
	Dirtiness, level, and leakage of engine oil				Oil leakage and functionality of each valve		
	Clogging, denting, or leakage of radiator or oil cooler, or damage or deterioration of hoses				Oil leakage, rod rust, damage, and movement of any cylinder		
					Oil leakage and functionality of rotary seal		
	Radiator (sub-tank) coolant level				Oil leakage and functionality of shut-off valve		
	Level and specific gravity of battery fluid and corrosion or looseness of terminals				Leakage, kinks/pinches, damage, or deterioration of hydraulic lines		
	Looseness, damage, or wear of fan belt				Leakage, oil level, dirty oil, unusual sound, or cracking of any reduction gear		
	Looseness, short circuits, or damage of any wiring				Looseness or loss of any attachment bolt		
	Looseness or loss of any attachment bolt				Maintaining neutral position of each cylinder		
	Cracking, bending, or attachment of mount and damage or deterioration of rubber				Swing braking function		
	DEF/AdBlue®, cooling water leakage, or damage or deterioration of hoses				Replacement of return element (after 100 hours for a new machine, and every 1000 hours thereafter)		
Upper structure	Wear, lubrication, and play of lever joint pins				Replacement of drain filter (after 100 hours for a new machine, and every 1000 hours thereafter)		
	Looseness or damage of rod and cable			Other equipment	Functional and installation status of headlamps, warning beeper and wiper		
	Display of APC and combination monitor, and functionality of each switch and gauge				Functionality of air conditioner		
					Functionality of compressor		
	Looseness, short circuit, or damage of any wiring				Cleaning of air filter		
	Looseness or damage of cab or glass, functionality, cracking, deformation, or leaks of each cover lock unit				Functionality of lubricator		
					Functionality of other optional parts		
	Dirtiness, and image of rear view mirrors						
	Cracking, damage, deformation, and installation of climbing steps/grips and anti-slip surfaces						
	Wear and lubrication status of installation pins for boom, arm, etc.						
	Missing or damaged bolts/nuts that prevent pin rotation						
	Curvature or cracking of boom, arm, etc.						
	Wear, deformation, cracking, or loss of bucket, points, or side cutters						
	Installation, wear, and lubrication status of slewing bearing and slewing gear						
	Water removal from hydraulic oil reservoir, fuel tank, fuel filter, and water separator						
	Looseness or loss of any attachment bolt						
	Functionality and effectiveness of swing lock						
	Installation of counterweights						
Lower structure	Wear, deformation, cracking, oil leakage, and installation of upper and lower rollers						
	Wear, deformation, cracking, oil leakage, and installation of sprockets and tumblers						
	Tension level of track shoes						
	Wear, deformation, cracking, or missing pins in track shoes or links						
	Severed steel cords, worn/missing rubber, or missing core metal in rubber crawlers						
	Looseness or loss of any attachment bolt						
	Functionality of travel brake						
	Functionality of parking brake						
	Cracking, deformation, wear, looseness, and installation of blades						
Remarks							

Symbols: "V" indicates "very good", "A" indicates "adjustment" is required, "X" indicates replacement is required, "R" indicates "repair" is required, "T" indicates additional "tightening" is required, "C" indicates "cleaning" is required, "L" indicates "lubrication" is required, a "+" (plus symbol) indicates more needs to be added, and "O" indicates maintenance is finished.

I218081-433-0E

https://truckmanualshub.com/

541A-00170

Index

218621

A

Accelerator dial 60
Accessory USB power supply port (optional) 62
Aerial 76
Air conditioner 238
Air conditioner mode switch 122
Arm 39
Attachment mode switch 105

B

Backup switch 63
Backup switch panel 63
Battery disconnect switch 77
Boom 39
Bucket 39,138

C

Cab 39
Console lock lever 55
Control levers 55
Control panel 60
Control valve 39
Cooling system 207
Counterweight 39
Cover/hood 74

D

Date/Time 108
DEF indicator 108
DEF level meter 108
DEF pump filter 192
DEF tank 39
DEF tank suction filter 193
Door 43
Door window 48
Dozer lever (optional) 59
Drink holder 54

https://truckmanualshub.com/

E

Electromagnetic fuel pump 204
Emergency escape hammer 54
Emergency stop switch 53
Engine 39
Engine oil filter 189
Engine water temperature gauge 108

F

Fire extinguisher (optional) 54
Front attachment 230
Front idler 39, 226
Front lower window 47
Front window 45
Fuel consumption gauge/Leaf indicator 109
Fuel gauge 107
Fuel pre-filter 195
Fuel pump (optional) 79
Fuel system 194
Fuel tank 39
Fuse box 236

G

Grease pump 75

H

High power switch 56
Horn selection switch (optional) 62
Horn switch 56
Hot & cool box 52
Hour meter 52
Hour meter (Monitor) 109
Hydraulic devices 213
Hydraulic oil temperature gauge 108
Hydraulic pump 39

I

Interior lamp 53

K

Key 45

L

Left control lever 58
Light switch 110

https://truckmanualshub.com/

M

Main fuel filter 202
Maintenance door 44
Manual accelerator switch 63
Menu screen 112
Mirror 75, 245
Monitor 102

O

Oil reservoir 39
Operator's seat 49
Optional switches (optional) 62

P

Power mode switch 104
Power supply port 53

Q

Quick accelerator switch 56

R

Radio 65
Rain visor (optional) 80
Rear view camera 79, 246
Right control lever 58
Roof window 48

S

Safety lock lever 55
SCR system 191
Seatbelt 52
Slow-down mode switch 106
Starter switch 60
Sun visor (optional) 49
Sunshade (optional, or included standard on models with a polycarbonate hatch) 48
Supply pump strainer 203
Swing gear 39
Swing lock release switch 64
Swing motor reduction gear 229
Swing table 39
Swing warning lamp switch (optional) 62
Switch panel 62

https://truckmanualshub.com/

T

Toolbox 78
Touch panel display 103
Track shoe 39
Travel link alarm switch (optional) 62
Traveling control levers 57
Traveling mode switch 104
Traveling motor 39

W

Washer switch 111
Washer tank 76
Wiper switch 111
Working lamp 78

https://truckmanualshub.com/

KATO WORKS CO.,LTD.

9-37, Higashi-ohi 1-chome, Shinagawa-ku, Tokyo 140-0011 Japan.
Tel. : Head Office Tokyo (03) 3458-1111
Overseas Marketing Department Tokyo (03) 3458-1115
Fax. : Tokyo (03) 3458-1163
URL http://www.kato-works.co.jp

180213TI 8.2018-50(GD)1

https://truckmanualshub.com/

KATO

899-92186210