ISUZU COMMERCIAL TRUCK
FORWARD
TILTMASTER

NPR/NPR HD/NQR
W3500/W4500/W5500
(DIESEL)

SERVICE MANUAL SUPPLEMENT
(2003)

FOREWORD

This supplemental Service Manual contains diagnosis, on-vehicle service, wiring diagrams, and component unit repair for Medium Duty Steel Cab Vehicles. (NPR / NPR HD / NQR ... W3500 / W4500 / W5500 ... DIESEL ENGINE). When used with the Service Manuals (Pub. No. NPD01-WSM-C01 and NPD02-WSM-CS1 for chassis and NPD01-ESM-C02 for Engine), complete service coverage is provided.

Keep this manual in a handy place for ready reference. If properly used, it will enable the technician to serve the owners of these vehicles.

CAUTION:

This service manual is intended for use by professional, qualified technicians.
Attempting repairs or service without the appropriate training, tools, and equipment could cause injury to you or others and damage to your vehicle that may cause it not to operate properly.
These vehicles contain parts dimensioned in the metric system as well as in the customary system. Some fasteners are metric and are very close in dimension to familiar customary fasteners in the inch system. It is important to note that, during any vehicle maintenance procedures, replacement fasteners must have the same measurements and strength as those removed, whether metric or customary. (Numbers on the heads of metric bolts and on surfaces of metric nuts indicate their strength. Customary bolts use radial lines for this purpose, while most customary nuts do not have strength markings.) Mismatched or incorrect fasteners can result in vehicle damage or malfunction, or possibly personal injury. Therefore, fasteners removed from the vehicle should be saved for re-use in the same location whenever possible. Where the fasteners are not satisfactory for re-use, care should be taken to select a replacement that matches the original. For information and assistance, see your authorized dealer.

CAUTION

To reduce the chance of personal injury and/or property damage, the following instructions must be carefully observed.

Proper service and repair are important to the safety of the service technician and the safe, reliable operation of all motor vehicles. If a part replacement is necessary, the part must be replaced with one of the same part number or with a part of the same quality. Do not use an incorrect or a replacement part of lesser quality.

The service procedures recommended and described in this service manual are effective methods of performing service and repair. Some of these procedures require the use of tools specially designed for the purpose.

Accordingly, anyone who intends to use a replacement part, service procedure or tool, which is not recommended by the vehicle manufacturer, must first determine that neither technician safety nor the safe operation of the vehicle will be jeopardized by the replacement part, service procedure, or tool selected.

It is important to note that this manual contains various **Cautions** and **Notices** that must be carefully observed in order to reduce the risk of personal injury during service or repair, or the possibility that improper service or repair may damage the vehicle or render it unsafe. It is also important to understand that these 'Cautions' and 'Notices' are not exhaustive, because it is impossible to warn of all the possible hazardous consequences that might result from failure to follow these instructions.

2003 SERVICE MANUAL
(SUPPLEMENT)

NPR/NPR HD/NQR W3500/W4500/W5500 MODELS

Any reference to brand names in this manual is intended merely as an example of the types of lubricants, tools, materials, etc., recommended for use. In all cases, an equivalent may be used.

All information, illustrations, and specifications contained in this manual are based on the latest product information available at the time of publication approval. The right is reserved to make changes at any time without notice.

PUBLICATION NO.
Isuzu Motors Limited NPD03-WSM-CS1
©2002 Isuzu Motors Limited
Printed in U.S.A. February 2001

No part of this publication may be reproduced, stored in any retrieval system, or transmitted, in any form or by any means, including but not limited to electronic, mechanical, photocopying, recording or otherwise, without the prior written permission of Isuzu Motors Limited. This includes all text, illustrations, tables, and charts.

NPR/NPR HD/NQR
W3500/W4500/W5500
TABLE OF CONTENTS

The table of contents on this page indicates the sections covered in this manual. At the beginning of each individual section is a table of contents which gives the page number on which each major subject begins.

SECTION	SUBJECT	CONTENTS	
0	GENERAL INFORMATION	0A GENERAL INFORMATION	0B MAINTENANCE AND LUBRICATION
1	HEATING AND AIR CONDITIONING	1A HEATING AND VENTILATION	1B AIR CONDITIONING
2	FRAME AND CAB	2A FRAME AND BODY MOUNTS 2B CAB MAINTENANCE	2C SHEET METAL
3	STEERING, SUSPENSION, WHEELS, AND TIRES	3A FRONT END ALIGNMENT 3B1 STEERING LINKAGE 3B3 POWER STEERING 3B4 STEERING COLUMN	3C FRONT AXLE AND SUSPENSION 3D REAR SUSPENSION 3E WHEELS AND TIRES
4	REAR AXLE AND PROPELLER SHAFT	4A1 REAR AXLE	4B PROPELLER SHAFT
5	BRAKES	5A HYDRAULIC BRAKES 5A1 VACUUM BOOSTER BRAKE SYSTEM 5A2 HYDRAULIC BOOSTER BRAKE SYSTEM	5A2 HYDRAULIC FOUNDATION BRAKES 5A4 ANTI-LOCK BRAKE SYSTEM (ABS) 5C PARKING BRAKE
6	ENGINE	6A ENGINE 6A6 ISUZU ENGINE 6B1 COOLING SYSTEM 6B2 RADIATOR 6B3 FAN	6C1 FUEL SYSTEM 6C3 FUEL INJECTION SYSTEM 6D ENGINE ELECTRICAL 6E EMISSION AND ELECTRICAL DIAGNOSIS 6F EXHAUST
7	TRANSMISSION	7A AUTOMATIC TRANSMISSION 7B1 MANUAL TRANSMISSION (MXA) 7B2 MANUAL TRANSMISSION (MZZ)	7C1 CLUTCH (FOR MXA TRANSMISSION) 7C2 CLUTCH (FOR MZZ TRANSMISSION)
8	CAB AND CHASSIS ELECTRICAL	8A CAB AND CHASSIS ELECTRICAL	
9	METRIC AND FASTENER INFORMATION	9 METRIC AND SAE FASTENER INFORMATION	
10	STEEL CAB	10D STEEL TILT CAB 10E STEEL CREW CAB	

NPR/NPR HD/NQR
W3500/W4500/W5500
MODEL DATA

Models for Manual Transmission

Truck Model	Engine	Clutch	Front Axle	Rear Axle	Transmission
	Standard	Standard	Standard	Standard	Standard
NPR/W3500	4HE1-TCN	11.8 inch	Reverse Elliott I-Beam	Single Speed Banjo, Full Floating	MXA5C
NPR HD/W4500	4HE1-TCN				
NQR/W5500	4HE1-TCS	12.8 inch			MZZ6U

Models for Automatic Transmission

Truck Model	Engine	Clutch	Front Axle	Rear Axle	Transmission
	Standard	—	Standard	Standard	Standard
NPR/NPR HD/ NQR W3500/W4500 W5500	4HE1-TCS	—	Reverse Elliott, I-Beam	Single Speed Banjo, Full Floating	AISIN 450-43LE

Models for Manual/Automatic Transmission

Truck Model	Brake
NPR/NPR HD/ W3500/W4500	Vacuum Assist + ABS
NQR W5500	HBB + ABS

*HBB.: Hydraulic Brake Booster
* ABS: Anti-Lock Brake System

MEMO

SECTION 0

GENERAL INFORMATION

CONTENTS

SUBJECT	PAGE
General Information	0A
Maintenance and Lubrication	0B

SECTION 0A

GENERAL INFORMATION

CONTENTS

SUBJECT	PAGE
Handling Electrostatic Discharge (ESD) Sensitive Parts	0A- 2
Model Reference	0A- 2
VIN (Vehicle Identification Number) and Weight Rating Plate	0A- 2
GVWR (Gross Vehicle Weight Rating)	0A- 3
Service Parts Identification Label	0A- 3
Regular Production Options (RPO) Code List	0A- 4
Engine Serial Number	0A- 5
Graphic Symbols	0A- 5
Action Symbols	0A- 5
Emergency Starting a Vehicle Due to a Discharged Battery	0A- 5
Towing Procedure	0A- 6
Vehicle Lifting Points	0A- 7
Abbreviations Charts	0A- 8
Essential Service Tools	0A-10

HANDLING ELECTROSTATIC DISCHARGE (ESD) SENSITIVE PARTS

When handling an electronic part that has an ESD sensitive sticker (figure 1), the service technician should follow these guidelines to reduce any possible electrostatic charge build-up on the service technician's body and the electronic part in the dealership:

1. Do not open the package until it is time to install the part.
2. Avoid touching the electrical terminals of the part.
3. Before removing the part from its package, ground the package to a known good ground on the vehicle.
4. Always touch a known good ground before handling the part. This should be repeated while handling the part and more frequently after sliding across the seat, sitting down from a standing position or walking a distance.

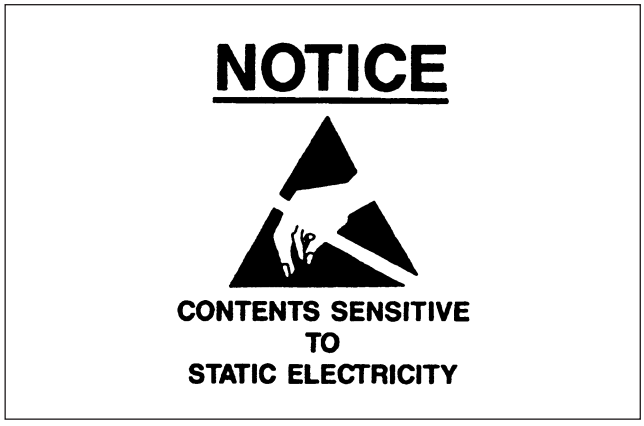

Figure 1. Electrostatic Discharge Symbol

MODEL REFERENCE

The models covered in this manual are referred to as a NPR, NQR.

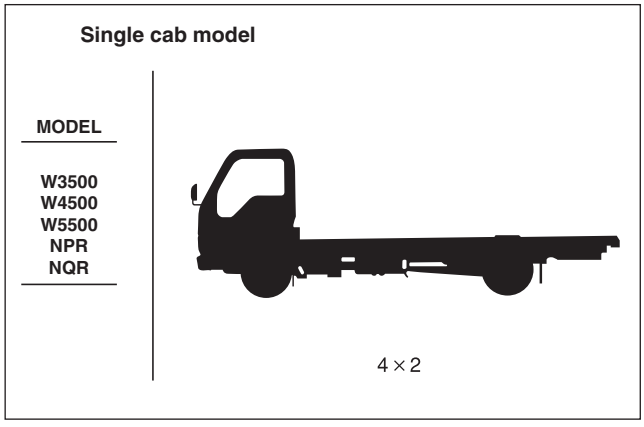

Figure 2. Model Reference (Single Cab Model)

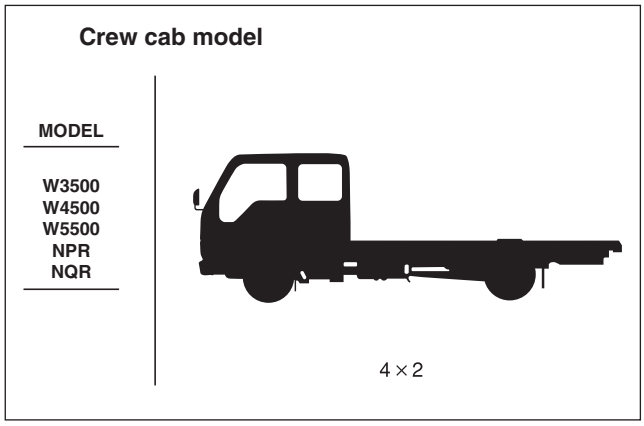

Figure 3. Model Reference (Crew Cab Model)

VIN (VEHICLE IDENTIFICATION NUMBER) AND WEIGHT RATING PLATE

The VIN and Weight Rating Plate (figure 4) lists the manufacturer, gross vehicle weight for the vehicle, maximum front end weight at ground, maximum rear end weight at ground, and the VIN (vehicle identification number). This plate is attached to the inner face of the cab side panel on the driver side.

The vehicle identification number is a legal identifier of your vehicle. It not only appears on the VIN plate, but also on the Vehicle Certificates of Title and Registration. The vehicle identification number specifically identifies a vehicle by code. Figure 5 displays the codes and descriptions for the model covered in this manual.

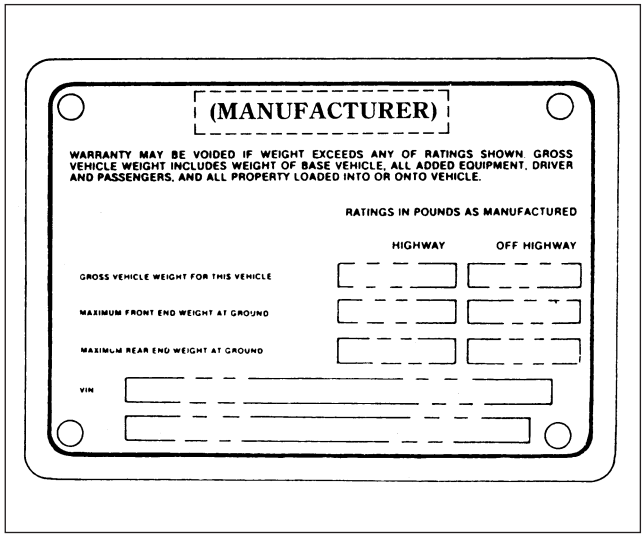

Figure 4. VIN Weight Rating Plate

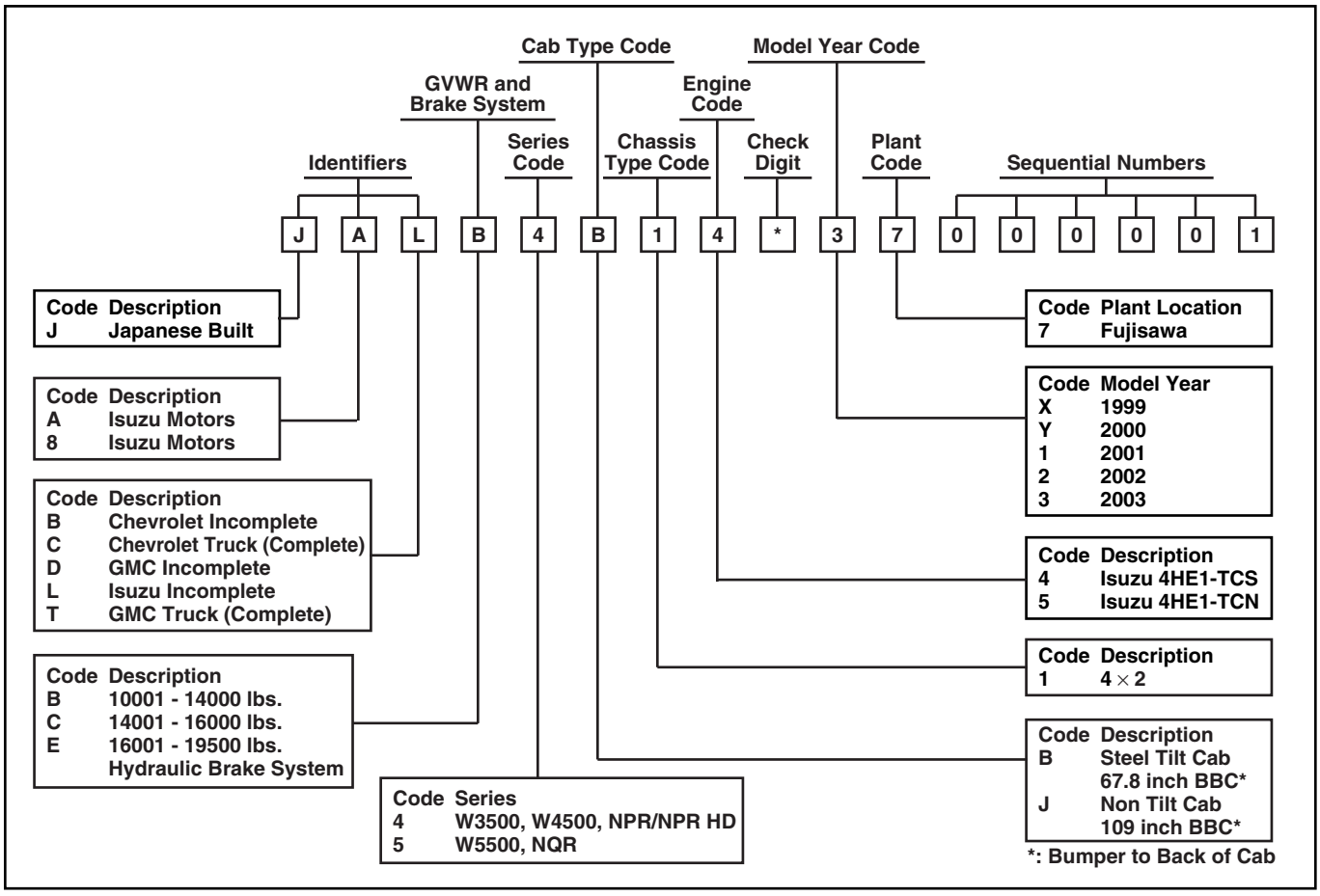

Figure 5. VIN Chart

GVWR (GROSS VEHICLE WEIGHT RATING)

The GVWR is the weight of a vehicle plus the weight of a vehicle's load. For the gross vehicle weight rating and the gross vehicle combined weight rating, refer to Model Explanation (figure 2). For the gross vehicle weight rating range refer to the VIN Chart (figure 5).

SERVICE PARTS IDENTIFICATION LABEL

The "Service Parts Identification" label (figure 6) lists major components and their part numbers plus vehicle options and their codes. The information on the label was printed at the factory; therefore, it represents only the equipment on the vehicle when it was shipped from the factory. **Always** refer to this label when ordering replacement service parts. (Refer to the "NOTICE" on the label.)

The service parts identification label is attached to the inner face of the cab side panel on the Passenger side.

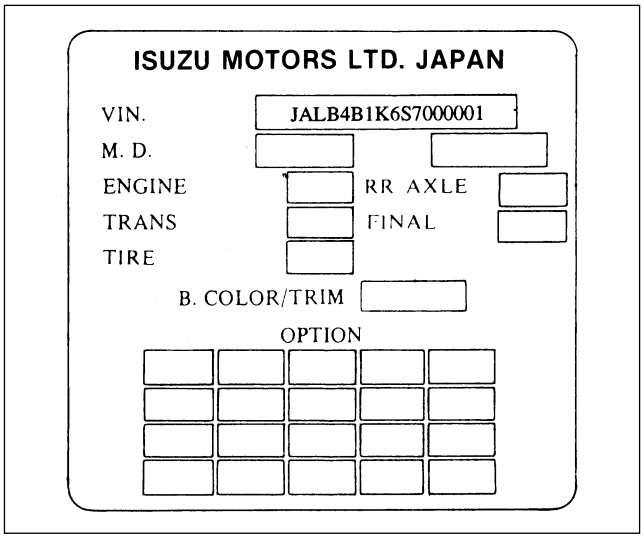

Figure 6. Service Parts Identification Label

REGULAR PRODUCTION OPTIONS (RPO) CODE LIST

The RPO list (figure 7) contains RPOs available on this model. Also, refer to the “Service Parts Identification” label (figure 6) for a list of the RPOs used on each specific vehicle.

Note; F=Front
R=Rear
w/=With

OPTION CODE	OPTION DESCRIPTION	OPTION CODE	OPTION DESCRIPTION
100	INTERIOR-TRIM COLOR COMBI.(IN WHITE)	RNJ	AUTOMATIC TRANSMISSION 4-SPEED (AISIN)
153	INTERIOR-TRIM COLOR COMBI.(GRAY)	RNL	MANUAL TRANSMISSION-5 SPEED (MXA-5C)
729	BODY COLOR CODE-ARC WHITE (W301-P801)	M11	SHIFT-FLOOR (REMOTE)
730	BODY COLOR CODE-ADRIATIC BLUE	V66	POWER TAKE OFF-PROVISIONS FOR
	(B302-P801)	NL7	FUEL TANK-125L, 33GAL
800	BODY COLOR CODE-IN WHITE	6HU	FUEL SEDIMENTER-WITH HEATER
979	BODY COLOR CODE-HEILING MAYERS GREEN	N33	STEERING COLUMN-TILT TYPE
D94	PAINT-TOUCH-UP, ONE COLOR		(WITH TELESCOPIC)
VG1	WAX-PROTECTIVE UNDERBODY	N40	STEERING-POWER
RWC	CANADIAN EQUIPMENT	ASQ	F/TIRE215/85R16-E, R/TIRE215/85R16-E
6SH	BUDGET PACKAGE		F&R/DISC 16X6K-127 w/DOT MARK
7VH	OFFICE DEPOT PACKAGE		WHITE DISC, (BS BRAND, R187)
YL3	FRIGID ZONE KIT	AVE	F&R/TIRE 225/70R19.5
6JJ	DEALER INSTALLATION OPTION		F&R/DISC 19.5X6.00-127, WHITE
6FM	US TERRITORY		(FT HIGHWAY, RR MUD & SNOW)
RQF	GVWR CLASS-3 (10001-14000 LBS)	AVU	F&R/TIRE 225/70R19.5
RQG	GVWR CLASS-4 (14001-16000 LBS)		F&R/DISC 19.5X6.00-127, WHITE
RQH	GVWR CLASS-5 (16001-19500 LBS)		(FT & RR HIGHWAY)
7NQ	VEHICLE CATEGORY-NQR	AVZ	F&R/TIRE 225/70R19.5 (FOR BUDGET)
6FZ	FENDER COVER		F&R/DISC 19.5X6.00-127, WHITE
RWZ	CAB-TILT, MANUAL		(FT & RR MUD & SNOW)
EK7	MARK-VEHICLE NAME	AZF	F/TIRE 215/85R16-E, R/TIRE 215/85R16-E
6JS	SEAT BELT EXTENSION		F&R/DISC 16X6K-128 w/DOT MARK
D20	SUNVISOR-CO-DRIVER SIDE		WHITE DISC (ALL SEASON)
C41	HEATER & DEFROSTER	9YY	F/TIRE 215/85R16-E, R/TIRE 215/85R16-E JU019
C60	AIR CONDITIONER-MANUAL CONTROL		F&R/DISC 16X6K-127 w/DOT MARK
C55	VENTILATOR-ROOF		WHITE DISC
V92	TRAILER PROVISIONS	9YZ	F/TIRE 215/85R16-E, R/TIRE 215/85R16-E
F59	STABILIZER SHAFT-FRONT		F&R/DISC 16X6K-127 w/DOT MARK
G73	AXLE REAR-HEAVY DUTY		WHITE DISC, FOR BUDGET
6CP	AXLE REAR-HEAVY DUTY VAR.2	9ZB	F/TIRE 215/85R16-E, R/TIRE 215/85R16-E
GT5	FINAL DRIVE GEAR RATIO-4.100 (41/10)		F&R/DISC 16X6K-127 w/DOT MARK
HC6	FINAL DRIVE GEAR RATIO-4.556 (41/9)		WHITE DISC (ALL SEASON)
R40	FINAL DRIVE GEAR RATIO-5.375 (43/8)	9ZC	F/TIRE 215/85R16-E, R/TIRE 215/85R16-E
R41	FINAL DRIVE GEAR RATIO-5.857 (41/7)		F&R/DISC 16X6K-127 w/DOT MARK
7QQ	BRAKE SYSTEM-HYDRO BRAKE BOOSTER		WHITE DISC FOR BUDGET (ALL SEASON)
NF8	EXHAUST-BRAKE	9ZD	F/TIRE 215/85R16-E, R/TIRE 215/85R16-E
J52	BRAKES-FT DISK, MULTIPLE PISTON		F&R/DISC 16X6K-127 w/DOT MARK
6PH	BRAKE-WHEEL LOCK CONTROL, (L.S.P.V)		WHITE DISC, (RR ALL SEASON)
JE5	ANTI LOCK BRAKE SYSTEM	9ZV	F/TIRE 215/85R16-E, R/TIRE 215/85R16-E
RLY	ENGINE-DIESEL 4CYL L 4.8L (4HE1)		F&R/DISC 16X6K-127 w/DOT MARK, WHITE
EE2	GOVERNOR-ENGINE, WITH HIGH ALTITUDE		US DISC (ALL SEASON, US GOODYEAR)
	COMPENSATOR	R46	SPARE TIRE & DISC WHEEL VAR.1
K51	TURBO CHARGER	7NC	SPARE TIRE & DISC WHEEL-LESS
KJ3	AIR INTAKE SYSTEM; RR VERTICAL	P10	CARRIER-SPARE WHEEL (TRUCK)
6PL	INTERCOOLER	U01	LAMPS-FIVE, ROOF MARKER
7QV	ENGINE POWER N-SPEC	6GZ	RADIO-AM/FM STEREO ETR 2-SPEAKERS
8AA	LONG LIFE COOLANT (50%)	6VL	AM/FM w/CASSETTE 2SP 31N-1
6HT	HEATER-OIL PAN	U73	ANTENNA
K05	HEATER-ENGINE BLOCK	7FK	SPEAKER OPTION: 2-SPEAKER
RNC	MANUAL TRANSMISSION-6 SPEED (MBP-6P)	C13	WIPER-WITH INTERMITTENT

Figure 7. Regular Production Option List

ENGINE SERIAL NUMBER

The engine serial number is machined on the left side of the engine just above the oil pan.

GRAPHIC SYMBOLS

Graphic symbols are used on some controls and displays on the vehicle (figure 8). Many of these symbols are used internationally.

Figure 8. International Symbols

ACTION SYMBOLS

In this manual, much of the general narrative has been replaced with step-by- step procedures and the addition of “Action Symbols.” To improve readability and to provide emphasis where necessary, the following symbols are used in the manual.

...Remove or Disconnect

...Install or Connect

...Disassemble

...Assemble

...Clean

...Inspect

...Measure

...Adjust

...Tighten to specified torque

...Important

EMERGENCY STARTING A VEHICLE DUE TO DISCHARGED BATTERY

If your vehicle will not start due to a discharged battery, it can often be started by using energy from another battery—a procedure called “jump starting.”

This vehicle has a 12volt starting system and a negative ground electrical system. Be sure that the other vehicle also has a 12volt starting system, and that it is the negative (black “–”) terminal which is grounded (attached to the engine block, chassis or frame rail). Its owner’s manual may give you that information. DO NOT TRY TO JUMP START IF YOU ARE UNSURE OF THE OTHER VEHICLE’S VOLTAGE OR GROUND (OR IF THE OTHER VEHICLE’S VOLTAGE AND GROUND ARE DIFFERENT FROM YOUR VEHICLE).

Some diesel engine vehicles have more than one battery because of higher torque required to start a diesel engine. This procedure can be used to start a single battery vehicle from any of the diesel vehicle’s batteries. However, it may not be possible to start a diesel engine from a single battery in another vehicle, at low temperatures.

NOTICE: Never tow the vehicle to start, because the surge forward when the engine starts could cause a collision with the tow vehicle. Also, this vehicle has 12volt batteries. Be sure the vehicle or equipment used to jump start your engine is also a 12volt Use of any other system may damage the vehicle’s electrical components.

Jump Starting Instructions

CAUTION: Batteries produce explosive gases, contain corrosive acid, and supply levels of electrical current high enough to cause burns. Therefore, to reduce the risk of personal injury when working near a battery:

- **Always shield your eyes and avoid leaning over a battery whenever possible.**
- **Do not expose a battery to open flames or sparks.**
- **Be sure any batteries that have filler caps are properly filled with fluid.**
- **Do not allow battery acid to contact eyes or skin. Flush any contacted area with water immediately and thoroughly, and get medical help.**
- **Follow each step in the jump starting instructions.**

1. Position the vehicle with the good (charged) battery so that the booster (jumper) cables will reach but never let the vehicles touch. Also, be sure the booster cables to be used do not have loose or missing insulation.
2. In both vehicles:
   - Turn off the engine control switch and all lights and accessories except the hazard flasher or any lights needed for the work area.
   - Apply the parking brake firmly, and shift the automatic transmission to Park or manual transmission to Neutral.
3. Make sure the cable clamps do not touch any other metal parts. Clamp one end of the first booster cable to the positive "+"terminal on one battery, and the other end to the positive terminal on the other battery. Never connect "+" to "–" (figure 9).
4. Clamp one end of the second cable to the negative "–" terminal of the good (charged) battery and the final connection (to any solid, stationary metallic object) on the engine at least 450 mm (18 in) from the discharged battery; or the frame rail, chassis or some other well-grounded point, if the battery is mounted outside the engine compartment. Make sure the cables are not on or near pulleys, fans, or other parts that will move when the engine is started.
5. Start the engine of the vehicle with the good (charged) battery and run the engine at a moderate speed for several minutes. Then, start the engine of the vehicle that has the discharged battery.
6. Remove the jumper cables by reversing the above installation sequence exactly. While removing each clamp, take care that it does not touch any other metal while the other end remains attached.

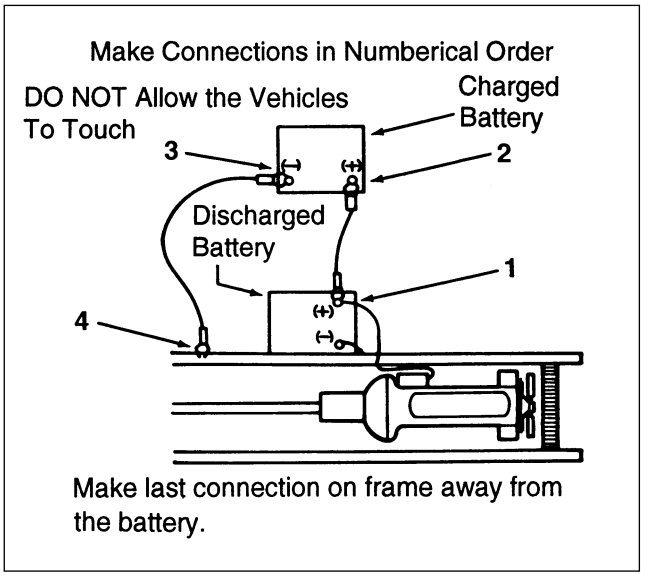

Figure 9. Jump Starting Diagram

TOWING PROCEDURE

Proper equipment must be used to prevent damage to vehicles during any towing. State (provincial in Canada) and local laws that apply to vehicles in tow must be followed.

- Vehicles should not be towed at speeds in excess of 55 mph (90 km/h).
- Connect to the main structural parts of the vehicle.
- DO NOT attach to bumpers, tow hooks or brackets.
- Use only equipment designed for this purpose.
- Follow the instructions of the wrecker manufacturer.
- A safety chain system must be used.
- The procedures below must be followed when towing, to prevent possible damage.

Front End Towing (Front Wheels Off The Ground)

Before Towing

To prepare a disabled vehicle for front end towing with front wheels raised off the ground, the following steps are necessary:

- Block the rear wheels of the disabled vehicle.

Manual Transmission Models

- Shift into neutral position.
- If there is damage or suspected damage to the transmission, disconnect the propeller shafts at the rear axle.
  Secure the propeller shafts to the frame or crossmember.

Automatic Transmission Models

- Disconnect the propeller shafts at the rear axle. Secure the propeller shafts to the frame or crossmember.

NOTICE: Never tow the vehicle with propeller

shafts is connected, as this may cause damage to the automatic transmission.

- Provide wood blocking to prevent towing chain and bar from contacting the bumper.
- If there is damage or suspected damage to the rear axle, remove the axle shafts. Cover the hub openings to prevent the loss of lubricant or entry of dirt or foreign objects.

After Towing

- Block the rear wheels and install the axle and propeller shafts if removed.
- Apply the parking brake before disconnecting from the towing vehicle.
- Check and fill rear axle with oil if required.

Front End Towing (All Wheels On The Ground)

Before Towing

Your vehicle may be towed on all wheels provided the steering is operable. Remember that power steering and brakes will not power assist. There must be a tow bar installed between the towing vehicle and the disabled vehicle.

To prepare a disabled vehicle for front end towing with all wheels on the ground, the following steps are necessary:

- Block the rear wheels of the disabled vehicle.

Manual Transmission Models

- Shift into neutral position.
- If there is damage or suspected damage to the transmission, disconnect the propeller shafts at the rear axle.
  Secure the propeller shafts to the frame or crossmember.

Automatic Transmission Models

- Disconnect the propeller shafts at the rear axle. Secure the propeller shafts to the frame or crossmember.

NOTICE: Never tow the vehicle with propeller shafts connected, as this may cause damage to the automatic transmission.

- Provide wood blocking to prevent towing chain and bar from contacting the bumper.
- If there is damage or suspected damage to the rear axle, remove the axle shafts. Cover the hub openings to prevent the loss of lubricant or entry of dirt or foreign objects.

After Towing

- Block the rear wheels and install the axle and propeller shafts if removed.
- Apply the parking brake before disconnecting from the towing vehicle.
- Check and fill rear axle with oil if required.

Rear End Towing

When towing a vehicle with rear wheels raised, secure the steering wheel to maintain straight-ahead position. Make certain that the front axle is not loaded above the front axle Gross Axle Weight Rating (GAWR) as indicated on the vehicle's VIN and Weight Rating Plate.

Special Towing Instructions

1. All state and local laws regarding such items as warning signals, night illumination, speed, etc., must be followed.
2. Safety chains must be used.
3. No vehicle should ever be towed at over 55 mph (90 km/h).
4. Loose or protruding parts of damaged vehicles should be secured prior to moving.
5. A safety chain system completely independent of the primary lifting and towing attachment must be used.
6. Operators should not go under a vehicle that is being lifted by the towing equipment unless the vehicle is adequately supported by safety stands.
7. No towing operation that for any reason jeopardizes the safety of the wrecker operator or any bystanders or other motorists should be attempted.

VEHICLE LIFTING POINTS

Figure 10 shows the jack stand placement points.

CAUTION: To help avoid personal injury when a vehicle is on a jackstand, provide additional support for the vehicle at the opposite end from which components are being removed. This will reduce the possibility of the vehicle falling off of the stand.

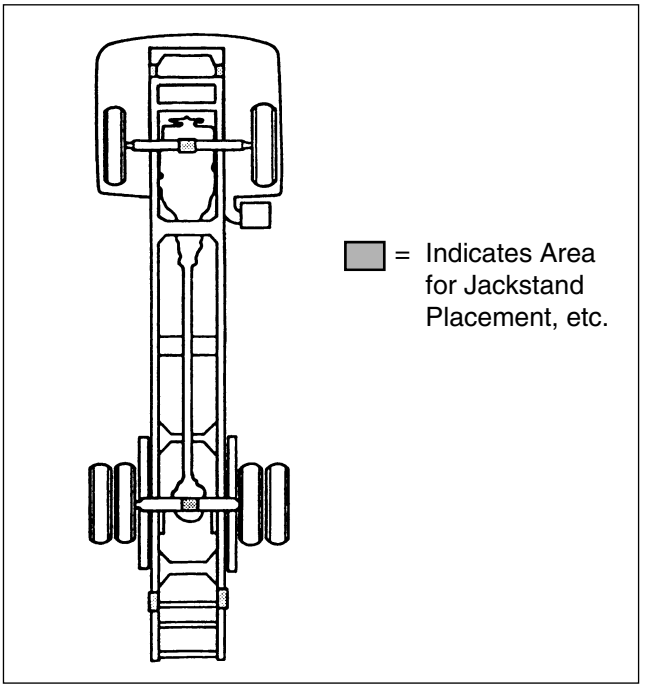

Figure 10. Vehicle Lifting Points

ABBREVIATIONS CHARTS

For abbreviations of emission system, refer to the section 6E.

LIST OF AUTOMOTIVE ABBRIVIATIONS WHICH MAY BE USED IN THIS MANUAL

A – Ampere (s)
ABS – Antilock Brake System
AC – Alternating Current
A/C – Air Conditioning
ACCEL – Accelerator
ACC – Accessary
ACL – Air Cleaner
Adj – Adjust
A/F – Air Fuel Ratio
AIR – Secondary Air Injection System
Alt – Altitude
AMP – Ampere (s)
ANT – Antenna
ASM – Assembly
A/T – Automatic Transmission
ATDC – After Top Dead Center
ATF – Automatic Transmission Fluid
Auth – Authority
Auto – Automatic
BARO – Barometric Pressure
Bat – Battery
B+ – Battery Positive Voltage
Bbl – Barrel
BHP – Brake Horsepower
BPT – Back Pressure Transducer
BTDC – Before Top Dead Center
°C – Degrees Celsuis
CAC – Charge Air Cooler
Calif – California
cc – Cubic Centimeter
CID – Cubic Inch Deplacement
CKP – Crankshaft Position
CKT – Circuit
CL – Closed Loop
CLCC – Closed Loop Carburetor Control
CMP – Camshaft Position
CO – Carbon Monoxide
Coax – Coaxial
Conn – Connector
Conv – Coverter
Cu.In. – Cubic Inch
CV – Constant Velocity
DI – Distributor Ignition
Diff – Differential
Dist – Distributor
DLC – Data Link Connector
DOHC – Double (or Dual) Overhead Camshaft
DRL – Daytime Running Light
DTC – Diagnostic Trouble Code
DTM – Diagnostic Test Mode
DTT – Diagnostic Test Terminal
DVM – Digital Voltmeter (10 meg.)
DVOM – Digital Volt Ohmmeter
EBCM – Electronic Brake Control Module
ECM – Engine Control Module
ECT – Engine Coolant Temperature
EEPROM – Electronically Erasable Programmable Read Only Memory
EGR – Exhaust Gas Recirculation
EI – Electronic Ignition
ESD – Electrostatic Discharge
ETR – Electronically Tuned Receiver
EVAP – Evaporation Emission
Exh – Exhaust
°F – Degrees Fahrenheit
Fed – Federal (All States Except Calif.)
FF – Front Drive Front Engine
FICD – Fast Idle Control Device
FL – Fusible Link
– Front Left
FLW – Fusible Link Wire
FP – Fuel Pump
FR – Front Right
FRT – Front
ft – Foot
FWD – Front Wheel Drive
4 × 4, 4WD – Four Wheel Drive
4 A/T – Four Speed Automatic Transmission
Gal – Gallon (3.785ℓ)
GEN – Generator
GND – Ground
Gov – Governor
g – Gram
Harn – Harness
HBB – Hydraulic Brake Booster
HC – Hydrocarbons
HD – Heavy Duty
Hg – Hydrargyrum (Mercury)
HiAlt – High Altitude
HO2S – Heated Oxygen Sensor
HU – Hydraulic Unit
HVAC – Heater-Vent-Air Conditioning
IAC – Idle Air Control
IAT – Intake Air Temperature
IC – Integrated Circuit
ID – Identification
– Inside Diameter
IGN – Ignition
Int – Intake
IP – Instrument Panel
IPC – Instrument Panel Cluster
ISC – Idle Speed Control

J/B – Junction Block
kg – Kilograms
km – Kilometers
km/h – Kilometer per Hour
kPa – KiloPascals
KS – Knock sensor
kV – Kilovolts (Thousands of Volts)
kW – Kilowatts
L – Liter
lb·ft – Foot Pounds
lb·in – Inch Pounds
LF – Left Front
LH – Left Hand
LR – Left Rear
LS – Left Side
LWB – Long Wheel Base
L-4 – In-line Four Cylinder Engine
MAF – Mass Air Flow
MAN – Manual
MAP – Manifold Absolute Pressure
Max – Maximum
MC – Mixture Control
MFI – Multiport Fuel Injection
MIL – Malfunction Indicator Lamp
Min – Minimum
mm – Millimeter
MPG – Miles per Gallon
MPH – Miles per Hour
M/T – Manual Transmission/Transaxle
MV – Millivolt
NA – Natural Aspirated
NC – Normally Closed
N·m – Newton Meter
NO – Normally Open
NOx – Nitrogen, Oxides of
OBD – On-Board Diagnostic
OD – Outside Diameter
O/D – Over Drive
OHC – Overhead Camshaft
OL – Open Loop
O2 – Oxygen
O2S – Oxygen Sensor
PAIR – Pulsed Secondary Air Injection System
P/B – Power Brakes
PCM – Powertrain Control Module
PCV – Positive Crankcase Ventilation
PRESS – Pressure
PROM – Programmable Read Only Memory
PNP – Park/Neutral Position
P/S – Power Steering
PSI – Pounds per Square Inch
PSP – Power Steering Pressure
Pt. – Pint = 1/8 gallon 0.473125ℓ
Pri – Primary
PWM – Pulse Width Modulate
Qt – Quart = 1/4 gallon 0.94625ℓ
QWS – Quick Warming-up System
REF – Reference
RF – Right Front
RFI – Radio Frequency Interference
RH – Right Hand
RL – Rear Left
RPM – Revolutions per Minute
RPS – Revolution per Second
RPM Sensor – Engine Speed Sensor
RPO – Regular Production Option
RR – Right Rear
RS – Right Side
RTV – Room Temperature Vulcanizing
RWAL – Rear Wheel Antilock Brake
RWD – Rear Wheel Drive
SAE – Society of Automotive Engineers
Sec – Secondary
SFI – Sequential Multiport Fuel Injection
SI – System International
SIR – Supplemental Inflatable Restraint System
SOHC – Single Overhead Camshaft
Sol – Solenoid
SPEC – Specification
Speedo – Speedometer
SRS – Supplemental Restraint System
ST – Start
– Scan Tool
Sw – Switch
SWB – Short Wheel Base
SYN – Synchronize
Tach – Tachometer
TB – Throttle Body
TBI – Throttle Body Fuel Injection
TCC – Torque Converter Clutch
TCM – Transmission Control Module
TDC – Top Dead Center
Term – Terminal
TEMP – Temperaure
TP – Throttle Position
TRANS – Transmission
TURBO – Tubocharger
TVRS – Television & Radio Suppression
TVV – Thermal Vacuum Valve
TWC – Three Way Catalytic Converter
3 A/T – Three Speed Automatic Transmission
2WD – Two Wheel Drive
4 × 2 – Two Wheel Drive
U-joint – Universal Joint
V – Volt (s)
VAC – Vacuum
VDC – Volts DC
VIN – Vehicle Identification Number
VRRRE – Vehicle Refrigerant Recovery and Recycling Equipment
V-ref – ECM Reference Voltage
VSS – Variable Swirl System

ABBREVIATIONS CHARTS (Continued)

VSS – Vehicle Speed Sensor	w/b – Wheel Base
VSV – Vacuum Switching Valve	W/L – Warning Light
V-6 – Six Cylinder “V” Engine	w/o – Without
W – Watt (s)	WOT – Wide Open Throttle
w/ – With	WSS – Wheel Speed Sensor

ESSENTIAL SERVICE TOOLS

Essential service tools that are shown in this service manual that have tool product numbers beginning with “J” are available for worldwide distribution from:
Kent-Moore
SPX Corporation
29784 Little Mack
ROSEVILLE,MI 48066-2298
1-800-328-6657
Mon.-Fri. 8:00 p.m. EST
Telex: 244040 KMTR UR
FAX-313-578-7375

SECTION 0B

MAINTENANCE AND LUBRICATION

NOTICE: When fasteners are removed, always reinstall them at the same location from which they were removed. If a fastener needs to be replaced, use the correct part number fastener for that application. If the correct part number fastener is not available, a fastener of equal size and strength (or stronger) may be used. Fasteners that are not reused, and those requiring thread locking compound will be called out. The correct torque value must be used when installing fasteners that require it. If the above conditions are not followed, parts or system damage could result.

CONTENTS

SUBJECT **PAGE**

Lubrication Detail Information 0B- 1
Engine Oil and Viscosity Recommendations 0B- 1
Maintenance Schedule 0B- 3
Explanation of Complete Vehicle Maintenance Schedule 0B- 6
Normal Vehicle Use 0B- 6
Owner Safety and Routine Maintenance 0B- 9
Noise Emission Control 0B-10
Noise Control System 0B-10
Tampering with Noise Control System Prohibited 0B-10
Recommended Fluids and Lubricants 0B-11
Lubrication Chart 0B-12
Specifications 0B-13
Capacities 0B-13
Mintenace Item 0B-13
Fastener Torques 0B-13

LUBRICATION DETAIL INFORMATION

ENGINE OIL AND VISCOSITY RECOMMENDATIONS

The oil industry markets various types of engine oil under certain service designation and specification numbers.

The selection of a reliable supplier and close attention to the oil and filter element change recommendations can provide satisfactory lubrication and longer life for the engine.

Using the proper engine oil and following the recommended oil change intervals is your best assurance of continued reliability and performance from your vehicle's engine.

Engine oil containers are labeled with various API(American Petroleum Institute) designations of quality. Be sure the oil you use has the API designation "CD", either alone or shown with other designations such as "SF/CD". Oils which are not labeled "CD" should not be used. For example, **do not use oils labeled only SA, SB, SC, SD, SE, CA, CB, CC, or oils with a combination of any of these letters—such as SE/CC, as this may cause engine damage.**
DO NOT USE SYNTHETIC OILS.

Diesel Engine Oil Viscosities

Viscosity numbers make up a classification of lubricants in terms of fluidity or viscosity, but with no reference to any other characteristics or properties.

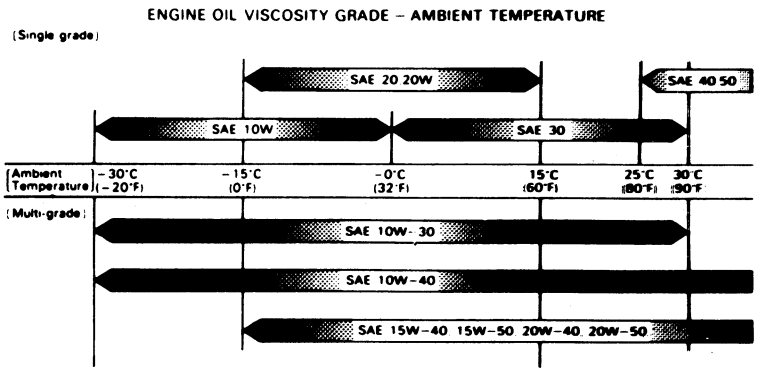

DO NOT USE SYNTHETIC OILS

Figure 1. Oil Viscosity Chart

Where cold weather starting is a problem,oil and coolant system heaters,as well as proper fuel selection, will be helpful. However, if these are not available, lighter viscosity oils may be used only to facilitate starting. Do not use starting aids in the air intake system. Such “aids” can cause immediate engine damage.

The engine oil viscosity specification depends on the temperature of the engine oil at the time of starting the engine. Viscosity recommendations for various starting temperatures are shown in the “Viscosity Chart”.

When choosing an oil, consider the range of temperature your vehicle will operate in before the next oil change. Then, select the recommended oil viscosity from the chart (figure 1).

Diesel Break-In Oils And Additives

The use of proprietary blends of supplementary additives or concentrates such as engine oil supplements, break-in oils, tune-up compounds, friction reducing compounds, etc., is not recommended in lubricating oils of the diesel engine in these vehicles.

Change Intervals

The oil and oil filter change intervals for the engine are based on the use of CD-quality oil and high quality filters. **Using oil other than CD-quality, or not changing the oil and filter often enough could reduce engine life.** Damage to engines due to improper maintenance or use of incorrect oil quality and/or viscosity is not covered by the warranty.

MAINTENANCE SCHEDULE

MAINTENANCE SCHEDULE FOR NPR, NQR/W-Series

No.	Item / Interval (kilometers)	10 400	20 800	31 200	41 600	52 000	62 400	72 800	83 200	93 600	104 000	114 400	124 800	135 200	145 600	156 000	166 400	Service Intervals Months or Miles (kilometers) whichever comes first
	Interval (Miles)	6,500	13,000	19,500	26,000	32,500	39,000	45,500	52,000	58,500	65,000	71,500	78,000	84,500	91,000	97,500	104,000	
1	Engine Noise Check	I	I	I	I	I	I	I	I	I	I	I	I	I	I	I	I	*
2	Idle Speed	I							I								I	
3	Valve Lash								A								A	
4	Injection Timing								I								I	
5	Injector								C								I	
6	Engine Oil & Oil Filter	R	R	R	R	R	R	R	R	R	R	R	R	R	R	R	R	or every 12 months
7	Fuel Filter (Single Cab Model)		R		R		R		R		R		R		R		R	or every 12 months
8	Main Fuel Filter (Crew Cab Model)		R		R		R		R		R		R		R		R	or every 12 months
	Fuel Filter / Water Separator (Crew Cab Model)	Every 12,000 miles (19,000 kilometers)																
9	Air Cleaner Filter				R				R				R				R	or every 12 months
10	Air Intake system (Duct, Hose & Clamps)				I				I				I				I	
11	Drive Belt								I								R	or every 12 months
12	Engine Bolt Torque								I								I	
13	Rotate Tires	R	R	R	R	R	R	R	R	R	R	R	R	R	R	R	R	

(I): Inspect, replace or adjust if necessary (A): Adjust (R): Replace (T): Tighten to specified torque (L): Lubricate
* Initial Torque check at 650 miles is required. (C): Clean

MAINTENANCE SCHEDULE (CONT.)

MAINTENANCE SCHEDULE FOR NPR, NQR/W-Series (CONT.)

No.	Item / Interval (kilometers)	10 400	20 800	31 200	41 600	52 000	62 400	72 800	83 200	93 600	104 000	114 400	124 800	135 200	145 600	156 000	166 400	Service Intervals Months or Miles (kilometers) whichever comes first
	Interval (Miles)	6,500	13,000	19,500	26,000	32,500	39,000	45,500	52,000	58,500	65,000	71,500	78,000	84,500	91,000	97,500	104,000	
14	Engine Cooling System	I	I	I	I	I	I	I	I	I	I	I	I	I	I	I	I	or every 12 months
15	Engine Coolant				R				R				R				R	or every 24 months
16	Exhaust System	I	I	I	I	I	I	I	I	I	I	I	I	I	I	I	I	
17	Fuel Line System		I		I		I		I		I		I		I		I	or every 12 months
18	Brake Lining and Pad for Wear	I	I	I	I	I	I	I	I	I	I	I	I	I	I	I	I	
19	Brake Drum and Rotor for Wear and Damage				I				I				I				I	or every 12 months
20	Brake Fluid	I	I	I	I	R	I	I	I	I	R	I	I	I	I	R	I	or every 12 months
21	Hydraulic Brake Booster Fluid					R					R					R		or every 24 months
22	Brake Line LSV and Hoses				I				I				I				I	or every 12 months
23	Clutch Pedal Free Travel		I		I		I		I		I		I		I		I	or every 12 months
24	Manual Transmission Oil	I	I	R	I	I	R	I	I	R	I	I	R	I	I	R	I	or every 12 months
25	Automatic Transmission Fluid	I	I	I	R	I	I	I	R	I	I	I	R	I	I	I	R	or every 12 months

(I): Inspect, replace or adjust if necessary (A): Adjust (R): Replace (T): Tighten to specified torque (L): Lubricate

MAINTENANCE SCHEDULE (CONT.)

MAINTENANCE SCHEDULE FOR NPR, NQR/W-Series (CONT.)

No.	Item / Interval (kilometers)	10 400	20 800	31 200	41 600	52 000	62 400	72 800	83 200	93 600	104 000	114 400	124 800	135 200	145 600	156 000	166 400	Service Intervals Months or Miles (kilometers) whichever comes first
	Interval (Miles)	6,500	13,000	19,500	26,000	32,500	39,000	45,500	52,000	58,500	65,000	71,500	78,000	84,500	91,000	97,500	104,000	
26	Automatic Transmission Filter				R				R				R				R	or every 24 months
27	Differential Gear Oil	I	I	I	R	I	I	I	R	I	I	I	R	I	I	I	R	or every 24 months
28	Power Steering Fluid					R					R					R		or every 12 months
29	Steering Gear Box Torque				T				T				T				T	or every 12 months
30	Propeller Shaft Flange Torque	I	T		T		T		T		T		T		T		T	or every 12 months
31	Leaf Spring U-Bolt Torque*	T		T		T		T		T		T		T		T		
32	Wheel Nut Torque*	T	T	T	T	T	T	T	T	T	T	T	T	T	T	T	T	
33	King Pin	L	L	L	L	L	L	L	L	L	L	L	L	L	L	L	L	or every 12 months
34	Propeller shaft		L		L		L		L		L		L		L		L	or every 12 months
35	Wheel Bearing Grease					R					R					R		or every 12 months
36	Rear Spring Pins	L	L	L	L	L	L	L	L	L	L	L	L	L	L	L	L	
37	Air Conditioner Blower Filter	Cleaned once a month																

(I): Inspect, replace or adjust if necessary (A): Adjust (R): Replace (T): Tighten to specified torque (L): Lubricate

* Initial Torque check at 650 miles is required.

EXPLANATION OF COMPLETE VEHICLE MAINTENANCE SCHEDULE

The following is a brief explanation of the service listed in the preceding Complete Vehicle Maintenance Schedule.

NORMAL VEHICLE USE

The vehicle maintenance instructions in the Maintenance Schedule are based on the assumption that the vehicle will be used as designed:

- to carry passengers and cargo within the limitations specified on the tire placard.
- to be driven on reasonable road surfaces within legal operating limits.
- to be driven on a daily basis, as a general rule, for at least several miles/kilometers.
- to be driven on proper fuel (See Owner's Manual; Diesel Fuel Requirement.).

Unusual operating conditions will require more frequent vehicle maintenance, as specified in the following section.

1. **ENGINE NOISE—**These components have an effect on the control of noise emissions.
2. **IDLE SPEED —** Check and adjust the engine idle speed on the first 6,500 miles (10,400 km) and every 52,000 miles (83,200 km). Adjustments must be made with test equipment known to be accurate.

Engine (Every 6,500 miles or 10,400 km)	Inspection sound absorption materials for tears, broken out sections or attachment. Repair or replace as necessary.
Cooling system (Every 13,000 miles or 20,800 km)	Inspection fan, shroud and radiator for attachment, tears or cleanliness. Repair or replace as necessary.
Air intake system (Every 26,000 miles or 41,600 km)	Inspect all ducts, hoses and intake silencers for leaks or chafing.Repair or replace as necessary.
Exhaust system (Every 6,500 miles or 10,400 km)	Inspect silencer, pipes, gaskets, clamps and mounting for exhaust gas leaks or looseness. Repair or replace as necessary.
Cab (Every 6,500 miles or 10,400 km)	Inspect sound absorption materials for tears, broken out sections or attachment. Repair or replace as necessary.

3. **VALVE LASH —** Incorrect valve clearance will result in increased engine noise and lower engine output, thereby adversely affecting engine performance. Retorque rocker shaft bracket nuts before checking and adjusting valve clearance. Check and adjust valve clearance at every 52,000 miles (83,200 km).
4. **INJECTION TIMING —** Incorrect injection timing could result in increased exhaust emission or smoke emission, or lower engine output.
   Check and adjust injection timing every 52,000 miles (83,200 km).
5. **INJECTOR —** Check spray condition at every 52,000 miles (83,200 km).
6. **ENGINE OIL AND OIL FILTER —** Change at interval noted below depending upon driving conditions.
   - NORMAL SERVICE — Change every 6,500 miles (10,400 km) or 12 months whichever occurs first.
   - SEVERE SERVICE — Change every 3,600 miles (5,760 km) or 3 months if the vehicle is often driven under one or more of these conditions (a) driving in dusty areas, (b) frequent idling or idling for long periods, (c) driving four miles (6 km) or less in freezing weather, or other short trips in cold weather, where engine dose not thoroughly warm up. Change oil and filter soon after driving in a dust storm.
7. **FUEL FILTER (SINGLE CAB MODEL) —** Replace filter at every 13,000 miles (20,800 km) or 12 months whichever occurs first, or more frequently if clogged. Drain water from the water separator every 6,500 miles (10,400 km).
8. **FUEL FILTER / WATER SEPARATOR (CREW CAB MODEL) —** Replace main filter near the engine at every 13,000 miles (20,800 km) or 12 months whichever occurs first, or more

frequently if clogged. Replace filter beneath rear left seat at every 12,000 miles (19,000 km) or 12 months whichever occurs first, or more frequently if clogged. Drain water from the water separator as same frequency as filter under rear left seat.

9. **AIR CLEANER FILTER —** Replace the engine air cleaner filter under normal operations every 26,000 miles (41,600 km). Operation of vehicle in dusty areas will necessitate more frequent filter replacement.
10. **AIR INTAKE SYSTEM —** Check if air cleaner hoses and ducts are connected and correctly installed every 26,000 miles (41,600 km).
11. **DRIVE BELT —** Check belt driving the fan, generator at every 52,000 miles (83,200 km). Look for cracks, fraying, wear, and proper tension.
    Replace at every 104,000 miles (166,400 km).
12. **ENGINE BOLT TORQUE —** Loosened bolts result in lower engine output. Check and adjust manifold mounting, and injection nozzle to correct torque every 52,000 miles (83,200 km).
    Specified tightening torque

INTAKE/EXHAUST, MANIFOLDS	18/34 N·m (13/25 lb·ft)
INJECTOR	19 N·m (14 lb·ft)

13. **ROTATE TIRES —** To equalize wear, rotate tires and adjust tire pressures at every 6,500 miles (10,400 km).

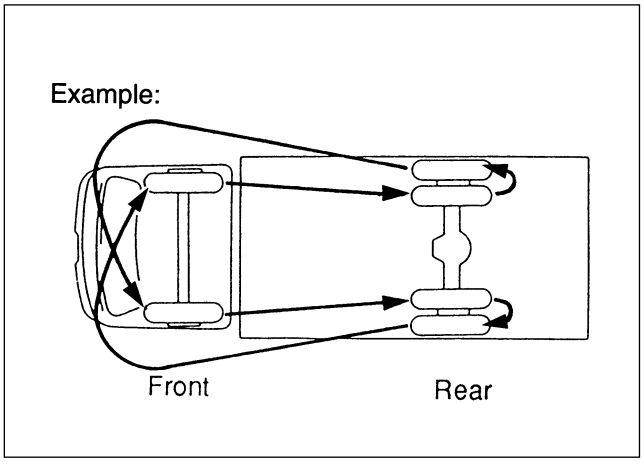

Figure 2. Rotate Tires

14. **ENGINE COOLING SYSTEM —** At 12 months or 6,500 miles (10,400 km) intervals, rinse radiator cap and filler neck with clean water, pressure test system and radiator cap for proper pressure holding capacity, tighten hose clamps and inspect condition of all cooling and heater hoses. Replace hoses if cracked, swollen or otherwise deteriorated.
    Also each 12 months or 6,500 miles (10,400 km), clean exterior of radiator core and if necessary, drain, flush and refill the engine cooling system with a new engine coolant solution as described in the Owner's Manual.
15. **ENGINE COOLING —** Every 24 months or 26,000 miles (41,600 km), drain the engine coolant by opening the drain cock at the bottom of the radiator core, flush and refill the engine cooling system with a new engine coolant solution.
16. **EXHAUST SYSTEM —** Check the complete exhaust system at every 6,500 miles (10,400 km). Check body areas near the exhaust system.
    Look for broken, damaged, missing, or out-of position parts. Also inspect for open seams, holes, loose connections, or other conditions which could cause heat build-up in the floor pan, which could let exhaust fumes seep into the passenger compartment. Dust or water in the cabin may indicate a leak in the area. Needed repairs should be made at once.
17. **FUEL LINE SYSTEM —** Inspect the fuel tank, cap and lines for damage at every 13,000 miles (20,800 km). Inspect fuel cap for correct sealing ability and indications of physical damage. Replace any damaged or malfunctioning parts.
18. **BRAKE LINING AND PAD FOR WEAR —** Check drum brake lining and disc brake pad for wear or cracks at every 6,500 miles (10,400 km). Check brakes (including parking brake) more often if conditions and habits result in frequent braking.
    Front disc brake have built-in wear indicators which are designed to make a high pitched squeal or cricket-like warning sound when the brake pads are worn to the point where new pads are needed.
    When the vehicle is in motion, the sound may be constant or it may come and go. Pressing the brake pedal firmly may cause the sound to stop.
    Have the brake linings or the brake pads replaced, if these conditions exist.
    Failure to do so can result in expensive damage to the brake system or a serious accident.
19. **BRAKE DRUM AND ROTOR FOR WEAR AND DAMAGE —** Check brake drums (rear and parking) and rotor (front) for wear or damage at every 26,000 mile (41,600 km) or 12 months whichever occurs first.
20. **BRAKE FLUID —** Check the brake fluid level in the brake fluid reservoir every 6,500 miles (10,400 km).
21. **HYDRAULIC BRAKE BOOSTER FLUID —** Replace power steering fluid every 24 months or 32,500 miles (52,000 km), whichever occurs first.
22. **BRAKE LINE, LSV AND HOSES —** Check

lines and hoses for proper hook-up, binding, leaks, cracks, chafing, etc. every 26,000 miles (41,600 km). Any questionable parts should be replaced or repaired at once. When rubbing or wear is noted on lines or hoses, the cause must be corrected at once.

23. **CLUTCH PEDAL CONTROL —** Check lines and hoses for proper hook-up, binding, leaks, cracks, chafing, etc. at every 13,000 miles (20,800 km). Any questionable parts should be replaced or repaired.
24. **MANUAL TRANSMISSION OIL —** Replace lubricant at every 19,500 miles (31,200 km). Check lubricant level at every 6,500 miles (10,400 km), and add lubricant to level of filler hole if necessary.
25. **AUTOMATIC TRANSMISSION FLUID —** Check the automatic transmission fluid level at each engine oil change and replace fluid and external filter every 26,000 miles (41,600 km).

How to Check: This operation could be difficult and you may choose to have this done at your Isuzu Dealership Service Department. If you choose to do it yourself, then be sure to follow all the instructions below or you could get a false reading on the dipstick.

CAUTION: Too much or too little transmission oil could damage your transmission. Too much could cause your transmission to overheat and fluid to spill out from the breather hose. Be sure to get an accurate reading if you check your transmission fluid.

Park vehicle on level ground and set parking brake. With engine idling and the regular brakes applied, move the gear selector through all gear positions and ending at “P”.

NOTICE: Wait at least 30 minutes before checking the transmission fluid if you have been driving at high speed for a long period of time, in city/heavy traffic and or while pulling a trailer.

Single cab: Remove the dipstick located at the rear left of the engine.

Crew cab: Remove the dipstick located beneath the rear-of-engine inspection panel.

Check fluid in Hot condition. The fluid should be checked while at normal operating temperature (Hot) between 158°F and 176°F (70°C to 80°C). Pull, wipe and clean the dipstick and reinsert all the way, wait at least 3 seconds then pull it back out again for reading. If the level is not in the “H” range then adjust it accordingly.

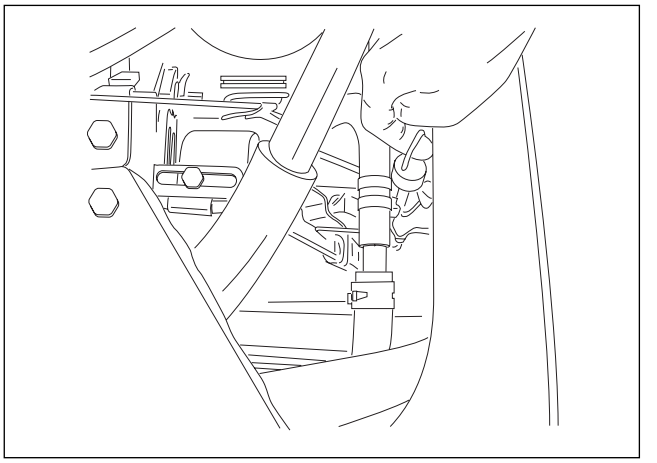

Figure 3(a). Dipstick of the ATF Level (Crew Cab Model)

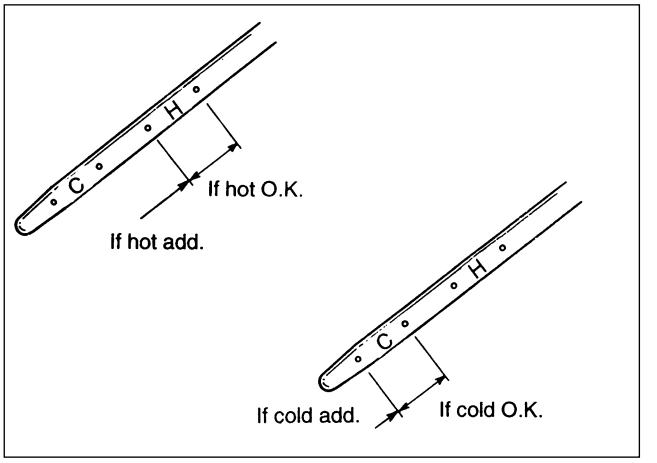

Figure 3(b). ATF Level Check

Check fluid in Cold condition. If outside temperature is near 70°F (21°C) and the vehicle has been sitting overnight then you can use the cold range. If the level is not in the “C” marks then you must perform a Hot condition check before making any level adjustment.

NOTICE: The cold range is used for reference only.

26. **AUTOMATIC TRANSMISSION FLUID FILTER —** Replace filter at every 26,000miles (41,600Km)
27. **DIFFERENTIAL GEAR OIL —** Replace lubricant at every 26,000 miles (41,600 km). Check lubricant level at every 6,500 miles (10,400 km) or every 12 months, and add lubricant to within 0 to 10 mm (0 to 0.4 in) of bottom edge of the filler hole if necessary.

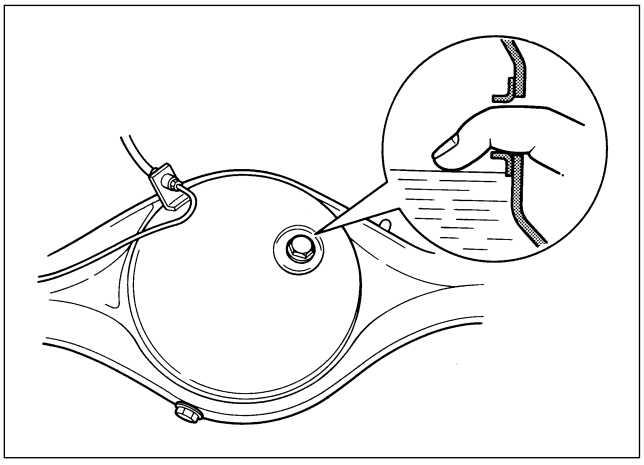

Figure 4. Differential Gear Oil Level

28. **POWER STEERING FLUID —** Replace power steering fluid every 24 months or 32,500 miles (52,000 km), whichever occurs first.
29. **STEERING GEAR BOX TORQUE —** Retighten the fixing bolts of the steering gear box to the specified torque at every 26,000 miles (41,600 km).
    Specified tightening torque
    STEERING GEAR BOX 102 N·m (75 lb·ft)
30. **PROPELLER SHAFT FLANGE TORQUE —** Check the fixing bolts of propeller shaft flange for looseness or damage at first 6,500 miles (10,400 km). Retighten the fixing bolts to the specified torque at every 13,000 miles (20,800 km).
    Specified tightening torque
    PROPELLER SHAFT FLANGE 102 N·m (75 lb·ft)
31. **LEAF SPRING U-BOLT TORQUE —** Tighten the U-Bolt nuts to the specified torque at 650 miles (1,050 km), 6,500 miles (10,400 km) and thereafter each 13,000 miles (20,800 km).
    Specified tightening torque
    LEAF SPRING U-BOLT Front 127 N·m (94 lb·ft)
    Rear 177 N·m (130 lb·ft)
32. **WHEEL NUT TORQUE —** Check tire for excessive or abnormal wear, or damage. Also check tire inflation pressures and adjust. Be sure wheels are not bent or cracked and that wheel nuts have been tightened to the specified torque at 650 miles (1,050 km) and then every 6,500 mile (10,400 km). Refer to Section 3 for the specified torque.
    Specified tightening torque
    Front and Rear wheel 440 N·m (325 lb·ft)
33. **KING PIN —** Lubricate the grease fitting on the king pins at 12 months or 6,500 miles (10,400 km) whichever occurs first.
34. **PROPELLER SHAFT —** Lubricate the grease fitting on each universal joint and spline coupling at 12 months or 13,000 miles (20,800 km) whichever occurs first.
35. **WHEEL BEARING GREASE —** Clean and repack front wheel bearings at every brake relining or 32,500 miles (52,000 km) whichever comes first.
36. **REAR SPRING PINS —** Lubricate the grease fitting on the rear spring pins every 6,500 miles (10,400 km).
37. The air conditioner blower filter should be removed and cleaned once a month.
    Remove the 4 screws securing the glove compartment and remove the filter.
    Use a vacuum cleaner to remove all dust and dirt adhering to the filter surface.
    - Do not use a stiff brush to clean the air conditioner blower filter. Damage to the filter will result.

OWNER SAFETY AND ROUTINE MAINTENANCE

Listed below are vehicle checks which should be made periodically by either the owner or a qualified technician to ensure proper performance and safety of the vehicle.

For your safety and that of others, any of the safety-related components that may have been damaged in an accident should be checked and necessary repairs performed before operating the vehicle.

At the minimum, these routine checks should be made every 6 months or 6,000 miles (10,000 km), whichever comes first. Whenever repairs are necessary, have them completed before operating the vehicle.

A **PARKING BRAKE —** Park on a fairly steep hill and hold the vehicle with the parking brake only. This checks holding ability.

Before checking item (B), be sure to have enough room around the vehicle. Then firmly apply both the parking brake and the regular brake.

Do not use the accelerator pedal. If the engine starts, be ready to turn off the ignition/engine control switch at once. Take these precautions because the vehicle could move without warning and possibly cause personal injury or property damage.

B **STARTER SAFETY SWITCH (AUTOMATIC TRANSMISSION) —** Check by trying to start the engine in each gear. The starter should

crank only with selector in position “P” or “N.”

C **TRANSMISSION SHIFT INDICATOR (AUTOMATIC TRANSMISSION) —** Check that the indicator points to the gear chosen.

D **STEERING —** Be alert for any changes in steering action. An inspection or service is needed when the steering wheel is harder to turn or has too much free play, or when there are strange sounds when turning or parking.

E **WHEEL ALIGNMENT, BALANCE, AND TIRES —** Check tires for abnormal wear or damage. Also, check for damaged wheels. A pull to the right or left on a straight and level road may show the need for a wheel alignment. A vibration of the steering wheel or seat at normal highway speeds may mean a wheel balancing is needed. Check tire pressure when the tires are “cold”, at least monthly, and whenever the vehicle is serviced. (Include the spare, if equipped.)

Inspect the tire for any cuts or punctures if frequent tire inflation is needed.

F **BRAKES —** Be alert for the low vacuum warning light or for the tone alarm, or changes in braking action, such as repeated pulling to one side, unusual sounds when braking or increased brake pedal travel. Check regularly that the brake fluid reservoir is properly filled and check for fluid leaks. Any of these conditions could indicate the need for brake system inspection and/or service.

G **EXHAUST SYSTEM —** Be alert for any changes in the sound of the exhaust system or exhaust oder. These are signs the system may be leaking. Have it checked and/or repaired at once.

H **WINDSHIELD WIPERS AND WASHERS —** Check operation and condition of the wiper blades. Check the flow and aim of the washer spray.

I **DEFROSTER —** Turn the control lever to “Defrost” and the fan lever to “4”. Then check the airflow from the ducts at the inside base of the windshield. The engine must be running at this time.

J **REARVIEW MIRRORS AND SUN VISORS —** Check that friction joints hold mirrors and sun visors in place.

K **HORN —** Sound the horn periodically to be sure it works.

L **LAP-SHOULDER BELTS —** Check seat belt system (including webbing, buckles, latch plates, and anchors) for proper operation, and for damage.

M **SEAT ADJUSTERS —** When adjusting a manual seat, be sure seat adjusters latch by pushing the seat forward and backward. Do not attempt to adjust the seat when the vehicle is in motion.

N **LAMPS —** Check panel lighting, warning lamps, indicator lamps, and interior lamps. On the outside, check: license plate lamps, side marker lamps, reflectors on outside mirrors, headlamps, parking lamps, identification and clearance lamps, taillights, brake lamps, turn signals, backup lamps, and hazard warning flashers. Have headlamp aim checked at once if beams seem improperly aimed.

O **GLASS, MIRRORS, LIGHTS AND/OR REFLECTORS CONDITION —** Look for broken, scratched, dirty or damaged glass, mirrors, lamps or reflectors that could reduce the view or visibility, or cause injury. Replace, clean or repair promptly.

P **DOOR LATCHES —** Check that doors close, latch, and lock tightly. Check for broken, damaged or missing parts that might prevent tight latching.

Q **TILT CAB —** Be sure the tilt lever is raised and the lock pin is inserted in the lever bracket.

R **FLUID LEAKS —** Check for fuel, water, oil, or other fluid leaks by looking at the surface beneath the vehicle after it has been parked for a while. If you notice diesel fumes or fluid at any time, have the cause found and corrected at once.

S **SPARE AND JACK —** Check that spare tire assembly and jack equipment (if equipped) are securely stowed at all times.

T **UNDERBODY —** Corrosive materials used for ice removal, snow removal, and dust control can collect on the underbody. If these materials are not removed, accelerated corrosion (rust) can occur on underbody parts such as fuel lines, frame, floor pan, and exhaust system. At least every spring, flush these materials from the underbody with plain water. Thoroughly clean the underbody where mud and debris can accumulate. Sediment packed in closed areas of the frame should be loosened before being flushed.

NOISE EMISSION CONTROL

NOISE CONTROL SYSTEM

The following information relates to compliance with Federal noise emission standards for vehicles with a Gross Vehicle Weight Rating (GVWR) of more than 10,000 lb (4,536 kg). The Maintenance Schedule provides information on maintaining the noise control system to minimize wear of the noise

emission control system during the life of the vehicle. The noise control system warranty is given in the vehicle Warranty Folder.

These standards apply only to vehicles sold in the United States.

TAMPERING WITH NOISE CONTROL SYSTEM PROHIBITED

Federal law prohibits the following acts or the causing thereof:

1. The removal or rendering inoperative by any person other than for purposes of maintenance, repair or replacement of any device or element of design incorporated in any new vehicle for the purpose of noise control, prior to its sale or delivery to the ultimate purchaser or while it is in use.
2. The use of the vehicle after such device or element of design has been removed or rendered inoperative by any person.
   Among those acts presumed to constitute tampering are acts listed below.

Insulation
- Removal of noise shields or underhood insulation.

Engine
- Removal of engine speed governor, if so equipped,or rendering inoperative so as to allow engine speed to exceed manufacturer specifications.

Fan and Drive
- Removal of fan clutch, if so equipped, or rendering clutch inoperative.
- Removal of fan shroud, if so equipped.

Air Intake
- Removal of air cleaner silencer.
- Reversing air cleaner cover.

Exhaust
- Removal of muffler and/or resonator.
- Removal of exhaust pipes and exhaust pipe clamps.

RECOMMENDED FLUIDS AND LUBRICANTS

USAGE	FLUIDS/LUBRICANTS
Engine Oil	SG/CE, SF/CD, SE/CD, CD Engine Oil
Manual Transmission Oil	SAE 5W-30 SF below 32 °C (90 °F) or SAE 40 engine oil above 32 °C (90 °F)
Automatic Transmission Fluid Power Steering Fluid Hydro Boost Brake Fluid	ATF Dexron®-III
Rear Axle	Multi-purpose gear oil SAE90 GL-5
Chassis Lubricant	Multi-purpose grease with high temperature, good quality, lithium soap, extreme pressure grease
Battery Terminals	Petroleum Jelly
Clutch and Brake Fluid	Brake fluid DOT 3 or equivalent
Cab-Door Hinges and Latches Lubricant	A semi-fluid grease having extreme pressure properties and containing zinc oxide (Lubricant or equivalent)
Engine Coolant	Mixture of water and good quality ethylene glycol base type anti-freeze conforming to GM Spec., 6277M or Isuzu Factory Fill Long Life Coolant Part No.2-90531-809-0
Windshield Washer Solvent	Washer Solvent
Propeller Shaft, Universal Joints and Sliding Sleeve Lubricant	NLGI #1 or #2 multi-purpose type grease
Propeller Shaft Center Bearing, Wheel Hub Bearing Lubricant	NLGI #2 or #3

LUBRICATION CHART

GREASE POINTS	REMARKS
2. King Pins	— 4 fittings
3. Propeller Shaft Universal Joints, Sliding Sleeve and Center Bearing	— 5 fittings

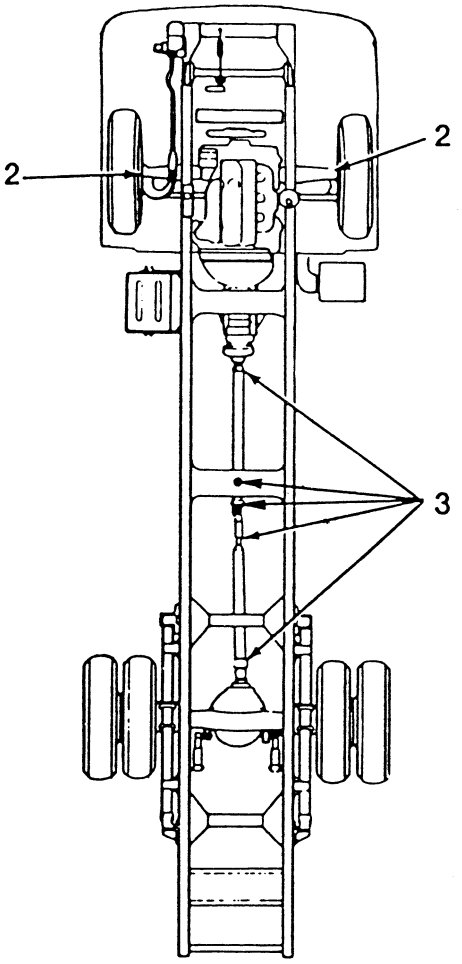

GREASE POINTS CHART

Figure 5. Grease Points Chart

SPECIFICATIONS

CAPACITIES

Engine Crankcase

This capacity is for a normal refill and it is an approximate amount. Keep the level as close as possible to the full mark without overfilling. Do not operate with the level below the low mark.

4HE1-TC.....13ℓ (3.4 gal)

This figure includes the full-flow oil filter, which should be changed at each oil change.

Engine Cooling System

Capacity.....14ℓ (3.7 gal)
Thermostat .....82, 85 °C (180, 185 °F)
Radiator Pressure Cap .....103 kPa (15.46 psi)

Fuel Tank

The fuel tank capacity is stated on a metal plate attached to the fuel tank body. Only fill the tank to 95 percent of its capacity. This will allow for fuel expansion.

Transmission

Manual Transmission Oil.....NPR; 3.2ℓ (6.8 pints)
NQR; 4.4ℓ (9.3 pints)
Automatic Transmission Fluid.....13.5ℓ (28.5 pints)

Rear Axle

Capacity.....9.7ℓ (20.5 pints)

MAINTENANCE ITEM

Air Cleaner (DONALDSON EGB10-8107) Filter.....ISUZU Part No. 8-94430-250-0 GM Part No. 94430250
Engine Oil Filter Cartridge.....ISUZU Part No. 8-97148-270-0 GM Part No. 97148270
Fuel Filter Cartridge .....ISUZU Part No. 1-13240-074-1 or -079-1 GM Part No. 94414796

FASTENER TORQUES

Intake Manifold Nut and Bolts ..... 18 N·m (13 ft·lbs)
Exhaust Manifold Nut and Bolts ..... 34 N·m (25 ft·lbs)
Injector .....1st 10 N·m (7 ft·lbs), 2nd 19 N·m (14 ft·lbs)
Steering Gear Box Fixing Nuts and Bolts .....102 N·m (75 ft·lbs)
Propeller Shaft Flange Nuts .....102 N·m (75 ft·lbs)
Leaf Spring U-Bolt Nuts .....Front 127 N·m (94 ft·lbs)
Rear 177 N·m (130 ft·lbs)
Wheel Nuts .....440 N·m (325 ft·lbs)

MEMO

SECTION 1

HEATING AND AIR CONDITIONING

CONTENTS

SUBJECT **PAGE**

Heating and Ventilation ..... **See 1999 – 2001 Service Manual**
Air Conditioning ..... **See 1999 – 2001 Service Manual**

MEMO

SECTION 2

FRAME AND CAB

CONTENTS

SUBJECT **PAGE**

Frame and Body Mounts ..... **See 1999 – 2001 Service Manual**
Cab Maintenance ..... **See 1999 – 2001 Service Manual**
Sheet Metal ..... **See 1999 – 2001 Service Manual**

MEMO

SECTION 3

STEERING, SUSPENSION, WHEELS AND TIRES

CONTENTS

SUBJECT **PAGE**

Front End Alignment ..... **See 1999 – 2001 Service Manual**
Steering Linkage ..... **See 1999 – 2001 Service Manual**
Power Steering ..... **See 2002 Service Manual**
Steering Column ..... **See 1999 – 2001 Service Manual**
Front Axle and Suspension ..... **See 1999 – 2001 Service Manual**
Rear Suspension ..... **See 1999 – 2001 Service Manual**
Wheels and Tires ..... **See 1999 – 2001 Service Manual**

MEMO

SECTION 4

REAR AXLE AND PROPELLER SHAFT

CONTENTS

SUBJECT **PAGE**

Rear Axle .....See 1999 – 2001 Service Manual
Propeller Shaft .....See 1999 – 2001 Service Manual

MEMO

SECTION 5

BRAKES

CONTENTS

SUBJECT **PAGE**

Hydraulic Brakes.....See 2002 Service Manual
Vacuum Booster Brake System.....See 1999 – 2001 Service Manual
Hydraulic Booster Brake System .....See 2002 Service Manual
Hydraulic Foundation Brakes .....See 1999 – 2001 Service Manual
Anti-lock Brake System (ABS).....5A4
Parking Brakes.....See 1999 – 2001 Service Manual

MEMO

SECTION5A4

ANTI-LOCK BRAKE SYSTEM (ABS)

CONTENTS

Service Precaution..... 5A4–2
Service Precaution..... 5A4–2
General Description..... 5A4–3
System Components 5A4–4
ABS Warning Light 5A4–6
Wheel Speed Sensor..... 5A4–6
Normal and Anti-lock Braking 5A4–7
Brake Pedal Travel 5A4–7
Acronyms and Abbreviations 5A4–7
General Diagnosis 5A4–8
General Information 5A4–8
ABS Service Precautions 5A4–8
Computer System Service Precautions 5A4–8
General Service Precautions 5A4–8
Note on Intermittents 5A4–8
Test Driving ABS Complaint Vehicles 5A4–9
“ABS” Warning Light..... 5A4–9
Normal Operation 5A4–9
Basic Diagnostic Flow Chart..... 5A4–10
Basic Inspection Procedure 5A4–10
Tech 2 Scan Tool 5A4–11
Tech 2 Features 5A4–12
Getting Started 5A4–12
Operating Procedure (For Example) 5A4–13
DTC Modes 5A4–14
DTC Information Mode 5A4–14
Clear & Reset Vehicle Type Mode 5A4–14
Plotting Snapshot Graph 5A4–14
Plotting Graph Flow Chart (Plotting graph after obtaining vehicle information)..... 5A4–15
Flow Chart for Snapshot Replay (Plotting Graph) 5A4–16
Tech 2 Data Display 5A4–17
Actuator Test 5A4–17
EHCU Connector pin Assignment 5A4–23
EHCU Connector Pin assignment 5A4–24
EHCU Connector Pin-out Checks 5A4–25
Circuit Diagram..... 5A4–26
Connector List 5A4–27
Part Location 5A4–28
Symptom Diagnosis..... 5A4–28
Chart A–1 ABS Works Frequently But Vehicle Does Not Decelerate 5A4–29
Chart TA-1 ABS Works Frequently But Vehicle Does Not Decelerate (Use TECH 2) 5A4–29
Chart A-2 Uneven Braking Occurs While ABS Works 5A4–30
Chart TA-2 Uneven Braking Occurs While ABS Works (Use TECH2)..... 5A4–30
Chart A-3, TA-3 The Wheels Are Locked ... 5A4–30
Chart A-4 Brake Pedal Feel Is Abnormal.... 5A4–31
Chart A-5,TA-5 Braking Sound (From Hydraulic Unit) Is Heard While Not Braking 5A4–32
Diagnostic Trouble Codes 5A4–33
Diagnosis By “ABS” Warning Light Illumination Pattern 5A4–34
Diagnostic Trouble Codes (DTCs)..... 5A4–35
Chart B-1-1 With the key in the ON position (Before starting the engine). Warning light(W/L) is not activated..... 5A4–37
Chart B-1-2 With the key in the ON position (Before starting the engine). Warning light(W/L) is blinking. 5A4–38
Chart B-2 (DTC 14 / 71) CPU Abnormality. 5A4–39
Chart B-3 (DTC 15 / 77) Power Voltage Abnormality..... 5A4–40
Chart B-4 (DTC 25 / 99) Exhaust Brake Cut Relay Abnormality..... 5A4–41
Chart B-5 (DTC 33 / 67) Motor Relay Abnormality 5A4–43
Chart B-6 (DTC 34 / 68) Abnormal Motor Rotation 5A4–43
Chart B-7 (DTC 41 / 65) Solenoid Valve Relay Abnormality..... 5A4–44
Chart B-8 (DTC 43 / 41) Abnormal Solenoid Valve Power Line..... 5A4–44
Chart B-9 (DTC 45 / 42) Open/Shorted Solenoid Valve Circuit 5A4–45
Chart B-10 (DTC 51 / 25) Open/Shorted FL Speed Sensor Circuit..... 5A4–46
Chart B-11 (DTC 52 / 21) Open/Shorted FR Speed Sensor Circuit..... 5A4–47
Chart B-12 (DTC 53 / 35) Open/Shorted RL Speed Sensor Circuit..... 5A4–48
Chart B-13 (DTC 54 / 31) Open/Shorted RR Speed Sensor Circuit..... 5A4–49
Chart B-14 (DTC 61/ 26) Abnormal FL Speed Sensor Signal 5A4–50
Chart B-15 (DTC 62/ 22) Abnormal FR Speed Sensor Signal 5A4–52
Chart B-16 (DTC 63/ 36) Abnormal RL Speed Sensor Signal 5A4–53
Chart B-17 (DTC 64/ 32) Abnormal RR Speed Sensor Signal 5A4–54
Unit Inspection Procedure 5A4–55
Chart C-1-1 FL Speed Sensor Output Inspection Procedure..... 5A4–55
Chart C-1-2 FR Speed Sensor Output Inspection Procedure..... 5A4–56
Chart C-1-3 RL Speed Sensor Output

Inspection Procedure 5A4–57
Chart C-1-4 RR Speed Sensor Output Inspection Procedure 5A4–59
Chart TC-1 Sensor Output Inspection Procedure (Use TECH 2) 5A4–60
Electronic Hydraulic Control Unit 5A4–61
Electronic Hydraulic Control Unit and Associated Parts 5A4–61
Removal 5A4–62
Installation 5A4–62
Front Speed Sensor 5A4–63
Front Speed Sensor and Associated Parts 5A4–63
Removal 5A4–63
Inspection and Repair 5A4–63
Installation 5A4–64
Front Speed Sensor Rotor 5A4–65
Front Speed Sensor Rotor and Associated Parts 5A4–65
Removal 5A4–66
Inspection and Repair 5A4–66
Installation 5A4–66
Rear Speed Sensor 5A4–67
Rear Speed Sensor and Associated Parts 5A4–67
Removal 5A4–68
Inspection and Repair 5A4–68
Installation 5A4–68
Rear Speed Sensor Rotor 5A4–69
Rear Speed Sensor Rotor and Associated Parts 5A4–69
Removal 5A4–69
Inspection and Repair 5A4–69
Installation 5A4–70
Special Tools 5A4–72

Service Precaution

CAUTION: Always use the correct fastener in the proper location. When you replace a fastener, use ONLY the exact part number for that application. ISUZU will call out those fasteners that require a replacement after removal. ISUZU will also call out the fasteners that require thread lockers or thread sealant. UNLESS OTHERWISE SPECIFIED, do not use supplemental coatings (Paints, greases, or other corrosion inhibitors) on threaded fasteners or fastener joint interfaces. Generally, such coatings adversely affect the fastener torque and the joint clamping force, and may damage the fastener. When you install fasteners, use the correct tightening sequence and specifications. Following these instructions can help you avoid damage to parts and systems.

General Description

The Anti-lock Brake System (ABS) works on all four wheels. A combination of wheel speed sensor and Electronic Hydraulic Control Unit (EHCU) can determine when a wheel is about to stop turning and adjust brake pressure to maintain best braking.

This system helps the driver maintain greater control of the vehicle under heavy braking conditions.

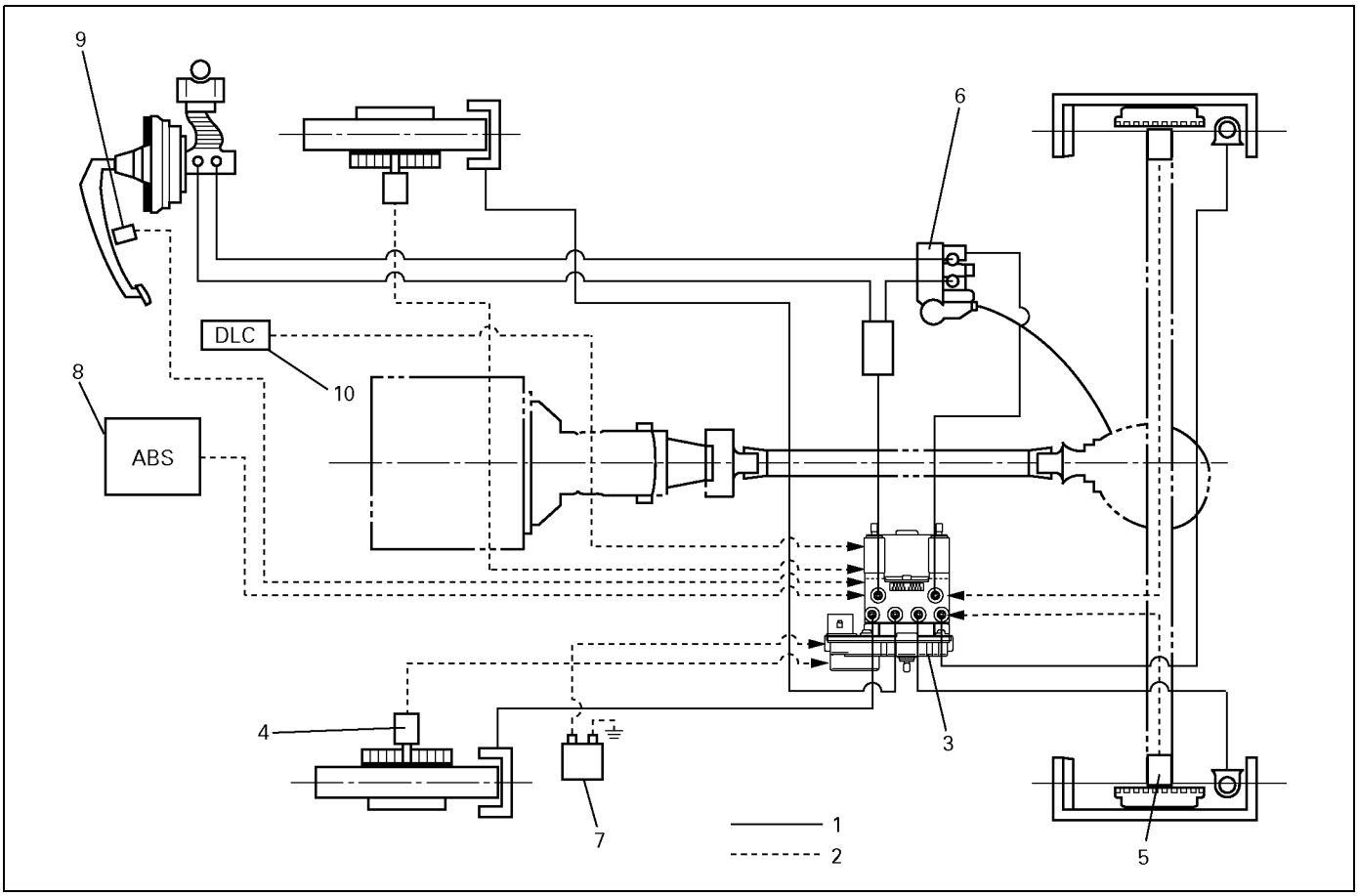

C05L300001

Legend

(1) Hydraulic Line
(2) Electronic Line
(3) Electronic Hydraulic Contorl Unit (EHCU)
(4) Front Wheel Speed Sensor
(5) Rear Wheel Speed Sensor
(6) Load Sensing Proportioning Valve (LSPV)
(7) Battery
(8) ABS Warning Light
(9) Brake Switch
(10) Data Link Connector

System Components

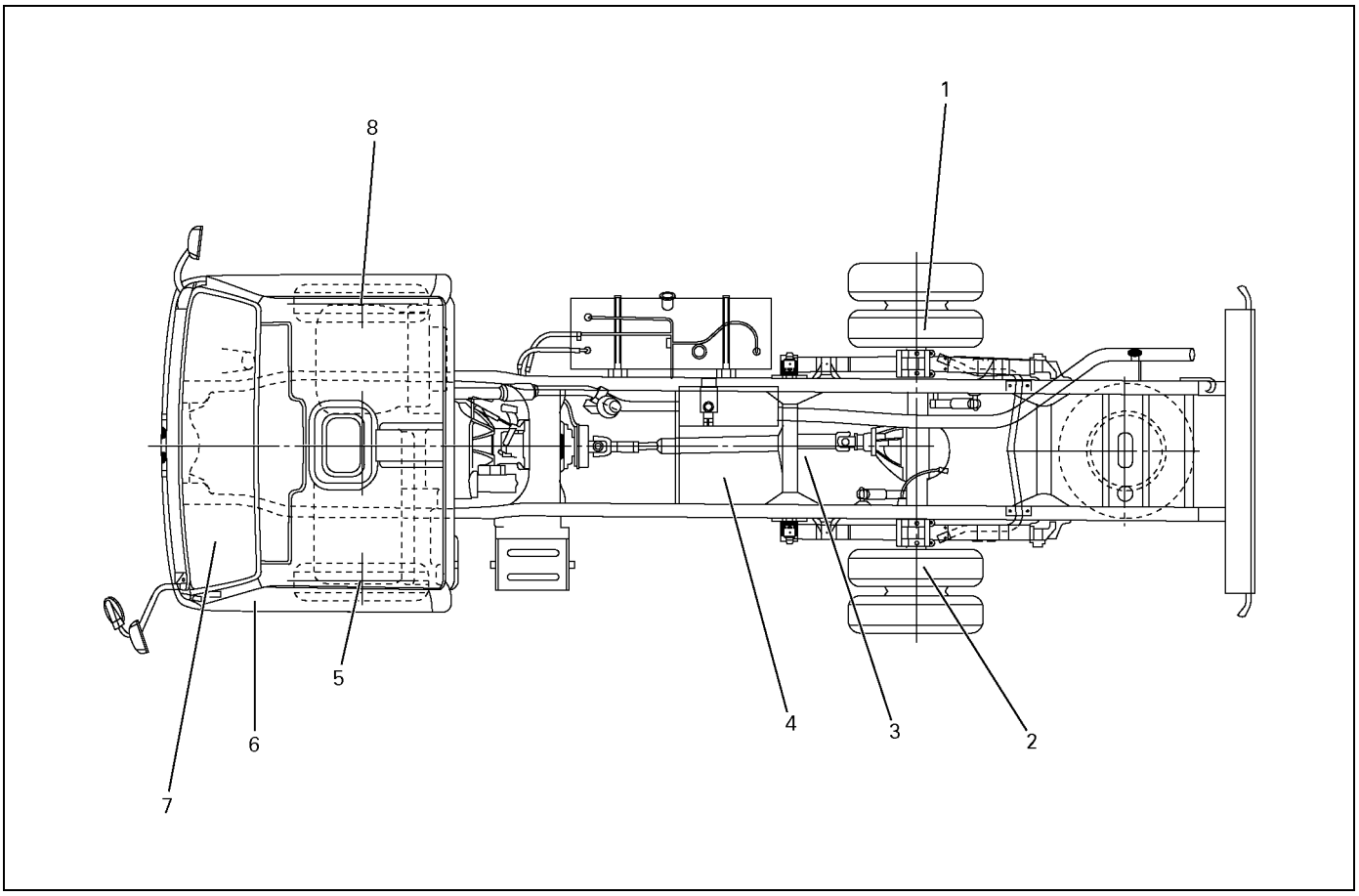

501L300001

Legend

(1) RR Speed Sensor RH
(2) RR Speed Sensor LH
(3) LSPV
(4) EHCU
(5) FRT Speed Sensor LH
(6) Data Link Connector
(7) ABS Warning Light
(8) FRT Speed Sensor RH

The Anti-lock Brake System consists of a Electronic Hydraulic Control Unit (EHCU), four Wheel Speed Sensors and Warning Light.

Electronic Hydraulic Control Unit (EHCU)

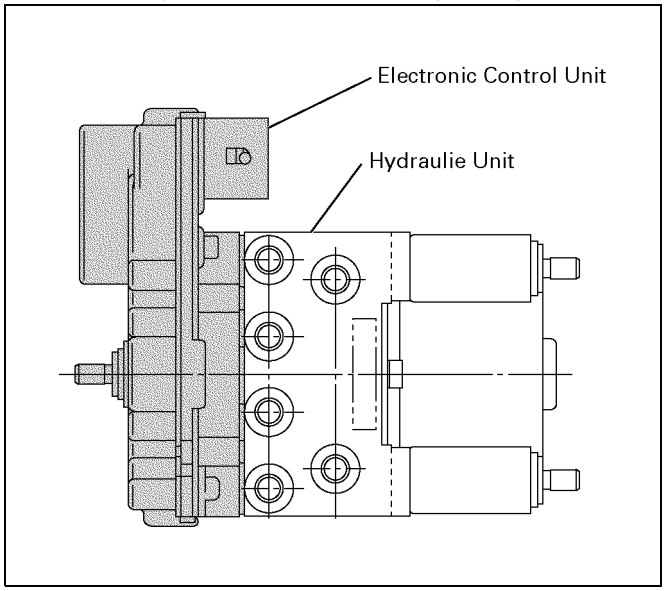

350L300001

The EHCU consists of Electronic Cntorol Unit (ECU) and Hydraulic Unit (HU). The ECU consists of ABS control circuits, fault detector, and a fail-safe. It drives the hydraulic unit according to the signal from each sensor, cancelling ABS to return to normal braking when a malfunction has occurred in the ABS.

The ECU has self-diagnosing function which can indicate faulty circuits during diagnosis. The HU contsists of Motor, Plunger ump, Solenoid Valves, Reservoir and Check Valve.

The EHCU is mounted on left side of the frame near the rear spring front bracket.

Solenoid Valves: Reduces or holds the caliper fluid pressure for each front disc brake or both rear drum brakes according to the signal sent from the ECU.

Reservoir: Temporarily holds the brake fluid that returns from the front and rear wheel brake so that pressure of front wheel brake can be reduced smoothly.

Plunger Pump: Feeds the brake fluid held in the reservoir to the master cylinder.

Motor: Drives the pump according to the signal from ECU. Check Valve: Controls the brake fluid flow.

ABS Warning Light

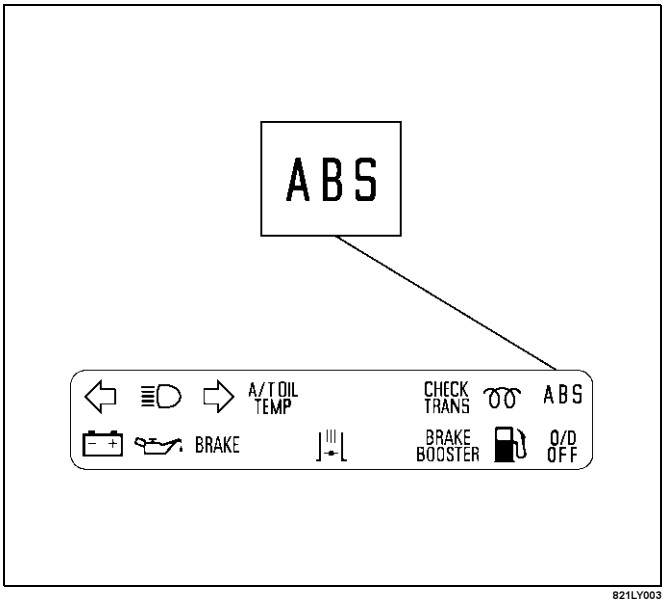

821LY003

Vehicles equipped with the Anti-lock Brake System have an amber “ABS” warning light in the instrument panel. The “ABS” warning light will illuminate if a malfunction in the Anti-lock Brake System is detected by the Electronic Control Unit (ECU). In case of an electronic malfunction, the ECU will turn “ON” the “ABS” warning light and disable the Anti-lock braking function. The “ABS” light will turn “ON" after the ignition switch is to the “ON” position.

“ABS” light will normally go on for two seconds and then will go out after the engine starting.

If the “ABS” light comes “ON" and stays “ON” while driving, the Anti-lock Brake System should be inspected for a malfunction according to the diagnosis procedure.

Wheel Speed Sensor

Front Speed Sensor

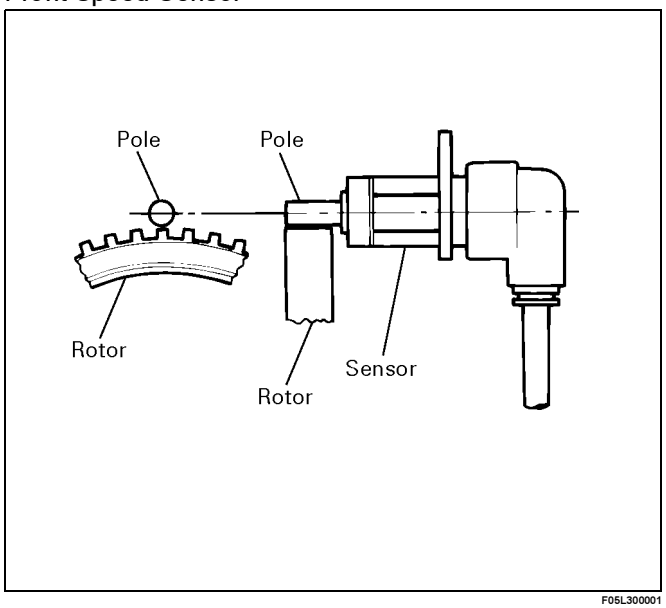

F05L300001

Rear Speed Sensor

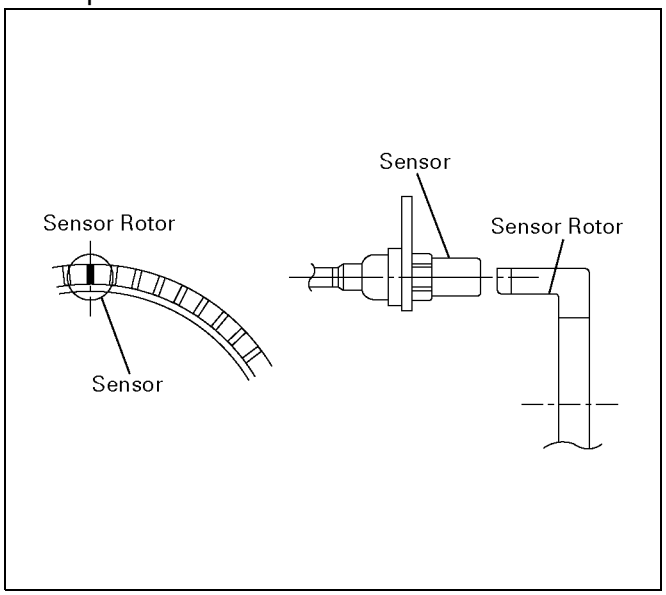

350L300002

It consists of a sensor and a rotor. The sensor is attached to the knuckle on the front wheels and to the bracket on the brake back plate on the rear wheels.

The front speed sensor is coil type and rear is Hall IC type.

The sensor rotors press-fitted to front and rear wheel hubs rotate and the speed sensors output pulse frequency depending on wheel rotation.

The ECU finds vehicle speed from its frequency.

Normal and Anti-lock Braking

Under normal driving conditions, the Anti-lock Brake System functions the same as a standard power assisted brake system. However, with the detection of wheel lock-up, a slight bump or kick-back will be felt in the brake pedal. This pedal “bump” will be followed by a series of short pedal pulsations which occurs in rapid succession. The brake pedal pulsation will continue until there is no longer a need for the anti-lock function or until the vehicle is stopped. A slight ticking or popping noise may be heard during brake applications when the Anti-lock function is being used.
When the Anti-lock function is being used, the brake pedal may rise even as the brakes are being applied. This is also normal. Maintaining a constant force on the pedal will provide the shortest stopping distance.

Brake Pedal Travel

Vehicles equipped with the Anti-lock Brake System may be stopped by applying normal force to the brake pedal. Although there is no need to push the pedal beyond the point where it stops or holds the vehicle, by applying more force the pedal will continue to travel toward the floor.
This extra brake pedal travel is normal.

Acronyms and Abbreviations

Several acronyms and abbreviations are commonly used throughout this section:

ABS
Anti-lock Brake System

CKT
Circuit

DLC
Data Link Connector

DTC
Diagnostic Trouble Code

DVM
Digital Volt Meter (High Impedance Multimeter)

ECU
Electronic Coutrol Unit

EHCU
Electronic Hydraulic Control Unit

FL
Front Left

FR
Front Right

GEN
Generator

HU
Hydraulic Unit

MV
Millivolts

RL
Rear Left

RR
Rear Right

RPS
Revolution per Second

SW
Switch

VDC
Volts DC

VAC
Volts AC

W/L
Warning Light

WSS
Wheel Speed Sensor

General Diagnosis

General Information

ABS malfunction can be classified into two types, those which can be detected by the ABS warning light and those which can be detected as a vehicle abnormality by the driver.
In either case, locate the fault in accordance with the "BASIC DIAGNOSTIC FLOWCHART" and repair.
Please refer to Section 5A for the diagnosis of mechanical troubles such as brake noise, brake judder (brake pedal or vehicle vibration felt when braking), uneven braking, and parking brake trouble.

ABS Service Precautions

Required Tools and Items:

- Box Wrench
- Brake Fluid
- Special Tool

Some diagnosis procedures in this section require the installation of a special tool.

J-39200 High Impedance Multimeter

When circuit measurements are requested, use a circuit tester with high impedance.

Computer System Service Precautions

The Anti-lock Brake System interfaces directly with the Electronic Control Unit (ECU) which is a control computer that is similar in some regards to the Engine Control Module. These modules are designed to withstand normal current draws associated with vehicle operation. However, care must be taken to avoid overloading any of the ECU circuits. In testing for opens or shorts, do not ground or apply voltage to any of the circuits unless instructed to do so by the appropriate diagnostic procedure. These circuits should only be tested with a high impedance multimeter (J-39200) or special tools as described in this section. Power should never be removed or applied to any control module with the ignition in the "ON" position.
Before removing or connecting battery cables, fuses or connectors, always turn the ignition switch to the "OFF" position.

General Service Precautions

The following are general precautions which should be observed when servicing and diagnosing the Anti-lock Brake System and/or other vehicle systems. Failure to observe these precautions may result in Anti-lock Brake System damage.

- If welding work is to be performed on the vehicle using an electric arc welder, the EHCU should be removed before the welding operation begins.
- The EHCU connector should never be connected or disconnected with the ignition "ON".
- The Hydraulic Unit of the Anti-lock Brake System is not separately serviceable and must be replaced as assemblies. Do not disassemble any component which is designated as non-serviceable in this Section.
- If only rear wheels are rotated using jacks or drum tester, the system will diagnose a speed sensor malfunction and the "ABS" warning light will illuminate. But actually no trouble exists. After inspection stop the engine once and re-start it, then make sure that the "ABS" warning light does not illuminate.

If the battery has been discharged
The engine may stall if the battery has been completely discharged and the engine is started via jumper cables. This is because the Anti-lock Brake System (ABS) requires a large quantity of electricity. In this case, wait until the battery is recharged, or set the ABS to a non-operative state by removing the fuse for the ABS. After the battery has been recharged, stop the engine and install the ABS fuse. Start the engine again, and confirm that the ABS warning light does not light.

Note on Intermittents

As with virtually any electronic system, it is difficult to identify an intermittent failure. In such a case duplicating the system malfunction during a test drive or a good description of vehicle behavior from the customer may be helpful in locating a "most likely" failed component or circuit. The symptom diagnosis chart may also be useful in isolating the failure. Most intermittent problems are caused by faulty electrical connections or wiring. When an intermittent failure is encountered, check suspect circuits for:

- Suspected harness damage.
- Poor mating of connector halves or terminals not fully seated in the connector body (backed out).
- Improperly formed or damaged terminals.

Test Driving ABS Complaint Vehicles

In case that there has been an malfunction in the lighting pattern of “ABS” warning light, the fault can be located in accordance with the “DIAGNOSIS BY “ABS” WARNING LIGHT ILLUMINATION PATTERN”. In case of such trouble as can be detected by the driver as a vehicle symptom, however, it is necessary to give a test drive following the test procedure mentioned below, thereby reproducing the symptom for trouble diagnosis on a symptom basis:

1. Start the engine and make sure that the “ABS” W/L goes OFF. If the W/L remains ON, it means that the Diagnostic Trouble Code (DTC) is stored. Therefore, read the code and locate the fault.
2. Start the vehicle and accelerate to about 30 km/h (19 mph) or more.
3. Slowly brake and stop the vehicle completely.
4. Then restart the vehicle and accelerate to about 40 km/h (25 mph) or more.
5. Brake at a time so as to actuate the ABS and stop the vehicle.
6. Be cautious of abnormality during the test. If the W/L is actuated while driving, read the DTC and locate the fault.
7. If the abnormality is not reproduced by the test, make best efforts to reproduce the situation reported by the customer.
8. If the abnormality has been detected, repair in accordance with the “SYMPTOM DIAGNOSIS”.

NOTE:

- Be sure to give a test drive on a wide, even road with little traffic.
- If an abnormality is detected, be sure to suspend the test and start trouble diagnosis at once.

“ABS” Warning Light

When ABS trouble occurs and the ECU actuates the “ABS” warning light, the trouble code corresponding to the trouble is stored in the ECU. Only the ordinary brake system is available when the ABS is turned ON. When the “ABS” warning light is actuated, if the starter switch is set ON after setting it OFF once, the ECU checks up on the entire system and, if there is no abnormality (in case of intermittent failure), judges ABS to work currently and the warning light works normally even though the trouble code is stored.

NOTE: Illumination of the “ABS” warning light indicates that anti-lock braking is no longer available. Power assisted braking without anti-lock control is still available.

Normal Operation

“ABS” Warning Light

When the ignition is first moved from “OFF” to “ON”, the amber “ABS” warning light will turn “ON”. The “ABS” warning light will turn “ON” for two seconds and will turn “OFF” after engine is started.

Basic Diagnostic Flow Chart

Step	Action	Yes	No
1	1. Customer complaint. 2. Questioning to customer. 3. Basic inspection (Refer to “Basic inspection procedure”) Using TECH 2?	Go to Step 2	Go to Step 3
2	Make sure of DTC by TROUBLE CODE. Is EHCU including DTC?	Go to Step 5	Go to Step 4
3	Check if the DTC is stored. Is EHCU including DTC?	Go to Step 5	Go to Step 4
4	Test drive. Is W/L lit?	Go to Step 5	Trouble diagnosis based on symptom (Refer to “SYMPTOM DIAGNOSIS") Go to Step 5
5	1. Repair of faulty part. 2. Elimination of DTC. 3. Inspection of “ABS” W/L Illumination pattern with ignition SW “ON”. 4. Test drive. Dose repeat trouble?	Repeat the diagnosis if the symptom or DTC appears again Go to Step 1	Go to Step 6
6	1. Reconnect all components and ensure all components are properly mounted. 2. Clear diagnostic trouble code. Was this step finished?	Finished	Go to Step 6

Basic Inspection Procedure

1. Basic Inspection of Service Brake

Step	Action	Yes	No
1	Is the fluid level normal?	Go to Step 2	Replenish with fluid. Go to Step 2
2	Does not fluid leak?	Go to Step 3	Repair. Go to Step 3
3	Is the booster functioning normal?	Go to Step 4	Repair. Go to Step 4
4	Is the pad and rotor normal?	Go to Step 5	Repair. Go to Step 5
5	Reconnect all components and ensure all components are properly mounted. Was this step finished?	Finished	Go to Step 5

2. Ground Inspection

Step	Action	Yes	No
1	Are ABS—related ground points ok?	Go to Step 2	Repair. Go to Step 2
2	Reconnect all components and ensure all components are properly mounted. Was this step finished?	Finished	Go to Step 2

Tech 2 Scan Tool

From 98 MY, Isuzu dealer service departments are recommended to use Tech 2. Please refer to Tech 2 scan tool user guide.

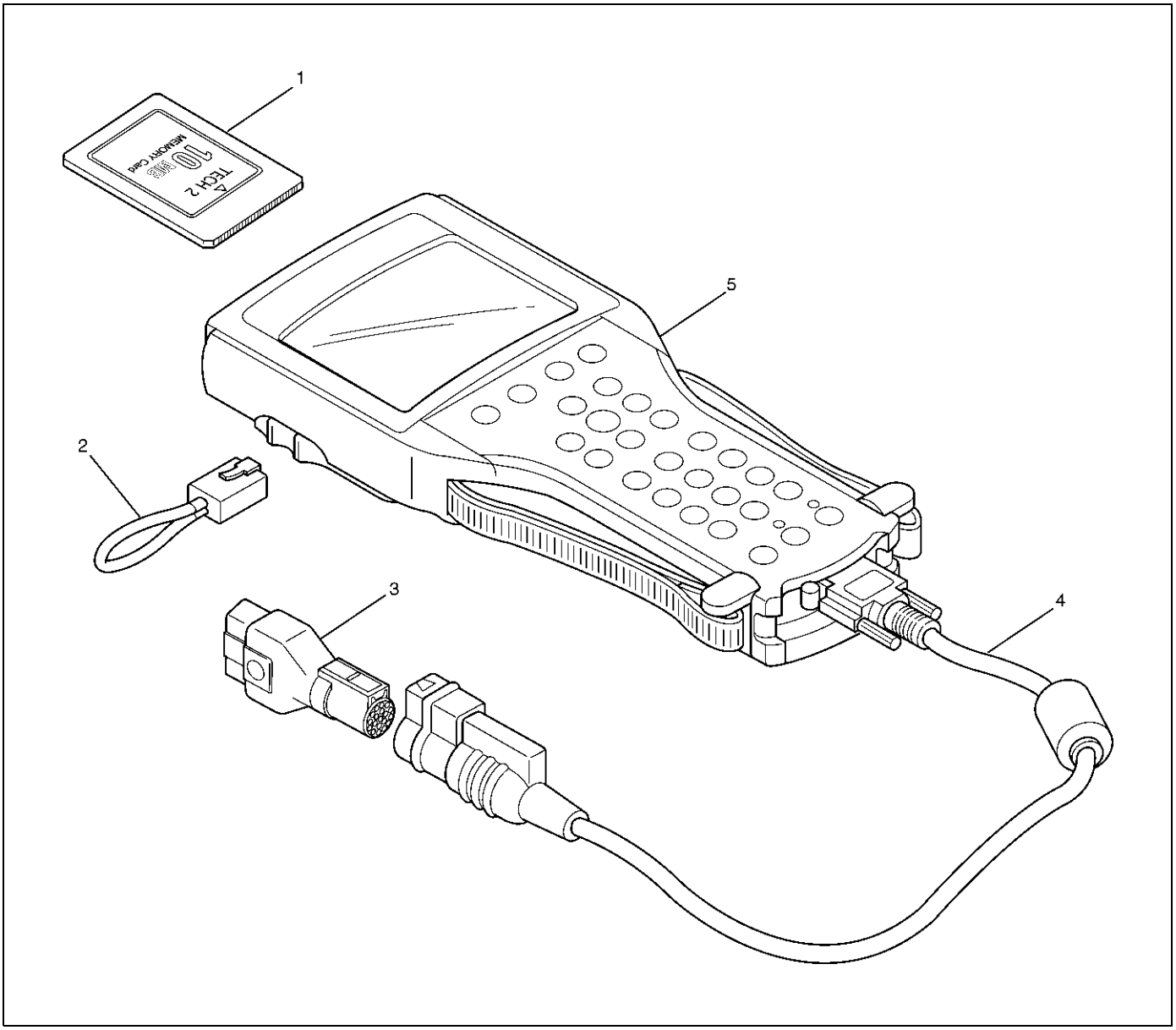

901RW180

Legend

(1) PCMCIA Card
(2) RS 232 Loop Back Connector
(3) SAE 16/19 Adapter
(4) DLC Cable
(5) Tech–2

Tech 2 Features

1. Tech 2 is a 12 volts system. Do not apply 24 volt.
2. After connecting and/or installing the Vehicle Commumications Interface (VCI) module, PCMCIA card and DLC connector to the Tech 2, connect the tool to the vehicle DLC.
3. Make sure the Tech 2 is powered OFF when removing or installing the PCMCIA card.
4. The PCMCIA card has a capacity of 10 Megabytes which is 10 times greater than the memory of the Tech 1 Mass Storage Cartridge.
5. The Tech 2 has the capability of two snapshots.
6. The PCMCIA card is sensitive to magnetism and static electricity, so care should be taken in the handling of the card.
7. The Tech 2 can plot a graph when replaying a snapshot.
8. Always return to the Main Menu by pressing the EXIT key several times before shutting down.
9. To clear Diagnostic Trouble Codes (DTCs), open Application Menu and press “F1: Clear DTC Info”.

Getting Started

- Before operating the Isuzu PCMCIA card with the Tech 2, the following steps must be performed:

1. The Isuzu PCMCIA card (1) inserts into the Tech 2 (5).
2. Connect the SAE 16/19 adapter (3) to the DLC cable (4).
3. Connect the DLC cable to the Tech 2 (5).
4. Make sure the vehicle ignition is off.
5. Connect the Tech 2 SAE 16/19 adapter to the vehicle DLC.

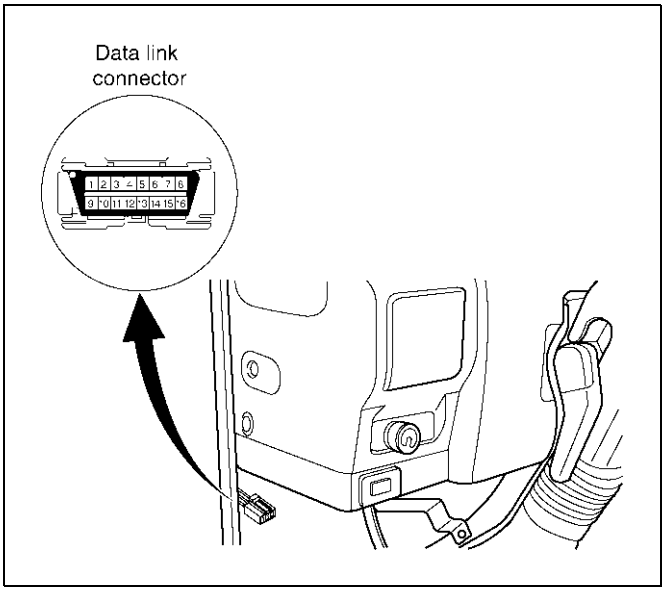

826LY003

6. Turn on the vehicle ignition.
7. Power the Tech 2 ON and verify the Tech 2 power up display.

060RW009

NOTE: The RS232 Loop back connector is only to use for diagnosis of Tech 2. Refer to user guide of the Tech 2.

Operating Procedure (For Example)

The power up screen is displayed when you power up the tester with the Isuzu systems PCMCIA card. Follow the operating procedure below.

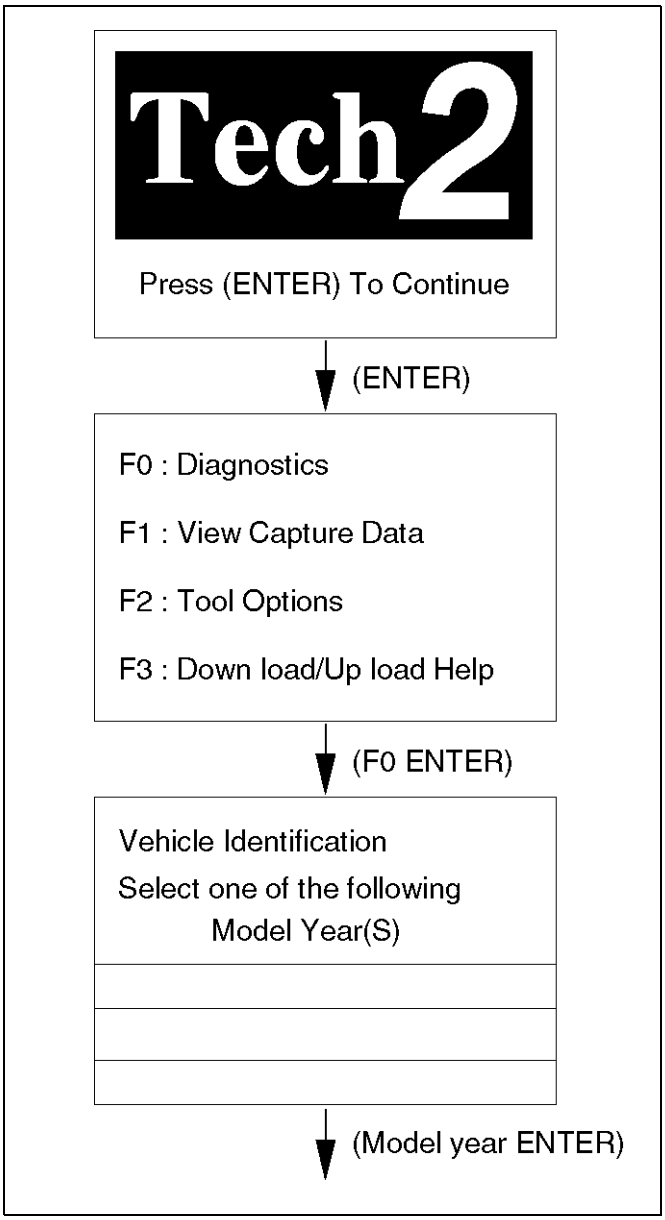

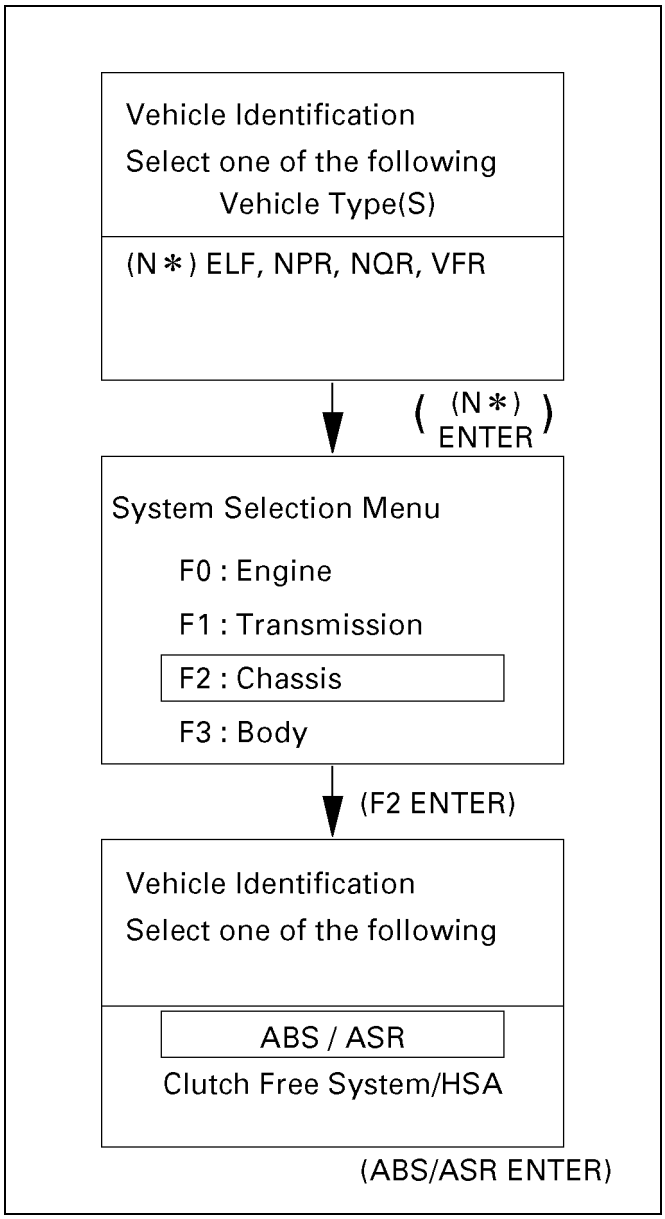

Menu

- The following table shows which functions are used for the available equipment versions.

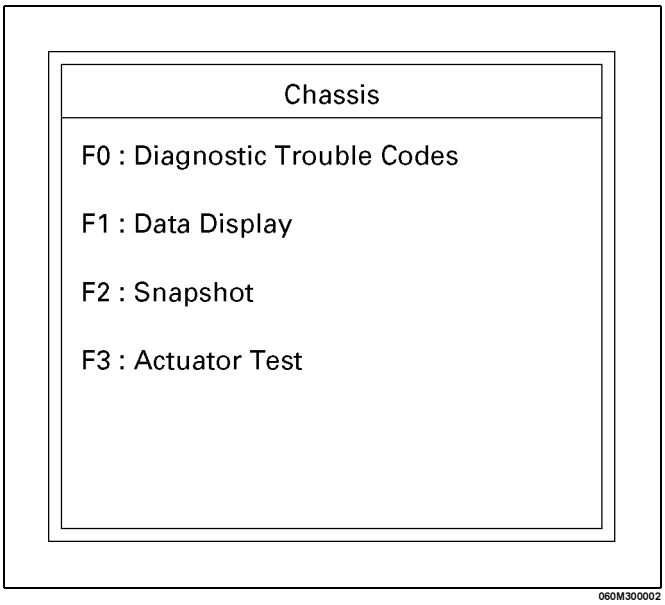

DTC Modes

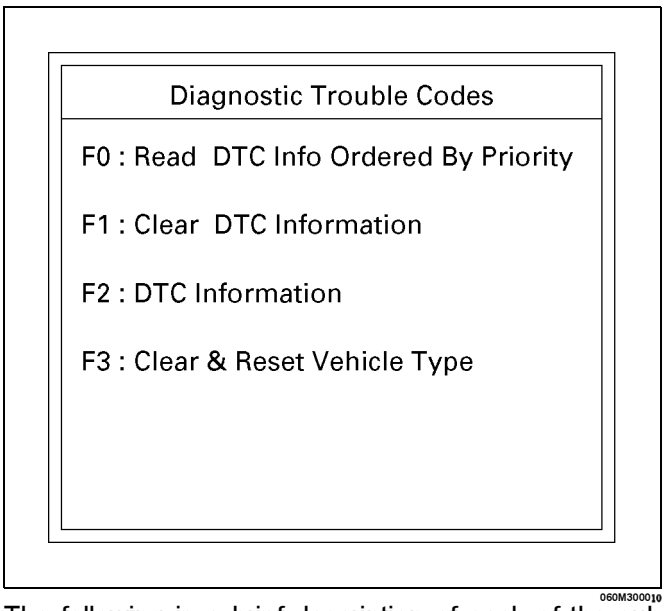

The following is a brief description of each of the sub menus. The order in which they appear here is alphabetical and not necessarily the way they will appear on the Tech 2.

DTC Information Mode

Use the DTC information mode to search for stored DTC information.

Clear & Reset Vehicle Type Mode

When a ECU was replaced, use this mode.
The mode carries out the reset in the ECU.

Plotting Snapshot Graph

This test selects several necessary items from the data list to plot graphs and makes data comparison on a long term basis. This test can check ABS performance and defect by graphing wheel speed differences between right and left sides, and front and rear sides obtained from the ABS data list menu.

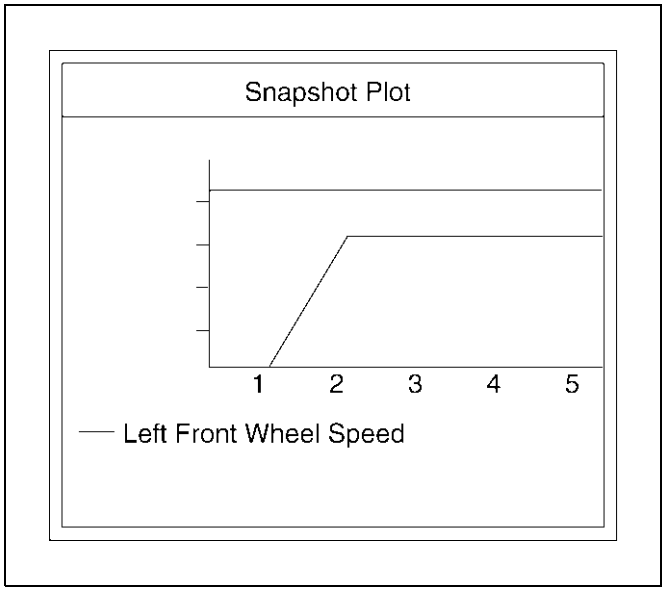

For trouble diagnosis, you can collect graphic data (snap shot) directly from the vehicle.
You can replay the snapshot data as needed. Therefore, accurate diagnosis is possible, even though the vehicle is not available.

Plotting Graph Flow Chart (Plotting graph after obtaining vehicle information)

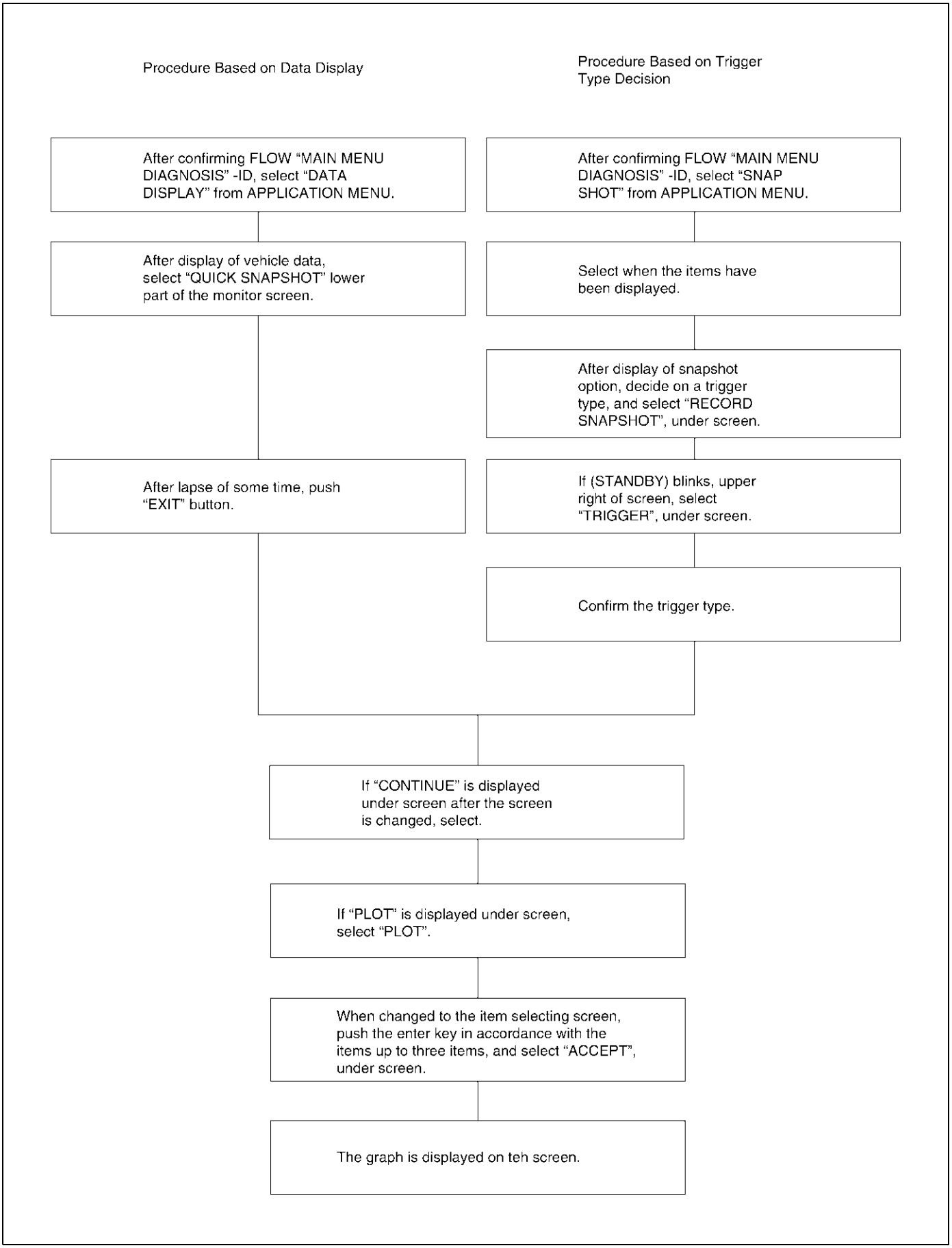

060RX085

Flow Chart for Snapshot Replay (Plotting Graph)

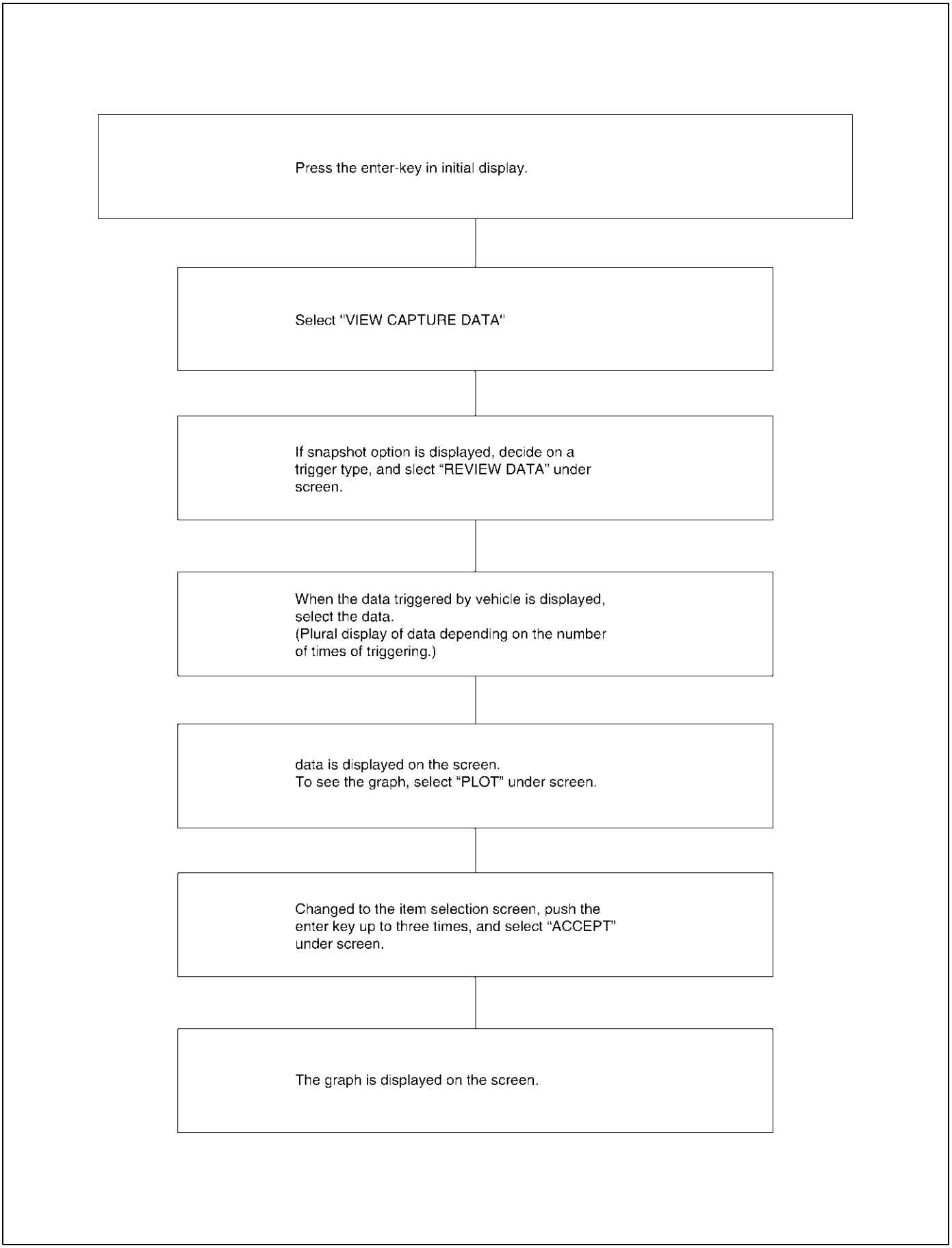

060RX040

Tech 2 Data Display

Use the Tech 2 Data Values only after the ABS Diagnostic System Check has been completed, no DTC(s) were noted, and you have determined that the on-board diagnostics are functioning properly. Tech 2 values from a properly-running engine may be used for comparison with the engine you are diagnosing.

ABS Data

Ignition SW is “ON” position.

(For example)

F1; ABS DATA

Front Left Wheel Speed	2 mph
Front Right Wheel Speed	2 mph
Rear Left Wheel Speed	2 mph
Rear Right Wheel Speed	2 mph
Brake Switch	OFF
ABS Warning Lamp	OFF
ABS Stop State	OFF
ABS Relay	OFF
Return Pump	OFF
DTC Status	OFF
Rear Left Dump Valve	OFF
Rear Left Isolation Valve	OFF
Rear Right Dump Valve	OFF
Rear Right Isolation Valve	OFF
Front Left Dump Valve	OFF
Front Left Isolation Valve	OFF
Front Right Dump Valve	OFF
Front Right Isolation Valve	OFF
Rear Left Dump Valve Feed back	OFF
Rear Left Isolation Valve Feed back	OFF
Rear Right Dump Valve Feed back	OFF
Rear Right Isolation Valve Feed back	OFF
Front Left Dump Valve Feed back	OFF
Front Left Isolation Valve Feed back	OFF
Front Right Isolation Valve Feed back	OFF
Front Right Dump Valve Feed back	OFF
Battery Voltage	12～16V
Exhaust Brake Cut	OFF
Diagnostics Connector	OFF
Vehicle Mode	OFF

Select Items | DTC | Quick Snapshot | More

060MY00081

Actuator Test

There are 8 different menus available for this test. The state of each circuit can be tested by using these menus. Especially when DTC cannot be detected, a faulty circuit can be diagnosed by testing each circuit by means of these menus.

Even when DTC has been detected, the circuit tests using these menus could help discriminate between a mechanical trouble and an electrical trouble.

In all cases test condition; Engine stops with the key turned to the “ON” position. To be more specific, the test is conducted with the brake pedal stepped on after stepping once and releasing.

- Engine: Stop
- Ignition SW: ON
- Brake Pedal: ON-OFF-ON

If the Ignition SW was turned OFF or communication was lost, make sure to apply the brake pedal ON-OFF-ON once again and then continue the test.

Actuator Test

ABS Relay

Return Pump Relay Test

Front Left Solenoid Valve Test

Front Right Solenoid Valve Test

Rear Left Solenoid Valve Test

Rear Right Solenoid Valve Test

ABS Check Light Test

Exhaust Brake Cut Test

060M300004

ABS Relay

Test condition: Engine stops with the key turned to the “ON” position. To be more specific, the test is conducted with the brake pedal stepped on after stepping once and releasing.
Make sure of the working sound of the ABS relay.
The circuit is normal if the working sound of the ABS relay is made in accordance with Tech2’s instruction.

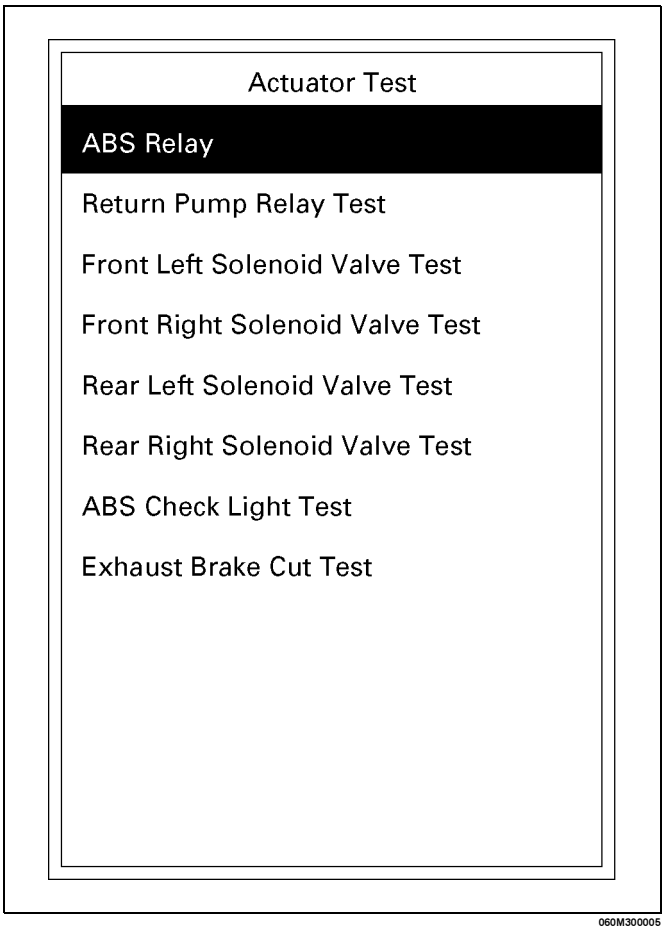

060M300005

Return Pump Relay Test

Test condition: Engine stops with the key turned to the “ON” position. To be more specific, the test is conducted with the brake pedal stepped on after stepping once and releasing.
Make sure of the working sound of the return pump relay.
The circuit is normal if the working sound of the return pump relay is made in accordance with Tech2’s instruction.

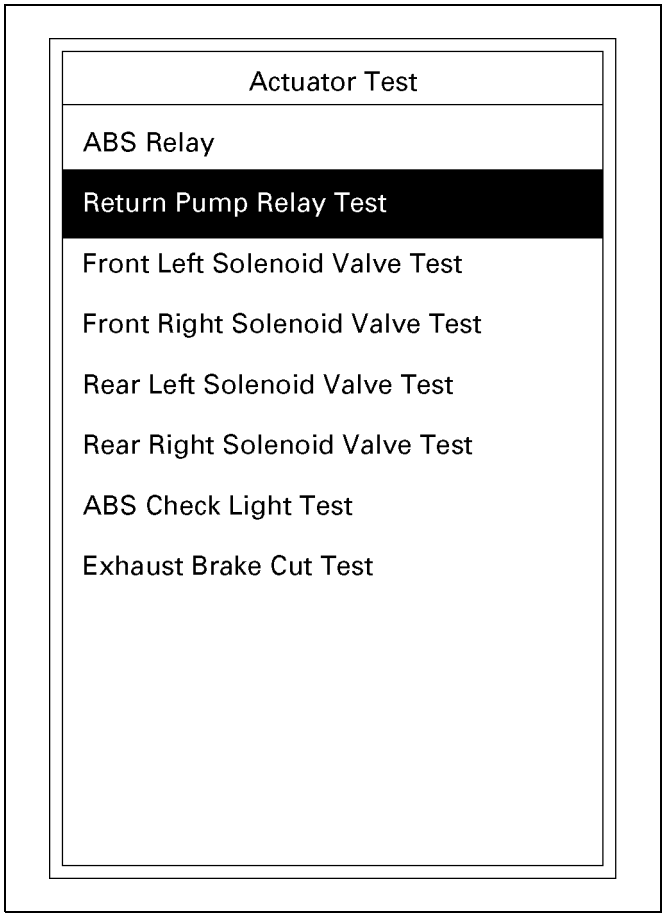

060M300006

Isolation Valve Test

Purpose: The purpose of this test is to detect brake pipe and valve line harness wire wrong connections and valve trouble.
This test will help you confirm the result of your repair service including the removal/reinstallation of brake pipe, valve line harness and valve.
Test conditions: The ignition key is in the “ON” position with the four wheels lifted up. The brake pedal is stepped on, released and stepped on again with the parking brake released.

Test procedure:

1. Connect Tech 2 with the vehicle, and select Actuaor Test from the menus.
2. Select a Solenoid Valve Test Menu from the Actuaor Test Menus.

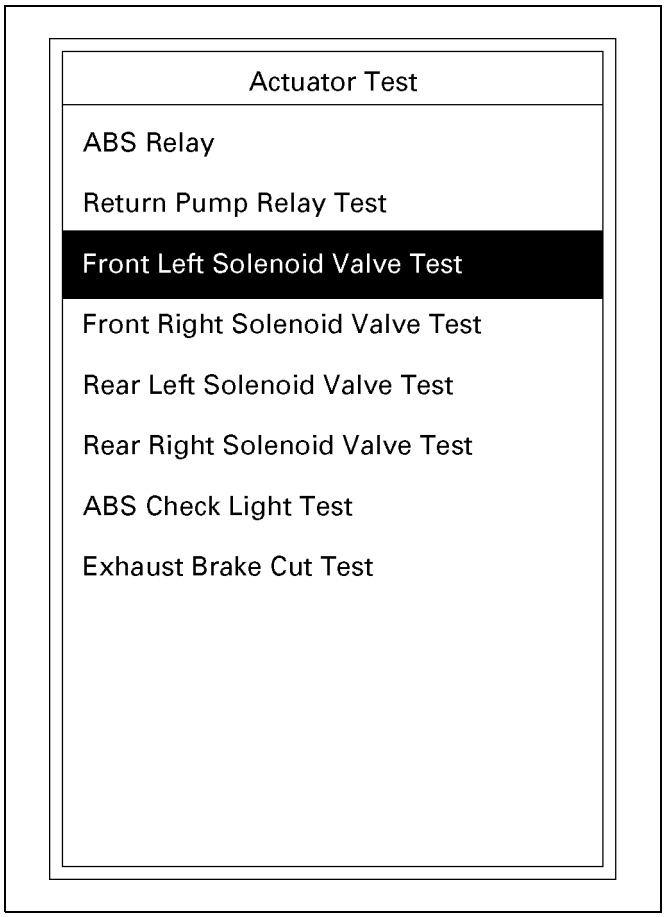

060MY00078

3. Select Isolation Valve from the Valve Select Menus.
4. Step on the brake pedal.
5. Release the brake pedal.
6. Make sure that the Isolation Valve “ON” aimed at by Tech 2 and the wheel locked position are the same. If different, check brake pipe, valve line harness wiring and H/UNIT. Repair is needed if abnormality is found.

7. Conduct Step 2 through Step 5 above on all the four wheels.

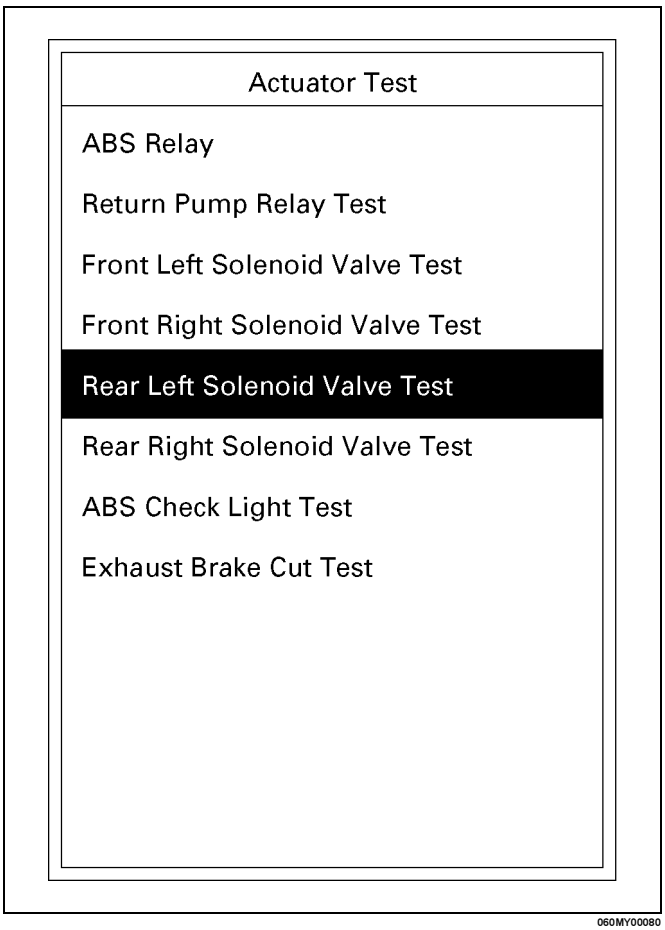

CAUTION: When conducting this test, please observe the following cautions.

1. **Do not start the engine without fail.**
2. **Lift up the vehicle at a level floor.**
   - **Secure a clearance from the floor surface enough to allow the lifted tire to rotate.**
3. **Maintain the lift up.**
4. **Wipe the floor surface to remove water and oil so that the surface may become unslippery.**
5. **Do not load the vehicle.**
   - **When lifting up the vehicle, be sure to observe the lifting up points. Refer to vehicle lifting points in 0A section.**

Dump Valve Test

Purpose: The purpose of this test is to detect brake pipe and valve line harness wire wrong connections and valve trouble.

This test will help you confirm the result of your repair service including the removal/reinstallation of brake pipe, valve line harness and valve.

Test conditions: The ignition key is in the “ON” position with the four wheels lifted up. The brake pedal is stepped on, released and stepped on again with the parking brake released.

Test procedure:

1. Connect Tech 2 with the vehicle, and select Actuator Test Function from the menus.
2. Select a Solenoid Valve Test Menu from the Actuator Test Menus.

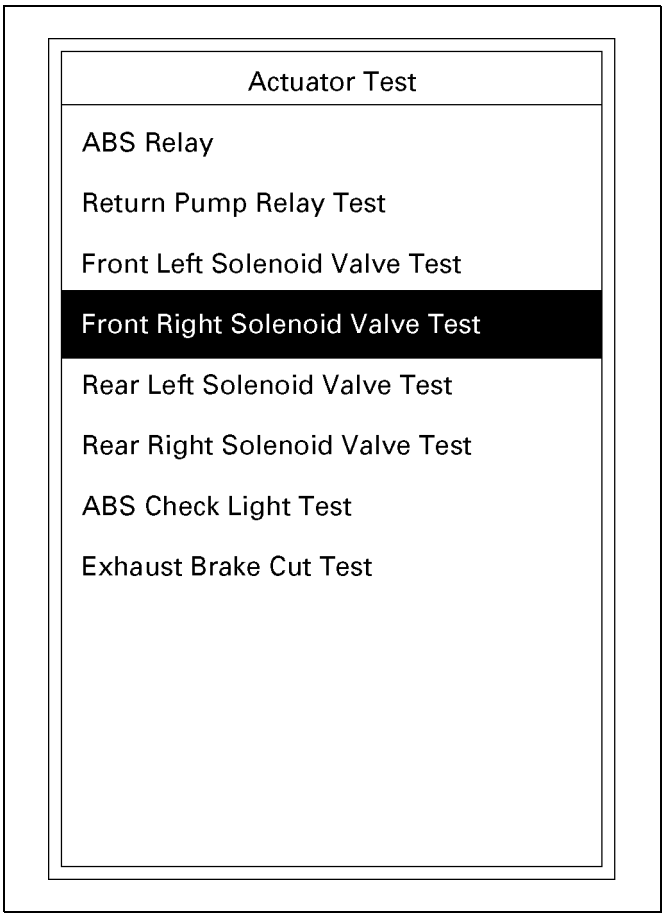

060MY00079

3. Select Dump Valve from the Valve Select Meuns.
4. Step on the brake pedal.
5. Make sure that the Dump Valve “ON” aimed at by Tech 2 and the wheel released position are the same. If different, check brake pipe, valve line harness wiring and H/UNIT. Repair is needed if abnormality is found.
6. Conduct Step 2 through Step 5 above on all the four wheels.

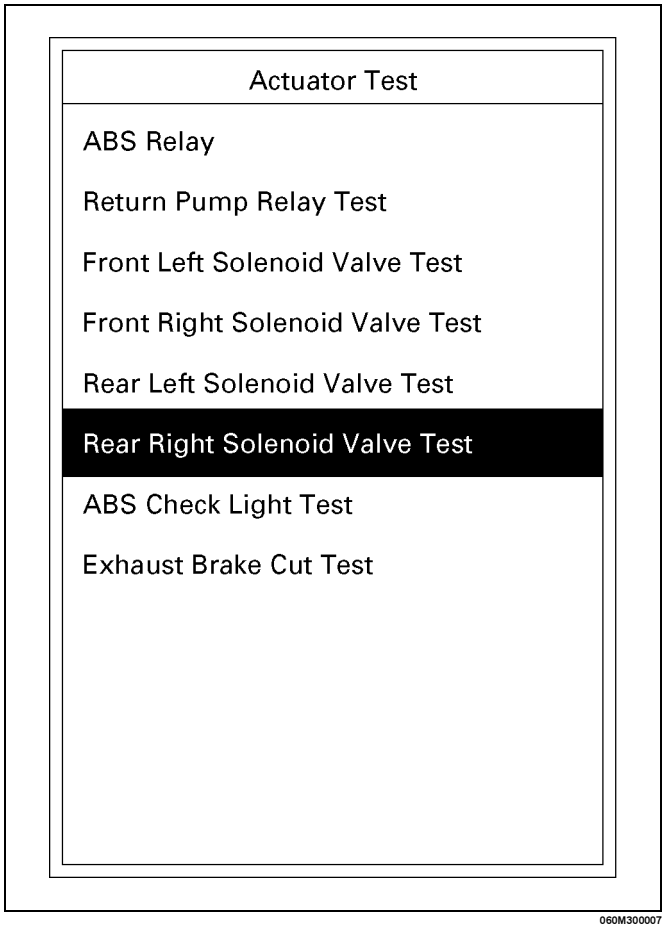

060M300007

CAUTION: When conducting this test, please observe the following cautions.

1. **Do not start the engine without fail.**
2. **Lift up the vehicle at a level floor.**
   - **Secure a clearance from the floor surface enough to allow the lifted tire to rotate.**
3. **Maintain the lift up.**
4. **Wipe the floor surface to remove water and oil so that the surface may become unslippery.**
5. **Do not load the vehicle.**
   - **When lifting up the vehicle, be sure to observe the lifting up points. Refer to vehicle lifting points in 0A section.**

ABS Check Light Test

Test condition: Engine stops with the key turned to the “ON” position. To be more specific, the test is conducted with the brake pedal stepped on after stepping once and releasing.

- The circuit is normal if the warning light in the meter panel comes on and goes out in accordance with Tech2’s instruction.

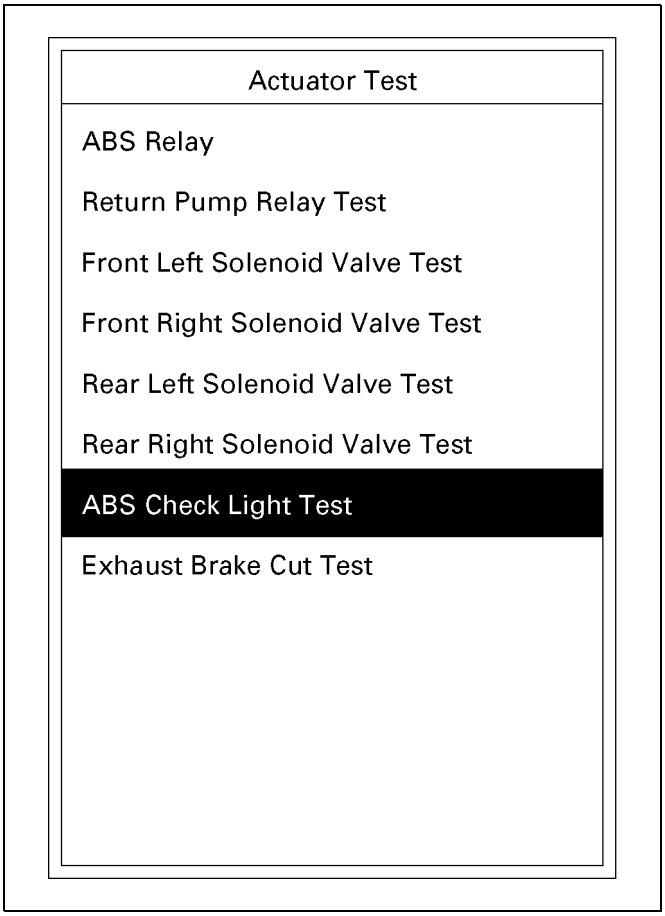

060M300008

Exhaust Brake Cut Test

Test condition: Engine stops with the key turned to the “ON” position. To be more specific, the test is conducted with the brake pedal stepped on after stepping once and releasing.
Make sure of the working sound of the exhaust brake cut relay.
The circuit is normal if the working sound of the exhaust brake cut relay is made in accordance with Tech2’s instruction.

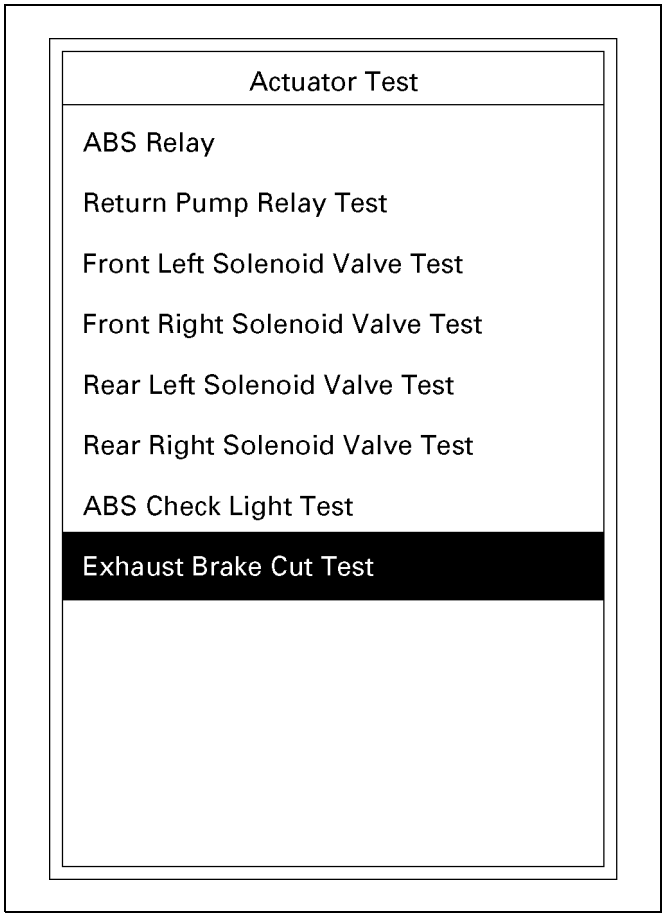

060M300009

EHCU Connector pin Assignment

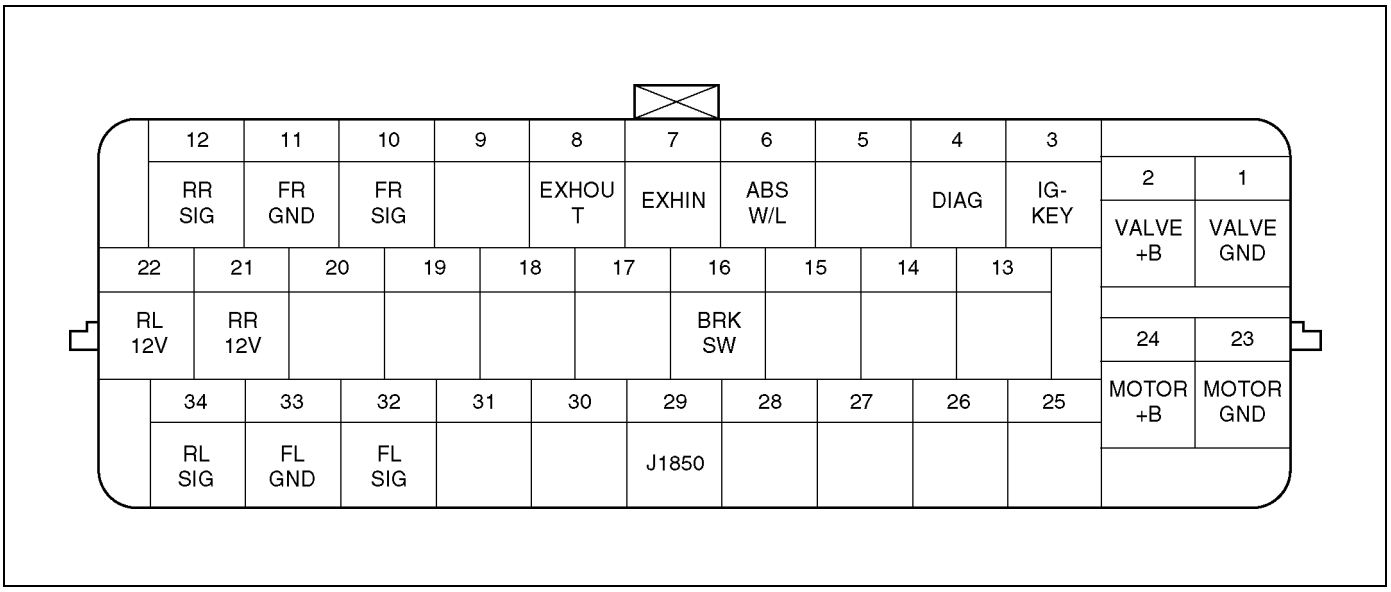

826L300001

EHCU Connector Pin assignment

Terminal No.	Symbol	Contens	Wiring Color
1	VALVE GND	ECU SYSTEM GND (0V)	BLK
2	VALVE+B	SOLENOID VALVE POWER (12V)	RED
3	IG-KEY	ECU SYSTEM POWER (12V)	BLK/YEL
4	DIAG	DIAGNOSIS	WHT/GRN
5	NC	NOT USED	—
6	ABS W/L	ABS WARNING LIGHT OUTPUT	WHT/VIOLET
7	EXH IN	EXHAUST BRAKE CUT INPUT SIGNAL	BROWN/BLK
8	EXH OUT	EXHAUST BRAKE CUT OUTPUT SIGNAL	LIGHT GRN
9	NC	NOT USED	—
10	FR SIG	FRT RH SPEED SIGNAL	PNK
11	FR GND	FRT RH SPEED SIGNAL GND	BLU
12	RR SIG	RR RH SPEED SIGNAL (HALL IC SENSOR)	WHT
13	NC	NOT USED	—
14	NC	NOT USED	—
15	NC	NOT USED	—
16	BRK SW	BRAKE SW INPUT SIGNAL	GRN
17	NC	NOT USED	—
18	NC	NOT USED	—
19	NC	NOT USED	—
20	NC	NOT USED	—
21	RR 12V	RR RH SPEED SENSOR POWER	RED
22	RL 12V	RR LH SPEED SENSOR POWER	BLU
23	MOTOR GND	MOTOR GND (0V)	BLK
24	MOTOR+B	MOTOR POWER (12V)	RED
25	NC	NOT USED	—
26	NC	NOT USED	—
27	NC	NOT USED	—
28	NC	NOT USED	—
29	J1850	COMMUNICATION	WHT/BLK
30	NC	NOT USED	—
31	NC	NOT USED	—
32	FL SIG	FRT LH SPEED SIGNAL	VIOLET
33	FL GND	FRT LH SPEED SIGNAL GND	RED/BLK
34	RL SIG	RR LH SPEED SIGNAL (HALL IC SENSOR)	YEL

EHCU Connector Pin-out Checks

- Disconnect ECU connector.
- Perform checks with high impedance digital multimeter J-39200 or equivalent.

No.	Circuit to be Tested	Key Switch position	Multi meter Scale/ Range	Measure between Pin Number	Nominal Valve	Note
1	EHCU Power Circuit	OFF	VDC	J-177,3(+) − J-177,1(−)	0 − 0.3V	
		ON	VDC	J-177,3(+) − J-177,1(−)	9.5V − 16.5V	
		OFF	VDC	J-177,2(+) − J-177,1(−)	9.5V − 16.5V	
		OFF	VDC	J-177,24(+) − J-177,1(−)	9.5V − 16.5V	
2	EHCU GND Circuit	OFF	Ω	J-177,1(+) − GND	0 − 1 Ω	
		OFF	Ω	J-177,23(+) − GND	0 − 1 Ω	
3	Exhaust Brake Cut Response Signal	ON	VDC	J-177,7(+) − J-177,1(−)	9.5V − 16.5V	Engine is running
4	Exhaust Brake Cut Request Signal	ON	VDC	J-177,8(+) − J-177,1(−)	9.5V − 16.5V	
		OFF	VDC	J-177,8(+) − J-177,1(−)	0 − 0.3V	
5	Brake Switch Signal Circuit	OFF	VDC	J-177,16(+) − J-177,1(−)	0 − 0.3V	
		OFF	VDC	J-177,16(+) − J-177,1(−)	9.5 − 16.5V	Apply Brake Pedal
6	ABS Warning Light	ON	VDC	J-177,6(+) − J-177,1(−)	9.5 − 16.5V	
		OFF	VDC	J-177,6(+) − J-177,1(−)	0 − 0.3V	
7	FRT LH Speed Sensor	OFF	kΩ	J-177,10(+) − J-177,11(−)	1 − 2kΩ	
		OFF	kΩ	J-177,10(+) − J-177,1(−)	More than 1000kΩ	
		OFF	VDC	J-177,10(+) − J-177,11(−)	More than 200mV	Turn Wheel at 0.5 RPS
8	FRT RH Speed Sensor	OFF	kΩ	J-177,32(+) − J-177,33(−)	1 − 2kΩ	
		OFF	kΩ	J-177,32(+) − J-177,1(−)	More than 1000kΩ	
		OFF	VDC	J-177,32(+) − J-177,33(−)	More than 200mV	Turn Wheel at 0.5 RPS
9	RR LH Speed Sensor	OFF	VDC	J-177,22(+) − J-177,34(−)	0.2 − 4.5V	Turn Wheel at 0.5 RPS
10	RR RH Speed Sensor	OFF	VDC	J-177,21(+) − J-177,12(−)	0.2 − 4.5V	Turn Wheel at 0.5 RPS

Circuit Diagram

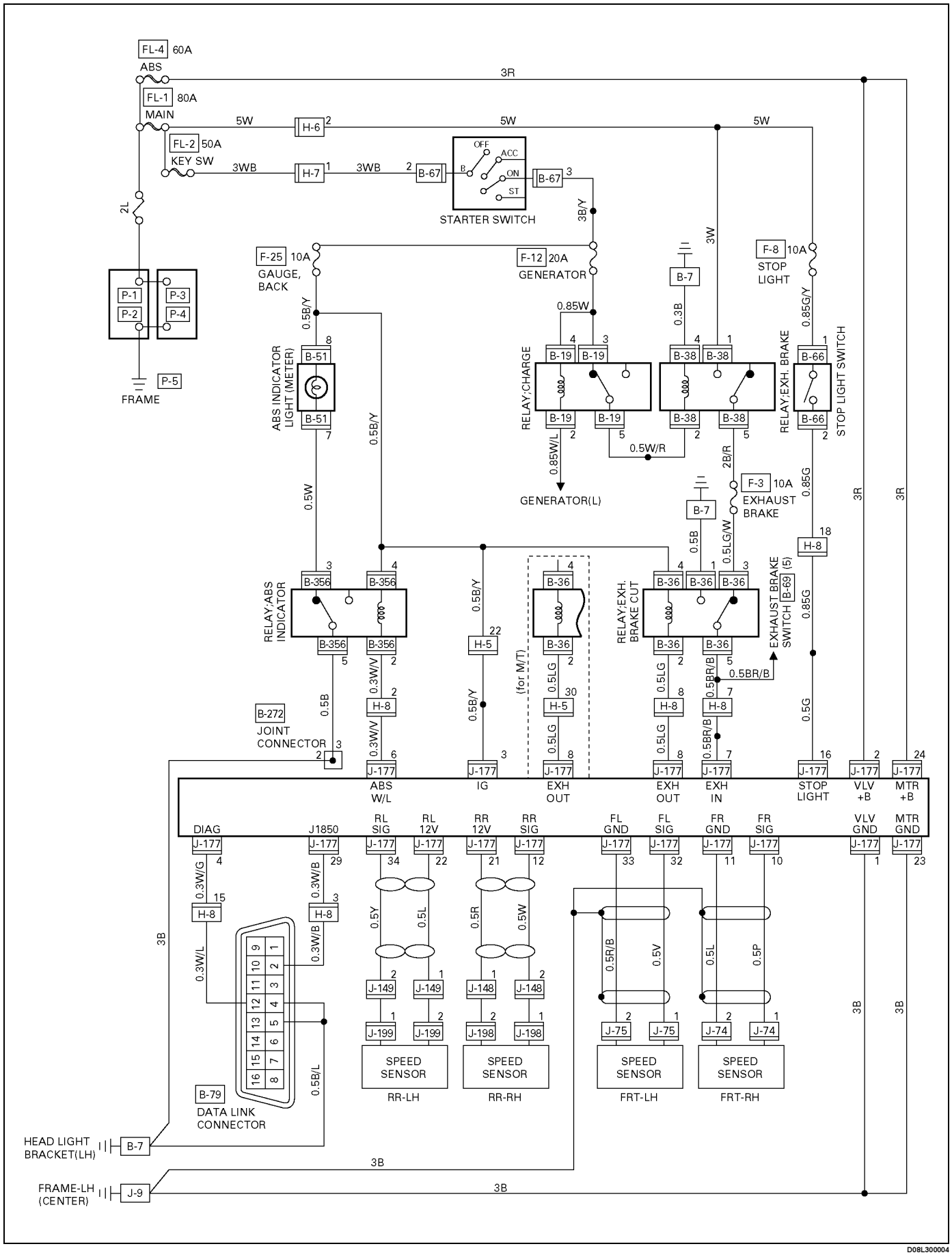

Connector List

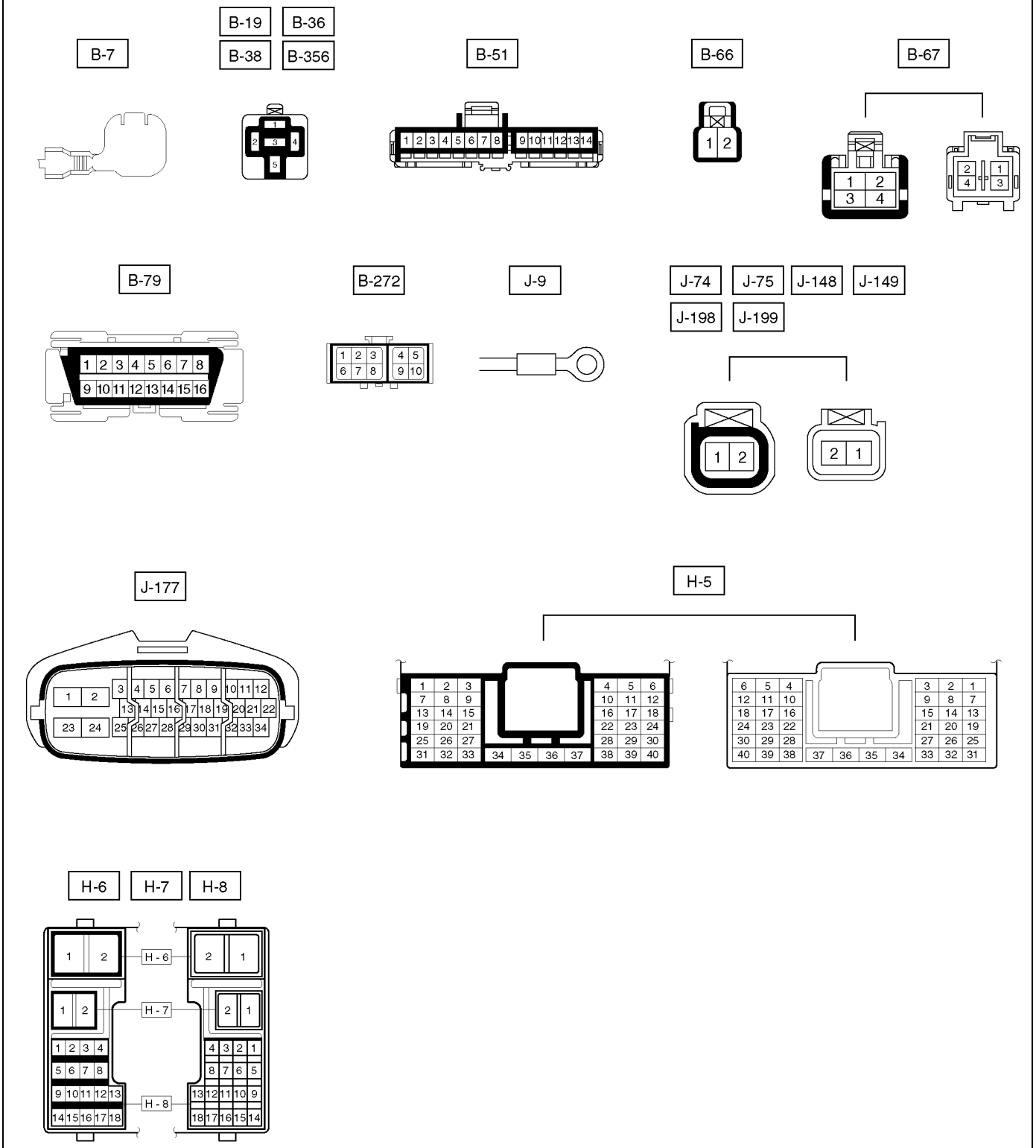

D08LY002-1

Part Location

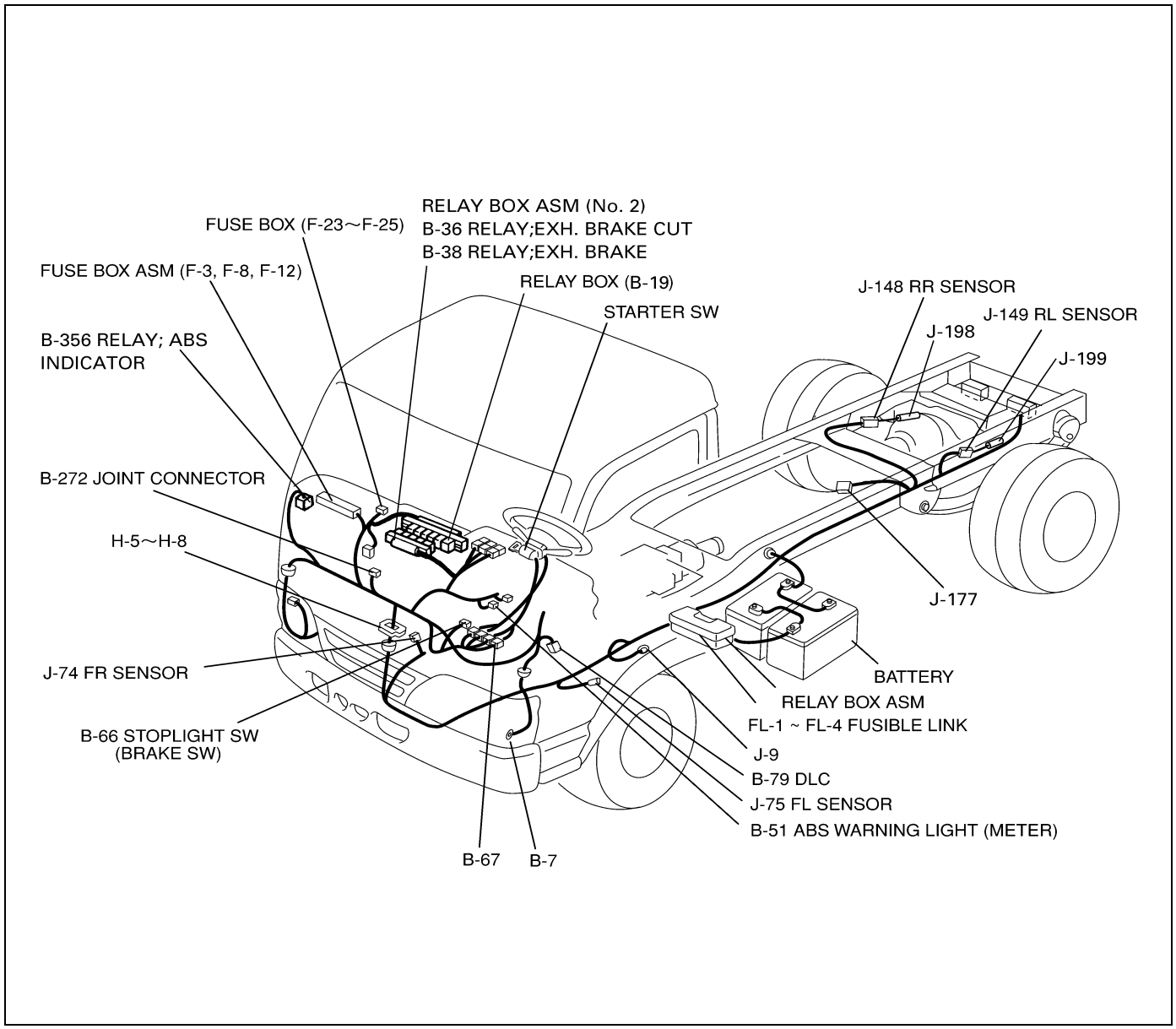

D08L300003

Symptom Diagnosis

The symptoms that cannot be indicated by the warning light can be divided in the following five categories:

1. ABS works frequently but vehicle does not decelerate.
2. Uneven braking occurs while ABS works.
3. The wheels lock during braking.
4. Brake pedal feel is abnormal.
5. Braking sound (from EHCU Unit) is heard while not braking.

These are all attributable to problems which cannot be detected by EHCU self-diagnosis. Use the customer complaint and a test to determine which symptom is present. Then follow the appropriate flow chart listed below.

No.	Symptom	Diagnostic Flow Charts	
		Without TECH 2	With TECH 2
1	ABS works frequently but vehicle does not decelerate.	Chart A–1	Chart TA–1
2	Uneven braking occurs while ABS works.	Chart A–2	Chart TA–2
3	The wheels are locked.	Chart A–3	Chart TA–3
4	Brake pedal feel is abnormal.	Chart A–4	—
5	Braking sound (from Hydraulic Unit) is heard while not braking.	Chart A–5	Chart TA–5

Chart A–1 ABS Works Frequently But Vehicle Does Not Decelerate

Step	Action	Yes	No
1	Is braking force distribution normal between the front and rear of the vehicle?	Go to Step 2	Repair brake parts. Go to Step 6
2	Are axle parts installed normally?	Go to Step 3	Repair axle parts. Go to Step 6
3	Is each wheel speed sensor installed nomally?	Go to Step 4	Repair wheel speed sensor. Go to Step 6
4	Is there damage, or powdered iron sticking to each wheel speed sensor/sensor rotor?	Replace sensor or sensor rotor. Go to Step 6	Go to Step 5
5	Is the output of each wheel speed sensor normal? (Refer to chart C-1 or TC-1)	Replace EHCU. Go to Step 6	Replace wheel speed sensor or repair harness. Go to Step 6
6	Reconnect all components and ensure all components are properly mounted. Was this step finished?	Repeat the “Basic diagnostic flow chart.”	Go to Step 6

Chart TA-1 ABS Works Frequently But Vehicle Does Not Decelerate (Use TECH 2)

Step	Action	Yes	No
1	1. Connect TECH 2. 2. WHEEL SENSORS make sure of the output conditions of each sensor. Is the output of each sensor normal?	Go to Step 2	Replace wheel speed sensor. Go to Step 3
2	Return to Chart A-1. Was the Chart A-1 finished?	Go to Step 3	Go to Step 2
3	Reconnect all components, ensure all components are properly mounted. Was this step finished?	Repeat the “Basic diagnostic flow chart.”	Go to Step 3

Chart A-2 Uneven Braking Occurs While ABS Works

Step	Action	Yes	No
1	Is each speed sensor installed normally?	Go to Step 2	Repair. Go to Step 5
2	Damage or powdered iron sticking to each sensor/sensor rotor?	Repair. Go to Step 5	Go to Step 3
3	Is the output of each sensor normal? (Refer to chart C-1 or TC-1)	Go to Step 4	Replace sensor or repair harness. Go to Step 5
4	Is brake pipe connecting order correct?	Replace EHCU. Go to Step 5	Reconnect brake pipe correctly. Go to Step 5
5	Reconnect all components, ensure all components are properly mounted. Was this step finished?	Repeat the “Basic diagnostic flow chart.”	Go to Step 5

Chart TA-2 Uneven Braking Occurs While ABS Works (Use TECH2)

Step	Action	Yes	No
1	1. Connect TECH 2. 2. WHEEL SENSORS make sure of the output conditions of each sensor. Is the output of each sensor normal?	Go to Step 2	Replace wheel speed sensor. Go to Step 3
2	Return to Chart A-2. Was the Chart A-2 finished?	Go to Step 3	Go to Step 2
3	Reconnect all components, ensure all components are properly mounted. Was this step finished?	Repeat the “Basic diagnostic flow chart.”	Go to Step 3

Chart A-3, TA-3 The Wheels Are Locked

Step	Action	Yes	No
1	Is ABS working?	Go to Step 2	Go to Step 4
2	Is vehicle speed under 10 km/h (6mph)?	Go to Step 3	Normal.
3	Is sensor output normal? (Chart C-1 or TC-1)	Go to Step 4	Replace sensor or repair harness. Go to Step 5
4	Is EHCU grounded properly?	Replace EHCU unit. Go to Step 5	Correct. Go to Step 5
5	Reconnect all components, ensure all components are properly mounted. Was this step finished?	Repeat the “Basic diagnostic flow chart.”	Go to Step 5

Chart A-4 Brake Pedal Feel Is Abnormal

Step	Action	Yes	No
1	Is the stop light actuated when the brake pedal is depressed?	Go to Step 2	Go to Step 3
2	1. Turn the key off. 2. Disconnect EHCU connector. 3. Measure the voltage between EHCU connector J-177 terminals 16 and 23, when brake pedal is depressed. Is the voltage between 9 – 16 V?	Go to Step 4	Harness NG between brake SW and EHCU. Go to Step 7
3	Is stop light fuse F-8 normal?	Go to Step 5	Replace fuse F-8. Go to Step 7
4	Is there continuity between EHCU connector J-177 terminal 23 to body ground?	Go to Step 6	Repair body grounded harness. Go to Step 7
5	Is the brake SW normal?	Repair stop light harness. Go to Step 7	Replace brake SW. Go to Step 7
6	Check the harness/connector for suspended disconnection, Is the harness/connector normal ?	Hydraulic system leakage or air entry(Refer to sec 5A,5A1,5A2and 5A3) Go to Step 7	Repair harness. Go to Step 7
7	Reconnect all components and ensure all components are properly mounted. Was this step finished?	Repeat the “Basic diagnostic flow chart.”	Go to Step 7

Chart A-5,TA-5 Braking Sound (From Hydraulic Unit) Is Heard While Not Braking

Step	Action	Yes	No
1	Is this the first time the vehicle is being driven after starting the engine?	It is self checking sound. Normal.	Go to Step 2
2	Is vehicle speed under 10 km/h (6 mph)?	It is self checking sound. Normal.	Go to Step 3
3	Check for the following condition: • At the time of shift down or clutch operation. • At the time of low μ drive (ice or snow road) or rough road drive. • At the time of high-speed turn. • At the time of passing curb. • At the time of operating electrical equipment switches. • At the time of racing the engine. Did it occur under any one condition above?	ABS may sometimes be actuated even when brake pedal is not applied.	Go to Step 4
4	Is the operation in each sensor/wheel speed sensor rotor normal?	Go to Step 5	Repair. Go to Step 7
5	Damage or powdered iron sticking to each sensor/wheel speed sensor rotor?	Repair. Go to Step 7	Go to Step 6
6	Is each sensor output normal? (Refer to chart C-1 or TC-1).	Check harness/ connector for suspected disconnection. If no disconnection is found, replace EHCU. Go to Step 7	Repair. Go to Step 7
7	Reconnect all components, ensure all components are properly mounted. Was this step finished?	Repeat the “Basic diagnostic flow chart.”	Go to Step 7

Diagnostic Trouble Codes

Choose and trace an appropriate flowchart by the numbers listed below to find fault and repair.

Code		Diagnosis	Chart No.
Flash out	Serial Communications		
12	—	Normal	—
14	71	CPU Abnormality	B-2
15	77	ECU Power Voltage Abnormality	B-3
25	99	Exhaust Brake Cut Relay Abnormality	B-4
33	67	Motor Relay Abnormality	B-5
34	68	Abnormal Motor Rotaiton	B-6
41	65	Solenoid Valve Relay Abnomality	B-7
43	41	Abnormal Solenoid Valve Power Line	B-8
45	42	Open/Shorted Solenoid Valve Circuit	B-9
51	25	Open/Shorted FL Speed Sensor Circuit	B-10
52	21	Open/Shorted FR Speed Sensor Circuit	B-11
53	35	Open/Shorted RL Speed Sensor Circuit	B-12
54	31	Open/Shorted RR Speed Sensor Circuit	B-13
61	26	Abnormal FL Speed Sensor Signal	B-14
62	22	Abnormal FR Speed Sensor Signal	B-15
63	36	Abnormal RL Speed Sensor Signal	B-16
64	32	Abnormal RR Speed Sensor Signal	B-17

Diagnosis By “ABS” Warning Light Illumination Pattern

In the event that there is abnormality in the “ABS” warning light illumination pattern while the key is in the ON position or if the warning light is actuated during driving, trouble should be diagnosed on a illumination pattern basis as follows:

No.	Condition	“ABS" Warning Light Illumination Pattern	Diagnostic
1	Warning light is actuated normally	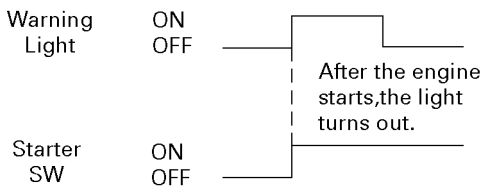	Normal
2	Warning light is not lit	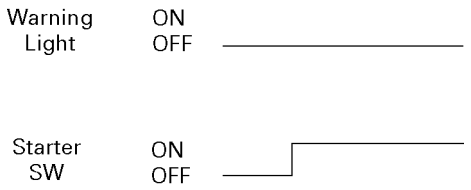	Warning light lighting circuit trouble→Go to Chart B-1-1
3	Warning light is lit constantly	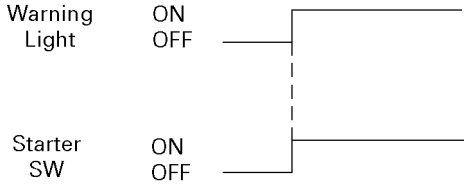	Diagnostic trouble codes are stored. Display diagnostic trouble codes and diagnose on a code basis according to the flow charts.
4	Warning light is actuated while driving	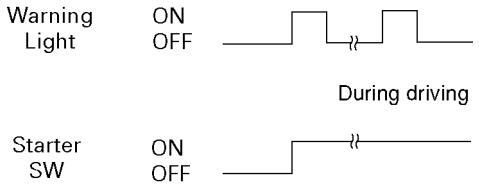	Diagnostic trouble codes are stored. Display diagnostic trouble codes and diagnose on a code basis according to the flow charts.
5	After key switch turns ON, Warning light is blinking, and it is lit when driving.	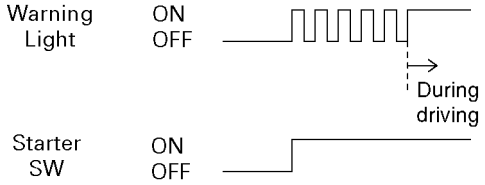	Diagnostic circuit trouble→Go to Chart B-1-2

Diagnostic Trouble Codes (DTCs)

When the warning light in the meter remains ON, the EHCU stores the fault identification and disables the ABS.

1. How to start DTC display:
   - Confirm that the vehicle has come to a stop. (less than 3.3km/h (2mph)) Short the data link connector B-79 terminal 12 to connector B-79 terminal 4 or 5 (GND). When key switch is turned ON, ABS warning light blinks and shows diagnostic Trouble codes.
   - DTCs can be displayed also by TECH 2.

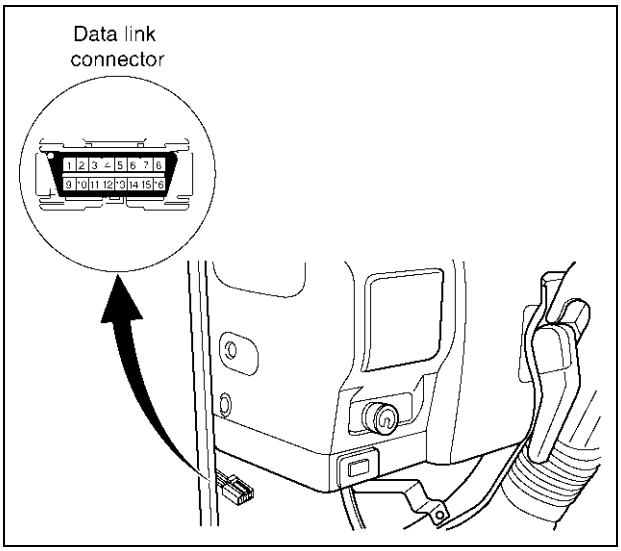

826LY003

2. DTC display:
   - DTC is displayed by blinking warning light.
   - Double-digit display.
   - First, normal DTC 12 is displayed three times and then any other DTCs are displayed three times. (If no other DTCs have been stored, the display of DTC 12 will be repeated.)
3. How to erase code:
   - Even if the failure was repaired, the code cannot be erased.
   - Conduct brake switch ON/OFF operation 6 or more times within 3 seconds of self-diagnosis startup.
   - The code cannot be erased if more than 3 seconds have passed since self-diagnosis startup, or if self-diagnosis has started with brake switched on (brake pedal depressed).
   - DTCs can be erased also by Tech 2.

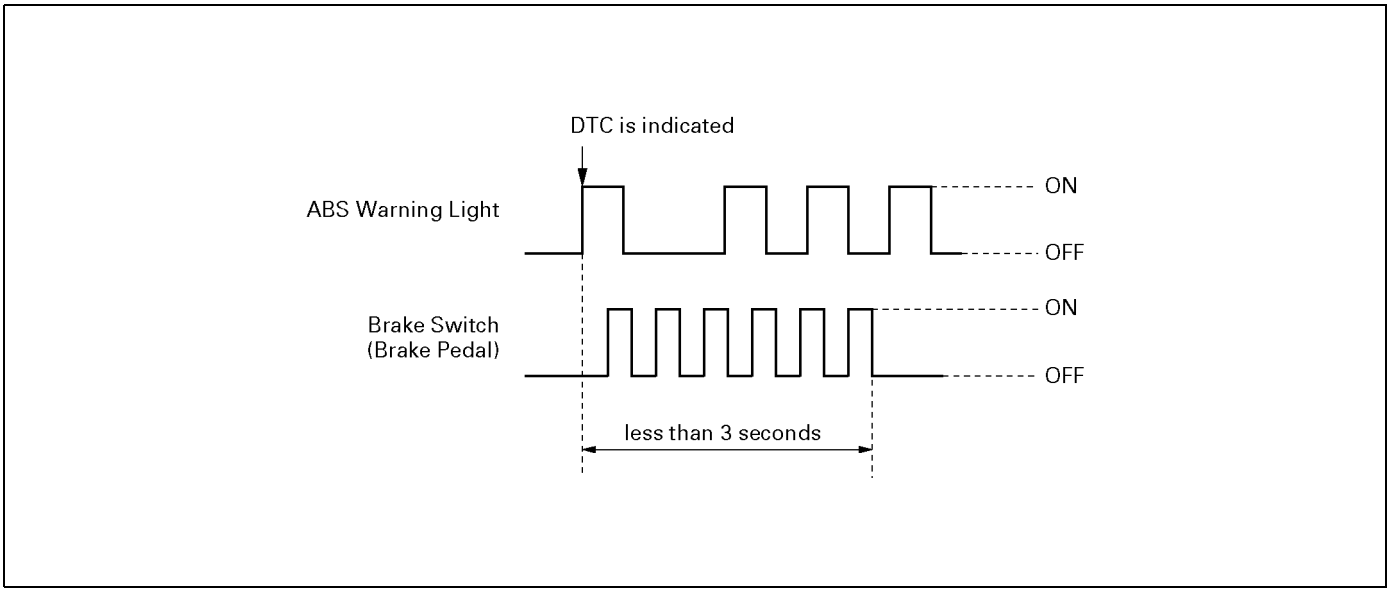

B05L300006

4. An example of DTC display
   Display of DTC 23

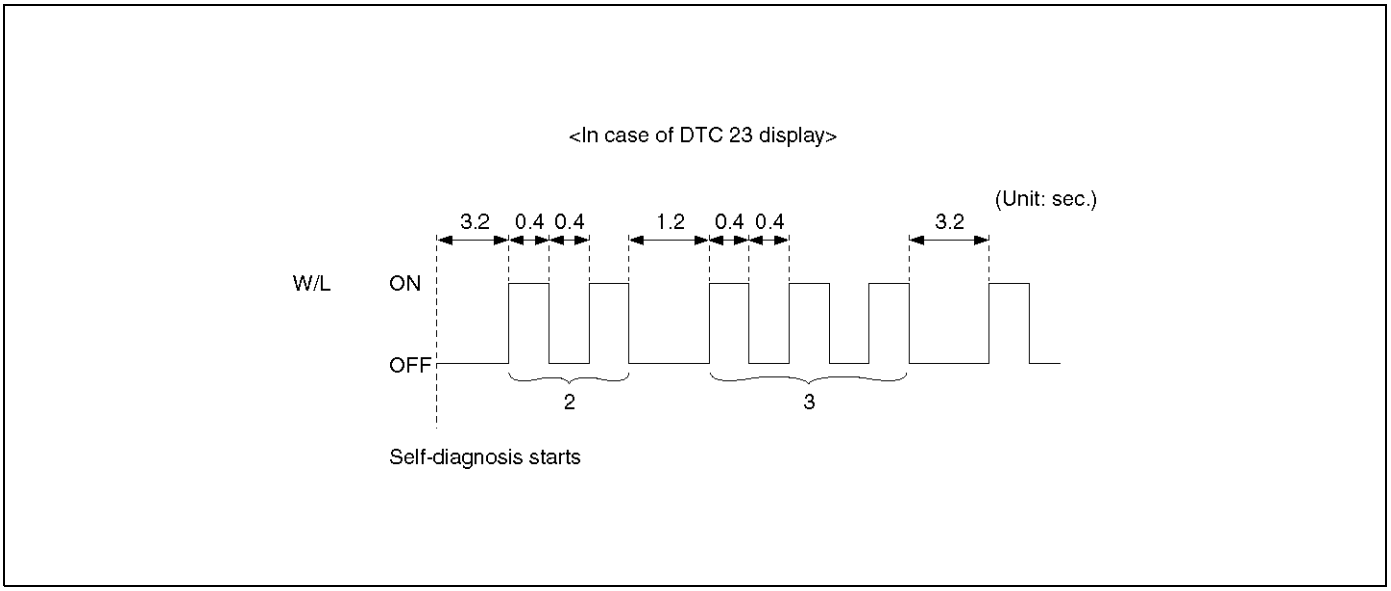

B05RW006-1

After displaying DTC 12 three times, one DTC after another is displayed, starting with the most recent one. A max of six DTC's are stored.

The DTC 12 is displayed repeatedly.

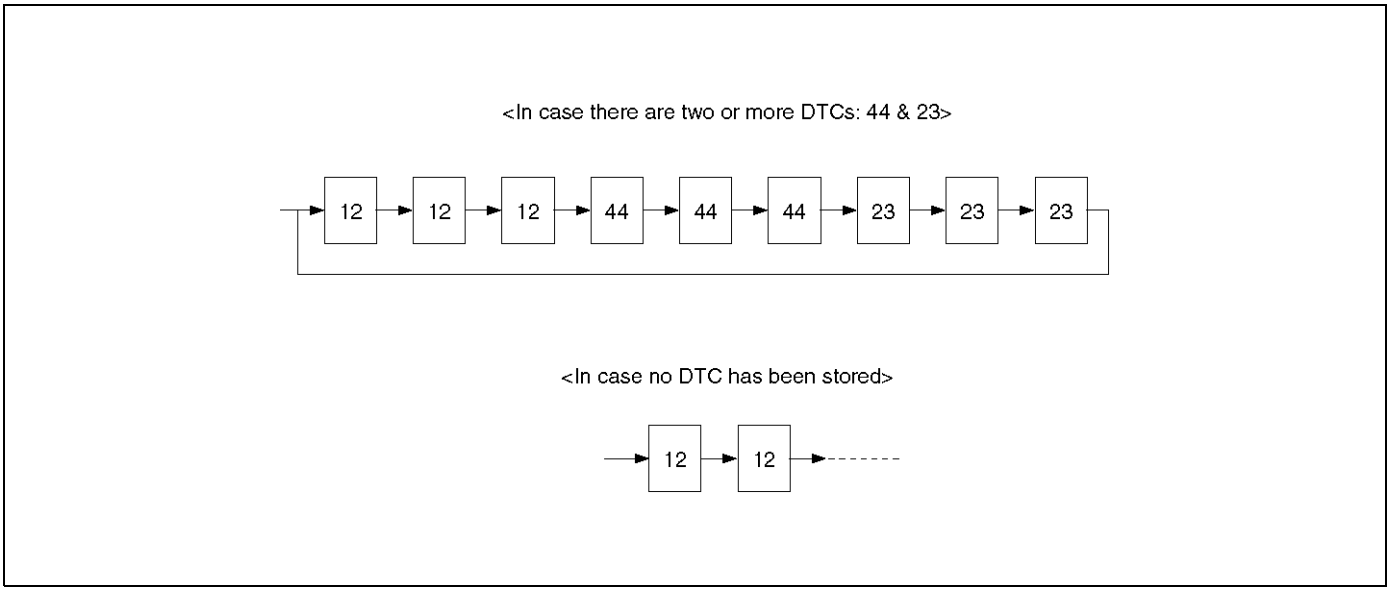

B05RS005-1

Chart B-1-1 With the key in the ON position(Before starting the engine). Warning light(W/L) is not activated.

Step	Action	Value(s)	Yes	No
1	Was W/L fuse F-25 blown?	—	Go to Step 5	Go to Step 2
2	Is W/L burnt out?	—	Go to Step 6	Go to Step 3
3	1. Turn the key off. 2. Disconnect EHCU connector. 3. Turn the key on. 4. Using DVM, measure the voltage between connector B-51 terminal 8 and EHCU connector J-177 terminal 1 or 23. Does the DVM display a voltage within the specified value?	9 – 16V	Go to Step 4	Go to Step 7
4	Check the continuity between EHCU connector J-177 terminals 1 and 23, and body ground. Is there continuity?	—	Go to Step 9	Go to Step 8
5	Replace the fuse. Is action complete?	—	Go to Step 10	—
6	Replace the W/L bulb. Is action complete?	—	Go to Step 10	—
7	Locate and repair open circuit, poor connection or short circuit in the ignition feed circuit. Is action complete?	—	Go to Step 10	—
8	Locate and repair open circuit, poor connection or short circuit in the ground circuit. Is action complete?	—	Go to Step 10	—
9	1. Check the harness for suspected disconnection. 2. If no fault found, replace the EHCU. Is action complete?	—	Go to Step 10	—
10	1. Reconnect all components, ensure all components are properly mounted. 2. Clear diagnostic trouble code. Was this step finished?	—	Go to “Basic diagnostic flow chart.”	—

Chart B-1-2 With the key in the ON position(Before starting the engine). Warning light(W/L) is blinking.

Step	Action	Value(s)	Yes	No
1	Does the Data Link Connector connect with any circuit?	—	Go to Step 2	Go to Step 3
2	Disconnect the circuit?	—	Go to Step 7	Go to Step 2
3	1. Turn the key off. 2. Disconnect EHCU connector. Is there continuity between the connector J-177 terminal 4 and J-177 terminals 1 and 23?	—	Go to Step 4	Go to Step 5
4	Repair the circuit between B-79 terminal 12 and J-177 terminal 4.	—	Go to Step 7	Go to Step 4
5	Are there other abnormal conditions?	—	Check according to the Chart of the condition.	Go to Step 6
6	Replace the EHCU.	—	Go to Step 7	Go to Step 6
7	1. Reconnect all components, ensure all components are properly mounted. 2. Clear diagnostic trouble code. Was this step finished?	—	Go to “Basic diagnostic flow chart.”	Go to Step 7

Chart B-2 (DTC 14 / 71) CPU Abnormality

Step	Action	Value(s)	Yes	No
1	Carry out the Chart B-13 and B-14.	—	Go to Step 2	Go to Step 1
2	1. Turn the key off. 2. Disconnect EHCU connector J-177. 3. Check the continuity between EHCU connector J-177 terminals 1 and 23, and body ground. Is there continuity?	—	Go to Step 3	Go to Step 4
3	1. Turn the key off and connect EHCU connector. 2. Erase the trouble code. 3. Turn the key off, then on, to perform system self-check. Does the trouble repeat?	—	Go to Step 5	Go to Step 6
4	Locate and repair open circuit, poor connection or short circuit in the ground circuit. Is action complete?	—	Go to Step 6	—
5	Replace the EHCU. Is action complete?	—	Go to Step 6	—
6	1. Reconnect all components, ensure all components are properly mounted. 2. Clear diagnostic trouble code. Was this step finished?	—	Go to “Basic diagnostic flow chart.”	Go to Step 6

Chart B-3 (DTC 15 / 77) Power Voltage Abnormality

Step	Action	Value(s)	Yes	No
1	Is the baterry boltage normal? (Battery capacity check)	—	Go to Step 2	Go to Step 5
2	1. Turn the key off. 2. Disconnect EHCUconnector J-177. 3. Start the engine. 4. Check the voltage between EHCU connector J-177 terminal 2 and connector J-177 terminals 1 and 23. Is the voltage within the specified value?	10 – 16V	Go to Step 3	Go to Step 6
3	Check the harness for suspected disconnection. Does fault found?	—	Go to Step 4	Go to Step 8
4	Repair and perform system self-check. Does the trouble repeat?	—	Go to Step 7	Go to Step 8
5	Charge or replace the battery. Is action complete?	—	Go to Step 8	—
6	Locate and repair open circuit, poor connection or short circuit between connector J-177 Terminal 2 and the slow blow fuse FL-4. Is action complete?	—	Go to Step 8	—
7	Replace the EHCU. Is action complete?	—	Go to Step 8	—
8	1. Reconnect all components, ensure all components are properly mounted. 2. Clear diagnostic trouble code. Was this step finished?	—	Go to “Basic diagnostic flow chart.”	Go to Step 8

Chart B-4 (DTC 25 / 99) Exhaust Brake Cut Relay Abnormality

Step	Action	Value(s)	Yes	No
1	1. Turn off the exhaust brake switch and engine warning switch. 2. Turn the key off. 3. Disconnect EHCU connectors. 4. Start the engine. 5. Using DVM, measure the voltage between EHCU connector J-177 terminal 7 and connector J-177 terminals 1 and 23. Does the DVM display a voltage within the specified value?	9.5 – 16.5V	Go to Step 2	Go to Step 4
2	Using DVM, measure the resistance between EHCU connector J-177 terminal 8 and connector J-177 terminals 1and 23. Does the DVM display a resistance within the specified value?	60 – 120 ohms	Go to Step 3	Go to Step 6
3	1. Connect the connector J-177 terminal 8 with ground. 2. Using DVM, measure the voltage between EHCU connector J-177 terminal 7 and connector J-177 terminals 1 and 23. Does the DVM display a voltage within the specified value?	0 – 0.3V	Go to Step 11	Go to Step 7
4	1. Stop the engine and turn the key off. 2. Remove the exhaust brake cut relay . 3. Check the continuity between relay connector B-36 terminals 3 and 5 (relay side). Is there continuity?	—	Go to Step 5	Go to Step 7
5	1. Start the engine . 2. Using DVM, measure the voltage between relay connector B-36 terminal 4 and connector J-177 terminals 1 and 23.(harness side) Does the DVM display a voltage within the specified value?	9.5 – 16.5V	Go to Step 9	Go to Step 10
6	1. Stop the engine and turn the key off. 2. Remove the exhaust brake cut relay . 3. Using DVM, measure the resistance between relay connector B-36 terminals 2 and 4 (relay side). Does the DVM display a resistance within the specified value?	60 – 120 ohms	Go to Step 8	Go to Step 7
7	Replace the exhaust brake cut relay. Is action complete?	—	Go to Step 12	Go to Step 7
8	Repair the power circuit of exhaust brake cut relay between connector B-36 terminal 4 and connector B-67 Terminal 3. Is the step finished?	—	Go to Step 12	Go to Step 8
9	Locate and repair open circuit, poor connection or short circuit between conector J-177 treminal 7 and connector B-36 terminal 5. Is action complete?	—	Go to Step 12	Go to Step 9

Step	Action	Value(s)	Yes	No
10	Locate and repair open circuit, poor connection or short circuit between connector B-36 terminal 3 and fuse :exhaust brake F-3. Is action complete?	—	Go to Step 12	Go to Step 10
11	Replace EHCU.	—	Go to Step 12	Go to Step 11
12	1. Reconnect all components, ensure all components are properly mounted. 2. Clear diagnostic trouble code. Was this step finished?	—	Go to “Basic diagnostic flow chart.”	Go to Step 12

Chart B-5 (DTC 33 / 67) Motor Relay Abnormality

Step	Action	Value(s)	Yes	No
1	1. Turn the key off. 2. Disconnect EHCU connector. 3. Turn the key on. 4. Using DVM, measure the voltage between connector J-177 terminal 24 and connector J-177 terminals 1 and 23. Does the DVM display a voltage within the specified value?	10 – 16V	Go to Step 5	Go to Step 2
2	1. Locate open circuit or short circuit on the harness between connector J-177 terminal 24 and slow blow fuse FL-4. 2. Repair the harness or replace slow blow fuse FL-4. Is action complete?	—	Go to Step 3	Go to Step 2
3	1. Using DVM, measure the voltage between connetor J-177 terminals 24 and 23. Does the DVM display a voltage within the specified valve?	10 – 16V	Go to Step 6	Go to Step 4
4	1. Repair the circuit between connector J-177 and GND. Is action complete?	—	Go to Step 6	Go to Step 4
5	Replace EHCU. Is action complete?	—	Go to Step 6	Go to Step 5
6	1. Reconnect all components, ensure all components are properly mounted. 2. Clear diagnostic trouble code. Was this step finished?	—	Go to “Basic diagnostic flow chart.”	Go to Step 6

Chart B-6 (DTC 34 / 68) Abnormal Motor Rotation

Step	Action	Value(s)	Yes	No
1	Replace the EHCU. Is action complete?	—	Go to Step 2	Go to Step 1
2	1. Reconnect all components, ensure all components are properly mounted. 2. Clear diagnostic trouble code. 3. Carry out test driving. Was this step finished?	—	Go to “Basic diagnostic flow chart.”	Go to Step 2

Chart B-7 (DTC 41 / 65) Solenoid Valve Relay Abnormality

Step	Action	Value(s)	Yes	No
1	1. Turn the key off. 2. Disconnect EHCU connectors. 3. Trun the key on. 4. Using DVM, measure the voltage between connector J-177 terminals 2 and 1. Does the DVM display a voltage within the specified value?	9.5 – 16.5V	Go to Step 6	Go to Step 2
2	1. Locate open circuit or short circuit to ground line on the harness between connector J-177 terminal 2 and slow blow fuse FL-4. 2. Repair the harness. Is action complete?	—	Go to Step 3	Go to Step 2
3	1. Using the DVM, measure the voltage between connector J-177 terminals 2 and 1. Does the DVM display a voltage within the specified value?	9.5 – 16.5V	Go to Step 7	Go to Step 4
4	1. Check for an open or a poor connection between connector J-177 terminal 1 and GND. 2. If a problem is found, repair as necessary. Is action complete?	—	Go to Step 5	Go to Step 4
5	1. Using the DVM, measure the voltage between connector J-177 terminals 2 and 1. Does the DVM display a voltage within the specified value?	9.5 – 16.5V	Go to Step 7	Go to Step 5
6	Replace EHCU. Is action complete?	—	Go to Step 7	Go to Step 6
7	1. Reconnect all components, ensure all components are properly mounted. 2. Clear diagnostic trouble code. Was this step finished?	—	Go to “Basic diagnostic flow chart.”	Go to Step 7

Chart B-8 (DTC 43 / 41) Abnormal Solenoid Valve Power Line

Step	Action	Value(s)	Yes	No
1	Replace EHCU. Is action complete?	—	Go to Step 2	Go to Step 1
2	1. Reconnect all components, ensure all components are properly mounted. 2. Clear diagnostic trouble code. 3. Carry out test driving. Was this step finished?	—	Go to “Basic diagnostic flow chart.”	Go to Step 2

Chart B-9 (DTC 45 / 42) Open/Shorted Solenoid Valve Circuit

Step	Action	Value(s)	Yes	No
1	Replace EHCU. Is action complete?	—	Go to Step 2	Go to Step 1
2	1. Reconnect all components, ensure all components are properly mounted. 2. Clear diagnostic trouble code. 3. Carry out test driving. Was this step finished?	—	Go to “Basic diagnostic flow chart.”	Go to Step 2

Chart B-10 (DTC 51 / 25) Open/Shorted FL Speed Sensor Circuit

Step	Action	Value(s)	Yes	No
1	1. Turn the key off. 2. Disconnect EHCU connector. 3. Using DVM, measure the resistance between connector J-177 terminals 32and 33. Does the DVM display a resistance within the specified value?	1 – 2 k ohms	Go to Step 2	Go to Step 3
2	Using DVM, measure the resistance between connector J-177 terminal 32 and ground. Does the DVM display a resistance within the specified value?	1000 k ohms or more	Go to Step 7	Go to Step 4
3	1. Disconnect FL sensor connector J-75. 2. Using DVM, measure the resistance between J-75 sensor connector terminals 1 and 2.(sensor side) Does the DVM display a resistance within the specified value?	1 – 2 k ohms	Go to Step 5	Go to Step 6
4	1. Disconnect FL sensor connector. 2. Using DVM, measure the resistance between J-75 sensor connector terminal 1 and ground.(sensor side) Does the DVM display a resistance within the specified value?	1000 k ohms or more	Go to Step 5	Go to Step 6
5	1. Locate open circuit, poor connection or short circuit on the harness between connector J-177 terminal 32 and connector J-75 terminal 1, and connector J-177 terminal 33 and connector J-75 terminal 2. 2. Repair the harness. Is action complete?	—	Go to Step 8	Go to Step 5
6	Replace FL speed sensor. Is action complete?	—	Go to Step 8	Go to Step 6
7	Replace EHCU. Is action complete?	—	Go to Step 8	Go to Step 7
8	1. Reconnect all components, ensure all components are properly mounted. 2. Clear diagnostic trouble code. Was this step finished?	—	Go to “Basic diagnostic flow chart.”	Go to Step 8

Chart B-11 (DTC 52 / 21) Open/Shorted FR Speed Sensor Circuit

Step	Action	Value(s)	Yes	No
1	1. Turn the key off. 2. Disconnect EBCM connectors. 3. Using DVM, measure the resistance between connector J-177 terminal 10 and 11. Does the DVM display a resistance within the specified value?	1 – 2 k ohms	Go to Step 2	Go to Step 3
2	Using DVM, measure the resistance between connector J-177 terminal 10 and ground. Does the DVM display a resistance within the specified value?	1000 k ohms or more	Go to Step 7	Go to Step 4
3	1. Disconnect FR sensor connector J-74. 2. Using DVM, measure the resistance between J-74 sensor connector terminals 1 and 2.(sensor side) Does the DVM display a resistance within the specified value?	1 – 2 k ohms	Go to Step 5	Go to Step 6
4	1. Disconnect FR sensor connector. 2. Using DVM, measure the resistance between J-74 sensor connector terminal 1 and ground.(sensor side) Does the DVM display a resistance within the specified value?	1000 k ohms or more	Go to Step 5	Go to Step 6
5	1. Locate open circuit, poor connection or short circuit on the harness between connector J-177 terminal 10 and connector J-74 terminal 1, and connector J-177 terminal 11 and connector J-74 terminal 2. 2. Repair the harness. Is action complete?	—	Go to Step 8	Go to Step 5
6	Replace FR speed sensor. Is action complete?	—	Go to Step 8	Go to Step 6
7	Replace EHCU. Is action complete?	—	Go to Step 8	Go to Step 7
8	1. Reconnect all components, ensure all components are properly mounted. 2. Clear diagnostic trouble code. Was this step finished?	—	Go to “Basic diagnostic flow chart.”	Go to Step 8

Chart B-12 (DTC 53 / 35) Open/Shorted RL Speed Sensor Circuit

Step	Action	Value(s)	Yes	No
1	1. Turn the key off. 2. Disconnect EHCU connector J-177 and RL speed sensor connector J-199. 3. Check the continuity between connector J-177 terminal 34 and sensor connector J-199 terminal 1. Is there continuity?	—	Go to Step 2	Go to Step 7
2	1. Check the continuity between connector J-177 terminal 34 and connector J-177 terminal 1. Is there continuity?	—	Go to Step 7	Go to Step 3
3	1. Check the continuity between connector J-177 terminal 22 and sensor connector J-199 terminal 2. Is there continuity?	—	Go to Step 4	Go to Step 7
4	1. Check the continuity between connector J-177 terminal 22 and connector J-177 terminal 1. Is there continuity?	—	Go to Step 7	Go to Step 5
5	1. Connect the connector J-177 with EHCU. 2. Turn the key on. 3. Using DVM, measure the voltage between connector J-199 terminal 2 (vehicle side) and ground. Does the DVM display a voltage within the specified value?	9 – 16V	Go to Step 6	Go to Step 7
6	Check the RL sensor output. (Refer to Chart C-1-3) Is the DTC repeated?	—	Go to Step 8	Go to Step 9
7	1. Locate open circuit, poor connection or short circuit on the harness between connector J-177 terminal 34 and connector J-199 terminal 1, and connector J-177 terminal 22 and connector J-199 terminal 2. 2. Repair the harness. Is action complete?	—	Go to Step 9	Go to Step 7
8	Replace EHCU. Is action complete?	—	Go to Step 9	Go to Step 8
9	1. Reconnect all components, ensure all components are properly mounted. 2. Clear diagnostic trouble code. Was this step finished?	—	Go to “Basic diagnostic flow chart.”	Go to Step 9

Chart B-13 (DTC 54 / 31) Open/Shorted RR Speed Sensor Circuit

Step	Action	Value(s)	Yes	No
1	1. Turn the key off. 2. Disconnect EHCU connector J-177 and RL speed sensor connector J-198. 3. Check the continuity between connector J-177 terminal 12 and sensor connector J-198 terminal 1. Is there continuity?	—	Go to Step 2	Go to Step 7
2	1. Check the continuity between connector J-177 terminal 12 and connector J-177 terminal 1. Is there continuity?	—	Go to Step 7	Go to Step 3
3	1. Check the continuity between connector J-177 terminal 21 and sensor connector J-198 terminal 2. Is there continuity?	—	Go to Step 4	Go to Step 7
4	1. Check the continuity between connector J-177 terminal 21 and connector J-177 terminal 1. Is there continuity?	—	Go to Step 7	Go to Step 5
5	1. Connect the connector J-177 with EHCU. 2. Turn the key on. 3. Using DVM, measure the voltage between connector J-198 terminal 2 (vehicle side) and ground. Does the DVM display a voltage within the specified value?	9 – 16V	Go to Step 6	Go to Step 7
6	Check the RL sensor output. (Refer to Chart C-1-4) Is the DTC repeated?	—	Go to Step 8	Go to Step 9
7	1. Locate open circuit, poor connection or short circuit on the harness between connector J-177 terminal 12 and connector J-198 terminal 1, and connector J-177 terminal 21 and connector J-198 terminal 2. 2. Repair the harness. Is action complete?	—	Go to Step 9	Go to Step 7
8	Replace EHCU. Is action complete?	—	Go to Step 9	Go to Step 8
9	1. Reconnect all components, ensure all components are properly mounted. 2. Clear diagnostic trouble code. Was this step finished?	—	Go to “Basic diagnostic flow chart.”	Go to Step 9

Chart B-14 (DTC 61/ 26) Abnormal FL Speed Sensor Signal

Step	Action	Value(s)	Yes	No
1	Is there play in the FL wheel bearing?	—	Go to Step 10	Go to Step 2
2	Is there play in the FL speed sensor/sensor rotor?	—	Go to Step 11	Go to Step 3
3	Is there powdered iron sticking to FL speed sensor/ sensor rotor?	—	Go to Step 12	Go to Step 4
4	Check the FL speed sensor. (Refer to Chart C-1-1 or TC-1) Is the FL sensor output normal?	—	Go to Step 5	Go to Step 8
5	Is there a broken tooth or indentation in the sensor rotor?	—	Go to Step 13	Go to Step 6
6	Using DVM, measure the resistance between connector J-177 terminal 33 and ground. Does the DVM display a resistance within the specified value?	1000 k ohms or more	Go to Step 7	Go to Step 9
7	1. Clear diagnostic trouble code. 2. Test drive and perform system self-check. Does repeat trouble?	—	Go to Step 18	Go to Step 16
8	Is there damage or indentation in the speed sensor?	—	Go to Step 14	Go to Step 15
9	1. Disconnect FL sensor connector J-75. 2. Using DVM, measure the resistance between sensor connector J-75 terminal 2 (sensor side) and ground. Does the DVM display a resistance within the specified value?	1000 k ohms or more	Go to Step 17	Go to Step 14
10	Adjust wheel bearing preload. Is action complete?	—	Go to Step 19	Go to Step 10
11	Repair or replace speed sensor/sensor rotor. Is action complete?	—	Go to Step 19	Go to Step 11
12	Repair speed sensor/sensor rotor. Is action complete?	—	Go to Step 19	Go to Step 12
13	Replace sensor rotor. Is action complete?	—	Go to Step 19	Go to Step 13
14	Replace FL speed sensor. Is action complete?	—	Go to Step 19	Go to Step 14
15	Check the FL speed sensor circuit. (Refer to Chart B-10.) Is action complete?	—	Verify repair	Go to Step 15
16	Check for a poor connection and an open circuit on the harness between connector J-177 terminal 33 and connector J-75 terminal 2, and connector J-177 terminal 32 and connector J-75 terminal 1. Refer to “Note on Intermittents” described in earlier this section. Is action complete?	—	Go to Step 19	Go to Step 16
17	1. Locate open circuit, poor connection or short circuit on the harness between connector J-177 terminal 33 and connector J-75 terminal 2, and connector J-177 terminal 32 and connector J-75 terminal 1. 2. Repair the harness. Is action complete?	—	Go to Step 19	Go to Step 17

Step	Action	Value(s)	Yes	No
18	Replace EHCU. Is action complete?	—	Go to Step 19	Go to Step 18
19	1. Reconnect all components, ensure all components are properly mounted. 2. Clear diagnostic trouble code. Was this step finished?	—	Go to “Basic diagnostic flow chart.”	Go to Step 19

Chart B-15 (DTC 62/ 22) Abnormal FR Speed Sensor Signal

Step	Action	Value(s)	Yes	No
1	Is there play in the FR wheel bearing?	—	Go to Step 10	Go to Step 2
2	Is there play in the FR speed sensor/sensor rotor?	—	Go to Step 11	Go to Step 3
3	Is there powdered iron sticking to FR speed sensor/ sensor rotor?	—	Go to Step 12	Go to Step 4
4	Check the FR speed sensor. (Refer to Chart C-1-2 or TC-1) Is the FR sensor output normal?	—	Go to Step 5	Go to Step 8
5	Is there a broken tooth or indentation in the sensor rotor?	—	Go to Step 13	Go to Step 6
6	Using DVM, measure the resistance between connector J-177 terminal 11 and ground. Does the DVM display a resistance within the specified value?	1000 k ohms or more	Go to Step 7	Go to Step 9
7	1. Clear diagnostic trouble code. 2. Test drive and perform system self-check. Does repeat trouble?	—	Go to Step 18	Go to Step 16
8	Is there damage or indentation in the speed sensor?	—	Go to Step 14	Go to Step 15
9	1. Disconnect FR sensor connector J-74. 2. Using DVM, measure the resistance between sensor connector J-74 terminal 2 (sensor side) and ground. Does the DVM display a resistance within the specified value?	1000 k ohms or more	Go to Step 17	Go to Step 14
10	Adjust wheel bearing preload. Is action complete?	—	Go to Step 19	Go to Step 10
11	Repair or replace speed sensor/sensor rotor. Is action complete?	—	Go to Step 19	Go to Step 11
12	Repair speed sensor/sensor rotor. Is action complete?	—	Go to Step 19	Go to Step 12
13	Replace sensor rotor. Is action complete?	—	Go to Step 19	Go to Step 13
14	Replace FR speed sensor. Is action complete?	—	Go to Step 19	Go to Step 14
15	Check the FR speed sensor circuit. (Refer to Chart B-11.) Is action complete?	—	Verify repair	Go to Step 15
16	Check for a poor connection and an open circuit on the harness between connector J-177 terminal 11and connector J-74 terminal 2, and connector J-177 terminal 10 and connector J-74 terminal 1. Refer to “Note on Intermittents” described in earlier this section. Is action complete?	—	Go to Step 19	Go to Step 16
17	1. Locate open circuit, poor connection or short circuit on the harness between connector J-177 terminal 11 and connector J-74 terminal 2, and connector J-177 terminal 10 and connector J-74 terminal 1. 2. Repair the harness. Is action complete?	—	Go to Step 19	Go to Step 17

Step	Action	Value(s)	Yes	No
18	Replace EHCU. Is action complete?	—	Go to Step 19	Go to Step 18
19	1. Reconnect all components, ensure all components are properly mounted. 2. Clear diagnostic trouble code. Was this step finished?	—	Go to “Basic diagnostic flow chart.”	Go to Step 19

Chart B-16 (DTC 63/ 36) Abnormal RL Speed Sensor Signal

Step	Action	Value(s)	Yes	No
1	Is there play in the RL wheel bearing?	—	Go to Step 8	Go to Step 2
2	Is there play in the RL speed sensor/sensor rotor?	—	Go to Step 9	Go to Step 3
3	Is there powdered iron sticking to RL speed sensor/ sensor rotor?	—	Go to Step 10	Go to Step 4
4	Check the RL speed sensor. (Refer to Chart C-1-3 or TC-1) Is the RL sensor output normal?	—	Go to Step 5	Go to Step 7
5	Is there a broken tooth or indentation in the sensor rotor?	—	Go to Step 11	Go to Step 6
6	1. Clear diagnostic trouble code. 2. Test drive and perform system self-check. Does repeat trouble?	—	Go to Step 15	Go to Step 14
7	Is there damage or indentation in the speed sensor?	—	Go to Step 12	Go to Step 13
8	Adjust wheel bearing preload. Is action complete?	—	Go to Step 16	Go to Step 8
9	Repair or replace speed sensor/sensor rotor. Is action complete?	—	Go to Step 16	Go to Step 9
10	Repair speed sensor/sensor rotor. Is action complete?	—	Go to Step 16	Go to Step 10
11	Replace sensor rotor. Is action complete?	—	Go to Step 16	Go to Step 11
12	Replace RL speed sensor. Is action complete?	—	Go to Step 16	Go to Step 12
13	Check the RL speed sensor circuit. Refer to Chart B-12. Is action complete?	—	Verify repair	Go to Step 13
14	Check for a poor connection and an open circuit on the harness between connector J-177 terminal 34 and connector J-199 terminal 1, and connector J-177 terminal 22 and connector J-199 terminal 2. Refer to “Note on Intermittents” described in earlier this section. Is action complete?	—	Go to Step 16	Go to Step 14
15	Replace EHCU. Is action complete?	—	Go to Step 16	Go to Step 15
16	1. Reconnect all components, ensure all components are properly mounted. 2. Clear diagnostic trouble code. Was this step finished?	—	Go to “Basic diagnostic flow chart.”	Go to Step 16

Chart B-17 (DTC 64/ 32) Abnormal RR Speed Sensor Signal

Step	Action	Value(s)	Yes	No
1	Is there play in the RR wheel bearing?	—	Go to Step 8	Go to Step 2
2	Is there play in the RR speed sensor/sensor rotor?	—	Go to Step 9	Go to Step 3
3	Is there powdered iron sticking to RR speed sensor/ sensor rotor?	—	Go to Step 10	Go to Step 4
4	Check the RR speed sensor. (Refer to Chart C-1-4 or TC-1) Is the RR sensor output normal?	—	Go to Step 5	Go to Step 7
5	Is there a broken tooth or indentation in the sensor rotor?	—	Go to Step 11	Go to Step 6
6	1. Clear diagnostic trouble code. 2. Test drive and perform system self-check. Does repeat trouble?	—	Go to Step 15	Go to Step 14
7	Is there damage or indentation in the speed sensor?	—	Go to Step 12	Go to Step 13
8	Adjust wheel bearing preload. Is action complete?	—	Go to Step 16	Go to Step 8
9	Repair or replace speed sensor/sensor rotor. Is action complete?	—	Go to Step 16	Go to Step 9
10	Repair speed sensor/sensor rotor. Is action complete?	—	Go to Step 16	Go to Step 10
11	Replace sensor rotor. Is action complete?	—	Go to Step 16	Go to Step 11
12	Replace RR speed sensor. Is action complete?	—	Go to Step 16	Go to Step 12
13	Check the RR speed sensor circuit. Refer to Chart B-13. Is action complete?	—	Verify repair	Go to Step 13
14	Check for a poor connection and an open circuit on the harness between connector J-177 terminal 12 and connector J-198 terminal 1, and connector J-177 terminal 21 and connector J-198 terminal 2. Refer to “Note on Intermittents” described in earlier this section. Is action complete?	—	Go to Step 16	Go to Step 14
15	Replace EHCU. Is action complete?	—	Go to Step 16	Go to Step 15
16	1. Reconnect all components, ensure all components are properly mounted. 2. Clear diagnostic trouble code. Was this step finished?	—	Go to “Basic diagnostic flow chart.”	Go to Step 16

Unit Inspection Procedure

This section describes the following inspection procedures referred to during “SYMPTOM DIAGNOSIS” and “DIAGNOSIS BY ‘ABS’ WARNING LIGHT ILLUMINATION PATTERN”:

	without TECH 2	with TECH 2
Speed Sensor Output Inspection	Chart C-1-1 to C-1-4	Chart TC-1

Chart C-1-1 FL Speed Sensor Output Inspection Procedure

Step	Action	Value(s)	Yes	No
1	1. Turn the key off. 2. Disconnect EHCU connector. 3. Jack up the vehicle, with all wheels off the ground. 4. Measure the AC voltage between connector J-177 terminals 32 and 33 while turning FL wheel at a speed of 0.5 RPS. Does the DVM display a voltage within the specified value?	200 mV or more	Go to Step 5	Go to Step 2
2	1. Disconnect FL sensor connector J-75. 2. Using DVM, measure the resistance between J-75 sensor connector terminals 1 and 2. Does the DVM display a resistance within the specified value?	1 – 2 k ohms	Go to Step 4	Go to Step 3
3	Replace FL speed sensor. Is action complete?	—	Go to Step 5	Go to Step 3
4	1. Locate open circuit, poor connection or short circuit on the harness between connector J-177 terminal 32 and connector J-75 terminal 1, and connector J-177 terminal 33 and connector J-75 terminal 2. 2. Repair the harness. Is action complete?	—	Go to Step 5	Go to Step 4
5	1. Reconnect all components, ensure all components are properly mounted. 2. Clear diagnostic trouble code. Was this step finished?	—	Go to “Basic diagnostic flow chart.”	Go to Step 5

Chart C-1-2 FR Speed Sensor Output Inspection Procedure

Step	Action	Value(s)	Yes	No
1	1. Turn the key off. 2. Disconnect EHCU connector. 3. Jack up the vehicle, with all wheels off the ground. 4. Measure the AC voltage between connector J-177 terminals 10 and 11 while turning FR wheel at a speed of 0.5 RPS. Does the DVM display a voltage within the specified value?	200 mV or more	Go to Step 5	Go to Step 2
2	1. Disconnect FR sensor connector J-74. 2. Using DVM, measure the resistance between J-74 sensor connector terminals 1 and 2. Does the DVM display a resistance within the specified value?	1 – 2 k ohms	Go to Step 4	Go to Step 3
3	Replace FR speed sensor. Is action complete?	—	Go to Step 5	Go to Step 3
4	1. Locate open circuit, poor connection or short circuit on the harness between connector J-177 terminal 10 and connector J-74 terminal 1, and connector J-177 terminal 11 and connector J-74 terminal 2. 2. Repair the harness. Is action complete?	—	Go to Step 5	Go to Step 4
5	1. Reconnect all components, ensure all components are properly mounted. 2. Clear diagnostic trouble code. Was this step finished?	—	Go to “Basic diagnostic flow chart.”	Go to Step 5

Chart C-1-3 RL Speed Sensor Output Inspection Procedure

Step	Action	Value(s)	Yes	No
1	1. Turn the key off. 2. Disconnect EHCU connector J-177. 3. Jack up the vehicle, with all wheels off the ground. 4. Connect a 120 ohms resistor between connector J-177 terminal 34 and ground. 5. Apply 9-16V voltage to connector J-177 terminal 22. 6. Using DVM, measure the DC voltage between connector J-177 terminal 34 and ground while turning RL wheel at a speed of 0.5 RPS. Does the DVM display a voltage within the specified value?	0.2 – 4.5V	Go to Step 5	Go to Step 2
2	1. Turn the key off. 2. Disconnect RL sensor connector J-199. 3. Connect a 120 ohms resistor between sensor connector J-199 terminal 1(sensor side) and ground. 4. Apply 9-16V voltage at sensor connector J-199 terminal 2(sensor side). 5. Using DVM, measure the DC voltage between connector J-199 terminal 1(sensor side) and ground while turning RL wheel at a speed of 0.5 RPS. Does the DVM display a voltage within the specified value?	0.2 – 4.5V	Go to Step 3	Go to Step 4
3	1. Locate open circuit, poor connection or short circuit on the harness between connector J-177 terminal 34 and connector J-199 terminal 1, and connector J-177 terminal 22 and connector J-199 terminal 2. 2. Repair the harness. Is action complete?	—	Go to Step 5	Go to Step 3
4	Replace RL speed sensor. Is action complete?	—	Go to Step 5	Go to Step 4
5	1. Reconnect all components, ensure all components are properly mounted. 2. Clear diagnostic trouble code. Was this step finished?	—	Go to “Basic diagnostic flow chart.”	Go to Step 5

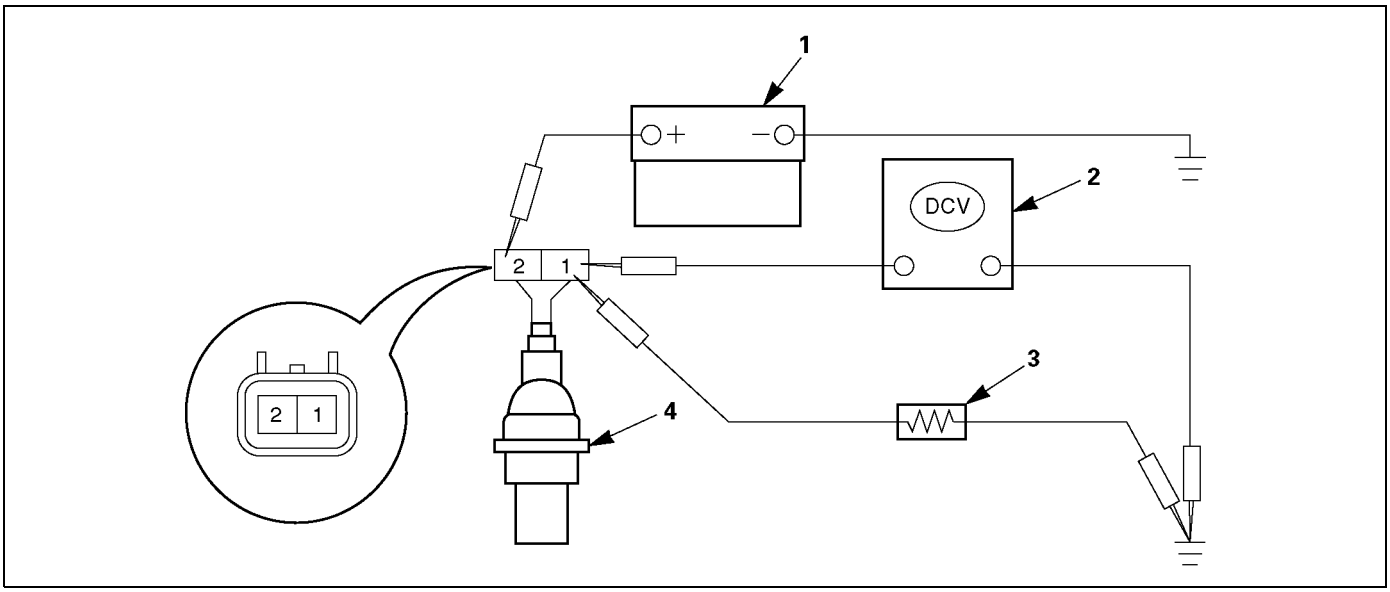

350LX010

Legend

(1) Battery
(2) DVM
(3) Resistor
(4) Speed Sensor

Chart C-1-4 RR Speed Sensor Output Inspection Procedure

Step	Action	Value(s)	Yes	No
1	1. Turn the key off. 2. Disconnect EHCU connector J-177. 3. Jack up the vehicle, with all wheels off the ground. 4. Connect a 120 ohms resistor between connector J-177 terminal 12 and ground. 5. Apply 9-16V voltage to connector J-177 terminal 21. 6. Using DVM, measure the DC voltage between connector J-177 terminal 12 and ground while turning RR wheel at a speed of 0.5 RPS. Does the DVM display a voltage within the specified value?	0.2 – 4.5V	Go to Step 5	Go to Step 2
2	1. Turn the key off. 2. Disconnect RR sensor connector J-198. 3. Connect a 120 ohms resistor between sensor connector J-198 terminal 1(sensor side) and ground. 4. Apply 9-16V voltage at sensor connector J-198 terminal 2(sensor side). 5. Using DVM, measure the DC voltage between connector J-198 terminal 1(sensor side) and ground while turning RR wheel at a speed of 0.5 RPS. Does the DVM display a voltage within the specified value?	0.2 – 4.5V	Go to Step 3	Go to Step 4
3	1. Locate open circuit, poor connection or short circuit on the harness between connector J-177 terminal 12 and connector J-198 terminal 1, and connector J-177 terminal 21 and connector J-198 terminal 2. 2. Repair the harness. Is action complete?	—	Go to Step 5	Go to Step 3
4	Replace RR speed sensor. Is action complete?	—	Go to Step 5	Go to Step 4
5	1. Reconnect all components, ensure all components are properly mounted. 2. Clear diagnostic trouble code. Was this step finished?	—	Go to “Basic diagnostic flow chart.”	Go to Step 5

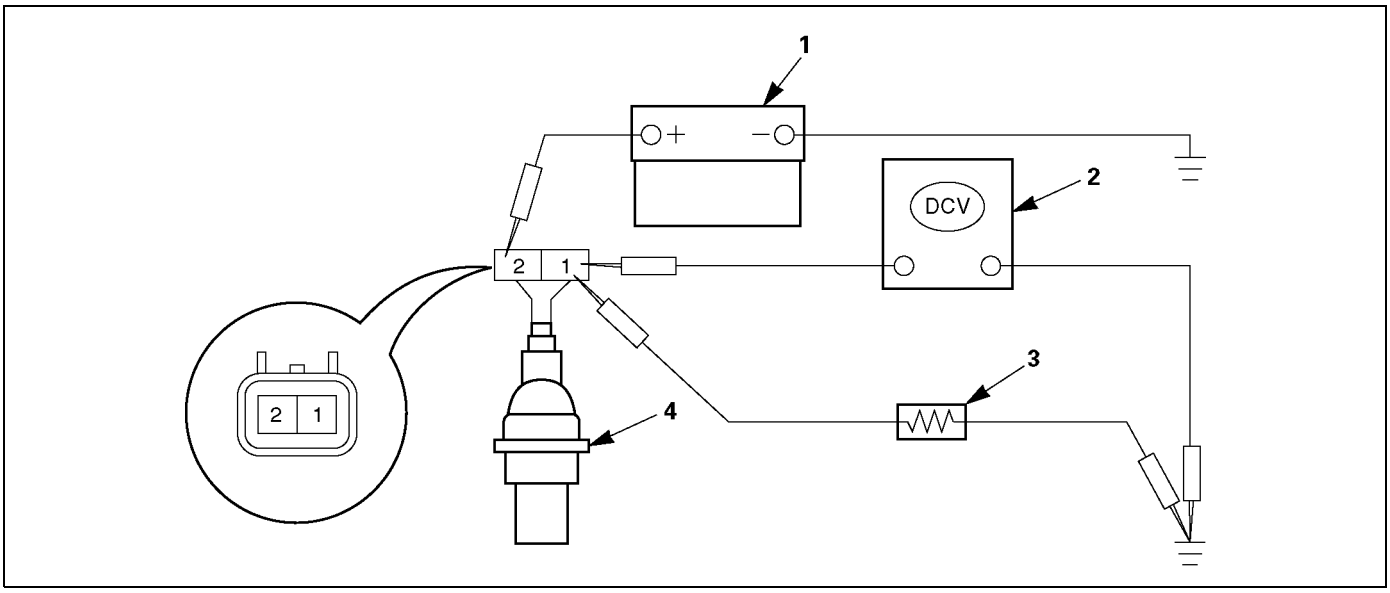

Legend

(1) Battery
(2) DVM
(3) Resistor
(4) Speed Sensor

Chart TC-1 Sensor Output Inspection Procedure (Use TECH 2)

Step	Action	Yes	No
1	1. Connect TECH 2. 2. Check the minimum speed of each sensor by WHEEL SENSORS. Is the sensor speed more than 5 km/h (3 mph)?	Go to Step 2	Go to Step 6
2	Check the sensor harness for suspected disconnection (check while shaking harness/connector). Is the sensor harness connection normal?	Replace speed sensor. Go to Step 3	Repair. Go to Step 3
3	Check the minimum speed of each sensor by WHEEL SENSORS. Is the sensor speed more than 5 km/h (3 mph)?	Go to Step 4	Go to Step 6
4	Check the sensor rotor. Is the sensor rotor normal?	Go to Step 5	Replace sensor rotor. Go to Step 5
5	Check the minimum speed of each sensor by WHEEL SENSORS. Is the sensor speed more than 5 km/h (3 mph)?	Repair harness or connector between EHCU and speed sensor. Go to Step 6	Go to Step 6
6	Reconnect all components and ensure all components are properly mounted. Was this step finished?	Repeat the “Basic diagnostic flow chart.”	Go to Step 6

Electronic Hydraulic Control Unit

Electronic Hydraulic Control Unit and Associated Parts

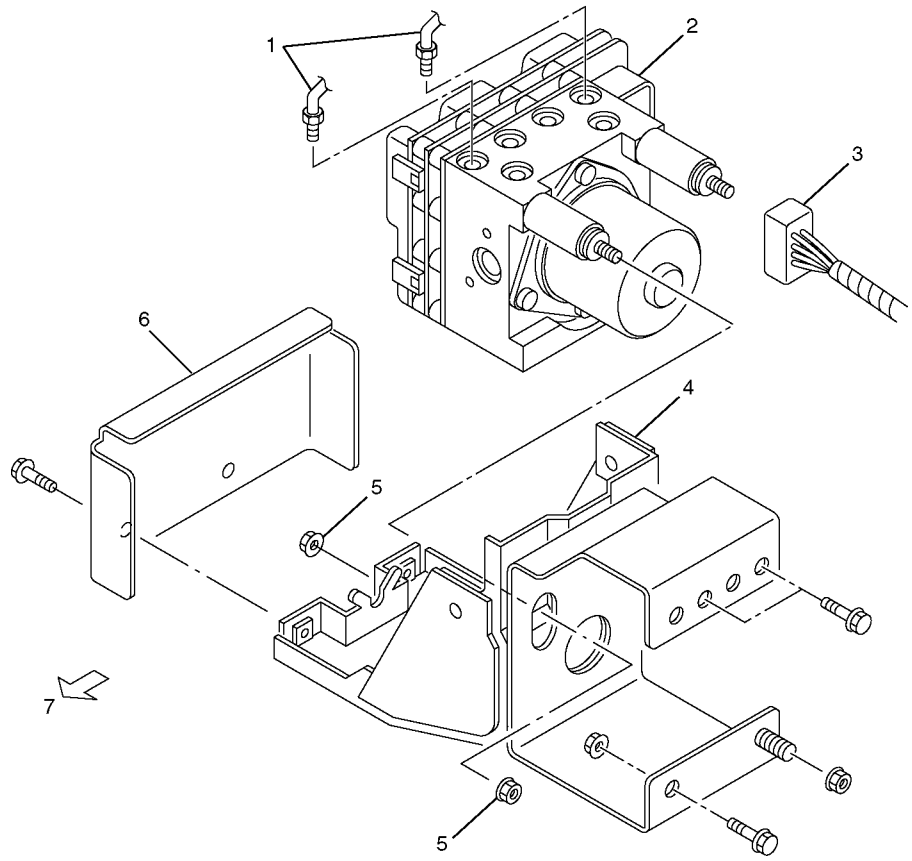

350L300003

Legend

(1) Pipe
(2) EHCU
(3) Connector
(4) Bracket
(5) Nut
(6) Cover
(7) Front

NOTE:

- If welding work is to be performed on the vehicle using an electric arc welder, the EHCU should be removed from the vehicle befor the welding operation begins.
- Do not put radio equipment etc, that emits strong radio wave near the EHCU.
- Never loosen any screw on the control unit.
- Do not paint the control unit.
- Prevrnt possible electrostatic discharge damage.
- Do not touch the control unit pin type terminal with a metalic tip of a screwdriver or tester.
- Do not apply voltage to the terminal.

Removal

1. Disconnect battery ground cable.
2. Disconnect cover.
3. Disconnect harness connector.
4. Disconnect 6 (six) brake pipes.
   - After disconnecting brake pipe, cap or tape the openings of the brake pipe to prevent the entry of foreign matter.
5. Remove 3 (three) EHCU fixing nut.
6. Remove EHCU.

NOTE:

- Do not hold brake pipe when removing EHCU.
- Do not loosen bolt or unt on EHCU.
  If loosening, do not reuse EHCU.

Installation

To install, follow the removal steps in the reverse order, noting the following points:

Torque

EHCU fixing nuts : 22 N·m (16 lbft)

Brackets fixing bolts and nut M10 : 45 N·m (33 lbft)

Bracket fixing bolt : 22 N·m (16 lbft)

Cover fixing bdts : 22 N·m (16 lbft)

Brake pipe flare nuts : 16 N·m (12 lbft)

- After installing the hydraulic unit, bleed brakes completely. See Section 5A “Hydraulic Brakes”.
  When bleeding, disconnect the ABS fuse FL-4 (60A) for EHCU.

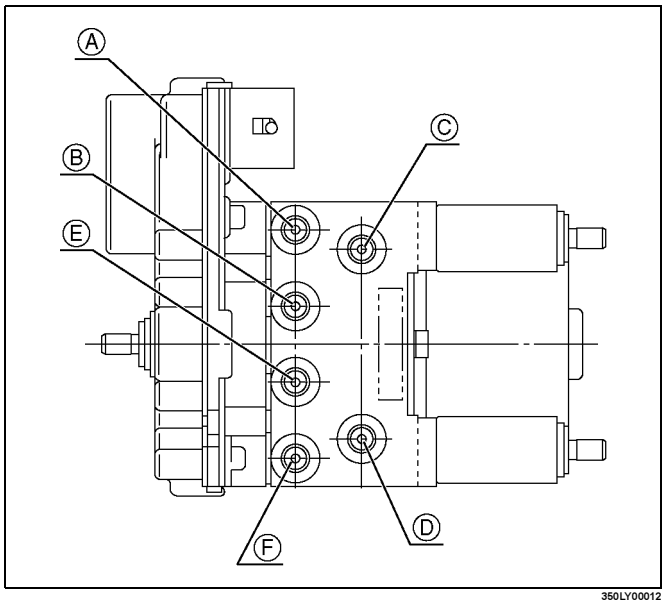

350LY00012

Legend

(A) Front Left Wheel Cylinder
(B) Front Right Wheel Cylinder
(C) Master Cylinder (front)
(D) Master Cylinder (rear)
(E) Rear Left Wheel Cylinder
(F) Rear Right Wheel Cylinder

Front Speed Sensor

Front Speed Sensor and Associated Parts

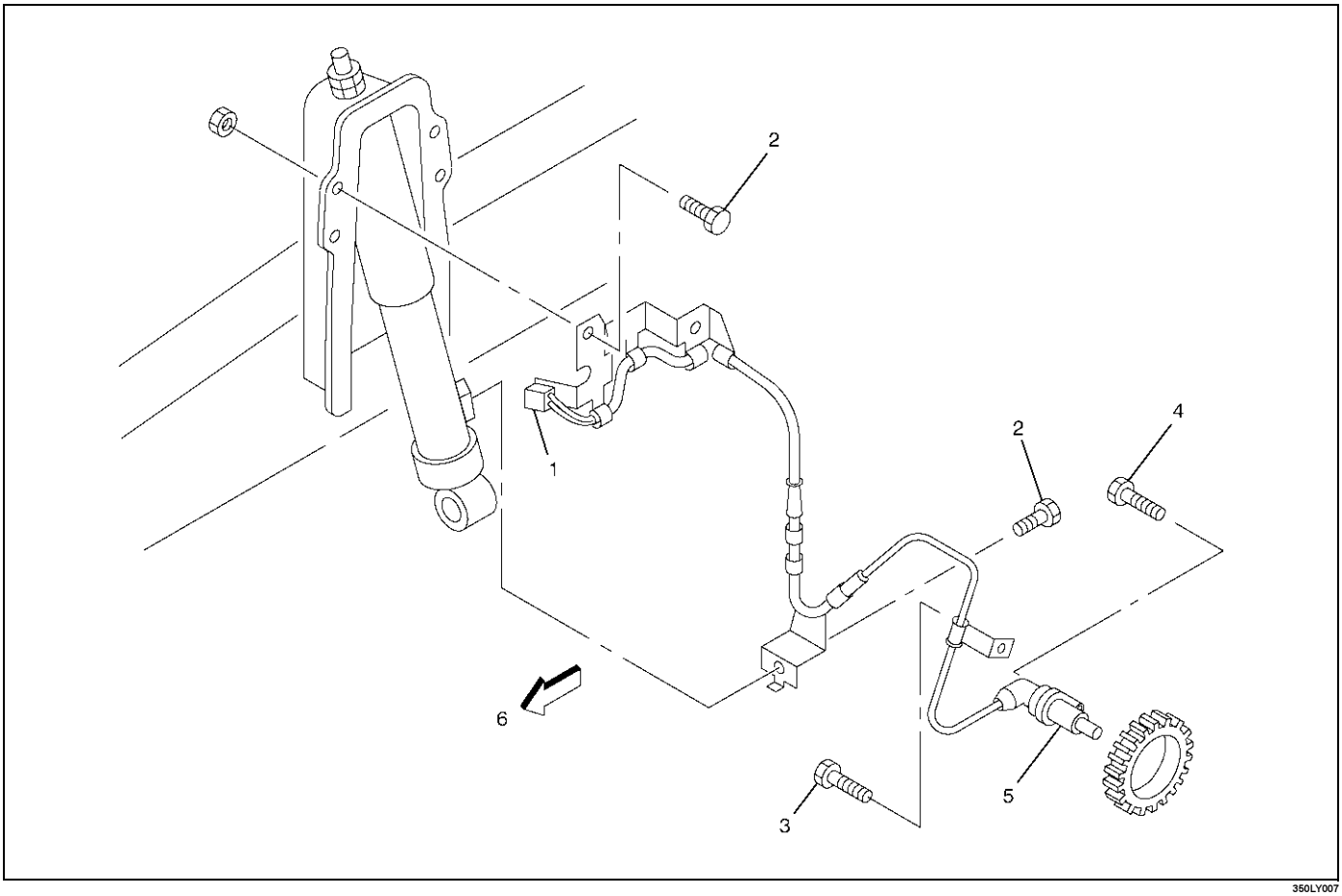

350LY007

Legend

(1) Speed Sensor Connector
(2) Sensor Cable Fixing Bolt
(3) Sensor Cable Fixing Bolt
(4) Sensor Fixing Bolt
(5) Speed Sensor
(6) Front

Removal

1. Remove speed sensor connector.
2. Remove sensor cable fixing bolts.
3. Remove the speed sensor fixing bolt.
4. Remove speed sensor.

Inspection and Repair

1. Check the speed sensor pole piece for presence of foreign materials; remove any dirt, etc.
2. Check the pole piece for damage; replace speed sensor if necessary.
3. Check the speed sensor cable for short or open circuit, and replace with a new one if necessary.
   To check for cable short or open, bend or stretch the cable while checking for continuity.

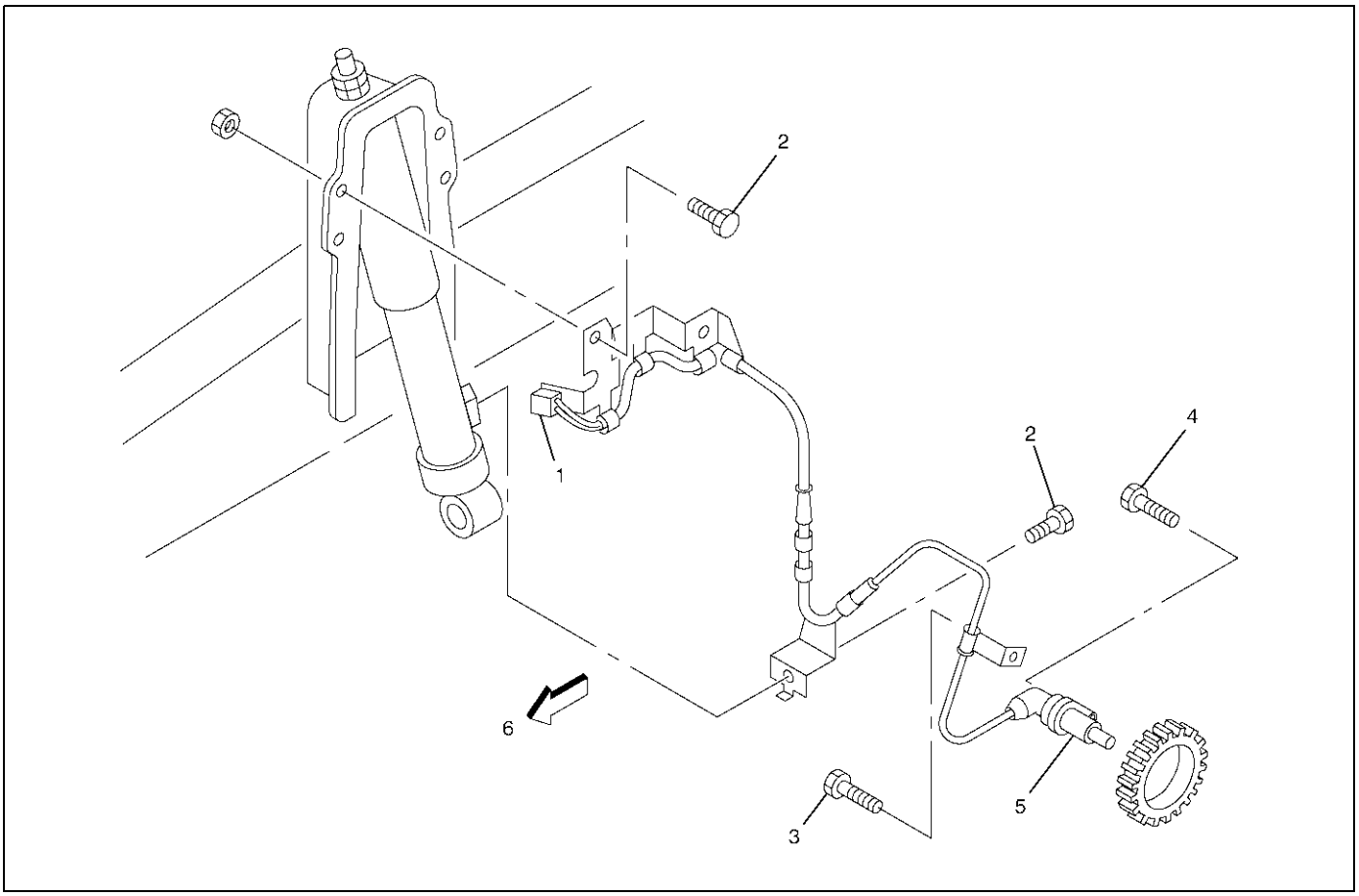

350LY007

Installation

1. Install speed sensor and take care not to hit the speed sensor pole piece during installation.
2. Install speed sensor fixing bolt and tighten the fixing bolt to the specified torque.

Torque : 22 N·m (16 lbft)

When installing speed sensor, firmly press the sensor flange and tighten the bolt.

3. Install speed sensor cable fixing bolts and tighten the fixing bolt to the specified torque.

Torque

Bolts (2) : 22 N·m (16 lbft)

Bolt (3) : 45 N·m (33 lbft)

NOTE: Confirm that a white or yellow line marked on the cable is not twisted when connecting the speed sensor cable.

4. Connect speed sensor connector.

Front Speed Sensor Rotor

Front Speed Sensor Rotor and Associated Parts

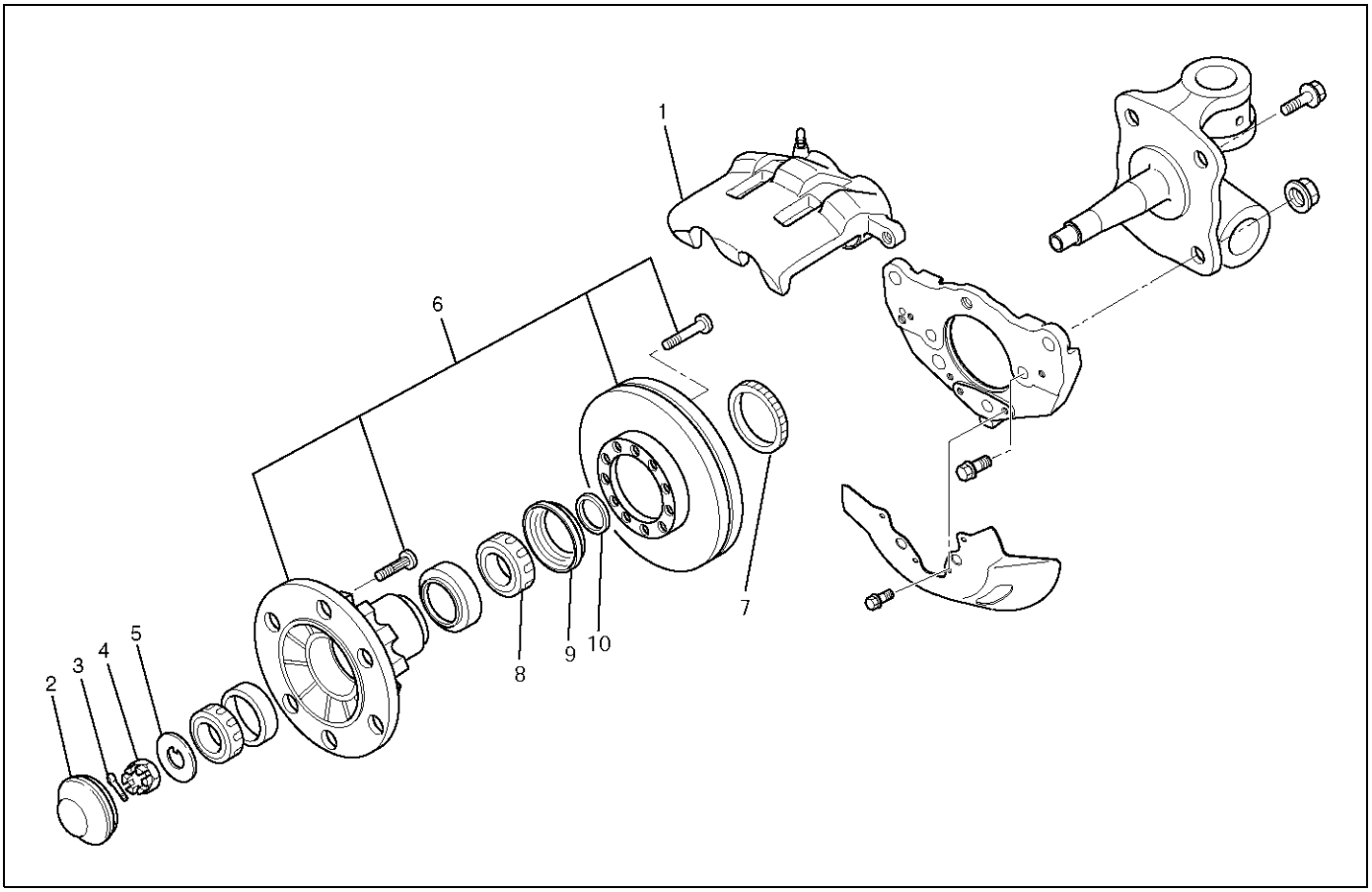

302LY003

Legend

(1) Disc Brake Assembly
(2) Hub Cap
(3) Cotter Pin
(4) Hub Nut
(5) Washer
(6) Hub and Disc Assembly
(7) Speed Sensor Rotor
(8) Inner Bearing
(9) Oil Seal
(10) Spacer

NOTE:

1. Prior to the removal of hub and disc assembly, remove the speed sensor.
2. Prior to hammering in case of removing a knuckle etc., remove the speed sensor.

Removal

1. Remove disc brake assembly and support the caliper assembly so that the brake hose is not stretched or damaged.
2. Remove hub cap.
3. Remove cotter pin and hub nut.
4. Remove washer.
5. Remove hub and disc assembly.

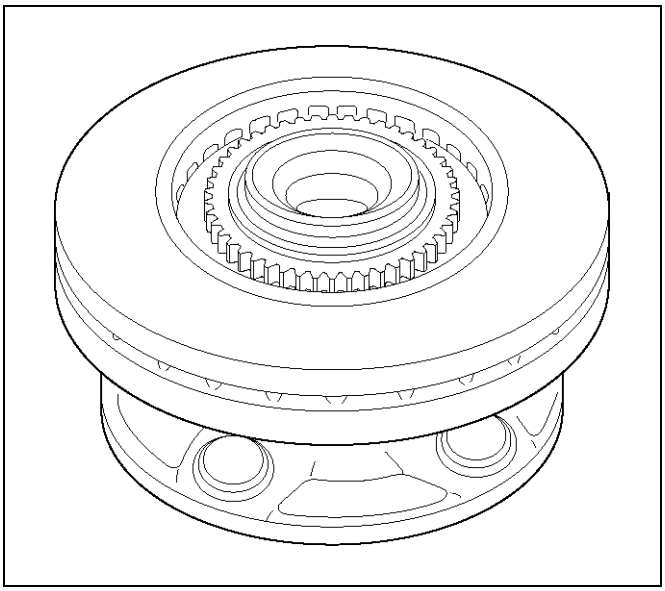

302LY001

6. Remove speed sensor rotor.
   - Using a universal puller, remove speed sensor rotor.
7. Remove inner bearing, oil seal and spacer.

Inspection and Repair

1. Check the speed sensor rotor for damage including tooth chipping, and if damaged, replace the speed sensor rotor.

Installation

1. Using a bench press, install new speed sensor rotor.
2. Install spacer onto the knuckle spindle.
3. Apply grease into the outer and inner bearings and install bearings in the hub.
4. Install oil seal into hub and disc assembly and install hub and disc assembly on to the knuckle spindle.

Preload Adjustment

Adjust the wheel bearing as follows:

1. Tighten the nut until you are unable to manually rotate the hub and disc assembly.
2. Loosen the nut.
3. Attach a spring balancer to one stud. Gradually retighten the nut until the hub and disc assembly bearing is adjusted to the specified preload.
   - Hub bearing preload
     New Hub Bearing 9.8-24.5 N (2.2-5.5 lb)
     Reused Hub Bearing 4.9-19.6 N (1.1-4.4 lb)

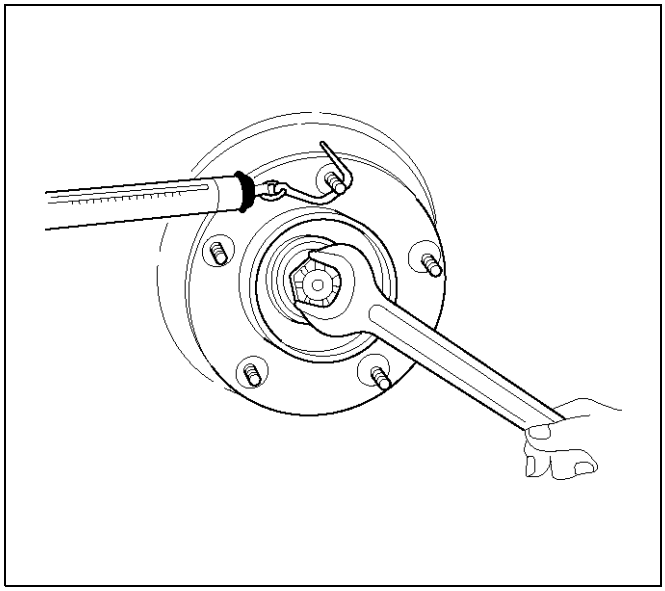

302LY002

5. Install a cotter pin through the nut and knuckle and bend it over.
   - If the notch in the nut does not line up with the cotter pin hole in the knuckle, tighten the nut until it does. Do not loosen the nut to line up a notch and the knuckle hole.
6. Apply grease into the hub cap and install it.
   - 40g
7. Install the disc brake assembly and tighten two bolts to the specified torque.
   - **Torque : 221 N·m (163 lb ft)**

Rear Speed Sensor

Rear Speed Sensor and Associated Parts

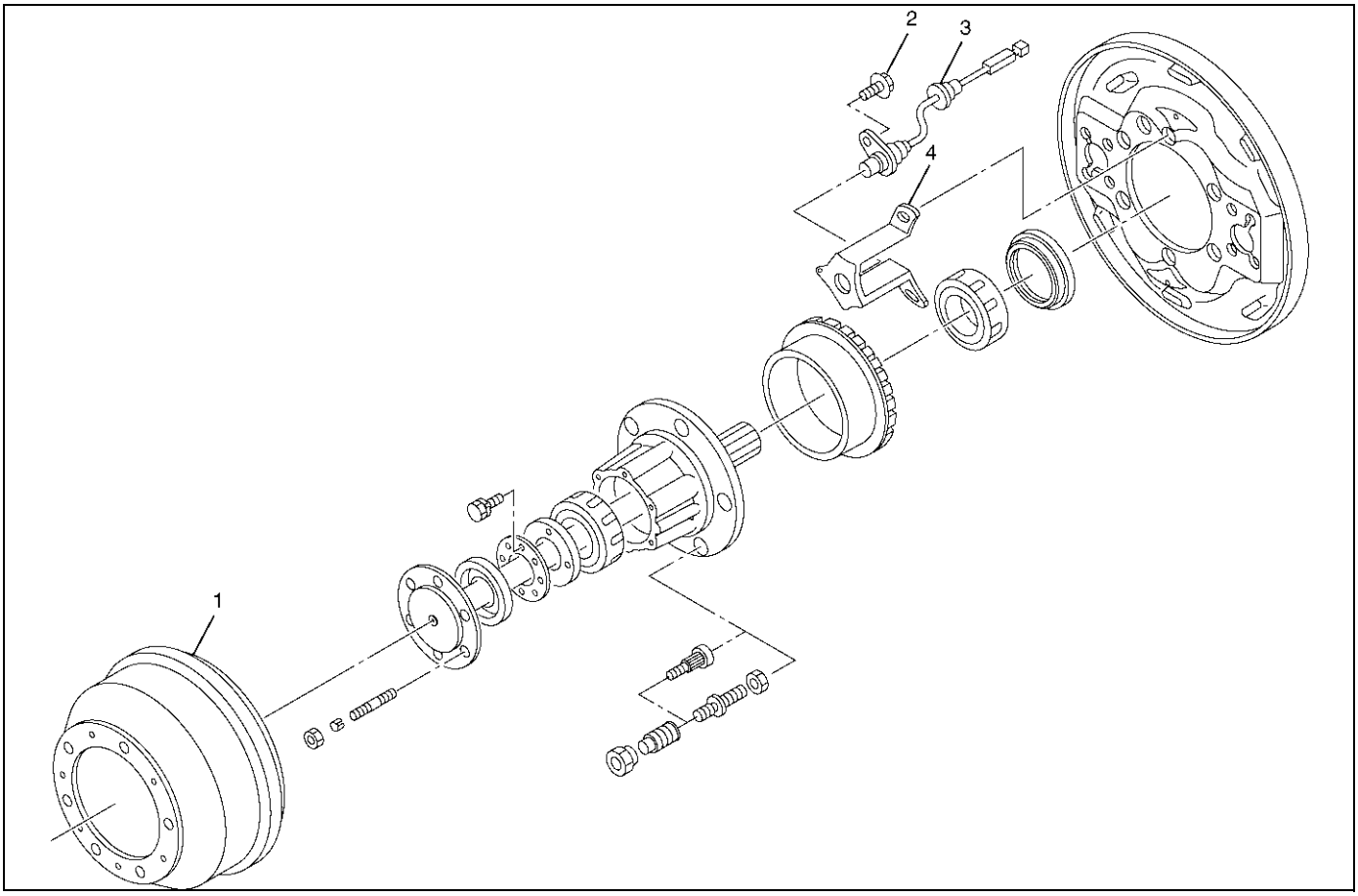

420LY002

Legend

(1) Brake Drum
(2) Speed Sensor Fixing Bolt
(3) Speed Sensor
(4) Speed Sensor Bracket

Removal

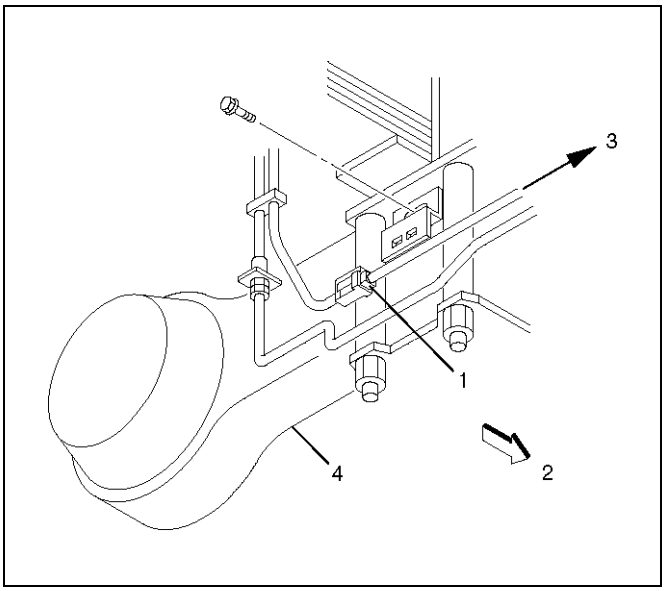

350LY008

Legend

(1) Speed Sensor Connector
(2) Front
(3) Speed Sensor
(4) Rear Axle

1. Disconnect speed sensor connector.
2. Remove brake drum.
3. Remove speed sensor fixing bolt.
4. Remove speed sensor.
5. Remove speed sensor bracket.

Inspection and Repair

1. Check the speed sensor for presence of foreign materials; remove any dirt, etc.
2. Check the speed sensor for damage, and replace the speed sensor if necessary.
3. Check the speed sensor harness for a short or an open, and replace with a new one if necessary. To check for harness short or open, bend or stretch the cable while checking for continuity.

Installation

1. Install speed sensor bracket and tighten the nut to the specified torque.

   Torque

   12,000 lb and 14,500 lb model 108 N·m (80 lbft)

   17,950 lb model 157 N·m (116 lbft)

2. Install the speed sensor and take care not to hit the speed sensor during installation.
3. Install the speed sensor fixing bolt and tighten it to the specified torque.

   Torque : 22 N·m (16 lbft)

4. Install brake drum and tighten bolts to the specified torque.

   Torque : 13 N·m (113 lbin)

5. Connect speed sensor connector.

NOTE: Confirm that the harness is not twisted when connecting the speed sensor connector.

Rear Speed Sensor Rotor

Rear Speed Sensor Rotor and Associated Parts

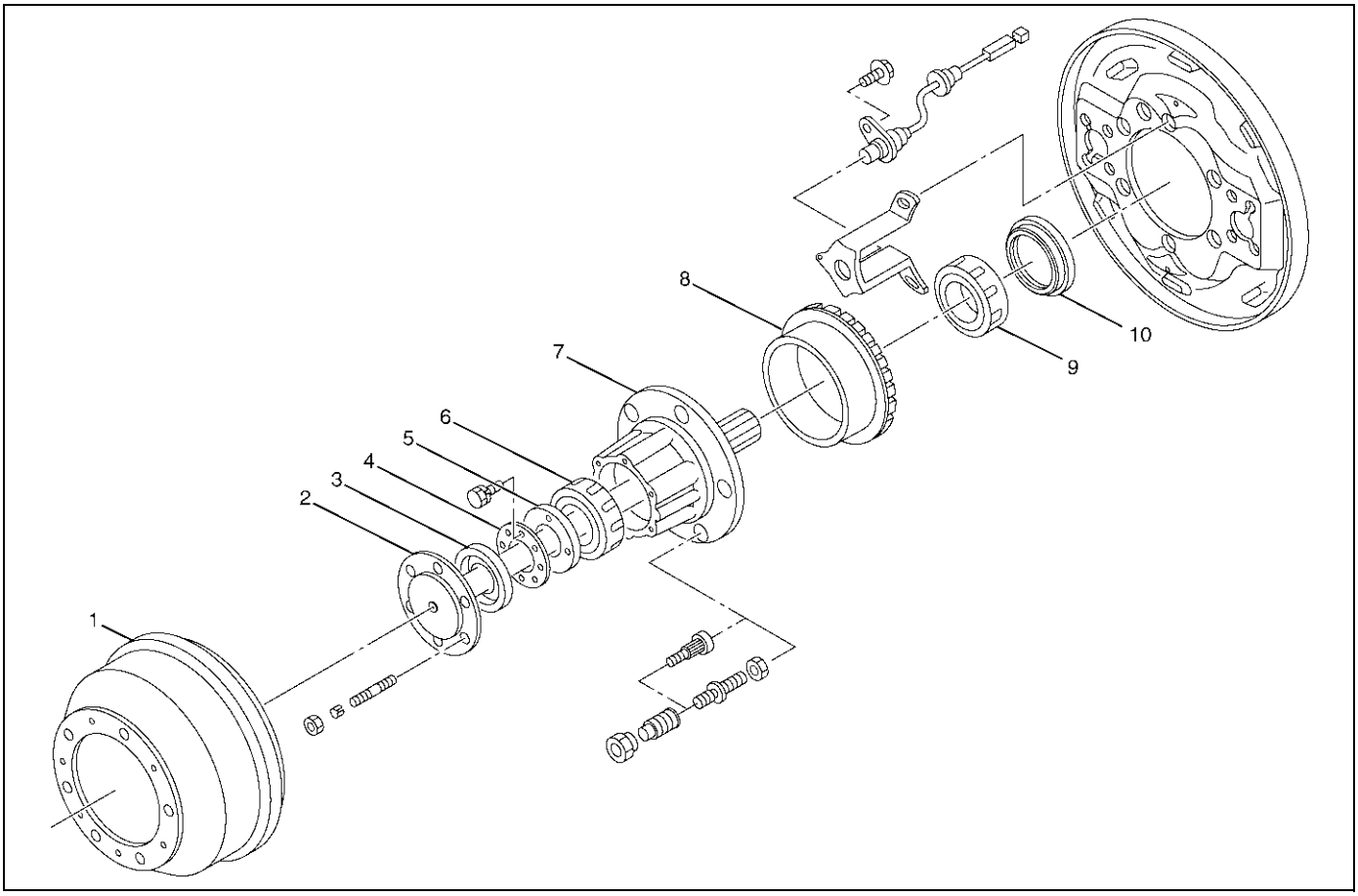

420LY001

Legend

(1) Brake Drum
(2) Axle Shaft
(3) Outer Oil Seal
(4) Lock Washer
(5) Bearing Nut
(6) Outer Bearing
(7) Rear Hub
(8) Speed Sensor Rotor
(9) Inner Bearing
(10) Inner Oil Seal

Removal

1. Remove brake drum.
2. Remove axle shaft.
3. Remove outer oil seal, using a screwdriver.
4. Remove lock washer.
5. Remove bearing nut with a hub bearing nut wrench.
6. Remove hub assembly from axle case.
7. Remove outer bearing from hub assembly.
8. Remove speed sensor rotor from hub assembly.
9. Remove inner bearing and inner oil seal from axle case

Inspection and Repair

1. Check the speed sensor rotor for damage including tooth chipping. If damaged, replace speed sensor rotor.

2. Deviation should be ± 0.1mm.

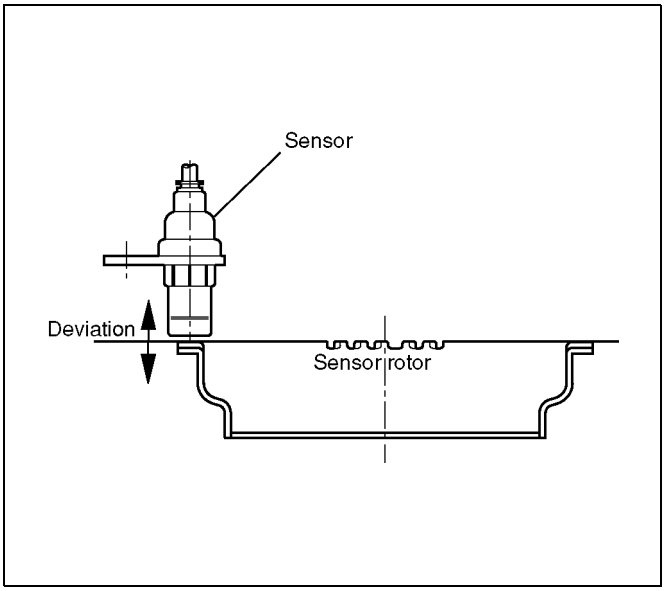

350L300004

Installation

1. Using a bench press, install new speed sensor rotor.

NOTE: Do not reuse the sensor rotor.

2. Install spacer on to the axle case.
3. Apply grease into the outer and inner bearings and install bearing in the hub.
4. Install outer oil seal into hub.

5. Install hub assembly onto the axle case.

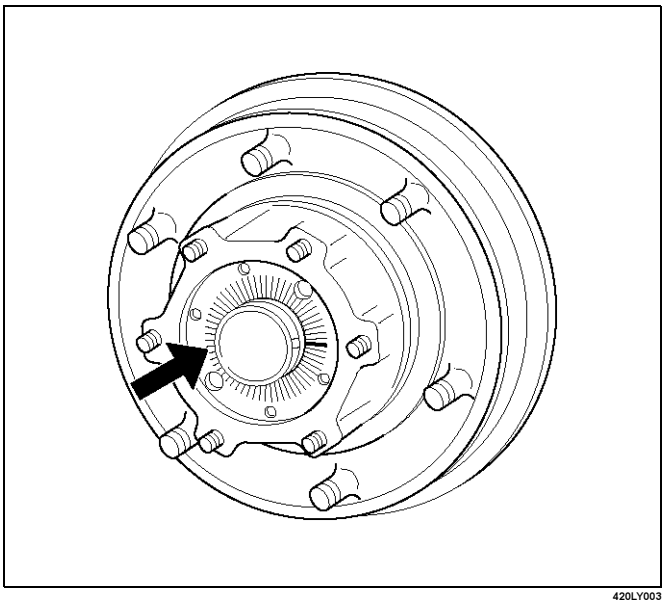

420LY003

6. Set the lock nut with the notched line facing out.

Preload Adjustment

1. Turn the hub to the left and right several times to establish bearing conformity.
2. Use the bearing nut wrench to tighten the bearing nut until the hub can not be manually rotated.
3. Loosen the bearing nut until hub rotates easily.

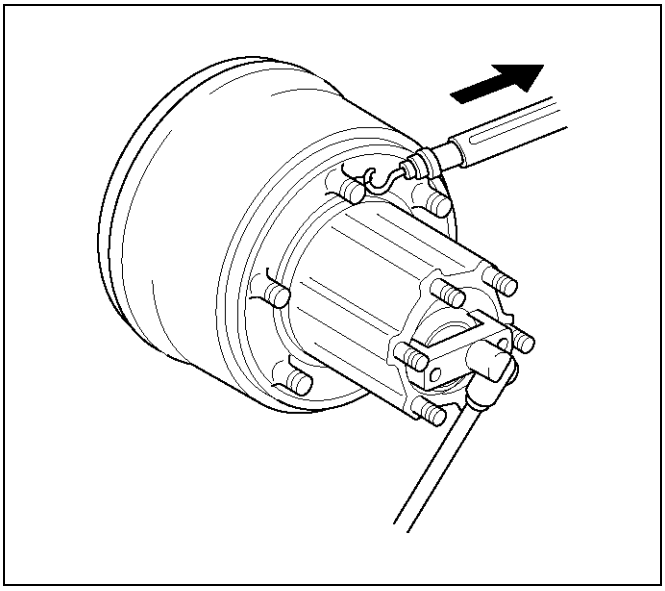

420LY004

4. Set the spring balancer to the wheel pin in the position shown in the illustration.
5. Measure the hub bearing preload by carefully pulling on the spring balancer and noting the indicator reading.
   Hub Bearing Preload (At Wheel Pin)
   42-52 N (9.5-11.7 lb)
6. Rotate the hub several times to the right and left.
7. Measure the bearing preload a second time.

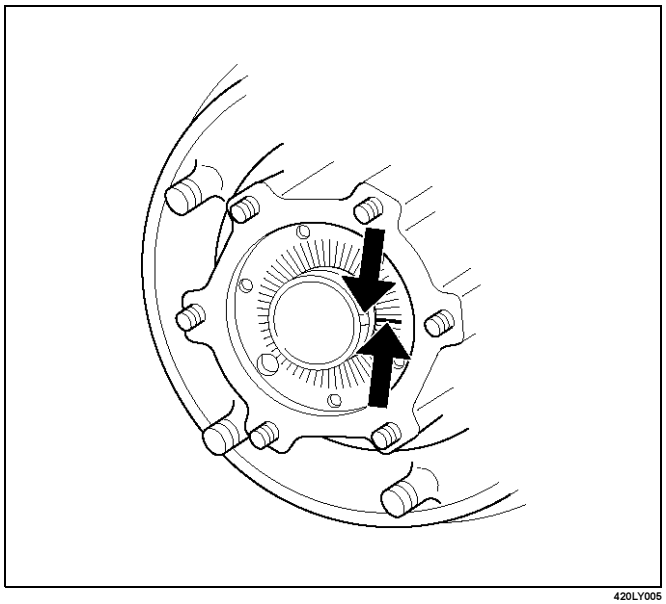

420LY005

8. Align the axle case groove with the closest bearing nut slit.

NOTE: If it is difficult to align the axle case and bearing nut, slightly tighten the bearing nut.

7. Install the lock washer with the lock washer tabs inserted to the axle case grooves.
   Install the lock bolts to prevent the bearing nut from loosening.
   Check that the lock washer tabs are inserted to the axle case grooves.
8. Apply grease to the outer oil seal lip inner and outer circumferences and install outer oil seal.
9. Clean the axle shaft.
   Apply gear oil to the axle shaft spline.
   Insert the axle shaft into the axle case.
   Take care not to damage the oil seal.
10. Tighten the axle shaft nuts to the specified torque a little at a time.
    Torque : 46 N·m (34 lb ft)
11. Install brake drum.

Special Tools

ILLUSTRATION	TOOL NO. TOOL NAME
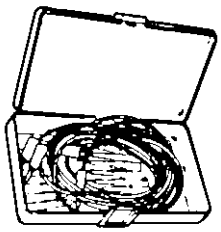	**J–35616** Connector test adapter kit
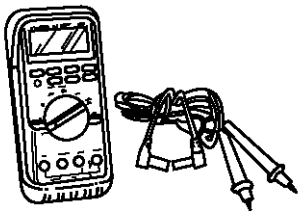	**J–39200** High impedance multimeter
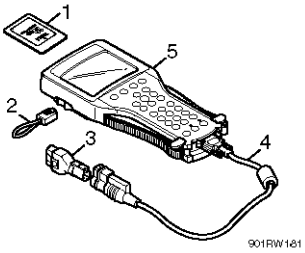	(1) PCMCIA Card (2) RS232Loop Back Connector (3) SAE 16/19 Adapter (4) DLC Cable (5) Tech–2

SECTION 6

ENGINE

CONTENTS

SUBJECT	PAGE
Engine	6A
Isuzu Engine	See 1999 Service Manual
Cooling System	See 1999 Service Manual
Radiator	See 1999 Service Manual
Fan	See 1999 Service Manual
Fuel System	See 1999 Service Manual
Fuel Injection System	See 1999 Service Manual
Engine Electrical	6D
Emission and Electrical Diagnosis	See 1999 Service Manual
Exhaust	See 1999 Service Manual

SECTION 6A

ENGINE

NOTICE: When fasteners are removed, always reinstall them at the same location from which they were removed. If a fastener needs to be replaced, use the correct part number fastener for that application. If the correct part number fastener is not available, a fastener of equal size and strength (or stronger) may be used. Fasteners that are not reused, and those requiring thread locking compound will be called out. The correct torque value must be used when installing fasteners that require it. If the above conditions are not followed, parts or system damage could result.

CONTENTS

SUBJECT	PAGE
Engine Replacement	6A- 2
Engine Mountings	6A- 7
Description	6A- 7
Maintenance	6A- 7
Front Engine Mount Replacement	6A- 7
Rear Engine Mount Replacement	6A- 8
Exhaust Brake System	See 1999 Service Manual
Description	See 1999 Service Manual
Operation	See 1999 Service Manual
Diagnosis of Exhaust Brake	See 1999 Service Manual
Exhaust Brake On-Vehicle Service	See 1999 Service Manual
Component Locations	See 1999 Service Manual
Magnetic Valve Replacement	See 1999 Service Manual
Vacuum Chamber Replacement	See 1999 Service Manual
Exhaust Brake Valve Replacement	See 1999 Service Manual

Accelerator Switch Replacement ..... **See 1999 Service Manual**
Clutch Switch Replacement ..... **See 1999 Service Manual**
Specifications ..... **See 1999 Service Manual**
Fastener Torques ..... **See 1999 Service Manual**

ENGINE REPLACEMENT

Remove or Disconnect (Figures 1-13)

1. Battery negative cable (1) at the battery (figure 1).
   Main feed wire (5) at the starter solenoid (figure 2).
2. Cooling system drain valve on the bottom rear of the radiator.
3. Engine oil at the oil pan plug.
4. Heater hoses at the water pump and thermostat housing. Refer to COOLING SYSTEM (SEC. 6B1) in this manual.
5. Air conditioning condenser mounts. Do not disconnect the hoses from the condenser. Secure the condenser forward of the radiator.
6. Air intake pipe (6) from the turbocharger and the air cleaner (figure 3).

Important

- Tape the inlet opening of the turbocharger to prevent entry of foreign material.

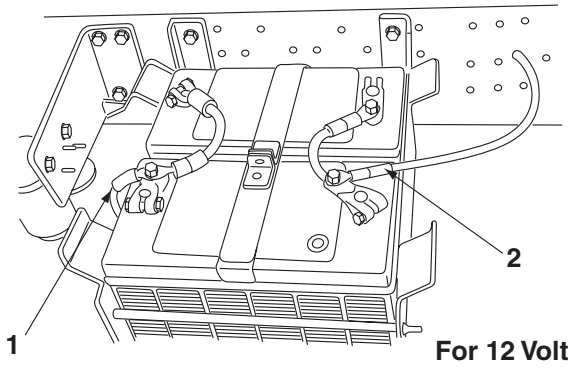

1. Battery Negative Cable
2. Battery Positive Cable

Figure 1. Battery Cable Identification

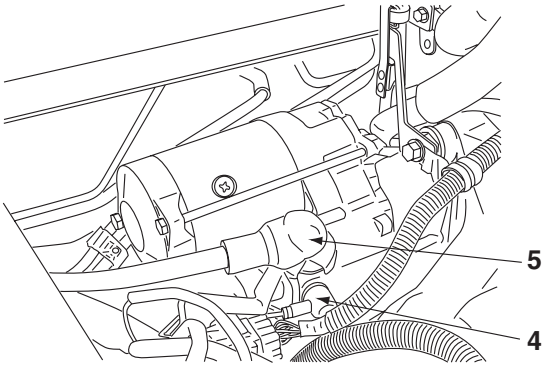

4. Solenoid Wire
5. Main Feed Wire

Figure 2. Wiring at Starter

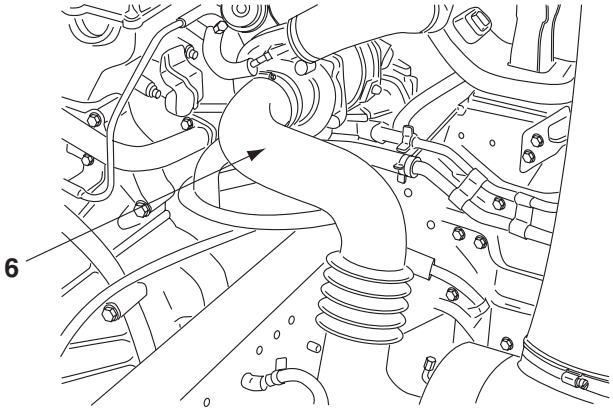

6. Air Intake Pipe

Figure 3. Air Intake Pipe to Turbocharger Attachment

7. Air inlet pipe (9) with connecting hoses (10) and (11) from the turbocharger (8) and charge air cooler (12) (figure 4).
8. Air inlet pipe (13) with connecting hoses (14) from the intake manifold and the charge air cooler (12) (figure 5).
9. Charge air cooler assembly (12) from the radiator.
10. Automatic transmission cooler lines from

radiator and transmission (A/T only). Refer to AUTOMATIC TRANSMISSION (SEC. 7A).
11. Heater hoses from the water pump and the thermostat housing. Refer to COOLING SYSTEM (SEC. 6B1).
12. Fan and fan clutch from the fan clutch plate. Refer to FAN (SEC. 6B3).
13. Radiator hoses from the radiator. Radiator and shroud. Refer to RADIATOR (SEC. 6B2).
14. Air conditioning compressor, generator and water pump belts. Refer to AIR CONDITIONING (SEC. 1B), COOLING SYSTEM (SEC. 6B1) and ENGINE ELECTRICAL (SEC. 6D) in this manual.
15. Fuel lines at the frame near the injection pump. Refer to FUEL SYSTEM (SEC. 6C1).

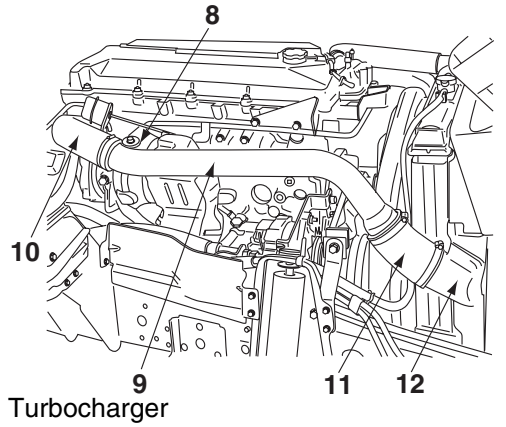

8. Turbocharger
9. Air Inlet Pipe
10. Connecting Hose
11. Connecting Hose W-00278
12. Charge Air Cooler

Figure 4. Air Inlet Pipe Attachment

16. Fuel shutoff cable at the injection pump and at the support bracket. Refer to DIESEL FUEL INJECTION (SEC. 6C3).
17. Electrical wires at the oil pressure and engine coolant temperature sending units. Refer to ENGINE ELECTRICAL (SEC. 6D).
18. Vacuum hoses (16) at the vacuum pump (15) (figure 6).
19. Generator adjusting bracket (17) (figure 6).
20. Generator output wire (19) and generator (18) (figure 7).

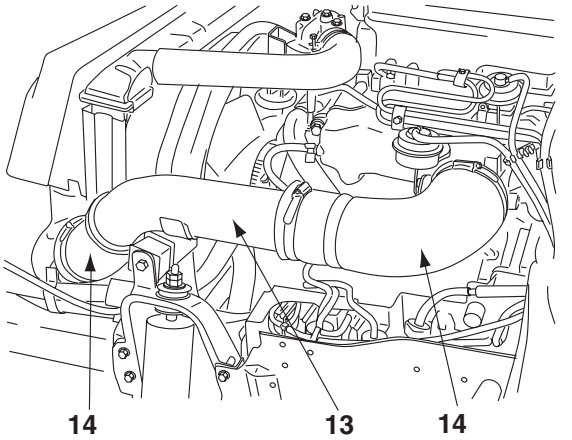

13. Air Inlet Pipe
14. Connecting Hose

Figure 5. Intake Manifold Pipe Attachment

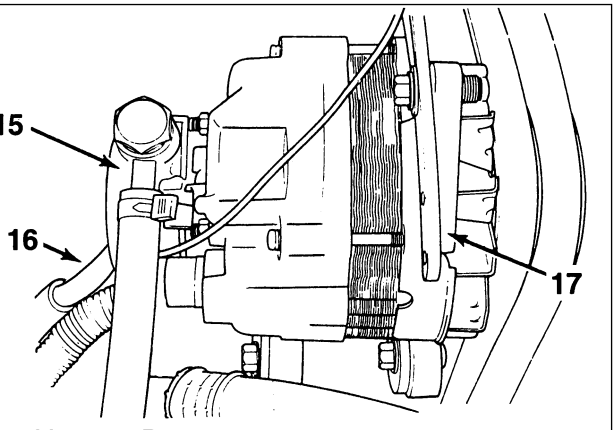

15. Vacuum Pump
16. Vacuum Hose
17. Generator Adjusting Bracket

Figure 6. Vacuum Hose Attachment at Vacuum Pump

21. Generator (18) remove the hoses from the compressor (figure 8).
22. Power steering hoses from the power steering pump. Refer to POWER STEERING (SEC. 3B3).

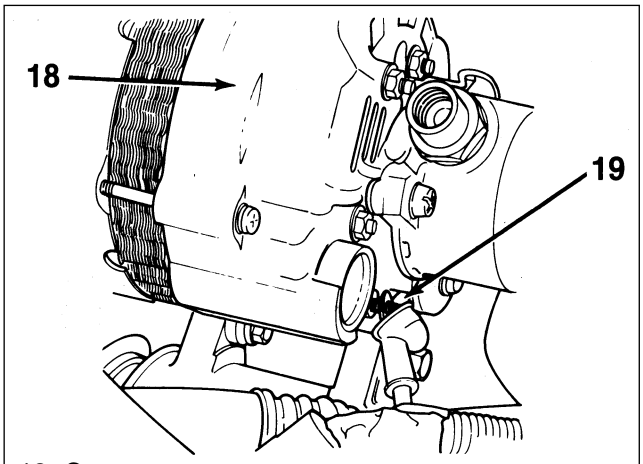

18. Generator
19. Generator Output Wire

Figure 7. Wiring and Generator

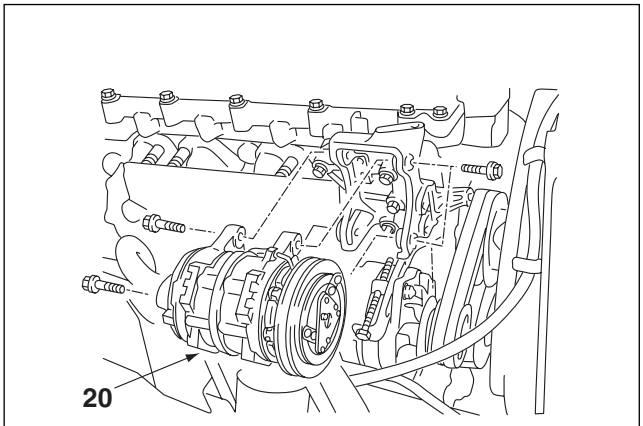

20. A/C Compressor

Figure 8. Air Conditioner (A/C) Compressor Removed

23. Shift and select cables from transmission. Refer to AUTOMATIC TRANSMISSION (SEC. 7A) or MANUAL TRANSMISSION (SEC. 7B).
24. Clutch slave cylinder. Refer to CLUTCH (SEC.7C).
25. Exhaust brake unit assembly (22) (figure 9).
26. Front exhaust pipe.
27. Electrical wiring harness and connectors.
28. Speedometer cable from transmission.
29. Propeller shaft and parking brake assembly. Refer to MANUAL TRANSMISSION (SEC. 7B).
30. Engine mount insulator (24) to engine mount bracket nuts (figure 11).
31. Transmission to frame crossmember braket (30) (figure 12).
32. Raise the transmission with a jack and remove the clutch housing to transmission bolts.
33. Attach a sling (34) and hoist to the engine assembly (35) (figure 13).
34. Engine by raising front, pulling forward, then turning the engine 90 degrees.

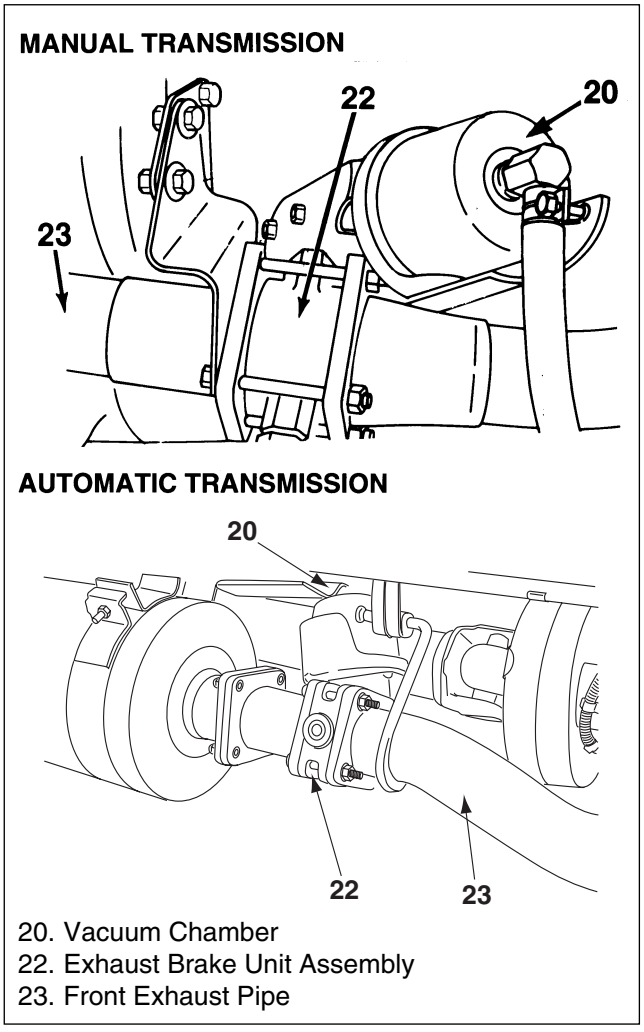

20. Vacuum Chamber
22. Exhaust Brake Unit Assembly
23. Front Exhaust Pipe

Figure 9. Exhaust Brake Installed

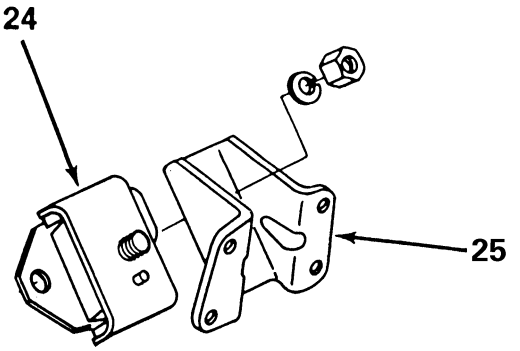

24. Engine Mount Insulator
25. Engine Mount Bracket

Figure 11. Front Engine Mount

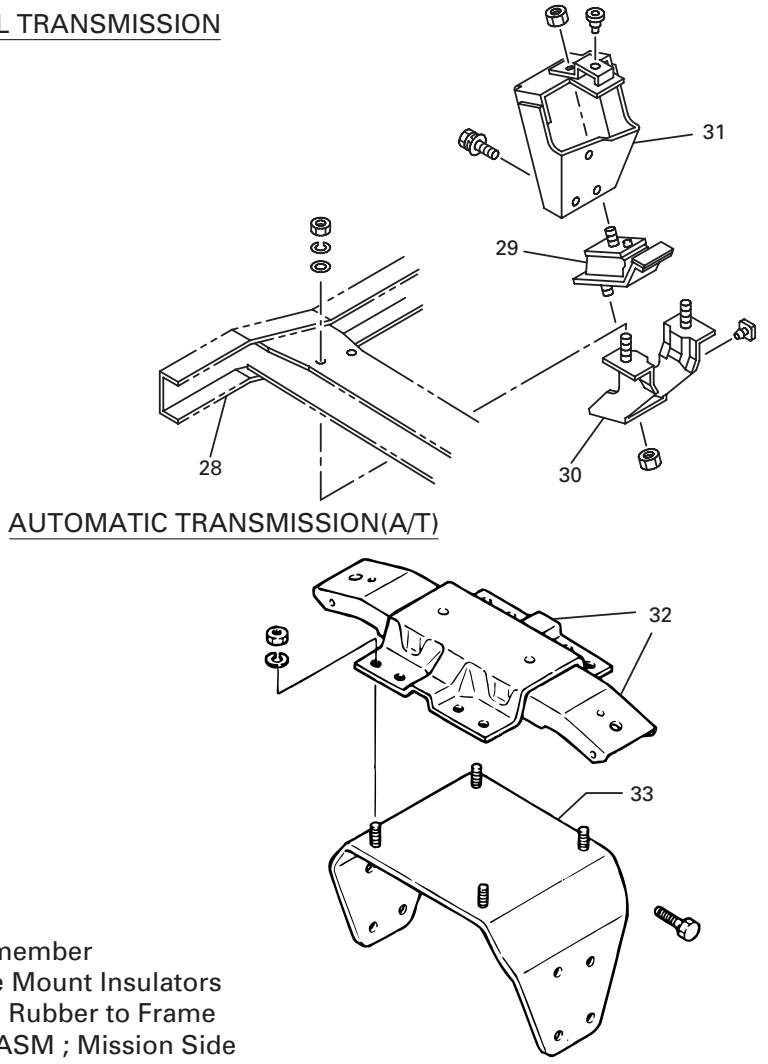

28. Crossmember
29. Engine Mount Insulators
30. BRKT ; Rubber to Frame
31. BRKT ASM ; Mission Side
32. Upper Mount Assembly
33. Bracket

Figure 12. Transmission Mount

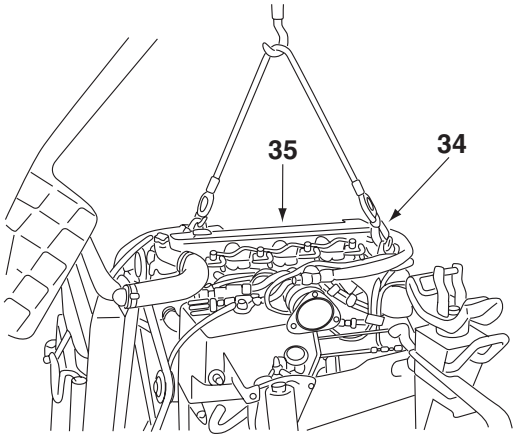

34. Engine Lifting Swing
35. Engine Assembly

Figure 13. Lifting Sling on Engine

Install or Connect (Figures 1-13)

NOTICE: See "NOTICE" on page 6A-1 of this section for steps 7, 8, 9 and 10.

1. Clutch pressure plate assembly and clutch driven plate. Refer to CLUTCH (SEC. 7C).
2. Sling (34) and hoist to the engine (35) (figure 13).
3. Support and raise the transmission with a jack.
4. Position and align the engine and the transmission input shaft. Keep the flywheel housing and clutch housing parallel with one another.
5. Mate the flywheel and clutch housings. Fabricated pilot studs may help to maintain alignment while connecting the housing.
6. Flywheel to clutch housing bolts except the clutch slave cylinder, wiring harness bracket, and exhaust brake bracket bolts. Do not torque the bolts yet.
7. Engine mount insulator (29) to braket assembly (31) (figure 12).
   - It may be necessary to loosen the engine mounts from the frame to align the stud to bracket holes.

   Tighten

   - The mount insulator nuts to 45 N·m (33 lb·ft).

8. Transmission mount.
9. Position the clutch slave cylinder, the wiring harness bracket, and the exhaust brake bracket onto the flywheel to clutch flange. Then install the bolts.

   Tighten

   - Flywheel housing to clutch housing bolts to 81 N·m (60 lb·ft).

10. Shift and select cable bracket onto the clutch housing.

    Tighten

    - Bracket bolts to 81 N·m (60 lb·ft).

11. Parking brake assembly and propeller shaft. Refer to MANUAL TRANSMISSION (SEC. 7B).
12. Speedometer cable to the transmission.
13. Power steering hoses and brackets onto the power steering pump. Refer to POWER STEERING (SEC. 3B3).
14. Generator and air conditioning compressor onto the cylinder block.
15. Generator adjusting bracket (17) (figure 6).
16. Generator output wire (19) to the generator (18) (figure 7).
17. Vacuum hose (16) to the vacuum pump (15) (figure 6).
18. Electrical wiring harness and connectors.
19. Fuel shutoff cable onto the injection pump. Secure their support brackets. Refer to DIESEL FUEL INJECTION (SEC. 6C3).
20. Fuel lines at the vehicle frame near the injection pump. Refer to FUEL SYSTEM (SEC. 6C1).
21. Generator, water pump and air conditioning compressor belts. Refer to AIR CONDITIONING (SEC. 1B), COOLING SYSTEM (SEC. 6B1) and ENGINE ELECTRICAL (SEC. 6D).
22. Radiator, fan shroud and radiator hoses. Refer to RADIATOR (SEC. 6B2).
23. Fan clutch and fan to the fan clutch plate. Refer to FAN (SEC. 6B3).
24. Automatic transmission (A/T) cooler lines to the radiator and the transmission (A/T only). Refer to AUTOMATIC TRANSMISSION (SEC. 7A).
25. Front exhaust pipe (23) and exhaust brake unit assembly (22) (figures 9 and 10).
26. Charge air cooler assembly (12) to the radiator.
27. New gasket and the air inlet pipe (13) with connecting hose (14) (figure 5).
28. Air inlet pipe (9) with connecting hoses (10) and (11) to the charge air cooler (12) and turbocharger (8) (figure 4).
29. Air intake pipe (6) with connecting hose (7) (figure 3).
30. Heater hoses at the water pump and thermostat housing. Refer to COOLING SYSTEM (SEC. 6B1).
31. Be sure the oil pan plug is tight. Install 13 liters (3 gal) of engine oil. The SAE weight will depend on the ambient temperature. Refer to MAINTENANCE AND LUBRICATION (SEC. 0B).

32. Close the radiator drain valve. Fill the cooling system as described in COOLING SYSTEM (SEC. 6B1).
33. Connect the main feed wire (5) at the starter, and the battery negative cable (1), at the battery (figures 1 and 2).
34. Check the automatic transmission fluid level and replenish as necessary (Automatic transmission only). Refer to AUTOMATIC TRANSMISSION (SEC. 7A).

ENGINE MOUNTINGS

DESCRIPTION

Cushion-type mountings are used at both the front and rear of the engine on all vehicles covered in this manual. (“Front” refers to the end of engine opposite the flywheel.)

Engine mountings are illustrated in figures 11 and 12.

MAINTENANCE

Engine mountings should be inspected periodically and if found damaged or deteriorated they should be replaced.

Check the engine mount brackets for cracks or elongated bolt holes. Replace the brackets if necessary. Check the mounting fasteners for the correct torque. Inspect the rubber parts for deterioration and replace if necessary.

NOTICE: Broken or deteriorated mounts can cause misalignment and eventual destruction of certain drive train components. If a single mounting is misaligned, damaged, or broken, the remaining mountings are subjected to abnormally high stresses. This may cause breakage or damage to the remaining mountings.

FRONT ENGINE MOUNT REPLACEMENT

Remove or Disconnect (Figure 11)

NOTICE: When supporting the engine to replace a mount, raise the engine only to height required to provide clearance for mounting removal. Be careful that control linkage and wiring are not damaged from raising the engine. When replacing a single front mounting, both mountings should be detached before attempting to raise the engine. Failure to do this will place excessive stress on the attached mounting when the engine is raised.

NOTICE: When raising or supporting the engine for any reason, do not use a jack under the oil pan, any sheet metal or crankshaft pulley. Due to the small clearance between the oil pan and the oil pump screen, jacking against the oil pan may cause it to be damaged or bent against the pump screen, resulting in a damaged oil pickup unit.

1. Engine mount bracket (25) attached to cylinder block.
2. Nuts and bolts holding engine mount insulator (24) to engine mount crosmember.
3. Engine mount insulator (24) to engine mount bracket nut.

Install or Connect (Figure 11)

1. Engine mount insulator (24) to engine mount bracket nut.

   Tighten

   - Engine mount bracket nut to 82 N·m (61 lb·ft).

2. Engine mount bracket (25) to the cylinder block.

   Tighten

   - Engine mount bracket bolts to 51 N·m (38 lb·ft).

3. Engine mount insulator bolts to engine mount crosmember.

   Tighten

   - Engine mount insulator bolts to 48 N·m (35 lb·ft).

REAR ENGINE MOUNT REPLACEMENT

Remove or Disconnect (Figure 12)

NOTICE: When supporting the engine to replace a mount, raise the engine only to height required to provide clearance for mounting removal. Be careful that control linkage and wiring are not damaged from raising the engine. When replacing a single mounting, both mountings should be detached before attempting to raise the engine. Failure to do this will place excessive stress on the attached mounting when the engine is raised.

NOTICE: When raising or supporting the engine for any reason, do not use a jack under the oil pan, any sheet metal or crankshaft pulley. Due to the small clearance between the oil pan and the oil pump screen, jacking against the oil pan may cause it to be damaged or bent against the pump screen, resulting in a damaged oil pickup unit.

- Support the transmission with a transmission or jack. The transmission mount is also the rear engine mount.
  1. Braket (Rubber to Frame) (30) to crossmember (28), nuts and washers.
  2. Lower the transmission slightly and remove the mount assembly.
  3. Nuts and washers and the insulators (29) from the upper mount (31).

Install or Connect (Figure 12)

NOTICE: See “NOTICE” on page 6A-1 of this section for steps 2 and 3.

- Support the transmission with a transmission or garage jack.
  1. Engine mount insulators (29) to the upper braket assembly (Mission Side) (31).
  2. Raise the transmission and install the braket (Rubber to Frame) (30) onto the frame crossmember (28). Remove the jack.

Tighten

- Braket (Rubber to Frame) nuts to 40 N·m(30 lb·ft).

SECTION 6D

ENGINE ELECTRICAL

NOTICE: When fasteners are removed, always reinstall them at the same location from which they were removed. If a fastener needs to be replaced, use the correct part number fastener for that application. If the correct part number fastener is not available, a fastener of equal size and strength (or stronger) may be used. Fasteners that are not reused, and those requiring thread locking compound will be called out. The correct torque value must be used when installing fasteners that require it. If the above conditions are not followed, parts or system damage could result.

CONTENTS

SUBJECT	PAGE
General Description	6D- 2
Battery	See 1999 Service Manual
Description	See 1999 Service Manual
Diagnosis of Battery	See 1999 Service Manual
On-Vehicle Service: Battery	See 1999 Service Manual
Charging System	See 1999 Service Manual
Description	See 1999 Service Manual
Maintenance	See 1999 Service Manual
Diagnosis of Charging System	See 1999 Service Manual
Generator Replacement	See 1999 Service Manual
Starting System	See 1999 Service Manual
Description	See 1999 Service Manual
Maintenance	See 1999 Service Manual
Diagnosis of Starting System	See 1999 Service Manual
On-Vehicle Service: Starter System	See 1999 Service Manual
Generator Unit Repair	6D- 4
Description of Generator	6D- 4
Generator Output Tests	6D- 4
Disassembly of Generator	6D- 5
Inspection and Repair	6D- 6
Electrical Bench Tests (Generator)	6D- 7
Assembly of Generator	6D- 8
Starter Motor Unit Repair	See 1999 Service Manual
Description of Starter Motor	See 1999 Service Manual
Diagnosis Prior to Disassembly	See 1999 Service Manual
Disassembly of Starter Motor	See 1999 Service Manual
Cleaning, Inspection and Repair	See 1999 Service Manual
Electrical Bench Tests (Starter)	See 1999 Service Manual
Assembly of Starter Motor	See 1999 Service Manual
Engine Heaters	See 1999 Service Manual
Engine Block Heater	See 1999 Service Manual
Engine Lube Oil Heater	See 1999 Service Manual
Specifications	6D- 9
Starter Motor	See 1999 Service Manual
Generator	6D- 9
Battery	See 1999 Service Manual
Fastener Torques	See 1999 Service Manual

GENERAL DESCRIPTION

Described below are the major engine electrical systems and components:

Charging System

(Figure 1)

The charging system includes the batteries, generator, battery discharge indicator circuit and the connecting wiring.

Cranking Circuit

(Figure 1)

The cranking or starting circuit includes the batteries together with the starter switch, starter assembly starter relay, transmission neutral safety switch, and related wiring.

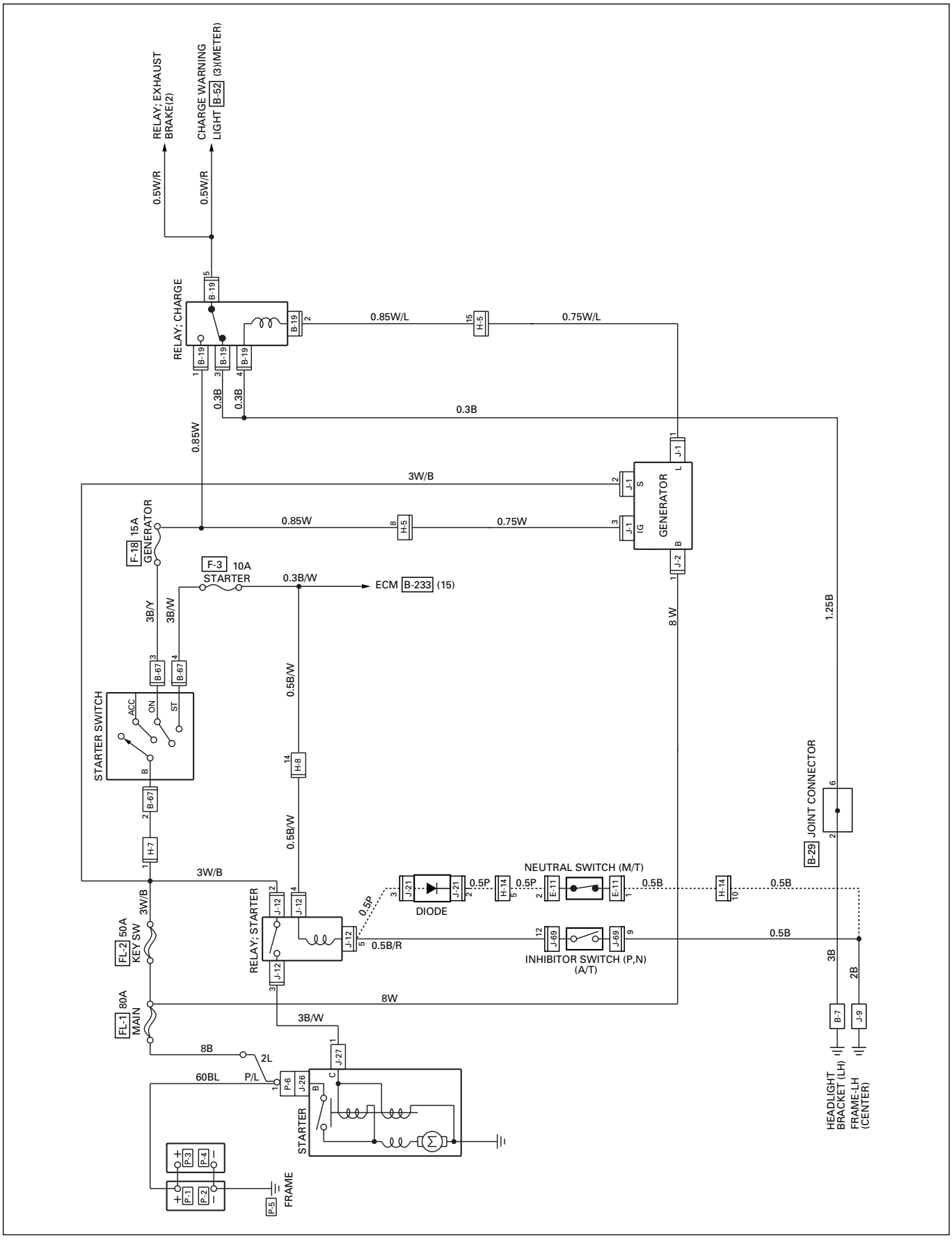

Figure 1. Charging and Starting Systems Circuit Diagram

GENERATOR UNIT REPAIR

DESCRIPTION OF GENERATOR

The generator (1) is a 12 volt, 110A, model with a solid state regulator mounted to the brush holder (2). The generator must be disassembled to remove the regulator or brush holder assembly. The generator rotor bearings (4) contain enough grease to eliminate periodic lubrication. Two brushes carry current through two slip rings to the field coil.

The stator windings are assembled on the inside of a laminated core that forms part of the generator frame. A rectifier bridge connected to the stator windings contains six diodes that change the stator AC voltages to a DC voltage (figures 9 and 10).

The vacuum pump (3) is attached to the rear of the generator.

GENERATOR OUTPUT TESTS

To check the generator in a test stand, proceed as follows:

Important

- Use a fully charged battery when performing these tests.

1. Connect an ammeter from the positive (+) battery side to the generator output wire. This is 8 mm (0.032 in) (black) wire. Leave the carbon pile disconnected.
2. Slowly increase the generator speed and observe the voltage meter. If voltage is uncontrolled with speed and increases above 16 volts on a 12-volt system, replace the regulator and check the rotor winding. If the voltage is below 15 volts, connect the carbon pile across the battery.
3. Run the generator at 5,000 RPM and adjust the carbon pile to obtain maximum current output, which should be 104 amperes at 13.5 volts.
4. If the output is not within 10 amperes of the rated output, check the rotor winding, rectifier bridge, and stator as described later under “Inspection and Repair” and “Electrical Bench Tests.”

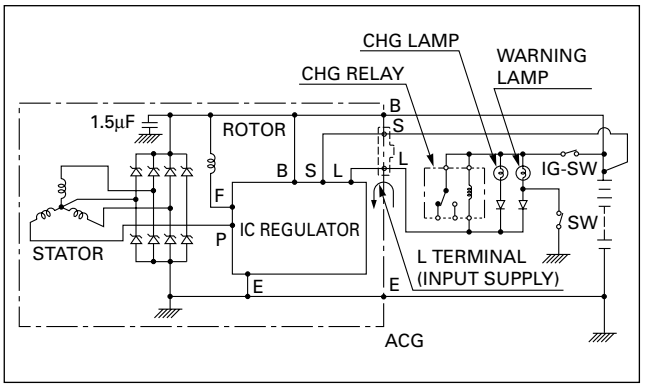

Figure 9. Generator Schematic

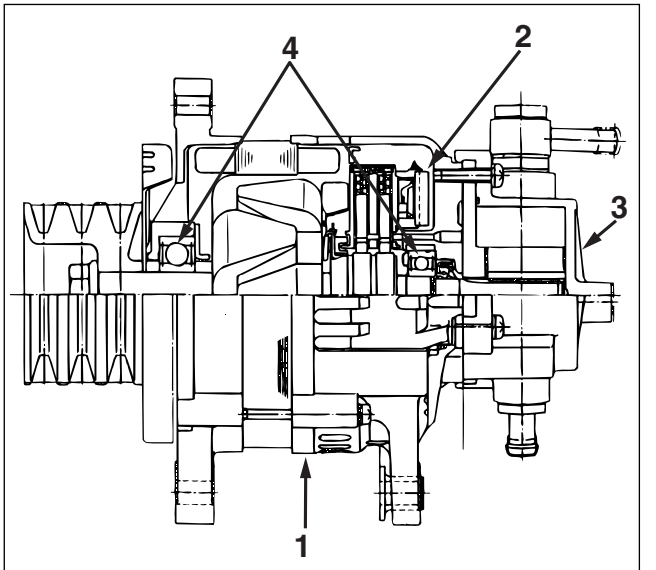

Fig. 6D-10
1. Generator
2. Voltage Regulator
3. Vacuum Pump
4. Ball Bearings

Figure 10. Generator

Inspect

- Before performing the generator output test, all charging system components, wires and terminals for wear or damage. Repair or replace any parts found defective.

DISASSEMBLY OF GENERATOR

Disassemble (Figure 16)

1. Vacuum pump assembly (9).
   - Remove the vacuum pump screws attached to the back of the generator. Hold the center plate to prevent the rotor and vanes from dropping out, then remove the vacuum pump in the direction in line with the rotor shaft. Remove the center plate fixing screws and the center plate, then remove the rotor and vanes.
2. Through bolts (10).
   - Separate the front cover assembly from the rear cover assembly.
     When separating the front and rear cover assemblies, be sure the stator assembly stays seated in the rear cover.
3. Pulley and rotor assembly (11).
   - Be sure not to damage the oil seal when removing the pulley and rotor assembly from the rear cover assembly.
   - Tape the rotor shaft splines to prevent accidental damage.
4. Rear cover and stator assembly (12).
5. Pulley nut (13).
   - Clamp the rotor assembly in a vise to remove the pulley nut.
6. Pulley (14).
7. Fan (15).
8. Spacer (16).
9. Rotor and rear bearing (17).
10. Bearing retainer (18).
11. Front ball bearing (19).
12. Front cover (20).
13. Rear cover (21).
    - Remove nuts at the rear cover battery terminal and diode holder assembly.

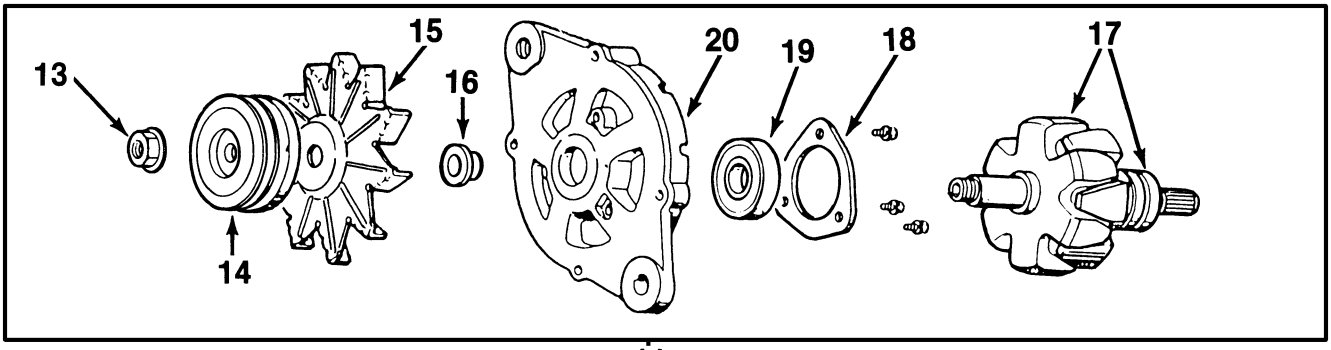

11

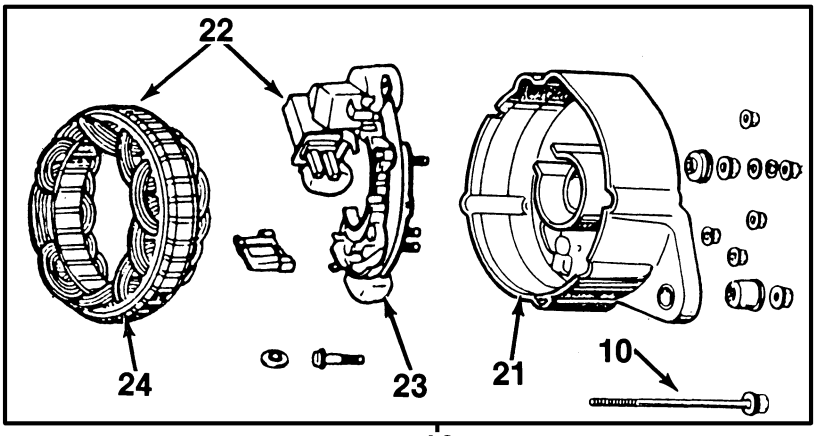

12

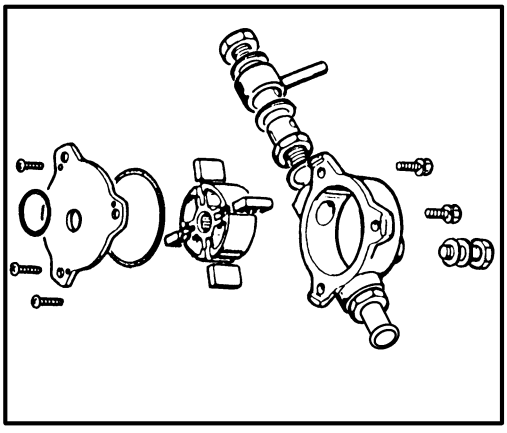

9

9. Vacuum Pump
10. Through Bolt
11. Pulley and Rotor Assembly
12. Rear Cover and Stator Assembly
13. Nut
14. Pulley
15. Fan
16. Spacer
17. Rotor and Rear Bearing
18. Bearing Retainer
19. Front Ball Bearing
20. Front Cover
21. Rear Cover
22. Stator and Diode Assembly
23. Diode Assembly
24. Stator

Figure 16. Generator Assembly

Important

- Separate the stator and rear cover. Be sure you identify the proper position of the insulated washers to prevent improper installation.

14. Stator and diode assembly (22).
15. Diode assembly (23).
    - Separate the diodes from the stator by melting the solder on the stator coils, diodes and N terminal leads. When melting solder, hold the lead wire with long-nose pliers to prevent heat from being transferred to the diodes.
16. Stator (24).

INSPECTION AND REPAIR

Clean

- All metal parts except the voltage rectifier bridge, stator, rotor and bearing assemblies in a suitable solvent.
- Wipe or blow the components dry.

Inspect

- Brush holder and brushes. The brushes have a line that indicates their limit. If the brushes are shorter than 6 mm (0.24 in) replace the brushes (figure 17).
- Voltage regulator for damage or corrosion.
- Bearings and spacer. Rotate the bearing and check for roughness or excessive drag. If in doubt about the bearing, replace it.

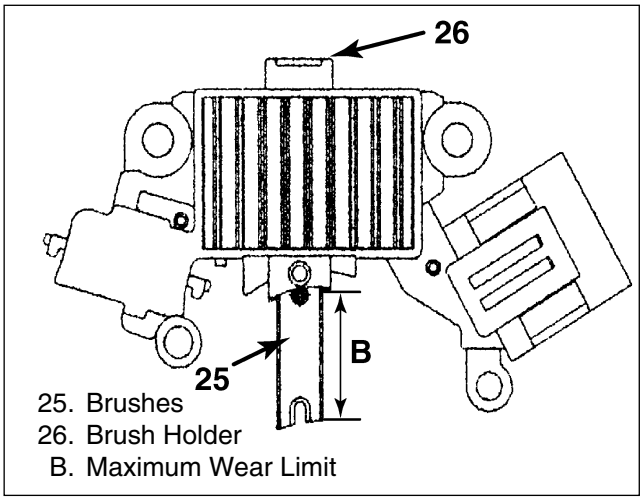

Figure 17. Brush Holder and Brushes

- Rotor and stator windings for burned insulation or broken terminal connectors, wires, etc.
  Burned insulation may appear as very dark or blackened wiring, and sometimes charred paint or a combination of the two. Replace the rotor or stator if the windings are burned.
- Generator frames. Check for distortion, cracks or damage. Replace as necessary.
- Rotor slip rings. If the rings are dirty, clean them with 500–600 grain or finer polishing cloth.
  Clean the slip rings with rubbing alcohol if the rings are contaminated. Spin the rotor and hold the polishing cloth against the rings until they are clean. Slip rings which are rough, scored, or out-of-round, must be machined in a lathe to 31.7 mm (1.248 in). Finish the slip rings with 500–600 grain or finer polishing cloth and blow away all dust particles after the machining process.
- All vacuum pump components for wear, damage or other abnormal conditions.
- Check valve. Apply a light pressure onto the check valve with a screwdriver and check the valve to be sure it's operating smoothly (figure 18).
- Oil seal (O-ring). Check the inner face of the rear cover for traces of oil leakage. Be sure the inner face of the oil seal is not worn or damaged.
  If worn or damaged, use a screwdriver to remove the oil seal (O-ring) from the rear cover.
  Install a new oil seal (O-ring) using an oil seal installer or equivalent.

Measure (Figures 19 and 20)

- The length of the vanes. The length must be 14.0–15.2 mm (0.551–0.598 in) (figure 9).
  Replace vanes if not within these specifications.
- The inside diameter of the vacuum pump housing. The diameter must be 60.0–60.1 mm (2.362–2.366 in) (figure 20).
  Replace the housing if not within these specifications.

ELECTRICAL BENCH TESTS (GENERATOR)

Inspect

- For an open circuit by connecting a self-powered test light or ohmmeter to each slip ring. If the test light does not come on or if the ohmmeter reading is high (infinite), the winding is open.
- For a grounded winding by connecting a self-powered test light or ohmmeter from one slip ring to the armature shaft. if the light lights or continuity exists, the armature is grounded.
- Shorted winding or high resistance by connecting a 12-volt battery and 0-10 amp ammeter in series with the two slip rings.
  The ammeter should read about 4.1 amps at 12 volts. The specified resistance is 2.9 ohms. An ammeter reading above the specified value

indicates shorted windings. An ammeter reading below the specified value indicates excessive resistance. If readings are not to specifications replace the rotor.

- Stator for continuity across the stator leads. If no continuity exists, replace the stator.

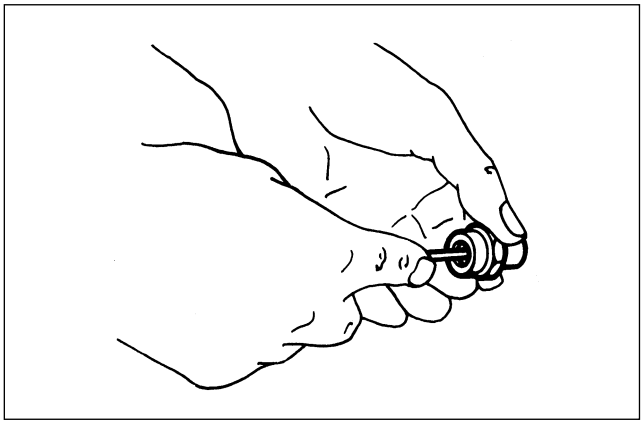

Figure 18. Checking Check Valve Operation

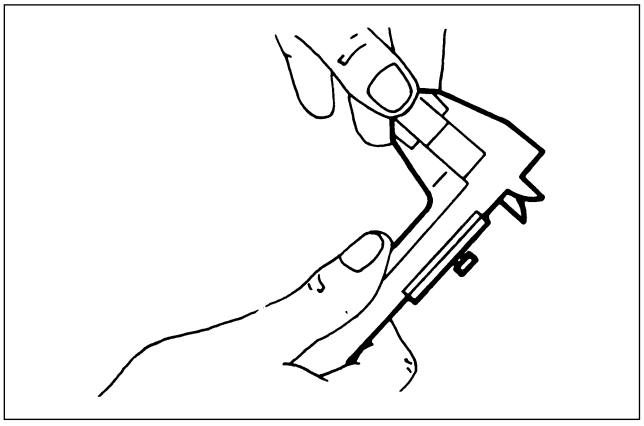

Figure 19. Measuring Length of Vane

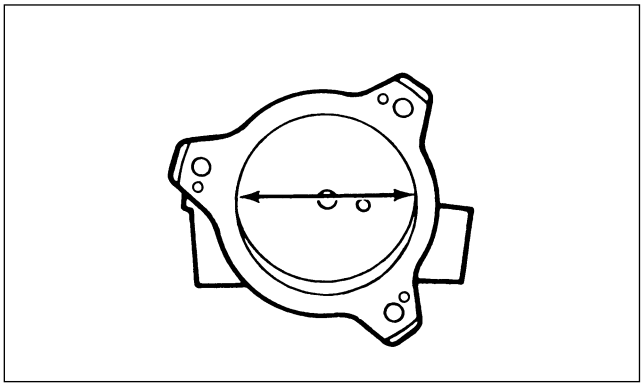

Figure 20. Inside Diameter of Vacuum Pump

- Stator for grounds by first unsoldering the rectifier bridge from the stator. Be sure to mark where the leads go. Then connect a self-powered test light or ohmmeter from each stator lead to the frame. If the test light lights or the ohmmeter indicates continuity, the stator is grounded and must be replaced.
- Check the diodes for continuity with an ohmmeter across the positive (+) side diodes and negative (–) side diodes. If continuity exists, the diode is in satisfactory condition. If no continuity exists, the diode is faulty. Reverse the ohmmeter test leads and check continuity. If no continuity exists, the diode is in satisfactory condition. If continuity exists at any point, the diode is defective and must be replaced.
  Resolder the rectifier bridge leads to the diodes. Then resolder the rectifier bridge to the stator terminals.

IC voltage regulator test procedure

Perform the following tests on the circuit shown in Figure 21 below to determine voltage regulator condition.

Tests 1 and 2

Use a variable resistor to gradually increase the voltage from 0 to 12 volts (VB).

Lamp conditions shown in the table (C/L1 and C/L2) are normal. If the conditions are different, the IC voltage regulator must be replaced.

Test 3

Use a variable resistor to gradually increase the voltage from 12V. Measure the voltage across the VB when the lamp goes out. The measured voltage must be within the 14.1~14.7 volt range at 20°C (68°F).

Voltage (VB) shown in table are normal. If voltage (VB) are different the IC voltage regulator must be replaced.

Judgment criteria

Test	SW1	SW2	C/L1	C/L2	VB
1	OFF	OFF	OFF	OFF	12V
2	ON	ON	ON	OFF	14.1~14.7V at 20°C
3	ON	ON	OFF	OFF	

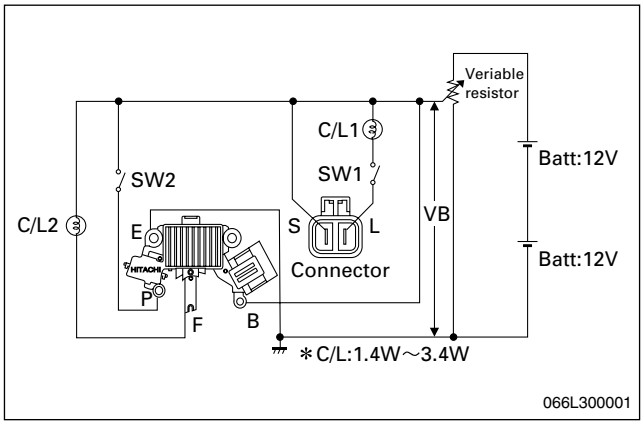

Figure 21. IC regulator tests diagram

ASSEMBLY OF GENERATOR

Assemble (Figure 16)

Important

- When connecting the stator coil leads and diode leads using solder, use long-nose pliers and work as quickly as possible to prevent the heat from transferring to the diodes.

1. Stator (24).
2. Diode assembly (23).
3. Stator and diode assembly (22).
4. Rear cover (21).
5 Front cover (20).
6. Front ball bearing (19).
7. Bearing retainer (18).
8. Rotor and rear bearing (17).
9. Spacer (16).
10. Fan (15).
11. Pulley (14).
12. Pulley nut (13).

Tighten

- Pulley nut to 107 N·m (80 lb·ft).

13. Rear cover and stator assembly (12).
    - Position the projected portion of the ring on the bearing so that the projection becomes minimal.
14. Pulley and rotor assembly (11).
    - Install the pulley and rotor assembly holding the brushes pushed in with a paper clip. Remove the tape on the rotor shaft splines and insert the pulley and rotor assembly into the rear cover assembly.
15. Through bolts (10).
    - Place a guide bar through the holes in the front cover and rear cover flange for proper alignment. Install the through bolts.

Tighten

- Through bolts to 4 N·m (35 lb·in).

16. Vacuum pump assembly (9).
    - Position the rotor (27), with the serrated boss (28) turned up, on the center plate and housing (figures 22).
    - Align the holes in the center plate and rotor.
    - Install vanes (29) into the slits in rotor (27). The vanes must be installed with the round side turned outward (figure 22).
    - After installation of seal (O-ring), install the center plate (figure 23).
    - Install the vacuum pump assembly to the back of the generator with 3 screws.

Tighten

- Vacuum pump screws to 7 N·m (62 lb·in).

- Install 5 cc (0.016 oz) engine oil in the filler port, then check that the generator pulley can be turned smoothly by hand.

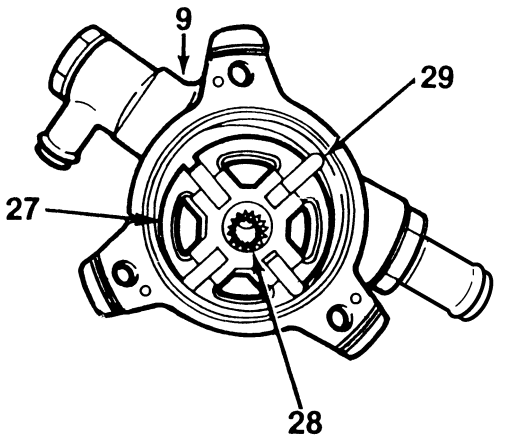

9. Vacuum Pump
27. Rotor
28. Serrated Boss
29. Vane

Figure 22. Installing Vanes Into Rotor

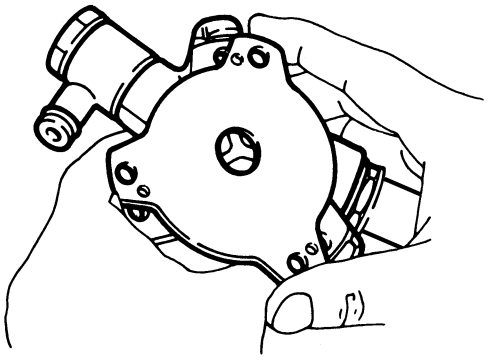

Figure 23. Installing Vacuum Pump Center Plate

SPECIFICATIONS (CONT.)

GENERATOR

Rated Voltage.....12 V
Rated Output.....110 amp
Rated Output at 5000 RPM .....104 amp
Regulated Voltage .....13.5 V
Brush Length
  Standard.....20 mm (0.787 in)
  Limit .....6 mm (0.236 in)
Slip Ring Diameter
  Standard.....31.7 mm (1.248 in)
  Limit.....30.6 mm (1.205 in)
Generator Pulley Direction (Viewed From Pulley Side) Clockwise Pulley
Diameter .....82 mm (3.23 in)
Generator Weight .....8.5 kg (17.0 lb)
Maximum Vacuum Pump Output.....–680 mm Hg (–13.15 psi)
Vacuum Pump Vane
  Standard Length.....14.0–15.2 mm (0.551–0.598 in)
Vacuum Pump Housing Inside Diameter
  Standard .....60.0–60.1 mm (2.362–2.366 in)
Vacuum Pump Weight .....1.2 kg (2.65 lb)

FASTENER TORQUES

Generator
  Adjusting Nut .....24 N·m (17 lb·ft)
  Lower Mount Bolt .....40 N·m (30 lb·ft)
  Bracket Mount Bolt.....46 N·m (34 lb·ft)
  Pulley Nut .....107 N·m (80 lb·ft)
  Rear Cover Through Bolts.....4 N·m (35 lb·in)
  Vacuum Pump Screws .....7 N·m (62 lb·in)

SECTION 7

TRANSMISSION

CONTENTS

SUBJECT **PAGE**

Automatic Transmission .....See 1999-2001 Service Manual
Manual Transmission (MXA) .....See 1999-2001 Service Manual
Manual Transmission (MZZ).....7B3- 1
Clutch (For MXA Transmission).....See 1999-2001 Service Manual
Clutch (For MZZ Transmission) 7C3- 3

MEMO

SECTION 7B3

MANUAL TRANSMISSION (MZZ)

NOTICE: When fasteners are removed, always reinstall them at the same location from which they were removed. If a fastener needs to be replaced, use the correct part number fastener for that application. If the correct part number fastener is not available, a fastener of equal size and strength (or stronger) may be used. Fasteners that are not reused, and those requiring thread locking compound will be called out. The correct torque value must be used when installing fasteners that require it. If the above conditions are not followed, parts or system damage could result.

CONTENTS

SUBJECT	PAGE
Description	7B3- 3
6-speed transmission	7B3- 3
On-Vehicle Service	7B3- 5
Transmission Oil Level Check	7B3- 5
Changing Transmission Oil	7B3- 5
Gearshift Lever Replacement	7B3- 5
Gearshift Cable Adjustment	7B3- 6
Gearshift Cable Replacement	7B3- 7
Vehicle speed sensor	7B3-10
Removal	7B3-10
Installation	7B3-10
Reverse, neutral, and selector switches	7B3-11
Removal	7B3-11
Inspection	7B3-11
Installation	7B3-11
Rear oil seal	7B3-12
Parts (Exploded view)	7B3-12
Removal	7B3-12
Installation	7B3-12
Transmission	7B3-14
Parts (Exploded view)	7B3-14
Disassembly	7B3-16
Reassembly	7B3-21
Top gear shaft	7B3-31
Parts (Exploded view)	7B3-31
Disassembly	7B3-31
Reassembly	7B3-32
Main shaft	7B3-33
Parts (Exploded view)	7B3-33
Disassembly	7B3-34
Reassembly	7B3-38
Countershaft	7B3-43
Parts (Exploded view)	7B3-43
Disassembly	7B3-43
Reassembly	7B3-44

Control box 7B3-46
Parts (Exploded view) 7B3-46
Disassembly 7B3-47
Reassembly 7B3-47
Specifications 7B3-49
Special Tools 7B3-50

DESCRIPTION

6-speed transmission

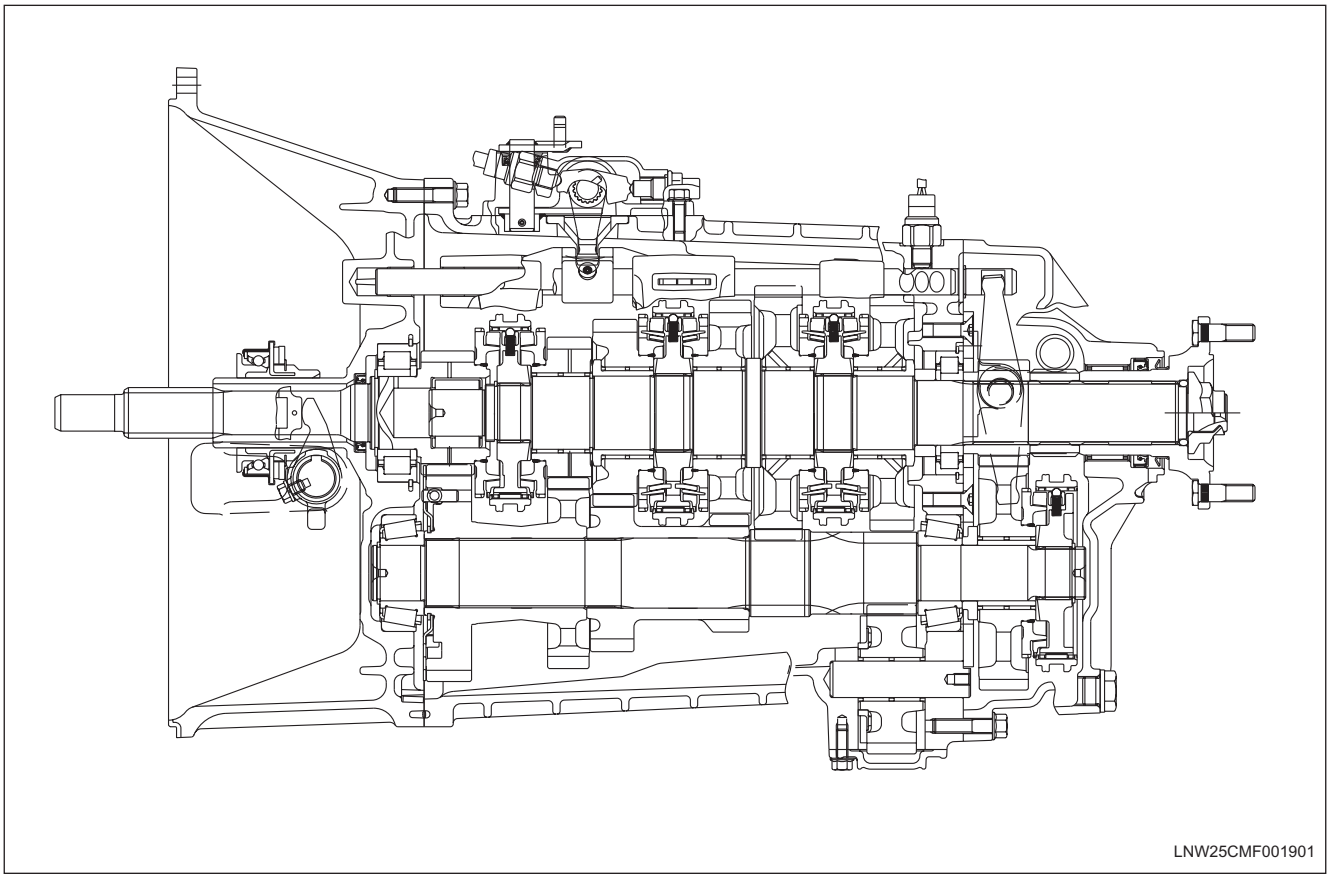

The newly designed MZZ transmission has a 3-piece aluminum case to greatly reduce weight.

Taper roller bearings are used for both ends of the countershaft (front and rear).

The transmission features a twin-rod shift control.

PROBLEM	POSSIBLE CAUSE	CORRECTION
Abnormal noise	1. Flywheel pilot bearing wear 2. Main shaft or countershaft bearing wear or other damage 3. Main shaft gear, countershaft gear, and/or reverse idle gear wear or other damage 4. Main shaft spline and/or synchronizer hub spline wear 5. Gear or bearing thrust surface scoring 6. Insufficient backlash between mating gears	1. Replace the bearing. 2. Replace the bearing(s). 3. Replace the gear(s). 4. Replace the spline(s). 5. Replace the gear(s) and/or bearing(s) 6. Replace the gears.

PROBLEM	POSSIBLE CAUSE	CORRECTION
Difficult shifting	1. Insufficient clutch pedal play 2. Change lever contact surface wear 3. Shift block, shift rod, and/or control box contact surface wear 4. Shift arm and/or synchronizer sleeve wear 5. Thrust washer and collar and/or gear thrust surface wear (Main shaft and countershaft thrust play) 6. Synchronizer wear	1. Adjust the play. 2. Repair or replace the change lever and apply grease. 3. Replace the worn components. 4. Replace the worn parts. 5. Replace the worn parts. 6. Replace the synchronizer.
Gear slippage	1. Détente ball wear 2. Shift rod and/or control box contact surface wear 3. Shift arm and/or synchronizer sleeve wear 4. Thrust washer and collar and/or gear thrust surface wear (Main shaft and countershaft thrust play) 5. Bearing wear or other damage 6. Main shaft spline and synchronizer hub spline wear 7. Synchronizer spring weak or broken	1. Replace the détente ball. 2. Replace the worn components. 3. Replace the worn parts. 4. Replace the worn parts. 5. Replace the worn or damaged bearings. 6. Replace the worn parts. 7. Replace the spring.
Oil leakage	1. Drain plug and/or filler plug loose 2. Broken gasket 3. Oil seal wear or damage	1. Tighten the plug(s). 2. Replace the gasket. 3. Replace the oil seal.

ON-VEHICLE SERVICE

TRANSMISSION OIL LEVEL CHECK

Measure

- Block the vehicle so it cannot move.
- Disconnect the ground cable from the battery negative (–) post.

1. Remove the filler plug (2) from the transmission case (3).
2. Check oil level
   - Add lubricant to within 0 to 10 mm (0 to 0.4 in) of bottom edge of the filler hole if necessary (figure.2).

   CAUTION: Use ENGINE OIL SAE 5W-30 for the transmission case.

3. Install the filler plug.

   Tighten

   - Filler plug to 39 N·m (29 lb·ft)

   - Connect the battery ground cable and remove the wheel blocks.

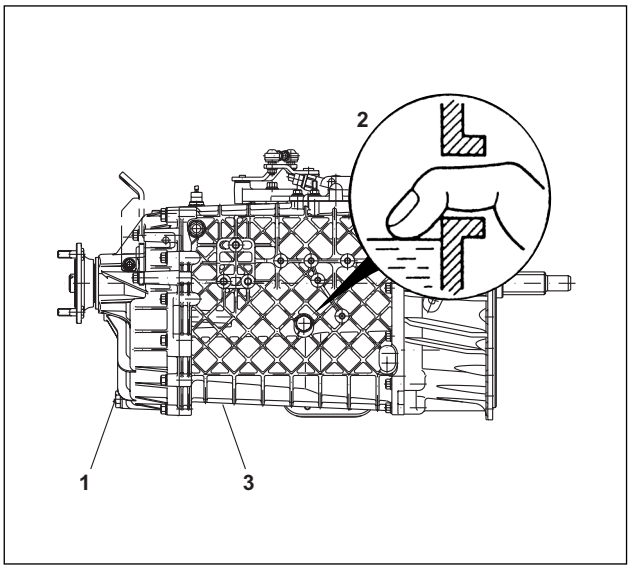

Legend

(1) Drain Plug
(2) Filler Plug
(3) Transmission Case

CHANGING TRANSMISSION OIL

Drain the transmission oil after driving the vehicle. The oil will drain more completely.

- Block the vehicle so it cannot move.
- Disconnect the ground cable from the battery negative (–) post.

1. Remove the drain plug.(1) Provide a pan to catch oil.
2. Install the drain plug and tighten.

   Tighten

   - Drain plug to 39 N·m (29 lb·ft)

3. Remove the filler plug (2).
4. Fill the transmission case to level of the filler plug opening.

   CAUTION: Use ENGINE OIL SAE 5W-30 for the transmission case.

5. Install filler plug and tighten.

   Tighten

   - Filler plug to 39 N·m (29 lb·ft)

   - Connect the battery negative cable and remove the wheel blocks.

GEARSHIFT LEVER REPLACEMENT

Remove or Disconnect

- Block the vehicle so it cannot move.
- Disconnect the ground cable from the battery negative (–) post.

1. Gearshift lever knob (4).
2. Cover assembly (5).
   - Remove the fixing screw (6) and 3 clips (7).
3. Shift cable (8) and select cable (9).
   - Disconnect the cables from the gearshift lever.
   - Remove the C-clips (10) and disconnect the cables from bracket.
4. Gearshift lever assembly (11).
   - Remove 2 screws (12) and 2 nuts (13).

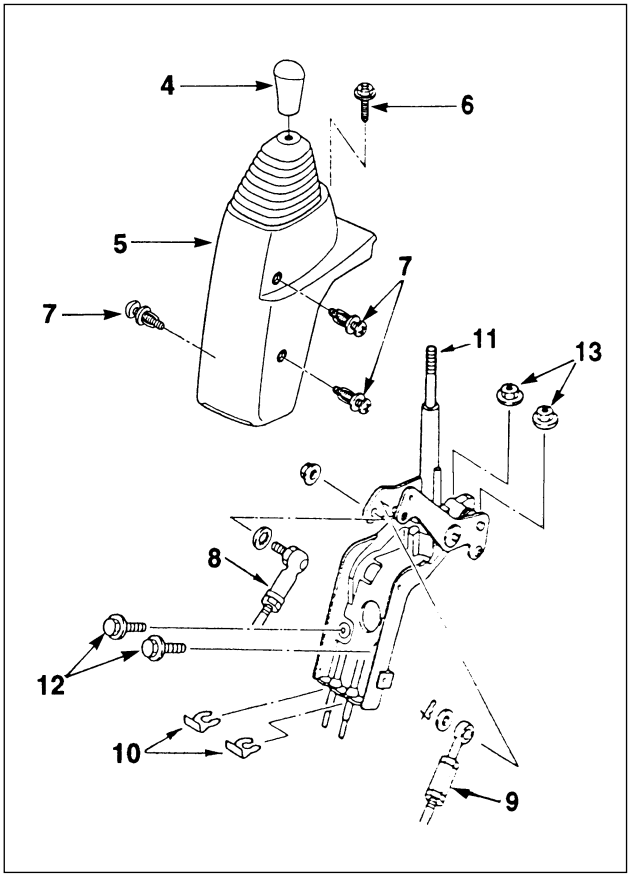

Legend

(4) Gearshift Lever Knob
(5) Cover Assembly
(6) Screw
(7) Clip
(8) Shift Cable
(9) Select Cable
(10) C-Clip
(11) Gearshift Lever Assembly
(12) Screw
(13) Nut

Install or Connect

1. Gearshift lever assembly (11).
2. Shift cable (8) and select cable (9).
   - Connect the cables to the gearshift lever.
   - Install the C-clips (10) to the bracket.

Adjust

- When connecting the shift cable and select cable to the gearshift lever, adjust the cable. Refer to GEARSHIFT CABLE ADJUSTMENT in this section.

3. Cover assembly (5).
4. Gearshift lever knob (4).

- Connect the battery negative cable and remove the wheel blocks.

GEARSHIFT CABLE ADJUSTMENT

After connection of the select cable and the shift cable, confirm if shift operation Is performed smoothly. If any dragging or Improper stroke is present, check and adjust In accordance with the procedures shown below.

Measure

Set the transmissIon in the neutral position, then confirm if the dimension between the center of the shift lever play and the instrument center cluster is within the 283 ± 15 mm (11.1 ± 0.6 in) . If the dimension is out of the reference value, adjust as required.

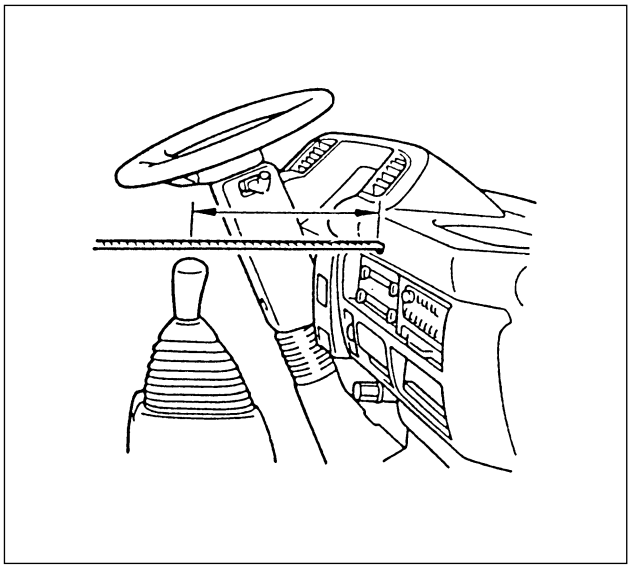

Adjust

- Block the vehicle so it cannot move.
- Disconnect the ground cable from the battery negative (–) post.

1. Remove the gearshift lever knob (4).
2, Remove the cover assembly (5).
3. Disconnect the shift cable (8) and the select cable (9) on the gearshift lever side.
4. Set the transmission in the neutral position, then adjust the dimension between the center of the shift lever play and the instrument center cluster to the 283 ± 15 mm (11.1 ± 0.6 in). (figure 4).

5. Loosen the lock nut (15) of the shift cable (8) and the select cable (9), then turn the ball joint (14) or turnbuckle (16) as necessary for respective pins.
6. Fasten the lock nut (15) with specific torque.

Tighten

- Lock nuts to 6 N·m (52 lb·in)

7. Install the cover assembly (5).
8. Install the gearshift lever knob (4).

- Connect the battery ground cable and remove the wheel blocks.

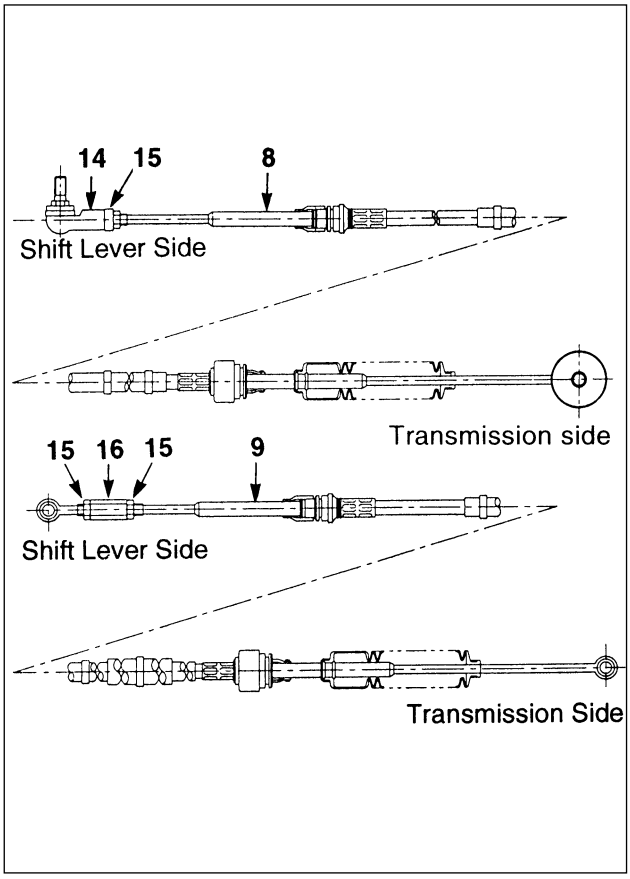

Legend

(8) Shift Cable
(9) Select Cable
(14) Ball Joint
(15) Lock Nut
(16) Turnbuckle

GEARSHIFT CABLE REPLACEMENT

Remove or Disconnect

- Block the vehicle so it cannot move.
- Disconnect the ground cable from the battery negative (–) post.

1. Gearshift lever knob (4).
2. Cover assembly (5).
3. Shift cable (8) and select cable (9).
   - Disconnect the shift cable and select cable from gearshift lever.
   - Remove the C-clips (10) and disconnect the cables from gearshift lever bracket.
   - Remove the grommet retainer (17), grommet seal (18) and grommet (19).
   - Tilt the cab.
   - Disconnect the shift cable and the select cable on the transmission side.
   - Remove the C-clips (10) and disconnect the shift cable and the select cable from the bracket.(20).
   - Remove the clips that fix the cables to the frames or brackets.
   - Remove the shift and select cable assemblies.

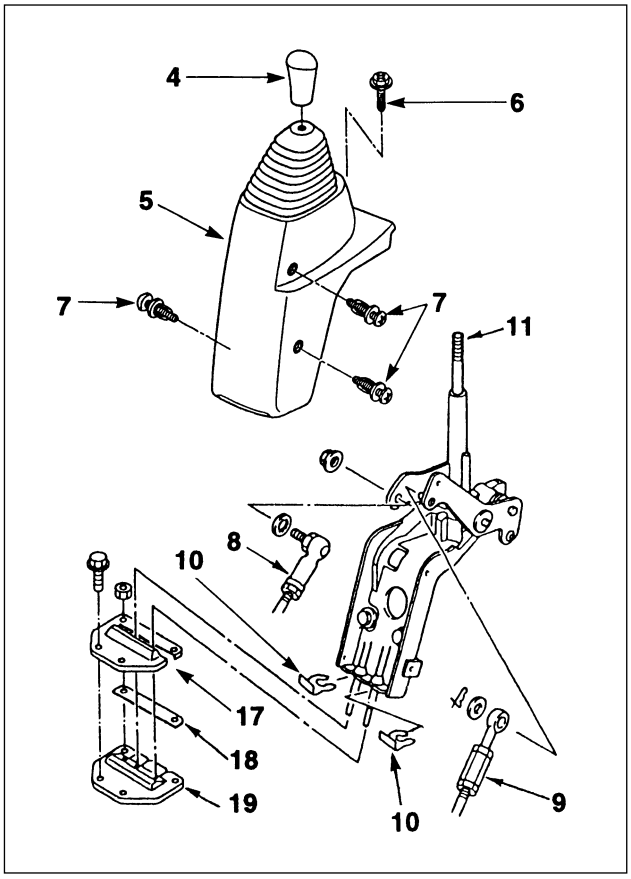

Legend

(4) Gearshift Lever Knob
(5) Cover Assembly
(6) Screw
(7) Clip
(8) Shift Cable
(9) Select Cable
(10) C-Clip
(11) Gearshift Lever
(17) Grommet Retainer
(18) Grommet Seal
(19) Grommet

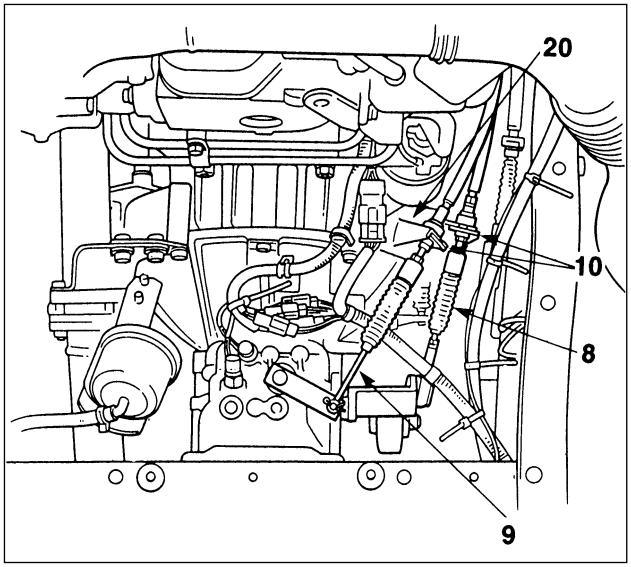

Legend

(8) Shift Cable
(9) Select cable
(10) C-clip
(20) Bracket

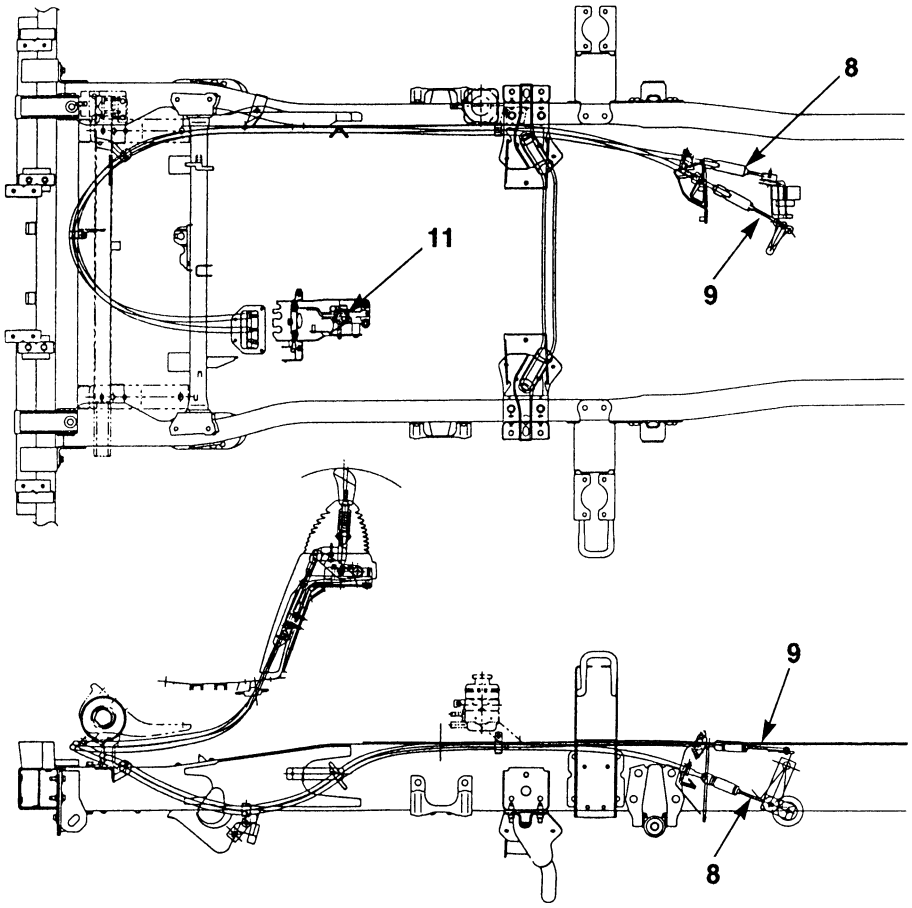

Legend

(8) Shift Cable
(9) Select Cable
(11) Gearshift Lever

Inspect

Check the cables for any deformation, damage or rust, and also check the sliding portion for any abnormal condition.

When there is any abnormal condition found, replace it with new one.

Install or Connect

1. Shift cable (8) and select cable(9).
   - Install temporarily that the shift cable and select cable.

Important

- Never bend the cables to radius less than 450 mm (18 in) unless it is necessary to do so for wiring purposes. And never bend the cables to radius less than 180 mm (7 in) even during wiring.
- Install the cables carefully without unnecessary twisting the cable boots.

- Fasten the cables with C-clips to the brackets on the transmission side.
  - Fasten the cables with C-clips to the gearshift lever bracket.
  - Fasten the cables with clips to the frames and brackets.
  - Connect the cables to the transmission.
  - Install the grommet (19), grommet seal (18) and grommet retainer(17).

Adjust

- When connecting the shift cable (8) and the select cable (9) to the gearshift lever, adjust the cables.
  Refer to GEARSHIFT CABLE ADJUSTMENT given previously in this section.

2. Cover assembly (5).
3. Gearshift lever knob (4).

- Connect the battery negative cable and remove the wheel blocks.

VEHICLE SPEED SENSOR

Removal

1. Remove the clips (1) and the protector (2).
2. Remove the wiring connectors.

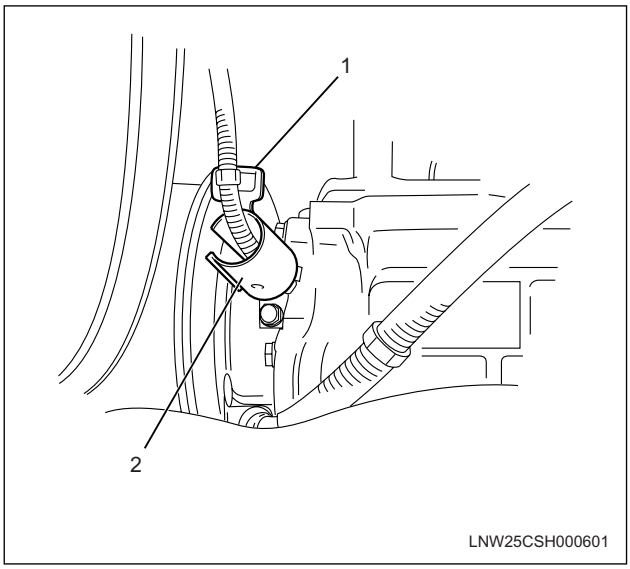

3. Loosen the fixing screw and remove the vehicle speed sensor (3).

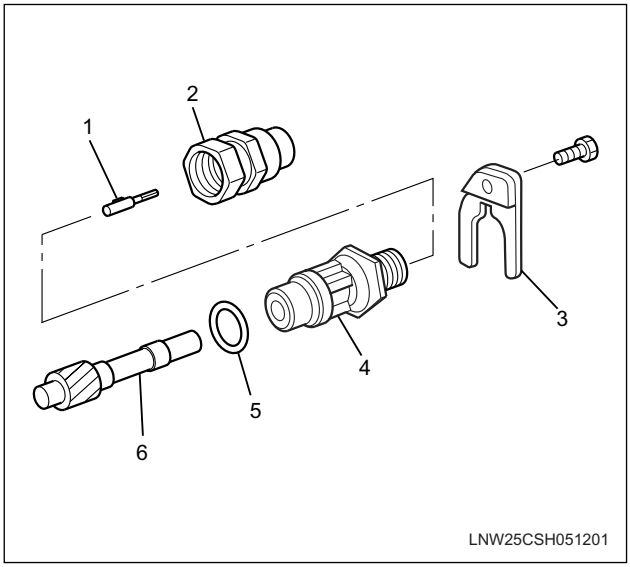

Legend

(1)	Sensor insert	(4)	Bush
(2)	Vehicle speed sensor	(5)	O-ring
(3)	Plate	(6)	Driven gear

Installation

1. Install the vehicle speed sensor and secure it with the fixing screw.
   - Align the gear tooth marked 17 of the speedometer's driven gear (17 teeth) with the opening in the plate.

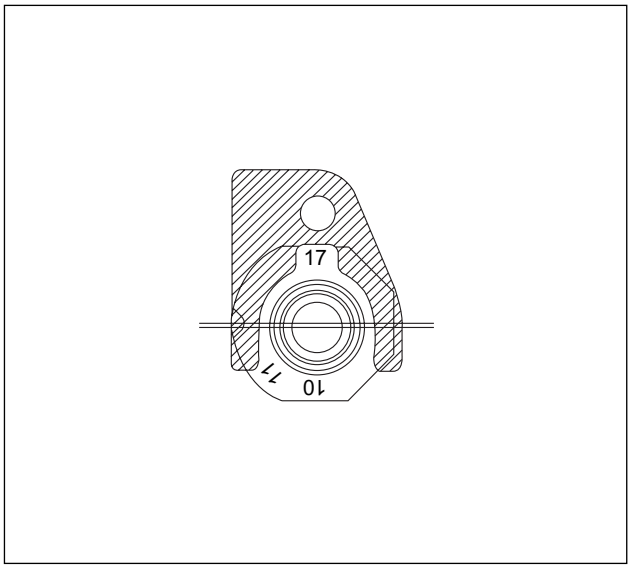

2. Tighten the fixing screw to the specified torque.

Torque : 20 N•m (2.0 lb•ft)

3. Install the sensor insert and the vehicle speed sensor. Tighten the vehicle speed sensor to the specified torque.

Torque : 25 N•m (18 lb•ft)

4. Connect the wiring connectors.
5. Install the protector and secure it with the clips.

REVERSE, NEUTRAL, AND SELECTOR SWITCHES

Removal

1. Remove the wiring connectors.
2. Remove the reverse switch (2). The switch has a black connector.
3. Remove the neutral switch (1). The switch has a black connector.

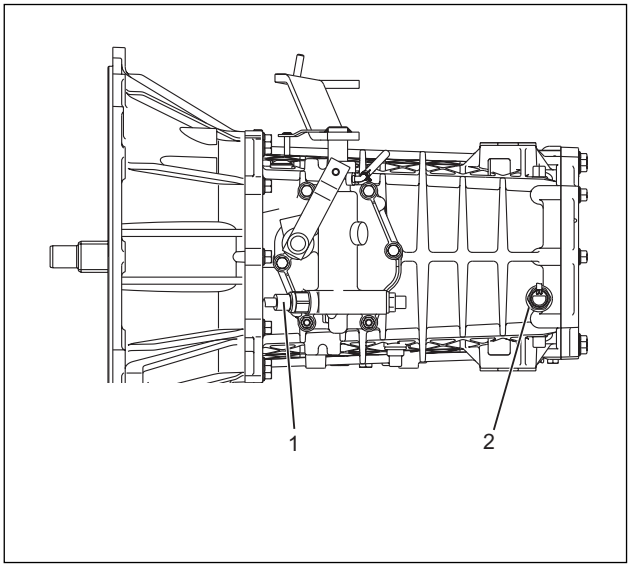

Inspection

1. Check for continuity between the switch terminals when the ball is pressed. If there is no continuity, the switch is bad.
2. Measure the switch travel.

Switch travel : 0.93 mm (0.04 in)

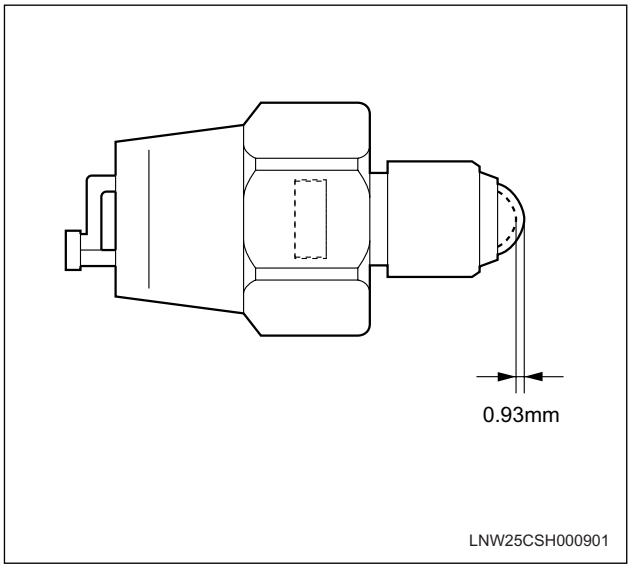

Installation

1. Apply liquid gasket (Loctite No.242) to the threaded portion of the neutral switch.
2. Install the neutral switch. Tighten the switch to the specified torque.

Torque : 34 N•m (25 lb•ft)

3. Apply liquid gasket (Loctite No. 242) to the threaded portion of the reverse switch.
4. Install the reverse switch. Tighten the switch to the specified torque.

Torque : 39 N•m (29 lb•ft)

REAR OIL SEAL

Parts

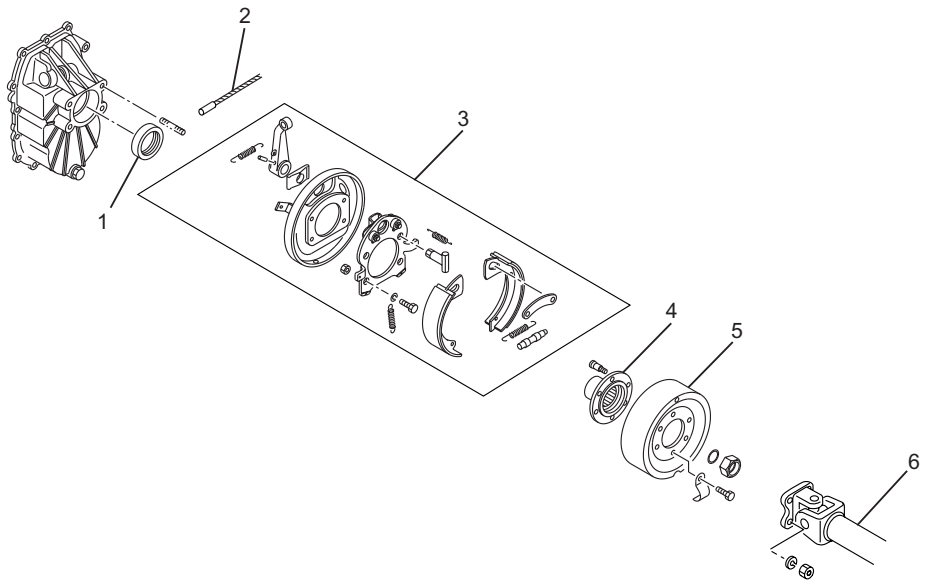

LNW25CMF002201

Legend

(1) Oil seal
(2) Parking brake cable
(3) Parking brake assembly
(4) Coupling driver
(5) Parking brake drum
(6) Rear propeller shaft assembly

Removal

1. Remove the rear propeller shaft assembly.
   - Refer to PROPELLER SHAFT (SEC. 4B) in 1999-2001 service manual.
2. Remove the parking brake cable.
   - Refer to PARKING BRAKE (SEC. 5C) in 1999-2001 service manual.
3. Remove the parking brake drum.
   - Refer to PARKING BRAKE (SEC. 5C) in 1999-2001 service manual.
4. Use the special tool (J-35016) to break the coupler driver lock nut caulking (2 locations) and remove the nut.
5. Remove the coupling driver together with the O-ring.
6. Remove the parking brake assembly.
   - Refer to PARKING BRAKE (SEC. 5C) in 1999-2001 service manual.
7. Use an ordinary screwdriver to remove the rear oil seal.

Installation

1. Apply engine oil (5W-30) to the new oil seal outer circumference.
2. Apply multi-purpose type grease to the lipped portion of the oil seal.
3. Use the installer (J-45881) to press the oil seal into the rear cover.

   CAUTION: The lipped portion of the oil seal is easily broken. Exercise care during the installation procedure.

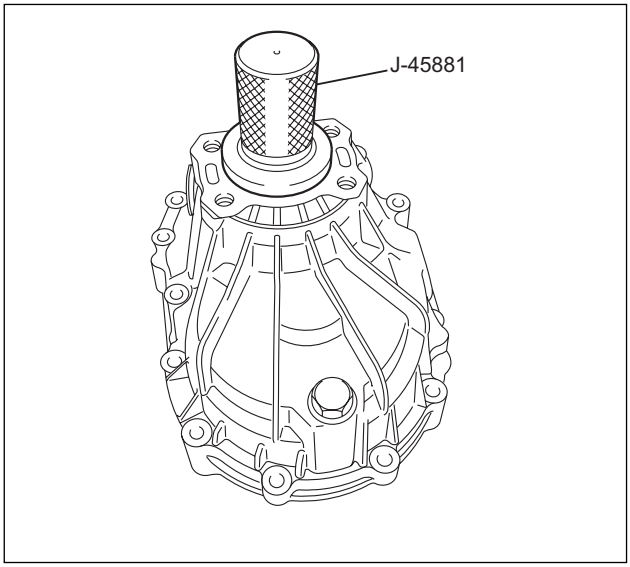

4. Install the parking brake assembly.
   - Refer to PARKING BRAKE (SEC. 5C) in 1999-2001 service manual.
5. Apply engine oil (5W-30) to the new O-ring.
6. Install the coupling driver together with the O-ring.
7. Apply engine oil (5W-30) to the seating surface of the new lock nut.
8. Use the special tool (J-35016) to tighten the lock nut to the specified torque.

Torque : 382 N•m (282 lb•ft)

9. Align the lip portion of the lock nut with the V-groove at the end of the shaft (length must be at least 5 mm). Wedge the lipped portion of the nut into the V-groove so that the gap between the nut and the bottom of the V-groove is less than 1.5 mm.
10. Caulk the lock nut at two places (radius approximately 1 mm with caulking sites 60 degrees away form each other).

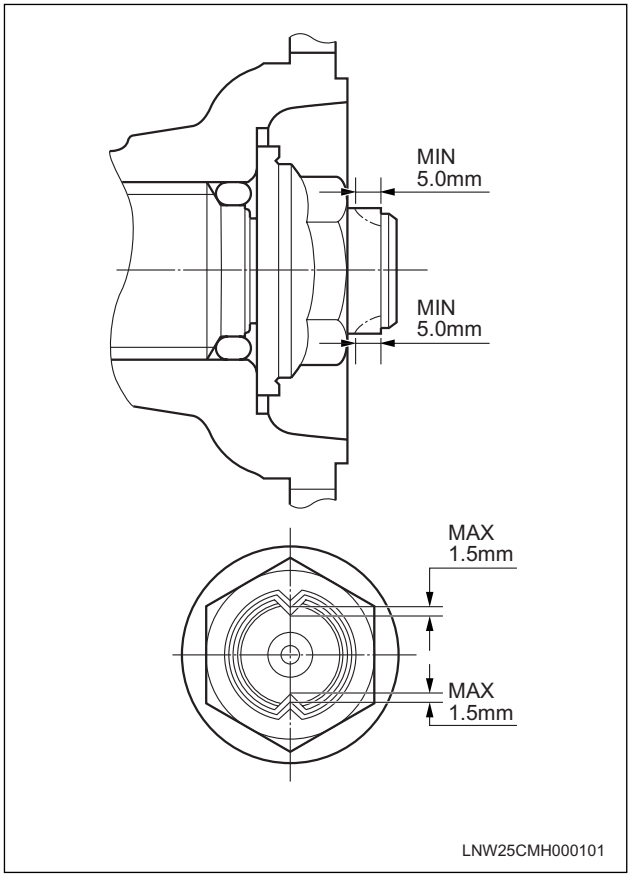

11. Install the parking brake drum.
    - Refer to PARKING BRAKE (SEC. 5C) in 1999-2001 service manual.
12. Install the parking brake cable.
    - Refer to PARKING BRAKE (SEC. 5C) in 1999-2001 service manual.
13. Install the rear propeller shaft assembly.
    - Refer to PROPELLER SHAFT (SEC. 4B) in 1999-2001 service manual.

TRANSMISSION

Parts

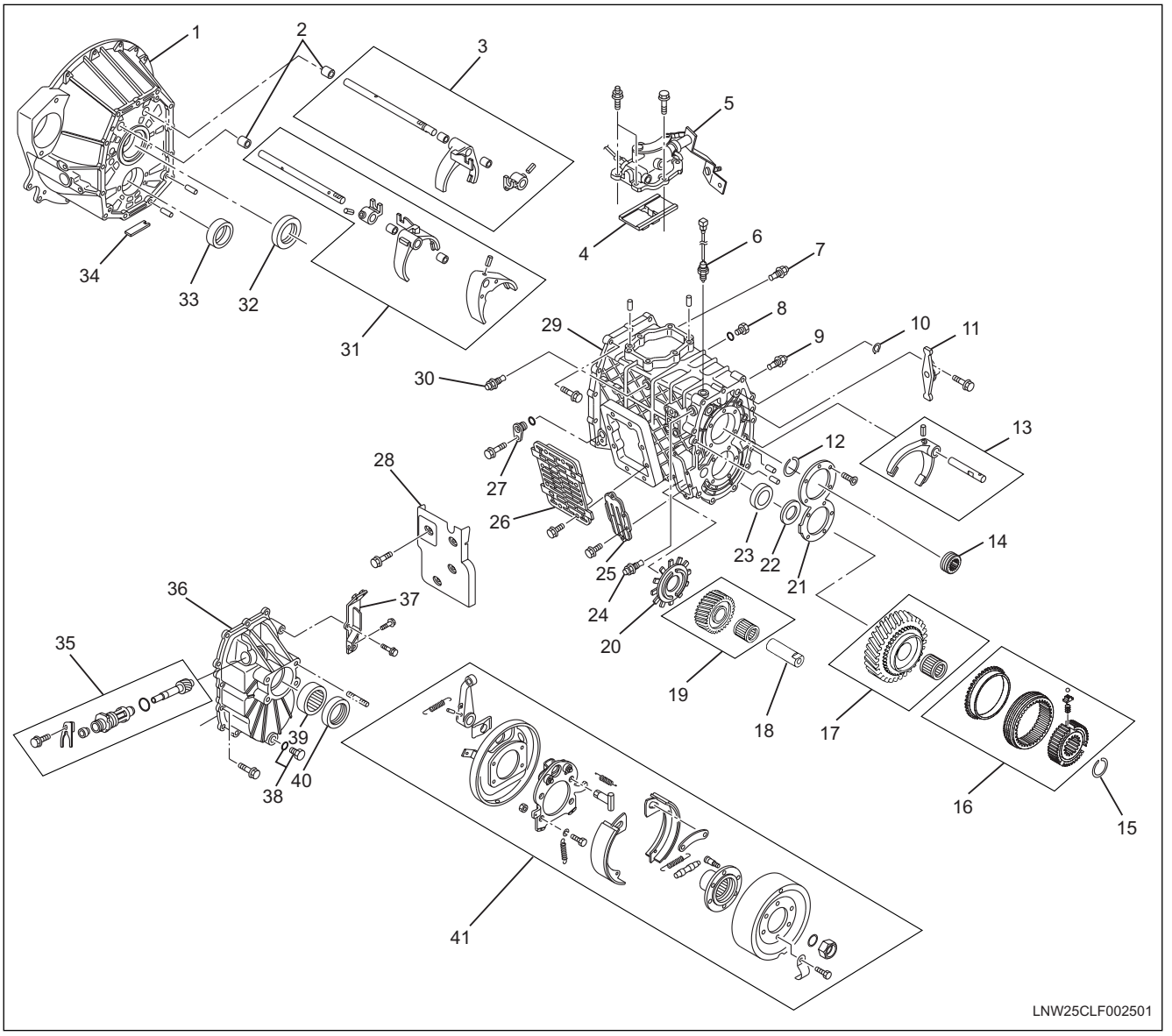

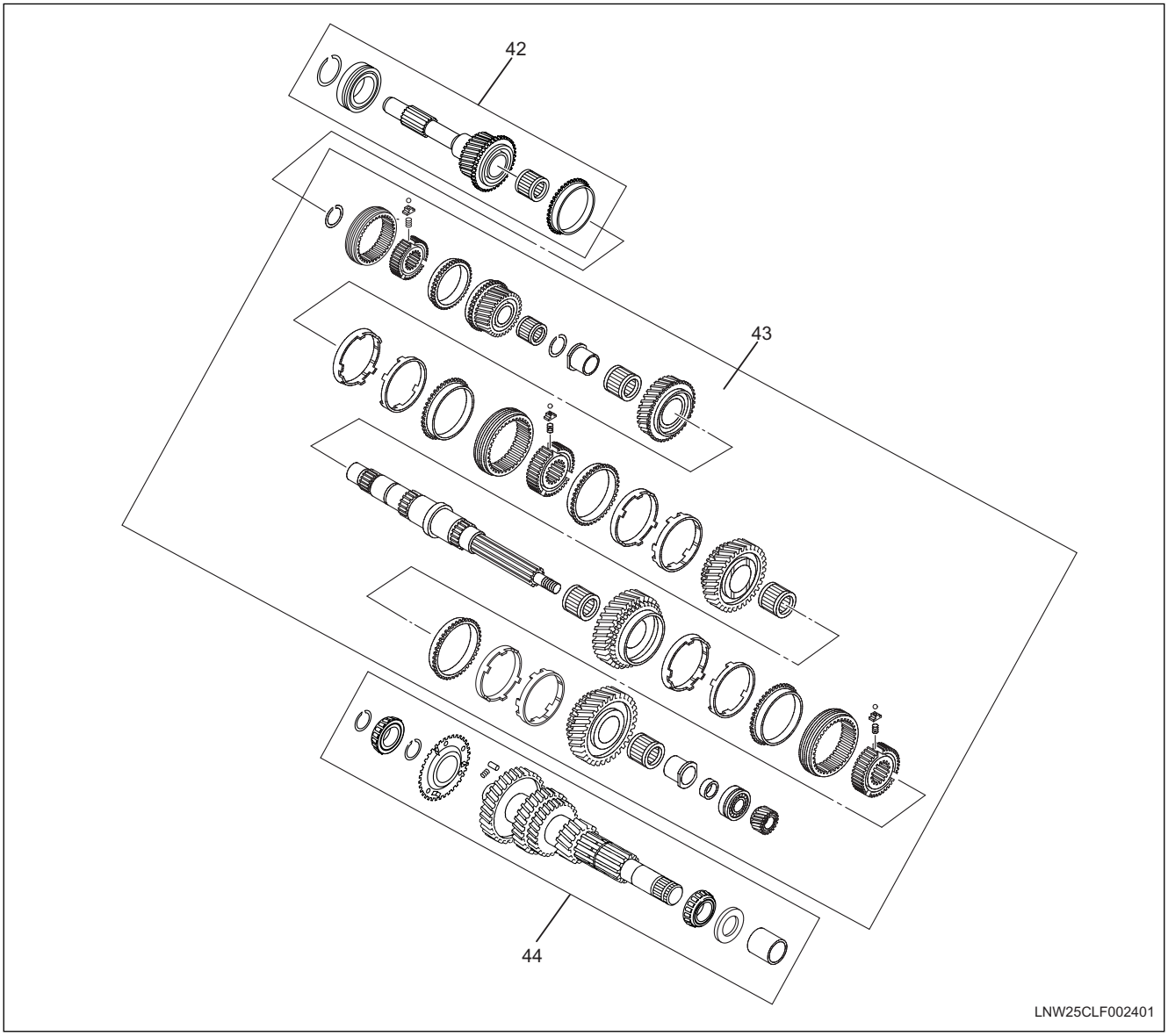

Legend

(1) Clutch housing
(2) Bush (Clutch housing)
(3) 4th / 5th, 6th shift arm
(4) Interlock plate
(5) Controller box
(6) Reverse switch
(7) Détente assembly
(8) Filler plug
(9) Détente assembly
(10) Snap ring
(11) 6th relay lever
(12) Snap ring
(13) 6th shift arm and shift rod
(14) Speedometer gear
(15) Snap ring
(16) 6th clutch hub assembly and sleeve
(17) 6th gear and needle bearing
(18) Reverse idle shaft
(19) Reverse idle gear and needle bearing
(20) Oil slinger
(21) Retainer
(22) Counter Shim
(23) Counter rear bearing
(24) Détente assembly
(25) Reverse gear idle cover
(26) PTO cover
(27) Sensor dummy plug
(28) Noise cover
(29) Transmission case
(30) Détente assembly
(31) 1st / reverse and 2nd/ 3rd shift arm
(32) Front oil seal
(33) Bearing outer race
(34) Magnet
(35) Speedometer driven gear
(36) Rear cover

(37) Parking brake cable bracket
(38) Drain plug
(39) Needle bearing (Main end)
(40) Rear oil seal
(41) Parking brake assembly
(42) Top gear shaft assembly
(43) Main shaft assembly
(44) Countershaft assembly

Disassembly

CAUTION: The transmission case and clutch housing are made of aluminum. They are easily damaged. Exercise care during the disassembly and reassembly procedure.

CAUTION: Be especially careful not to damage the transmission case ribs. A damaged rib greatly weakens the case.

CAUTION: Remember that transmission and clutch parts are heavy and must be handled with great care to avoid serious injury to yourself and others around you.

1. Remove the shift block together with the release bearing, the clutch shaft, and the shaft fork.
   - Refer to CLUTCH (SEC. 7C3) in 1999-2001 service manual.
2. Remove the parking brake drum.
   - Refer to PARKING BRAKE (SEC. 5C) in 1999-2001 service manual.
3. Use the special tool (J-35016) to break the coupler driver lock nut caulking (2 locations) and remove the nut.
4. Remove the coupling driver together with the O-ring.
5. Remove the parking brake assembly.
   - Refer to PARKING BRAKE (SEC. 5C) in 1999-2001 service manual.
6. Remove the parking brake cable bracket from the transmission case.
7. Remove the filler plug and O-ring.
8. Remove the drain plug and the O-ring.
   - Allow time for the transmission oil to drain into a suitable container. Check the oil volume. Look for metallic particles and other foreign material in the oil.
9. Remove the noise cover.
10. Remove the speedometer driven gear (2).
11. Remove the reverse switch (3).
12. Remove the 4 détente assemblies ((4), (5), (6), and (7)).
13. Remove the control box (1) together with the interlock plate (8).

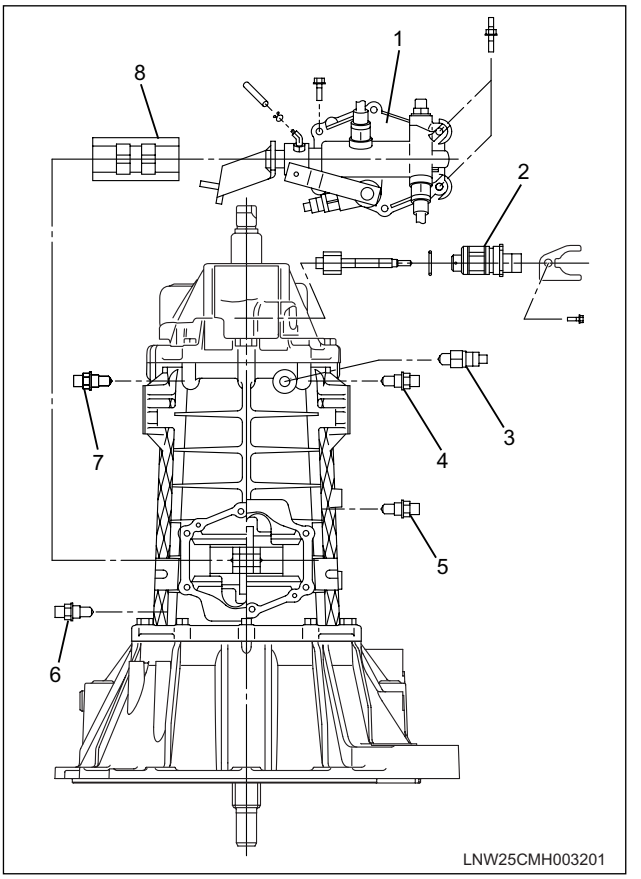

14. Remove the PTO cover (1).
15. Remove the reverse idle cover (2).

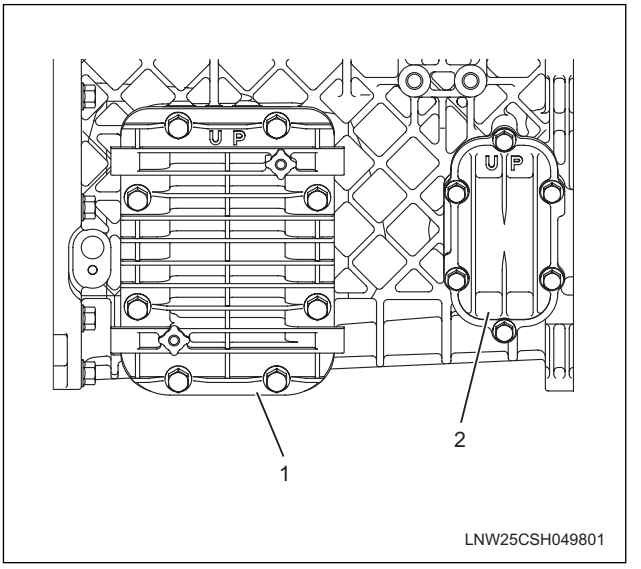

16. Remove the rear cover assembly.
17. Inspect the rear cover oil seal for wear and other damage. If wear or damage is present, the oil seal must be replaced. Use an ordinary screwdriver to remove it from the rear cover.
18. Use the remover (J-26941) and the sliding hammer (J-2619-01) to remove the neutral bearing (main end) from the rear cover.

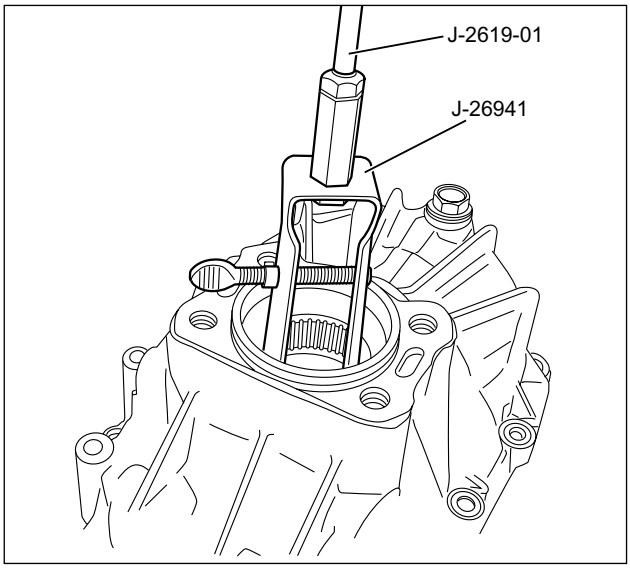

19. Remove the relay lever (6th gear (1)).
20. Use a spring remover to force out the spring pins (2) from the 6th gear shift arm (3) and the 6th gear shift rod (4).
21. Remove the 6th gear shift arm and the 6th gear shift rod.

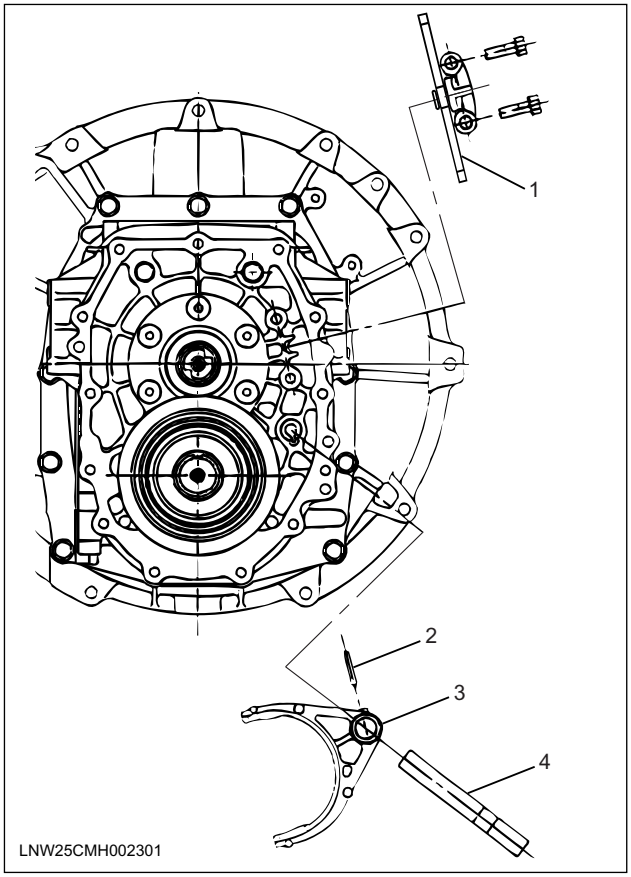

22. Use a pair of snap ring pliers to remove the snap ring from the 6th gear clutch hub.
23. Use a puller to remove the 6th gear clutch hub assembly, the sleeve, the block ring, the gear, and the needle bearing from the counter shaft.

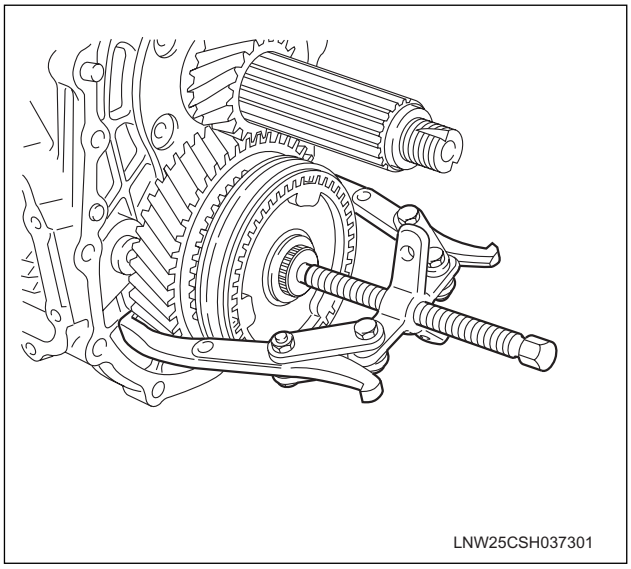

24. Disassemble the 6th gear clutch hub assembly and the sleeve.

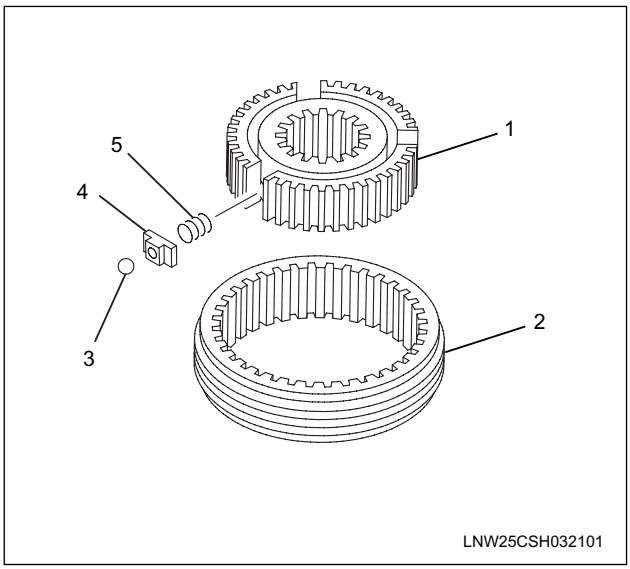

Legend

(1) Clutch hub
(2) Sleeve
(3) Ball
(4) Block
(5) Spring

25. Remove the speedometer gear.
26. Remove the retainer from the transmission case.
27. Pull out the reverse idle shaft.
28. Remove the reverse idle gear together with the needle bearing and the oil slinger.

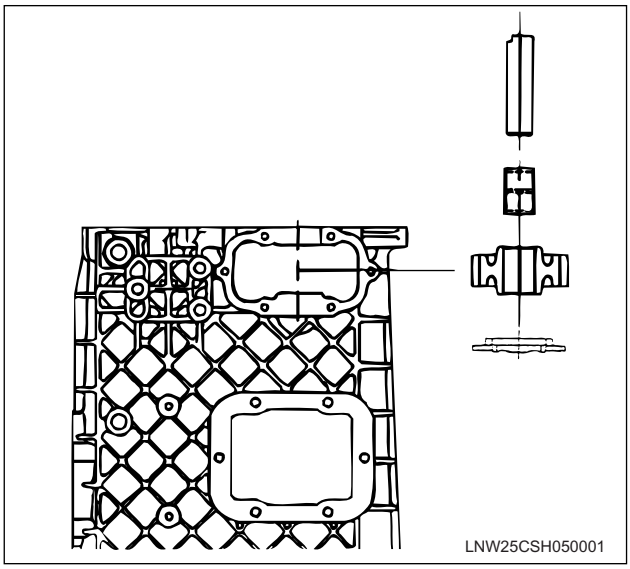

29. Remove the snap ring (rear outer) from the main shaft rear bearing.
30. Remove the counter shims.
31. Remove the snap rings (4th / 5th and 6th shift rods).

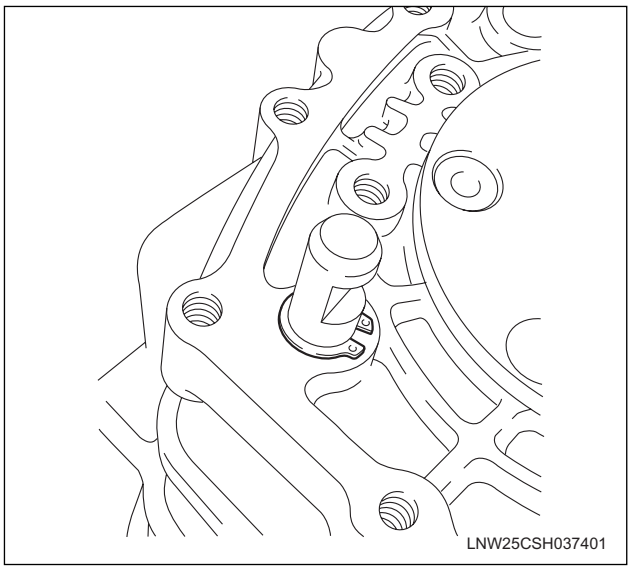

32. Remove the transmission case from the clutch housing.
33. Remove the bearing rear outer race from the transmission case.

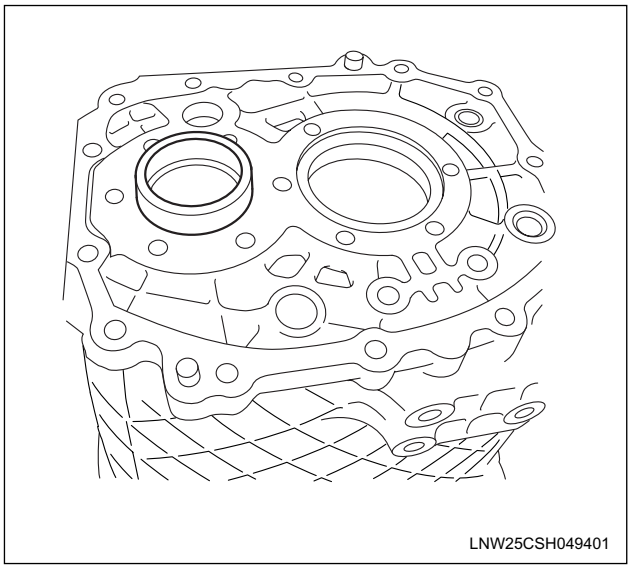

34. Use a spring pin remover to remove the spring pins from the 4th / 5th shift rod, the 1st / reverse shift block, the 6th shift block, and 4th / 5th shift arm.
35. Remove the 4th / 5th shift rod, the 1st / reverse shift block, the 6th shift block, and 4th / 5th shift arm.

CAUTION: To avoid damaging other parts, place a round shaft at the opposite end of the shift rod when removing the spring pins.

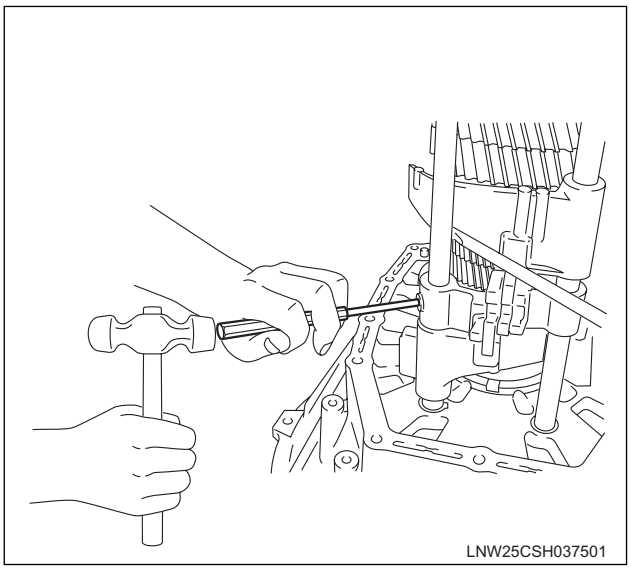

36. Remove the 1st / reverse and the 2nd / 3rd shift rod, the 1st / reverse shift arm, the 2nd (3rd shift arm, the 1st / reverse, and the 6th shift block.

    CAUTION: To avoid damaging other parts, place a round shaft at the opposite end of the shift rod when removing the spring pins.

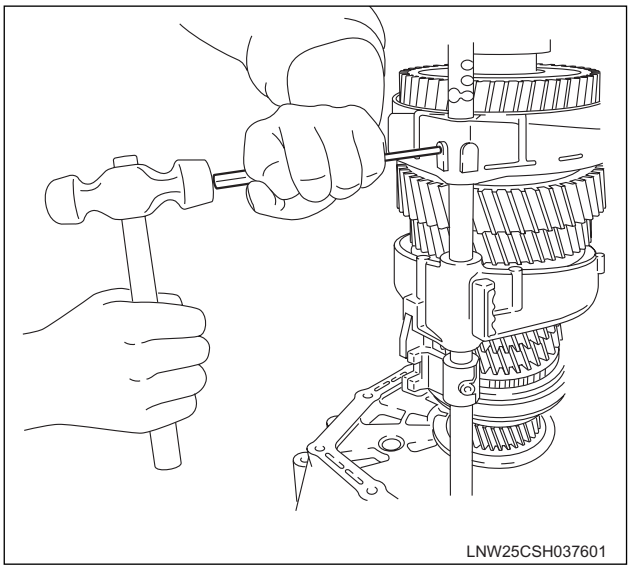

37. Use the remover (J-45883) to remove the bush from the 4th / 5th shift arm.
38. Use the remover (J-45883) to remove the bush from the 1st / reverse shift arm.
39. Use the remover (J-45883) to remove the bush from the 2nd / 3rd shift arm.

    CAUTION: To avoid damaging other parts, place a round shaft at the opposite end of the shift arm (same length as the remover) when removing the bushes.

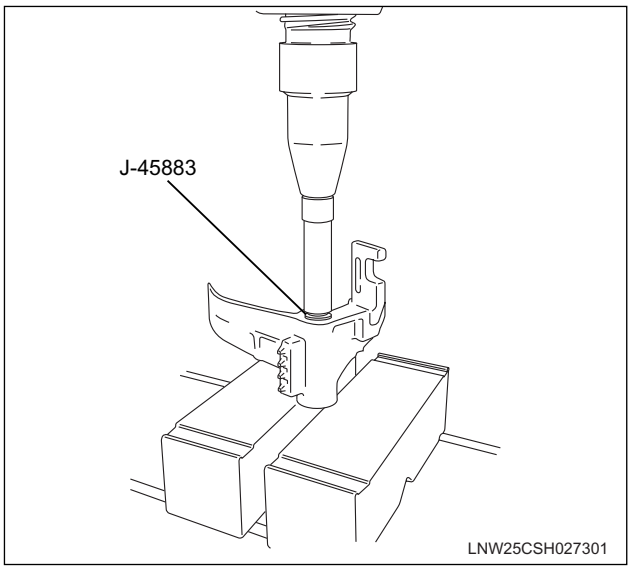

40. Remove the magnet from the clutch housing.
41. Remove the main shaft assembly, upper gear shaft assembly, and the countershaft assembly.
    a) Tightly wrap belts such as lashing belts around the main shaft assembly, upper gear shaft assembly, and the countershaft assembly in two or more places to prevent the assemblies from separating.

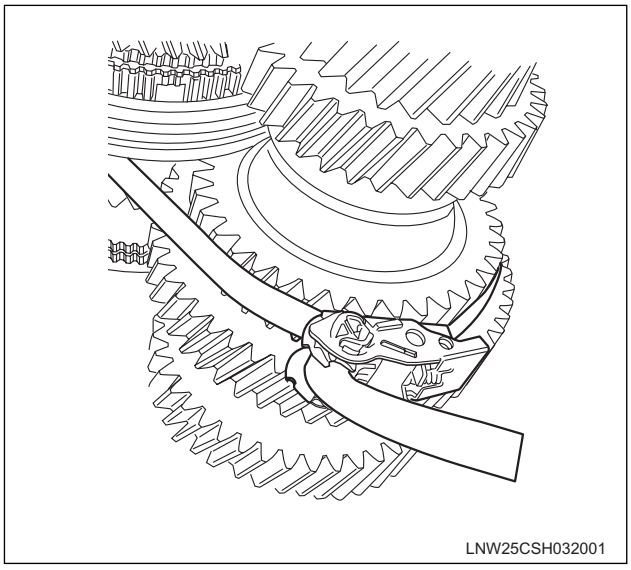

    b) Secure the bearing remover to the main shaft with the lock nut, then raise it with a hoisting cable. Spread the outer snap ring of the upper gear shaft bearing, which is attached to the clutch housing, and simultaneously remove upper gear shaft assembly, main shaft assembly, and countershaft assembly from the clutch housing.

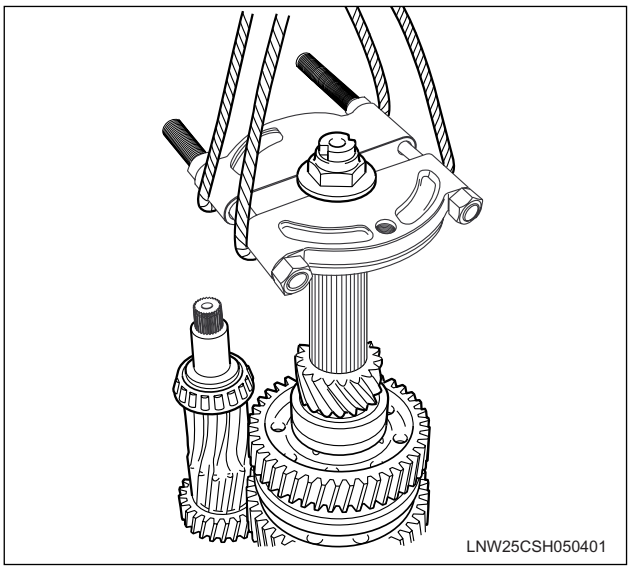

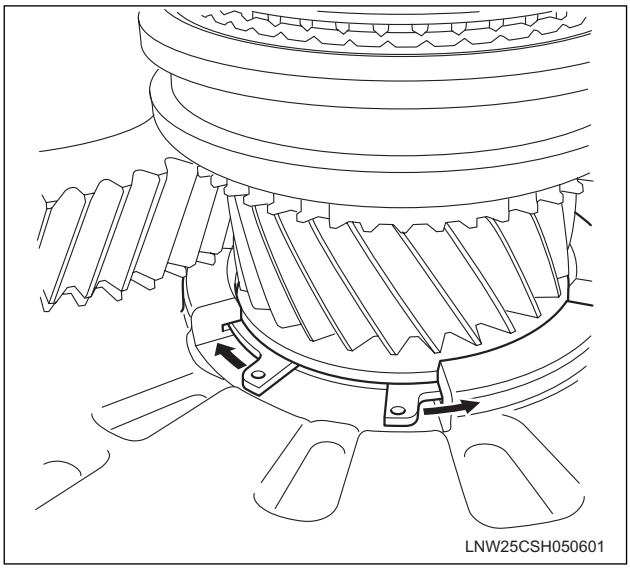

42. Inspect the clutch housing bush for wear and damage. If wear or damage is present, the bush must be replaced. Remove the old bush from the clutch housing with a pair of pliers.

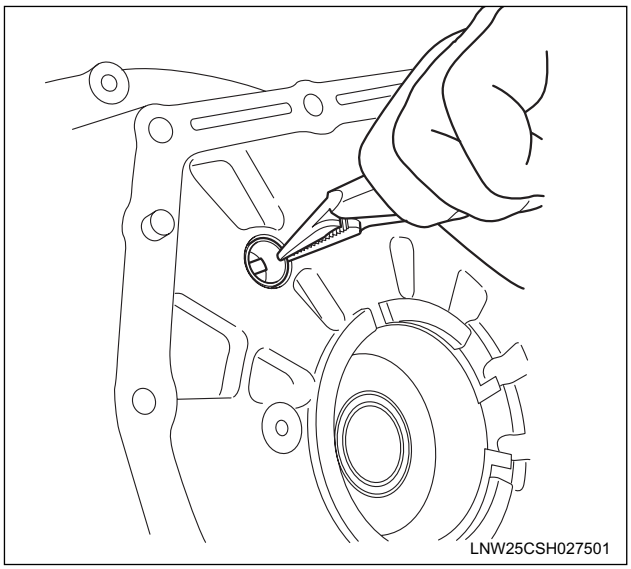

43. Inspect the front oil seal for wear and damage. If wear or damage is present, the race be replaced. Remove the old seal from the clutch housing with an ordinary screwdriver.
44. Inspect the other parts for wear and damage. If wear or damage is present, make the necessary repairs or replace the part(s).
45. Inspect the shift rod and the shift arm (shift mechanism) for bending, wear, and other damage. If minor wear or damage is present, make the necessary repairs. If major wear or damage is present, the part(s) must be replaced.
46. Use a micrometer to measure the shift arm end thickness. If the thickness exceeds the specified limit, the shift arm must be replaced.

Shift arm end thickness mm (in)

Gear	Standard	Limit
1st / reverse 3rd / 2nd 5th / 4th	9.60 – 9.85 (0.378 – 0.388)	9.00 (0.354)
6th	9.60 – 9.85 (0.378 – 0.388)	9.30 (0.366)

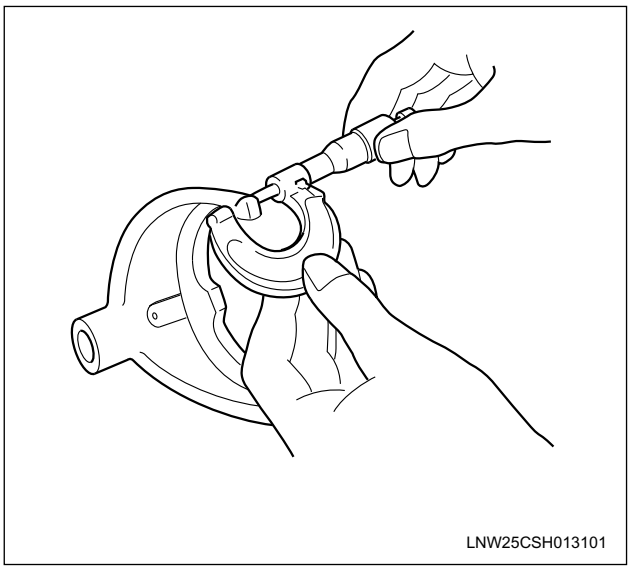

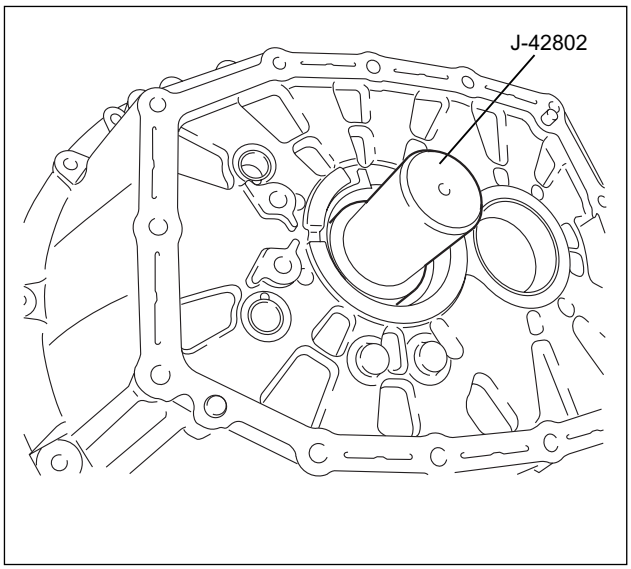

47. Inspect the speedometer driven gear and the driven gear bush for wear and other damage. Replace the driven gear and bush if significant wear is present.

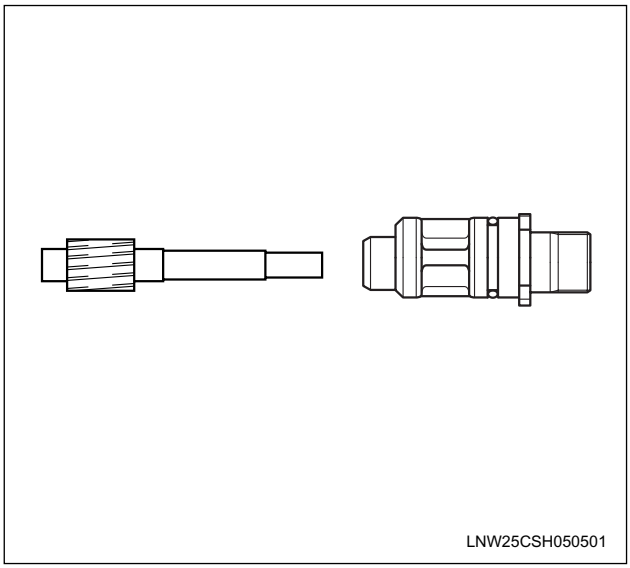

Reassembly

1. Inspect the oil seal for wear and damage. If damage or wear is present, the seal must be replaced.
2. Apply engine oil (5W-30) to the outside circumference of the oil seal.
3. Apply multi-purpose type grease to the lipped portion of the oil seal.
4. Use the installer (J-42802) to press the oil seal into the clutch housing.

   CAUTION: The lipped portion of the oil seal is easily broken. Exercise care during the installation procedure.

5. Inspect the bearing outer race for wear and damage. If wear or damage is present, the race must be replaced.
6. Inspect the clutch housing bush for wear and damage. If wear or damage is present, the bush must be replaced.
7. Use the installer (J-45883) to press the bush into the clutch housing. Pay close attention to the bush installation direction (refer to the illustration).

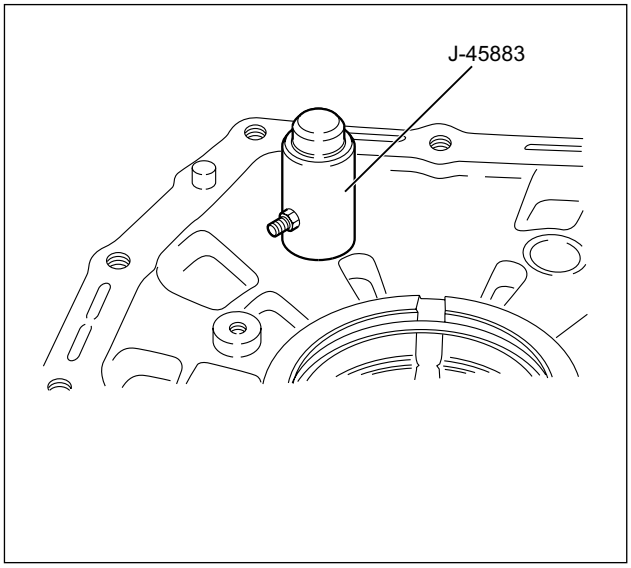

   - Attach by crimping to secure at three points, but avoid the grooved area and previous crimping spots.
   - Apply the second and subsequent bushing presses with the notch facing the clutch housing.

8. Attach the main shaft assembly, upper gear shaft assembly, and countershaft assembly

a) Tightly wrap belts such as lashing belts around the main shaft assembly, countershaft assembly, and upper gear shaft assembly at two or more places to prevent the assemblies from separating. Make sure that the upper gear shaft does not fall when the assembly is suspended.

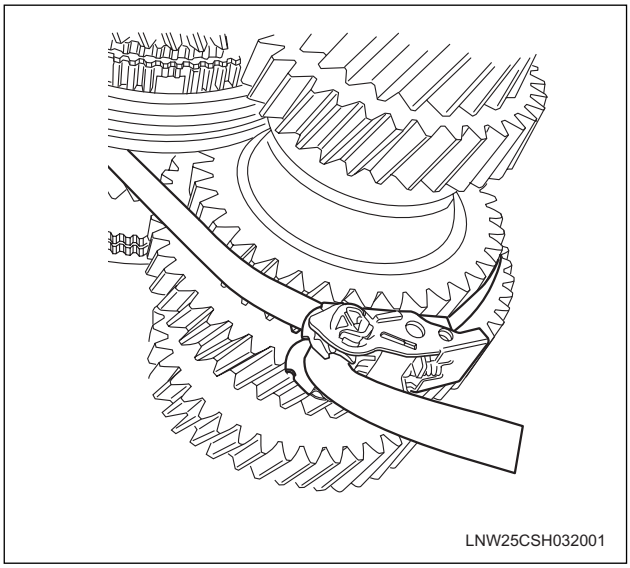

b) Secure the bearing remover to the main shaft with a lock nut, then raise it with a hoisting cable. Spread the outer snap ring of the upper gear shaft bearing, which is attached to the clutch housing, and simultaneously install the upper gear shaft assembly, main shaft assembly, and countershaft assembly into the clutch housing.

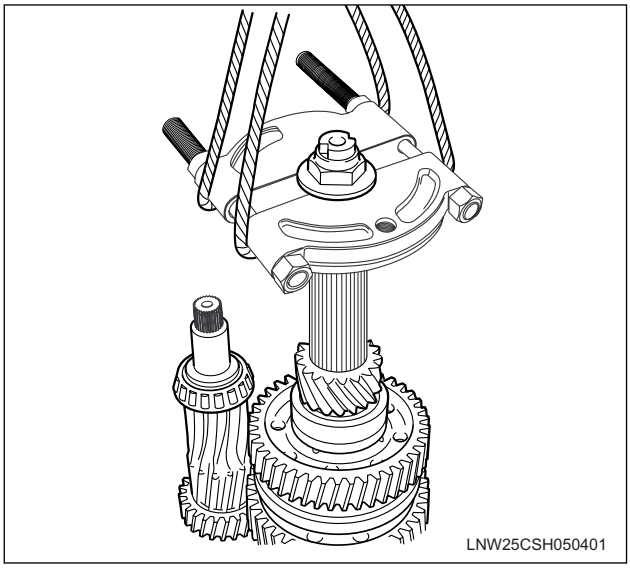

c) Set the outer snap ring of the upper gear shaft bearing onto the clutch housing, spread it using snap-ring pliers, and insert the upper gear shaft bearing.

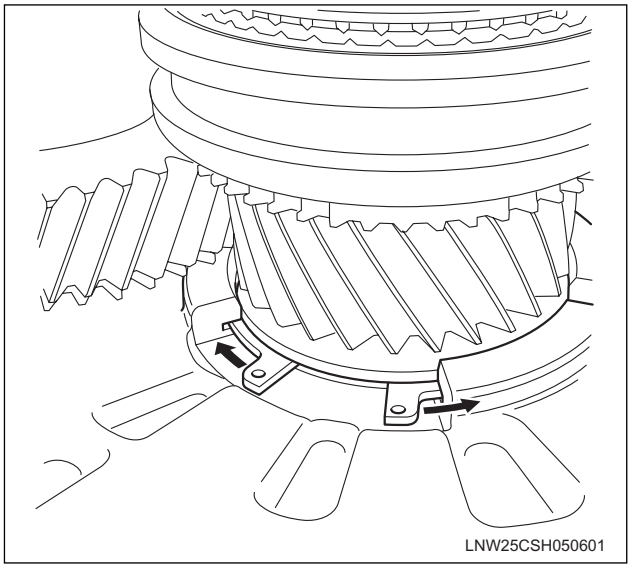

Note
- **Be sure to verify that the snap ring is properly attached.**
- **When suspending the shaft, maintain vertical alignment to prevent the front oil seal from being damaged, and work with care.**

9. Install the magnet to the clutch housing.
10. Inspect the 3rd / 2nd shift arm bush for wear and damage. If wear or damage is present, the bush must be replaced.
11. Use the installer (J-45883) to press the bush into the clutch housing. Pay careful attention to direction of installation and installation angle.
12. Caulk the bush at 3 locations (do not caulk near the bush grooves).
13. Inspect the 1st / reverse shift arm bush for wear and damage. If wear or damage is present, the bush must be replaced.
14. Use the installer (J-45883) to press the bush into the clutch housing. Pay careful attention to direction of installation and installation angle.
15. Caulk the bush at 3 locations (do not caulk near the bush grooves).
16. Inspect the 4th / 5th shift arm bush for wear and damage. If wear or damage is present, the bush must be replaced.
17. Use the installer (J-45883) to press the bush into the clutch housing.
18. Caulk the bush at 3 locations (do not caulk near the bush grooves). Pay careful attention to direction of installation and installation angle.

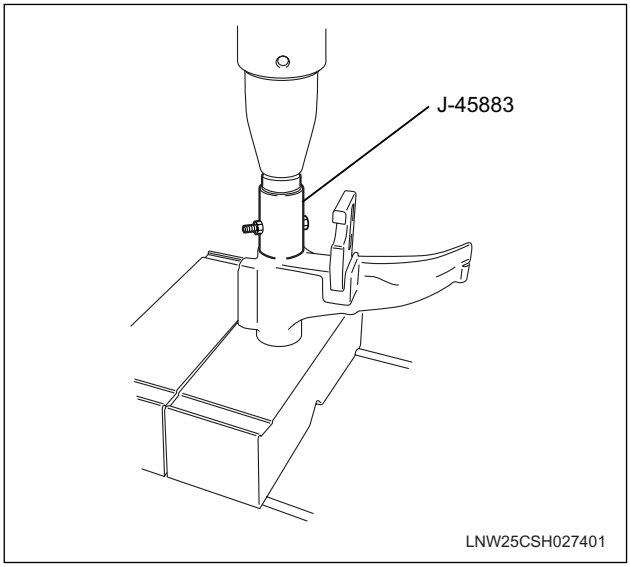

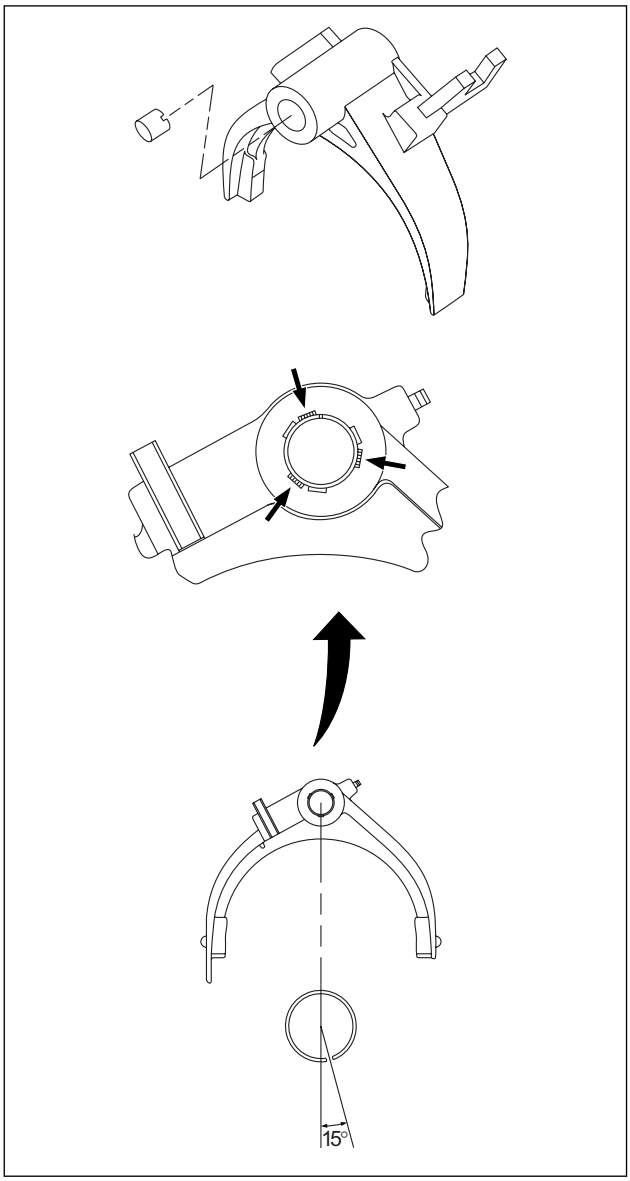

19. Align the spring pin holes.
20. Install the 1st / reverse and the 2nd / 3rd shift rod (1) to the 1st / reverse and the 6th shift block (5), the 2nd / 3rd shift arm (4), and the 1st / reverse shift arm (2).
21. Use a hammer to drive the spring pins (3) (6) into the holes.

    CAUTION: To avoid damaging other parts, place a round shaft at the opposite end of the shift rod when installing the spring pins.

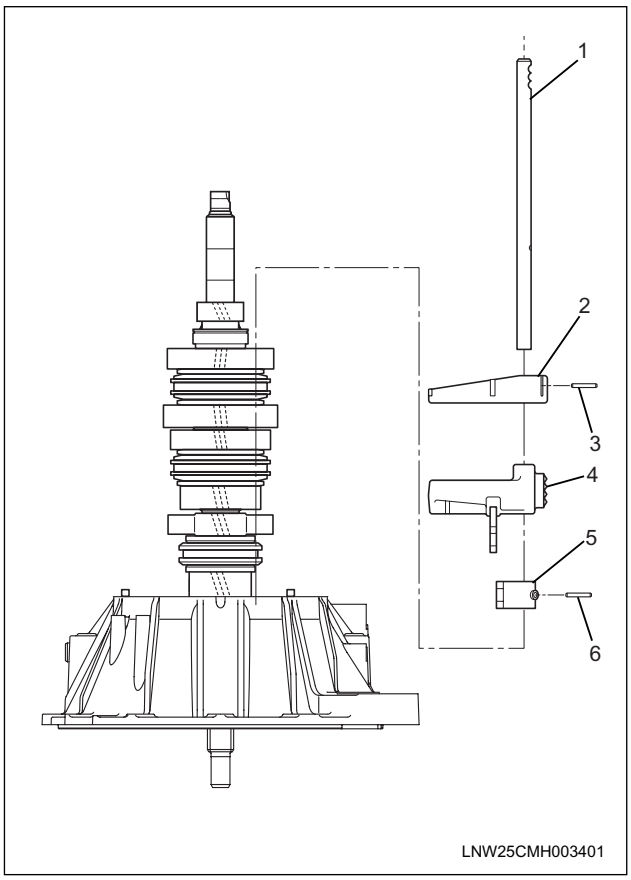

22. Align the spring pin holes.
23. Install the 4th / 5th and the 6th shift rod (1) to the 4th / 5th shift arm (3), the 1st / reverse and the 6th shift block (2).
24. Use a hammer to drive the spring pins (4) into the holes.

    CAUTION: To avoid damaging other parts, place a round shaft at the opposite end of the shift rod when installing the spring pins.

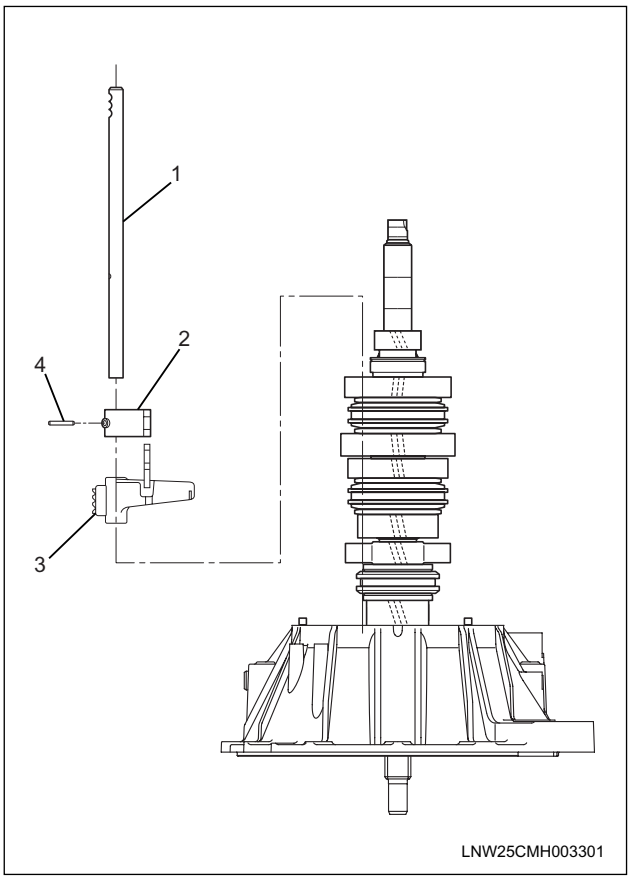

25. Apply ThreeBond TB1215 to the fitting surfaces of the transmission case and the clutch housing.
    - Remove moisture and oil from the fitting surface prior to application. Set the beat diameter to greater than 2 mm (0.078 in.) and make it even all around.
26. Install the clutch housing to the transmission case. Tighten the bolts to the specified torque.

Torque : 46 N•m (34 lb•ft)

27. Install the bearing rear outer race to the transmission case.
28. Install the snap ring to the 4th / 5th and the 6th gear shift rod.

Note: If a snap ring is deformed or damaged, replace it with a new one and verify that it is attached properly.

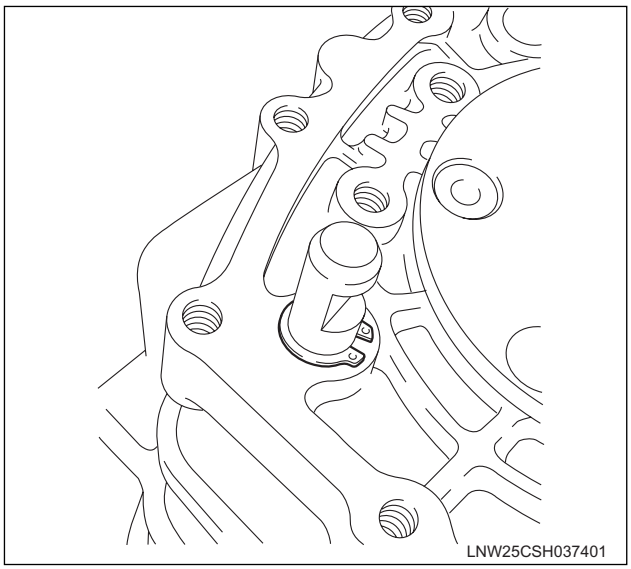

29. Attaching the countershim
    a) Put the gear into neutral.
    b) Set the transmission assembly with the housing at the bottom.

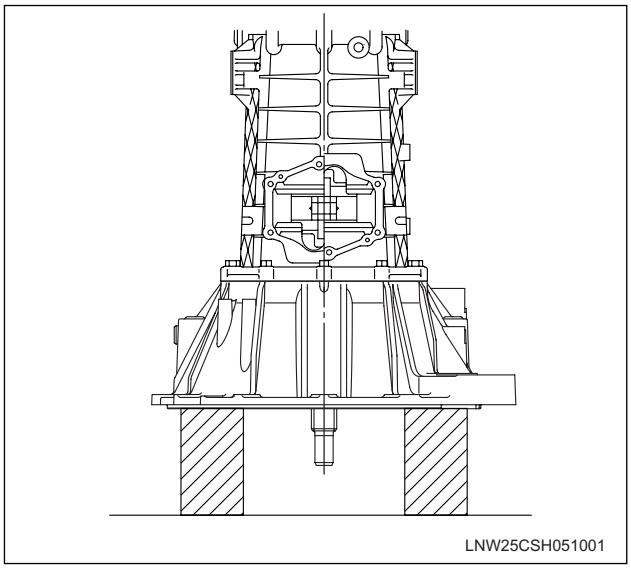

    c) Break in the taper roller bearing by rotating the countershaft at least 30 times.
    d) Selecting a countershim
       - Measure the depth between the rearmost surface of the transmission housing and the outer wheel surfaces of the countershaft rear bearing. Take three measurements at 120-degree intervals, and calculate the average.
       - Select the shim with the appropriate thickness from the table below.

Measured depth mm (in)	Shim thickness mm (in)
2.13 – 2.19 (0.084 – 0.086)	1.98 (0.078)
2.07 – 2.13 (0.081 – 0.084)	1.92 (0.076)
2.01 – 2.07 (0.079 – 0.081)	1.88 (0.074)
1.95 – 2.01 (0.077 – 0.079)	1.80 (0.071)
1.89 – 1.95 (0.074 – 0.077)	1.74 (0.069)
1.83 – 1.89 (0.072 – 0.074)	1.68 (0.066)
1.77 – 1.83 (0.070 – 0.072)	1.62 (0.064)
1.71 – 1.77 (0.067 – 0.070)	1.58 (0.062)
1.65 – 1.71 (0.065 – 0.067)	1.50 (0.059)
1.59 – 1.65 (0.063 – 0.065)	1.44 (0.057)
1.53 – 1.59 (0.060 – 0.063)	1.38 (0.054)
1.47 – 1.53 (0.058 – 0.060)	1.32 (0.052)
1.41 – 1.47 (0.056 – 0.058)	1.26 (0.050)
1.35 – 1.41 (0.053 – 0.056)	1.20 (0.047)

30. Install the snap ring (rear outer) to the main shaft rear bearing.
31. Apply engine oil (5W-30) to the needle bearing.
32. Install the reverse idle gear together with the needle bearing and the oil slinger.
33. Install the reverse idle shaft.
    - The arrow indicates the front of the transmission.

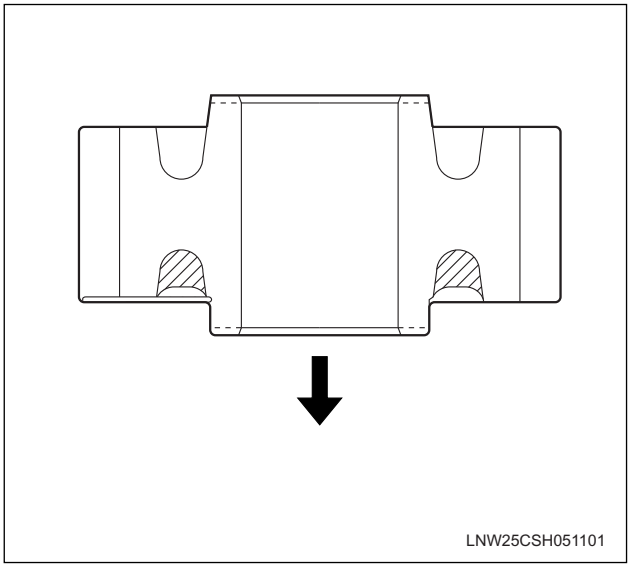

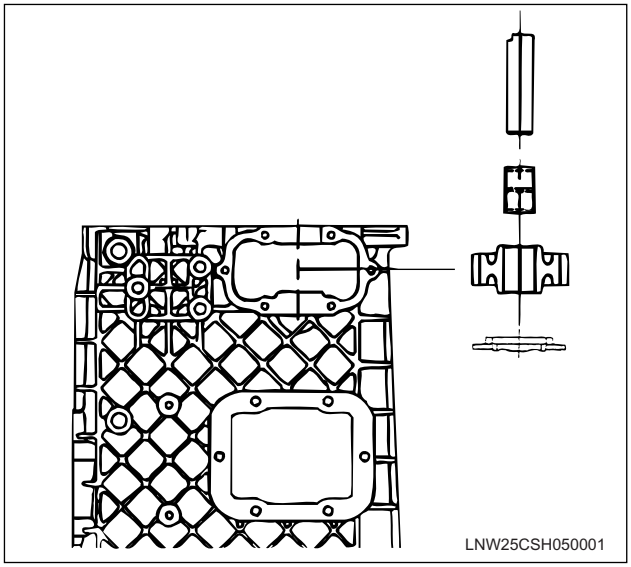

34. Install the retainer to the transmission case. Tighten the bolts to the specified torque.

Torque : 26 N•m (20 lb•ft)

Note: Be sure to thoroughly remove sealing material from the screw threads of the transmission housing, and to use a set of new screws.

35. Install the speedometer gear.
36. Install the block and spring to the clutch hub.
37. Adjust the phase so that the three balls fit into the three ball grooves inside the sleeve.

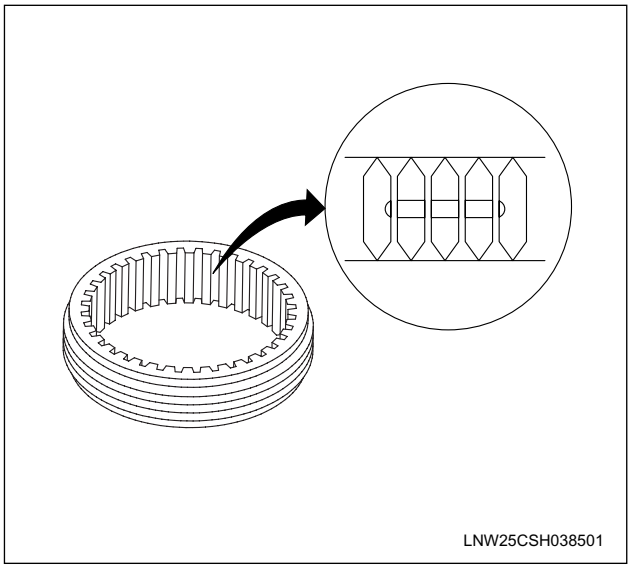

38. Insert the sleeve (1) into the clutch hub (5) until resistance is felt.

39. Insert the ball (2), the block (3), and the spring (4) into the clutch hub. Be sure that the ball enters the ball groove.
    - The arrow indicates the front of the transmission.

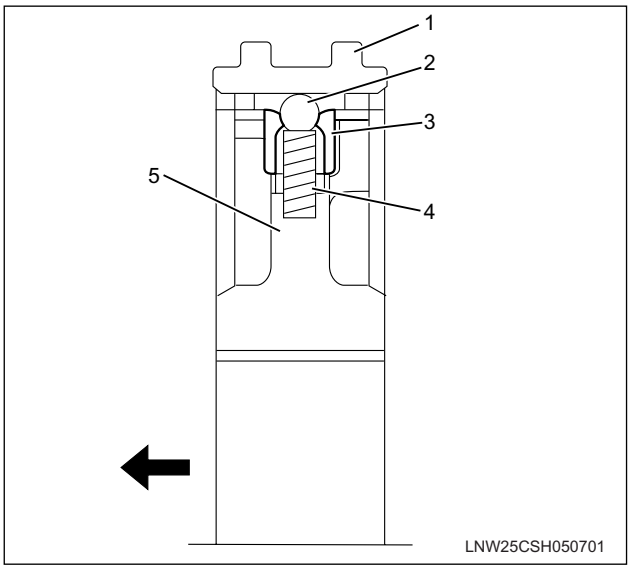

40. Apply engine oil (5W-30) to the neutral bearing and the inside of the block ring.
41. Assemble the 6th gear the needle bearing, and the 6th gear block ring.
42. Align the above assembly with the clutch hub block ring.
43. Assemble the 6th gear clutch hub assembly and the sleeve.
44. Use the installer (J-5590) and a hammer to install the assembled parts.

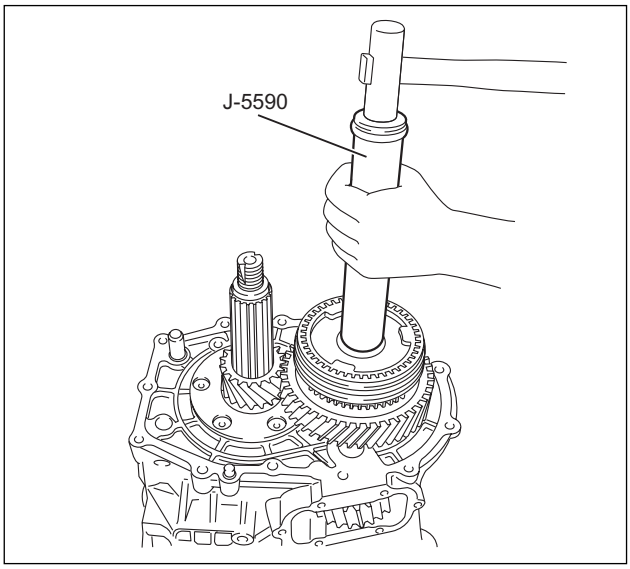

45. Use a pair of snap ring pliers to install the 6th gear clutch hub snap ring.
    - From the mountable snap rings, select the thickest one of the three types.

Shim thickness mm (in)	Discernment color
1.7 (0.067)	Light blue
1.8 (0.071)	Orange
1.9 (0.075)	Purple

Note: If a snap ring is deformed or damaged, replace it with a new one and verify that it is attached properly.

46. Apply engine oil (5W-30) to the shift rod holes in the transmission case.
47. Install the 6th gear shift arm (3) and the 6th gear shift rod (4).
48. Align the spring pin holes.
49. Insert the spring pins (2).
50. Install the relay lever (6th gear (1)). Tighten the bolts to the specified torque.

Torque : 50 N•m (37 lb•ft)

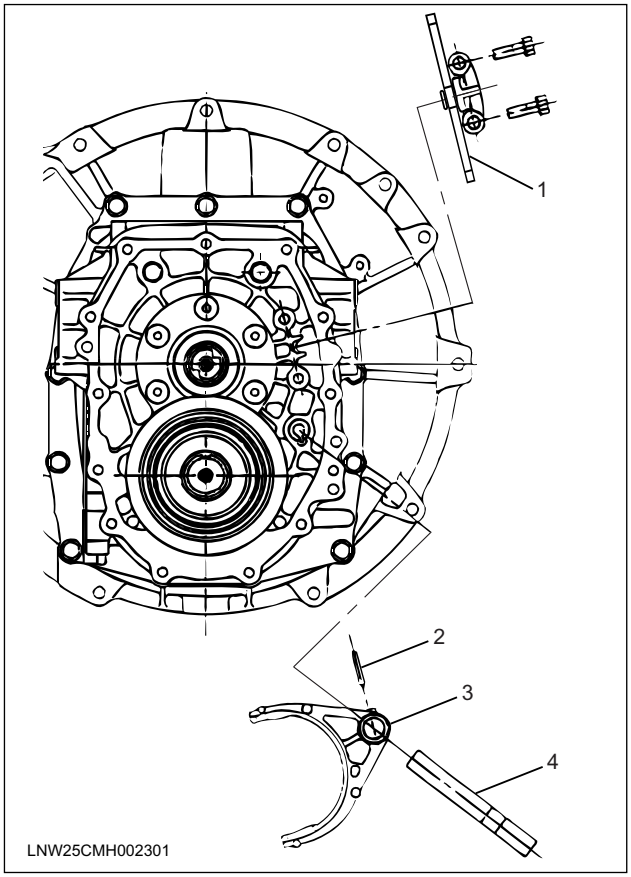

51. Apply multi-purpose type grease to the inside of the main end needle bearing.
52. Apply engine oil (5W-30) to the inside contact surfaces of the rear cover bearing.
53. Use the installer (J-45882) and the handle (J-8092) to press the needle bearing into the rear cover from the outside. The inscribed mark on the bearing must be facing out.

    CAUTION: The lipped portion of the oil seal is easily broken. Exercise care during the installation procedure.

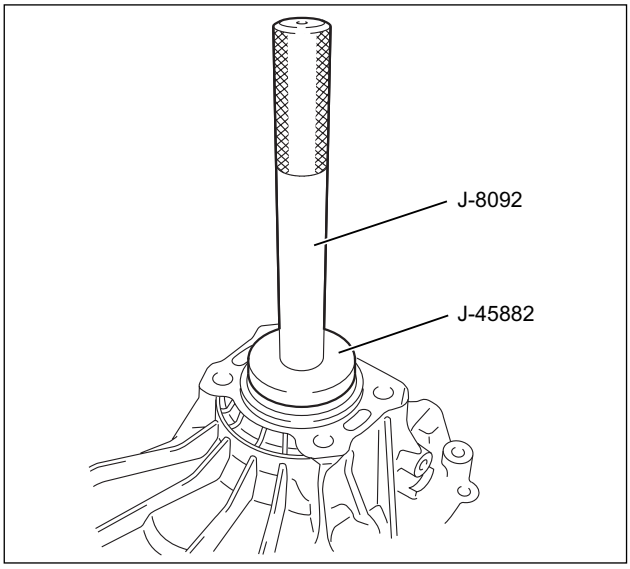

54. Inspect the rear cover oil seal for wear and damage. If wear or damage is present, the oil seal must be replaced.
55. Apply multi-purpose type grease to the lip portion of the oil seal.
56. Apply engine oil (5W-30) to the outer circumference of the oil seal.
57. Use the installer (J-45881) to press the oil seal into the rear cover.

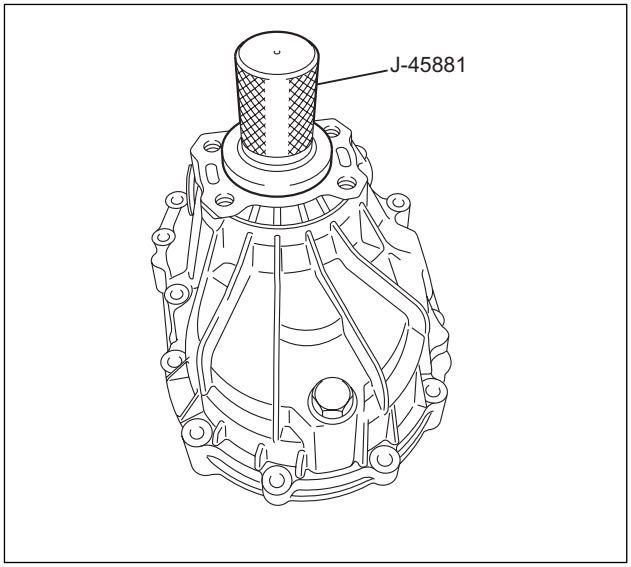

58. Apply ThreeBond 1215 to the contact surfaces of the transmission case and the rear cover.
59. Install the rear cover to the transmission case. Tighten the bolts to the specified torque.
    - Be Remove moisture and oil from the fitting surface prior to application. Set the beat diameter to greater than 2 mm (0.078 in.) and make it even all around.

Torque : 46 N•m (34 lb•ft)

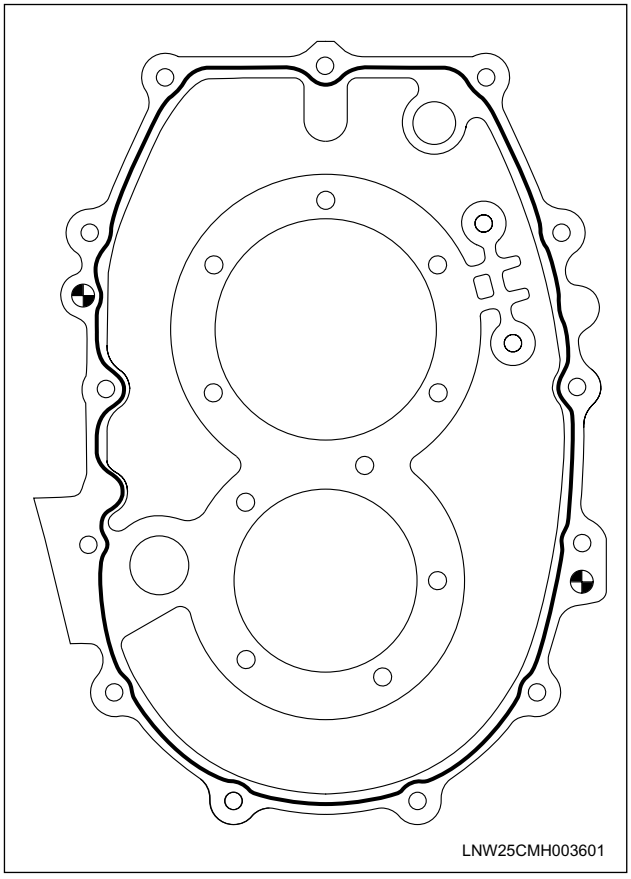

Note: The two bolts, indicated by the arrows, have lock-tight material applied to them. Be sure to thoroughly remove sealing material from the threads and to use new bolts with lock-tight material.

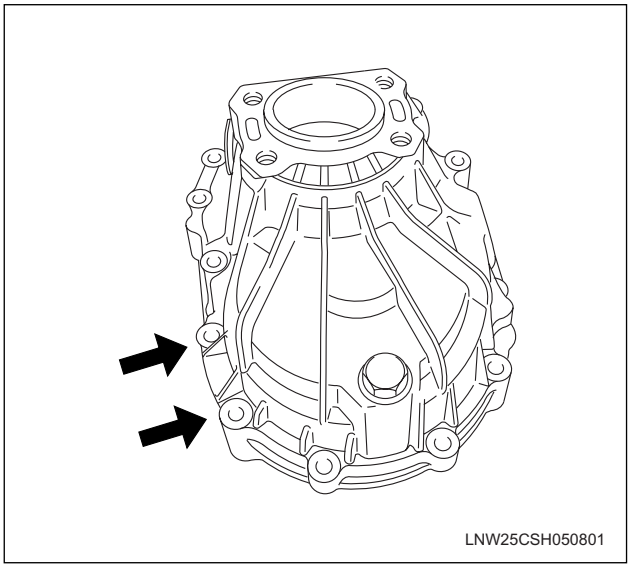

60. Align the contact surfaces of the transmission case reverse gear side cover.
61. Apply ThreeBond 1215 to the contact surfaces.
62. Install the reverse gear side cover. Tighten the bolts to the specified torque.

Torque : 23 N•m (17 lb•ft)

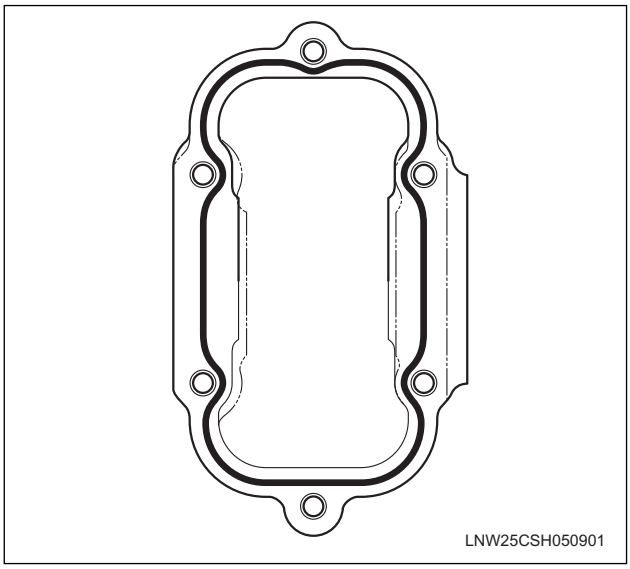

63. Align the contact surfaces of the transmission case PTO cover.
64. Apply ThreeBond 1215 to the contact surfaces.
65. Install the PTO cover. Tighten the bolts to the specified torque.

Torque : 37 N•m (27 lb•ft)

Note: The bolts have lock-tight material applied to them. Be sure to thoroughly remove sealing material from the threads and to use new bolts with lock-tight material.

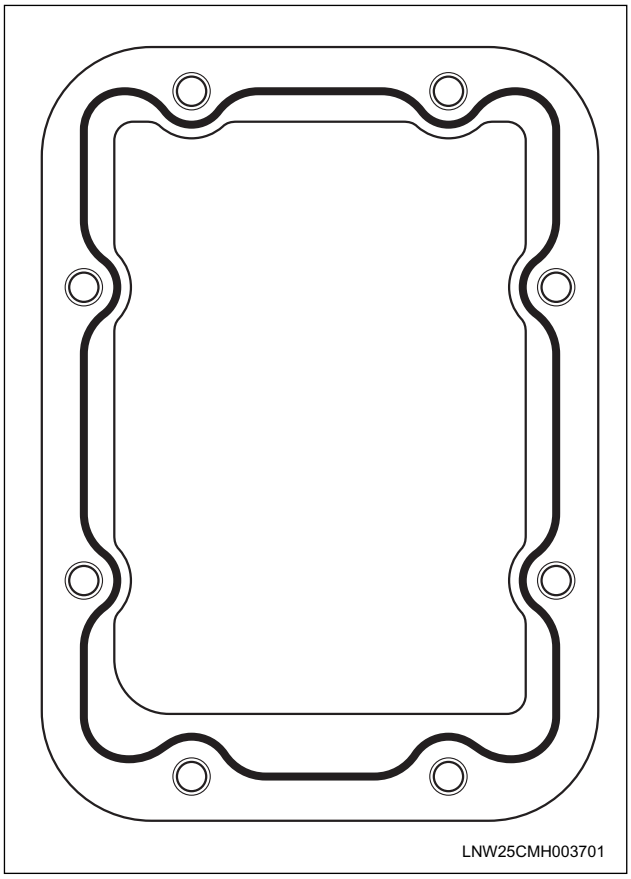

66. Place the transmission in the neutral position.
67. Align the contact surfaces of the transmission case control box (1).
68. Apply ThreeBond 1215 to the contact surfaces.
69. Install the interlock plate (8) and the control box. Tighten the bolts to the specified torque.

Torque : 27 N•m (20 lb•ft)

Note: The bolts have lock-tight material applied to them. Be sure to thoroughly remove sealing material from the threads and to use new bolts with lock-tight material.

70. Install the 4 détente assemblies ((7), (6), (5), and (4)). Tighten the bolts to the specified torque.

Torque : 27 N•m (20 lb•ft)

71. Apply liquid gasket (Loctite No. 242) to the threaded portion of the reverse switch.
72. Install the reverse switch (3). Tighten the bolt to the specified torque.

Torque : 39 N•m (29 lb•ft)

73. Apply engine oil (5W-30) to the speedometer driven gear (2) and the O-ring.
    - Align the gear tooth marked 17 of the speedometer's driven gear (17 teeth) with the opening in the plate.

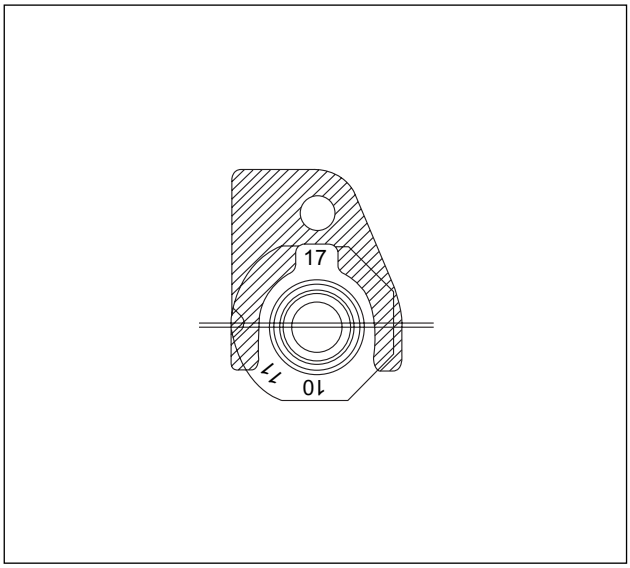

74. Install the driven gear together with the O-ring. Tighten the bolts to the specified torque.

Torque : 20 N•m (2.0 lb•ft)

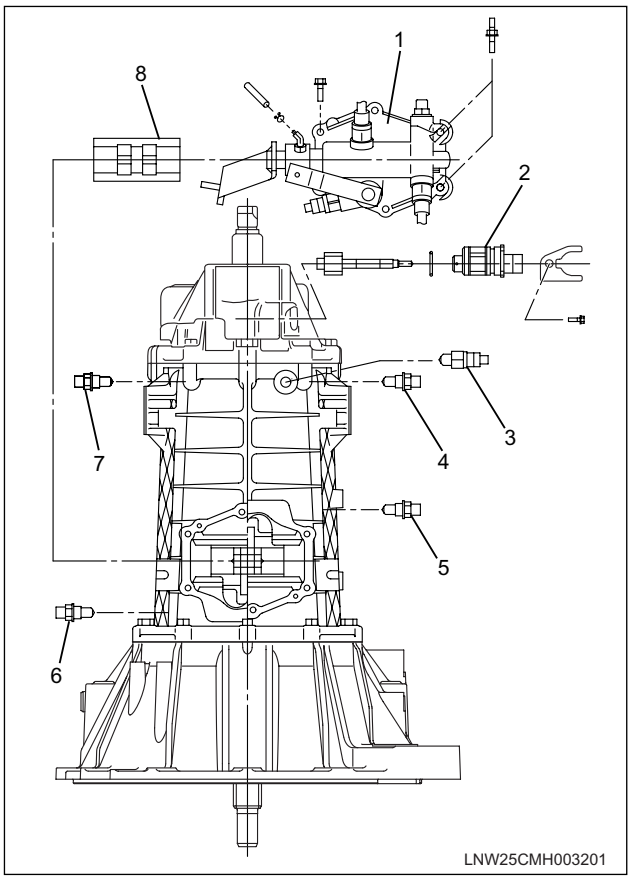

76. Install the noise cover.
77. Apply engine oil (5W-30) to the drain plug O-ring.
78. Install the drain plug together with the O-ring. Tighten the bolts to the specified torque.

Torque : 39 N•m (29 lb•ft)

79. Apply engine oil (5W-30) to the filler plug O-ring.
80. Install the filler plug together with the O-ring. Tighten the bolts to the specified torque.

Torque : 39 N•m (29 lb•ft)

81. Install the parking brake assembly.
    - Refer to PARKING BRAKE (SEC. 5C) in 1999-2001 service manual.
82. Install the parking brake bracket to the transmission case. Tighten the bolts to the specified torque.

Torque : 48 N•m (35 lb•ft)

83. Apply engine oil (5W-30) to the coupling driver O-ring.
84. Install the coupling driver together with the O-ring.
85. Apply engine oil (5W-30) to the seating surface of the new coupling driver lock nut.

86. Use the special tool (J-35016) to tighten the lock nut to the specified torque.

Torque : 382 N•m (282 lb•ft)

87. Align the lip portion of the lock nut with the V-groove at the end of the shaft (length must be at least 5 mm). Wedge the lipped portion of the nut into the V-groove so that the gap between the nut and the bottom of the V-groove is less than 1.5 mm.
88. Caulk the lock nut at two places (radius approximately 1 mm with caulking sites 60 degrees away form each other).

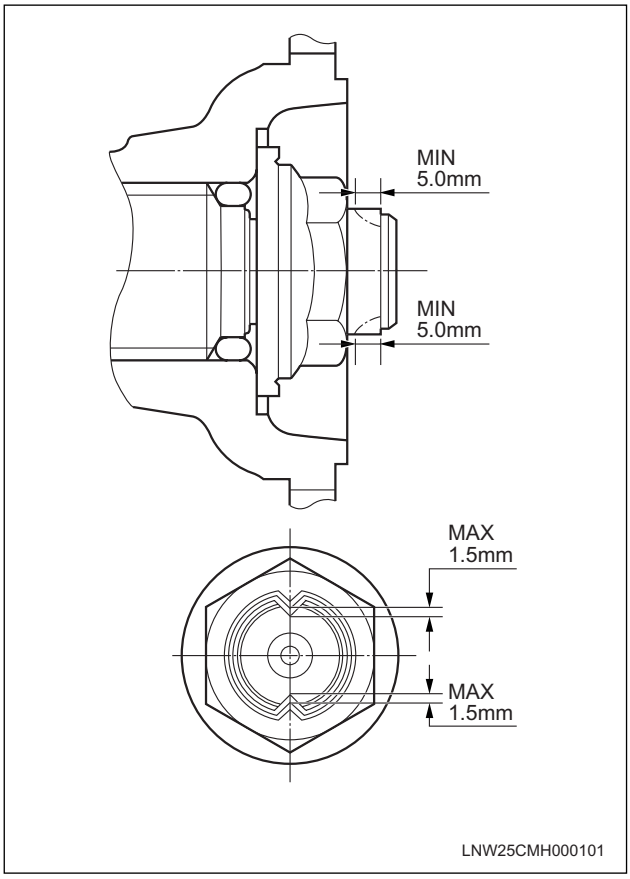

89. Install the parking brake drum.
    - Refer to PARKING BRAKE (SEC. 5C) in 1999-2001 service manual.
90. Install the shift block together with the release bearing, the the clutch shaft, and the shift fork.
    - Refer to CLUTCH (SEC. 7C3) in 1999-2001 service manual.

TOP GEAR SHAFT

Parts

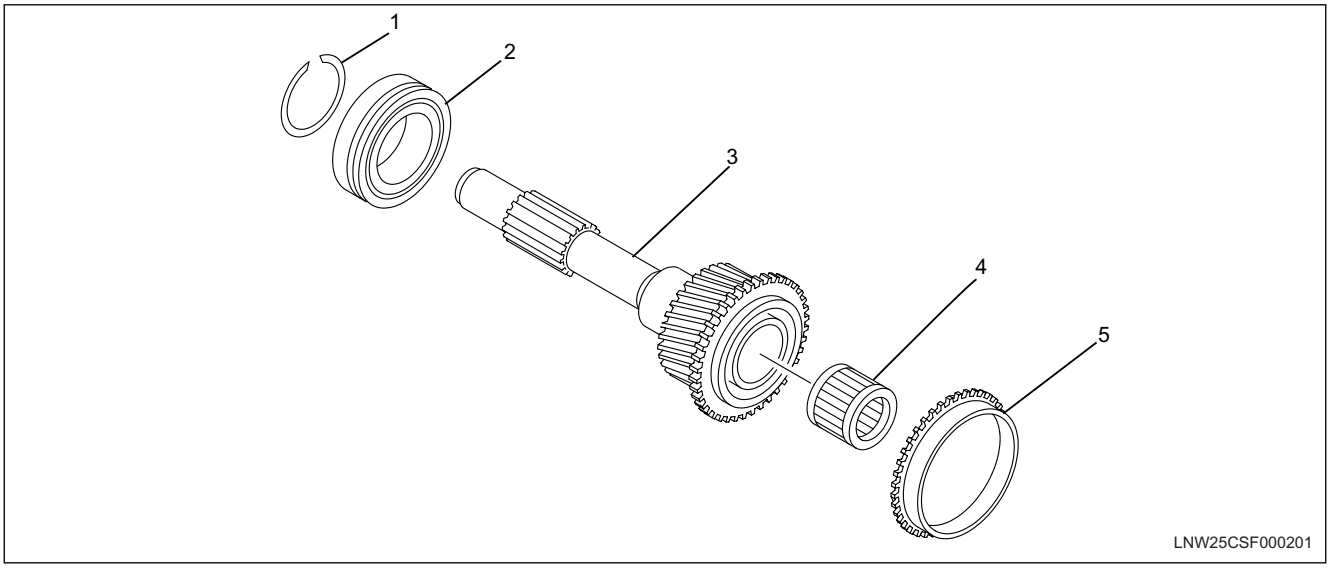

Legend

(1) Snap ring
(2) Bearing
(3) Top gear shaft
(4) Needle bearing
(5) Block ring

Disassembly

1. Remove the block ring from the top gear shaft.
2. Remove the needle bearing from the top gear shaft.

   Note: The needle bearing is of a separator type. Be careful not to drop the roller when dissembling.

3. Use a pair of snap ring pliers to remove the snap ring from the top gear shaft.
4. Use a press and a bearing remover to remove the bearing from the top gear shaft.

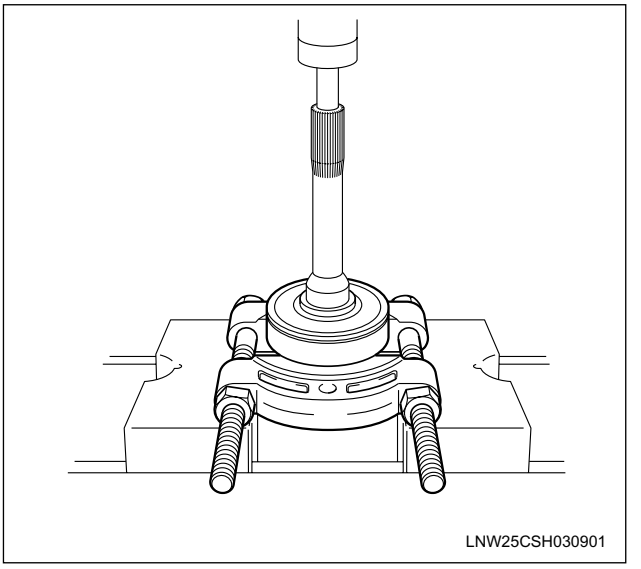

5. Inspect each of the disassembled parts for wear and damage. If wear or damage is present, make the necessary repairs or replace the part(s).
6. Inspect the gear teeth, the spline, and the end contact surfaces for wear and damage. If wear or damage is present, the part(s) must be replaced.
7. Inspect each of the bearings. The bearings must rotate smoothly and quietly. There must be no corrosion. Play in the thrust direction must be normal. Replace the bearing(s) if these conditions are not met.

8. Inspect the needle bearing rolling surface and roller for discoloration, excessive wear, and pitching. Replace the bearing if any of these conditions are present.

Reassembly

1. Use the installer (J-41736) and a press to install the bearing to the top gear shaft.

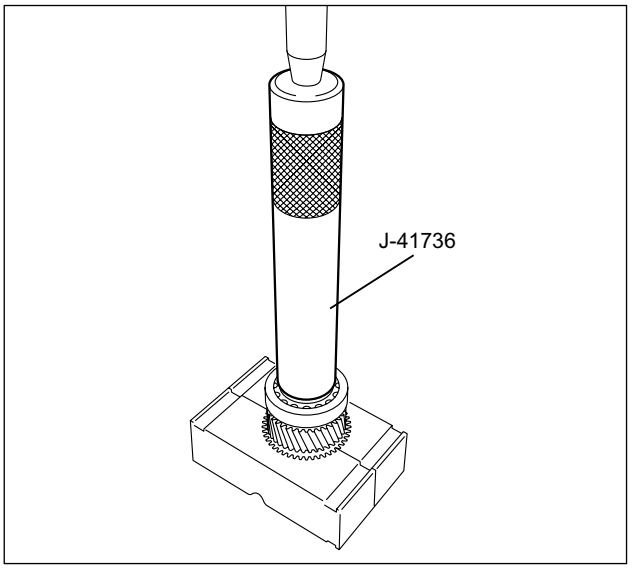

2. Use a pair of snap ring pliers to install the snap ring to the top gear shaft.
3. Install the needle bearing to the top gear shaft.
4. Thoroughly apply 5W-30 motor oil to the inner surface of the block ring, then attach the block ring to the upper gear shaft.

MAIN SHAFT

Parts

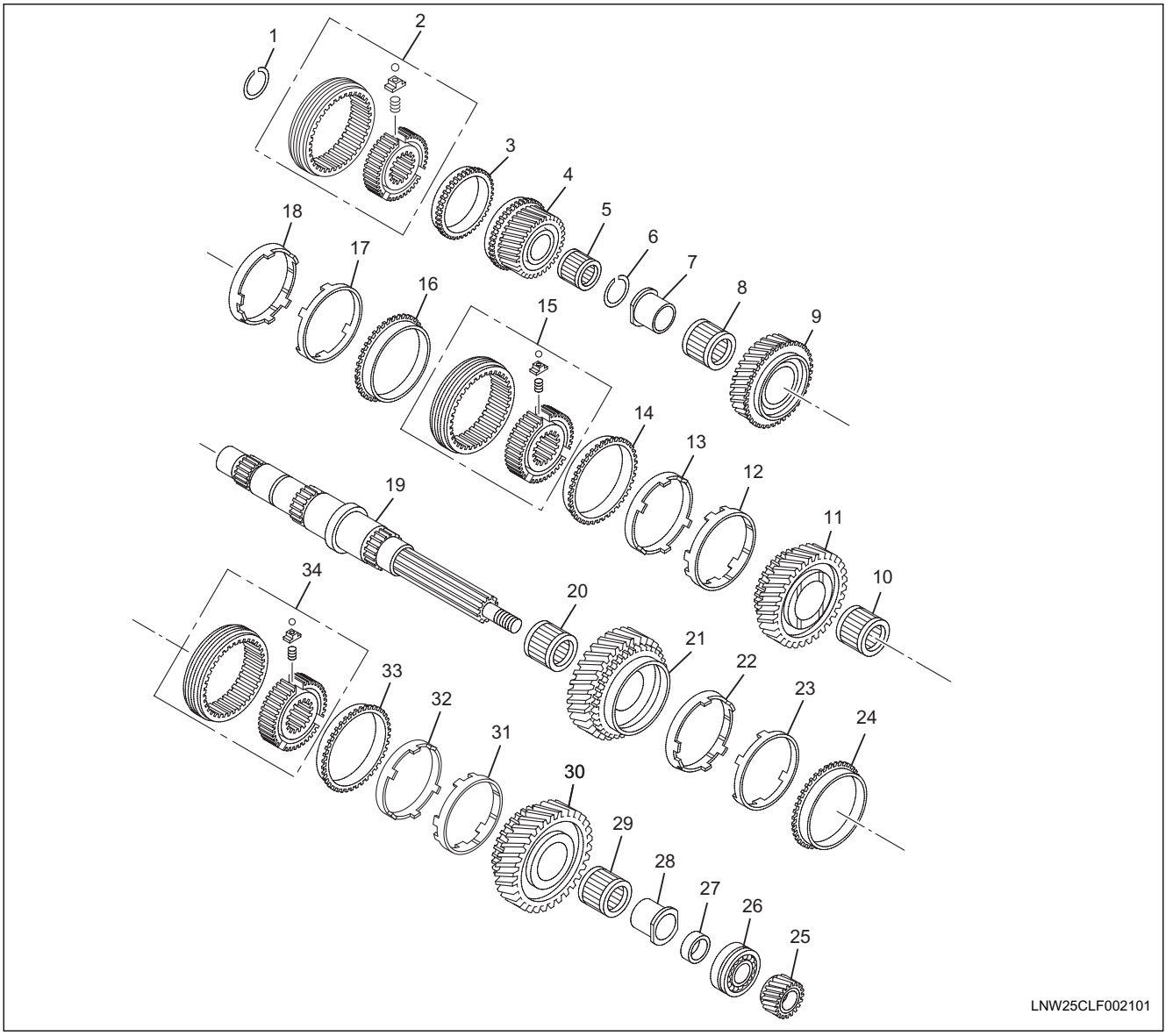

Legend

(1) Snap ring
(2) 4th / 5th clutch hub assembly and sleeve
(3) 4th block ring
(4) 4th gear
(5) Needle bearing
(6) Snap ring
(7) Collar
(8) Needle bearing
(9) 3rd gear
(10) Needle bearing
(11) 2nd gear
(12) 2nd gear inside ring
(13) 2nd gear outside ring
(14) 2nd gear block ring
(15) 2nd / 3rd clutch hub assembly and sleeve
(16) 3rd gear block ring
(17) 3rd gear outside ring
(18) 3rd gear inside ring
(19) Main shaft
(20) Needle bearing
(21) 1st gear
(22) 1st gear inside ring
(23) 1st gear outside ring
(24) 1st gear block ring
(25) 6th gear
(26) Bearing
(27) Spacer
(28) Collar
(29) Needle bearing
(30) Reverse gear
(31) Reverse gear inside ring
(32) Reverse gear outside ring
(33) Rreverse gear block ring
(34) 1st / reverse clutch assembly and sleeve

Disassembly

1. Remove the 6th gear.
2. Use a bearing remover and a press to simultaneously remove the following parts.
   - Bearing
   - Spacer
   - Collar
   - Reverse gear
   - Needle bearing
   - Reverse gear inside ring
   - Reverse gear outside ring
   - Reverse gear block ring
   - 1st / reverse clutch hub assembly and sleeve
   - 1st gear block ring
   - 1st gear outside ring
   - 1st gear inside ring
   - 1st gear
   - Needle bearing

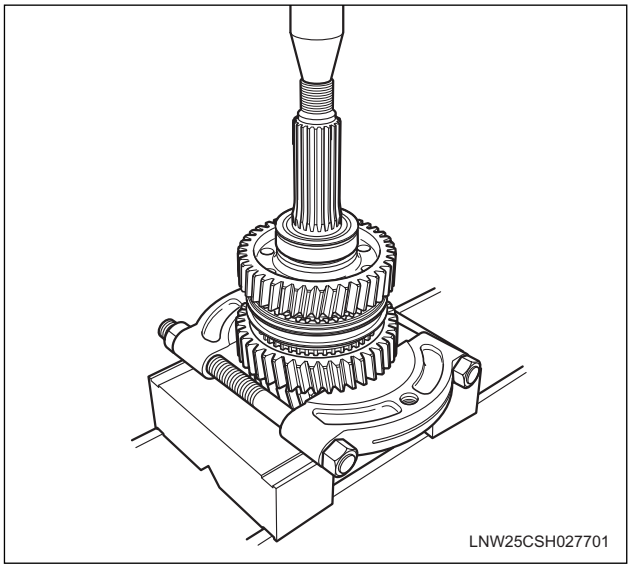

3. Disassemble the 1st / reverse clutch hub assembly and sleeve.

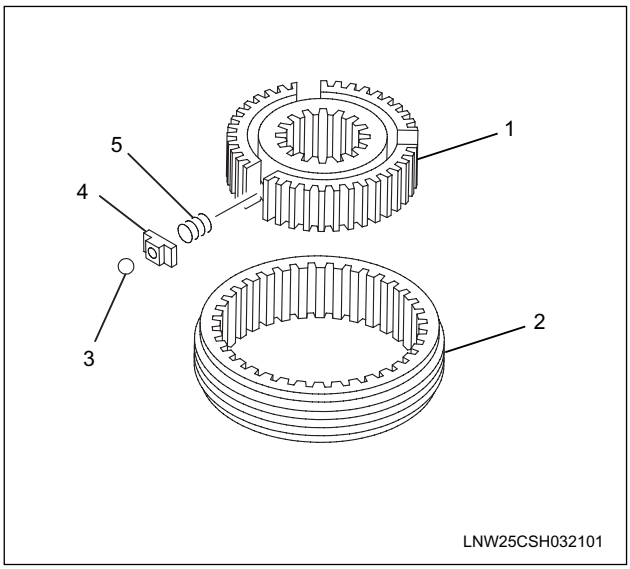

Legend

(1) Clutch hub
(2) Sleeve
(3) Ball
(4) Block
(5) Spring

4. Use a pair of snap ring pliers to remove the snap ring securing the 4th / 5th clutch hub assembly.
5. Use a bearing remover to simultaneously remove the 4th / 5th clutch hub assembly, the sleeve, the 4th / 5th block ring, and the 4th gear needle bearing.

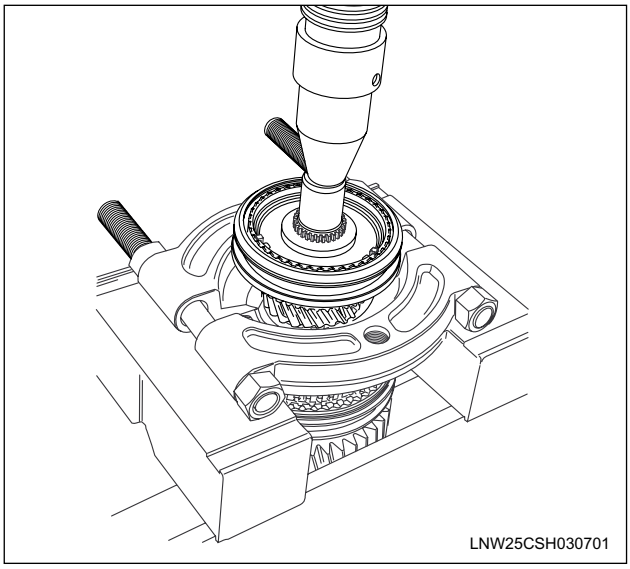

6. Disassemble the 4th / 5th clutch hub assembly and the sleeve.

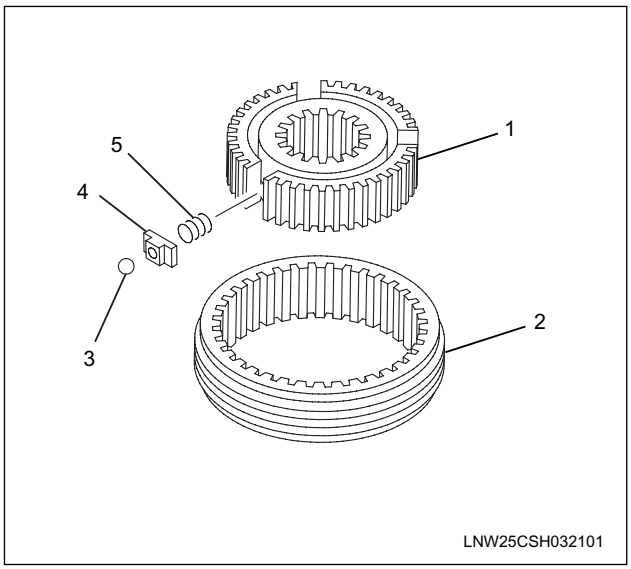

Legend

(1) Clutch hub
(2) Sleeve
(3) Ball
(4) Block
(5) Spring

7. Use a pair of snap ring pliers to remove the snap ring securing the 3rd gear collar.
8. Use a bearing remover to simultaneously remove the 3rd gear collar, the 3rd gear needle bearing, the 3rd gear inside ring, the 3rd gear outside ring, the 3rd gear block ring, the 2nd / 3rd clutch hub assembly, the sleeve, the 2nd gear block ring, the 2nd gear inside ring, the 2nd gear outside ring, and the 2nd gear needle bearing from the main shaft.

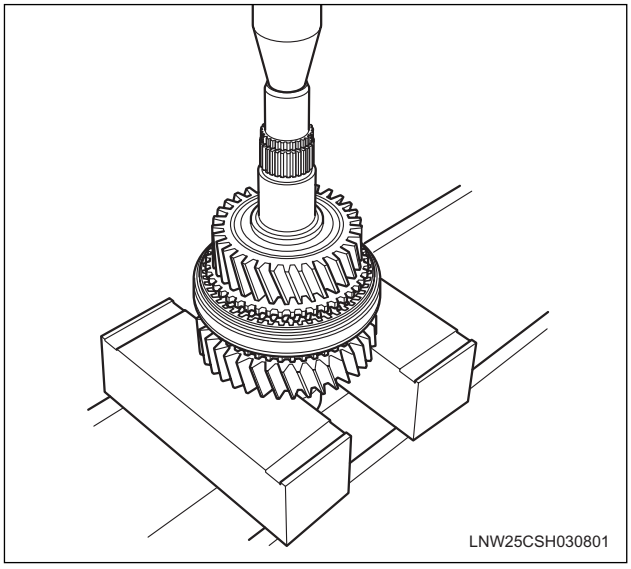

9. Disassemble the 2nd / 3rd clutch hub assembly and the sleeve.

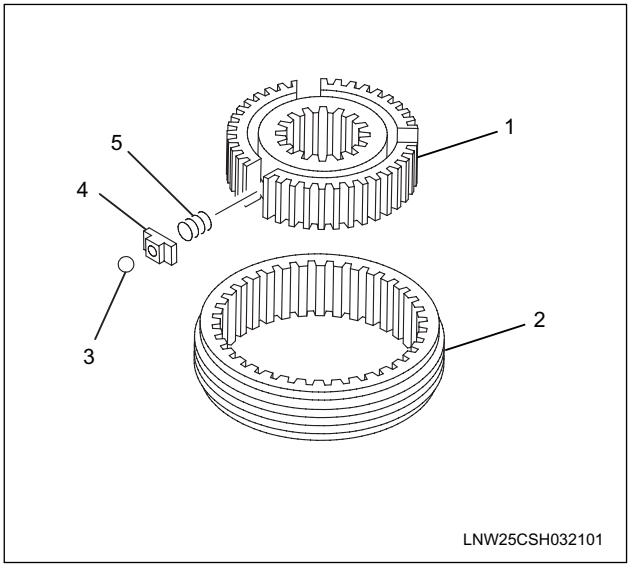

Legend

(1) Clutch hub
(2) Sleeve
(3) Ball
(4) Block
(5) Spring

10. Inspect each of the bearings for roughness, abnormal operating noise, corrosion, internal and external damage, and excessive play (in the direction of the slide). Repair or replace the bearings as required.
11. Use and inside dial gauge to measure the inside diameter of each of the gears. If the measured diameter exceeds the specified limit, the gear must be replaced.

Gear inside diameter mm (in)

Gear	Standard range	Limit
6th	50.009 – 50.025 (1.968 – 1.969)	50.065 (1.971)
5th	48.009 – 48.025 (1.890 – 1.890)	48.065 (1.892)
4th	55.010 – 55.029 (2.165 – 2.166)	55.069 (2.168)
3rd	63.010 – 63.029 (2.480 – 2.481)	63.069 (2.483)
2nd	63.010 – 63.029 (2.480 – 2.481)	63.069 (2.483)
1st	63.010 – 63.029 (2.480 – 2.481)	63.069 (2.483)
Reverse	63.010 – 63.029 (2.480 – 2.481)	63.069 (2.483)

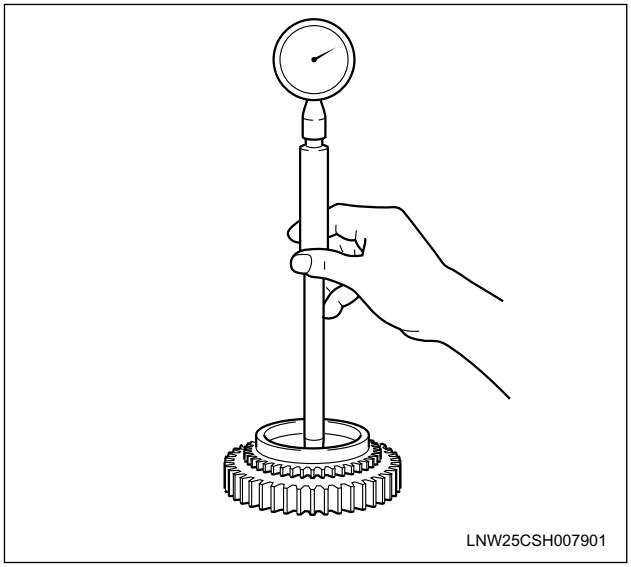

12. Use a dial gauge to measure the main shaft deflection (curvature). If the deflection exceeds the specified limit, the shaft must be replaced.

Main shaft deflection mm (in)

Standard	Limit
0.015 (0.001)	0.1 (0.004)

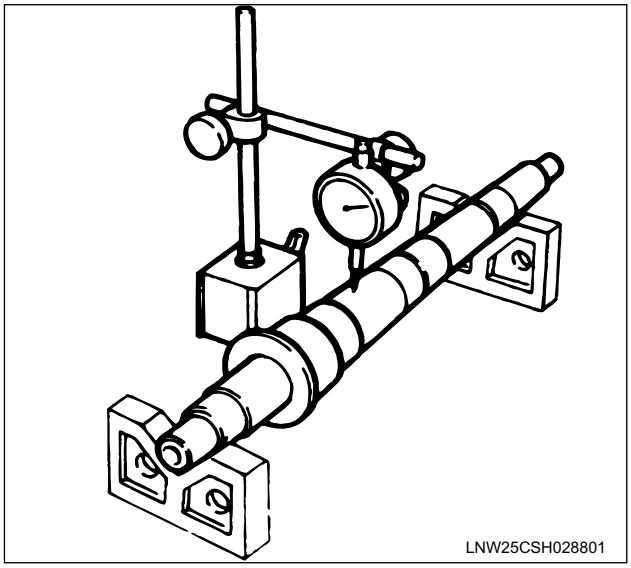

13. Inspect the synchromesh mechanism. Use an oil stone or a pencil grinder to correct light stepping and other minor imperfections.

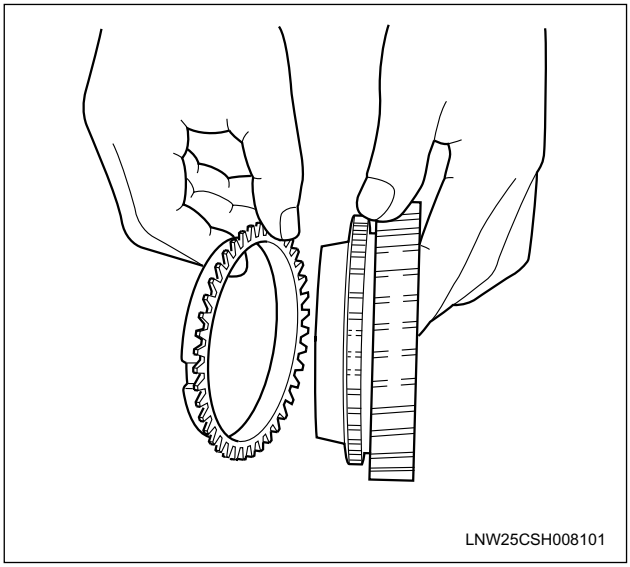

14. Use a thickness gauge to measure the gaps between the block ring and the dog gear. If the gap exceeds the specified limit, the block ring must be replaced.

Block ring and dog gear gap mm (in)

Gear	Standard	Limit
4th / 5th / 6th	1.03 – 2.60 (0.04 – 0.10)	0.50 (0.02)
2nd / 3rd	1.00 – 2.50 (0.04 – 0.10)	0.50 (0.02)
1st / Reverse	1.00 – 2.50 (0.04 – 0.10)	0.50 (0.02)

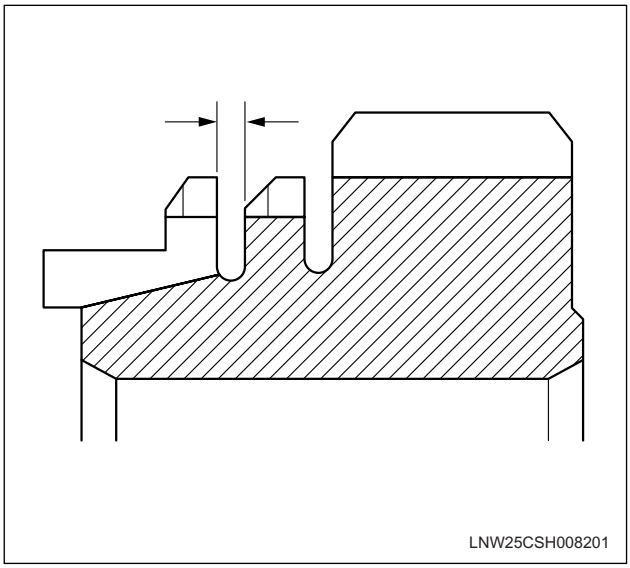

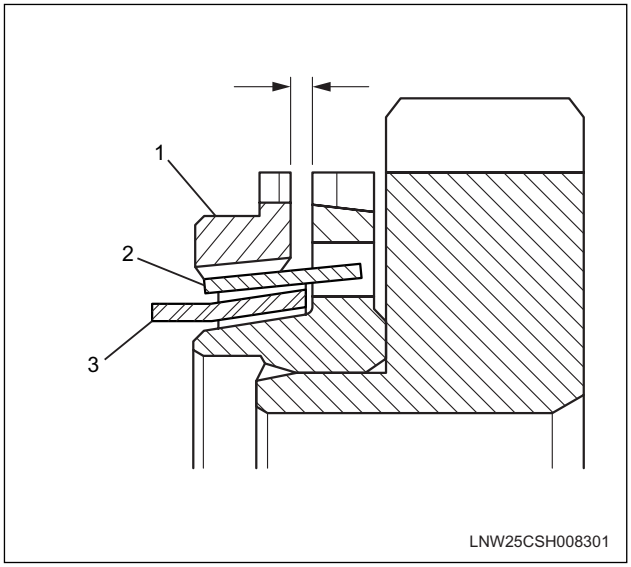

15. Inspect the clutch hub and sliding sleeve contact surfaces for wear and/or damage.
16. Inspect the spline interior and groove for wear and/or damage.
17. Measure the spline play in the direction of rotation (above the clutch hub outside circumference). If the play exceeds the specified limit, the spline must be replaced.

Spline play mm (in)

Standard
0 – 0.16 (0 – 0.01)

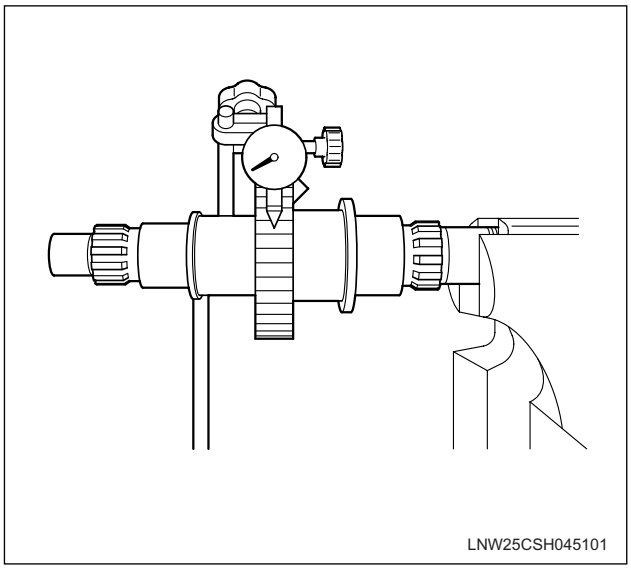

18. Measure the gaps at the clutch hub and the protrusion of the block ring using a thickness gauge.
    - If the measurements exceed the limits, replace the block and clutch hub.

Block and clutch hub gap mm (in)

Gear	Limit
5th / 4th 6th	4.30 – 4.70 (0.17 – 0.19)
1st / Reverse 3rd / 2nd	3.30 – 3.70 (0.13 – 0.15)

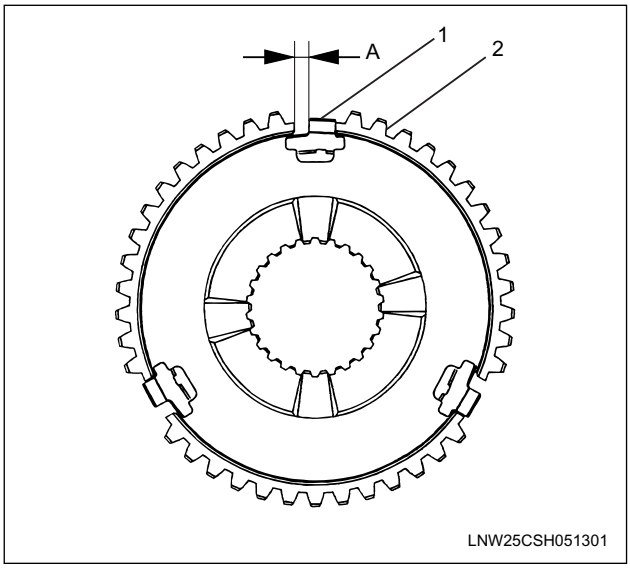

Legend

(1) Block ring
(2) Clutch hub

Reassembly

1. Clean all the parts.
2. Place the main shaft in a vise. The long end of the spline must be facing down.
3. Install the block and spring to the 2nd / 3rd clutch hub.
4. Insert the 3 balls into the 3 insert grooves inside the sleeve. Position the balls carefully to set the phase.

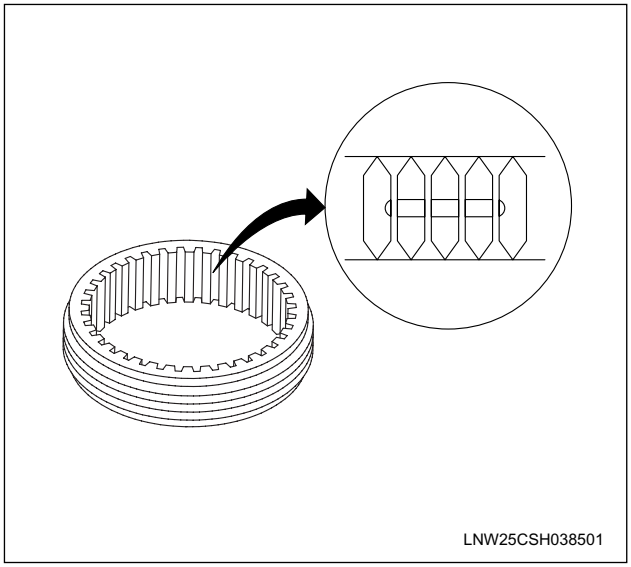

5. Install the sleeve (1) to the clutch hub (5). The sleeve should press slightly against the block.
6. Press on the ball (2), the block (3), and the spring (4). Insert the sleeve into the ball groove until it touches the ball.

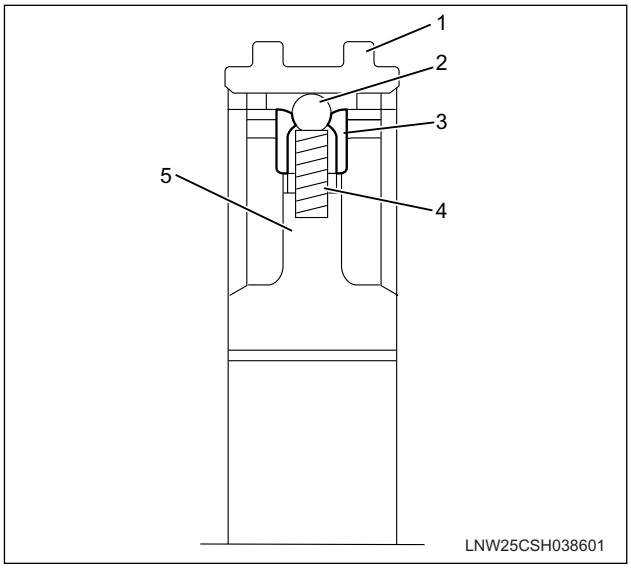

7. Apply 5W-30 motor oil to the needle bearing, second gear thrust surface, and the tapered surface of the synchronization cone. Face the dog gear upward and attach the second gear (6) and needle bearing (5) to the main shaft.
8. Attach the second-gear inside ring (4), second-gear outside ring (3), and second-gear block ring (2) so that the teeth of the outside ring mesh with those of the dog gear.
9. Insert the 6 pawls on the inside ring into the holes in the hub.

10. Use the installer (J-41736) to press the 2nd / 3rd clutch hub assembly and sleeve (1) into place.

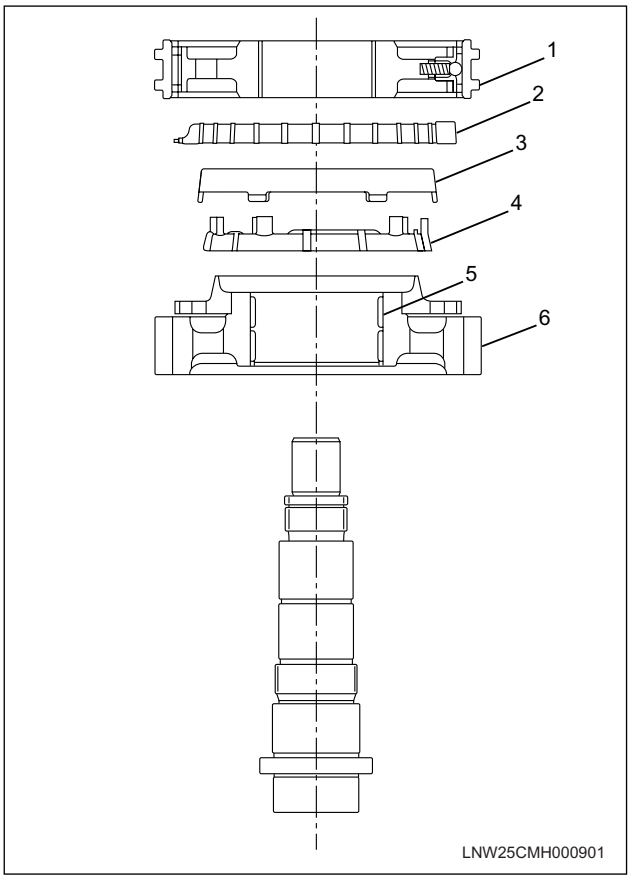

11. Attach the third-gear block ring (7), third-gear outside ring (6), third-gear inside ring (5) so that the six teeth mesh with those of the hub. Make sure to thoroughly apply 5W-30 motor oil to both sides of the inside ring and outside ring as well as the inside surface of the block ring.
12. Apply 5W-30 motor oil to the needle bearing, third-gear thrust surface, and the tapered surface of the synchronization cone. Face the dog gear downward and press-fit the third gear (4), needle bearing (3), and collar (2) using a (J-41736) installer tool so that the teeth of the outer ring mesh with those of the dog gear of the third gear.
13. Use a pair of pliers to install the snap ring (1).

CAUTIONS:
- **If the snap ring is bent or otherwise damaged, it must be replaced with a new one.**
- **Be sure that the snap ring is completely installed to the snap ring groove.**

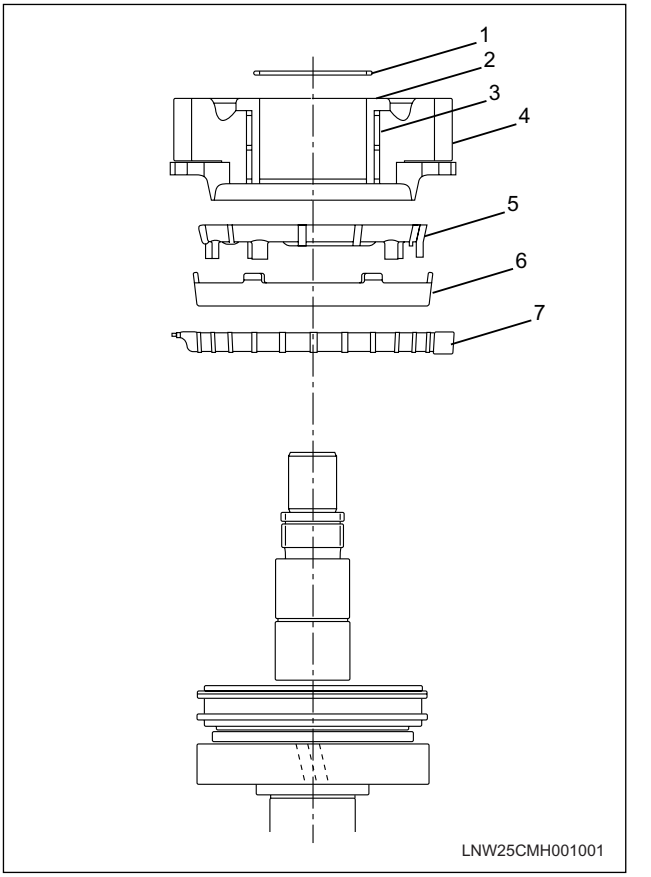

14. Install the block and spring to the 4th / 5th clutch hub.
15. Insert the 3 balls into the 3 insert grooves inside the sleeve. Position the balls carefully to set the phase.

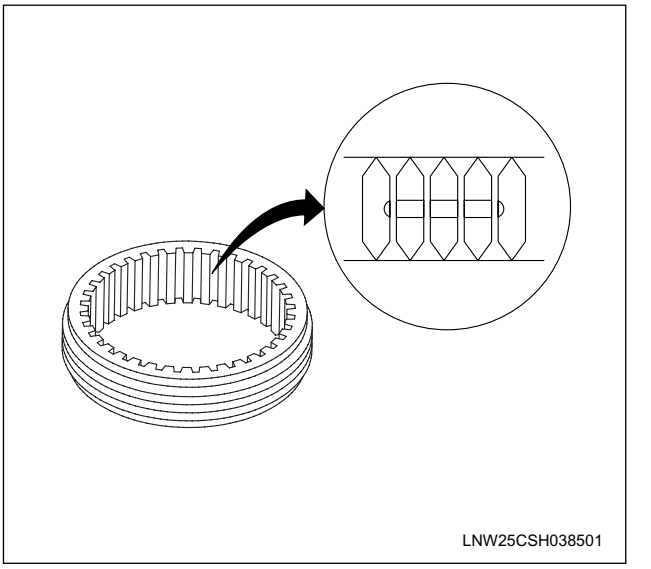

16. Install the sleeve (1) to the clutch hub (5). The sleeve should press slightly against the block.

17. Press on the ball (2), the block (3), and the spring (4). Insert the sleeve into the ball groove until it touches the ball.

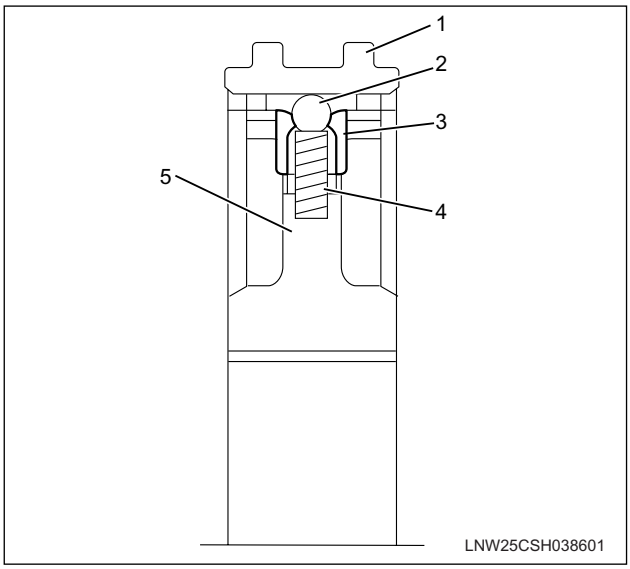

18. Apply engine oil (5W-30) to the needle bearing, the 4th gear thrust surfaces, and the synchrotron taper.
19. Install the 4th gear (5) and the needle bearing (4) to the main shaft. The dog gear must be facing up.
20. Apply engine oil (5W-30) to the 4th block ring. (3)
21. Use the installer (J-41736) to press the 4th / 5th clutch hub assembly and sleeve (2) into the groove in the 4th / 5th block ring.
22. Use a pair of pliers to install the snap ring (1).

    CAUTIONS:
    - **If the snap ring is bent or otherwise damaged, it must be replaced with a new one.**
    - **Be sure that the snap ring is completely installed to the snap ring groove.**

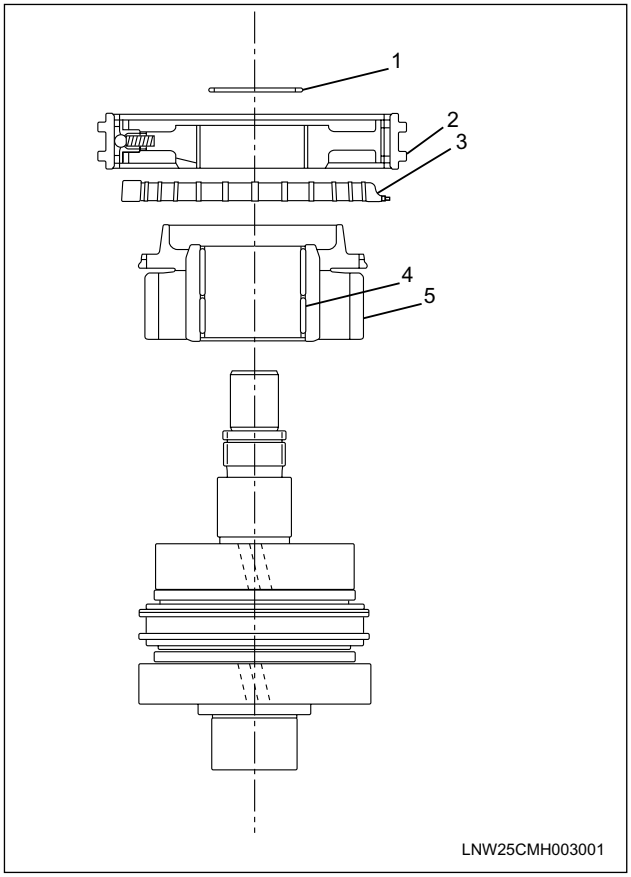

23. Install the block and spring to the 1st / reverse clutch hub.
24. Insert the 3 balls into the 3 insert grooves inside the sleeve. Position the balls carefully to set the phase.

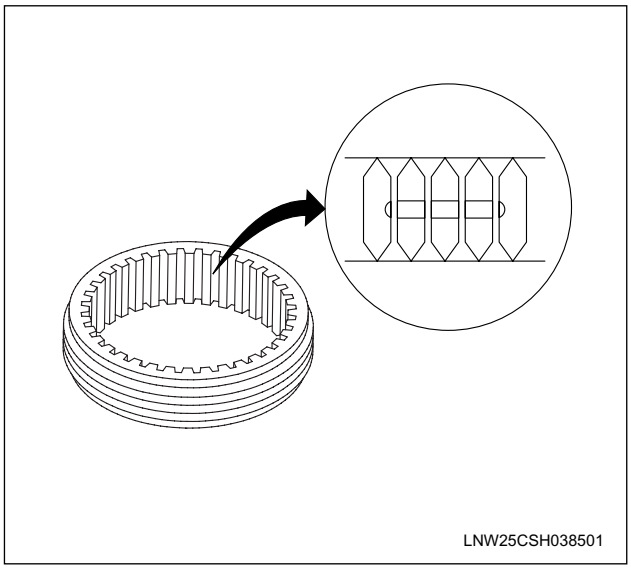

25. Install the sleeve (1) to the clutch hub (5). The sleeve should press slightly against the block.
26. Press on the ball (2), the block (3), and the spring (4). Insert the sleeve into the ball groove until it touches the ball.

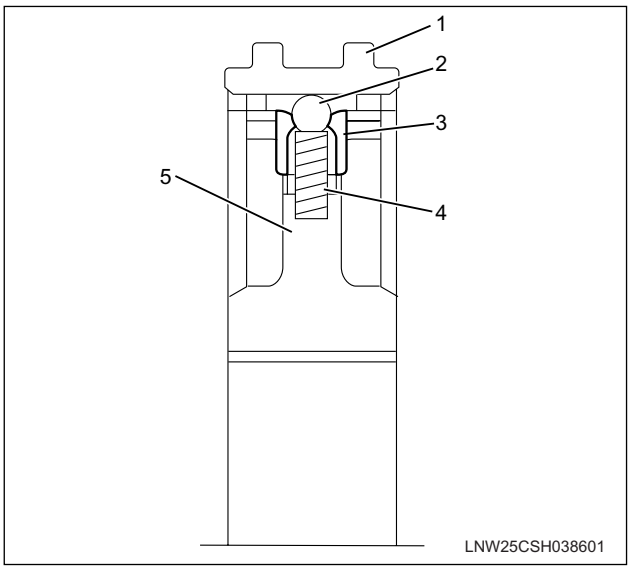

27. Apply engine oil (5W-30) to the needlel bearing, the 1st gear thrust surfaces, and the synchrotron taper.
28. Install the 1st gear (6) and the needle bearing (5) to the main shaft. The dog gear must be facing up.
29. Assemble the first-gear inside ring (4), first-gear outside ring (3), and first-gear block ring (2) in that order. Then attach them so that the teeth of the outer ring mesh with those of the dog gear of the first gear. Be sure to thoroughly apply 5W-30 motor oil to both sides of the inside ring and outside ring as well as the inside surface of the block ring.
30. Insert the 6 pawls on the 1st gear inside ring into the 6 hub holes.
31. Use the installer (J-41736) to press the 1st / reverse clutch hub assembly and sleeve (1) into place.

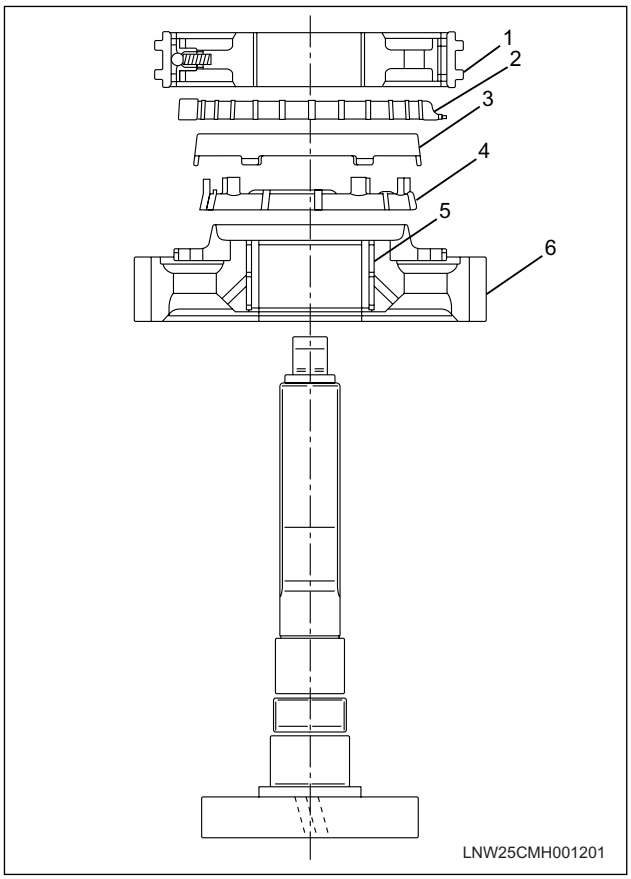

32. Apply engine oil (5W-30) to the reverse gear block ring (6), the reverse outside ring (5), and the reverse inside ring (4).
33. Align the block ring groove phase with the 1st / reverse clutch hub assembly and sleeve.
34. Install the block ring.
35. Apply engine oil (5W-30) to the needle bearing and the reverse gear thrust surfaces.
36. Align the reverse gear with the pawl on the outer ring to set the synchrotron phase.
37. Use the installer (J-41736) to press the reverse gear (3), the needle bearing (2), and the collar (1) into place.

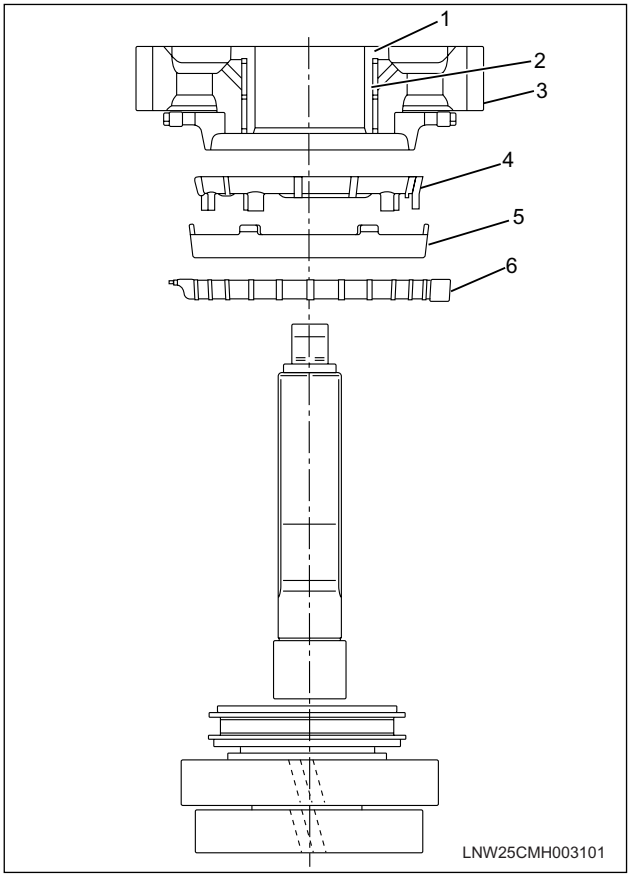

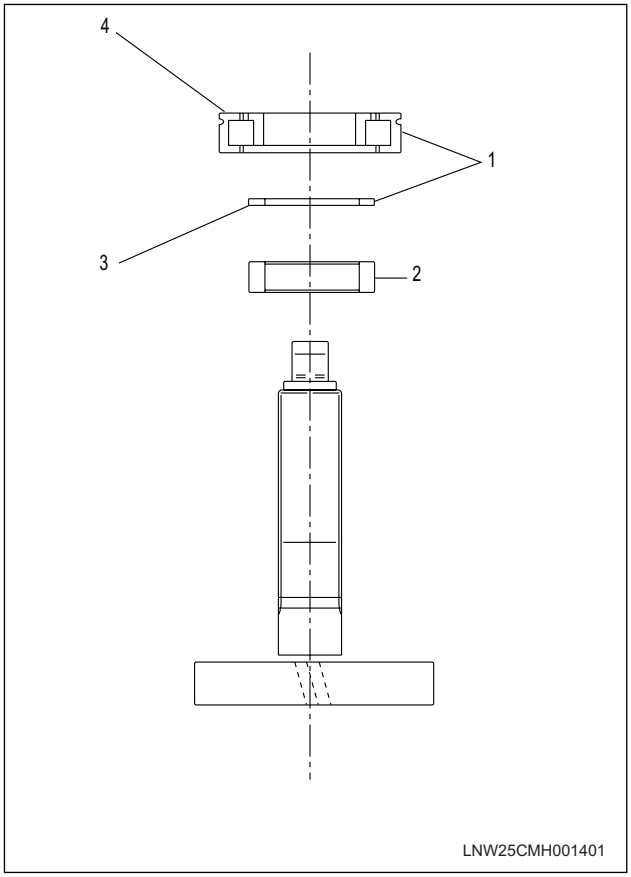

38. Install the spacer (2).
39. Use the installer (J-41736) to press the bearing (1) into place. The bearing surface ‘A’ mark (4) must be facing up. The bearing surface ‘B’ mark (3) must be facing down.
40. Install the 6th gear. The projecting portion of the gear must be facing down.

COUNTERSHAFT

Parts

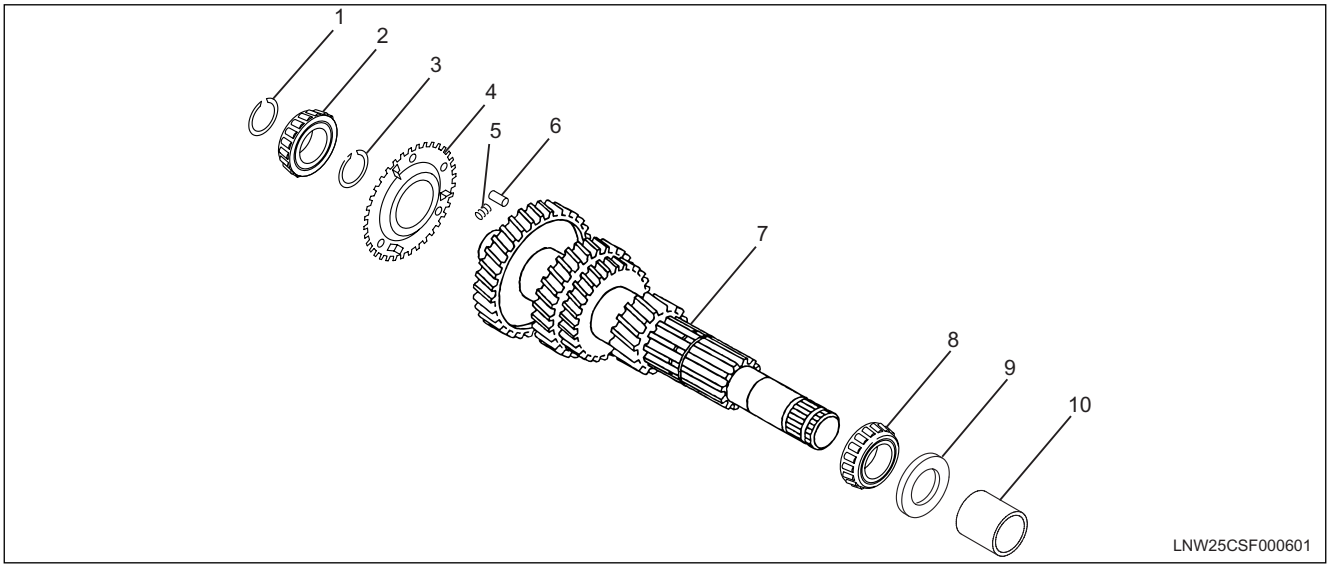

Legend

(1) Snap ring
(2) Bearing (Front of countershaft)
(3) Snap ring
(4) Antilash plate
(5) Coil spring
(6) Straight pin
(7) Countershaft assembly
(8) Bearing (Back of countershaft)
(9) Thrust washer
(10) Collar

Disassembly

1. Use a pair of snap ring pliers to remove the snap ring holding the bearings in place.
2. Use the bearing remover (J-42379) to remove the bearing from the front of the countershaft.

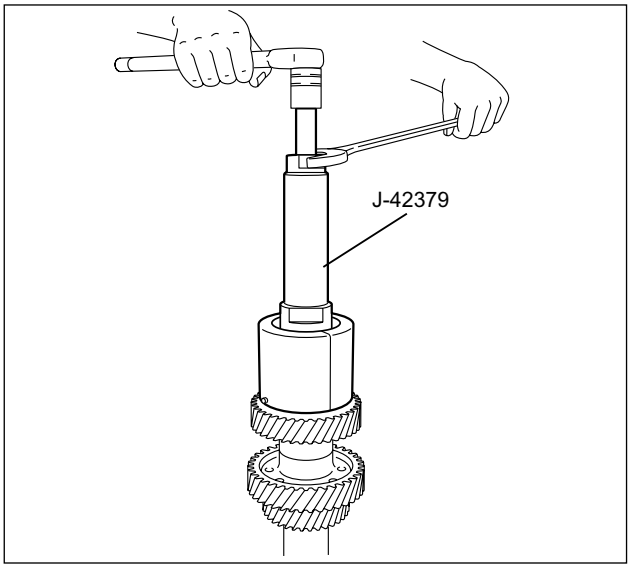

3. Use a pair of snap ring pliers to remove the snap ring holding the antilash plate in place.
4. Use the flange holder (J-37872) to remove the antilash plate.

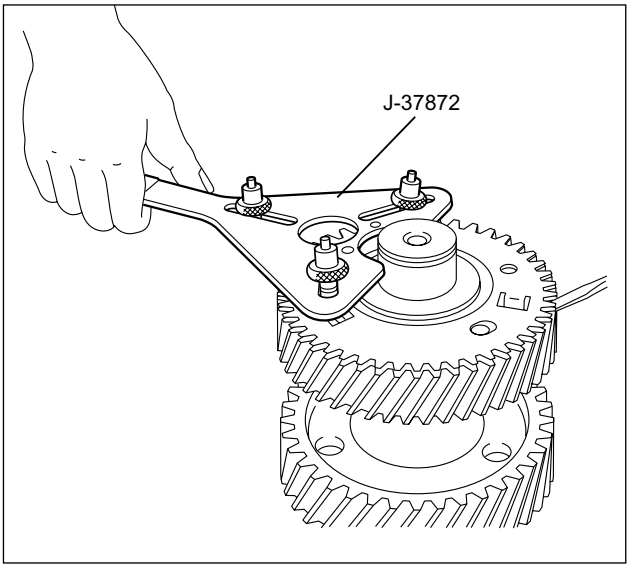

5. Remove the 3 coil springs from the 5th gear.
6. Remove the straight pin form the 5th gear.
7. Use a bearing remover and a press to remove the collar and the thrust washer.

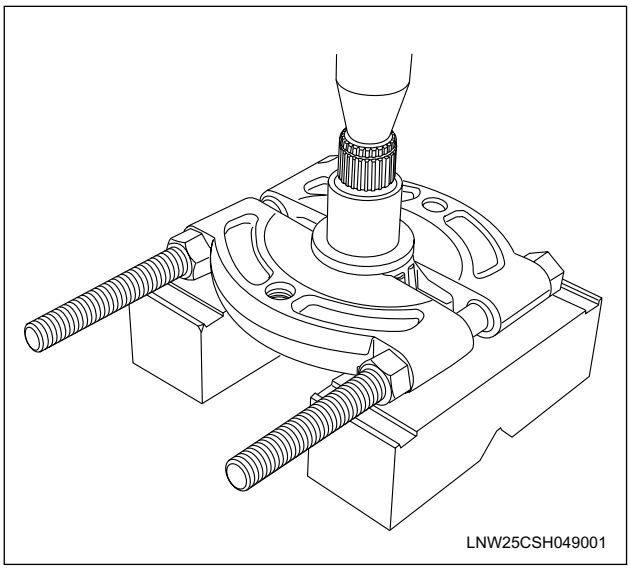

8. Use the bearing remover (J-42379) to remove the bearing from the rear of the countershaft.

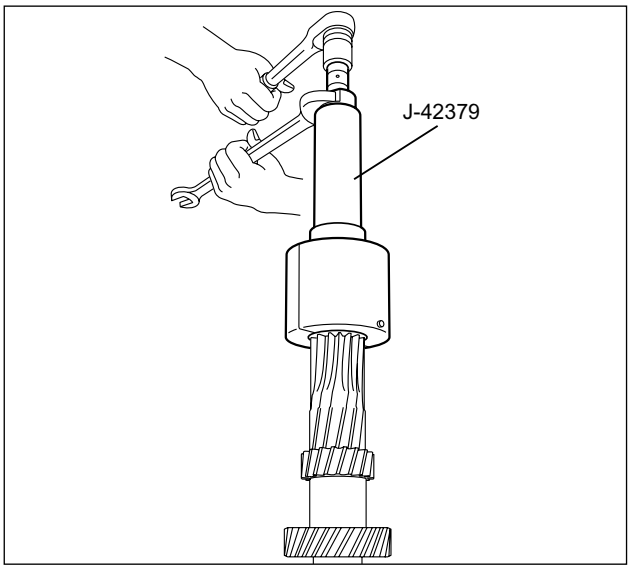

9. Inspect the disassembled parts for wear and/or other damage. Repair or replace damaged parts as required.
10. Check the cross-sectional area of each gear for significant wear and/or damage. If wear of damage is present, the gear must be replaced.
11. Inspect each of the bearings for roughness, abnormal operating noise, corrosion, internal and external damage, and excessive play (in the direction of the slide). Repair or replace the bearings as required.

Reassembly

1. Use the installer (J-5590) and a press to force the rear countershaft bearing into place.

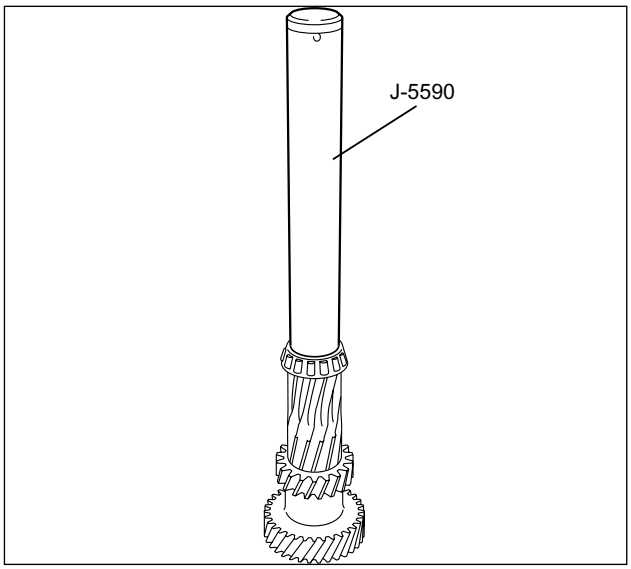

2. Use the installer (J-5590) and a press to force the collar and thrust washer into place.

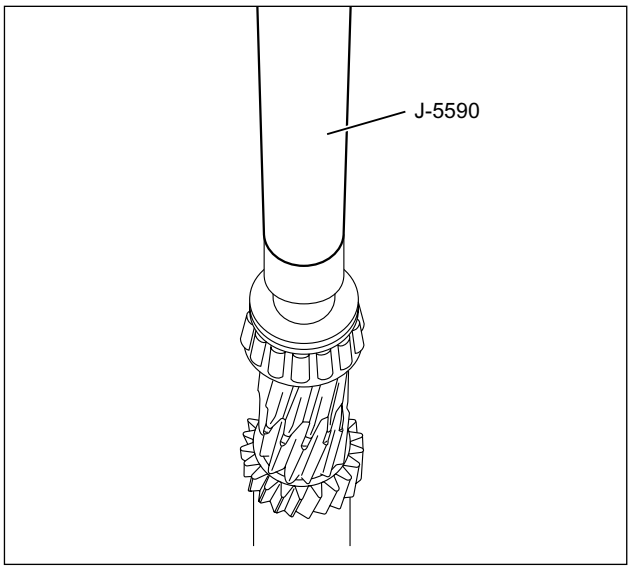

3. Install the straight pin. Pay attention to the pin projection area.

Pin projection area	mm (in)
Standard	
2.80 (0.11)	

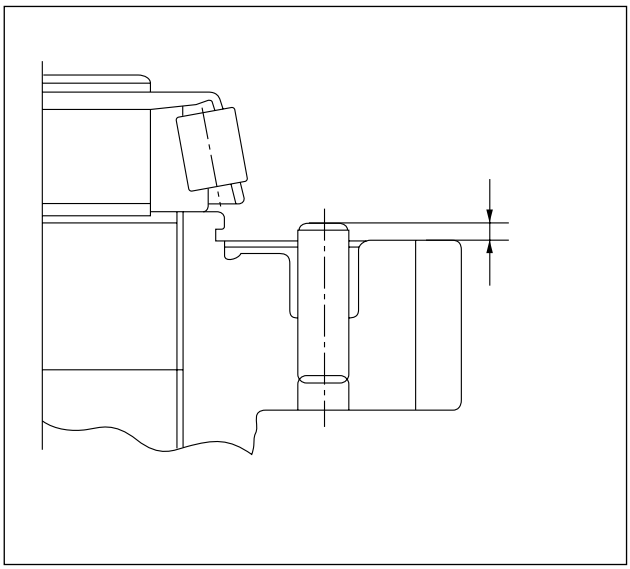

4. Install the 3 coil springs to the 5th gear grooves. When viewed from the center of the gear, the springs will touch the left side of the pin.

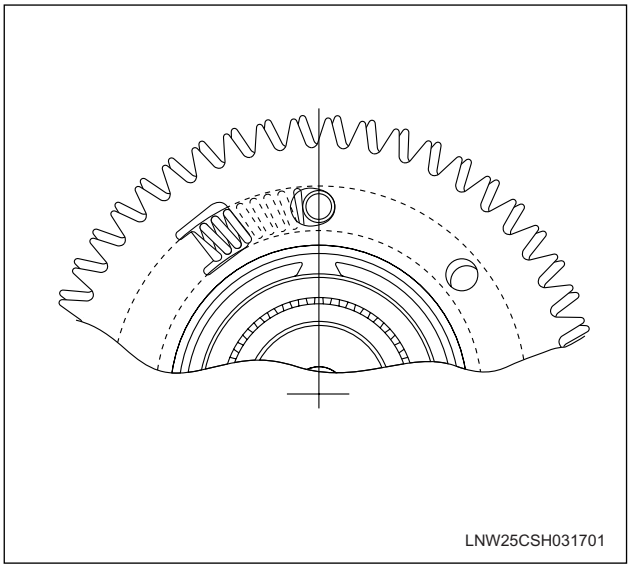

5. Compress the springs between the return portion of the antilash plate and the straight pin.
6. Use the flange holder (J-37872) to align the setting holes in the antilash plate and the 5th gear.

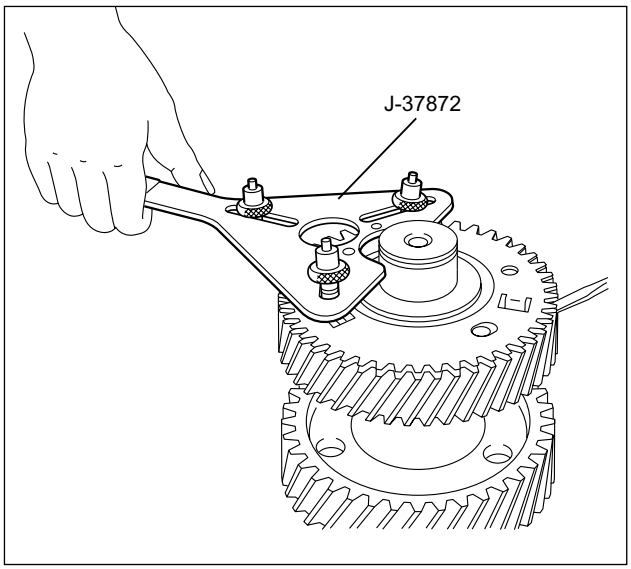

7. Use a pair of snap ring pliers to install the snap ring securing the antilash plate.
8. Use the installer and a press to force the bearing on to the front of the countershaft.

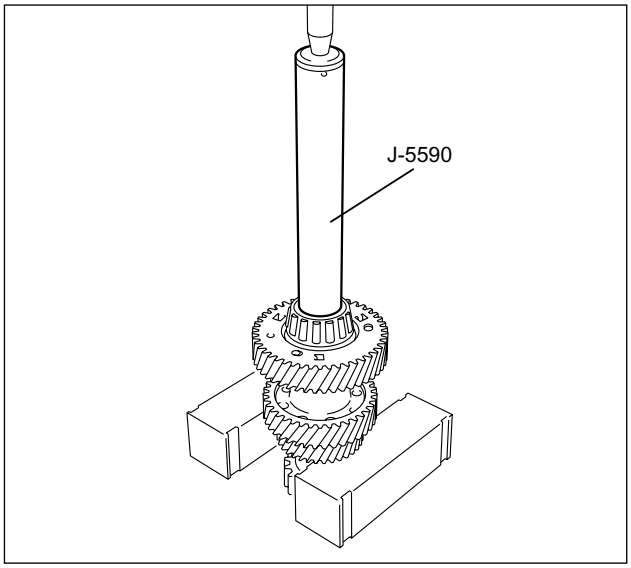

9. Use a pair of snap ring pliers to install the snap ring securing the front countershaft bearing.
   - From the mountable snap rings, select the thickest one of the three types.

Shim thickness mm (in)	Discernment color
1.9 (0.075)	Colorlessness
2.1 (0.083)	Yellow
2.3 (0.091)	Pink

Note: If a snap ring is deformed or damaged, replace it with a new one and verify that it is attached properly.

CONTROL BOX

Parts

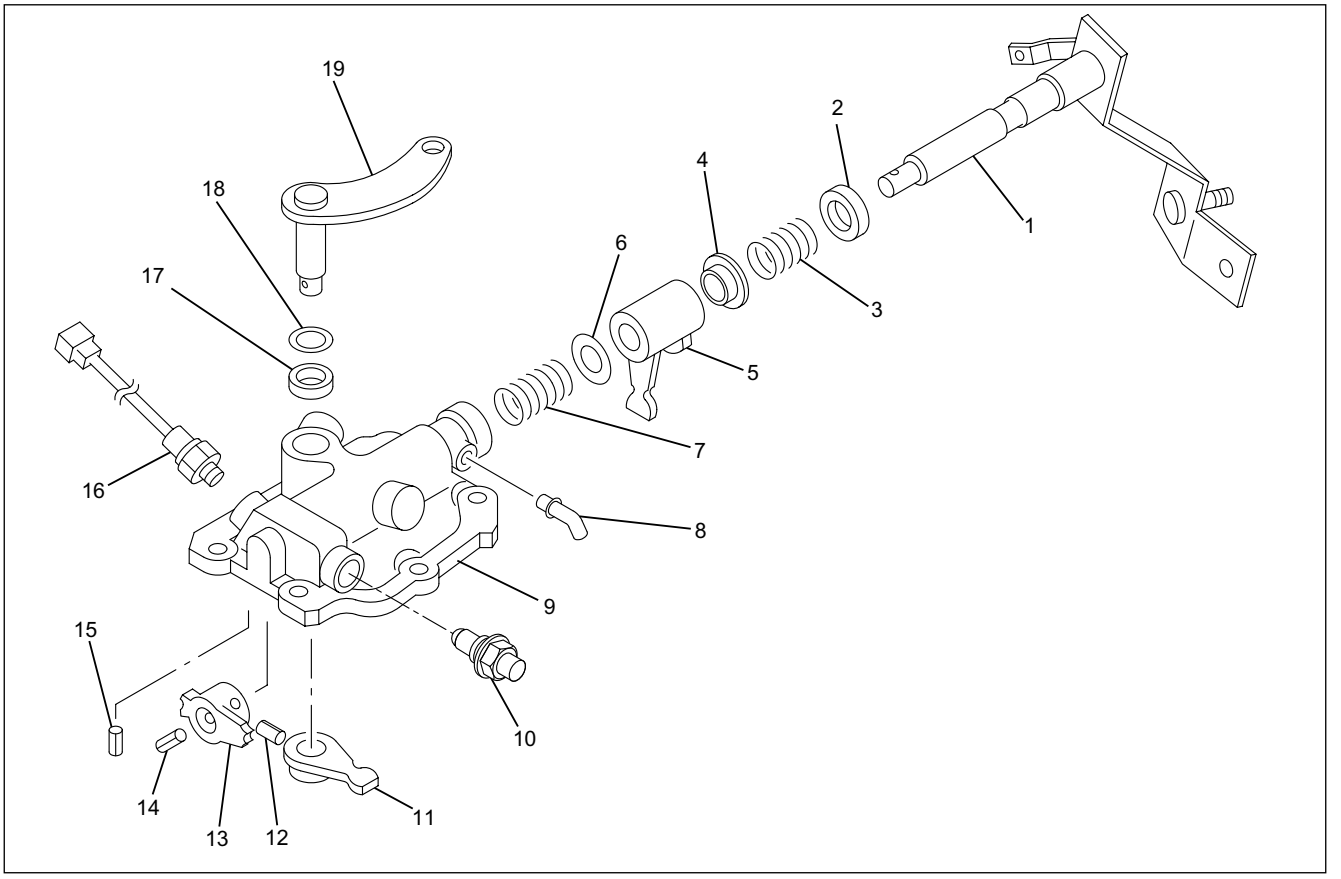

Legend

(1) Shift lever shaft
(2) Shift lever shaft oil seal
(3) Spring
(4) Washer
(5) Shift internal lever
(6) Spring seat
(7) Spring
(8) Pipe
(9) Control box
(10) Détente
(11) Selector internal lever
(12) Spring pin (Selector internal lever)
(13) Stopper ring
(14) Spring pin (Stopper ring)
(15) Spring pin (Shift lever shaft)
(16) Neutral switch
(17) Selector lever shaft oil seal
(18) Washer
(19) Selector external lever

Disassembly

1. Remove the neutral switch (1), the détente (2).

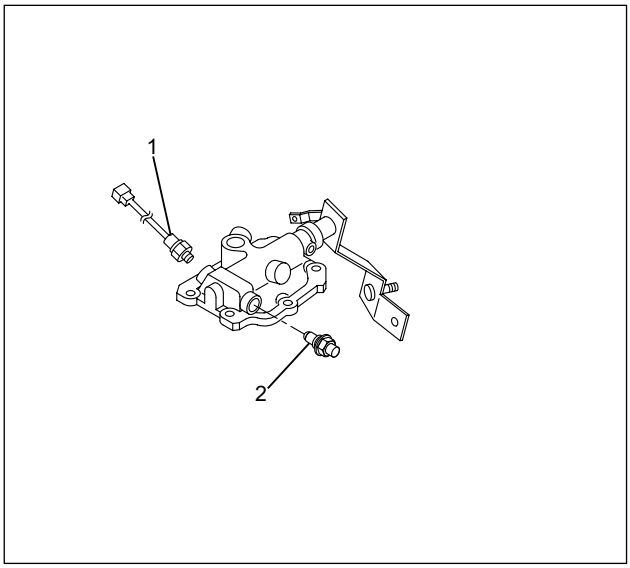

2. Use a spring pin remover to remove the selector internal bar spring pin (4).
3. Remove the selector internal bar (3), the selector external bar (1), and the washer (2).

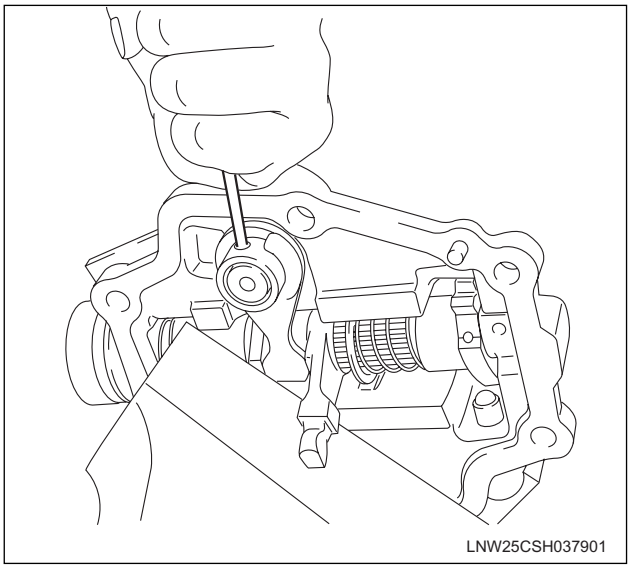

4. Use a pair of pliers to remove the stopper ring spring pin (8) and the shift lever shaft spring pin.
5. Pull the shift lever shaft from the assembly.
6. Remove the stopper ring (7), the spring (6), the spring seat (5), the shift internal bar (4), the washer (3), and the spring (2).

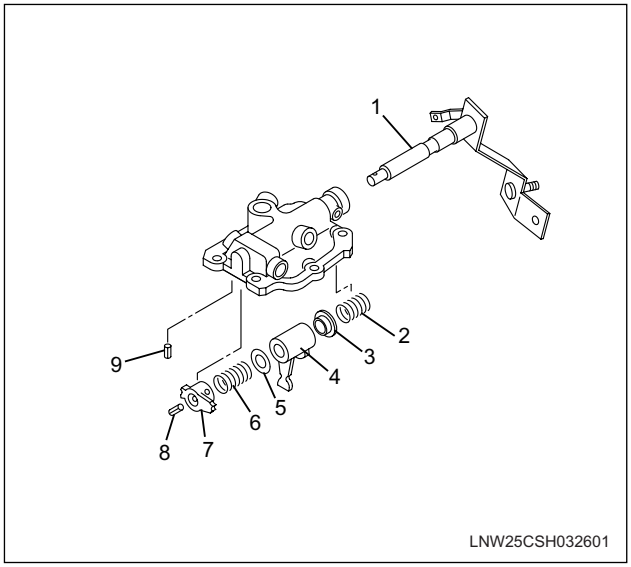

7. Use a screwdriver or similar prying tool to remove the selector lever shaft oil seal and the shift lever shaft oil seal from the control box.
8. Inspect the disassembled parts for wear and/or damage. Make the necessary repairs or replace the part as appropriate.
9. Inspect the shift lever shaft for significant wear. Replace the shaft if significant wear is present.
10. Inspect the control box for excessive play and rough or restricted movement. Replace the control box if either of these conditions is present.

Reassembly

1. Use the installer (J-41738) to install the shift lever shaft oil seal and the selector lever shaft oil seal to the control box.

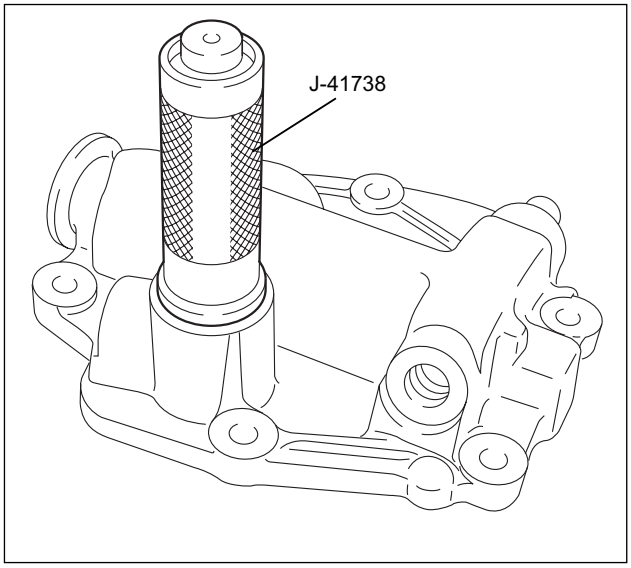

2. Install the spring (2), the washer (3), the shift internal lever (4), the spring seat (5), the spring (6), and the stopper ring (7) to the control box.
3. Insert the shift lever shaft (1).
4. Align the pin holes in the shift lever shaft and the stopper ring.
5. Drive the new stopper ring spring pin (8) and the new shift lever shaft spring pin (9) into place.

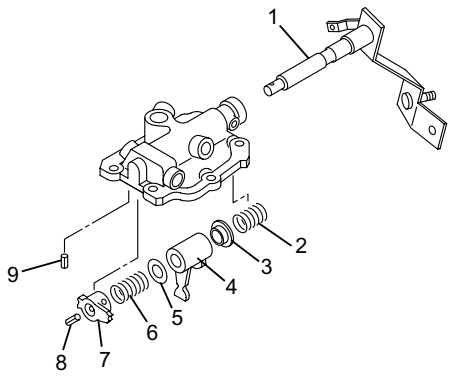

LNW25CSH032601

6. Install the selector external lever (1) and the washer (2) to the control box.
7. Install the selector internal lever (3).
8. Drive the new selector internal lever spring pin into place.

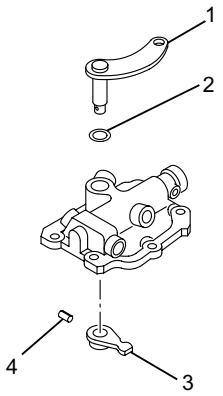

LNW25CSH032501

9. Install the détente (2).

Torque : 28 N•m (2.9 Kg•m)

- Detents are precoated. Be sure to thoroughly remove sealing material around the threads of the case, and use new detents.

10. Tighten the neutral switch (1) to the specified torque.
    - Thoroughly remove sealing material from the threads, apply lock tight 242 to them, and then assemble.

Torque : 34 N•m (3.5 Kg•m)

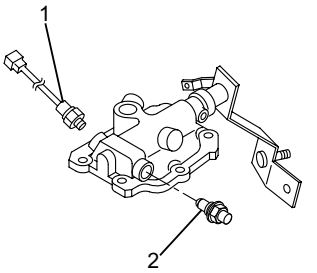

SPECIFICATIONS

Transmission Type	MZZ6U Direct Drive 6-Speed
Gear Mesh Type	1st, 2nd, 3rd, Reverse: Synchro-mesh
Gear Ratio	1st 6.389
	2nd 3.767
	3rd 2.234
	4th 1.442
	5th 1.000
	6th 0.782
	Reverse 6.369
Lubricating Oil	Engine Oil SAE 5W-30
Oil Capacity	Approx. 4.4 Liters (9.30 pints)
Weight without Lubricating Oil	100 kg (221 lb)
Distance between Center of Shift Lever Play and Center Cluster	283 ± 15 mm (11.1 ± 0.6 in)
Spline Play between Clutch Hub and Mainshaft	0 – 0.16 mm (0 – 0.01 in)
Shift Arm Thickness	More than 9.0 mm (0.354 in)
	6th 9.3 mm (0.366 in)
Gear Inside Diameter	1st, 2nd, 3rd, Reverse 63.1 mm (2.483 in)
	4th 55.1 mm (2.168 in)
	5th 48.0 mm (1.892 in)
	6th 50.1 mm (1.971 in)
Main Shaft Deflection	0.1 mm (0.004 in)
Block Ring and Dog Gear Gap	0.5 mm (0.020 in)
Block and Clutch Hub Gap	1st / Reverse, 3rd / 2nd 3.3 – 3.7 mm (0.130 – 0.150 in)

FASTENER TORQUES

Clutch Housing to Transmission Case Bolt	46 N·m (34 lb·ft)
Rear Cover Bolt	46 N·m (34 lb·ft)
Control Bolt	27 N·m (20 lb·ft)
Filler Plug	39 N·m (29 lb·ft)
Drain Plug	39 N·m (29 lb·ft)
Drive Coupling Lock Nut	382 N·m (282 lb·ft)
Reverse Switch	39 N·m (29 lb·ft)
Neutral Switch	34 N·m (25 lb·ft)
Vehicle Speed Sensor Driven Gear Mounting Bolt	20 N·m (2.0 lb·ft)
Vehicle Speed Sensor	25 N·m (18 lb·ft)
Retainer Bolt	26 N·m (20 lb·ft)
6th Relay Lever Bolt	50 N·m (37 lb·ft)
Reverse Gear Side cover Bolt	23 N·m (17 lb·ft)
PTO Cover Bolt	37 N·m (27 lb·ft)
Detente Plug	27 N·m (20 lb·ft)
Parking Brake Bracket Bolt	48 N·m (35 lb·ft)

SPECIAL TOOLS

ILLUSTRATION	**TOOL NO.** TOOL NAME
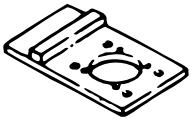	**J-35016** Drive Pinion Flange Bracket
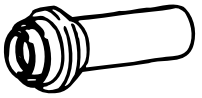	**J-45881** Oil Seal Installer
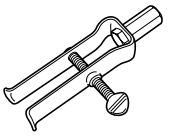	**J-26941** Bearing Remover
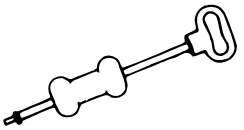	**J-2619-01** Sliding Hammer
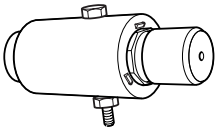	**J-45883** Bush Remover & Installer
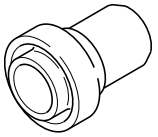	**J-42802** Oil Seal Installer
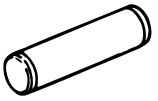	**J-5590** Bearing Installer
	J-8092 Driver Handle
	J-45882 Bearing Installer
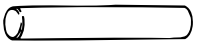	**J-41736** Clutch Hub & Collar Installer
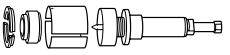	**J-42379** Bearing Remover

ILLUSTRATION	**TOOL NO.** TOOL NAME
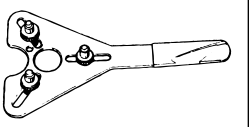	**J-37872** Flange Holder
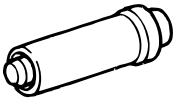	**J-41738** Oil Seal Installer

SECTION 7C3

CLUTCH (FOR MZZ TRANSMISSION)

NOTICE: When fasteners are removed, always reinstall them at the same location from which they were removed. If a fastener needs to be replaced, use the correct part number fastener for that application. If the correct part number fastener is not available, a fastener of equal size and strength (or stronger) may be used. Fasteners that are not reused, and those requiring thread locking compound will be called out. The correct torque value must be used when installing fasteners that require it. If the above conditions are not followed, parts or system damage could result.

CONTENTS

SUBJECT	PAGE
Description	7C3- 1
Clutch System	7C3- 1
Diagnosis of Clutch	7C3- 2
On-Vehicle Service	7C3- 5
Clutch System Inspection	7C3- 5
Clutch Pedal Free Play, Height and Travel Adjustment	7C3- 5
Bleeding the Clutch Hydraulic Circuits	7C3- 7
Component Parts Replacement	7C3- 8
Clutch Assembly	7C3- 8
Clutch Controls	7C3-11
Unit Repair	7C3-13
Master Cylinder	7C3-13
Slave Cylinder	7C3-14
Specifications	7C3-16
Fastener Torques	7C3-16
Special Tools	7C3-16

DESCRIPTION

CLUTCH SYSTEM

Driving Members

The driving members of a clutch usually consist of two flat surfaces machined to a smooth finish. One of these surfaces is usually the rear face of the engine flywheel, and the other is a comparatively heavy flat ring with one side machined. This part is known as the pressure plate. It is fitted into a steel cover, which also contains some of the operating members, and is bolted to the flywheel.

Driven Member

The driven member is a clutch disc with a splined hub which is free to slide lengthwise along the splines of the clutch shaft, but which drives the shaft through these same splines. Suitable frictional facings are attached to each side of the clutch disc by means of rivets. These facings must be heat resistant since friction produces heat.

Operating Members

The driving and driven members are held in contact by spring pressure.

The throwout (clutch release) bearing is a ballthrust bearing contained in the clutch housing, mounted on a sleeve attached to the front of the transmission case. The throwout bearing is moved by the clutch release yoke to contact the release levers and move the pressure plate to the rear, thus separating the clutch driving members from the driven member when the clutch pedal is depressed by the driver.

Clutch Controls

This system utilizes hydraulic pressure as a means of transmitting clutch pedal movement to the clutch release mechanism. The system consists of a pedal-operated master cylinder and a slave cylinder, interconnected with hydraulic lines. The clutch pedal is connected to the master cylinder pushrod, and the slave cylinder pushrod is connected to the clutch release fork.

DIAGNOSIS OF CLUTCH

PROBLEM	POSSIBLE CAUSE	CORRECTION
Clutch Slips	1. Binding of release levers in the pressure plate and cover assembly.	1. Replace the clutch cover assembly.
	2. Clutch release levers improperly adjusted.	2. If levers are in place, adjust free pedal.
	3. Facings loose on the clutch disc.	3. Replace the driven disc assembly.
	4. Improper clutch release bearing adjustment.	4. Adjust for proper clearance (free pedal).
	5. Binding or sticking clutch pedal assembly.	5. Repair or replace faulty parts. Check linkage for proper adjustment.
	6. Weak or broken clutch pressure springs.	6. Replace the clutch cover assembly.
	7. Burned clutch facings.	7. Replace clutch driven disc assembly and check flywheel and pressure plate friction surfaces for damage replace parts as necessary.
	8. Binding or sticking of the clutch disc hub on the transmission drive gear.	8. Lubricate splines with high temperature grease (if dry). Replace driven discs if splined hubs are worn.
	9. Release bearing binding on bearing retainer.	9. Replace release bearing or lubricate.
	10. Warped pressure plate or engine flywheel.	10. Replace defective parts. Check transmission, clutch, and engine alignment.
	11. No free pedal.	11. Adjust for free pedal, check clutch driven disc wear and replace parts as required.
Clutch Chatters During Engagement	1. Loose engine mounts.	1. Tighten engine mount bolts to specifications.
	2. Grease or oil on facings.	2. Replace driven disc assembly and repair oil leak.
	3. Slight binding in linkage during engagement.	3. Check linkage for wear or damage. Replace parts as required.
	4. Weak pressure springs.	4. Replace clutch cover assembly.
	5. Clutch release levers binding during engagement.	5. Repair or replace clutch cover assembly.
	6. Worn or broken pilot bearing.	6. Replace and lubricate pilot bearing.
	7. Rough engine idle.	7. Tune engine to manufacturer's specifications.

DIAGNOSIS OF CLUTCH (CONT.)

PROBLEM	POSSIBLE CAUSE	CORRECTION
Clutch Chatters During Engagement (Cont.)	8. Bent or out of plane pressure plate fingers. 9. Driven disc warped, cracked, or loose friction material. 10. Pressure plate warped or hot spots. 11. Flywheel warpage or discoloration. 12. Flywheel housing bore and face not aligned.	8. Replace clutch cover assembly if release fingers are more than 2 mm (0.079 in) out of plane. 9. Replace driven disc assembly. 10. Replace pressure plate or clutch cover assembly. 11. Replace flywheel. 12. Correct per alignment procedure.
Clutch Drags When Disengaged	1. Pedal cannot disengage clutch because of excessive free pedal travel. 2. Clutch release levers need adjustment. 3. High spots on clutch facings. 4. Loose rivet in facings. 5. Clutch disc wobbles because of broken springs in hub. 6. Flange of clutch cover not in alignment with flywheel because of loose bolts or bent flange. 7. Deteriorated or broken engine mounts. 8. Worn clutch release bearing. 9. Worn linkage components. 10. Clutch disc warped. 11. Broken or loose facings. 12. Misalignment of transmission. 13. Main drive gear misaligned because of worn bearings. 14. Clutch pressure plate warped. 15. Loose flywheel housing bolts.	1. Check pedal and linkage for wear, replace parts as required. Adjust clutch and linkage for proper free travel. 2. Replace clutch cover assembly. 3. Replace driven disc assembly. 4. Replace driven disc assembly. Check for damaged flywheel and pressure plate, replace as necessary. 5. Replace driven disc assembly. 6. Torque bolts to specifications or replace cover assembly. 7. Replace engine mountings. 8. Replace release bearing and adjust clutch free pedal. 9. Check pedal and linkage for wear; replace parts as required. 10. Replace driven disc assembly, also check flywheel for deep heat checks. Replace flywheel as necessary. 11. Replace driven disc assembly. 12. Check engine mounts, wear on flywheel housing, and bolt torque. 13. Repair transmission if required and check flywheel pilot bearing; replace pilot bearing as required. 14. Replace clutch cover assembly; also check flywheel surface for dished out wear pattern. Replace flywheel as required. 15. Torque bolts to specifications.

DIAGNOSIS OF CLUTCH (CONT.)

PROBLEM	POSSIBLE CAUSE	CORRECTION
Clutch Grabs	1. Grease or oil on clutch facings. 2. Exposed rivet heads due to excessively worn facings or loose rivets. 3. Loose engine mounts. 4. Clutch pressure springs too stiff. 5. Momentary binding in linkage while clutch is being engaged. 6. Warped pressure plate, or flywheel.	1. Replace driven disc assembly and repair oil leak. 2. Replace driven disc assembly and check for flywheel and pressure plate damage. Replace damaged parts. 3. Tighten engine mount bolts to specifications. 4. Replace clutch cover assembly. 5. Check pedal and linkage for wear or damage. Replace parts as required. 6. Replace damaged parts. Check alignment.
Clutch Noisy When Engaged	1. Improper clutch release bearing adjustment. 2. Clutch disc damper springs weak or broken. 3. Linkage binds. 4. Clutch release bearing binding. 5. Loose flywheel or clutch cover bolts. 6. Misalignment of transmission. 7. Worn splines on clutch disc or transmission main drive gear. 8. Weak or missing clutch return springs. 9. Clutch pedal assembly binding.	1. Adjust clutch linkage for pedal free play. 2. Replace driven disc assembly. 3. Check pedal and linkage. Replace or repair as required. 4. Check for alignment and release bearing lubricant. Replace bearing as required. 5. Torque bolts to specifications. 6. Check engine mountings, wear on flywheel housing, and fastener torque. 7. Replace parts as required. Lubricate with high temperature grease. 8. Replace clutch cover assembly. 9. Check pedal and linkage for wear or damage. Repair or replace parts as required.
Clutch Pedal Pulsates During Engagement	1. Misalignment of transmission. 2. Loose or improperly installed engine mounts. 3. Clutch release levers not adjusted to uniform height.	1. Check engine mountings, wear on flywheel housing, and fastener torque. 2. Refer to ENGINE (SEC. 6A) for proper engine mount installation. 3. Replace clutch cover assembly.
Clutch Rattles When Disengaged with Engine Idling	1. Wear or looseness in linkage. 2. Retractor springs on release lever weak, broken, or disconnected. 3. Loose flywheel or clutch cover bolts. 4. Rough engine idle.	1. Check linkage for wear or damage. Replace parts as required. 2. Replace clutch cover assembly. 3. Torque bolts to specifications. 4. Tune engine to manufacturer's specifications.

DIAGNOSIS OF CLUTCH (CONT.)

PROBLEM	POSSIBLE CAUSE	CORRECTION
Clutch Noisy When Disengaged	1. Pilot bearing or bushing in crankshaft worn, damaged, broken, or inadequately lubricated. 2. Release bearing worn, dirty, damaged, broken, or inadequately lubricated. 3. Transmission main drive gear bearing worn, dirty or lacks lubricant.	1. Replace parts as required. Lubricate with high temperature grease. 2. Replace release bearing. Lubricate with high temperature grease. 3. Repair transmission. Check for rear bearing cap oil hole for restriction clearance.

ON-VEHICLE SERVICE

CLUTCH SYSTEM INSPECTION

The system should be checked and serviced periodically as stated below.

- Maintain the proper level of hydraulic fluid in the master cylinder reservoir. Refer to MAINTENANCE AND LUBRICATION (SEC. 0B) for recommended fluid and checking intervals.
- Inspect the entire clutch system regularly for fluid leakage. Leakage must be corrected immediately.
- Adjust the clutch linkage if necessary.
- If the clutch pedal action is springy or spongy, it is an indication that air needs to be bled from the hydraulic system.

A specified clearance in the hydraulic control linkage must exist between the end of the push rod and master cylinder piston. This clearance is measured as pedal free travel.

Before making the adjustment, make sure that the level of fluid in the master cylinder reservoir is 13 mm (1/2 in) below the top of the reservoir. The fluid system must be free of air.

The dual brake/clutch master cylinder reservoir is in the left-upper portion of the dash panel. It can be accessed by opening the driver door (figure 1).

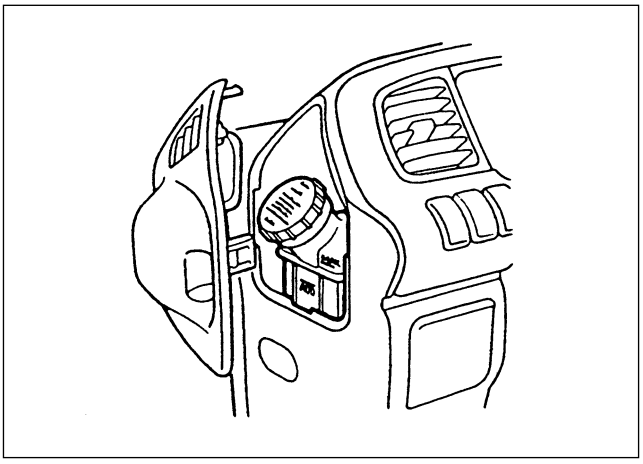

Figure 1. Master Cylinder Reservoir

CLUTCH PEDAL FREE PLAY, HEIGHT AND TRAVEL ADJUSTMENT

Adjust (Figures 2, 3 and 4)

1. Loosen the jam nut (5) on the clutch switch (6) (figure 4).
3. Remove the master cylinder from the clutch pedal assembly.
2. Loosen the jam nut on the master cylinder push rod (figures 2 and 3).
3. Turn the push rod until the distance from the centre of clevis pin hole to mounting surface of clutch pedal bracket should be set at 157.0–157.5 mm (6.18–6.20 in).
   When fixed under this condition, there is no need to adjust the clutch pedal height and free play.
4. Tighten the master cylinder push rod jam nut .

Tighten

- Jam nut to 13 N·m (113 lb·in).

5. Install the master cylinder to the clutch pedal assembly.

Measurement (Figure 2)

- Clutch pedal normal play is between 15–25 mm (0.6–1.0 in) (reference).
- Clutch pedal height “A” is between 160–170 mm (6.3–6.7 in) (reference).
- Clutch pedal travel “B” is between 159–169 mm (6.2–6.7 in) (reference).

6. Check clearance at the clutch switch. Turn the switch in its bracket until the clearance between the fully depressed plunger and the clutch pedal is 0.5–1.0 mm (0.02–0.04 in) (figure 4).

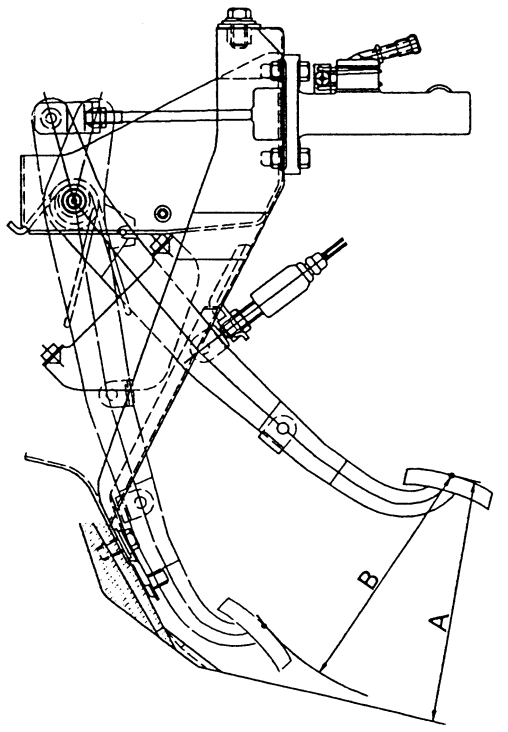

A. Pedal Height .....160–170 mm (6.3–6.7 in) (reference)

B. Pedal Travel.....159–169 mm (6.2–6.7 in) (reference)

Figure 2. Clutch Pedal Height and Travel Adjustment

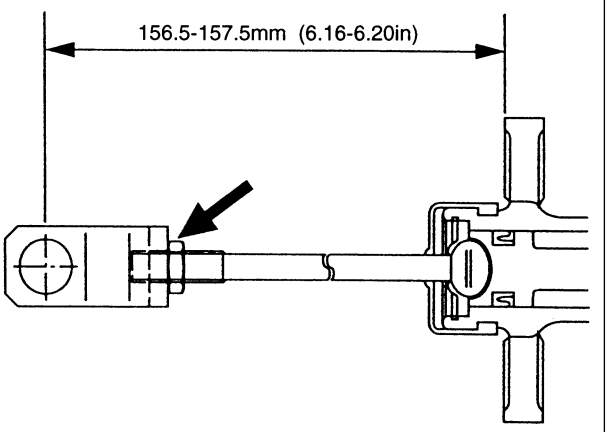

Figure 3. Master Cylinder Push Rod Adjustments

CAUTION: Clutch switch must be adjusted so that when the clutch pedal is released, it closes the switch but does not completely depress the switch plunger (max stroke see figure 4). If the plunger is completely depressed by the pedal, switch damage may result.

7. Tighten the jam nut (5) at the clutch switch.

Tighten

- Jam nut to 13 N·m (113 lb·ft).

8. Recheck the clutch switch clearance.

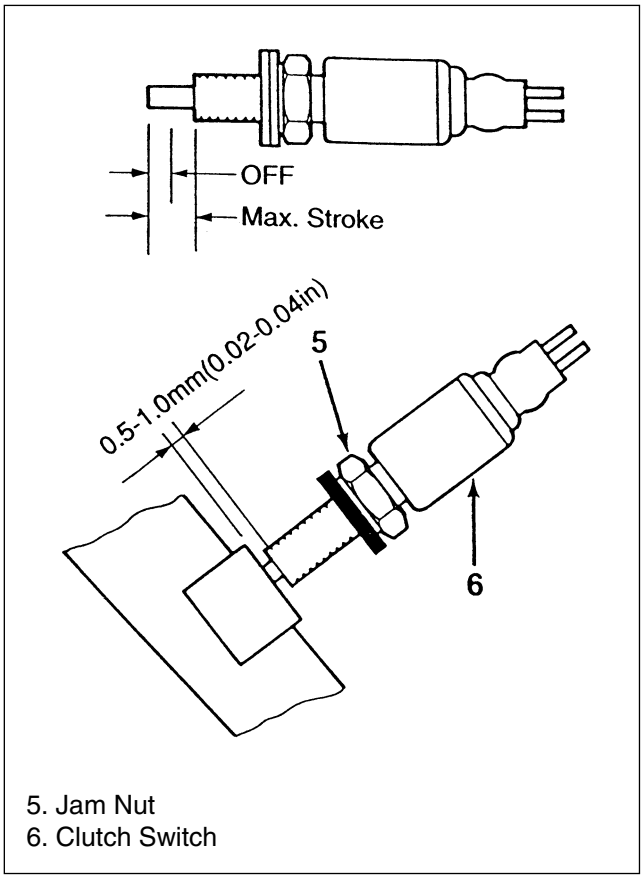

Figure 4. Clutch Switch Clearance

BLEEDING THE CLUTCH HYDRAULIC CIRCUITS

If air enters the clutch circuit, it will cause the clutch to drag. It will be necessary to bleed the clutch fluid circuit if the reservoir has been emptied or the hydraulic circuit has been disassembled. To bleed the clutch circuit properly, an assistant will be needed.

Bleeding Procedure

(Figure 5)

1. Check the level of the clutch fluid in the clutch reservoir and add clutch fluid if necessary.
2. Remove the rubber cap from the bleeder screw and wipe the bleeder screw clean. Connect a vinyl tube to the bleeder screw and insert the other end of the vinyl tube into a transparent container. Pump the clutch pedal repeatedly and hold the pedal in the depressed position.
3. Loosen the bleeder screw on the clutch slave cylinder to discharge clutch fluid and air bubbles into a container then tighten the bleeder screw immediately.
4. Release the clutch pedal slowly. Repeat step 3 until all air bubbles disappear from the clutch fluid being discharged into the container. During the bleeding operation, keep the clutch fluid reservoir filled to 13 mm (1/2 in) below the top of the reservoir.
5. Install the rubber cap onto the bleeder screw.

Optional Bleeding Method

Tool Required:

J-35854 Power Bleeder Adapter or Equivalent

- Connect a power bleeding machine to the master cylinder with the use of adapter J-35854 or equivalent. Bleed until all air bubbles are out of the system and a solid pedal is obtained.

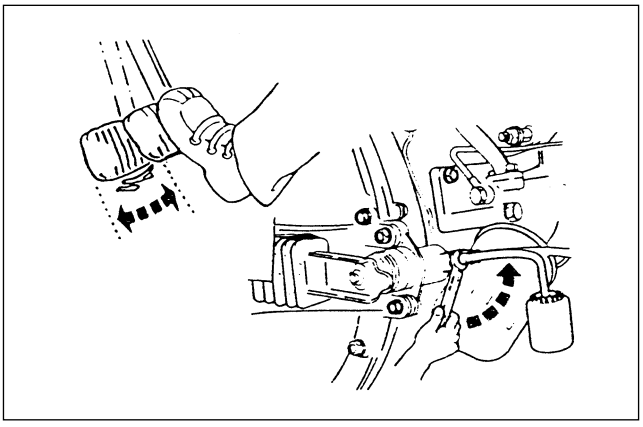

Figure 5. Loosening Clutch Slave Cylinder Bleeder Screw

COMPONENT PARTS REPLACEMENT

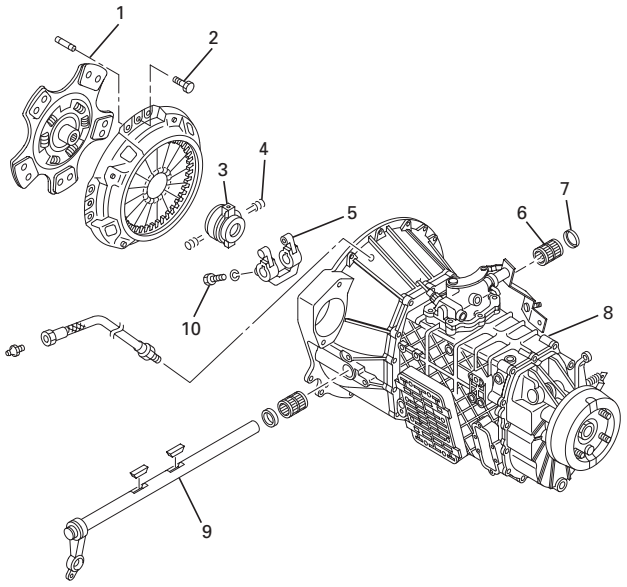

1. Clutch Disc Assembly
2. Pressure Plate Assembly
3. Shift Block and Release Bearing
4. Return spring
5. Shift Fork
6. Needle Bearing
7. Dust Cover
8. Transmission Assembly
9. Clutch Shaft
10. Set Bolt

Figure 6. Clutch Assembly

CLUTCH ASSEMBLY

Remove or Disconnect (Figure 7, 8 and 9)

1. Transmission assembly. (8)
   Refer to “MANUAL TRANSMISSION”. (Section 7B3)
2. Pressure plate assembly. (2)
3. Clutch Disc assembly. (1) (Figure 7)

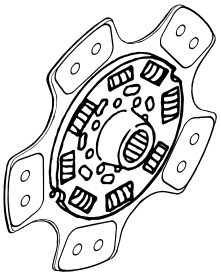

Figure 7. Driven Plate

4. Return spring.
5. Shift block and release bearing.
   - Use suitable puller to remove the release bearing.

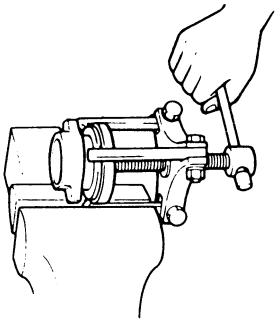

Figure 8. Release Bearing

6. Set bolt.
7. Clutch shaft.
   - Remove the clutch shaft. Clutch shaft with a brass ber to remove it.

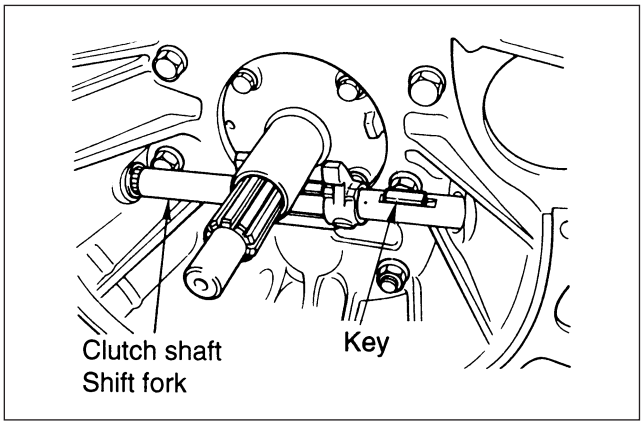

Figure 9. Clutch Shaft

8. Shift fork.
9. Dust cover.
10. Needle bearing.

Inspect

- Pressure plate cover for cracks or distortion.
- Diaphragm spring for heat distortion.
- For loose or bent rivets.
- Release bearing for roughness or noise by rotating the bearing race under light pressure.
- Shift fork for wear or damage.
- Pilot bearing on the crankshaft for roughness by rotating the bearing race under light pressure.
- Replace all parts that would effect proper operation of the clutch release assembly.
- Replace the flywheel, pressure plate assembly, or driven plate if found to be scored, burned, warped, or worn. Do not machine the flywheel or the pressure plate to eliminate these conditions.

Measure (Figure 10, 11, 12, 13, 14, 15 and 16)

- Pressure plate wear (figure 10).
  If the wear exceeds the limit 0.3 mm (0.012 in), the pressure plate assembly must be replaced.

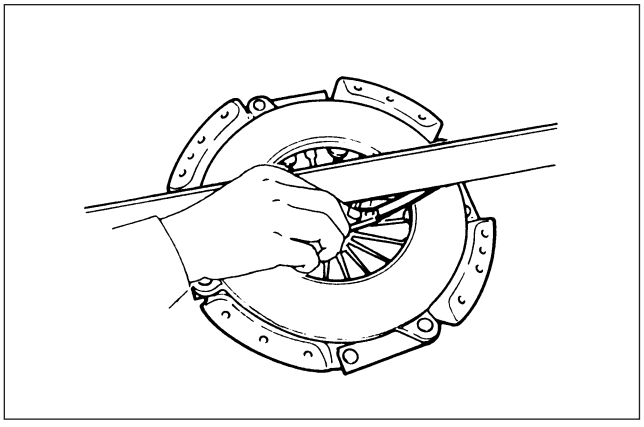

Figure 10. Pressure plate wear.

- Pressure plate clamping force. Invert the pressure plate and position an 9.2 mm (0.36 in) thick plate Ⓐ over the pressure plate with hydraulic press. Then observe the load gage reading when the dimention Ⓑ becomes 19 mm (0.75 in) as indicated in figure 11. Replace the pressure plate assembly if the clamping force is less than 970 kg (2,139 lb).

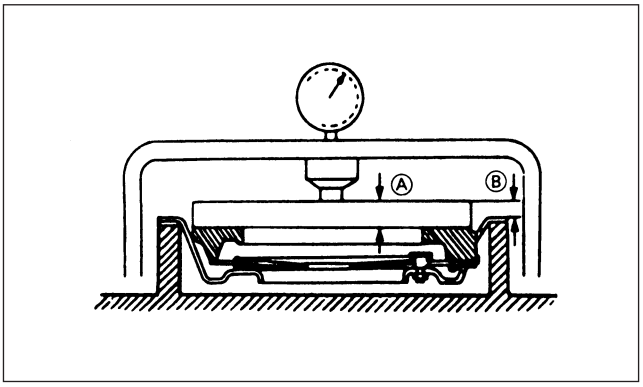

Figure 11. Pressure plate clamping force.

- The depression of the rivet head on the driven plate. Replace the Clutch Disc assembly if the thickness of the friction material is less than 0.2 mm (0.008 in) (figure 12).

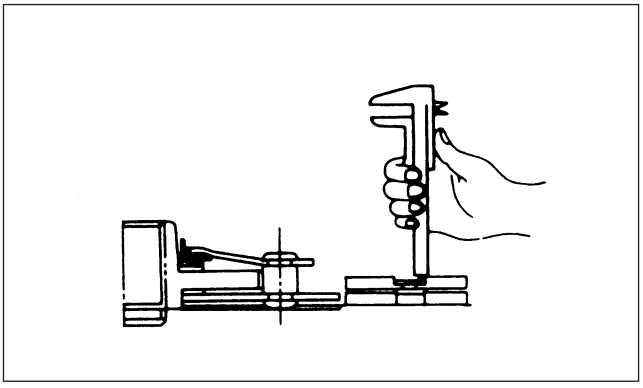

Figure 12. Depression of Rivet head.

- Clutch Disc warpage (figure 13).
  Limit : 0.6 mm (0.024 in).
  Clutch Size : 325 mm (12.80 in).

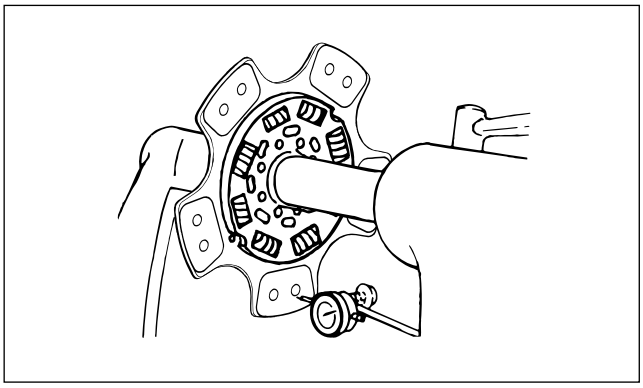

Figure 13. Driven plate.

- Height of the diaphragm spring fingers (figure 14). Position an 9.2 mm (0.36 in) thick plate under the pressure plate. Compress the diaphragm spring until the spring touches the table. Measure the height of the diaphragm spring fingers. They must be 61.8–63.8 mm (2.43–2.51 in) high.

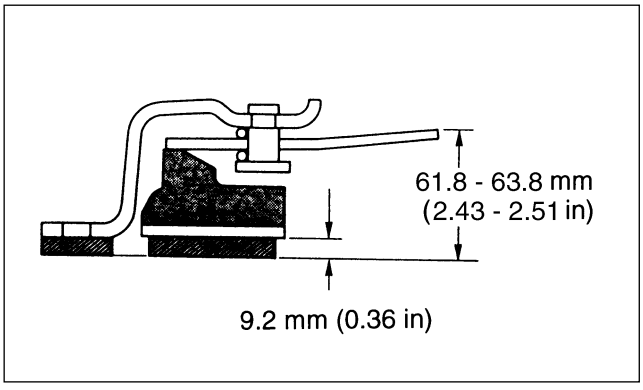

Figure 14. Height of diaphragm spring.

- Check the surface of the shift block for wear or damage (figure 15).
- Check the surface of the shift fork for wear or damage (figure15).

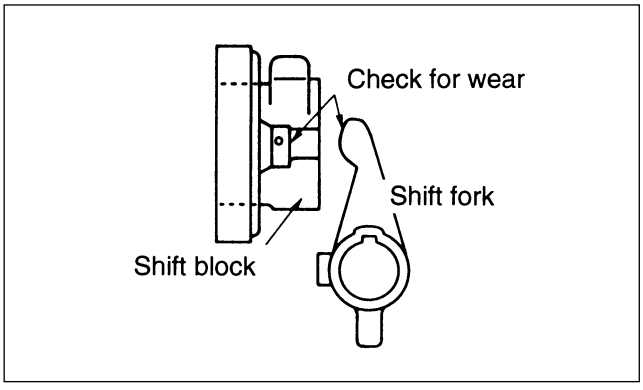

Figure 15. Shift block and Shift fork wear

- Clutch shaft diameters as shown in figure 16. If the diameter is less than 24.5 mm (0.96 in), replace the clutch shaft and needle bearing.

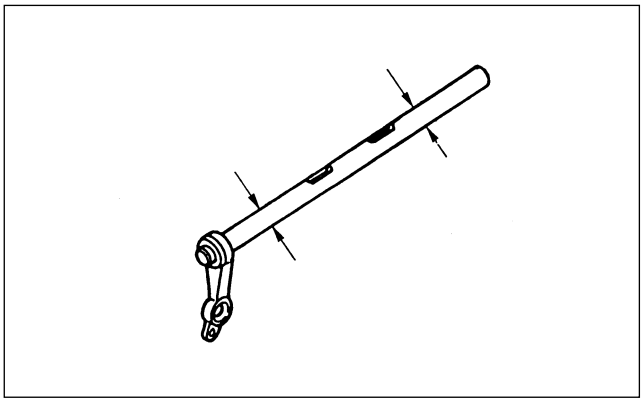

Figure 16. Clutch shaft wear

Install or connect (Figure 17, 18, 19, 20, and 21)

1. Needle bearing
   - Use a 32 mm (1.26 in) diameter bar to drive the Needle bearing from the marked side of bearing and install it specified depth as shows in illustration.

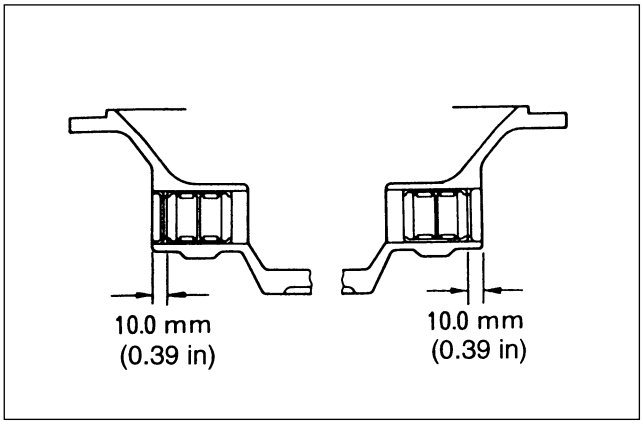

Figure 17. Needle bearing

2. Dust seal.
   - Before installing the new bearing, apply MoS^2 contained type grease to the bearing surfaces and the clearance area between the bearing and the dust seal.

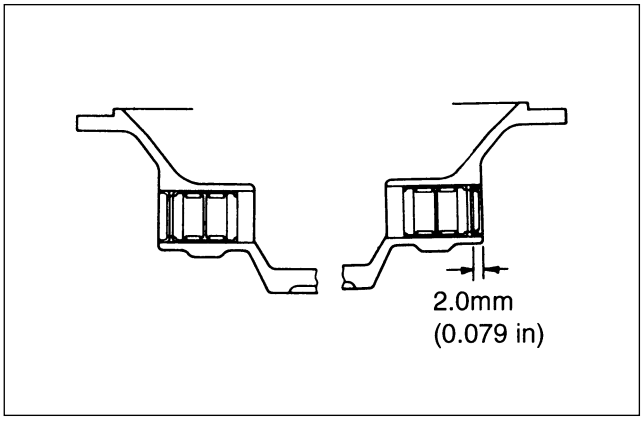

Figure 18. Dust seal

3. Shift fork.
4. Clutch shaft and key.
5. Set bolt.
   - Install the clutch shaft to the clutch housing.
   - Key and shift fork onto the clutch shaft assembly.
   - Tighten the set bolt

Tighten

Set bolt to 13 N•m (113 lb•in)

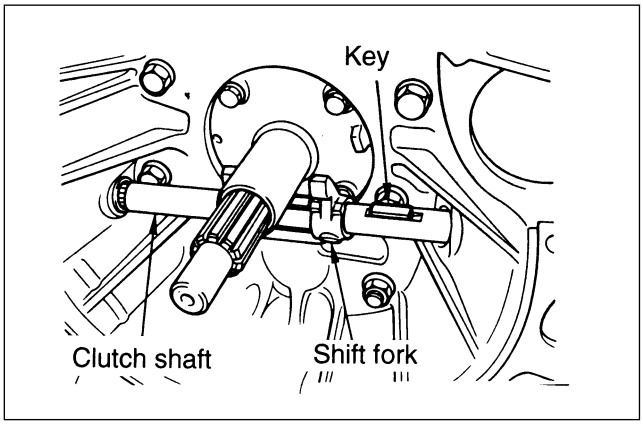

Figure 19. Set bolt

6. Shift block and releace bearing
7. Return spring.
   - Apply the MoS^2 contained type grease to shift fork and shift block surfaces.
   - Install the return spring.

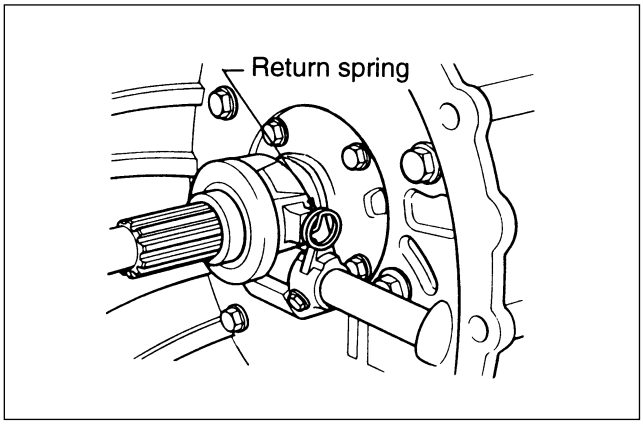

Figure 20. Return spring

8. Clutch Disc assembly.
   - Clutch pilot aligner J–45991 into the center of the Clutch Disc assembly.

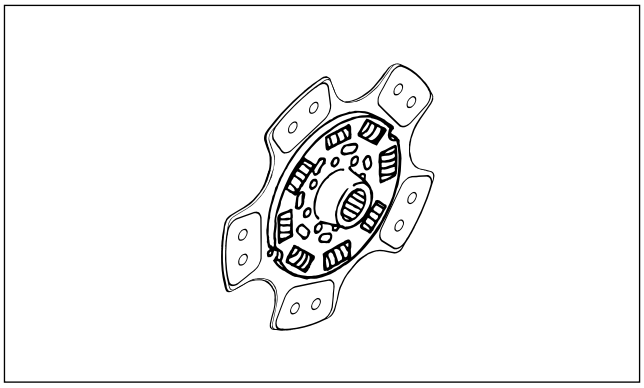

Figure 21. Clutch Disc assembly

9. Pressure plate assembly.
   - Install the pressure plate assembly to the flywheel.
     If the pressure plate was replaced to new parts, be sure to remove the ring which is installed to the diaphragm spring.

Tighten

Pressure plate bolt to 40 N•m (30 lb•ft) in the sequence shown in figure 22.

   - Remove the pilot aligner.

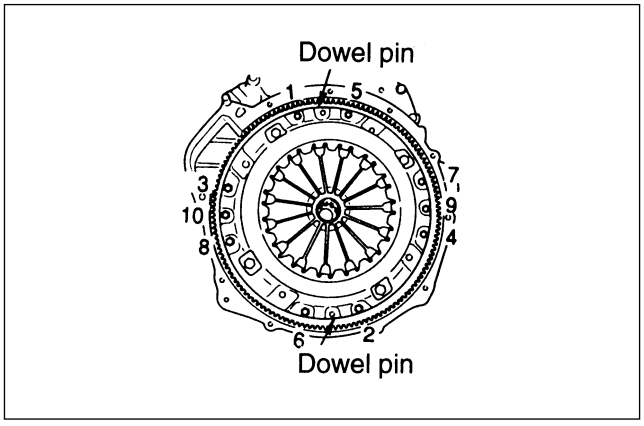

Figure 22. Pressure plate assembly

10. Transmission assembly.
    - Refer to “SECTION 7B3 ON-VEHICLE SERVICE: TRANSMISSION ASSEMBLY REPLACEMENT” in this manual.

CLUTCH CONTROLS

Remove or Disconnect

- Drain the clutch fluid from the clutch hydraulic line.

NOTICE: Do not let clutch fluid remain on a painted surface. Wash it off immediately.

1. Meter cluster and meter assembly.
   - Pull out the meter cluster and disconnect harness connectors.
     Refer to INSTRUMENTAL PANEL (SEC.10D).
2. Electric vacuum pump
   - Remove the electric vacuum pump.
     Refer to "ELECTRIC VACUUM PUMP" (SEC. 8).
2. Hose and pipe (1).
3. Clutch pedal and bracket assembly (2).
4. Clutch switch (3).
5. Clevis pin (4).
6. Master cylinder (5).
7. Return spring (6).
8. Fulcrum pin (7).
9. Clutch pedal (8).
10. Flexible hose (9).
11. Slave cylinder (10).

Inspect

- All parts for damage or wear.
- The clearance between the pedal shaft and bushings.
- Replace the clutch pedal assembly if the clearance is excessive.

Install or Connect (Figure 6)

NOTICE: For steps 1, 6 and 8 see “NOTICE” on page 7C3-1 of this section.

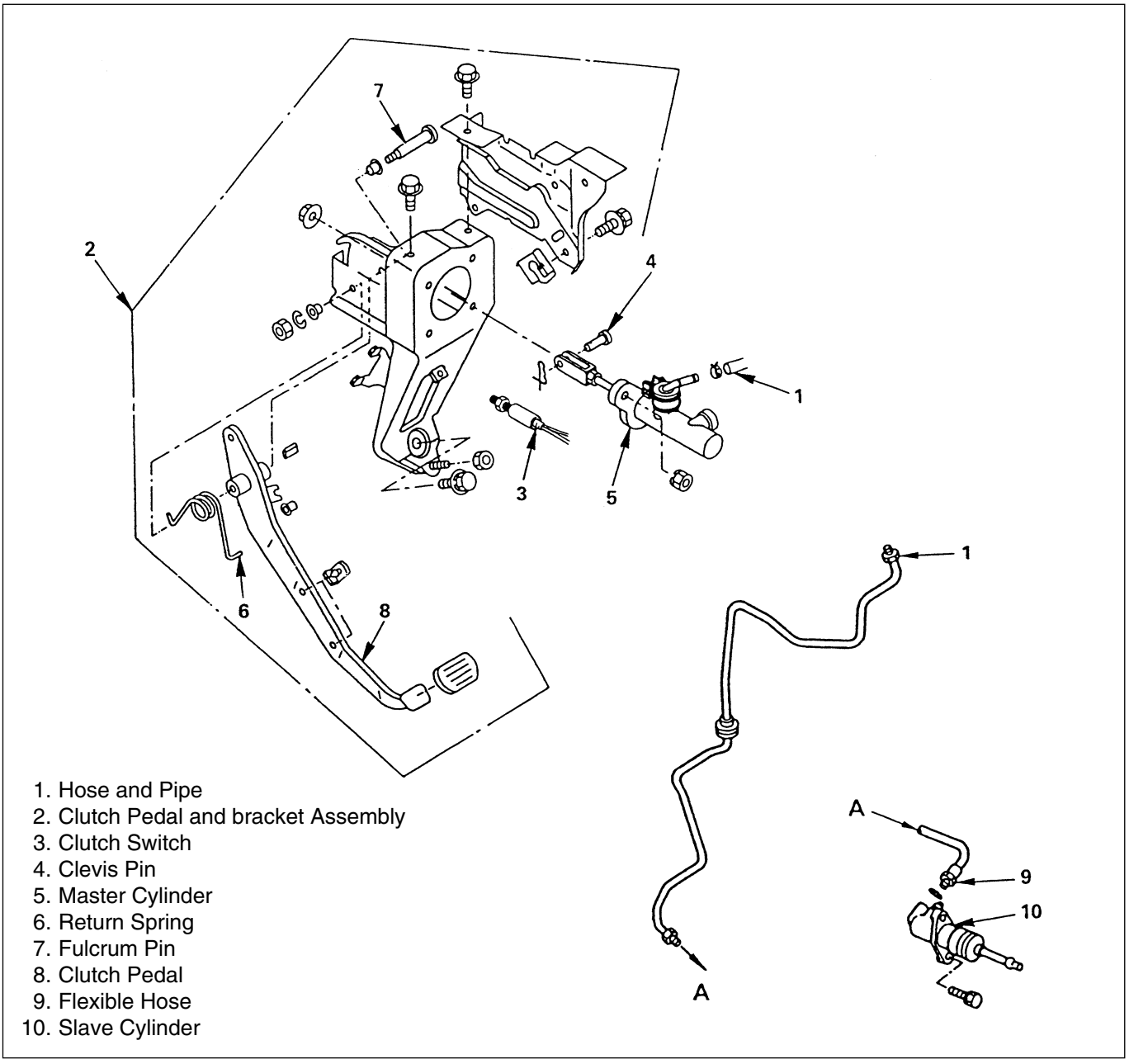

Figure 23. Clutch Control Assembly

1. Slave cylinder.

Tighten

- Slave cylinder bolt to 19 N·m (14 lb·ft).

2. Flexible hose.
3. Clutch pedal.
4. Fulcrum pin
5. Return spring.
6. Master cylinder.

Adjust

- Loosen the jam nut on the master cylinder push rod.
- Adjust push rod length to156.5mm – 157.5mm (6.16 – 6.20 in.), and tighten the jam nut.

Tighten

- Master cylinder jam nut to 13 N·m (113 lb·in).

7. Clutch switch.
8. Clutch pedal and bracket assembly.

Tighten

- Clutch pedal and bracket bolt to 37 N·m (27 lb·ft).

9. Hose and pipe
10. Electric vacuum pump.
    - Refer to ELECTRIC VACUUM PUMP (SEC. 8).
11. Meter cluster and meter assembly.
    - Refer to INSTRUMENTAL PANEL (SEC.10D).
12. Bleed the clutch hydraulic circuit. Refer to "Bleeding Clutch Hydraulic Circuits" previously in this section.

UNIT REPAIR

MASTER CYLINDER

Disassemble (Figure 24)

1. Hose joint (1).
2. Pressure switch (3).
3. Dust cover (6).
4. Snap ring (5).
5. Piston assembly (4).
6. Cylinder body (2).

Clean

- All disassembled parts in brake fluid. Be sure to check the ports for restrictions. Use a metal wire to loosen the dirt.

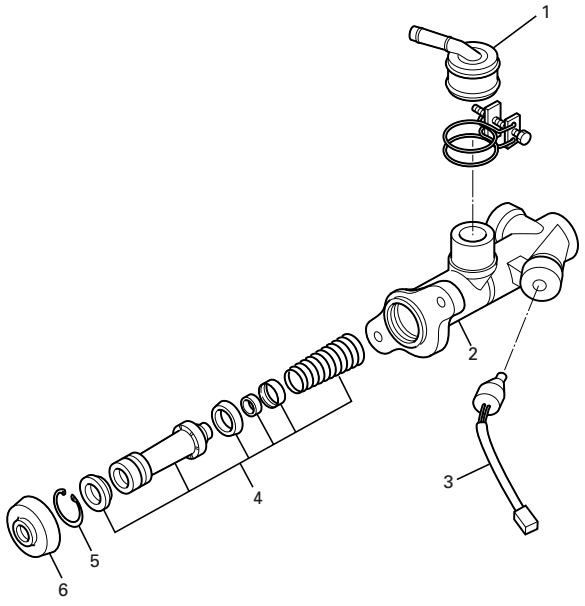

1. Hose Joint
2. Cylinder Body
3. Pressure switch
4. Piston Assembly
5. Snap Ring
6. Dust Cover

Figure 24. Master Cylinder Assembly

Inspect

- Cylinder bore and piston for wear and rust formation.
- Spring for weakening.
- Replace any parts if wear, damage, or any other abnormal conditions are found during inspection.

Measure (Figure 25)

- The bore inside the master cylinder body with a dial indicator. Use a micrometer to check the thickness of the piston. Replace the master cylinder body or piston if the clearance is less than 0.12 mm (0.0047 in) (figure 25).

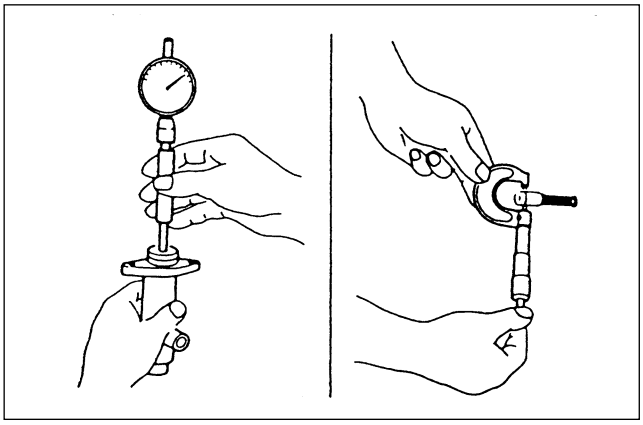

Figure 25. Measuring Clearance at Master Cylinder and Piston

Assemble (Figures 24 and 26)

1. Cylinder body (2).

   Important

   - Before installing the parts, apply a thin coat of brake fluid.

2. Piston assembly (4). Install new cup in groove in piston with the lip turned toward the front of the cylinder body. Use care so as not to scratch the lipped portion of the cup (figure 26).
3. Dust cover (4), with snap ring (5).
4. Snap ring (5) to the cylinder body groove.
5. Dust cover (6).
6. Hose joint (1).

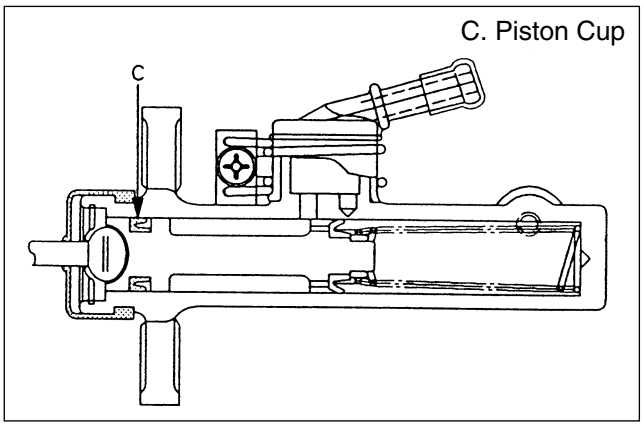

Figure 26. Installing Piston Assembly

SLAVE CYLINDER

Disassemble (Figure 27)

1. Push rod (1).
2. Boot (2).
3. Piston assembly (3).
4. Slave cylinder body (4).
5. Bleeder screw and cap (5).

Clean

- All disassembled parts in brake fluid. Be sure to wipe excess brake fluid from the components.

Inspect

- Cylinder bore and piston for wear and rust formation.
- Spring for weakening.
- Piston cups for wear, deterioration and scratches.
- Replace any parts if wear, damage, or any other abnormal conditions are found during inspection.

Measure (Figure 28)

- The clearance inside the slave cylinder body with a dial indicator. Use a micrometer to check the thickness of the piston. Replace the slave cylinder body or piston if the clearance is less than 0.11 mm (0.0043 in) (figure 28).

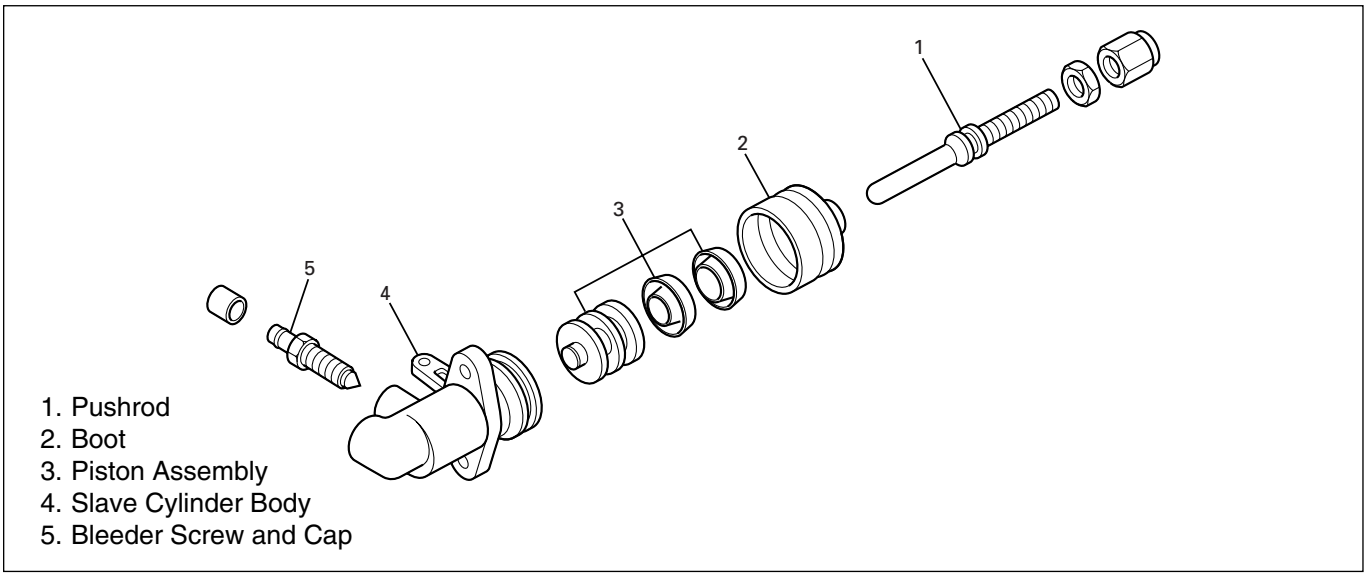

Figure 27. Slave Cylinder Assembly

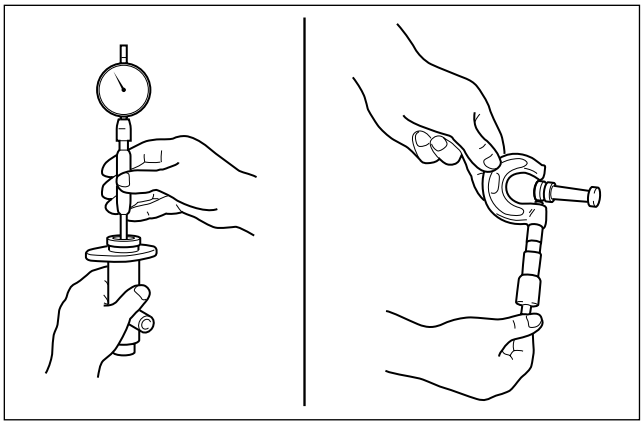

Figure 28. Measuring Clearance at Slave Cylinder and Piston

Assemble (Figure 27)

1. Slave cylinder body (12).

NOTICE: See "NOTICE" on page 7C3-1 of this section.

2. Bleeder screw and cap (5).

Tighten

- Bleeder screw to 8 N·m (69 lb·in).

Important

- Before installing the parts, apply a thin coat of brake fluid.
- Be sure to install the piston cup in the piston groove with the lip turned toward the front of the cylinder body. Use care so as not to scratch the lip portion of the piston cup.

4. Piston assembly (3).
5. Boot (2).
6. Push rod (1).

SPECIFICATIONS

Pressure Plate Types.....Dry Single Plate w/Cushioning Spring
Clearance Between Master Cylinder Body and Piston.....0.12 mm (0.0047 in)
Clearance Between Slave Cylinder Body and Poiston.....0.11 mm (0.0043 in)
Driven Plate Warpage Maximum Limit .....0.6 mm (0.024 in)
Clutch Size.....325 mm (12.80 in)
Depression of Rivet Head Maximum Limit .....0.2 mm (0.008 in)
Pressure Plate Clamping Force Maximum Limit .....970 kg (2,139 lb)
Pressure Plate Finger Height ..... 61.8–63.8 mm (2.43–2.51 in)
Master Cylinder Push Rod Length
(From Centre of Crevis Pin Hole to Mounting Surface).....156.5–157.5 mm (6.16–6.20in)
Pedal Height (Reference).....160–170 mm (6.3–6.7in)
Pedal Travel (Reference) .....159–169 mm (6.2–6.7in)
Free Play (Reference).....15–25 mm (0.6–1.0 in)
Clutch Switch Clearance .....0.5–1.0 mm (0.020–0.039 in)

FASTENER TORQUES

Master Cylinder Push Rod Jam Nut.....13 N·m (113 lb·in)
Clutch Switch Jam Nut .....20 N·m (14 lb·ft)
Pressure Plate Bolts .....40 N·m (30 lb·ft)
Master Cylinder Bolts .....13 N·m (113 lb·in)
Slave Cylinder Bolts.....19 N·m (14 lb·ft)
Flexible Hose Tube Nuts.....20 N·m (14 lb·ft)
Slave Cylinder Bleeder Screw .....8 N·m (69 lb·in)
Clutch Pedal and Bracket Assembly Mounting Bolt .....37 N·m (27 lb·ft)

SPECIAL TOOLS

ILLUSTRATION	**TOOL NO.** TOOL NAME
	J-35854 Power Bleeder Adapter
	J-45991 Clutch Pilot Aligner

SECTION 8

CAB AND CHASSIS ELECTRICAL

NOTICE: When fasteners are removed, always reinstall them at the same location from which they were removed. If a fastener needs to be replaced, use the correct part number fastener for that application. If the correct part number fastener is not available, a fastener of equal size and strength (or stronger) may be used. Fasteners that are not reused, and those requiring thread locking compound, will be called out. The correct torque values must be used when installing fasteners that require it. If the above conditions are not followed, parts or system damage could result.

CONTENTS

SUBJECT	PAGE
General Information	SEE 1999-2001 SERVICE MANUAL
Notes for Working on Electrical Items	SEE 1999-2001 SERVICE MANUAL
Symbols and Abbreviations	SEE 1999-2001 SERVICE MANUAL
Symbols	SEE 1999-2001 SERVICE MANUAL
Abbreviations	SEE 1999-2001 SERVICE MANUAL
Parts for Electrical Circuit	SEE 1999-2001 SERVICE MANUAL
Wiring	SEE 1999-2001 SERVICE MANUAL
Fuse and Fusible Link	SEE 1999-2001 SERVICE MANUAL
Relay	SEE 1999-2001 SERVICE MANUAL
Diode	SEE 1999-2001 SERVICE MANUAL
Connector	SEE 1999-2001 SERVICE MANUAL
Reading the Circuit Diagram	SEE 1999-2001 SERVICE MANUAL
Connector Symbol	SEE 1999-2001 SERVICE MANUAL
Joint Connector	SEE 1999-2001 SERVICE MANUAL
Main Data and Specifications	SEE 1999-2001 SERVICE MANUAL
Bulb Specifications	SEE 1999-2001 SERVICE MANUAL
Fuse and Fusible Link Location	SEE 1999-2001 SERVICE MANUAL
Fuse Block Circuit	SEE 1999-2001 SERVICE MANUAL
Reference Table of Fuse	SEE 1999-2001 SERVICE MANUAL
Relay Location	SEE 1999-2001 SERVICE MANUAL
Relay List	SEE 1999-2001 SERVICE MANUAL
Diode Location	SEE 1999-2001 SERVICE MANUAL
Reference Table of Grounding Point	SEE 1999-2001 SERVICE MANUAL
Grounding Point Location	SEE 1999-2001 SERVICE MANUAL
Cable Harness Routing	SEE 1999-2001 SERVICE MANUAL
System Repair	SEE 1999-2001 SERVICE MANUAL
Start and Charging	SEE 1999-2001 SERVICE MANUAL
Engine Control Module	SEE 1999-2001 SERVICE MANUAL
Engine Stop System	SEE 1999-2001 SERVICE MANUAL
Headlight, D.R.L and Cornering Light	SEE 1999-2001 SERVICE MANUAL
Clearance Light, Taillight, License Plate Light, ID Light and Illumination Light	SEE 1999-2001 SERVICE MANUAL
Turn Signal Light, Hazard Warning Light and Stoplight	SEE 1999-2001 SERVICE MANUAL
Horn and Backup Light	SEE 1999-2001 SERVICE MANUAL
Dome Light and Body Interior Light	SEE 2002 SERVICE MANUAL
Transmission Control Module (TCM)	SEE 1999-2001 SERVICE MANUAL
Windshield Wiper and Washer	SEE 1999-2001 SERVICE MANUAL
Audio and Cigarette Lighter	SEE 1999-2001 SERVICE MANUAL

*Meter and Warning/Indicator Light.....8-3
Heater, Air Conditioning, Condensor Fan and Ceramic Heater .....SEE 1999-2001 SERVICE MANUAL
Service Terminal .....SEE 1999-2001 SERVICE MANUAL
ABS (Anti-lock Brake System) 8-9
Power Window .....SEE 1999-2001 SERVICE MANUAL
Power Door Lock.....SEE 2002 SERVICE MANUAL
Wiring Diagram .....SEE 1999-2001 SERVICE MANUAL

*
Refer to 1999-2001 service manual for item of section “Meter and Warning / Indicator Light” except “GENERAL DESCRIPTION” , “PARTS LOCATION”, “CIRCUIT DIAGRAM” and “CONNECTOR LIST”.

METER AND WARNING / INDICATOR LIGHT

GENERAL DESCRIPTION

The circuit consists of the starter switch, meter assembly, vacuum tank switch, oil pressure switch, brake fluid level switch, parking brake switch, vehicle speed sensor, fuel tank unit, A/T shift indicator, electronic vacuum pump and thermo unit.

The meter assembly contains the speedometer, fuel gage, engine coolant temperature gage and the warning/indicator light.

The meter warning/indicator lights and their bulb sockets are a unit, they are installed from the back of the speedometer assembly.

PARTS LOCATION

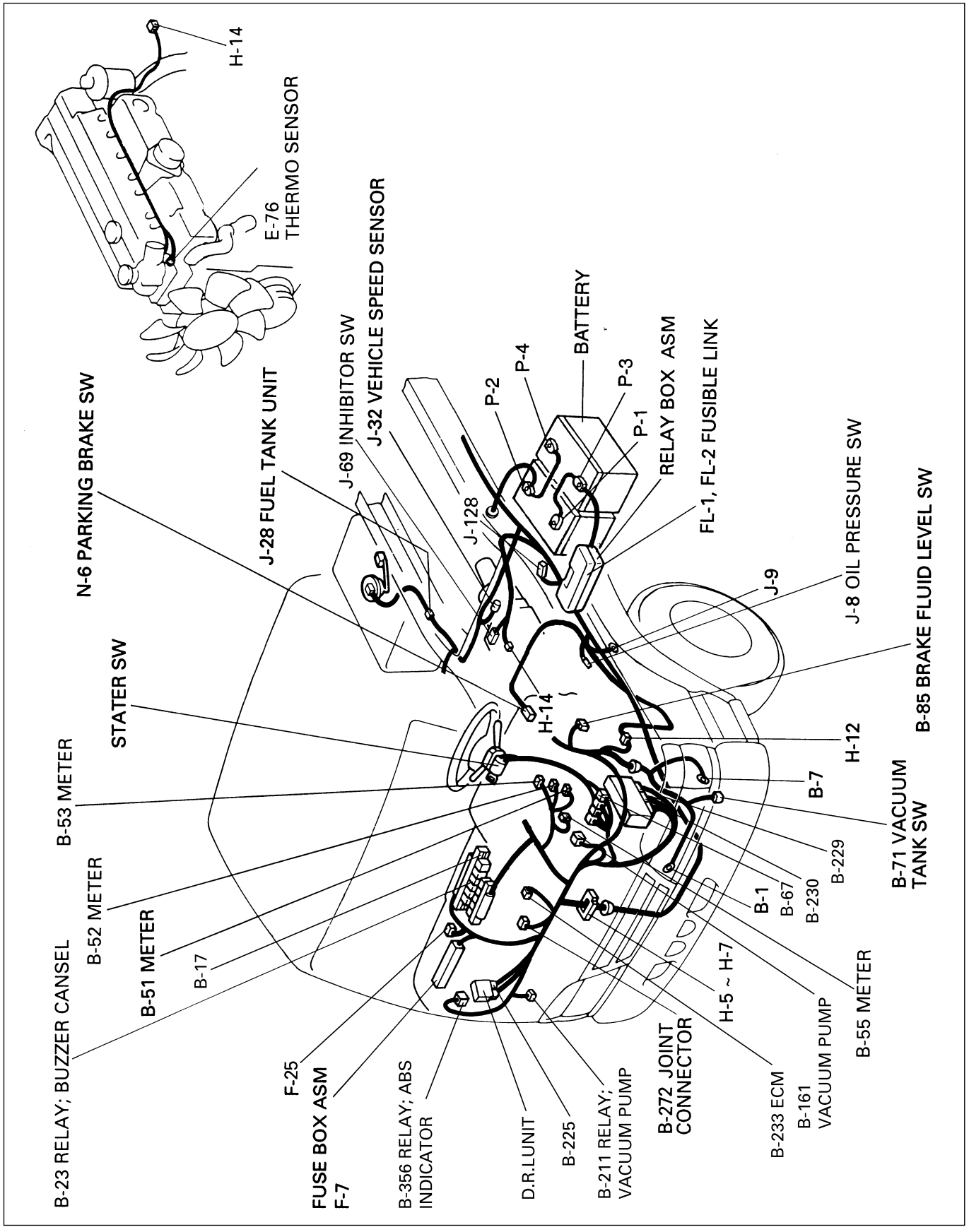

Figure 1. Parts Location

CIRCUIT DIAGRAM - FOR HBB VEHICLE

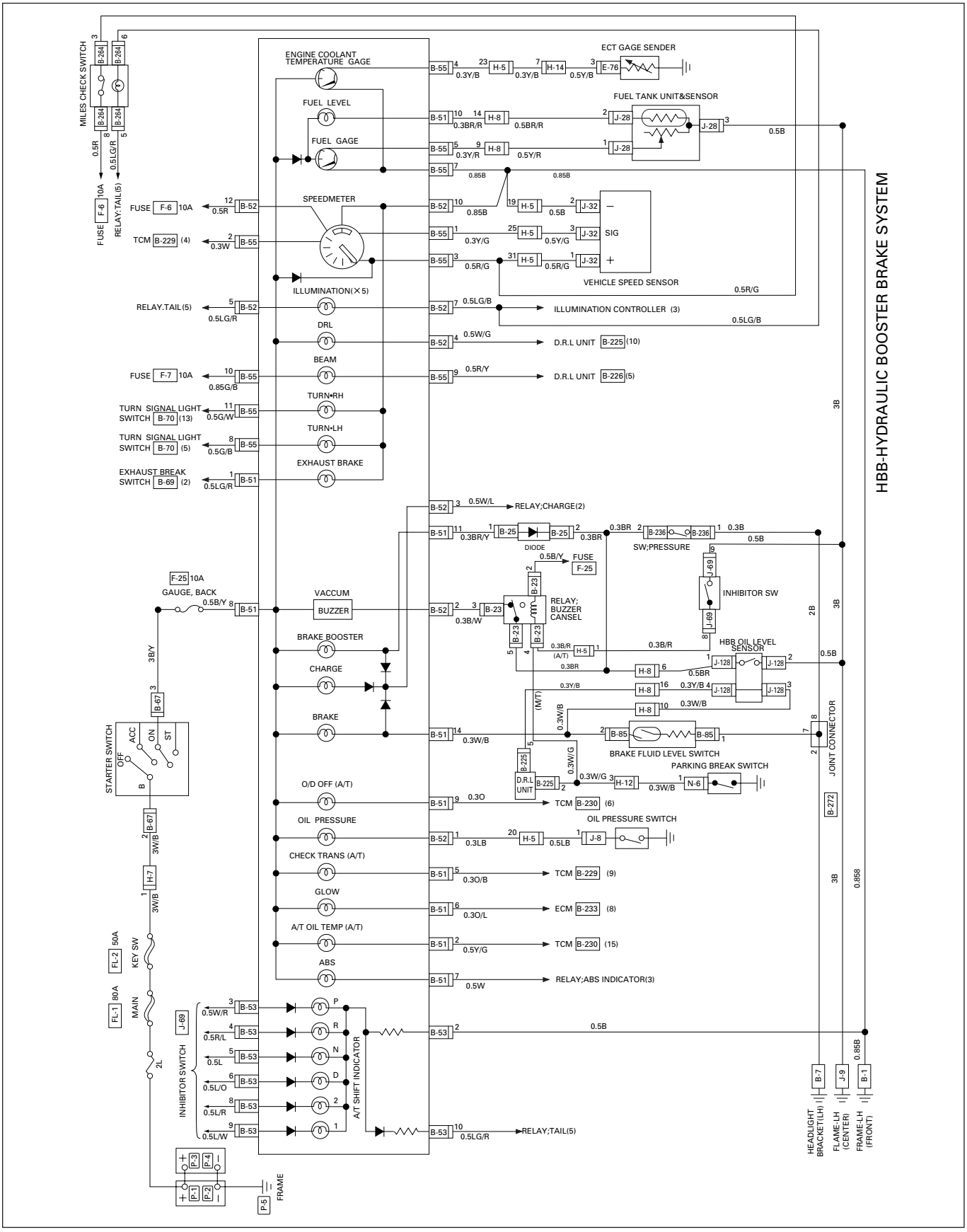

Figure 2. Circuit Diagram

CIRCUIT DIAGRAM - EXCEPT HBB VEHICLE

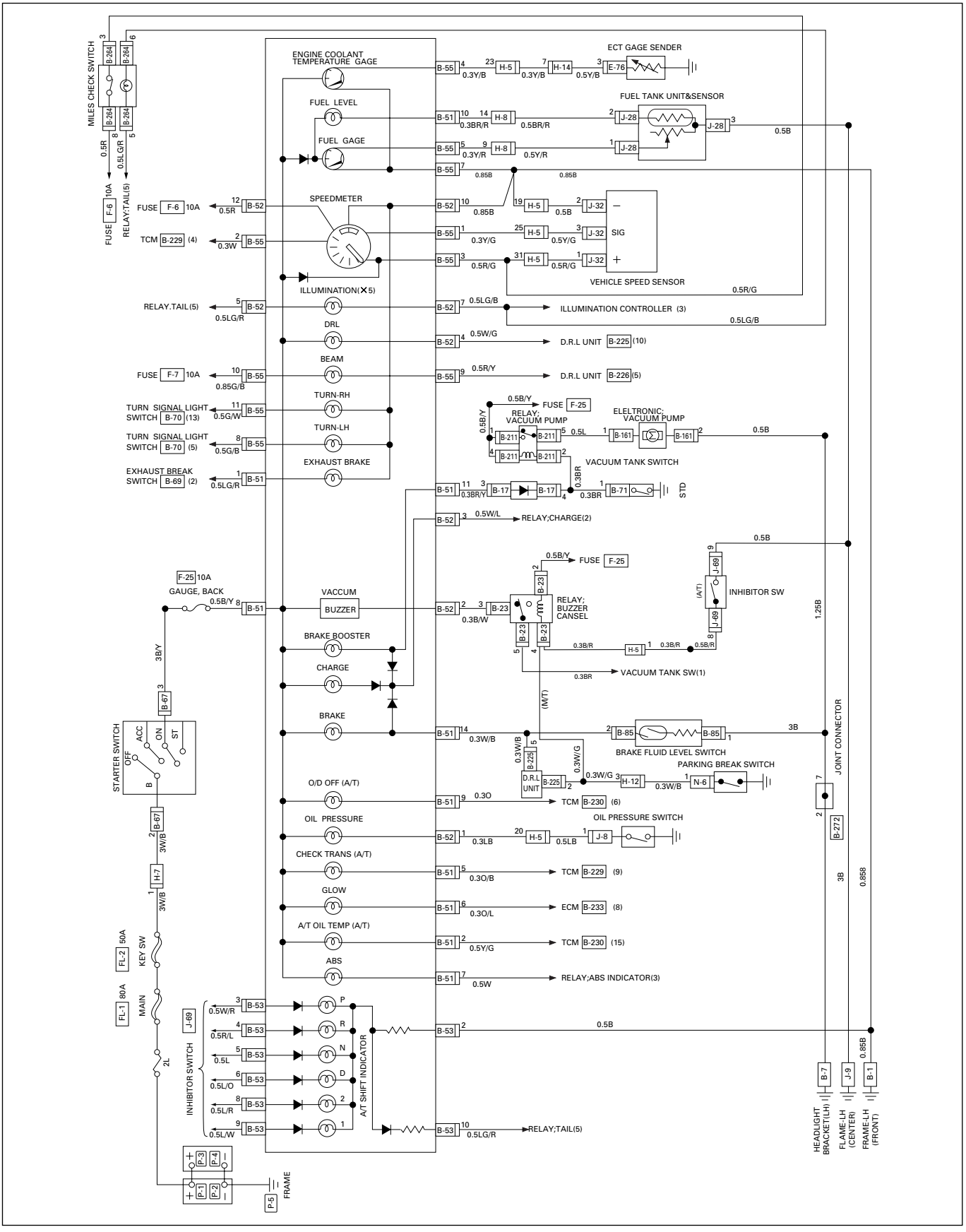

Figure 3. Circuit Diagram

CONNECTOR LIST

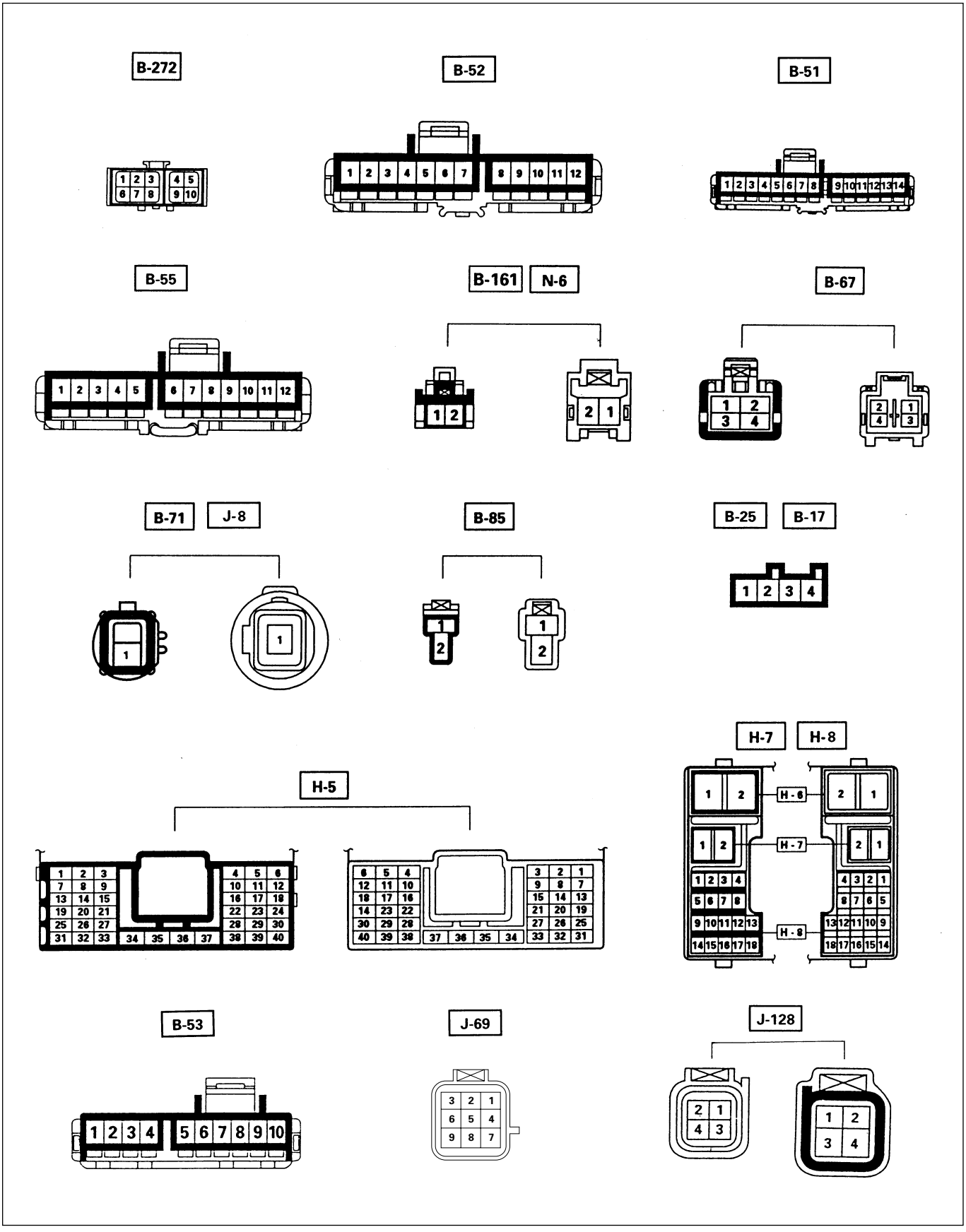

Figure 4. Connector List (1)

CONNECTOR LIST

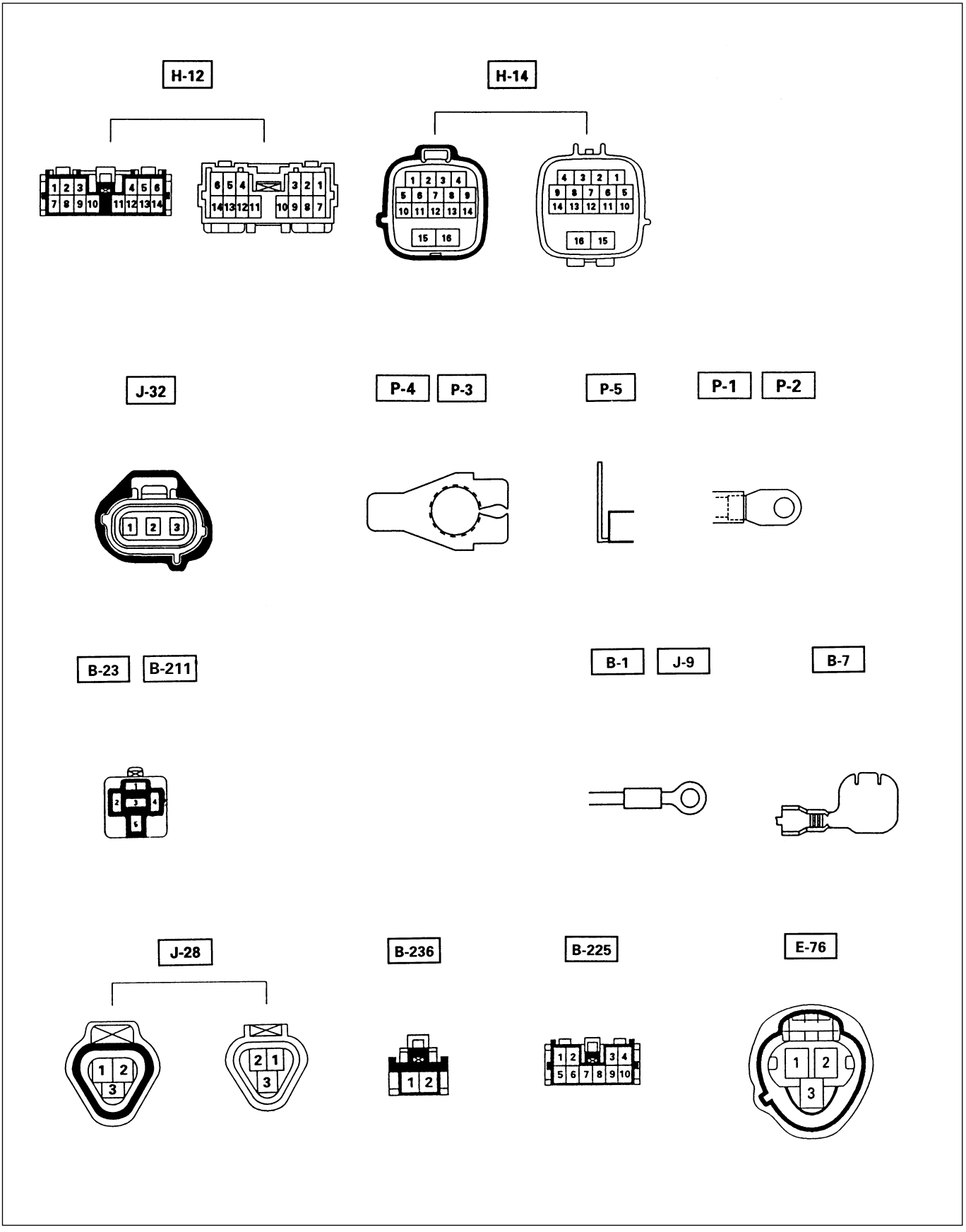

Figure 5. Connector List (2)

ANTI-LOCK BRAKE SYSTEM (ABS)

GENERAL DESCRIPTION

The Anti-lock Brake System (ABS) works on all four wheels. A combination of wheel speed sensor and Anti-lock Brake System Control Unit can determine when a wheel is about to stop turning and adjust brake pressure to maintain best braking.
This system helps the driver maintain greater control of the vehicle under heavy braking conditions.

PARTS LOCATION

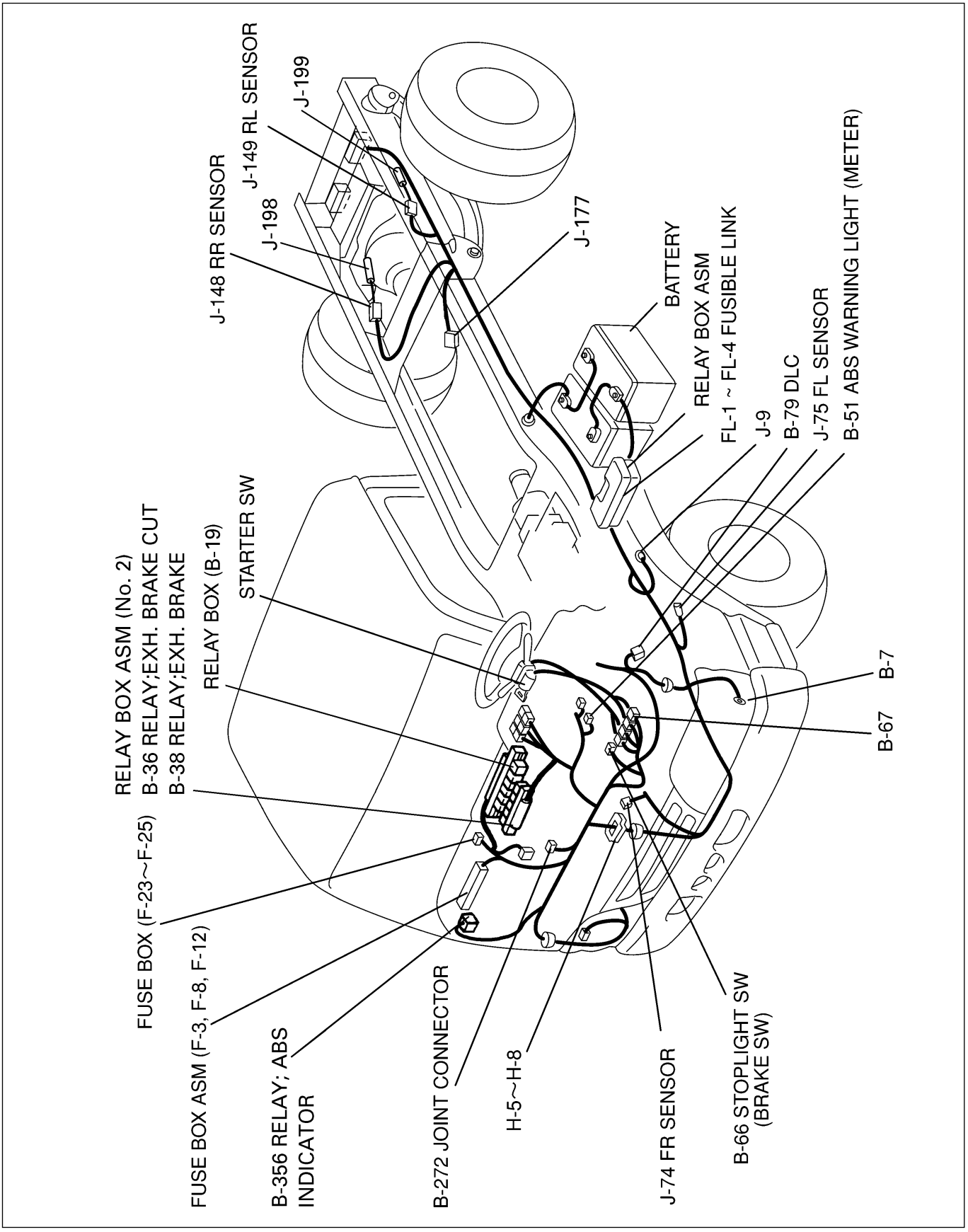

Figure 6. Parts Location

CIRCUIT DIAGRAM

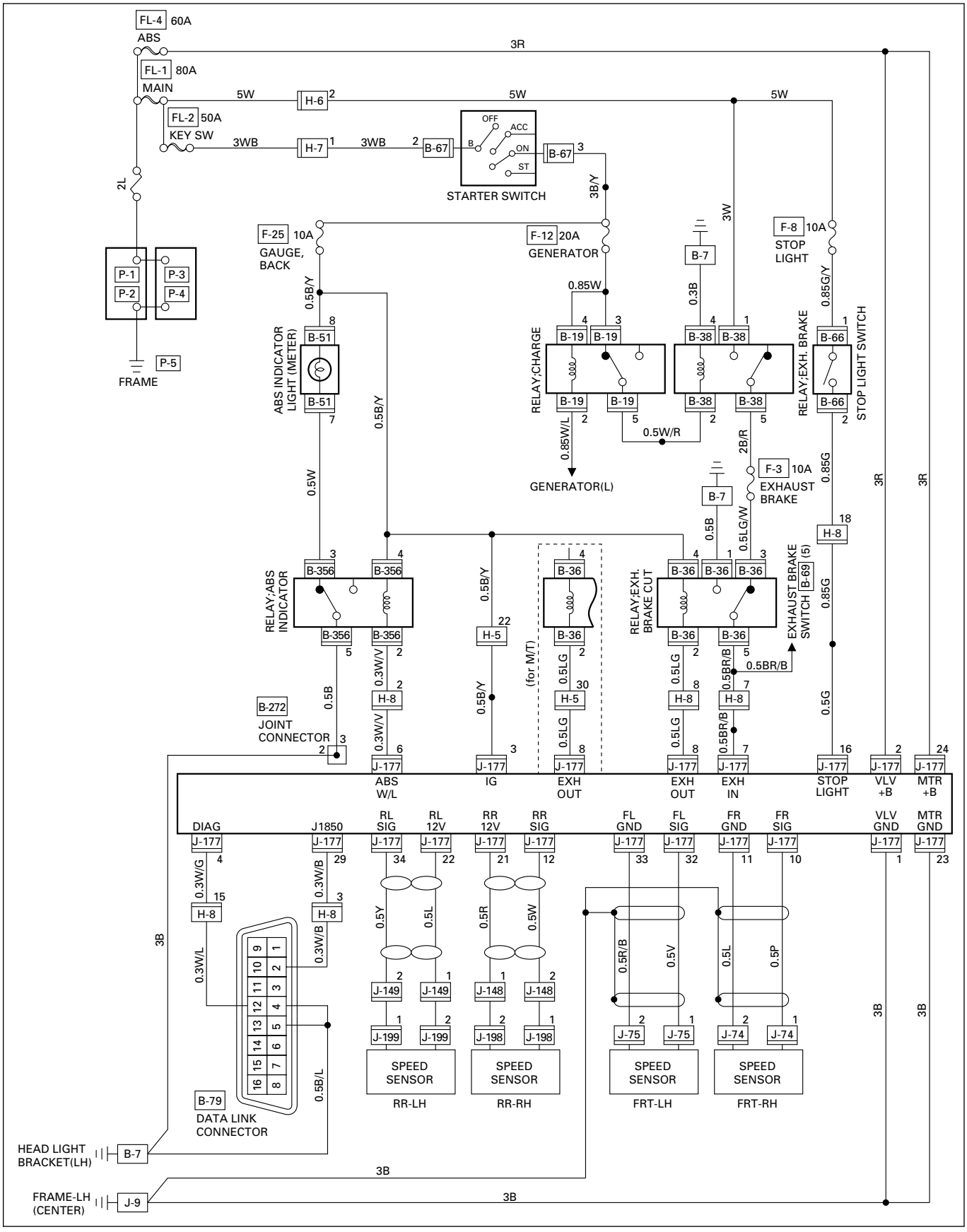

Figure 7. Circuit Diagram

CONNECTOR LIST

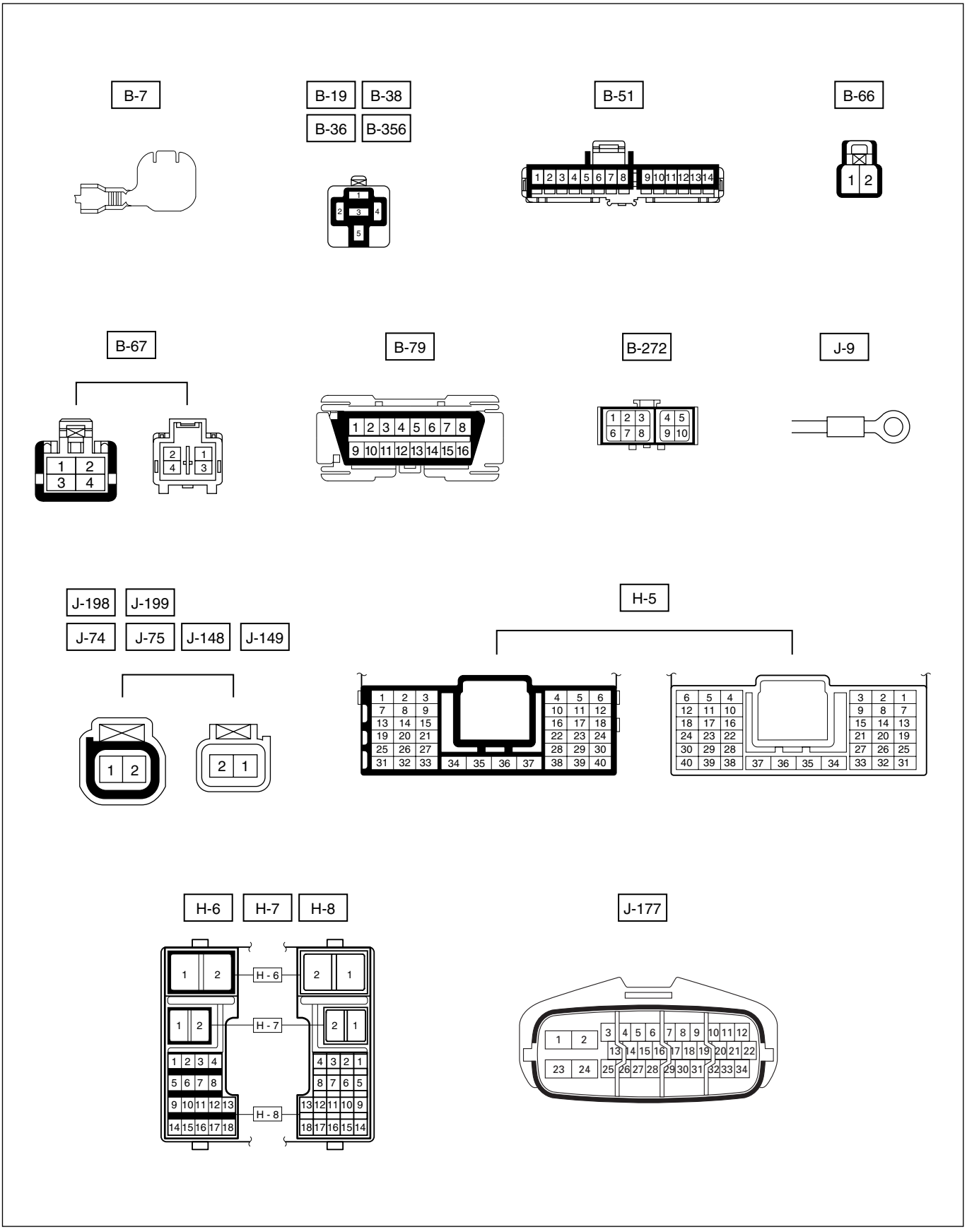

Figure 8. Connector List

SECTION 9

METRIC AND FASTENER INFORMATION

NOTICE: When fasteners are removed, always reinstall them at the same location from which they were removed. If a fastener needs to be replaced, use the correct part number fastener for that application. If the correct part number fastener is not available, a fastener of equal size and strength (or stronger) may be used. Fasteners that are not reused, and those requiring thread locking compound will be called out. The correct torque value must be used when installing fasteners that require it. If the above conditions are not followed, parts or system damage could result.

CONTENTS

SUBJECT **PAGE**

Metric Fasteners .....See 1999 – 2001 Service Manual
Replacement Fasteners.....See 1999 – 2001 Service Manual
Fastener Strength Identification.....See 1999 – 2001 Service Manual
Prevailing Torque Fasteners.....See 1999 – 2001 Service Manual
Recommendations for Reuse .....See 1999 – 2001 Service Manual
Six-Lobed Socket Head Fasteners .....See 1999 – 2001 Service Manual
Decimal and Metric Equivalents .....See 1999 – 2001 Service Manual
Conversion Table.....See 1999 – 2001 Service Manual

MEMO

SECTION 10

STEEL CAB

CONTENTS

SUBJECT **PAGE**

Steel Tilt Cab ..... **See 1999 – 2001 Service Manual**
Steel Crew Cab ..... **See 2002 Service Manual**

MEMO

NPD03-WSM-CS1

PUBLICATION NO.
NPD03-WSM-CS1
NPRD-109KA01-C1.54
Printed in U.S.A