https://truckmanualshub.com/

SISU AXLES

Doc 22444_A 09/2014

HIGH SPEED, (TRUCK) DRIVE STEER AXLE, FSDP10S

GAWR	10 000 kg [22,000 Lb.]
GCWR	20 000 kg [44,000 Lb.]
Axle Type	Spiral Bevel Center Differential Planetary Wheel End Reduction, 5-planet Carrier
Brakes	
Type	Drum, S-cam
Size	Ø410 [16,1 Inch] mm x 180 mm [7,1 Inch] Width
Slack Adjuster	Automatic, 165 mm [6.5 Inch] Length
Chamber	30 Square Inch
Certification	FMVSS 121
Steering	
KPI	6°
Caster	1.5°
Camber	0°
Turn angle	48°
Housing	Fabricated Steel, Cross Section 153 mm [6,0 Inch] Height x 137 mm [5,4 Inch] Width, Center Bowl
Wheel End	10-studs on 335 mm [13,2 Inch] BC, 280.8 mm [11,06 Inch] Pilot Diameter. Minimum Wheel Size 20 Inch
Wheel offset (optimal)	Inset 90…165 mm [3.5…6.5 Inch]
Drive Flange	ISO8667-T150
Final Drive Ratios	4.63, 4.85, 5.54 6.36, and 7.01
Tracks Available (Over wheel mounting faces)	2360 mm [92.9 Inch]
Lubrication	
Type	API GL-5
Capacity (estimated)	Total 13 liters [27 pints]
Weight-Dry	740 kg [1,631 Lb.]

All ratings are nominal. Actual capacities determined based upon review of application data by Sisu Axles Inc.

OPTIONS:	Spring Seats	Wheel Stud Length
	Wheel Nuts	Brake Chambers
	Axle Differential Lock	Input Drive flange
	ABS Provision	Steering Arm Configurations
	CTI Provision	Top Coating
	Slack Adjuster Type	Caster angle

Other options may be available. Contact Sisu Axles sales for more information.

Sisu Axles, Inc
P.O. Box 189
FIN-13101 Hämeenlinna
FINLAND

Tel. +358 204 55 2999
Fax +358 204 55 2900
www.sisuaxles.com

Business ID: 1509332-6
VAT number: FI15093326
sales@sisuaxles.com

https://truckmanualshub.com/

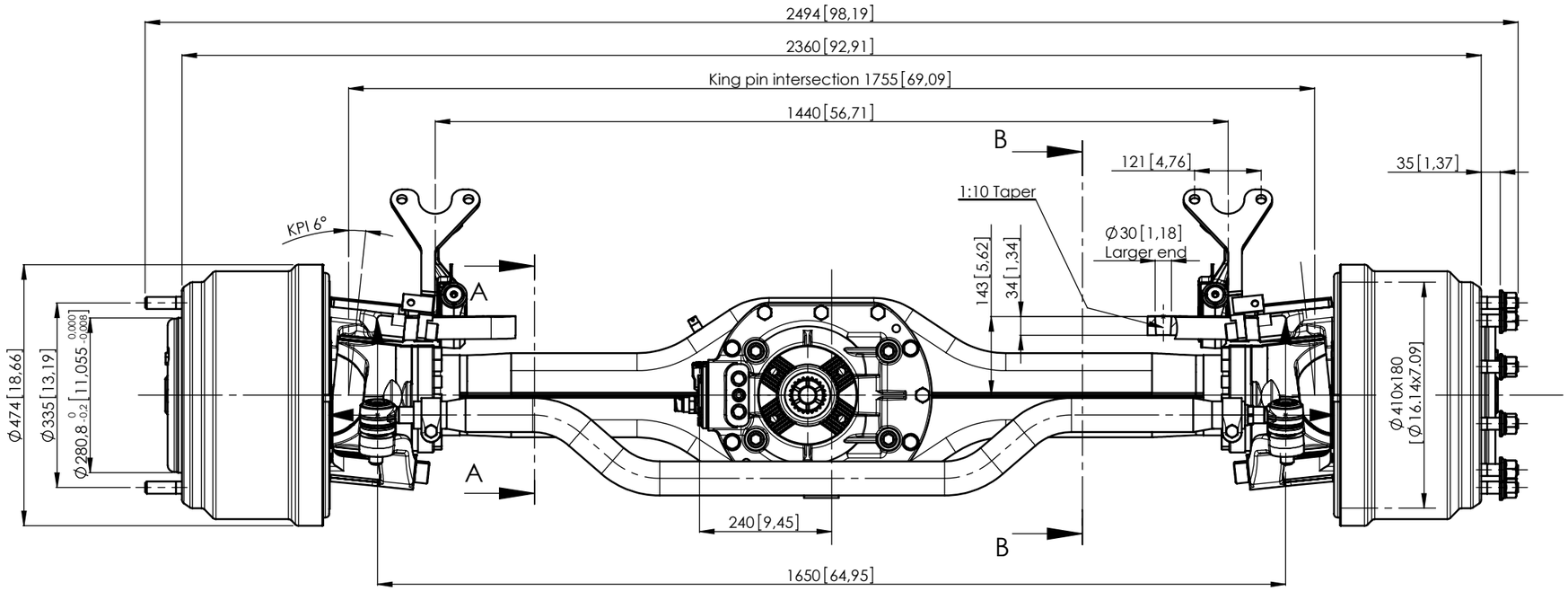

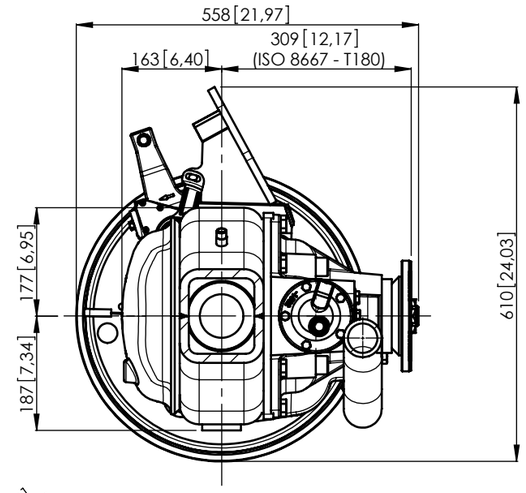

A-A

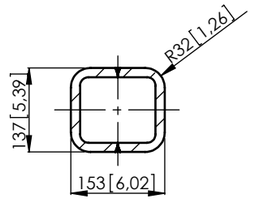

C-C

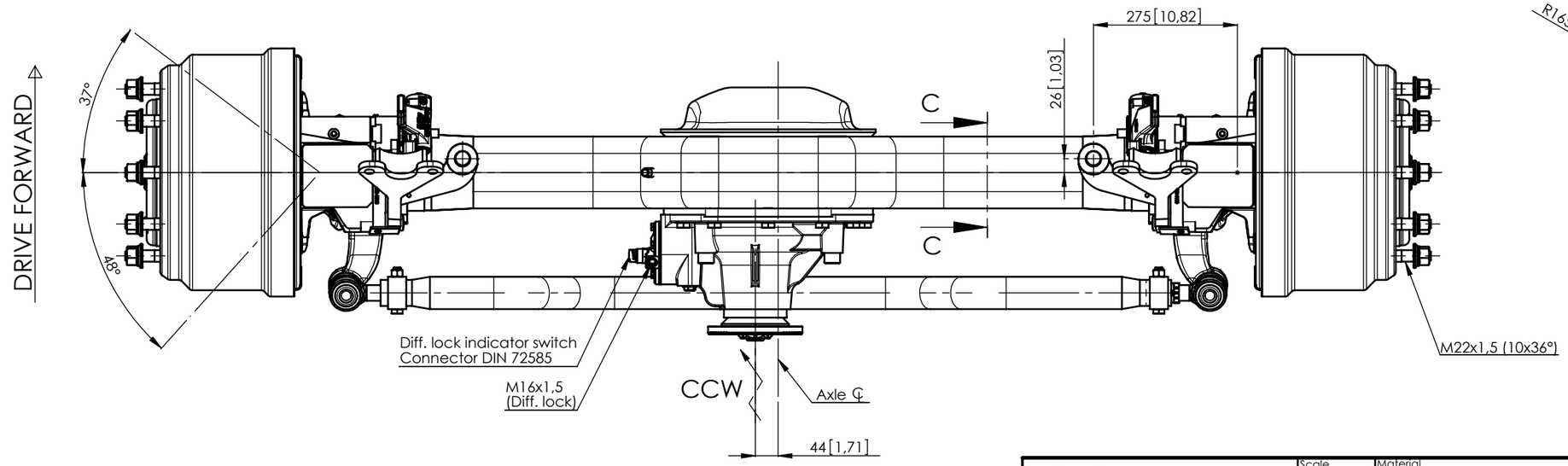

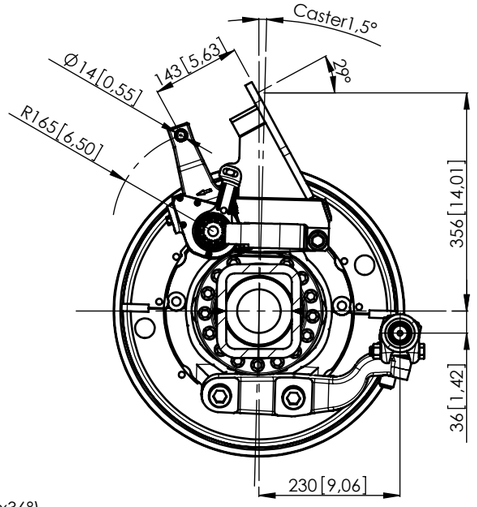

B-B

SISU AXLES

THIS DRAWING AND THE INFORMATION CONTAINED HEREIN IS PROPRIETARY TO SISU AXLES INC. IT SHALL NOT BE REPRODUCED, COPIED OR DISCLOSED IN WHOLE OR IN PART, OR USED FOR MANUFACTURE OF FOR OTHER PURPOSE WITHOUT THE WRITTEN PERMISSION OF SISU AXLES INC.

Scale 1:10 DO NOT SCALE DRAWING	Material					Product FSDP10S	
	Drawn JALI	Date 25.4.2007	Approved	Date			
Dimensions mm	Title Dimension drawing					Weight kg	
	Steering						
	Drive						
	Drawing n:o M541-018-0032				Rev. A	Sheet 1/1	Drawing size A3

REV.	DESCRIPTION	CHANGED	CHANGED DATE	APPROVED	APPROVED DATE
A	Modeled and redrawn	NIAH	01.04.2010	JALI	26.05.2010