https://truckmanualshub.com/

NOBLELIFT

FE3R08-12-SMS-001

Warning

Operators should read and understand this manual and all warning labels on the forklift before using the forklift!
Keep the manual for future reference!

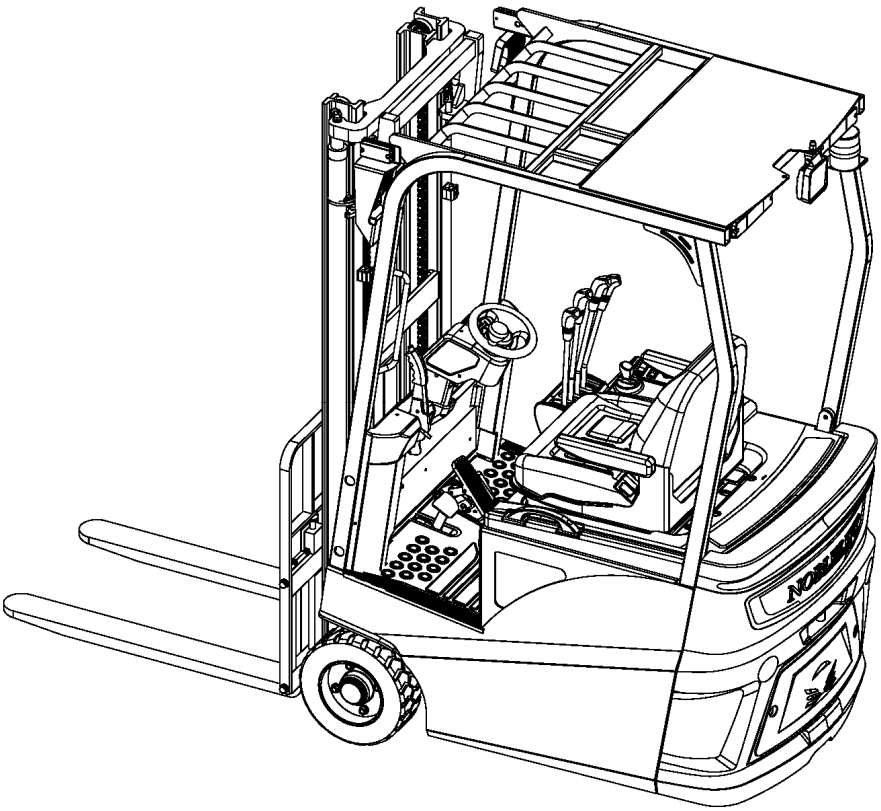

Operation & Maintenance Manual

FE3R08-12 N SERIES

Battery Counterbalanced Forklift Truck

NOBLELIFT INTELLIGENT EQUIPMENT CO.,LTD.

https://truckmanualshub.com/

Table of Contents

Introduction…… 4
Chapter 1 Precautions of using forklift…… 5
Ⅰ. Forklift transportation 5
Ⅱ. Forklift storage 5
Ⅲ. Pre-use preparation 5
Ⅳ. Operation of the forklift 5
Ⅴ. Charging of accumulator cells 6
Chapter 2 Structure and main performance parameters of the forklift…… 7
Ⅰ. Overall Dimension and Technical Parameters of the forklift 7
1. Overall dimension 7
2 Technical Parameters 8
Ⅱ. Structure, principle and adjustment of the main components 9
1. Steering drive axle 9
1.1 Overview 9
1.2 Failure Analysis 11
2. Braking system 11
2.1 Overview 11
2.2 Brake pedal 11
2.3. Brake master cylinder 12
2.4. Brake 13
2.5 Technical points for brake disassembly and adjustment 15
2.6 Adjustment of brake pedal 18
2.7 Troubleshooting and Failure Analysis Failure analysis 19
2.8. Care and maintenance 20
3 Steering system 20
4 Electrical system 20
4.1 Overview 20
4.2 The characteristics of the electronic system 20
4.3 Main functions and settings…… 20
4.4 Curtis controller fault 23
5. Accumulator…… 31
5.1 Accumulator safety precautions…… 31
5.2 Accumulator use precautions…… 32
5.3 Charging of the accumulator…… 33
5.4 Installation and replacement of the accumulator…… 35
6. Hydraulic system…… 35
6.1 Overview…… 35
6.2 Oil pump…… 35
6.3 Multi-way valve…… 35
6.4 Lifting cylinder and the lifting chain…… 37

6.5 Governor valve…… 38
6.6 Tilt cylinder…… 39
6.7 Maintenance and adjustment…… 40
6.8 Failure analysis…… 42
7. Lifting system…… 44
7.1 Overview…… 44
7.2 Outer and inner main frame…… 44
7.3 Fork frame…… 45
7.4 Roller position…… 46
7.5 Maintenance and adjustment…… 46
7.6 Installation of accessories…… 48
8. Removal and installation…… 48
8.1 Precautions…… 48
8.2 Lifting points of the detached parts…… 48
Chapter 3 0peration, use and safety of the forklift…… 50
Ⅰ. Transportation and testing the forklift 50
1 Lifting 50
2 Transporttation 50
3 Use of a new forklift 51
4 The relationship between forklift stability and load 51
5 Load centre and load curve 51
6 Forklift stability 52
7 Adatp a new forlift 52
Ⅱ. Driving and operation 52
1. A brief introduction of Console 52
2 Safety features of the forklift 52
3 Forklift driving 53
4 Loading and unloading of the goods…… …… 54
Ⅲ. About safety 55
1. Site and working environment of the forklift 55
2. Safety rules 56
3 Transportation of the forklift 66
4 How to avoid rollover and how to protect yourself 66
5 Safety issues during maintenance and protection 68
6 Safety during use of the accumulator 69
7 Signs 71
Chapter IV Maintenance and repairing of the forklift 72
Ⅰ. Check before operation 72
Ⅱ. Checking after operation 72
Ⅲ. Clean the forklift 73
1. Clean the forklift surface 74
2. Clean the chain 74

https://truckmanualshub.com/

3 .Clean the electric system 74
4 . After the cleaning 74
Ⅳ. Regular maintenance 74
1. Replace critical safety components periodically..... 74
2. List of forklift oil 75
3.Maintenance list 75
Ⅴ.Repairing of the forklift..... 77
1. Failure diagnosis… …… 77
2. The preparation work before repairing 78
3.Check the hydraulic oil…… 78
4. Check the volume of the brake fluid…… 78
5.Aftermaintenance, the preparatory work before using…… 78
Ⅵ Storage of the forklift…… 79
1.Operations before storage…… 79
2.Measures during storage…… 79
3.Re-test the forklift…… 79

https://truckmanualshub.com/

Introduction

This manual briefly describes the technical parameters of the counterbalanced accumulator forklift made by our company, and the structure of its main components, working principle and requirements on operation and maintenance. Please read this manual carefully before operation, so as to achieve proper driving and maintenance, and to ensure safe and effective material handling. Meanwhile, this manual aims to guide operators to use the forklift in an appropriate way and to maximize its performance! We hope that operators and equipment managers could read it carefully before use! Please strictly observe the provisions and cautions stipulated in this manual and operate the forklift with caution and care, so that the forklift can be maintained in its best status and optimal performance can be ensured. When you lease or transfer your forklift, always keep this manual with it.

For highlighting purpose, the following icons are used in this manual:

1. ⃠ ----refers to a potential danger; if not avoided, it may cause serious human injury, vehicle damage or fire.

2. ⚠ ----refers to a potential danger; if not avoided，it may cause minor human injury, or local damage to the vehicle.。

3. ☞ ----Refers to general cuations and instructions during use.

⚠Most parts of the product are made from recyclable steel. The recycling and disposal of cast-offs resulted during use, maintenance, cleaning and disassembling of the product has to comply with local regulations without pollution to the environment. The recycling and disposal of the cast-offs should only be operated by specialised personnel in the designated area. The cast-offs, such as hydraulic oil, batteries and electronic units, if improperly disposed, may be hazardous to the environment and human health.

Special Declaration:

1）This product is strictly prohibited for potentially explosive hazardous environments.

2）The Noise level of the normal use of this product is compliant with international standards EN 12,053.

3）The vibration level of the normal use of the product is compliant with international standards EN13059.

4）The normal use of the product's environmental requirements as follows: no more than 2000 meters above sea level and the temperature range of 5 ° C—+40 ° c, humidity should no more than 90%.The wind speed is not more than 5m/s.

If you need to use in the freezer for a long time, Or in special environmen， it is needed to install special attachments. Please contact our technical staff.

5）Product recall serive is available when serial faulties occur.

☞ Due to continuous product improvement, Noblelift reserves the right to make changes in product designs and specifications without prior notice. For the latest product parameters, please feel free to contact us. All parameters provided herein are as of the publication date of the Instruction Manual.

Chapter 1 Precautions of using forklift

Forklift drivers and managers must remember the principle of "safety first", and carefully read this maintenance manual. Operators shall be in strict accordance with this manual to ensure safe and normal operation.

Ⅰ. Forklift transportation

The following shall be noted when transporting forklift by container or trucks:

(1) Apply the parking brake;

(2) Fix the main frame and counterweight with steel wires, and use pads to wedge the corresponding positions at the front and rear tires;

(3) Start lifting from the positions indicated by the "Craning Label" on the forklift.

Ⅱ Forklift storage

(1) Reduce the main frame to the lowest position;

(2) Turn off the electric lock, place the lever rod to the "Nertral" position and unplug the power cord;

(3) Tighten the hand brake;

(4) Use pads to wedge the front and rear tires ;

(5) If the forklift is to be left unused for a long time, its wheels should be elevated. The accumulator should be recharged once a month.

Ⅲ Pre-use preparation

(1) Check if all instruments are normal;

(2) Check the tire pressure;

(3) Check the condition of the levers and pedals;

(4) Check if the accumulator voltage is within the working scope, and if the specific gracity of the electrolyte and the height level of the liquid are appropriate;

(5) Check if the connectors and plug contacts of the electrical system are reliable;

(6) Check for leakage of the hydraulic fluid, electrolyte and brake fluid;

(7) Check the tightness of major fasteners;

(8) Check if the lighting and signal lamps are normal;

(9) Release the parking brake;

(10) Conduct test actions such as lifting and lowering the main frame, tilting forwards and backwards, steering and braking;

(11) Contamination level of hydraulic oil shall not be greater than 12.

Ⅳ. Operation of the forklift

(1) Only trained and licensed drivers can drive the forklift;

(2) Operators shall wear security shoes, hats, clothing and gloves for protection purpose;

(3) Operators should note the performance and working conditions of mechanical, hydraulic, electrical and MOSFET governor;

(4) Power on by switching on the key switch, choose the right position of direction switch, and then rotate the steering wheel to see if the forklift can steer.
If ok, slowly depress the speed pedal and maintain an appropriate speed;

(5) Observe the voltage meter, if the voltage indicated by the voltage meter is below 41V during working, immediately stop operation, and recharge the accumulator or replace with another fully charged accumulator;

(6) Weight of loads handled should not exceed the specified value and fork spacing and location should be appropriate. The fork should be fully inserted below all the goods, which shall be uniformly distributed on the fork. Uneven loading shall be avoided;

(7) If the distance between loads‘ center of gravity and the fork arm is no more than 500mm, the maximum load shall be the rated capacity. If the distance between loads‘ center of gravity and the fork arm is more than 500mm, the maximum load shall be less than the rated capacity;

(8) When carrying loads, the main frame should tit backwards to the maximum extent and the fork arm should be in contact with the goods. Raise the fork to about 200mm away from the ground before driving;

(9) Standing under the fork and on the lifting fork are forbidden;

https://truckmanualshub.com/

(10) The initial velocity should not be too fast when lifting and lowering goods;

(11) Never operate the forklift and accessories at places other than the driver's seat;

(12) When the main frame is moving forwards and backwards to the maximum extent, or when the fork is lifted to its maximum height, the operator must rapidly set the lever to the neutral position;

(13) When the main frame is lifting, driving or turning of the forklift is not allowed;

(14) When driving the forklift, drivers should pay attention to pedestrians, road obstacles and potholes, and also note the gap above the forklift;

(15) Drivers should be very careful when driving on ramps. When driving on a ramp with slope gradient more than one-tenth, do move forward for up-hilling and backward for down-hilling.
Never perform steering during up-hilling ad down-hilling process. And avoid loading and unloading when the forklift is down-hilling;

(16) Slow down when steering on wet or slippery road surfaces; be very careful and drive slowly when driving on docks or temporary boards;

(17) For forklifts with lifting height greater than 3 meters, users shall be careful to guard against falling down of the goods overhead and take protective measures if necessary;

(18) Do not carry unfixed or loosely stacked goods and be careful when handling goods with large size;

(19) When driving the forklift with load, emergency braking should be avoided;

(20) Before leaving the forklift, lower the fork down to the ground, set the lever at neutral position and disconnect power. In case of parking on a ramp,
apply the parking brake. Use wedge pads to fix the wheels if you need to park for a long time;

(21) The safety valve pressures of multiple unit valve and steering device have been tuned up before leaving the factory. During use, users
shall not adjust it, because excessive pressure may cause damage to the entire hydraulic system or its components ,and the motor;

(22) When moving with no load, forklift with accessories shall be operated in a way as if carrying a load.

Ⅴ. Charging of accumulator cells

(1) When charging the accumulator cells for the first time and further charging, users should be in strict compliance with the instructions;

(2) When operating the forklift, if the accumulator voltage decreases to 41V, or that of its single cell drops below I.7V , or the instrument alarms, users shall immediately stop using the forklift and replace the accumulator or recharge it before further use;

(3) Check the specific gravity, liquid level and temperature of the electrolyte from time to time during the charging process;

(4) Forklift must be recharged as soon as possible after use. Never leave the forklift uncharged longer than 24 hours. When charging, pay attention to prevent
insufficient charging and over-charging, so as not to damage the battery;

(5) Users should conduct balanced recharging to the forklift in normal use once a month, so as to adjust the proportion among the accumulator units.

Please refer to the relevant sections of this Mannual for detailed charging and maintenance methods.

Chapter 2 Structure and main parameters of the forklift

Ⅰ. Overall size and performance parameters of the forklift

1. Overall dimensions (as shown in Figure 1-1)

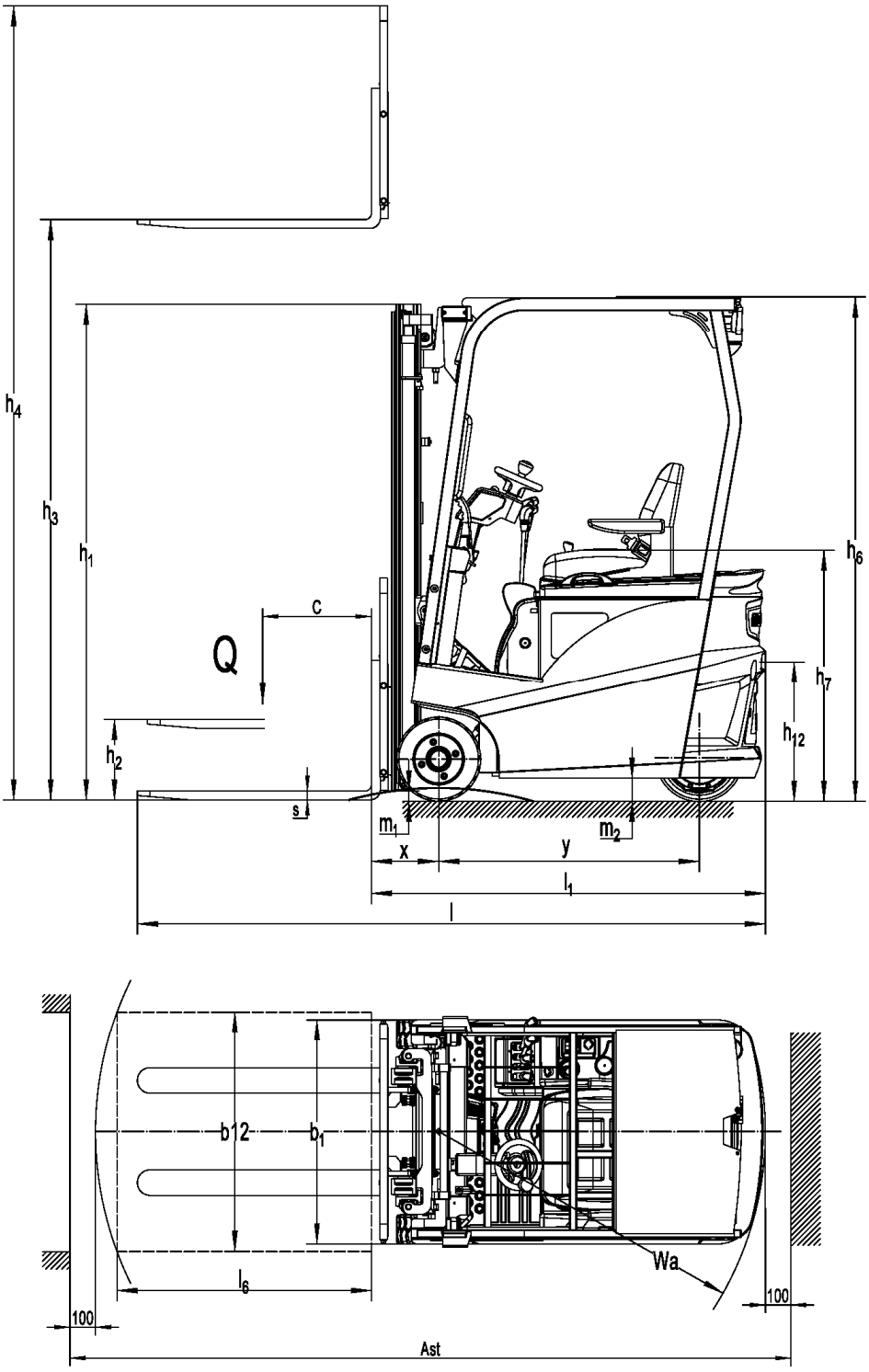

Figure 1-1 Overall dimension

2. Technical parameters (Table 1-1)

	Mode	FE3R08	FE3R10	FE3R12
Characteriscis	Drive mode:	Electric	Electric	Electric
	Operation mode:Manual, walking, stand-up driving, Sit-down driving, picking	Sit-down	Sit-down	Sit-down
	Rated loading capacity Q(Kg)	800	1000	1200
	Load centre distance C(mm)	500	500	500
	Front overhang distance x(mm)	265	265	265
	Wheelbase y (mm)	841/923	951/1033	991/1073
weight	Weight with accumulator Kg	1800	1910	2080
	Axle load with full load, front/rear Kg	2300/300	2460/350	2880/400
	Axle load with no load, front/rear Kg	770/1020	850/1060	910/1170
Wheel,body	Tires:solid rubber,super- elastic, pneumatic, polyurethane tires	Solid rubber/ polyurethan	Solid rubber/ polyurethan	Solid rubber/ polyurethan
	Specification of Front wheel	13×4½×8	13×4½×8	13×4½×8
	Specification of rear wheel b_{10}(mm)	φ250×82	φ250×82	φ343×140
	Front wheelbase b_{11}(mm)	765	765	765
Basic size	Tilt angle of main frame, forward/backward α/β(°)	3°/5°	3°/5°	3°/5°
	Height of main frame when retracted h_1(mm)	1965	1965	1965
	Free lifting height h_2(mm)	95	95	95
	Lifting height h_3(mm)	3000	3000	3000
	Height of main frame when stretched h_4(mm)	3865	3865	3865
	Height of overhead guard h_6(mm)	1975	1975	1975
	Seat height h_7(mm)	980	980	980
	Traction pin height h_{10}(mm)	540	540	540
	Total length l_1(mm)	2290	2400	2460
	Length of forklift body (Fork surface) l_2(mm)	1370	1480	1545
	Total width b_1(mm)	880	880	880
	Fork dimension s/e/l(mm)	35/100/920	35/100/920	35/100/920
	Distance from main frame to ground m_2(mm)	80	80	80
	Distance from wheel base centre to ground m_2(mm)	90	90	90
	Turning radius Wa(mm)	1160	1320	1350
Performance parameters	Driving speed, full load/no load km/h	8/9	7.5/9	7.0/9
	Lifting speed， full load/no load m/s	0.17/0.28	0.16/0.22	0.15/0.22
	Lowering speed full load/no loadm/s	0.23/0.22	0.16/0.20	0.17/0.20
	Maximum traction, full load/no load S_2 5 min %	3320/3530	3320/3600	3420/3640
	Climbing ability, full load/no load S_2 5 min %	6/10	6/10	6/10

motor	Drive motor power S_2 60min Kw	2.5	2.5	3
	Lifting motor power S_3 15% Kw	3	3	3
	Accumulator voltage/capacity K_5 V/Ah	24/280	24/420	24/420
	Accumulator weight kg	280	392	392
others	Drive control type	AC	AC	AC
	Working pressure of accessories Pa	115	135	155
	Oil volume of accessories l / min	16	16	16
	Noise level at driver's ear according to EN 12 053 EN 12 053 decible	70	70	70

Ⅱ.Structure, principle and adjustment of the forklift's main components

1. Steering drive axle

1.1 Overview

The steering drive axle of forklift is composed of reduction gearbox assembly,drive motor and slewing bearing. Driving gear of decelerator is connected directly with the travel motor, so the driving speed of forklift increases with the increase of motor speed and the driving direction can be changed by changing the direction of motor rotation.

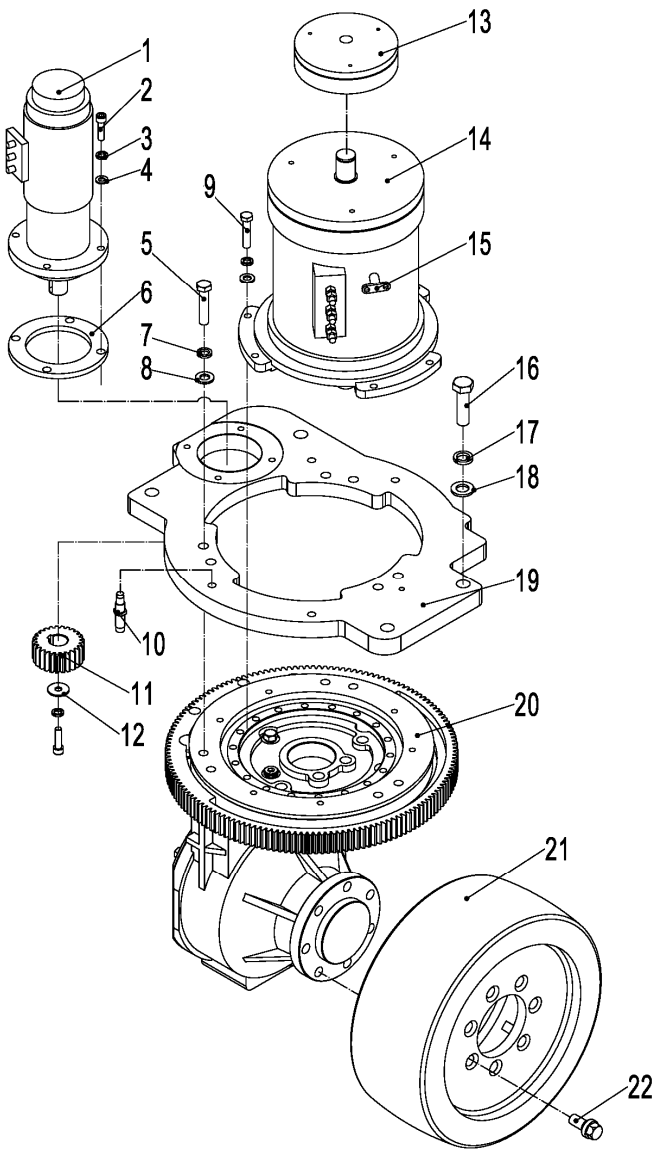

1. steering motor	2. screw	3. spring washer	4. washer
5. bolt	6. heel	7. spring washer	8. washer
9.bolt	10. proximity switch	11. Steering pinion	12. washer
13. Electromagnetic brake (optional)	14. motor	15. coder	16. bolt
17. spring washer	18. washer	19. Gearbox mounting board	20. gear-box
21. back wheel	22. boss bolt		

Figure 2-1 Steering drive axle

The drive steering axle has a characteritics of compact structure, reliable performance, smooth transmission and low noise. Axle shell is made of steel materials, which provides strong rigidity and high load capacity. See Table 2-1 for the main technical parameters.

Table 2-1 main performance parameters

Model		FE3R08-10	FE3R12
Motor Power	kw	2.5	3.0
Motor rated speed	r/min	2500	2500
Battery voltage	V	24	24
Gear Ratio	i	18.98	22.32
Maximum wheel load	kg	1100	1400
Wheel diameter	mm	254	343

1.2 Failure Analysis

Table 2-2 Failure Diagnosis and Correction

Failures	Possible causes	Correction methods
High vibration	Looseness of fastening bolts at the installation and connection points	Tighten the bolts
Excessive oil temperature	Deterioration of gear oil	Replace
	Abnormal oil level	Add or reduce oil
	Jamming of moving parts	Adjustment
Oil leakage	Looseness of bolts at the combining surfaces	Tighten the bolts
	Damaged seals	Replace
Noise	Damaged rotary gear	Replace
	Damaged bearing	Replace

2. Braking system

2.1 Overview

The braking system consists of the brake pedal, brake master cylinder and wheel brakes. The two wheel brakes in the front are hydraulic internal expansion brakes.

2.2 Brake pedal

The structure of brake pedal is shown in Figure 2-2. The pedal would transfer the pedal force into brake oil pressure through the push rod on the brake master cylinder.

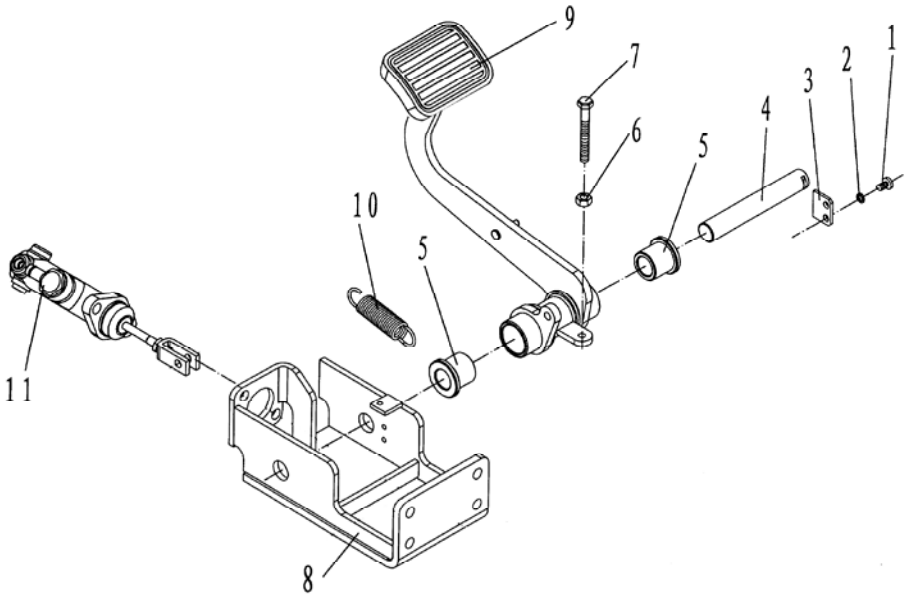

1 Screw	2. Spring washer	3. Fixed plate	4.Axle
5. Bearing	6 Socket hexagonal screw.	7. Spacing bolt	8. Foot brake bracket
9. Brake pedal	10. Return spring	11.Brake pump assembly	

Figure 2-2 Brake pedal assembly

2.3 Brake master cylinder (Figure 2-3)

The master cylinder includes a valve seat, a check valve, a return spring, the main cup, piston and auxiliary cup. Stop washer and stop steel wire are used to fix the ends of the cylinder and rubber dust cover is applied to protect its external surface. Master cylinder piston works by depressed the brake pedal to touch the push rod. When the brake pedal is depressed, the push rod will push the piston forward, and the brake fluid in the cylinder will flow back to the storage tank through the oil return hole until the main cup block the oil return hole. When the main cup block the oil return hole, the brake fluid in front cavity of the master cylinder is compressed and the check valve is opened. The fluid will flow to the wheel cylinder through the brake pipelines. Thus, each wheel cylinder piston will protrude and the friction disk of the brake shoe will contact the brake drum to achieve slowing down or braking. At this point, the back cavity of piston will be filled with brake fluid from the oil return hole and the oil inlet. When the brake pedal is released, the piston will be pressed backwards by the return spring, and at the same time the brake fluid in each brake cylinder is also compressed by the return spring of the brake shoe, so that the brake fluid will flow back to the master cylinder (front cavity of the piston) through the check valve. Then the piston will return to its normal position, while the brake fluid in the master cylinder flows back to the storage tank through the oil returning hole. The pressure of the check valve will be adjusted to be in certain proportional of the remaining pressures in the brake pipeline and the brake cylinder, so that the cylinder cup will be correctly placed to prevent oil spilling and to eliminate air resistance that may occur during emergency brake.

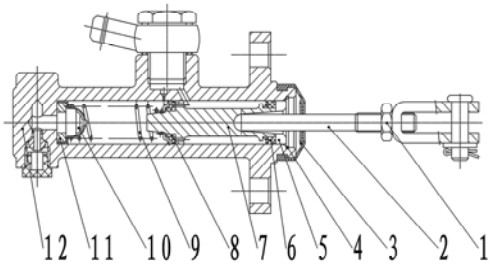

1. Locking nut
2. Pushing rod
3. Dust cover
4. Stop steel wire
5. Stop washer
6. Auxiliary cup
7. Piston
8. Main cup
9. Spring
10. check valve
11. Valve seat
12. Pump body

Figure 2-3 Brake Master Cylinder

2.4 Brake

The brake is a dual-shoe brake installed on both sides of the drive axle. The brake consists of two groups of brake shoes, brake cylinders and regulators. One end of the brake shoe contacts the fixed pin and the other end contacts the regulating device. The return spring and the compression spring bar hold the parking brake. In addition, the parking brake mechanism and automatic regulating device are also assembled onto the brake. See figure 2-4

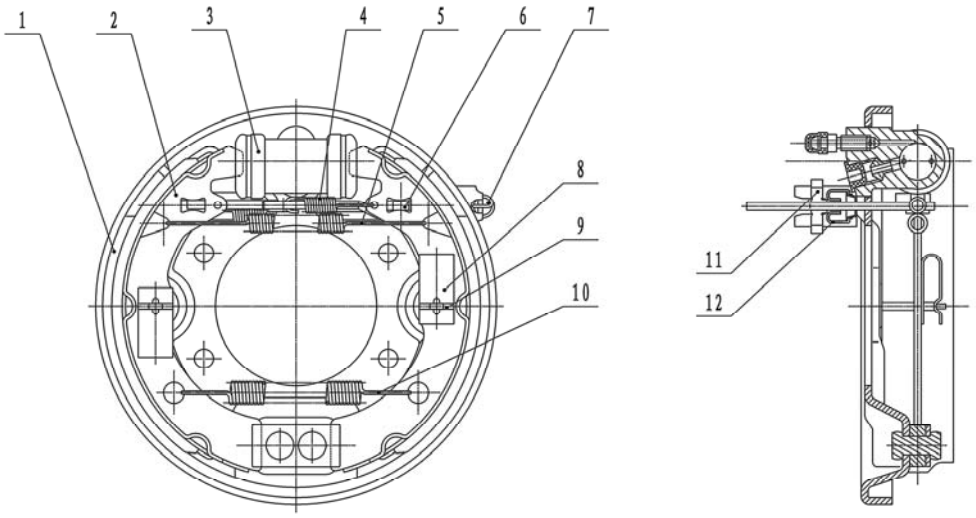

1. Left plate assembly	2. Brake crow assembly	3. Brake Cylinder	4. Self-adjusting spring	5. Return spring	6. Handbrake self-adjusting body
7. Handbrake return spring	8. Spring compression	9. compression bar	10. Tension spring	11. Spacing bar	12. Connection rod dust cover

Figure 2-4 Brake

(1) Brake action

Brake cylinder exerts the same force to the main brake shoe and auxiliary brake shoe to suppress the brake drum, until the upper end of auxiliary brake shoe contacts against the fixed pin. Then the brake shoe will move towards the rotation direction of the brake drum. After contact against the fixed pin, the friction between friction disk and brake drum will increase. The main brake shoe will exert a pressure larger than the brake cylinder pressure on the auxiliary brake shoe, resulting in a large braking force. See Figure 2-10

When moving backwards, the brake action is in reverse to that of moving forwards. See Figure 2-6

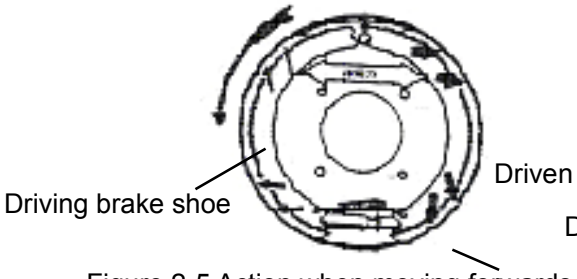

Figure 2-5 Action when moving forwards

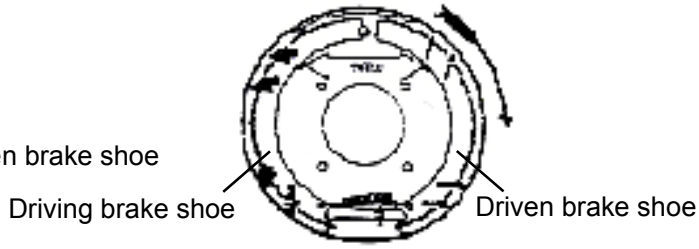

Figure 2-6 Action when moving backwards

(2) Parking brake

Mounted in the wheel brake, the parking brake consists of the lever and push lever. The lever is mounted on side of the main brake shoe by a pin, and the pulling action spread through the push lever to the auxiliary brake shoe. See figure 2-7

(3) Clearance self-adjusting mechanism

The clearance self-adjusting mechanism can maintain appropriate clearance between the friction disk and the brake drum. See Figure 2-8 for its structure. Clearance self-adjusting mechanism works only when the forklift is moving in reverse.

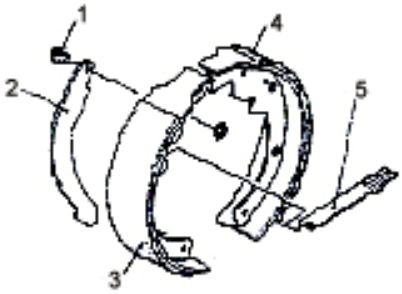

1. Pin 2. lever 3. Driving brake shoe 4. Driven brake shoe 5. Support rod

Figure 2-7 Parking brake

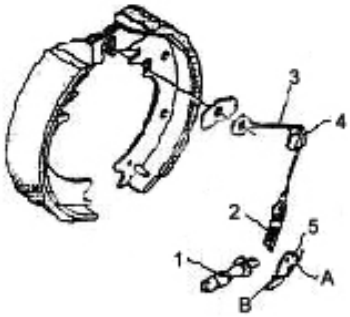

1.Regulating mechanism 2. Spring 3. Cable 4. Guide groove 5. lever

Figure 2-8Clearance self-adjusting mechanism

(4) Action of the automatic clearance adjusting mechanism

If braking during reversing of the forklift, the auxiliary and main brake shoes contact with each other and rotate together, so that the lever will rotate rightwards around A point as shown in Figure 2-8, and B point is then elevated. After the brake is released, the lever will rotate leftwards by the spring force to lower B point. When the clearance between brake hub and friction disk is enlarged, the vertical distance of B point's rotation will increase. The regulator will be toggled for one more tooth and the regulating lever lengthens (see Figure 2-9), so that the clearance shrinks. Clearance adjustment range falls within 0.40mm ~ 0.45mm.

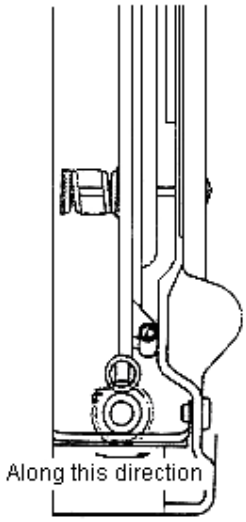

Figure 2-9 Clearance
self-adjusting mechanism

2.5 Technical points for brake disassembly and adjustment

Disassembly, assembly and adjustment of the brake and adjustment of brake pedal when the wheel and wheel hub is removed.

2.5.1 Disassembly of the brake

(1) Remove the support pin, regulating bar, regulating device and spring on the auxiliary brake shoe. See figure 2-11

(2) Remove the return spring on the shoe. See figure 2-12

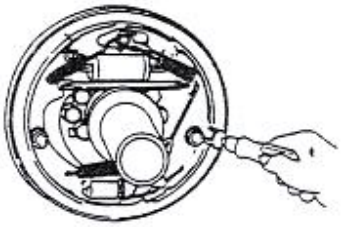

Figure 2-11

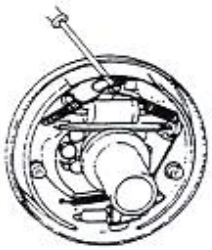

Figure 2-12

(3) Remove the fixing spring on the main brake shoe. See figure 2-13

(4) Remove the main and auxiliary brake shoes. And also remove the regulator and the regulator spring. See figure 2-14

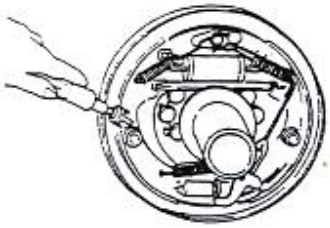

Figure 2-13

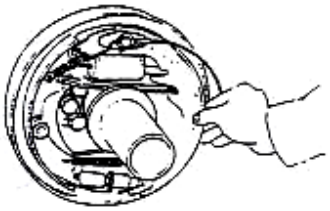

Figure 2-14

(5) Remove the brake pipe from the brake cylinder. Then remove the mounting bolt of the

brake cylinder, and remove the brake cylinder from the brake backing plate. See figure 2-15

6) Remove the E-shaped retaining ring used for fixing the brake cable on the brake backing plate. Then remove the mounting bolt on the brake backing plate and dismount the brake backing plate from the drive axle. See figure 2-16

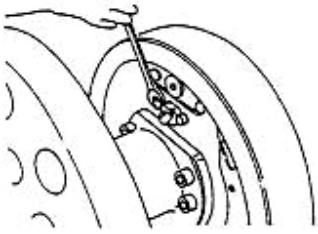

Figure 2-15

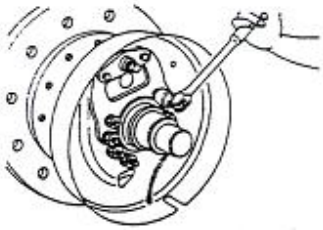

Figure 2-16

(7) Disassemle the brake cylinder: Remove the dust-proof ring. Press on one end of the piston to push out the other end and then press down the headed out end of piston with fingers. See figure 2-17

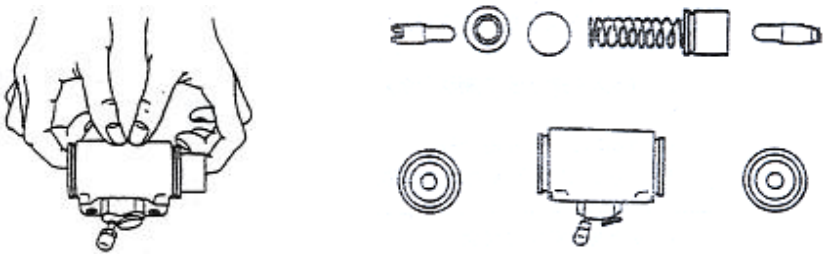

Figure 2-17

2.5.2 Check of the brake

Inspect the parts and then repair or replace damaged ones.

(1) Check the surface of the brake cylinder and peripheral surface of the piston for rust; then measure the clearance between the piston and the brake cylinder.

Standard size: 0.03mm-0.10mm; Maximum size: 0.15mm

(2) Conduct visual inspection of the piston cup for damage and deformation. Replace the cup if there is any abnormality.

(3) Measure the free length of brake cylinder spring. Replace it if it exceeds the baseline.

(4) Measure the thickness of friction disk. Replace it if the wear degree exceeds limit. Figure 2-23 Standard thickness: 8.0mm; Minimum thickness: 2.0mm

(5) Conduct visual inspection on the inner surface of brake drum for damage and uneven wear. Then grind the brake drum for correction purpose and replace it if it can't be corrected.

Standard value: 314mm; Maximum value: 316mm. See Figure 2-19

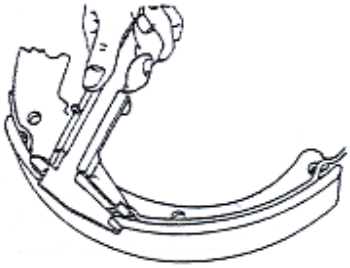

Figure 2-18

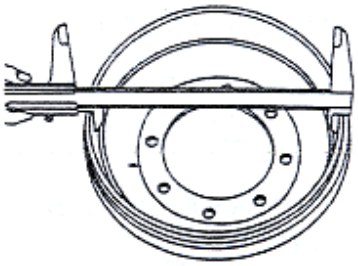

Figure 2-19

2.5.3 Brake assembly

(1) Coat the cup and piston on the brake cylinder with brake fluid and assemble the spring, piston cup, piston and protection loop in sequence.

(2) Mount brake cylinder on the brake backing plate.

(3) Mount the brake backing plate on the drive axle.

(4) Coat all the positions as shown in Figure 2-20 with heat-resistant grease,

and be careful not to smear any oil on the friction disk.

(a) Contact surface of the brake backing plate and brake shoe;

(b) Fixed pin;

(c) Contact surface of the brake shoe and spring compression base;

(d) Support pin of the hand brake lever;

(e)Threads on the regulating mechanism and other rotating parts.

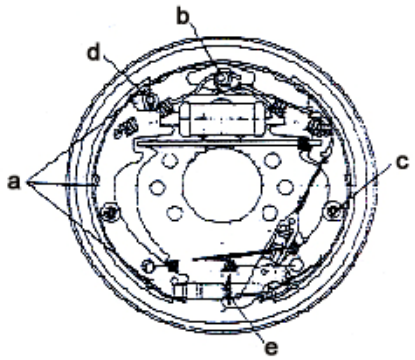

Figure 2-20

(5) Use a E-shape retaining ring to seize the parking brake cable.

(6) Mount the brake shoe with a fixed spring. See figure 2-21

(7) Mount the compression spring on the push lever of hand brake, and then mount the push lever onto the brake shoe.

See figure 2-22

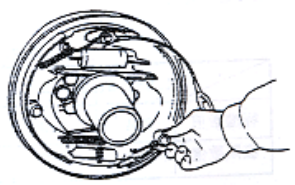

Figure 2-21

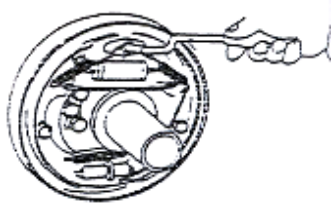

Figure 2-22

(8) Mount the brake shoe guide plate to the support pin, and then mount the return spring of the brake shoe. First install the main shoe and then install the auxiliary shoe. See figure 2-28

(9) Mount the regulator, the regulator spring, ejector Pin, return spring of the ejector Pin. The following points shall be noted:

(a) The screw direction and mounting direction of the regulator;

(b) The direction of spring in the regulator (contact between regulator gear and spring is not allowed);

(c) The direction of return spring in the ejector pin (the spring hook at the support pin side should be fixed at the side opposite to the ejector pin);

(d) The lower end of the adjustment lever must contact with the regulator gear.

(10) Connect the brake pipelines with the wheel cylinders.

(11) Measure the inner diameter of brake drum and outer diameter of brake shoe, and then use the regulator to set the difference between inner diameter of brake drum and outer diameter of brake shoe at 0.3mm-0.5mm. See figure 2-24

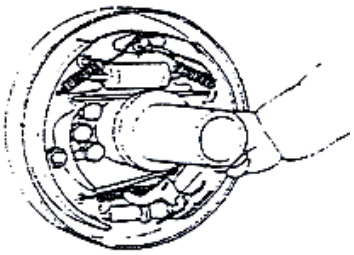

Figure 2-23

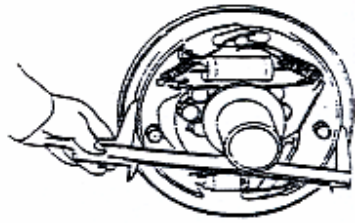

Figure 2-24

2.5.4 Operation test of the automatic clearance regulator as shown in Figure 2-25

(1) First, adjust the diameter of brake shoe to be close to the stipulated installation size; pull the lever to rotate the regulator. When letting the lever go, the regulator lever will return to its original position and the regulator gear won't rotate.

Note: Even if the regulator gear and the lever both return after the lever is let go, the regulator still works properly.

(2) If the regulator can not finish the above actions when the lever is pulled, carry out the following checks:

(a) Securely mount the adjustment lever, ejector pin, spring of the ejector pin and compression spring base;

(b) Check the return spring on ejector pin and the regulator spring for damage,and then check the rotation of its regulator gear and its meshing parts to see if there is excessive wear or damage. Check whether the pin contacts with the gear. Replace damaged parts.

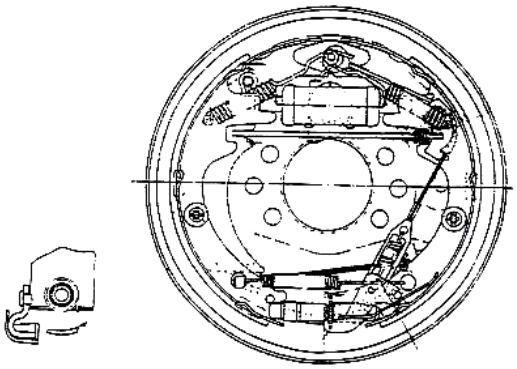

Figure 2-25

2.6 Adjusting the brake pedal as shown in Figure 2-26 (a)

(1) Shorten the push lever;

(2) Regulate the pedal spacing bolt and adjust the pedal height as shown in Figure 2-26 (b);

(3) Adjust the length of the push lever until its front end contacts with the piston of master cylinder. Then turn back 1-2 circles to guarantee a free travel of the pedal between the 10mm-20mm;

(4) Lock the nuts of push lever and the pedal spacing bolt.

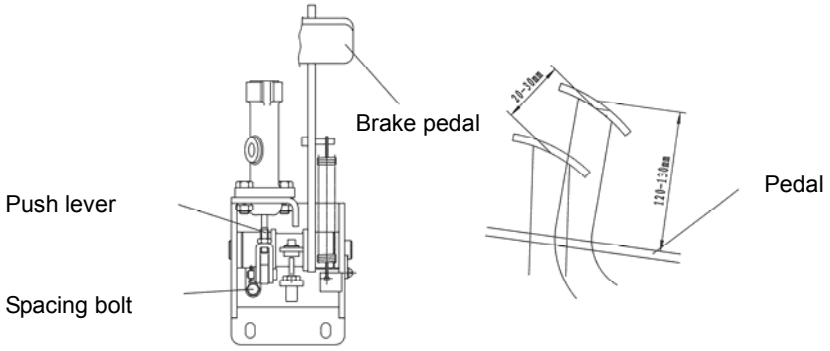

（ a ） Figure 2-26 （ b ）

2.7 Troubleshooting and Failure Analysis(Table 2-3)

(Table 2-3)

Problems	Causes analysis	Solutions
Abnormal braking	1.Oil leaks in the brake system	Repair it
	2 The brake shoe clearance is not well-tuned	Adjust the regulator
	3 The brake is over-heated	Check if the brake is slipping
	4 Brake drum and friction disk are not appropriately contacted	Readjust it

	5 There are foreign matters attached to the friction disk.	Repair or replace it
	6 The brake fluid is contaminated	Check the brake fluid
	7 The brake pedal hasn't been adjusted properly	Adjustment
Noise in the brake	1 The friction surface is hardened or with foreign matters attached on it	Repair or replace it
	2 The baking plate is deformed or the bolts are loosen	Repair or replace it
	3 The brake shoe is deformed or is not installed correctly	Repair or replace it
	4 Worn friction disk	Replace
	5 The wheel bearing is loosened	Repair or replace it
The braking is uneven	1 There are oil stain on the friction disk	Repair or replace it
	2 The brake shoe clearance is not well-tuned	Adjust the regulator
	3 The wheel cylinder fails	Repair or replace it
	4 The return spring of brake shoe is damaged	Replace
	5 The brake drum is deflected	Repair or replace it
The braking is not enough	1.Oil leaks in the brake system	Repair or replace it
	2 The brake shoe clearance is not well-tuned	Adjust the regulator
	3 Air is mixed within the brake system	Let out the air
	4 The brake pedal is not adjusted appropriately	Readjust it

2.8 Care and maintenance

① Before conducting running-in test of a new drive axle, users shall fill in gear oil.Fill oil into the hole at top of the axle shell until oil is spilled out of the oil level hole in central axle.

② The thickness of friction disk on brake shoe is 8mm. The minimum thickness allowed is 2mm. These two are key components of the braking system and should be checked monthly. If excessive wear is found, the components shall be timely replaced to avoid accidents.

③ Technical maintenance after each 50h:

Ⅰ. Change the gear oil if a new axle has been working for 50h along with the forklift. Clean the axle before refilling new oil.

Ⅱ. Check all the fasteners. If any looseness is found, tighten it immediately.

Ⅲ. Check the wheel axle and wheel hub connection for any oil leakage. Re-apply sealant if any leakage is found.

④ Monthly technical maintenance:

Ⅰ. Check the brake drum for any destructive wear.

Ⅱ. Check the wear condition of brake shoe. If wearing is so serious that the brake shoe fails to meet requirements, the brake shoe should be replaced immediately.

Ⅲ. Check if the oil level in axle shell meets standards. If the oil level reduces, users should promptly fill up.

⑤ Semi-annual technical maintenance: Change the gear oil within the axle once every six

months of working.

⑥ Annual technical maintenance: Disassemble the drive axle for inspection every year.

⑦ Check and debug requirements during the installation process:

When re-installing the wheel hub of the drive axle, users should regulate the clearance adjuster of the brake, so as to set the gap between brake drum and friction disk at 0.3mm ~ 0.5mm. Fill 100ml 3# lithium base grease into the tapered roller bearing on the wheel hub.

Adjustment of the bearing clearance on wheel hub: tighten the inner locking nut until the wheel brake drum can barely turn up. Then rotate the inner locking nut in reverse for 1 / 8 circle. At this moment wheel brake drum can be freely rotated without jamming, significant axial clearance or deflection. Finally, assemble the washer pad and tighten the outside locking nut.

3. Steering system

When turing to ± 90°, the steering motor of 180°seamless all-electric steering will stop automatically, to eliminating any chance of overloading. When the steering angle exceeds ± 20 °, the speed will reduce automatically to ensure the high security during driving. The steering system mainly consists of the steering wheel, steering motor and slewing bearing. Slewing bearing is nstalled in the upper portion of the steering drive,connected by gears and steering motor via the steering motor rotation to reverse positive and negative ,so that the steering wheel can deflect to achieve steering. See Figure 2-1

4. Electric system

4.1 Overview

The electrical system of FE3R06-12 three-wheel AC electric forklift is powered by an 80V battery and traction is enabled by the AC motor. The lifting force is generated in a way as follows: the DC motor drive pump to generate oil pressure, and then hydraulic pipes work on the hydraulic cylinders on both sides of the frame to achieve lifting of the fork. The lighting system is powered by a 24V voltage.Schematic of electrical system See Figure 2-28

4.2 Characteristics of the Electric System

The forklift’s AC frequency conversion traction motor, AC frequency conversion steering motor controller, dashboard display, AC drives are all products from the Curtis Company, the world's leading supplier of electric vehicle systems. The AC frequency conversion motor is efficient, durable and essentially maintenance-free. As it does not contain any commutator seen in DC motors, acceleration is faster (commutator limits acceleration and even limits braking torque during high-speed driving). The controller is one universally used in electric vehicles that communicate via CANopen protocol. With its analog and digital I / O and communication devices, the controller is ideal for managing forklift movements, I / O, for controlling operation and for displaying information. In addition, it can perform discharging and monitoring of the battery group and offers a variety of protection. Dashboard display ECO-SMART can show a variety of data, and can be set at factory or by users. Plus, other functions such as entering of user commands are also avaliable.

4.3 Main functions and settings

By properly setting the motor parameters, control parameters and corresponding functional value of the controller, users can acheive safe and efficient performance as well as full operational capabilities of the electric forklift.

1. The crawling speed of electric forklift can be regulated. By setting the crawling speed of the controller, users can operate the electric forklift under low-speed in a long time.

2. Acceleration rate can be regulated. Under different acceleration rate, the "hardness and softness" feel of the accelerator pedal varies. By setting of the acceleration rate, users can meet various accelerating demands in different conditions.

3. Reverse braking and regenerative braking.When the direction lever is placed reversely during moving of the forklift, a reverse braking signal will be created, and then the motor drive will

order the traction motor to generate a braking torque, so as achieve the purpose of deceleration. Size of the braking force is controlled by the accelerator pedal.Regenerative braking refers to the forklift's braking force generated by the controller when the forklift's speed is relatively higher than the traction motor speed. The force can be transformed into electrical energy and returned to the battery group. In order to reduce the speed of the forklift when moving downwards, users can release the accelerator pedal to a certain extent to achieve regenerative braking, so as to extend the driving distance enabled by a single battery charge.

4. Function of avoiding slipping backwards on a ramp. Electric forklift with AC traction motor could excellently avoid downwards-moving of the forklift on a ramp.

5. The maximum driving speed could be regulated. By setting a reasonable vmaximum speed of the electric forklift, users can avoid overload of traction motor due to excessive speed.

6. Static response off.If the seat switch or key switch is off, the control device will be turned off either. Re-start is enabled only when the directional control lever is placed on the neutral position.If the driver leaves the forklift and then return, he needs to place the directional control lever on the neutral position to re-start the forklift.This feature eliminates accidental occurrence of unsafe operation.A few seconds of latency have been set to the input end of seat switch, so as to realize momentary disconnection of the seat switch in case of turbulence.

7. Function of security protection. If damage occurs to the controller's power components when forklift is running, the controller will disconnect the main contactor in the shortest time; if the controller's temperature is too high, the controller will automatically limit armature current of the motor; if the battery voltage is too low, the controller will stop working to ensure safety.

8. Both the traction motor controller and pump motor controller are equipped with a self-diagnostic function. Fault code will show on the meter display and the controller will be automatically disabled to ensure the operating system's security whenever controller fault occurs during its working process.

9. The meter display will show the battery power and its cumulative work hours See Figure 2-27.

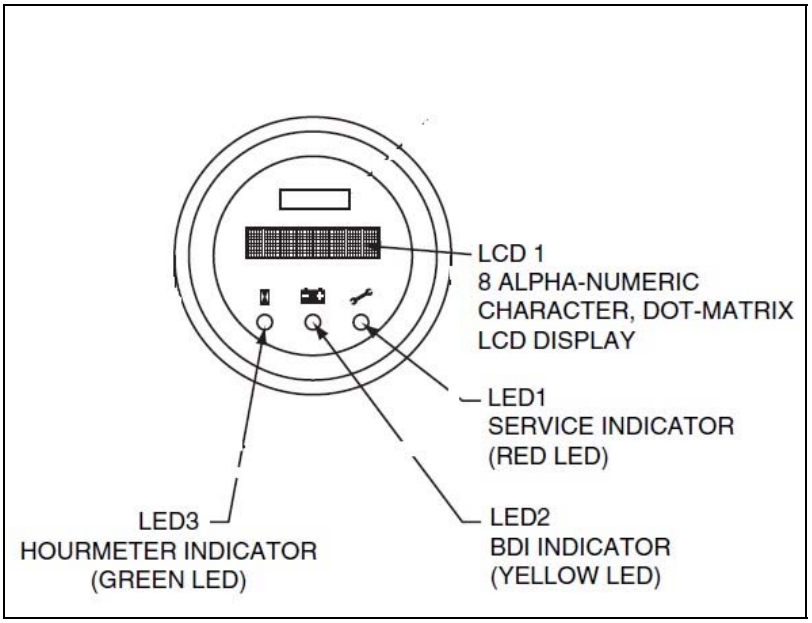

See Figure 2-27

☞ **About the parameters of the controller and functions of the setings, you should operate them under the direction of the electrical engineers. If the differenceof the parameters you set and between the performance parameters of the motor is too large htat may causethe electric forklift low performance, inefficient, and even does not work.**

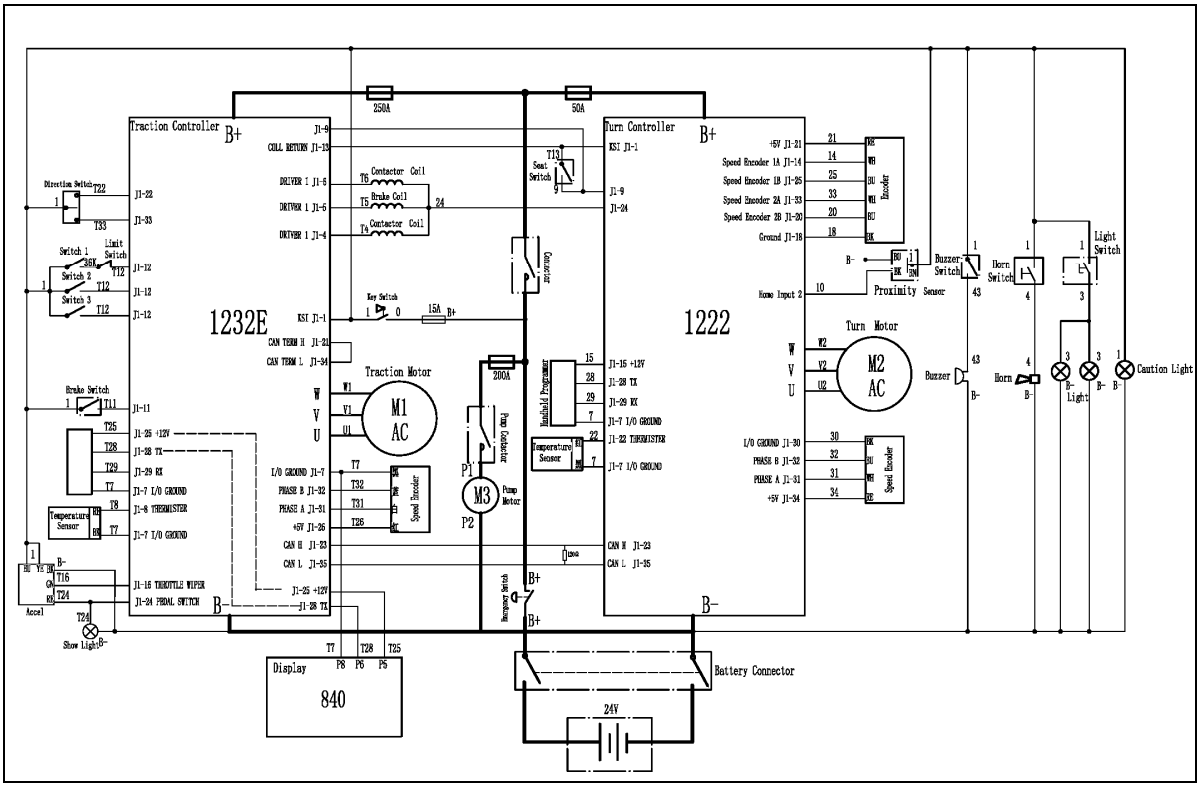

Figure 2-28 Schematic of electrical system of FE3R06-12

4.4.Curtis controller fault

CODE	PROGRAMMER LCD DISPLAY *EFFECT OF FAULT*	POSSIBLE CAUSE	SET/CLEAR CONDITIONS
12	Controller Overcurrent *ShutdownMotor;* *ShutdownMainContactor;* *ShutdownEMBrake;* *ShutdownThrottle;* *FullBrake;* *ShutdownPump.*	1. External short of phase U,V, or W motor connections. 2. Motor parameters are mis-tuned. 3. Controller defective. 4. Speed encoder noise problems.	*Set:* Phase current exceeded the current measurement limit. *Clear:* Cycle KSI.
13	Current Sensor Fault *ShutdownMotor;* *ShutdownMainContactor;* *ShutdownEMBrake;* *ShutdownThrottle;* *FullBrake;* *ShutdownPump.*	1. Leakage to vehicle frame from phase U, V, or W (short in motor stator). 2. Controller defective.	*Set:* Controller current sensors have invalid offset reading. *Clear:* Cycle KSI.
14	Precharge Failed *ShutdownMotor;* *ShutdownMainContactor;* *ShutdownEMBrake;* *ShutdownThrottle;* *FullBrake;* *ShutdownPump.*	1. See Monitor menu » Battery: Capacitor Voltage. 2. External load on capacitor bank (B+ connection terminal) that prevents the capacitor bank from charging.	*Set:* Precharge failed to charge the capacitor bank to the KSI voltage. *Clear:* Cycle Interlock input or use VCL function *Enable_Precharge()*.
15	Controller Severe Undertemp *ShutdownMotor;* *ShutdownMainContactor;* *ShutdownEMBrake;* *ShutdownThrottle;* *FullBrake;* *ShutdownPump.*	1. See Monitor menu » Controller: Temperature. 2. Controller is operating in an extreme environment.	*Set:* Heatsink temperature below -40°C. *Clear:* Bring heatsink temperature above -40°C, and cycle interlock or KSI.
16	Controller Severe Overtemp *ShutdownMotor;* *ShutdownMainContactor;* *ShutdownEMBrake;* *ShutdownThrottle;* *FullBrake;* *ShutdownPump.*	1. See Monitor menu » Controller: Temperature. 2. Controller is operating in an extreme environment. 3. Excessive load on vehicle. 4. Improper mounting of controller.	*Set:* Heatsink temperature above +95°C. *Clear:* Bring heatsink temperature below +95°C, and cycle interlock or KSI.
17	Severe Undervoltage *Reduced drive torque.*	1. Battery Menu parameters are misadjusted. 2. Non-controller system drain on battery. 3. Battery resistance too high. 4. Battery disconnected while driving. 5. See Monitor menu » Battery: Capacitor Voltage. 6. Blown B+ fuse or main contactor did not close.	*Set:* Capacitor bank voltage dropped below the Severe Undervoltage limit (see page 58) with FET bridge enabled. *Clear:* Bring capacitor voltage above Severe Undervoltage limit.

CODE	PROGRAMMER LCD DISPLAY *EFFECT OF FAULT*	POSSIBLE CAUSE	SET/CLEAR CONDITIONS
18	Severe Overvoltage *ShutdownMotor;* *ShutdownMainContactor;* *ShutdownEMBrake;* *ShutdownThrottle;* *FullBrake;* *ShutdownPump.*	1. See Monitor menu » Battery: Capacitor Voltage. 2. Battery menu parameters are misadjusted. 3. Battery resistance too high for given regen current. 4. Battery disconnected while regen braking.	*Set:* Capacitor bank voltage exceeded the Severe Overvoltage limit (see page 58) with FET bridge enabled. *Clear:* Bring capacitor voltage below Severe Overvoltage limit, and then cycle KSI.
22	Controller Overtemp Cutback *Reduced drive and brake torque.*	1. See Monitor menu » Controller: Temperature. 2. Controller is performance-limited at this temperature. 3. Controller is operating in an extreme environment. 4. Excessive load on vehicle. 5. Improper mounting of controller.	*Set:* Heatsink temperature exceeded 85°C. *Clear:* Bring heatsink temperature below 85°C.
23	Undervoltage Cutback *Reduced drive torque.*	1. Normal operation. Fault shows that the batteries need recharging. Controller is performance limited at this voltage. 2. Battery parameters are misadjusted. 3. Non-controller system drain on battery. 4. Battery resistance too high. 5. Battery disconnected while driving. 6. See Monitor menu » Battery: Capacitor Voltage. 7. Blown B+ fuse or main contactor did not close.	*Set:* Capacitor bank voltage dropped below the Undervoltage limit (see page 58) with the FET bridge enabled. *Clear:* Bring capacitor voltage above the Undervoltage limit.
24	Overvoltage Cutback *Reduced brake torque.*	1. Normal operation. Fault shows that regen braking currents elevated the battery voltage during regen braking. Controller is performance limited at this voltage. 2. Battery parameters are misadjusted. 3. Battery resistance too high for given regen current. 4. Battery disconnected while regen braking. 5. See Monitor menu » Battery: Capacitor Voltage.	*Set:* Capacitor bank voltage exceeded the Overvoltage limit (see page 58) with the FET bridge enabled. *Clear:* Bring capacitor voltage below the Overvoltage limit.
25	+5V Supply Failure *None, unless a fault action is programmed in VCL.*	1. External load impedance on the +5V supply (pin 26) is too low. 2. See Monitor menu » outputs: 5 Volts and Ext Supply Current.	*Set:* +5V supply (pin 26) outside the +5V±10% range. *Clear:* Bring voltage within range.
26	Digital Out 6 Overcurrent *Digital Output 6 driver will not turn on.*	1. External load impedance on Digital Output 6 driver (pin 19) is too low.	*Set:* Digital Output 6 (pin 19) current exceeded 15 mA. *Clear:* Remedy the overcurrent cause and use the VCL function *Set_DigOut()* to turn the driver on again.

CODE	PROGRAMMER LCD DISPLAY *EFFECT OF FAULT*	POSSIBLE CAUSE	SET/CLEAR CONDITIONS
27	Digital Out 7 Overcurrent *Digital Output 7 driver will not turn on.*	1. External load impedance on Digital Output 7 driver (pin 20) is too low.	*Set:* Digital Output 7 (pin 20) current exceeded 15 mA. *Clear:* Remedy the overcurrent cause and use the VCL function *Set_DigOut()* to turn the driver on again.
28	Motor Temp Hot Cutback *Reduced drive torque.*	1. Motor temperature is at or above the programmed Temperature Hot setting, and the requested current is being cut back. 2. Motor Temperature Control Menu parameters are mis-tuned. 3. See Monitor menu » Motor: Temperature and » Inputs: Analog2. 4. If the application doesn't use a motor thermistor, Temp Compensation and Temp Cutback should be programmed Off.	*Set:* Motor temperature is at or above the Temperature Hot parameter setting. *Clear:* Bring the motor temperature within range.
29	Motor Temp Sensor Fault *MaxSpeed reduced (LOS, Limited Operating Strategy), and motor temperature cutback disabled.*	1. Motor thermistor is not connected properly. 2. If the application doesn't use a motor thermistor, Motor Temp Sensor Enable should be programmed Off. 3. See Monitor menu » Motor: Temperature and » Inputs: Analog2.	*Set:* Motor thermistor input (pin 8) is at the voltage rail (0 or 10V). *Clear:* Bring the motor thermistor input voltage within range.
31	Coil1 Driver Open/Short *ShutdownDriver1.*	1. Open or short on driver load. 2. Dirty connector pins. 3. Bad crimps or faulty wiring.	*Set:* Driver 1 (pin 6) is either open or shorted. This fault can be set only when Main Enable = Off. *Clear:* Correct open or short, and cycle driver.
31	Main Open/Short *ShutdownMotor; ShutdownMainContactor; ShutdownEMBrake; ShutdownThrottle; FullBrake; ShutdownPump.*	1. Open or short on driver load. 2. Dirty connector pins. 3. Bad crimps or faulty wiring.	*Set:* Main contactor driver (pin 6) is either open or shorted. This fault can be set only when Main Enable = On. *Clear:* Correct open or short, and cycle driver
32	Coil2 Driver Open/Short *ShutdownDriver2.*	1. Open or short on driver load. 2. Dirty connector pins. 3. Bad crimps or faulty wiring.	*Set:* Driver 2 (pin 5) is either open or shorted. This fault can be set only when EM Brake Type = 0. *Clear:* Correct open or short, and cycle driver.
32	EMBrake Open/Short *ShutdownEMBrake; ShutdownThrottle; FullBrake.*	1. Open or short on driver load. 2. Dirty connector pins. 3. Bad crimps or faulty wiring.	*Set:* Electromagnetic brake driver (pin 5) is either open or shorted. This fault can be set only when EM Brake Type >0. *Clear:* Correct open or short, and cycle driver.
33	Coil3 Driver Open/Short *ShutdownDriver3.*	1. Open or short on driver load. 2. Dirty connector pins. 3. Bad crimps or faulty wiring.	*Set:* Driver 3 (pin 4) is either open or shorted. *Clear:* Correct open or short, and cycle driver.
34	Coil4 Driver Open/Short *ShutdownDriver4.*	1. Open or short on driver load. 2. Dirty connector pins. 3. Bad crimps or faulty wiring.	*Set:* Driver 4 (pin 3) is either open or shorted. *Clear:* Correct open or short, and cycle driver.

CODE	PROGRAMMER LCD DISPLAY *EFFECT OF FAULT*	POSSIBLE CAUSE	SET/CLEAR CONDITION
35	PD Open/Short *ShutdownPD.*	1. Open or short on driver load. 2. Dirty connector pins. 3. Bad crimps or faulty wiring.	*Set:* Proportional driver (pin 2) is either open or shorted. *Clear:* Correct open or short, and cycle driver.
36	Encoder Fault *ShutdownEMBrake;* *ShutdownThrottle.*	1. Motor encoder failure. 2. Bad crimps or faulty wiring. 3. See Monitor menu » Motor: Motor RPM.	*Set:* Motor encoder phase failure detected. *Clear:* Cycle KSI.
37	Motor Open *ShutdownMotor;* *ShutdownMainContactor;* *ShutdownEMBrake;* *ShutdownThrottle;* *FullBrake;* *ShutdownPump.*	1. Motor phase is open. 2. Bad crimps or faulty wiring.	*Set:* Motor phase U, V, or W detected open. *Clear:* Cycle KSI.
38	Main Contactor Welded *ShutdownMotor;* *ShutdownMainContactor;* *ShutdownEMBrake;* *ShutdownThrottle;* *FullBrake;* *ShutdownPump.*	1. Main contactor tips are welded closed. 2. Motor phase U or V is disconnected or open. 3. An alternate voltage path (such as an external precharge resistor) is providing a current to the capacitor bank (B+ connection terminal).	*Set:* Just prior to the main contactor closing, the capacitor bank voltage (B+ connection terminal) was loaded for a short time and the voltage did not discharge. *Clear:* Cycle KSI
39	Main Contactor Did Not Close *ShutdownMotor;* *ShutdownMainContactor;* *ShutdownEMBrake;* *ShutdownThrottle;* *FullBrake;* *ShutdownPump.*	1. Main contactor did not close. 2. Main contactor tips are oxidized, burned, or not making good contact. 3. External load on capacitor bank (B+ connection terminal) that prevents capacitor bank from charging. 4. Blown B+ fuse.	*Set:* With the main contactor commanded closed, the capacitor bank voltage (B+ connection terminal) did not charge to B+. *Clear:* Cycle KSI.
41	Throttle Wiper High *ShutdownThrottle.*	1. See Monitor menu » Inputs: Throttle Pot. 2. Throttle pot wiper voltage too high.	*Set:* Throttle pot wiper (pin 16) voltage is higher than the high fault threshold (can be changed with the VCL function *Setup_Pot_Faults()*). *Clear:* Bring throttle pot wiper voltage below the fault threshold.
42	Throttle Wiper Low *ShutdownThrottle.*	1. See Monitor menu » Inputs: Throttle Pot. 2. Throttle pot wiper voltage too low.	*Set:* Throttle pot wiper (pin 16) voltage is lower than the low fault threshold (can be changed with the VCL function *Setup_Pot_Faults()*). *Clear:* Bring throttle pot wiper voltage above the fault threshold.
43	Pot2 Wiper High *FullBrake.*	1. See Monitor menu » Inputs: Pot2 Raw. 2. Pot2 wiper voltage too high.	*Set:* Pot2 wiper (pin 17) voltage is higher than the high fault threshold (can be changed with the VCL function *Setup_Pot_Faults()*). *Clear:* Bring Pot2 wiper voltage below the fault threshold.

CODE	PROGRAMMER LCD DISPLAY *EFFECT OF FAULT*	POSSIBLE CAUSE	SET/CLEAR CONDITIONS
44	Pot2 Wiper Low *FullBrake.*	1. See Monitor menu » Inputs: Pot2 Raw. 2. Pot2 wiper voltage too low.	*Set:* Pot2 wiper (pin 17) voltage is lower than the low fault threshold (can be changed with the VCL function *Setup_Pot_Faults()*). *Clear:* Bring Pot2 wiper voltage above the fault threshold.
45	Pot Low Overcurrent *ShutdownThrottle;* *FullBrake.*	1. See Monitor menu » Outputs: Pot Low. 2. Combined pot resistance connected to pot low is too low.	*Set:* Pot low (pin 18) current exceeds 10mA. *Clear:* Clear pot low overcurrent condition and cycle KSI.
46	EEPROM Failure *ShutdownMotor;* *ShutdownMainContactor;* *ShutdownEMBrake;* *ShutdownThrottle;* *ShutdownInterlock;* *ShutdownDriver1;* *ShutdownDriver2;* *ShutdownDriver3;* *ShutdownDriver4;* *ShutdownPD;* *FullBrake;* *ShutdownPump.*	1. Failure to write to EEPROM memory. This can be caused by EEPROM memory writes initiated by VCL, by the CAN bus, by adjusting parameters with the programmer, or by loading new software into the controller.	*Set:* Controller operating system tried to write to EEPROM memory and failed. *Clear:* Download the correct software (OS) and matching parameter default settings into the controller and cycle KSI.
47	HPD/Sequencing Fault *ShutdownThrottle.*	1. KSI, interlock, direction, and throttle inputs applied in incorrect sequence. 2. Faulty wiring, crimps, or switches at KSI, interlock, direction, or throttle inputs. 3. See Monitor menu » Inputs.	*Set:* HPD (High Pedal Disable) or sequencing fault caused by incorrect sequence of KSI, interlock, direction, and throttle inputs. *Clear:* Reapply inputs in correct sequence.
47	Emer Rev HPD *ShutdownThrottle;* *ShutdownEMBrake.*	1. Emergency Reverse operation has concluded, but the throttle, forward and reverse inputs, and interlock have not been returned to neutral.	*Set:* At the conclusion of Emergency Reverse, the fault was set because various inputs were not returned to neutral. *Clear:* If EMR_Interlock = On, clear the interlock, throttle, and direction inputs. If EMR_Interlock = Off, clear the throttle and direction inputs.
49	Parameter Change Fault *ShutdownMotor;* *ShutdownMainContactor;* *ShutdownEMBrake;* *ShutdownThrottle;* *FullBrake;* *ShutdownPump.*	1. This is a safety fault caused by a change in certain parameter settings so that the vehicle will not operate until KSI is cycled. For example, if a user changes the Throttle Type this fault will appear and require cycling KSI before the vehicle can operate.	*Set:* Adjustment of a parameter setting that requires cycling of KSI. *Clear:* Cycle KSI.
51–67	OEM Faults *(See OEM documentation.)*	1. These faults can be defined by the OEM and are implemented in the application-specific VCL code. See OEM documentation.	*Set:* See OEM documentation. *Clear:* See OEM documentation.

CODE	PROGRAMMER LCD DISPLAY *EFFECT OF FAULT*	POSSIBLE CAUSE	SET/CLEAR CONDITIONS
68	VCL Run Time Error *ShutdownMotor; ShutdownMainContactor; ShutdownEMBrake; ShutdownThrottle; ShutdownInterlock; ShutdownDriver1; ShutdownDriver2; ShutdownDriver3; ShutdownDriver4; ShutdownPD; FullBrake; ShutdownPump.*	1. VCL code encountered a runtime VCL error. 2. See Monitor menu » Controller: VCL Error Module and VCL Error. This error can then be compared to the runtime VCL module ID and error code definitions found in the specific OS system information file.	*Set:* Runtime VCL code error condition. *Clear:* Edit VCL application software to fix this error condition; flash the new compiled software and matching parameter defaults; cycle KSI.
69	External Supply Out of Range *None, unless a fault action is programmed in VCL.*	1. External load on the 5V and 12V supplies draws either too much or too little current. 2. Fault Checking Menu parameters Ext Supply Max and Ext Supply Min are mis-tuned. 3. See Monitor menu » Outputs: Ext Supply Current.	*Set:* The external supply current (combined current used by the 5V supply [pin 26] and 12V supply [pin 25]) is either greater than the upper current threshold or lower than the lower current threshold. The two thresholds are defined by the External Supply Max and External Supply Min parameter settings (page 53). *Clear:* Bring the external supply current within range.
71	OS General *ShutdownMotor; ShutdownMainContactor; ShutdownEMBrake; ShutdownThrottle; ShutdownInterlock; ShutdownDriver1; ShutdownDriver2; ShutdownDriver3; ShutdownDriver4; ShutdownPD; FullBrake; ShutdownPump.*	1. Internal controller fault.	*Set:* Internal controller fault detected. *Clear:* Cycle KSI.
72	PDO Timeout *ShutdownThrottle; CAN NMT State set to Pre-operational.*	1. Time between CAN PDO messages received exceeded the PDO Timeout Period.	*Set:* Time between CAN PDO messages received exceeded the PDO Timeout Period. *Clear:* Cycle KSI or receive CAN NMT message.
73	Stall Detected *ShutdownEMBrake; ShutdownThrottle; Control Mode changed to LOS (Limited Operating Strategy).*	1. Stalled motor. 2. Motor encoder failure. 3. Bad crimps or faulty wiring. 4. Problems with power supply for the motor encoder. 5. See Monitor menu » Motor: Motor RPM.	*Set:* No motor encoder movement detected. *Clear:* Either cycle KSI, or detect valid motor encoder signals while operating in LOS mode and return Throttle Command = 0 and Motor RPM = 0.
74	Fault On Other Traction Controller	Dual Drive fault: see Dual Drive manual.	
75	Dual Severe Fault	Dual Drive fault: see Dual Drive manual.	

CODE	PROGRAMMER LCD DISPLAY *EFFECT OF FAULT*	POSSIBLE CAUSE	SET/CLEAR CONDITIONS
77	Supervisor Fault *ShutdownMotor;* *ShutdownMainContactor;* *ShutdownEMBrake;* *ShutdownThrottle;* *ShutdownInterlock;* *ShutdownDriver1;* *ShutdownDriver2;* *ShutdownDriver3;* *ShutdownDriver4;* *ShutdownPD;* *FullBrake;* *ShutdownPump.*	1. The Supervisor has detected a mismatch in redundant readings. 2. Internal damage to Supervisor microprocessor. 3. Switch inputs allowed to be within upper and lower thresholds for over over 100 milliseconds.	*Set:* Mismatched redundant readings; damaged Supervisor; illegal switch inputs. *Clear:* Check for noise or voltage drift in all switch inputs; check connections; cycle KSI.
78	Supervisor Incompatible *ShutdownMotor;* *ShutdownMainContactor;* *ShutdownEMBrake;* *ShutdownThrottle;* *ShutdownInterlock;* *ShutdownDriver1;* *ShutdownDriver2;* *ShutdownDriver3;* *ShutdownDriver4;* *ShutdownPD;* *FullBrake;* *ShutdownPump.*	1. The main OS is not compatible with the Supervisor OS.	*Set:* Incompatible software. *Clear:* Load properly matched OS code or update the Supervisor code; cycle KSI.
87	Motor Characterization Fault *ShutdownMotor;* *ShutdownMainContactor;* *ShutdownEMBrake;* *ShutdownThrottle;* *FullBrake;* *ShutdownPump.*	1. Motor characterization failed during characterization process. See Monitor menu » Controller: Motor Characterization Error for cause: 0=none 1=encoder signal seen, but step size not determined; set Encoder Step Size manually 2=motor temp sensor fault 3=motor temp hot cutback fault 4= controller overtemp cutback fault 5=controller undertemp cutback fault 6=undervoltage cutback fault 7=severe overvoltage fault 8=encoder signal not seen, or one or both channels missing 9=motor parameters out of characterization range.	*Set:* Motor characterization failed during the motor characterization process. *Clear:* Correct fault; cycle KSI.

CODE	PROGRAMMER LCD DISPLAY *EFFECT OF FAULT*	POSSIBLE CAUSE	SET/CLEAR CONDITIONS
88	Encoder Pulse Error *ShutdownMotor;* *ShutdownMainContactor;* *ShutdownEMBrake;* *ShutdownThrottle;* *ShutdownInterlock;* *ShutdownDriver1;* *ShutdownDriver2;* *ShutdownDriver3;* *ShutdownDriver4;* *ShutdownPD;* *FullBrake;* *ShutdownPump.*	1. Encoder Steps parameter does not match the actual motor encoder.	*Set:* Motor lost IFO control and accelerated without throttle command. *Clear:* Ensure the Encoder Steps parameter matches the actual encoder; cycle KSI.
89	Motor Type Fault *ShutdownMotor;* *ShutdownMainContactor;* *ShutdownEMBrake;* *ShutdownThrottle;* *FullBrake;* *ShutdownPump.*	1. The Motor_Type parameter value is out of range.	*Set:* Motor_Type parameter is set to an illegal value. *Clear:* Set Motor_Type to correct value and cycle KSI.
91	VCL/OS Mismatch *ShutdownMotor;* *ShutdownMainContactor;* *ShutdownEMBrake;* *ShutdownThrottle;* *ShutdownInterlock;* *ShutdownDriver1;* *ShutdownDriver2;* *ShutdownDriver3;* *ShutdownDriver4;* *ShutdownPD;* *FullBrake;* *ShutdownPump.*	1. The VCL software in the controller does not match the OS software in the controller.	*Set:* VCL and OS software do not match; when KSI cycles, a check is made to verify that they match and a fault is issued when they do not. *Clear:* Download the correct VCL and OS software into the controller.
92	EM Brake Failed to Set *ShutdownEMBrake;* *ShutdownThrottle.* *Position Hold is engaged when Interlock=On.*	1. Vehicle movement sensed after the EM Brake has been commanded to set. 2. EM Brake will not hold the motor from rotating.	*Set:* After the EM Brake was commanded to set and time has elapsed to allow the brake to fully engage, vehicle movement has been sensed. *Clear:* Activate the throttle.
93	Encoder LOS (Limited Operating Strategy) *Enter LOS control mode.*	1. Limited Operating Strategy (LOS) control mode has been activated, as a result of either an Encoder Fault (Code 36) or a Stall Detect Fault (Code 73). 2. Motor encoder failure. 3. Bad crimps or faulty wiring. 4. Vehicle is stalled.	*Set:* Encoder Fault (Code 36) or Stall Detect Fault (Code 73) was activated, and Brake or Interlock has been applied to activate LOS control mode, allowing limited motor control. *Clear:* Cycle KSI **or**, if LOS mode was activated by the Stall Fault, clear by ensuring encoder senses proper operation, Motor RPM = 0, and Throttle Command = 0.
94	Emer Rev Timeout *ShutdownEMBrake;* *ShutdownThrottle.*	1. Emergency Reverse was activated and concluded because the EMR Timeout timer has expired. 2. The emergency reverse input is stuck On.	*Set:* Emergency Reverse was activated and ran until the EMR Timeout timer expired. *Clear:* Turn the emergency reverse input Off.

CODE	PROGRAMMER LCD DISPLAY *EFFECT OF FAULT*	POSSIBLE CAUSE	SET/CLEAR CONDITIONS
98	Illegal Model Number *ShutdownMotor;* *ShutdownMainContactor;* *ShutdownEMBrake;* *ShutdownThrottle;* *FullBrake;* *ShutdownPump.*	1. Model_Number variable contains illegal value. For 1234E/36E/38E models, a value other than 1234, 1236, 1238, or 1298 is illegal. For 1232E models, a value other than 1232 is illegal. 2. Software and hardware do not match. 3. Controller defective.	*Set:* Illegal Model_Number variable; when KSI cycles, a check is made to confirm a legal Model_Number, and a fault is issued if one is not found. *Clear:* Download appropriate software for your controller model.
99	Dualmotor Parameter Mismatch	Dual Drive fault: see Dual Drive manual.	

5. Accumulator

Battery shape as shown in Figure 2-31.

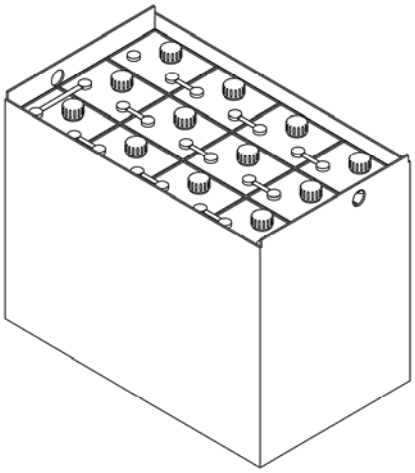

Figure 2-31 Battery

5.1 Accumulator safety precautions:

△ Appropriate ventilation measures shall be adopted because hydrogen and oxygen will be generated at the end of the accumulator charging process. If spark occur during the process, explosion may be caused.

△ Harmful acid mist will also be generated during charging. Remove the mist promptly after charging and clean up the accumulator and the charging place promptly.

△ Please wear protective glasses and rubber gloves when charging the accumulator as it contains sulfuric acid. Careless use may cause skin burns and loss of vision. If you splash electrolyte (acid) in your eyes or skin, immediately wash with plenty of water and visit a doctor for treatment. Electrolyte on clothes can be washed off with water.

△ People who are not familiar with the operating method of the accumulator and its dangerousness shall not use the accumulator, so as to avoid harm to personnel caused by the dilute sulfuric acid.

△ Never place any metal objects or tools on the accumulator to eliminate the danger of short-circuit.

△ Unplug the power connector of the accumulator only when power is fully turned off. Hot plugging is strictly prohibited.

△ Before installing the accumulator, please read the instruction manual carefully. After reading, please keep it with you for future reference.

5.2 Accumulator use precautions

Service life of the accumulator is generally 2 to 3 years, or even 4 years if it can be properly used and maintained. In case of the improper use and maintenance, it may suffer early damage in a few months since initial use.

During use of the accumulator, users should regularly check the electrolyte level and the remaining accumulator capacity. Recharge the accumulator if necessary. Accumulator maintenance is relatively simple, but requires patience and meticulousness. Timely supplementing and density control of the electrolyte as well as cleanup of accumulator and polarity terminals can effectively extend the service life of accumulator.

Check if there is water in the accumulator box and drain the water immediately if any.

In addition, the accumulator should not be stored with electrolyte in it. In case of short-term storage of a fully charged accumulator, please charge the it every month during the storage period to compensate for self-discharge of the accumulator, preventing vulcanization of accumulator plate or eliminating minor vulcanization of the accumulator plates. Plus, users shall check the accumulator status frequently during the storage period.

If the accumulator is being used, please conduct a fully discharge together with a fully charge each month. This could help maintain accumulator capacity and avoid plate salvation.

Please keep the external surface of the accumulator clean.

Check the accumulator and the fixing status of wire leads. There should be no looseness.

Check the accumulator case for cracking and damage and then check the pole and lead chuck to see if they are burnt.

Wipe clean dust on the external surface of the accumulator with a cloth. If electrolyte overflows to the surface, please wipe with a cloth or rinse with hot water and wipe it dry with a cloth. Remove dirt and oxides on the post piling and wipe clean the external of lead cable and lead chuck. Unblock and clean up the vent on the filler cap. During the installation process, apply a thin layer of industrial Vaseline on the pole and lead chuck.

Check the accumulator fluid level:

Vertically insert a glass tube with a diameter of 6 ~ 8mm and length of 150mm into the filler until reaching the upper edge of the plate. Then press the upper end of the tube with thumb and clip out the glass tube with the index finger, middle finger and ring finger. The height of the electrolyte within the tube is the height of electrolyte above the plate accumulator surface, which should be 15-25mm. Finally, return the electrolyte to the original single-cell accumulator.

Add electrolyte

If the electrolyte level is too low, distilled water should be promptly added other than tap water, river water or well water, so as to avoid failure of self-discharge caused by impurities. Plus, do not add electrolyte, otherwise the electrolyte concentration will increase, shortening the accumulator life. Note that the electrolyte level can not be too high in order to prevent spill-over of the electrolyte during charging and discharging process that may cause short circuit. After adjusting the electrolyte level, charge the accumulator for 0.5 hours or more to well mix the added distilled water with the original electrolyte. Otherwise, the interal parts of the accumulator tend to be frozen in winter.

Check the electrolyte density

The electrolyte density varies with the different degree of accumulator charging and discharging. Drop of the electrolyte density is an indication of accumulator discharging. To measure the electrolyte density in each cell is a manifestation of the accumulator discharge level.

(1) Measurement method: Remove the liquid filler cap in the single cells in the accumulator, and draw the electrolyte from the liquid filler cap with a density meter, until the float of density meter floats up. When observing the readings, you should raise the density meter to a position that flush with your eye sight, and put the float in the center of the glass tube without touching the tube wall, so as not to affect the accuracy of reading.

If the temperature is below 25 ℃ or higher than 25 ℃, a thermometer should be used to measure the actual temperature of the electrolyte for correcting the value of electrolyte density.

(2) Correction of electrolyte density: errors exist in the density of the electrolyte at different temperatures, so the electrolyte density value shall be corrected accordingly. Electrolyte density at

https://truckmanualshub.com/

25 ℃ shall be used as the benchmark. Therefore, if the electrolyte temperature is higher than 25 ℃, you should add 0.0007 to the actual measured value of density for an increase in temperature by 1 ℃; In contrast, if the electrolyte temperature is lower than 25 ℃, subtract the density by 0.0007 when the temperature decrease by 1 ℃; If the temperature difference is large, the density value shall be corrected by the following formula:

Density of electrolyte under standard temperature (25 ℃) can be converted by the following formula:

D25 = Dt + 0.0007(t - 25)

D25 — Electrolyte density when the temperature is 25 ℃

D25 — Measured electrolyte density when the temperature is t ℃

t — The electrolyte temperature when measuring the density

5.3 Charging of the accumulator

(1) Initial charge (generally initial charge has been conducted to the products before leaving the factory, so users could omit this operation)

The quality of initial charge would greatly impact the future performance of accumulator. So initial charge shall be conducted by experienced operators.

Initial charge should be carried out to new accumulators before use.

You should wipe clean the surface of the accumulator and check for damage before the initial charge.

Open the cover on the liquid filler to ensure that the vent is unblocked.

When the charger is under normal working conditions, you could fill sulfuric acid electrolyte with density of 1.26±0.005 (25 ℃) and temperature below 30 ℃ into the accumulator. In this case, liquid level shall be 15 ～ 25mm higher than the protection plate.

Place the accumulator aside for 3 to 4 hours, but ensure the time will never be more than 8 hours. Conduct initial charge only after liquid temperature is reduced to below 35 ℃. If the electrolyte level reduces after standing down, you should add electrolyte to it original level.

Sulfuric acid electrolyte shall be prepared by mixing the accumulator acid and distilled water according to national standard GB4554-84 (never use industrial sulfuric acid and tap water).

⚠**Warning:During preparation, please slowly fill the concentrated sulfuric acid into the distilled water by trickle and continuously stir with a acid-proof glass rod or with a lead covered wood stick. Filling of distilled water into the sulfuric acid is not allowed, otherwise it will cause boiling and splashing of solution, resulting in burning.**

Connect the accumulator with the charger correctly in terms of polarity in a reliable manner, namely, ensure ro connect positive to positive and negative to negative.

For the first phase of initial charge, please use 0.5I5A (60A for D-600 accumulator) until the voltage of a single cell reaches 2.4V. Then we could shift to the second phase of initial charge;

For the second phase of the initial charge, you could use 0.25I5A (30A for D-600 accumulator) for charging；

The temperature of the electrolyte shall not exceed 45 ℃ during charging. Reduce the charge current by half or suspend the charge when the temperature is close to 45 ℃. Continue charging after the electrolyte temperature drops to below 35 ℃. In this case, the charging time shall be extended appropriatly;

Evidence of fully charged: In the second stage of the initial charging, charging voltage will be up to 2.6V and the voltage change shall be less than 0.005V; When electrolyte density is 1.28 ± 0.005 (25 ℃) , if there is no significant change within 2 hours and fine bubbles emerges intensely, the accumulator can be considered fully charged. The charging power is 4 to 5 times of the rated capacity and the charging time is about 70 hours;

In order to accurately control the content of sulfuric acid in the electrolyte, the density of the electrolyte should be checked at the end of the charging process; In case of any

discrepancy, please use distilled water or sulfuric acid with density of 1.40 to adjust. Ensure the electrolyte density and height level is adjusted to the specified value within 2 hours since the charging starts;

Wipe clean the accumulator surface and cover the filler cap before putting into use.

（(2) General Charge

Do not use accumulator that is not fully charged. Users should pay close attention to the discharge level of accumulator during use. If the discharge level exceeds the set value, conduct charge in time. Excessive discharge is strictly forbidden. When the voltage drops o 1.7V / cell, electrolyte density decreases to 1.17, stop discharge timely and conduct charge soon. Never delay charging for a long time. Don't stop halfway without reason during the charging process.

When conducting general charge, first open the flip cover on the filler cap cover and check whether the electrolyte height meet requirements. If not, please fill distilled water to adjust the liquid level to the required height.

Connect the output of the charger with the accumulator in accordance with the requirements. Connect positive to positive and negative to negative. Pay attention not to connect it reversed.

The charger compatible with the accumulator could automatically regulate the charging current according to the charging capacity and conduct charging until the accumulator is fully charged. (Please refer to the manual of charger for details on observation of the charging state)

In order to keep the accumulator status updated, it is recommended to record each charge and discharge conducted for each accumulator, so as to provide useful basis for determining whether or not the accumulator in the future or not. During the charging process, measure and record the current, total voltage, voltage of each single cell(the cells shall be numbered) , changes in the electrolyte density and temperature (measure with a 0 ~ 100 ℃ mercury thermometer) every 1-2 hour .

If large quantities of even and fine bubbles come into being, voltage of single cell is stabilized at 2.5-2.7V and electrolyte density and terminal voltage stops rising in 2-3 hours, then it can be determined that the accumulator is fully charged. If any cells have no or few bubbles, try to find out the reasons and fix the problem. Then record it in your work log.

Electrolyte temperature shall not exceed 45 ℃ during the charging process. The temperature of the electrolyte during charging shall not exceed 45℃. Suspend charging if the temperature is close to 45 ℃ and continue charging when the electrolyte temperature drops to below 35℃.

When the accumulator charging comes to end, the electrolyte density of the accumulator shall be checked and adjusted. If the electrolyte density fails to meet the requirements, draw some electrolyte from the original cells. If it is less denser than normal, fill concentrated electrolyte with density of 1.40 for adjustment; if it is denser than normal, dilute it by adding distilled water. After adjustment, the difference of electrolyte density of cells should not exceed 0.01 and the liquid level should meet relevant requirements. After adjusting the density, you could continue to charge with small current for 0.5 hours to mix the electrolyte. Then review the electrolyte density and adjust it if necessary. Finally, wipe clean and mount the accumulator for future use.

3）Balanced recharging

Under normal circumstances, although all the accumulator cells run under the same situation, but for some reasons, imbalance in the entire accumulator may occur. In such case, balanced recharging should be conducted to eliminate the charge difference between the accumulator cells, so as to achieve a balanced charging between all cells of the battery. Balanced recharging is simple and users can operate according to the instructions.

Perform balanced recharging to the accumulator once every two or three months during normal use. accumulators that are left unused for a long time should be charged before use.

5.4 Installation and replacement of the accumulator

Perform installation and replacement of batteries in a fixed and reliable manner to avoid tipping; Beating on the polar column and lead chuck with a tool is strictly forbidden; in the handling process, pay attention to avoid strong impact.

6. Hydraulic system

6.1 Overview

The hydraulic system consists of working pump, multiple unit valve, lifting cylinder, tilting cylinder, pipelines and other component parts. See figure 2-48

The hydraulic oil will be supplied by the oil pump directly connected with the motor. The multiple unit valve will assign oil to each cylinder.

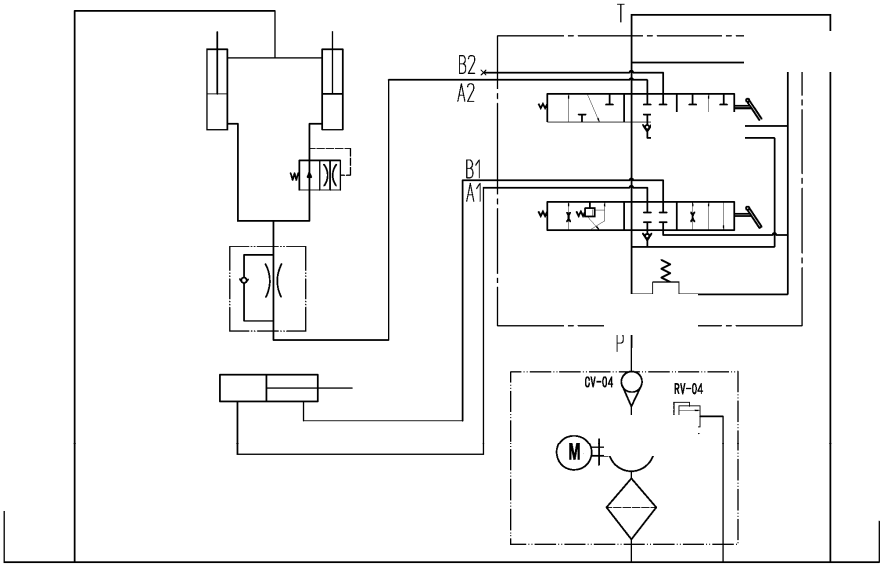

Figure 2-32 Diagram of the hydraulic system

6.2 Oil pump

The oil pump is a gear pump.

6.3 Multiple unit valve

The multiple unit valve includes two four-piece valves. Controlled by the valve rod of the multiple unit valve, the hydraulic oil from the work pump will assign high-pressure oil to the lifting cylinder or tilting cylinder. Safety valve and self-locking valve are installed in the multiple unit valve. Safety valve is located in the upper side of oil inlet in the multiple unit valve to control the system pressure; self-locking valve is located in the tilt valve plate to prevent serious consequences due to misoperation of control lever in case of no pressure source of the tilting cylinder. A check valve is mounted between the oil inlet and the oil abortion hole of the lifting valve plate, as well as between the oil inlet and the oil abortion hole of the lifting valve plate with check valve.

Please see Figure 2-33for the shape of the multiple unit valve.

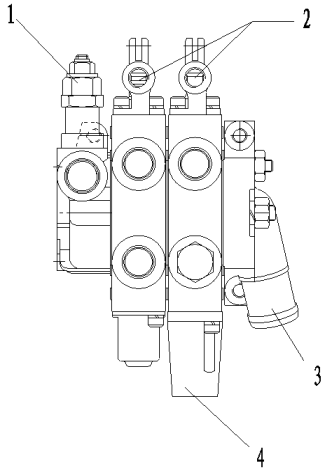

1. Safety valve 2. Microswitch bracket 3. Oil returning hole 4. Lifting speed sensor sets

Figure 2-33Shape of multiple unit valve

(1) Operation of the slide valve (Take tilting slide valve as an example)

(a) Middle position (Figure 2-34)

At this time the high pressure oil discharged from the oil pump will return to the cylinder through the middle position.

(b) Pull in the slide valve (Figure 2-35)

The middle channel is closed at this time, oil from the inlet hole openes the check valve and flow into the cylinder interface B. Oil flows from interface A will flow to the cylinder through the low pressure channel. Then the slide valve can return to the middle position with the help of the return spring.

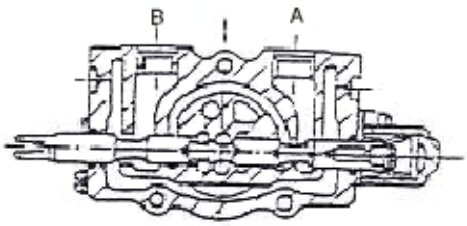

Figure 2-34

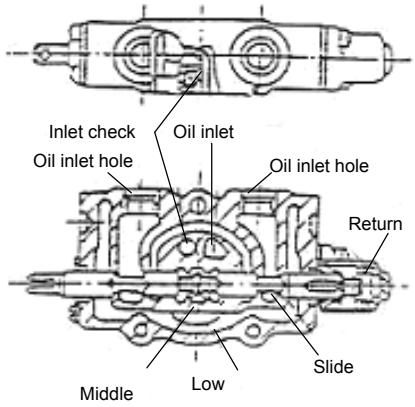

Figure 2-35

(c) Pull out the slide valve (Figure 2-35)

The middle position is closed at this time, oil from the inlet hole openes the check valve and flowes into the cylinder interface A. Oil flows from interface B will flow to the cylinder through the low pressure channel. Then the slide valve can return to the middle position with the help of the return spring.

(2) Action of safety overflow valve (Figure 2-36)

The overflow valve is installed between the "HP" interface of the oil pump and the low-pressure channel "LP". The oil that flows through the lifting valve "C" will acts on the different areas of diameter "A" and "B", so the check valve "K" and overflow lifting valve "D" all land on the valve seat. The preset pressure in the oil pump "HP" channel will act on the spring of pilot valve and the check valve "E" will open. Oil will flow around the valve into the low pressure "LP" side through the open-end hole.

Once the pilot valve "E" is open, the pressure at the inside of valve "C" will decrease and the

valve "E" and valve "C" will both land on the valve seat. Liquid flow at back of the flow valve "D" will be off, so the pressure inside is reduced. Pressure on pump "HP" channel side and the inside pressure are different, the valve "D" will open under the pressure difference and the oil will directly flow into the low pressure loop "LP".

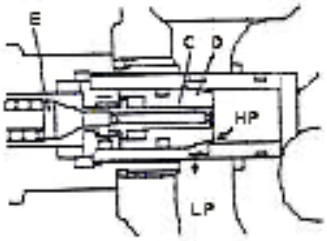

Figure 2-36

(3) Action of the self-locking tilt valve

Self-locking tilt valve is mounted in the tilt cylinder valves. The self-locking valve could prevent sudden fall of the main frame when negative pressure occurs in the cylinder and also eliminate dangers if the valve rod is titled due to misuse. With this self-locking valve, when forklift motor stops working, the main frame will not tilt forward even if the control lever is shoved. Oil flow direction when valve core is pulled out is the same with that shown in Figure 2-35, at which time the main frame is tilting backwards.

(a) When the valve core is inserted (pump is working), oil from the main pump will flow into the tilt cylinder through interface "B", and the oil flowes back from the cylinder will be used to the piston through the role of port A. Oil will return to the cylinder through the holes A and B on the valve core. See Figure 2-37

(b) When the valve core is inserted (pump is not working), there will be no oil that flows into interface "B" of the cylinder, so that the pressure in part P will not increase. Therefore, the piston will not move and oil in the cylinder Interface "A" can not return to the oil cylinder, which won't move. See Figure 2-38

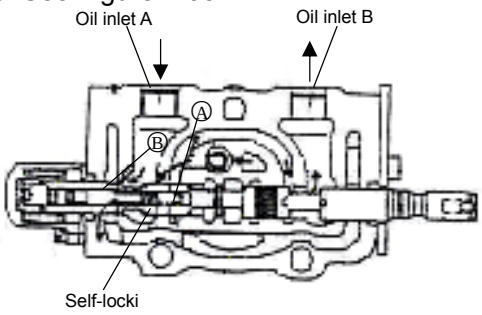

Figure 2-37

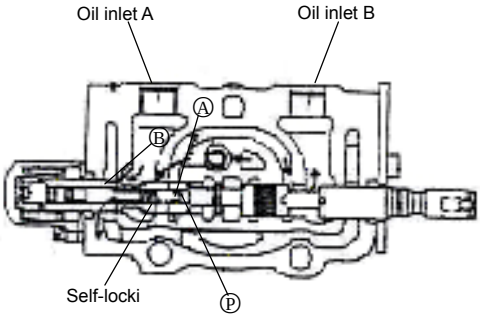

Figure 2-38

(4) Pressure adjustment of the safety valve

The pre-set pressure of the safety valve: 13.5/16.8MPa;

⚠**Attention: Pressure of the safety valve has been set by the manufacturer and users shall not adjust it wilfully.**

6.4 Lifting cylinder and lifting chain （ See figure 2-39）

The lifting cylinder is a single-acting piston cylinder, which consists of the cylinder, piston rod, piston and cylinder head. For the series of forklifts, the two lifting cylinders are installed behind the

outer main frame, with the cylinder bottom fixed on the cylinder bearing with a pin and a bolt. And the top of the cylinder (ie the top of the piston rod) is connected with the beam on the outer door frame.

Cylinder head is fitted with steel bearing and oil seal to support the piston rod and to protect the cylinder from dust.

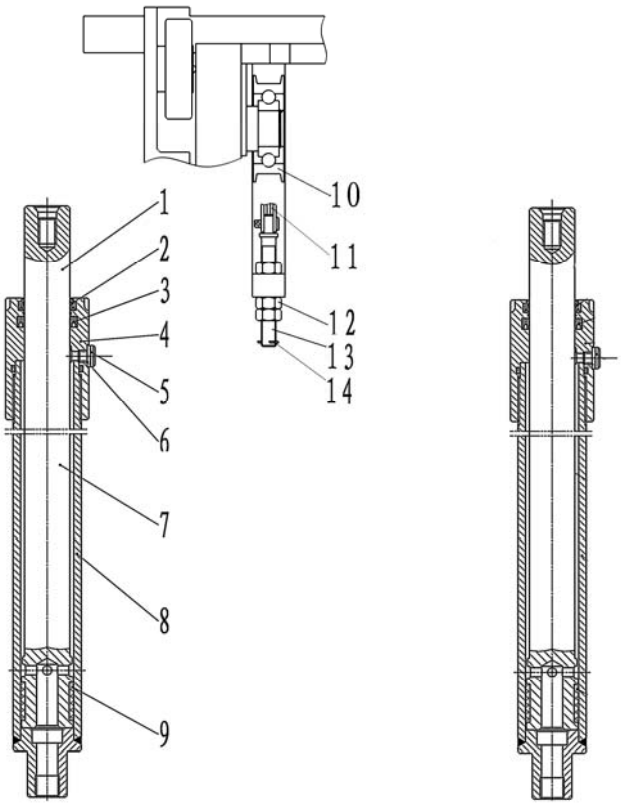

1. Piston rod	2. Dust proof ring	3. Y ring	4. Steel cover	5. Screw
6. Combination washer	7. Piston rod	8. cylinder body	9. ring	10. Chain wheel
11. Chain	12. Nut	13. Chain joint	14. Cotter pin	

Figure 2-39 Lifting cylinder and chain

6.5 Governor valve

The governor valve is installed within the right lifting cylinder to control the decline speed of fork and to ensure safety in case of rupture at high pressure and other unexpected situations. See Figure 2-40 for the connection method.

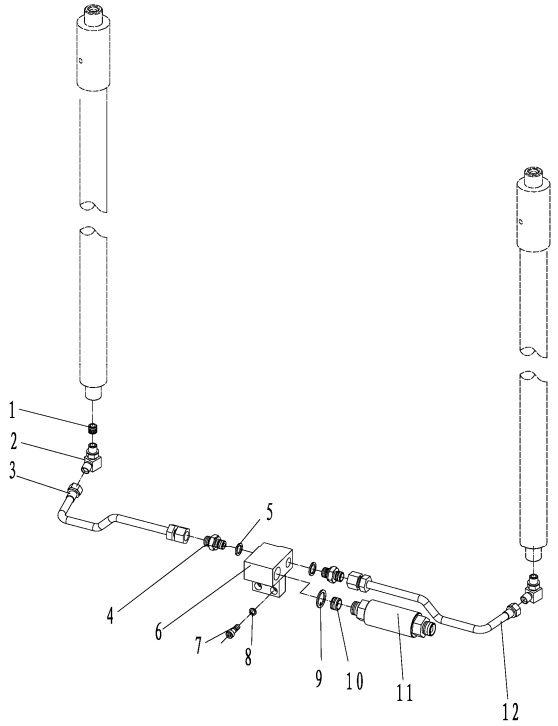

1. anti-explosion valve 2. angle coupling 3. left steel tube 4. Straight joint 5. washer
6. three-way valve 7. bolt 8. washer 9. washer 10. governor valve
11. Straight joint 12. right steel tube

Figure 2-40 Built-in governor valve

6.6 Tilting Cylinder

The tilting oil cylinder is double acting, with its piston rod end connected to the main frame through the earrings. Bottom of the tilting oil cylinder is connected with the frame by pins.
and there is a tilted cylinder at each side of the forklift.

The tilting cylinder is mainly composed by piston, piston rod, cylinder, cylinder bottom, guide sleeve and seals. The piston and piston rod adopt welded structure, with the piston outer surface mounted with a bearing outer ring and two Yx seal rings. In the internal hole of guide sleeve there mounts an axle sleeve, Yx seal ring, retaining ring and dust ring. The shaft sleeve support the piston rod, seals, retaining ring and dust ring that protects from oil spills and dust, all of which are mounted to the cylinder together with the 0-ring. See Figure 2-41

When the tilt sliding valve is pushed forward, the high-pressure oil will flow from the cylinder bottom to push the piston, moving the main frame titling forward. When the slide valve is pulled backwards, the high-pressure oil will flow into from the front end of the cylinder to pull the piston backward, moving the main frame titling backward.

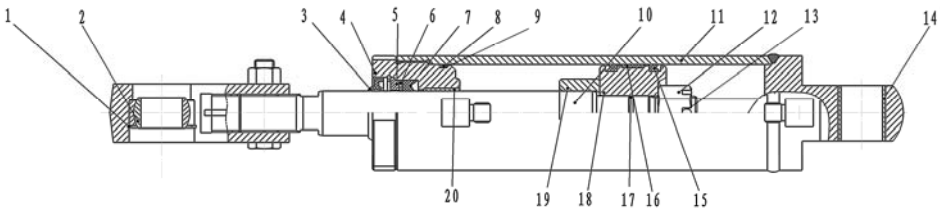

1. Retaining Ring	2. Joint bearings	3. Dust proof ring	4. Cylinder cover	5. Blank
6. Retaining Ring	7. shaft seal	8. O-ring	9. Retaining Ring	10. Piston rod
11. Cylinder	12. Nut	13. Cotter pin	14. Steel-backed bearing	15. Hole sealed
16. Hole with a supporting ring	17.O-ring	18. Piston	19. Adjusted set	20. Steel-backed bearing

Figure 2-41 Tilting oil cylinder

6.7 Maintenance and adjustment

(1) Disassembling

Clean it thoroughly before disassembling. Removed parts should be placed on a clean paper or cloth. Be careful not to make the parts dirty or damaged.

(a) Place the pump flange at the clamp table.

(b) Remove the connecting bolt 11, rear end cover 5 and pump 1.

(c) Remove the liner plate 6, drive gear 2 and passive gear 3.

(d) Remove the seal ring 7 and retaining ring 8 from the front and back end cover.

Note: If you do not plan to replace the seal ring, do not remove it from the front end.

(2) Check

Check the disassembled parts and clean them with gasoline (except rubber parts).

(a) Pump check

If the contact length of pump cavity and gear is greater than 1/2 of the circumference, replace the pump.

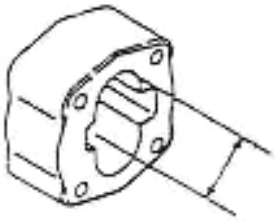

Figure 2-42

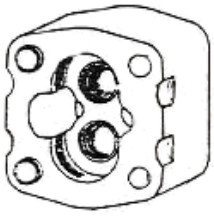

Figure 2-43

(b) Check of liner plate

Check the contact surface of the lining plate and replace it if the surface is damaged or if the lining thickness is less than the specified value. Specified value of the lining thickness: 4.94mm.

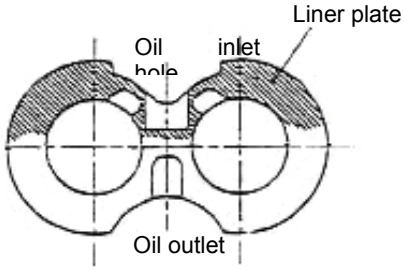

Figure 2-44

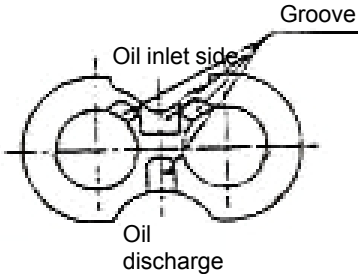

Figure 2-45

(c) Check of the front and rear pump cover

If the inner surface of the bush discolours (turn brown) exceeding the range of 150 °, replace it.

(d) Check of the driving and passive gears

Replace a pair of gears in case of excessive wear. If size of D is less than the specified value, replace in pairs.

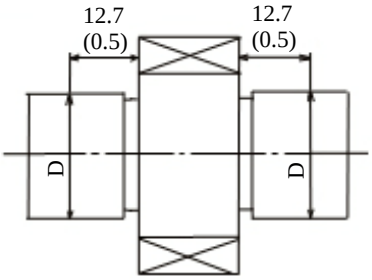

Figure 2-46

(e) If necessary, replace the seal rings, bushing seal, retaining ring, oil seal, spring ring.

(3) Assembly

(a) Mount a new seal ring and a new retainer ring at the front end cover of the pump.

(b) Mount the upper liner plate at the front end cover trench. Be careful not to mis-distinguish the oil abortion hole and the oil discharge hole.

(c) Mount the drive and passive gears on the front end cover.

(d) Mount the liner plate on the gear side to align the groove to the gear points. Be careful not to mis-distinguish oil suction side and oil discharge side.

(e) Mount a new seal ring and a new retainer ring on the groove at the rear-end cover. See Figure 2-65

(f) Mount the rear cover on the pump body and pay attention to distinguish the oil abortion hole and the oil discharge hole.

(g) When all the parts have been installed, tighten the connecting bolts to the specified torque of 9 ~ 10kg.m.

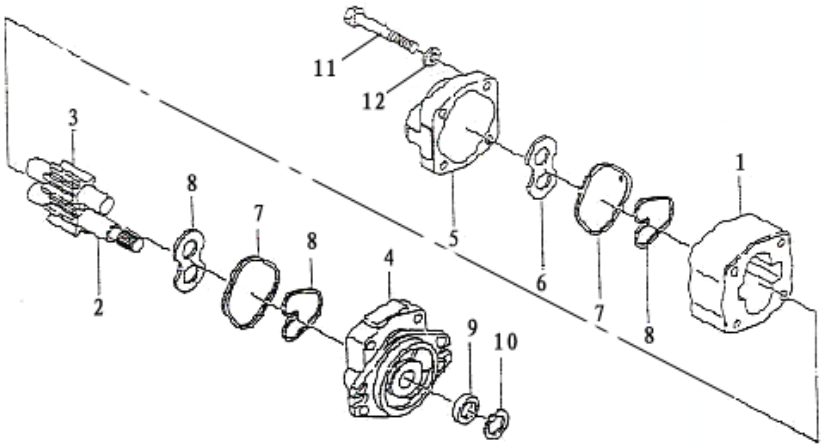

1. Body of pump	2. Driving gear	3. Passive gear	4. Front-end cover
5. Rear-end cover	6. Liner plate	7. Seal ring	8. Retainer ring
9. Oil seal	10. Flexible ring	11. Bolt	12. Washer

Figure 2-47 Gear pump

(4) Test run

Conduct running-in of the pump to check if it functions properly. Then perform oil pump testing on the test bench or test by the following steps on the forklift truck:

(If oil pump is subject to decomposition and maintenance due to serious wear and jamming caused by the hydraulic oil, the hydraulic oil and filter should be replaced before test-running on the forklift.)

(a) Mount the pump onto the forklift and mount the pressure gauge onto the test hole of the

multiple unit valve.

(b) Loosen the adjusting screw of the overflow valve to keep the pump working for 5001000-1000rpm for about 10 minutes. Ensure that the oil pressure is lower than 10kg/cm ².

(c) Increase the pump speed to 1500-2000rpm and keep it running for about 10 minutes.

(d) Set the pump operating speed at 1500-2000rpm. Perform pressure increment of 20-30kg/cm ² and keep it running for 5 minutes after each increase, until the pressure reaches 175kg/cm ². Then keep each oil line working for 5 minutes and replace the oil returning filter.

When increasing the oil pressure, pay attention to the oil temperature, pump surface temperature and the operation sound. If the oil temperature or the pump surface temperature rises excessively, reduce the load to lower the oil temperature before further testing.

(e) After testing, set the overflow pressure at 175kg/cm ² and measure the flow traffic. Determine the flow traffic by measuring lifting speed.

6.8 Failure analysis

If the hydraulic system fails, please find out the causes according to the table below and conduct necessary repairs.

（1）Failure analysis of the multiple unit valve (Table 2-8)

Table 2-8

Fault	Cause	Countermeasures
Pressure of the lifting oil line can't be increased	Jamming of the slide valve	Clean it after disassembling
	Oil hole is blocked	Clean it after disassembling
Vibration Pressure rise is slow	Jamming of the slide valve	Clean it after disassembling
	Inadequate exhaust of air	Full exhaust
Steering oil pressure is greater than the specified value	Jamming of the slide valve	Clean it after disassembling
	Oil hole is blocked	Clean it after disassembling
Less than the required oil volume	Overflow valve is not well adjusted	Adjustment
With noise	Overflow valve is not well adjusted	Adjustment
	Wear of sliding surface	Replace the overflow valve
Leakage (external)	Aging or damage of the O seal ring	Replace the O seal ring
The set pressure is low	The spring is damaged	Replace the spring
	Damage of valve seat surface	Adjust or replace the overflow valve
Leakage (internal)	Damage of valve seat surface	Fix the seat surface
The set pressure is high	Jamming of the valve	Clean it after disassembling

（2）Failure Analysis of the oil pump（Table 2-9）

Table 2-9

Fault	Cause	Countermeasures
Low volume of oil discharge	The oil level in the oil tank is low	Add oil to the specified value
	The tube or filter is blocked	Clean or replace as needed
Low pressure of the pump	●Liner plate damage ●Bearing damage ●Poorly functioned seal ring, bushing seal or retaining	Replace

	ring	
	Overflow valve is not well adjusted	Adjust the pressure of overflow valve to the specified value with a pressure gauge
	There is air within the system	●Re-tighten the side tubing of the oil inlet ●Add oil ●Replace the oil pump seal
With noise when running	The inlet tube is damaged or the filter is blocked	Check the tube or repair oil filter
	Looseness or leakage of the oil inlet	Tighten the loosened parts
	Excessive oil viscosity	Replace the oil with viscosity compatible with the pump operating temperature
	Bubbles in the oil	Find out the cause of bubbles and take measures accordingly
The pump leaks oil	The pump seal or seal ring is damaged	Replace
	Pump is damaged	Replace

7. Lifting system

7.1 Overview

Composed by the inner and outer main frames as well as the forklift frame, the lifting system is a roller vertical elevating system with two levels.

7.2 Outer and inner main frames (Figure 2-48)

Inner and outer main frames are welded structures. The bottom of the outer main frame is installed onto the drive axle by supporting parts.

The central part of the outer main frame is connected with the frame by the tilting cylinder and can tilt forward and backward under the action of the tilting cylinder.

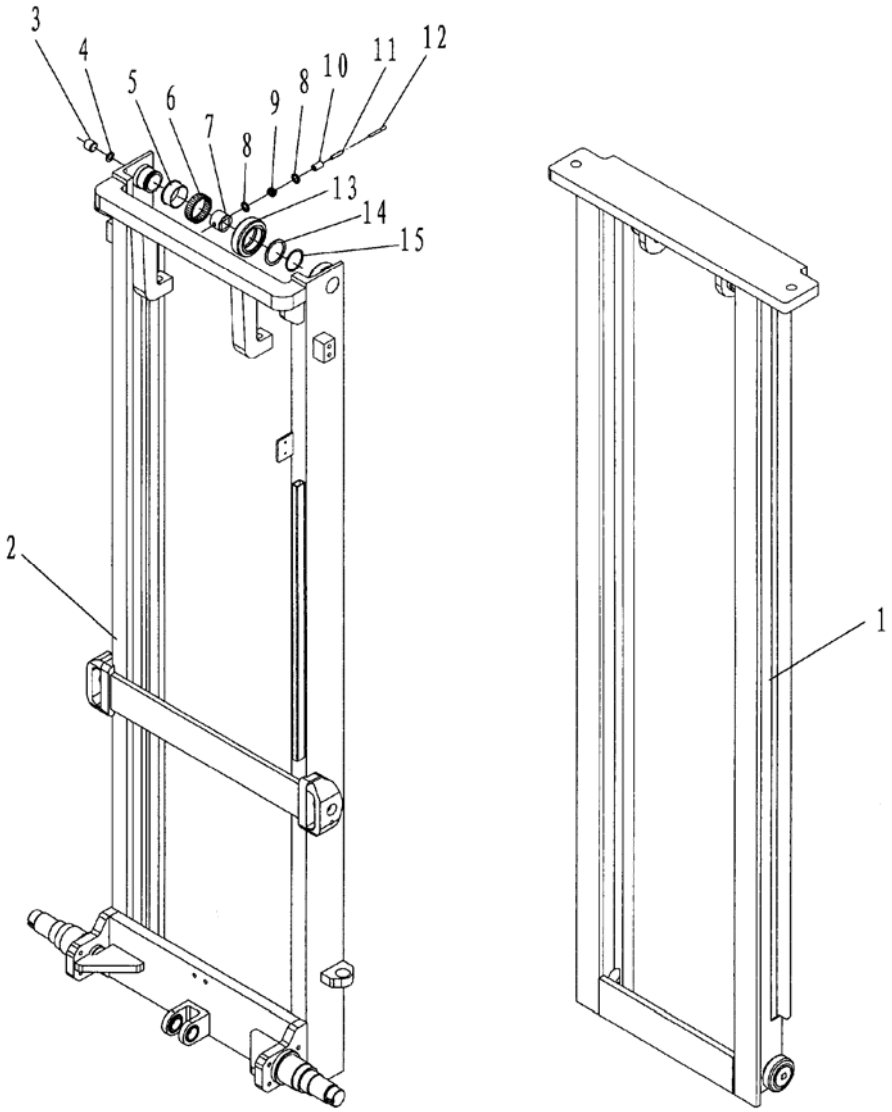

1. Outer main frame	2. Inner main frame	A. Composite roller	3. Adjustment screw
4. Lock washer	5. nner ring roller	6. Roller	7. Side roller base
8. Dust ring	9. Roller pin	10. Side roller pipe axis	11. Outer ring roller
12. Cylindrical pin	13. Outer ring roller	14. Retaining ring	15. Steel washer for shaft

Figure 2-48 Inner and outer main frame

7.3 Forklift frame (Figure 2-49)

Forklift frame will roll within the inner main frame through the main roller, which is mounted onto the main roller shaft and fixed by elastic rings. The main roller shaft is welded onto the fork frame and the side roller is integrated into the adjustable composite roller that rolls along the wing plate of the inner main frame. Use two fixed side rollers to roll along the outside of the wing plate in the inner main frame to eliminate rolling gap. The longitudinal load will be born by the main roller. When the fork rises to its highest level, the top roller will be exposed from the main frame top. Lateral load will be born by the side roller.

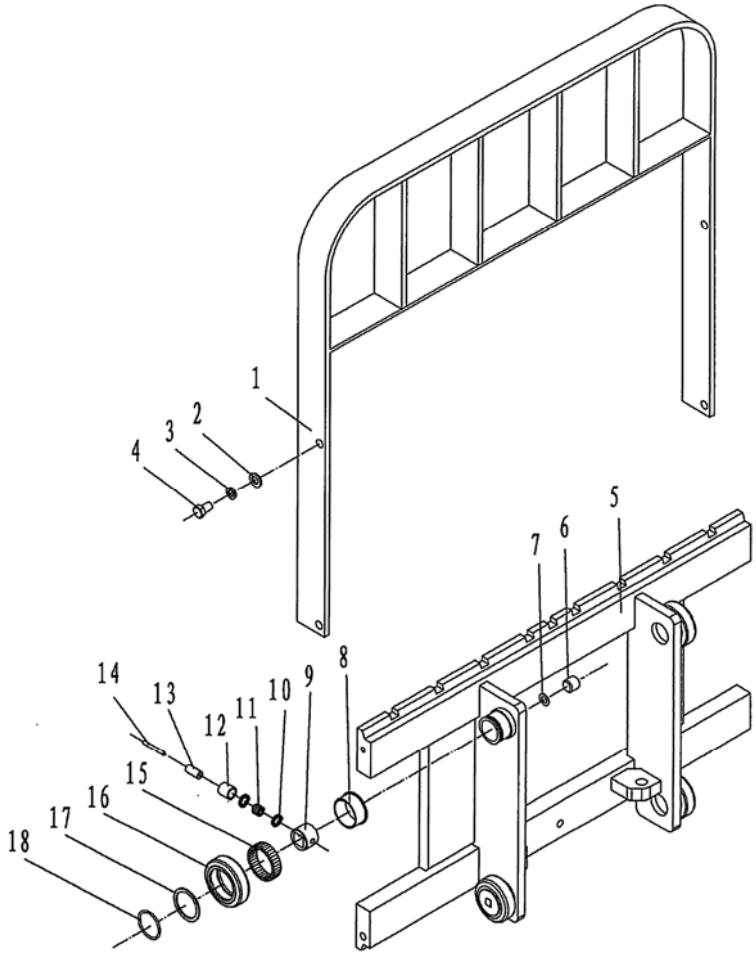

1. Block shelves	2. Washer	3. Spring washer	4. Bolt
5. Carriage	A. Composite roller	6. Adjustment screw.	7. Lock washer
8. Inner ring roller	9. Side roller base	10. Dust ring	11. Roller pin
12. Side roller pipe axis	13. Outer ring roller	14. Cylindrical	15. Roller
16. Outer ring rolle	17. Retaining ring	18. Steel washer for shaft	

Figure 2-49 Fork frame

7.4 Roller position (Figure 2-50)

There are two types of rollers: outer frame composite roller, composite roller of inner frame and fork frame. The two rollers are installed in the outer door frame, inner door frame and fork rack. Composite roller consists of the main roller () and the side roller, with the former bearing loads from the front and rear sides and the latter bearing loads from the side to achieve free movement of the inner door frame and fork frame.

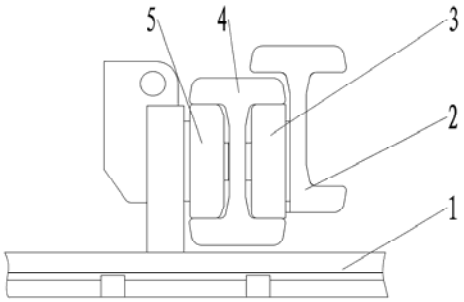

1. Fork frame 2. Outer main frame 3. Composite roller of outer frame 4. Inner main frame 5. Inner frame and composite roller of fork frame

Figure 2-50 Roller position

Note: (a) adjust the clearance of side rollers at 0.5mm;

(b) Apply lubricant oil onto the main roller surface and the contact surface of main frame.

7.5 Maintenance and adjustment

7.5.1 Regulating the lifting cylinder. See Figure 2-51

After disassembling or replacing the lifting cylinder, inner main frame or outer main frame, re-adjust the lifting cylinder stroke. Adjustment method is as follows:

(1) Mount the piston rod without adjusting pad onto the beams of inner main frame.

(2) Slowly lift the main frame to its maximum extent of stretching and check the synchronization of two cylinders.

(3) Add the adjustment pad between the piston rod head of the cylinder and the beam on the inner main frame. Thickness of the pad is 0.2mm or 0.5mm.

(4) Adjust the tightness of the chain.

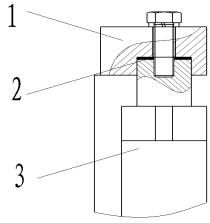

1. Upper beam on the inner main frame 2. Adjustment pad of lifting cylinder 3. Lifting cylinder

Figure 2-51 Regulation of the lifting cylinder

7.5.2 Height adjustment of the fork frame (Figure 2-52)

(1) Park the forklift on level ground and set the main frame vertical.

(2) Lower the fork bottom to make it reach the ground. Then adjust the adjusting nuts on the upper end joint of the chains, so that there will be a certain distance A between main roller and the lower end of the inner main frame

(A=24～29)。

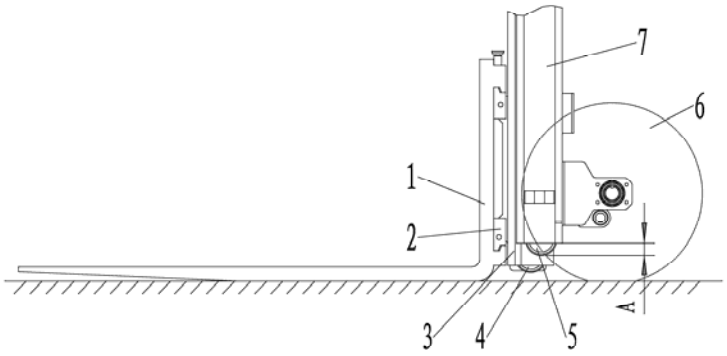

1. Fork assembly 2. Fork frame 3. Inner main frame 4. Composite roller

5. Composite roller 6. Tires 7. Outer main frame

Figure 2-52

(3) Lower the fork to the ground and tilts it backward in place. Adjust the upper end joints of the chain and then regulate the nut to set tightness of the two chains at the same degree.

7.5.3 Change or replace the roller of the fork frame

(1) Place a tray on the forklift and park it on level ground.

(2) Lower the fork and tray down to the ground.

(3) Remove the upper end joint of the chain and remove the chain from the chain wheel.

(4) Lift the inner main frame (① in Figure 2-53)

(5) Reverse the forklift after confirming that the fork frame has been separated from the outer main frame (② in Figure 2-53).

(6) Replace the main roller

(a) Remove all of spring rings and remove the main roller with drawing tools. Pay attention to the adjustment pad.

(b) Confirm that the new roller is the same with the newly replaced one. Mount the new rollers to the fork frame and fix it with an flexible washer.

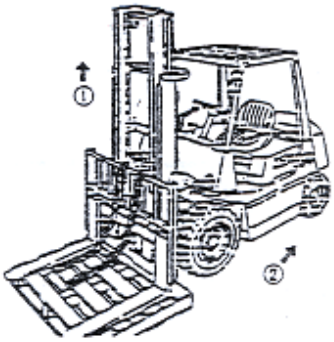

Figure 2-53

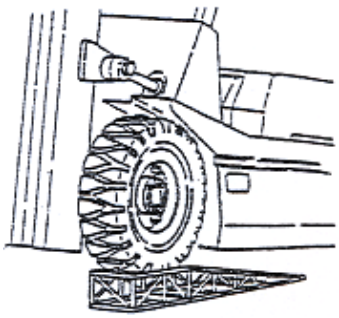

Figure 2-54

7.5.4 Replace the roller of main frame as shown in Figure 2-54

(1) Accoding to the method of replacing fork frame roller as described in 9.5.3, remove the fork frame from the main frame. 9.5.3

(2) Drive the forklift to a level ground and jack up the front wheels for 250-300mm.

(3) Apply the hand brake and put pads under the rear wheels.

(4) Remove the lifting cylinder and the mounting bolts of inner main frame. Lift the inner main frame and be careful not to loose the adjustment pad at head of the piston rod.

https://truckmanualshub.com/

(5) Remove the connecting bolts on the lifting cylinder and at the bottom of the outer main frame, and then remove the lifting cylinder and the tubing between the two cylinders without loosening the pipe joints.

(6) Lower the inner main frame and remove the main roller at the bottom of the inner main frame. The main roller at the upper end of the outer main frame will be exposed out of the inner main frame top.

(7) Replace the main roller.

(a) Remove the main roller at the upper end with drawing tools and keep the adjustment pads appropriately.

(b) Install the new roller and the adjustment pads removed at the (a) step.

(8) Lift the inner main frame until all the rollers enter the main frame.

(9) Mount the lifting cylinder and the fork frame in reverse procedures of removing.

7.6 Installation instruction of accessories

⚠ **If you need to install accessories, please contact our sales department and never install by yourselves.**

8 Removal and installation

8.1 Precautions

(1) Only qualified operator can remove or repair the forklift's parts.

2) Before disassembling and detection operations, park the forklift on a flat ground and wedge the wheels, otherwise accidental movement of the forklift may occur. Meanwhile, set the main switch at the off position and disconnect the accumulator plug.

(3) Before disassembling and testing operations, remove all the rings, watches and other metal objects on your body to avoid accidental short circuit.

(4) Please use the right tools for the disassembling process, and use the specified tools if required.

(5) Please choose an appropriate spreader according to the size and weight of the removed parts, so as to avoid danger.

(6) Be sure to mount sling steadily before lifting to prevent falling of the cargo. Please keep the sling tightened during the lifting process.

(7) When removing a heavy part from the forklift, be careful to keep balance and to avoid damage.

8.2 Lifting points of the detached parts

(1) Lifting description of the lifting system as shown in Figure 2-55

Overall Dimension L×W×H (mm)	Weight (kg)
1255×845×2005	380

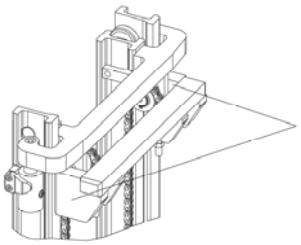

Rings

Figure 2-55

(2) Lifting description of the overhead guard as shown in Figure 2-56

Overall Dimension L×W×H (mm)	Weight (kg)
935×773×1400	40

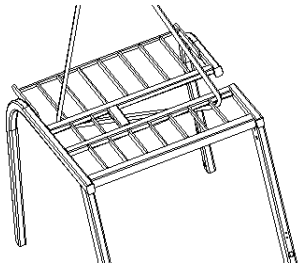

Figure 2-56

(3) Lifting description of the counterbalance as shown in Figure 2-57

⚠ **The lifting ring on the counterbalance can be used to lift the balance weight only. Do not use it for lifting the whole forklift.**

Model	Overall Dimension L×W×H (mm)	Weight (kg)
FE3R06-08	365×845×780	550
FE3R10-12	370×850×875	570

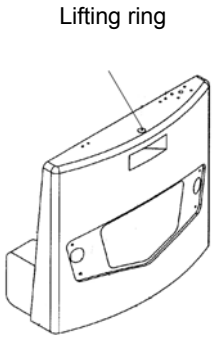

Figure2-57

(4) Lifting description of the accumulator as shown in Figure 2-58

Model	Overall Dimension L×W×H (mm)	Weight (kg)
FE3R06	806×263×680	329
FE3R08	806×263×714	443
FE3R10	808×372×670	500
FE3R12	808×372×670	560

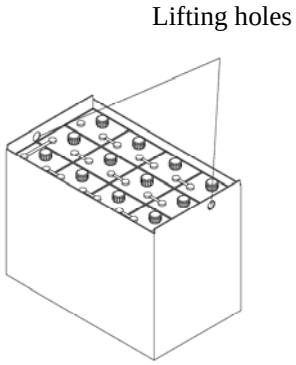

Figure 2-58

⚠ **The accumulator also functions as a counterbalance, so users shall not arbitrarily change it; otherwise the overall balance and other features may be affected**。

Chapter 3 0peration, use and safety of the forklift

Ⅰ. Transportation and test turn

1 lifting

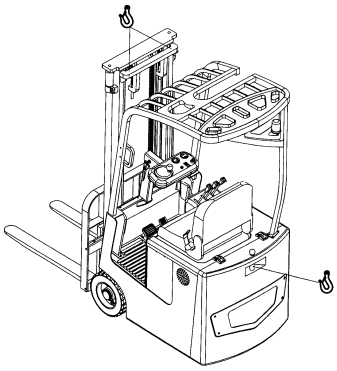

⚠The use of lifting equipment must be large enough to have the bearing capacity (greater than the weight of the forklift; see the nameplate of the forklift).

The lifting point is especially designed for easy transportation of the forklift.

- The forklift parked in a safe location.
- The focus of lifting equipment must be tied to lifting position.
- The mast must tilt back maximum

⚠ Will lifting equipment is tied to the lifting point , make sure that it will not slide back and forth, and not make security frame without stress, and lift again after the protection from liner.

2. Transportion

2.1 Drag the forklift without the function of moving

Move the forklift when the drive function does not work, you can move it only after releasing the electromagnetic brake.

- Press the emergency stop control switch and keep the power switch key in the "OFF" position.
- Open the back cover and battery cover
- Remove the balance weight
- Loosen the three screws on drive motor by counter-clockwise, until the brake does not hinder the movement of forklift, then re-assembled balance.

Now, you can drag forklift.

2.2 Assembly

Sometimes, in order to transport easily, the main frame assembly (1) and fork body (8) is devided. At this moment, you can assemble it according to the following steps, of course, some tools are required, such as lifting equipment, retaining ring pliers, wrenches, etc.

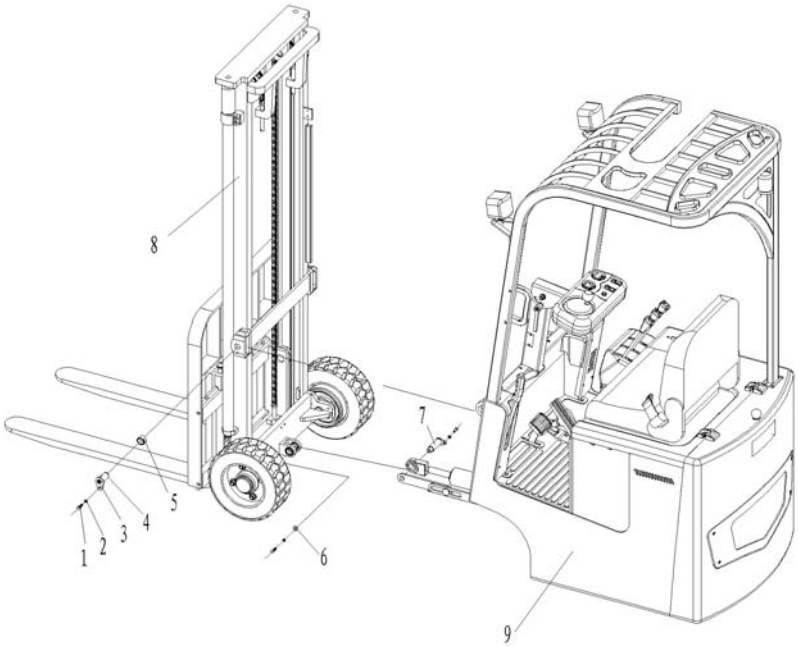

1. Bolt 2. Washer 3. Oil-holder 4.Shaft 5. Bushing
6. lock washer 7. Connecting shaft 8. Working settings 9. Body assembl

a) First, use the lifting device to hang the main frame (8) and fork body assembly (9) together
b) Second, fix them up by the shaft (7) then fit with a Snap Ring (6).
c) then use shaft(4) again, fixed them up, then do not forget to pay attention to fix the shaft by bolt (1) and washers (2).
d) Finally, connect tubing.
After completing the the assembly, check again to confirm whether the installation is fastness.

⚠ The fork can only use the battery as the power source, using AC power may damage the electronic components, and the length of cable connected to the battery should be less than 6 meters.

To make the fork can work properly after the delivery or transportation, users should complete the following tasks:
- Check the status of fork and equipment integrity.
- Sometimes you need to install the battery, be careful not to damage the battery cable.
- Charge the battery immediately.
- If the user wants to replace with a maintenance-free battery, then you should check the battery charge gauge whether the model matches with the battery (or the service personnel to obtain permission from the manufacturer).

3. The use of a new forklift

⚠ **•All the package materials removed from a new forklift shall be recycled according to local regulations.**
• Test run should be carried out before using a new forklift to see if the forklift parts can work properly (see Ⅰ. Check before operation on page 75).
The service life of your forklift depends on your initial operation. When using it in the first 200 hours, please pay great attention to the following issues:

⚠ **• Heat engine operation shall be conducted before use no matter what season it is.**
• Conduct maintenance in a timely and through manner.
• Never operate it violently or rudely。

4. The relationship between forklift stability and load
In the load curve, the front wheel centre of the forklift is taken as the fulcrum to keep the forklift body and load on the fork balanced. Pay attention to load quantity and load centre when driving to maintain stability of the forklift.

⊘ **·In case the load exceeds the load curve, rear wheels may be lifted and subject to extreme cases, and the forklift may rolling over, causing serious accidents. If goods are stacked at a place close to the sharp tip of fork, the risks above also exist. In this case, decrease the load weight.**

5. Load centre and load curve
Load centre refers to the distance between the front surface of the fork and the cargo's centre of gravity. Load curve label indicating the relationship between the load centre and the allowed loading quantity (allowable load) is attached to the forklift. Replace the plate in case of damage or loss.

⊘ **·If the forklift is equipped with accessories for cargo handling, such as the side shifter, bucket, or rotating fork, the allowable load shall be less than standard forklift (without accessories) for the following reasons:**

1) Reduce loads equal to the weight of the accessories.

2) Since adding of accessory will move the load centre forward, the allowable load will be reduced accordingly.

The installation of accessory will cause load centre shift forward, which is known as the "loss of load centre."

Do not exceed the allowable load indicated by the load curve attached to the forklift or the accessory.

6. Forklift stability

Standard of forklift stability is specified in IS0 or other standards. However, the stability described in these standards does not apply to all the running status and the stability of forklift varies with different operational status.

The maximum stability can be ensured under the following operating status:

1) The ground is flat and solid.

2) Operate under standard no-load or load.

Standard no-load status: fork or carrying accessories are 30cm away from the ground and the main frame can tilt backwards to the specified position without load.

Standard load status: fork or carrying accessories are 30cm away from the ground, allowable load capacity is carried at the standard load centre and the main frame can tilt backwards to the specified position.

⃠ **·When loading and unloading goods, try to minimize the tilting degree when tilting forwards and backwards. Never tilt forwards unless the load is close to or fixed by steel shelves or the lifting height is low.**

7 Adatp a new forlift

Forklift should be put to use in low-load operation when first use, especially in less than 100h, should meet the following requirements:

- Must prevent new battery discharge in early use. General it should be timely charge when discharge 20%..
- The regularly maintenance and care should be thoroughly
- Avoid harsh brake,harsh to open or take sharp corners
- Oil change or lubrication required in advance.
- Limit the weight load at rated load of 70 to 80%.

Ⅱ、driving and operation

1. A brief introduction of Console

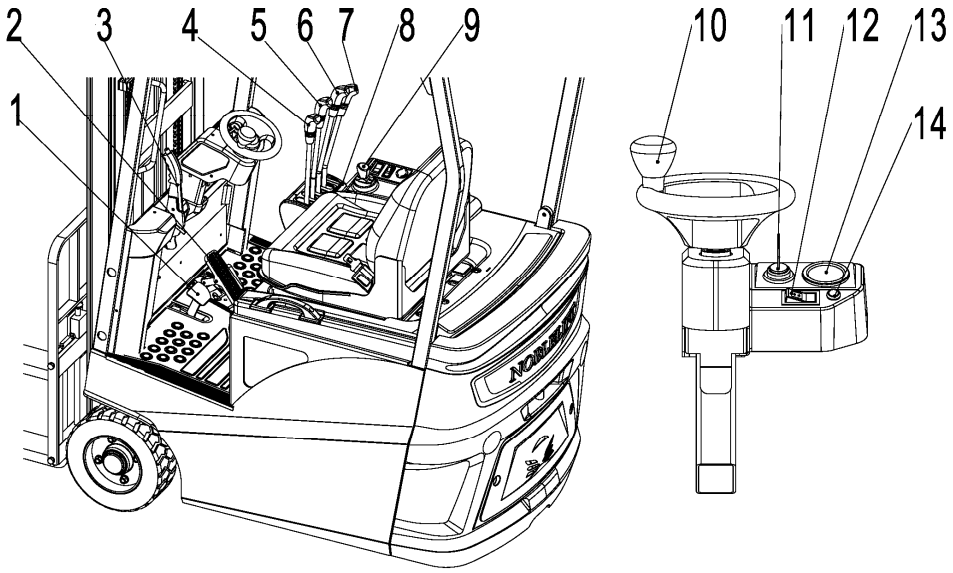

1、brake pedal 2、accelerator pedal 3、stopping braking 4、lifting lever
5、Tilting lever 6、Belonging to joystick 1 7、Belonging to joystick 2
8、Gear switch 9、Emergency stop switch 10、steering wheel 11、key switch
12、turn signal swich 13、appearance 14、horn button

2. The safety features of the forklift
This forklift made full equipment of safety to minimize accident's occurrence.
A) when the fork raiseds to its highest position, the fork uses double limit security protection -- spacing mechanical and spacing electric.
B) when steering Angle excees ±20 , the driving speed will automatic reduced.
C) when electrical system have any error, the fork will automaticly stop running.
D) only when open forward back switch, and at the same time stepp on the accelerator pedal, the fork can move.
E) before in electricity (power key switch to ON position), if there are any control button is active, if step on the accelerating pedals first, the forward and backward switch is not ON the median, the driver doesn't sit, etc, the fork will not driving.

3.Forklift driving
Before driving or loading and unloading goods , the operator must ensure that all staff leave dangerous area.
A)get into the cab, the power key should switch to ON location.

⚠ **Before in electricity (power key switch to ON position), if there are any control button is active, after electrify, security function will be automatically lock the fork, let fork can't move.**
b) left hand holding the steering wheel, right hand put in the place of forward back switch.
c) with right foot step on the pedal to loosen the electromagnetic brake acceleration, pay attention to been stepped during the driving process.
d) when clicks forward back switch forward or backward, the fork should be forward or backward correspondingly. On the accelerator is more and more big, the speed and acceleration is also more quickly. The starting and accelerating should be gentle, don't suddenly start or accelerated.

⚠ **when driving in the slope, the goods on the fork must face the going uphill.**

There are five kinds of methods to realize the brakes:
a) to release the accelerator pedal(and had better put the forward back switch in middle), then brake. The brake is soft, smooth, people should often use this method.
b)by putting the forward back switch in middle to brake. The brake is soft and smooth.
c) reverse braking, for example, to change the driving direction, which is about to putting the forward back switch to the driving reverse direction.
d) the emergency brake: right foot releases the accelerator pedal and step on the brake pedal; or press the abrupt stop switch.which is on the left side of the seat
e) people can also brake by the hand brake.

⚠**Generally , goods should face the driving directionas much as possible; When loading goods is too high that block the eye view, people should drive backward, this will have a good view and practical.**

4. Loading and unloading of the goods

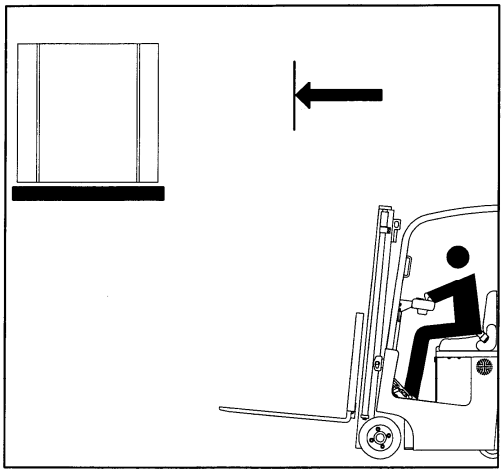

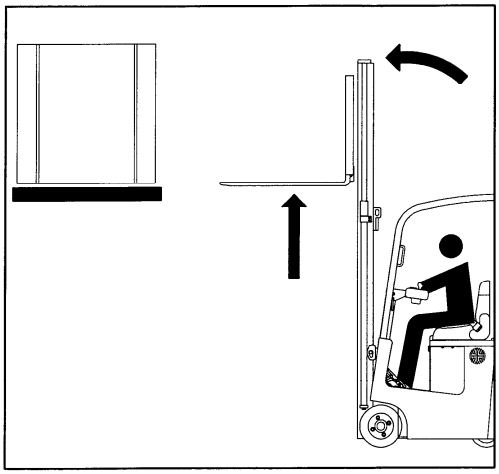

-Make sure your fork is safe:
-make sure the weight of goods is not exceed the maximumcarrying capacity of the fork
-The storage of goods must be safety and reliable.

-parking slowly when there is a certain distance from the goods, fork lifting to a certain height, can loading and unloading of the goods easily.

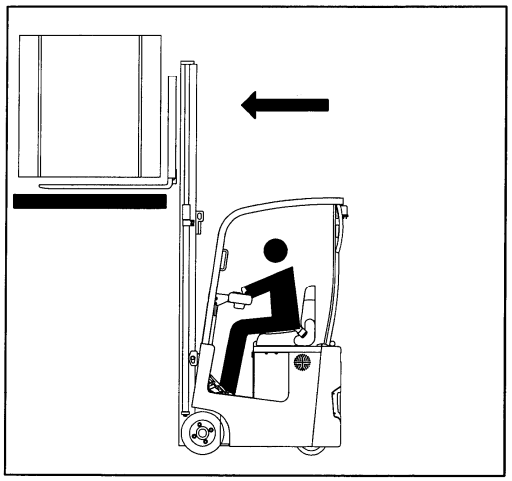

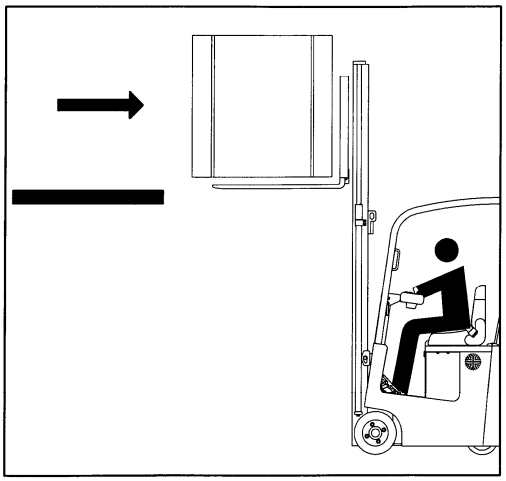

- Forklift moves slowly forward，

- Forklifs moves slowly backward

- Ensure that the forklift enter into goods.

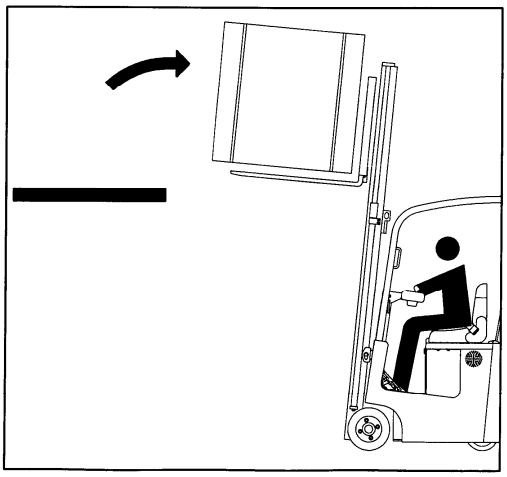

- Main frame sloping slowly
- until the maximum Angle.

- Ensure that the forklift leave the shelves.

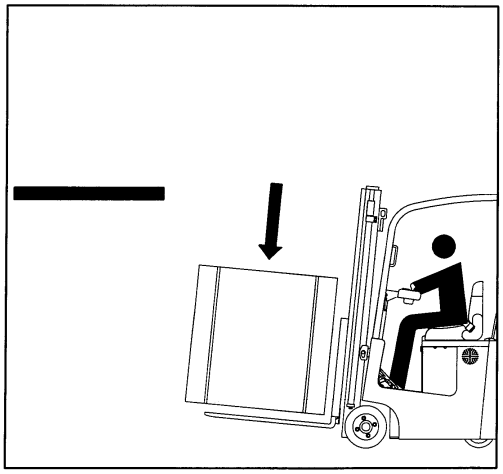

-Set down the goods slowly
- From the ground to a certain height (200 mm or so),
-now you can put the goods to the destination safely

1) Do not leaning the main frame when the goods are in a high position!
2) No matter no-load or load, t is dangerous to drive when fork rises , and keep the fork (200 mm fork or so)from the ground, driving when the main frame sloping.
When the forklift with lateral device truck up, do not be lateral operation, lest forklift truck lost balance!

III. About safety

Ensure safety is your business and responsibility. This section describes the basic safety regulations and warnings during use of the forklift, but also applicable to forklifts with special specifications and with the main frame and accessories.

1. Site and working environment of the forklift

(1) Ground conditions

The forklift should used on solid ground in well-ventilated environment.

Forklift performance depends on the road condition. Running speed should be adjusted to an appropriate level. Be especially careful when driving on ramps or rough roads. When driving on ramps or rough roads, the forklift will speed up, increasing tire wear and the noise.

(2) Working environment

Ambient temperature for use of the forklift should be within -20 °C ~ 40 °C and the ambient humidity shall be less than 80%.

(3) Weather conditions

In days of fog, rain, snow and strong winds, pre-assess the safety of using the forklift. It’s better not to use it for outdoor operations. If it is must be done, be extremely cautious during driving and operation.

2.Safety rules

Only qualified people who has been trained and has driver license can operate the forklift!

Forbid to drive on the highway!

Vigilant: injuries, the ambulance!

Do not change parts on forklift arbitrary without permission.

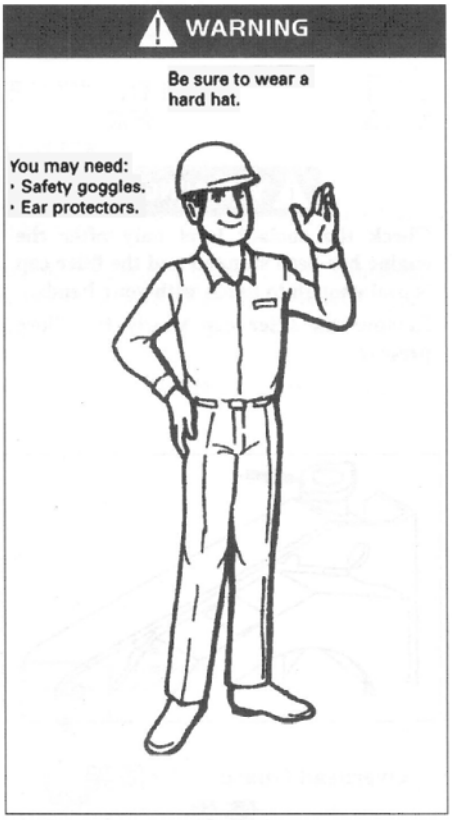

Put fatigue dress on before driving!

Read the instruction manual carefully before driving!

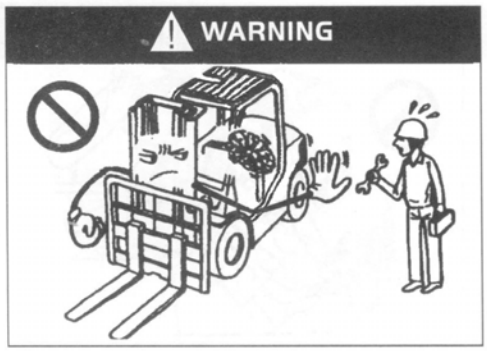

Turn off the engine before maintenance!

Understand traffic regulations

Before use, please check on the truck!

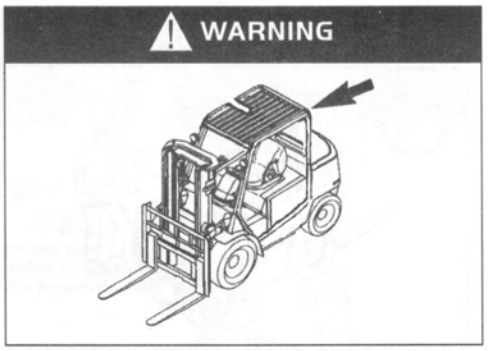

Do not move the overhead guard!

To keep driver's cap clean!

Do not drive an unsafe forklift!

Drivers should have a healthy body!

Be sure your truck is safe!

https://truckmanualshub.com/

Work in specified area

Do not drive a damaged truck!

Hold tightly when get on the truck!

Start forklift correctly!

Adjust seat before driving!

Make sure your forklift is in safe operating condition!

Appropriate fasten seat belts!

Always pay attention to the height of work place!

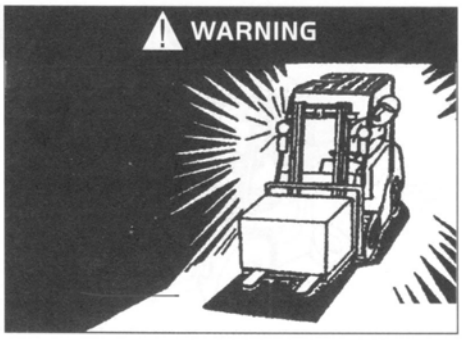

Turn on lights in dark area!

Do not put arm and body outside of the overhead guard during work!

Avoid driving on soft ground, only allowed to run on solid and flat ground.

Keep body under the guards!

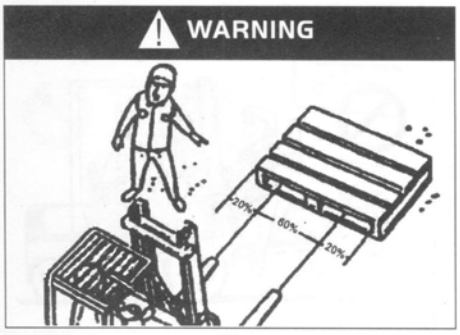

Avoid eccentric loading!

Pay attention to encounter item by front fork when loading!

Check fork pin position!

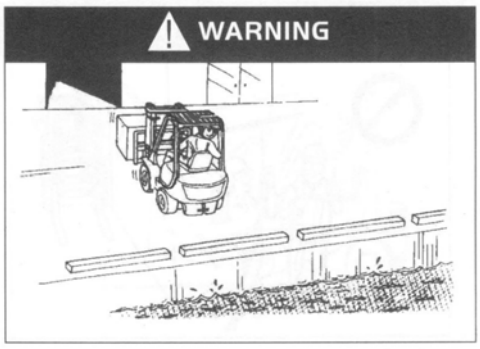

Note the security of the work region!

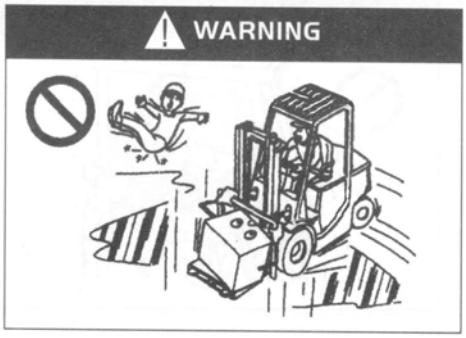

Do not run on smooth or slippery ground!

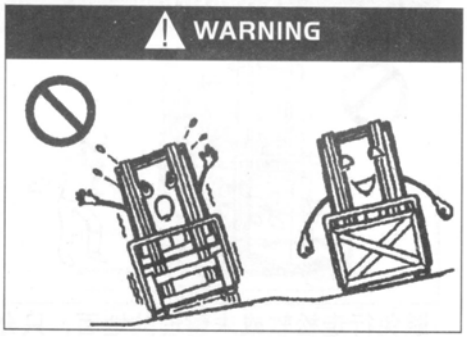

Note the horizontal driving stability of the truck when it is un-load!

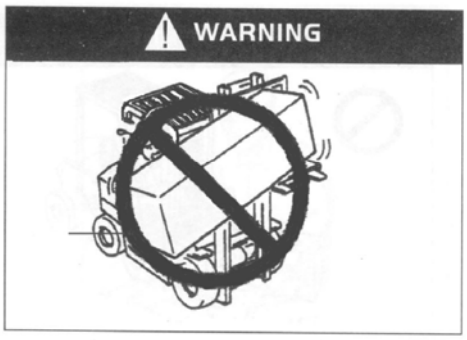

Be especially careful when handling long or wide cargo!

Forbid handling people!

If can not see the front when turning, please whistle and drive slowly.

Use appropriate pallets or sleeper when handling small objects!

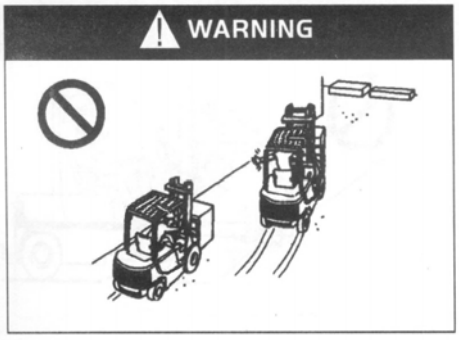

Do not chase each other through the traffic!

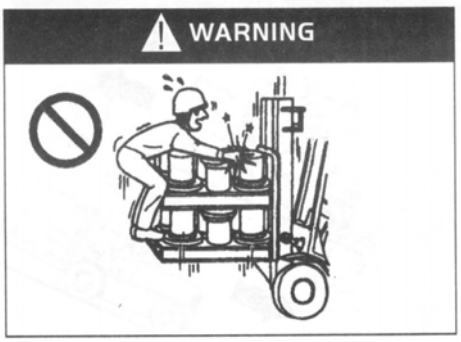

Not allowed to stand on the goods!

Not allowed to gaze around while driving!

Do not use the forklift to do stunt!

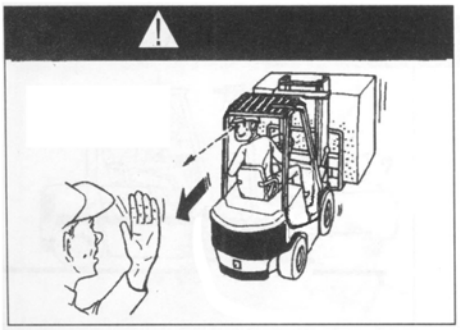

when goods is so high to keep out line of sight,drive backward or forward under direction of others

Should obey the traffic rules and all warnings and signs!

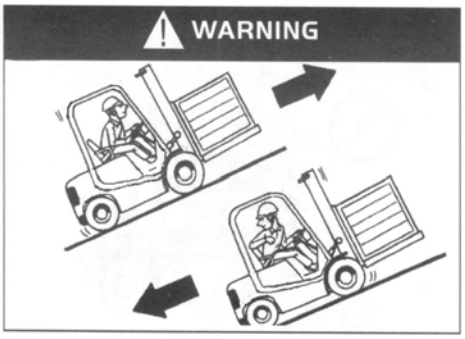

when loading,travel forward in upgrade and backward in downgrade

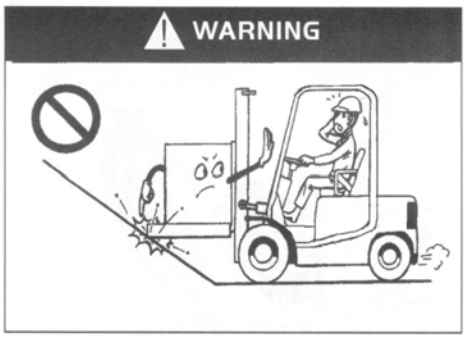

Pay attention to the steep uphill slopes and goods lifting height!

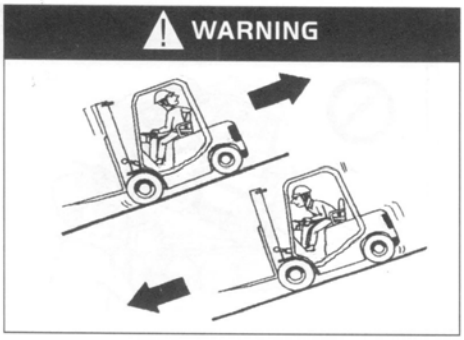

When no-load,travel backward in upgrade and travel forward in downgrade!

Note using brake when start truck on the slopes!

Not turn when driving on a slope!

People or things moving on road should be warned by whistle!

Be careful to crush people or goods when turning!

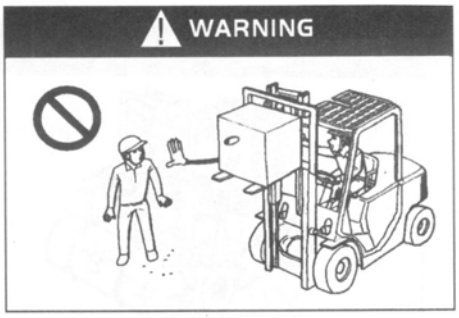

Operators are not allowed to close when the truck is working!

While turning a high speed can cause accident because of unstable center of gravity!

People are not allowed to start in work place!

Notice the change of rated load weight before use forklift.

Pay attention to the area where forklift is driven!

https://truckmanualshub.com/

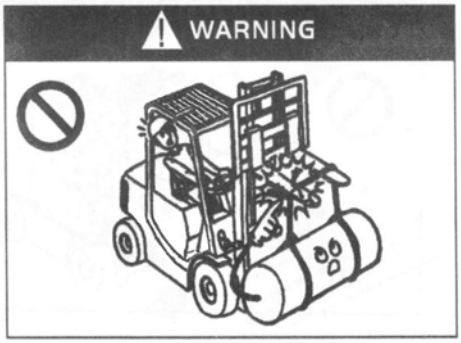

Use the fork correctly when loading!

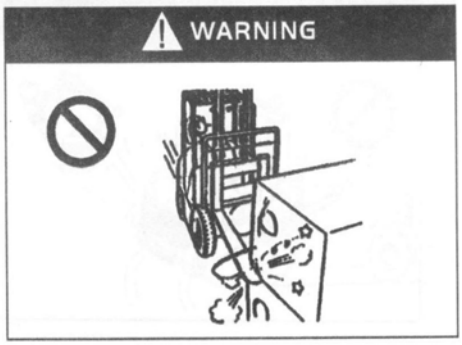

Slow down when loading!

Do not move the truck when there is someone in front of the truck!

It is forbidden to stand or walk under the elevatory fork!

Do not load the goods which is higher than the goods rest.

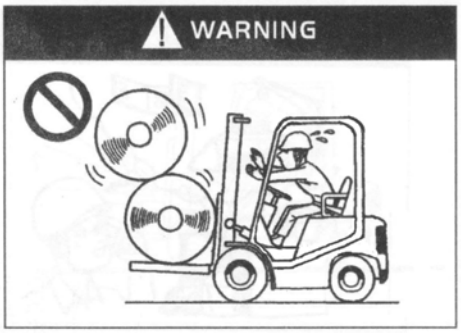

Please bind the goods which is difficult to fix before load!

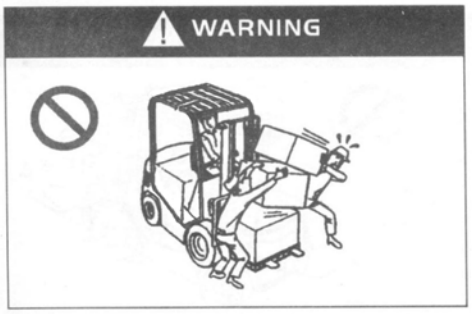

Do not carry the goods from forklift by manpower!

Do not let people to carry the goods have been damaged!

Do not misuse the fork!

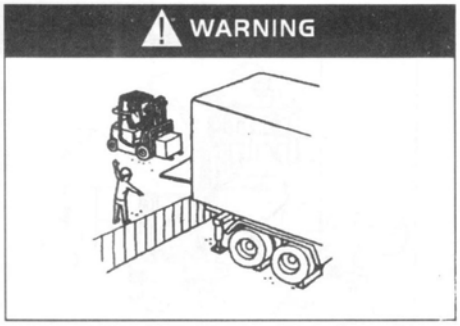

Be careful when load the container!

Do not pick up people!

Do not misuse forklift!

Do not extend any part of body outside when driving!

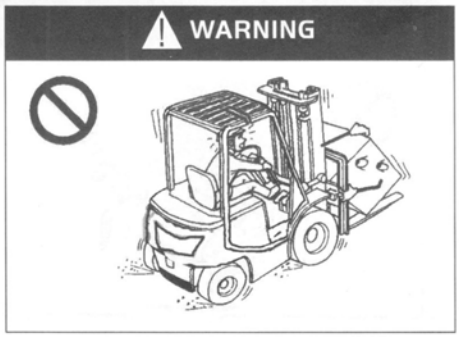

Drive the truck smoothly to avoid sudden acceleration and deceleration!

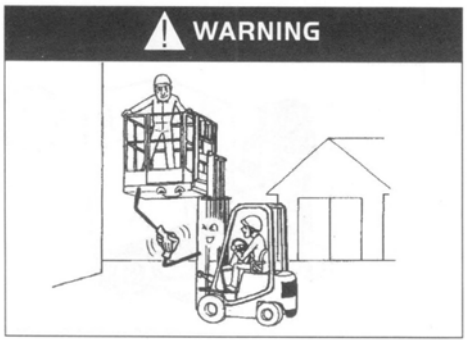

Must use special equipment to lift people safely to lift people safely to work at height!

Do not overload!

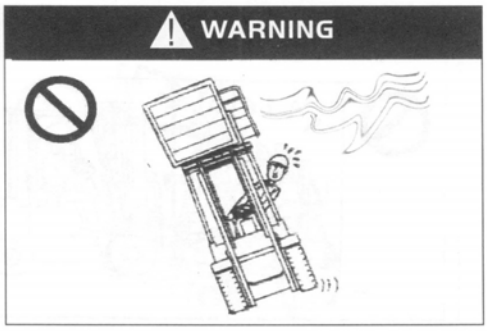

Do not lift when there is excessive wind!

Not allowed to work in explosive environments!

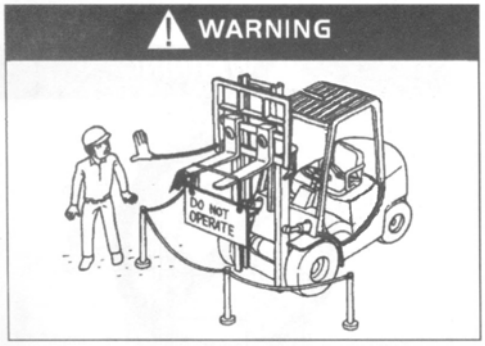

The faulty trucks should be put into the indicated area!

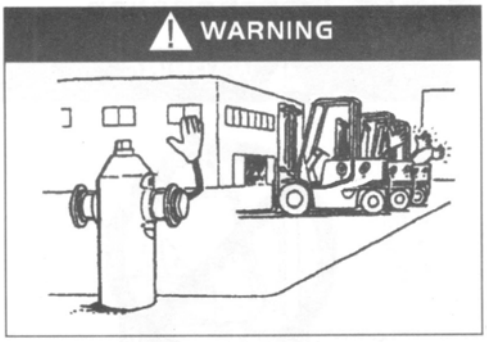

park the forklift to the indicated area!

Do not park the forklift on the slope!

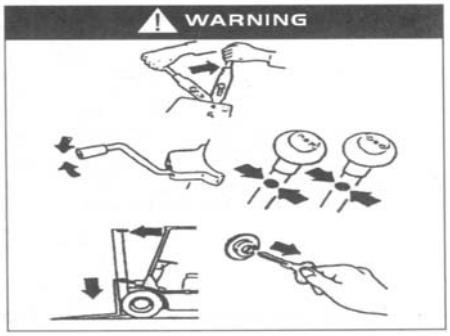

When the forklift is not in use,please do the follow.

— Brake
— Put direction pole in neutral position.
— Lower the fork to the ground
— Frame forward tilt.
— Take off the key

3 Truck' s transportation

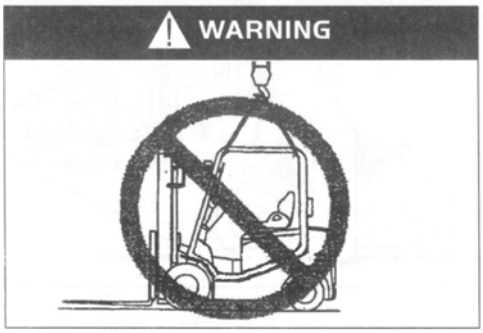

Forbid hoisting from the top!

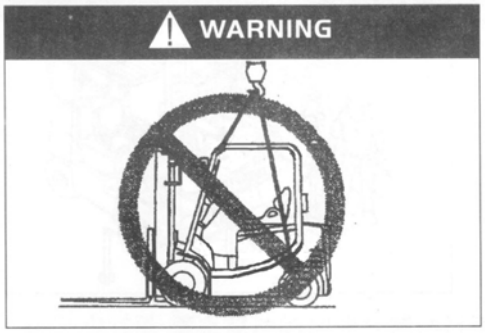

Forbid hoisting on the frame!

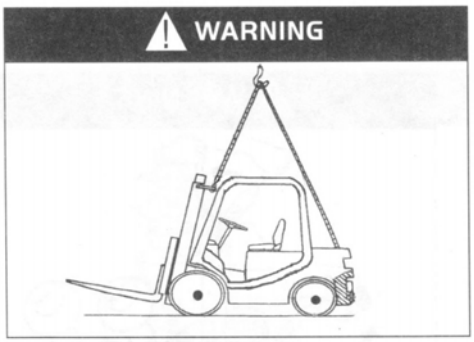

Hoisting the forklift correctly!

Hoisting the forklift

• Tie firmly steel cable on two terminal holes of outer mast beam and on counterweight hoisting hook,then,hoist forklift with hoisting device.the side of steel cable connecting to counterweight should go through notch of roofguard without exerting pressure on roofguard.

⚠ **• When lifting the truck, be sure not to wire rope and overhead guard around together.**

• Wire rope and lifting equipment to be very strong, enough to secure bearing fork lift, because the truck is extremely heavy.

• Do not use the cab (overhead guard) to hoist the forklift.

• Forklift upgrade, do not enter the truck underneath.

4 How to avoid overturning,how to protect yourself

Prohibit forward tilt to enhance loading, so as to avoid tipping!

Prohibit lifting goods tipsily!

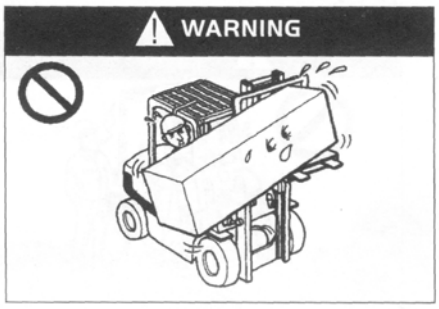

Prohibit eccentric loading of goods!

To avoid driving on slippery roads!

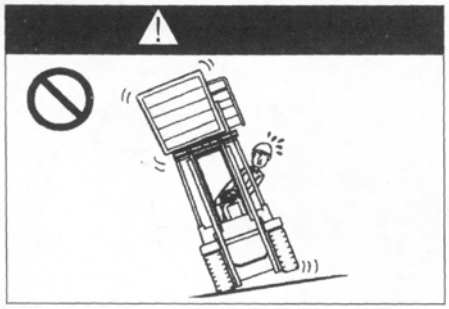

When the truck is not in the horizontal position, do not load or unload!

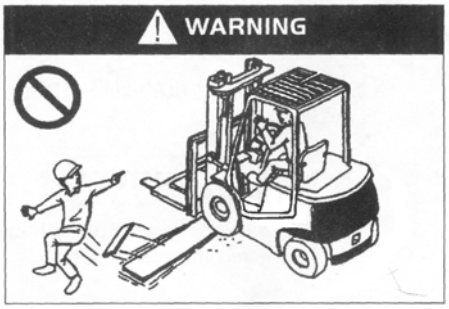

Prohibit crossing the obstacle such astrench, mound and railway!

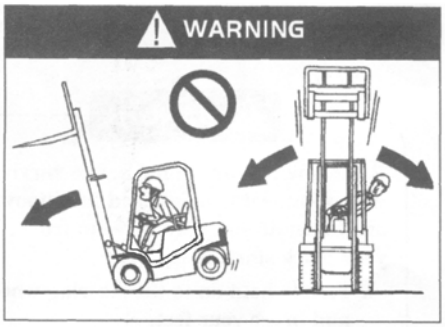

When moving, the distance between fork and ground should less than 150mm to 200mm!

whether load or no-load,don't turn in a high speed or in a large radian !

when no-load fork is lifted,please turn with a narrow range.

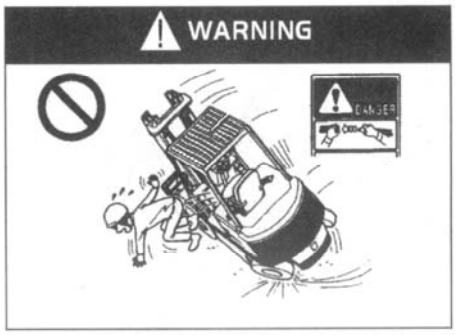

Be sure to fasten seat belts!

https://truckmanualshub.com/

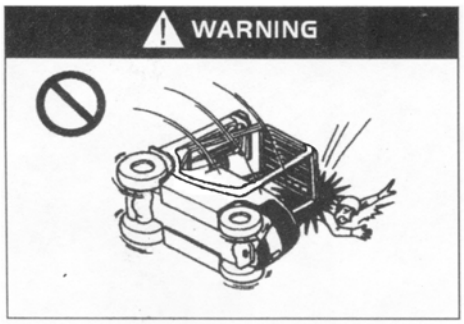

Do not jump in the event of forklift rollover!

Please wear helmets when driving!

In case of tipping, it is safer when you stayed in the forklift with seat belt than jumping out of the forklift. If the forklift begins to tip:

1. Step on the brake pedal and clench the steering wheel tightly.
2. Do not jump.
3. Bend your body to the opposite direction of tipping.
4. Tilt your body forward。

5. Safety issues during maintenance and protection

(1) Maintenance location

• The premise should be designated places that can provide enough equipment and security facilities to the service organization.
• The site should be level ground.
• The site should be well ventilated.
• The site should have fire-fighting equipment.

2) Precautions before maintenance

• No smoking.
• Wear all kinds of protective equipments (helmets, shoes, glasses, gloves and boots) and appropriate clothing.
• Timely and wipe out overflowed oil.
• Use a brush or cloth or clean dust or dirty oil before adding lubrication oil.
• Turn off the key switch and pull out the accumulator plug except for some certain cases.
• Lower the fork to the ground before carrying out maintenance of forklift.
• Use compressed air to clean electrical components.

(3) Precautions on care and maintenance

• Take care not to put feet below the fork and not to be tripped by the fork.
• When upgrading the fork, use pads or other things as cushion below the main frame to avoid sudden drop of the fork and main frame.
• Take care to open and close the front chassis and accumulator cover plate, so as not to pinch fingers.
• When your job can’t be completed within a day, make a mark to continue work next time.
• Use right tools and never use makeshift tools.
• Because of the high pressure of hydraulic circuit, never carry out maintenance work before the internal pressure of oil circuit is reduced.
• When injured by high-voltage electricity, immediately seek medical treatment.
• Do not use the main frame assembly as a ladder.
• Do not put your hands, feet and body between the forklift frame and the main frame

assembly.

(4) Inspection and replacement of tires

⚠ **• Removal and installation of tires must be operated by professionals.**

• Handling of high-pressure air shall be done by professionals

• Wear a goggle when using compressed air.

• During disassembling of tires, do not loose bolts and nuts at rim connection. As there is high-pressure gas within the tires, looseness of bolts, nuts and rims could cause danger.

• Before removing bolts and nuts at the rim connection, you must first exhaust the high pressure gas within the tires with special tools.

(5) Use of jack (replace the tires)

⚠ **• When jacking up the forklift, do not keep any part of your body below the forklift.**

• When jacking up the forklift, ensure that there are no one and no load in the forklift.

• When the forklift wheels are lifted off the ground, stop use the jack and place pads below the forklift to protect it from falling down.

• Take measures to prevent the forklift from sliding before jacking up the forklift.

(6) Requirements on waste discharge (electrolyte liquid, oil, etc.)

⚠ **·Waste parts on the forklift (plastic parts, electrical components, etc.) and waste liquid (hydraulic oil, brake fluid, etc.) should be recycled according to the local regulations rather than discharged**。

6. Safety during accumulator use

(1) No smoking

⚠ **·The accumulator can produce hydrogen. Spark will generate in case of short-circuit and lit cigarette near the accumulator may cause explosion and fire.**

(2) Prevent electric shock

⚠ **• The accumulator has high voltage, so when you perform installation and maintenance, do not touch the accumulator conductor, which can cause serious burns.**

(3) Correct connection

⚠ **• When the accumulator is charging, ensure the positive and negative poles are not reversed, otherwise heat, fire, smoke or explosion may be caused.**

(4) Never place metal objects on the accumulator

⚠ **• Avoid reversed installing of the positive and negative bolts or tools, which may lead to short-circuit occurs, causing injury and explosion.**

(5) Avoid excessive discharge

⚠ **· Do not keep using the forklift until it can not move, otherwise the accumulator life will be shortened. If the accumulator capacity alarm indicator flashes continuously, it means that the accumulator needs to be recharged.**

(6) Keep clean

⚠ **• Keep cleanness of accumulator surface**

·Do not use a dry cloth or chemical fiber cloth to clean the accumulator surface. Do not use polyethylene film to cover the battery.

• Static electricity can cause an explosion.

• Clean the uncovered parts at the top of the accumulator with a damp cloth.

(7) Wear protective clothing

⚠ **• During maintenance of the battery, you should wear goggles, rubber gloves and rubber boots.**

(8) Accumulator electrolyte could be harmful

⚠ **• Accumulator electrolyte is made of dilute sulphuric acid. Be careful when handling.**

• When the electrolyte adheres to skin and clothing or touch your eyes, it will result in vision loss or serious burning.

(9) Emergency treatment

⚠ **When an accident occurs, perform following emergency treatment and contact a doctor immediately.**

• spilled on skin: rinse with water for 10-15 minutes.

• spilled in eyes: rinse with water for 10-15 minutes.

• contamination in large area: use soda (sodium bicarbonate) or clean with water.

• Ingestion: Drink plenty of water or milk.

• spilled on clothing: immediately take off the clothes.

(10) Put on the accumulator top cover

⚠ **• Put on accumulator top cover tightly to prevent electrolyte leakage.**

• Do not add too much electrolyte, otherwise the electrolyte will overflow and cause current leakage.

(11) Waterproof

⚠ **• The accumulator can not be wet by rain or sea water, otherwise the accumulator will be damaged, causing fire.**

(12) Abnormality of accumulator

⚠ **When the following problems occur to the battery, please contact our sales department:**

• Accumulator stinks.

• The electrolyte gets dirty.

• The electrolyte temperature gets higher.

• The electrolyte volumes reduce quicker than normal .

(13) Prohibiting disassembling

⚠ **• Do not drain the electrolyte from the battery**
• Do not disassemble the battery.
• Do not repair the battery.

(14) Storage

⚠ **• When the accumulator is to be unused for a long time, it should be stored in well-ventilated places with low possibility of fire.**

(15) Disposal of waste battery

⚠ **• Contact our sales department for disposal of waste battery.**

7. Signs

There are many special warning signs in the forklift, about their location and details, please see the chart below. Please take times to become familiar with these signs.

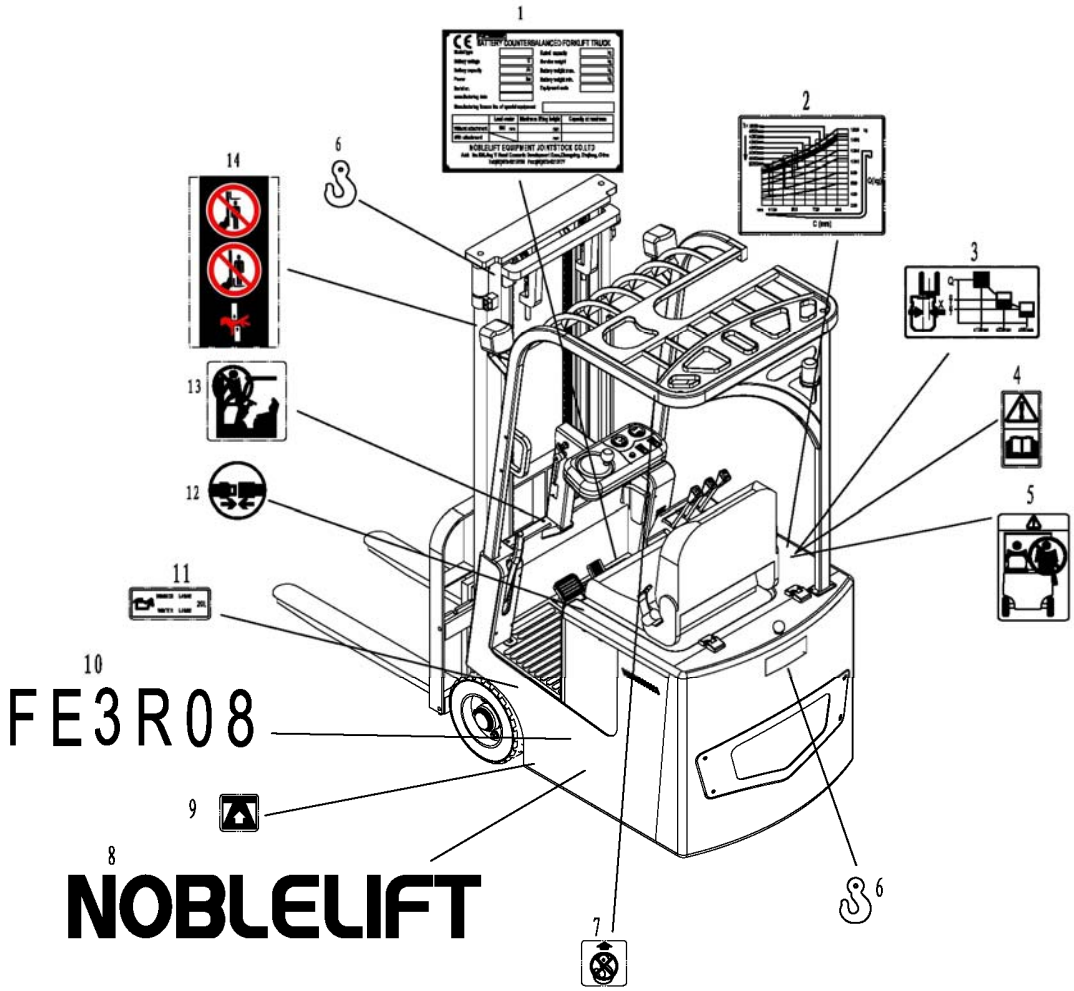

1、Nameplate　2、curve of load　3、Side shifter notice
4、reading the Operation & Maintenance Manual　5、No carrying people
6、Suspension point　7、Prohibit suspension poin　8、Corporate logo
9、Strong point　10、Product Model　11、hydraulic oil
12、safety belt　13、No climbing　14、Warning labels

Chapter IV Maintenance and reparing of the forklift

Conduct a comprehensive inspection of forklift to avoid failure and to extend its service life. Service hours indicated in the Maintenance Procedures is based on the assumption that the forklift works 8 hours a day and works 200 hours a month. In order to ensure safe operation, maintain the forklift regularly according to the maintenance procedures.

Routine maintenance and repair work shall be carried out by the forklift driver and other inspection and maintenance work shall be done by professional maintenance personnel.

Ⅰ. Check before operation

In order to ensure safe operation and to keep the forklift in good condition, please undertake the statutory duty to conduct a comprehensive inspection of the forklift before operation. If any problems are found, please contact the sales department of our company.

⚠ **• A small fault will cause a major accident. Don't operate or move the forklift before the completion of repair and inspection work.**

• Conduct checking the forklift on a platform.

• Before checking the electrical system of the forklift, turn the key switch off and unplug the accumulator before check.

• Improper handling of waste oil (such as dumping into water pipes, soil, or burning them) will cause pollution to the water, soil and air, thus are strictly prohibited.

1. Check points and contents

	No.	Check points	Check contents
Braking system	1	Brake pedal	Travel distance and braking force of the foot brake pedal
	2	Brake oil	Quantity and cleanliness
	3	Parking brake	Travel distance and braking force of the parking brake lever
Steering system	4	Manipulation of steering wheel	Tightness, rotation, forward and backward movement
	5	Manipulation of hydraulic steering	The operation of all components
Hydraulic system and main frame	6	Features	Function, cracks and lubrication status
	7	Pipeline	If the oil pipeline leaks
	8	Hydraulic Oil	Appropriate oil volume
	9	Lifting chain	Tightness of the left and right chains should be the same
Wheels	10	Tires	Pressure size and if there is any damage or abnormality
	11	Rim nut	Firmly tighten it
Accumulator	12	Charging	Check the display status of accumulator capacity, the specific gravity and firm connection of the plugs
Lights, horn and switches	13	Headlights, tail lamps, reversing lamp, steering lamps, horn and emergency power off switch	Switch on and off the lamps to see if they can light up. Press the horn button to see if the horn could sound and check if the emergency power off switch is normal.
Inspection and displaying lamps	14	Features	When the key switch is turned on, it should display "normal test state"

Others	15	Overhead guard, backrest	If the bolts and nuts are tightened
	16	Nameplate and labels	Completeness
	16	Other parts	If there is abnormality

Ⅱ.Checking after operations

After work, remove dirt from the forklift and check the following items:

(1) Inspect all parts and components for damage or leakages.

(2) Check for deformation, distortion, damage or breakage.

(3) Add grease if necessary.

(4) Lift the fork to the maximum height for several times after operations are finished. (After you do not lift the fork to its maximum height in daily work, this allows the oil flow through the cylinder to prevent rusting.))

(5) Replace abnormal components that cause failures during work.

⚠ **• A small fault will cause a major accident. Do not operate or move the forklift before completion of repair and inspection.**

Ⅲ.Clean the forklift

⚠ **• Park the forklift at the specified location.**

• Pull the parking brake lever.

• Press the emergency stop switch.

• Turn off the key switch and remove the key.

• Disconnect the accumulator plug.

1. Clean the forklift surface

⚠ **Do not use flammable liquids to clean the forklift and take safety measures to prevent short circuits.**

·Use water and soluble detergent to clean the forklift.

• Carefully clean the oil filler and the periphery of the lubricating port.

Please conduct lubrication timely if you clean the forklift frequently.

2. Clean the chain

⚠ **Do not use chemical detergents, acids and other corrosive liquids to clean the chain.**

• Place a container under the main frame.

• Use gasoline and other petrochemical derivatives to clean the chain.

• Do not use any additives when cleaning with a steam nozzle.

• Wipe the chain pin and water on chain surface immediately after cleaning.

3. Clean the electric system

⚠ **Do not use water to clean the pump control and the connectors, so as to avoid damage to the electrical system.**

Use non-metallic brush or low-power dryer to clean the electric system according to the manufacturer's instructions. Do not move the protective cover.

4. After cleaning

• Thoroughly wipe off water stains on the forklift (compressed air could be used.)

• Start the forklift according to the procedures.

⚠ **If moisture penetrates into the motor, you should first remove the moisture to prevent short circuits.**

⊘ **Moisture will reduce brake performance, so you shall conduct braking to dry the brake.**

Ⅳ. Regular maintenance

• Regular inspection and maintenance of the forklift shall be conducted to keep it in good performance status.

•Use spare parts made by Noblelift Machinery.

•Do not use different types of oil when replacing or refilling oil .

• The oil and accumulator being replaced shall be disposed according to local environmental protection laws and regulations rather than being dumped and abandoned.

• Develop comprehensive maintenance and repair program.

• Keep detailed record of each maintenance and repair.

• Forklift repairing without training is prohibited.

⚠•No smoking.

· Turn off the key switch and disconnect the accumulator plug before maintenance. (Except for conducting some of the troubleshooting checks)

• Clean electrical parts with compressed air and do not use water for cleaning.

• Never stretch your hands, feet or any part of the body into the place between the main frame and instrument rack.

• The charged capacitor within the controller may cause electrical injury even if the key switch is off. Be careful when contacting the controller.

⚠ **The maintenance period displayed in this manual means in a single class assignments and normal working condition. If use in a dusty environment, or in a temperature changable environment or more homework, that the maintenance period must be reduced.**

In the test run period, people should make the following extra stages:
(in the first 50 to 100 hours of work or 2 months later:)
-check if the nut on the wheels is loose , if need, tighten it.
- Check the hydraulic parts for leakage, I if needed，screw it.
-check the joint parts: such as security frame, the balance weight, the drive wheels are strong, if needed, tighten them.

1. Replace critical safety components periodically

1）If injury or damage of some parts is difficult to find through regular maintenance, users shall conduct periodic replacement of parts given in the following table to further improve security.

2）If these parts are abnormal before the due replacement time, replace them immediately.

NO.	Name of key safety components	Service life (years)
1	Brake hose or tube	I～2
2	Hydraulic hose for the lifting system	I～2
3	Lifting chain	2～4
4	High pressure hose and tube for the hydraulic system	2
5	Oil cup of the brake fluid	2～4
6	Brake master cylinder cover and dust proof cover	1
7	Internal seals and rubber parts of the hydraulic system	2

2. List of forklift oil

Name	Trademark	Capability(L)	Remark
Hydraulic oil	L-HM32	13	⩾-5℃
	L-HV32		⩾-20℃
Gear oil	85W/90GL-5	3.5	-15℃ ~ +49℃
	80W/90GL-5		-25℃ ~ +49℃
Brake fluid	Caltex DOT3	0.2	
Industrial Vaseline	2#		Battery electrode column
Grease	3# Lithium Grease		

3. Maintenance and care list
Implement and abide by their respective cycle according to below maintenance list, maintenance cycle introducts as follows:
W1 = every work 50 hours, but at least once a week.
M3 = every work 500 hours, but at least once every three months
M6 = every work 1000 hours, but at least once every six months.
M12 = every work 2000 hours, but at least once every 12 months

			Maintenance time interval			
			Standard=● Cold storage =#	W1	M3	M6	M12
Body of the fork and work wear	1.1	Check all of the bearing parts for damage		●		
	1.2	Check for loose for all the connection of the bolts		●		
Driving part	2.1	I Check for noise and leakage of the transmission		●		
	2.2	Check for the gear oil of the transmission system		●		
	2.3	Change gear oil			#	●
Tires	3.1	Check for the wear and damage	●			
	3.2	Check the wheel bearings and ensure that it is with the wheels closely a)		●		
Steering system	4.1	Check for the steering operating status		●		
Brake system	5.1	Check for the performance, adjustment and brake fluid volume of the foot brake	●			
	5.2	Check for wear situation of the drive wheels brake discs		●		
	5.3	Check for the connection of the brake , if needed, adjust it		●		
Lifting system	6.1	Check the performance, wear and adjustment		●		
	6.2	Visual check whether there is a roller stuck phenomenon		●		
	6.3	Check if the jaw of the fork and carriage is wear and damage	#	●		
Hydraulic system	7.1	Performance examination	#	●		
	7.2	Check if all the joint parts have leakage and damage b）	#	●		
	7.3	Check if the hydraulic cylinder is leakage and damage, and the accessories are safe and reliable	#	●		

	7.4	Check the oil volume	#	●		
	7.5	Replace hydraulic oil, filter c)			#	●
	7.6	Check the oil cylinder is normal or not			#	●
Electrical system	8.1	Performance examination		●		
	8.2	Check if all the wire connection are safe, reliable, and damage		●		
	8.3	Check if the fuse amperes are proper				
	8.4	Check if the switches and steering device are safe and reliable, functioning is proper		●		
	8.5	Check forward and back switch and the accelerator		●		
	8.6	Check if the function of warning device is correct	#	●		
Motor	9.1	check for wear of carbon brushes and commutator (pump station motor).			●	
	9.2	Check for the safety of additional device motor		●		
	9.3	Use a vacuum cleaner to clean the dust of the motor			●	
Accumulator	10.1	Check the density and the capacity of electrolyte, the voltage of the battery	#	●		
	10.2	Check the wiring security devices and grease applicability	#	●		
	10.3	Clean the battery connectors, check the tightness	#	●		
	10.4	Check for the damage of the battery cable, if need to change		●		
Lubricating oil	11.1	Add lubricant in accordance with the schedule of fork with grease	#	●		
Comprehensive measurement	12.1	Check for errors of grounding of the electrical system of grounding				●
	12.2	Check the running speed and braking distance				●
	12.3	Check the lifting and drop speed, leans forward ,sloping and lateral.				●
	12.4	Check the insurance device and security function		●		
Demonstration	13.1	Test run under the rated load		●		
	13.2	Complete the above maintenance operation in that the fork is reliable for person.	#	●		

a) After working about 100 hours at the origional time, check the tightness situation of the nut on the check; If need to tighten.
b) After working about 100 hours at the origional time, check for leaks of joints in hydraulic system; If need to tighten.
c) After working 500 hours.

V、Repairing of the forklift

1. Failure diagnosis

Fault	Cause	Countermeasures
Fork can't driving	- Battery connectors are not connected - Electricity lock switch is on "0 FF" position - Emergency stop button do not open - Run out of the batterypower - The accelerator pedal do not step on - The driver don't sit well - before in electricity (power key switch to ON position), if there are any control button is active, after electrify, security function will be automatically lock the fork, let fork can't move.	- connecting -Set electricity lock switch is on "on" position - Rotate openthe Emergency stop button - Charging - Step on this pedal during driving - 按 -Correct posture when driving - Operate according to the right steps
Goods can not rise	- Hydraulic oil is too little - Battery power is only 20 to 30% - Lifting micro switch contact bad or damaged	- Check the hydraulic oil - Battery charging -Check the micro switch or replacement
Goods can not fall	- The oil dirty jams the multiple valve - The piston rod damaged because overload or the slanting load	- Check the hydraulic oil and clean the multiple valves, if necessary to replace hydraulic oil - Correct the cylinder or replace the piston rod
Can't stop when rising	- Lifting micro switch is damage	- Cut off power, and replace the lifting micro switch
Moving in one direction	- Forward back switch is breakdown	- Check Forward back switch
Moving slowly	- Battery power is not enough, electromagnetic brake is tighten or the corresponding cable contact is not good	- Check the battery gauge to display lights, electromagnetic brake and the corresponding cable
Suddenly start	- Traction inverter is damaged - Speed controller is damaged	- Replace the traction inverter - Repair or replacement of

If through the above method still can not resolved the problem, please inform the person who are specially trained by manufacturers of after-sales service agencies .
2. The preparation work before repairing
In order to prevent the accident happened during the period of maintenance and caring, people must finished the following preparations:
Safety-parking.
-press emergency stop switch and pulled out the battery connectors.
Operate only when the fork needs to rise or after the goods lifted, measures must be taken to prevent vehicle and fork overturned or slip or sudden decline.About lifting the vehicle, see the hoisting parts in chapter 3 "the operation, use and safety of forklift, use and safety".
3. Check the hydraulic oil
-ready to carry out the vehicle which need to maintenance and caring.
-uncovered pedal cushion hole and refueling cover holes of the former floor.
- check the gas of hydraulic oil.

⚠**when check the volume of the hydraulic, must fall the fork and goods fork frame to the minimum position.**
4. Check the volume of the brake fluid
Check brake fluid in the pot which on the left of the body. If the brake fluid is insufficient, add it.
5. After maintenance, the preparatory work before using
Only after finished the following operation can the forklift be used again.
- clean the forklift.
-if the installation of security frame, tires and the mainframe is firm.
-check whether brake function properly.
-check if the function of emergency stop switch is appropriate.
-check if the function of the horn is normal.

VI. Storage of the forklift
If the forklift do not use more than 2 months, it must be parked in antifreeze and dry place, before storage, some necessary protection measures should taken.
If the forklift has been storaged for more than six months, please discuss with the manufacturer about some additional protective measures.

⚠**During the storage period, the forklift had better jacke up, to ensure that the wheels are completely off the ground,make sure the wheels and wheel bearing will not suffer any damage.**
1. Operations before storage
- clean the forklift thoroughly.
-check if the brake function is correct.
-check the hydraulic oil fuel, if needs and fill it up.
-anointed with oil or grease daub protection to all components.
-add lubricant grease according to the detailed add the lubricating oil table
- battery recharging.
-disconnect and sweep the battery, coate electrode grease to the battery electrodes.
Besides these, still abide by some special requirements in the specification of the battery
2. Measures during storage
Charge the battery every 2 months.

⚠**It is very important to charge regularly. Otherwise, may release its powerl because of its self-discharge. Because the sulfuric acid salinization role, The battery will totally loss because the sulfuric acid salinization.**

https://truckmanualshub.com/

3. Re-test turn forklift

⚠ **After having a long storage,the Forklift should re-test turn before using it again, to make sure that all the parts are in good condition, each function can run normally, to ensure the safe use of forklift.**

- clean the forklift thoroughly.
- add lubricant grease according to the detailed add the lubricating oil table
-sweep the battery, coate electrode grease to the battery electrodes and then grafted in connectors.
- battery recharging.
- check if the drive wheels of gear box contains water, if has, change it.
- check if the hydraulic oil contains water, if has, change it
--starting the forklift

If the lectrical switch of the system is not appropriately contacted, spraying to all the exposed electrical connectors by contacts cleaner, removing the oxidation laye in these connections through repeated operation.

⊘ **After re-testing turn, do a a few times brake test mmediately.**

Maintenance record

No.	Date	Maintenance content	Note

https://truckmanualshub.com/

NOBLELIFT INTELLIGENT EQUIPMENT CO.,LTD.
Service hotline：4008-836115
Wechat：nuolijixie
Postcode：313100 email address: info@noblelift.com
Website：www.noblelift.com
Version：Otc,2018