https://truckmanualshub.com/

MEDIUM DUTY MODELS

OWNER'S MANUAL

Peterbilt

A PACCAR COMPANY

https://truckmanualshub.com/

Quick Table of Contents

•Introduction 3
•Cab And Frame Access 9
•Getting To Your Engine 13
•Controls And Displays 16
•Seat And Restraint Systems 74
•Driver's Checklists 83
•Starting And Operating The Vehicle 89
•Maintenance and Service 150
•Consumer Information and Vehicle Identification 263
•Subject Index 264

© 2009 PACCAR Inc - All Rights Reserved

This manual illustrates and describes the operation of features or equipment which may be either standard or optional on this vehicle. This manual may also include a description of features and equipment which are no longer available or were not ordered on this vehicle. Please disregard any illustrations or descriptions relating to featuures or equipment which are not on this vehicle.

Peterbilt reserves the right to discontinue, change specifications, or change the design of its vehicles at any time without notice and without incurring any obligation.

The information contained in this manual is proprietary to Peterbilt. Reproduction, in whole or in part, by any means is strictly prohibited without prior written authorization from PACCAR Inc.

https://truckmanualshub.com/

Introduction

How to Use This Manual

This Operator's Manual contains useful information for the safe and efficient operation of your Medium Duty vehicle. It also provides information on maintaining your vehicle in the best condition, with an outline for performing safety checks and basic preventive maintenance inspections.

We have tried to present the information you'll need to learn about your vehicle's functions, controls, and operation as clearly as possible. We hope you'll find this manual easy to use. There will be times when you need to take this manual out of your Peterbilt vehicle. When you do, please be sure to return it to the cab when you are finished using it. That way it will be there when you need it the next time or when you pass the vehicle on to the next user.

Your Medium Duty may not have all the features or options mentioned in this manual. Therefore, you should pay careful attention to the instructions that pertain to just your vehicle. In addition, if your vehicle is equipped with special equipment or options not discussed in this manual, consult your dealer or the manufacturer of the equipment.

All information contained in this manual is based on the latest production information available at the time of publication. Peterbilt Motors Company reserves the right to make changes at any time without notice.

Safety Signals

A number of alerting messages are in this manual. Please read and follow them. They are there for your protection and information. These messages can help you avoid injury to yourself and your passengers, and can help prevent costly damage to the vehicle.

Key symbols and “signal words” are used to indicate what kind of message is going to follow. Pay special attention to instructions prefaced by symbols and the signal words “WARNING”, “CAUTION”, and “NOTE”. Please do not ignore any of these alerts.

WARNING

When you see this word, the message that follows is especially vital. It signals a **potentially hazardous situation** which, if not avoided, could result in an injury or death. This message will tell you what the hazard is, what can happen if you don't heed the warning, and how to avoid it.

Example:

WARNING! Never carry additional fuel containers in the vehicle. Such containers, full or empty, may leak, explode or cause a fire in the event of a collision.

CAUTION

Signals a **potentially hazardous situation** which, if not avoided, could result in property or vehicle damage.

Example:

CAUTION: Continuing to operate your vehicle with insufficient oil pressure will cause serious engine damage.

NOTE

Provides general information: for example, the note may suggest how to operate the vehicle more efficiently.

Example:

NOTE: Pumping the accelerator will not assist in starting the engine.

Please take the time to read these messages when you see them, and remember:

WARNING!

Something that could seriously injure or kill you or others.

CAUTION:

Something that could cause property or vehicle damage.

NOTE:

Useful information.

https://truckmanualshub.com/

Vehicle Safety

Make sure your Medium Duty is in top working condition before heading out on the road—it is the *responsible* driver's duty to do so. Inspect the vehicle according to the "Driver's Check List", page 83.

WARNING! Do not drink and drive. Your reflexes, perceptions, and judgment can be affected by even a small amount of alcohol. You could have a serious—or even fatal accident—if you drive after drinking. Please do not drink and drive or ride with a driver who has been drinking.

Please remember, this manual is not a training manual. It cannot tell you everything you need to know about driving your Peterbilt vehicle. For that you need a good training program or truck driving school. If you have not been trained, get the proper training before you drive. Only qualified drivers should drive this vehicle.

Every new Peterbilt vehicle is designed to conform to all Federal Motor Vehicle Safety Standards applicable at the time of manufacture. However, even with these safety features, continued safe and reliable operation depends greatly upon regular vehicle maintenance. The vehicle must be operated within the range of its mechanical capabilities and the limits of its load ratings. (See the tire and rim weight ratings information on the Vehicle Certification Label on the driver's door frame.) This vehicle is not approved for off-road operation.

How to Find What You Want

There are several tools built into this manual to help you find what you need quickly and easily. First is the Contents. Located at the front of the manual, this lists the main subjects covered and gives page numbers where you can find these subjects. Use the Contents to find information on a large subject like "Operating the Transmission."

Cross-references also help you get the information you need. If some other part of the manual contains further information on the subject you are reading about, a cross-reference will refer you to another page, for example: "See page 75, for more information on Safety Restraint Belts."

Finally, you will find a helpful Index at the back of the manual, listing subjects alphabetically. For example, if you want information on brakes, just look under "Brakes" in the Index. You will find the pages where brakes or related topics are discussed.

A Special Word About Repairs

This is not a repair or workshop manual. Your Peterbilt Dealer's Service Center is the best place to have your Medium Duty repaired. You can find Peterbilt dealers all over the country with the equipment and trained personnel to quickly get you back on the road—and to keep you there.

Your Medium Duty is a complex machine. Anyone attempting repairs on it needs good mechanical training, proper specifications, and proper tools. If you are sure you meet these qualifications, then you can probably perform some repairs yourself. But if you are not an experienced mechanic, anddo not have the right equipment or training, please leave the repairs to an authorized service facility. They are the ones equipped to do the job safely and correctly.

WARNING! Do not attempt repair work without sufficient training, service manuals, and the proper tools. You could be killed or injured, or you could make your vehicle unsafe. Do only those tasks you are fully qualified to do.

Shop Manuals

If you do decide to do complex repair work, you will need the **Medium Duty Maintenance Manual**. It contains service procedures, parts information, and supporting material on major components in your vehicle, such as Suspensions, Drivelines, Axles, and the Heater/Air Conditioner.

Listed below are manuals available from your Peterbilt Dealer. (There is a charge for these manuals.) Please provide the Chassis Serial Number when ordering, to be sure you get the correct manuals for your vehicle.

Medium Duty Maintenance Manual. This manual includes detailed service procedures specifically compiled for the components on your vehicle, including: electrical information, maintenance, disassembly, assembly, repairs, overhaul, and troubleshooting procedures. The information contained in this manual is the same used by Peterbilt dealers.

Medium Duty Master Parts Catalog. Contains illustrated parts lists with drawings and exploded views for Medium Duty series vehicles.

Medium Duty Body Builders' Manual. Contains general guidelines on mechanical and electrical modifications required by your dealer to add bodies, accessories, and special equipment to straight-truck configurations.

WARNING! Modifying your vehicle can make it unsafe. Some modifications can affect your vehicle's electrical system, stability, or other important functions. Before modifying your vehicle, check with your dealer to make sure it can be done safely. Improper modifications can cause death or personal injury.

Preventive Maintenance Section

The Preventive Maintenance section (pages 116 – 226) in this manual contains general service information for the operator, such as: lubrication points, making adjustments, and other helpful service information. This is summary information only, used for general maintenance of major components installed on your Medium Duty. For detailed service information see your **Medium Duty Maintenance Manual**.

When it comes time for major service work, your Peterbilt Dealer or Authorized Service Center will need vehicle and component information. To help you gather this vehicle information, see “Consumer Information and Vehicle Identification” on page 226. This section explains vehicle identification and provides space to record model and serial numbers of major components installed on your vehicle.

Additional Sources of Information

Installed Equipment — Operator's Manuals

Major component suppliers to Peterbilt also supply operation manuals specific to their products. Additional manuals and other pieces of literature are included in the glove compartment literature set. Look for information on products such as the engine, driver’s seat, transmission, axles, tires, and radio. If you are missing these pieces of literature, ask your Peterbilt Dealer for copies.

Other Sources

Another place to learn more about trucking is from local truck driving schools. Contact one near you to learn about courses they offer.

Federal and state agencies such as the department of licensing also have information you can ask for. The National Highway Traffic Safety Administration and the Federal Motor Carrier Safety Administration can give you

information about regulations governing transportation across state lines. Regulations that differ from state to state can be found at various agencies in state governments.

 https://truckmanualshub.com/

Cab and Frame Access

Introduction

The following section covers procedures for accessing the cab and the frame.

Door Lock and Keys

Doors can be locked from the inside by using the lock button. Close the door then push the button down to lock. Doors automatically unlock when you open them from inside, and can be locked from the outside with the key only.

As standard equipment, two keys are provided for the doors and ignition. When necessary, additional locks and keys are provided for storage compartments.

WARNING! To help lessen the chance and/or severity of death or personal injury in case of an accident, always lock the doors while driving. Along with using the lap shoulder belts properly, locking the doors helps prevent doors from inadvertently opening and occupants from being ejected from the vehicle.

To lock or unlock the doors from outside the cab:

- Insert the key in the door lock.
- Turn the key toward the rear door frame to lock; forward to unlock.

Cab and Frame Access

The following cab and frame entry/exit procedure recommendations were prepared with personal safety foremost in mind.

WARNING! Do not jump out of the cab or get into the cab without proper caution. You could slip or fall, possibly suffering death or serious injury. You could slip and fall if the steps are wet or icy, or if you step in fuel, oil, grease, snow or mud.

To help avoid personal injury due to a slip or fall:

- ALWAYS FACE TORWARDS THE CAB AND USE THREE POINTS OF CONTACT (TWO FEET, ONE HAND OR ONE FOOT, TWO HANDS) TO GRIP THE STEPS OR HANDHOLDS WHENEVER POSSIBLE AND LOOK WHERE YOU ARE GOING.

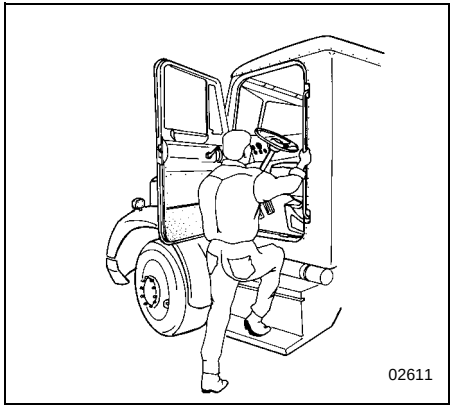

- Use even more care when steps and handholds (or footwear) are wet, coated with ice, snow, mud, oil, fuel, or grease.

WARNING! Always reinstall the battery compartment cover (step) before entering the cab. Without the battery cover you could slip and fall, resulting in death or possible injury to yourself.

WARNING! Do not step on vehicle components without antiskid surfaces or use components not designed for entry-and-exit use. You could fall and kill or injure yourself if you step onto a slippery surface. For example:

- ***Do not step onto the surface of a fuel tank. A fuel tank is not a step. The tank surface can get very slippery, and you might not be able to prevent a fall.***
- ***Use only the steps and handholds provided, not chain hooks, quarter fenders, etc.***
- ***Do not climb onto and off the deck plate—use steps and grab handle provided. If there is no deck plate, or if proper steps and grab handles are not provided, do not climb onto the area behind the cab.***
- ***Do not climb onto or stand on the frame rails. The frame rails are very slippery and could cause you to fall, resulting in death or personal injury.***
- ***Keep steps clean. Clean any fuel, oil, debris, ice, snow or grease off the steps before entering the cab or accessing the deck plate.***

https://truckmanualshub.com/

NOTE: Any alteration (adding bulkheads, headache racks, tool boxes, etc.) behind the cab that affects the utilization of grab handles, deck plates, or frame access steps installed by Peterbilt should comply with Federal Motor Carrier Safety Regulation 399.

Engine Access

Hood Hold Downs and Tilt

The hood is locked in its closed position by an external latch on each side. These latches serve as hold downs and keep the hood from opening unexpectedly.

CAUTION: If you do not latch the hood securely, it could open during operation and cause vehicle damage. Be sure to latch the hood securely before moving the vehicle.

WARNING! A pivoting hood could hurt someone or be damaged itself. Before opening or closing the hood, be sure there are no people or objects in the way. Failure to stand in a position of safety can cause death or personal injury.

To open the hood, unlatch both of the hood hold downs.

WARNING! Before opening the hood, make sure your footing is secure and stable. Failure to do so may cause the hood to close uncontrollably which may result in death or personal injury.

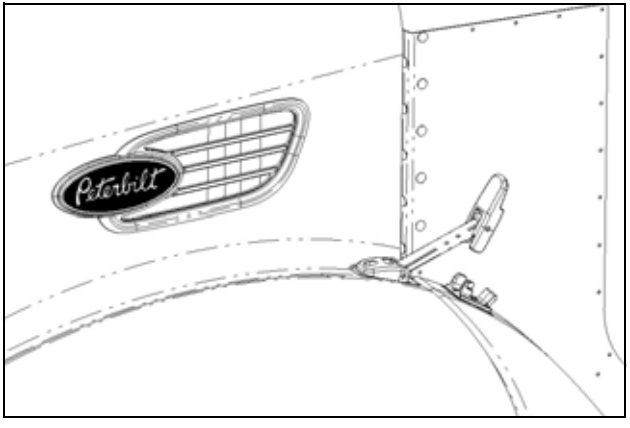

UNLATCHED

Put one hand on the hood handle (just above the Peterbilt emblem), one foot on the bumper, and one foot on the ground. Tilt the hood forward until you hear it “lock”.

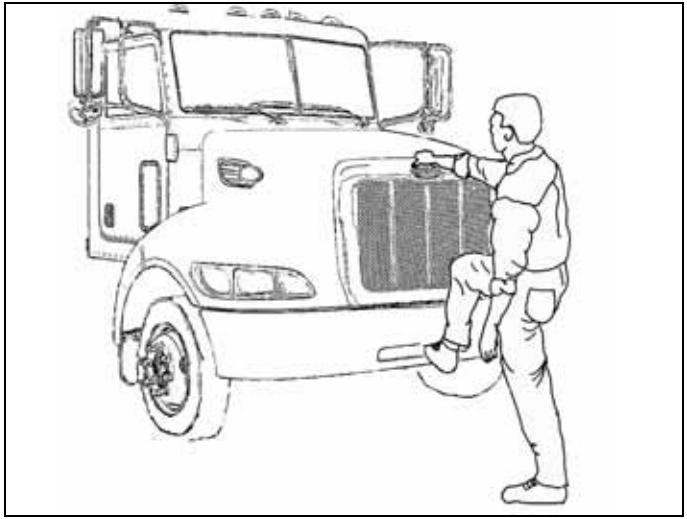

WARNING! Always make sure the lock is engaged to keep your hood open while working in the engine compartment. Failure to do so may allow the hood to fall unexpectedly resulting in death or personal injury.

To close the hood, you must first release the hood safety lock.

WARNING! Before closing the hood, be sure the area is clear—no people or objects are in the way. Failure to do so may result in death or personal injury

CAUTION: To avoid hood damage when closing the hood, firmly pull the cable to release the hold-open lock.

Locate the hood lock release cable as shown in the illustration below. The cable is located on the Drivers side bumper, visable when the hood is in the open position.

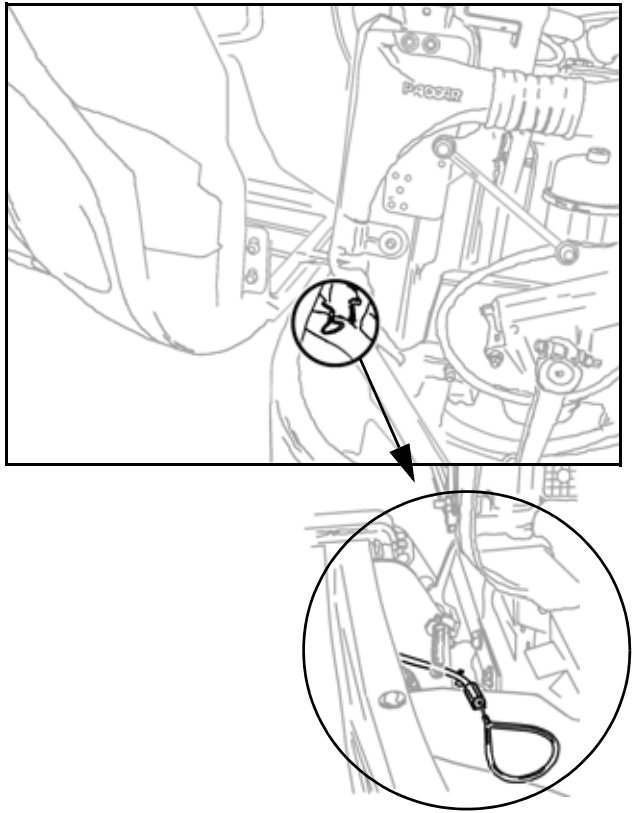

After lowering the hood, latch the hood closed with the hold downs.

WARNING! If the hood is not latched securely, it could open during operation and cause an accident resulting in death or personal injury. Be sure the hood is latched securely before moving the vehicle.

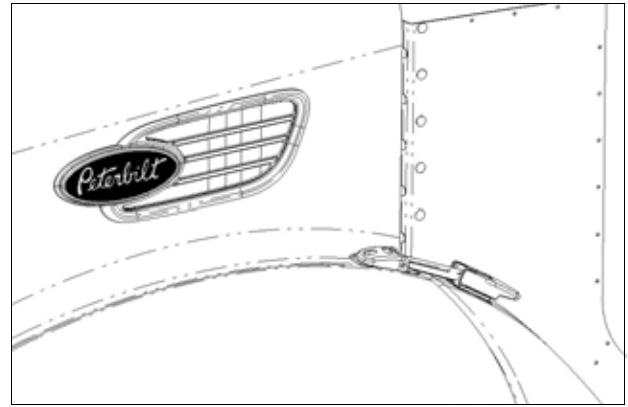

LATCHED

Controls and Displays

Instruments and Controls

Introduction

Your Medium Duty vehicle's dashboard is shown on the opposite page.

The dash includes standard gauges and switches. Your vehicle may come with all or some of the switches and gauges discussed here. The location of switches on the dash will vary depending on the options ordered and how your vehicle was configured.

LEFT SIDE

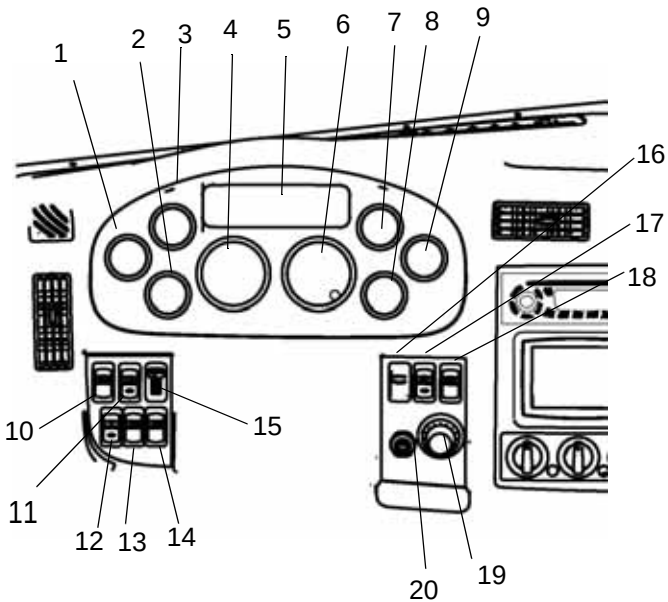

1	Engine Oil Pressure
2	DEF Gauge
3	Fuel Level
4	Tachometer
5	Driver Information Display
6	Speedometer
7	Primary Air Pressure
8	Secondary Air Pressure
9	Water Temperature
10	Headllights
11	Load Lights
12	Hazard Switch
13	Optional
14	Optional
15	Panel Lights
16	Optional
17	Cruise Control On/Off
18	Cruise Control Select
19	Menu Control Switch
20	Ignition

RIGHT SIDE

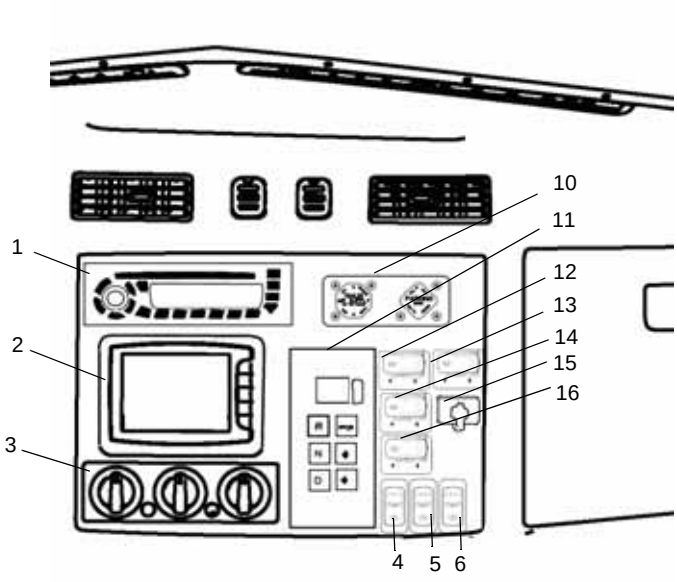

1	Radio
2	Navigation
3	HVAC Controls
4	Emission Controls
5	Engine Brake (on/off)
6	Engine Brake (Select)
7	Optional Switch*
8	Optional Switch*
9	Optional Switch*
10	Park Brake Controls
11	Transmission Display (Automatic)
12	Optional Switch
13	Optional Switch
14	Optional Switch
15	Optional USB Port
16	Optional Switch
	*These switches are not shown. These switch locations are available only if the automatic transmission selector is not mounted (item 11).

Menu Control Switch (MCS)

The MCS is used to navigate the Driver Information Display unit. The Menu Control Switch is located on the D Panel as shown in the illustration below.

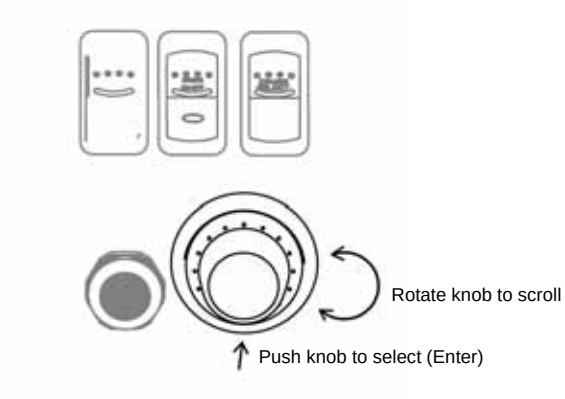

The MCS has the following functions:

- Rotating the MSC
  - Selecting display
  - Setting values
- Pushing the MSC
  - Confirming desired selection

Standard Warning Lights and Audible Alarm

The warning lights and audible alarm may indicate a system malfunction. Check the lights safely and frequently, and respond properly as soon as you see one go on. These lights could save you from a serious accident.

WARNING! Do not ignore a warning light or audbile alarm. These signals tell you something is wrong with your vehicle. It could be a failure in an important system, such as the brakes, which could lead to an accident causing death or injury. Have the appropriate system checked immediately.

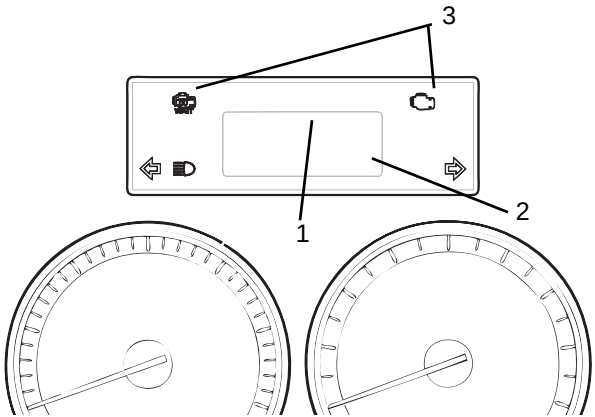

1. Driver Information Display
2. Status Indicator
3. Lower Light Bar

Warning lights and indicator symbols will be shown in both areas 1 and 2. Area 3 is dedicated to the turn and high beam indicator symbols.

1. Driver Information Display:

The display can show up to six warning lights. Warnings do not have fixed positions and are displayed in order of criticality. The most critical warning will be displayed on the top row and to the left. If more than six warnings are active, the menu control switch (MCS) can be used to scroll through the additional warnings.

2. Status Indicator:

Additional lights and indicator symbols are displayed in the Status Indicator. They are limited to:

a. Park Brake
b. Transmission Gear (Automatic transmissions only)
c. Warnings:

1 Number of active warnings.

! A red warning is active.

△ An amber warning is active.

d. Cruise Control - active
e. Clock alarm bell

Refer to “Warning Light / Indicator Symbols” on page 22 for information on each symbol.

Instrument System Self Test:

When the ignition switch is turned on the instrumentation system will undergo a Self Test. This test will verify the operation of the gauges and warnings.

During the Instrumentation System Self Test, three screens will sequentially display warning icons (approximately 3 seconds each screen) on the Information Display. These are:

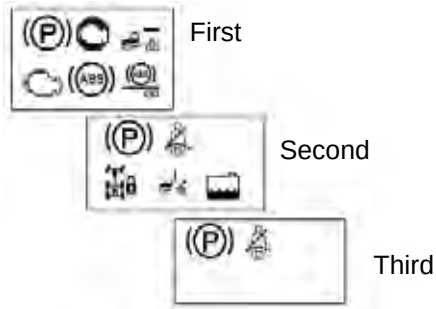

Refer to “Warning Light / Indicator Symbols” on page 22 for information on each symbol.

Completing this sequence will indicate a successful Self Test. Have your instrumentation system checked by a qualitfied service technician if does not successfully complete.

Audible Alarm:

The audible alarm will sound during the Instrumentation System Self Test. The audible alarm will also sound in conjunction with some warning lights. These events

include but are not limited to headlight on, fifth wheel, stop engine, primary/secondary air, and driver door open warnings.

Optional Lights:

Additional lights may be operational depending on individual vehicle specifications. These will be included in the Instrument System Self Test.

NOTE: Some optional lights may illuminate even though your vehicle is not equipped with that particular feature.

Warning Light / Indicator Symbols

The following is a list of Warning Light / Indicator Symbols. Reading left to right, the table header identifies

- the Symbol Name
- the appearance of the Symbol
- the Symbol Color when it is illuminated
- whether the symbol is standard (Std) or optional (Opt)
- the Page Number reference for additional information

Symbols are listed by major component sections.

Example: Engine, and then in alphabetical order.

Warning Light / Indicator Symbols

Symbol Name	Symbol	Color	Std	Opt	Page
1. Active Warnings, Exclamation Point	!	Red	•		24
2. Active Warnings, Number	1	Yellow	•		25
3. Active Warnings, Triangle	△	Yellow	•		25
4. Alternator	ALT	Red		•	25
5. Anti-Lock Brake System (ABS)	ABS	Yellow	•		25
6. Anti-Lock Brake System (ABS), Trailer	ABS	Yellow	•		25
7. Axle, Inter-Axle Differential Locked (Tandem Axles)		Yellow	•		26
8. Brake System	BRAKE			•	26
9. Clock, Alarm Bell		Yellow	•		26

Warning Light / Indicator Symbols

Symbol Name	Symbol	Color	Std	Opt	Page
10. Cruise Control, Active		Yellow	•		27
11. Dump Truck, Body Up		Yellow		•	27
12. Dump Truck, Trailer Body Up		Yellow		•	27
13. Emissions, Diesel Particulate Filter (DPF)		Yellow	•		27
14. Emissions, High Exhaust System Temperture (HEST)		Yellow	•		27
15. Engine, Check Engine		Yellow	•		27
16. Engine, Ether Start		Green		•	27
17. Engine, Heater		Yellow		•	27
18. Engine, Low Coolant Level		Yellow	•		27

Warning Light / Indicator Symbols

Symbol Name	Symbol	Color	Std	Opt	Page
19. Engine, Overspeed	RPM	Red		•	28
20. Engine, Retarder (Brake)		Green		•	28
21. Engine, Stop Engine		Red	•		28
22. Engine, Wait To Start	WAIT	Yellow		•	28
23. Fifth Wheel, King Pin Lock		Red		•	28
24. Fifth Wheel, Slide Unlocked		Red	•		28
25. Lights, High Beam		Blue	•		29
26. Message Waiting		Green		•	29
27. Park Brake	P	Red	•		29

Warning Light / Indicator Symbols

Symbol Name	Symbol	Color	Std	Opt	Page
28. Power Take-off (PTO)	PTO	Green		•	29
29. Power Take-off (PTO), Pump Mode	PUMP MODE	Green		•	29
30. Refrigerator		Green		•	29
31. Seat Belt, Fasten		Red	•		30
32. Suspension Dump		Yellow	•		30
33. Tire Inflation		Yellow		•	30
34. Transmission, Auxiliary	AUX	Yellow		•	30
35. Transmission, Check		Red		•	30
36. Transmission, Range Inhibit	RANGE INHIBIT	Red		•	30

Warning Light / Indicator Symbols

Symbol Name	Symbol	Color	Std	Opt	Page
37. Transmission, Oil Filter		Yellow		•	30
38. Transmission, Oil Temperature High		Yellow		•	31
39. Turn Signal, Left		Green	•		31
40. Turn Signal, Right		Green	•		31
41. Voltage		Orange	•		31

Warning Light/Indicator Symbol Descriptions

!

1. Active Warnings, Exclamation Point

Illuminates when a red warning is active. Use the MCS knob to view the warnings that are active. Refer to the preceeding Figure , “Warning Light / Indicator Symbols,” on page 22 for warning color classification.

2. Active Warnings, Number

1

Illuminates the total number of red and yellow active warnings. Use the MCS to view the active warnings if the display shows a > symbol.

3. Active Warnings, Triangle

△

Illuminates when an yellow warning is active. Use the MCS knob to view the warnings that are active. Refer to the preceeding Figure , “Warning Light / Indicator Symbols,” on page 22 for warning color classification.

4. Alternator

ALT

Illuminates if the alternator is not charging. (For alternators with warning lamp output signal.)

5. Anti-Lock Brake System (ABS)

ABS

Illuminates during the Instrumentation System Self Test. Have the ABS system checked by a Peterbilt dealer if the ABS Warning Lamp stays on for more than 3 seconds.

Illuminates during normal operating conditions to indicate a problem with the ABS System. See “ABS Warning Lamps” on page 104 for more information.

Illuminates when a problem exists with the optional Wheel Spin Control feature. See “Advanced ABS with Stability Control” on page 106 for more information.

6. Anti-Lock Brake System (ABS), Trailer

ABS

Illuminates during the Instrumentation System Self Test **and** the tractor/truck is connected with a ABS equipped trailer.

Illuminates during normal operating conditions to indicate a problem with the Trailer ABS System. This should be checked by a Peterbilt dealer as soon as possible. See “ABS Warning Lamps” on page 104 for more information.

NOTE:

•Tractors/Trucks and trailers built after March 1, 2001 must be able to turn on an In-Cab Trailer ABS Warning Lamp (per U.S. FMVSS121). The industry chose Power Line Communication (PLC) as the standard method to turn it on. See “Trailer ABS Warning Lamp” on page 104 *for more information*

•On trailers built prior to March 1, 2001 verify trailer ABS system status via the required external warning lamp mounted on the trailer. The indicator lamp on the trailer should be yellow and identified with the letters "ABS".

7. Axle, Inter-Axle Differential Locked (Tandem Axles)

Illuminates when the inter-axle differential switch is ON thus locking the inter-axle differential. This powers the forward rear and the rear rear differentials equally. When the switch is turned off (inter-axle differential unlocked) the engine power is allowed to flow to any of the 4 drive tires based on the differential effect (mostly to the forward rear differential). (This feature is standard on all tandem axles).

8.Brake System

Illuminates to indicate a malfunction in the hydraulic brake system (when equipped with Hybraulic brakes).

9.Clock, Alarm Bell

Illuminates when the alarm is set. It will flash when the clock alarm is active.

10.Cruise Control, Active

Illuminates when cruise control is active.

11.Dump Truck, Body Up

Illuminates when Truck Dump Body is up.

12.Dump Truck, Trailer Body Up

Illuminates when Trailer Dump Body is up.

13.Emissions, Diesel Particulate Filter (DPF)

Illuminates when diesel particulate trap is plugged. This warning will also illuminate when regeneration operation is disabled.

14.Emissions, High Exhaust System Temperture (HEST)

Illuminates when the exhaust gas temperature and exhaust components become extremely hot.

15.Engine, Check Engine

Illuminates when a problem exists, but the vehicle can still be safely driven. Vehicle should be serviced to correct the problem but the situation should not be considered an emergency.

16.Engine, Ether Start

Illuminates when ether start switch is on.

17. Engine, Heater

Illuminates when Engine Heater switch is on.

18. Engine, Low Coolant Level

Illuminates with an audible alarm indicating critically low coolant level. The vehicle must be serviced to correct the problem but the situation should not be considered an emergency.

19. Engine, Overspeed

Illuminates when engine RPM is exceeded.

20. Engine, Retarder (Brake)

Illuminates when the engine retarder (compression brake or exhaust brake) switch is turned on. (Engine retarders are an option.)

21. Engine, Stop Engine

Illuminates and an audible alarm tone will sound when a major engine system problem exists.

WARNING! This should be considered an emergency. You should stop the vehicle as safely as possible and turn OFF the ignition. The vehicle must be serviced and the problem corrected before driving again. Failure to do so may cause severe engine damage or cause an accident involving death or personal injury.

22. Engine, Wait To Start

Illuminates when engine grid heater is on (PACCAR PX-6 and PX-8).

23. Fifth Wheel, King Pin Lock

Illuminates when air actuated fifth wheel King Pin is unlocked.

24. Fifth Wheel, Slide Unlocked

Illuminates and an audible warning tone will sound when the air operated sliding fifth wheel switch is on, thus unlocking the sliding fifth wheel. The light and an audible warning tone should NOT be considered an emergency but simply as a reminder to turn off the switch to lock the sliding fifth wheel before driving. This switch should not be operated while driving. (Sliding fifth wheels are an option).

25. Lights, High Beam

Illuminates when the high beams are on. This icon will flash with audible alarm if the headlamps are left on when the door is open. In addition, this icon will flash, but without an audible alarm, if there is a problem with the low beam headlights or the low beam headlight wiring. In such event, the high beam headlights will turn on at 50% normal brightness.

26. Message Waiting

Illuminates with telematic equipped messaging.

WARNING! Do not attempt to read telematic messages while operating the vehicle. Reading messages can distract you from safe vehicle operation, which may cause death or personal injury.

27. Park Brake

Illuminates in the status indicator when parking brakes are applied and the vehicle is stationary. This symbol will also illuminate in the Driver Information Display if the parking brakes are applied and the vehicle is in motion.

28.Power Take-off (PTO)

Illuminates when the PTO is engaged.

NOTE: Do not drive vehicle with PTO engaged.

PUMP MODE

29.Power Take-off (PTO), Pump Mode

Illuminates with remote throttle application. Indicates pump mode is active.

30. Refrigerator

Illuminates to indicate that the refrigerator is on and ignition is off.

31. Seat Belt, Fasten

Illuminates when the ignition key is turned on as a reminder to fasten your seat belt.

WARNING! Do not drive vehicle without your seat belt and your riders' belts fastened. Riding without a safety belt which is properly fastened can lead to increased injury or death in an accident. Unbelted riders could be thrown into the windshield or other parts of the cab or could be thrown out of the cab. They could strike another person. Injuries can be much worse when riders are unbelted. Always fasten your seat belt and be sure anyone riding with you does the same.

32.Suspension Dump

Illuminates when suspension air bags are deflated.

33. Tire Inflation

Illuminates when tire pressures need to be checked. (Tire Pressure Monitoring System is an option)

34. Transmission, Auxiliary

Illuminates to indicate auxiliary transmission is in neutral.

35. Transmission, Check

Illuminates when transmission has recorded a fault code. This icon may also appear in the Transmission Display menu of the Driver Information Display unit (see item G; page 35). If the user is in this display menu, the icon does not indicate a fault code.

36. Transmission, Range Inhibit

Illuminates with Allison 1000/2000 series transmissions with "Range Inhibit" output.

37. Transmission, Oil Filter

Illuminates when service is required (Allison transmissions only).

38. Transmission, Oil Temperature High

Illuminates when transmission lubricant temperature is too high.The information display will provide the current oil temperature when the icon is illuminated.

Trans. Temp.
302 F

CAUTION: This should be considered an emergency. You should stop the vehicle as safely as possible and turn OFF the ignition. The vehicle must be serviced and the problem corrected before driving again. Failure to do so may cause severe transmission damage.

39. Turn Signal, Left

Blinks when the left turn signal or the hazard light function is operating.

40. Turn Signal, Right

Blinks when the right turn signal or the hazard light function is operating.

41. Voltage

Illuminates when transmission lubricant temperature is too high.The information display will provide the current oil temperature when the icon is illuminated.

Voltage
12.6 Volts

Driver Information Display

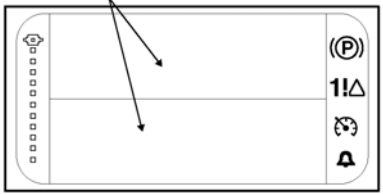

WARNING! Do not look at the Driver Information Display for prolonged periods while the vehicle is moving. Only glance at the monitor briefly while driving. Failure to do so can result in the driver not being attentive to the vehicle's road position, which could lead to an accident and possible death or personal injury or equipment damage.

The Driver Information Display, located at the top of the instrument cluster, displays important vehicle information through a constant monitoring of systems when any of the following conditions are met:

- ignition key in ON or ACC positions
- ignition timer is active
- MCS button is pushed (independent of ignition key switch position)
- clock alarm sounds
- driver or passenger door is opened
- hazard warning lamp switch is on

The various functions may be accessed by navigating through Menu Screens using the MCS. Refer to "Menu Control Switch (MCS)" on page 19 for more detail for the MCS.

The bullets in the Menu Bar allow access to each item by pushing the MCS when the desired bullet is highlighted.

In addition to a blank screen, the following are menu items and the information available within each menu selections.

NOTE: Some Driver Information Display functions are only accessible when the vehicle is parked. Other functions are accessible while the vehicle is moving or when parked. Each function is identified in the following descriptions.

A. **Fuel Economy** (Accessible while parked or driving)

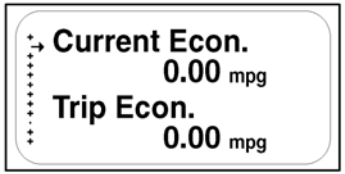

1. Current fuel economy - Indicates instantaneous fuel economy.
2. Trip fuel economy - Indicates trip fuel economy.

B. **RPM Detail** (Accessible while parked or driving)

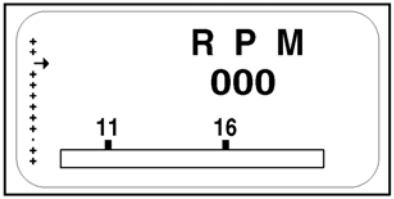

RPM reading of actual engine RPM. Engine RPM within the bar graph indicates the engine is operating in the most efficient RPM range. The display color will change if you are operating outside of this range.

C. **Ignition Timer** (Accessible while parked only)

Ignition timer is set from this menu. The ignition timer may be set for up to 30 minutes.

D. Trip Information

NOTE: When accessing the trip information menu, push the MCS on this menu (bullet). To exit, push the MCS again. To reset the trip values, press the Trip Odometer Reset Button on the main gauge instrument cluster.

Certain Trip Information functions area accessible when driving or when parked:

– Trip Economy

– Trip Average Speed

Other Trip Information functions are accessible only when parked:

– Trip Distance

– Trip Engine Hours

– Trip Idle Hours

– Trip Idle Percentage (%)

– PTO Hours

– PTO Trip Hours

– PTO Trip Percentage (%)

To reset the Trip Values, press the Trip Odometer Reset Button on the main gauge instrument cluster.

E. **Truck Information** (Accessible only while parked)

NOTE: When accessing the truck information menu, push the MCS on this menu (bullet). To exit, push the MCS again.

1. Chassis Number
2. Engine Make
3. Engine Model
4. Engine SW Version
5. Transmission Make
6. Transmission Model

7. Transmission SW Version
8. ABS (Antilock Braking System) Make
9. ABS Model
10. ABS SW Version
11. CECU (Cab Electronic Control Unit) Software Version
12. CECU Hardware Version

F. **Diagnostic Display** (Accessible only while parked)

NOTE: "Faults Found" will only be active if a red or yellow warning lamp is illuminated.

The diagnostic display menu (bullet) will indicate a fault that is generated by the vehicle's Engine, ABS and/or Transmission systems. While on this menu item the display will either indicate "No Faults Found" or "Faults Found". If "Faults Found" is active, pushing the MCS will display new menus for more information.

G. **Transmission Display** (Automated Transmissions only - Accessible while parked or driving)

NOTE: Refer to the Automated Transmission Operator's Manual for additional information.

This menu will show gear number that coincides with the current transmission gear selected. The menu also displays the transmission icon to let the user know what screen they are in. (Does not indicate a fault code.)

H. **Settings Menu** (Accessible only while parked)

The Settings menu screen allows the driver to view and/or change the following menu items:

- Display Format 12 Hour (AM/PM) or 24 Hour (military)
- Home/Local Time
- Alarm ON/OFF
- Alarm Time
- Units of measure
- Language (English, Spanish or French)

To Set Clock Display Format:

1. When in the Settings Menu, scroll through the list of menu items to "Format".
2. Press the MCS to display either 12 hour (AM/PM) or 24 hour (military) time.

To Set Home, Local or Alarm Time:

1. When in the Settings Menu, scroll through the list of menu items. Press the MCS to select the item to change.
2.

3. Rotate the MCS knob to change the hour. Press the MCS.

Standard Gauges

On the pages that follow you will find descriptions of some of the gauges on your instrument panel. For more information about using them in driving, see "Starting and Operating the Vehicle" Also check the Index under the name of the gauge or function you want to know more about.

WARNING! Do not ignore a warning light or audbile alarm. These signals tell you something is wrong with your vehicle. It could be a failure in an important system, such as the brakes, which could lead to an accident involving death or personal injury. Have the appropriate system checked immediately.

Some gauges will display a red LED warning light, with some accompanied by an audible alarm, whenever the limits of the function being displayed are exceeded.

Speedometer

The speedometer indicates the vehicle speed in miles per hour (mph) and in kilometers per hour (km/h). The speedometer also includes an odometer, trip meter, and trip reset button.

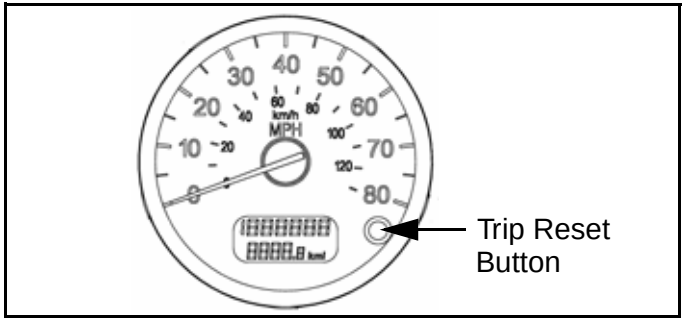

Odometer / Trip Meter

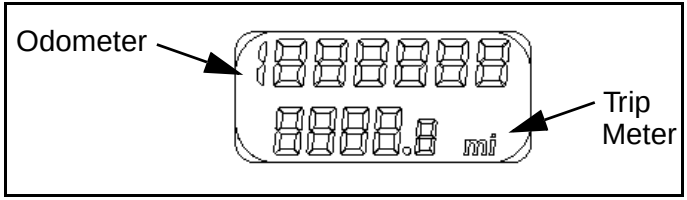

The LCD display in the lower part of the speedometer contains the odometer and trip meter.

The odometer displays the total distance your vehicle has traveled. It will display in miles on an English speedometer or in kilometers on a metric speedometer. The maximum

distance that can be shown on the odometer is “1 999 999” before it rolls over to zero.

The trip odometer displays how far the vehicle has gone on a particular trip. The trip odometer will display in miles on an English speedometer or in kilometers on a metric speedometer, in one tenth divisions. The maximum distance that can be shown on the trip odometer is “9999.9” before it rolls over to zero.

To reset the trip odometer, press and hold the trip reset button on the speedometer. The numbers will reset to 0 and begin to count new miles/km traveled. This also resets the trip values in the Driver Information Display.

The trip reset button also toggles all displays between English and Metric. (See page 39.)

NOTE: The Odometer/Trip Meter comes on when the door is opened or the key is in the accessory or ignition position. The Odometer/Trip Meter will remain on for 3 seconds after the door is closed or the ignition switch is turned off. This allows driver and service personnel to read the odometer without ignition switch being turned on.

Tachometer

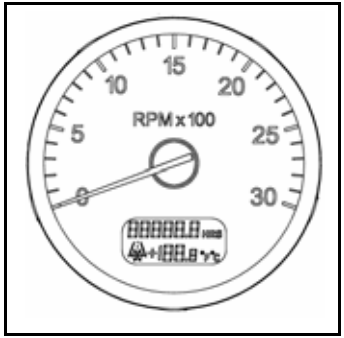

Your tachometer measures the engine speed in revolutions-per-minute (RPM). The tachometer also includes an engine hour meter and outside air temperature display.

Watching your tachometer is important to driving efficiently. It will let you match driving speed and gear selection to the operating range of your engine. If your engine speed gets too high, you can select a higher gear to lower the RPM. If your engine speed drops too low, you can select a lower gear to raise the RPM.

Engine Hours / Outside Air Temperature

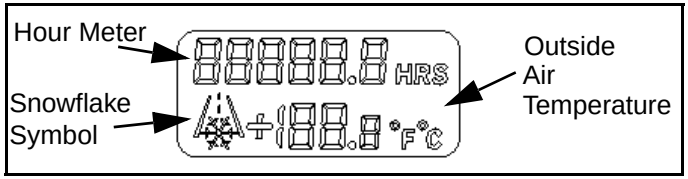

The LCD display in the lower part of the tachometer contains the engine hour meter and the outside air temperature display.

The engine hour meter will display the total number of hours the engine has been running. The maximum hours that can be shown are “99999.9” before the meter rolls over to zero.

The outside air temperature (OAT) will display the temperature outside the vehicle. The temperature can be displayed from -40° to 158° in Fahrenheit or -40° to 70° Celsius.The display will also alert the driver when the outside temperate approaches freezing (32°F or 0°C) by displaying a snowflake symbol. The symbol will turn on when the temperature drops below 34°F or 11°C and flash for the first 3 seconds, then stay on until the temperature goes above 37°F or 28°C.

The temperature can display using Standard or Metric units. Press the trip reset button on the Speedometer 4 times within 4 seconds. This will also change the units shown by the Driver Information Display.

Refer to “Units of measure” on page 36 for another method to change units.

NOTE: The OAT will come on when the door is open and the key switch is in the accessory or ignition position. The OAT display will turn off when the ignition switch is turned off.

NOTE: The OAT uses a sensor (located at the bottom of the driver’s side mirror assembly) to measure outside air temperature only. It is not capable of displaying the temperature of the road surface on either the temperature display or the snowflake icon.

NOTE: The effects of direct sunlight, or the use of mirror heat, will increase the outside air temperature displayed while the vehicle is stationary.

Engine Oil Pressure Gauge

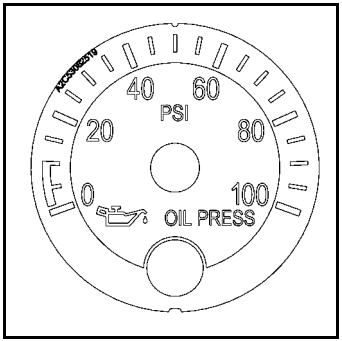

It is important to maintain oil pressure within acceptable limits. Your engine manual will give normal operating pressures for your engine.

CAUTION: Continuing to operate your vehicle with insufficient oil pressure will cause serious engine damage.

- If your oil pressure fails to rise within 10 seconds after your engine starts, stop the engine and determine the cause.
- If your oil pressure suddenly drops while you are driving, bring the vehicle to a stop as soon as possible in a safe location off the road and turn off the engine. Wait a few minutes to allow oil to drain into the oil pan, and then check the oil level. Add oil if necessary. If the problem persists, contact an authorized service center.

Check the engine manufacturer's manual for the correct oil pressure ranges for your engine.

Water Temperature Gauge

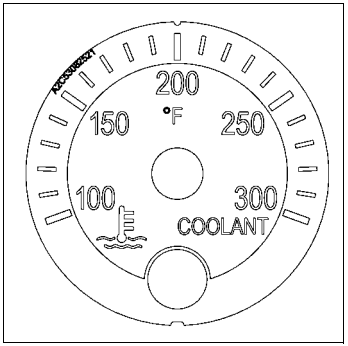

The water temperature gauge shows the temperature of the engine coolant. Under normal operating conditions the

water temperature gauge should register between 165° and 205°F (74° and 90°C). Under certain conditions, somewhat higher temperatures may be acceptable. But the maximum allowable temperature is 210°F (99°C) with the cooling system pressurized, except for certain special engines. Check your engine manual to be sure.

Engine Overheating

WARNING! Stop the vehicle in a safe location if the engine temperature gauge indicates an overheating situation. Failure to park the vehicle in a safe location may result in death, personal injury or property damage.

Wait until the coolant temperature is below 122° F (50°C). Protect your face, hands, and arms by covering the cap with a large, thick rag to protect you against escaping fluid and steam. Before you completely remove the cap, carefully and slowly turn the cap part way to allow excess pressure to escape. Then push down and turn for final removal.

The cooling system may overheat if the coolant level is below normal or if there is a sudden loss of coolant (such as a worn hose splitting). It may also temporarily overheat during severe operating conditions such as climbing a long hill on a hot day or stopping after high-speed driving.

WARNING! Do not remove the radiator fill cap while the engine is hot. Scalding steam and fluid under pressure may escape and cause death or serious personal injuries. You could be badly burned.

- ***Wait until the coolant temperature is below 122°F (50°C).***
- ***Protect face, hands, and arms by covering the cap with a large, thick rag to protect against escaping fluid and steam.***
- ***Carefully and slowly turn the cap one-quarter of a turn or until it reaches the first stop—allowing excess pressure to escape—push down and turn for final removal.***

If the “Engine Coolant Temperature” warning light comes on, or you have any other reason to suspect the engine may be overheating:

- Stop the vehicle, but DO NOT TURN OFF THE ENGINE unless a low water warning device indicates a loss of coolant.

CAUTION: Keep the engine running if the engine is overheating and the low coolant alarm is not on. Allowing the engine to run with coolant in the system will help protect the engine from overheating whick will reduce the damage to the engine.

- With the transmission in neutral, check to be certain the oil pressure gauge reads normal. Increase the engine speed to about 1100 - 1200 RPM, maximum. Return the idle speed to normal after 2 or 3 minutes. If the warning light does not go off or the temperature gauge does not begin to drop, then turn the engine off.
- If the overheating came from severe operating conditions, the temperature should have cooled by this time. If it has not, stop the engine and let it cool before checking to see if the coolant is low.

Fuel Gauge

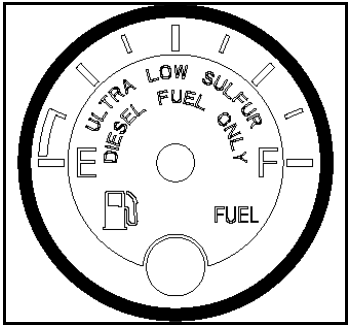

WARNING! Do not remove a fuel tank cap near an open flame. Hot fuel vapors are combustible and can cause an explosion or fire resulting in death, injury or property damage.

CAUTION: Use Ultra Low Sulfur Diesel fuel only. Failure to do so may damage components of the engine and Diesel Particulate Filter (DPF).

CAUTION: The fuel gauge shows the approximate amount of fuel in the fuel tanks. Besides empty and full, the gauge also indicates 1/4, 1/2, and 3/4 of total capacity. You will want to keep your fuel tanks at least half full to reduce condensation of moisture in the tanks. This moisture can damage your engine.

Diesel Exhaust Fluid (DEF) Gauge

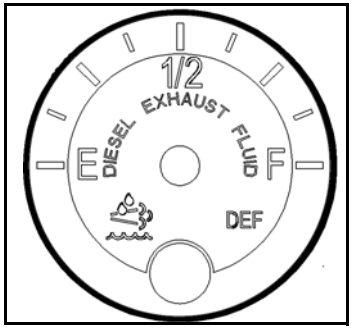

The deisel exhaust fluid gauge shows the approximate amount of DEF fluid in the DEF tank. Besides empty and full, the gauge also indicates 1/4, 1/2, and 3/4 of total capacity. DEF fluid is required to meet certain emission requirements. Do not allow your DEF tank to remain empty. Please refer to your emission supplemental manual for more details about DEF fluid.

CAUTION: Use Diesel Exhaust Fluid only. Failure to do so may damage components of the Diesel Particulate Filter (DPF).

Primary (Secondary) Air Pressure Gauge (Air Reservoir)

The air pressure gauge indicates the amount of air pressure in the brake system in pounds per square inch (psi).

- The primary gauge shows front reservoir air pressure.
- The secondary gauge shows pressure in the rear reservoir.

Ensure the air pressure registers more than 100 psi in both service systems before you move the vehicle. If the pressure in either circuit is too low for normal brake operation, the warning light will glow and the audible alarm will sound.

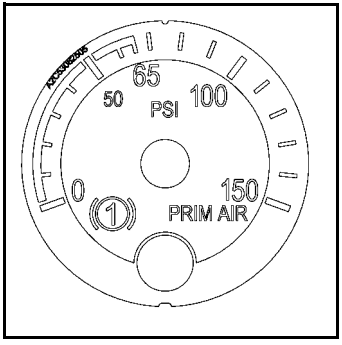

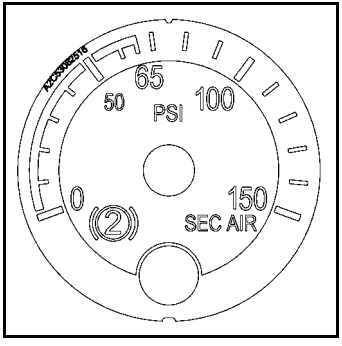

WARNING! The air pressure warning light and the audible alarm indicate a dangerous situation. There is not enough air pressure in the reservoirs for repeated braking and the brake system has failed. If air pressure falls below 60 psi (414 kPa) the spring brakes could suddenly apply, causing a wheel lockup, loss of control, or your vehicle to be overtaken by following vehicles. You could be in an accident involving death or personal injury. If these alarms come on while you are driving, immediately bring your vehicle to a safe stop off of the road. If the light and alarm do not turn off at start-up, do not try to drive the vehicle until the problem is found and fixed.

Optional Gauges

Maximum transmission temperature may vary, depending upon the transmission and type of lubricant. Check your transmission's owner's manual.

Forward Drive Axle Temperature Gauge

Rear Drive Axle Temperature Gauge

These gauges indicate the temperature of the lubricant in your vehicle's axle(s). These temperatures will vary with the kind of load you are carrying and the driving conditions you encounter. Maximum axle temperature may vary, depending upon the axle and type of lubricant. Very high temperatures signal a need to have your axle(s) lubrication checked.

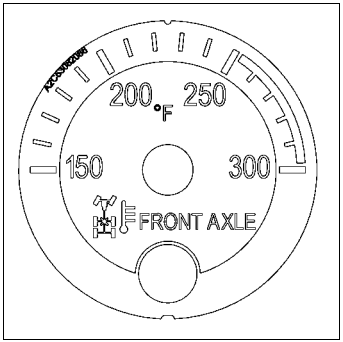

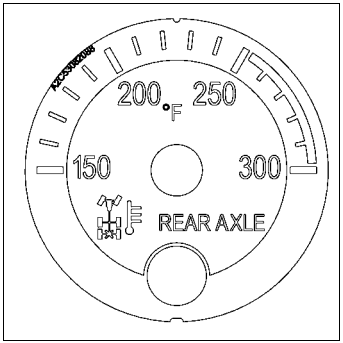

CAUTION: Driving with very hot temperatures in your rear drive axles can cause serious damage to axle bearings and seals. Have your axle lubrication checked if you notice a sign of overheating.

Steering Column-Mounted Controls

Turn Signal and Indicator Lights

NOTE: The ignition key must be turned to ON for the signal/switch to operate.

Your turn signal lever is mounted on the left side of the steering column below the steering wheel. Green directional indicator lights appear on the instrument panel. To

operate the signal, move the lever in the direction of the turn. Each time the turn indicator is activated the audbile alarm emits a short beep.

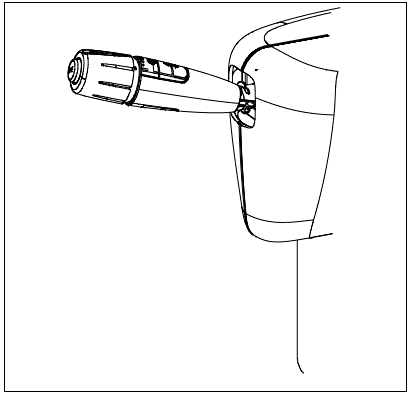

High Beam Headlamps

NOTE: The headlamps must be “ON” for the high beam switch to operate.

- To switch your headlamps to lower or higher beam, gently pull the turn signal lever towards the steering wheel, until you hear the switch click and the beam changes. The blue indicator light in the instrument panel will be ON when the high beam is being used.
- To return to previous beam: pull the lever towards the steering wheel again.

Headlamp Flash

To activate headlamp flash, gently push the turn signal lever away from the steering wheel until you hear and feel the switch click. Release lever to deactivate.

- If your headlamps are off, low beams will flash on.
- If your headlamps are on, they will dim. Maximum duration of dimming is 3 seconds. When the function ends, your headlamps will return to low beams.

ID And Clearance Lights Flash

To flash, press the button on the end of the turn signal lever and hold. To cancel the flash, release the button.

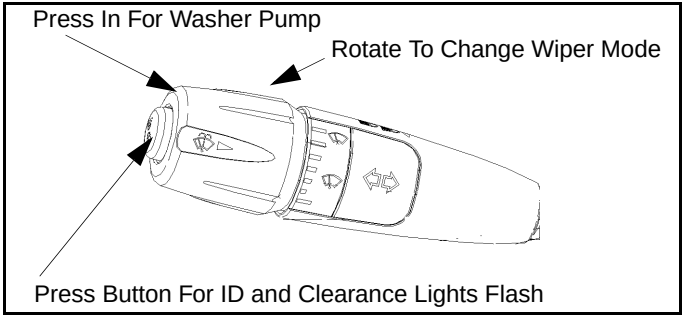

If your ID and clearance lights are on, they will flash off.

Windshield Wipers/Washer

Your vehicle is equipped with a two-speed, intermittent windshield wiper system. A seven-position rotary wiper switch (located on the turn signal lever) operates the windshield wipers and washer (see next illustration). Rotate the end of the turn signal lever to change the wiper mode.

NOTE: The ignition key must be turned to ON or ACC for the wiper/washer switches to operate.

The first position after OFF is the intermittent #1 cycle. The next positions are intermittent #2, #3, and #4. The last two positions are wiper low speed and wiper high speed.

See the wiper switch settings table that follows for intermittent delay times.

WARNING! Clean blades regularly with a damp cloth to remove road film and wax build-up. Do not drive with worn or dirty wiper blades. They can reduce visibility, making driving hazardous which may lead to an injury accident resulting in death or personal injury.

CAUTION:

- ***Do not use antifreeze or engine coolant in the windshield washer reservoir—damage to seals and other components will result.***

If the electric pump is operated for a long period (more than 15 seconds) with a dry reservoir, the pump motor may be damaged.

To Wash The Windshield

Push the rotary wash/wipe knob in (towards steering column), hold for more than 0.8 seconds and then release. Hold the knob in to extend the washing cycle. After the lever is released, the wipers will shut off automatically or resume the wiper's setting speed.

Wiper Switch Settings

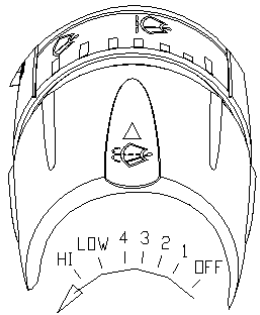

Wiper Switch Position	Wiper Speed
Off	Off
Intermittent #1	20 Second Delay
Intermittent #2	17 Second Delay
Intermittent #3	7 Second Delay
Intermittent #4	4 Second Delay
Low	Low Speed
High	High Speed

To activate the wipers for one swipe without activating the washer (“mist” function), push the turn signal lever in (towards the steering column) and release in less than 0.5 seconds. The wipers will perform a single swipe and then resume the wiper’s setting speed.

Check the windshield washing fluid level daily. If necessary, fill to top.

Clean all inside and outside windows regularly. Use an alcohol-based cleaning solution and wipe dry with either a lint-free or a chamois cloth. Avoid running the wiper blades over a dry windshield to prevent scratching the glass. Spray on washer fluid first. A scratched windshield will reduce visibility.

Electric Horn

Your Peterbilt has an electric horn. To operate, press on the horn symbol near the center of the steering wheel.

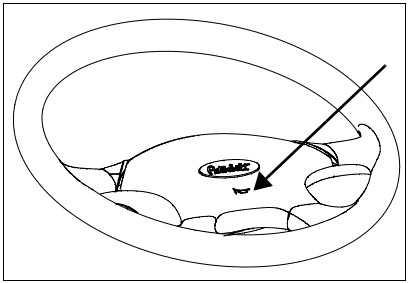

Air Operated Horn (Option)

Your Medium Duty vehicle may be equipped with an air horn. To operate, pull on the lanyard extending from the overhead header panel.

Trailer Brake Hand Valve

This hand valve provides air pressure to apply the trailer brakes only. It operates independently of the foot treadle valve.

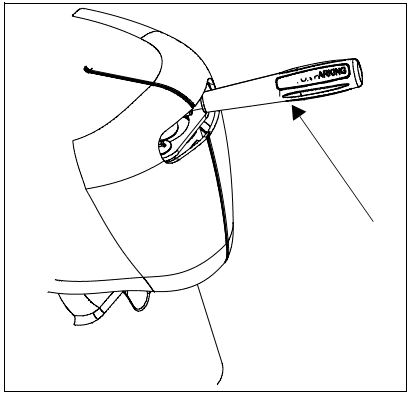

To operate the trailer brake hand valve: Pull down on the lever under the right side of the steering wheel.

WARNING! If you have these levers, they may be close together on your steering wheel column. Exercise care to choose the appropriate lever. The BrakeSaver lever is located lower and closer to the driver on the steering column (see page 59). Activating the trailer hand brake lever instead of the BrakeSaver lever could lead to an accident resulting in death or personal injury.

See “Brake Safety and Emergency” on page 112 for more complete information on when and how to use your trailer brake. Or see the Index, under Brake

NOTE: The trailer brake is not to be used as the main means of braking. To use this brake frequently instead of using the foot brake will wear out the trailer brake sooner.

WARNING! Always apply the parking brakes for parking or holding your vehicle on grade. It is dangerous to use air-applied trailer brakes for parking or holding a vehicle. Air system pressure can bleed down and release the brakes. You could have a vehicle roll-away causing an accident resulting in death or personal injury.

Tilt- Telescoping Steering Column

Depending on your vehicle's configuration, you may have either a Tilt or a Tilt/Telescoping steering column.

- The tilt feature allows forward and rearward movement of the wheel.
- The telescoping feature allows you to move the wheel up and down.

To activate these features, locate the Tilt/Telescoping handle on the left side of the steering column.

To adjust the steering wheel, PULL and HOLD the handle. Push or pull the wheel to the desired height and angle, then RELEASE the handle to lock the wheel at the correct position.

WARNING! Make all adjustments to the steering mechanism while the vehicle is stopped. Adjusting the Tilt-Telescoping Steering Wheel while the vehicle is in motion could cause loss of control. You wouldn't be able to steer properly and could have an accident resulting in death or personal injury.

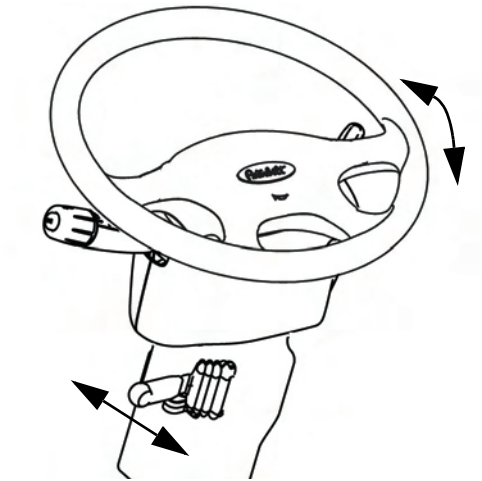

Dash- And Door-Mounted Features

Ignition Switch

Your ignition switch has four (unmarked) positions:

- ACC (Accessory): With your key in this position you can play the radio or use other accessories, but your engine won't start.

- OFF:In this position all systems are off, and you can remove your key.
- IGN & ACC:This position allows you to turn on the engine and all accessory power.
- START:Starter activation to start engine.

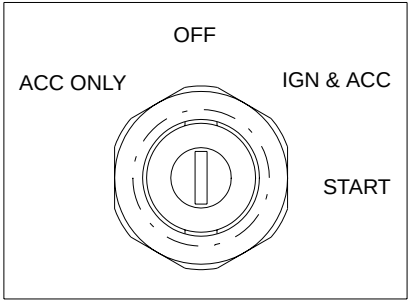

Hazard Flasher

The four-way Emergency Flasher switch is located to the right of the ignition key switch. With the switch in the ON position, the emergency flasher makes all four turn signals (front and rear) flash simultaneously. The flasher works independently of the ignition switch. You should always use the flasher if the vehicle is disabled or parked under emergency conditions.

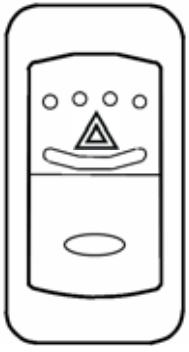

WARNING! Use your Hazard Flasher Warning System any time you have to stop the vehicle on or off the road, day or night. A hard-to-see vehicle can result in an accident causing death or personal injury. Another vehicle could run into you if you do not set your flashers and follow the placement of emergency signals per FMCSR 392.22. Always move the vehicle a safe distance off the road when stalled or stopped for repairs. A disabled vehicle can be dangerous for you and others.

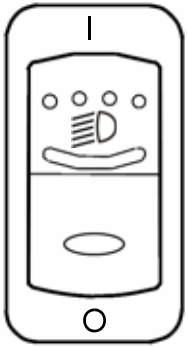

Daytime Running Lights

On vehicles equipped with the Daytime Running Light (DRL) system, the low beam headlights are turned ON automatically at reduced brightness (to conserve headlamp life).

If the headlight switch is turned OFF, the DRL system engages automatically after the engine starts and you release the parking brake. If the headlight switch is ON, the DRL system is overridden, and headlights operate normally.

WARNING! Do not use daytime running lights (DRL) during periods of darkness or reduced visibility. Do not use DRL as a substitute for headlights or other lights during operations that require lighting of your vehicle. Doing so could lead to an accident resulting in death or personal injury.

NOTE: On vehicles equipped with daytime running lights (DRL), the high-beam headlamps go on automatically at reduced brightness if the engine is running and the headlamp switch is turned off. The daytime running lights are turned off automatically while the parking brake is engaged. If the headlamp switch is turned on, the DRL system is overridden & headlamps operate normally.

Panel Light Dimmer

The Panel Light Dimmer lets you vary the brightness of your instrument panel lights.

To Operate Your Panel Light Dimmer:

1. Turn on either the headlights or clearance lights.
2. To brighten the instrument lights, rotate the thumb-wheel up.
3. To dim the instrument lights, rotate the thumbwheel down.

ID and Clearance Lights Switch

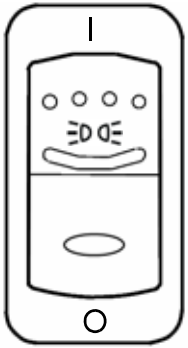

These are the amber lights on top of your cab, the lights on the front and sides of the trailer, and the red lights on the rear of a truck or trailer. They are controlled by the control panel switch labelled CL LPS or with the symbol shown above.

Dome Light

The center-mounted dome light is operated by gently pushing on the lens until a click is heard. The same action turns the light on or off, depending on its previous state.

Fog Lights Switch

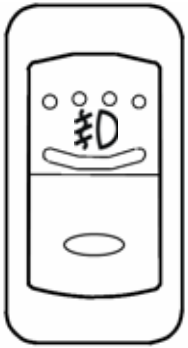

If your vehicle has fog lights, turn them ON or OFF with the control panel switch with the symbol shown above.

NOTE: Across the U.S.A. and Canada, State/Provincial requirements vary as to when high beams and fog lights can and cannot be used together. Some states allow only four lights to be used together, while some allow more. How your lights are arranged will affect whether you can operate headlights and fog lights concurrently—always comply with the state or provincial requirements where you are driving.

Air Suspension Deflate Switch (Dump Valve)

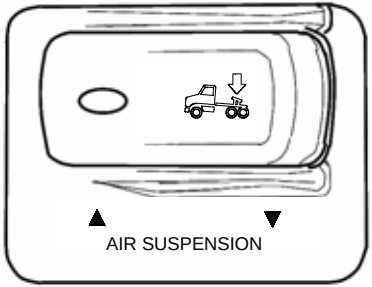

Your Peterbilt vehicle may have an air suspension deflation switch which allows the air in the suspension to be exhausted from a switch on the dash. The purpose of this feature is to allow you to lower your tractor to get under a trailer. You may notice a guard over the switch. This prevents you from accidentally deflating the suspension.

WARNING! Operating the Air Suspension Deflate Switch (Dump Valve) while driving can lead to an accident causing death or personal injury. Sudden deflation while your vehicle is moving can affect handling and control. Use this switch only when your vehicle is not moving.

CAUTION: Operating a vehicle with air suspension bags either overinflated or underinflated may cause damage to driveline components. If a vehicle must be operated under such conditions, do not exceed 5 mph.

Cruise Control Switch

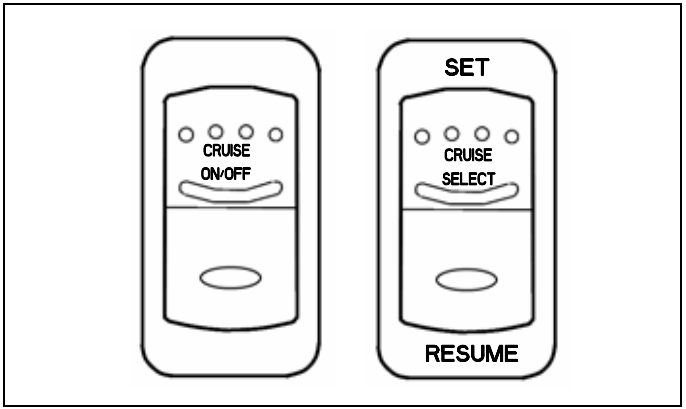

The master switch turns the cruise control ON or OFF. The second switch allows you to SET the desired speed or RESUME the desired speed after the cruise control function has been interrupted.

WARNING! Do not operate the cruise control when operating on road surfaces with poor traction (wet, icy, or snow covered roads) or in heavy traffic. Accelerations caused by the normal operation of the cruise control could cause you to lose control of the vehicle resulting in an accident causing death or personal injury.

NOTE: Cruise control functions and features may vary depending upon which engine you have. For specific explanation of your cruise control, see the cruise control or engine manual included with your vehicle.

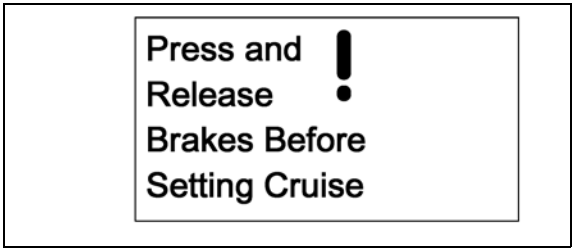

This vehicle's electronic system will perform a 'rationality check' every time the vehicle is started. This check is to ensure that the service brakes are working before allowing cruise control to function. This safety feature is

designed to ensure that a driver is able to cancel the cruise set speed by using the service brake pedal. The system will not allow cruise control operation if it does not pass the ‘rationality check’. The Driver Information Display will prompt you to press the service brake pedal if it has not been pressed since the vehicle has been started.

Regeneration Switch

In order to meet 2007 EPA engine emission requirements, vehicles will have a either a two or three position switch to help control and maintain the exhaust Diesel Particulate Filter. Please refer to “Exhaust After-Treatment System” on page 128 for more information about the emission control system and how it affects normal operating procedures.

START

Depressing the button in the START direction for 4 to 8 seconds will initiate a parked regeneration. Be sure to release the button to ensure that the system will begin the regerenation cycle.

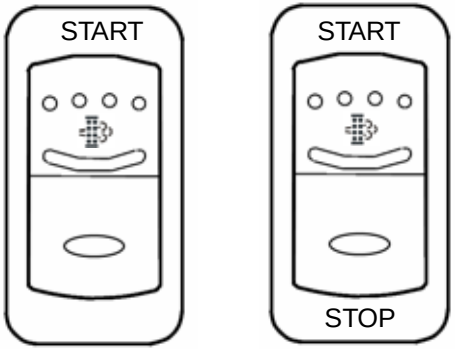

Two Position Three Position

CENTER (three position switch only)

Center is the normal position of the switch.

The center position will allow an automatic regeneration to occur.

STOP (three position switch only)

When STOP is pressed the system will not regenerate under any conditions.

CAUTION: Do not leave the three position switch in the STOP position unless you need to cancel or stop regeneration. Leaving the switch in the STOP position for extended periods of time will result in increased soot levels in the DPF which can affect engine performance or disable the engine.

Power Mirror Switch

If your vehicle is equipped with power mirrors, the mirror controls will be located on the driver side door pad. Aerodynamic-style mirrors are controlled for 4-way adjustable movement, while Moto mirrors are controlled for 2-way adjustable movement.

WARNING! Convex mirrors can distort images and make objects appear smaller and farther away than they really are. You could have an accident resulting in death or personal injury if you are too close to another vehicle or other object. Keep plenty of space between your vehicle and others when you turn or change lanes. Remember that other objects are closer than they may appear.

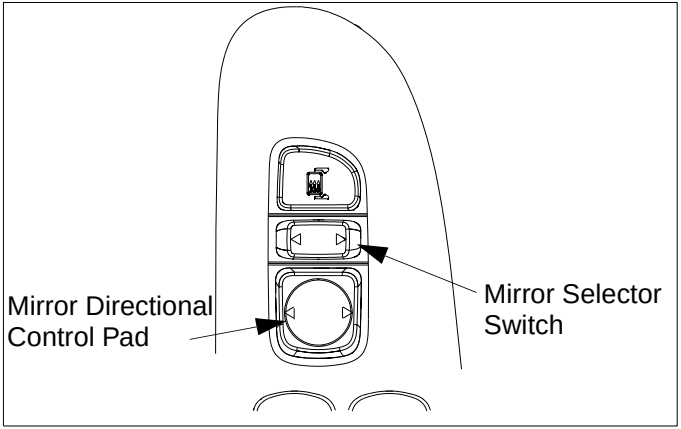

NOTE: The Power Mirror Switch does not control the adjustment of the convex mirrors.

To Adjust Moto Mirrors

1. Move the mirror selector switch to the right or left from the neutral center position to select the desired mirror for adjustment.

NOTE: If the mirror is fixed (non-motorized) on the left side, then the mirror selector switch will ONLY allow selection of the neutral and right mirror switch positions.

2. Depress the mirror directional control pad towards the arrows pointing left or right to adjust the mirror in/out.

NOTE: After mirror adjustments have been completed, return the mirror selector switch back to the center (neutral) position, to prevent unintentional adjustments to the mirrors.

Mirror Heat Switch

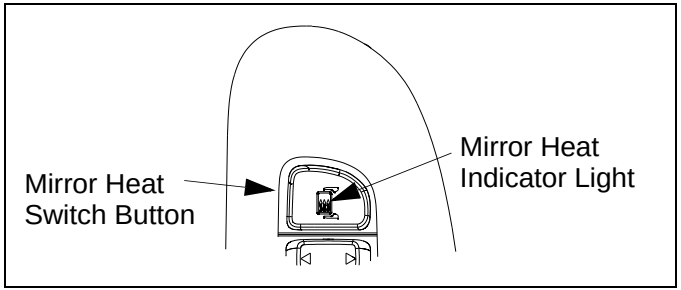

Your vehicle may be equipped with optional heated mirrors. Mirror heat is controlled by the mirror heat switch button, which is part of the mirror switch module located on the driver side door pad. Motorized mirrors with mirror heat have an automatic 15-minute “time out” feature, where the mirror heat-only module is automatically deactivated.

To defrost the mirrors in cold weather, depress the mirror heat switch button and release. The mirror heat symbol in the button will illuminate to indicate the mirror heat function has been activated. Pressing and releasing the button again turns the mirror heat and the indicator light Off.

NOTE: The effects of direct sunlight, or the use of mirror heat, will increase the outside air temperature displayed while the vehicle is stationary.

Power Window Switch

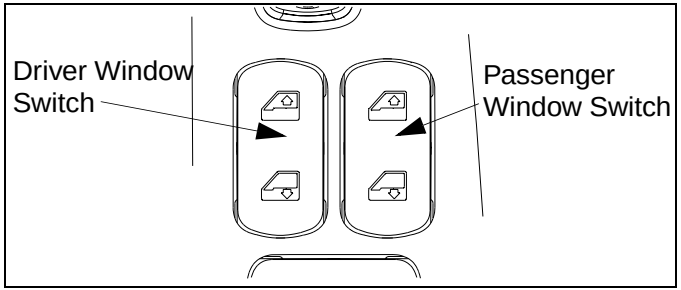

WARNING! When closing the power windows, be sure that they are free of obstructions, including your, or your passenger’s, hands and body. Failure to do so can result in death or personal injury.

Your vehicle is probably equipped with power windows. Power window rocker switches are located on the door pads (a switch for the passenger window is also on the driver side door pad, as shown above). To open or close a window, depress the switch for that window at the end that displays a downward- or upward-directed arrow, respectively, in the window symbol on the switch face. Release the switch to stop window movement.

Power Door Lock Switch

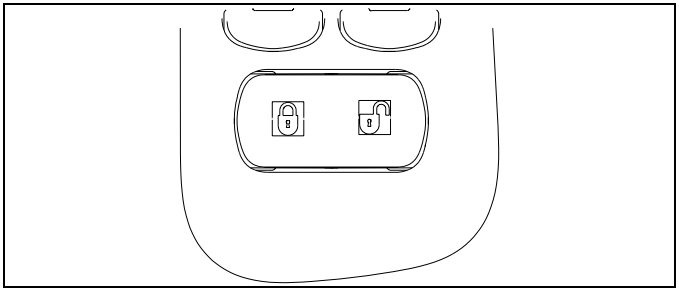

Your vehicle is probably equipped with power door locks. Power door lock rocker switches are located on the door pads (switch on the driver side door pad is shown above). To lock or unlock both cab doors as well as a sleeper door, depress any door lock switch at the end that displays a closed or open padlock symbol, respectively, on the switch face.

Manual and Automatic Control Switch

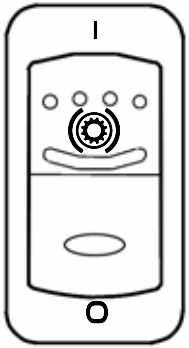

With the switch in the AUTOMATIC position, the BrakeSaver will be fully applied automatically when the operator has the vehicle in gear and takes his or her foot off the accelerator pedal.

With the switch in the ON position, the BrakeSaver will be applied constantly, regardless of whether the operator has the vehicle in gear or his or her foot off the accelerator.

Manual Control Lever

This hand-operated control lever provides modulated application of the BrakeSaver in the manual or ON mode (see next illustration). How much braking you get depends on how much you move the lever.

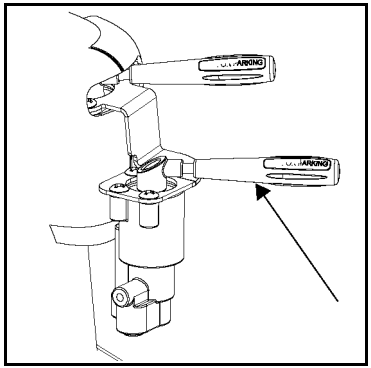

A Control Air Pressure gauge and an Engine Oil Temperature gauge are provided with the BrakeSaver.

Jacobs Engine Brake or Cummins “C” Brake Switch

The ON/OFF switch turns the system ON or OFF. The second switch performs the progressive braking function that controls the amount of retarding.

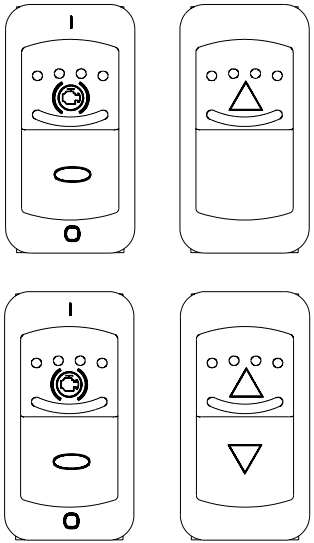

2-Mode and 3-Mode Systems

- If you have the two-mode system, you can select HIGH or LOW.
- If you have the three-mode system, you can select low, medium, or high retarding.

WARNING! Do not use the Jacob's brake as the primary means of slowing or stopping the vehicle. The Jacob's brake is designed to be used in conjunction with the service brakes. Failure to do this may cause death or personal injury.

Interaxle Differential Lock Switch

The interaxle differential allows differential action between the forward rear and the rear rear driving axles. The interaxle differential lock switch allows the operator to LOCK or UNLOCK the differential. The guard over this switch prevents you from accidentally activating the lock.

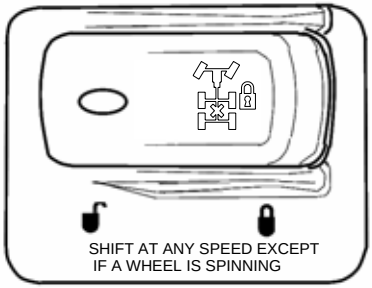

WARNING! Placing the differential lock in the "LOCK" position while your wheels are spinning could cause loss of control or axle damage. there could be an accident involving death or personal injury. Switch to "LOCK" only when your wheels are not spinning.

See "Interaxle Differential" on page 95 for more information on using your interaxle differential.

Two-Speed Rear Axle (Range) Switch

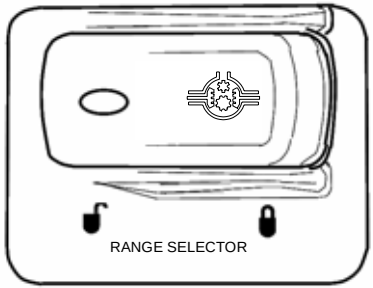

If your vehicle is equipped with a two-speed rear axle, you can select the axle range by the dash mounted switch shown above. The low range provides maximum torque for operating off-highway. The high range is a faster ratio for highway speeds.

For information on how to operate your two-speed rear axle properly and safely, see “Dual Range (Two Speed) Axles” on page 97.

Fifth Wheel Lock (Slider Adjustment) Switch

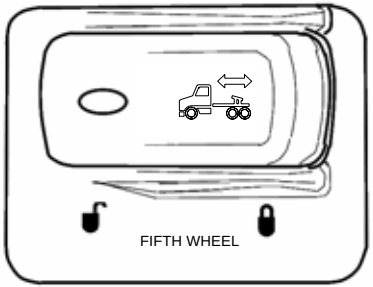

WARNING! Do not move the fifth wheel while the tractor-trailer is in motion. Movement of the fifth wheel while a tractor-trailer is moving can cause a serious accident involving death or personal injury. Your load could shift suddenly, causing you to lose control of the vehicle. Never operate the vehicle with the switch in the unlock position. Always inspect the fifth wheel after you lock the switch to be sure the fifth wheel is engaged.

Vehicles having an air slide fifth wheel have a fifth wheel slider lock controlled by a switch on the instrument panel. By placing the switch in the unlock position, you can slide

the fifth wheel to various positions to adjust weight distribution. There is a guard over this switch to protect you against accidentally activating or releasing the lock.

Parking Brake Valve and Trailer Air Supply Valve

Before you leave the cab, apply all parking brakes.

- for vehicles with air brakes:

1. Apply all parking brakes. Pull out the **Yellow** Parking Brake Control knob (1) located on the dash. In tractors, the **Red** (octagon-shaped) Trailer Air Supply Control knob (2) will automatically pop out.

Full Truck Parking Brake Valve

WARNING! Do not leave the cab without applying the parking brake. The truck could roll and cause an accident involving death or personal injury. Always apply the parking brake before you leave the cab.

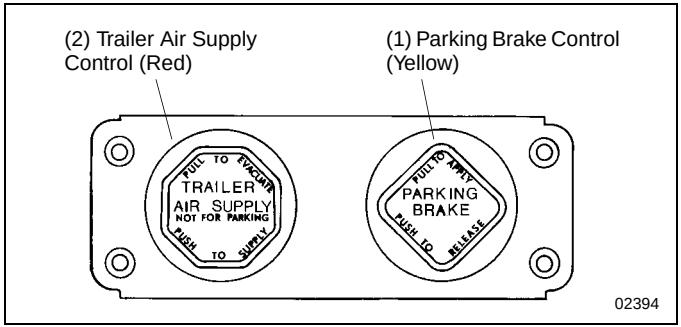

Combination (Tractor/Trailer) Parking Brake Control Valves

2. Shift the transmission into its PARK position. (See Pages 100 and 146 for transmission shifting and parking brake information.)
3. Turn the key to OFF.
4. Remove the key.

WARNING! Do not pull out the parking brake valve while the vehicle is moving. Stopping with the parking brake controls can cause a sudden wheel lock-up, loss of control, or over-take by following vehicles possibly resulting in an accident involving death or personal injury

WARNING! Before operating your vehicle after it has been parked, do not forget to push in the parking brake valve to release the parking brakes. Failure to release your parking brakes before putting the vehicle into motion can cause fire or loss of control of the vehicle, which can result in death or personal injury.

See “Using the Brake System” on page 104 for more information.

- for vehicles with hydraulic brakes:

The parking brake consists of a driveline drum brake actuated by a lever and cable. The hand lever, mounted on the vehicle's cab floor, pulls or releases the cable controlling the brake. Pulling upward on the parking brake lever pulls the cable and expands the driveline brake shoes outward against the driveline brake drum.

The driveline brake is disengaged by pushing the handle downward to its lowest position.

NOTE: Failure to fully release the parking brake can cause the brakes to overheat.

CAUTION: Unless it is an emergency, do not pull upward on the parking brake lever while the vehicle is moving. Attempting to stop with the parking brake could cause damage to the drive-line, transmission, or the parking brake mechanism itself.

Using the Parking Brake

1. Come to a complete stop.
2. Apply the parking brake. Pull upward on the parking brake lever until it reaches an over (top) center position. (The PARK light on the dash will come on.)

NOTE: Ensure the lever is over center. The light will come on prior to brake being fully applied.

PARKING BRAKE LEVER

Heater-Air Conditioning Controls

Your heat and air conditioning controls are mounted in the “D” instrument panel in conventional models. Additionally, the sleeper compartment may also contain a separate heating and cooling system with separate controls.

WARNING! Exhaust fumes from the engine contain carbon monoxide, a colorless and odorless gas. Do not breathe the engine exhaust gas. A poorly maintained, damaged, or corroded exhaust system can allow carbon monoxide to enter the cab or sleeper. Entry of carbon monoxide into the cab is also possible from other vehicles nearby. Failure to properly maintain your vehicle could cause carbon monoxide to enter the cab/sleeper, causing death, injury or serious illness.

WARNING! Never idle your vehicle for prolonged periods of time if you sense that exhaust fumes are entering the cab or sleeper. Investigate the cause of the fumes and correct it as soon as possible. If the vehicle must be driven under these conditions, drive only with the windows open. Failure to repair the source of the exhaust fumes may lead to death, injury or personal harm.

NOTES:

•Keep the engine exhaust system and the vehicle’s cab/sleeper ventilation system properly maintained. It is recommended that the vehicle’s exhaust system and cab/sleeper be inspected:

- By a competent technician every 15,000 miles
- Whenever a change is noticed in the sound of the exhaust system
- Whenever the exhaust system, underbody, cab or sleeper is damaged

•To allow for proper operation of the vehicle ventilation system, keep the inlet grille at the base of the windshield clear of snow, ice, leaves and other obstructions at all times.

•If you are required to idle your vehicle for long periods of time, install an auxiliary heater or automatic idle control. These auxiliary devices can reduce fuel consumption and save you money.

•If other vehicles are parked next to you idling, move your vehicle or do not stay in your vehicle for prolonged periods of time.

•When idling for short periods of time

–Set to Heat or A/C

–Set the fan to Medium or High speed

–Set the controls to FRESH AIR

To Set the Heater-Air Conditioning Controls

Conventional Cab:

The Conventional cab's controls will have one control unit on the dash, and may have a rocker switch for the bunk control unit (see illustrations that follow):

- A rotary knob (A) in the left portion controlling the blower speed with five settings (including OFF).
- A rotary knob (B) in the center portion controlling the movement of air within the cab. This control is continuously variable through five modes (clockwise from left):
  - Panel
  - Panel/Floor
  - Floor
  - Defrost/Floor
  - Defrost
- A rotary knob (C) in the right portion controlling the air temperature.
- A push button switch (D) in the center left portion to engage the air conditioner compressor (only vehicles with air conditioning).
- A push button switch (E) in the center right portion to select either fresh- or recirculated-air mode.

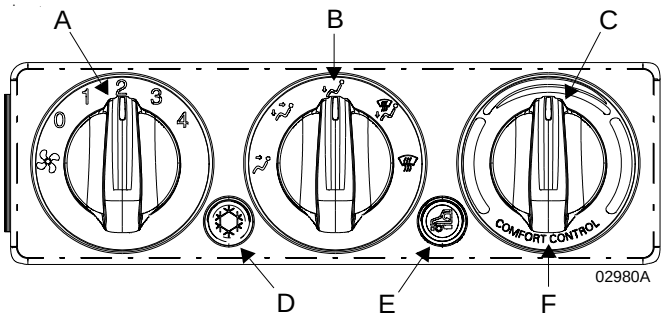

NOTE: For vehicles equipped with the Peterbilt Comfort Control (PCC) option: The PCC option lets the temperature knob function as a thermostat that regulates duct temperatures based on the knob settings. When active, the "COMFORT CONTROL" icon (F) will be illuminated under the temperature knob (C).

Conventional Cab Control Panel (vehicle with air conditioner and PCC)

- **To heat the cab,** select the desired air mode and set the temperature knob to hot (the red position on the control) and the blower to whatever speed makes you most comfortable.
- **To defog the windshield,** select the Defrost mode and turn the blower speed to high. Set the temperature knob to hot (the red position on the control). The air conditioner is automatically activated to remove moisture from the cab. After the windshield is clear, adjust the mode, blower speed, and temperature to your comfort.

WARNING! Do not drive with visibility reduced by fog, condensation, or frost on the windshield. Your view may be obscured, which could result in an accident involving causing death or personal injury. For clear visibility and safe driving, it is extremely important for you to follow the instructions pertaining to the function and use of the ventilation/heating and defogging/defrosting system. If in doubt, consult your dealer. Maximum heating output and fast defrosting can be obtained only after the engine has reached operating temperature.

CAUTION: During extreme cold weather, do not blow hot defroster air onto cold windshields. This could crack the glass. Turn the air flow control lever to Defrost and adjust the fan speed accordingly while the engine warms. If the engine is already warm, move the temperature selector to Cool, then gradually increase the temperature when you see that the windshield is starting to warm up.

- **To cool the cab,** turn on the A/C switch, set the temperature knob to cool (the blue position on the control), and the blower to high until the cab becomes cool. Then you can turn down the blower if you wish.

For Efficient Cooling:

1. Be sure all heater - air conditioner controls are off.
2. Start the engine. Allow time for warm-up.

CAUTION: A cold compressor can cause refrigerant to liquefy and warp the valve plates or cause a hydraulic lock. Warm the engine before starting the air conditioner.

CAUTION: To avoid damage to the compressor & blower motors, turn off all controls when a system is not in use.

3. Set the air control in the RECIRC mode.
4. Close all windows.
5. Idle the engine between 1000 and 1500 RPM and turn the blower speed control to High.
6. After the cab temperature cools to a comfortable level, adjust the blower speed and controls to keep the desired condition.

NOTE: When the air conditioner is not in regular use, operate it for at least 15 minutes at least once a month or every 5,000 miles (8,000 Km), whichever comes first. This will lubricate the seals in the air conditioning system. The air conditioning system is active when the Defrost mode is selected.

Cigarette Lighter

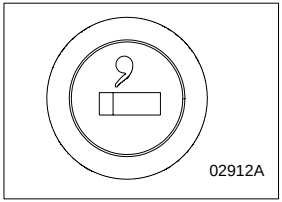

The cigarette lighter is located at the bottom of the cup holders. To operate your lighter, push the center of the knob in. After a few moments the lighter will automatically pop out, ready to use. After use, insert the knob, but do

not push it in. The cigarette lighter circuit is protected by a 10-ampere fuse to prevent damage should the lighter get stuck in the IN position. If this fuse needs replacement, check to ensure that the lighter is not stuck before replacing the fuse.

WARNING! Do not exceed the voltage/amperage capacity of the cigarette lighter. It could result in a fire causing death or personal injury. Follow all warnings and instructions in the operator's manual for the appliance you are using.

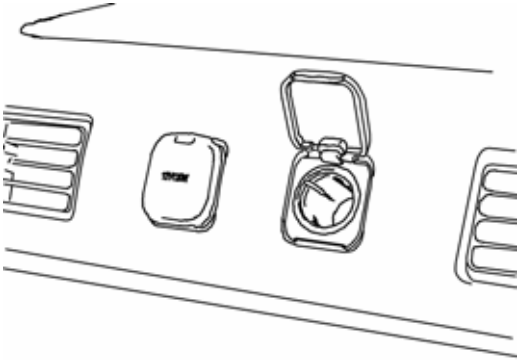

The power port at the top of the dash may be used to power auxiliary equipment not drawing more than 15 amperes maximum per port. Devices designed to use these power ports will not fit into the cigarette lighter port.

Cupholders/Ashtray

Your vehicle comes standard with two cupholders located in the center of the cab, below the dashboard. This vehicle may have an optional ashtray which is designed to fit into one cupholder.

WARNING! Paper or other combustible substances in an ashtray could cause a fire resulting in death or personal injury. Keep all burnable materials besides smoking materials out of the ashtray.

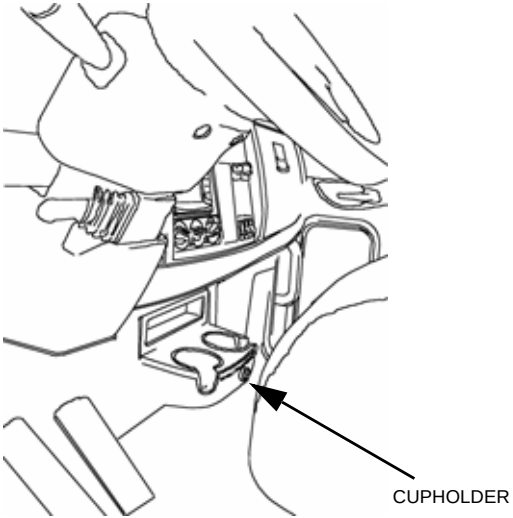

Shift Pattern Display

The correct shift pattern for your vehicle appears on your control panel or windshield or on a medallion in the shift knob. It is important that you know more about your transmission than just the shift pattern. Please read the manufacturer's manual that is included with your vehicle.

Accessories

Peterbilt Navigation System

Your vehicle may be equipped with a Peterbilt Navigation System. This system is a Global Positioning Satellite (GPS)-linked computer. It receives input from multiple sources to locate your vehicle. Read and understand the Supplemental Navigation System Owner's Manual and observe the Warnings, Cautions, and Notes that follow before using the system.

WARNING! Verify legal weight and height restrictions for the route suggested by the Navigation System. Failure to verify height restrictions could lead to causing death, personal injury or property damage. Failure to verify weight restrictions could result in a traffic infraction.

WARNING! Only glance at the Navigation System monitor while driving. Prolonged periods of viewing while driving could result in an accident involving death or personal injury.

WARNING! Do not program the Navigation System while driving. Always stop your vehicle when programming or changing the settings on the Navigation System. Programming the system while driving can cause you to take your eyes off the road, which could result in an accident involving death, personal injury or equipment damage.

CAUTION: Do not rely on the Navigation System to route you to the closest emergency services. Not all emergency services are in the database.

NOTE: Regardless of how and where the navigation system directs you, it is your responsibility to operate the vehicle in a safe and legal manner.

NOTE: Ensure the volume level of all audio devices is set to a level that still allows you to hear outside traffic and emergency vehicles.

NOTE: The map database is the most current available at the time of production. The database is designed to provide you with route suggestions and does not take into account the relative safety of a suggested route or of factors that may affect the time required to reach your destination. See the Supplemental Navigation System Owner's Manual for more information.

Radio

As an option, your vehicle has either an AM/FM Stereo Receiver or an AM/FM Stereo/Cassette Player.

For instructions on how to operate your particular radio, see the manufacturer's Radio Operating Instructions in the glove compartment.

Glove Compartment

A glove compartment is provided to store important documents, the vehicle literature set (including this Operator's Manual) and other related materials. You can open it by pushing the knob on the front.

- To close, push the cover up and press to latch it.
- You can lock and unlock the glove compartment door with your ignition key; turn it clockwise to lock and counterclockwise to unlock.

WARNING! Do not drive with the glove compartment open, it can be dangerous. In an accident or sudden stop, you or a passenger could be thrown against the cover and be killed or injured. To reduce the risk of death or personal injury during an accident or sudden stop, keep the glove compartment closed when the vehicle is in motion.

WARNING! Do not carry loose objects in your cab, it can be dangerous. In a sudden stop, or even going over a bump in the road, they could fly through the air and strike you or a passenger. You could be injured or even killed. Secure all loose objects in the cab before moving the vehicle.

Seats

Introduction

This section covers the operation and safe use of your Medium Duty vehicle’s seats. For further information on features and adjustment of the seat, see the manufacturer's literature included with the vehicle.

Seat Adjustment

WARNING! Do not adjust the driver's seat while the vehicle is moving. A sudden or unexpected seat movement can cause the driver to lose control of the vehicle causing death or personal injury. Make all adjustments to the seat while the vehicle is stopped.

- ***After adjusting the seat and before driving off, always check to be sure that the seat is firmly latched in position.***

Standard Driver's Seat

The standard driver's seat can be adjusted forward and rearward. These movements are each controlled by levers located on the FRONT of the seat.

Driver's Seat with Air Suspension (Option)

WARNING! Before driving or riding in the vehicle, be sure that there is adequate head clearance at maximum upward travel of seat. Death or personal injury may occur if head clearance is not adequate.

https://truckmanualshub.com/

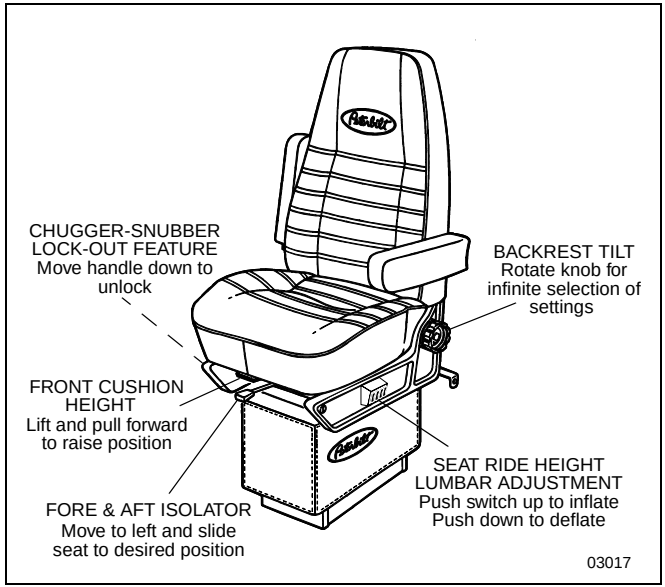

Peterbilt Ultraride II Highback Air Seat

Safety Restraint Belts

The right and left seats are equipped with 3-point lap/shoulder belts; the center seat has a 2-point seat belt. Safety belts have proven to be the single most effective means available for reducing the potential for either serious injury or death in motor vehicle accidents. Therefore, read and follow these instructions and always observe user warnings pertaining to safety belts.

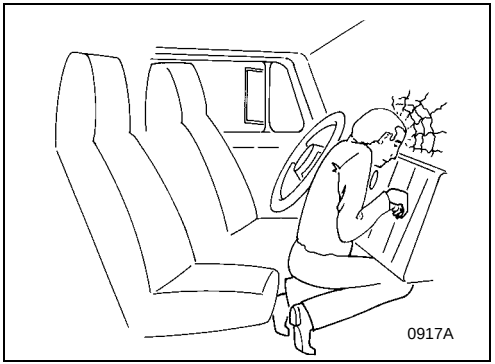

Unbelted Person in Crash

WARNING! Do not drive vehicle without your seat belt and your riders' belts fastened. Riding without a safety belt which is properly fastened can lead to increased death or injury in an accident. Unbelted riders could be thrown into the windshield or other parts of the cab or could be thrown out of the cab. They could strike another person. Injuries can be much worse when riders are unbelted. Always fasten your seat belt and be sure anyone riding with you does the same.

Lap/Shoulder Belt

The combination lap-shoulder belt is equipped with a locking mechanism. The system adjusts automatically to a person's size and movements as long as the pull on the belt is slow.

Hard braking or a collision locks the belt. The belt will also lock when driving up or down a steep hill or in a sharp curve.

To fasten the belt:

1. Grasp the belt tongue.
2. Pull the belt in a continuous slow motion across your chest and lap.

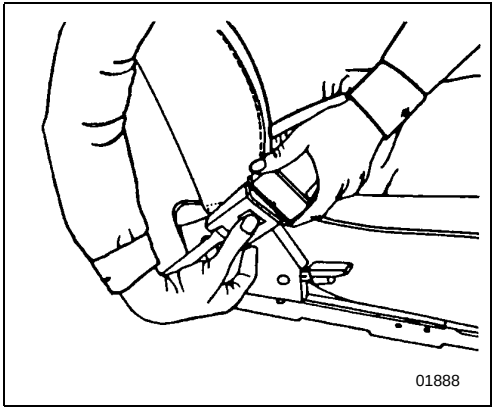

3. Insert the belt tongue into the buckle on the inboard side of the seat.
4. Push down until the tongue locks securely (with an audible click). Pull on the belt to check for proper fastening.
   - Pull the shoulder section to make sure the belt fits snugly across the chest.
   - The shoulder belt must be positioned over the shoulder—it must never rest against the neck.

- Belts should fit snugly across the pelvis and chest. Make sure any slack is wound up on the retractor.

To unfasten the belt:

Push in the release button on the buckle. The belt will spring out of the buckle.

- To release a locked belt, lean back to take the body pressure off of the belt.
- To store a lap-shoulder belt, allow the belt to wind up on the retractor by guiding the belt tongue until the belt comes to a stop.

Proper Safety Belt Adjustment

Your combination lap-shoulder belt may need adjustment. Adjust safety belts properly.

- The lap belt should be worn as low and tight on the hips as possible. Make sure any slack is taken up by the belt mechanism.
- The shoulder belt should fit snugly across your body. It should be positioned midway over the shoulder (nearer to the door); it should never rest against your neck.

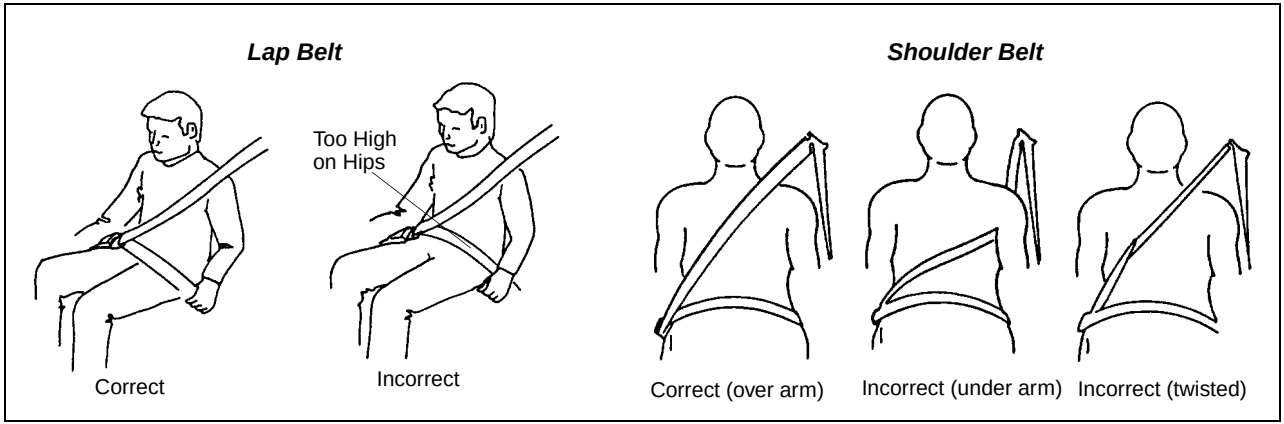

Safety Restraint Belts

- Be sure, also, that your belt is not too loose. A loose belt could allow you to slide under it in an accident, and that could bring the belt up around your abdomen.
- Do not twist the belt in the process of putting it on. A twisted belt will not work as well to protect you.

WARNING! Always wear your seat belt low over your pelvic bones.

- ***You can be killed or seriously injured if your belt is buckled too high. In a crash, it would apply force to your abdomen, not your pelvic bones. This can result in death or serious internal injuries.***
- ***Do not drive with your seat belt loose. A seat belt that is too loose can allow you to fall too far forward, possibly causing head and neck injuries, resulting in death or personal injury. You could strike the wheel or the windshield. Adjust your belt so that there is no more than 1 in. (25mm) of slack.***

WARNING! Do not wear the shoulder belt under your arm or otherwise out of position. In a crash your body would move too far forward, increasing the chance of death or head and neck injury. Also, the belt would apply too much force to the ribs, which are not as strong as your shoulder bones, and could cause you to suffer internal injuries. Wear the shoulder belt over your shoulder (see “Safety Restraint Belts” on page 75***).***

WARNING! Do not twist the belt in the process of putting it on. A twisted belt will not work as well to protect you. In a crash, the full width of the belt would not be protecting you. A twisted belt could cut into your body and cause death or serious injuries. Straighten the belt before buckling it. If you are unable to wear it without twisting it, have your dealer or service person repair it as soon as possible.

https://truckmanualshub.com/

Safety Restraint Tips

NOTE: Per FMCSR 392.60 - Unauthorized Persons Not to be Transported. Federal law prohibits the transportation of persons in commercial vehicles unless they are specifically authorized in writing by the motor carrier. See the cited FMCSR for a complete description of the regulation and exemptions.

- Any authorized person riding in your vehicle should wear a seat belt. A responsible operator sees to it that everyone in the vehicle rides safely—and that means with a seat belt.
- Do not strap in more than one person with each belt.
- Do not wear a belt over rigid or breakable objects in or on your clothing, such as eye glasses, pens, keys, etc., as these may cause injury in an accident.
- Several layers of heavy clothing may interfere with proper positioning of belts and reduce the overall effectiveness of the system.
- Keep belt buckles free of any obstruction that may prevent secure locking.
- Damaged or worn belts, subjected to excessive stretch forces from crashes, cuts or tears, or normal wear, must be replaced—they may not protect you if you have an accident.
- If belts show damage to any part of assembly, such as webbing, bindings, buckles or retractors, they must be replaced.
- Do not allow safety belts to become damaged by getting caught in door or seat hardware, or rubbing against sharp objects.
- The belts must be kept clean or the retractors may not work properly.
- Never bleach or dye seat belts: chemicals can weaken them. Do, however, keep them clean by following the care label on the belts. Let them dry completely before allowing them to retract.
- Make sure the belt of the unoccupied passenger seat is fully wound up on its retractor, so that the belt tongue is in its stowed position. This reduces the possibility of the tongue becoming a striking object in case of a sudden stop.
- Do not modify or disassemble the seat belts in your vehicle. They will not be available to keep you and your passengers safe.

- If any seat belt is not working properly, see an Authorized Service Center for repair or replacement.

WARNING! Before driving or riding in a vehicle, ensure that there is adequate head clearance at maximum upward travel of seat. Shorten the tether belt as necessary to provide adequate head clearance. Death or serious injury may occur if head clearance is not adequate.

Tether Belts

Tether belts are installed on suspension seats. They help secure the seat to the floor to restrain it in case of a sudden stop or an accident.

Fixed Tethers

If your Medium Duty vehicle has been equipped with fixed length tethers, no manual adjustment is required. The same inspection and replacement guidelines should be used as stated on page 197.

WARNING! Do not remove, modify, or replace the tether belt system with a different tether system. A failed or missing tether belt could allow the seat base to fully extend in the event of an accident leading to greater injuries or death.

WARNING! Failure to adjust tether belts properly can cause excessive movement of the seat in an accident. This could lead to death or greater injuries to you. Tether belts should be adjusted so that they are taut when the seat is in its most upward and forward position.

Tether Adjustment

- Make sure that the tether belt is attached to the cab floor and seat frame. It should be routed through the buckle on each side.
- Often the attachments are made using a split-type hook. Make sure both halves of the hook are around the anchor bracket.
- To lengthen the tether, turn the buckle to a right angle to the webbing. Then pull the buckle. To shorten the tether, pull on the strap.

https://truckmanualshub.com/

Komfort–Lok® Latch

Your Peterbilt contains a feature designed to eliminate cinching and provide improved safety and comfort. Cinching is the condition where a belt becomes continually tighter around you during a rough, bouncy ride. The need for this feature increases with rough road conditions, particularly over long distances. To eliminate cinching, simply activate the Komfort–Lok® feature at the appropriate time:

1. Fasten the seatbelt according to the directions in the previous “Safety Belt Restraint” section.
2. You are now ready to activate the Komfort–Lok. Lean forward to pull a little slack in the belt (maximum of one inch, measured from the belt to your chest). Be sure to allow only a small amount of slack.
3. When the slack is right, flip the latch cover up, cinching it into place.
4. To release the Komfort–Lok latch, reach up and pull the latch cover open (down), or simply pull down on the shoulder belt.
5. When you want to get out of the cab, release the latch, then just push the button on the buckle.

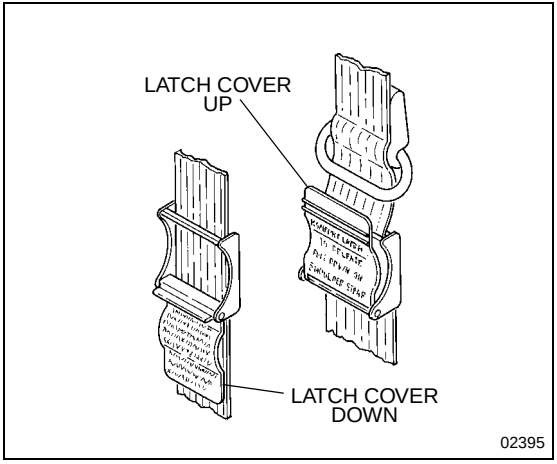

The Komfort–Lok latch

During Pregnancy

Pregnant women should always wear combination lap/shoulder belts. The lap belt portion must be worn snugly and as low as possible across the pelvis. To avoid pressure on the abdomen, the belt must never pass over the waist. Sometimes pregnant women worry that in a crash the seat belt could hurt the baby. But if a woman wears her belt properly—low over her pelvis, below her abdomen—the belt will not harm the baby, even in a crash. And remember—the best way to keep an unborn baby safe is to keep the mother safe.

Passengers

Anyone riding in your vehicle should wear a seat belt. A responsible operator sees to it that everyone in the vehicle rides safely—and that means with a seat belt.

Belt Damage and Repair

Damaged belts in the cab must be replaced. Belts that have been stretched, cut, or worn out may not protect you in an accident.

Pregnant Woman with Belt Properly Worn

If any seat belt is not working properly, see an Authorized Service Center for repair or replacement.

For further information on seat belts and seat belt maintenance, see “Safety Restraint System — Inspection,” Page 197.

https://truckmanualshub.com/

Driver's Check List

Safe Vehicle Operation

To keep your Medium Duty vehicle in top shape and maintain a high level of safety for you, your passengers, and your load, make a thorough inspection every day before you drive. You will save maintenance time later, and the safety checks could help prevent a serious accident. Please remember, too, that the Federal law requires a pre-trip inspection and so do commercial trucking companies.

You are not expected to become a professional mechanic. The purpose of your inspections is to find anything that might interfere with the safe and efficient transportation of yourself, any passengers, and your load. If you do find something wrong and cannot fix it yourself, have an Authorized Service Center or qualified mechanic repair your vehicle right away.

The following operations are to be performed by the driver. Performing these checks and following the maintenance procedures in this manual will help keep your Medium Duty vehicle running properly.

For your safety, as well as those around you, be a responsible driver:

- If you drink, do not drive.
- Do not drive if you are tired, ill, or under emotional stress.

Much has gone into the manufacturing of your Medium Duty vehicle, including advanced engineering techniques, rigid quality control, and demanding inspections. These manufacturing processes will be enhanced by you—the safe driver—who:

- knows and understands how to operate the vehicle and all its controls
- maintains the vehicle properly
- uses driving skills wisely

For more information, refer to Department of Transportation Regulation 392.7, which states that interstate commercial motor vehicles are not to be driven unless the driver is sure that certain parts and accessories are in working order.

WARNING! Do not drink and drive. Your reflexes, perceptions, and judgment can be affected by even a small amount of alcohol. You could have a serious—even fatal—accident if you drive after drinking. Please do not drink and drive or ride with a driver who's been drinking.

- ***The use of alcohol, drugs, and certain medications will seriously impair perception, reactions, and driving ability. These circumstances can substantially increase the risk of an accident and death or serious personal injury.***

Vehicle Loading

Compare your vehicle's load capacity with the total load you are carrying. If adjustments need to be made, make them—do not drive an overloaded vehicle. If you are overloaded or your load has shifted, your vehicle may be unsafe to drive.

WARNING! Do not exceed the specified load rating. Overloading can result in loss of vehicle control and death or serious personal injury, either by causing component failures or by affecting vehicle handling. Exceeding load ratings can also shorten the service life of the vehicle.

- ***The components of your vehicle are designed to provide satisfactory service if the vehicle is not loaded in excess of either the gross vehicle weight rating (GVWR), or the maximum front and rear gross axle weight ratings (GAWRs). (Axle weight ratings are listed on the driver's door edge.)***

Here are some definitions of weight you should know:

GVWR: is the Gross Vehicle Weight Rating. This is the MAXIMUM WEIGHT your vehicle is allowed to carry, including the weight of the empty vehicle, loading platform, occupants, fuel, and any load. Never exceed the GVWR of your vehicle.

GCW: is the actual combined weight, or Gross Combination Weight (GCW), of your vehicle and its load: tractor, plus trailer(s), plus cargo.

https://truckmanualshub.com/

GAWR: is the Gross Axle Weight Rating. This is the total weight that one axle is designed to transmit to the ground. You will find this number listed on the driver's door edge.

Load Distribution: be sure any load you carry is distributed so that no axle has to support more than its GAWR.

WARNING! An unevenly distributed load or a load too heavy over one axle can affect the braking and handling of your vehicle, which could result in an accident causing death or personal injury. Even if your load is under the legal limits, be sure it is distributed evenly.

Emergency Equipment

It is good practice to carry an emergency equipment kit in your vehicle. One day, if you have a roadside emergency, you will be glad the following items are with you:

- window scraper
- snow brush
- container or bag of sand or salt
- emergency light
- small shovel
- first aid kit
- fire extinguisher

Approaching Your Vehicle

- Check the overall appearance and condition. Are windows, mirrors, and lights clean and unobstructed?
- Check beneath the vehicle. Are there signs of fuel, oil, or water leaks?
- Check for damaged, loose, or missing parts. Are there parts showing signs of excessive wear or lack of lubrication? Have a qualified mechanic examine any questionable items and repair them without delay.
- Check your load. Is it secured properly?

Daily Checks

NOTE: The following items (Engine Compartment, Chassis and Cab, and Prestart Checks) should be checked daily, as a minimum. They are in addition to, not in place of, federal motor Carrier Safety Regulations. These regulations may be purchased by writing to:

Superintendent of Documents
U.S. Government Printing Office
Washington, DC 20402

Engine Compartment Checks — Daily

1. Engine Fluid Levels—add more if necessary.
   - Engine oil
   - Coolant (check while engine is cold)
   - Power steering fluid level
   - If your truck has hydraulic brakes, check the fluid level in the master cylinder reservoir. See page 154 for more information.
2. Engine Belt—check tension and condition of belts. This is important to ensure proper air compressor and engine operation.
   - Measure the belt tension at the longest span of the belt. See page 142 for further information on checking belt tension.

     NOTE: Deflection should be one belt thickness for each foot distance between the pulley centers.
   - If breaks or tears are found, the belt should be replaced before operating the vehicle.
3. Fuel Filter/Water Separator Draining—check and drain. Depending on the fuel storage facility, more frequent draining may be required.
4. Windshield washer reservoir fluid level—fill if necessary.
5. Hood closed before entering cab. Is it latched properly?

Chassis and Cab Checks — Daily

Before entering the cab and operating the vehicle, check the following equipment for proper maintenance:

1. Lights—do headlights, turn signals, emergency flashers, and exterior lamps function and are they clean and adjusted properly?
2. Windows and Mirrors—are they clean and adjusted properly?
3. Tires and Wheels—are they inflated properly? Are all wheel cap nuts in place and torqued properly—tighten if necessary. Check front wheel bearing oil levels. Inspect all tires and wheels for damage—correct if found.
4. Suspension—check for loose or missing fasteners. Check damage to springs or other suspension parts.

https://truckmanualshub.com/

5. Brake Components—check lines, linkages, chambers, camtubes (for cracks or broken parts), and brake operation.

6. If your truck has hydraulic brakes, check:
   - the brake system for leaks
   - hydraulic lines for cracks or kinks
   - calipers for leaks

7. Air System—are there leaks?
   - Air Tanks—drain water from all air tanks. Make sure the drain cocks are closed. This procedure is also required for air suspension tanks equipped with automatic drain valves.
   - See page 104 for further details on “Using the Brake System.”

8. Steps and Handholds—check for worn surfaces and loose or missing fasteners.

9. Fluid Tanks—check underneath the vehicle for signs of fluid leaks. If any are found, correct before operating the vehicle.

10. Fuel Tank Caps—are they secure?

WARNING! Diesel fuel in the presence of an ignition source (such as a cigarette) could cause an explosion. You could be killed or seriously injured. A mixture of gasoline or alcohol with diesel fuel increases this risk of explosion.

•Do not remove a fuel tank cap near an open flame.

•Use only the fuel and/or additives recommended for your engine.

•See page 147 for more information.

11. Trailer Connections (Tractor)—are they secure and the lines clear? If they are not being used, are they stored properly?
    - Is the trailer spare wheel secure and inflated?
    - Is the landing gear up and the handle secured?

12. Check the fifth wheel. Is the kingpin locked?
    - Is the sliding fifth wheel locked?

Prestart — Daily

1. Seat—adjust the seat for easy reach of controls.

2. If your vehicle is equipped with an adjustable steering column, adjust the steering wheel to a comfortable position.
3. Mirrors—check and readjust mirrors if necessary.
4. Lights—turn ignition key to the IGN & ACC position and check for warning lights and buzzer. Check operation of turn signals and emergency lights.
5. Instruments—check all instruments.
6. Windshield—check operation of windshield wipers and washers.
7. Horn—check operation of horn.
8. Check fire extinguisher charge and road emergency kit.
9. Fuel—check fuel. Is there enough fuel?
10. Seat Belts—fasten and adjust safety restraint belts

Weekly Operations

1. Battery—check battery and terminals. Check battery and alternator cables for signs of chafing.
2. Wheel Cap Nuts—are they all in place and torqued properly—tighten if necessary. See “Wheel Cap Nut Torque,” Page 173.
3. Other Controls and Wiring—check for condition and adjustment.
4. Steering Components—check pitman arm, draglink, and power steering hoses, etc., for loose, broken, or missing parts.
5. Other Engine Compartment Checks
   - Check condition and fastening of engine belt, hoses, clamps, and radiator.
   - Check the air cleaner, muffler, and exhaust pipes. Are they tight and secure?
   - After Engine Warm-up
     - Automatic Transmission—check fluid level in the automatic transmission oil (if equipped).

https://truckmanualshub.com/

Starting and Operating the Vehicle

Introduction

For detailed information on starting and operating the engine, refer to the *Engine Operation and Maintenance Manual* provided with your Medium Duty vehicle.

Because each vehicle is custom-equipped, all engine operation instructions presented in this section are general. You will want to consult the engine manual to find out details about your vehicle's specific engine requirements. You may need to use a slightly different procedure from the one outlined here.

Also, read the American Trucking Association's (ATA) Truck Driver's Handbook. It will give you tips on starting, shifting, and driving your vehicle.

WARNING! Do not use ether or other starting fluids as a cold-starting aid in your Medium Duty vehicle. Your engine uses either an electrical grid or an open flame inside the manifold, to heat the air/fuel mixture for cold weather starting. If ether or another starting fluid is used, the air/fuel will ignite inside the manifold, which could cause an explosion and death or severe injury.

WARNING! Do not start or let the engine run in an enclosed, unventilated area. Exhaust fumes from the engine contain carbon monoxide, a colorless and odorless gas. Carbon monoxide can be fatal if inhaled.

- ***Do not park or operate the vehicle in areas where the hot exhaust system may come in contact with dry grass, brush, spilled fuel or other material that can cause a fire.***

CAUTION: The use of a winterfront can result in excessive engine coolant, oil, and charge air (intake) temperatures, which can lead to overheating and possible engine damage. If you must use a winterfront

- ***Refer to the "Engine Operation and Maintenance Manual" for operating restrictions and recommendations.***
- ***Use only a winterfront available from your Peterbilt dealer that is compatible with a 2002 EPA-compliant engine cooling system. These winterfronts are specifically designed for use with new grill snap patterns.***

Starting Procedure — Normal Temperatures

Use the following procedure to start your Medium Duty vehicle when outside temperatures are at or ABOVE normal starting temperatures. Check the *Engine Operation and Maintenance Manual* for starting temperatures.

1. Set the parking brake.

NOTE: When any one of the following is true, oil should be applied to the turbocharger oil inlet port: (1) if the engine has not been started for more than 25 days; or (2), the outside temperature is very cold; or (3), the oil filter has been changed.

•With an oil can, squirt approximately one-half cup (120 ml) of clean, specified engine oil into the turbocharger oil inlet port. This will keep the turbocharger bearings lubricated until the engine oil pressure gets up to normal.

2. Insert key into the ignition switch.
3. Disable (or turn OFF) the following systems prior to starting the engine: the exhaust brake, the dual-speed rear axle (put in LOW), and block heater (if equipped).
4. Disengage the transmission: place the shift lever in the Neutral position.
5. Disengage (depress) the clutch (with manual transmission).
6. Turn the ignition switch to the IGN & ACC position. For normal temperatures, no accelerator advance is necessary. See "Use of Accelerator" below. If the "WAIT

https://truckmanualshub.com/

TO START" indicator lamp turns ON, wait until the indicator lamp goes OFF (approximately 60 seconds) before attempting to start the engine. (For each engine and ambient temperatures, warm-up cycles will vary.)

7. Turn the ignition switch to the IGN & START position to engage the starter. Crank the engine until it starts. If the engine does not start within 30 seconds, release the key.

Use of Accelerator

- For mild to warm temperatures above 60°F (16°C) keep your foot OFF the accelerator pedal while cranking. If the engine does not start after 5 seconds, apply full throttle while cranking.
- For below normal starting temperatures fully depress the accelerator (throttle) pedal **after** engaging the starter.

NOTE: Pumping the accelerator will not assist in starting the engine.

CAUTION: To help avoid overtaxing the starter motor or batteries, or causing engine damage, follow the recommendations listed below:

- Do not engage starter for more than 30 seconds at a time.
- Wait two minutes between each attempt to start the engine. This allows the starter motor to cool and time for the batteries to regain power.
- If the engine fails to start after a couple of tries, there could be a malfunction with the engine or other related system. Make any adjustments or repairs necessary before trying to start the engine again.

When the engine starts:

- Watch the oil pressure gauge. Oil pressure should rise within 15 seconds after the engine starts. If the oil pressure does not rise, stop the engine. Find what is wrong before restarting. Check the *Engine Operation and Maintenance Manual* for the right oil pressure for your vehicle's engine. In most engines, idle pressure should be about 15 psi.

CAUTION: Never operate the starter motor while the engine is running. The starter and flywheel gears could clash or jam, severely damaging them.

- Wait until normal engine oil pressure registers on the gauge before idling or accelerating the engine beyond 1000 rpm.
- Watch the air pressure gauge. Wait until both pointers register at least 100 psi (689 kPa) before releasing the spring brake and moving the vehicle. Also, check the alarm system for any type of faults and correct them before moving the vehicle.

CAUTION: Do not try to put the vehicle in motion before pressure in the air system reaches 100 psi (689 kPa) because the wheels will still be locked by the spring brake action.

- ***Unnecessary stress and possible brake malfunction could occur if the vehicle is forced to move before the air system reaches 100 psi (689 kPa).***

Starting Procedure — Cold Temperatures

In addition to the previous “Normal Starting Procedures,” use these Cold Weather Starting guidelines when the air temperature falls below a certain temperature. Check your *Engine Operation and Maintenance Manual* for further details on when cold weather starting aids are needed.

Using special cold-starting equipment will help the engine start easier. And in cold weather, fast engine starting helps relieve the loads on the electrical system and cranking motor. If you follow these few simple guidelines, you will extend the service life of your vehicle's engine:

- Keep the electrical system in top condition.
- Use the best quality and recommended grade of fuel (see *Engine Operation and Maintenance Manual*).
- Use the recommended engine lubricating oil.
- As stated in the Normal Starting Procedures, when temperatures are **below** normal, fully depress the accelerator pedal after engaging the starter.

https://truckmanualshub.com/

Engine Block Heater (Option)

To preheat the engine before starting, plug the optional engine block heater into a properly grounded AC electrical source. Do not start the engine with the heater plugged in.

WARNING! Engine block heaters can cause fires resulting in death or serious personal injury and/or property damage if not properly maintained and operated. Regularly inspect the engine block heater wiring and connector for damaged or frayed wires. Do not use the heater if there are any signs of problems. Contact your Authorized Service Center or the manufacturer of the heater if you are in need of repairs or information.

CAUTION: Always unplug the heater before starting the engine. Damage to the cooling system could occur if the heater is not turned OFF (unplugged).

When the temperature falls below 0°F (–18°F) for Caterpillar engines, or –10°F (–24°C) for Cummins engines, the block heater is required.

- Use a solution of half ethylene glycol antifreeze and half water for best heater performance. Do not exceed 60 percent concentration of antifreeze, as it can shorten heater life. See page 146 for more information.
- After servicing the cooling system, operate the vehicle for a day or two before using the heater. Trapped air inside the engine needs time to escape.

Cold Weather Starting—Air Intake Heater

Do not use ether or any other starting fluid as a cold starting aid in your Medium Duty vehicle. Engine conditions are automatically monitored and in cold weather the fuel/air mixture is preheated in the manifold.

WARNING! Do not use ether or other starting fluids as a cold-starting aid in your Medium Duty vehicle. Your engine uses either an electrical grid or an open flame inside the manifold, to heat the air/fuel mixture for cold weather starting. If ether or another starting fluid is used, the air/fuel will ignite inside the manifold, which could cause an explosion and death or severe injury.

With each engine make, the air intake heating system works differently. To understand fully how your engine's heating system operates, see the engine Operation and Maintenance Manual for details.

On most systems the engine block temperature is monitored at startup; other systems monitor the engine oil pressure, coolant temperature, and time, as well. When the pre-set conditions are met, the heater automatically engages.

Air Intake Heater

The air intake heater system will alert you when the engine requires preheat. On the dash is a “WAIT TO START” warning light (See page 28). This light alerts you to wait before starting the engine.

Turn the key to IGN & ACC: the WAIT TO START light will light up for bulb check.

Wait until the WAIT TO START light goes off before you start the engine.

When the WAIT TO START light goes off, the preheat cycle is complete and you can start the engine normally.

After the engine starts and until operating conditions reach a certain point, the system will continue to operate to eliminate white-smoke exhaust.

Engine Warm–Up and Idling

The purpose of engine warm-up is to allow an oil film to be established between pistons, shafts, and bearings while your engine gradually reaches operating temperature.

Warm–Up Procedure

1. After you have started the engine, idle the engine at approximately 600 rpm while you check vital engine systems:
   – oil pressure
   – air pressure
   – alternator output (with the optional voltmeter)
2. Before placing engine under a load, continue warm-up with the engine at 900 to 1000 rpm for 3 to 5 minutes.
   - When a cold engine is started, increase the engine speed (rpm) slowly to be sure adequate lubrication is available to the bearings and to allow the oil pressure to stabilize. In extremely cold temperatures, you may have to increase idle speed.

https://truckmanualshub.com/

NOTE: In colder climates where the temperatures are often below freezing, sufficient warm-up for turbocharged engines is especially important. Chilled external oil lines leading to the turbocharger will slow the oil flow until the oil warms, reducing oil available for the bearings. Watch the engine oil pressure gauge for a warming trend before increasing engine idle speed (rpm).

3. Continue the engine warm-up until the coolant temperature reaches at least 130°F (54°C). At this temperature, you can use partial throttle. Wait until the coolant temperature is at least 160°F (71°C) before operating at full throttle. See "Operating Manual Transmissions" on page 98.

WARNING! Exhaust fumes from the engine contain carbon monoxide, a colorless and odorless gas. A poorly maintained, damaged, or corroded exhaust system can allow carbon monoxide to enter the cab or sleeper. Failure to properly maintain your vehicle could cause carbon monoxide to enter the cab and cause death or serious illnesses.

WARNING! Never idle your vehicle for prolonged periods of time if you sense that exhaust fumes are entering the cab. Investigate the cause of the fumes and correct it as soon as possible. If the vehicle must be driven under these conditions, drive only with the windows slightly open. Failure to repair the source of the exhaust fumes may lead to death, injury or serious illness.

Idling the Engine

Under most circumstances, continuous idling of your engine merely wastes fuel. In severe Arctic weather conditions, however, you may need longer idling to be sure all parts of your engine are fully lubricated.

CAUTION: Do not allow your engine to idle, at low rpm (400–600 rpm), longer than five minutes. Long periods of idling after the engine has reached operating temperatures can decrease engine temperature and cause gummed piston rings, clogged injectors, and possible engine damage from lack of lubrication. The normal torsional vibrations generated can also cause transmission wear.

- During the time it takes you to drink a cup of coffee, your engine can cool as much as 60° F (33° C) below normal operating temperature. To keep the engine warm during a short break, turn it off. Do not allow your engine to idle longer than five minutes.

Engine Fan Switch (Option)

Your Medium Duty vehicle may have an engine fan switch installed as an option. The switch, which is mounted on the accessory switch panel, allows you to control the engine fan manually or automatically.

- With the ignition key switch ON and the fan switch in the ON position, the engine fan will be on regardless of engine temperature.
- With the engine fan switch in the AUTOMATIC position, the engine fan will automatically turn on when the engine coolant reaches a temperature of about 200°F (93°C)

WARNING! Do not work on or near the fan with the engine running. Anyone near the engine fan when it turns on could be killed or seriously injured. If it is set at MANUAL, the fan will turn on any time the ignition key switch is turned to the ON position. In AUTO, it could engage suddenly without warning. Before turning on the ignition or switching from AUTO to MANUAL, be sure no workers are near the fan.

CAUTION: The fan or equipment near it could be damaged if the fan turns on suddenly when you do not expect it. Keep all tools and equipment away from the fan.

NOTE: Do not operate the engine fan in the MANUAL position for extended periods of time. The fan hub was designed for intermittent operation. Sustained operation will shorten the fan hub's service life as well as reduce fuel economy.

https://truckmanualshub.com/

Cruise Control (Option)

This feature improves fuel mileage and reduces driver fatigue by maintaining a constant vehicle speed. The cruise control will only operate above a programmed minimum vehicle speed, 15 mph for the CAT 3126B engine, 30 mph for the Cummins ISC engine.

Engaging the Cruise Control

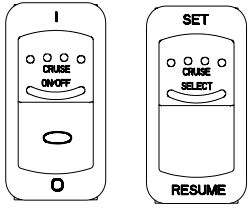

NOTE: Ensure that the vehicle speed is above the minimum cruise control speed and the engine speed is above 1100 rpm.

1. Move the ON/OFF switch to the ON position.

NOTE: Toggling the SET/RESUME switch to the RESUME position at this point will select the previously set cruise speed.

2. Accelerate the vehicle to the desired cruise speed.
3. Toggle the SET/RESUME switch lever to the SET position to set the cruise speed. This toggle switch has additional functions that are set by the manufacturer. The two functions are:
   - To **decrease** the cruise set speed, hold the SET/RESUME switch in the RESUME position and coast to a lower speed.
   - To **increase** the cruise set speed, hold the SET/RESUME switch in the SET position; this will accelerate the vehicle to a higher speed.

Disengaging the Cruise Control

Do **one** of these steps to disengage the cruise control:

- Move the ON/OFF switch to the OFF position.

  or

- Depress the brake pedal.

  or

- Depress the clutch pedal.

https://truckmanualshub.com/

Reengaging the Cruise Control

1. Move the ON/OFF switch to the ON position.

or

2. Toggle the SET/RESUME lever to the RESUME position.

Operating the Transmission

Introduction

Your Medium Duty vehicle is equipped with either a manual or automatic transmission with special features and gearing to meet your particular needs. It is important for you, the driver, to understand how your particular transmission is operated. To do this, you have two sources of information: this *Operator's Manual* and the transmission manufacturer's *Driver/Operator's Instruction Manual*. Because of the variety of different transmissions installed in Medium Duty vehicles, operating procedures for your particular transmission are not included in this manual; therefore, you should read and understand both manuals. Read the general guidelines and instructions that follow and read the specific instructions contained in the transmission manufacturer's manual that is included with your vehicle.

NOTE: You will find a shift pattern diagram in the cab. Check to be sure you know the correct sequence for your particular transmission.

Operating Manual Transmissions

If your truck has an automatic transmission, go to page 103.

6, 9, 10, and 11–Speed Manual

The 6–speed synchronized manual transmission has 6 forward speeds and 1 reverse. The 9–speed transmission has 9 forward and 2 reverse speeds, consisting of a 5–speed low range section and a 4–speed high range section.

For specific instructions on operating one of the optional 10- or 11-speed transmissions, consult the transmission manufacturer’s Driver/Operator Instruction Manual.

https://truckmanualshub.com/

Transmission Warm–Up

In cold weather [below 32°F (0°C)], you may find shifting sluggish when you first start up. Transmission warm-up is especially important at this time, but it is always a good idea to warm your transmission oil before starting out on the road.

To warm the transmission lubricating oil during engine warm-up:

1. Put the transmission in Neutral.
2. Release the clutch pedal and let the transmission operate in Neutral for three to five minutes prior to shifting into either a forward or reverse range.

Putting the Vehicle in Motion

After making sure the vehicle's oil and air pressure are correct and all other parts and systems are in proper working condition:

1. If your truck is equipped with a hand throttle, disengage the hand throttle before driving the vehicle.
2. Fully depress the clutch pedal until the clutch brake makes contact (see page 100). The contact will occur at about 1 inch or less from the floorboard.
   - The total stroke of the clutch pedal is about 10 inches. The first 1½ inches is free travel. After the free travel comes the release stroke, which is the part that fully releases the clutch. The last inch engages the clutch brake.
   - Always start out in a low gear. Starting in a higher gear, even with a light load, will cause a very jumpy start and excessive wear.

   CAUTION: Always use first gear or a low speed range to start the vehicle in motion. The use of a higher gear or speed range forces undue strain on the engine, clutch, other transmission components, and may cause damage.
3. Evaluate the road surface conditions and terrain your vehicle is on. Select a gear low enough to let your vehicle start forward with the throttle at idle.
4. Push the parking brake valve handle (Yellow) against the dash panel to release the brakes.

https://truckmanualshub.com/

5. Release the clutch pedal, then gradually accelerate to permit smooth starting,
6. Do not allow your vehicle to roll (even a little) in the opposite direction during clutch engagement. If you need to start up on an incline, apply your service brakes before you release the parking brake. Then release your service brakes as you engage the clutch and apply throttle.

For further instructions on operating your transmission, see the transmission manufacturer's manual that is included with your vehicle.

If you have a misaligned gear condition in your vehicle's transmission and cannot start, gradually release the clutch, allowing the drive gear teeth to line up properly. Then the drive gear can roll enough to allow the teeth to line up properly and complete the shift.

The best engine performance and maximum economy is obtained if gears are properly selected. This efficiency is achieved by always selecting gears within optimum engine rpm, which is where maximum torque and power are obtained. For further information, see “More Driving Tips and Techniques” on page 130.

Shifting Gears in a New Vehicle

Shift carefully in a new vehicle. The transmission may be a little stiff at first. Avoid gear clashing by closely following these procedures.

When you are operating a new vehicle or one that has been exposed to cold weather, you want the transmission lubricant (fluid) to circulate and coat the contacting surfaces of the gears. Metal contacting metal in moving parts may seriously damage your transmission—do not drive in one gear for long periods of time until the transmission lubricant has a chance to coat all contacting surfaces. Carefully observe the free travel in the clutch for the first few hundred miles. As the clutch lining wears and high spots get worn smooth, you will get less free travel.

Clutch Brake and Travel (9–, 10–, and 11–Speed Transmissions only)

These transmissions utilize a clutch brake, rather than synchronizers. The clutch brake works by stopping all of the gears in the transmission, allowing you to easily shift into first gear or reverse without grinding gears. The total

https://truckmanualshub.com/

stroke of the clutch pedal is about 10 inches. The first part is the release stroke: the part that fully releases the clutch. The last inch engages the clutch brake.

During hard-shifting with vehicle not moving

- To apply the clutch brake (while the vehicle is stopped) fully depress the clutch pedal to the floorboard to stop the gears. With the throttle at idle, select first gear then release the clutch pedal to let the vehicle start forward, until the clutch is fully engaged. See the transmission manufacturer's manual that is included with your vehicle for further details.

During Normal Driving

If you want to shift directly into any gear other than first or reverse, depress the clutch pedal only far enough to release the clutch. Pushing the clutch to the floor applies the clutch brake and could cause gear hang-up.

CAUTION: Be careful not to apply the clutch brake while the vehicle is moving. The purpose of the clutch brake is to stop the transmission so that you can shift into a starting gear without grinding gears. Applying the clutch brake when the vehicle is moving causes a braking effect on the drivetrain and shortens the service life of the clutch brake.

Double Clutching

Whether you are upshifting or down shifting, it is best to double clutch. Double clutching is easier on the transmission and on the engine, helping your vehicle match engine speed with driveline speed and achieving clash-free shifts.

To double clutch:

1. Push the clutch pedal down to disengage the clutch.
2. Move the gear shift lever to Neutral.
3. Release the pedal to engage the clutch. This lets you control the rpm of the mainshaft gears, allowing you to match the rpm of the mainshaft gears to those of the output shaft.

https://truckmanualshub.com/

- Upshifts: let the engine and gears slow down to the rpm required for the next gear.
- Downshifts: press accelerator, increase engine and gear speed to the rpm required in the lower gear.

4. Now quickly press the pedal to disengage the clutch and move the gear shift lever to the next gear speed position.
5. Release the pedal to engage the clutch.

More Transmission Tips

“Riding” the Clutch

The clutch is not a footrest. Do not drive with your foot resting on the clutch pedal. It will allow your clutch to slip, causing excessive heat and wear—damage could result.

Release Bearing Wear

When you must idle your engine for any period of time, shift your transmission to Neutral and disengage the clutch (take your foot OFF of the pedal). This helps prevent unnecessary wear to your clutch release bearing, and it is less tiring for you, too.

Clutch Adjustment

Inspect manual clutches according to the manufacturer's recommendations. Regular maintenance should be followed to maintain correct clutch adjustment. Have your dealer's Service Department perform any adjustment necessary.

Tips

- Always use the clutch when making upshifts or downshifts.
- Always select a starting gear that will provide sufficient gear reduction for the load and terrain.
- Never downshift when the vehicle is moving too fast.
- Never slam or jerk the shift lever to complete gear engagement.
- Never coast with the transmission in Neutral and the clutch disengaged.
- To provide smooth gear engagements while shifting, use proper coordination between shift lever and clutch.

https://truckmanualshub.com/

Operating Automatic Transmissions

An automatic transmission makes shifting much easier, however it is important to understand how to operate the transmission efficiently. Please read the transmission manufacturer's operation manual supplied with your vehicle.

There may not be a "park" position with your automatic transmission. Always be sure you apply the parking brake before leaving the cab.

WARNING! Do not leave the cab of your vehicle without applying the parking brake. The truck could roll and cause an accident resulting in death or personal injury. Always apply the parking brake before you leave the cab.

https://truckmanualshub.com/

Using the Brake System

NOTE: Today's diesel engines have significant torque and startability power at low RPMs. Combinations of engine speed and available torque may overpower the vehicle's parking brakes.

WARNING! Never drive your vehicle with the parking brakes applied. Always release the parking brakes prior to moving the vehicle. Failure to disengage the parking brakes prior to moving your vehicle could result in excessive heat build-up of the brakes and start a fire, possibly resulting in death, personal injury or property damage.

NOTE: If your truck is equipped with hydraulic brakes, go to page 121.

The operation of the vehicle's braking system and many vehicle accessories depends upon the storage and application of a high-pressure air supply.

This air brake system is a multiple circuit type: it has a circuit for the front wheels, a separate circuit for the rear wheels, and one for the trailer (tractors only). The system is supplied by a compressor driven by the engine. The vehicle's compressor takes outside air and compresses it, usually to 100–130 psi (690–896 kPa). This compressed air then goes to the reservoirs to be stored until needed.

When you operate your air brakes, the stored compressed air flows into the chambers where it is used to apply your truck and trailer brakes. That is why, when you push down on the brake pedal, you do not feel the same amount of pressure on the pedal that you do when you apply the brakes on your car. All you are doing on your truck is opening an air valve to allow air to flow into the brake chambers.

WARNING! The brake system is a critical vehicle safety system. For the safety of you and others around you, have the vehicle submitted for periodic preventive maintenance checks as well as having any suspected problems immediately checked by an Authorized Service Center. Failure to properly maintain your brake system can lead to serious accidents involving death or personal injury.

 https://truckmanualshub.com/

Brake Operation

WARNING! Do not drive through water deep enough to wet brake components, as it may cause the brakes to work less efficiently than normal. The vehicle's stopping distance may be longer than expected, and the vehicle may pull to the left or right when brakes are applied, which could contribute to an accident that could cause death or personal injury.

If you think your brakes have become wet, check the rear and both sides of the vehicle for clear traffic, then gently apply the brakes, releasing and gently reapplying until the brakes dry out—restoring normal operation. Always check your brakes after driving through deep water to help reduce the possibility of personal injury or an accident.

Front Brake System

When the brake pedal is depressed, the front circuit portion of the treadle valve delivers air from the front service reservoir to the front axle brake chambers via a quick-release valve.

Simultaneously (on full truck configurations), air is also supplied to the modulating valve control port. In the event of a rear service circuit failure, the modulating valve will exhaust air from the spring brake chambers, applying the spring brakes in proportion to the front circuit application.

Rear Brake System

When the brake pedal is depressed, the rear circuit portion of the treadle valve delivers air from the rear service reservoir to the service brake relay valve control port. The relay valve then delivers air directly from the rear service reservoir to the rear brake chambers in proportion to the treadle pressure.

On tractors without ABS, the relay valve is part of the BP-R1 brake valve, which automatically proportions the drive axle brake application pressure when driving bobtail (without a trailer connected). The proportioning BP-R1 brake valve allows full use of the steer axle (front) brakes and reduces the chance that the drive axle brakes will lockup. The bobtail brake proportioning system is automatically turned off when a trailer is connected.

https://truckmanualshub.com/

Using the Parking Brake

The yellow diamond-shaped knob on the dash controls the truck/tractor parking brakes. These are spring brakes that you activate by releasing air pressure from their chambers. When they are not in use, air pressure compresses the springs and releases the brakes. Pulling the knob OUT applies the parking brake, which exhausts air from the chambers and allows the springs to extend and apply the brakes.

WARNING! Do not pull out the parking brake valve while the vehicle is moving. Stopping with the parking brake controls can cause a sudden wheel lock-up, loss of control, or over-take by following vehicles. You could be killed or severely injured.

WARNING! Do not leave the cab without applying the parking brake. The truck could roll and cause an accident, resulting in death or personal injury. Always apply the parking brake before you leave the cab.

Before you leave the cab:

1. Apply all parking brakes. Pull out the **Yellow** Parking Brake Control knob located on the dash. The **Red** (octagon-shaped) Trailer Air Supply Control knob on tractors will automatically pop out. (An optional dash warning light will indicate when the brake is ON.)
2. Shift the transmission into PARK position:
   - manual transmission, select First or Reverse gear
   - automatic transmission, select Neutral.
3. Turn the key to OFF.
4. Remove the key.

Full Truck Parking Brake Control Knob

https://truckmanualshub.com/

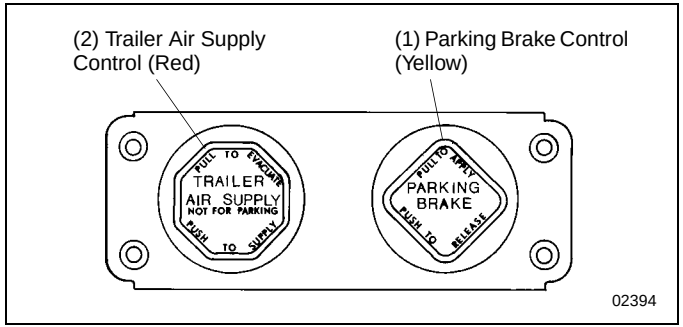

Combination (Tractor/Trailer) Parking Brake Control Valves

The parking brakes act on the rear wheels only. They are spring-applied, with air pressure used to release them. Release air is supplied by both the front and rear circuit reservoirs through a double check valve.

To release the truck or tractor parking brakes ONLY:

- Push IN the **Yellow** knob on the dash. Your trailer will remain parked.

  Below 60 psi (414 kPa) the **Yellow** parking brake valve remains OUT (ON position). If air pressure is not restored above 60 psi (414 kPa), the knob will automatically return to the OUT position if you attempt to push it in. See page 43 for more information.

To release the trailer brakes ONLY:

- Push IN the **Red** knob on the dash. The truck or tractor will remain parked.

To release the full combination of brakes:

- Push IN ***BOTH*** knobs on the dash.
- In the event that air pressure is reduced below a safe level: the low air warning light will come on first; if air pressure continues to drop, the parking brake valve will pop OUT, automatically applying the spring brakes.

CAUTION: Do not try to put the vehicle in motion before pressure in the system reaches 100 psi (689 kPa) because the wheels are locked by the spring brake action.

•Unnecessary stress and possible brake malfunction could occur if the vehicle is forced to move before the air system reaches 100 psi (689 kPa).

•Below 60 psi (414 kPa) the parking brake valve button remains in the applied (ON) position. If air pressure is not restored, the button will automatically return to its initial position.

WARNING! If the air pressure falls below 60 psi (414 kPa) the spring brakes may stop the vehicle abruptly, which could result in an accident involving death or personal injuries. Observe the red warning lamps on the gauges. If one comes on, do not continue to drive the vehicle until it has been properly repaired or serviced.

WARNING! Do not use the trailer hand brake or service brakes to park and hold an unattended vehicle—use the parking brakes. Because service brakes work with air pressure, these brakes could slowly release. Your vehicle could roll, causing a serious accident. Someone could be hurt or killed. Never rely on the service brakes to hold a parked vehicle.

Tractor and Trailer Air Supply Valve

Initial Charge

The red octagon knob controls the air supply to the trailer. With the system completely discharged, both the **Red** (trailer air supply) and the **Yellow** (parking brake) knobs are OUT; thus, tractor and the trailer parking (spring) brakes are applied.

To supply air to the trailer system and release the trailer parking brakes:

1. Allow the tractor air system pressure to build up to operating level.
2. When system pressure reaches 50 psi (345 kPa) the **Red** knob may be pushed IN.
3. Hold the **Red** knob IN by hand until the trailer air pressure builds to a pre-set level, about 45 psi. At this point it will remain in, charging the trailer system and releasing only the trailer brakes.
4. The **Yellow** knob will remain OUT (tractor brakes ON).

Normal Run Position

- The **Yellow** knob (system park) may now be pushed IN, which will supply air to the tractor spring brakes, releasing them.
- With both knobs pushed IN, air is now being supplied to both the trailer and the tractor spring brakes; all brakes are released.

https://truckmanualshub.com/

The parking brakes act on the rear wheels only. They are spring-applied, with air pressure used to release them. Release air is supplied by both the front and rear circuit reservoirs through a double check valve.

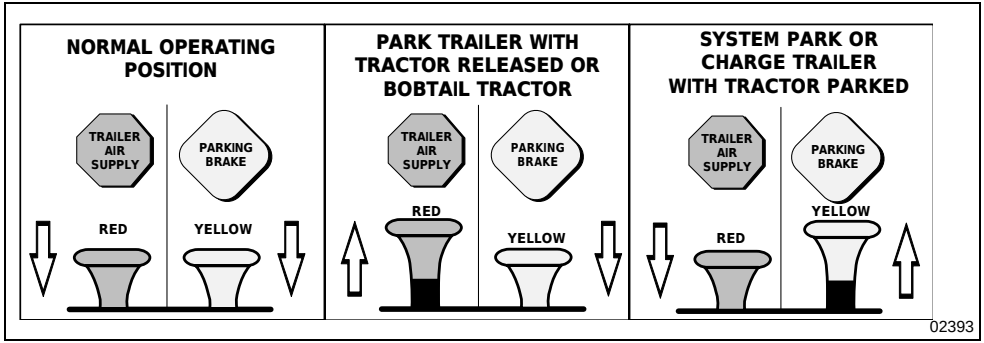

Trailer Park or Emergency Brake Application Only

If you ever have a failure or disconnect the air supply hose to the trailer, the trailer parking brakes will set. The **Red** knob will automatically pop OUT and seal off the tractor air reservoirs to protect the tractor air system pressure.

To apply the trailer brakes only:

Pull OUT the **Red** knob. This will exhaust air from the trailer supply line, causing the tractor protection valve to close and the trailer spring brakes to apply. The trailer is now in “emergency” or “park.” This mode would be used to uncouple from the trailer and during bobtail operation (running without a trailer connected).

WARNING! Do not use the trailer hand brake or service brakes to park and hold an unattended vehicle—use the parking brakes. Because service brakes work with air pressure, these brakes could slowly release. Your vehicle could roll, causing a serious accident. Someone could be hurt or killed. Never rely on the service brakes to hold a parked vehicle.

Parking Tractor and Trailer

- With both knobs pushed in for normal operating modes, the parking brakes of both the tractor and the trailer may be applied by pulling the **Yellow** knob OUT. This will exhaust the air from the tractor spring brakes, and simultaneously cause the **Red** knob to pop OUT, which will apply the trailer brakes. This complies with the FMVSS 121 requirement that one control should apply all the parking brakes on the vehicle.

Trailer Charge

- If both knobs are OUT (combination vehicle is parked), and it is desired to recharge the trailer, the ***Red*** knob may be pushed IN to repressurize the trailer supply line. The tractor will remain parked. For more information on air supply pressure requirements, see page 108.

Brake Safety and Emergency

WARNING! Do not operate the vehicle in the event of a malfunction in any air circuit. The vehicle should not be operated until the system is repaired and both braking circuits, including all pneumatic and mechanical components, are working properly. Loss of system air can cause the service brakes to not function resulting in the sudden application of the spring brakes causing wheel lock-up, loss of control, or over-take by following vehicles. You could be in an accident and killed or severely injured.

https://truckmanualshub.com/

Front Brakes — Truck

The following applies to full truck configurations:

If air pressure is lost in the front circuit, the vehicle front brakes will not operate. Check valves isolate the rear circuit, so the rear service brakes and parking brakes are unaffected. The spring brakes will not automatically apply as long as rear service pressure is maintained.

WARNING! If the remaining system pressure drops below 60 psi (414 kPa) due to repeated brake applications, the spring brakes will automatically apply—stopping the vehicle abruptly, potentially causing death or serious injury. Observe the warning light (BRAKE AIR) in the panel. If it comes on, do not continue to drive the vehicle until it has been properly repaired or serviced.

Rear Brakes — Truck

The following applies to full truck configurations:

If air is lost in the rear brake circuit, check valves isolate the front circuit, and front brake operation is unaffected. Because this is a dual air system, spring brakes will not automatically apply as long as pressure is maintained in the front circuit.

When the brake pedal is depressed, the modulating valve detects the reduction or absence of rear service delivery pressure, and exhausts air from the spring chambers, applying the spring brakes in proportion to the front brake application.

When releasing the brake pedal, the modulating valve delivers front service air to the spring brake chambers, releasing the spring brakes in proportion to the front brake application.

Thus, if there is a rear service failure, the remaining front axle braking is supplemented by modulated spring brake action on the rear axle.

WARNING! Efficiency of emergency braking depends on the amount of air available in the front circuit reservoir, which is sufficient for a limited number of brake applications and releases.

- ***REMEMBER: when the remaining system pressure drops below 60 psi (414 kPa), the spring brake is automatically applied, stopping the vehicle abruptly, potentially causing death or serious injury. Observe the warning light (BRAKE AIR) in the panel, it will come on before the spring brakes are applied. If it comes on, do not continue to drive the vehicle until it has been properly repaired or serviced.***

Brakes — Tractor/Trailer

The following applies to tractor/trailer configurations:

If pressure is lost in the tractor front or rear circuit, the “check” valves isolate the unaffected circuit, allowing this circuit to continue normal operation. The trailer brakes are still functional.

- If air pressure is lost in the trailer supply/park circuit, and the pressure drops below 60 psi (414 kPa), the trailer spring brakes are automatically applied, and the tractor air pressure circuits are unaffected.
- If air pressure is lost in the trailer brake service circuit, and the pressure in the tractor front and rear circuits drops below 60 psi (414 kPa), the tractor and trailer spring brakes are automatically applied.

Emergency Braking

WARNING! Unless you have an anti-lock braking system, always avoid completely depressing the service brake pedal, if possible, even during emergency braking. Depressing the brake pedal too aggressively can cause the wheels to lock, which can lead to an uncontrolled skid and can result in an accident involving death or personal injury.

For Non-ABS Vehicles: To stop your vehicle in an emergency, vary the service brake application pressure to provide maximum braking force without locking the wheels.

https://truckmanualshub.com/

Use engine compression to assist the service brakes by not depressing the clutch pedal until the engine reaches idle speed.

Overheated Brakes

Under normal braking conditions, the energy generated will bring the internal brake drum temperature to about 500°F (260°C). This is well within the safe zone: the maximum safe temperature of lining for drum type brakes is usually about 800°F (427°C).

But if service brakes are used for emergency braking, used improperly, or for prolonged periods, internal brake drum temperatures may exceed 800°F (427°C). Such brake overheating may be detected by a burning smell or smoke coming from a drum. If this occurs, you should immediately stop and check for cracked brake drums or lining fires. If neither exists, get back behind the wheel and resume a slow speed as soon as possible to cool the brakes. If the vehicle was to remain stopped, the heat transfer could destroy the linings and distort the brake drum.

To prevent drums from distortion while they cool down:

- Park the vehicle on level surface and block the wheels.
- Release the parking brake and allow the brakes to cool down. See page 106.

Anti-Lock Braking System

This vehicle may be equipped with an anti-lock braking system (ABS). This ABS reduces the possibility of wheel lock-up. If a wheel is about to lock during braking, the ABS will automatically adjust air pressure to the brake chambers on the appropriate wheel(s) to prevent wheel lock-up. The ABS is automatically turned on when the ignition switch is turned on.

ABS Warning Lamps

Truck/Tractor ABS Warning Lamp

A truck/tractor ABS warning lamp illuminates when the ignition switch is first turned on and will remain on until the system self-test has been completed successfully. Normally, the ABS lamp will remain on until a speed of no more than 9 mph has been reached and the speed sensors have been checked for correct output. The lamp

should remain off after this point unless a failure in the system is detected. The truck/tractor ABS lamp is located in the warning lamp cluster.

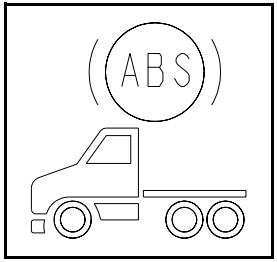

CAUTION: If the truck/tractor ABS warning light does not illuminate when the ignition is first turned on, there is a problem with the bulb or wiring. You should have this checked as soon as possible.

Trailer ABS Warning Lamp

Trucks, tractors, and trailers built on and after March 1, 2001 are equipped with power line communication (PLC) per U.S. FMVSS 121, including a trailer ABS warning lamp in the cab.

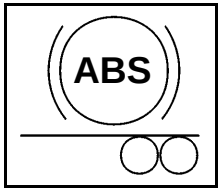

CAUTION: If the trailer ABS warning lamp does not illuminate when the ignition is first turned on, there is a problem with the bulb or wiring. The driver should have this checked as soon as possible.

NOTE: A successsful warning lamp illumination and bulb check at ignition on does not indicate that the trailer you may be connected to has trailer ABS. You should personally inspect every trailer to determine its braking system.

A trailer ABS warning lamp will illuminate for a bulb check when the ignition switch is first turned on - whether or not a trailer is connected to the vehicle. If the bulb check is satisfactory, the lamp will next do either of the following:

1. If no trailer is connected, or if a non-ABS-equipped trailer is connected, the trailer ABS lamp will go off after a few seconds.

 https://truckmanualshub.com/

NOTE: A "properly connected" ABS-equipped trailer is

- *a trailer with PLC hooked up to the J560 connector.*
- *a trailer without PLC that is hooked up to an optional ISO 3731 connector.*

NOTE: For doubles or triples: PLC does not distinguish between trailers. An ABS problem in any trailer will activate the trailer ABS warning lamp.

2. If an ABS-equipped trailer is properly connected, the trailer ABS warning lamp will remain illuminated for a few more seconds while the trailer ABS is tested.
   - If no trailer ABS problems are detected, the lamp will go off.
   - If a trailer ABS problem is detected, the lamp will remain on. The driver should have the trailer's ABS problem corrected before the vehicle is driven with that trailer attached.

WARNING! Do not rely on an anti-lock brake system that is functioning improperly. You could lose control of the vehicle resulting in a severe accident, causing death or personal injury. If your ABS lamp goes on while you are driving or stays on after the self-check, your anti-lock system might not be working. The ABS may not function in an emergency. You will still have conventional brakes, but not anti-lock brakes. If the lamp indicates a problem, have the ABS checked.

Wheel Spin Control Warning Lamp

Your ABS may have an acceleration slip regulation (ASR) or automatic traction control (ATC) feature. Either of these features is monitored by a wheel spin control warning lamp. This lamp is located in the warning lamp cluster.

The Wheel Spin Control warning lamp will briefly illuminate and then go out when the ignition switch is first turned on. The Wheel Spin Control warning lamp will illuminate whenever the ASR or ATC system detects drive wheel spin. The lamp will remain illuminated as long as wheel spin is detected and the ASR or ATC system is applying the drive wheel brakes or reducing engine

torque. Do not allow the Wheel Spin Control lamp to remain on continuously for an extended length of time. Extended, continuous use of the ASR / ATC can cause overheating of the drive wheel brakes. Engine torque or vehicle speed should be reduced to eliminate wheel spin and prevent excessive application of the ASR / ATC system.

Except for checking for proper illumination of the ABS and Wheel Spin Control warning lamps when first starting the truck and for monitoring these lamps while driving, no special operating procedures are required. For detailed system description, see service literature for your specific ABS that was provided with your vehicle.

Trailer Brake Hand Valve

Tractor/trailer vehicles are equipped with a trailer brake hand valve mounted on the right side of the steering wheel column. This hand valve provides air pressure to apply the trailer brakes only. It operates independently of the foot treadle valve.

To operate the trailer brake hand valve:

- Pull down on the lever.
- The valve is self-returning. When pressure is removed from the valve lever, it will return to the OFF position.

NOTE: The trailer brake is not to be used as a substitute for the service brakes. Using this brake frequently, instead of using the foot brake, will cause the trailer brakes to wear out sooner.

WARNING! Do not use the trailer hand brake or service brakes to park and hold an unattended vehicle—use the parking brakes. Because service brakes work with air pressure, these brakes could slowly release. Your vehicle could roll, causing a serious accident. Someone could be hurt or killed. Never rely on the service brakes to hold a parked vehicle.

Driving Bobtail or With an Unloaded Trailer

NOTE: The following information is applicable only to tractor configurations.

Do not use the engine retarder (such as an exhaust brake) to slow the vehicle down when you are bobtailing or pulling an empty trailer.

 https://truckmanualshub.com/

WARNING! Do not use an engine retarder when you are driving bobtail or with an unloaded trailer. Using engine retarders while bobtailing or with an unloaded trailer can cause a wheel lockup resulting in less control and/or jackknife. The trailer may not load the rear tractor tires enough to provide necessary traction. When you are bobtail or unloaded, you can have a serious accident, causing death or personal injury, if your wheels lock suddenly during braking.

Bobtail Brake Proportioning System

When a trailer is not connected, the drive axle brake application pressure will automatically be limited by the proportioning system.

The brake proportioning system regulates the application pressure to the rear drive axle. To provide equivalent braking power, tractors (driven bobtail) will require greater brake pedal application than other types of vehicles not equipped with a proportioning system.

On tractors that do not have anti-lock brake systems (ABS) a bobtail brake proportioning system is installed. When a trailer is not connected (bobtail mode), the brake application pressure (on the rear drive axle) will automatically be limited by the proportioning system.

Engine Retarder (option)

An engine retarder or exhaust brake may be installed (as an option) to create a braking effect on the drive wheels. This device uses your engine's power to slow your vehicle down. Because it can help keep your vehicle's brakes from overheating, it can save wear and tear on the service brakes. However, the retarder is not an emergency brake.

Ideally (on normal road surfaces), you should slow your vehicle with the retarder (where permitted by law) and use the service brakes only for stopping completely. Operating this way will greatly prolong the life of the brakes.

https://truckmanualshub.com/

WARNING! The service brakes must be used in an emergency. The engine or retarder alone might not stop you fast enough to prevent an accident. You could be killed or injured if you relied only on the engine retarder.

- ***The engine retarder is NOT intended as the primary brake for the vehicle, nor is it an emergency brake. The engine retarder only helps the service brakes by using pressure to slow the drivetrain. Use the service brakes for quick stops.***

Exhaust Brake

With the exhaust brake switch ON, the brake automatically creates its braking effect when you remove your foot from the accelerator pedal.

The brake switch is located on the accessory dash panel. It controls whether the brake is ON (ready to slow the vehicle down) or OFF (no braking action).

- Do not use the engine retarder (such as an exhaust brake) to slow the vehicle down when you are bobtailing or pulling an empty trailer.
- Make sure the brake is OFF before starting the engine.
- After the engine is started, warmed up, and you are ready to get under way, turn the exhaust brake switch ON for added braking effect.

WARNING! Do not use the engine retarder when operating on road surfaces with poor traction (such as wet, icy, or snow covered roads or gravel). Retarders can cause the wheels to skid on a slippery surface. You could lose control of the vehicle and/or jackknife if the wheels begin to skid, resulting in an accident, causing death or personal injury.

However, if your vehicle is equipped with Rockwell/WABCO anti-lock brakes (ABS), the operation of the exhaust brake (if turned ON) will be controlled by the ABS. For more ABS information, see “Anti-Lock Braking System” on page 113.

For more information on when and how to use the engine retarder in your vehicle, see the owner’s manual for the engine brake that is included with your vehicle.

https://truckmanualshub.com/

Brake Components

The following is a brief description of the air/brake system. It is intended to supply you with general information on how the system works. For complete information see the **Medium Duty Maintenance Manual**.

Compressor: supplies air to the system. System pressure is controlled by the governor.

Governor: controls the air pressure in the system by actuating the compressor discharge mechanism. Its cut-out pressure is 115 to 125 psi (793 to 862 kPa). Its preset cut-in pressure is set to between 13 to 25 psi (90 to 172 kPa) below the cut-out pressure setting (cut-out and cut-in interval is not adjustable).

Safety Valve: installed on the supply reservoir outlet. It should “vent off” at 150 psi (1034 kPa) permitting air to escape.

Air Dryer (Option): collects and removes moisture and contaminants from the air as it travels from the compressor to the wet tank (reservoir).

Compressed Air Tanks: The wet (supply) and dry (service) tanks are located behind the battery box and on the frame rail; the supply tank is below the front service tank. See “Air Tanks” on page 162.

The wet tank receives air from the air dryer and cools it somewhat, allowing moisture to condense for draining. Relatively dry air is then supplied to the two service tanks for distribution to their respective brake circuits. The service tanks are isolated from each other by check valves.

Dual Service Brake Treadle Valve: delivers air to the two service brake circuits.

Double Check Valve: directs the higher air pressure from either the rear (primary) or front (secondary) service tank to the modulating valve.

Modulating Valve (SR–1): used only on full trucks, not tractors. It performs four functions:

- Limits spring brake hold-off air pressure delivered to the spring brake chambers.
- Provides a quick release of air pressure from the spring brake chambers to speed spring brake application.

https://truckmanualshub.com/

- Modulates spring brake application in proportion to front service application in the event of a rear service failure.
- Prevents compounding of service and spring applications.

Relay valve (full truck): speeds up the application of the rear service brake. It also incorporates a quick–release feature.

Brake Proportioning (BP-R1) valve (tractor): this valve delivers air to the tractor's service brake chambers. It automatically proportions the drive axle brake app

lication pressure when driving bobtail (without a trailer connected). Proportioning the brakes allows full use of the steer axle brakes and reduces lockup of the drive axle brakes. The bobtail brake proportioning system is automatically turned off when a trailer is connected.

Quick–Release Valve: speeds the release of air from the brake chambers. When air is released, the air in the brake chambers is exhausted at the quick-release valve, rather than exhausting back through the treadle valve.

Single Check Valve: allows air flow in one direction only.

Parking Brake Valve: yellow diamond-shaped knob. It controls the application and release of the parking (spring) brakes of truck or tractor-trailer combinations or of the tractor alone. If the air system is being charged from zero pressure, the parking brake valve will not hold in the release position until the system pressure exceeds 60 psi (414 kPa), which is the pressure required to override the load of this valve's plunger return spring.

Trailer Supply Valve (tractor): The **Red** octagonal-shaped knob protects the tractor system; it functions in conjunction with the parking brake valve (yellow). The trailer supply valve is responsible for synchronizing the tractor and trailer parking and emergency brakes. If the air system is being charged from zero pressure, the trailer supply valve will not hold in the applied position until the system pressure exceeds 50 psi (345 kPa). It automatically pops out and exhausts air if supply air pressure drops below 60 psi (414 kPa).

Tractor Protection Valve: The functions of this valve are to (1) receive all pneumatic signals pertinent to the operation of the trailer brake system, (2) transmit these signals

https://truckmanualshub.com/

to the trailer, and (3) protect the tractor air supply in case of separation of the air lines connecting the tractor to the trailer.

Hydraulic Brakes

WARNING! Do not operate the vehicle in the event of a malfunction in any air or hydraulic circuit. Such a malfunction may prevent the brake system from operating properly, and could result in an accident, causing death or personal injury. The vehicle should not be operated until the system is repaired and both braking circuits, including all pneumatic, hydraulic, and mechanical components are working properly.

The operation of the vehicle's braking system is based on the principle of hydraulics. Hydraulic action begins when force is applied to the brake pedal. This force creates hydraulic pressure in the master cylinder and is amplified with assistance of a power booster. The supplemental boost in force is developed when pressurized power steering fluid from the steering pump presses on the master cylinder piston. As a safety precaution, the pressurized fluid from the master cylinder has two mutually independent circuits. The primary circuit supplies the front wheels while the secondary circuit supplies the rear wheels. The displaced fluid from the master cylinder travels through brake pipes terminating at the wheel cylinders which actuate the brake pad mechanisms. Actuation of these mechanisms force the brake pads against the rotors to stop the wheels.

A reserve electric motor pump provides a redundant power source for the hydraulic booster in the event normal flow from the power steering pump is interrupted. Manual braking is also available in the event both the power and reserve systems are inoperative.

WARNING! Never drive your vehicle with the parking brakes applied. Always release the parking brakes prior to moving the vehicle. Failure to disengage the parking brakes prior to moving your vehicle could result in excessive heat build-up of the brakes and start a fire, possibly causing death, personal injury or porperty damage.

https://truckmanualshub.com/

NOTE: Today's diesel electronic engines have significant torque and startability power at low RPM. Combinations of engine speed and available torque may over-power the vehicle's parking brakes.

WARNING! The brake system is a critical vehicle safety system. For the safety of you and others around you, have the vehicle submitted for periodic preventive maintenance checks as well as having any suspected problems immediately checked by an Authorized Service Center. Failure to properly maintain your brake system can lead to accident, resulting in death or personal injury

Brake Components

The following is a brief description of the hydraulic brake system. It is intended to supply you with general information on how the system works. For complete information see the Peterbilt Medium Duty Maintenance Manual.

Anti-Lock Brake System (ABS) Modulator Valve Body: adjusts brake fluid flow between the master cylinder and the wheel calipers to avoid wheel lockup.

ABS Warning Lamp: lights when the ABS controller detects wheel lock-up while driving and activates the ABS. Lights also when a fault in the ABS is detected.

Brake Fluid Reservoir: stores brake fluid and offers a place to replenish when needed.

Brake Master Cylinder: translates brake pedal force into hydraulic fluid pressure in the primary and secondary circuits.

Brake Pedal: applies actuation force from operator's foot to the master cylinder pistons.

Brake Warning Lamp: illuminates when either power steering fluid flow is interrupted or when a pressure differential is present in the primary and secondary brake fluid pressure. Either case adversely affects braking operation.

Differential Switch: measures the hydraulic fluid pressure difference between the primary and secondary circuits.

https://truckmanualshub.com/

Electrohydraulic Pump: The Electrohydraulic (EH) pump is used as a backup boost pump. The EH pump turns on and provides fluid pressure to the hydraulic booster in the event power steering fluid stops flowing through the booster head.

Front and Rear Wheel Calipers: translate hydraulic fluid pressure into force applied at each wheel-end brake rotor to retard wheel motion.

Hydraulic Booster: The hydraulic booster applies additional hydraulic force from the power steering gear to the master cylinder piston when the brake pedal is applied.

Parking Brake Lamp: illuminates when the parking brake is engaged (the lever is in the up position.)

Parking Brake Lever: the hand lever located in the cab which engages or disengages the driveline drum brake.

Power Steering Flow Switch: senses flow of power steering fluid.

Power Steering Fluid Reservoir: stores power steering fluid and offers a place to replenish when needed.

Power Steering Gear: assists the steering operation and sends pressurized power steering fluid to the brake booster.

Power Steering Pump: draws power steering fluid from the reservoir and sends it to the power steering gear.

Warning Buzzer: sounds when either power steering fluid flow is interrupted or when a pressure differential is present between the primary and secondary brake fluid pressure. Either case adversely affects braking operation.

Brake Warning Lamp

When the brake warning lamp comes on, it indicates a malfunction in the brake system. Possible malfunctions include loss of hydraulic pressure from the power steering circuit or a pressure differential between the primary and secondary brake circuits.

WARNING! Do not operate the vehicle if the brake light or buzzer comes on. The light or buzzer indicates a failure in one of the brake components/system. Safely drive your vehicle to the side of the road immediately. Failure to do this may lead to an accident, causing death or personal injury.

SERVICE BRAKE WARNING INDICATOR

If the buzzer sounds while driving, or if the BRAKE light comes on, do the following:

1. Slow down carefully.

   Here are some things you can do to assist in slowing the vehicle:

   - **Downshift** - Putting the transmission into a lower gear will help slow the vehicle.
   - **Pump the brakes** - Pumping the brake pedal may generate enough hydraulic pressure to stop the vehicle.
   - **Use the parking brake** - The parking or emergency brake is separate from the hydraulic system. Therefore it can be used to slow the vehicle.

2. Move a safe distance off the road and stop.
3. Set the parking brake. (See page 106.)
4. Turn on the emergency flasher and use other warning devices to alert other motorists.

Wet or Overheated Brakes

- Wet Brakes

  If you have been driving in heavy rain or deep standing water, your brakes will get wet. Water in the brakes can cause them to be weak, to apply unevenly, or to grab. These conditions can cause a lack of braking power, wheel lockups, or pulling of the vehicle to one side or the other.

  Avoid driving through deep puddles or flowing water if possible. If not possible, you should to the following:

  - Slow down.
  - Place transmission in lower gear.
  - Gently press on the brake pedal.
  - Increase engine speed while keeping light pressure on the brake pedal for a short distance to dry out the brake linings.

- Overheated Brakes

https://truckmanualshub.com/

While traveling down steep hills, gravity will tend to speed you up. You must go slow enough that your brakes can hold you back without getting too hot. If you ride the brake pedal and the brakes get too hot, they may “fade”, causing you to press even harder in an attempt to maintain your desired stopping power. The brakes may even fade so much that you won’t be able to slow down or stop at all.

Using lower transmission gears will help keep the vehicle from going too fast. Using lower gears allows engine compression and friction to help slow the vehicle. Be sure to be in the right gear **before** you start down a hill, especially if you have a manual transmission. You could get hung up in NEUTRAL and lose the benefit of engine braking. “Coasting” is illegal, and also VERY dangerous.

Anti-Lock Braking System

This vehicle is equipped with an Anti-Lock Braking System (ABS). ABS reduces the likelihood of a wheel locking. If a wheel is about to lock during braking, the ABS will automatically adjust hydraulic pressure to the brake calipers on the appropriate wheel(s) to prevent wheel lock-up. The ABS is automatically activated when the ignition switch is turned on.

CAUTION: The center pin of the 7-way trailer light line may be constantly powered for ABS. Make sure it will not accidently turn on trailer equipment.

ABS Warning Lamp

The ABS warning lamp will come on briefly, then go off, when the key switch is first turned on. If the lamp remains ON until a speed of 4 mph (6 km/h) is reached, then goes OFF, there may be a stored fault code. If the lamp **remains** ON when a speed in excess of 4 mph (6 km/h) is reached, there may be an active fault in the ABS system.

CAUTION: If the ABS warning light does not illuminate when the ignition is first turned on, there is a problem with the bulb or wiring. You should have this checked as soon as possible.

WARNING! No indication will be given via the dashboard warning lights or buzzer if tires of the wrong size are installed on your vehicle. The Anti-Lock Brake System (ABS) is calibrated for the specific tire revolutions per mile. Use of a tire and/or wheel size different from that originally installed on your vehicle may cause the ABS system to not function during a hard braking event. This could cause an accident, resulting in death or personal injury. Consult with your Peterbilt dealer before using a different tire and/or wheel size than was originally installed on your vehicle.

Parking Brake Burnishing

WARNING! If a new drum or new brake shoes are installed, the driveline brake must be burnished. Failure to properly burnish the parking brake before putting it in service could result in an inoperative parking brake, possible vehicle rollaway, and death, personal injury or damage to the vehicle.

This procedure is recommended for new vehicles where less lever actuation force is required. This procedure is **mandatory** whenever the driveline brake shoes or brake drum are replaced.

1. Drive the vehicle at 15 mph (24 km/h) in a low gear (first or second) on a dry, hard road surface.
2. Apply the parking brake lever with a moderate force (approximately 40 pounds) until the vehicle is brought to a stop. Do not allow the wheels to lock up.
3. After stopping, release the parking brake lever and drive the vehicle at 20 mph (32 km/h) in a low gear for approximately 2.5 miles, to allow the brake drum to cool.
4. Repeat steps 1, 2, and 3 above until a total of 10 stops have been completed.
5. Adjust the parking brake lever. See the Medium Duty Maintenance Manual.

https://truckmanualshub.com/

Operating the Rear/Drive Axle

Introduction

This section covers the operation of your Rear/Drive Axle. These instructions apply to the most common features of drive axles. Refer to the manufacturer's instructions for further information on the operation of your axle.

If your vehicle is equipped with a Rockwell Tractech™ No-spin single rear axle, the wheel differential lock feature automatically engages and disengages. When one wheel starts to spin on a slippery surface, this rear axle feature engages to improve traction.

Interaxle Differential Lock

On vehicles with tandem rear axles, the interaxle differential allows each axle to turn independently. Differential action between the tandems relieves stress on the rear axles and reduces tire wear. The interaxle differential lock switch allows the operator to LOCK or UNLOCK the differential, depending on road surface conditions.

When operating normally on paved, dry surfaces, keep your truck's interaxle differential in the UNLOCK position.

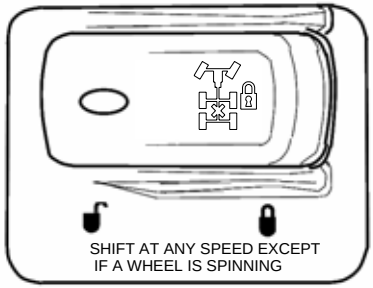

In the LOCK position, an air operated clutch positively locks both sets of axles together, providing greater traction on slippery road surfaces; however, steering around corners and on dry pavement is more difficult. Continuous operation on a paved, dry surface stresses the tandem axles, possibly causing internal damage.

Use this feature only when driving on surfaces with poor traction, such as wet slippery roads, heavy mud or snow, or loose gravel. And do not use it when going downhill or at speeds greater than 25 mph (40 km/h).

Lock the inter-axle differential when you encounter road conditions such as these:

- Ice or snow — with or without tire chains.

https://truckmanualshub.com/

- Dirt roads.
- Loose sand, mud, or other rough road conditions.

WARNING! Do not put the differential lock in the LOCK position while the wheels are spinning freely (slipping), you could lose control of the vehicle, resulting in death, personal injuryor property damage. Switch to LOCK only when the wheels are not spinning.

- Look ahead for wet, muddy, or icy patches on the road, stop your vehicle and switch to LOCK ahead of time.

WARNING! Do not operate the vehicle on dry pavement with the differential locked. This could lead to an accident, resulting in death or personal injury. On dry pavement, you will not be able to steer well with the differential locked. Lock the differential only when operating on surfaces with poor traction, such as wet, slippery roads or loose gravel.

Inter–Axle Differential Lock Operation

WARNING! Do not use the inter-axle differential lock when travelling downhill or at speeds above 25 mph (40 km/h). When it is engaged under these conditions, your vehicle will exhibit "understeer" handling characteristics. This "understeer" condition will cause your vehicle to turn less quickly and more steering effort will be required, which can cause an accident, resulting in death or personal injury.

To LOCK the inter-axle differential:

1. Anticipate when you might need increased traction, slow down to a steady speed under 25 mph (40 km/h) or stop the vehicle. Do not lock the inter-axle differential while going down steep grades or traveling faster than 25 mph, or while wheels are spinning or traction is minimal; lock it before you encounter these conditions.

https://truckmanualshub.com/

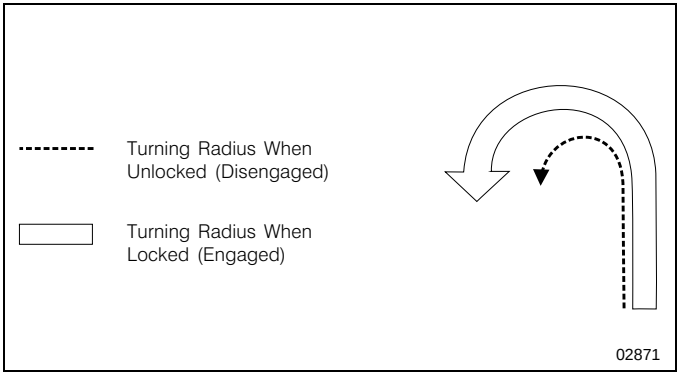

Understeer Condition

2. Put the inter-axle differential lock switch, labeled MAIN DIFFERENTIAL LOCK, in the LOCK position. A light (DIFF LOCK) in the warning module on the dash will turn on, indicating that the differential is locked (engaged).
3. If you LOCK or UNLOCK the inter-axle differential while moving, let up momentarily on the accelerator pedal to relieve torque on the gearing and allow full engagement of the clutch (the mechanism that locks the wheels).

NOTE: If your vehicle has an automatic transmission, it may be necessary to shift the transmission to the Neutral position momentarily to allow the main inter-axle differential lock splines to fully engage or disengage.

4. Drive the vehicle through the poor traction area, keeping your speed under 25 mph (40 km/h).

To UNLOCK the inter-axle differential:

1. When you reach dry pavement or better road conditions where the differential lock is not needed, switch the differential lock to UNLOCK.
2. Let up momentarily on the accelerator pedal to relieve torque and allow the clutch to disengage.
3. When you unlock the differential, normal vehicle handling will resume and the light on the warning module will turn off.

 https://truckmanualshub.com/

More Driving Tips and Techniques

WARNING! Low air pressure could make the brakes unsafe for driving. Before driving the vehicle, make sure the pressure does pump up to over 100 psi for normal brake operation. If the air pressure does not pump up to at least 100 psi, don't try to move the vehicle as it may cause an accident, possibly resulting in death or personal injury.

CAUTION: Operating a vehicle with air suspension bags either overinflated or underinflated may cause damage to driveline components. If a vehicle must be operated under such conditions, do not exceed 5 mph.

Driving Tips And Techniques

This section covers additional driving tips and techniques on how to drive your vehicle more efficiently. For further information, read the American Trucking Association's (ATA) *Truck Driver's Handbook*. It will give you more tips on starting, shifting, and driving your vehicle.

Use of Driver Information Display

The Driver Information Display provides information to help the driver optimiize vehicle efficiency. Refer to the section "Driver Information Display" on page 28 for details. A driver will find the section describing Trip Information and the RPM Detail useful.

Coasting

WARNING! Do not coast with the transmission in neutral or with the clutch pedal depressed—it is a dangerous practice. Without the use of the retarding power of the drivetrain, your vehicle can reach dangerous speeds. At very high speeds you may not be able to put the transmission in any gear. At high speeds you could seriously damage your vehicle or cause an accident when you put the transmission in gear. The engine speed could exceed the maximum governed speed and cause a serious accident, resulting in death or personal injury, due to mechanical failures.

Do not coast with the transmission in neutral or with the clutch pedal depressed. Besides being illegal and dangerous, coasting is also expensive. It causes premature fail-

 https://truckmanualshub.com/

ure or damage to the clutch and transmission and overloads the brake system.

Coasting with the transmission in neutral also prevents proper transmission component lubrication. During coasting the transmission is driven by the rear wheels, and the countershaft gear (which lubricates the transmission components by oil splash) will only be turning at idle speed.

Descending a Grade

WARNING! Do not hold the brake pedal down too long or too often while going down a steep or long grade. This could cause the brakes to overheat and reduce their effectiveness. As a result, the vehicle will not slow down at the usual rate. To reduce the risk of an accident which could cause death or personal injury, before going down a steep or long grade, reduce speed and shift the transmission into a lower gear to help control your vehicle speed. Failure to follow procedures for proper downhill operation could result in loss of vehicle control.

Engine Overspeed

CAUTION: To avoid engine damage, do not let the engine rpm go beyond the maximum governed rpm—valve damage could result if overspeed conditions occur.

NOTE: Often these recommendations are secondary to maintaining an adequate and safe speed relative to the surrounding traffic and road conditions.

Operate the engine within the optimum engine rpm range and do not allow the rpm's to exceed the maximum governed speed. See your *Engine Operation and Maintenance manual* for information regarding engine rpm. When the engine is used as a brake to control vehicle speed (e.g., while driving down a grade), do not allow the engine rpm to exceed maximum governed speed.

Under normal load and road conditions operate the engine in the lower end of the range.

Use of Tachometer

The tachometer is an instrument that aids in obtaining the best performance of the engine and manual transmission, serving as a guide for shifting gears.

https://truckmanualshub.com/

Refer to the *Engine Operation and Maintenance manual* for optimum engine rpm.

- If the engine rpm moves beyond the maximum governed speed, indicating an overspeed condition, apply the service brake or shift to a higher gear to bring engine rpm within the optimum speed range.
- When driving downhill: shift to a lower gear, use the engine brake (if so equipped), and use the service brake, keeping the engine speed below 2,100 rpm.

When the engine speed reaches its maximum governed speed, the injection pump governor cuts off fuel to the engine. However, the governor has no control over the engine rpm when it is being driven by the vehicle's transmission, for example, on steep downgrades. Apply service brakes or shift to a higher gear.

Fuel economy and engine performance are also directly related to driving habits:

- The best results in trip time and fuel economy are obtained while driving the vehicle at a steady speed.
- Shift into higher or lower gears (or apply the service brake) to keep engine rpm near the lower end of the optimum operating range.
- Avoid rapid acceleration and braking.

WARNING! Do not exceed the specified load rating. Overloading can result in loss of vehicle control and an accident causing death or personal injury, either by causing component failures or by affecting vehicle handling. Exceeding load ratings can also shorten the service life of the vehicle.

- ***The components of your vehicle are designed to provide satisfactory service if the vehicle is not loaded in excess of either the gross vehicle weight rating (GVWR), or the maximum front and rear gross axle weight ratings (GAWRs). (Axle weight ratings are listed on the driver's door edge.)***

NOTE: For your safety and the safety of others, follow routine and periodic maintenance schedules for all components on your vehicle. See Table 3, “Maintenance Schedule,” Page 123

https://truckmanualshub.com/

Air Suspension Height/Air Pressure

Your vehicle may have an air suspension. A deflation switch on the dash allows you to exhaust the air in the suspension, which allows you to lower the height of your vehicle for loading. On tractors, the deflate switch allows you to lower the fifth wheel to slide under a trailer.

A guard on the switch prevents you from accidentally deflating the suspension.

WARNING! Do not operate the Air Suspension Deflate Switch (Dump Valve) while driving. Sudden deflation while your vehicle is moving can affect handling and control and could lead to an accident possibly resulting in death or personal injury. Use this switch only when your vehicle is not moving.

CAUTION: Operating a vehicle with air suspension bags either overinflated or underinflated may cause damage to driveline components. If a vehicle must be operated under such conditions, do not exceed 5 mph (8 km/h).

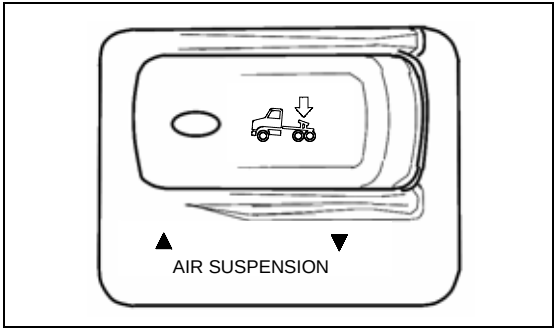

Air Suspension Deflate Switch

Setting Ride Height

Vehicles equipped with rear air suspensions have their ride height and axle (pinion) angle(s) preset at the factory. These are precision settings and should not be altered. Incorrectly adjusted ride height may result in improper interaxle U-joint working angles. This can result in premature driveline wear and driveline vibration. If your vehicle is equipped with a Peterbilt rear air suspension, and if it becomes necessary to reset the ride height, you may temporarily set it by following the next procedure. Proper ride height measurement and values are shown in the illustration and table below.

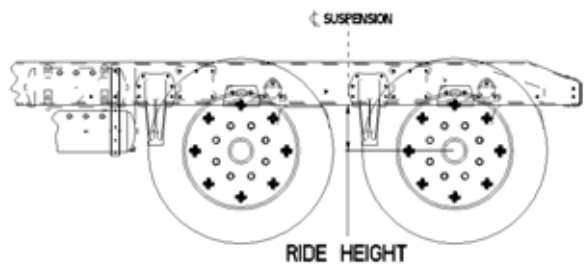

Ride Height Measurement (Location for Tandem Axles Shown)

Proprietary Rear Air Suspension	Ride Height [inches (mm)]*	
	Single Drive	Tandem Drive
Air Trac	11.00 (279)	11.00 (279)
Low Air Leaf	6.50 (165)	8.50 (216)
*These values are for a fully laden vehicle		

Follow this procedure to temporarily set ride height.

WARNING! To prevent possible death, injury and damage to property, ensure that a vehicle is parked and the wheels chocked before beginning this procedure.

CAUTION: Completing this procedure will enable you to safely reach the nearest authorized Peterbilt repair facility to have ride height and pinion angle reset using the proper equipment and technique. Do this as soon as possible to avoid potential driveline damage.

NOTE: Suitable wheel chocks are at a minimum an 18-inch (46 cm) long 4x4.

1. Ensure that the air supply and delivery plumbing of the height control valve is consistent with the illustration.

NOTE: At least one of the mounting holes in the height control valve bracket will be slotted to permit rotating the valve.

NOTE: On dual-valve systems, begin with the LH valve on the next step.

2. Loosen the fasteners mounting a height control valve to its bracket.

https://truckmanualshub.com/

WARNING! Be extremely careful when deflating the air springs. The rear of the vehicle will drop about 3-1/2 inches (88 mm) when the air springs are deflated. Make sure that no persons that could be killed or injured or any objects that could be damaged are under the vehicle.

To minimize the risk of damage death or injury, do not use the dump valve to deflate the air springs. Operate the height control valve(s) manually to ensure positive control of air spring deflation.

To minimize risk of death or injury, keep away from air springs as they are being inflated.

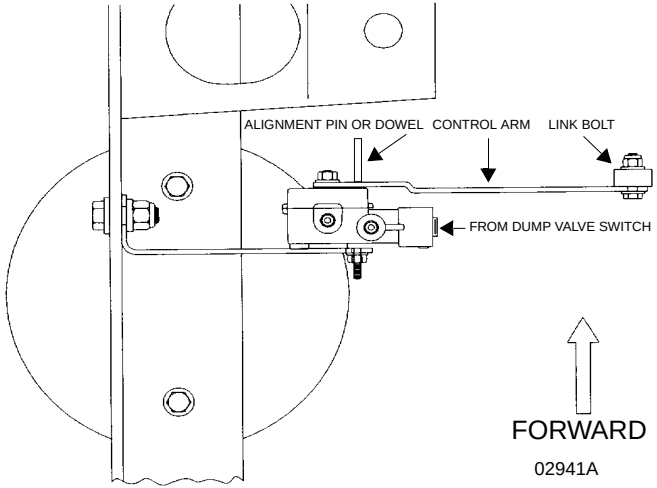

Typical Height Control Valve (Top View)

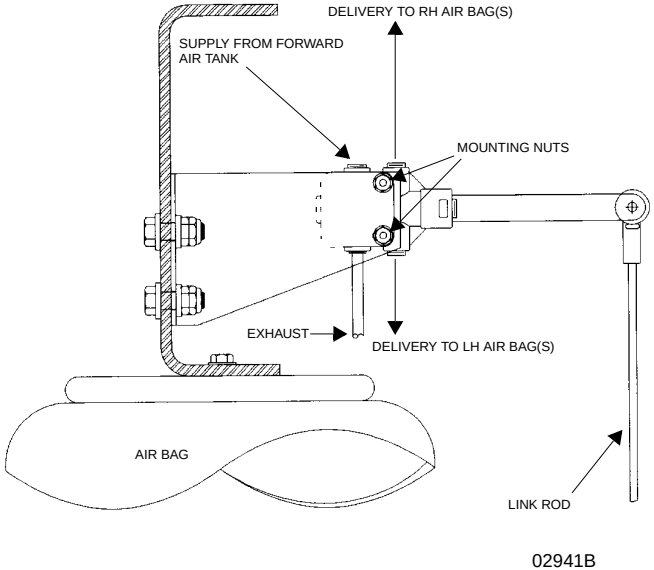

Typical Height Control Valve
(Rear View Looking Forward)

3. Rotate the valve either clockwise or counterclockwise until air pressure in the air springs provides the ride height specified for that suspension. Measure the ride height from the bottom of the frame rail to the approximate centerline of the rearmost drive axle hub:
   - For tandem axles, make the vertical measurement at the centerline of the suspension (see illustration on page 134).
   - For a single axle, make the measurement in front of the axle, in the area forward of the tires but not past the suspension bracket.
4. When at the correct ride height, ensure that the height control valve lever is in the neutral position, then install either the built-in alignment pin or a 1/8-inch (3 mm) dowel (see page 134).
5. Torque the mounting fasteners to 55 — 75 lb. in. (6.2 — 8.5 N.m.).
6. Remove the alignment pin or dowel.
7. Repeat Steps 2 through 6 above for the RH valve on vehicles with a dual-valve system.

https://truckmanualshub.com/

Driving with Deflated Air Springs

Vehicles with the air suspension (option): If an air spring ruptures, there will be enough air pressure to drive the vehicle to a safe stop off the highway to investigate the problem.

WARNING! Do not continue to drive with ruptured air springs. The air loss can cause the spring brakes to apply allowing your brakes to drag and burn up the linings, which could lead to an accident causing death or personal injury. Do not continue to operate the vehicle in this condition.

To get to a repair facility, do the following:

1. Remove the height control link connected to the axle and to the suspension air valve control arm. This will cause the air valve control arm to center in the closed position.
2. The air system can then be pumped up to normal pressure for continued operation.

WARNING! Low air pressure could make brakes unsafe for driving by not providing sufficient air brake application pressure in an emergency, which could lead to an accident resulting in death or personal injury. Before driving the vehicle, make sure the air pressure pumps up to over 100 psi for normal brake operation. If it does not reach 100 psi, do not try to move the vehicle.

CAUTION: Do not operate a vehicle with air suspension bags either over- or under-inflated. This could cause damage to drive-line components. If you must drive under such conditions, do not exceed 5 mph (8 km/h).

Fifth Wheel

The following applies to tractor configurations:

WARNING! Ensure that all fifth wheel maintenance, adjustments, and rebuilding are done only by a qualified mechanic. An improperly maintained fifth wheel can cause a trailer to separate from a tractor. This could lead to an accident causing death, personal injury and damage to property.

https://truckmanualshub.com/

Your Medium Duty vehicle may be equipped with either a fixed or an air-controlled sliding fifth wheel. Either type should self-lock when a trailer king pin trips the locking dogs as the tractor is backed under a trailer.

Fifth Wheel Jaw Lock

To unlock the fifth wheel lock:

- Pull out on the lever (usually located on the left-hand side of the fifth wheel) until it remains in an overcenter position.

Hook–Up:

- After connecting your tractor to the trailer, always inspect the jaws to be sure they have locked on the kingpin before driving.

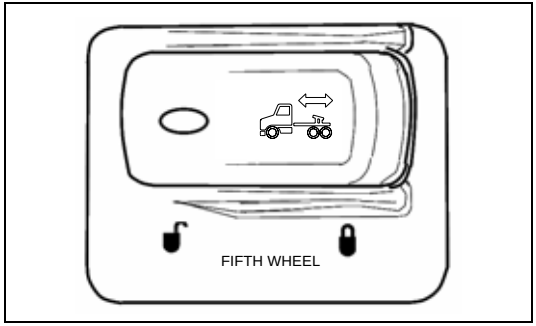

Fifth Wheel Slide Switch

Air–Controlled Sliding Fifth Wheel

Vehicles having an air-controlled sliding fifth wheel have a fifth wheel slider lock controlled by a switch on the accessory switch panel. To operate this type of lock, move the switch to the appropriate position. By placing the switch in the UNLOCK position, you can slide the fifth wheel to various positions to adjust weight distribution. There is a guard on this switch to protect you against accidentally activating or releasing the lock.

https://truckmanualshub.com/

WARNING! Do not move of the fifth wheel while the tractor-trailer is in motion. Your load could shift suddenly, causing you to lose control of the vehicle, which can result in a accident causing death or personal injury. Never operate the vehicle with the switch in the UNLOCK position. Always inspect the fifth wheel after you lock the switch to be sure the fifth wheel lock is engaged.

Fifth Wheel Lubrication

- Frequently operate and lubricate movable or sliding fifth wheels to prevent corrosion.

CAUTION: Both the fifth wheel plate and the slide tracks (if a slider) should be cleaned and lubricated periodically to ensure smooth turning and sliding action. Failure to keep these surfaces lubricated can lead to frame or driveline damage.

See page 219 for maintenance information.

Vehicle Recovery and Spring Brakes

Introduction

Your Medium Duty vehicle is equipped with built-in recovery provisions, designed for short distance use only. If your vehicle must be recovered, disconnect the driveline at the rear U–joint, and remove or support the rearmost section of the driveline. This is necessary because if the transmission is driven by the driveshaft (rear wheels on the ground), no lubricant will reach the gears and bearings, causing damage to the transmission.

CAUTION: Remove the driveline and axle shafts or lift the driving wheels off the ground before towing the vehicle. See "More Driving Tips and Techniques" on page 130***. All lubricating and clutch application oil pressure is provided by an engine-driven pump, which will not work when the engine is stopped. You could seriously damage your vehicle by towing it with the driveline connected and the drive wheels on the ground.***

Worse, when vehicles are towed, either by wrecker or piggy-back, the lubricant in the top front of the drive axle will drain to the rear. This will leave the top components dry. The resulting friction may seriously damage them. Always remove the main driveshaft and axle shafts before towing your vehicle.

NOTE: For additional information concerning heavy-duty truck recovery, see Truck Maintenance Council Recommended Practice #602–A — "Front Towing Devices For Trucks and Tractors," and #626 — "Heavy Duty Truck Towing Procedures." Copies of these can be obtained from the following address:

The Maintenance Council
American Trucking Association Inc.
2200 Mill Rd.
Alexandria, VA 22314
(703) 838-1763

 https://truckmanualshub.com/

Vehicle Recovery Guidelines

Refer to the guidelines below when towing to prevent possible damage:

- Use proper towing equipment to prevent damage to the vehicle.

  CAUTION: Connect only to the towing provisions, as described on the following pages. Connections to other structural parts could damage the vehicle. Do not attach to bumpers or bumper brackets. Use only equipment designed for this purpose.

- Use a safety chain system and the vehicle's (2) hitches. Be sure to use both hitches together to recover a vehicle.
- Disconnect driveline.
- Follow state/provincial and local laws that apply to vehicles in tow.
- Do not tow vehicles at speeds in excess of 55 mph (90 km/h).

Recovery Rigging

To connect to the Medium Duty vehicle, attach the towing chain or cable and the hitches to the (2) tow recievers through the center access hole in the bumper.

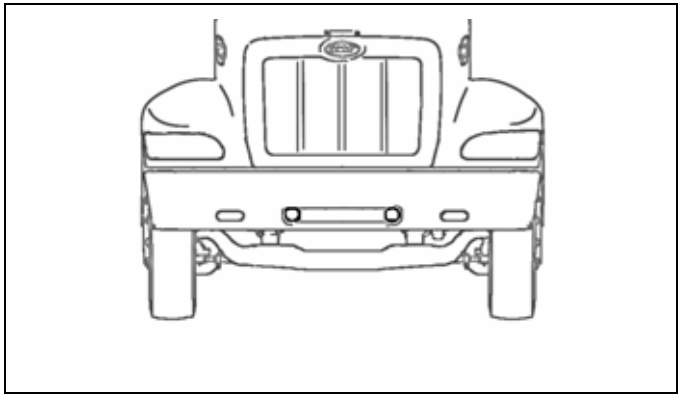

Front Tow Hook Recievers

Returning Vehicle to Service

You will have to add lubricant to prevent damage after your vehicle has been towed.

1. Into the pinion cage, add 1 pint (.47 liter) of lubricant.

2. Into the inter-axle differential, add 2 pints (.94 liter) of approved lubricant.
   - See “Recommended Lubrication Types,” Page 136.
3. After adding the specified type and amount of lubricant, drive the vehicle. It should be unloaded. Drive 1 to 2 miles (1.5 to 3 km) at a speed lower than 25 mph (40 km/h). This will thoroughly circulate the lubricant through the assembly.

Spring Brakes — Manual Release

In order to tow a vehicle, if there is insufficient air to release the parking brake, the spring brakes can be manually released.

WARNING! Do not drive vehicle with malfunctioning brakes. If one of the brake circuits should become inoperative, braking distances will increase substantially and handling characteristics while braking will be affected. You could lose control of your vehicle and cause an accident resulting in death or personal injury. Have it towed to the nearest dealer or qualified workshop for repair.

You may sometimes have to release your vehicle's spring brakes by hand. This could happen if the system air pressure does not reach operating pressure because your engine or compressor is not working properly. You will have to release the spring brakes at the spring brake chambers.

WARNING! Do not disassemble a spring brake chamber. These chambers contain a powerful spring that is compressed. Sudden release of this spring can cause death or personal injury.

- ***Do not operate a vehicle when the spring brakes have been manually released. Driving a vehicle after its spring brakes are manually released is extremely dangerous. You will probably have no brakes at all. You could have a serious or fatal accident.***
- ***Releasing the spring brakes on an unsecured vehicle could lead to an accident. The vehicle could roll, causing severe injury. Always secure the vehicle with wheel chocks, chains, or other safe means to prevent rolling before manually releasing the spring brakes.***

https://truckmanualshub.com/

To move a vehicle immobilized by the spring brakes due to loss of air pressure in the brake system, perform the following procedure:

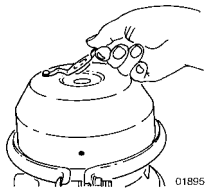

1. Remove the cap from the spring chamber.

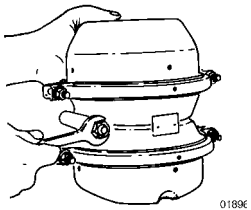

2. Remove the release stud assembly from the side pocket, and remove the release nut and washer from the release stud.

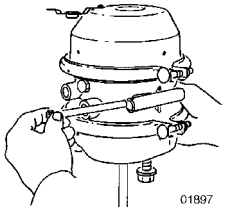

3. Slide out the release stud.

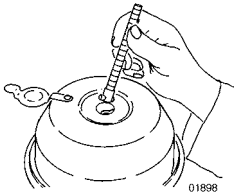

4. Insert the release stud through the opening in the spring chamber where the cap was removed. Insert it into the pressure plate. Turn the release stud 1/4 turn clockwise in the pressure plate. This secures the cross pin into the cross pin area of the pressure plate and locks it into the manual release position.

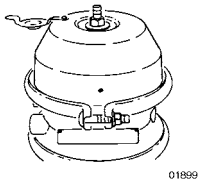

5. Assemble the release stud washer and nut on the release stud.

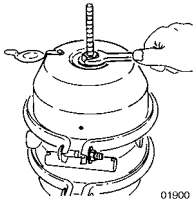

6. With a wrench, turn the release stud assembly nut until the compression spring is 90–95 percent caged. While doing this, check to make sure the push rod (adapter push rod or service push rod) is retracting. Do not over-torque the release stud assembly. (S–Cam type maximum: 50 ft-lb, Wedge type maximum: 30 ft-lb.) The spring brake is now mechanically released.

Freeing the Vehicle from Sand, Mud, Snow and Ice

WARNING! Do not spin the wheels faster than 35 mph (55 km/h). Spinning a tire at speedometer readings above this can be dangerous—tires can explode from spinning too fast. Under some conditions, a tire may be spinning at a speed twice that shown on the speedometer. Any resulting tire explosion could cause severe injury or death to a bystander or passenger, as well as extensive vehicle damage: including tire, transmission and/or rear axle malfunction.

If the vehicle gets stuck in sand, mud, snow, or ice:

- Move the gearshift lever or selector from First to Reverse.
- Apply light pressure on the accelerator pedal while the transmission is in gear.
- Remove your foot from the accelerator while shifting.
- Do not race the engine.
- For best traction and safety, avoid spinning the wheels.

https://truckmanualshub.com/

Comply with the following instructions to avoid transmission damage:

- Always start the vehicle in motion with the shift lever in first gear.
- Be sure that the transmission is fully engaged in gear before releasing the clutch pedal (manual only).
- Do not shift into reverse while the vehicle is moving.
- Do not permit the vehicle to be towed for long distances without removing the driveshaft.

Tire Chains

If you need tire chains, install them on both sides of the driving axle.

CAUTION: Chains on the tires of only one tandem axle can damage the driveline U–joints and the interaxle differential. Repairs could be costly and time-consuming.

https://truckmanualshub.com/

Shut–Down

Introduction

After you have parked in a safe place, check your vehicle to make sure it will be ready for the next trip. To make sure your vehicle is ready to go after a long stop (such as overnight), please follow the suggestions below. Your vehicle will be easier to get going when you are ready, and it will be safer for everyone who might be around it.

Please remember, too, that in some states it is illegal to leave the engine running and the vehicle unattended.

Final Stopping Procedures

1. Set the parking brake before leaving the driver's seat.

To hold your vehicle while it is parked, DO NOT rely on the following:

- air brakes
- hand control valve for trailer brakes
- engine compression

Always use your parking brakes!

WARNING! Do not use the trailer hand brake or service brakes to park and hold an unattended vehicle—use the parking brakes. Because service brakes work with air pressure, these brakes could slowly release. Your vehicle could roll, causing an accident resulting in death or personal injury. Someone could be hurt or killed. Never rely on the service brakes to hold a parked vehicle.

2. If you must park on a steep grade, ALWAYS BLOCK THE WHEELS.

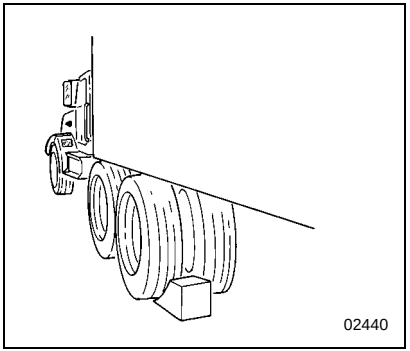

Blocked Wheels

 https://truckmanualshub.com/

3. Drain water from the air reservoirs.
   - While the engine and air supply system are still warm, drain moisture from the air reservoirs. Open the reservoir drains just enough to drain the moisture. Do not deplete the entire air supply. Be sure to close the drains before leaving the vehicle.
4. Secure the vehicle, close all the windows, and lock all doors.

Before Stopping the Engine

Do not shut off the engine immediately. A hot engine stores a great amount of heat and it does not cool down immediately after you shut if off. Always cool the engine down before shutting it off. You will greatly increase its service life.

Idle the engine at 1000 rpm for five minutes. Then low idle for thirty seconds before shutdown. This will allow circulating coolant and lubricating oil to carry away heat from the cylinder head, valves, pistons, cylinder liners, turbocharger, and bearings. This way you can prevent engine damage that may result from uneven cooling.

Turbocharger

This cooling-down practice is especially important for a turbocharged engine. The turbocharger on your vehicle contains bearings and seals that are subjected to hot exhaust gases. While the engine is operating, heat is carried away by circulating oil. If you stop the engine suddenly after a hard run, the temperature of the turbocharger could rise to as much as 100°F (55°C) above the temperature reached during operation. A sudden rise in temperature like this could cause the bearings to seize or the oil seals to loosen.

Refueling

Air inside the fuel tanks allows water to condense in the tank. To prevent this condensation while the vehicle is parked for extended periods of time, fill the tanks to 95 percent of capacity. Never fill to more than 95 percent capacity as this provides room for expansion resulting from temperature extremes. When refueling, add approximately the same amount to each fuel tank on vehicles with more than one tank.

https://truckmanualshub.com/

WARNING! Do not carry additional fuel containers in your vehicle. Fuel containers, either full or empty, may leak, explode, and cause or feed a fire, possibly causing death or personal injury. Do not carry extra fuel containers, even empty ones are dangerous.

WARNING! Diesel fuel in the presence of an ignition source (such as a cigarette) could cause an explosion. You could be killed or seriously injured. A mixture of gasoline or alcohol with diesel fuel increases this risk of explosion.

- ***Do not remove a fuel tank cap near an open flame.***
- ***Use only the fuel and/or additives recommended for your engine.***

Specification: Use only Diesel Fuel, Grade 2–D, as recommended by engine manufacturers. If you need further information on Grade 2–D fuel specifications, consult the *Engine Operation and Maintenance Manual*.

Location of Fuel Shut–Off Valves

If your vehicle is equipped with shut-off valves for the take-off and return lines, they are located on the fuel lines entering the top of the fuel tank. Fuel shut-off valves for the fuel crossover line are on the bottom of the fuel tank, at the crossover line connection.

https://truckmanualshub.com/

PREVENTIVE MAINTENANCE

INTRODUCTION

This section will help you keep your Medium Duty vehicle in good running condition. There are a number of checks you can do, and you may be able to do some of the service work yourself. But please, let your Peterbilt Dealer or Authorized Service Center do any work you do not have the tools or skill to perform. Authorized service mechanics are trained in the proper technical and safety procedures to maintain your Medium Duty vehicle correctly.

Good driving practices, daily and weekly driver maintenance inspections, and periodic service inspections by an Authorized Service Center, will help keep your Medium Duty vehicle in good working order and provide many years of dependable service.

WARNING! It is dangerous to work on a vehicle without the right know-how and proper tools. You could be killed or seriously injured, cause damage to the vehicle, or make your vehicle unsafe to drive. Do only work you know you are fully able to do, and for which you have the right tools.

•Before attempting any procedures in the engine compartment, stop the engine and let it cool down. Hot components can burn skin on contact.
•Be alert and cautious around the engine at all times while the engine is running.
•If work has to be done with the engine running, always (1) set the parking brake, (2) chock the wheels, and (3) ensure that the shift lever or selector is in Neutral.
•Exercise extreme caution to prevent neckties, jewelry, long hair, or loose clothing from getting caught in the fan blades or any other moving engine parts.

•Disconnect the battery ground strap whenever you work on the fuel system or the electrical system. When you work around fuel, do not smoke or work near heaters or other fire hazard. Keep an approved fire extinguisher handy.
•Always support the vehicle with appropriate safety stands if it is necessary to work underneath the vehicle. A jack is not adequate for this purpose.
•When working underneath the vehicle without appropriate safety stands but with the wheels on the ground (not supported), make sure that (1) the vehicle is on hard level ground, (2) the parking brake is applied, (3) all wheels are chocked (front and rear) and (4) the engine cannot be started. Remove the ignition key.
•Never start or let the engine run in an enclosed, unventilated area. Exhaust fumes from the engine contain carbon monoxide, a colorless and odorless gas. Carbon monoxide can be fatal if inhaled.

WARNING! Wear protective clothing when handling hydraulic fluid. It is mildly toxic and can cause skin and eye irritation.

CAUTION: Hydraulic brake fluid may damage painted surfaces of the vehicle.

Incomplete or improper servicing may cause problems in the operation of the vehicle. If in doubt about any servicing, have it done by your Authorized Service Center. Improper maintenance during the warranty period may also affect the warranty coverage.

Modifying your vehicle can make it unsafe. Some modifications can affect your vehicle's electrical system, stability, or other important functions. Before modifying your vehicle, check with your Peterbilt Dealer to make sure it can be done safely and correctly.

Environmental Protection and Material Hazards

Some of the ingredients in engine oil, hydraulic oil, transmission and axle oil, engine coolant, diesel fuel, air conditioning refrigerant (R–134a and PAG oil), batteries, etc., may contaminate the environment if spilled or not disposed of prop-

erly. Non-compliance with environmental regulations can result in fines and/or jail terms. Contact your local government agency for information concerning proper disposal.

WARNING! Diesel engine exhaust and some of its constituents are known to the State of California to cause cancer, birth defects, and other reproductive harm. Other chemicals in this vehicle are also known to the State of California to cause cancer, birth defects, and other reproductive harm. This warning requirement is mandated by California law (Proposition 65) and does not result from any change in the manner in which Peterbilt Motors Company trucks are manufactured.

WARNING! Handle lubricants carefully. Vehicle lubricants (oil and grease) can be poisonous and cause death, injury or sickness.

How to Order Parts

Replacement parts can be ordered through your local Peterbilt Dealer. For service parts information, two parts catalogs are also available, the Medium Duty Operator's Parts Catalog and the Peterbilt Electronic Parts Catalog (ECAT). When ordering replacement parts, please provide the Medium Duty vehicle's Chassis Serial Number. See Page 265.

Operator's Parts Catalog a complete, non-illustrated listing of the Final Chassis Bill of Material. It includes all parts used to custom-build your Medium Duty.

Electronic Parts Catalog a complete illustrated parts listing for your specific vehicle, with drawings and exploded views, available only in electronic CD–ROM format.

MAINTENANCE SCHEDULE AND LUBRICATION

Introduction

The following section summarizes preventive maintenance and lubrication requirements for the maintenance of your Medium Duty vehicle. For specific maintenance procedures and complete lubrication instructions of specific components consult the **Medium Duty Maintenance Manual** and manufacturer's service manuals. These manuals are available for a minimal charge from your Peterbilt Dealer or direct from the component manufacturer. In addition, supporting manuals and literature are included in the glove compartment of your Medium Duty vehicle.

Preventive Maintenance Intervals and Schedule

Your preventive maintenance program begins with daily checks you perform. See “Driver's Check List” on page 13. If your Medium Duty vehicle is serviced regularly, you can avoid many large, expensive, and time-consuming repairs, as well as ensuring many years of safe and smooth operation. Also, be advised that neglect of recommended service may in some cases void your vehicle's warranty. So, for your safety and life of your vehicle, please follow Table 2, “Maintenance Schedule,” Page 157. But remember, there may be maintenance operations that demands skills and equipment you do not have. If so, please take your Medium Duty vehicle to an expert mechanic, for your safety and your vehicle's performance.

WARNING! It can be dangerous to attempt maintenance work without sufficient training, service manuals, and the proper tools. You could be killed, injured or you could make your vehicle unsafe. Do only those tasks you are fully trained and equipped to do.

In severe operating conditions such as mining, logging, or earth moving, you will need to perform maintenance checks and services more frequently. Other “severe operating conditions” to be aware of are: rough, extreme temperature environments; conditions where heavy loads are being hauled; contaminated environments, or steep grades. Consult the component manufacturer's maintenance manuals for further information on maintenance procedures specific to these conditions.

Maintenance Intervals

Table 1, ”Recommended Maintenance Intervals”, shows service intervals for normal and heavy-duty operations.

For additional “Engine Cooling System” information see Page 178. For additional “Air System” information see Page 196.

NOTE: Different lubricants or service intervals than those listed below may be required.

Table 1 Recommended Maintenance Intervals

ITEM	INTERVAL	COMMENTS
Hood Pivot	None	
Front Brake Camshaft	10,000–15,000	Synthetic Grease With Special Fittings
Tie–Rod Ends	10,000–15,000	
Power Steering Reservoir		
– Check Fluid Level	10,000–15,000	
– Change Fluid & Filter	60,000	2 Times/Year (After Summer & Winter)
Drag Link	10,000–15,000	
Steering Gear Box	None	
Steering U–joints	10,000–15,000	
Steering Slip Joint	10,000–15,000	t
Brake Treadle	10,000–15,000	
Clutch Pedal Shaft	None	
Transmission		
– Check	10,000–15,000	
– Drain and Refill - Manual	50,000	
– Drain and Refill - Automatic	25,000	
Rear Axle		
– Check Fluid Level	10,000–15,000	
– (Rear Axle) Drain, Flush, Refill	500,000	Synthetic Lube

Table 1 Recommended Maintenance Intervals

ITEM	INTERVAL	COMMENTS
Rear Wheel Bearings	100,000	With LMS Wheel End Package
Rear Brake Camshafts	10,000–15,000	Synthetic Grease With Special Fittings
Fifth Wheel	10,000–15,000	40 to 60K For Adjustment
Spring Pins	10,000–15,000	With Rubber Bushed Pins – No Service
Front & Rear Slack Adjusters	10,000–15,000	Synthetic Grease With Special Fittings
King Pins	10,000–15,000	
Front Wheel Bearings	100,000	Eaton LMS
Accelerator Linkage	None	
Engine Lubricating Oil		
– Check Fluid Level	Daily Trip Check	
– Change Oil	10,000–15,000	Must Meet Engine Company Specifications
Spring Shackle Pins	10,000–15,000	No Service With Rubber Bushed Spring Pins
Clutch Linkage	10,000–15,000	
Clutch Release Bearing	10,000–15,000	Extended Grease Fittings
Clutch Cross Shaft	10,000–15,000	Extended Grease Fittings
Door Weatherstrip	As Required	
Lock Cylinders	As Required	
Door Hinges	As Required	Teflon Bushing
Door Latches and Striker Plate	As Required	
Driveshaft		
– U-Joints	10,000–15,000	SPL Driveline, Up To 100,000 Miles
– Slip Joints	10,000–15,000	SPL Driveline
Center Bearing	None	
Suspension	Per Specifications	AG200 – Synthetic Grease With Special Fitting

Table 1 Recommended Maintenance Intervals

ITEM	INTERVAL	COMMENTS
Hydraulic Brakes		
Brake Pad Lining Inspection	7,500 mile	Minimum 3/16 in. thickness
Rotor Inspection	15,000 miles or 15 mos	
Park Brake Inspection	15,000 miles or 15 mos	
Brake Fluid Reservoir		
Check Fluid Level	7,500 miles	Use DOT 3 brake fluid only
Change Fluid	Every 2 years	Use DOT 3 brake fluid only
Power Steering Fluid Reservoir		
Check Fluid Level	7,500 miles	Use Automatic Transmission Fluid (ATF)
Change Fluid	60,000 miles or twice per year	Use Automatic Transmission Fluid (ATF)

Maintenance Schedule

Use Table 2, ”Maintenance Schedule,” as a guide to plan service work. Be sure and follow the frequency recommendations for your vehicle.

TABLE KEY

	NOTE: If a scheduled service interval is shaded, skip to the next interval. The frequency of each service operation is identified by open (non-shaded areas).
C2	Federal Annual Inspection 120,000 miles/192,000 km only.
C4	Federal Annual Inspection 240,000 miles/384,000 km only.
E2	50,000 Mile Service Interval
G2	Synthetic Lube Required – 500,000 Drain

Table 2 Maintenance Schedule

	INTERVAL			COMMENTS
OPERATION \ FREQUENCY	7,500 mi 12,000 km	15,000 mi 24,000 km	60,000 mi 96,000 km	
INITIAL DRIVE–IN	**A**	**B**	**C**	
Clutch Brake				
Clutch Pedal Free Travel _____ inches				
Glass for Cracks or Chips				
Door Window Operation				
Radio				
Interior Lights				
Interior Appearance: Seats				
Floor Mats				
Door Panels				
Headliner				
Sleeper				
Dash				
Covers				
Wiper Operation				

Table 2 Maintenance Schedule

	INTERVAL			COMMENTS
OPERATION \ FREQUENCY	7,500 mi 12,000 km	15,000 mi 24,000 km	60,000 mi 96,000 km	
Wiper Blade Condition				
Horns (Electric and Air)				
Mirrors				
SAFETY EQUIPMENT	**A**	**B**	**C**	
Drain Water from Air Tanks				
Air Tank Check Valve				
Emergency Operation of Spring Brakes				
Air Press. Build–up time: _____ min.				
Governed Air Pressure: _____ psi				
Air Press. Drop–Brakes not Applied: ___				
Air Press. Drop–Brakes Applied: ___				
Fire Extinguisher Charge				
Flare Kit / Reflectors				
CIRCLE INSPECTION	**A**	**B**	**C**	
Physical Damage:				
Exterior Sheet Metal				
Grille and Radiator				
Trailer Light Cord and Connectors				
Air Lines and Gladhands				
5th Wheel Mounting and Condition				
Pintle – Hook/Eye Condition				
Headlights – High and Low Beams				
Road Lights				
Marker Lights				
Turn Signals				

Table 2 Maintenance Schedule

	INTERVAL			COMMENTS
OPERATION \ FREQUENCY	7,500 mi 12,000 km	15,000 mi 24,000 km	60,000 mi 96,000 km	
Emergency Flasher				
Brake Lights				
Backup/Loading Lights				
License Plates: Permits and Mounting				
Mud Flaps / Serviceable				
Fuel Tank Mounting				
Exhaust System–Condition and Mounting Bolts				
Frame Fastener Torque: does NOT apply to Le Jeune frame fasteners.			C2	
Lubricate: Door Hinges and Latches				
Body Mounts (Straight Truck Only)				
Body Sides and Roof Panels (Straight trucks)				
Cab: Hold–down Latches				
Mounts				
Front Pivot Assembly				
Jack Operation and Leaks				
Safety Lock, Tip–Over Stop				
ENGINE SERVICE	**A**	**B**	**C**	
Cooling: Extended Life Coolant maintenance/ is located on page 183 of this manual				
Coolant Level				
Pressure Test				
Replace Water Filter				New Release At 100–120K – Per Engine Filter Manufacturer Recommendations
Radiator Mounting				

Table 2 Maintenance Schedule

OPERATION \ FREQUENCY	INTERVAL			COMMENTS
	7,500 mi 12,000 km	15,000 mi 24,000 km	60,000 mi 96,000 km	
Fan Shroud				
Fan Assembly and Idler Pulley				No Service Required
Check Water Pump for Leaks / Play				
Radiator – Exterior Condition				
Replace Engine Coolant			C4	Fill as Required – Extended Drain Per Manufacturer Specifications.
Air Cleaner:				
Contaminant Accumulation				
Air Cleaner Restriction ___ (replace if greater than 20)				
Vacuator Valve–Operation & Condition				
Mounting Bolts				
Leaks				
Interference				
Engine Oil Level				Daily Inspection Required
Power Steering – Reservoir Level				
Power Steering Fluid – Replace				Service 2XPer Year – 60,000 Mile Intervals
Power Steering Filter – Replace			C2	
Drive Belt Condition and Adjustment				
Air Conditioner Compressor Mounting				
Cold Start Aids				
Governor and Pump Security Seals OK				
High Idle: _____ rpm				
Emergency Shutdown				
Vibration Damper Condition				

Table 2 Maintenance Schedule

	INTERVAL			COMMENTS
OPERATION \ FREQUENCY	7,500 mi 12,000 km	15,000 mi 24,000 km	60,000 mi 96,000 km	
Drain Water from Fuel System				
Engine Oil – Change				25,000 Mile Change Interval – Must Meet Engine Co. Requirements
Oil Filters – Replace				
Fuel Filters – Replace				
Engine Tune–up			C2	
Cranking System:				
Visual Inspect./Loose Connections				
Starter Draw: _____ volts				
Alternator/Charging System:				
Visual Inspection/Loose Connections				
Output Voltage: _____ volts				
UNDER VEHICLE	**A**	**B**	**C**	
Steering Components – Condition:				
Steering Gear				
Steering Shaft Splines and Joint(s)				
Pitman Arm				
Drag Link				
Steering Arms				
Tie Rod Arms				
Tie Rod Ends				
Radius Rods / Torque Arms				
Chassis Frame – Cracks or Breaks				
Spring Shackles and Hanger Brackets				No Service Required
Spring Pins				No Service Required

Table 2 Maintenance Schedule

OPERATION \ FREQUENCY	INTERVAL			COMMENTS
	7,500 mi 12,000 km	15,000 mi 24,000 km	60,000 mi 96,000 km	
King Pin Wear				
Steer Axle Wheel Bearing - End Play Adjustment and Inspection				350,000 Miles With LMS Outer Ends • No Leak – No Service
Front Hub Lubricant Level				
Spring Leaves				
U–Bolt and Suspension Fastener Torque				Tighten U-bolts after the first 500 miles (800 km). Rear suspension fasteners: retorque after first 2,000 miles (3218 km).
Leaks:				
Coolant				
Engine Oil				
Power Steering				
Fuel				
Transmission				
Axles				
Inner and Outer Hub Seals				
Engine and Transmission Mounts				
Drivelines – U–joints and Slip Yokes				
Rear Axle Lubricant Level				
Rear Axle Lubricant Flush & Refill			C4	At 250,000 Miles
Rear Axle Breathers – Clear				
Tractor Protection Valve Breakaway Test				
Brake Chamber Mounting Bolt Torque				
Brake Hoses for Cracks and Chafing				
Adjust Brakes				

Table 2 Maintenance Schedule

OPERATION \ FREQUENCY	INTERVAL 7,500 mi 12,000 km	15,000 mi 24,000 km	60,000 mi 96,000 km	COMMENTS
Front & Rear Brake Camshaft Tube Lubrication				Synthetic Grease Required – Special Fitting
Clutch Pedal Shaft				No Service Required
Clutch Linkage				
Suspension Fittings				AG 200 – 250,000 Mile Service
Clutch Release Bearing				Required Extended Fittings
Driveline Center Bearing				No Service Required
Automatic Slack Adjusters				Synthetic Lube Required – Special Fittings
Brakes: Lining Remaining (replace as required)				
RF _____ RRF _____ RRR _____				
LF _____ LRF _____ LRR _____				
Drum Condition:				
RF _____ RRF _____ RRR _____				
LF _____ LRF _____ LRR _____				
Chassis Lubrication				
Transmission Lubricant Level				
Transmission Lubricant and Filter Change			C2	Synthetic Lube Required – 500,000 Drain
Rear Axle Lubricant Change			C2	Synthetic Lube Required – 500,000 Drain
Front Hub Lubricant Change			C2	Synthetic Lube Required – 500,000 Drain
BATTERIES	**A**	**B**	**C**	
Battery cables - signs of chafing				
Signs of Over–Charging				
Remove Corrosion and Seal Terminals				
Hold-down and Box – Mounting Bolts				
Load Test Batteries				

Table 2 Maintenance Schedule

	INTERVAL			COMMENTS
OPERATION \ FREQUENCY	7,500 mi 12,000 km	15,000 mi 24,000 km	60,000 mi 96,000 km	
Sealed Type – Condition:				
(Color of charge indicator for each battery)				
1 _____ 2 _____ 3 _____ 4 _____				
TIRES AND WHEELS	**A**	**B**	**C**	
Missing Valve Caps and Stem Locks				
Cracks or Loose Wheel lugs				
Tandem Mating				
Irregular Wear				
Tire Pressure (Record below)				
Remaining Tread (Record below)				
Tires & Wheels Inspection				
Right 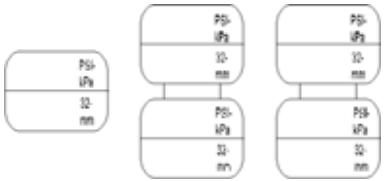				

Table 2 Maintenance Schedule

	INTERVAL			COMMENTS
OPERATION \ FREQUENCY	7,500 mi 12,000 km	15,000 mi 24,000 km	60,000 mi 96,000 km	
Left 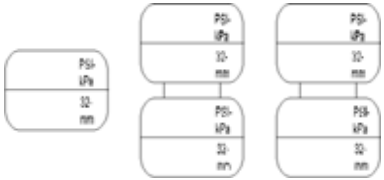				
Air Pressure Adjusted to: _____				
ALIGNMENT	**A**	**B**	**C**	
Toe–in: _____ in (mm)				
Caster: L _____ R _____				
Rear Axle Alignment			C2	
ROAD TEST	**A**	**B**	**C**	
Steering / Steering Play				
Shifting				
Brakes				
Engine Operation (noises, surging, black smoke)				
Throttle Linkage				
Jake Brake Operation				
Seat Belts				
Air Seat Operation				
Cab Heater				

Table 2 Maintenance Schedule

OPERATION \ FREQUENCY	INTERVAL			COMMENTS
	7,500 mi 12,000 km	15,000 mi 24,000 km	60,000 mi 96,000 km	
Air Conditioner				
Instruments and Gauges:				
Speedometer/odometer				
Tachometer				
Oil Pressure				
Engine Temperature				
Illumination				
BODY	**A**	**B**	**C**	
Interior Liner Damage				
Door Operation				
Roll–up Door Tracks – Lubricate				
Lift–gate Operation				
OTHER	**A**	**B**	**C**	
Hood Pivots				
Fifth Wheel Components				40 – 60K For Adjustment
Brake Treadle Hinge and Roller				
Lock Cylinders				
Door Hinges				
Door Latches and Striker Plate				
Door Weatherstrip				
Air Dryer				Drain Tanks, Replace Desiccant as Required

Lubrication Specifications

You will find a complete Engine Lubrication Service Guide in the *Engine Operation and Maintenance Manual*. There, the engine manufacturer explains more fully all the maintenance operations you and a qualified service mechanic will need. And please remember: one key to keeping your Medium Duty vehicle running at top economy and in prolonging its life is proper lubrication servicing. Neglecting this essential aspect of vehicle care can cost time and money in the long run.

Below you will find basic information needed to perform routine vehicle lubrication. Of course you will want to schedule service more frequently if you are operating under severe conditions such as extreme heat or cold, with very heavy loads, rough roads, etc. For any special service requirements, consult your service manuals and your lubricant supplier. The component manufacturer's specification and requirements take precedence over other specifications.

WARNING! Handle lubricants carefully. Vehicle lubricants (oil and grease) can be poisonous and cause death, injury or sickness. They can also damage the paint on the vehicle.

CAUTION: Do not mix different types of lubricants. Mixing lubricants (oil and grease) of different brands or types could damage vehicle components; therefore, drain (or remove) old lubricants from the unit before refilling it.

•When switching between types of lubricants, thoroughly drain all areas of the component.

Lubrication Types

Use Table 3 on page 170 and the list of lubricants below to identify the type of lubricant to use on your Medium Duty vehicle. For a quick summary of each lubrication point, see Table 1 on page 154.

ATF: DEXRON® III/MERCON®-approved automatic transmission fluid

BB: Ball Bearing grease

CB: Engine oil for mild to moderate requirements

CC/CD: Engine oil for severe requirements (MIL–L–2104B / MIL–L–45199B w/ 1.85% max sulfated ash content)

CD: Engine oil meeting API “Five engine test sequence”

CD50: SAE 50W synthetic transmission fluid

CE: Engine oil meeting severe duty service requirements for direct—injection turbocharged engines.

CL: Multipurpose chassis grease

EP: Extreme Pressure lubricant

GL: Straight mineral gear lubricant

HD: Hypoid Gear Oil, A.P.I. — GL–5/SAE 80W–90

HT: High Temperature grease (Timken Specification 0–616)

MP: Multipurpose gear lubricant (MIL–L–2105B)

SD: Engine oils with increased protection against temperature deposits, rust, wear, and corrosion.

WB: Wheel Bearing grease (Timken Specification 0–610)

APPLICATION	LUBRICANT
Universal Joints	EP
Drive Shaft Splines	CL
Wheel Bearings (driven hubs)	HD
Wheel Bearings (nondriven hubs)	CD50
Steering Column	CL
Alternator Bearing	BB*
Fan Hub	BB*
Power Steering Reservoir	ATF
Steering Drag Link	CL
Steering Knuckles	CL
Spring Pins	CL
Clutch Release Bearings	BB
Brake Shoe Anchor Pins	HT
Brake Cam Bearings	HT
Slack Adjusters	CL
Starter Bearings	CC
Turbocharger Aneroid	CC
Water Pump	BB*
*Consult manufacturer or lubricant supplier for special details.	

NOTE: The responsibility for meeting these specifications, the quality of the product, and its performance in service rests with the lubricant supplier.

Oil Reservoirs

For oil reservoirs with side filler plugs (transmissions, axles, steering gear boxes, transfer cases, etc.), the oil must be level with the filler opening.

NOTE: Use care when checking the oil level with a finger. Just because you can reach the oil level with a finger, does not mean the oil level is correct.

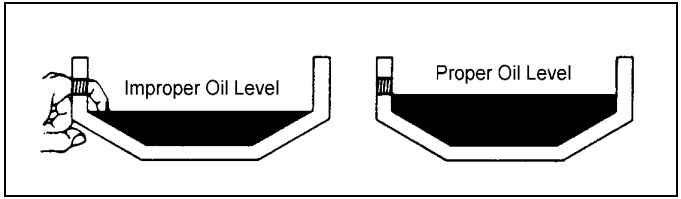

Lubrication Chart

The following lubrication specifications (see Table 3 on page 170) are for an ambient operating temperature range of –15 to 100°F (–26 to 38°C). For extreme temperature operations, consult the component manufacturer's manuals.

Table 3 Recommended Lubrication Types

COMPONENTS	RECOMMENDED LUBRICANT
Power Steering Gear	Automatic Transmission Fluid (ATF)
Driveline U-Joints Slip-Joint Splines Hood Pivots Fan Drive Fifth Wheel Components Clutch Pedal Shaft Clutch Linkage Other chassis grease fittings not covered below.	EP chassis grease, lithium 12-hydroxystearate or lithium complex base, NLGI 2.
Wheel Bearing-Non Driving Axles	OIL LUBICATED: SAE 80W-90 EP gear oil, MIL-L-2105D, API GL5; or SAE 75W-90 synthetic oil
	GREASE LUBRICATED: EP chassis grease, lithium 12-hydroxystearate or lithium complex base, NLGI 2.
Threaded Pins & Bushings (e.g., spring pins & bushings)	EP grease, lithium 12-hydroxystearate or lithium complex base, NLGI 2, with 3% molybdenum additive: Mobil Grease Special (Mobil), Molygrease EP (Chevron), or equal.
Suspension Fittings (other than threaded pins & bushings)	EP chassis grease, lithium 12-hydroxystearate or lithium complex base, NLGI 2.
Steering Axle: Grease Fittings on Steering Arm; Tie Rod Ends; Drag Link; King Pins	EP chassis grease, lithium 12-hydroxystearate base, NLGI 2.
Clutch Release Bearing (remove inspection plate for access); Driveshaft Center Bearing	High temperature ball bearing grease. Chevron SRI Mobil Grease HP, Texaco Multifax 2, or equivalent.
Automatic Slack Adjusters; Wedge Brake Components; Disc Brake Caliper	High temperature EP grease; Texaco Thermotex EP-1, Shell Darina EP-1, Mobilith AW-1, Rockwell 0-616A, or equivalent.
Deviations from the above list of lubricants should be based on specifications published in the component manufacturer's manuals or otherwise approved by the manufacturer.	

Table 3 Recommended Lubrication Types

COMPONENTS	RECOMMENDED LUBRICANT
Cam Brake Camshaft Splines; Disc Brake Shaft Splines and Slide Pin Retainers; Brake Clevis Pins	Antiseize type grease, Rockwell specification 0-637.
Brake Camshaft Bushings	EP Chassis grease, lithium 12-hydroxystearate base, NLGI 2. *CAUTION: Do not contaminate brake linings with grease.*
Steering Shaft Grease Fittings	EP chassis grease, lithium 12-hydroxystearate base, NLGI 2.
Brake Treadle Hinge and Roller	Engine oil
Lock Cylinders	Lock lubricant.
Door Hinges	Not required — Teflon bushings
Door Latches & Striker Plates.	Polyethylene grease stick.
Door Weatherstrip	Silicone lubricant.
Other Items	Use manufacturer’s manuals.
Deviations from the above list of lubricants should be based on specifications published in the component manufacturer's manuals or otherwise approved by the manufacturer.	

ENGINE MAINTENANCE

WARNING! Exhaust fumes from the engine contain carbon monoxide, a colorless and odorless gas. A poorly maintained, damaged, or corroded exhaust system can allow carbon monoxide to enter the cab or sleeper. Failure to properly maintain your vehicle could cause carbon monoxide to enter the cab and cause death, personal injury or serious illness.

WARNING! Never idle your vehicle for prolonged periods of time if you sense that exhaust fumes are entering the cab. Investigate the cause of the fumes and correct it as soon as possible. If the vehicle must be driven under these conditions, drive only with the windows slightly open. Failure to repair the source of the exhaust fumes may lead to death, personal injury or serious illness.

NOTE: Keep the engine exhaust system and the vehicle's cab ventilation system properly maintained. It is recommended that the vehicle's exhaust system and cab be inspected:
• By a competent technician every 15,000 miles.
• Whenever a change is noticed in the sound of the exhaust system.
• Whenever the exhaust system, underbody, cab or sleeper is damaged.

Engine Lubrication

Proper engine lubrication depends on ambient temperature and where the vehicle will be operated. Use the recommended oil for the weather conditions outside.

NOTE: For engine oil specifications, oil change intervals, engine filter requirements or general engine maintenance procedures, refer to the Engine Operation Manual included with your vehicle or the engine manufacturer's service manual.

Service Intervals

- Check engine oil daily.

Oil Draining:

- Refer to the engine manufacturer's *Engine Operation and Maintenance Manual* supplied with your vehicle for information about draining and refilling engine oil, engine crankcase capacity, engine oil type, and changing oil filters, etc.

WARNING! Hot engine oil can be dangerous. You could be seriously burned. Let the engine oil cool down before changing it.

- Drain the oil into a container designed for this purpose.
- When draining the oil, remove the plug with the proper size wrench and keep as far away as possible. Always keep your forearm parallel to the ground to help prevent hot oil from running down your arm.
- The oil filler cap must be secured to avoid oil spill causing a potential fire hazard.

Oil Level Check

- To check the engine oil level, park the vehicle on level ground and wait 5 minutes after shutting the engine OFF. This allows time for the oil to drain to the oil pan.
- Remove the dipstick and wipe it off with a clean, lint-free rag.
- Reinsert the dipstick all the way in and pull it out again to check oil level. Correct oil level is between the low (L) and high (H) marks on the dipstick.

For further information regarding oil level, see the engine manufacturer's *Engine Operation and Maintenance Manual* supplied with the vehicle.

Fuel System

Specification: Use only Diesel Fuel, Grade 2-D, as recommended by engine manufacturers. If you need further information on Grade 2-D fuel specifications, consult the Engine Operation Manual in the glove compartment.

WARNING! Diesel fuel in the presence of an ignition source (such as a cigarette) could cause an explosion. You could be killed or seriously injured. A mixture of gasoline or alcohol with diesel fuel increases this risk of explosion.

CAUTION: If anyone ever pours gasoline into your fuel tank, drain the entire system. Otherwise, the pump and engine will be damaged. Don't try to dilute the gasoline by adding diesel fuel (see Warning above).

WARNING! Use Ultra Low Sulfur Diesel fuel only. Failure to do so may damage components of the engine and Diesel Particulate Filter (DPF).

Please follow these recommendations when you are changing your fuel filters or strainer elements. Your vehicle's engine will run better and last longer if you do. See the engine manufacturer's recommendations for proper water and micron requirements.

Installing Fuel Filters

When removing filters, cover any electrical equipment and wiring that might get soaked with fuel. Diesel fuel may permanently damage electrical insulation.

When installing spin–on (throwaway) filters:

1. Prefill filter with fuel.
2. Moisten gasket with diesel fuel.
3. Hand tighten them only 1/2 to 2/3 turn after gasket contact. Mechanical tightening of these filters may distort or crack the filter head.

- When replacing a fuel filter element, do not use a substitute. Install only filter elements designed for fuel filtration. First clean and inspect the shell. Then insert the new element and fill the container at least 2/3 full of clean fuel before installing the shell

  NOTE: To expel air from density-type strainer elements, soak them in clean fuel before installing them.

- Throw away old gaskets. Replace them with new ones to ensure a positive seal.
- Position the shell and gasket properly. Then tighten the cover nut or bolt just enough to prevent fuel leakage.
- After starting the engine, check for leaks around the filter.

Filter Draining

Check fuel filter/water separator daily. Check with engine OFF. Depending on the fuel storage facility, more frequent draining may be required.

1. Open drain valve (by hand only): turn valve screw counter-clockwise approximately 1 1/2 to 2 turns until draining occurs. Drain filter sump of water until clear fuel is visible.

If entrapped water exceeds sump volume, you can either:

A. Close valve and run engine until smooth idle is established, then repeat drain procedures, or
B. Remove filter from mounting head, completely drain all fluid, and reassemble filter assembly. Be sure to follow new filter assembly instructions.

2. Close drain valve by turning valve screw clockwise approximately 1 1/2 to 2 turns.

CAUTION: Do not overtighten the valve. Over-tightening can damage the threads.

Fuel Tanks

1. Inspect fuel tanks, fuel hoses, and fittings to ensure proper positioning and fastening; check for leaks.
2. Inspect mounting brackets, straps, and pins to ensure proper positioning & fastening every 15,000 miles/ 24,000 km (see label on fuel tank and data below):

Type of Tank	Tank Strap T-Bolt Nut Torque
Aluminum	30 Lb. ft. (41 Nm)
Cylindrical Steel	8 Lb. ft. (11 Nm)

Emission Components

Deisel Exhaust Fluid Tank

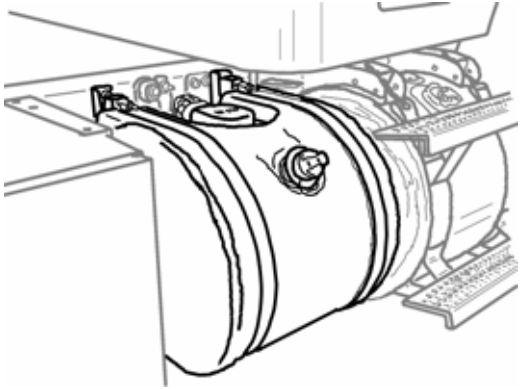

Vehicles that comply with 2010 EPA emission requirements will have a Deisel Exhaust Fluid (DEF) tank mounted to the vehicle frame. During normal operating situations, your vehicle may consume 2-3 gallons of DEF for every 100 gallons of deisel fuel. Be sure to maintain sufficient fluid in the DEF tank for proper vehicle performance.

Specifications of the DEF

What to do if you run out of DEF and are stranded. call a dealership.

Engine Accesories: Accessory Drive Belts

You can extend the reliability and service life of your vehicle's drive belts with proper attention to installation, and maintenance. Neglect could cause belt failure. The result could be the loss of the electrical or air system as well as possible engine damage from overheating. So it’s a very good idea to check your belts frequently and replace them as soon as you detect trouble.

Follow this procedure to install an accessory drive belt:

1. Rotate the new belt around the pulleys, and then rotate the automatic tensioner so that the idler pulley swings toward the belt routing. Figure 1 shows an example of the rotation direction to release the tensioner.
2. Slip the belt around the idler pulley attached to the automatic tensioner.
3. Release the automatic tensioner.
4. Check the belt alignment on each pulley. The belt must fall between the flanges of each pulley.

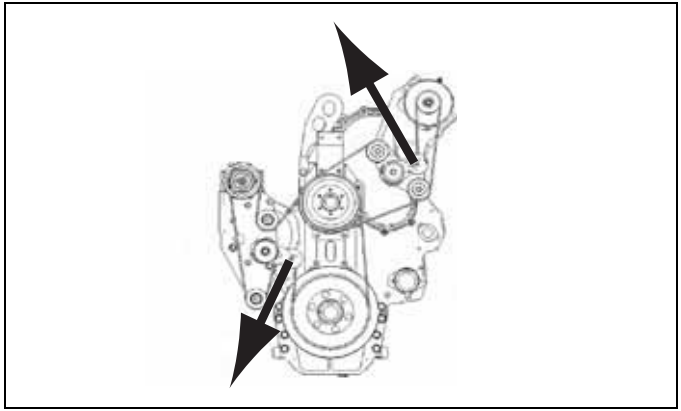

Engine Fan

Thermatic (Clutch) — Type Fan

WARNING! Do not work on the fan with the engine running. The engine fan can engage at any time without warning. Anyone near the fan when it turns on could be killed or seriously injured. Before turning on the ignition, be sure that no one is near the fan.

To Check the Fan:

- Check the fan assembly mounting bolts for tightness. Inspect the blades for damage.
- Check the clutch operation by starting the engine when it is cold. Then idle it at about 800 RPM. Listen for air leaks.
- Check that the fan is not working while the engine is warming. When the clutch engages, note the reading on the vehicle's panel—mounted coolant temperature gauge. If the fan clutch engages at low engine temperature or cycles on and off more frequently than it should (receives “false signals”), have the problem corrected at an Authorized Service Center.

Fan Drive and Blade

Fan Blade Clearance: Around the fan shroud, the recommended distance is 1 in. (25 mm) from front edge of any fan blade-to-radiator side member. Minimum clearance is 3/4 in. (19 mm).

- Rear edge of any blade must be no closer than 3/8 in. (9 mm) to the nearest engine component. If this cannot be obtained, the fan spacer or fan is not correct.
- The leading edge of any fan blade must be 1 in. (25 mm) from the inside edge of the shroud.

Exhaust System

The exhaust system is part of the noise control system. Periodically check the exhaust for wear and loose or missing parts. For details, see “Noise and Emission Control” on page 257.

WARNING! The exhaust piping, muffler, converter muffler or independent converter become extremely hot during engine operation and can cause death or personal injury including serious burns to the skin. Allow adequate cooling time before working on or near any part of the exhaust system.

Engine Cooling System

Your engine’s cooling system is standard with Extended Life Coolant (ELC). ELC consists of a mixture of ethylene glycol, water, and organic acid technology chemical inhib-

itors. ELC prevents corrosion and scale formation as well as provides freezing and boiling point protection.

CAUTION: The engine cooling system has very specific maintenance and inspection requirements. Failure to follow requirements can damage the engine. Engine damage can include but is not limited to:

- ***Freezing***
- ***Boiling***
- ***Corrosion***
- ***Pitted cylinder liners***

This information is found in the engine manufacturers owner's manual. It is the owner's responsibility to follow all requirements listed in the engine manufacturers owner's manual.

What To Check In An ELC-filled Cooling System

ELC Concentration

Check the level of freeze/boilover protection, which is determined by the ELC concentration. Use a glycol refractometer to determine glycol level. Add ELC to obtain the ELC to water ratio required to provide the protection you need. Use the chart below to help determine how much ELC you need to add.

NOTE: Maximum recommended ELC concentration is 60% ELC and 40% water by volume (a 60/40 coolant mixture). The minimum recommended concentration is 40%.

In an ELC-filled cooling system, the freeze point should be maintained between -30° F and -45° F (-34° C and -43° C)

Desired ELC/ Water ratio:	0%	10%	15%	20%	25%	30%	35%	40%	45%	50%	55%	60%	65%	70%	75%	80%	85%	90%	100%
Freeze point °F (°C)	+32 (0)	+25 (-4)	+20 (-7)	+15 (-9)	+10 (-12)	+5 (-15)	-5 (-21)	-12 (-24)	-23 (-31)	-34 (-37)	-50 (-46)	-65 (-54)	-75 (-59)	-84 (-64)	-70 (-57)	-55 (-48)	-43 (-42)	-30 (-34)	-5 (-21)

ELC Condition (Contamination and Inhibitor Concentration)

Perform a visual inspection of the ELC. It should have no cloudiness or floating debris. Determine the chemical inhibitor concentration level by using an ELC-specific test kit or test strips. Inhibitor concentration level determines corrosion protection. If you are concerned about possible coolant quality, contamination, or mechanical problems, submit a coolant sample for analysis. Improper maintenance may cause coolant degradation and could result in damage to the cooling system and engine components. Consult your dealer or the ELC manufacturer's representative for recommended ELC test kits, test strips, and laboratory sample procedures.

ELC Extender

Add ELC extender if necessary at the maintenance interval under "Cooling" on page 183.

Topping Off

WARNING! Removing the fill cap on a hot engine can cause scalding coolant to spray out and burn you badly. If the engine has been in operation within the previous 30 minutes, be very careful in removing the fill cap. Protect face, hands, and arms against escaping fluid and steam by covering the cap with a large, thick rag. Do not try to remove it until the surge tank cools down if you see any steam or coolant escaping. In any situation, remove the cap very slowly and carefully. Be ready to back off if any steam or coolant begins to escape.

NOTE: If frequent topping off is necessary and there are no visible signs of coolant leaks when the engine is cold, check for leaks with the engine operating at normal temperature.

WARNING! Handle coolant and antifreeze carefully. Ethylene glycol antifreeze is poisonous and can cause death or personal injury. Store in original fluid container only and always keep out of reach of children.

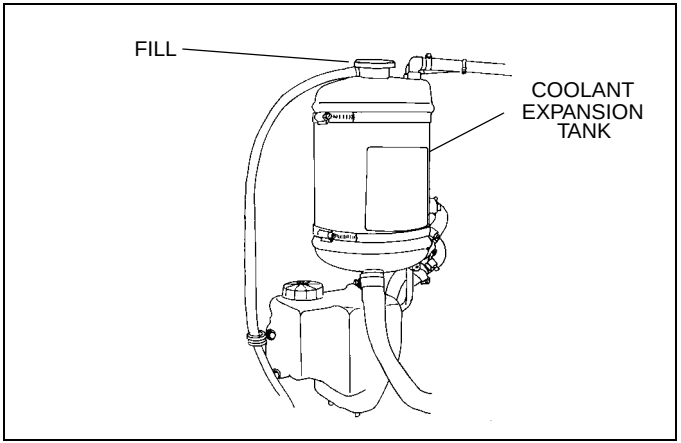

Cooling System Expansion Tank

Proper Coolant Level

NOTE: Do not overfill a cooling system. Excess coolant may result in overflow, loss of antifreeze, and reduced corrosion protection.

Check the coolant level after each trip. Add coolant as necessary. You may find your coolant level is not up to the correct level soon after you have filled the radiator. This may be because all the trapped air in the system has not yet been purged. It takes a little time for all the air to leave the system after you fill your radiator.

Refilling Your Radiator

1. Be sure the radiator and engine block drains are closed.
2. Move the heater control to maximum heat position.
3. Remove the surge tank pressure cap
4. Through the surge tank, fill the system with premixed coolant. Pour it in a steady flow until the radiator is full.
5. Start the engine.
6. Idle at low RPM.
7. Complete the filling. Do it as quickly as possible.
8. Idle the engine until it reaches normal operating temperature.
9. Fill the radiator as necessary to raise the coolant level to the proper reading. Replace the surge tank pressure cap.

Engine (Block) Heater (option)

WARNING! Do not use the heater if there are any signs of problems. Engine block heaters can cause fires resulting in death, serious personal injury and/or property damage if not properly maintained and operated. Regularly inspect the engine block heater wiring and connector for damaged or frayed wires. Contact your Authorized Service Center or the manufacturer of the heater if you are in need of repairs or information.

CAUTION: Always unplug the block heater before starting your engine. Damage to the cooling system could occur if not turned OFF (unplugged).

Use a solution of half ethylene glycol antifreeze and half water for best heater performance. Do not use more than 65 percent concentration of antifreeze, as a shortened heater life will result.

After servicing the cooling system, operate the vehicle for a day or two before using the heater. Trapped air inside the engine needs time to escape.

PREVENTIVE MAINTENANCE (PM) INTERVALS					
I	A	B	C	D	E
At the first 15,000 mi./ 24,000 km or at the first PM	15,000 mi./24,000 km/ Monthly	30,000 mi./48,000 km	60,000 mi./96,000 km/ 6 months	120,000 mi./ 192,000km / Annually	240,000 mi./384,000 km

SYSTEM	COMPONENT	MAINTENANCE TASK	Recommended PM Interval					
			I	A	B	C	D	E

Cooling	Hoses	Check the radiator and heater hoses for leaks.	X			X		
	Extended Life Coolant (ELC)	Check the freeze point (see page 178).			X			
		Check for contamination using test strips (see page 179).			X			
		Replace blank water filter if applicable.					X	
		Perform lab analysis (see page 179). If lab analysis shows coolant is unsuitable for continued use Flush, drain, and refill (see page 178). Add ELC Extender (see page 179).					X	
		Flush, drain, and refill with new coolant (see page 178).						X
	Fan clutch housing	Check for air leaks.	X			X		
	Surge Tank Fill Cap	Check fill cap seal at each oil change.	X	X	X	X	X	X

BRAKE SYSTEM

If your truck has an air brake system, see the pages below.

If your truck has a hydraulic brake system, please go to “Hydraulic Brake System” on page 188.

Introduction

To operate your vehicle safely, you need some understanding of its brake systems. Brake adjustment and brake balance must be set carefully to allow equal stopping forces at all wheels. Tires are also a very important part of the whole system. How fast you can stop depends on how much friction there is between the road and your tires.

CAUTION: The air brake system of this vehicle was configured for ONE of the following operations: tractor or truck, and complies with the respective portions of FMVSS 121. A tractor shall not be operated or configured as a truck, nor shall a truck be operated or configured as a tractor, without significant modifications to the air brake system in order to retain compliance with FMVSS 121. Contact your Peterbilt dealer for instructions.

All of the following areas are interrelated and must conform to original specifications:

- tire size
- wedge angle
- brake linings
- slack adjusters
- cam radius
- drum radius
- brake chambers

Once a brake system is set to specifications, changing any one of its components or any combination of components may degrade the system. All parts have to work together to perform as they should.

Because your brake system is air operated, see the following section “Air System” on page 195 for more information on checking your brakes.

Any replacement components in the brake system should be the same or better than the original components. Any changes from the original specifications can affect the performance of the entire system.

WARNING! Do not use any replacement part in the brake system unless it conforms exactly to original specifications. A nonconforming part in your vehicle's brake system could cause a malfunction resulting in an accident causing death or personal injury. Sizes and types are so related to one another that a seemingly unimportant change in one may result in a change in how well the brakes work for you on the road. If parts do not work together properly, you could lose control of your vehicle, which could cause a serious accident.

WARNING! Do not work on the brake system without the parking brake set and wheels chocked securely. If the vehicle is not secured to prevent uncontrolled vehicle movement, it could roll and cause death, serious personal injury or damage to the vehicle.

•Use wood blocks (4 in. X 4 in. or larger) against the front and rear surfaces of the tires. Be sure the vehicle cannot move.

Lubrication

Cam-actuated brake components such as anchor pins and brake camshafts are subjected to high temperatures, and must be lubricated with nonmelting, water resistant brake grease meeting R–S Specification 0–616 (NLGI–Grade 1).

- Lubricate according to Table 1, “Recommended Maintenance Intervals,” Page 154.

WARNING! Do not apply too much lubricant to brake components—lubricate sparingly. Excessive amounts of lubricant could contaminate brake linings, which could reduce brake effectiveness and cause an accident resulting in death or injury.

Brake and Slack Adjuster Lubrication

According to the interval, pressure lubricate the slack adjuster and brake camshaft (bracket/tube). Two grease fittings are provided for both the slack adjuster and camshaft bracket/tube.

- Use standard chassis lubricant (meeting No. 1 grade high temperature, water proof specifications).

- Do not use moly-disulfide loaded grease or oil (they may shorten the service life of the slack adjuster).
- Do not use pressure-release grease fittings when lubricating the slack adjuster.

Checks and Adjustments

All vehicle operators should check the brakes regularly. Always adjust the brakes when they are cool.

- Park the vehicle on a level surface and block the wheels before attempting any brake checks or adjustments.

Brake Linings

WARNING! Do not use brake linings with a thickness below the specified minimum. Such linings will have lining rivets exposed that can damage the brake drum and reduce brake efficiency, which could cause death , personal injury or system failure.

- Brake linings should be inspected for wear by a qualified mechanic at an Authorized Service Center. See Table 2, “Maintenance Schedule,” Page 157. In severe service applications inspect the linings more frequently.

Automatic Slack Adjusters

Your Medium Duty vehicle is equipped with automatic brake (slack) adjusters.

Periodically, brake adjustment should be checked using the following procedure:

1. Check brakes when the temperature of the service brake linings are cool and the system air pressure is at 100 psi (690 kPa) minimum.
2. Release the parking brakes to allow the slack adjusters to retract.
3. Measure the retracted pushrod length from the face of the brake chamber to the center of the pushrod pin.
4. Apply 80 to 90 psi brake application and measure the same distance.
5. The difference is the pushrod travel distance (applied stroke).

Verify that the result is within the correct range (see Table 4, ”Brake Adjuster Stroke”). Correctly installed and functioning brakes (auto slack) will produce the strokes listed for each chamber type.

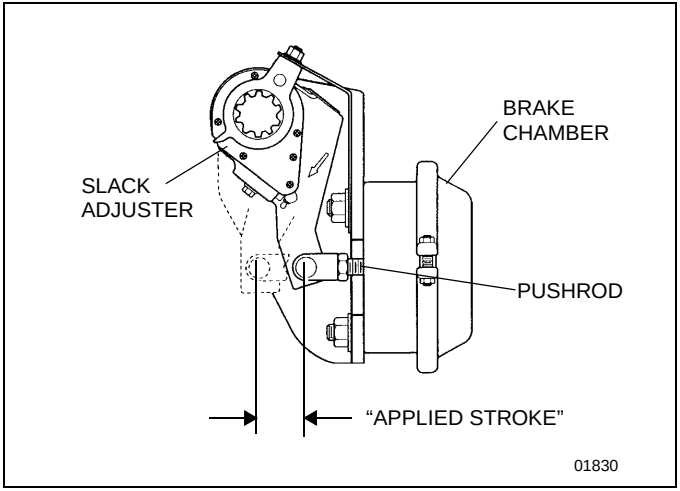

Measuring Pushrod Travel

Table 4 Brake Adjuster Stroke

80–90 PSI (552 – 621 KPA) BRAKE APPLICATION		
AIR CHAMBER TYPE (Size)	**BRAKE**	**PUSHROD TRAVEL (Applied Stroke)**
20	Front	1 to 1–3/4 in. (25–44mm)
30	Rear	1–1/4 to 2 in. (32–51mm)

WARNING! Manual adjustment of automatic slack adjusters is a dangerous practice that could result in an accident involving death or injury. It gives the operator a false sense of security about the effectiveness of the brakes. Contact the Service Department at your dealership if the stroke exceeds the above specifications. A stroke exceeding these values may indicate a problem with the slack adjuster or the brake foundation.

- If the pushrod travel reaches the above specifications, check the slack adjuster installation. Inspect brake adjuster and anchor bracket for damage. The anchor bracket should be tight.
- With the air system at 100 psi (690 kPa) or more, apply the brake.

If adjustment is necessary and the slack adjuster is working, the adjusting hex nut will rotate during the chamber return stroke. Installing a wrench on the hex nut will make this easier to see. On each stroke after the first, the amount of adjustment and chamber travel will be less.

Constant manual adjustment of automatic slack adjusters can shorten the life of the internal clutch. If the installation appears to be free of damage, but the applied stroke range could not be achieved, the slack adjuster must be replaced.

*NOTE: The brake adjuster alone does not ensure proper brake operation. Inspect all brake components. All brake components work together and must be checked periodically to ensure the brake system works properly. See the "**Medium Duty Maintenance Manual**" for more information on brake maintenance.*

Hydraulic Brake System

Introduction

To operate your vehicle safely, you need some understanding of its brake systems. Brake adjustment and brake balance must be set carefully to allow equal stopping forces at all wheels. Tires are also a very important part of the whole system. How fast you can stop depends on how much friction there is between the road and your tires.

All of the following areas are interrelated and must conform to original specifications:

- wheel size
- tire size
- brake pads
- brake rotors
- front wheel bearings
- front end alignment
- parking brake drum radius

Once a brake system is set to specifications, changing any one of its components or any combination of components may degrade the system. All parts have to work together to perform as they should.

Your brake system is hydraulically operated. Refer to the section titled "Service Brake Component Inspection" on page 190 for more information on inspecting the brakes.

Any replacement components in the brake system must meet the specifications of the original components. Any changes from the original specifications can affect the performance of the entire system.

WARNING! Do not use any replacement part in the brake system unless it conforms exactly to original specifications. A nonconforming part in your vehicle's brake system could cause a malfunction resulting in an accident causing death or injury. Consult you local dealer for suitable replacement parts.

WARNING! Do not work on the brake system without the parking brake set, the keys removed from the vehicle, and wheels chocked securely. If the vehicle is not properly secured to prevent inadvertent vehicle movement, it could roll and cause death, serious personal injury or damage to the vehicle.

- ***Use wood blocks (4 in. X 4 in. X 6 in. or larger) against the front and rear surfaces of the tires. Be sure the vehicle cannot move.***

Brake Fluid Check and Refill

WARNING! Wear protective clothing when handling hydraulic fluid. It is mildly toxic and can cause skin and eye irritation.

WARNING! Use only the type of hydraulic fluid specified. Do not use or mix different types of hydraulic fluid. The wrong hydraulic fluid will damage the rubber parts of the brake system which may lead to loss of braking and possibly cause an accident resulting in death or serious personal injury.

CAUTION: Hydraulic brake systems use two distinct and incompatible fluids. Power steering fluid is used in the hydraulic brake booster system. Brake fluid is used in the master cylinder and brake pipes. Do not mix these fluids when replenishing the system or seal damage can result.

CAUTION: Hydraulic brake fluid may damage painted surfaces of the vehicle.

Make sure that the fluid level registers on or above the fluid level mark molded on the reservoir - add more if necessary, as follows:

1. Remove each reservoir cap and extract the rubber diaphragm from each reservoir.
2. Fill each reservoir with clean hydraulic fluid of the approved specification (DOT 3 brake fluid).
3. Insert the rubber diaphragms into the reservoirs.

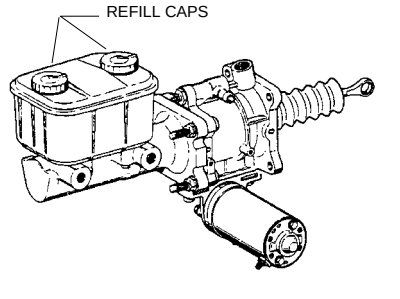

BOOSTER AND MASTER CYLINDER ASSEMBLY

4. To prevent leakage from the reservoirs, ensure that the seal in each reservoir cap is in good condition before refitting the cap.

WARNING! If the brake fluid reservoir requires an excessive amount of hydraulic fluid, the complete system must be inspected for leaks and repaired if necessary (consult your nearest Peterbilt dealer). Failure to keep the brake system in good repair may lead to loss of braking and possibly cause an accident resulting in death or serious personal injury.

Service Brake Component Inspection

Remove each wheel to inspect the brake components.

WARNING! When replacing disc brake pads, be sure to use the same lining material on both axles. Mixing lining types can result in unbalanced braking, increased pad wear, or degraded stopping performance possibly cause an accident resulting in death or serious personal injury. Consult your nearest Peterbilt dealer.

Disc brake pads

Visually inspect all brake pad linings. Brake pads should be replaced when the remaining lining reaches 3⁄16 inch thickness or less.

It is recommended that all disc brake pads be replaced at the same time since this will maintain balanced braking. At a minimum, replace all disc brake pads on one axle, both ends, at the same time.

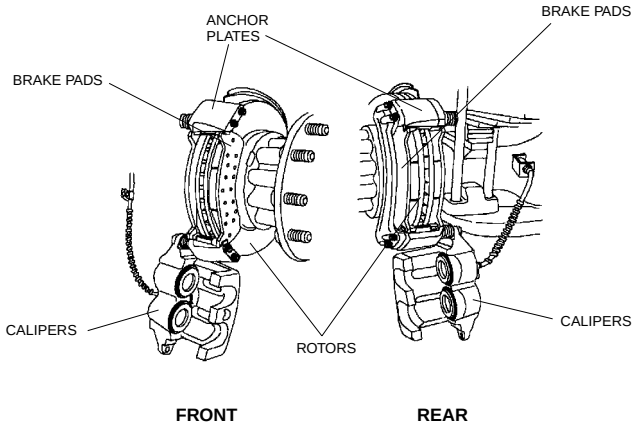

SYSTEM COMPONENTS

Calipers

Visually inspect calipers for brake fluid leakage, damaged or defective pistons or piston boots. If there is evidence of leakage, damage, or other defects the caliper should be replaced or repaired.

Disc brake rotors

Visually inspect rotors for scoring, warping, cracks, bluing or heat spots or other damage or defects. If signs of damage or defects are found, the rotor(s) should be resurfaced or replaced in accordance with the vehicle manufacturer's recommended service procedure.

Anchor plates

Visually inspect anchor plates for worn or damaged slippers, damaged or dislodged guide pin boots or other defects. If signs of wear, damage or defects are found, the anchor plate(s) should be repaired or replaced.

Parking Brake Component Inspection

NOTE: If you are not properly trained to perform brake inspections or service, take your vehicle to your nearest Peterbilt dealer.

Visually inspect brake shoe lining for wear, cracks, or breakage. If linings are worn down to 2.5 mm (0.10 in), they must be replaced. Inspect brake drum for deep scores, heat spots, cracks, or damage. Replace if needed.

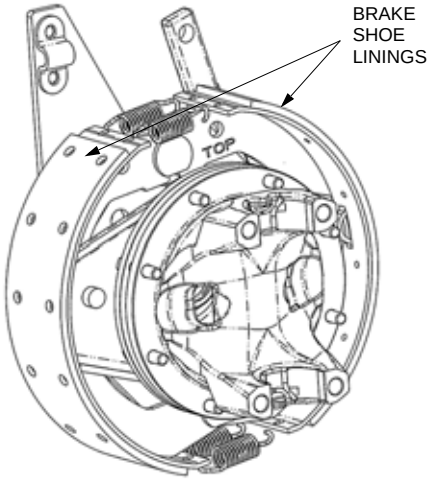

PARKING BRAKE COMPONENTS

Anti–Lock Braking System (ABS)

Your Medium Duty vehicle is equipped with an anti-lock braking system. For detailed service information, see the Peterbilt **Medium Duty Maintenance Manual**. All service work should be performed by a qualified technician at an Authorized Service Center. The foundation brake system must be in proper working order to ensure the best ABS performance.

CAUTION: Do not weld anywhere on the vehicle before detaching the ABS Electronic Control Unit (ECU) connector and all other electronic control units. Welding equipment can send an energy surge through electronic equipment and cause damage. Disconnect all ECUs before attaching welding equipment.

CAUTION: Never detach the ECU connector with the ignition turned on. The connectors could arc and damage electronic equipment. Turn off the ignition before disconnecting any electronic equipment.

Other precautions

- Check ABS wiring harnesses periodically for chafing or other problems. No regular maintenance is required on the ABS components.

- During wheel balancing, dyno testing, or any time the ignition is on with part of the ABS disconnected, a failure code will be recorded. Consult with your Peterbilt Dealer or Authorized Service Center for information on clearing the failure code.

If, due to operating conditions, a brake application causes either wheel on the same axle to begin skidding, wheel speed sensors immediately signal the anti-lock controller in the modulator assembly. The controller responds instantly by signaling the solenoids in the modulator which activate the air valves, reducing application pressure as needed to prevent the wheels from locking up. If this over-riding correction is effective, application pressure is allowed to build up to the original input.

Any malfunction of the anti-lock system on one or more axles will cause the system to fail-safe, and the panel-mounted amber warning light will come on, indicating both a malfunction, and automatic shut-down of the system. If the foundation brake system is intact, the service brakes will continue to function normally, but without benefit of the anti-lock feature.

NOTE: If one wheel on any driven axle continues to slip or spin for approximately 4 seconds, this will cause the anti-lock controller for that axle to go into the fail-safe mode, and the warning light will give a shutdown signal.

•In this case, the anti-lock system can be turned back on, and the warning light extinguished, by turning the key switch OFF and ON, after the vehicle has been brought to a full stop. When the key switch is turned back on, the warning light will illuminate and remain on for 3 to 5 seconds. This is a built-in function test of the warning light.

WARNING! Do not attempt to recycle the anti-lock system by turning the keyswitch OFF and ON until the vehicle has been brought to a full stop and the parking brakes set. Failure to do so could adversely affect steering and braking control, and may result in loss of vehicle control which may result in an accident involving death or personal injury.

WARNING! Do not operate the vehicle in the event of a malfunction in any air or hydraulic circuit. Such a malfunction may prevent the brake system from operating properly, and could result in an accident causing death or serious personal injury. The vehicle should not be operated until the system is repaired and both braking circuits, including all pneumatic, hydraulic, and mechanical components are working properly.

AIR SYSTEM

Introduction

WARNING! Prior to the removal of any air system component, always block and hold the vehicle by a secure means other than the vehicle's own brakes. Depleting air system pressure may cause the vehicle to roll unexpectedly resulting in an accident causing death or injuries. Keep hands away from chamber push rods and slack adjusters, they may apply as system pressure drops.

- ***Never connect or disconnect a hose or line containing air pressure. It may whip as air escapes. Never remove a component or pipe plug unless you are certain all system pressure has been depleted.***
- ***Never exceed recommended air pressure and always wear safety glasses when working with air pressure. Never look into air jets or direct them at anyone.***
- ***Never attempt to disassemble a component until you have read and understood recommended procedures. Some components contain powerful springs and injury or death can result if not properly disassembled. Use only proper tools and observe all precautions pertaining to the use of those tools.***
- ***Completely bypassing a Bendix AD-IS air dryer will bypass the system's pressure protection valves. This could lead to loss of air pressure or damage to the vehicle's air system, which could cause an accident involving death or personal injury. Always adhere to the manufacturer's procedure if it is necessary in an emergency to temporarily bypass an AD-IS-series air dryer.***

WARNING! Do not release the parking brake or attempt to move the vehicle until air pressure in both circuits is at least 100 psi (690 kPa), the level required for normal brake operation.

- ***Do not use the trailer hand brake control to hold vehicle while parked. This control utilizes air pressure for brake application. Because acceptable air leakage levels cause all truck air systems to gradually lose pressure, vehicle rollaway could occur, resulting in an accident and death or injuries.***
- ***Always apply the tractor and trailer parking brakes when the vehicle is unattended.***

Contamination of the air supply system is the major cause of problems in air-operated components such as brake valves, wiper motors, and suspension height control valves. To keep contaminants to the lowest possible level, follow these maintenance procedures.

Scheduled Maintenance

Use Table 5, ”Air System Scheduled Maintenance,” to schedule service operations and air system tests.

Table 5 Air System Scheduled Maintenance

	MAXIMUM INTERVALS				
TEST	**EACH WEEK**	**EACH MONTH** (10,000 mi) (16,000 km)	**THREE MONTHS** (25,000 mi) (40,000 km)	**SIX MONTHS** (50,000 mi) (80,000 km)	**ANNUALLY** (100,000 mi) (160,000 km)
Air Compressor			•		
Air Governor			•		
System Leakage	•				
Dual Air Brake Treadle Valve			• — or — •		
Hand–Operated Trailer Brake Valve			• — or — •		
Tractor Parking Valve			•		
Parking Brake Valve			•		
Trailer Air Supply			•		
Tractor Protection Valves					•
Relay Valve					•
Spring Brake Inversion Valve					•
Automatic Limiting Valve					•
Single Check Valves				•	
Double Check Valves	•				
Stop Light Switch				•	
Low–Pressure Wig Wag	•				
Low–Pressure Switch		•			

Table 5 Air System Scheduled Maintenance

	MAXIMUM INTERVALS				
TEST	**EACH WEEK**	**EACH MONTH** (10,000 mi) (16,000 km)	**THREE MONTHS** (25,000 mi) (40,000 km)	**SIX MONTHS** (50,000 mi) (80,000 km)	**ANNUALLY** (100,000 mi) (160,000 km)
Automatic Drain Valve		•			
Safety Valve			•		
Quick Release Valve					•
Manual Drain Valve				•	

Air System Function Test

Scheduled maintenance should be performed on the Medium Duty vehicle's air system, as outlined in the **Medium Duty Maintenance Manual** and Table 5. In addition, perform an Air System Function Test at least every 3 months or if there is any indication of a potential problem.

Air Tanks

The front (secondary) service tank is underneath the cab, on the driver's side; the wet (supply) tank is underneath the front service tank, behind the battery box; and the rear (primary) service tank is attached to the left frame, just behind the cab.

The supply tank (or "wet" tank), must be drained on a daily basis. Drain the supply tank by pulling the drain valve lanyard. Hold it open until the escaping air is free of water.

The two service tanks (or "dry" tanks), must be drained on a weekly basis. Drain the two service tanks by opening the drain valves. Turn valve handles counter-clockwise, and leave open until the escaping air is free of water.

WARNING! If the supply and service tanks are not drained at the recommended frequency, water could enter the air lines and valves. This could cause corrosion or blockage, which could compromise the brake system safety and potentially cause an accident involving death or injury.

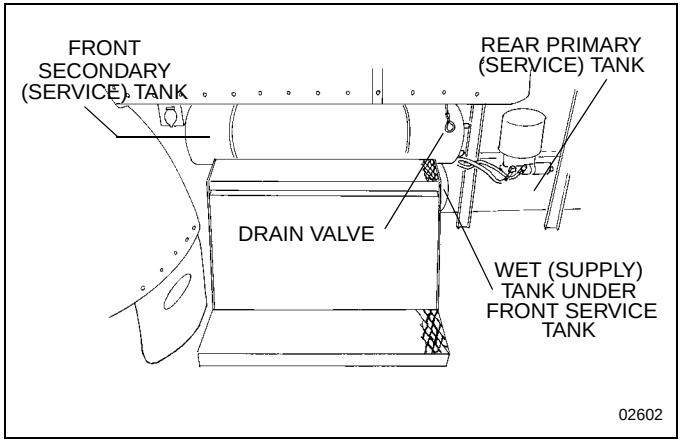

Location of Air Tanks

Periodically: Clean filter screens ahead of the valves by removing the screens and soaking them in solvent. Blow them dry with pressurized air before reinstalling them.

CAUTION: Do not use penetrating oil, brake fluid, or wax-based oils in the air system. These fluids may cause severe damage to air system components.

- Maintain the air compressor to prevent excessive oil bypass. See the **Medium Duty Maintenance Manual** for maintenance details.
- Replace worn seals in valves and air motors as they are needed. Your Peterbilt Dealer carries rebuild kits for most units.

Dual Air Gauge and Air Leaks

Your Medium Duty vehicle comes with a primary and secondary air pressure guage. The gauge indicates the amount of air pressure in pounds per square inch (psi). See “Primary (Secondary) Air Pressure Gauge (Air Reservoir)” on page 43.

If the pressure in either or both systems is too low for normal brake operation, i.e., either pointer falls below 60 psi (414 kPa), a warning light on the gauge will glow and the audible alarm will sound. If the light and alarm do not turn off at start-up, do not try to drive the vehicle until the problem is found and fixed.

WARNING! Do not operate the vehicle if leakage in the air system is detected. Conduct the following procedure and contact an Authorized Service Center (or any other properly equipped service center) if a leak is detected. Failure to check the brakes or follow these procedures could cause a system failure, increasing the risk of an accident resulting in death or personal injury.

Follow the procedure below to check the compressed air system for leaks:

1. Periodically, or after maintenance or replacement of air system components:
2. Build up air pressure in the system to the governor cut-out point or until 120 psi (827 kPa) is reached.
3. Stop the engine and release the service brakes.
4. Without applying the brake pedal, observe the rate of air pressure drop. This rate should not exceed 2.0 psi (14 kPa) per minute.
5. Start the engine and build up the air pressure again.
6. Stop the engine, and apply the brakes fully. Apply the brake pedal and hold it down for five minutes. The pressure drop should not exceed 3.0 psi (21 kPa) per minute.
7. If you detect excessive leakage (air pressure loss greater than 3.0 psi after five minutes of brake application), a leakage test should be made at the air line connections and at all air brake control units. These tests should determine where air is escaping.

Air Compressor

Operation

All compressors, regardless of make or model, run continuously while the engine is running. System pressure is controlled by the governor. The governor acts in conjunction with the unloading mechanism in the compressor cylinder block to start and stop compression of air. The compressor is unloaded when the system pressure reaches 120 psi (827 kPa) and compression is re-established when system pressure falls to 100 psi (690 kPa).

Preventive Maintenance

The following service checks are provided for your information only and should be performed by a certified mechanic. Contact your Peterbilt Dealer or consult the **Medium Duty Maintenance Manual** and the engine manufacturer's Maintenance Manual for further information on servicing air com-

pressors. After completing any repairs to the air system, always test for air leaks, and check the brakes for safe operation before putting the vehicle in service.

According to Table 5, “Air System Scheduled Maintenance,” Page 196:

- Inspect compressor air filter element, if so equipped, and replace element if clogged. Check compressor mounting and drive for alignment and belt tension. Adjust if necessary.
- Remove compressor discharge valve cap nuts and check for presence of excessive carbon. If excessive carbon is found, clean or replace the compressor cylinder head. Also, check compressor discharge line for carbon, and clean or replace the discharge line if necessary.
- Disassemble compressor and thoroughly clean and inspect all parts. Repair or replace all worn or damaged parts, or replace compressor with a factory exchange unit.

CAUTION: When draining the engine cooling system is required, to prevent damage from freezing, the compressor must also be drained at the cylinder head and block. Engine damage could occur if the cooling system is not periodically drained and maintained. See “Engine Cooling System,” Page 178***, and the Medium Duty Maintenance Manual for further information.***

Air Dryer

WARNING! Use of incorrect air dryer could cause air system failure, leading to loss of vehicle control and serious personal injury or death. If your vehicle is equipped with a Bendix AD-IS air dryer, it is important that future replacements be identical or similar in design.

Any deviation from the Bendix AD-IS type air dryer would require changes to the vehicle air system. Some vehicles use a dual air system consisting of a wet tank, forward dry tank, and rear dry tank. The dry tanks have a single-check valve in the tank inlet. The check valves prevent a complete loss of air in the event of an air system failure (tank or hose failure). This ensures a controlled stop (with

reduced braking capability). Other vehicles use a Bendix AD-IS air dryer which eliminates the need for a wet tank and check valves in the dry tanks.

NOTE: A small amount of oil in the system may be normal and should not, by itself, be considered reason to replace a desiccant cartridge; oil-stained desiccant can function adequately.

Every 900 operating hours or 25,000 miles/40,000 km or 3 months, check for moisture in the air brake system by opening reservoirs, drain cocks, or valves and checking for the presence of water. A tablespoon of water in a reservoir would point to the need for a desiccant cartridge change. However, the following should be considered first:

- Air usage is exceptionally high/abnormal for a highway vehicle. This may be due to accessory air demands or some other unusual air requirement that doesn't allow the compressor to load/unload in a normal fashion or it may be due to excessive leaks in the air system.
- When more than a 30-degree F. (17-degree C) range of temperature occurs in one day, small amounts of water can accumulate in the air brake system due to condensation. Under these conditions, the presence of small amounts of moisture is normal and should not be considered as an indication that the dryer is not performing properly.
- An outside air source may have been used to charge the air system, in which case this air did not pass through the drying bed.

Air Intake System

Engine heat, vibration, and age combine to loosen air intake connections and cause cracks in the tubing and elbows. Leaks in the intake system allow abrasive dust to enter the engine and quickly cause expensive damage. During your daily walk-around inspection, carefully check all tubing, elbows, clamps supports and fasteners for condition and tightness.

- Under normal operating conditions, Peterbilt recommends complete disassembly and cleaning of the air intake system at each 25,000 mile (40,000 km). Under severe operating conditions, the disassembly and cleaning should be more frequent. Replace any defective parts. With the possible exception of mounting brackets, do not repair defective parts.

- Check the Charge-Air-Cooler for air leaks annually. The air leaks can be caused by cracked tubes or header. For service see your Peterbilt Dealer or Authorized Service Center.

Turbocharger

When servicing the air intake and exhaust systems on a turbocharged engine, check the items listed below.

WARNING! Do not operate engine with the turbocharger intake piping disconnected. A suction is created when the engine is running. This suction could draw your hand or anything else near it into the impeller fan. You could be killed or seriously injured. Always keep the intake piping connected when you will be running the engine.

Lubricating System: Check the oil lines, housing, and connections. Look for leaks, damage, or deterioration. Leaks could mean you have damaged oil lines or oil seals.

Manifold: With the engine operating, check for leaking manifold or flange gaskets.

High Frequency Vibration: Vibration may indicate turbo rotor imbalance. Have your Peterbilt Dealer or Authorized Service Center investigate this immediately. If you detect any deficiencies, take the vehicle to an Authorized Service Center for servicing. Delay could lead to severe and expensive damage to your vehicle.

Air Filter Replacement

Service the filter elements when the Air Cleaner Restriction gauge (option) locks in the extreme High position. Have the element serviced at a Peterbilt Dealer or Authorized Service Center. Paper elements require care and proper handling, because they are critical to engine service life.

Service the air cleaner periodically. If the vehicle operates in areas with heavy dust, maintenance should be more frequent. Follow the instructions below to remove the air filter.

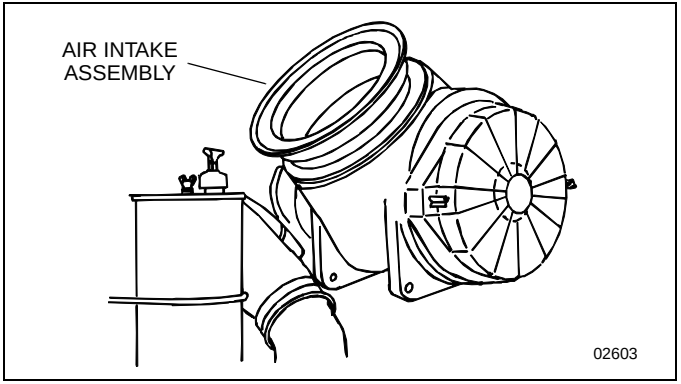

Air Intake Assembly

To remove the air filter:

1. Remove the two thumb screws.
2. Remove air cleaner service cover.
3. Remove the filter element.

Clean out the inside of the air cleaner body and outlet tube with a dry rag.

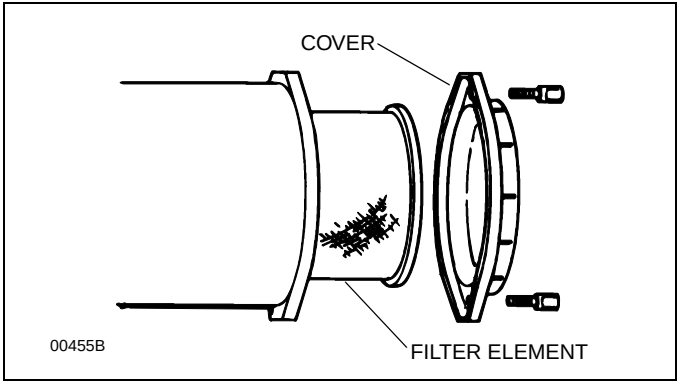

Air Cleaner - Filter Element

To install air cleaner element:

1. Slide air cleaner element into housing.
2. Install air cleaner end cap.
3. Install thumbscrews around air cleaner housing end cap.

*NOTE: The air cleaner is internally sealed by a radial seal around Inlet tube of air cleaner element. For further information on servicing the air cleaner, see the **Medium Duty Maintenance Manual**.*

TIRES AND WHEELS

Introduction

Keeping the tires in good condition is essential to the safe, efficient operation of your Medium Duty vehicle. Regular, frequent inspection and the right care will give you the assurance of safe and reliable tire operation.

WARNING! Use only original equipment manufactured (OEM) components. Use of non-original equipment could cause wheel breakage and wheel separation from vehicle, which could result in an accident causing death or personal injury. Each mounting system is engineered only for use with its correct mating part. Be sure that properly matched components are used for each type of mounting. The comparison chart on Page 213 ***illustrates the differences between parts used in hub-piloted mount and ball seat mount applications. Only OEM supplied hub-piloted or ball-seat mounted wheels may be used on this vehicle.***

- ***If you are not fully qualified and not equipped with the proper tools and equipment, do not attempt to raise the vehicle or remove or install the damaged tire and wheel assembly. Obtain expert help. A person can be killed or seriously injured and/or damage can result from using the wrong service methods. Truck tires and wheels should be serviced only by trained personnel using proper equipment. Do not reinflate a tire that has been run flat or is seriously low on air without first removing the tire from the rim and inspecting for damage.***
- ***Follow OSHA regulations per section 1910.177.***
- ***Do not exceed the speed rating of tires. Exceeding the speed rating may result in sudden tire failure and loss of vehicle control.***
- ***Follow all warnings and cautions contained within the tire and wheel manufacturers literature.***
- ***Only properly trained personnel should service tire and rim assemblies.***
- ***See*** page 215 ***for specific safety requirements for trucks with hydraulic brakes.***

Speed Restricted Tires

WARNING! This vehicle may be equipped with speed restricted tires. Check each tire's sidewall for maximum rated speed. Vehicle should not be operated at sustained speed in excess of maximum rated speed. Failure to comply with these speed restrictions could cause sudden tire failure which can result in death, personal injury or property damage.

Tire Inspection and Replacement

Visually inspect your tires frequently for any abnormal conditions such as scrapes, bulges, and uneven wear. This must be done immediately after known or suspected contact with an object in the road, with a pothole, road irregularity or after severe braking. Refer these conditions to an Authorized Tire Service Center for repair or replacement. Never drive on a tire if such conditions appear.

If the tire looks underinflated, stand off to the side and check for damage to the wheel assembly. This can be done by visually comparing the wheel in question to other wheels on the vehicle. For dual wheel assemblies, check between the wheels for damage. If any damage is found, or you suspect damage, do not attempt further repair. Call for expert tire service.

Tire Inflation and Loading

Low pressure is a tire's worst enemy. Underinflation allows tires to flex improperly, causing high temperatures to build up. Heat causes early tire damage such as flex break, radial cracks, and ply separation. And low pressure may affect control of your vehicle, especially at the front wheels.

WARNING! Do not operate vehicle with underinflated tires. The extra heat caused by underinflation can cause sudden tire failure such as a tire fire or blow out which can cause an accident resulting in death or personal injury. Low pressure may affect control at the front wheels, which could result in an accident and serious injury. Keep your tires inflated to the manufacturer's recommended air pressure.

Tire Inflation

Most tire wear problems are caused by underinflation as the result of slow leaks. So you will want to check tire pressure regularly. Give the tires a visual test every day, and check inflation with a gauge every week.

When checking tire pressure, inspect each tire for damage to sidewalls, cuts, cracks, uneven wear, rocks between dual wheels (tires), etc. If a tire appears underinflated, check for damage to the wheel assembly. Do not forget to check between dual wheels. If you find wheel damage, have an expert tire service repair it.

WARNING! Do not repair damaged tires unless you are fully qualified and equipped to do so. Wheel and tire assemblies cannot be worked on without proper tools and equipment, such as: safety cages or restraining devices. Have all tire repairs performed by an expert. And stand away from the tire assembly while the expert is working. Failure to do this may result in death or injury.

CAUTION: Pressure should be checked when the tires are cool. Warm or hot tires cause pressure buildup and will give you an inaccurate reading. So never deflate a warm tire to the specified pressure.

Underinflated tires will adversely affect the operation of the vehicle and tires:

- making steering difficult
- causing extra strain on the tire sidewalls
- reducing the tread life of tires due to the high temperatures generated from excess flexing of the tire
- Inflate tires to the manufacturer's cold air pressure specification molded into the tire side wall.

Lower tire pressure does not give you more traction on ice or snow. Underinflation actually reduces traction and steering control. See the tire manufacturer's *Drivers Handbook* for more information on proper operation and use of tires.

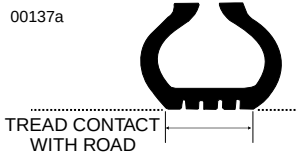

Proper Inflation: the correct profile for full contact with the road.

Underinflation: causes abnormal tire deflection, which builds up excessive heat, running the risk of failure. It also causes irregular wear.

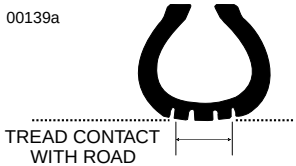

Overinflation: reduces the tread contact area with the road surface, concentrating all of the vehicle weight on the center of the tread. This causes premature wear of the tire.

- Too much air pressure reduces the tire tread contact area and results in rapid wear in the center of the tire. It also causes tires to run hard and makes them more vulnerable to impact and other road hazard damage.

WARNING! Overinflated tires can cause accidents. They wear more quickly than properly inflated tires and are more subject to punctures, cracks, and other damage. They could fail and cause you to lose control of your vehicle resulting in an accident causing death or personal injury. Be sure all tires are inflated correctly according to the manufacturer's recommendations.

If overinflation is noted during travel, do not deflate tires. The increased pressure is caused by temperature build-up during operation. This condition has been taken into account during manufacturing of the tires. Allow tires to cool, then recheck and adjust if necessary.

Tire Loading

WARNING! Do not exceed the load rating of your tires (molded on the side wall of your tire) or the maximum vehicle load rating, whichever is less. Overloading could result in premature tire failure causing you to loose control of your vehicle and result in an accident causing death or personal injury. The maximum vehicle load rating (GVWR) is found on the Tire and Rim Data label on the driver's door.

Overloading your vehicle is as damaging to the tires as underinflation. It significantly affects the expected life (total mileage of a tire). The following chart shows how neglect or deliberate abuse can affect the life of your vehicle's tires.

Table 6 Effect of Load Pressure on Tire Life

Vehicle Load	Normal	20% Over	40% Over	60% Over	80% Over	100% Over
Tire Pressure	Normal	20% Low	30% Low	35% Low	45% Low	55% Low
Expected Total Tire Mileage	Normal	70%	50%	40%	30%	25%

Wheel Mounting and Fastening

After the vehicle travels about 50 to 100 miles (80 to 160 km), wheel mountings “seat in” and will lose some initial torque. Check hub/wheel mountings after this initial period and retighten.

Wheel Cap Nut Torque

At the first scheduled lube interval, have all wheel cap nuts torqued to their specified value. See Table 7, “Wheel Cap Nut Torque,” Page 210 After that, check wheel cap nuts at least once a week. Contact an Authorized Service Center for information on the proper installation procedure for the wheels on your truck. This is a job you may not be able to do yourself if you do not have the right equipment.

WARNING! Never use oil or grease on studs or nuts; improper torque readings will result, which could cause improper wheel clamping and could lead to a wheel failure resulting in an accident causing death or personal injury.

Wheel Bearing Adjustment

For safe, reliable operation and adequate service life, your wheel bearings must be checked and adjusted properly at the recommended intervals. See Table 2, “Maintenance Schedule,” Page 113, and Table 2, “Maintenance Schedule,” Page 157. The person best equipped to do this is your Authorized Service Center's mechanic.

Proper Torque and Sequence

Proper wheel torque can best be obtained on level ground. Install lug nuts and finger-tighten in the numerical sequence as shown below, see “Crisscross Tightening Sequence” on page 212. This procedure will ensure that the wheel is drawn evenly against the hub. Torque each nut to the torque value listed in Table 7 on page 210.

WARNING! Tighten wheel cap nuts properly. If they are not tightened properly, wheel nuts could eventually cause the wheel to become loose, to fail, and/or to come off while the vehicle is moving, possibly causing loss of control if the vehicle and death, serious personal injury or damage to the vehicle.

Table 7 Wheel Cap Nut Torque

WHEEL & NUT CONFIGURATION	STUD SIZE	DYNAMIC TORQUE FOR INNER & OUTER CAP NUTS & RIM CLAMP NUTS	
		N.m	Lb–Ft
Steel Disc-Type Wheel; Double Cap Nut Mounting; Standard 7/8” Radius Ball Seat or Flanged Nuts:	3/4-16	545–630	400–465
	1-1/8-16	545–630	400–465
Alum. Disc-Type Wheel; Double Cap Nut Mounting; Standard 7/8” Radius Ball Seat or Flanged Nuts:	3/4-16	530–625	390–460
	1-1/8-16	530–625	390–460
Heavy-Duty Steel Disc-Type Wheel; Double Cap Nut Mounting; 1-3/16” Radius Ball Seat:	15/16-12	1020–1090	750–800
	1-1/8-16	885–950	650–700
	1-15/16-12	1020–1090	750–800
Hub-Piloted Disc-Type Wheel w/Two Piece Flanged Cap Nuts: Budd Nut w/Teflon Coating:	Steel Wheel	505–590	370–435
	Alum. Wheel	475–580	350–425
Motor Wheel Nut:	Steel Wheel	545–630	400–465
	Alum. Wheel	530–625	390–460
Stud Backnuts (when used)	3/4-16	240–270	175–200
	1-14	240–410	175–300
Heavy-Duty Cast Wheel w/Demountable Rim:	1-8	585–640	430–470
	1-12	585–640	430–470
	1-14	585–640	430–470
Rockwell or Clark Demountable Rims on Planetary Axles	3/4-10	270–305	200–225

Table 7 Wheel Cap Nut Torque

WHEEL & NUT CONFIGURATION	STUD SIZE	DYNAMIC TORQUE FOR INNER & OUTER CAP NUTS & RIM CLAMP NUTS	
		N.m	Lb–Ft
Cast Wheel with Demountable Rim:	Dayton: 5/8-11 Front & Rear	220–240	160–175
	3/4-10, Cad Plated Studs Front	306–340	225–250
	Rear	272–340	220–250
	3/4-10, PHOS & Oil Coated Studs, Front & Rear	238–258	175–190
Cast Wheel with Demountable Rim:	Gunite: 5/8-11 Front & Rear	220–250	160–185
	3/4-10 Front/Over 14,000 Lb GAWR	325–359	240–265
	Other Front & Rear	271–305	200–225

Disc Wheels

WARNING! Use the correct components and tools when working on wheels. Grooves in the wheel disc or other damage to the disc can weaken the wheel and cause it to eventually come off. This could cause you to lose control of your vehicle, and may result in an accident causing death or personal injury.

The end of the wheel wrench must be smooth. Burrs on the end of the wrench can tear grooves in the disc. These grooves may lead to cracks in the disc, and can cause it to fail.

Demounted Rims

To check the torque on demountable rims, follow the criss-cross sequence shown below. See Table 7, “Wheel Cap Nut Torque,” Page 210 for proper torque specifications.

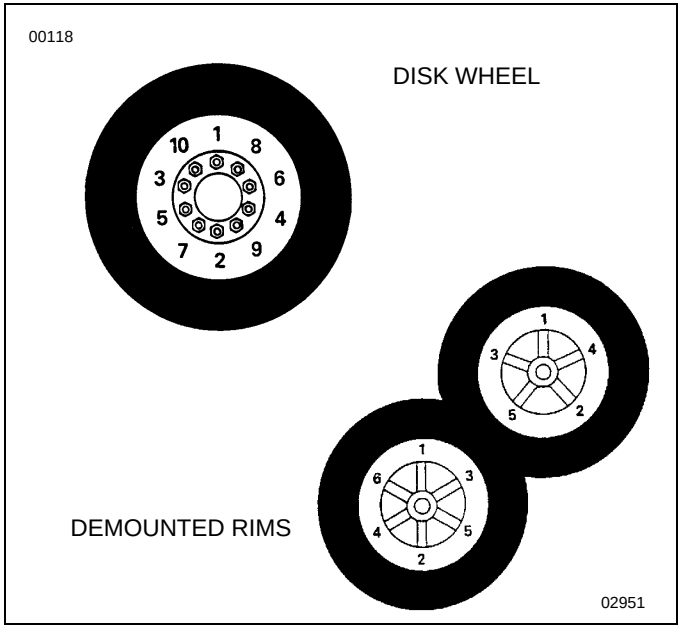

Crisscross Tightening Sequence

WARNING! Improperly mounting and demounting tire and rim assemblies is dangerous. Failure to observe proper precautions could cause the tire-rim assembly to burst explosively, causing serious injury or death. See the wheel manufacturer's literature for the proper way to mount and demount your tires and rims. Follow their precautions exactly.

Comparing Hub Piloted and Ball Seat Parts

WARNING! Do not mismatch wheel components. Equipment that does not exactly match original specifications or that is mismatched could cause the wheels to break and separate from the vehicle causing death or personal injury. Each mounting system is engineered for use only with its correct mating part. Be sure properly matched components are used for each type of mounting.

The following comparison (Table 8, ”Comparing Hub-piloted and Ball-seat Wheels”), shows the difference between parts used in hub pilot mount and ball seat mount applications.

Table 8 Comparing Hub-piloted and Ball-seat Wheels

HUB–PILOTED MOUNT	BALL–SEAT MOUNT
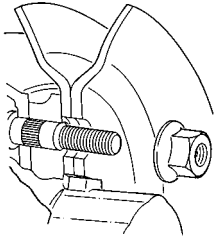 00187	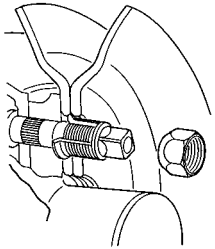 00203
Hub, Drum, and Stud Assembly	
Hub-piloted mountings use M22 x 1.5 metric threads (about 7/8 in. diameter). The stud stands out at least 1.94 in. beyond the brake drum. **All studs are right-hand threads.** Pilot bosses (machined surfaces) on the hub, fit tightly to the wheel center bore.	Ball-seat (stud-piloted) mountings use 3/4x16 or 1-1/8x16 threads. The dual mounting studs provide 1.30 in. –1.44 in. standout. **Right-hand and left-hand threads are required.** Inner and outer wheel nuts center the wheels by seating against wheel ball seats.
Wheels	
Hub-piloted wheels have stud holes reamed straight through (no ball seats). Center bore diameter is 8-21/32 in.	Ball-seat wheels have spherical chamfers machined on each stud hole. Center bore diameter is 8-23/32 in.
Wheel Nuts	
Hub-piloted wheel nuts have a hex body and a flange for clamping against wheel face. Hex size is 1-5/16 in. (33 mm).	Ball-seat inner and outer wheel nuts mate with spherical chamfers on wheels. The inner nut has 13/16 in. square end. The outer nut has a 1-1/2 in. hex.

Tire Replacement

Front: replace front tires when less than 4/32 in. of tread depth remains. Check depth at three places equally spaced around the tire.

Drive Axles or Trailers: replace tires on drive axles when less than 2/32 in. of tread depth remains in any major groove. Check depth at three places equally spaced around the tire.

WARNING! Do not install regrooved or reinforcement-repaired tires on steering axles. They could fail unexpectedly and cause you to lose control of your vehicle resulting in an accident causing death or personal injury.

WARNING! Do not replace original equipment tires with load ratings less than the original tires. Doing so could lead to unintentional overloading of the tire, which could cause a failure resulting in loss of vehicle control and an accident causing death or personal injury.

NOTE: To prolong the tires' life and make them safer, have their radial and lateral run-out checked at your Peterbilt Dealer. And of course have the tires balanced any time you change a tire.

Matching Tires

Be sure to buy matched tires for your vehicle, especially on the rear axles. Mismatched tires can cause stress between axles and cause the temperature of the axle lubricant to get too hot. Matched tires will help the driveline last longer and will give you better tire mileage.

WARNING! Do not mismatch tires, it can be dangerous. Never mix tires of different design such as steel belted radials and bias ply tires, etc. Mixing tire types and sizes will adversely affect the road-holding ability of both types of tires and can lead to loss of vehicle control and causing death or personal injury.

Make sure, too, that you use the right size tires on each wheel. Some trucks require different sizes on front and rear wheels. For safety, always use the recommended size and type of tires.

Wheel and Tire Replacement

WARNING! The Anti-Lock Brake System (ABS) is calibrated for the specific tire revolutions per mile. Use of a tire and/or wheel size different from that originally installed on your vehicle may cause the ABS system to not function during a hard braking event. This could cause an accident resulting in death or serious personal injury. Consult with your Peterbilt dealer before using a different tire and/or wheel size than was originally installed on your vehicle.

CAUTION: No indication will be given via the dashboard warning lights or buzzer if tires of the wrong size are installed on your vehicle. See the warning above for consequences of tires of the wrong size.

HEATER AND AIR CONDITIONER

Introduction

The combination heater-air conditioner provides comfort for those in the cab through accurate control of the cab environment in all weather conditions. Regular attention to the items below will help you keep the heater-air conditioner unit running well.

WARNING! Excessive heat may cause the pressurized components of the air conditioning system to explode possibly causing death or personal injury. Never weld, solder, steam clean, or use a blow torch near any part of the air conditioning system.

- ***If a refrigerant leak develops in the presence of excessive heat or an open flame, hazardous gases may be generated. These gases may cause unconsciousness or death. If you become aware of a refrigerant leak on your vehicle have your system service immediately and observe the following precautions:***
- ***Stay away from the hot engine until the exhaust manifold has cooled.***
- ***Do not permit any open flame in the area. Even a match or a cigarette lighter may generate a hazardous quantity of poisonous gas.***
- ***Do not smoke in the area. Inhaling gaseous refrigerant through a cigarette may cause violent illness.***

Heater

- Check all heater controls for full-range operation.
- Check hoses, connections, and heater core for condition and leaks.
- Check the drain pan of the fresh air vent for trapped water before assuming that there is a leak in the heating system. If the heater core is leaking, a reliable radiator shop should be able to repair it.
- Check the heater core for debris blocking the air flow. If the blower and air controls are functioning properly, yet the heater is not operating properly, the heater core or the hot water valves may be clogged or closed. Clean the heater core if necessary. If the condition persists, take the vehicle to a Peterbilt Dealer for proper heater service or repair.

CAUTION: During extreme cold weather, do not blow hot air onto cold windshields. This could crack the glass. Turn the air direction lever to Defrost and reduce the fan speed while the engine warms. If the engine is already warm, move the temperature selector to Cool, then gradually increase the temperature when you see that the windshield is starting to warm-up.

Air Conditioner

WARNING! The air conditioning system is under pressure. If not handled properly during servicing, it could explode, causing death, injury to you or damage your vehicle. Any servicing that requires depressurizing and recharging the air conditioning system must be conducted by a qualified technician with the right facilities to do the job.

- Check the compressor and drive clutch for noise and vibration. If you find problems, have the system checked thoroughly. A malfunctioning clutch usually indicates trouble elsewhere in the system.
- Check the evaporator core and condenser core for debris restricting air flow. Clean if necessary. Small particles may be removed with compressed air blown through the core in the opposite direction of normal air flow.

WARNING! Wear eye protection any time you blow compressed air. Small particles blown by compressed air could injure your eyes.

- Check the compressor belt for condition and proper tension.
- Check all hoses for kinks, deterioration, chafing, and leaks. Adjust kinked or chafing hoses to eliminate restrictions and prevent further wear.
- Check all components and connections for refrigerant leaks. If you discover a leak, do not try to tighten a connection. Tightening a connection may cause a worse leak. Have a qualified technician correct the problem.

NOTE: A leaking evaporator or condenser core cannot be repaired; it must be replaced.

Have the air conditioning system fully serviced annually by your Peterbilt Dealer or Authorized Service Center. Qualified service technicians will have to evacuate and recharge the system.

ELECTRICAL SYSTEM

CAUTION: Do not modify or improperly repair the vehicle's electrical system or power distribution box. All electrical repairs should be performed by an authorized Peterbilt dealer. Improper repair or modifications will void your warranty and/or cause serious damage to your vehicle.

Location Of Fuses

Fuses are located inside the cab, left side, next to the driver's door.

Fuse Inspection and Replacement

WARNING! Do not replace a fuse with one of a higher rating. Doing so may damage the electrical system and cause a fire, possibly causing death, personal injury or property damage.

CAUTION: Before replacing a fuse, turn OFF all lights and accessories and remove the ignition key to avoid damaging the electrical system.

WARNING! Never patch fuses with tin foil or wire. This may cause serious damage elsewhere in the electrical circuit, and it may cause a fire, possibly causing death, personal injury or property damage.

CAUTION: If a circuit keeps blowing fuses, have the electrical system inspected for a short circuit or overload by an authorized Peterbilt dealer as soon as possible. Failure to do so could cause serious damage to the electrical system and/or vehicle.

NOTE: If a fuse of the same rating is not available, a fuse of a lower rating may be temporarily substituted. You can also use a fuse from a circuit you can temporarily do without (for example, an accessory circuit or radio).

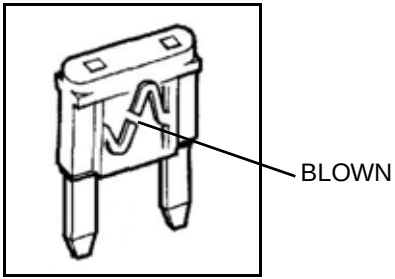

All the electrical circuits have fuses to protect them from a short circuit or overload. If something electrical on your chassis stops working, the first thing you should check for is a blown fuse.

1. Turn OFF all lights and accessories and remove the ignition key to avoid damaging the electrical system..
2. Determine from the chart on the fuse panel which fuse controls that component.
3. Remove that fuse and see if it is blown.
4. If it is blown, replace it with a fuse of the same rating.

Adding Electrical Options

WARNING! Do not add a fuse with a rating higher than 30 amps. Doing so may damage the electrical system and cause a fire, possibly causing death, personal injury or property damage.

CAUTION: Follow all manufacturers' circuit protection recommendations for the components and wires being added.

Spare circuits are located throughout the wiring for the dash. For proper electrical system performance, refer to a wiring diagram for your chassis before adding electrical options.

Truck-Body Connection

Your vehicle includes a junction box mounted to the frame for wiring the vehicle body to the main chassis harness.

Refer to the Body Builder's Manual for further information on using the Truck and Body Connection.

Battery Cables

WARNING! Battery cables can cause fires resulting in death or serious personal injury and/or property damage if not properly maintained and located. Regularly inspect the battery cables and connectors for damaged or compromised cable insulation. Contact your Authorized Service Center if you are in need of repairs or information.

Turn off the ignition and disconnect the negative battery cable.

Battery cables have a protective insulation covering the metal cable. Contact your authorized service center to have the cables replaced if you find any chafing, tears or breaks in the insulation and the cable is visible through the tear or break.

Batteries

WARNING! Battery posts, terminals, and related accessories contain lead and lead compounds, chemicals known to the State of California to cause cancer and reproductive harm. Wash hands after handling.

Battery Access

The vehicle is originally equipped with two batteries. Replacement batteries must meet the following specifications: maintenance-free, group 31 size, threaded stud, 12V/650 cold cranking ampere (CCA), and 160 minutes of reserve capacity. The battery compartment has space to install an optional third battery.

The battery compartment is located on the left side of the vehicle, under the cab access steps.

The cover is held in place by two latches one on each side.

WARNING! Always reinstall the battery compartment cover (step) before entering the cab. Without the step you could slip and fall, resulting in death or possible injury to yourself.

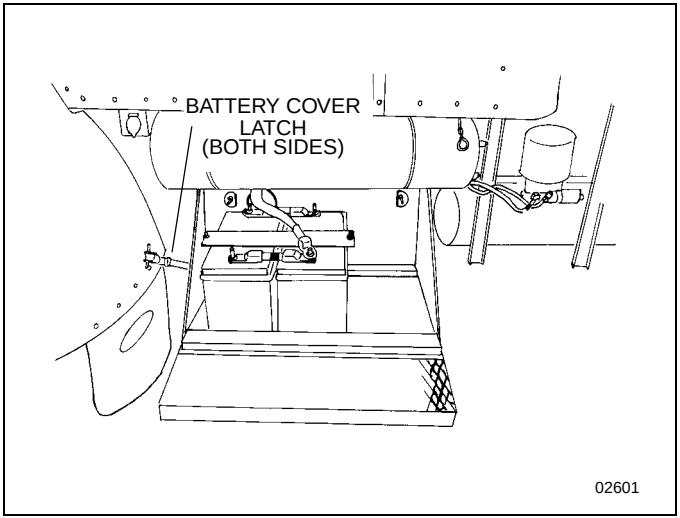

Battery Compartment

WARNING! Before attempting any work on the batteries or electrical system, remove all jewelry. If metal jewelry or other metal comes in contact with electrical circuits, a short circuit may occur causing death, injury or property damage.

Removing and Installing Batteries:

1. Be sure all switches on the vehicle are turned OFF.
2. Disconnect negative ground cable.
3. Disconnect positive cable.
4. Unscrew bolt of holding plate with open end wrench.

To reinstall batteries:

1. Place batteries in vehicle and tighten bolt of holding plate.
2. Reconnect positive cable.
3. Reconnect negative ground cable.

Battery Care

Regular attention to the charging system will help prolong the service life of the batteries. Here are some common causes of battery failure:

Overcharge: this condition results from improper voltage regulator adjustment. It results in overheating of the battery, warped plates, and evaporation of electrolyte.

Undercharge: the voltage regulator is malfunctioning or is improperly adjusted, the drive belt is slipping, or your vehicle has undergone long periods of standing idle or short distance driving. These conditions result in battery plates becoming covered with a hard coating.

Vibration: loose battery hold-downs may cause battery plate failure.

Short Circuits: these discharge the battery by draining electricity.

Dirty or Loose Connections: improper connections may stop the flow of electrical power to and from the battery.

Jump Starting Vehicles

Because of the various battery installations and optional electrical systems, Peterbilt does not recommend that you attempt to jump start your vehicle. If you have a battery problem, it is best to contact a Peterbilt Dealer or a reputable towing service.

However, if your battery is discharged (dead), you may be able to start it by using energy from a good battery in another vehicle. This is termed “jump starting.” Be sure to follow the precautions and instructions below.

WARNING! Batteries contain acid that can burn and gases that can explode. Ignoring safety procedures can cause you or others to be killed or badly hurt.

WARNING! Never jump start a battery near fire, flames, or electrical sparks. Batteries generate explosive gases that could explode causing death or serious personal injury. Keep sparks, flame, and lighted cigarettes away from batteries.

WARNING! Do not allow battery fluid to contact eyes, skin, fabrics, or painted surfaces. Always wear eye protection. Battery acid that may spill during charging should be washed off with a solution of warm water and baking soda to neutralize the acid. If you accidentally get acid in your eyes or on your skin, immediately rinse with cold water for several minutes and call a doctor.

•Be careful that metal tools (or any metal in contact with the positive terminal) do not contact the positive battery terminal and any other metal on the vehicle at the same time. Remove metal jewelry and avoid leaning over the battery.
•If metal jewelry or other metal comes in contact with electrical circuits, a short circuit may occur causing death or serious personal injury, as well as electrical system failure and damage to the vehicle.
•Do not try to jump start or charge a frozen battery. (Even a battery with ice particles on the electrolyte surface is dangerous.) Allow it to thaw out first. And always allow the battery to thaw gradually—do not apply direct heat. Gas trapped in the ice may cause an explosion.

To Jump Start Your Vehicle

WARNING! The voltage of the booster battery must have a 12–volt rating. And the capacity of the booster battery should not be lower than that of the discharged battery. Use of batteries of different voltage or substantially different capacity rating may cause an explosion and death or serious personal injury.

CAUTION: Applying a higher voltage booster battery will cause expensive damage to sensitive electronic components, such as relays, and the radio.

•Improper hook-up of jumper cables or not following these procedures can damage the alternator or cause serious damage to both vehicles.

WARNING! To avoid death, serious personal injury and damage to the vehicle, heed all warnings and instructions of the jumper cable manufacturer.

•The jumper cables must be long enough so that the vehicles do not touch.

If either battery has vent caps, remove them and check the fluid level. If it is OK, replace the caps before going further. If the level is low, add distilled water and replace the caps before proceeding. If no water is available, remove the caps and cover the filler openings with a cloth. After jump starting the vehicle, dispose of the cloth.

WARNING! If you do not cover the filler openings on the battery, electrolyte could boil out of the openings and cause death, injury or damage the vehicle. Replace caps securely if the battery has the full level of electrolyte. If the electrolyte is low and no water is available, cover with a cloth.

Preparing the vehicles:

1. Position the two vehicles together, but do not let them to touch.
2. Turn OFF all lights, heater, radio, and any other accessory.
3. Set the parking brakes: pull out the **Yellow** button located on the dash.
4. Shift the transmission into park position. (See Pages 67 and 34 for transmission shifting and parking brake information.)
5. Turn engine OFF (booster vehicle).
6. Disconnect ground cable on booster battery.

Connect the batteries:

WARNING! When connecting jumper cables, make sure they can not get caught in any moving parts in the engine compartment. You could be killed or seriously injured.

1. Attach one end of a jumper cable to the positive terminal of the discharged (dead) battery. This will have a large red “+” or “P” on the battery case, post, or clamp.
2. Attach the other end of the same cable to the positive (+) terminal of the good (booster) battery.
3. Attach the remaining jumper cable FIRST to the negative terminal (black “–” or “N”) of the good battery.
4. Attach the other end of the negative cable to a bare metal part bolted to the engine block or clamp directly to the engine block if possible.

   IMPORTANT: Always connect positive (+) to positive (+) and negative (–) to negative (–).
5. Start the engines:
   - Start the vehicle that has the good battery first. Let it run for a few minutes.
   - Then start the vehicle that has the discharged (dead) battery.

   If the engine fails to start, do not continue to crank the starter but contact the nearest Authorized Service Center.

Remove jumper cables:

WARNING! When disconnecting jumper cables, make sure they do not get caught in any moving parts in the engine compartment. You could be killed or seriously injured.

Reverse the above procedure exactly when removing the jumper cables. With engine running, disconnect jumper cables from both vehicles in the exact reverse order (Steps 4 – 1), making sure to first remove the negative cable from the vehicle with the discharged battery.

Battery Charging

Except for using small trickle charges (as explained on Page 226) to maintain battery condition, you should have your vehicle's batteries charged by a qualified service facility.

WARNING! Batteries can kill or injure you severely. They contain acid, produce poisonous and explosive gases, and supply levels of electric current high enough to cause burns. A spark or flame near a battery on charge may cause it to explode with great force.

To help reduce the risk of personal injuries, follow these guidelines carefully when recharging a battery:

- Before attempting any service in the electrical installation, disconnect the battery negative cable.
- Allow no sparks or open flame anywhere near the charging area.
- Charge a battery only in a well-ventilated area, such as outdoors or in a fully open garage which contains no pilot lights or other flames. Gases generated during the charging process must be allowed to escape.
- Maintain the full level of electrolyte in the batteries. This reduces the volume of gas in the cells. The electrolyte level should always be between 0.4–0.6 in. (10–15mm) above plates. **Fill with distilled water only.** After distilled water has been added, wait at least a half hour to measure solution density (specific gravity). The specific gravity should be between 1.258–1.265 or the electrolyte level within “MIN” and “MAX” marks.
- When fast charging, remove the battery caps so pressure does not accumulate.
- Always make sure the battery charger is OFF before connecting or disconnecting the cable clamps.
- To avoid short circuits and damage to yourself or the vehicle, never place metal tools or jumper cables on the battery or nearby. Metal that accidentally comes in contact with the positive battery terminal or any other metal on the vehicle (that is in contact with the positive terminal), could cause a short circuit or an explosion.

Charging Reminders

- Use protective eyewear.
- Keep all batteries away from children.
- Never reverse battery poles.
- Never attempt to place the vehicle in motion, or run the engine with batteries disconnected.
- Keep the battery clean and dry.
- Look for any signs of damage.

WARNING! Never use a metallic funnel to add distilled water. It could come in contact with a terminal, creating a short circuit, resulting in death, severe personal injury or damage to your vehicle.

WARNING! Always shield your eyes and avoid leaning over the battery whenever possible. Electrolyte in batteries could splash up into your eyes causing severe burns and/or serious personal injury.

- Battery terminals should not be coated with improper grease. Use petroleum jelly or commercially available, noncorrosive, nonconductive terminal coatings.
- Battery acid that may spill during charging should be washed off with a solution of warm water and baking soda to neutralize the acid. If you accidentally get acid in your eyes or on your skin, immediately rinse with cold water for several minutes and call a doctor.
- Do not charge a frozen battery; allow it to thaw out first. And always allow the battery to thaw gradually—do not apply direct heat. Gas trapped in the ice may cause an explosion.
- Never use a fast charger as a booster to start the engine. This can seriously damage sensitive electronic components such as relays, radio, etc., as well as the battery charger. Fast charging a battery is dangerous and should only be attempted by a competent mechanic with the proper equipment.

Slow Battery Charging

NOTE: Follow the instructions that come with your battery charger.

- It is not necessary to remove the battery from the compartment.

WARNING! Charger cables must be connected positive to positive (+ to +) and negative to negative (– to –). If connected improperly, batteries could explode causing death or serious personal injury.

•Always make sure the battery charger is OFF before connecting or disconnecting the cable clamps. To reduce the danger of explosions and resulting death or serious personal injury, do not connect or disconnect charger cables while the charger is operating.

1. Make sure the electrolyte level in each cell is between the “MIN” and “MAX” marks. If the fluid level is below the “MIN” mark, correct the condition.
2. Disconnect the battery cables.
3. Connect charger cables.
4. Start charging the battery at a rate not over 6 amperes. Normally, a battery should be charged at no more than 10 percent of its rated capacity.

5. After charging, turn OFF charger and disconnect charger cables.

Bulb Replacement

Tail Lights

To replace the tail lamps, remove lens. The bulbs are all of the bayonet type.

1. To remove the bulbs, turn bayonet counter clockwise and pull out.
2. To install, fit the bulb in the socket, push in and turn bayonet clockwise.

Replacement Bulbs

DESCRIPTION	PART NO.
Headlights	9007BULB
Front turn signal	3157K LL BULB
Marker	1895BULB
Stop/tail turn	1157BULB
Backup	1156BULB
Hood marker	4157NAK LL BULB
Roof marker	194BULB
Dome	1141BULB
Warning lamp module	#37 or 73 (T1 3/4 wedge base

Electrical and Alternator Precautions

Take the following precautions to avoid burning out alternator diodes:

- Do not start the engine with alternator disconnected (connections removed) from the circuit.
- Before welding, disconnect all electronic connections to the vehicle batteries.
- Remove battery power cable and insulate it from the vehicle. See “Welding” on page 250 for more information.
- Do not run the engine with the batteries disconnected.
- Do not disconnect the battery cables or alternator connection cables with the engine running.
- Never turn the ignition switch to the IGN & START position with the engine running.
- When charging the battery (installed in the vehicle) disconnect the battery cables.
- Do not reverse the cables of the alternator, starter motor, or battery.

- Do not polarize the alternator. The alternator should not be polarized like a generator. To ensure correct polarity, use a test lamp or a voltmeter.

CAB MAINTENANCE

Exterior Maintenance

Painted Surfaces

Wash painted surfaces frequently to remove grime and caustic deposits which may stain the finish. See “Cleaning, Protection and Weather–Stripping” on page 230.

Chrome and Aluminum Surfaces

To prevent rust, keep chromed parts clean and protected with wax at all times, especially in winter conditions where the roads are salted.

- If necessary, use a commercial chrome cleaner to remove light rust.
- Chrome surfaces are best cleaned with fresh water. Wipe dry to preserve their luster. A commercial chrome cleaner will remove light rust. After cleaning, wax flat surfaces and apply a thin coat of rust preventive lubricant around bolts or other fasteners.
- Clean aluminum wheels and bumpers with warm water. Tar remover will get rid of heavy deposits of road grime. To prevent spotting, wipe aluminum surfaces dry after washing.
- Under corrosive conditions, such as driving on salted roads, clean aluminum parts with steam or high pressure water from a hose. A mild soap solution will help. Rinse thoroughly.

Stainless Steel

Even high quality stainless steel parts can rust under prolonged exposure to salt water, especially when the salt-laden moisture is held against the metal surface by road grime. It is, therefore, important to frequently clean salty moisture and grime from stainless steel surfaces.

- If surface rust is encountered, wash the surface and use a commercial polishing compound to clean off the rust, followed by a coating of wax (do not apply wax to hot parts, such as exhaust pipes).
- Never use steel wool when cleaning stainless steel because minute particles of the steel wool can embed in the surface of the stainless steel and cause rust staining.

Cleaning, Protection and Weather–Stripping

Frequent washings of the vehicle are required to remove grime and contaminants that can stain and oxidize paint and accelerate corrosion of plated and polished metal surfaces.

Waxing offers added protection against staining and oxidation. But to allow enough time for your truck's finish to cure, wait about 30 days after the date of manufacture before waxing. Do not apply wax in the hot sun and do not friction burn the paint with a buffing machine.

Occasionally spray weather-stripping on doors and windows with silicone compound to help preserve resiliency. This is especially useful in freezing weather to prevent doors and windows from sticking shut with ice.

Vehicle Cleaning

Precautions

WARNING! Handle cleaning agents carefully. Cleaning agents may be poisonous and cause death or personal injury if swallowed or inhaled. Keep them out of the reach of children.

- Observe all caution labels.
- Always read directions on the container before using any product.
- Do not use any solution that can damage the body paint.
- Most chemical cleaners are concentrates which require dilution.
- Use spot removing fluids only in well ventilated areas.
- Do not use gasoline, kerosene, naphtha, nail polish remover or other volatile cleaning fluids. They may be toxic, flammable or hazardous in other ways.
- Do not clean the underside of chassis, fenders wheel covers, etc. without protecting your hands and arms. You may cut yourself on sharp-edged metal parts.
- Moisture, ice, and road salt on brakes may affect braking efficiency. Test the brakes carefully after each vehicle wash.

Any vehicle is subject to deterioration from industrial fumes, ice, snow, corrosive road salt, etc., to name just a few causes. A well-cared-for vehicle can look like new many years later. Regular and correct care will contribute to maintaining the beauty and the value of your vehicle.

Your Peterbilt Dealer has a number of vehicle-care products and can advise you on which ones to use for cleaning the exterior and interior of your vehicle.

CAUTION: Do not aim the water jet directly at door locks or latch. Tape the key holes to prevent water from seeping into the lock cylinders. Water in lock cylinders should be removed with compressed air. To prevent locks from freezing in the winter, squirt glycerin or lock deicer into the lock cylinders.

Washing the Exterior

1. Begin by spraying water over the dry surface to remove all loose dirt before applying the car wash and wax solution.
   - Do not wash the vehicle in direct sunshine.
   - Do not spray water directly into any vents.
2. Using soapy water, wash the vehicle with a clean soft cloth or a soft brush made for automotive cleaning.
   - Use cool or warm water and a mild, household type soap. Strong industrial detergents and cleaning agents are not recommended.
   - Do not use stiff brushes, paper towels, steel wool, or abrasive cleaning compounds because they will scratch painted, plated, and polished metal surfaces.
3. Rinse surfaces frequently while washing to flush away dirt that might scratch the finishes during the washing operation.
4. Wipe everything dry with a chamois to avoid water spots.
   - To prevent water spotting, dry off the cosmetic surfaces with a clean cloth or chamois.
5. Remove road tar with an automotive type tar remover or mineral spirits.
6. After cleaning and drying, apply a quality automotive wax.

   NOTE: To allow enough time for your truck's finish to cure, wait at least thirty days after the date of manufacture before waxing.
   - Do not apply wax in the hot sun

- Never dust off dry surfaces with a cloth because it will scratch the finishes.

Cleaning the Chassis

- Hose dirt and grime from the entire chassis. Then, if an oil leak develops, you will be able to detect it easier.
- Corrosive materials used for ice and snow removal and dust control can collect on the underbody. If these materials are not removed, accelerated corrosion (rust) can occur on underbody parts such as fuel lines, frames, floor pan, and exhaust system—even though they have been provided with corrosion protection.

At least every spring, flush these materials from the under body with plain water. Be sure to clean any area where mud and other debris can collect. Sediment packed in closed areas of the frame should be loosened before being flushed. If desired, your Peterbilt Dealer or Authorized Service Center can do this service for you.

Cleaning Cab Interiors

Peterbilt cab and sleeper interiors are built using a variety of different materials including fabrics, carpet, polyurethane, and painted plastic surfaces. These cleaning procedures will ensure that interior components remain in good condition for the life of the vehicle.

General Cleaning Guidelines

WARNING!

•Cleaning agents may contain hazardous agents. Thoroughly read, understand and follow the manufacturer's instructions when using a cleaning agent to avoid possible death, personal injury and property damage.

• Handle cleaning agents carefully. Keep them out of the reach of children. Commercial cleaning agents may be poisonous.

CAUTION: To avoid possible property damage

• Do not spray any kind of liquid directly at instruments or controls. Apply cleaner to a rag first and then clean instruments and gauges. Excess fluid may damage the use and function of instruments and gauges.

- ***Always test a commercial cleaning agent on an inconspicuous area of the surface to be cleaned before using it.***
- ***Never clean interior components with chemicals or solvents such as***
  - Gasoline
  - Naphtha
  - Acetone
  - Turpentine
  - Benzene
  - Carbon Tetrachloride
  - Lacquer Thinner
  - Nail Polish Remover
  - Ammonia-based Products
- ***Clean difficult stains such as oil, grease, and mustard as soon as possible. The longer a stain goes untreated, the more difficult it is to remove.***
- ***Avoid application of conditioning products containing silicones or waxes to the top surface of the dash panel. This may cause glare that can be a driver distraction.***

Interior Trim, Dash Shell, and Instrument Panels

CAUTION: To avoid possible damage to these components, do not use abrasive cleaners, brushes, chemical solvents or strong detergents.

- Use a clean, lint-free cloth.
- Clean with the cloth dampened with a mild soap-and-water solution.
- Remove soap with a clean, damp rag.
- For difficult stains on painted plastic surfaces, such as the dash shell, use Dupont™ Sontara® cleaner, part number PS-3909S. The product is available from Dupont as a presaturated wipe.

Carpet

CAUTION: Do not apply water directly to carpet. Excess water may damage the carpet. Keep carpet as dry as possible.

- Use a clean, lint-free cloth or clean, soft-fiber brush.
- Clean with the cloth or brush dampened with a mild soap-and-water solution.

- Remove soap with a clean, damp rag.
- If a stronger cleaning solution is required, use a foam-type carpet shampoo.

Vinyl and Fabric Upholstery

CAUTION: To avoid possible damage to the upholstery, do not use chemical solvents or strong detergents on these components.

- Use a clean, lint-free cloth.
- Clean with the cloth dampened with a mild soap-and-water solution.
- Remove soap with a clean, damp rag.
- For difficult stains, use a commercial fabric or vinyl cleaner.

Safety Restraint System — Inspection

The seat belt system, including webbing, buckles, latches, and mounting hardware, endures heavy use in medium-duty vehicles—much more than seat belt systems in passenger cars. All users should be aware of the factors contributing to this heavy use and reduced belt life.

WARNING! Failure to properly inspect and maintain restraint systems can lead to serious injury or loss of life. Without periodic inspection and maintenance to detect unsafe conditions, seat restraint components can wear out or not protect you in an accident.

Factors contributing to reduced seat belt life:

- High mileage—heavy trucks often accumulate mileage in excess of 500,000 total miles (800,000 km) during the vehicle lifetime. This is much greater than a typical passenger car, which frequently will not exceed 125,000 total miles (200,000 km).
- Seat and cab movement—in trucks, there is almost constant movement of the belt due to ride characteristics and seat design. The constant movement of the belt

inside the restraint hardware and the potential for the belt to come in contact with the cab and other vehicle parts, contributes to the wear of the entire system.

- Environmental conditions, such as dirt and ultraviolet rays from the sun, will reduce the life of the seat belt system.

Due to these factors, the three-point safety belt system installed in your vehicle requires thorough inspection every 20,000 miles (32,000 km). If the vehicle is exposed to severe environmental or working conditions, more frequent inspections may be necessary.

Any seat belt system that shows cuts, fraying, extreme or unusual wear, significant discoloration due to UV (ultraviolet) exposure, abrasion to the seat belt webbing, or damage to the buckle, latch plate, retractor hardware or any other obvious problem should be replaced immediately, regardless of mileage.

WARNING! It is important to remember that any time a vehicle is involved in an accident, the entire seat belt system must be replaced. Unexposed damage caused by the stress of an accident could prevent the system from functioning properly the next time it is needed, which could result in severe injury or even death.

Inspection Guidelines

Follow these guidelines when inspecting for “cuts, fraying, extreme or unusual wear of the webbing, and damage to the buckle, retractor, hardware, or other factors.” Damage to these areas indicates that belt system replacement is necessary.

WARNING! Replace the entire belt system (retractor and buckle side) if replacement of any one part is necessary. Unexposed damage to one or more components could prevent the system from functioning properly the next time it is needed, which could result in severe injury or even death.

1. Check the web wear in the system. The webbing must be closely examined to determine if it is coming into contact with any sharp or rough surfaces on the seat or other

parts of the cab interior. These areas are typical places where the web will experience cutting or abrasion. Cuts, fraying, or excessive wear would indicate the need for replacement of the seat belt system.

2. The pillar web guide (D-loop) is the area where almost constant movement of the seat belt webbing occurs because of relative movement between the seat and cab.
3. Check the Komfort-Lok Latch for cracks or possible damage and check for proper operation.

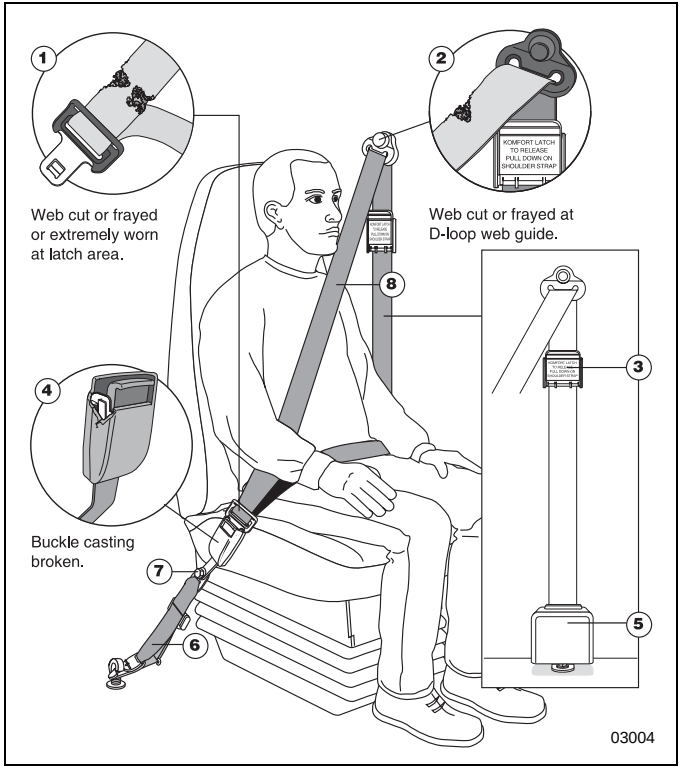

Seat Belt Inspection Points

4. Check buckle and latch for proper operation and to determine if latch plate is worn, deformed, or damaged.
5. Inspect the retractor web storage device, which is mounted on the floor of the vehicle, for damage. The retractor is the heart of the occupant restraint system and can often be damaged if abused, even unintentionally. Check operation to ensure that it is not locked up and that it spools out and retracts webbing properly.

   WARNING! Failure to adjust tether belts properly can cause excessive movement of the seat in an accident. This could lead to death or greater injuries for you. Tether belts should be adjusted so that they are taut when the seat is in its most upward and forward position.

6. If tethers are used, be sure they are properly attached to the seat and, if adjustable, that they are adjusted in accordance with installation instructions. Tethers must also be inspected for web wear and proper tightness of mounting hardware.
7. Mounting hardware should be evaluated for corrosion, and for tightness of bolts and nuts.
8. Check web in areas exposed to ultraviolet rays from the sun. If the color of the web in these areas is gray to light brown, the physical strength of the web may have deteriorated due to exposure to the sun's ultraviolet rays. Replace the system.

Once the need for replacement of the seat belt has been determined, be certain it is only replaced with an authorized PACCAR Parts replacement seat belt.

If the inspection indicates that any part of the seat belt system requires replacement, the entire system must be replaced. An installation guide is attached to every replacement belt. Utilize the proper guide for your type of seat, and follow the instructions very closely. It is vitally important that all components be reinstalled in the same position as the original components that were removed and that the fasteners be torqued to specification. This will maintain the design integrity of the mounting points for the seat belt assembly. Contact your Authorized Peterbilt Dealer if you have any questions concerning seat belt replacement.

Windshield Wipers/Washer

Check wiper blades annually or every 60,000 miles (96,000 km). Anco 18-inch (450mm) wiper blades are recommended.

The windshield washer tank is located inside the engine compartment below the radiator expansion tank. See “Washer Reservoir” on page 201. Check the windshield washing fluid level weekly. If necessary, fill to top.

CAUTION: If the electric pump is operated for a long period (more than 15 seconds) with a dry reservoir, the pump rotor may be damaged.

Clean all inside and outside windows regularly. Use an alcohol-based cleaning solution and wipe dry with either a lint-free or a chamois cloth. Avoid running the wiper blades over a dry windshield to prevent scratching the glass. Spray on washer fluid first. A scratched windshield will reduce visibility.

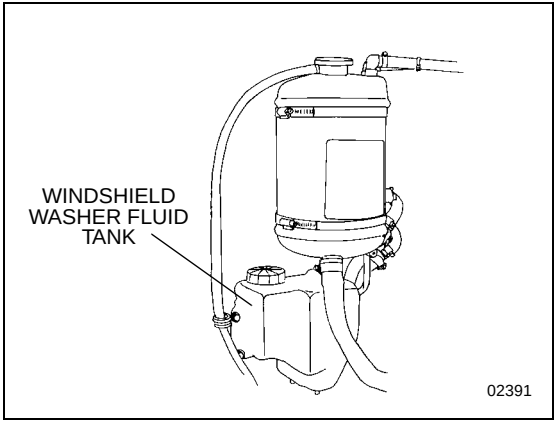

Windshield Washer Fluid Tank

Washer Reservoir

CAUTION: Do not use antifreeze or engine coolant in the windshield washer reservoir—damage to seals and other components will result.

Weekly: check reservoir water level, located in the engine compartment under the coolant expansion tank. If necessary, fill to the proper level.

TRANSMISSION AND CLUTCH

Introduction

Follow these steps to ensure parts are properly lubricated:

- Maintain oil level, check it regularly
- Change oil regularly
- Use the correct grade and type of oil
- Buy oil from a reputable dealer

All Transmissions

Oil Change: Drain and replace according to Table 1, “Recommended Maintenance Intervals,” Page 154 and the Transmission Service Manual. Use the recommended types of oil as specified in the *Operation and Service Manual* (included with vehicle). Select the appropriate lubricant for the expected ambient (outside air) temperatures.

Transmission Lubricants

CAUTION: When adding oil, types and brands of oil should not be intermixed because of possible incompatibility, which could decrease the effectiveness of the lubrication or cause component failure.

Manual Transmissions

Manual transmissions are designed so that the internal parts operate in a bath of oil circulated by the motion of gears and shafts.

Service Intervals

For recommended types and brands of all lubricants, see the transmission manufacturer's *Service Manual* and Table 1, “Recommended Maintenance Intervals,” Page 154.

Table 9 Transmission Lubrication — Manual transmissions

MODEL	RECOMMENDED LUBRICANT (See Note)	AMBIENT TEMPERATURE RANGE		VISCOSITY (SAE)
		DEG. C	DEG. F	
Eaton-Fuller	HD engine oil: API CE or CF-4.	Above -12	Above +10	50
	Synthetic oil: Chevron RPM Synthetic Transmission Fluid, or equal, meeting MIL-L-2104D and Eaton PS-081 specifications.	Above -40	Above -40	50
NOTE: Do not use multi-viscosity or EP (extreme pressure) gear oil (e.g., axle oils) in transmissions. Multi-viscosity or EP oils may damage components.				

Standard Transmission Oil Level

NOTE: The vehicle must be parked on level ground.

- Maintain the oil level and check it regularly. Oil should be up to bottom of filler plug hole.

Clutch System Introduction

Free pedal is the distance the clutch pedal moves by applying only slight pressure. During free pedal the release yoke in the transmission moves until its bearing pads contact the release bearing. This movement of the release yoke is called free travel. Thus, free pedal and free travel are directly related to each other.

As the clutch pedal is depressed further, with harder pressure, the release yoke moves the release bearing away from the engine. This causes the clutch plate to release from the driven disks in the clutch. This is called release travel. And finally, on 9-, 10-, and 11-speed transmissions, as the pedal is pushed to the last 1/2 to 1 inch of travel, the release bearing contacts and engages the clutch brake. This is called clutch brake squeeze. When the clutch wears, the release bearing gradually moves toward the engine, decreasing free pedal and free travel. When all free pedal and free travel are gone, the clutch requires adjustment.

The clutch is adjusted by turning an adjustment ring that is built into the clutch. When the ring is turned, the release bearing moves back toward the transmission, restoring free pedal and clutch free travel. Under normal clutch wear this is the only adjustment needed. Do not attempt to change any other component. See the **Medium Duty Maintenance Manual** for details.

Clutch Adjustment — Normal Wear

Clutch pedal free travel is usually 1 3/4 in. to 2 in. (34 to 51 mm). This should be your guide for determining whether your truck needs clutch adjustment. Also, if it becomes increasingly difficult to shift into gears, or the truck creeps with the clutch pedal depressed, your clutch needs adjustment. See the **Medium Duty Maintenance Manual** for the proper adjustment procedures.

Some vehicles have automatic clutch adjustment. If yours doesn't have this feature, adjustment will have to be done by a trained certified mechanic. Have the adjustment done before clutch pedal free travel is reduced to the minimum allowable 1/2 in. (13mm).

Clutch Linkage

The Medium Duty vehicle is equipped with a rod and lever mechanical clutch linkage. Lubricate each pivot point on the clutch linkage.

Automatic Transmissions

Service Intervals

Check daily with engine idling. See Table 1, “Recommended Maintenance Intervals,” Page 154 for service intervals.

Automatic Transmission Oil Level

NOTE: The vehicle must be parked on level ground.

Maintain the oil level and check it daily. Oil should be up to the “HOT” mark on the dipstick when (1) the engine is running, (2) the transmission is at operating temperature, and (3) the transmission is in Neutral. See the Transmission Operator's Manual in the glove compartment for more information on checking the transmission oil level.

Table 10 Transmission Lubrication — Automatic transmissions

MODEL	RECOMMENDED LUBRICANTS	AMBIENT TEMPERATURE RANGE		VISCOSITY (SAE)
		DEG. C	DEG. F	
ALLISON	TranSynd (Castrol)	Above -23	Above -10	10W

STEERING AND DRIVELINE

Power Steering

Oil (under low pressure) provides the power to operate the steering gear. It also serves to lubricate moving parts and remove heat. A loss of steering efficiency will occur if too much heat builds up in the system.

WARNING! Do not operate the vehicle if the steering system is not working properly. You could lose control of your vehicle if the steering system is not in good working condition, which could result in an accident causing death or injury. For driving safety, visually check the steering gear and components. Frequent checks are important for driving safety, especially after traveling over rough roads.

NOTE: If the steering feels unbalanced from side-to-side while turning, check for the following possible causes:

- *unequal tire pressures*
- *vehicle overloaded or unevenly distributed load*
- *wheels out of alignment*
- *wheel bearings improperly adjusted*

If you cannot correct the problem, check with an Authorized Service Center.

The Medium Duty vehicle is equipped with integral power steering. The system includes an engine-driven fluid pump, a fluid reservoir, the steering gear, and connecting hoses. Because of the hydraulic power assist, little effort is required to turn the steering wheel. When no input is applied through the steering wheel, the steering gear will return to the neutral position. If, for any reason, the power assist system goes out, steering the vehicle is still possible—yet it will require much greater effort.

Visually check the following parts:

- Crosstube: Is it straight?
- Draglink tube clamp: Check for looseness or interference.
- Ball joints and steering U–joints: Check for looseness.
- Steering wheel for excessive free-play. Check the simplest probable causes first:
  - unequal tire pressures
  - loose cap nuts
  - bent crosstube
  - lack of lubrication

If these checks do not reveal the problem, or if you correct them and still have a steering problem, take your truck to an authorized Peterbilt Dealer for evaluation.

Fluid Level and Refill

Have the power steering fluid and filters changed at an Authorized Service Center.

- Check and completely change the fluid level according to Table 1, “Recommended Maintenance Intervals,” Page 154. Use the following procedure:

NOTE: Before removing reservoir cover, wipe outside of cover so that no dirt can fall into the reservoir.

The power steering fluid reservoir is attached to an underhood bracket on the LH side of the engine.

- Maximum / Minimum level is marked on the reservoir. These same levels are also marked by lines on the dipstick in the reservoir.
- There are two ways to check whether the power steering fluid is at its proper level. Both checks are with the engine NOT running.

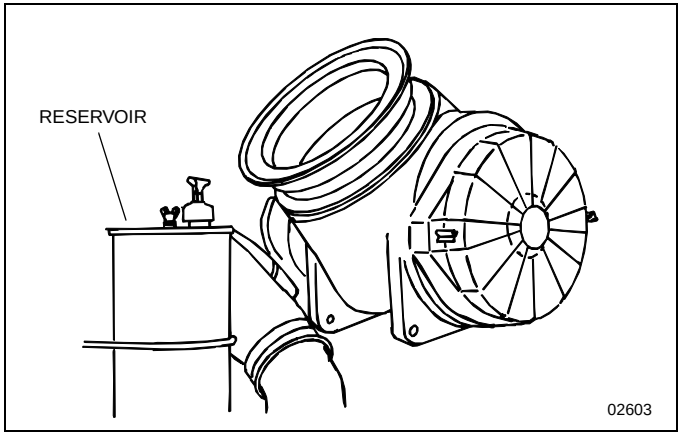

Power Steering Fluid Reservoir

1. If you check the fluid with the engine and steering system COLD the fluid level should be at/or above the Minimum indicator level and should generally not exceed the middle point between Maximum and Minimum level indicators.
2. If you check the fluid with the engine and steering system WARM the fluid should NOT exceed the Maximum level indicator and should generally not drop below the middle point between the Maximum and Minimum level indicators.

Fluid Refill

Use Automatic Transmission Fluid (ATF) Type E or F or Dexron® II. For other approved brands and types of fluid, see the **Medium Duty Maintenance Manual**.

Steering Driveline

- Torque on U–joint pinch bolt and nut 45–55 lb. ft. (61-75 N.m.), lubricated.
- Torque on Pitman arm clamp bolt and nut: 180-210 lb. ft. (244-285 N.m.), lubricated.

Driveshaft and U-Joints

The slip joints and universal joints of the drive shaft should be lubricated according to Table 1, “Recommended Maintenance Intervals,” Page 154.

- Use a good quality lithium-soap-base or equivalent extreme pressure (E.P.) grease: NLGI Grade 2.

For “Towing Guidelines” and “Returning a Towed Vehicle to Service” see “Vehicle Recovery Guidelines” on page 109.

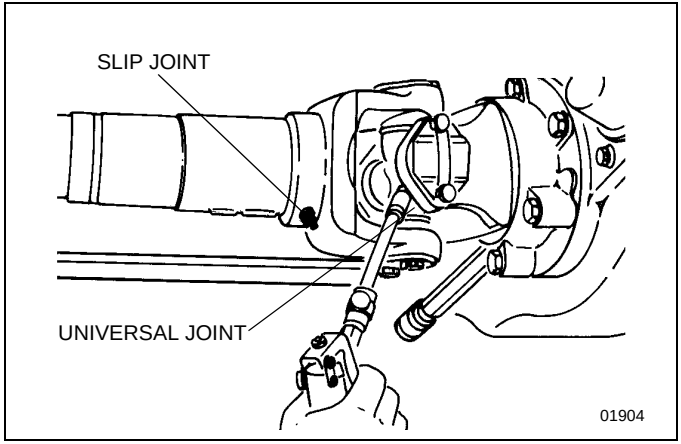

Driveshaft Lubrication

WARNING! Improper lubrication of U–joints can cause them to fail prematurely. The driveshaft could separate from the vehicle and result in an accident causing death, injury or vehicle damage. Make sure lubricant is purged at all four ends of each U–joint and loosen caps if necessary. Also, regularly inspect U–joints for excessive wear or movement, and repair or replace as necessary.

FRONT AXLE AND SUSPENSION

Inspection

For all vehicles, mandatory maintenance procedures include retightening all U–bolts and inspecting the suspension for loose fasteners, abnormal wear, or damage. However, even with proper maintenance, the service life of leaf springs is affected by many factors, such as: fatigue, vehicle gross weight, type of load, road conditions, and vehicle speed.

- Check for cracks, wear marks, splits, or other
- ects on the surface of the spring. Defective parts must be replaced. Because repaired springs cannot be fully restored to their original service life, replace the complete assembly if cracks or other defects are detected.
- Visually inspect shock absorbers and rubber bushings. See the **Medium Duty Maintenance Manual** for further information on servicing the front suspension.

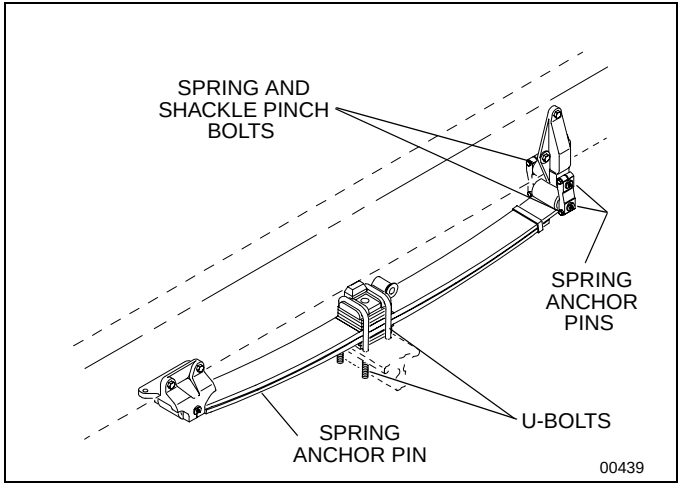

Front Suspension

Axle Lubrication

- Change bearing lubrication when seals are replaced, or brakes are relined. See Table 1, “Recommended Maintenance Intervals,” Page 154.

- Thoroughly clean hubs and bearings with solvent and a stiff bristle brush, then dry and inspect components for wear or damage. Re-lubricate with approved axle lubricant.

Kingpin Lubrication

- Lubricate with approved lubricant. Lubricate knuckle thrust bearings, knuckle pins, and tie rod ends. See Table 1, “Recommended Maintenance Intervals,” Page 154. Lack of lubrication causes premature wear and hard steering. Lubrication schedule may be shortened if necessary.

Suspension Lubrication

Each spring anchor pin has a grease fitting. Pressure lubricate spring pins according to Table 1, “Recommended Maintenance Intervals,” Page 154, using EP chassis lube with 12-Hydroxy Lithium Stearate Base NLGI-2 with 3% molybdenum additive (e.g. Mobil-grease EP or equal).

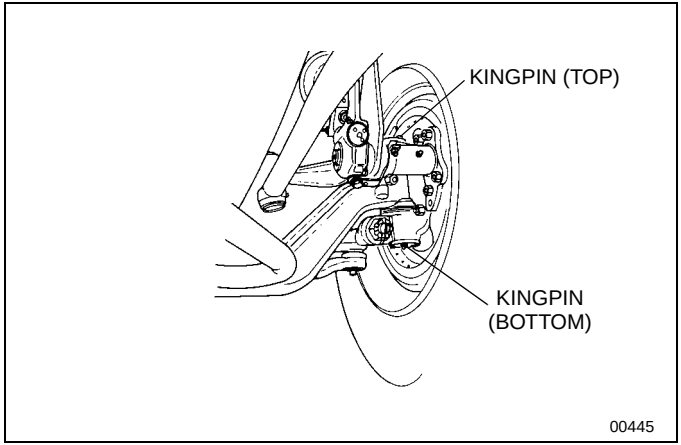

Front Axle

- At regular intervals, the spring leaves may be lubricated with a rust-inhibiting oil applied with a spray gun or brush.
- Lubricate all spring pins until grease flows out of both ends of the bushing. Look for signs of rust or water in the flushed grease. If a pin will not accept grease, it should be removed, cleaned, and inspected.

CAUTION: Do not spray the suspension with chemical products or mineral oil; it can cause damage to the bushings.

Torque

U–Bolts, Spring and Shackle Pinch Bolts

It is important that U–bolts remain tight. Severe use of your vehicle will cause them to loosen faster. But all vehicles need to have their U–bolts checked and tightened regularly. See “Maintenance Schedule” on page 157. Be sure someone with the proper training and the right tools checks and tightens the U–bolts on your Medium Duty vehicle.

New springs can “settle in” after service, relieving the tension on the U–bolts. Loose U–bolts can cause leaf spring breakage, axle misalignment, hard steering and abnormal tire wear.

- All vehicles should have suspension U–bolts tightened after the first 500 miles (800 km) of operation. Torque the front suspension U-bolts to 245-300 lb. ft. (333-408 N.m.)

WARNING! Do not operate the vehicle if the U–bolts are not properly tightened. Loose U–bolts do not properly secure the axle to the suspension. This could cause loss of vehicle control and an accident resulting in death or injury. Loose U–bolts can also cause uneven tire wear and poor alignment.

U–bolts are difficult to tighten unless you have the right equipment. If you cannot tighten them correctly yourself, be sure to have them checked and tightened regularly by an authorized mechanic.

WARNING! Do not replace U–bolts and nuts with common U–bolts or standard nuts. Use only U–bolts and nuts of SAE Grade 8 specification or better.These parts are critical to vehicle safety. If the wrong U–bolts or nuts are used, the axle could loosen or separate from the vehicle and cause an accident resulting in death or injury.

- At the same time U-bolts are tightened, re-torque the spring and shackle pinch bolts to 105 lb. ft. (142 N. m.)

REAR AXLE AND SUSPENSION

General Maintenance

WARNING! Do not work on the vehicle without the parking brake set and wheels chocked securely. If the vehicle is not secured to prevent uncontrolled vehicle movement, it could roll and cause death, personal injury or damage to the vehicle.

•Use wood blocks (4 in. X 4 in. or larger) against the front and rear surfaces of the tires. Be sure the vehicle cannot move.

Your vehicle's suspension, by design, requires a minimal amount of maintenance. However, suspensions in “over-the-road” operations require periodic inspection to ensure trouble-free performance.

WARNING! Do not operate the vehicle if the U–bolts are not properly tightened. Loose U–bolts do not properly secure the axle to the suspension. This could cause loss of vehicle control and an accident resulting in death or injury. Loose U–bolts can also cause uneven tire wear and poor alignment.

WARNING! Failure to maintain the specified torque values or to replace worn parts can cause component system failure, possibly resulting in an accident causing death or injury. Improperly tightened (loose) suspension U–bolts can lead to unsafe vehicle conditions, including: hard steering, axle misalignment, spring breakage or abnormal tire wear. See the Fastener Torque Tables for proper torque specifications.

CAUTION: Do not spray the suspension with chemical products or mineral oil; it can cause damage to the bushings.

*NOTE: Failure to follow these recommendations could void warranty. See the “**Medium Duty Maintenance Manual**” for further information on servicing the rear suspension.*

Visual Inspection

For all vehicles, mandatory maintenance procedures include retightening of U–bolts and complete inspection. However, even with proper maintenance, many factors affect the service life of springs and suspension components, such as: fatigue, vehicle gross weight, type of load, road conditions and vehicle speed.

It is important that U–bolts remain tight. Severe use of your vehicle can cause them to loosen faster. But all vehicles need to have their U–bolts checked and tightened regularly. Be sure someone with the proper training and the right tools checks and tightens the U–bolts on your Medium Duty vehicle.

New springs “settle-in” after the vehicle's initial service, causing the U–bolts to become loose. After the first 500 miles (800 km) of operation, inspect the suspension periodically, as noted below:

- Visually check for loose or missing fasteners, cracks in hanger or axle connection brackets.
- Check that springs are centered in hangers and in good condition.
- Check for cracks, wear marks, splits, or other defects on the surface of the spring.
- Replace defective parts. Because repaired springs cannot be fully restored to their original service life, replace the complete assembly if cracks or other defects are detected.
- After replacement of any part or discovery of loose components, check the torque of all fasteners.

Rear Axle Lubrication

- Check oil level with the vehicle parked on level ground and the fluid warm. The level should be even with the bottom of the filler hole.

CAUTION: Do not mix lubricants of different grades; although, mixing different brands of the same grade lubricant (meeting MIL–L–2105–C), is acceptable. Lubricants of different grades are not compatible and could damage the axle.

NOTE: In all cases, the lubricant supplier assumes full responsibility for the performance of their product, and for product and patent liability.

Initial Change: Change lubricant in new or rebuilt axle assemblies within the first 3,000 to 5,000 miles (4800 to 8000 km). For recommended types and brands of lubricants, contact your Peterbilt Dealer or Authorized Service Center. See the **Medium Duty Maintenance Manual** and the axle manufacturer's Service Manual for further information on servicing drive axles.

Table 11 Drive Axle Lubrication

MODEL	RECOMMENDED LUBRICANTS	AMBIENT TEMPERATURE RANGE		VISCOSITY (SAE)
		° C	° F	
EATON, ROCKWELL	EP gear oil, MIL-L-2105D, API GL-5.	-26 to +38	-15 to +100	80W-90
	Synthetic Lubricant: Chevron RPM Synthetic Gear Lubricant, or equal, meeting MIL-L-2105D and Eaton PS-037 specification.	-40 to +38	-40 to +100	75W-90

- No initial drain is required on Eaton axles that are factory filled with an Eaton-approved synthetic lubricant.
- Petroleum-based lubricants must be drained within the first 5,000 miles (8000 km) if converting to an approved synthetic lubricant.

See Table 1, “Recommended Maintenance Intervals,” Page 154 for standard rear axle service intervals.

- Use petroleum-based lubricants meeting MIL–L–2105–C/D grade specifications or approved synthetic lubrication. Do not use oil additives.

To change axle lubricant:

1. Park the vehicle on level ground with the axle lubricant at normal operating temperature.
2. Remove filler (1) and drain plug (2).
3. Completely drain the oil and clean the drain plug.

CAUTION: Do not overfill axles.

4. Reinstall the drain plug (2) and refill with recommended oil up to the bottom of filler plug hole.
5. Reinstall filler plug (1).

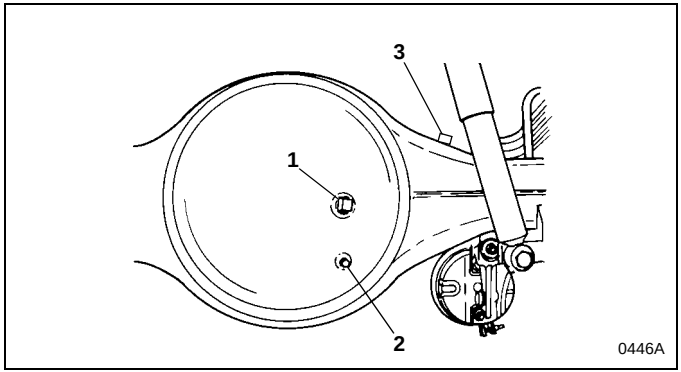

Rear Axle Filler and Drain Holes and Breather Vent

Axle Housing Breather Vent

- Check and clean the axle housing breather vent (3) at each oil level check.

Rear Suspension Fasteners

Continual road shock and load stresses may force the rear axles out of alignment. If you detect rapid tire wear on the rear axles, you may have misaligned axles. Have your rear axle alignment checked and adjusted by a Peterbilt Dealer or Authorized Service Center.

Every 5,000 miles (8000 km) or 180 days, whichever occurs first and thereafter, retorque all suspension fasteners to recommended specifications. See the Fastener Torque Table for proper torque specifications.

Load the vehicle to its normal gross weight before tightening U-bolts. Loading the vehicle ensures proper adjustment of the U-bolt and spring assembly.

U–bolts are difficult to tighten unless you have the right equipment. If you cannot tighten them correctly yourself, be sure to have them checked and tightened regularly by an authorized mechanic.

WARNING! Do not replace U–bolts and nuts with common U–bolts or standard nuts. These parts are critical to vehicle safety. If the wrong U–bolts or nuts are used, the axle could loosen or separate from the vehicle and cause an accident resulting in death or injury. Use only U–bolts and nuts of SAE Grade 8 specification or better.

WARNING! Do not operate the vehicle if the U–bolts are not properly tightened. Loose U–bolts do not properly secure the axle to the suspension. This could cause loss of vehicle control and an accident resulting in death or injury. Loose U–bolts can also cause uneven tire wear and poor alignment.

Suspension alignment should be checked when any one of the following conditions exist:

- Discovery of loose suspension fasteners (Any torque below the recommended torque value.).
- Discovery of elongated holes in a suspension component.
- Bushing replacement.
- Excessive or abnormal tire wear.

NOTE: To ensure an accurate torque reading, use properly maintained and calibrated torque wrenches.

Grade 5 Capscrew Torque Specifications		
Capscrew Body Size (inches-thread)	Torque	
	Lb. ft.	N.m.
1/4-20	6—9	8—12
-28	7—10	9.5—14
5/16-18	13—18	18—24
-24	14—20	19—27
3/8-16	22—32	30—43
-24	25—40	34—54
7/16-14	35—50	47—68
-20	39—56	53—76
1/2-13	54—77	73—104
-20	58—87	79—118
9/16-12	78—111	105—151
-18	87—124	118—168
5/8-11	108—154	147—209
-18	122—174	166—236
3/4-10	192—273	260—370
-16	214—305	290—414
7/8-9	309—441	419—598
-14	341—486	462—659
1 -8	464—662	629—898
1-12	508—724	689—982

Grade 8 Capscrew Torque Specifications		
Capscrew Body Size (inches-thread)	Torque	
	Lb. ft.	N.m.
1/4-20	9—12	12—16
-28	10—14	14—19
5/16-18	18—25	24—34
-24	20—28	27—38
3/8-16	31—44	42—60
-24	35—50	47—68
7/16-14	50—71	68—96
-20	56—80	53—108
1/2-13	76—109	103—149
-20	86—123	117—167
9/16-12	110—158	149—214
-18	123—176	167—239
5/8-11	153—218	208—296
-18	173—247	235—335
3/4-10	271—386	367—523
-16	303—431	411—583
7/8-9	437—624	593—846
-14	482—589	654—799
1 -8	656—935	889—1268
1-12	718—1023	973—1386

The torque values in the previous tables are based on the use of clean and dry threads.

For standard capscrews:

1. Always use the torque values listed the capscrew table.
2. Reduce torque by 10% when engine oil is used as a lubricant.
3. Reduce torque by 20% if new plated capscrews are used.

FRAME AND FIFTH WHEEL

Engine Painting

Do not electrostatically paint electronically controlled engines or vehicles with these engines.

Frame Rails

WARNING! Do not cut, splice or weld on frame rails or drill through the top or bottom flanges. These operations could affect frame rail strength leading to a failure resulting in an accident causing death or injury. Always leave frame repairs to your* Peterbilt *Dealer.

Fifth Wheel Maintenance

Proper preventive maintenance is essential to trouble-free service and safe operation of the fifth wheel.

Every 2 Months or 25,000 Miles:

- Refer to specific manufacturer's literature for any special instructions.
- Steam clean the fifth wheel.
- Check lock guard operation using a commercial lock tester.
- Clean and oil all moving parts.
- Lubricate the following parts with a lithium-base grease.
  - Lock mechanism
  - All grease fittings (especially those which grease the top surface of the fifth wheel).
- Check for missing or loose nuts and bolts in the fifth wheel and mounting brackets. Retighten loose bolts to correct torque. Replace missing or damaged bolts.

Every 6 Months or 50,000 Miles:

- Refer to specific manufacturer's literature for any special instructions.
- Remove fifth wheel from vehicle. Refer to the **Medium Duty Maintenance Manual**, “Fifth Wheel Removal.”
- Steam clean the fifth wheel and mounting brackets.
- Check all moving parts for excessive wear or damage. Replace all worn or broken parts.
- Complete two-month service procedure.
- Install fifth wheel. Refer to the **Medium Duty Maintenance Manual**, “Fifth Wheel Installation.”

Sliding Fifth Wheel

- Lubricate bearing surface of support bracket through the grease fittings on the side of the fifth wheel plate. Use a water resistant lithium-base grease.

NOTE: The plate must be lifted up slightly to relieve the weight of the bracket while applying grease.

NOISE AND EMISSION CONTROL

Noise Emission Warranty

Peterbilt Motors Company warrants to the first person who purchases this vehicle (for purposes other than resale) and to each subsequent purchaser: that this vehicle, as manufactured by Peterbilt Motors Company, was designed, built and equipped to conform, at the time it left Peterbilt's control, with all applicable U.S. EPA Noise Control Regulations.

This warranty covers this vehicle as designed, built and equipped by Peterbilt, and is not limited to any particular part, component or system of the vehicle manufactured by Peterbilt. Defects in design, assembly or in any part, component or system of the vehicle as manufactured by Peterbilt, which at the time it left Peterbilt's control caused noise emissions to exceed Federal standards, are covered by this warranty for the life of the vehicle.

Tampering with Noise Control System

Federal law prohibits the following acts or the causing thereof:

1. The removal or rendering inoperative by any person other than for purposes of maintenance, repair, or replacement, of any device or element of design incorporated into any new vehicle for the purpose of noise control prior to its sale or delivery to the ultimate purchaser or while it is in use, or
2. The use of the vehicle after such device or element of design has been removed or rendered inoperative by any person.

Among those acts presumed to constitute tampering are the acts listed below:

Air Intake System

- Removing or rendering inoperative the air cleaner/silencers or intake piping.

Engine Cooling System

- Removing or rendering inoperative the fan clutch.
- Removing the fan shroud.

Engine

- Removing or rendering engine speed governor inoperative so as to allow engine speed to exceed manufacturer's specifications.
- Modifying ECU parameters.

Exhaust System

- Removing or rendering inoperative exhaust system components.

Inspection and Maintenance Instructions

The following instructions are based on inspection of the noise control system at regular intervals.

If, during periodic inspection and maintenance of other systems and components, it is found that parts of the noise control system require attention, we recommend that those parts be inspected at more frequent intervals to assure adequate maintenance and performance.

Air Intake System

- Do all checks and maintenance procedures listed in this manual under Engine Air Intake System and Air Cleaner. See “Air Intake System” on page 201.
- Check the induction tubing, elbow connections, clamps, brackets, and fasteners for deterioration, cracks, and security.
- If you find an air leak anywhere between the air cleaner and the engine, repair that leak immediately.

CAUTION: Air leaks cause excessive noise and may result in serious damage to the engine. If you do not repair them the engine damage will not be covered by your warranty. Repair all air leaks as soon as you find them.

Exhaust System

- Check for exhaust leaks, which would indicate a leaking manifold gasket; replace gasket if necessary.
- Check cap screws for tightness, including those at the flanges. Refer to the engine manufacturer's service manual for proper tightening sequence and torque values.

Joints and Clamps

- Check for leaks, and tighten as necessary. Check for deterioration or dents in pipes and clamps which could allow exhaust to escape.

Piping

- Check exhaust piping for rust, corrosion, or damage. Replace deteriorated piping before holes appear. If piping is perforated at any point, temporary patching or lagging is acceptable until you can have permanent repairs made. On turbocharged engines, check joints at flanges and mounting brackets for tightness.

Mufflers

NOTE: Use only an exact replacement muffler in exhaust systems. Certain mufflers contain integral catalytic converters essential for compliance with EPA emission standards. Using a noncompliant muffler as a replacement could violate these standards and also void the emission system's warranty.

- Check muffler, clamps, and mounting brackets. Tighten if necessary. Inspect muffler for signs of rust or corrosion.
- Check internal baffling. You can do this by listening for rattling sounds while tapping the muffler with a rubber mallet or revving the engine up and down through its normal operating range.

Exhaust Tail Pipe

- Check the mounting. Tighten as necessary. The miter cut at the tip of the pipe must be facing the rear of the vehicle. Do not modify the end of the pipe in any way.

Engine Fan and Shroud

WARNING! Do not work on the fan with the engine running. The engine fan can engage at any time without warning. Anyone near the fan when it turns on could be killed or seriously injured. Before turning on the ignition, be sure that no one is near the fan.

- Check all fasteners for tightness. Check for stress cracks in the shroud. Make sure the shroud is adjusted so that it does not touch the fan blades.
- Check to verify that the fan is disengaged (not turning) with the engine running at normal operating temperatures (from cold to the point that the fan engages).
- Check fan blade mounting bolts. Inspect fan blades to be sure they are not cracked or bent. If problems exist, refer to the Cooling System section in the **Medium Duty Maintenance Manual** for detailed maintenance instructions.

Transmission and Driveline

- Substituting a different main transmission or drive line components, other than design-specified units, may result in increased vehicle noise emission.

Maintenance Log

To ensure your Medium Duty vehicle's noise control requirements are maintained, record maintenance checks. Use the following log sheet (see Table 12) and retain copies of documents regarding maintenance services performed and parts replaced on the vehicle.

Table 12 Maintenance Log

Date of Service	Mileage	Service Performed	Service Center Name and Address

Table 12 Maintenance Log

Table 12 Maintenance Log

CONSUMER INFORMATION AND VEHICLE IDENTIFICATION

Reporting Safety Defects

If you believe that your vehicle has a defect which could cause a crash or could cause injury or death, you should immediately inform the National Highway Traffic Safety Administration (NHTSA) in addition to notifying Peterbilt Motors Company.

If NHTSA receives similar complaints, it may open an investigation, and if it finds that a safety defect exists in a group of vehicles, it may order a recall and remedy campaign. However, NHTSA cannot get involved in individual problems between you, your Peterbilt Dealer, and Peterbilt Motors Company.

To contact NHTSA, you may either call the Auto Safety Hotline toll-free at 1–800–424–9393 (366–0123 in Washington, D.C.) or write to: Administrator, NHTSA, 400 Seventh Street, S.W., Washington, D.C. 20590. You can also get other information about auto safety from the Hotline.

Canadian Consumer Information

Canadian customers who wish to report a safety-related defect to Transport Canada, Defect Investigations and Recalls, may telephone the toll free hotline 1-680-333-0510, or cantact Transport Canada by mail at:

Transport Canada, ASFAD
Place de Ville Tower C
330 Sparks Street
Ottawa ON KIA 0N5

For additional road safety information, please visit the Road Safety website at: http://www.tc.gc.ca/roadsafety/menu.htm

California Proposition 65 Warning

Diesel engine exhaust and some of its constituents are known to the State of California to cause cancer, birth defects, and other reproductive harm. Other chemicals in this vehicle are also known to the State of California to cause cancer, birth defects or other reproductive harm. Battery posts, terminals, and related accessories contain lead and lead compounds, chemicals known to the State of California to cause cancer and reproductive harm. Wash hands after handling.

Vehicle Identification

All Peterbilt vehicles are identified by a 17–digit Vehicle Identification Number (VIN). This unique numeral and letter combination identifies the manufacturer, the model year it was built, and other vehicle attributes. The VIN is in compliance with 49CFR565, Code of Federal Regulations. As an example, the model year and assembly plant are designated by a letter in the tenth and eleventh character positions (see 4 and 5 below).

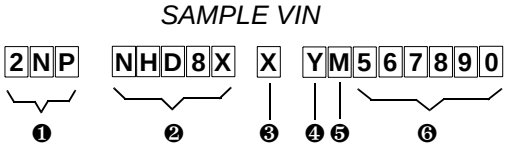

❶ Manufacturer Identifier
❷ Vehicle Attributes
❸ Check Digit
❹ Model Year
❺ Assembly Plant
❻ Serial/Chassis Number

Vehicle Identification Number (VIN)

- The Chassis/Serial Number refers to the last seven characters of the VIN, including the assembly plant designator (eleventh character position) and a six-digit serial number. This number will allow your Peterbilt Dealer to identify your vehicle. You will be asked for this number when you bring your vehicle in for service.

Table 13 Model Year Letter Designations

CODE	YEAR
2	2002
3	2003
4	2004
5	2005
6	2006

VIN Location

The VIN is marked on the Incomplete Vehicle Certification Label (on trucks) or on the Tire, Rim, and Weight Rating Data Label (on tractors). Both labels are located on the driver's door frame.

Chassis Number Locations

The chassis/serial number is shown in three places:

- Right frame rail, top flange, about 3 ft. from the front end
- Components and Weights Label on driver's door frame
- Tire and Rim Info Label on driver's door frame

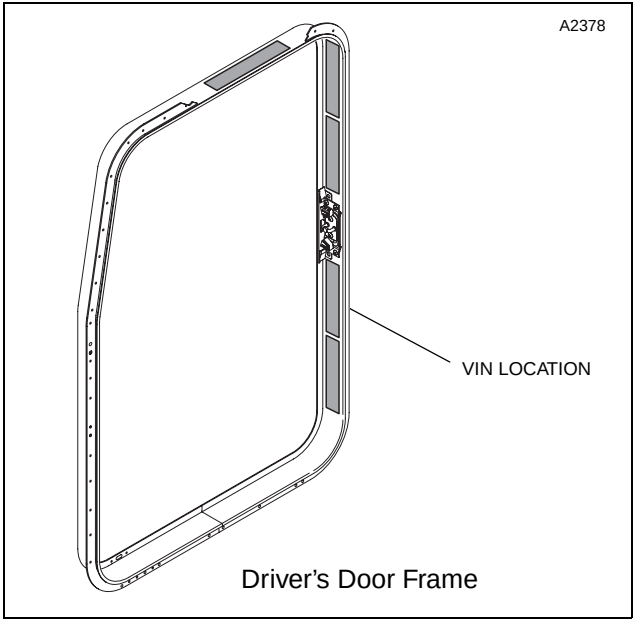

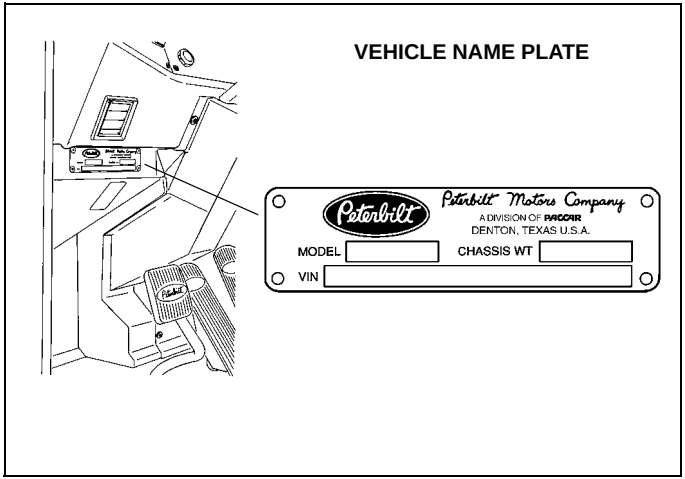

Complete Vehicle Certification Label

The Complete Vehicle Certification label certifies that the vehicle complies with all applicable Federal Motor Vehicle Safety Standards. It is located on the driver's side door frame and contains the following information:

- Date of manufacture
- GVWR — Gross Vehicle Weight Rating
- GAWR FRONT and REAR — Gross Axle Weight Ratings for Front and Rear Axle
- TIRE/RIM SIZES AND INFLATION PRESSURES — Tire/Rim Sizes and Cold Pressure Minimums
- VIN — Vehicle Identification Number

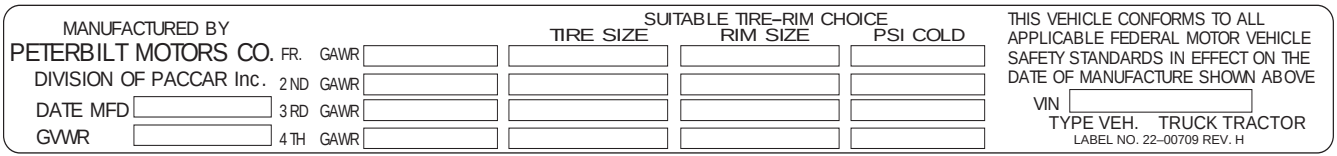

COMPLETE VEHICLE CERTIFICATION LABEL — SAMPLE

WARNING! Do not exceed the specified load rating. Overloading can result in loss of vehicle control and an accident involving death or personal injury, either by causing component failures or by affecting vehicle handling. Exceeding load ratings can also shorten the service life of the vehicle.

NOTE: GVW is the TOTAL SCALE WEIGHT the vehicle is designed to carry. This includes the weight of the empty vehicle, loading platform, occupants, fuel, and any load.

The tire size and rim size (and the cold inflation pressure to match that combination) listed under “Suitable Tire-Rim Choice” on the Certification Label are only representative examples for the specified axle ratings. These components may not be the ones actually installed on the axle, because there are many other appropriate combinations.

The “PSI Cold” inflation pressure on the Certification Label is for the tire-rim combination in the example, and may not be the same as the recommended inflation pressure for the actual tires on that axle.

Check the manufacturer's product information for the tires and rims actually on each axle to obtain recommended tire inflation pressure for specific applications.

Incomplete Vehicle Certification Label

The Incomplete Vehicle Certification Label (for trucks) is located on the driver’s door frame. It contains the following information:

- DATE OF MANUFACTURE
- VIN — Vehicle Identification Number
- LISTING OF APPLICABLE FEDERAL MOTOR VEHICLE SAFETY STANDARDS

Noise Emission Label

The Noise Emission Label is in the map compartment. It contains information regarding U.S. noise emission regulations and date of manufacture.

Paint Data Label

The Paint Data Label contains the paint colors used by the factory to paint your vehicle. It lists frame, wheels, cab interior and exterior colors. This label is located in the map compartment.

Federal Safety Standard Certification Label

The NHTSA regulations require a label certifying compliance with Federal Safety Standard, for United States and U.S. Territories, be affixed to each motor vehicle and prescribe where such label may be located. This certification label, which indicates the date of manufacture and other pertinent information, is located on the driver's side door frame.

Component Identification

Each of the major components on your vehicle has an identification label or tag. For easy reference, record component numbers such as, model, serial, and assembly number. See the "Vehicle Component Register" (last page of this manual).

Engine: For further information, please refer to the *Engine Operation and Maintenance Manual*.

Clutch: Enclosed in clutch housing. Location depends on manufacturer.

Transmission: For both manual and automatic transmissions, the identification number is stamped on a tag affixed to the right rear side of the transmission case.

Steer Axle: The front axle serial number is stamped on a plate located on the center of the axle beam.

Drive Axles: The drive axle numbering system includes three labels or stamps:

1. Axle Specification Number, usually stamped on the right rear side of the axle housing. This number identifies the complete axle.
2. Axle Housing Number Tag, usually located on the left forward side of the housing arm. This tag identifies the axle housing.
3. Axle Differential Carrier Identification, usually located on the top side of the differential carrier. The following information is either stamped, or marked with a metal tag: Model No., Production Assembly No., Serial No., Gear Ratio, and Part Number.

A

Accessories 72
Air conditioner 217
  refrigerant 151
Air Dryer 200
Air filter 202
Air horns 49
Air intake 201, 257
Air leaks 199
Air pressure gauge 198
Air suspension
  deflated air spring 137
  switch, operation 133
Air tanks 87, 119, 147
Alternator precautions 227
Anti-lock brakes 112, 115, 125
Automatic transmission 88, 103, 242
  fluid 245
  oil level 242
Axle weight rating 84, 85, 132, 267

B

Ball bearing grease 168
Ball seat mounted wheels 213
Battery
  access 220
  care 221
  compartment cover 10
  electrolyte 225
  recharging 224, 226
  slow battery charging 226
Belts, seat 75, 78
Block heater 93, 182
Bobtail brake 109, 117
Brake
  adjustment 186
  air pressure gauge 198
  checks and adjustments 185
  components 119
  compounding 120
  emergency braking 112
  hand valve, trailer 116
  linings 186
  lubrication 185
  operation 105
  overheating 113
  parking 106
  proportion valve 105
  safety - front 111
  safety - rear 111
  safety - tractor/trailer 112
  system - safety and emergency 110, 194
  system - towing and spring brakes 142
  system checks 184, 188
  system malfunction 142
  system park - tractor 110
  trailer brake hand valve 116

trailer charge 110
treadle valve 119
Brake Fluid Check 189
Brake Fluid Reservoir 122
Brake Master Cylinder 122
Brake Warning Lamp 123

C

Cab
access 9
heater maintenance 216
maintenance 234
Calipers 191
Charge air cooler 202
Chassis
grease 168
number 264, 265
Cleaning the vehicle 230
Clutch 98
clutch adjustment 102
clutch brake 100
clutch travel 100
fan drive 259
operating the clutch 98
riding the clutch 102
Coasting 102
Component lubrication index 168
Compressed air reservoir 87, 119, 197
Compressor 119
Consumer information 263
Controls
Air Suspension Deflate Switch (Dump Valve) 54
Brakesaver 59
Cruise Control Switch 55
Dome Light Switch 53
Electric Horn 48
Fifth Wheel Lock (Slider Adjustment) Switch 62
Fog Lights Switch 54
Hazard Flasher 51
Heater-Air Conditioning Controls 66
ID and Clearance Lights Switch 53
Interaxle Differential Lock Switch 61
Mirror Heat Switch 58
Panel Light Dimmer 53
Parking Brake Valve and Trailer Air Supply Valve 63
Power Door Lock Switch 59
Power Mirror Switch 57
Power Window Switch 58
Tilt- Telescoping Steering Column 50
Trailer Brake Hand Valve 49
Two-Speed Rear Axle (Range) Switch 62
Windshield Wipers and Washers 47
Cooling system
conventional coolant 181
extended life coolant 179
temperature 41
topping up 180

Cruise control
operation 97
Cruise Control On/Off 17
Cruise Control Select 17

D

Daily operations 86
dash 16
dashboard 16
Daytime running lights 52
DEF 43, 176
DEF Gauge 17
Defogging/defrosting system 68
Deisel Exhaust Fluid 176
Department of transportation regulation 392.7 83
Diesel fuel 148
Dipstick 174
Disc brake pads 190
Disc brake rotors 191
Door Lock 9
Door lock 59, 231
Double check valve 119
Downshift 102
Driver Information Display 17
Driver's
checklist 83
daily and weekly checks 85, 86, 88
seat 74
tips 102
Driveshaft 245
lubrication 245
Driving
bobtail 116, 122
vehicle inspection 83
with deflated air springs 137
DRL 52
Dry tank 119
Dual air pressure gauge 92

E

Economical driving 130
Electrical system 220
alternator 227
batteries 220, 221, 225
battery charging 221, 224, 226
jumper cables 222
Electrolyte 225
Emergency
braking 112
equipment 85
Emission Components 176
Engine
belt tension 86, 221
block heater 93
compression 146
daily checks 86
fan switch 96
heater 182, 215, 218

identification 268
idling 95
lubrication 173
oil draining 174
oil level check 174
overspeed 131
retarder 117
rpm 147
service notes 173
starting procedure 89
stopping the engine 147
vital engine systems 94
warmup procedure 94
weekly checks 88
winterfronts 90
Engine Oil Pressure 17
Environmental protection 152
Ether 89
Exhaust
brake 117, 118
fumes 151

F

Fan blade 259
switch 96
Federal motor regulations 83, 85
Federal motor vehicle safety standards 5
Federal safety label 268
Fifth wheel 137
air controlled 138
fixed 138
lock switch 138
maintenance 255
sliding maintenance 256
Frame precautions 255
Front axle 247
front axle identification 268
Front brake system 105
Front suspension
u-bolts 246
Front Wheel Calipers 123
Fuel
filter 86, 175
filter draining 175
refueling 147
system 148
Fuel Level 17
Fuel Tank Inspection 176
Fuel tanks 176

G

Gauges and Displays 37
Drive Axle Temperature Gauge 45
Engine Oil Pressure Gauge 40
Fuel Gauge 42
Speedometer / Odometer 32, 37
Tachometer 38
Voltmeter 42

Warning Lights and Buzzers 19
Water Temperature Gauge 40
GAWR
defined 85
GAWR - gross axle weight rating 84, 132, 267
GCW - gross combination weight 84
Glove compartment 73
Governor 119
Grease index 168
GVWR
defined 84
GVWR - gross vehicle weight rating 84, 132, 207, 267

H

Hand brake 116, 146
Hazard flasher 124
Hazard Switch 17
Headllights 17
Heater and air conditioner
maintenance 216
High beam 46
Hood Latch and Tilt 11, 13
hood lock release cable 14
Hub piloted and ball seat parts 213
HVAC 18
Hydraulic Booster 123
Hydraulic Brakes 64, 86, 87, 121
Hydraulic Fluid Check 86
Hypoid gear oil 168

I

Idling the engine 95
Ignition 17
Incomplete vehicle certification label 267
Inter-axle differential 128

J

Jumper cables 222
use of 223

K

Keys 9
Keys and Locks
Ignition Switch 50
Komfort-Lok latch 81

L

Lap - shoulder belt 76
Lap belt 77
Load capacity 84
Load distribution 85
Load Lights 17
Low air pressure 137
Lubrication 185, 247
axle 246
brakes 185
chart 169
coasting 131
driveshaft 245
engine 173, 174

front axle 247
front suspension 247
idling 94, 95
power steering 243, 244
rear axle 250, 251, 252
transmission 239, 240
types and brands 167
wheel bearings 247

M

Maintenance
manual 6
schedule 153
Manual transmission 98
lubricants 239
oil level 240
shifting gears 98
master cylinder 121
Menu Control Switch 17
Modifications 151
Modulating valve 119
Muffler 259

N

NHTSA consumer information 263
Noise and emission control 257
air intake system 257
engine 258
exhaust system 258
fan drive 257
inspection and maintenance instructions 258

O

Off-road operation 5
Oil
draining 174
level 174
pressure gauge 91
Operating the engine 89
Operating the Rear/Drive Axle 127
Operating the transmission 98
Optional equipment 103, 117, 128
Overheated Brakes 124

P

Paint identification label 267
parked regeneration 56
Parking brake 106
adjustment 186
automatic 107
brake system, operation 63, 64, 106, 107, 111, 142
brake system, tractor/trailer operation 108
use 64, 90, 99, 100, 124, 146, 150, 223
valve 120
Parking Brake Burnishing 126
Parking Brake Component Inspection 191
Parking Brake Indicator 65
Parking Brake Lever 123
Parts catalog 6, 7, 152
Power steering 243

fluid level 244
fluid refill 245
lubrication 243
Primary Air Pressure 17

Q

Quick-release valve 120

R

Radio 18, 73
Rear axle 250
housing breather vent 252
identification 268
lubrication 250, 251, 252
oil change 250
oil level 250
Rear brake system 105
Rear suspension 249
fasteners (standard) 249
Rear Wheel Calipers 123
Recovering vehicles 140
Regeneration Switch 56
Relay valve 120
Release bearing wear 102
Repairs 6
Retarders
engine 117
rpm 94, 100, 147

S

Safe vehicle operation 83
Safety
belt adjustment 77
passengers 79
restraint belts 75
restraint tips 79, 82
signals 3
stands 151
tether belts 80
Safety precautions, maintenance 150
Seat adjustment 74
Seat belt system
damage and repair 82
guidelines 235
inspection 234
Komfort-Lok latch 81
replacement part 237
tether belts 237
Seats 74
Secondary Air Pressure 17
Serial number 265
Service Brake Components 190
Shackle pinch bolts 248
Shift pattern/diagram 98, 101
Shifting gears 90, 98, 100, 101, 102, 131, 132, 145
Shifting gears in a new vehicle 100
Shock absorber 246
Shop manuals 6
Shoulder belt 77

Single check valve 120
Slack adjusters 186
Speedometer 17
Spring brakes - manual release 142
Spring pins 247
Springs 246
Starting Procedure
  Cold Temperatures 92
  Normal Temperatures 90
Steering Column-Mounted Controls 45
Steering maintenance 243
Stopping procedures 146
Storage compartment 73
Suspension 249
  fasteners 249
  fasteners, torque 249

T

Tachometer 17, 131
Tether belts 80, 237
  adjustment 80
Tire
  chains 145
  inflation pressure 206
  inspection 205
  replacement, tread depth 214
Towing 142, 145
  vehicle recovery precautions 140
Tractor park 110
Tractor protection manifold 121
Trailer
  hand brake 116
  park 109
  spring brakes 112
  supply valve, red 120
Trailer ABS 114
Trailer park 108
Transmission
  automatic 103
  clutch 98
  identification 268
  lubrication 239, 240, 242
  maintenance 240
  manual 98
  operation 98
  service notes 239
Truck/tractor ABS 113
Turbocharger 147, 202

U

U-Bolt torque 248
Underbody maintenance 231
Underinflated tires 206

V

Vehicle
  driving 83
  loading 84
  weight rating 84, 132, 267

Vehicle inspections 83

W

WAIT TO START light 91
Warning Light Symbols table 22
Warranty 151, 153, 249, 257, 258
Water Temperature 17
Weekly operations 88
Weight rating 84, 132
Welding 227
Wet Brakes 124
Wet tank 119
Wheel and Tire Replacement, hydraulic brakes 215
Wheel bearing
  grease 168
  lubrication 246
wheel cylinders 121
Wheels and tires
  load rating 207
  overinflation 207
  proper inflation 206
  replacement 204, 214
  tightening sequence 208
  tire inspection 205
  tread depth 214
  underinflation 207
  wheel nut torque 209
Windshield
  washer reservoir 238
Windshield washer reservoir 47

https://truckmanualshub.com/

https://truckmanualshub.com/

Other Publications

Order either of the two publications shown below through your Peterbilt dealer. There is a charge for each. Allow four weeks for delivery.

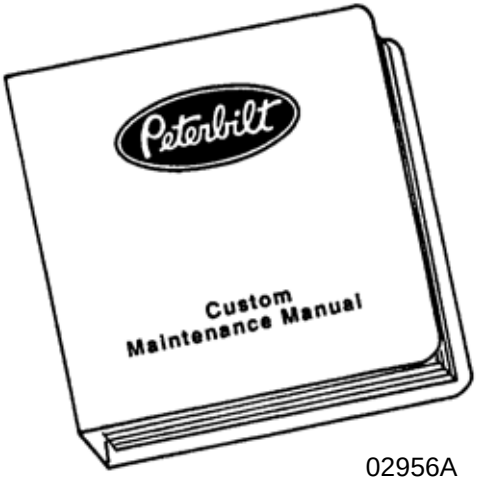

02956A

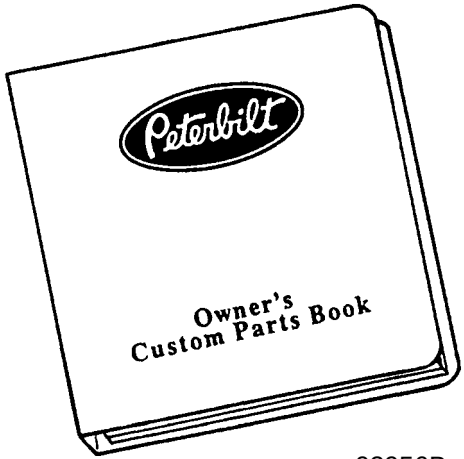

02956B

Custom Maintenance Manual

This manual contains both proprietary and supplier service information specifically compiled for the components on your vehicle.

The material in this manual is the same as that used by Peterbilt dealers. It includes inspection, maintenance, overhaul, and troubleshooting procedures.

Owner's Custom Parts Book

This book is a complete, unillustrated, computer-generated list of the parts used to custom-build your Peterbilt vehicle. Please provide your Chassis Serial Number when ordering.

https://truckmanualshub.com/

Y53-6027 05-09 Printed in the U.S.A. Peterbilt Motors Company, A PACCAR Company, P.O. Box 90208, Denton, Texas 76202