https://truckmanualshub.com/

# Operation Manual

# 1012

# 1013

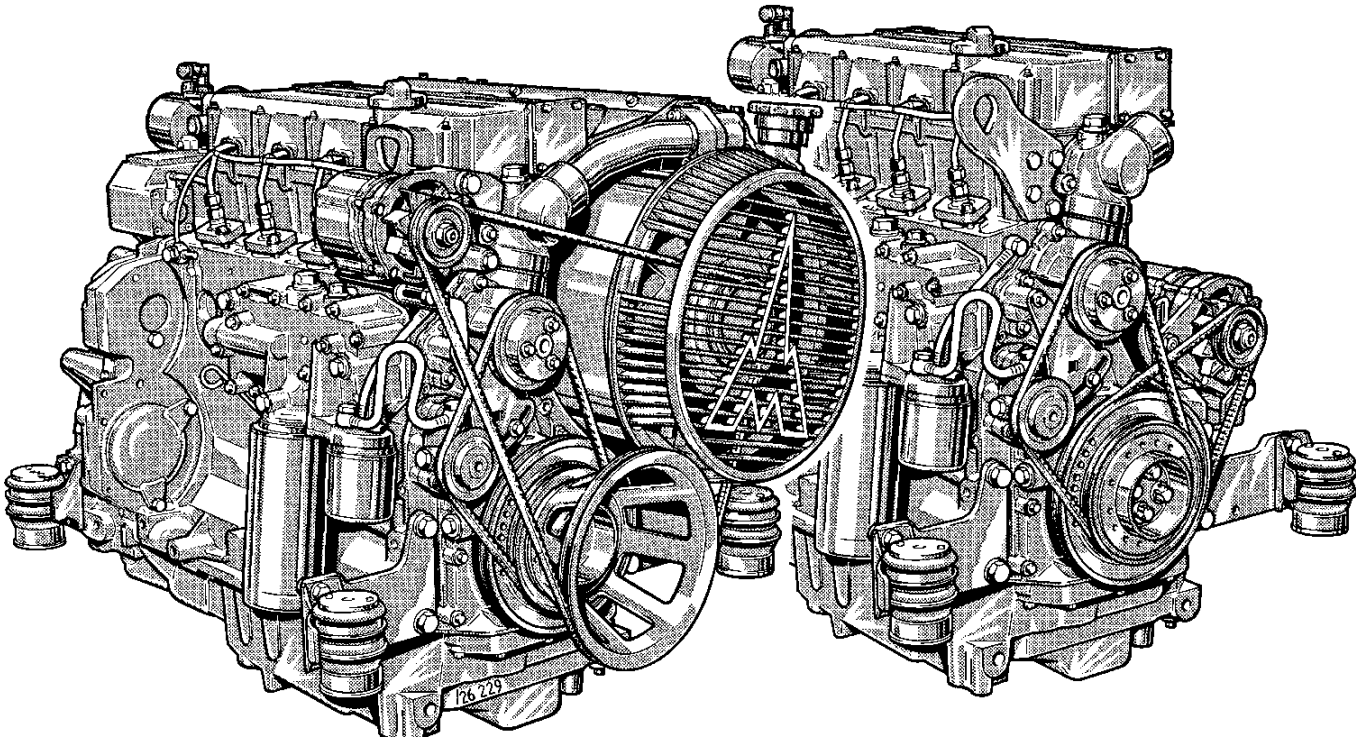


DEUTZ®

https://truckmanualshub.com/

- Please read and observe the information given in this Operation Manual. This will enable you to avoid accidents, preserve the manufacturer's warranty and maintain the engine in peak operating condition.

- This engine has been built exclusively for the application specified in the scope of supply, as described by the equipment manufacturer and is to be used only for the intended purpose. Any use exceeding that scope is considered to be contrary to the intended purpose. The manufacturer will not assume responsibility for any damage resulting therefrom. The risks involved are to be borne solely by the user.

- Use in accordance with the intended purpose also implies compliance with the conditions laid down by the manufacturer for operation, maintenance and servicing. The engine should only be operated by personnel trained in its use and the hazards involved.

- The relevant accident prevention guidelines and other generally accepted safety and industrial hygiene regulations must be observed.

- When the engine is running, there is a risk of injury through:
  - turning/hot components
  - engines with positive ignition
  - ignition systems (high electrical voltage)
  You must avoid contact at all times!

- Unauthorized engine modifications will invalidate any liability claims against the manufacturer for resultant damage.
  Manipulations of the injection and regulating system may also influence the performance of the engine, and its emissions. Adherence to legislation on pollution cannot be guaranteed under such conditions.

- Do not change, convert or adjust the cooling air intake area to the blower.
  The manufacturer shall not be held responsible for any damage which results from such work.

- When carrying out maintenance/repair operations on the engine, the use of DEUTZ original parts is prescribed. These are specially designed for your engine and guarantee perfect operation.
  Non-compliance results in the expiry of the warranty!

- Maintenance and cleaning of the engine should only be carried out when the engine is switched off and has cooled down.
  You must ensure that the electrical systems have been switched off and the ignition key has been removed.
  Accident prevention guidelines concerning electrical systems (e.g. VDE-0100/-0101/-0104/-0105 Electrical protective measures against dangerous touch voltage) are to be observed.
  When cleaning with fluids, all electrical components are to be covered impermeably.

https://truckmanualshub.com/

**Engine serial number:**

| | | | | | | |
|---|---|---|---|---|---|---|
| | | | | | | |

Please enter the engine serial number here. This number should be quoted when enquiring about customer service, repairs or spare parts (see Section 2.1).

Technical modifications required to improve our engines are reserved with regard to specification data and other technical information contained in this Operation Manual. No parts of this Manual may be reproduced in any form or by any means without our written approval.

# Operation Manual

# 1012
# 1013

0297 9682 en

DEUTZ®

https://truckmanualshub.com/

# Foreword

**Dear Customer,**

Liquid-cooled Deutz engines are designed for a large number of applications. Consequently, a wide range of variants are offered to meet the requirements of specific cases.

Your engine is appropriately equipped for the installation concerned, which means that not all of the components described in this Operation Manual are necessarily mounted on your engine.

We have endeavoured to highlight any differences so that you will be able to locate the operating and maintenance instructions relevant to your engine quickly and easily.

Please read this Manual before starting your engine, and always observe the operating and maintenance instructions.

We are available to help with any additional enquiries

Sincerely,

**DEUTZ AG**

https://truckmanualshub.com/

# Contents


**1. General**

**2. Engine Description**
2.1 Model
2.1.1 Rating Plate
2.1.2 Position of the Rating Plate
2.1.3 Engine Serial Number
2.1.4 Cylinder numbering
2.2 Engine Illustrations
2.2.1 Operation side 1012
2.2.2 Starter side 1012
2.2.3 Operation side 1012 E
2.2.4 Starter side 1012 E
2.2.5 Operation side 1013
2.2.6 Starter side 1013
2.2.7 Operation side 1013 E
2.2.8 Starter side 1013 E
2.2.9 Starter side Unit Engine BF4M 1013 EC
2.2.10 Operation side Unit Engine BF4M 1013 EC
2.2.11 Starter side Unit Engine BF6M 1013 EC
2.2.12 Operation side Unit Engine BF6M 1013 EC
2.3 Lube Oil Circuit Schematic
2.3.1 Lube Oil Circuit 1012 / 1012 E
2.3.2 Lube Oil Circuit 1013 / 1013 E
2.4 Fuel System
2.4.1 Fuel System Plan
2.5 Engine cooling
2.5.1 Cooling System Schematic 1012
2.5.2 Cooling System Schematic 1012 E
2.5.3 Cooling System Schematic 1013
2.5.4 Cooling System Schematic 1013 E/ 1013 E

**3. Engine Operation**
3.1 Commissioning
3.1.1 Pour in Engine Oil
3.1.2 Filling Oil Bath Air Cleaner
3.1.3 Pour in Fuel
3.1.4 Filling / Venting the Cooling System
3.1.5 Other Preparations
3.2 Starting
3.2.1 Starting
3.3 Monitoring Operation
3.3.1 Engine Oil Pressure
3.3.2 Coolant temperature
3.3.3 Coolant Level / Coolant Level Gauge
3.4 Shutting off
3.4.1 Mechanical shut-off
3.4.2 Electrical shut-off
3.5 Operating conditions
3.5.1 Winter Operation
3.5.2 High Ambient Temperature, High Altitude

**4 Operating Media**
4.1 Lube Oil
4.1.1 Quality
4.1.2 Viscosity
4.2 Fuel
4.2.1 Quality Grade
4.2.2 Winter-Grade Fuel
4.3 Coolant
4.3.1 Water Quality for Coolant Preparation
4.3.2 Coolant Preparation
4.3.3 Cooling System Protective Liquid

**5. Routine Maintenance**
5.1 Maintenance Schedule
5.2 Maintenance Chart
5.3 Maintenance Record

https://truckmanualshub.com/

# Contents


**6. Service and Maintenance**
6.1 Lubrication System
6.1.1 Oil Change Intervals
6.1.2 Checking Oil Level / Changing Engine Oil
6.1.3 Changing Oil Filter
6.1.4 Cleaning/Changing Oil filter (Cup)
6.2 Fuel System
6.2.1 Changing Fuel Filter
6.2.2 Replace fuel filter
6.2.3 Clean/Replace Fuel Pre-Filter, Filter Element
6.2.4 Venting the Fuel System with Preliminary Fuel Filter
6.2.5 Clean/Replace Fuel Pre-Filter, Filter Element
6.2.6 Vent Fuel System with Fuel Pre-Filter
6.2.7 Clean/Replace/Vent Fuel Pre-Filter, Filter Element
6.2.8 Clean / purge or change fuel pre-filter
6.2.9 Venting the Fuel System with Preliminary Fuel Filter
6.2.10 Changing Fuel Leakage Line
6.2.11 Changing Fuel Leakage Pipes
6.3 Cooling System
6.3.1 Cleaning Intervals
6.3.2 Cleaning Cooling System
6.3.3 Draining Cooling System 1012 / 1013
6.3.4 Filling / Venting Cooling System 1012 / 1013
6.3.5 Draining the Cooling System 1012 E / 1013 E
6.3.6 Filling/Venting the Cooling System 1012 E/1013 E
6.3.7 Draining the Cooling System Unit Engine
6.3.8 Filling/Venting the Cooling System Unit Engine
6.3.9 Draining the Charge-Air Cooler
6.4 Combustion Air Cleaner
6.4.1 Cleaning Intervals
6.4.2 Emptying Cyclone Type Precleaner
6.4.3 Cleaning Oil Bath Air Cleaner
6.4.4 Dry Type Air Cleaner
6.5 Belt Drives
6.5.1 Checking V-Belts
6.5.2 Tensioning Fan / Alternator Belts 1012
6.5.3 Changing Fan / Alternator Belts 1012
6.5.4 Tensioning Coolant / Fuel Pump Belts 1012
6.5.5 Changing Coolant / Fuel Pump Belts 1012
6.5.6 Tensioning Coolant / Fuel Pump Belts 1012 E
6.5.7 Changing Coolant / Fuel Pump Belts 1012 E
6.5.8 Tensioning Alternator Belt 1012 E
6.5.9 Changing Alternator Belt 1012 E
6.5.10 Tensioning / Changing Fan Belt 1013
6.5.11 Tensioning Coolant / Fuel Pump belts 1013
6.5.12 Changing Coolant / Fuel Pump Belts 1013
6.5.13 Tensioning / Changing Alternator Belt 1013
6.5.14 Tensioning Coolant / Fuel Pump Belts 1013 E
6.5.15 Changing Coolant / Fuel Pump Belts 1013 E
6.5.16 Tensioning / Changing Compressor Belt
6.6 Adjustments
6.6.1 Checking / Adjusting Valve Clearances
6.7 Accessories
6.7.1 Battery
6.7.1.1 Checking Battery and Cable Connectors
6.7.1.2 Checking Electrolyte Level
6.7.1.3 Checking Specific Gravity of Electrolyte
6.7.2 Three-Phase Alternator
6.7.3 Lifting Tackle

**7. Faults, Causes and Remedies**
7.1 Fault Table

**8. Engine Preservation**
8.1 Preservation

**9. Technical Specification**
9.1 Engine Specifications and Settings
9.2 Screw Tightening Torques
9.3 Tools

**10. Service**

https://truckmanualshub.com/

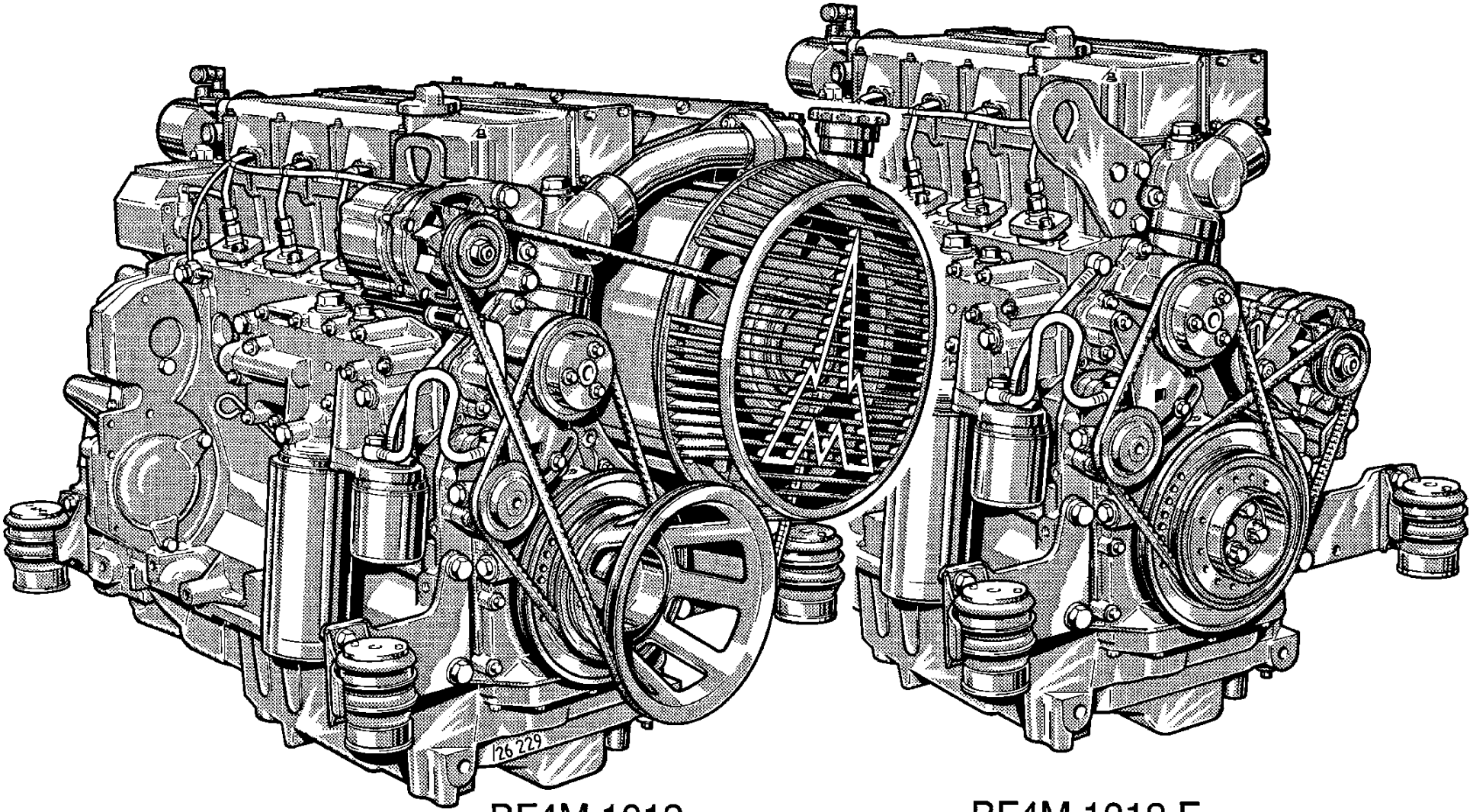


BF4M 1012

BF4M 1012 E

https://truckmanualshub.com/

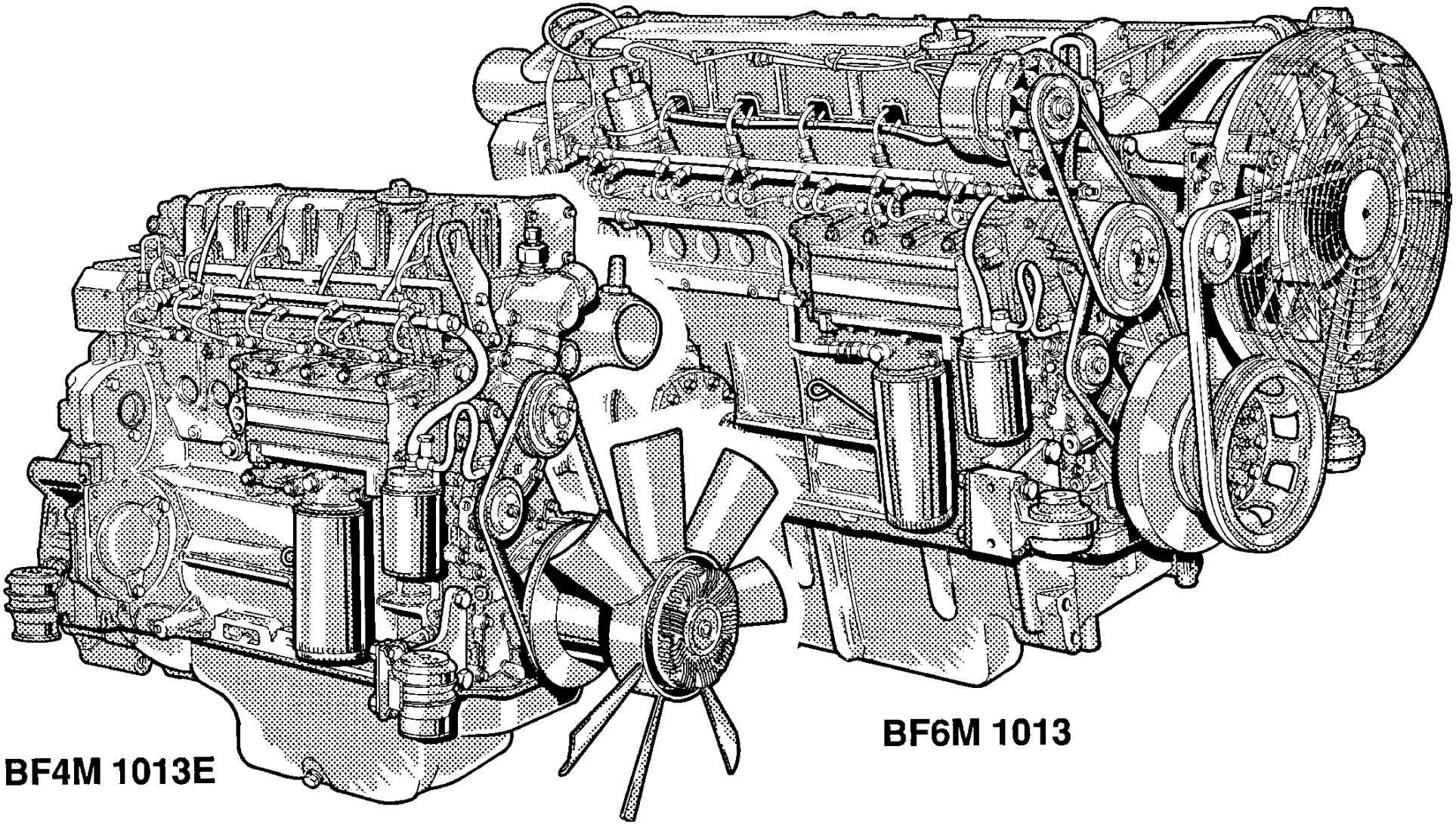

https://truckmanualshub.com/



## DEUTZ Diesel Engines

are the product of many years of research and development. The resulting know-how, coupled with stringent quality standards, guarantee their long service life, high reliability and low fuel consumption.
It goes without saying that DEUTZ Diesel Engines meet the highest standards for environmental protection.

## Beware of Running Engine

Shut the engine down before carrying out maintenance or repair work. Ensure that the engine cannot be accidentally started. Risk of accidents.
When the work is complete, be sure to refit any panels and guards that may have been removed.
Never fill the fuel tank while the engine is running.
Observe industrial safety regulations when running the engine in an enclosed space or underground.

## Care and Maintenance

Sound care and maintenance practices will ensure that the engine continues to meet the requirements placed on it. Recommended service intervals must be observed and service and maintenance work carried out conscientiously.
Special care should be taken under abnormally demanding operating conditions.

## Safety

This symbol is used for all safety warnings. Please follow them carefully. The attention of operating personnel should be drawn to these safety instructions. General safety and accident prevention regulations laid down by law must also be observed.

## Asbestos

DEUTZ original parts are asbestos-free.

## Service

Please contact one of our authorized service representatives in the event of breakdowns or for spare parts inquiries. Our trained specialists will carry out repairs quickly and professionally, using only genuine spare parts.
Original parts from DEUTZ AG are always produced in accordance with state-of-the-art technology.
Please turn to the end of this manual for further service information.

### California

**Proposition 65 Warning**

Diesel engine exhaust and some of its constituents are known to the State of California to cause cancer, birth defects, and other reproductive harm.

https://truckmanualshub.com/

https://truckmanualshub.com/

# Engine Description

2

2.1 Model
2.2 Engine Illustrations
2.3 Lube Oil Circuit
2.4 Fuel System
2.5 Cooling System

https://truckmanualshub.com/



## 2.1.1 Rating Plate

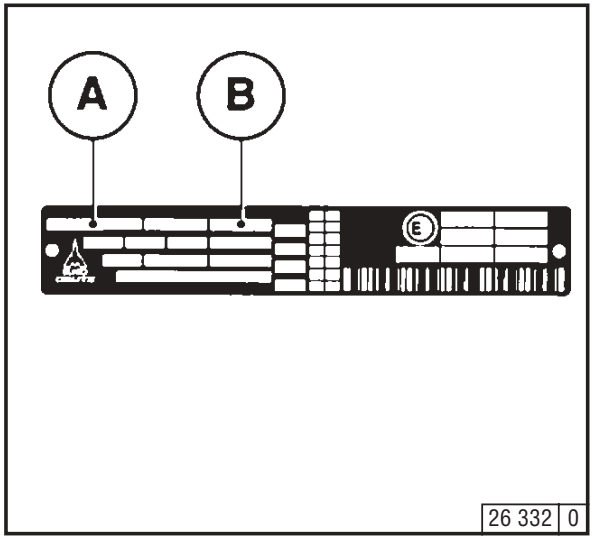


The model **A**, the engine serial number **B** and the performance data are stamped on the rating plate. The model and engine serial number must be given when ordering spare parts.

## 2.1.2 Rating Plate Location

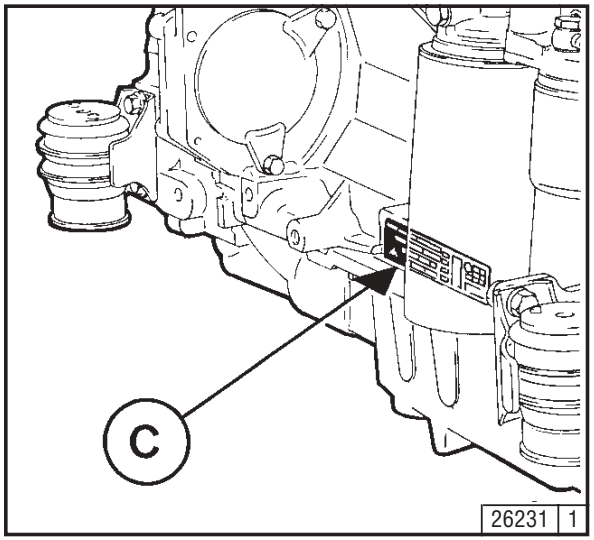


The rating plate **C** is attached to the crankcase.

## 2.1.3 Engine Serial Number

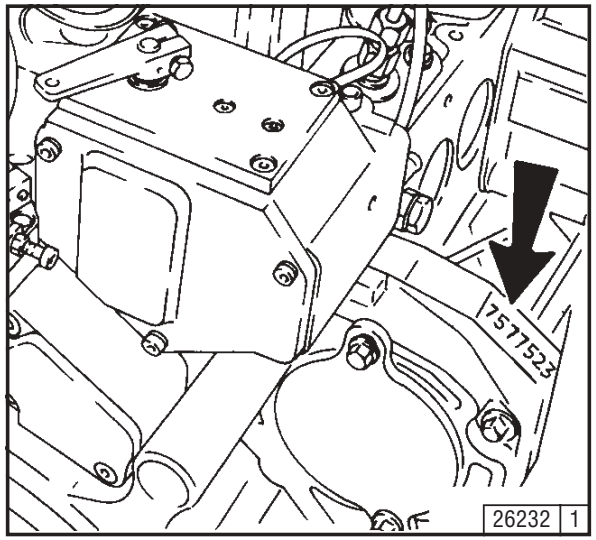


The engine serial number is also stamped on the crankcase itself **(arrow).**

https://truckmanualshub.com/



## 2.1.4 Cylinder Numbering

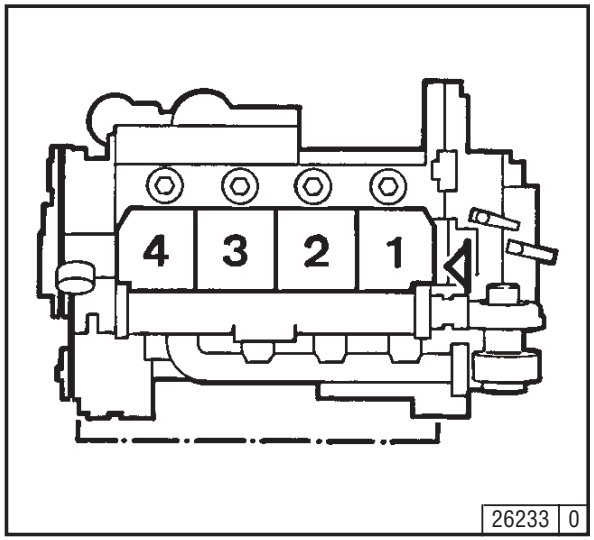


Cylinders are numbered consecutively, beginning at the flywheel end.

https://truckmanualshub.com/



## 2.2.1 Service Side 1012

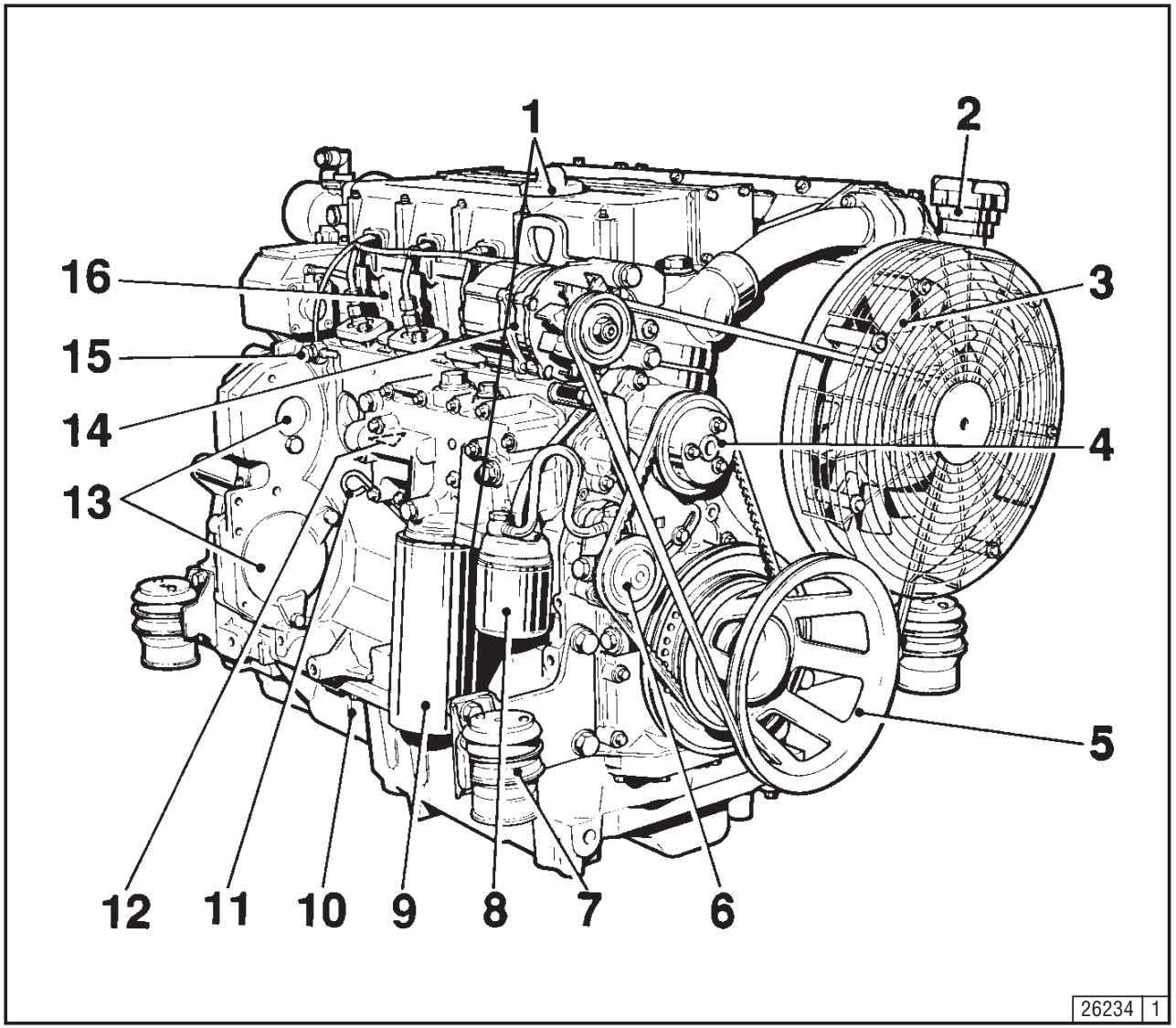


1 Oil filler (option: between filters)
2 Coolant filler
3 Cooling fan
4 Coolant pump
5 Belt pulley
6 Fuel pump
7 Engine mount
8 Fuel filter
9 Lube oil filter
10 Oil pan
11 Dipstick
12 Lube oil cooler
13 Mounting facility for hydraulic pumps
14 Alternator
15 Back leak fuel pipe with pressure-regulating valve
16 Cylinder head

https://truckmanualshub.com/



## 2.2.2 Starter Side 1012

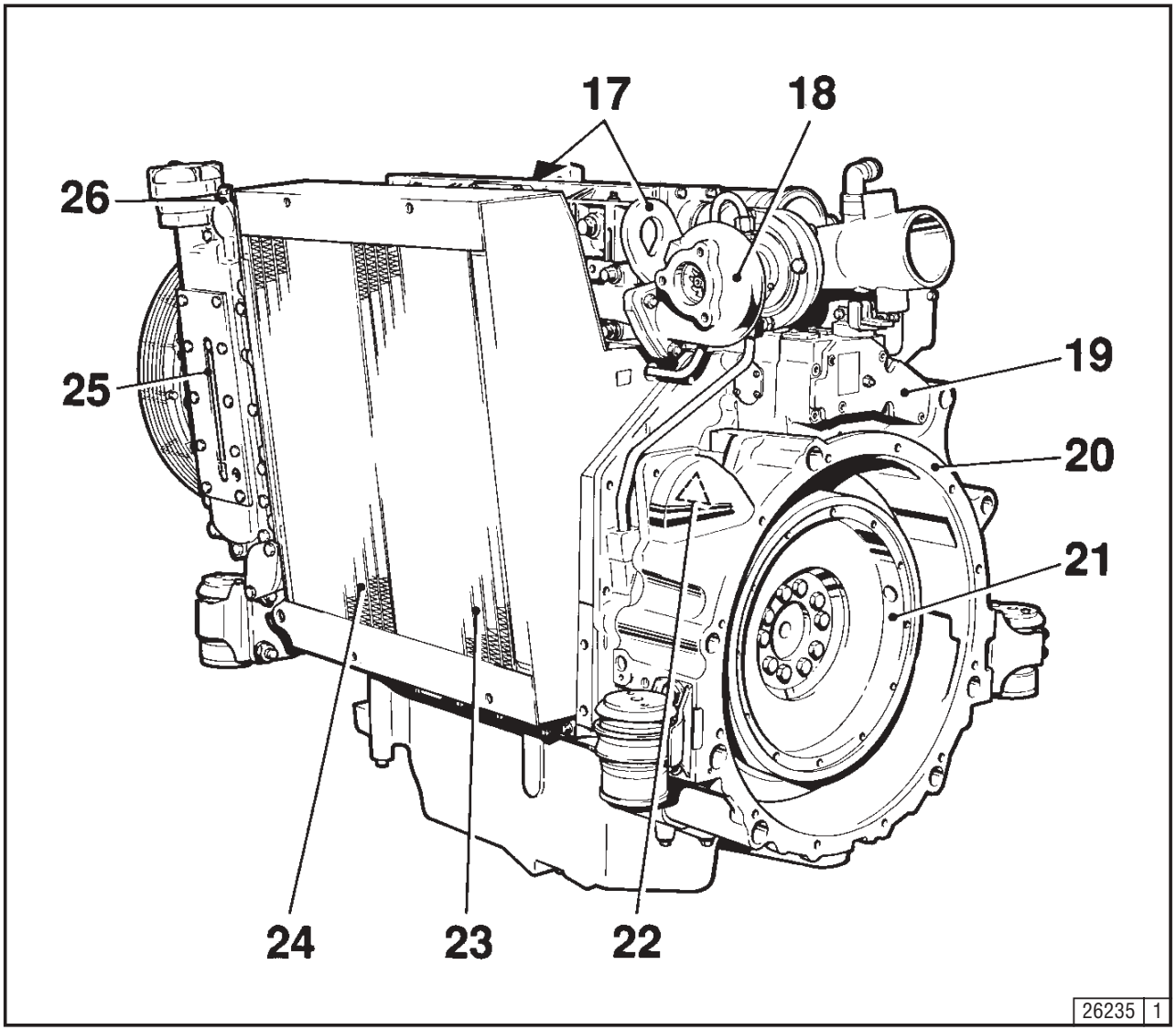


17 Lifting points
18 Exhaust turbocharger
19 Speed governor
20 SAE housing
21 Flywheel
22 Starter motor
23 Hydraulic oil cooler
24 Coolant heat exchanger
25 Coolant level gauge
26 Bleeder valve

https://truckmanualshub.com/



## 2.2.3 Service Side 1012 E

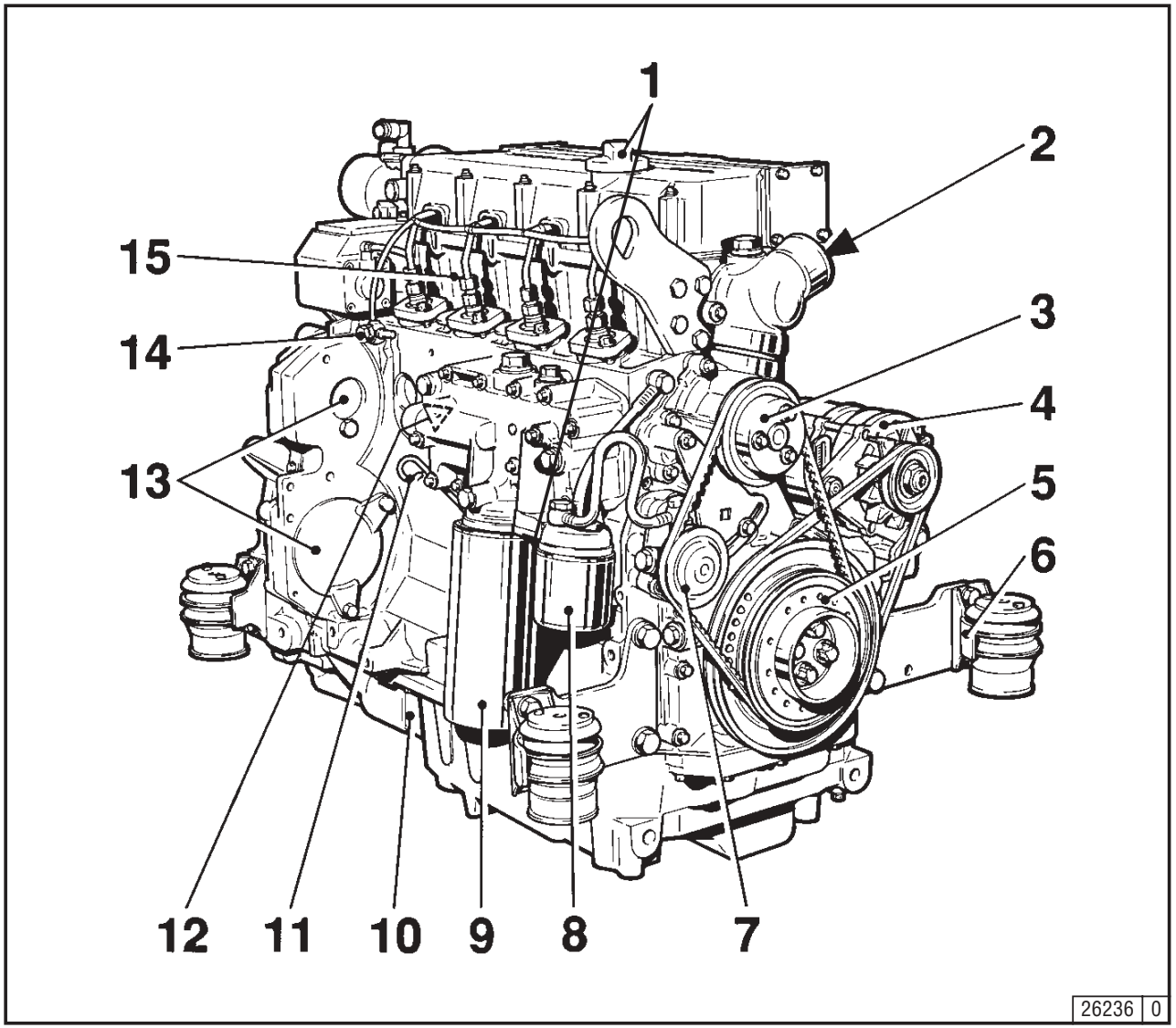


1 Oil filler (option: between filters)
2 Coolant inlet
3 Coolant pump
4 Alternator
5 Belt pulley
6 Engine mount
7 Fuel pump
8 Fuel filter
9 Lube oil filter
10 Oil pan
11 Dipstick
12 Lube oil cooler
13 Mounting facility for hydraulic pump
14 Back leak fuel pipe with pressure-regulating valve
15 Cylinder head

https://truckmanualshub.com/



### 2.2.4 Starter Side 1012 E

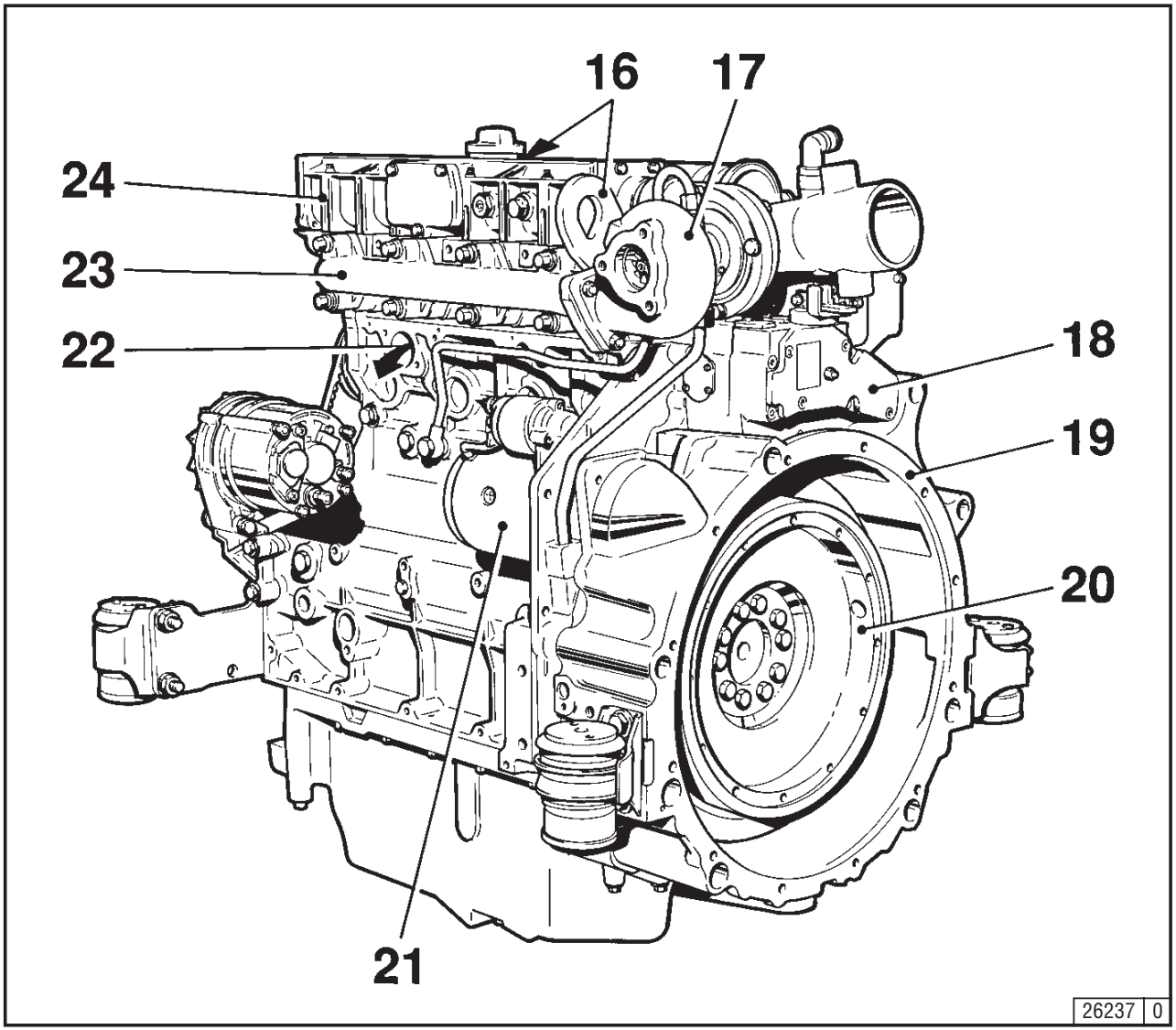


16 Lifting points
17 Exhaust turbocharger
18 Speed governor
19 SAE housing
20 Flywheel
21 Starter motor
22 Coolant outlet to heat exchanger
23 Exhaust manifold
24 Air intake manifold

https://truckmanualshub.com/



## 2.2.5 Service Side 1013

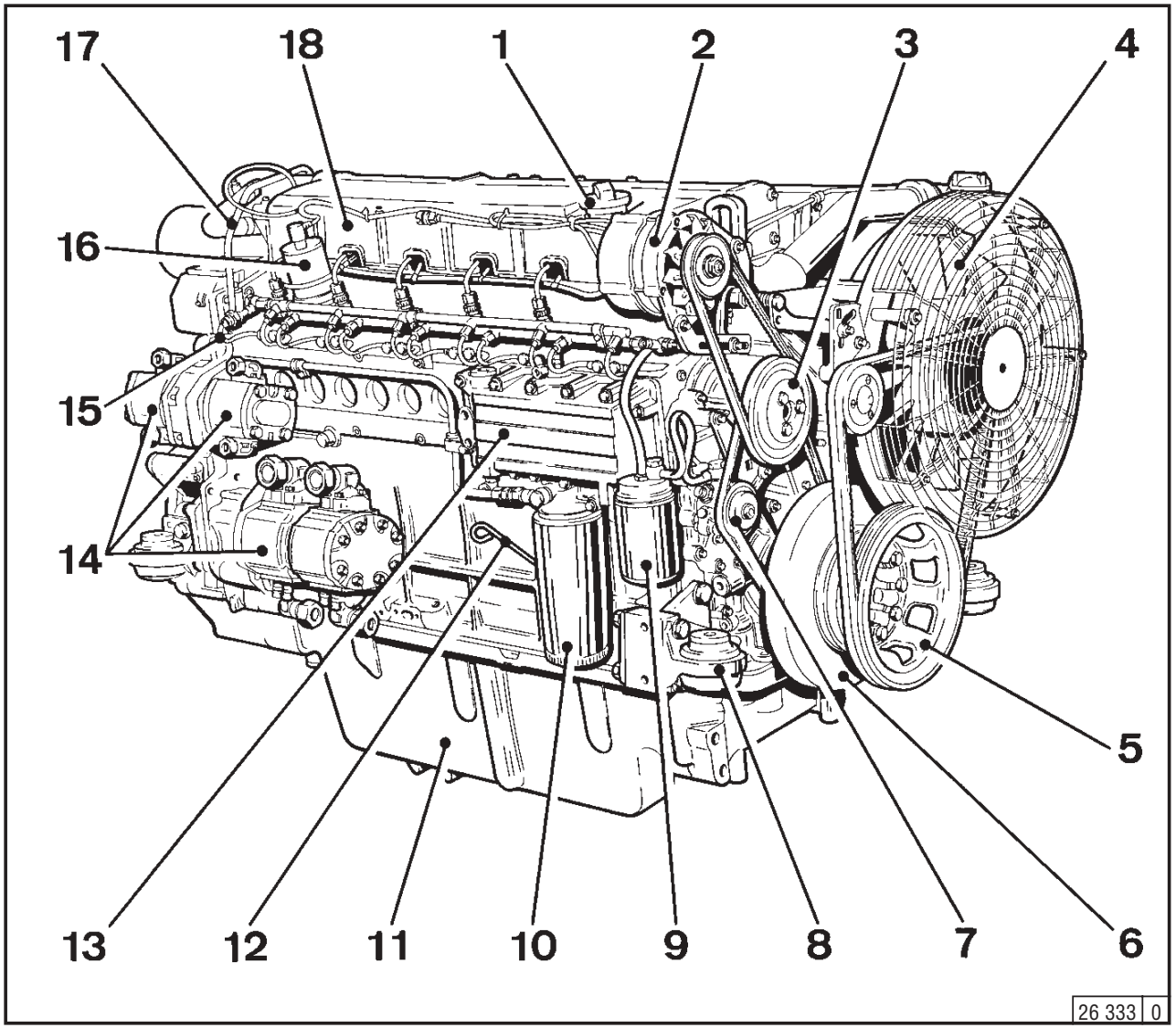


1 Oil filler (option: between filters)
2 Alternator
3 Coolant pump
4 Fan
5 Belt Pulley
6 Vibration damper
7 Fuel pump
8 Engine mount
9 Fuel filter
10 Lube oil filter
11 Oil pan
12 Dipstick
13 Lube oil cooler
14 Hydraulic pumps (or compressor)
15 Fuel pipe
16 Solenoid
17 Lube oil line to turbocharger
18 Cylinder head

https://truckmanualshub.com/



## 2.2.6 Starter Side 1013

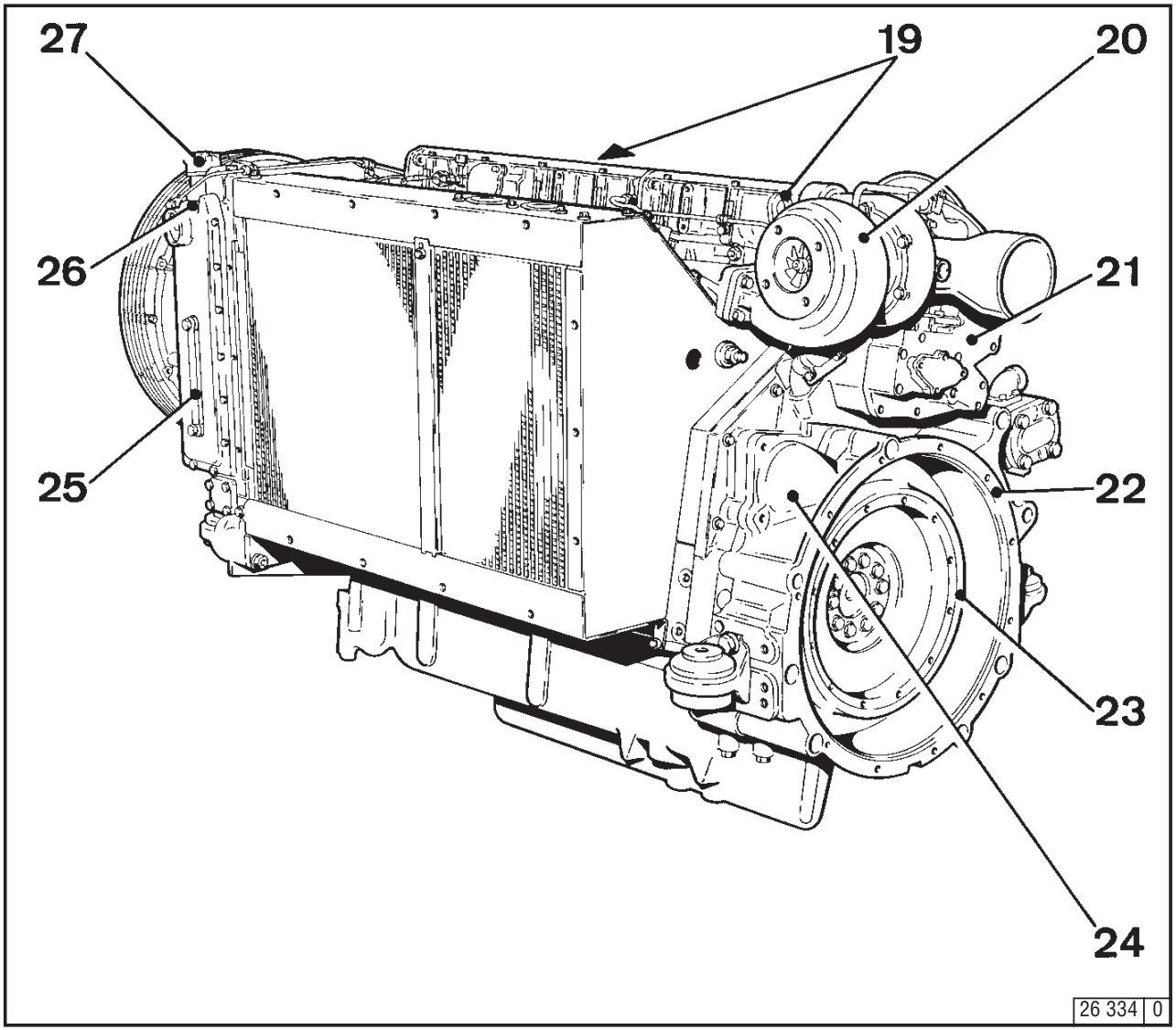


19 Lifting points
20 Exhaust turbocharger
21 Speed governor
22 SAE housing
23 Flywheel
24 Starter motor
25 Coolant level gauge
26 Bleeder valve
27 Coolant filler cap

https://truckmanualshub.com/



## 2.2.7 Service Side 1013 E

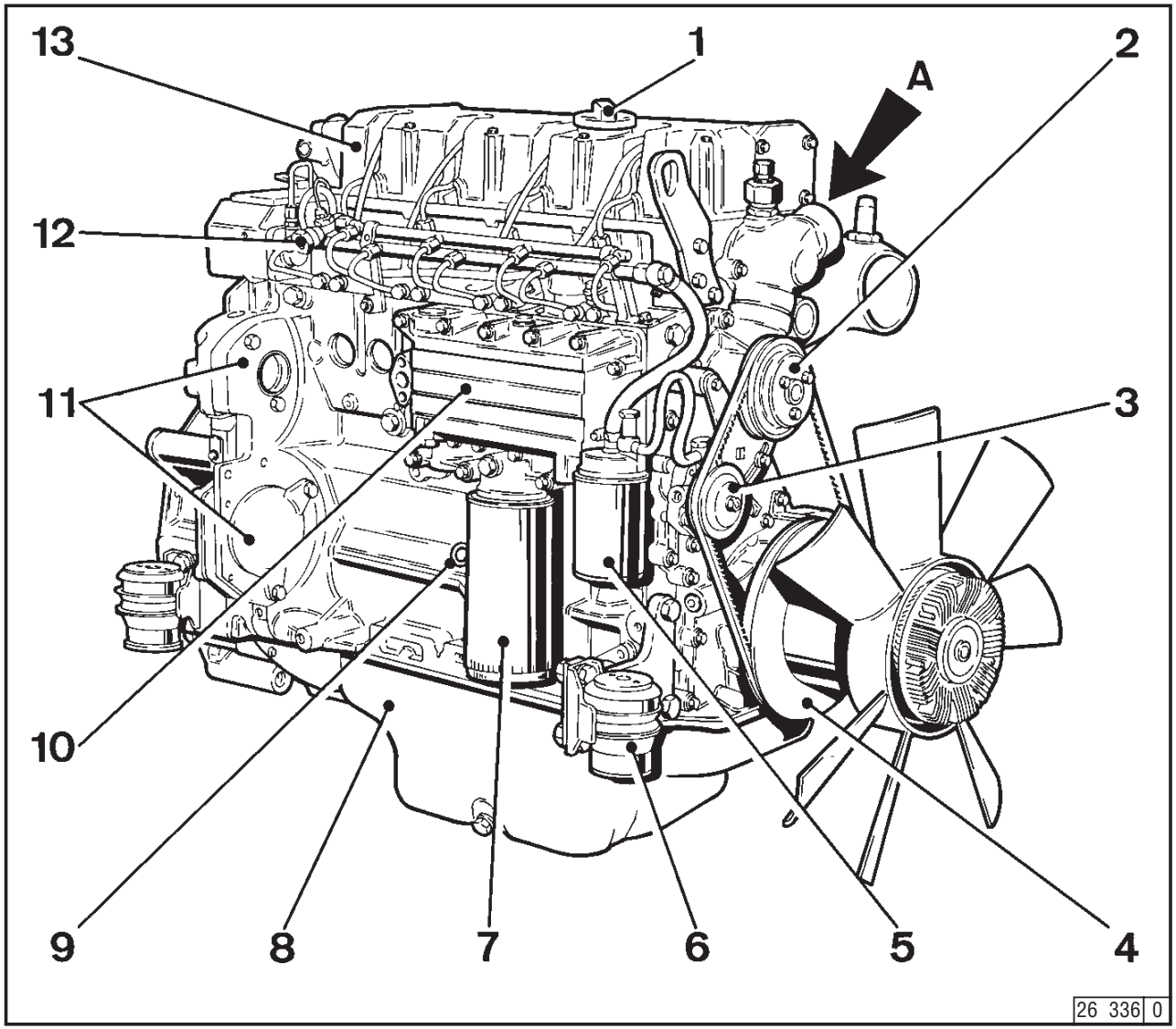


1 Oil filler
2 Coolant pump
3 Fuel pump
4 Vibration damper
5 Fuel filter
6 Engine mount
7 Lube oil filter
8 Oil pan
9 Dipstick
10 Lube oil cooler
11 Mounting facility for hydraulic pump
12 Back leak fuel pipe with pressure-regulating valve
13 Cylinder head
A Coolant inlet

https://truckmanualshub.com/



### 2.2.8 Starter Side 1013 E

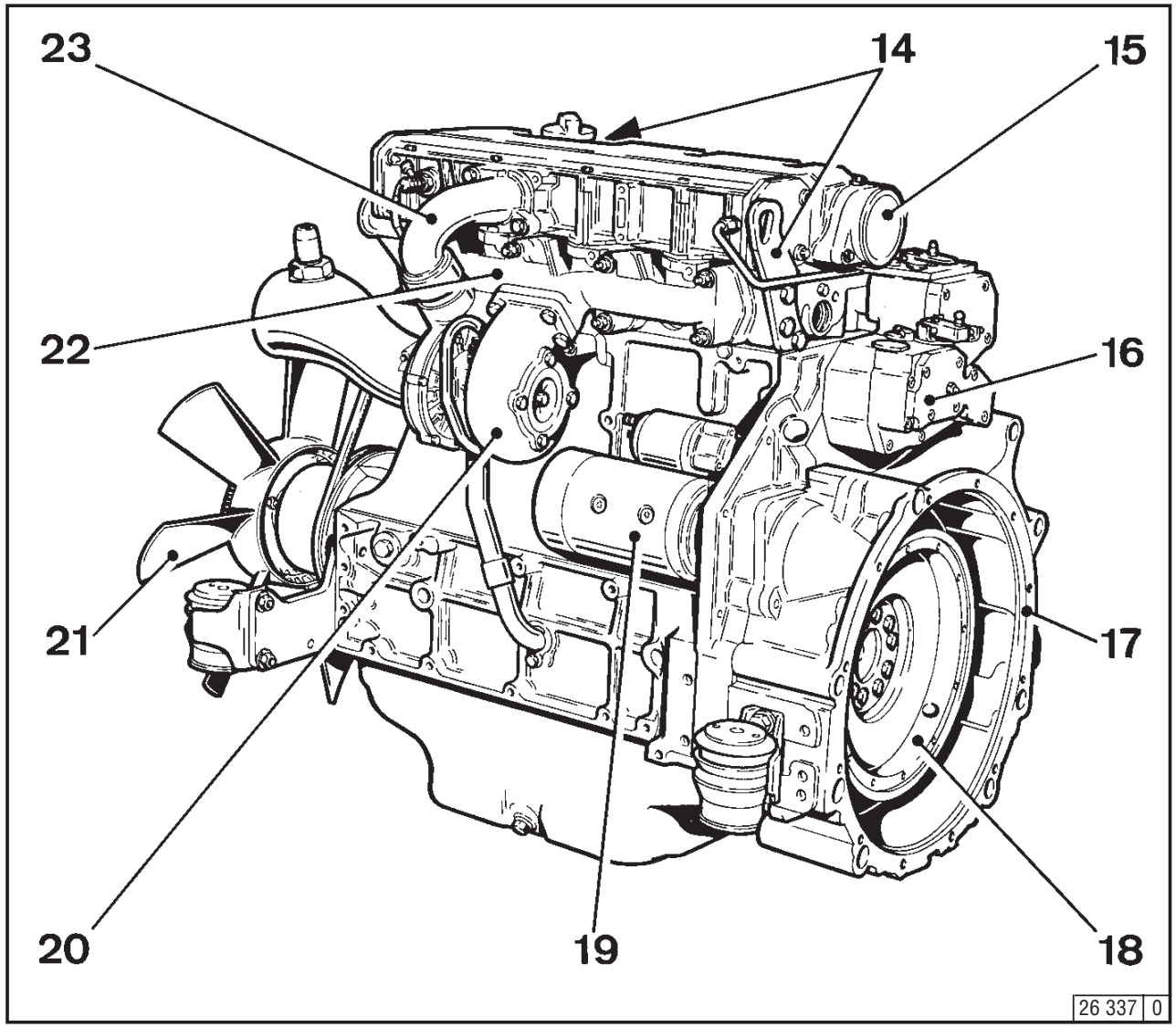


14 Lifting points
15 Crankcase breather valve
16 Speed governor
17 SAE housing
18 Flywheel
19 Starter motor
20 Exhaust turbocharger
21 Fan
22 Exhaust manifold
23 Air intake manifold

https://truckmanualshub.com/



## 2.2.9 Starter Side
## Unit Engine BF4M 1013 EC

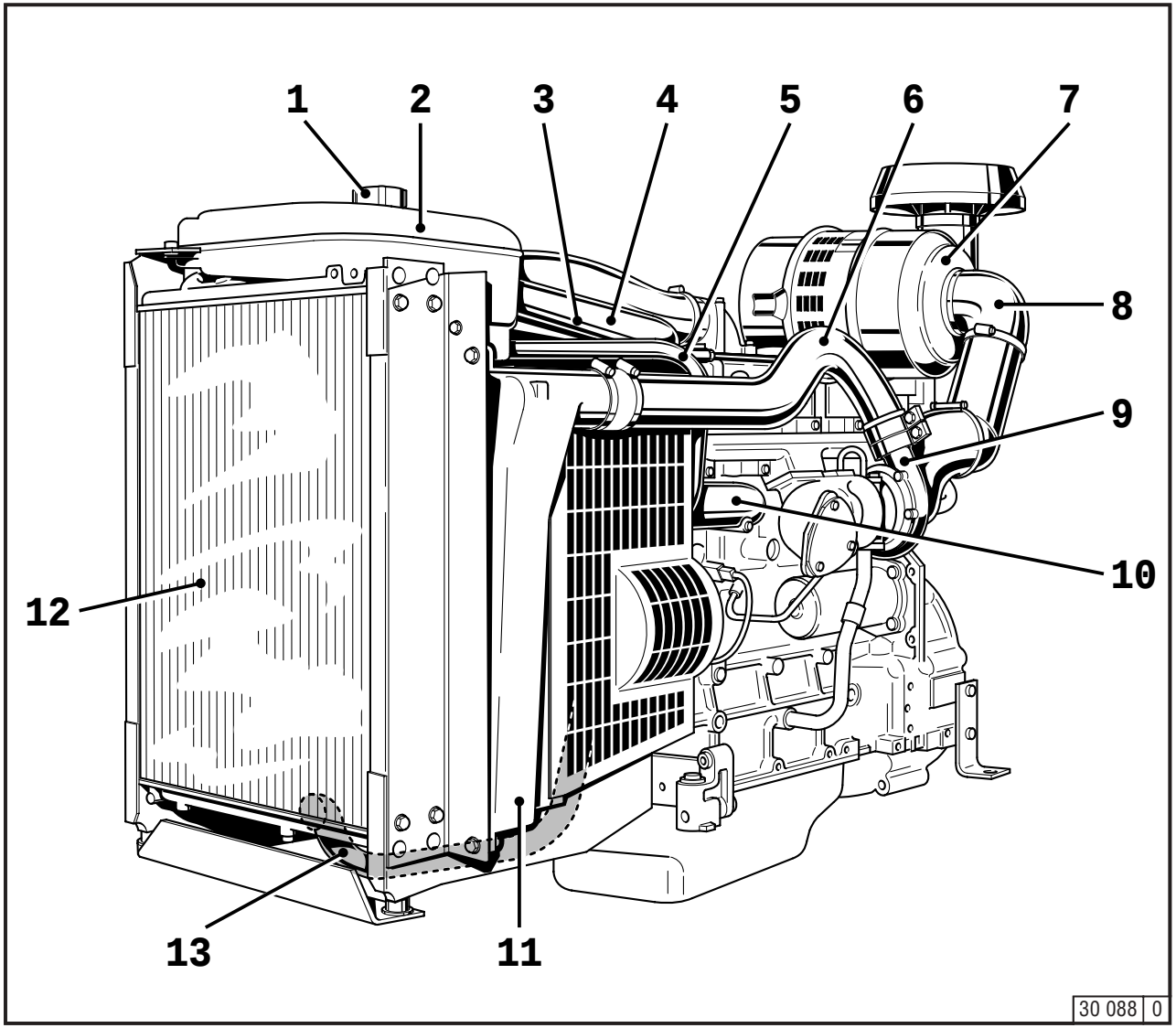


1 Coolant filler neck with cap
2 Expansion tank
3 Vent line from cylinder head to expansion tank
4 Coolant line from engine crankcase to engine fluid radiator
5 Expansion line from expansion tank to radiator
6 Charge air line from exhaust turbocharger to charge-air cooler
7 Dry air filter
8 Induction air line between dry air filter and exhaust turbocharger
9 Exhaust turbocharger
10 Coolant line from crankcase to engine fluid radiator
11 Charge-air cooler
12 Engine fluid radiator
13 Coolant line from engine fluid radiator to engine thermostat

https://truckmanualshub.com/



## 2.2.10 Service Side
## Unit Engine BF4M 1013 EC

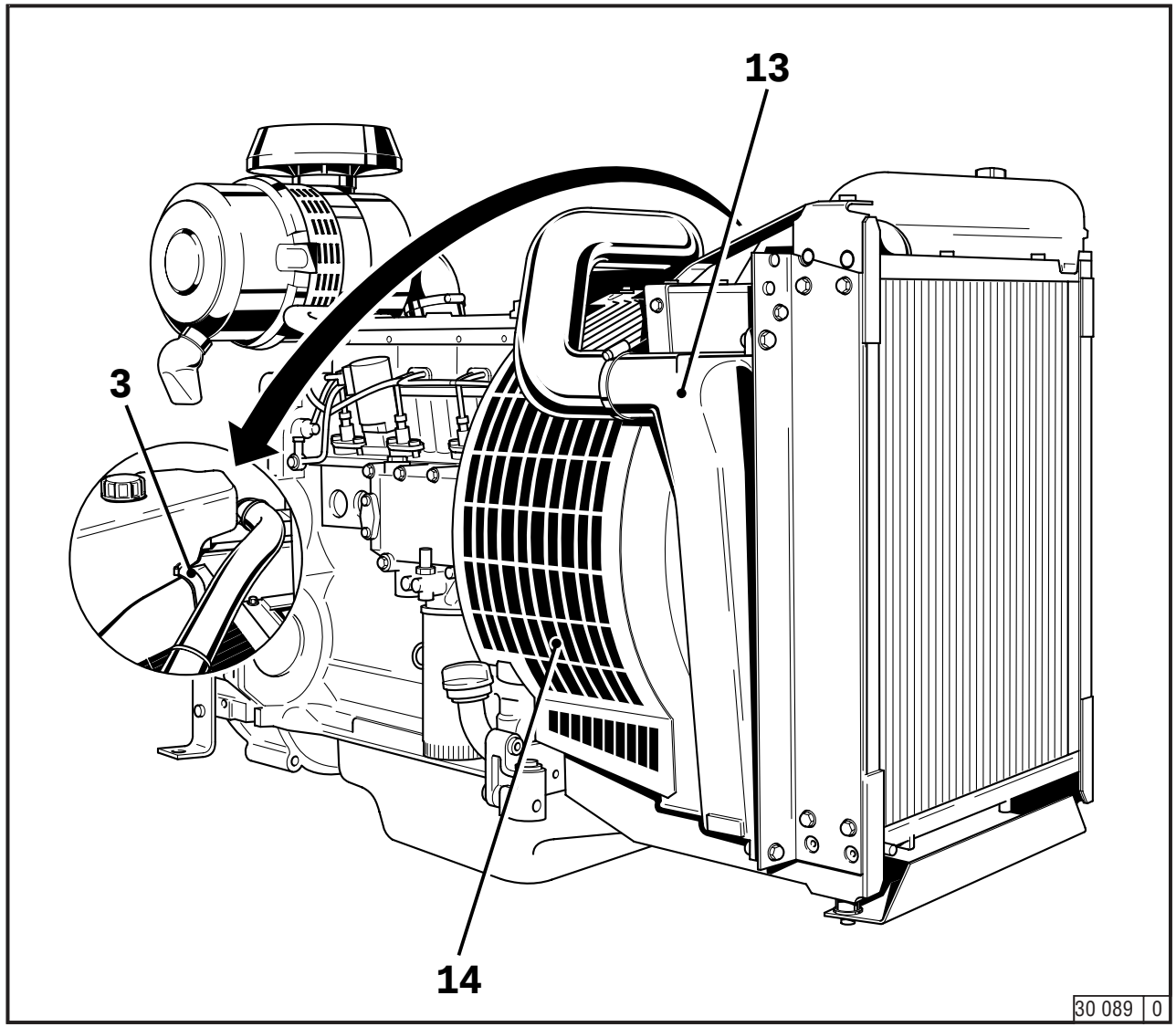


3 Ventilation line from cylinder head to expansion tank
13 Charge-air line from charge-air cooler to engine
14 Protective guard

https://truckmanualshub.com/



## 2.2.11 Starter Side
## Unit Engine BF6M 1013 EC

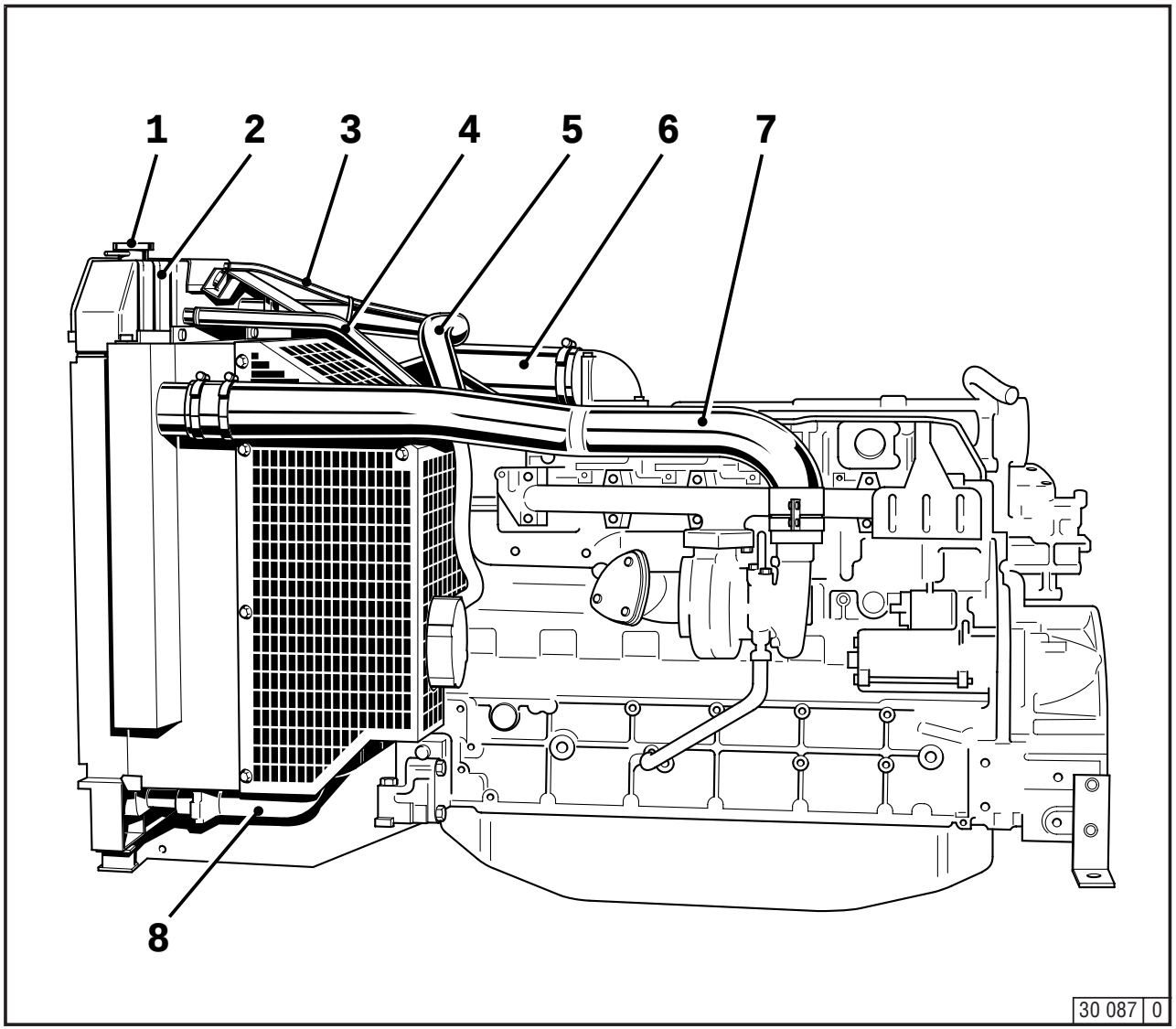


1 Filler neck with cap
2 Expansion tank
3 Vent line from cylinder head to expansion tank
4 Expansion line from expansion tank to coolant pump
5 Coolant line from crankcase to engine fluid radiator
6 Charge-air line from charge-air cooler to engine
7 Charge-air line from exhaust turbocharger to charge-air cooler
8 Coolant line from engine fluid radiator to engine thermostat

https://truckmanualshub.com/



## 2.2.12 Service Side
### Unit Engine BF4M 1013 EC

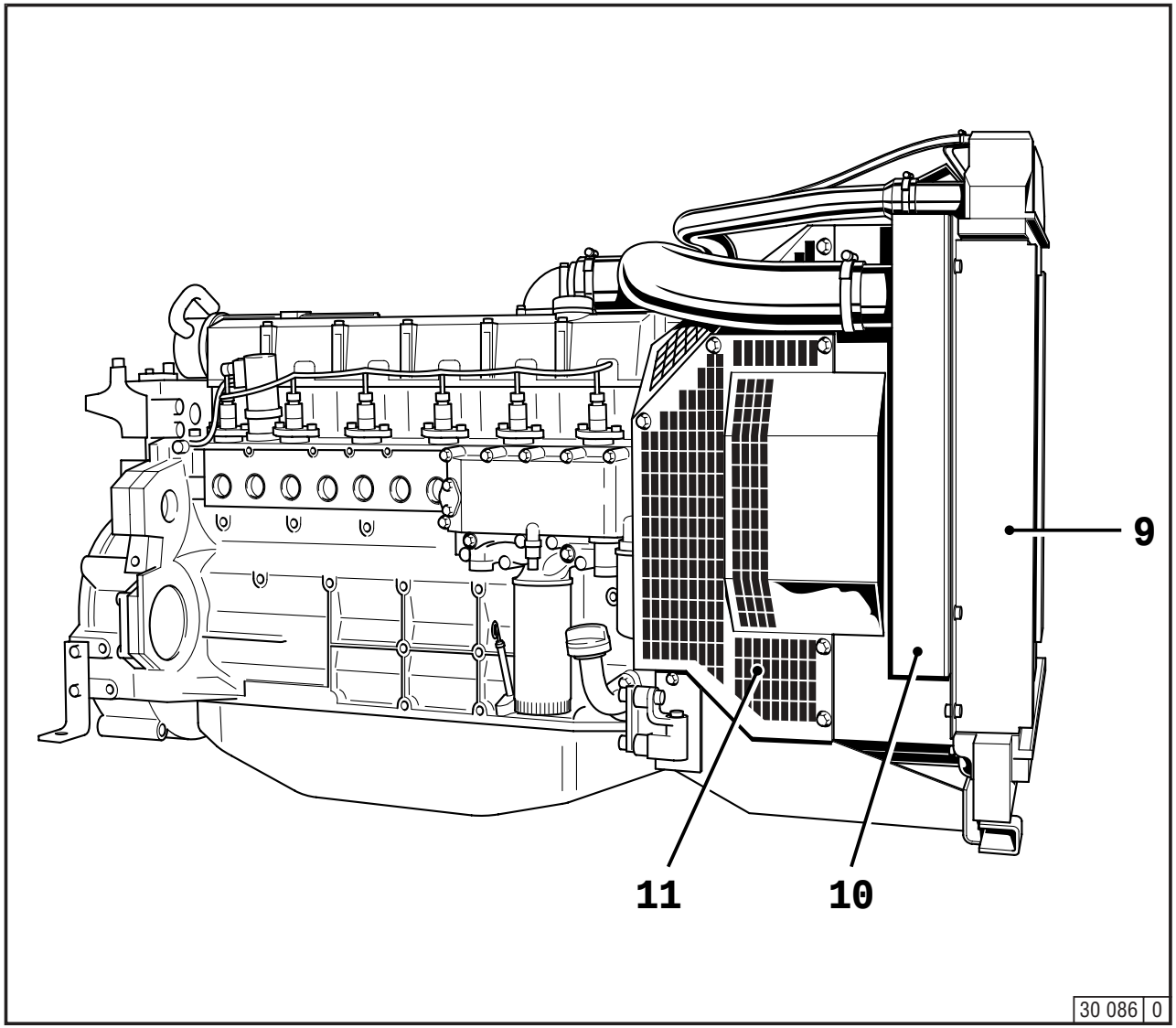


9 Engine fluid radiator
10 Charge-air cooler
11 Protective guard

https://truckmanualshub.com/



## 2.3.1 Lube Oil Circuit Schematic 1012 / 1012 E

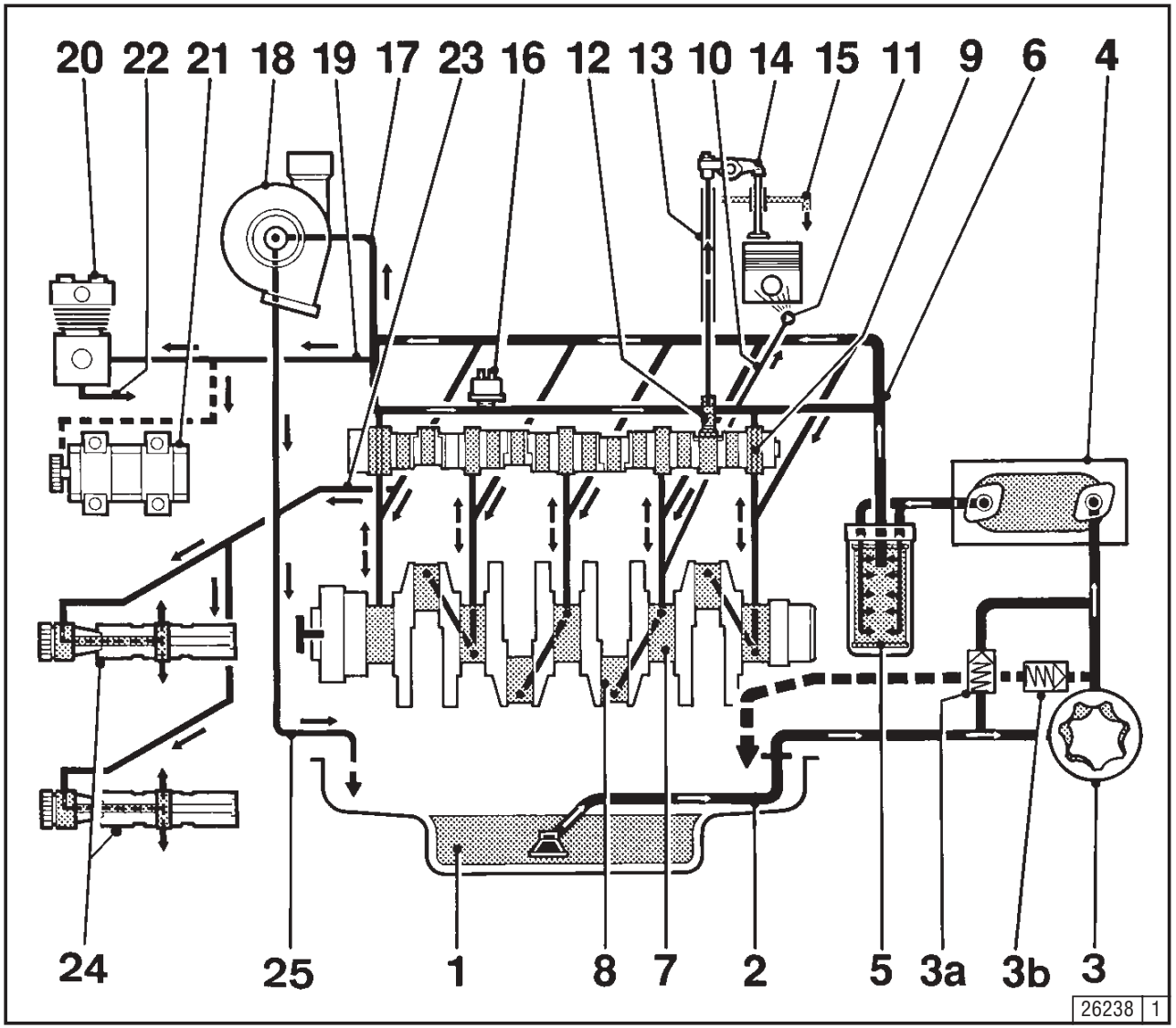


1 Oil pan
2 Air intake manifold
3 Lube oil pump
3a Back leak fuel valve
3b Pressure-relief valve
4 Lube oil cooler
5 Lube oil filter
6 Main oil gallery
7 Crankshaft bearing
8 Conrod bearing
9 Camshaft bearing
10 Line to spray nozzle
11 Spray nozzle for piston cooling
12 Tappet w/ control bore for pulse lubrication of rocker arms
13 Pushrod (designed for lube oil supply of rocker arms)
14 Rocker arm
15 Return line to oil pan
16 Oil sensor
17 Oil line to exhaust turbocharger
18 Exhaust turbocharger
19 Oil line to compressor or hydraulic pump
20 Compressor
21 Hydraulic pump
22 Return line to compressor or hydraulic pump
23 Line to mass balancing gear (2x)
24 Counterbalancing shafts
25 Exhaust turbocharger return to crankcase

https://truckmanualshub.com/



## 2.3.2 Lube Oil Circuit Schematic 1013 / 1013 E

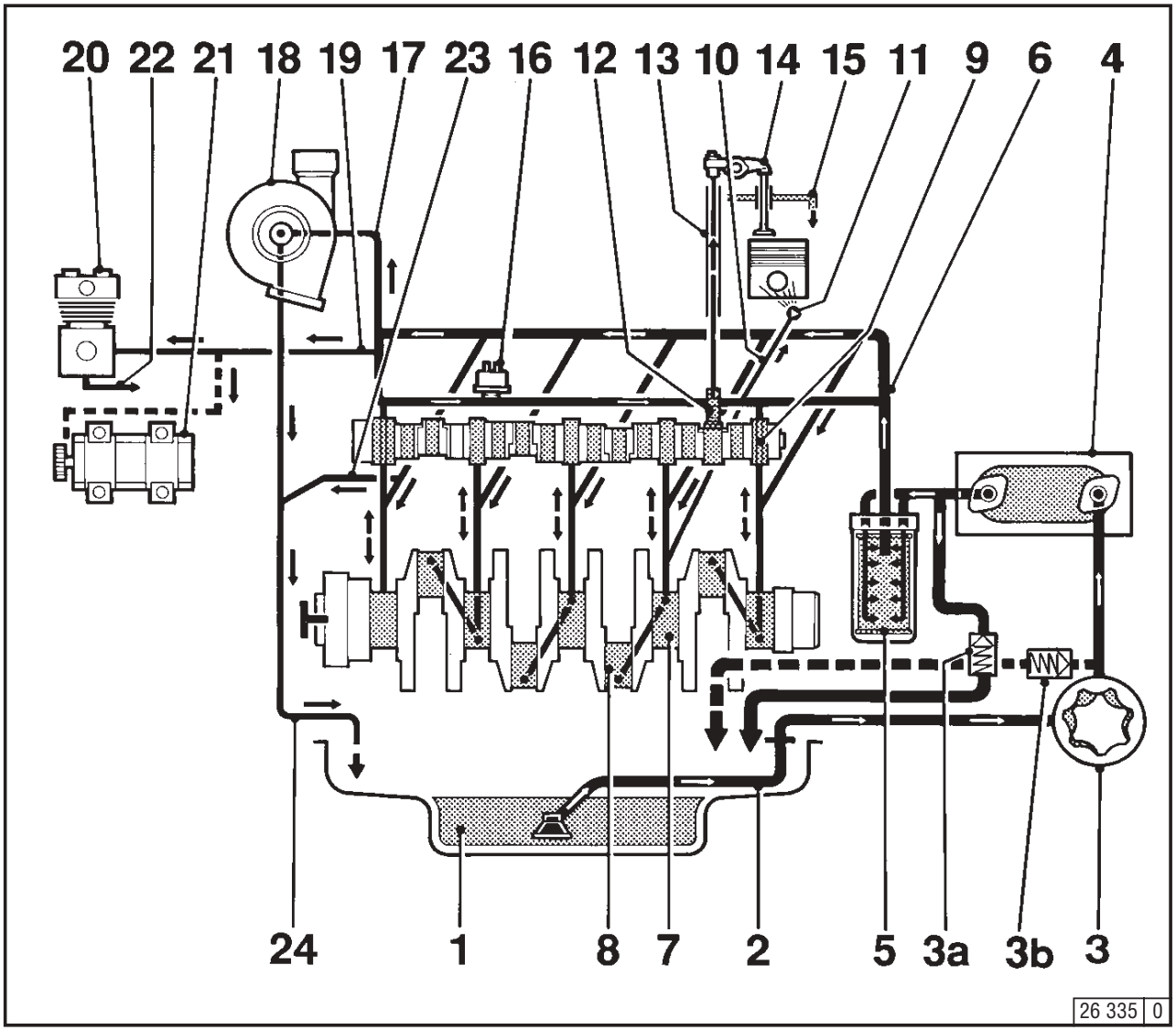


1 Oil pan
2 Air intake manifold
3 Lube oil pump
3a Back leak fuel valve
3b Pressure-relief valve
4 Lube oil cooler
5 Lube oil filter
6 Main oil gallery
7 Crankshaft bearing
8 Conrod bearing
9 Camshaft bearing
10 Spray nozzle line
11 Spray nozzle for piston cooling
12 Tappet w/ control bore for pulse lubrication of rocker arms
13 Pushrod (designed for lube oil supply of rocker arms)
14 Rocker arm
15 Return line to oil pan
16 Oil sensor
17 Oil line to exhaust turbocharger
18 Exhaust turbocharger
19 Oil line to compressor or hydraulic pump
20 Compressor
21 Hydraulic pump
22 Return line to compressor or hydraulic pump
23 Return to oil pan
24 Exhaust turbocharger return to crankcase

https://truckmanualshub.com/



## 2.4.1 Fuel System Schematic

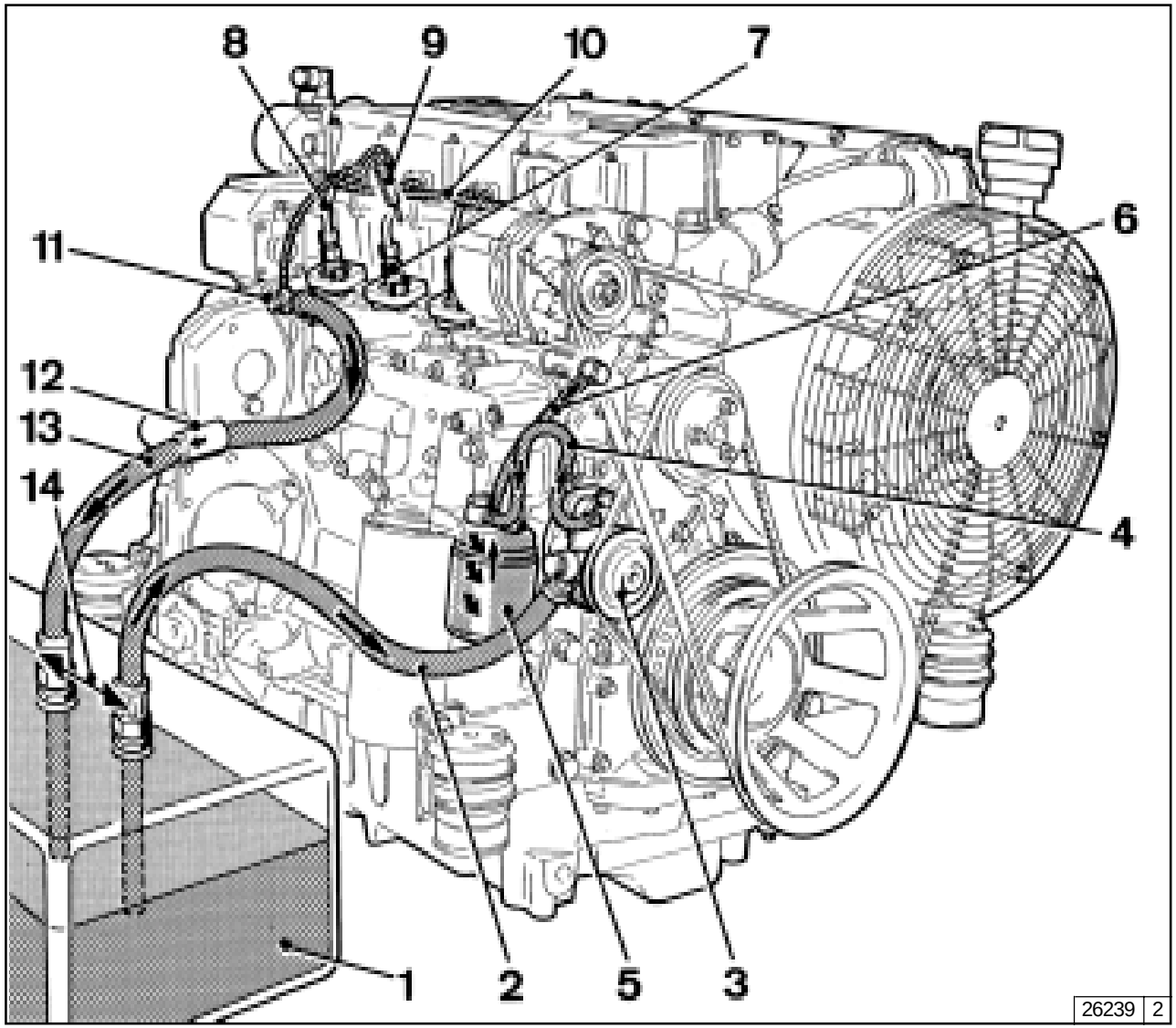


1 Fuel tank
2 Line to fuel pump
3 Fuel pump
4 Line to fuel filter
5 Fuel filter
6 Line to injection pumps
7 Injection pump
8 Line to injector
9 Injector
10 Back leak fuel pipe
11 Banjo bolt with pressure-regulating valve
12 Fuel check valve
13 Return line to fuel tank
14 Keep this spacing as wide as possible

https://truckmanualshub.com/



## 2.5.1 Cooling System Schematic 1012

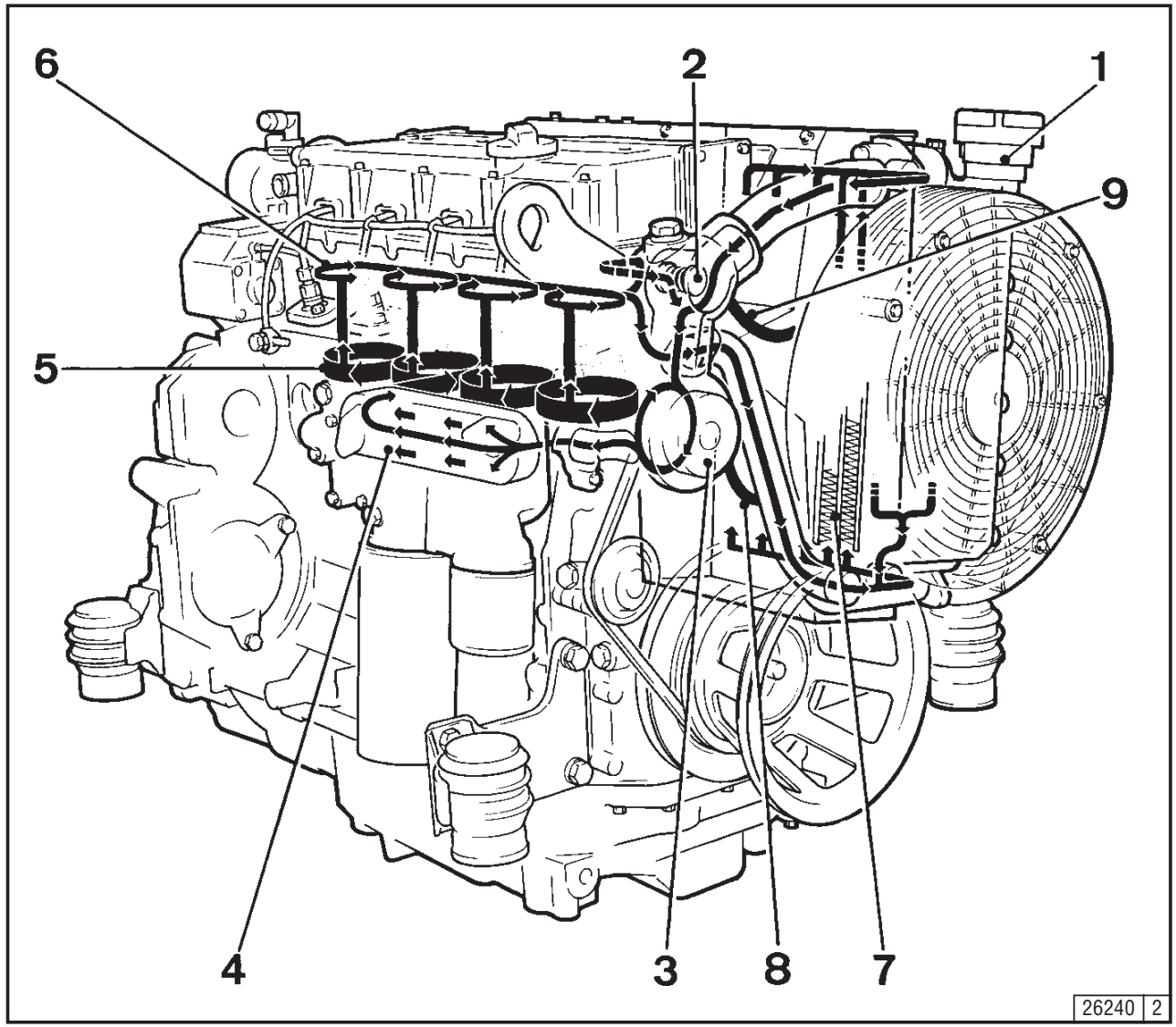


1 Coolant filler
2 Thermostat housing
3 Coolant pump
4 Lube oil cooler
5 Cylinder cooling
6 Cylinder head cooling
7 Heat exchanger
8 Return from thermostat to coolant pump housing
9 Ventilation line from cylinder head to heat exchanger (expansion tank)

https://truckmanualshub.com/



## 2.5.2 Cooling System Schematic 1012 E entrance regulation

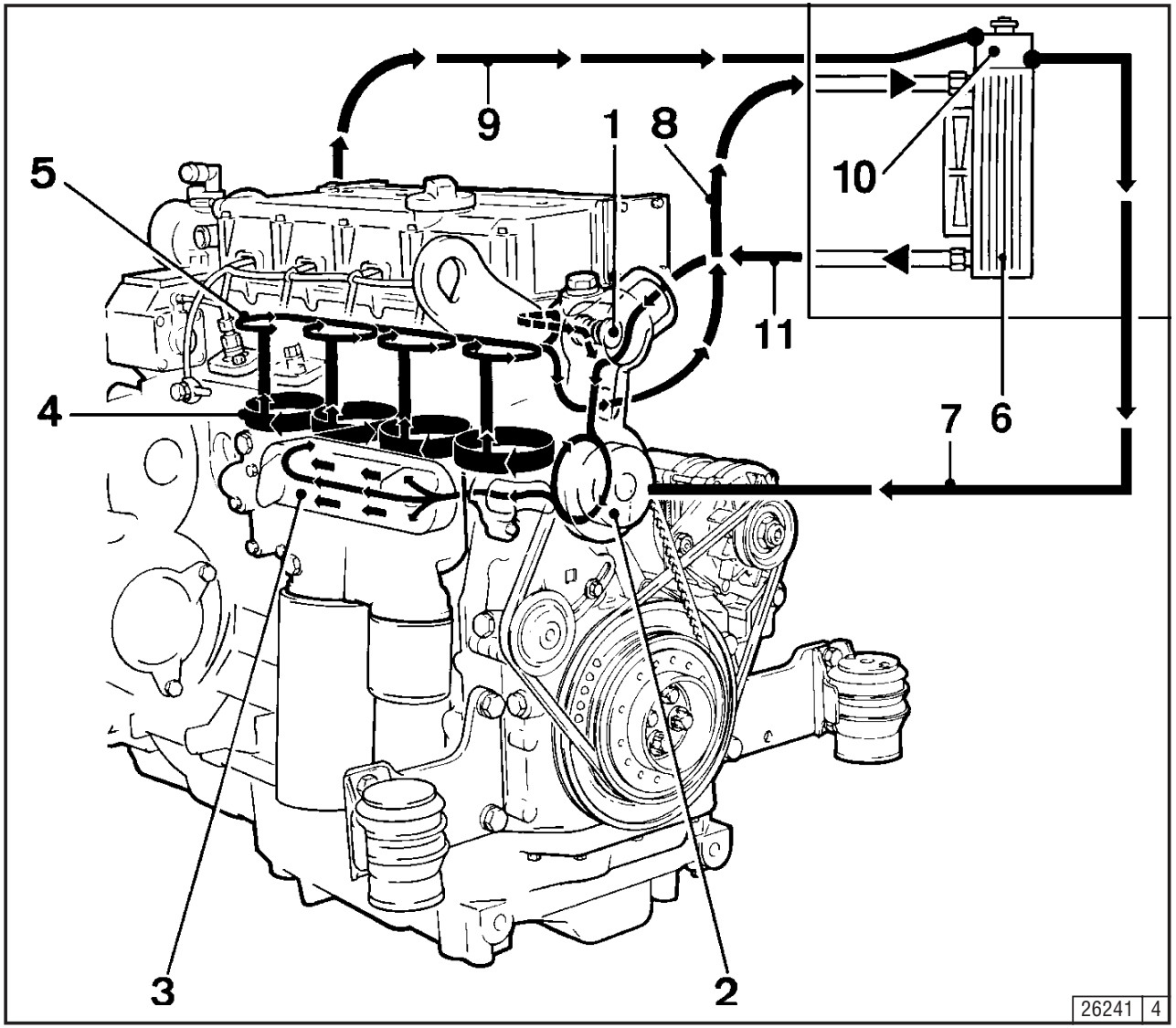


1 Thermostat housing
2 Coolant pump
3 Lube oil cooler
4 Cylinder cooling
5 Cylinder head cooling
6 Heat exchanger
7 Ventilation line expansion tank - coolant pump
8 Line from engine to heat exchanger
9 Ventilation line from cylinder head to expansion tank
10 Expansion tank
11 Line from heat exchanger to thermostat

https://truckmanualshub.com/



**1012 E**
**escape regulation**

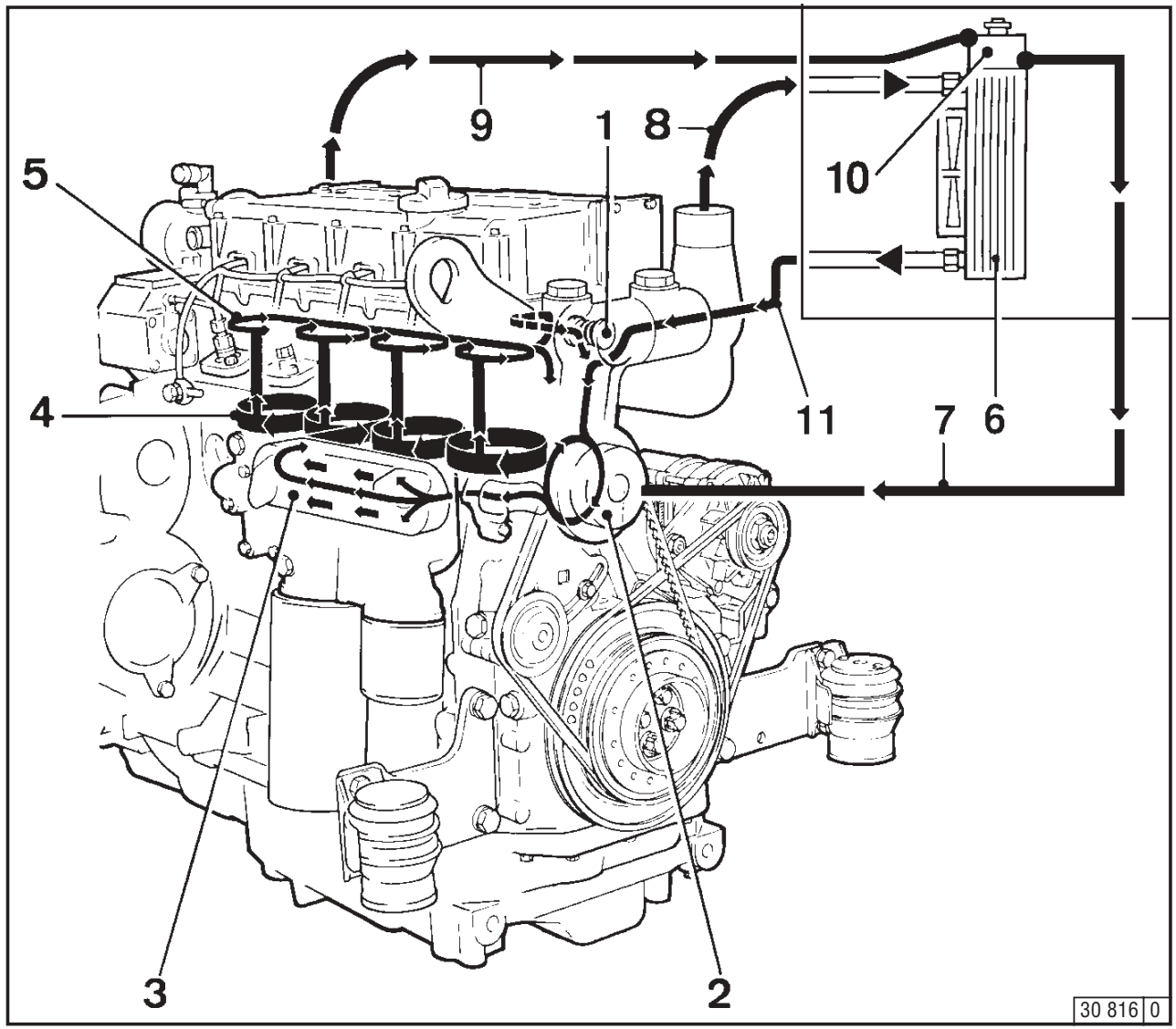


1 Thermostat housing
2 Cooling fluid pump
3 Lubricating oil cooler
4 Cylinder cooling
5 Cylinder head cooling
6 Heat exchanger
7 Compensation setting of compensation tank t o cooling fluid pump
8 Line (Crankcase) from thermostat to heat exchanger
9 Ventilation line from cylinder head to compensation tank
10 Compensation tank
11 Line from heat exchanger to cooling fluid pump

https://truckmanualshub.com/



## 2.5.3 Cooling System Schematic 1013

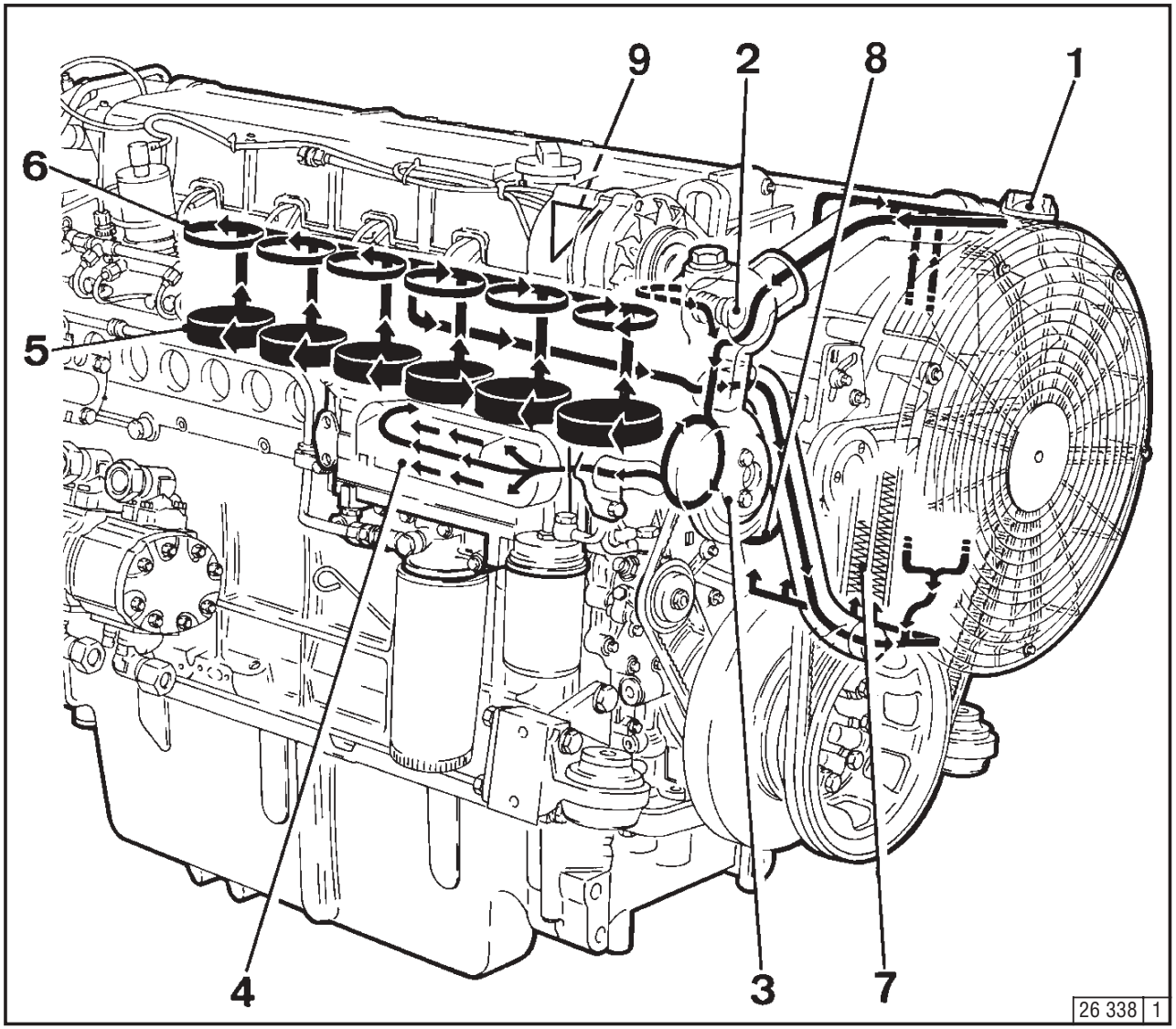


1 Coolant filler
2 Thermostat housing
3 Coolant pump
4 Lube oil cooler
5 Cylinder cooling
6 Cylinder head cooling
7 Heat exchanger
8 Expansion line coolant pump/expansion tank
9 Ventilation line from cylinder head to heat exchanger (expansion tank)

https://truckmanualshub.com/



## 2.5.4 Cooling System Schematic 1013 E entrance regulation

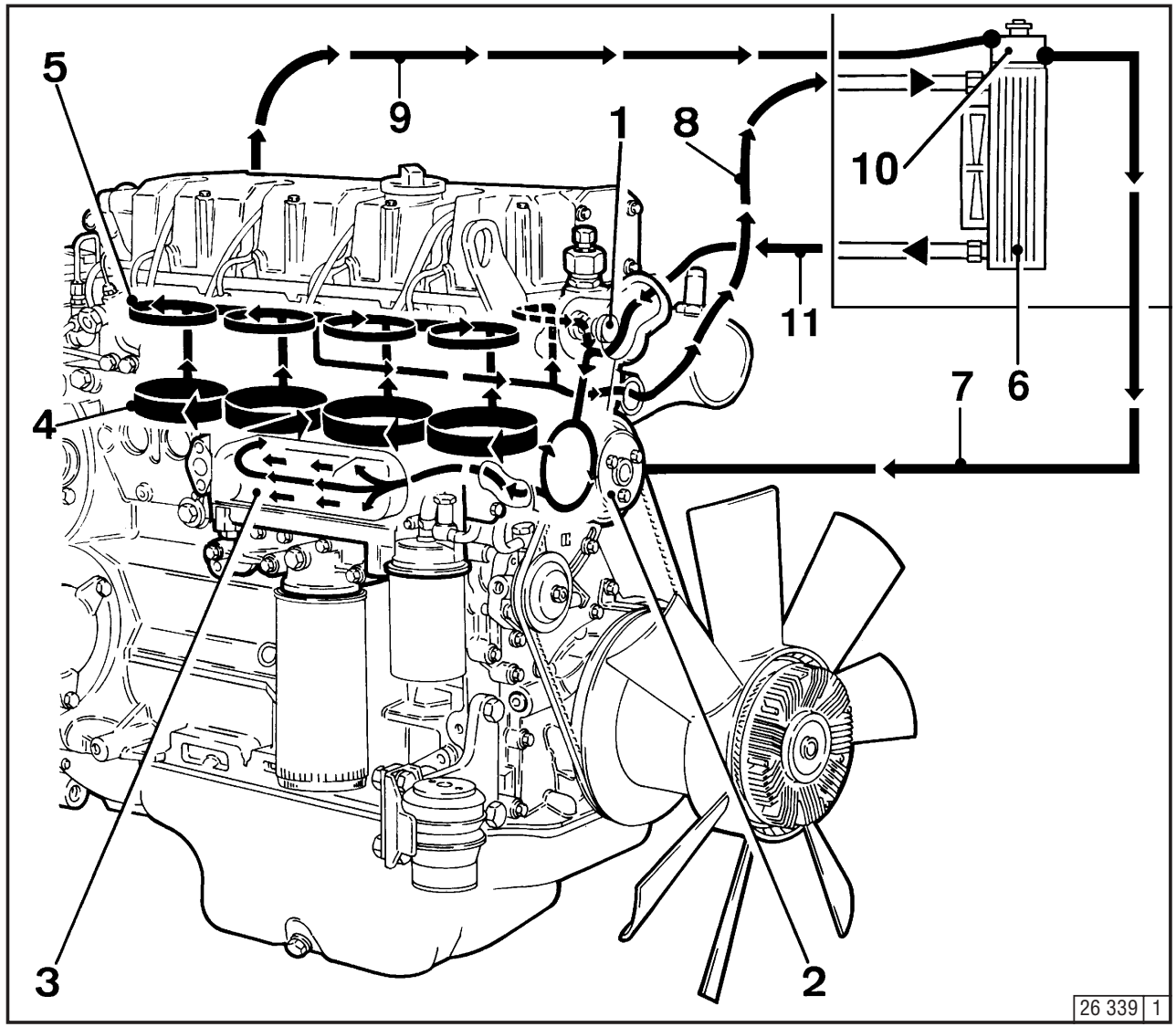


1 Thermostat housing
2 Coolant pump
3 Lube oil cooler
4 Cylinder cooling
5 Cylinder head cooling
6 Heat exchanger
7 Ventilation line expansion tank - coolant pump
8 Line from engine to heat exchanger
9 Ventilation line from cylinder head to expansion tank
10 Expansion tank
11 Line from heat exchanger to thermostat

https://truckmanualshub.com/



**1013 E**
**escape regulation**

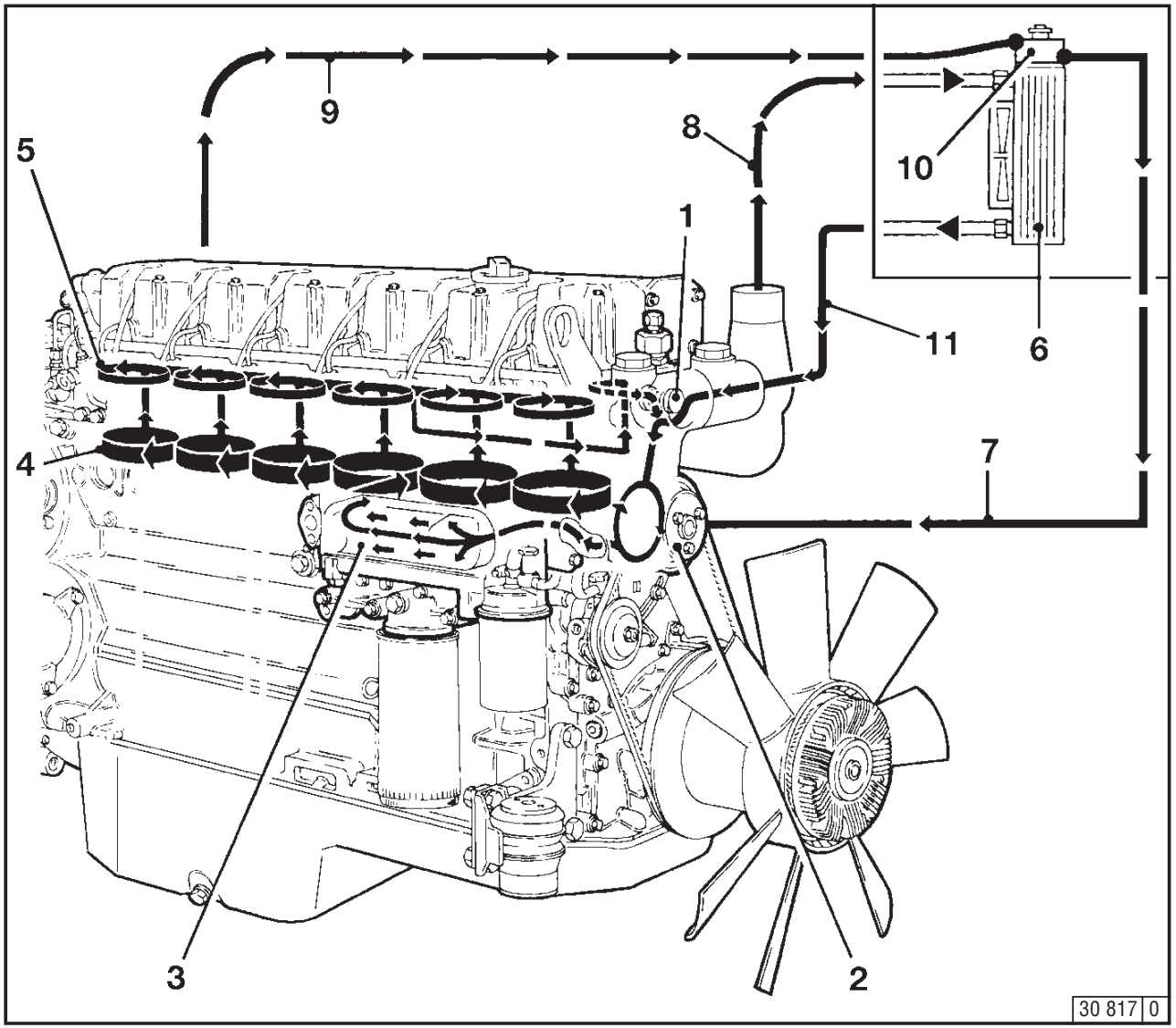


1 Thermostat housing
2 Cooling fluid pump
3 Lubricating oil cooler
4 Cylinder cooling
5 Cylinder head cooling
6 Heat exchanger
7 Compensation setting of compensation tank t o cooling fluid pump
8 Line (Crankcase) from thermostat to heat exchanger
9 Ventilation line from cylinder head to compensation tank
10 Compensation tank
11 Line from heat exchanger to cooling fluid pump

https://truckmanualshub.com/

# Engine Operation

3

3.1 Commissioning
3.2 Starting
3.3 Monitoring Systems
3.4 Stopping
3.5 Operating Conditions

https://truckmanualshub.com/



### 3.1.1 Adding Engine Oil

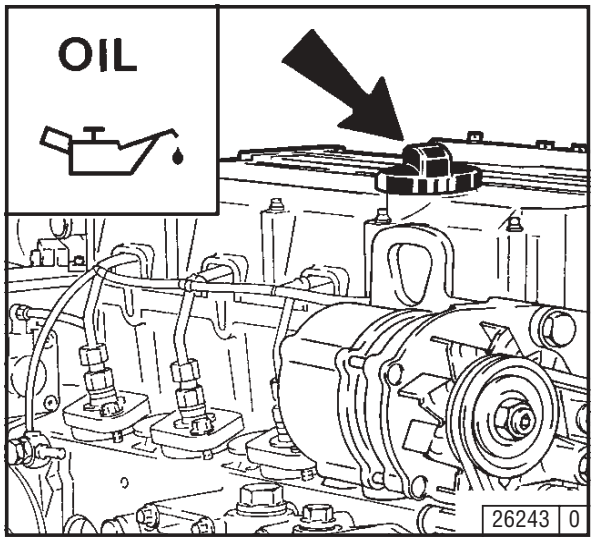


As a rule, engines are delivered empty of oil.
Pour lube oil into the oil filler neck (arrow).
For oil quantities, see 9.1.
For oil grade and viscosity, see 4.1.

### 3.1.2 Filling Oil Bath Air Cleaner

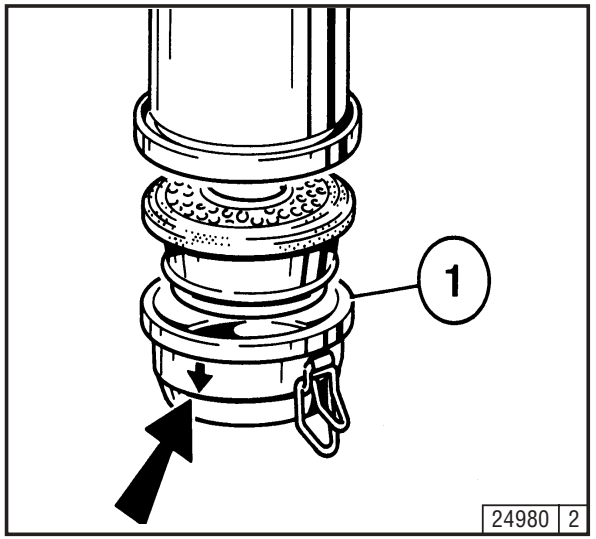


Fill oil cup 1 of the oil bath air cleaner (if fitted) with oil up to the arrow.
For oil grade and viscosity, see 4.1.

Do not fill the precleaner dust collector (if fitted) with oil.

### 3.1.3 Adding Fuel

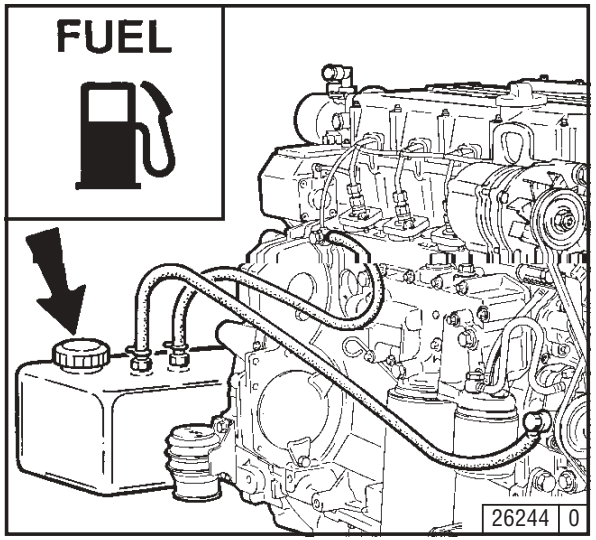


Use only commercial-grade diesel fuel. For fuel grade, see 4.2.
If required use a preliminary fuel filter.
If in doubt, please ask your service representative.
Use summer or winter-grade fuel, depending on the ambient temperature.

Never fill the fuel tank while the engine is running. Keep the filler cap area clean and do not spill fuel.

https://truckmanualshub.com/



### 3.1.4 Filling/Venting the Cooling System

- 1012/1013
  See section 6.3.4
- 1012 E/1013 E
  See section 6.3.6
- Unit engine (with frontal radiator)
  See section 6.3.8.

Engine never without coolant operate.
(also not briefly)

### 3.1.5 Other Preparations

- Check battery and cable connections, see 6.7.1.

- Trial run
  - After the engine has been prepared, let it run for about 10 minutes without load.

  During and after trial run
  - Check the engine for leaks.

  After the engine has been turned off
  - Check the oil level and top up if necessary, see 6.1.2.
  - Tighten the V-belt, see 6.5.

- **Breaking-in**
  During the break-in phase - about 200 operat-ing hours - check the oil level twice a day.
  After the engine is broken in, checking once a day will be sufficient.

- Commissioning conserved engines
  Remove conservation materials as outlined in section 8.1

https://truckmanualshub.com/



## 3.2.1 Electric Starting

Make sure that no-one is standing in the danger area of the engine/ machine before switching on. After repairs: Check whether all protection devices are mounted and all tools have been removed from the engine.
Do not use any additional starting aids (e.g. injection with start pilot) when starting with heating plugs. Danger of accidents! Attention: The engine may never be started with the speed governor removed. Disconnect the battery terminals! If the engine does not start properly with automatic starting of the heating flange (starter does not get any current due to malfunction in the equipment/customer side electrical control), the start procedure must be aborted completely (set ignition switch to OFF, interrupt power supply for the heating flange). Before restarting the engine, the fault must be eliminated to avoid any overheating damage to the heating flange/charge air hoses.

Do not actuate the starter for more than 20 seconds. If the engine does not catch, wait a minute then try again.
If the engine does not catch after two attempts, refer to the Diagnosis Chart (see 7.1).

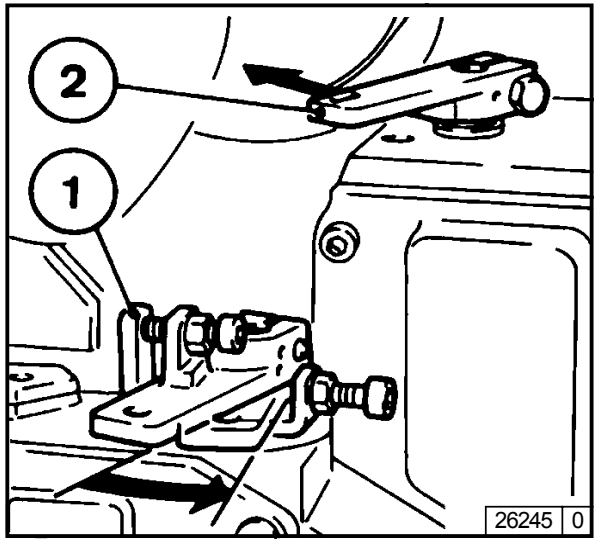


- Disengage the clutch to separate the engine from the driven equipment.
- Move speed control lever 1 in direction of arrow at least to middle speed position.
- Move shutdown lever 2 to operating position (in opposite direction of arrow).

### Starting without Cold-Start Aid

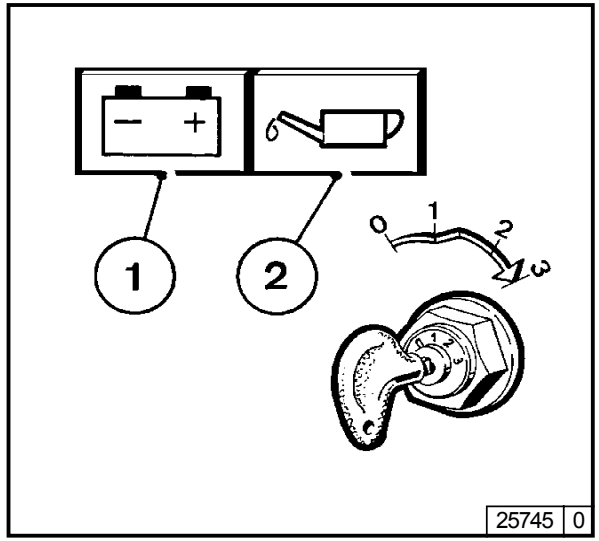


- Insert key.
  – Position 0 = no operating voltage.
- Turn key clockwise.
  – Position 1 = operating voltage.
  – Pilot lights 1 and 2 come on.
- Push the key in and turn it further clockwise against spring pressure.
  – Position 2 = no function
  – Position 3 = start
- Release key as soon as engine fires.
  – Pilot lights go out.

https://truckmanualshub.com/



## Starting with Heater Plugs

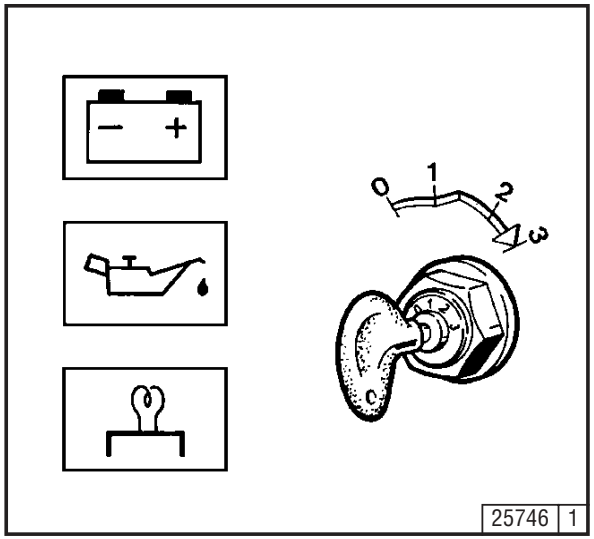


- Insert key.
  – Position 0 = no operating voltage.

- Turn key clockwise.
  – Position 1 = operating voltage.
  – Pilot lights come on. Leave to preheat until pilot lights go out.

- Push key in and turn further clockwise against spring pressure.
  – Position 2 = no function.
  – Position 3 = start.

- Release key as soon as engine fires.
  – Pilot lights go out.

https://truckmanualshub.com/



## 3.3.1 Engine Oil Pressure

### Oil Pressure Pilot Light

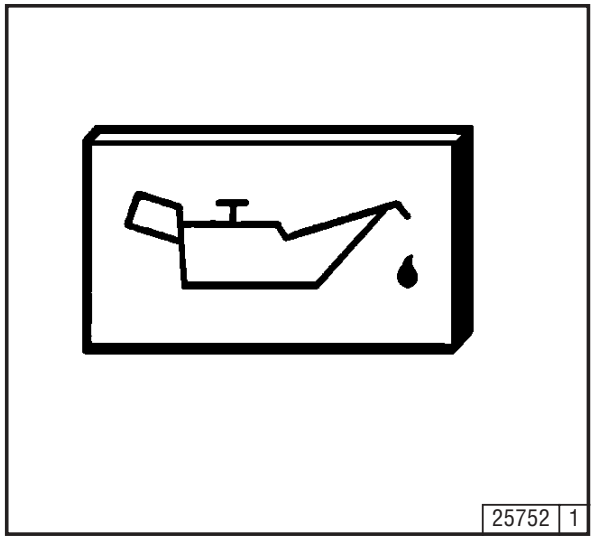


- The oil pressure pilot light comes on with operating voltage on and engine off.
- The oil pressure pilot light should go out when the engine is running.

### Oil Pressure Indicator

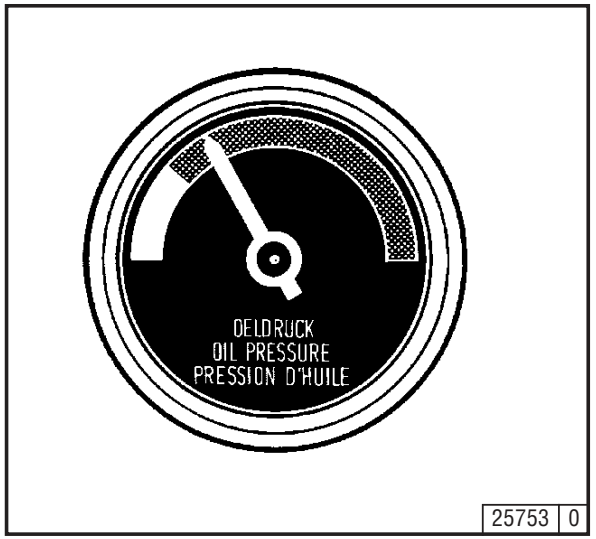


- The pointer must remain in the green sector over the entire operating range.

### Oil Pressure Gauge

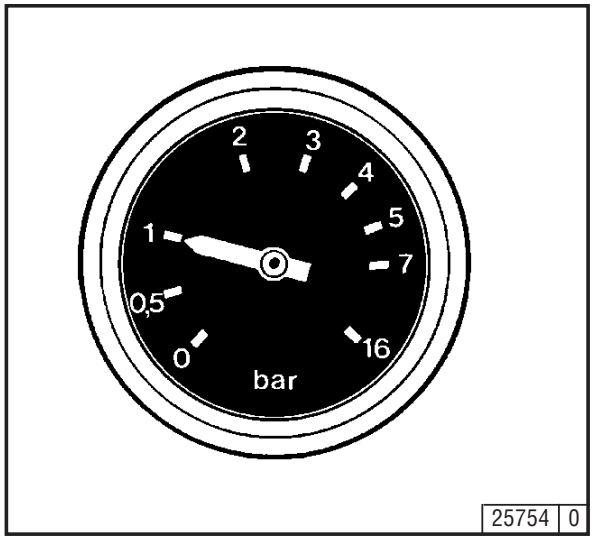


- The pointer must indicate the minimum oil pressure (see 9.1).

https://truckmanualshub.com/



### 3.3.2 Coolant Temperature

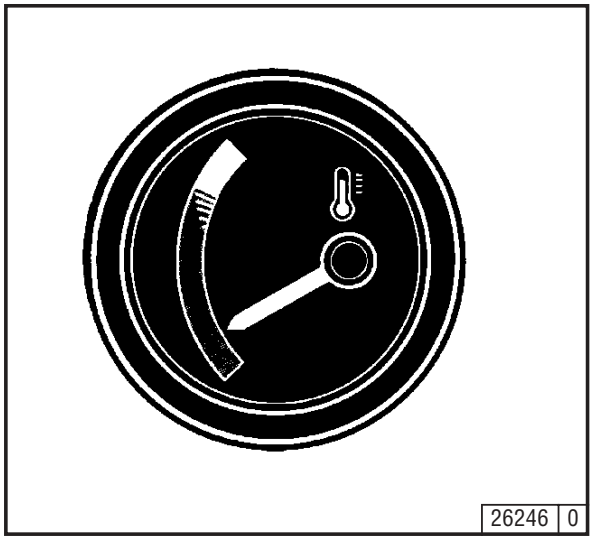


- The coolant temperature gauge pointer should remain in the green sector most of the time. It should rarely enter the yellow-green sector. If the pointer enters the orange sector, the engine is overheating. Turn it off and establish the cause from the Diagnosis Chart (see 7.1).

### 3.3.3 Coolant Level / Coolant Level Gauge

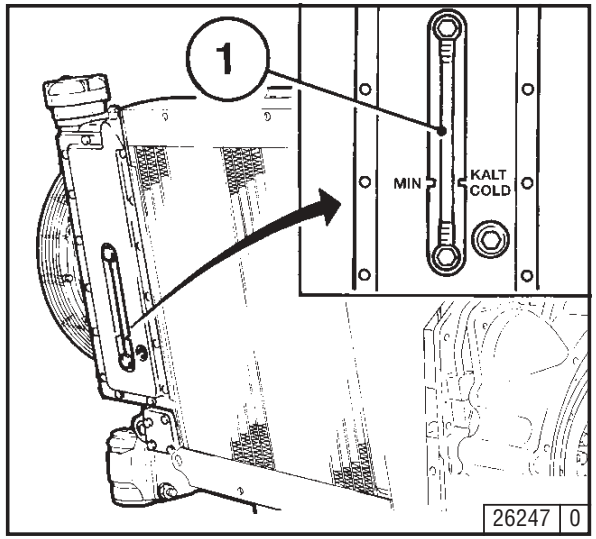


- When the engine is cold, coolant level 1 should be above the KALT-COLD mark.

- Top up with coolant if the level falls below the MIN mark on the sight glass, or if the coolant warning switch comes on.
  – Unscrew the filler cap.
  – Top up with coolant up to the upper edge of the filler neck.
  – Tighten the filler cap

- If it is not possible to carry out a check at the inspection opening, if required carry out a check at the filler neck:
  If you cannot see any fluid:
  - topping up is required.

- If a level switch is fitted, the engine is shut down automatically when the level falls below the MIN marking.

https://truckmanualshub.com/



### 3.4.1 Engines with Mechanical Shutdown

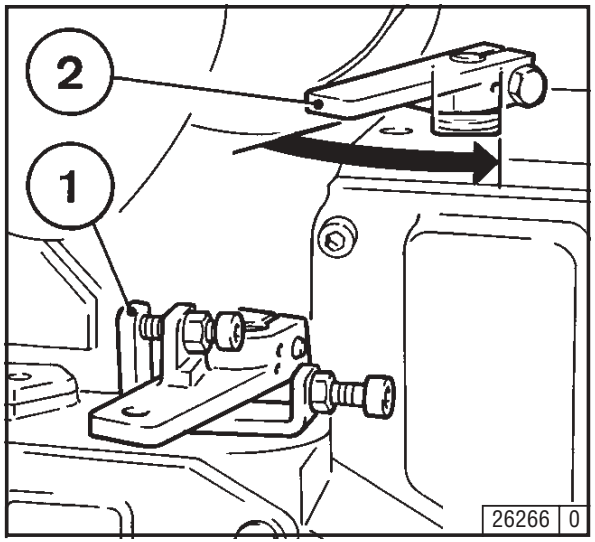


- Move speed control lever 1 to low idle.
- Operate shutdown lever 2 until the engine comes to a stop. The charge pilot light and the oil pressure pilot light will come on when the engine stops.
- Turn key counterclockwise (to Position 0) and remove. The pilot lights will go out.

Where possible, do not switch the engine off from full load. Leave running in idle for approx. 2 minutes.

### 3.4.2 Engines with Electrical Shutdown

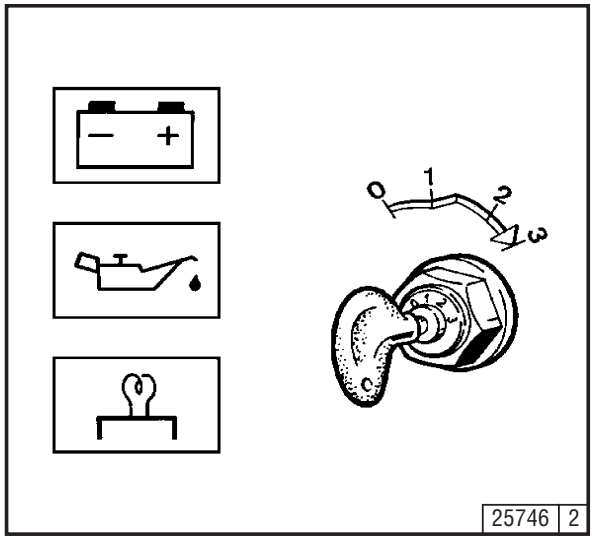


- Turn key counterclockwise (to Position 0) and remove. The pilot lights will go out.

https://truckmanualshub.com/



## 3.5.1 Winter Operation

- **Lube Oil Viscosity**
  - Select the oil viscosity (SAE grade) according to the ambient temperature when the engine is started (see 4.1.2).
  - Increase oil change frequency when operating below –10°C, see 6.1.1.

- **Diesel Fuel**
  - Use winter-grade diesel fuel for operation below 0°C, see 4.2.2.

- **Coolant**
  - Set the water/antifreeze mix to suit the lowest likely temperature (max. –35°C), see 4.3.1.

- **Additional Maintenance Work**
  - Drain the sludge from the fuel tank once a week by undoing the drain plug.
  - Adjust the oil level in the oil bath air cleaner (if fitted) to suit the ambient temperature.
  - At temperatures below –20°C, lubricate the flywheel ring gear from time to time with low-temperature grease, such as Bosch FT 1 V 31. To do so, remove the starter and introduce the grease through the pinion hole.

- **Cold-Start Aids**
  - At temperatures near or below freezing point, use glow plugs if necessary (see 3.2.1).
    This not only lowers the starting limit temperature, but provides easier starting at temperatures normally not requiring a starting aid.

- **Battery**
  - Efficient cold starting requires a healthy battery (see 6.7.1).
  - The starting limit temperature can be lowered by 4-5°C by heating the battery up to about +20°C. To do so, remove the battery and store in a warm place.

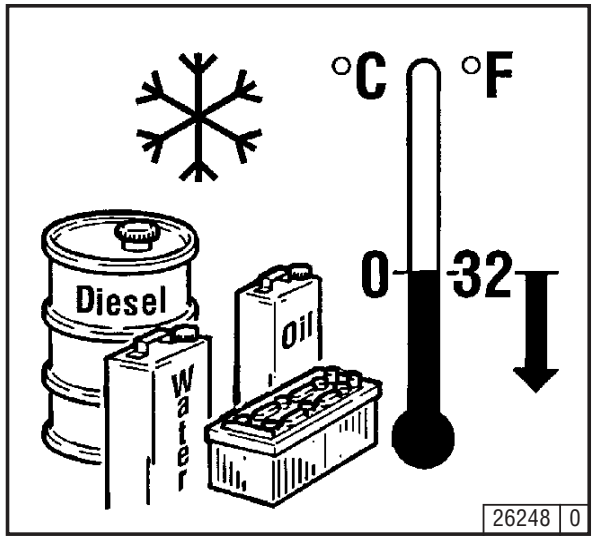

https://truckmanualshub.com/



### 3.5.2 High Ambient Temperature, High Altitude

- As the altitude and ambient temperature rise, the density of the air tends to decrease, which affects the maximum power output of the engine, the exhaust gas quality and, in extreme cases, the starting behavior. Under transient conditions, the engine can be used at altitudes up to 1000 meters / 3400 feet and temperatures up to 30°C.
  If the engine is to operate under more severe conditions (at higher altitudes or temperatures), it will be necessary to reduce the injected fuel quantity and, thus, engine power.

- If you have any doubts about engine operation under these or similar conditions, ask your engine or equipment supplier whether the engine has been derated in the interests of reliability, service life and exhaust gas quality (smoke). Otherwise, contact the nearest service representative.

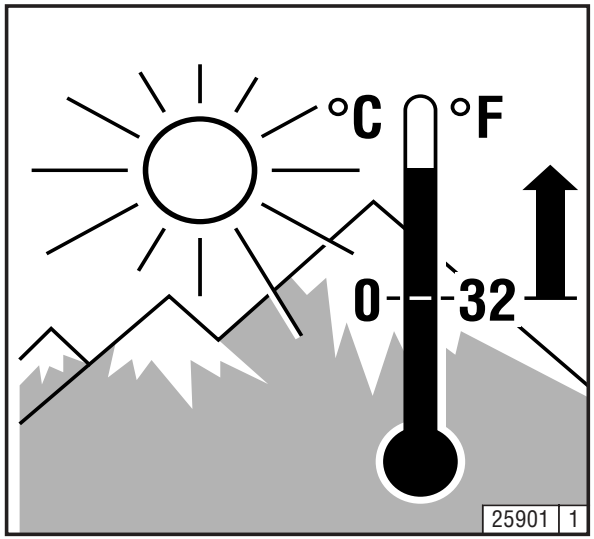

https://truckmanualshub.com/

# Operating Media

4

4.1 Lube Oil
4.2 Fuel
4.3 Coolant

© 2002

https://truckmanualshub.com/



## 4.1.1 Quality Grade

Lube oils are differentiated by **Deutz** according to their performance and quality class. Oils of other, comparable specifications can be used.

| Approved oils: | | | |
|---|---|---|---|
| **Deutz** | DQC I | DQC II | DQC III |
| **ACEA** | E2-96 | E3/96/E5-02 | E4-99 |
| **API** | CF/CF-4 | CH-4/CG-4 | - |
| **DHD** | - | DHD-1 | - |

The precise assignment of the admissible oil qualities to the engines is indicated in chapter 6.1.1.
If in doubt, contact your service representative.

## 4.1.2 Viscosity

Generally, multi-grade oils shall be used. In closed heated rooms at temperatures >5°C, also single-grade oils can be used.

As the viscosity of lube oil is dependent on temperature, the choice of SAE grade should be governed by the ambient temperature prevailing at the engine operating site.
Optimum operating behaviour will be attained if you take the accompanying oil viscosity diagram as a guide.
Should the temperature fall temporarily below the limits of the SAE grade selected, cold starting may be affected but the engine will not be damaged.
In order to keep wear to a minimum, do not exceed application limits for extended periods of time.

Synthetic lube oils feature an improved temperature and oxidation stability.

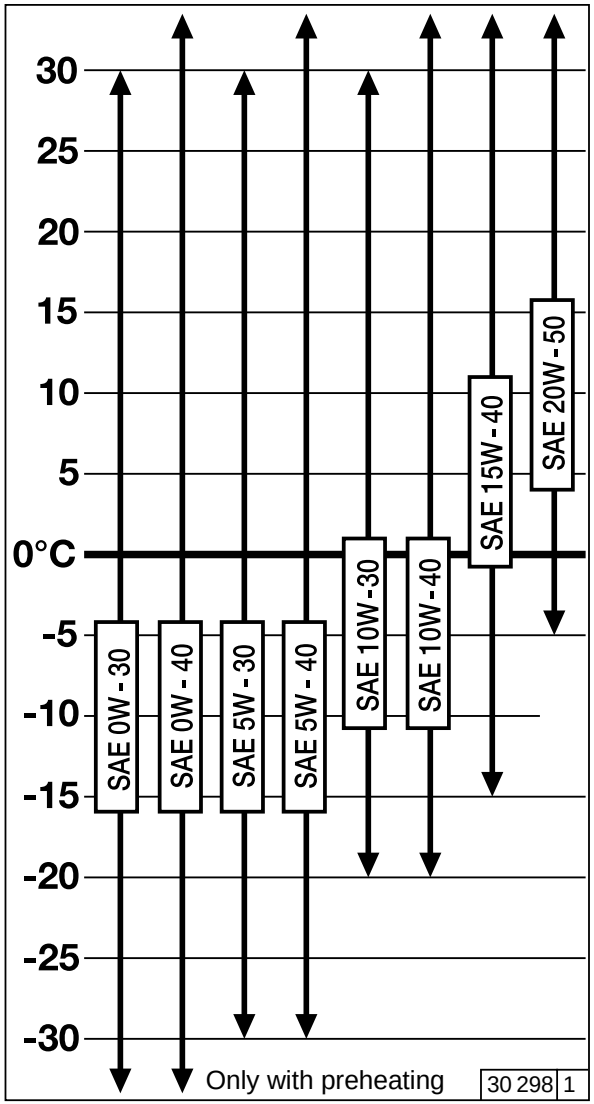


© 2002

https://truckmanualshub.com/



### 4.1.2.1 Specific lube oil definitions

The oils listed in the table are to be used for the following engines and applications:

- 1013FC
- all engines in block-type thermal power stations
- all engines in gensets operating in parallel with the mains / with each other
- engines in harvesting machines

These are high-grade oils. In addition, most of these oils are partly synthetic, some even fully synthetic (5W-40), and thus achieve the thermal stability required for the relevant application and are distinguished by a low tendency to cause deposits in the turbocharger and in the charge air pipes with closed-circuit crankcase breather.

**Lube oils for engines with uprated power and engines with high loading**

| Producer | Type of lube oil | SAE class | Availability |
|---|---|---|---|
| **DEUTZ** | **DEUTZ Oil TLX-10W40FE** | **10W-40** | **Europe** |
| ADDINOL | ADDINOL Super Truck MD 1048 | 10W-40 | Europe, Asia |
| | ADDINOL Ultra Truck MD 0538 | 5W-30 | Europe, Asia |
| AGIP | Agip Sigma Ultra TFE | 10W-40 | worldwide |
| | Autol Valve Ultra FE | 10W-40 | Germany |
| ARAL | Aral MegaTurboral | 10W-40 | worldwide |
| | Aral SuperTurboral | 5W-30 | worldwide |
| AVIA | TURBOSYNTH HT-E | 10W-40 | Germany |
| BAYWA | BayWa Super Truck 1040 MC | 10W-40 | South Germany |
| | BayWa Turbo 4000 | 10W-40 | South Germany |
| BP OIL International | BP Vanellus E7 Plus | 10W-40 | Europe |
| | BP Vanellus E7 Supreme | 5W-40 | Europe |
| Castrol | Castrol SYNTRUCK | 5W-40 | Europe, North America, Brazil, Argentina, Australia, South Africa |
| Castrol | Castrol DYNAMAX | 7,5W-40 | Europe, North America, Brazil, Argentina, Australia, South Africa |
| CEPSA | EUROTRANS SHPD | 10W-40 | Spain, Portugal |
| CHEVRON | Chevron Delo 400 Synthtic | 5W-40 | North America |
| DEA | DEA Cronos Synth | 5W-30 | Germany, Europe |
| | DEA Cronos Premium LD | 10W-40 | Germany, Europe |
| | DEA Cronos Premium FX | 10W-40 | Europe |
| ESSO | Essolube XTS 501 | 10W-40 | Europe |
| FUCHS EUROPE | Fuchs Titan Cargo MC | 10W-40 | worldwide |
| | Fuchs Titan Cargo SL | 5W-30 | worldwide |
| | Fuchs Titan Unic Plus MC | 10W-40 | worldwide |
| MOBIL OIL | Mobil Delvac 1 SHC | 5W-40 | Europe, SE Asia, Afrika |
| | Mobil Delvac 1 | 5W-40 | worldwide |
| | Mobil Delvac XHP Extra | 10W-40 | Europe, SE Asia |
| Schmierölraffinerie Salzbergen | Wintershall TFG | 10W-40 | Europe |
| Shell International | Shell Myrina TX / Shell Rimula Ultra | 5W-30 | Europe, different description in some country |
| | Shell Myrina TX / Shell Rimula Ultra | 10W-40 | Europa, different description in some country |
| Texaco | Ursa Super TDX 10W-40 | 10W-40 | Europe |
| | Ursa Premium FE 5W-30 | 5W-30 | Europe |
| TOTAL FINA ELF | TOTAL RUBIA TIR 8600 | 10W-40 | worldwide |
| | ELF PERFORMANCE EXPERTY MX 1010 | 10W-40 | worldwide |
| | ELF PERFORMANCE EXPERTY MX 1012 | 10W-40 | Germany, Benelux, Scandinavia, Austria |
| | FINA KAPPA FIRST | 5W-30 | Europe |
| | FINA KAPPA ULTRA | 10W-40 | Europe |

The table will be extended as and when required.

© 2002

https://truckmanualshub.com/



## 4.2.1 Quality Grade

Use commercially available diesel fuel with less than 0.5% sulphur content. If the sulfur content is higher than 0.5%, oil change intervals should be reduced (see 6.1.1).

The following fuel specifications/standards are approved:
(refer to TR 0199-3002)

- **Diesel fuel**
  - DIN EN 590
  - BS 2869: A1 and A2
    (with A2, take note of the sulfur content!)
  - ASTM D 975-88; 1-D and 2-D
  - NATO Code F-54and F-75
  - ISO 8217 DMX
  - ISO 8217 DMA
- **Light heating oil**
  according to DIN 51603
  ASTM D 396; 1 and 2
  BS 2869 Class D
- **Jet fuel**
  - F34/F35/F44 (kerosene)
  - F54 (equivalent to diesel fuel according to DIN EN 590)
  - XF 63 (equivalent to F34+F35 with additives)
- **Bio diesel fuel**
  - according to DIN 51606- FAME

Exhaust emission values which may be determined in the cause of type approval tests always refer to the reference fuel prescribed by the authorities for the type approval test.

## 4.2.2 Winter-Grade Fuel

Waxing may occur at low temperatures, clogging the fuel system and reducing engine efficiency. If the ambient temperature is less than 0 °C, winter-grade fuel (suitable down to -20 °C) should be used. This fuel is usually available from filling stations well in advance of the cold months.

- At temperatures below -20°C/, kerosene should be added to the diesel fuel. The relevant percentages are given in the diagram at the right
- Special diesel fuels can be used for climatic zones down to - 44 °C.

If summer-grade diesel fuel must be used at temperatures below 0°C, up to 60% kerosene can be added (see diagram).

In most cases, adequate resistance to cold can be obtained by adding a flow improver (additive). Please contact your **Deutz** partner.

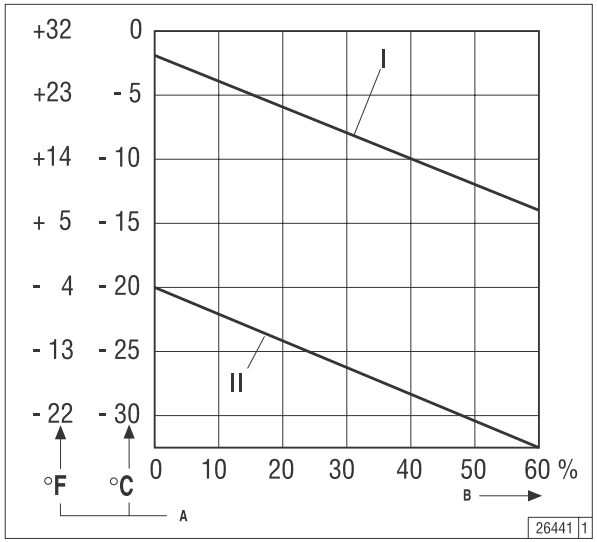


| Legend: | |
|---|---|
| I | Summer diesel fuel |
| II | Winter diesel fuel |
| A | Outside temperature |
| B | Percentage of kerosene to be added |

Diesel fuels must never be mixed with petrol (normal and super grade petrol)!

Mix in tank only. Fill with the appropriate amount of kerosene first, then add the diesel fuel.

© 2002

https://truckmanualshub.com/



### 4.3.1 Water Quality for Coolant Preparation

The values given below must not be exceeded.
A test kit (order number 1213 0382) can be obtained from DEUTZ Service to check the quality of the water available.

| Water quality | min. | max. |
|---|---|---|
| pH-value at 20°C /68° F | 6.5 | 8.5 |
| Chloride ion content [mg/dm3] | – | 100 |
| Sulfate ion content [mg/dm3] | – | 100 |
| Total hardness [°dGH] | 3 | 20 |

### 4.3.2 Coolant Preparation

The preparation and monitoring of coolant in liquid-cooled engines is especially important because corrosion, cavitation and freezing can lead to engine damage.
The coolant is prepared by admixing a cooling system protective liquid with the cooling water.
The cooling system must be monitored regularly (see 5.1). The water level and the cooling system protective liquid concentration should both be checked.
The cooling system protective liquid concentration can be checked with a commercially available tester (e.g. gefo glycomat® ).

When nitrite-based cooling system protective liquids are mixed with amine-based liquids, harmful nitrosamines are formed.

### 4.3.3 Cooling System Protective Liquid

DEUTZ cooling system protective agents can be obtained under order number 01011490 (5 litres) or 1221 1500 (210 litres). These are nitrite-, amine- and phosphate-free and provide effective protection against corrosion, cavitation and freezing.
If the above-mentioned cooling system agents are not available, the following products can be used in exceptional cases.

| Manufacturer | Product description |
|---|---|
| AVIA | AVIA Antifreeze Extra |
| BASF | Glysantin G 48 |
| DEA | DEA radiator antifreeze |
| SHELL | SHELL GlycoShell |

The concentration of the cooling system protective liquid in the coolant may not fall below/exceed the following limits:

| Cooling system protective liquid | Water |
|---|---|
| max. 45 Vol.% | 55% |
| min. 35 Vol.% | 65% |

For the quantity, see table overpage and information in section 9.1.
Other cooling system protective liquids, e.g. chemical corrosion inhibitors, can, in exceptional circumstances, be used in the coolant, in consultation with DEUTZ Service.
Order the cooling system protective liquid from: DEUTZ Service

Cooling system protective liquids must be disposed of in accordance with environmental regulations.

© 2002

https://truckmanualshub.com/



| Cooling System Protection | | | | | | | | | |
|---|---|---|---|---|---|---|---|---|---|
| **Cooling system protection [Vol %]** | **Cooling protective agent [°C]** | **Cooling system capacity *) [Liters]** | | | | | | | |
| | | 18 | 20 | 22 | 25 | 27 | 30 | 32 | 35 |
| | | **Cooling system protective liquid [Liters]** | | | | | | | |
| 35 | –22 | 2.8 | 7.0 | 7.7 | 8.75 | 9.5 | 10.5 | 11.2 | 12.3 |
| 40 | –28 | 7.2 | 8.0 | 8.8 | 10.0 | 10.8 | 12.0 | 12.8 | 14.0 |
| 45 | –35 | 8.1 | 9.0 | 9.9 | 11.3 | 12.2 | 13.5 | 14.4 | 15.8 |
| 50 | –45 | 9.0 | 10.0 | 11.0 | 12.5 | 13.5 | 15.0 | 16.0 | 17.5 |

*) For quantity of coolant in your engine, see Section 9.1.
Note: For figures in gray field, refer back to head-office.

© 2002

https://truckmanualshub.com/



5.1 Maintenance Schedule
5.2 Maintenance Chart
5.3 Maintenance Record

© 2002

https://truckmanualshub.com/



Maintenance step= E Check= ● Adjust= ❍ Clean= ▲ Replace= ■

Before or during 1st test run, during commissioning check twice daily or when commissioning new or reconditioned engines

Every 10 operating hours or daily

In operating hours (OH), every

*E70=1012 Engines 10000OH
*E70=1013 Engines 13000OH

## Industrial engines

The specified engine maintenance times are the max. permissible recommended times. Depending on the application shorter maintenance times may be necessary. Please refer to manufacturer's operating manual.
# Maintenance work to be carried out only by authorised service personnel.

| E10 | E20 | E30 500 | E40 1000 | E50 1500 | E60 2000 | E60 3000 | E70* * | Years 1 | Years 2 | Operation | Section |
|---|---|---|---|---|---|---|---|---|---|---|---|
| ● | ● | | | | | | | | | Lube oil level, top up as necessary | 6.1.2/3.1.6 |
| | | ■ | | | | | | | | Lube oil (oil changing interval acc. to engine application), see TR0199-99-3002 | 6.1.1/6.1.2 |
| | | ■ | | | | | | | | Oil filter cartridge (for every lube oil change) | 6.1.3 |
| | | | ■ | | | | | | | Fuel filter cartridge | 6.2.1 |
| | | | | | | ● | | | | Injection valve | # |
| | | | ● | | | | | | ■ | Flexible fuel leakage lines (replace completely) | 6.2.5 |
| ● | | | ■1) | | | | | ■ | | Fuel pre-filter * | 4.2/ 6.2/2-4 |
| ● | | ● | | | ■ | | | | ■ | Coolant (additive concentration) | 4.3.1/ 2/ 3 |
| ●✔ | ● | | | ●✔ | | | | | | Coolant liquid level/ ✔ Version with float switch, see TR0130-48-004 | 3.3.3 |
| ● | ● | | ■ | | | | | | | Dry/suction air filter (if present service as per maintenance display) | 6.4.3 /4 |
| ● | | | ▲ | | | | | ▲ | | Charge cooler (drain lube oil / condensate) | 6.3.9 |
| | | | ● | | | | | | | Battery and cable connections | 6.7.1 |
| | | | ● | | | | | | | Sheathed-element glow plugs | – |
| ● | | | ● | | | | | | | Engine monitoring, warning system | 3.3 # |
| | | | | ❍ | | | | | | Valve clearance (set if necessary, earlier if noises occur) | 6.6.1# |

* If the water level warning system (lamp/siren) responds, the fuel pre-filter must be emptied immediately.

1) Changing the pre-filter cartridge depends on the degree of soiling of the fuel used. If fuels which do not meet the requirements of TR 0199-99-3005 (see 4.2.1) are used the warranty will be voided.

© 2004

https://truckmanualshub.com/



## Industrial engines

The specified engine maintenance times are the max. permissible recommended times. Depending on the application shorter maintenance times may be necessary. Please refer to manufacturer's operating manual.
# Maintenance work to be carried out only by authorised service personnel.

Maintenance step= E Check= ● Adjust= ❍ Clean= ▲ Replace= ■

Before or during 1st test run, during commissioning check twice daily or when commissioning new or reconditioned engines

Every 10 operating hours or daily

In operating hours (OH), every

*E70 1012 Engines 10000OH
*E70 1013 Engines 13000OH

| E10 | E20 | E30 500 | E40 1000 | E50 1500 | E60 2000 | E60 3000 | E70* * | Years 1 | Years 2 | Operation | Section |
|---|---|---|---|---|---|---|---|---|---|---|---|
| ● | | ● | | | | | | | ■ | V-belts (retighten or replace as necessary) | 6.5 |
| ● | ● | | | | | | | | | Check engine for leaks (visual inspection) | – |
| ● | | | ● | | | | | | | Engine bearing fixings (renew if damaged) | 9.2 |
| | | | ● | | | | | | | Check cooling system bearings – rubber and retaining elements | – |
| ● | | | ● | | | | | | | Fixings, hose connections / clamp | – |
| | | | | | | | ■ | | | Major overhaul | # |

## Expansions or modifications for engines with EPA acceptance

The specified engine maintenance times are the max. permissible recommended times. Depending on the application shorter maintenance times may be necessary. Please refer to manufacturer's operating manual.
# Maintenance work to be carried out only by authorised service personnel.

Maintenance step= E Check= ● Adjust= ❍ Clean= ▲ Replace= ■

max. permissible recommended times in operating hours (OH), every

Before or during 1st test run, during commissioning check twice daily or when commissioning new or reconditioned engines

Every 10 operating hours or daily

In operating hours (OH), every

*1012 Engines 10000OH
*1013 Engines 13000OH

| E10 | E20 | E30 500 | E40 1000 | E50 1500 | E60 3000 | E60 4500 | E70* * | Years 1 | Years 2 | Operation | Section |
|---|---|---|---|---|---|---|---|---|---|---|---|
| | | | | | ■ | | | | | Injection valve < 130kW | # |
| | | | | | | ■ | | | | Injection valve > 130kW | # |

© 2004

https://truckmanualshub.com/



### 5.2.1 Additional maintenance

| Intervals at/after | Maintenance | Stages | Execution |
|---|---|---|---|
| 50 Bh | E 10 | After commissioning and E50, E60, E70 | authorized trained staff |
| daily | E 20 | Daily check | routine operator, authorized trained staff |
| 500 Bh | E 30 | Inspection | authorized trained staff |
| 1000 Bh | E 40 | Extended inspection | authorized trained staff |
| 2000 Bh | E60 | Extended intermediate overhaul | authorized trained staff |
| 3000 Bh (EPA) | E60 | Extended intermediate overhaul | authorized trained staff |
| 10 000 Bh (1012) | E 70 | Major overhaul | authorized trained staff |
| 12 000 Bh (1013) | E 70 | Major overhaul | authorized trained staff |

© 2004

https://truckmanualshub.com/



The maintenance chart shown here is supplied as self-adhesive label with each engine. It should be affixed where it can be seen clearly on the engine or driven equipment.

Check that this is the case.

If necessary, ask your engine or equipment supplier for a fresh supply of labels.

Routine work should be carried out according to the schedule in 5.1.

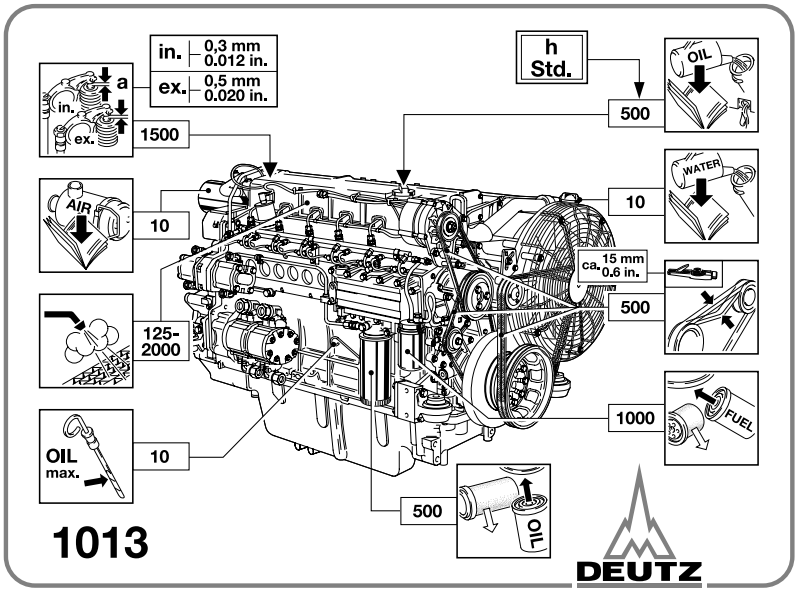


0297 7782 0

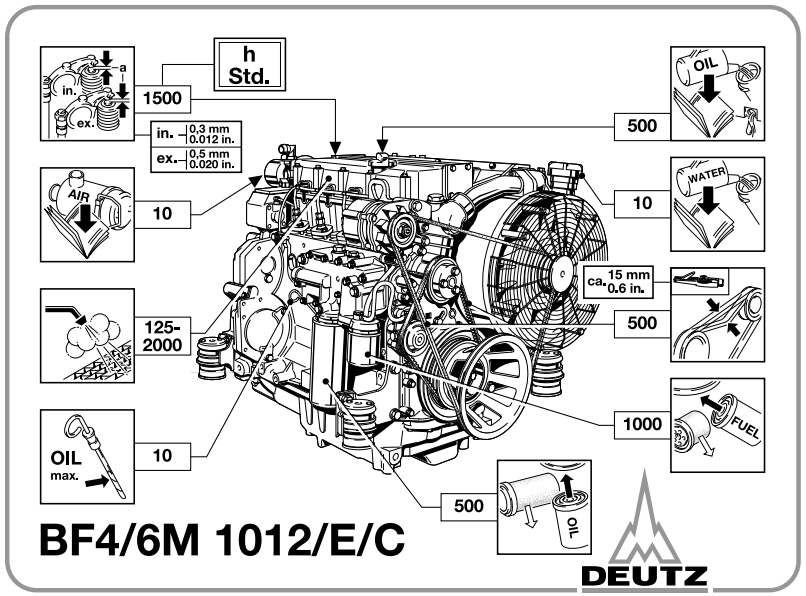


0297 7783 0

Stop the engine before carrying out any maintenance work.

© 2004

https://truckmanualshub.com/



The maintenance chart shown here is supplied as self-adhesive label with each engine. It should be affixed where it can be seen clearly on the engine or driven equipment.
Check that this is the case.
If necessary, ask your engine or equipment supplier for a fresh supply of labels.
Routine work should be carried out according to the schedule in 5.1.

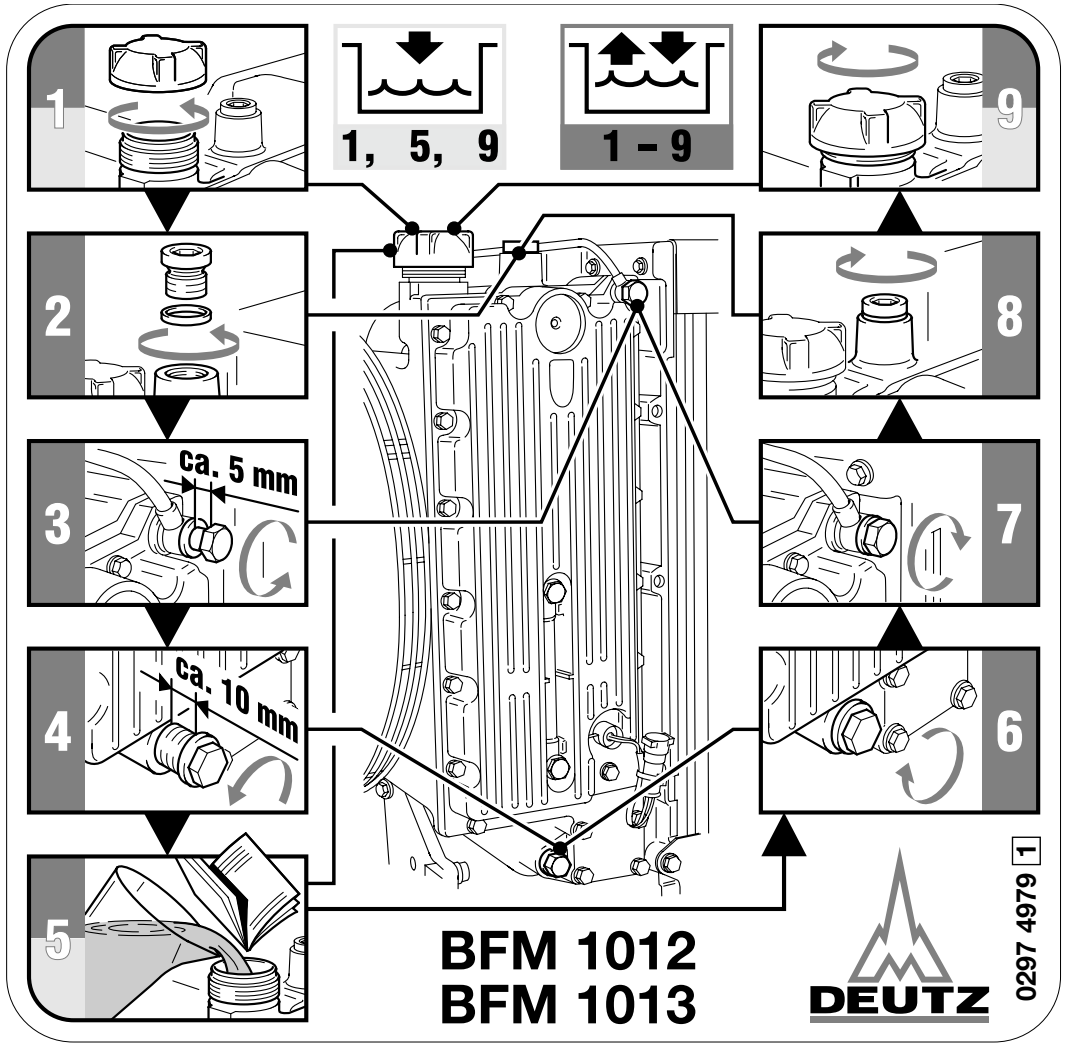


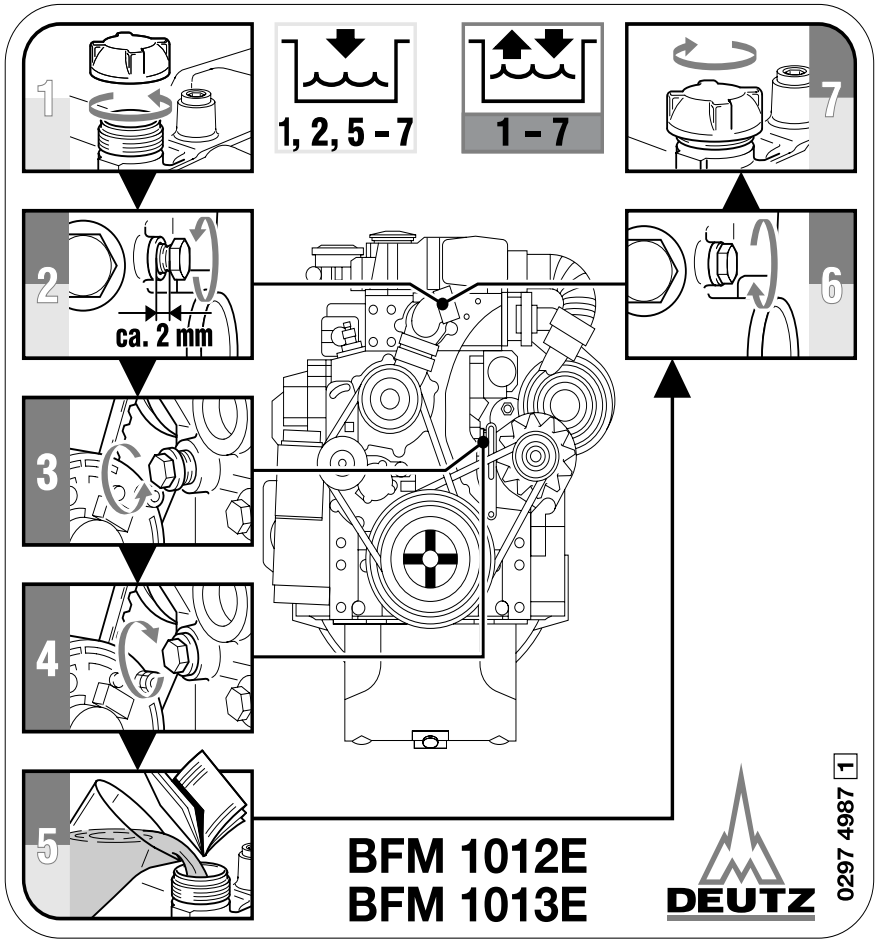


Standard engine

© 2004

https://truckmanualshub.com/



The maintenance chart shown here is supplied as self-adhesive label with each engine. It should be affixed where it can be seen clearly on the engine or driven equipment.
Check that this is the case.
If necessary, ask your engine or equipment supplier for a fresh supply of labels.
Routine work should be carried out according to the schedule in 5.1.

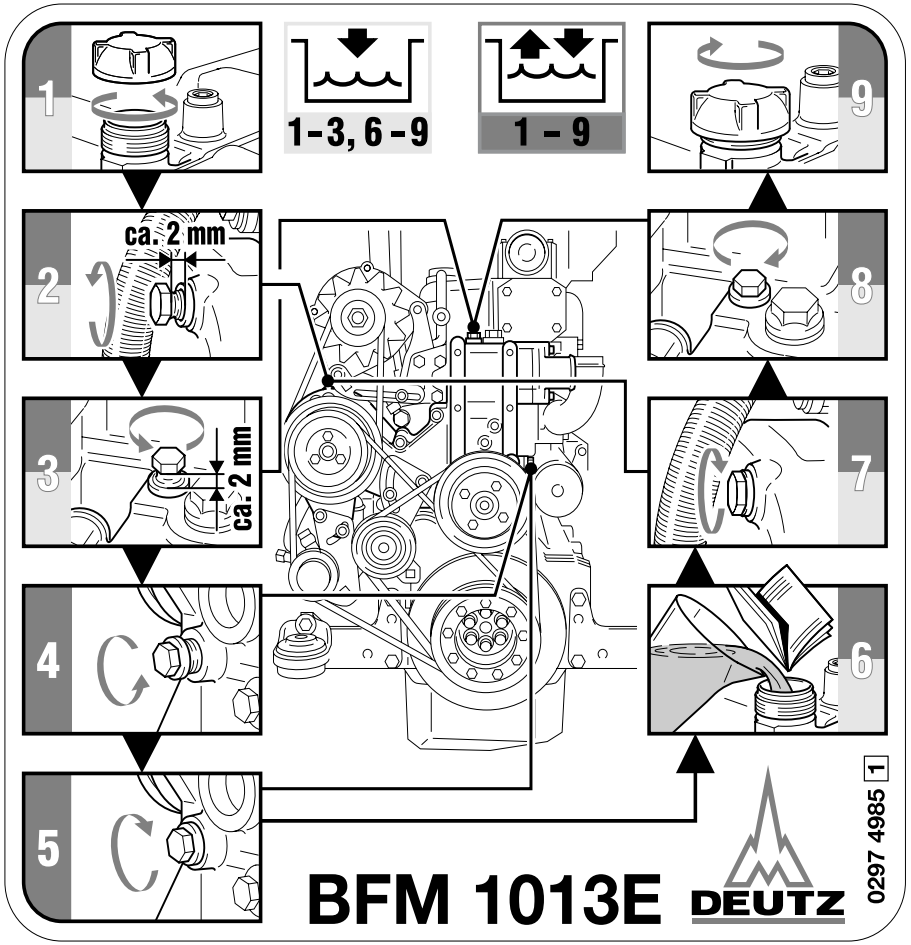


Short engine

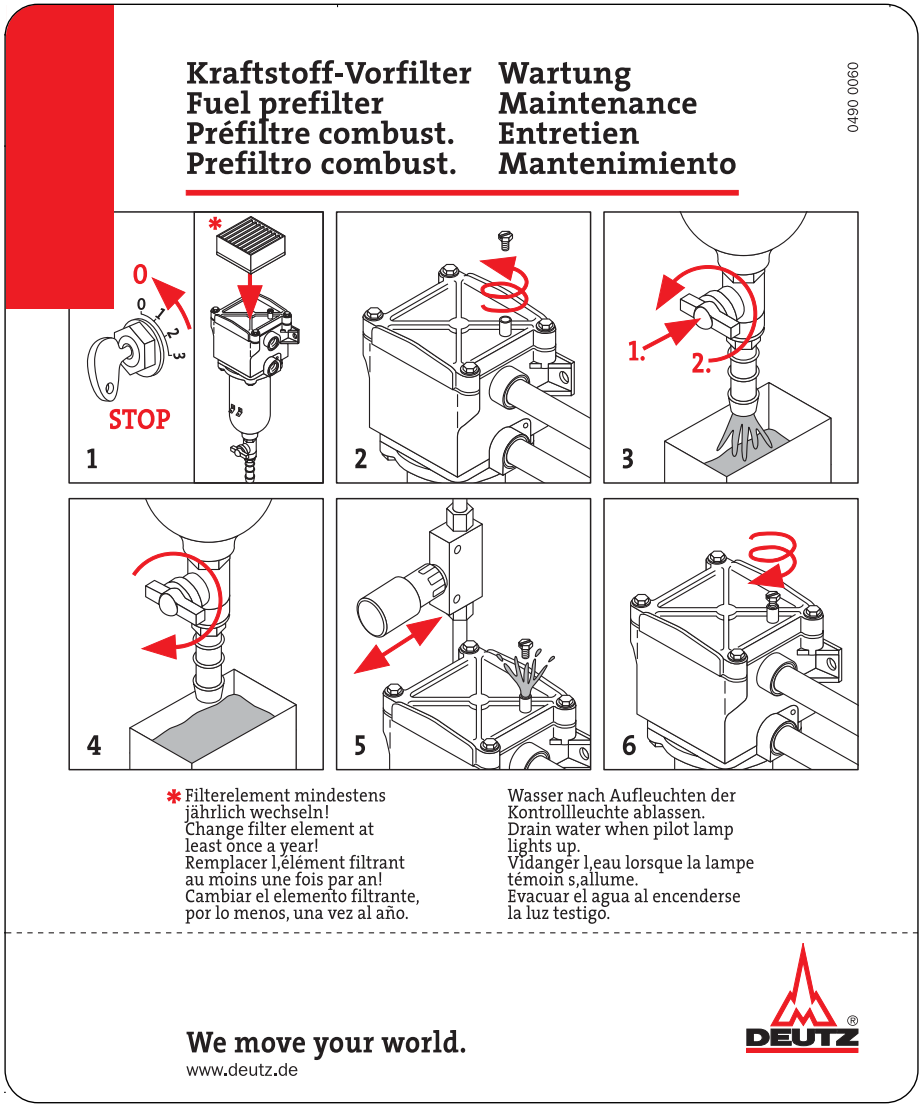


© 2004

https://truckmanualshub.com/



| Hours. | Date | Signaure / Stamp | Hours | Date | Signaure / Stamp |
|---|---|---|---|---|---|
| 50-150* | | | - | | |
| 125 | | | 250 | | |
| 375 | | | 500 | | |
| 625 | | | 750 | | |
| 875 | | | 1000 | | |
| 1125 | | | 1250 | | |
| 1375 | | | 1500 | | |
| 1625 | | | 1750 | | |
| 1875 | | | 2000 | | |
| 2115 | | | 2250 | | |
| 2375 | | | 2500 | | |
| 2625 | | | 2750 | | |

* Commissioning new and overhauled engines
The maintenance jobs duly completed can be recorded in the above table.

https://truckmanualshub.com/



## 5.3 Completed Maintenance Jobs



| Hours | Date | Signaure / Stamp | Hours | Date | Signaure / Stamp |
|---|---|---|---|---|---|
| 2875 | | | 3000 | | |
| 3125 | | | 3250 | | |
| 3375 | | | 3500 | | |
| 3625 | | | 3750 | | |
| 3875 | | | 4000 | | |
| 4125 | | | 4250 | | |
| 4375 | | | 4500 | | |
| 4625 | | | 4750 | | |
| 4875 | | | 5000 | | |
| 5125 | | | 5250 | | |
| 5375 | | | 5500 | | |
| 5625 | | | 5750 | | |

The maintenance jobs duly completed can be recorded in the above table.

https://truckmanualshub.com/



| Hours. | Date | Signaure / Stamp | Hours | Date | Signaure / Stamp |
|---|---|---|---|---|---|
| 5875 | | | 6000 | | |
| 6125 | | | 6250 | | |
| 6375 | | | 6500 | | |
| 6625 | | | 6750 | | |
| 6875 | | | 7000 | | |
| 7125 | | | 7250 | | |
| 7375 | | | 7500 | | |
| 7625 | | | 7750 | | |
| 7825 | | | 8000 | | |
| 8125 | | | 8250 | | |
| 8375 | | | 8500 | | |
| 8625 | | | 8750 | | |

The maintenance jobs duly completed can be recorded in the above table.

https://truckmanualshub.com/



| Hours | Date | Signaure / Stamp | Hours | Date | Signaure / Stamp |
|---|---|---|---|---|---|
| 8875 | | | 9000 | | |
| 9125 | | | 9250 | | |
| 9375 | | | 9500 | | |
| 9625 | | | 9750 | | |
| 9875 | | | 10000 | | |
| 10125 | | | 10250 | | |
| 10375 | | | 10500 | | |
| 10625 | | | 10750 | | |
| 10825 | | | 11000 | | |
| 11125 | | | 11250 | | |
| 11375 | | | 11500 | | |
| 11625 | | | 11750 | | |

The maintenance jobs duly completed can be recorded in the above table.

https://truckmanualshub.com/

https://truckmanualshub.com/



6.1 Lubrication System
6.2 Fuel System
6.3 Cooling System
6.4 Combustion Air Cleaner
6.5 Belt Drives
6.6 Adjustments
6.7 Accessories

©2004

https://truckmanualshub.com/



### 6.1.1 Oil Change Intervals

- The oil change intervals are dependent on the engine application and the quality of the lube oil.
- If the engine runs fewer hours during the year than stated in the table, the oil should be changed at least **once a year**.
- The table refers to the following conditions:
  – For diesel fuel: sulfur content max. 0.5 % by weight.
  – Continuous ambient temperatures down to -10 °C / +14°F
- For fuels
  – with sulfur content is > 0.5 to 1 %
  or
  – continuous ambient temperature below -10 °C/+14°F
  or
  – with bio-diesel fuels in accordance with DIN 51606-FAME the intervals between oil changes should be halved.
- In the case of fuels containing more than 1 % sulfur, contact your **service representative**.

Change the oil with the engine off but still warm (lube oil temperature approx. 80 °C).

- If, for vehicle engines, lube oil change intervals are determined by operating hours, the lube oil change intervals indicated in table 6.1.1.1. equipment engines.

©2004

https://truckmanualshub.com/



### 6.1.1.1 Lube Oil Change Intervals for Equipment Engines

| Deutz lube oil quality class | | Lube oil grade DQC I | Lube oil grade DQC II | Lube oil grade DQC III |
|---|---|---|---|---|
| ACEA-specfication | | E2-96 | E3-96/E5-02 | E4-99 |
| API-specfication | | CF/CF-4 | CG-4/CH-4 | - |
| Worldwide specification | | - | DHD-1 | - |
| special DEUTZ release list | | - | - | see chap. 4.1.2.1 |
| Standard lube oil code for building equipment and nonroad vehicles | | EO.. . EO...A, EO...B | EO...C | - |
| **Engine series** | **Engine version** | **Lube oil change intervals in op. hours** | | |
| | | Oil use normal / high | Oil use normal / high | Oil use normal / high |
| **1012** | All engines except for: | 250 | 500 | 500 |
| | Engines in harvest machines black-type thermal power stations, gensets | - | - | 500 |
| **1013** | All engines except for: | 250 | 500 | 500 |
| | engines from nonroad stage II | - | 500 | 500 |
| | Engines in harvest machines black-type thermal power stations, gensets | - | - | 500 |
| | BF4M1013FC | - | - | 500 |
| | BF6M1013FC, P ≤ 200 kW | - | - | 500 |
| | BF6M1013FC, P > 200 kW | - | - | 250 |

* Gensets as referred to here are units operating in parallel with the mains / with each other.
Emergency power units are dealt with in TC 0199-99-1126.

©2004

https://truckmanualshub.com/



### 6.1.1.2 Oil change intervals for vehicle engines

| Deutz lube oil quality class | DQC I | DQC II | DQC III |
|---|---|---|---|
| | Lube oil-quality | | |
| ACEA-specification | E2-96 | E3-96/E5-02 | E4-99 |
| API-specification | CF/CF-4 | CG-4/CH-4 | - |
| worldwide specification | - | DHD-1 | - |
| special DEUTZ release list | - | - | see chap. 4.1.2.1 |

| Application | Average speed in km/h approx. | Engine version | | Lube oil change intervals in km | | |
|---|---|---|---|---|---|---|
| Nonroad vehicles/ city busses | | **1012/1013** | Euro I | 10 000 | 15 000 | 20 000 |
| | | | Euro II and Euro III, except for: | - | 15 000 | 20 000 |
| | | BF4M1013FC | Euro II ≤ 14 l oil contents (first filling) | - | - | 10 000 |
| | | | > 14 l oil contents (first filling) | - | - | 20 000 |
| | | | Euro III | - | - | 20 000 |
| | | BF6M1013FC | Euro II ≤ 19 l oil contents (first filling) | - | - | 10 000 |
| | | | > 19 l oil contents (first filling) | - | - | 20 000 |
| | | | Euro III | - | - | 20 000 |
| Local traffic | | **1012/1013** | Euro I | 15 000 | 20 000 | 30 000 |
| | | | Euro II and Euro III, except for: | - | 20 000 | 30 000 |
| | | BF4M1013FC | Euro II ≤ 14 l oil contents (first filling) | - | - | 15 000 |
| | | | > 14 l oil contents (first filling) | - | - | 30 000 |
| | | | Euro III | - | - | 30 000 |
| | | BF6M1013FC | Euro II ≤ 19 l oil contents (first filling) | - | - | 15 000 |
| | | | > 19 l oil contents (first filling) | - | - | 30 000 |
| | | | Euro III | - | - | 30 000 |
| Long distance | | **1012/1013** | Euro I | 20 000 | 30 000 | 40 000 |
| | | | Euro II and Euro III, except for: | - | 30 000 | 40 000 |
| | | BF4M1013FC | Euro II ≤ 14 l oil contents (first filling) | - | - | 20 000 |
| | | | > 14 l oil contents (first filling) | - | - | 40 000 |
| | | | Euro III | - | - | 40 000 |
| | | BF6M1013FC | Euro II ≤ 19 l oil contents (first filling) | - | - | 20 000 |
| | | | > 19 l oil contents (first filling) | - | - | 40 000 |
| | | | Euro III | - | - | 40 000 |

©2004

https://truckmanualshub.com/



## 6.1.2 Checking Oil Level / Changing Engine Oil

### 6.1.2.1 Checking Oil Level

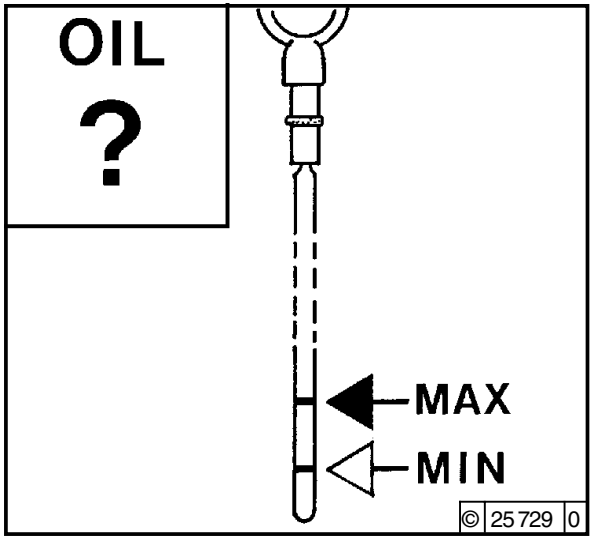


- Ensure that the engine or vehicle is on a level surface.
- **– Warm engine**
- Switch off engine, wait 5 minutes and check the oil level
- **–Cold engine**
  Check the oil level
- Remove the dipstick
- Wipe off with a non-fibrous, clean cloth.
- Insert up to the stop and pull out again.
- Check oil level, if required top up to the "**MAX**" level
  – If the oil level is just above the "**MIN**" mark, it should be topped up.

The oil level must not drop below the "**MIN**" mark.

### 6.1.2.2 Changing Engine Oil

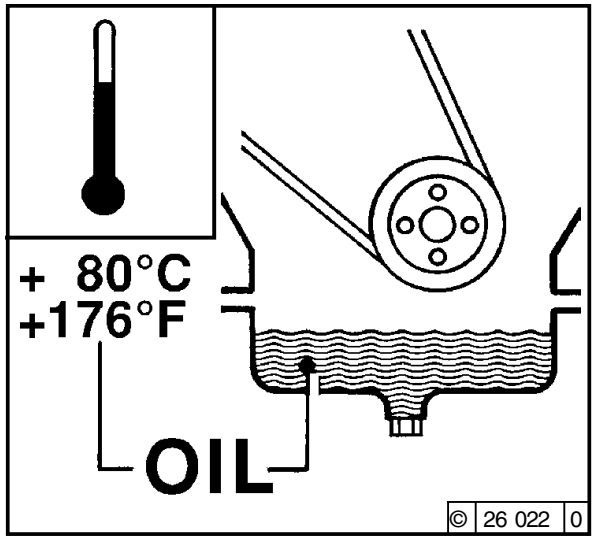


- Run the engine warm.
- Ensure that the engine or vehicle is on a level surface.
  – Lube oil temperature approx. 80°C.
- Switch off the engine.

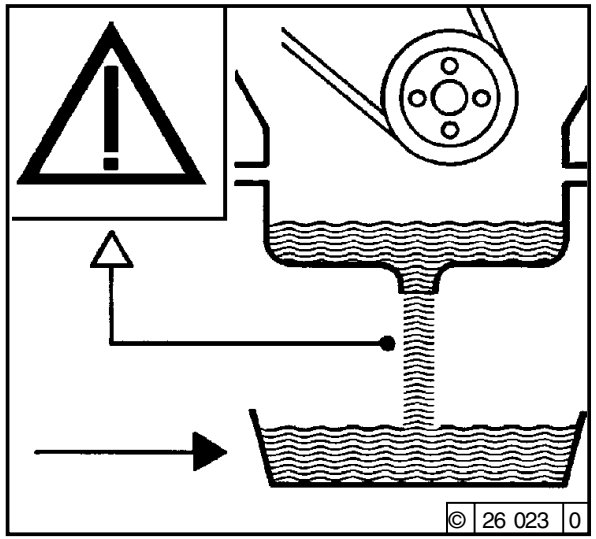


- Place an oil tray beneath the engine.
- Unscrew drain plug.
- Drain oil.
- Fit oil drain plug with new gasket and tighten firmly (for torque, see 9.2).
- Fill with lube oil
  – For grade/viscosity, see 4.1.
  – For quantity, see 9.1.
- Check oil level, see 6.1.2.1

Be careful when draining hot oil - danger of scalds! Do not let used oil run into the soil but catch it in a container ready for proper disposal.

©2004

https://truckmanualshub.com/



## 6.1.3 Changing Oil Filter

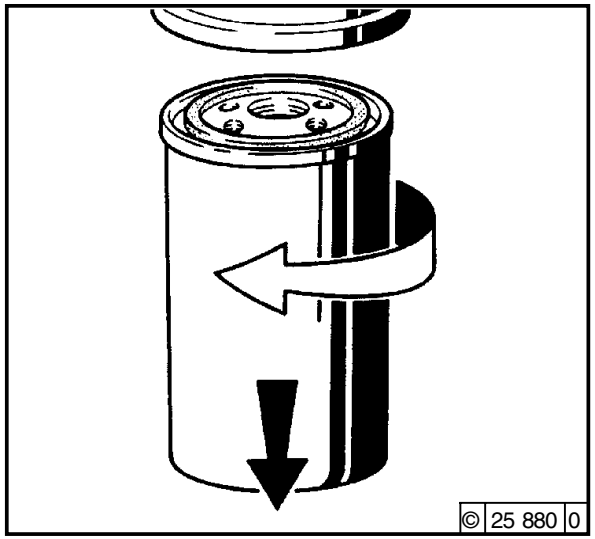


- With fitted torsion lock:
  Loosen screws and slide clamps downwards.
- Undo the filter cartridge with commercial tool and spin off.
- Catch any dripping oil.

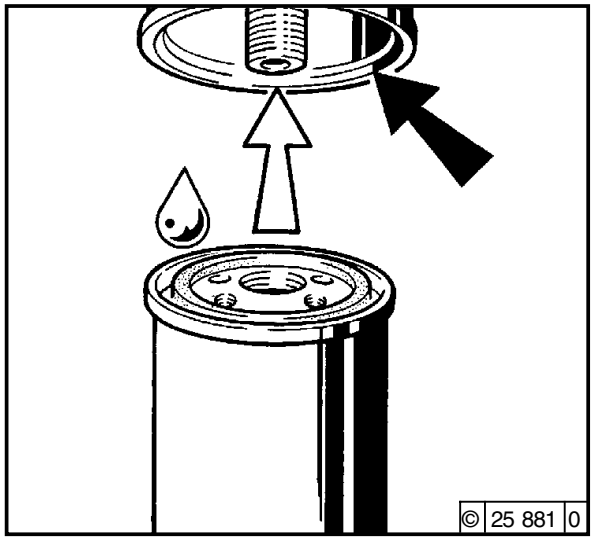


- Clean any dirt from the filter carrier rim.
- Lightly oil the rubber gasket of the new oil filter cartridge.
- Screw in the new cartridge finger tight against the gasket.

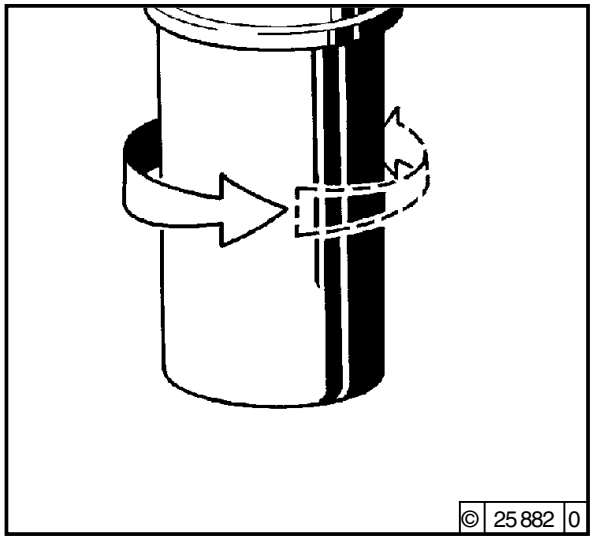


- Check that the cartridge is correctly seated against the gasket and tighten with a final half-turn.
- If a torsion lock is fitted:
  Slide clamps up into position and tighten screws.
- Check oil level (see 6.1.2).
- Check oil pressure (see 3.3.1).
- Check cartridge seal.

Beware of burns from hot oil.

©2004

https://truckmanualshub.com/



### 6.1.4 Changing Oil Filter Cup

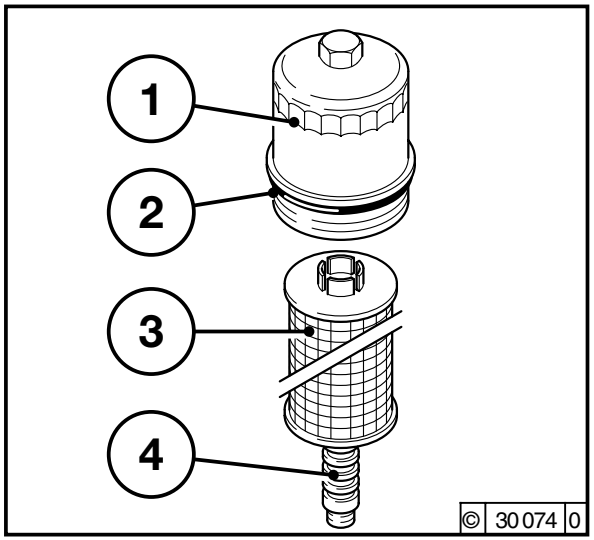


- Switch off the engine.
- Loosen the lube oil filter cap 1 and unscrew in an anticlockwise direction.
- Carefully lift the paper filter cartridge 3 out of guide 4.
- Catch any dripping oil.
- Change the paper filter cartridge 3.
- Clean any dirt from the filter carrier rim and the lube oil filter cover 1 and guide 4.

Caution: hot oil!
Risk of scalding!

- Replace rubber seal 2 and apply a small amount of grease
- Carefully insert the new paper filter cartridge 3 in guide 4.
- Tighten lube oil filter cover 1 in the clockwise direction (25 Nm).
- Start the engine.
- Check the oil level, see 6.1.2.
- Check the oil pressure, see 3.3.1.
- Check lube oil filter fitting for leaks.

©2004

https://truckmanualshub.com/



## 6.2.1 Replace Fuel Filter

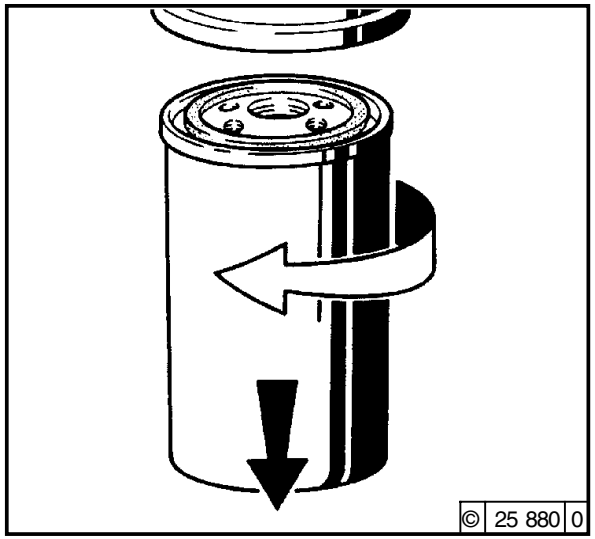


- Close fuel stopcock.
- Undo fuel filter cartridge with commercial tool and spin off.
- Catch any fuel.

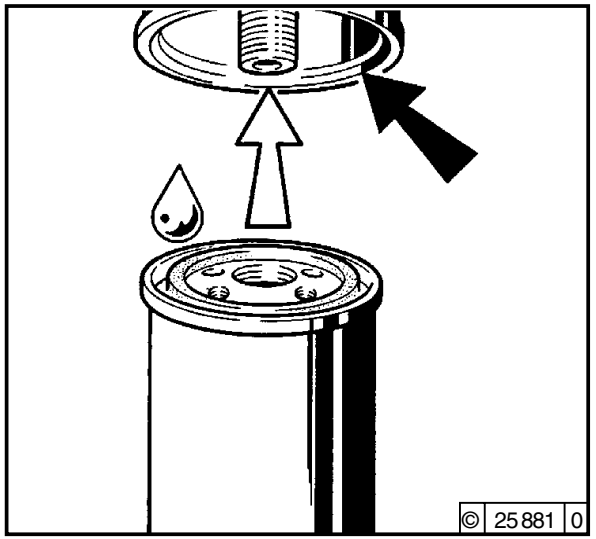


- Clean any dirt from the filter carrier rim.
- Apply light film of oil or diesel fuel to the rubber gasket of the new DEUTZ original fuel filter cartridge.
- Screw in the new cartridge finger tight against the gasket.

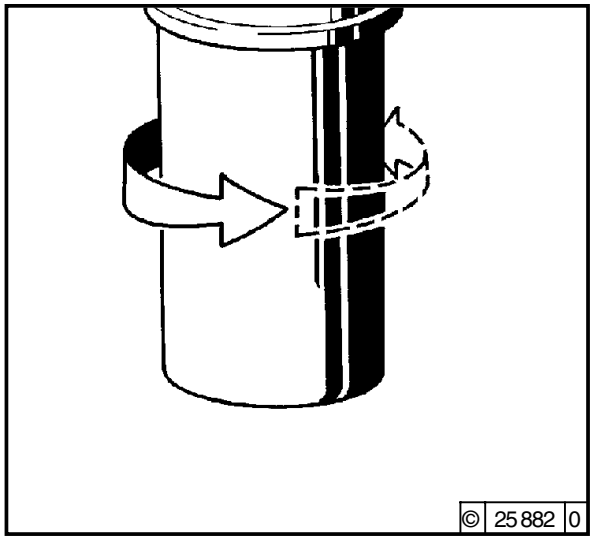


- Check that the cartridge is seated correctly against the gasket and tighten with a final half-turn.
- Open fuel stopcock.
- Check for leaks.

Keep naked flames away when working on the fuel system. Do not smoke!

The fuel system does not need to be bled.

©2004

https://truckmanualshub.com/



## 6.2.2 Replace Fuel Filter

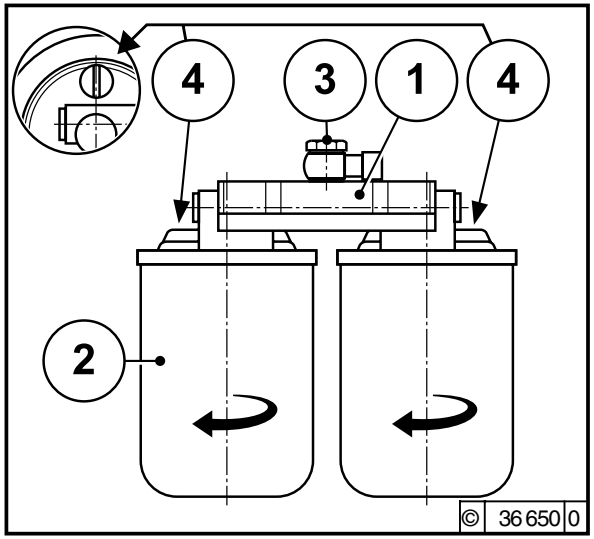


- Close the fuel shut-off valve.
- Undo fuel filter cartridge with commercial tool and spin off.
- Catch any escaping fuel.
- Clean any dirt from the filter carrier sealing surface 1.

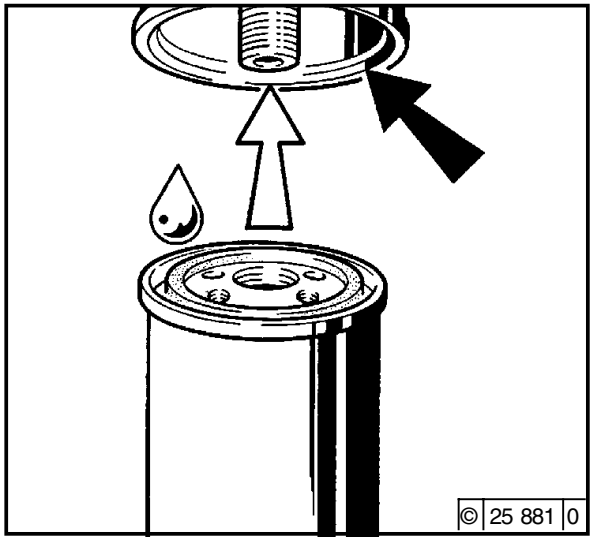


- Apply light film of oil or diesel fuel to the rubber gasket of the new original DEUTZ fuel filter cartridge.
- Manually screw in the new cartridge until the gasket is flush.
- Tighten the fuel filter cartridge with a final half-turn.

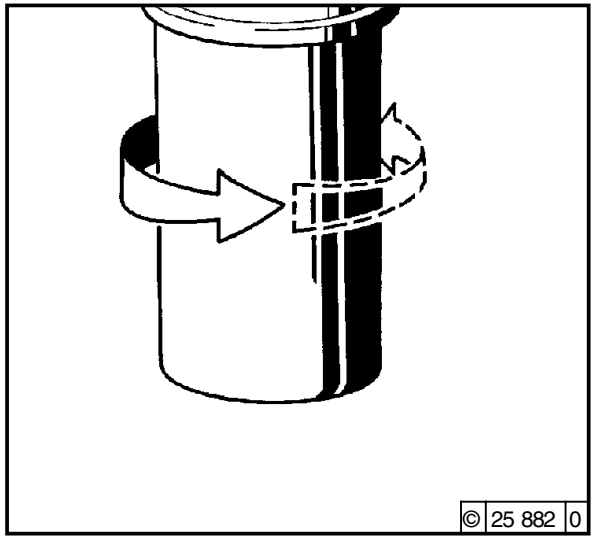


- Open fuel shut-off valve.
- Bleed fuel system, see 6.2.4.
  Also loosen the bleed screw 4 until air-free fuel emerges.
- Tighten the bleed screw 4
- Check for leaks.

The fuel system needs to be bled.

Keep naked flames away when working on the fuel system. Do not smoke!

©2004

https://truckmanualshub.com/



## 6.2.3 Clean/Replace Fuel Pre-Filter, Filter Element

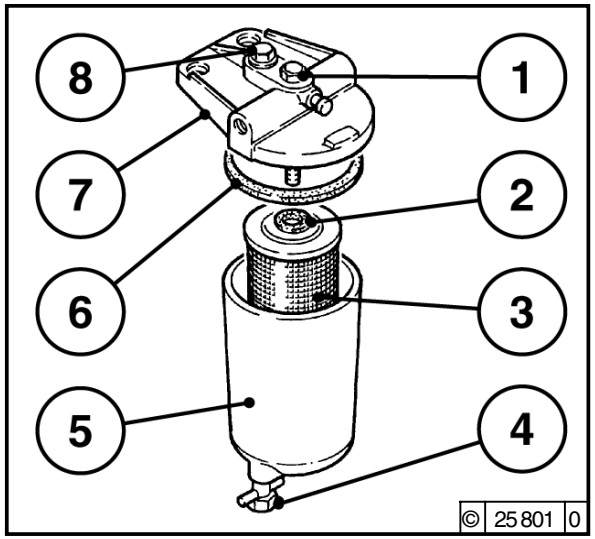


**Clean:**

- Close fuel stopcock.
- Place the fuel pan beneath the preliminary fuel filter.
- Remove drain plug 4 and drain off fuel.
- Unscrew clamping screw 1, remove filter housing 5 with filter insert 3.
- Clean sealing surface of the filter bracket 7 and filter insert housing 5 of any dirt.
- Insert new sealing ring 6 and filter insert 3 (change as necessary).
  –Push the filter insert up to approx. 3 cm over the edge of the housing onto the guide in the filter housing 5.

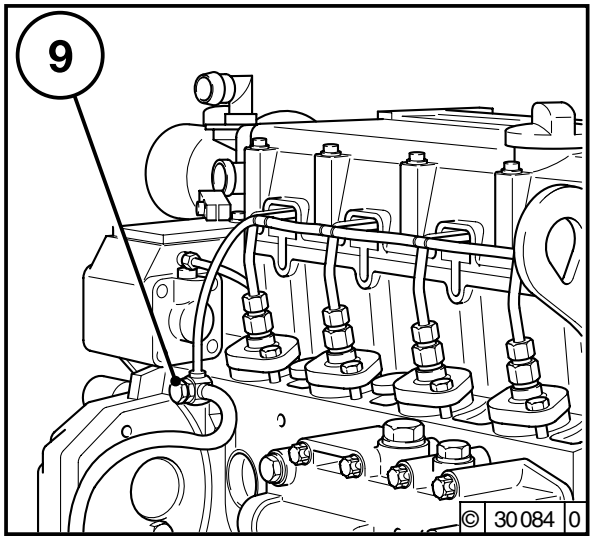


- Press filter housing 5 with filter insert 3 and sealing ring 6 against the filter console 7 and screw into place with clamping screw 1 (tightening torque 25 Nm).
  Note: it must be possible to push the upper seal 2 on filter insert 3 over the guide bracket on filter console 7.
- Tighten drain plug 4.
- Open fuel stopcock.
- Check for leaks after the engine has been started.

**Replace:**

- Replace defective filter insert 3.

## 6.2.4 Venting the Fuel System with Preliminary Fuel Filter

**Bleed:**

- Place the fuel pan beneath the preliminary fuel filter.
- Loosen drain plug 4 and observe the draining fluid. When fuel instead of water starts to flow, retighten drain plug 4.
- Check for leaks after the engine has been started.

**Vent:**

- During initial commissioning, after maintenance work or if the tank is run empty it is essential to vent the fuel system.
- Set engine controller to stop position
- Place fuel collecting trough under the filter housing 5 / pressure control valve 9.
- Open fuel stopcock, pressure control valve 9, vent screw 8
- Turn engine with starter (max. 20 sec.) until fuel free from air bubbles escapes from vent screw 8 and pressure holding valve 9.
- Tighten vent screw 8 (tightening torque 15 Nm) and pressure control valve 9.
- Set engine controller to start position and start
- When the engine has started check for leaks

Keep naked flames away when working on the fuel system. Do not smoke! Dispose of waste fuel in an environmentally-friendly manner!

©2004

https://truckmanualshub.com/



## 6.2.5 Clean/Replace Fuel Pre-Filter, Filter Element

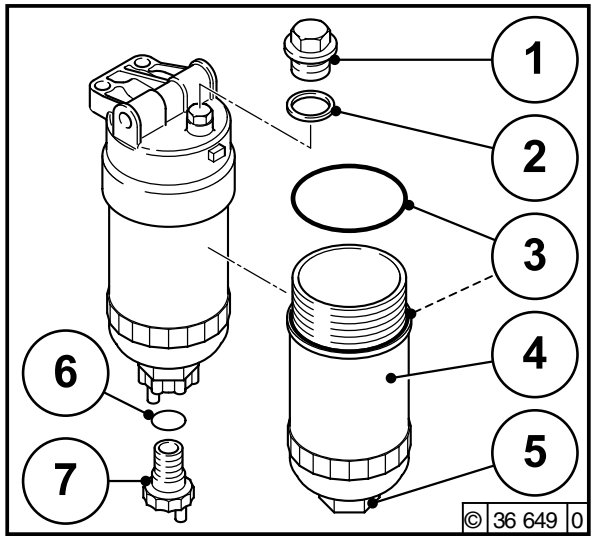


**Clean/Replace:**

- Close the fuel shut-off valve.
- Place fuel collection container beneath the fuel pre-filter.
- Loosen the drain screw 7+9 and drain fuel.
- Turn the filter element housing 4 with gasket 3 and filter element 3 anti-clockwise and remove.
- Clean any dirt from the sealing face of the filter carrier and filter element housing 4 and sludge chamber 5 and filter element (replace if necessary).
- Insert new round sealing rings 2+3+6.
- Screw in filter element housing 4 and filter element (max. torque 25 $^{-5}$ Nm).

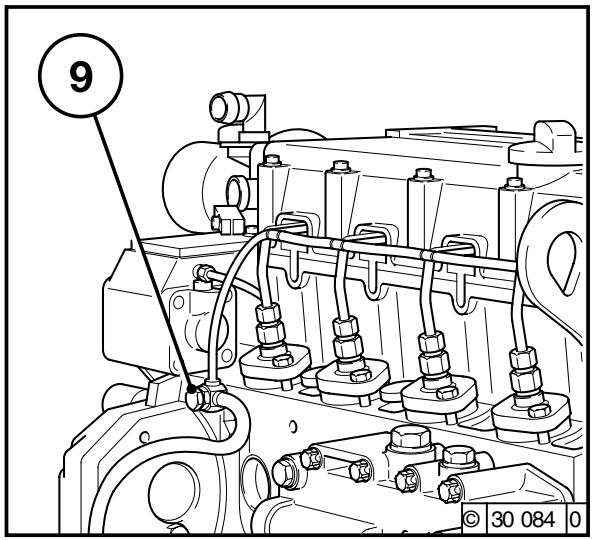


- Tighten the drain screw 7+9
- Open fuel shut-off valve.
- Bleed system
- Check for leaks after starting the engine.

## 6.2.6 Vent Fuel System with Fuel Pre-Filter

**Drain Water:**

- Place fuel collection container beneath the fuel pre-filter.
- Loosen drain screw 9 and watch the draining liquid, tighten the drain screw 9 when water changes to fuel.
- Bleed system
- Check for leaks after starting the engine.

**Vent:**

- In the event of re-commissioning, following maintenance work or if the tank has been run empty, the fuel system must be vented.
- Bring engine regulator into stop position.
- Position fuel collection container beneath filter housing 9 / pressure maintenance valve 9.
- Open fuel shut-off valve, pressure maintenance valve 9, vent screw 10.
- Vent system, turn over engine with the starter (max. 20 sec.) up to vent screw 10 and pressure retention valve 9.
- Firmly tighten vent screw 10 (tightening torque 25$^{-5}$ Nm) and pressure maintenance valve 9.
- Bring engine regulator into start position and start.
- Check for leaks after starting the engine.

Keep naked flames away when working on the fuel system. Do not smoke!
Dispose of wastefuel in an environmentally-friendly manner!

©2004

https://truckmanualshub.com/



## 6.2.7 Clean/Replace/Vent Fuel Pre-Filter, Filter Element

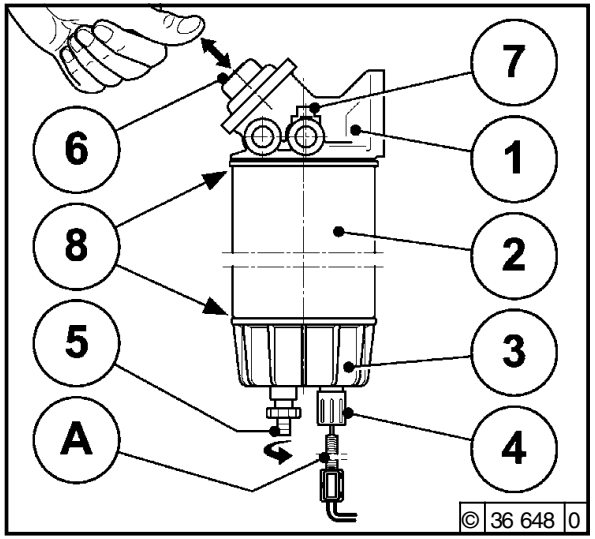


**Clean:**
- Close the fuel shut-off valve.
- Place fuel collection container beneath the fuel pre-filter.
- Loosen the drain screw 5 and drain fuel/ water.
- Turn filter cartridge 2 and dirt trap 3 anticlockwise and remove.
- Turn dirt trap 3 anticlockwise and remove. Empty emulsion into the fuel collection container and clean the dirt trap 3.
- Screw the filter cartridge 2 and dirt trap 3 together. Wet the filter cartridge with fuel, wet the sealing surfaces 8 slightly with oil.
- Mount clockwise.
- Open the fuel shut-off valve and bleed the system.
- Check for leaks after starting the engine.

**Replace:**
- Replace defective filter cartridge 2.
- Clean any dirt from the filter carrier 1 sealing surface 8.
- Wet the filter cartridge 2 with fuel, wet the sealing surfaces 8 slightly with oil.
- Mount the filter cartridge 2 and dirt trap 3 clockwise.
- Open fuel shut-off valve.
- Check for leaks and vent the system after starting the engine.

**Vent:**
- Loosen the vent screw 7 slightly.
- Actuate the pump until fuel free from air bubbles emerges.
- Tighten the vent screw.

A= connection possibility for:
Electrical connection for water/fuel level sensor in the dirt trap

Work may only be performed on the fuel system with the engine switched off.
No naked flames! Do not smoke!
Dispose of waste fuel in an environmentally-friendly manner.

©2004

https://truckmanualshub.com/



## 6.2.8 Clean / purge or Change Fuel Pre-Filter

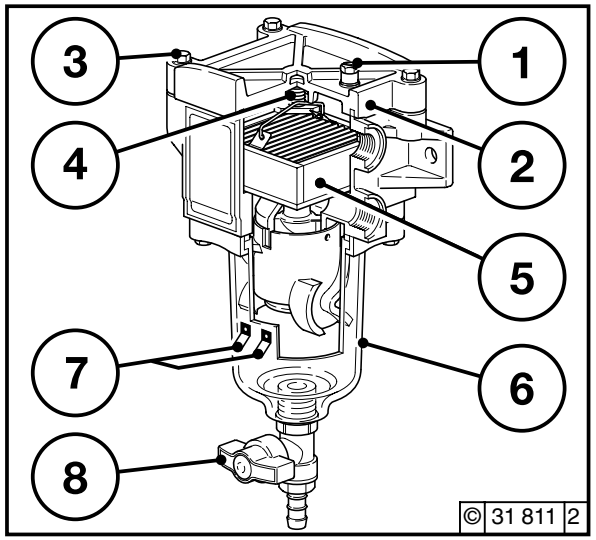


**Clean (purge) - remove water:**

- Turn off engine or, in the case of a change-over filter, switch over to the other filter.
- Close the fuel stopcock or supply. (if available)
- Open the bleed screw 1 on the cover 2
- Place the fuel collector underneath the fuel pre-filter.
- Empty water and dirt from the bowl 6 by opening (press in and turn slightly without using force) the drain cock 8 and close the drain cock 8 again
- Close the bleed screw 1 on the cover 2 again
- Bleed the fuel pipe according to instructions, see 6.2.6 opposite.

**Changing the filter element 5:**
Change at least once a year or as required (drop in performance also after purging)

- Turn off the engine or switch to other filter in case of changeover filter
- Close the fuel stopcock or supply (if available)
- Loosen the cover screws 3 diagonally
- Remove the cover 2
- Remove the spring cassette 4
- Remove the filter element 5 from the bracket
- Insert new filter element 5
- Place spring cassette 4 on the element
- Check that the cover seal is fit properly in the cover 2 and check for damage (change if necessary)
- Tighten the cover 2 with the screws 3 diagonally (torque 6 Nm)
- Check the cover 2 for proper fit and leaks
- Bleed the fuel system, see 6.2.4.

The connection of a warning system (lamp/horn) via contacts 7 is specified. Immediate maintenance is necessary when the warning system is triggered.

Naked flames are prohibited when working on the fuel system! Do not smoke!
Dispose of old fuel in an environmentally friendly way!

©2004

https://truckmanualshub.com/



## 6.2.9 Venting Fuel system without Fuel Pre-Filter

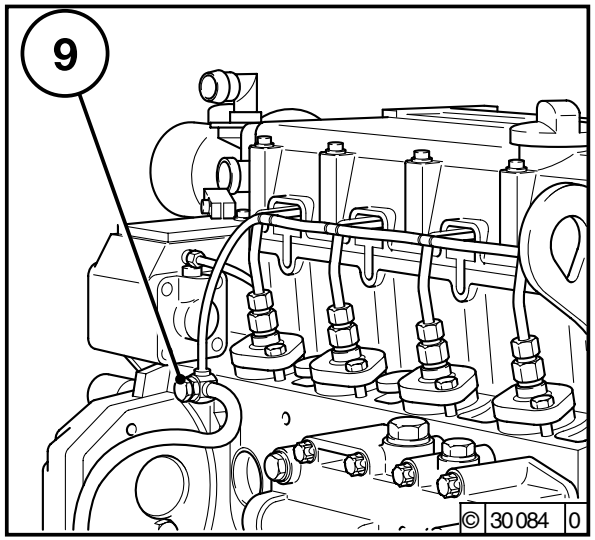


- Set engine controller to stop position
- Open fuel stopcock
- Loosen pressure holding valve 9
  Catch any fuel which escapes and dispose of in an environmentally-friendly way
- Turn engine with starter (max. 20 sec.) until fuel with no air bubbles escapes from pressure holding valve 9.
- Tighten up pressure holding valve 9.
- Set engine controller to start position and start
- When the engine has started check for leaks

Avoid naked flames when working on the fuel system. Do not smoke. Dispose of waste fuel in an environmentally-friendly way

## 6.2.10 Changing Fuel Leakage Pipes

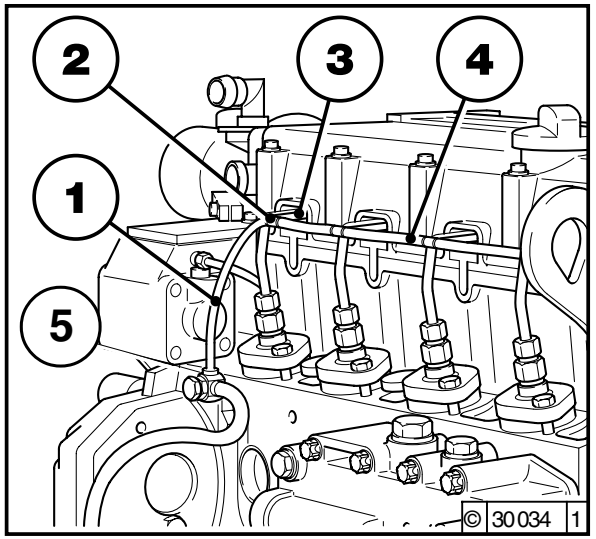


- Close fuel stopcock
- Dismantle valve cap cover
- Loosen hose clamps 6 with hose clamp pliers TN 8020 (see chap.9.3).
- Remove rubber hoses 3 and hose clamps 6 from the injection valves.
- Loosen pressure holding valve 9
- Dismantle hose clamps 6, rubber hoses 1, 3 and 4 and connection piece 2 and dispose of in an environmentally-friendly way.
- Mounting new fuel leakage pipes:
  Slide rubber hoses 3 (lubricate inside with mounting grease) with hose clamps 6 on the connection nipples of the injection valves and close with hose clamp pliers TN 8020.

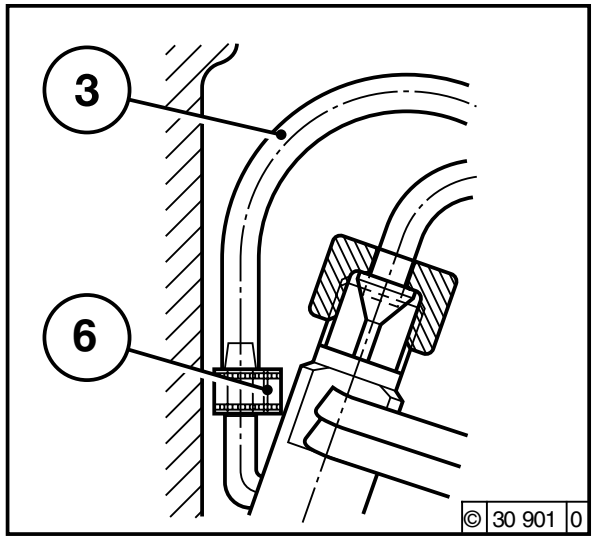


- Mounting pressure holding valve 9:
  Tighten up new ring piece with bolt 5.
- Remount valve cap cover
- Set engine controller to start position and start
- When the engine has started check for leaks

Ensure that the hose clamp lock shows to the injection valve and the hose clamp cannot fall into the motor housing.

©2004

https://truckmanualshub.com/



## 6.3.1 Cleaning Intervals

- The amount of contamination in the cooling system depends on the engine application.
- Spilled oil or fuel on the engine increases the risk of contamination. Be especially careful if the engine is used in dusty environments.
- Serious contamination can occur, for example:
  – on construction sites where there is a high level of air-borne dust.
  – in harvesting application where there are high concentrations of chaff and chopped straw in the vicinity of the machine.
- Because applications vary, cleaning intervals have to be determined from case to case. The cleaning intervals given in the table below can be used as a guide.

| Checking / Cleaning Intervals | |
|---|---|
| Suggested OH | Application |
| 2000 | Ships, gensets in enclosed spaces, pumps |
| 1000 | Vehicles on paved roads |
| 500 | Tractors, forklift trucks, mobile gensets |
| 250 | Vehicles on construction sites and unpaved roads, construction equipment, compressors, underground mining equipment |
| 125 | Agricultural machines, harvester tractors |

## 6.3.2 Cleaning Cooling System

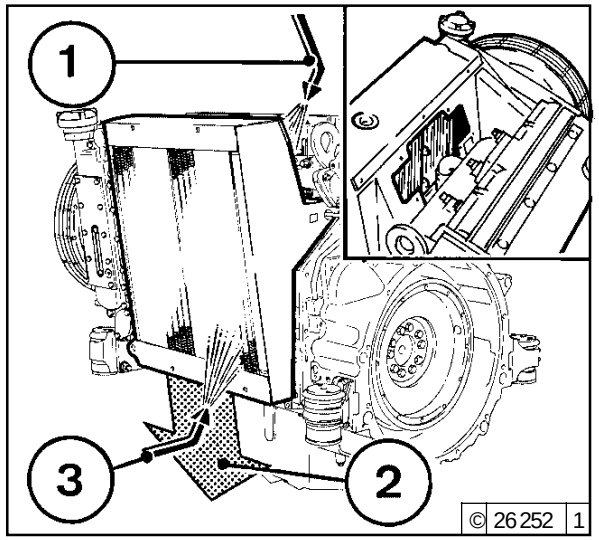


**Series 1012/1013**

- Place a cleaning bath under the heat exchanger (it. 2).
- Remove the service flap on the heat exchanger (see insert).

**Compressed Air**

– Blow out heat exchanger with compressed air (first from it. 3, then from it. 1).
  Be careful not to damage the cooling fins.
– Wash out loosened dirt with a hose.

**Cold Cleansing Agent**

– Spray the heat exchanger with a commercial cold cleansing agent and let stand for about 10 minutes.
– First spray clean with a water jet from position 3 then from position 1 (do not spray sensitive engine components directly with a water jet, eg generator, cables, electronic components, fan drive).

**Cleaning with steam or with hot water**

– Remove oil and grease residues with the jet set at a gentle setting.

- Refit service flap.
- Run the engine up to normal operating temperature to evaporate any remaining water.

**Series 1012E/1013E**

- If an external cooling system is fitted, follow the manufacturer's instructions.

**Unit engine**

- Clean as described under series 1012/1013. The cleaning jet must be positioned parallel to the cooling-air ducts.

Hose pressure: max. 100 bar

Engine never without coolant operate.
(also not briefly)

©2002

https://truckmanualshub.com/



## 6.3.3 Draining Cooling System

### 1012/1013

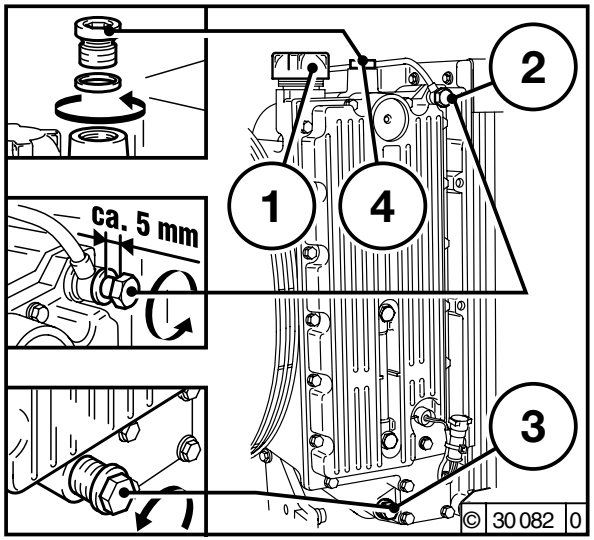


- Place container under drain plug 3.
- Unscrew cap 1.
- Unscrew drain plug 3 fully.
- Drain coolant.
- Drain the remaining fluid from the engine oil cooler (coolant duct).
- Screw in the sealing plug 3 up to the first notch and screw in the sealing plug on the oil cooler (arrow).

Be careful when draining hot coolant – danger of scalds! Collect drained coolant and dispose of according to environmental regulations.

**Fill/vent the cooling system**: see section 6.3.4

If a heater is connected to the cooling system, all heater valves must be opened during filling.
Depending on the water content and the installation position of the heater, it may be required to repeat the last point several times to vent the heater system.

## 6.3.4 Filling / Venting Cooling System 1012/1013

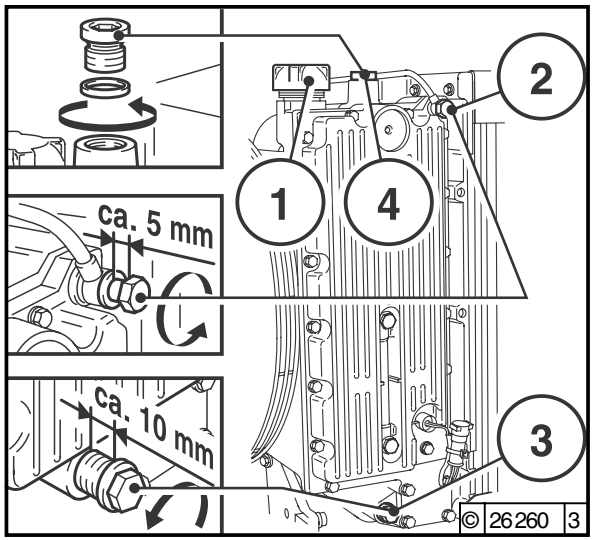


- Unscrew cap 1.
- Loosen sealing plug 2.
- Unscrew vent plug 4.
- Unscrew sealing plug 3 (10 mm) up to the first notch.
- Add coolant up to the max. marking or fill-up limit (heater valve – if fitted – of the unit must be opened).
- Tighten sealing plug 2 (tightening torque 18 Nm)
- Tighten vent plug 4 (tightening torque 40 Nm)
- Tighten sealing plug 3.
- Close cap 1.
- Start engine and warm up until thermostat opens.
- Switch off engine.
- Check coolant level (see section 3.3.3) and top up as required.

©2004

https://truckmanualshub.com/



## 6.3.5 Draining the Cooling System

### 1012 E / 1013 E

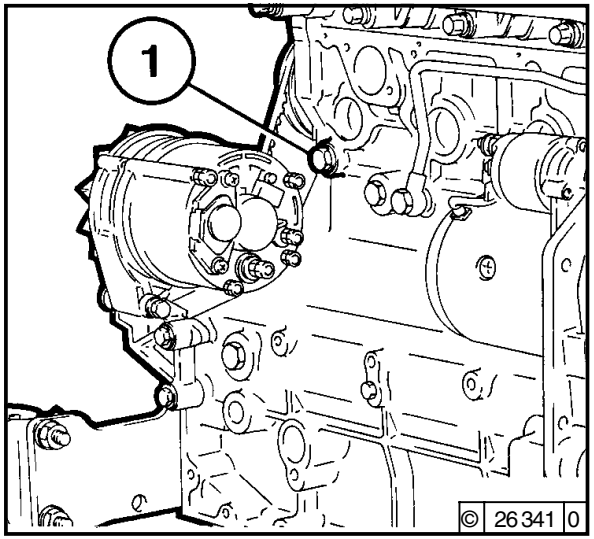


- Place a container under sealing plug 1.
- Remove sealing plug 1 from the crankcase.
- Drain off the coolant.
- Tighten sealing plug 1 again.
- If sealing plug 1 is not accessible, the system can be drained at the engine oil cooler (coolant duct).

Filling/venting the cooling system:
See section 6.3.6.

Be careful when draining hot coolant – danger of scalds! Collect drained coolant and dispose of according to environmental regulat-ions.

## 6.3.6 Filling/Venting the Cooling System 1012 E/1013 E Standard engine

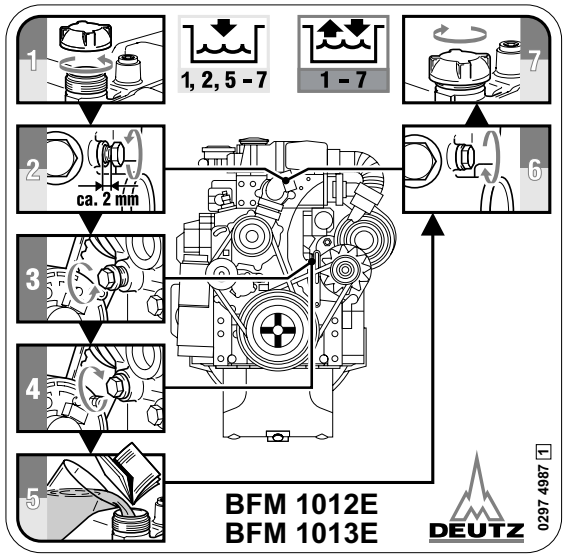


- Open radiator cap position 1.
- Loosen vent plug position 2.
- Add coolant up to the maximum marking or filler limit (heater valve of the system must be opened – if fitted).
- Tighten vent plug position 2 + sealing plug position 3.
- Close radiator cap position 1.
- Start engine and warm up until thermostat opens.
- Switch off engine.
- Check coolant level when the engine is cold and top up as required.
- Close the radiator sealing plug position 1.
- The cooling systems, which are built in line with our installation guidelines, are vented automatically after they have been filled.

### 1013 E Short engine

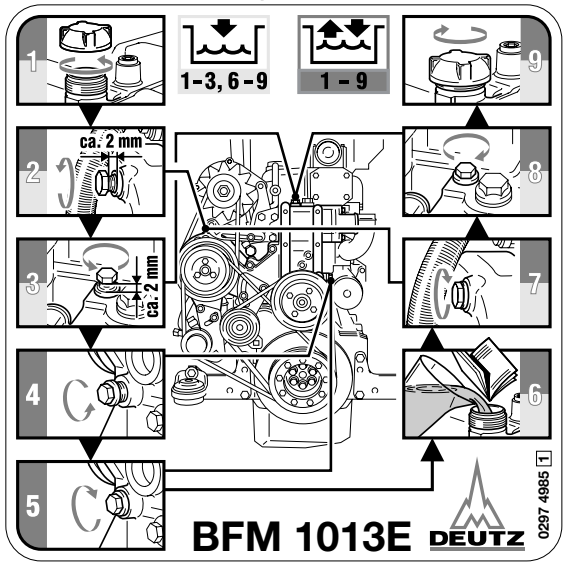


- With external cooling systems in accordance with the specifications of the manufacturer.
- Loosen vent plug position 2 and sealing plug position 3.
- Add coolant up to the maximum marking or filler limit (heater valve of the system must be opened – if fitted).
- Tighten vent plug position 2 + sealing plug position 3.
- Close radiator cap position 1.
- Start engine and warm up until thermostat opens.
- Switch off engine.
- Check coolant level when the engine is cold and top up as required.
- Close the radiator sealing plug position 1.

©2004

https://truckmanualshub.com/



## 6.3.7 Draining the Cooling System

### Unit Engine (4 Cylinders)

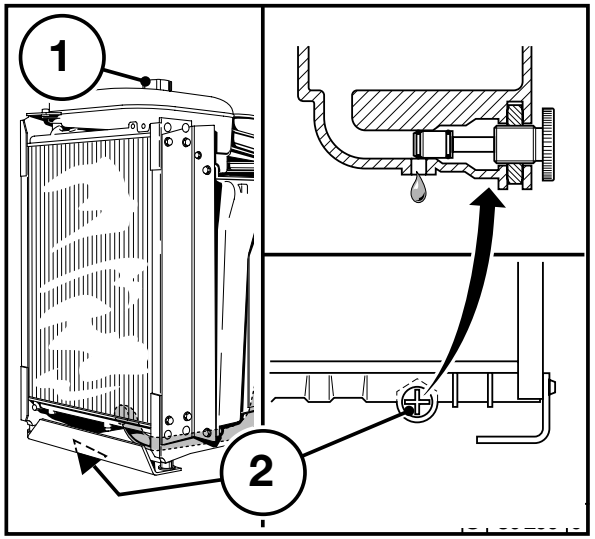


- Open the cap 1 of the expansion tank.
- Place a container beneath knurled screw 2.
- Unscrew the knurled screw 2 in an anti-clockwise direction until coolant is emitted.
- Drain off coolant.
- In case of clogging, rinse the radiator through with clear water.
- Tighten knurled screw 2.
  Filling/venting the cooling system:
  see section 6.3.8

### Unit engine (6 cylinders)

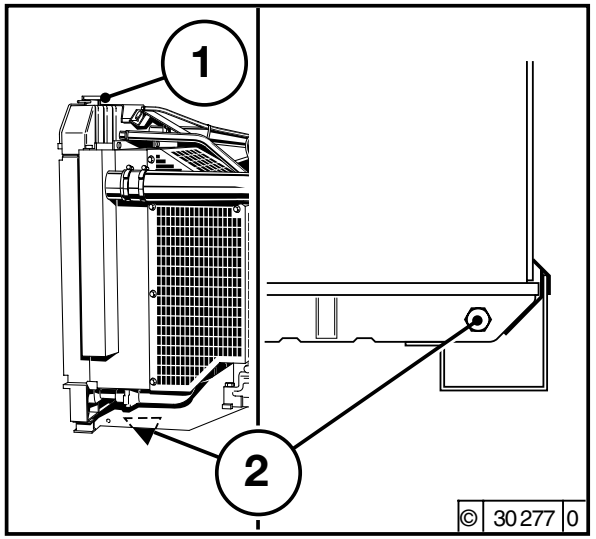


- Open the cap 1 of the expansion tank.
- Place a container beneath sealing plug 2.
- Unscrew the sealing plug 2.
- Drain off coolant.
- In case of clogging, rinse the radiator through with clear water.
- Tighten sealing plug 2.
  Filling/venting the cooling system:
  see section 6.3.8

Be careful when draining hot coolant - danger of scalds! Collect drained coolant and dispose of according to environmental regulations.

## 6.3.8 Filling/Venting the Cooling System

### Unit Engine

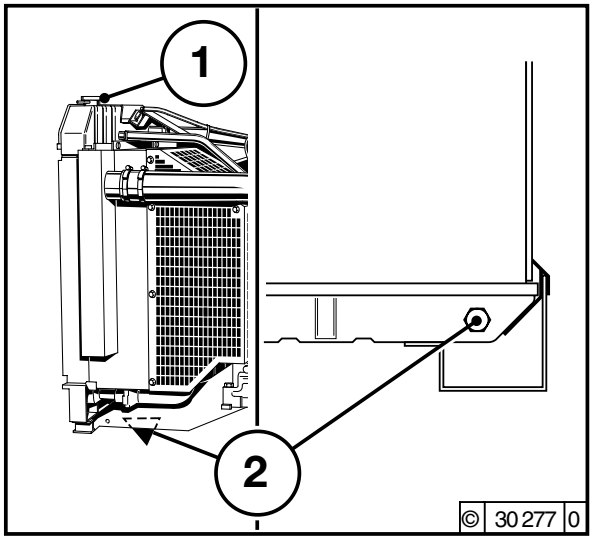


- Open the cap 1 of the expansion tank.
- Slowly add coolant up to the max. marking or filler limit.
- Close the cap.
- Start the engine and warm up until the thermostat opens, the upper coolant line warms up tangibly.
- Briefly run the engine at nominal output (fixed setting), this rinses out any pockets.
- Switch off the engine and leave to cool down.
- Open cap 1, add coolant up to the max. marking or filler limit and close the cap 1.
- Once the engine has been run once, check the coolant level when the engine is cold.

If a heater is connected to the cooling system, the heater valves must be opened when coolant is added. Depending on the coolant contents and the installation location of the heater, it may be necessary to repeat the procedure several times.

©2004

https://truckmanualshub.com/



### 6.3.9 Draining the Charge-Air Cooler

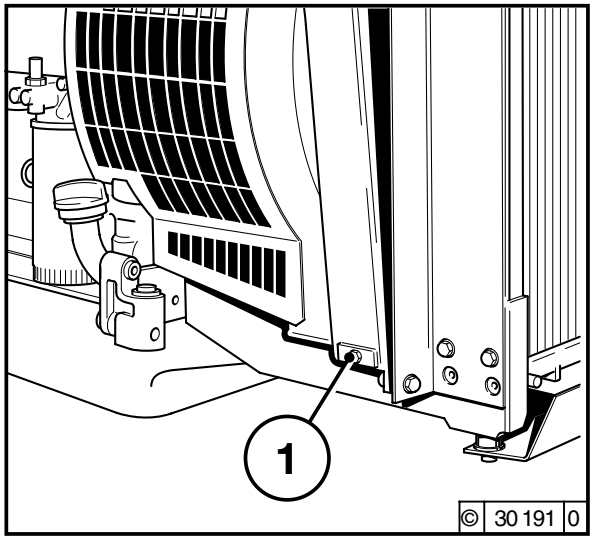


- Loosen the drain plug 1 on the end of the charge-air cooler.
- Drain off any oil residues that may be remaining.
- Close the drain plug 1.

©2004

https://truckmanualshub.com/



## 6.4.1 Cleaning Intervals

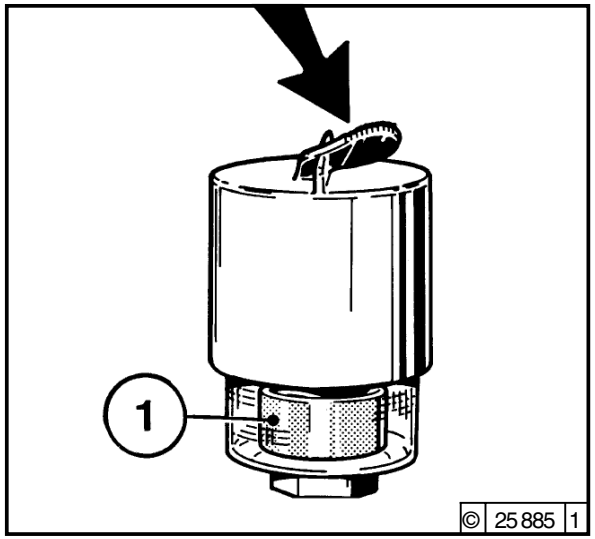


- The amount of dirt in the air cleaner depends on the amount of dust in the air and the size of the air cleaner used. If a high level of dust is anticipated, a cyclone-type precleaner can be fitted to the air cleaner.
- Cleaning intervals will have to be determined from case to case.
- If a dry type air cleaner is used, clean when indicated by the service indicator or switch.
- Air cleaner servicing is needed when:
  - Service Indicator
    the red signal 1 is fully visible when the engine is off.
  - Service Switch
    the yellow pilot light comes on when the engine is running.
- After carrying out service work, reset the signal by pressing the button on the service indicator.

©2004

https://truckmanualshub.com/



### 6.4.2 Emptying Cyclone Type Precleaner

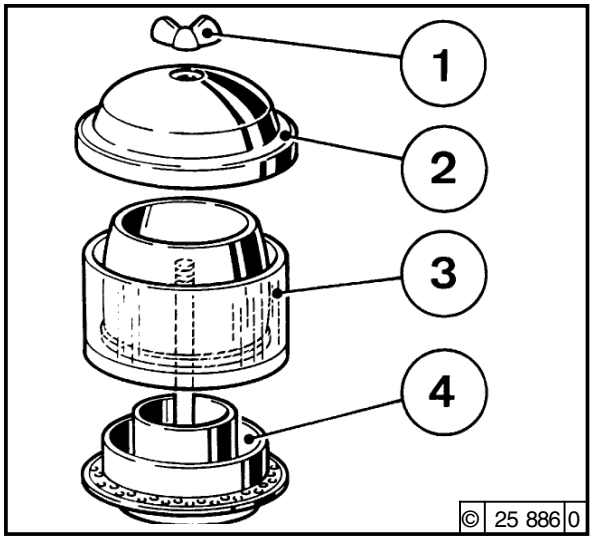


- Undo wing nut 1 and remove cover 2.
- Remove collector bowl 3 from lower section 4 and empty. Clean leaves, straw and other foreign matter from lower section of precleaner.
- Reposition collector bowl 3 onto lower section 4, fasten cover 2 in place by tightening wing nut 1.

Never fill collector bowl with oil. Replace collector bowl if damaged.

### 6.4.3 Cleaning Oil Bath Air Cleaner

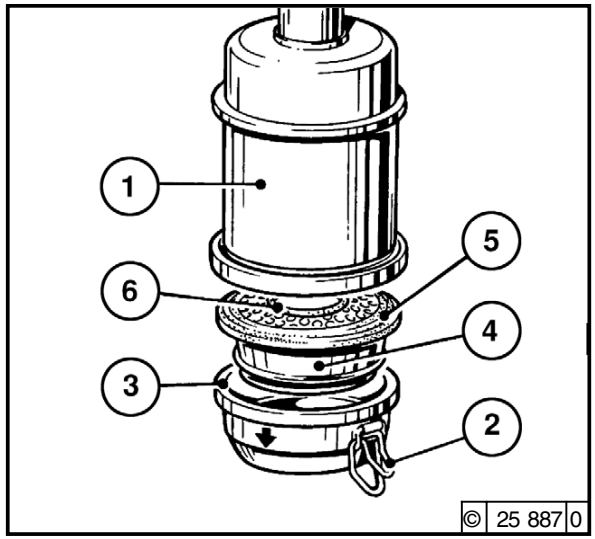


- Turn engine off and wait about 10 minutes for the oil to drain from filter housing 1.
- Release snap clips 2 and remove oil cup 3 together with filter element 4. If necessary prize element out with a screwdriver, taking care not to damage the rubber gasket 5.
- Remove dirty oil and sludge. Clean oil cup.
- Clean filter element 4 in diesel fuel and allow to drip-dry.
- Clean filter housing 1 if very dirty.
- Inspect and replace rubber gaskets 5 and 6 if necessary.
- Fill oil cup with engine oil up to the mark (arrow) (for viscosity, see 4.1.2).
- Refit oil cup and element to filter housing and secure with snap clips.

Never clean air cleaner with gasoline. Dispose of old oil in accordance with environmental regulations.

©2004

https://truckmanualshub.com/



## 6.4.4 Dry Type Air Cleaner

### Dust Discharge Valve

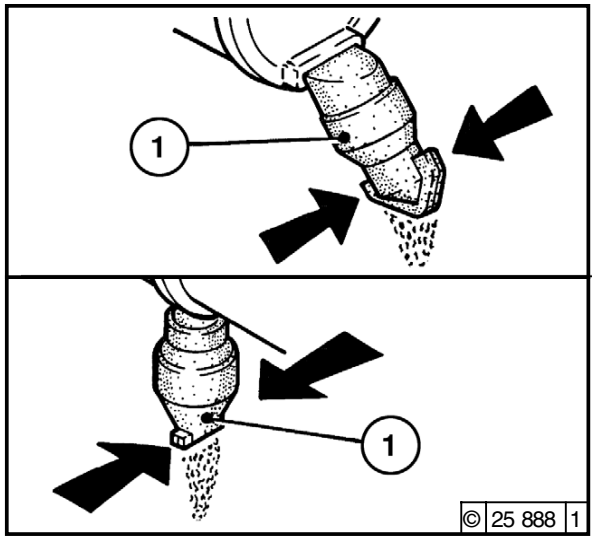


- Empty dust discharge valve 1 by pressing apart lips of discharge slot as indicated by arrows.
- Clean discharge slot from time to time.
- Remove any caked dirt by pressing together the upper section of the valve.

### Filter Cartridge

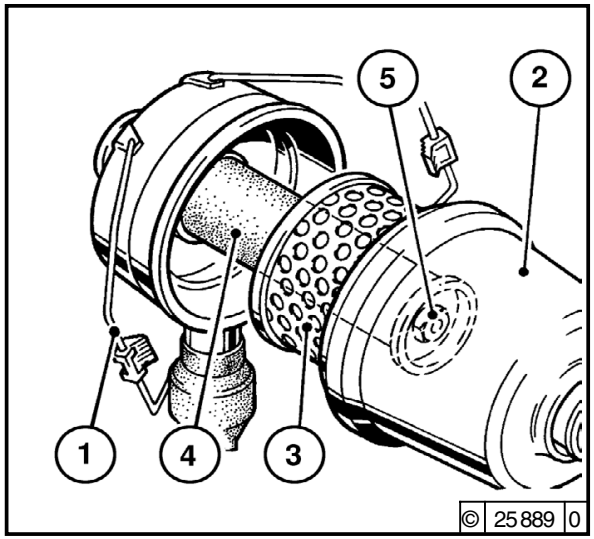


- Undo clip fasteners 1.
- Take off hood 2 and remove cartridge 3.
- Clean cartridge (replace at least once a year).
- Clean cartridge 3:
  – Blow out from inside out with dry compressed air (max. 5 bar), or
  – in difficult cases, tap out, taking care not to damage the cartridge, or
  – wash according to manufacturer's instructions.
- Check paper filter (light showing through) and gaskets for damage. Replace if necessary.
- After five air cleaner services or after two years at the latest, replace safety cartridge 4 (never clean).
  To do so:
  – Undo hex. nut 5 and remove cartridge 4.
  – Install new cartridge, insert and tighten hex. nut.
- Install cartridge 3, replace hood 2 and do up clip fasteners.

Never clean filter cartridge with gasoline or hot fluids.

©2004

https://truckmanualshub.com/



## 6.5.1 Checking V-Belts

1012

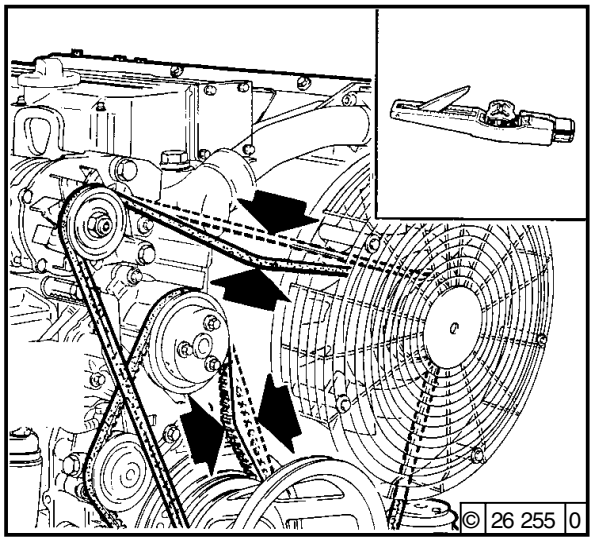


1013

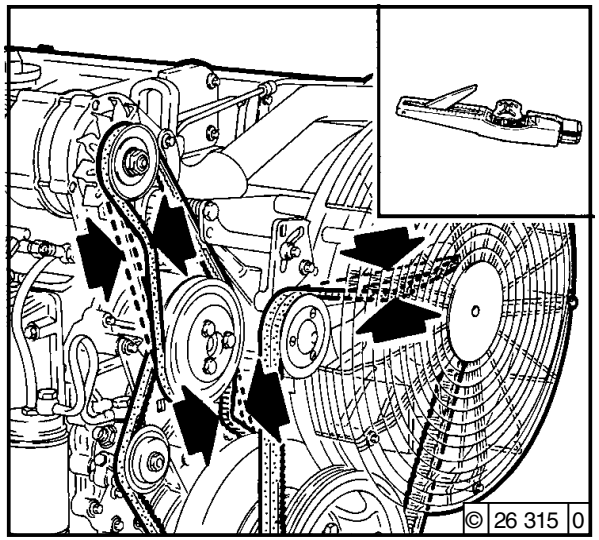


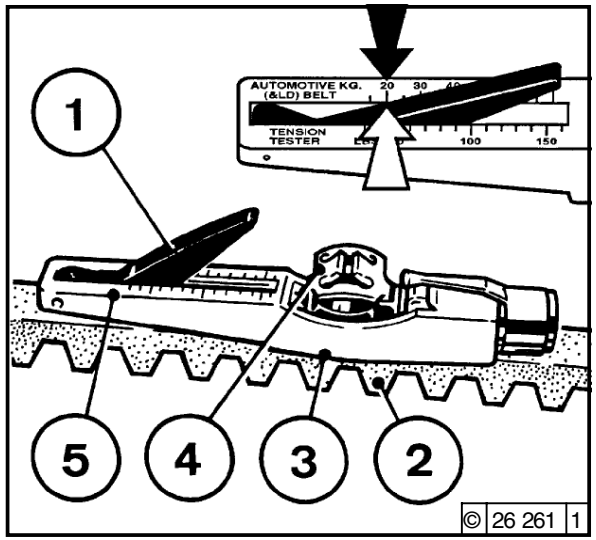


- Inspect entire V-belt for damage.
- Replace damaged V-belts.
- After installing new belts, run engine for 15 minutes, then check belt tension.
- Use a V-belt tension gauge (see 9.3) to check belt tension.
  - Place indicator arm 1 into gauge.
  - Position gauge on V-belt 2, midway between the pulleys, with flange 3 on bottom of gauge against the edge of belt.
  - Push slowly on the black pad 4 at right angles to belt 2 until the spring is heard or felt to trigger.
- Carefully remove the gauge without altering the position of the indicator arm.
  - Read off the value: Turn the gauge sideways to see the exact spot where the top of the black indicator arm 1 intersects scale 5 (arrow). For settings, see 9.1.
  - If necessary, retension belt and measure again.

Check, tension and change belts only with the engine off. Refit belt guard, if provided.

©2004

https://truckmanualshub.com/



## 6.5.2 Tensioning Fan / Alternator Belts 1012

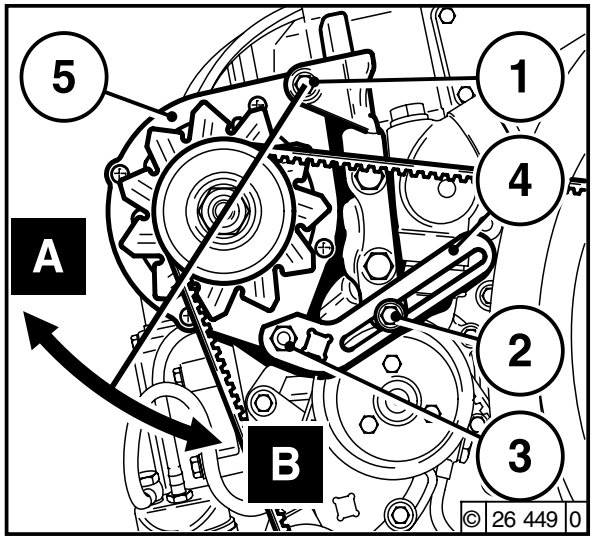


- Slacken off bolts 1, 2 and 3.
- Press alternator 5 in direction of arrow A until correct belt tension is achieved.
- Re-tighten bolts 1, 2 and 3.

## 6.5.3 Changing Fan / Alternator Belts 1012

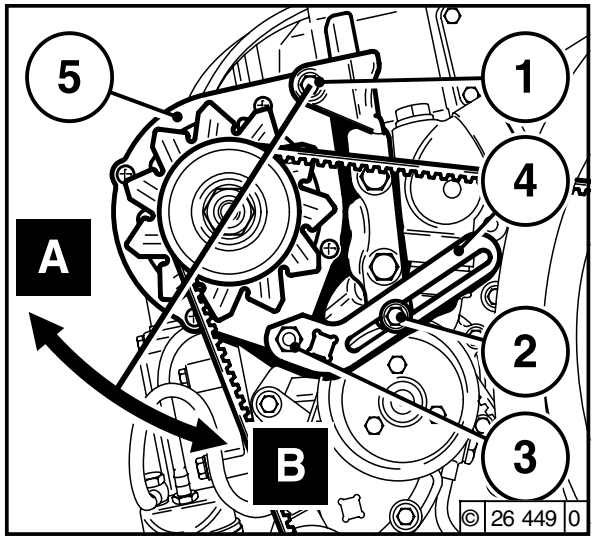


- Slacken off bolts 1, 2 and 3.
- Press alternator in direction of arrow B.
- Remove and replace belt.
- Tension belt in accordance with 6.5.3.
- Re-tighten bolts 1, 2 and 3.

## 6.5.4 Tensioning Coolant / Fuel Pump Belts 1012

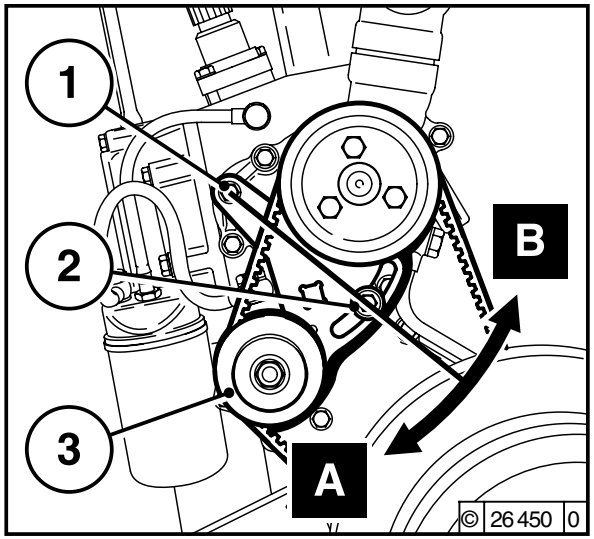


- Slacken off bolts 1 and 2.
- Push fuel pump 3 in direction of arrow (A) until correct belt tension is achieved.
- Re-tighten bolts 1 and 2.

Check, tension and change belts only with the engine off. Refit belt guard, if provided.

©2004

https://truckmanualshub.com/



## 6.5.5 Changing Coolant / Fuel Pump Belts 1012

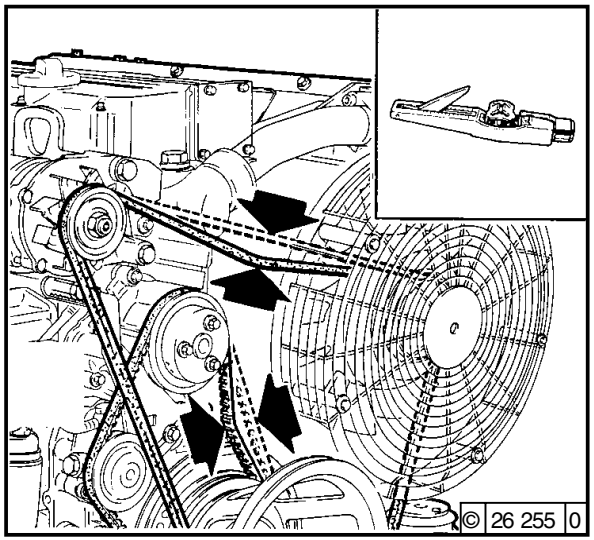


- Remove fan belt as described in 6.5.3.
- Slacken off bolts 1 and 2.
- Push fuel pump 3 in direction of arrow (B).
- Remove and replace belt.
- Push fuel pump in direction of arrow (A) until correct belt tension is achieved.
- Tighten bolts 1 and 2.
- Reinstall fan belt and tension as described in 6.5.2.

## 6.5.6 Tensioning Coolant / Fuel Pump Belts 1012E

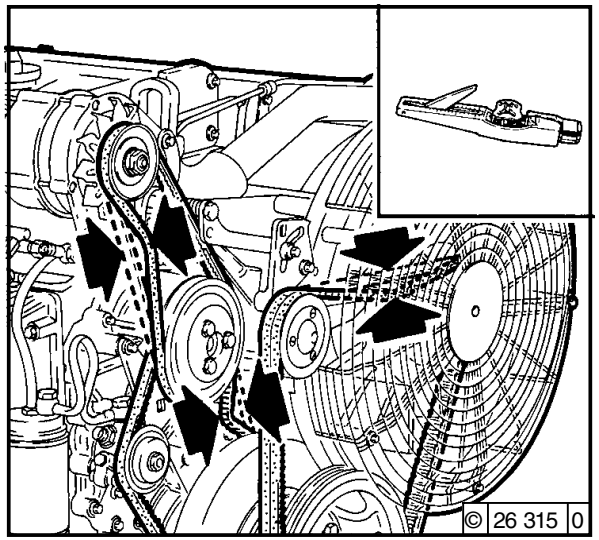


- Slacken off bolts 1 and 2.
- Push fuel pump 3 in direction of arrow until correct belt tension is achieved.
- Tighten bolts 1 and 2.

Check, tension and change belts only with the engine off. Refit belt guard, if provided.

## 6.5.7 Changing Coolant / Fuel Pump Belts 1012E

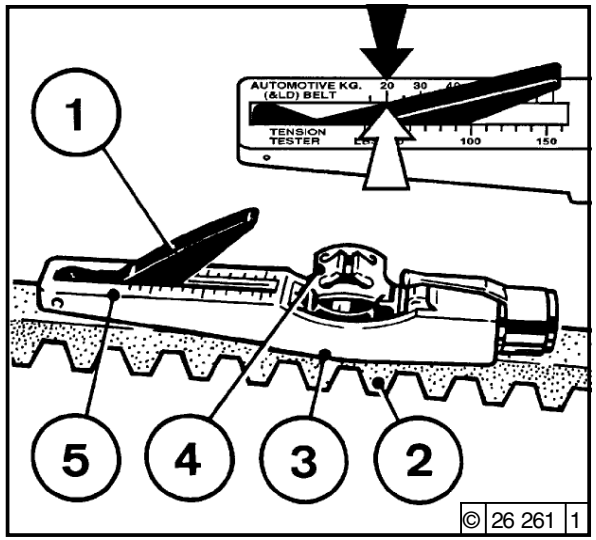


- Slacken off bolts 1 and 2.
- Push fuel pump 3 in direction of arrow.
- Remove and replace belt.
- Push fuel pump in opposite direction of arrow until correct belt tension is achieved.
- Tighten bolts 1 and 2.

©2004

https://truckmanualshub.com/



## 6.5.8 Tensioning Alternator Belt

### 1012E

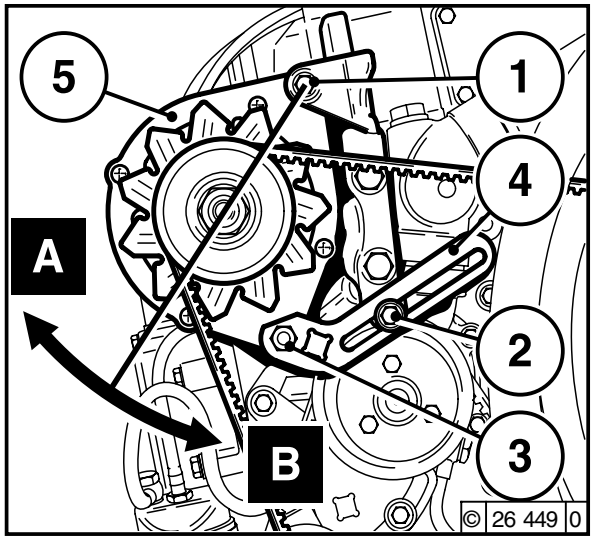


- Slacken off bolts 1, 2 and 4.
- Move alternator 5 in direction of arrow by turning bolt 3 until correct belt tension is achieved.
- Tighten bolts 1, 2 and 4.

Check, tension and change belts only with the engine off. Refit belt guard, if provided.

## 6.5.9 Changing Alternator Belt

### 1012E

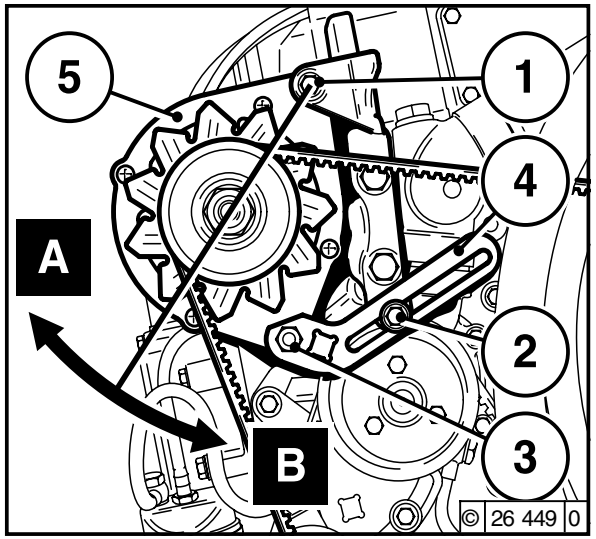


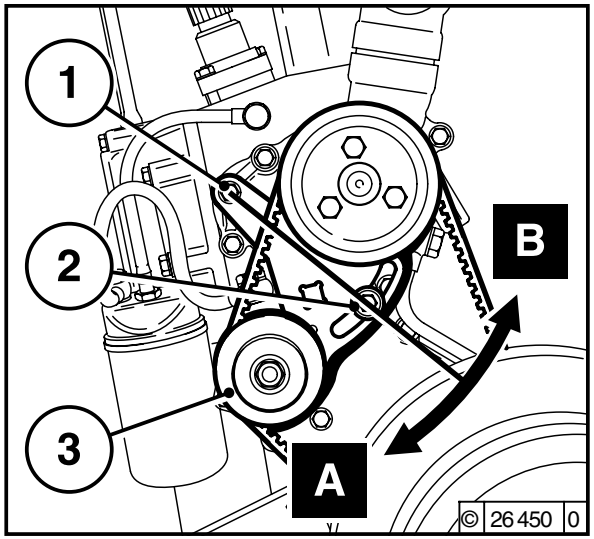


- Remove fuel pump belt as described in 6.5.7.
- Slacken off bolts 1, 2 and 4.
- Adjust bolt 3 until the V-belt can be removed.
- Fit new belt.
- Adjust bolt 3 until the correct belt tension is achieved.
- Tighten bolts 1, 2 and 4.
- Reinstall fuel pump belt and tension as described in 6.5.6.

©2004

https://truckmanualshub.com/



## 6.5.10 Tensioning / Changing Fan Belt 1013

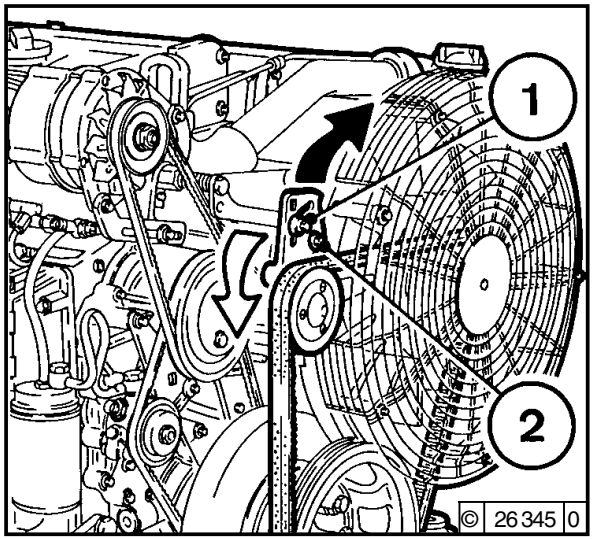


- Slacken off bolts 1 and 2.
  - Tensioning:
    Insert square wrench in square and pull in direction of arrow until correct belt tension is achieved.
  - Changing:
    Insert square wrench in square and loosen in opposite direction of arrow. Tension new belt as described above.
- Tighten bolts 1 and 2.

## 6.5.11 Tensioning Coolant / Fuel Pump belts 1013

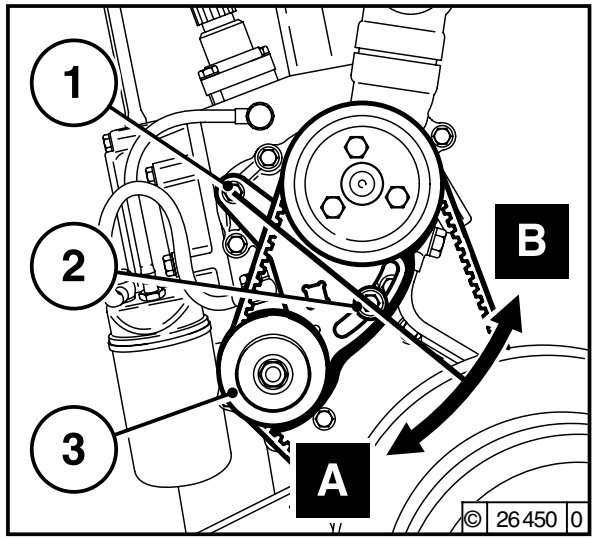


- Slacken off bolts 1 and 2.
- Push fuel pump 3 in direction (A) of arrow until correct belt tension is achieved.
- Tighten bolts 1 and 2.

Check, tension and change belts only with the engine off. Refit belt guard, if provided.

## 6.5.12 Changing Coolant / Fuel Pump Belts 1013

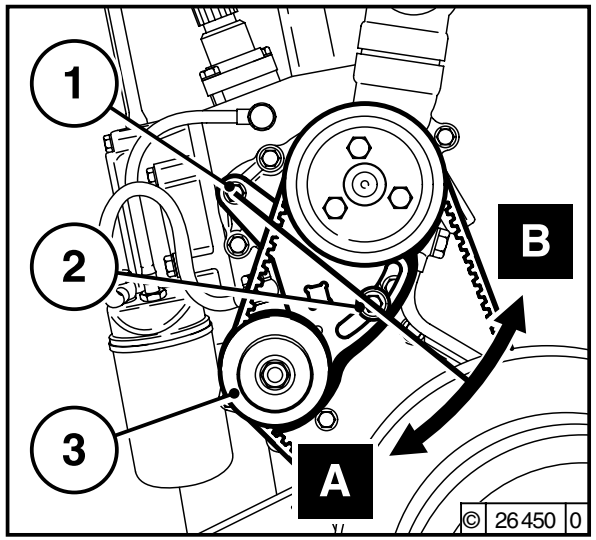


- Remove fan / alternator belt as described in 6.5.10 and 6.5.13.
- Slacken off bolts 1 and 2.
- Push fuel pump 3 in direction (B) of arrow.
- Remove and replace belt.
- Push fuel pump in direction (A) of arrow until correct belt tension is achieved.
- Tighten bolts 1 and 2.
- Reinstall fan / alternator belt and retension as described in 6.5.10 and 6.5.13.

©2004

https://truckmanualshub.com/



## 6.5.13 Tensioning /Changing Alternator Belt 1013

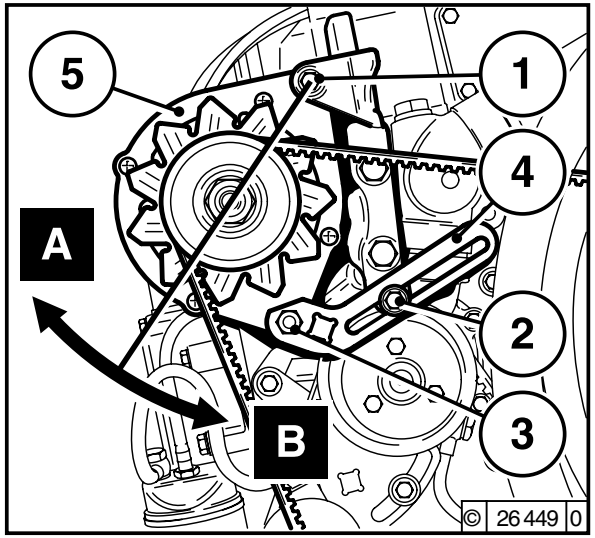


**Tensioning:**
- Slacken off bolts 1, 2 and 3.
- Move alternator 5 in direction of arrow (A) until correct belt tension is achieved.
- Re-tighten bolts 1, 2 and 3.

**Changing**:
- Slacken off bolts 1, 2 and 3.
- Move alternator 5 in direction of arrow (B) until belt is exposed.
- Remove and replace belt, tension (see above).
- Re-tighten bolts 1, 2 and 3.

## 6.5.14 Tensioning Coolant /Fuel Pump Belts 1013E

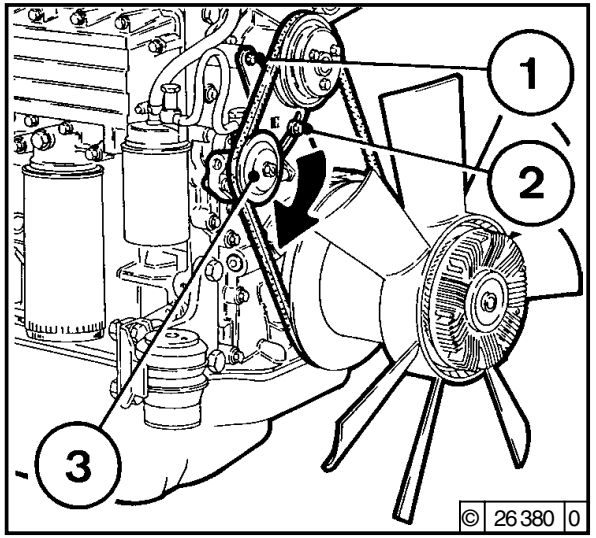


- Slacken off bolts 1 and 2.
- Push fuel pump 3 in direction of arrow until correct belt tension is achieved.
- Tighten bolts 1 and 2.

## 6.5.15 Changing Coolant / Fuel Pump Belts 1013E

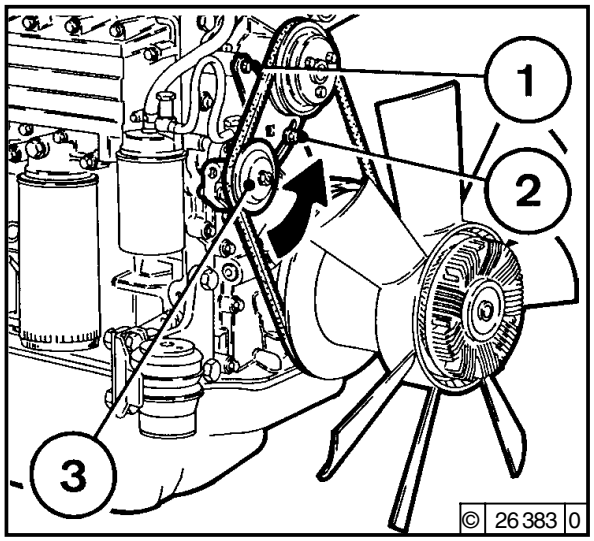


- Slacken off bolts 1 and 2.
- Push fuel pump 3 in direction of arrow.
- Remove and replace belt.
- Push fuel pump 3 in opposite direction of arrow until correct belt tension is achieved.
- Tighten bolts 1 and 2.

Check, tension and change belts only with the engine off. Refit belt guard, if provided.

©2004

https://truckmanualshub.com/



## 6.5.16 Tensioning /Changing Compressor Belt

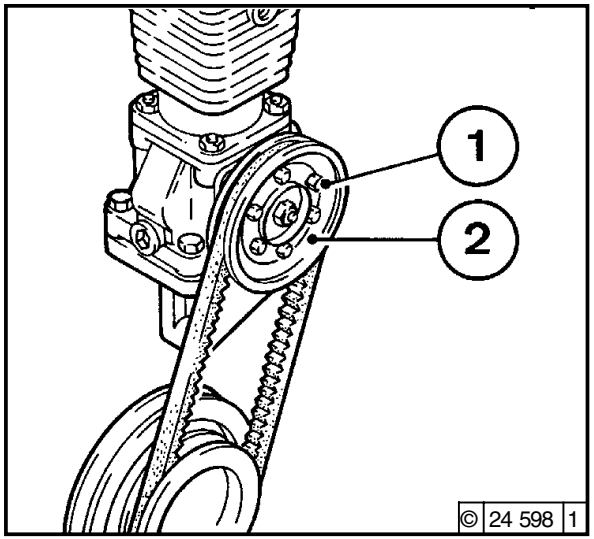


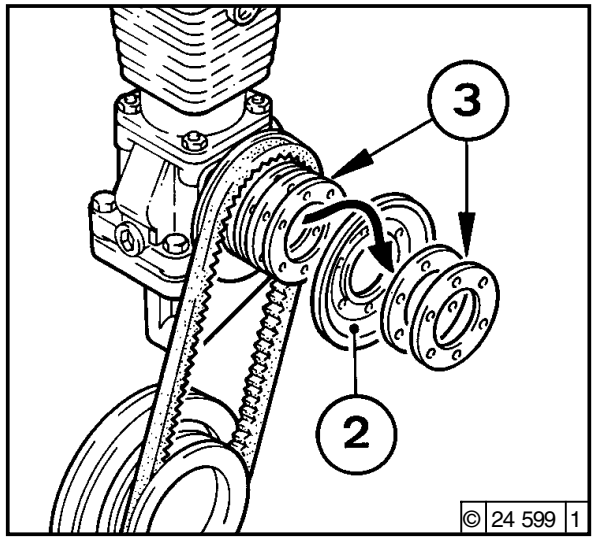


- Remove hex. bolts 1.
- Take off outer half-pulley 2.
- Replace belt if necessary.

- To retension belt, remove one or more shims 3 – as may be required – from inside. Place removed shim(s) outside on removed half-pulley 2.
- Turn engine over while tightening bolts 1 to prevent belt being pinched.

Check, tension and change belts only with the engine off. Refit guard, if provided.

©2004

https://truckmanualshub.com/



## 6.6.1 Checking / Adjusting Valve Clearances

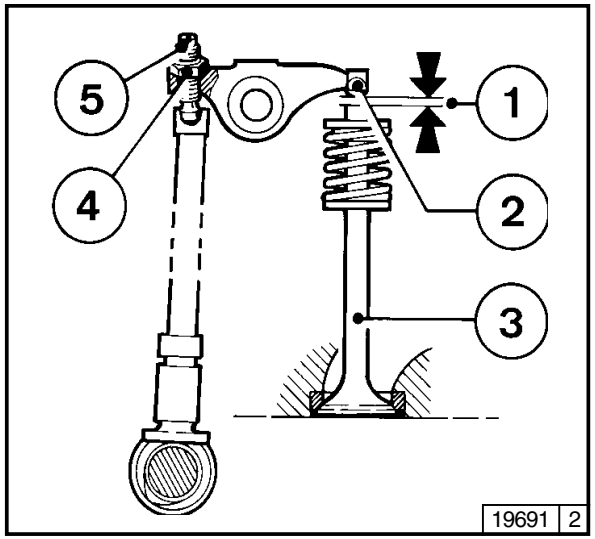


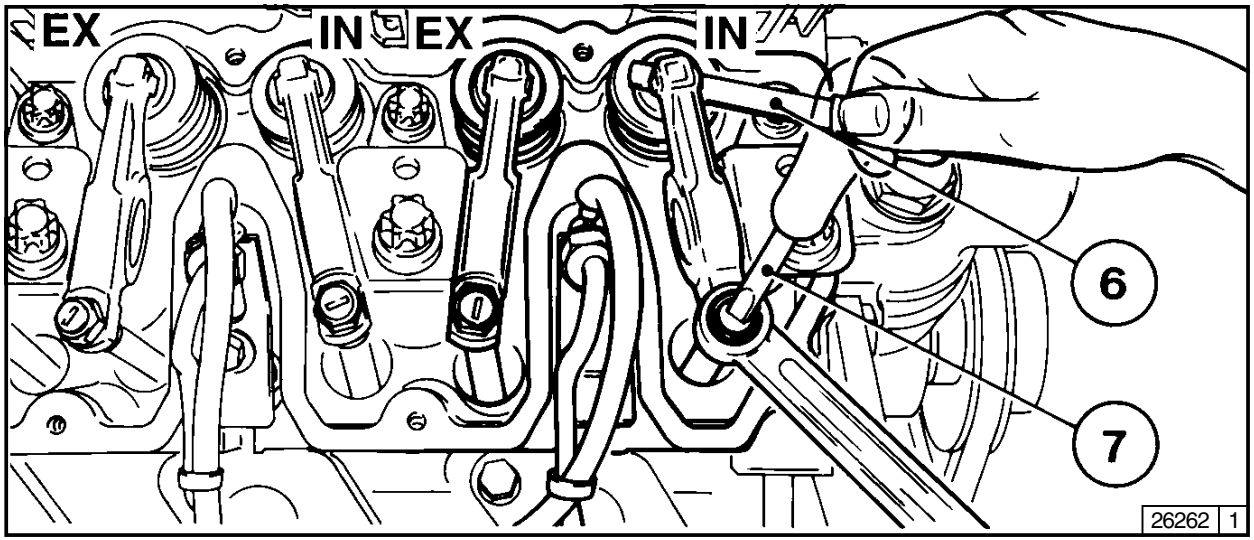


- Slacken off breather valve and swing to one side.
- Remove rocker cover.
- Position crankshaft as per schematic 6.6.1.1
- Before adjusting valve clearance, allow engine to cool down for at least 30 minutes. The oil temperature should be below 80 °C / 176 °F.
- Check valve clearance between rocker arm / tappet contact face 2 and valve stem 3 with feeler gauge 6 (there should be only slight resistance when feeler blade is inserted). For permissible valve clearance, see 9.1.
- Adjust valve clearance if necessary:
  – Release locknut 4.
  – Use screwdriver 7 to turn setscrew 5 so that the correct clearance is attained after locknut 4 has been tightened.
- Check and adjust valve clearance on all remaining cylinders.
- Replace rocker cover (use new gasket if needed).
- Swing breather valve back into position and secure.

©2004

https://truckmanualshub.com/



## Check valve clearance, if necessary set GenSet

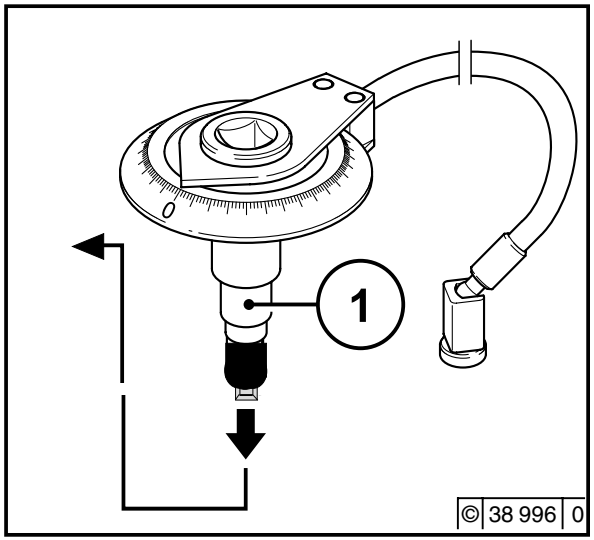


- Loosen bleed valve and swing to the side.
- Remove cylinder head cover.
- Let the engine cool down for at least 30 minutes before setting the valve clearance. Oil temperature below 80 °C.
- Place turnover device over the fastening screws of the belt pulleys.
- Turn over the engine until reaching the valve overlap, cylinder no. 1
- Crankshaft setting according to setting table, see 6.6.1.1.

**Note:** Valve overlap means:
The outlet valve begins to open. Valve setting table, see 6.6.1.1

- Set valve clearance if necessary by:
  - loosening the counter nut
  - plug valve spacer with the setting device 1 opposite on setting screw 5 and set as follows:
    Fix the magnet
    Turn the slotted screwdriver of setting device 1 without clearance
    Then turn back angle degrees 90°/150° (by hand or torque wrench)
    IN= inlet valve 90°
    EX= outlet valve 150°
  - Tighten counter nut 4 (20 Nm).
- Do the tests and settings on every cylinder.
- Remount the cylinder head cover (if necessary with new gasket).
- Swing the bleed valve into position and fix.

Example: BF4M 1013
Valve clearance setting

| | |
|---|---|
| 1. Operation | 1. Set cylinder to overlap cylinder 4. |
| 2. Operation | 3. Set cylinder to overlap cylinder 2. |
| 3. Operation | 4. Set cylinder to overlap cylinder 1. |
| 4. Operation | 2. Set cylinder to overlap cylinder 3. |

©2004

https://truckmanualshub.com/



### 6.6.1.1 Valve Clearance Adjustment Schematic

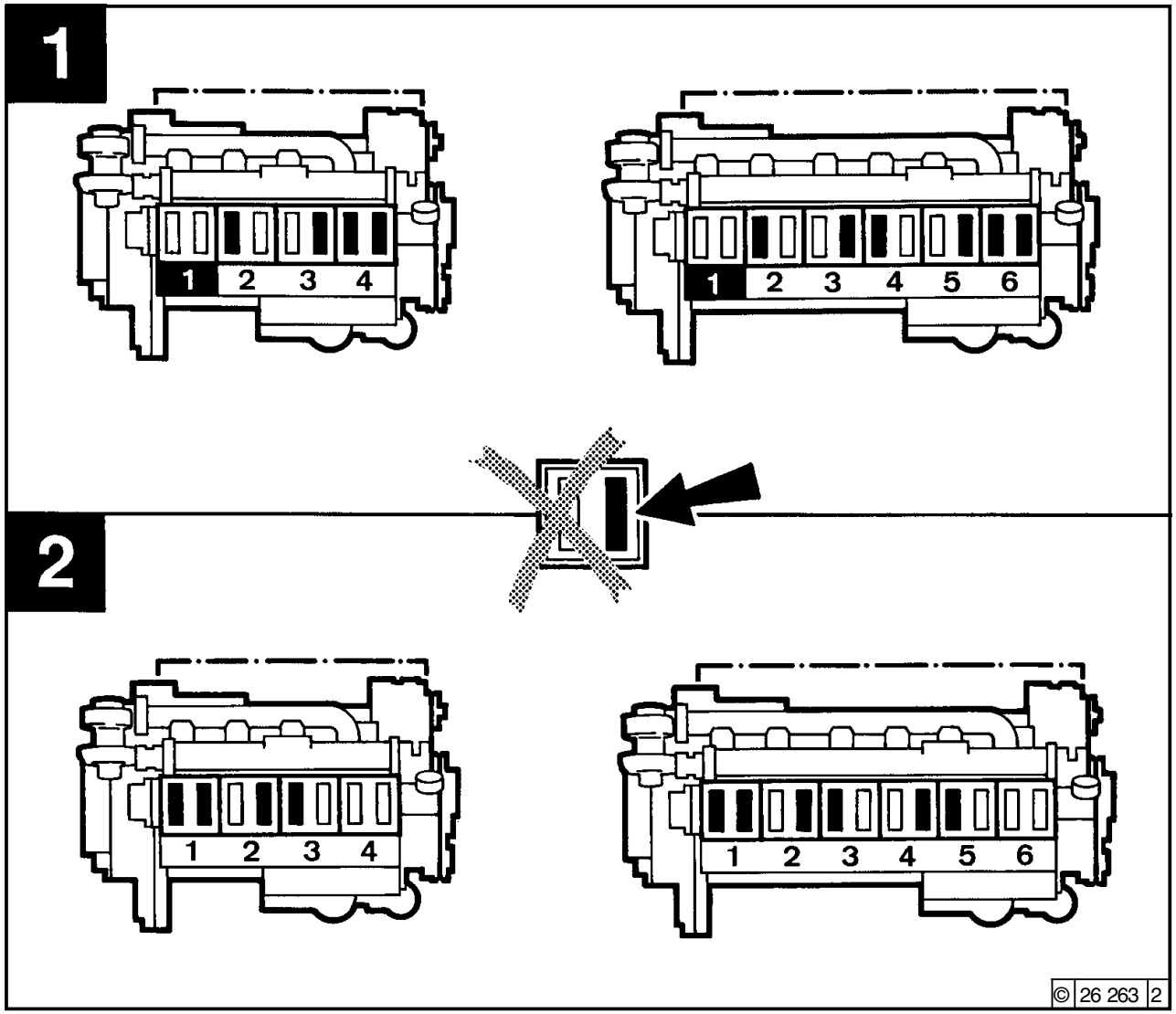


- **Crankshaft Position 1:**

  Turn crankshaft until both valves in cylinder 1 overlap (exhaust valve about to close, inlet valve about to open). Adjust clearance of valves **marked in black** on schematic. Mark respective rocker arm with chalk to show that adjustment has been done.

- **Crankshaft Position 2:**

  Turn crankshaft one full revolution (360°).

  Adjust clearance of valves **marked in black** on schematic.

©2004

https://truckmanualshub.com/



## 6.7.1 Battery

### 6.7.1.1 Checking Battery and Cable Connectors

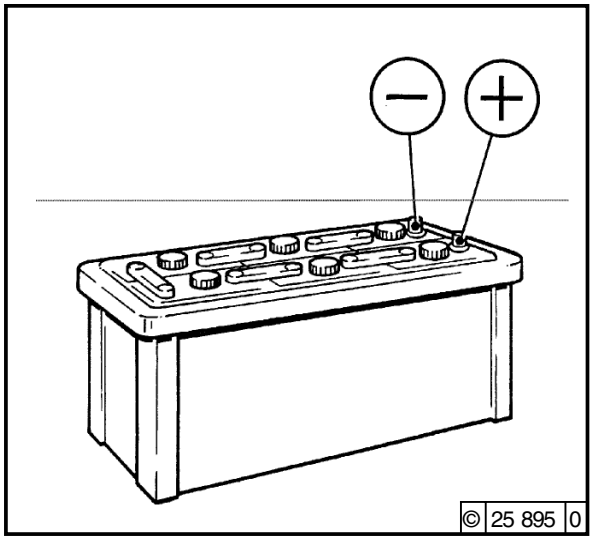


- Keep battery clean and dry.
- Undo dirty clamps.
- Clean terminal posts (+ and –) and clamps of the battery, and grease with acid-free and acid-resistant grease.
- When reassembling, ensure that clamps make good contact. Do up clamp bolts finger tight.

### 6.7.1.2 Checking Electrolyte Level

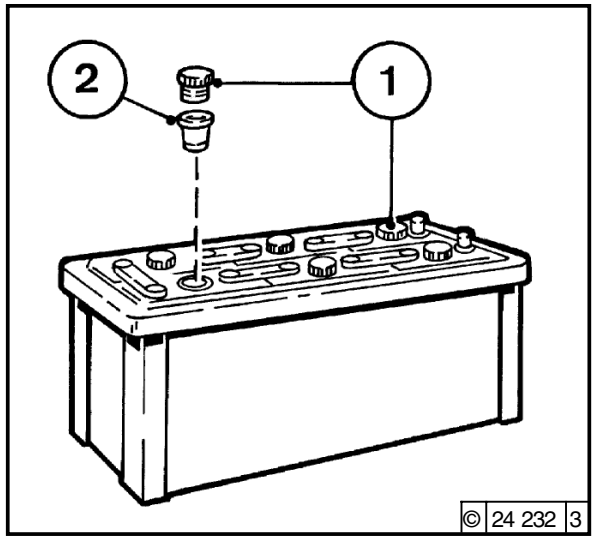


- Remove caps 1.
- If testers 2 are used, the electrolyte should come up to their base.
- If testers are not used, the electrolyte level should be 10-15 mm above the top of the plates.
- If necessary, top up with distilled water.
- Replace caps.

### 6.7.1.3 Checking Specific Gravity of Electrolyte

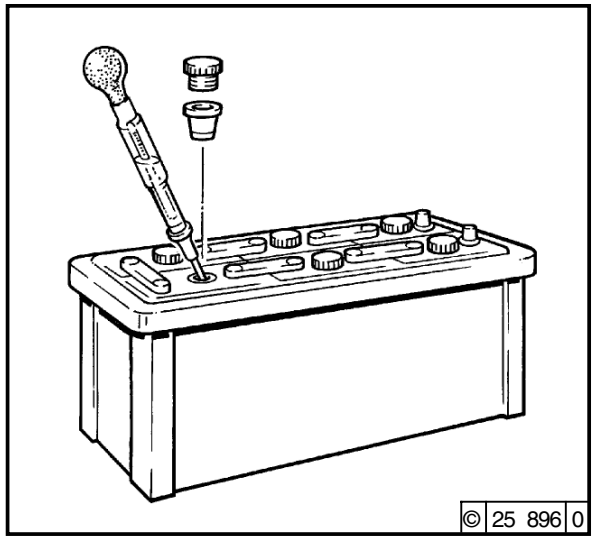


- Measure the specific gravity of individual cells with a commercial hydrometer.

  The hydrometer reading (see table on following page) indicates the state of charge. During measurement, the temperature of the electrolyte should preferably be 20°C / 68°F.

©2004

https://truckmanualshub.com/



| Specific Gravity | | | | |
|---|---|---|---|---|
| in [kg/l] | | in °Bé [°Baumé]* | | State of Charge |
| Normal | Tropics | Normal | Tropics | |
| 1.28 | 1.23 | 32 | 27 | Fully charged |
| 1.20 | 1.12 | 24 | 16 | Half charged, recharge |
| 1.12 | 1.08 | 16 | 11 | Discharged, recharge immediately |

* Measurement of specific gravity in °Bé is out of date and rarely used today.

The gases emitted by the battery are explosive. Keep sparks and naked flames away from the battery.
Do not allow battery acid to come into contact with skin or clothing.
Wear protective goggles.
Do not rest tools on the battery.

©2004

https://truckmanualshub.com/



## 6.7.2 Three-Phase Alternator

Notes on the three-phase system:

- Never disconnect the cables between battery, alternator and regulator while the engine is running.
- If, however, it is necessary to start and operate the engine without the battery, disconnect the regulator from the alternator before starting.
- Be sure not to confuse the battery terminals.
- Replace defective bulb of the charge pilot lamp immediately.
- Cleaning the engine: Do not spray water/ steam directly onto the alternator. Run the engine up to normal operating temperature to evaporate any remaining water.
- The habit of touching a lead against the frame to check whether it is live must under no circumstances be used with three-phase electrical systems.
- In the case of electric welding, connect the ground terminal on the welder directly to the piece being welded.

## 6.7.3 Lifting Tackle

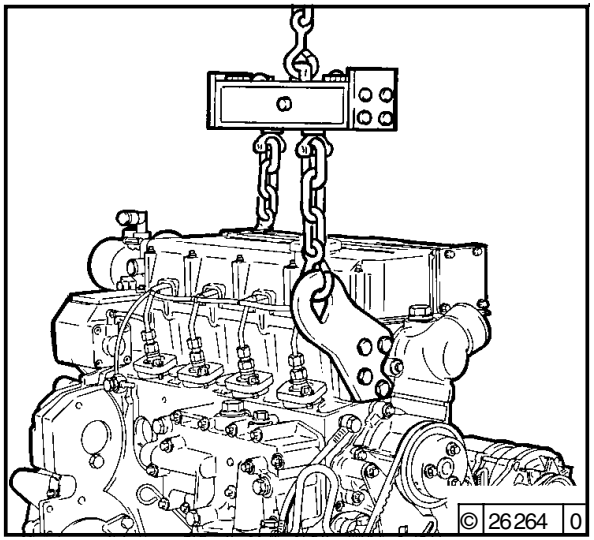


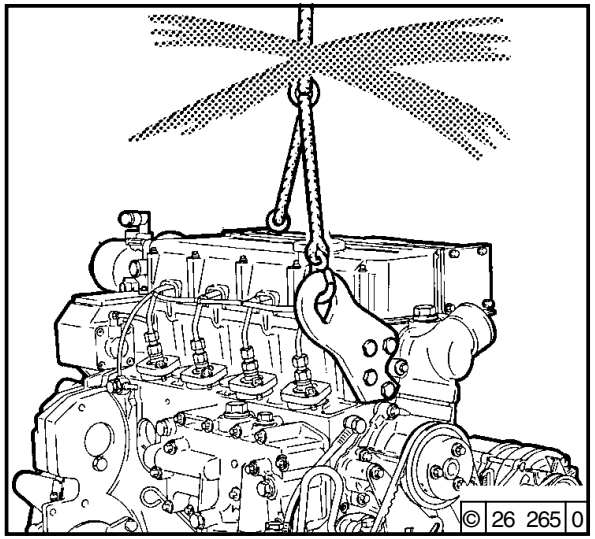


- Always use proper lifting tackle when transporting the engine.

Use only the correct lifting tackle.

©2004

https://truckmanualshub.com/



©2004

https://truckmanualshub.com/



## 7.1 Diagnosis Chart

https://truckmanualshub.com/



- If engine problems occur, they frequently have their cause in improper operation or engine maintenance.
- If problems do occur, always check first that the operating and maintenance instructions have been followed.
- A diagnosis chart is given on the facing page.
- If you cannot identify the cause of the problem or are unable to rectify it yourself, please contact DEUTZ Service.

Before starting, make sure that nobody is standing in the immediate vicinity of the engine or driven machine.
**Important:** When carrying out repair work, never start the engine with speed governor removed.
**Disconnect battery.**

https://truckmanualshub.com/



| Fault | | | | | | | | | | | Remedy | |
|---|---|---|---|---|---|---|---|---|---|---|---|---|
| Engine fails or is difficult to start | | | | | | | | | | | Check | P |
| | Engine starts but runs unevenly or stalls | | | | | | | | | | Adjust | E |
| | | Engine overheats. Temperature monitor gives warning | | | | | | | | | Replace | W |
| | | | Engine gives poor performance | | | | | | | | Clean | R |
| | | | | Engine not firing on all cylinders | | | | | | | Top up | A |
| | | | | | Engine has little or no oil pressure | | | | | | Lower level | S |
| | | | | | | Engine oil consumption excessive | | | | | | |
| | | | | | | | Engine smokes | | - blue | | | |
| | | | | | | | | | - white | | | |
| | | | | | | | | | | - black | | |
| | | | | | | | | | | **Cause** | **Section** | |
| ● | | | | | | | | | | Not declutched (where possible) | Operation | **P** |
| ● | | | | | | | | ● | | Below starting limit temperature | | **P** |
| ● | | | ● | | | | | | | Engine shutdown lever in stop position (faulty solenoid) | | **P** |
| | | ● | | | ● | | | | | Oil level too low | | **A** |
| | | ● | ● | | | ● | ● | | | Oil level too high | | **S** |
| | | | | | ● | ● | ● | | | Excessive inclination of engine | | **P / E** |
| ● | | | | | | | | | | Speed control lever set to middle position | | **P / E** |
| | | ● | ● | | | | | | ● | Dirty air cleaner/Faulty turbocharger | Combustion air | **P / W** |
| | | ● | ● | | | | | | ● | Air cleaner service switch/indicator defective | | **P** |
| | | | ● | | | | | | ● | LDA* defective (leaking line) | | **P** |
| | | ● | ● | | | | | | ● | Charge air line leaking | | **P / W** |
| | | ● | | | | | | | | Coolant pump defective | Cooling system | **P / R** |
| | | | ● | | | | | | ● | Charge air cooler contaminated | | **P / R** |
| | | ● | | | | | | | | Coolant heat exchanger dirty | | **P / R** |
| ● | ● | ● | ● | ● | | | | | | Cooling fan defective, split or loose V-belt (belt-driven fuel pump) | | **P / W** |
| | ● | ● | | | | | | | | Cooling air temperature rise/ hot air recirculation | | **P** |
| ● | | | | | | | | | | Battery defective or discharged | Electrics | **P** |

*LDA = Aneroid device

https://truckmanualshub.com/



| Fault | | | | | | | | | | | Remedy | |
|---|---|---|---|---|---|---|---|---|---|---|---|---|
| Engine fails or is difficult to start | | | | | | | | | | | Check | P |
| | Engine starts but runs unevenly or stalls | | | | | | | | | | Adjust | E |
| | | Engine overheats. Temperature monitor gives warning | | | | | | | | | Replace | W |
| | | | Engine gives poor performance | | | | | | | | Clean | R |
| | | | | Engine not firing on all cylinders | | | | | | | Top up | A |
| | | | | | Engine has little or no oil pressure | | | | | | Lower level | S |
| | | | | | | Engine oil consumption excessive | | | | | | |
| | | | | | | | Engine smokes - blue | | | | | |
| | | | | | | | | - white | | | | |
| | | | | | | | | | - black | | | |
| | | | | | | | | | | **Cause** | **Section** | |
| ● | | | | | | | | | | Electrics cable connections to starter, electrical system loose or oxidized | Electrics | **P** |
| ● | | | | | | | | | | Starter defective or pinion does not engage | | **P** |
| ● | ● | | ● | | | | | ● | ● | Incorrect valve clearance | Engine | **E** |
| ● | ● | | ● | ● | | | | | | Leaking injection line | | **P** |
| | | ● | | | | | | | | Vent pipe blocked (coolant heat exchanger) | | **P / R** |
| ● | | | | | | | | ● | | Glow plugs defective | | **P** |
| ● | ● | ● | ● | ● | | | | ● | ● | Injector defective | | **P / W** |
| ● | ● | | ● | ● | | | | | | Air in fuel system | | **P / W** |
| ● | ● | | ● | ● | | | | | | Fuel filter/prefilter dirty | | **P/ R /W** |
| | | ● | | | | | | | | Oil filter defective | | **W** |
| ● | | | | | ● | ● | | | | Incorrect lube oil SAE class or quality | Operating media | **W** |
| ● | ● | | ● | | | | | ● | | Fuel quality not as per Operation Manual | | **P/ W** |
| | | ● | | | | | | | | Coolant level too low | | **P/ A** |

Table 2 of 2

https://truckmanualshub.com/



## 8.1 Preservation

https://truckmanualshub.com/





## 8.1 Preservation

If the engine is to remain idle for an extended period of time, it is necessary to take protective measures to prevent rust formation. The preservative measures described here will protect the engine for up to 6 months. The procedure will have to be reversed before the engine is recommissioned.

- Anti-corrosion oils to specification:
  - MIL-L-21260B
  - TL 9150-037/2
  - NATO code C 640/642

- Recommended cleansing agent to remove preservatives when recommissioning engine:
  - Petroleum benzine (hazardous materials class A3)

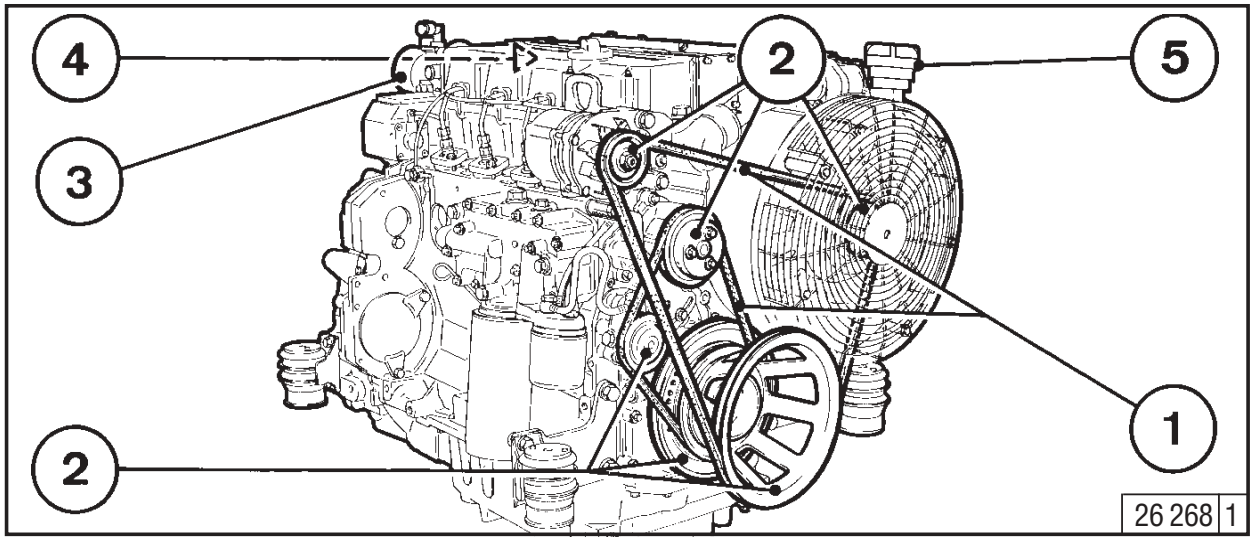


**Preserving Engine:**

- Clean engine (with cold cleansing agent if preferred). See 6.3.2.
- Run engine until warm, then turn off.
- Drain engine oil (see 6.1.2) and fill with anti-corrosion oil.
- Drain coolant (see 6.3.3/6.3.5).
- Fill with anti-corrosion agent (see 4.3.3).
- If necessary, clean oil bath air cleaner (see 6.4.3) and fill with anti-corrosion oil.
- Drain fuel tank.
- Make up a mixture of 90% diesel fuel and 10% anti-corrosion oil, and refill fuel tank.
- Run engine for about 10 minutes.
- Turn engine off.
- Turn engine over manually several times. If using starter, set shutdown lever to stop position.
- Remove V-belts 1 and store in wrapped condition.
- Spray grooves of V-belt pulleys 2 with anti-corrosion agent.
- Close off intake ports 3 and exhaust ports 4.
- Lightly grease and replace coolant filler 5.
- Drain anti-corrosion agent (see 6.3.3 / 6.3.5).

**Removing Engine Preservatives:**

- Remove anti-corrosion agent from grooves in V-belt pulleys 2.
- Install V-belts 1. Retension after brief operation is necessary (see 6.5).
- Remove covers from intake port 3 and exhaust port 4.
- Fill with coolant (see 6.3.4 / 6.3.5).
- Start engine.

https://truckmanualshub.com/

# Technical Specifications



9.1 Engine Specifications and Settings
9.2 Torque Wrench Settings
9.3 Tools

https://truckmanualshub.com/



| Model | | BF4M 1012<br>BF4M 1012 E | BF4M 1012 C<br>BF4M 1012 EC | BF6M 1012<br>BF6M 1012 E | BF6M 1012 C<br>BF6M 1012 EC |
|---|---|---|---|---|---|
| Number of cylinders | | 4 | 4 | 6 | 6 |
| Cylinder arrangement | | vertical, in line | | | |
| Bore | [mm] | 94 | | | |
| Stroke | [mm] | 115 | | | |
| Total displacement | [$cm^3$] | 3192 | 3192 | 4788 | 4788 |
| Compression ratio | [ε]. | 17.5 | | | |
| Working cycle/Combustion system | | 4-stroke diesel with turbocharging and direct injection | | | |
| Charge air cooler | | w/o | w/ | w/o | w/ |
| Direction of rotation | | counter-clockwise | | | |
| Weight 1012 / C incl. cooling system | [kg approx.] | contact company headquarters | | | |
| Weight 1012 E / EC w/o cooling system as per DIN 70020-A | [kg approx.] | 330 | 332 | 435 | 437 |
| Engine power | [kW] | 1). | | | |
| Speed | [rpm] | 1). | | | |
| Valve clearance with cold engine | [mm] | Inlet 0,3 + 0,1 / Outlet 0,5 + 0,1. | | | |
| Injector opening pressure | [bar] | 250/275 | | | |
| Start of delivery | [°crank angle bTDC] | 1). | | | |
| Firing order of engine | | 1-3-4-2 | 1-3-4-2 | 1-5-3-6-2-4 | 1-5-3-6-2-4 |
| V-belt tension: | | Pre-tension / re-tension 2). | | | |
| Generator fan | [N] | 550 / 300 ± 50. | | | |
| Fuel pump - coolant pump | [N] | 550 / 300 ± 50. | | | |
| Compressor | [N] | 650 / 400 ± 50. | | | |

1) Engine power, speed, start of delivery are stamped on engine rating plate, see also 2.1

2) Retension 15 minutes after the engine has been driven under load

https://truckmanualshub.com/



| Model BFM1012 / E | | BF4M 1012<br>BF4M 1012 E | BF4M 1012 C<br>BF4M 1012 EC | BF6M 1012<br>BF6M 1012 E | BF6M 1012 C<br>BF6M 1012 EC |
|---|---|---|---|---|---|
| Cooling system | | Liquid-cooled/Cooling system protection | | | |
| Coolant quantity | | | | | |
| 1012/C | [litres approx.] | 9.3 | 10.0 | 12.2 | 13.6 |
| 1012 E/EC [5] | [litres approx.] | 5.6 | 5.6 | 7.3 | 7.3 |
| 1012 unit engine (with frontal radiator) | [litres approx.] | 15.9 | 18.1 | — | — |
| Permissible continuous coolant temperature | | | | | |
| Engine outlet, with performance group I | [°C] | max.110 [6] | | | |
| Engine outlet, with performance group II-IV | [°C] | max.105 [6] | | | |
| Thermostat initial opening at | [°C] | 83 [7] | | | |
| Thermostat full open temperature | [°C] | 95 [8] | | | |
| Coolant prewarming | | [4] | | | |
| Coolant pump | | | | | |
| Delivery pressure in | [bar] | [9] | | | |
| Delivery rate in | [m³ /h] | [9] | | | |
| Power consumption in | [kW] | [9] | | | |
| Lubrication | | forced-feed lubrication | | | |
| Oil temperature in oil pan | [°C] | 125 | | | |
| Min. oil pressure with engine warm (120°C and SAE oil 15 W 40) and low idle speed | [bar] | 0.8 | | | |
| Oil capacity (first fill-up) without filter | [litres approx.] | 8.5 [3] | 8.5 [3] | 12.5 [3] | 12.5 [3] |
| Oil capacity (first fill-up) with filter | [litres approx.] | 10.0 [3] | 10.0 [3] | 14.0 [3] | 14.0 [3] |

[3] Approximate figures can vary depending on the design. The upper marking on the dipstick is always the maximum.
[4] Only during winter (see 3.5.1)
[5] Only engine capacity without radiator. Capacity of external cooling system dependent on cooling system design.
[6] Other performance groups have different values. Please contact company headquarters.
[7] With external cooling systems with outlet control, the temperature at which the thermostat opens is 87°C
[8] With external cooling systems with outlet control, the temperature at which the thermostat is fully opened is 102°C.
[9] Please contact company headquarters (varies depending on engine design)

https://truckmanualshub.com/



| Model | | BF4M 1013<br>BF4M 1013 E | BF4M 1013 C<br>BF4M 1013 EC | BF6M 1013<br>BF6M 1013 E | BF6M 1013 C<br>BF6M 1013 EC | BF6M 1013 CP<br>BF6M 1013 ECP |
|---|---|---|---|---|---|---|
| Number of cylinders | | 4 | 4 | 6 | 6 | 6 |
| Cylinder arrangement | | vertical, in line | | | | |
| Bore | [mm] | 108 | | | | |
| Stroke | [mm] | 130 | | | | |
| Total displacement | [cm³] | 4764 | 4764 | 7146 | 7146 | 7146 |
| Compression ratio | [ε]. | 17.5 | | | | |
| Working cycle/Combustion system | | 4-stroke diesel with turbocharging and direct injection | | | | |
| Charge air cooler | | w/o | w/ | w/o | w/ | w/ |
| Direction of rotation | | counter-clockwise | | | | |
| Weight 1013 / CP incl. cooling system | [kg approx.] | contact company headquarters | | | | |
| Weight 1013 E / EC / ECP w/o cooling system as per DIN 70020-A | [kg approx.] | 455 | 455 | 600 | 600 | 600 |
| Engine power | [kW] | [1]. | | | | |
| Speed | [rpm] | [1]. | | | | |
| Valve clearance with cold engine | [mm] | Inlet 0,3 + 0,1 / Outlet 0,5 + 0,1. | | | | |
| Injector opening pressure | [bar] | 250/275 | | | | |
| Start of delivery | [°crank angle bTDC] | [1]. | | | | |
| Firing order of engine | | 1-3-4-2 | 1-3-4-2 | 1-5-3-6-2-4 | 1-5-3-6-2-4 | 1-5-3-6-2-4 |
| V-belt tension: | | Pre-tension / re-tension [2]. | | | | |
| Generator fan | [N] | 550 / 300 ± 50. | | | | |
| Fuel pump - coolant pump | [N] | 550 / 300 ± 50. | | | | |
| Compressor | [N] | 650 / 400 ± 50. | | | | |

[1] Engine power, speed, start of delivery are stamped on engine rating plate, see also 2.1

[2] Retension 15 minutes after the engine has been driven under load

https://truckmanualshub.com/



| Model 1013 /E | | BF4M 1013<br>BF4M 1013 E | BF4M 1013 C<br>BF4M 1013 EC | BF6M 1013<br>BF6M 1013 E | BF6M 1013 C<br>BF6M 1013 EC | BF6M 1013 CP<br>BF6M 1013 ECP |
|---|---|---|---|---|---|---|
| Cooling system | | Liquid-cooled/Cooling system protection | | | | |
| Coolant quantity | | | | | | |
| 1013 / C / CP | [litres approx.] | 12.1 | 13.6 | 15 | 16.3 | 16.9 |
| 1013 E / EC / ECP [5] | [litres approx.] | 7.2 | 7.2 | 9.8 | 9.8 | 9.8 |
| 1013 unit engine (with frontal radiator) | [litres approx.] | 17.5 | 19.7 | 22 | 23.7 | 23.7 |
| Permissible continuous coolant temperature | | | | | | |
| Engine outlet, with performance group I | [°C] | max.110 [6]. | | | | |
| Engine outlet, with performance group II-IV | [°C] | max.105 [6]. | | | | |
| Thermostat initial opening at | [°C] | 83 [7]. | | | | |
| Thermostat full open temperature | [°C] | 95 [8]. | | | | |
| Coolant prewarming | | [4]. | | | | |
| Coolant pump | | | | | | |
| Delivery pressure in | [bar] | [9]. | | | | |
| Delivery rate in | [m³ /h] | [9]. | | | | |
| Power consumption in | [kW] | [9]. | | | | |
| Lubrication | | forced-feed lubrication | | | | |
| Oil temperature in oil pan | [°C] | max. 125 | | | | |
| Min. oil pressure with engine warm (120°C and SAE oil 15 W 40) and low idle speed | [bar] | 0.8 | | | | |
| Oil capacity (first fill-up) without filter | [litres approx.] | 13 [3]. | 13 [3]. | 20 [3]. | 20 [3]. | 20 [3]. |
| Oil capacity (first fill-up) with filter | [litres approx.] | 14.0 [3]. | 14.0 [3]. | 21.0 [3]. | 21.0 [3]. | 21.0 [3]. |

[3] Approximate figures can vary depending on the design. The upper marking on the dipstick is always the maximum.
[4] Only during winter (see 3.5.1)
[5] Only engine capacity without radiator. Capacity of external cooling system dependent on cooling system design.
[6] Other performance groups have different values. Please contact company headquarters.
[7] With external cooling systems with outlet control, the temperature at which the thermostat opens is 87°C
[8] With external cooling systems with outlet control, the temperature at which the thermostat is fully opened is 102°C.
[9] Please contact company headquarters (varies depending on engine design)

https://truckmanualshub.com/



| Model | | BF4M 1013 FC | BF6M 1013 FC |
|---|---|---|---|
| Number of cylinders | | 4 | 6 |
| Cylinder arrangement | | vertical, in line | |
| Bore | [mm] | 108 | |
| Stroke | [mm] | 130 | |
| Total displacement | [$cm^3$] | 4764 | 7146 |
| Compression ratio | [ε]. | 17.6 | |
| Working cycle/Combustion system | | 4-stroke diesel with turbocharging and direct injection | |
| Charge air cooler | | with | |
| Direction of rotation | | counter-clockwise | |
| Weight 1013 FC without cooling system | | contact company headquarters | |
| as per DIN 70020-A | [kg approx.] | 455 | 600 |
| Engine power | [kW] | [1]. | |
| Speed | [rpm] | [1]. | |
| Valve clearance with cold engine | [mm] | Inlet $0,3^{+0,1}$ / Outlet $0,5^{+0,1}$. | |
| Injector opening pressure | [bar] | 275 | |
| Start of delivery | [°crank angle bTDC] | [1]. | |
| Firing order of engine | | 1-3-4-2 / 1-3-4-2 | 1-5-3-6-2-4 / 1-5-3-6-2-4 / 1-5-3-6-2-4 |
| V-belt tension: | | Pre-tension / re-tension [2]. | |
| Generator fan | [N] | $550 / 300^{\pm 50}$. | |
| Fuel pump - coolant pump | [N] | $550 / 300^{\pm 50}$. | |
| Compressor | [N] | $650 / 400^{\pm 50}$. | |

[1] Engine power, speed, start of delivery are stamped on engine rating plate, see also 2.1

[2] Retension 15 minutes after the engine has been driven under load

https://truckmanualshub.com/



| Model 1013 FC | | BF4M 1013 FC | BF6M 1013 FC |
|---|---|---|---|
| Cooling system | | Liquid-cooled/Cooling system protection | |
| Coolant quantity | | | |
| 1013 FC [5] | [litres approx.] | 7.2 | 9.8 |
| Permissible continuous coolant temperature | | | |
| Engine outlet, with performance group I | [°C] | with flap turbocharger max.110 [6] ./ with feast turbocharger max.105 [6] . | |
| Engine outlet, with performance group II-IV | [°C] | max.105 [6]. | |
| Thermostat initial opening at | [°C] | 87 . | |
| Thermostat full open temperature | [°C] | 102 . | |
| Coolant prewarming | | [4] . | |
| Coolant pump | | | |
| Delivery pressure in | [bar] | [7] . | |
| Delivery rate in | [$m^3$ /h] | [7] . | |
| Power consumption in | [kW] | [7] . | |
| Lubrication | | forced-feed lubrication | |
| Oil temperature in oil pan | [°C] | max. 125 | |
| Min. oil pressure with engine warm (120°C and SAE oil 15 W 40) and low idle speed | [bar] | 0.8 | |
| Oil capacity (first fill-up) without filter | [litres approx.] | 16 [3] . | 28 [3] . |
| Oil capacity (first fill-up) with filter | [litres approx.] | 17 [3] . | 29 [3]. |

[3] Approximate figures can vary depending on the design. The upper marking on the dipstick is always the maximum.

[4] Only during winter (see 3.5.1)
[5] Only engine capacity without radiator. Capacity of external cooling system dependent on cooling system design.
[6] Other performance groups have different values. Please contact company headquarters.
[7] Please contact company headquarters (varies depending on engine design)

https://truckmanualshub.com/



| Location | Preload [Nm] | | | Torquing Load [Nm] | | | | Total [Nm] | Remarks |
|---|---|---|---|---|---|---|---|---|---|
| | Stage 1 | Stage 2 | Stage 3 | Stage 1 | Stage 2 | Stage 3 | Stage 4 | | |
| Rocker cover | | | | | | | | 8,5 | |
| Rocker arm setscrew | | | | | | | | 21 | |
| Mount, flywheel side | | | | | | | | 187 | M16x40 8.8 A4C |
| Mount, turbocharger side | | | | | | | | 187 | M16x40 8.8 A4C |
| Air intake manifold | | | | | | | | 8,5 | |
| Exhaust manifold | | | | | | | | 21 | |
| Oil drain plug | | | | | | | | 50 | |
| Injector mounting | | | | | | | | 16 | Torx |
| Injection line mounting | | | | | | | | 30 | M14x1.5 |
| Oil pan (cast iron) | | | | | | | | 29 | |
| Oil pan (sheet metal) | | | | | | | | 21 | |

https://truckmanualshub.com/



## TORX

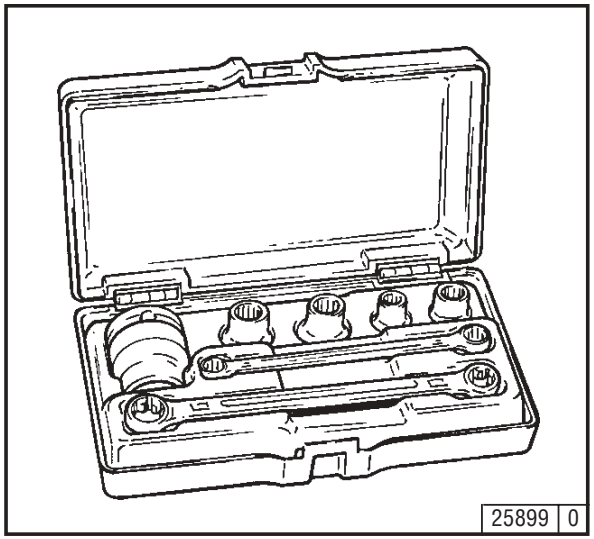


A TORX wrench set is used with engines in the 1012/1013 series. This system was chosen because of the many advantages it offers:

- Outstanding accessibility to bolts.
- High load transfer when loosening and tightening.
- Almost impossible for socket to slide off or break.

**TORX tools** can be ordered from:

**WILBÄR**
**Postfach 14 05 80**
**D-42826 Remscheid**

## V-belt Tension Gauge

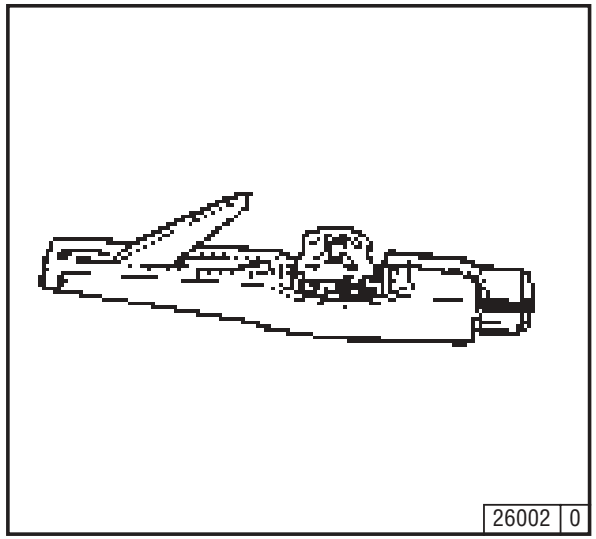


The V-belt tension gauge can be obtained under order number **91107** from:

**WILBÄR**
**Postfach 14 05 80**
**D-42826 Remscheid**

## Hose clamp pliers

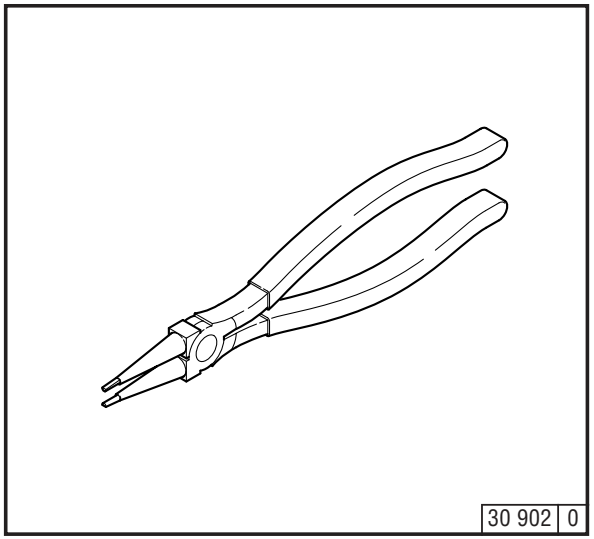


The hose clamp pliers can be obtained under order number **8020** from

**FA.WILBÄR**
**Postfach 14 05 80**
**D-42826 Remscheid**

https://truckmanualshub.com/



## Filling aid
## BFM 1012/1013

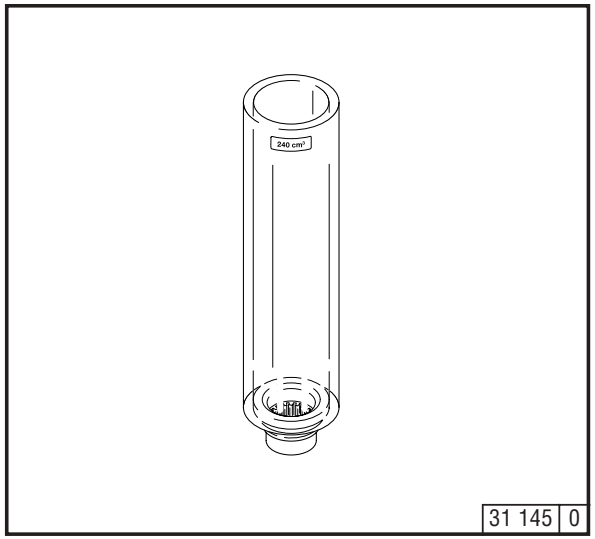


The filling aid is obtainable under order No.
**170 140** from:

**Fa. Wilbär**
**Postfach 14 05 80**
**D-42826 Remscheid**

## Filling aid
## BFM 1012/1013 E

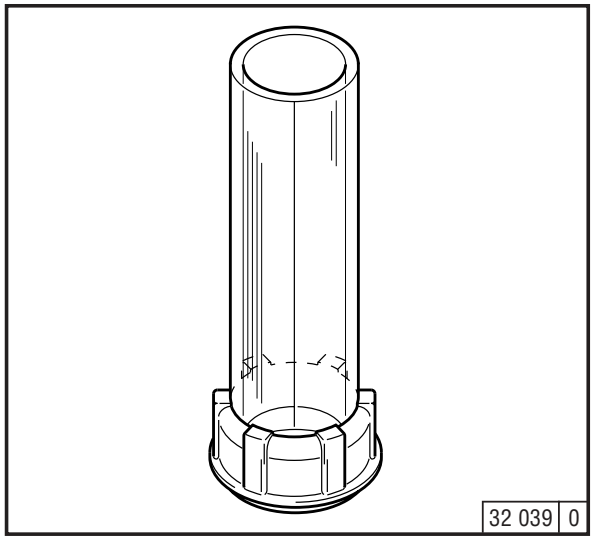


The filling aid is obtainable under order No.
**170 150** from:

**Fa. Wilbär**
**Postfach 14 05 80**
**D-42826 Remscheid**

https://truckmanualshub.com/

# Notes

## Warnings to Place on Equipment

**CALIFORNIA**

**Proposition 65 Warning**

Diesel engine exhaust and some of its constituents are known to the State of California to cause cancer, birth defects, and other reproductive harm.

## Warning in the Manual

**CALIFORNIA**

**Proposition 65 Warning**

Diesel engine exhaust and some of its constituents are known to the State of California to cause cancer, birth defects, and other reproductive harm.

**or**

**CALIFORNIA**

**Proposition 65 Warning**

Diesel engine exhaust and some of its constituents are known to the State of California to cause cancer, birth defects, and other reproductive harm.

https://truckmanualshub.com/

# Notes

## California Proposition 65 Information

### To California customers and to customers selling diesel engine equipment into or for use in California.

Proposition 65, a California law, requires warnings on products which expose individuals in California to chemicals listed under that law, including certain chemicals in diesel engine exhaust.

**Obligations of Manufactures of Diesel-Powered Off-Road Equipment.** The California Superior Court has approved either of the following two methods of compliance with Proposition 65 requirements by manufactures of off-road equipment containing diesel engines. (The court order containing these provisions is attached.)

1. **On-Equipment Warning.** Place the warning pictured in attachment 1 on all equipment shipped by you into or for sale in California after January 1, 1996. The warning must be in a location where it is easily visible to the operator of the equipment when (s)he is operating the equipment. The warning must be secured to the equipment. If warnings or operating instructions are provided through a digital display, you may usee that method of providing warning.
2. **Operator Manual Warning.** When the operator manual is next revised or by December 31, 1995 whichever is earlier, place the warning in attachment 2 in the operator manual. The warning may be either printed in the manual or on a sticker.

The warning must appear in one of the following locations:

- Inside The front cover
- Inside the back cover
- Outside the front cover
- Outside the back cover
- As the first page of text

Under either alternative, the warning must appear in the same size, print and format as the attachment selected or be of an equally conspicuous size and format. If the warning is provided in an on-screen display, the warning must contain the language in the attachment and must be provided at the time of or in connection with ignition in the same manner as other safety warnings electronically communicated on screen.

Obligation of Resellers of Diesel Engines. This letter must accompany any loose diesel engine sold in California.
Should you have any questions, please call Deutz Corporation Product Support Department.

https://truckmanualshub.com/

# Notes

https://truckmanualshub.com/



**Knowing it's DEUTZ**

DEUTZ has always stood for excellence in motor construction, pioneering many developments in the industry. As an independent motor manufacturer, we offer — worldwide — a comprehensive range of diesel and gas motors spanning from 4kW to 7,400kW. Our products are perfectly tailored to meet our customers' individual requirements.

Over 1.4 million DEUTZ motors do their job reliably all over the world. We are determined to preserve the high standard of performance and dependability of our motors, thus keeping our customers satisfied at all times. Therefore we are represented worldwide through a network of highly competent service partners who will meet the needs of our customers, wherever they are.

This is why DEUTZ is not only the name for motors which pack a lot of inventive genius. DEUTZ also means reliable service and comprehensive support to enhance your motor's performance.

This index Sales & Service offers you an overview of the DEUTZ partners in your vicinity, including the products for which they are responsible and the range of services provided. But even when no direct product responsibility is mentioned, your DEUTZ partner will be happy to help you with expert advice.

The Index is constantly updated. Please ask your DEUTZ service partner for the latest edition.

DEUTZ AG — at your service.

**Order-No.: 0312 0806**

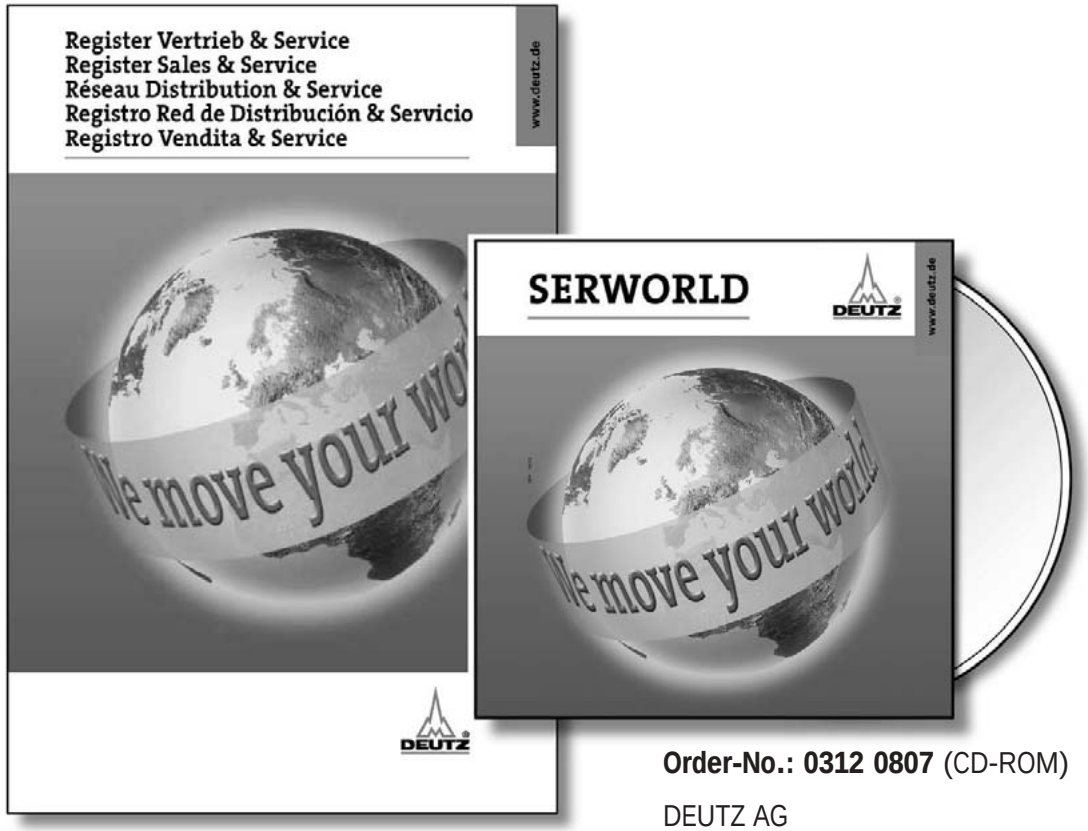


**Order-No.: 0312 0807** (CD-ROM)

Obtainable from the local service Partner reponsible for you or from:

DEUTZ AG
Deutz-Mülheimer Str. 147-149
D-51057 Köln

Phone: 0049-221-822-0
Telefax: 0049-221-822-5304
Telex: 8812-0 khd d
http://www.deutz.de