https://truckmanualshub.com/

Allison Transmission®

Allison 4th Generation Controls

Mechanic's Tips

3000 and 4000 Product Families

MT4015EN

https://truckmanualshub.com/

Mechanic's Tips

2005 FEBRUARY
Rev. 1 2005 SEPTEMBER
MT4015EN

Allison Transmission

Allison 4th Generation Controls

3000 Product Family (Except 3700 SP)
4000 Product Family

Allison Transmission, Inc.
P.O. Box 894 Indianapolis, Indiana 46206-0894
www.allisontransmission.com

Printed in USA
Copyright © 2007 Allison Transmission, Inc.

https://truckmanualshub.com/

NOTES

https://truckmanualshub.com/

TABLE OF CONTENTS

SECTION I INTRODUCTION

1–1 ABOUT THIS MANUAL 7

SECTION II PREVENTIVE MAINTENANCE

2–1 PERIODIC INSPECTION AND CARE 18
2–2 IMPORTANCE OF PROPER TRANSMISSION FLUID LEVEL 19
2–3 TRANSMISSION FLUID CHECK 19
2–4 KEEPING FLUID CLEAN 25
2–5 FLUID RECOMMENDATIONS 25
2–6 TRANSMISSION FLUID AND FILTER CHANGE INTERVALS 26
2–7 TRANSMISSION FLUID CONTAMINATION 30
2–8 TRANSMISSION FLUID AND FILTER CHANGE PROCEDURE 31
2–9 FLUID LEAK DIAGNOSIS 33
2–10 BREATHER 35
2–11 TROUBLESHOOTING 36
2–12 TRANSMISSION STALL TEST 42

SECTION III REMOVING TRANSMISSION

3–1 DRAINING TRANSMISSION 47
3–2 DISCONNECTING CONTROLS 47
3–3 UNCOUPLING FROM DRIVELINE, ENGINE, AND VEHICLE 49
3–4 REMOVING THE TRANSMISSION 50
3–5 REMOVING OUTPUT FLANGE OR YOKE 50

SECTION IV TRANSMISSION PREPARATION

4–1 CHECKING INPUT COMPONENTS 51
4–2 INSTALLING OUTPUT FLANGE OR YOKE 51
4–3 INSTALLING PTO 52
4–4 INSTALLING FILL TUBE AND SEAL 52
4–5 CHECKING PLUGS AND OPENINGS 53

https://truckmanualshub.com/

SECTION V PREPARING VEHICLE FOR TRANSMISSION INSTALLATION

5–1 ENGINE, TRANSMISSION ADAPTATION REQUIREMENTS 54
5–2 CHECKING FLEXPLATE DRIVE ASSEMBLY 57
5–3 CHASSIS AND DRIVELINE INSPECTION 58
5–4 COOLER, FILTER, AND LINES 59
5–5 CHECKING CONTROLS 60

SECTION VI INSTALLING TRANSMISSION INTO VEHICLE

6–1 HANDLING 64
6–2 MOUNTING TO ENGINE 64
6–3 INSTALLING TRANSMISSION MOUNTING COMPONENTS 65
6–4 COUPLING TO DRIVELINE 65
6–5 CONNECTING OUTPUT RETARDER ACCUMULATOR 65
6–6 CONNECTING POWER TAKEOFF CONTROLS 66
6–7 CONNECTING PARKING BRAKE CONTROL 67
6–8 CONNECTING COOLER 67
6–9 CONNECTING ELECTRICAL COMPONENTS 67
6–10 CONNECTING SPEEDOMETER DRIVE 69
6–11 FILLING HYDRAULIC SYSTEM 69
6–12 INSTALLATION CHECKLIST 70

SECTION VII CHECKS AND ADJUSTMENTS

7–1 INSTALLATION CHECKLIST 71
7–2 ROAD TEST AND VEHICLE OPERATION CHECKLIST 73

SECTION VIII CUSTOMER SERVICE

8–1 OWNER ASSISTANCE 75
8–2 SERVICE LITERATURE 75

https://truckmanualshub.com/

TRADEMARK USAGE

The following trademarks are the property of the companies indicated:

- Allison DOC™ is a trademark of General Motors Corporation.
- DEXRON® is a registered trademark of the General Motors Corporation.
- TranSynd™ is a trademark of Castrol Ltd.

https://truckmanualshub.com/

WARNINGS, CAUTIONS, NOTES

IT IS YOUR RESPONSIBILITY to be completely familiar with the warnings and cautions described in this manual. It is, however, important to understand that these warnings and cautions are not exhaustive. Allison Transmission could not possibly know, evaluate, and advise the service trade of all conceivable ways in which service might be done or of the possible hazardous consequences of each way. The vehicle manufacturer is responsible for providing information related to the operation of vehicle systems (including appropriate warnings, cautions, and notes). Consequently, Allison Transmission has not undertaken any such broad evaluation. Accordingly, ANYONE WHO USES A SERVICE PROCEDURE OR TOOL WHICH IS NOT RECOMMENDED BY ALLISON TRANSMISSION OR THE VEHICLE MANUFACTURER MUST first be thoroughly satisfied that neither personal safety nor equipment safety will be jeopardized by the service methods selected.

Proper service and repair is important to the safe, reliable operation of the equipment. The service procedures recommended by Allison Transmission (or the vehicle manufacturer) and described in this manual are effective methods for performing service operations. Some of these service operations require the use of tools specially designed for the purpose. The special tools should be used when and as recommended.

Three types of headings are used in this manual to attract your attention. These warnings and cautions advise of specific methods or actions that can result in personal injury, damage to the equipment, or cause the equipment to become unsafe.

WARNING: A warning is used when an operating procedure, practice, etc., if not correctly followed, could result in personal injury or loss of life.

CAUTION: A caution is used when an operating procedure, practice, etc., if not strictly observed, could result in damage to or destruction of equipment.

NOTE: A note is used when an operating procedure, practice, etc., is essential to highlight.

https://truckmanualshub.com/

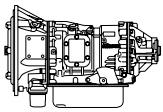

INTRODUCTION

Section I

1–1. ABOUT THIS MANUAL

This manual is a mechanic's reference for maintaining, removing, or installing 3000 and 4000 Product Family transmissions with Allison 4th Generation Controls. All features of the transmission and the vehicle involved in installation procedures are discussed. The information presented will help the mechanic maintain, remove, or install the transmission in a manner that assures satisfactory operation and long service life. For additional detailed information, refer to the appropriate transmission service manual and electronic controls troubleshooting manual.

Unless specifically indicated otherwise, this manual refers to all Allison 4th Generation Controls for 3000 and 4000 Product Family transmissions, except for the 3700 SP model. The differences between the various transmission models are explained as required.

https://truckmanualshub.com/

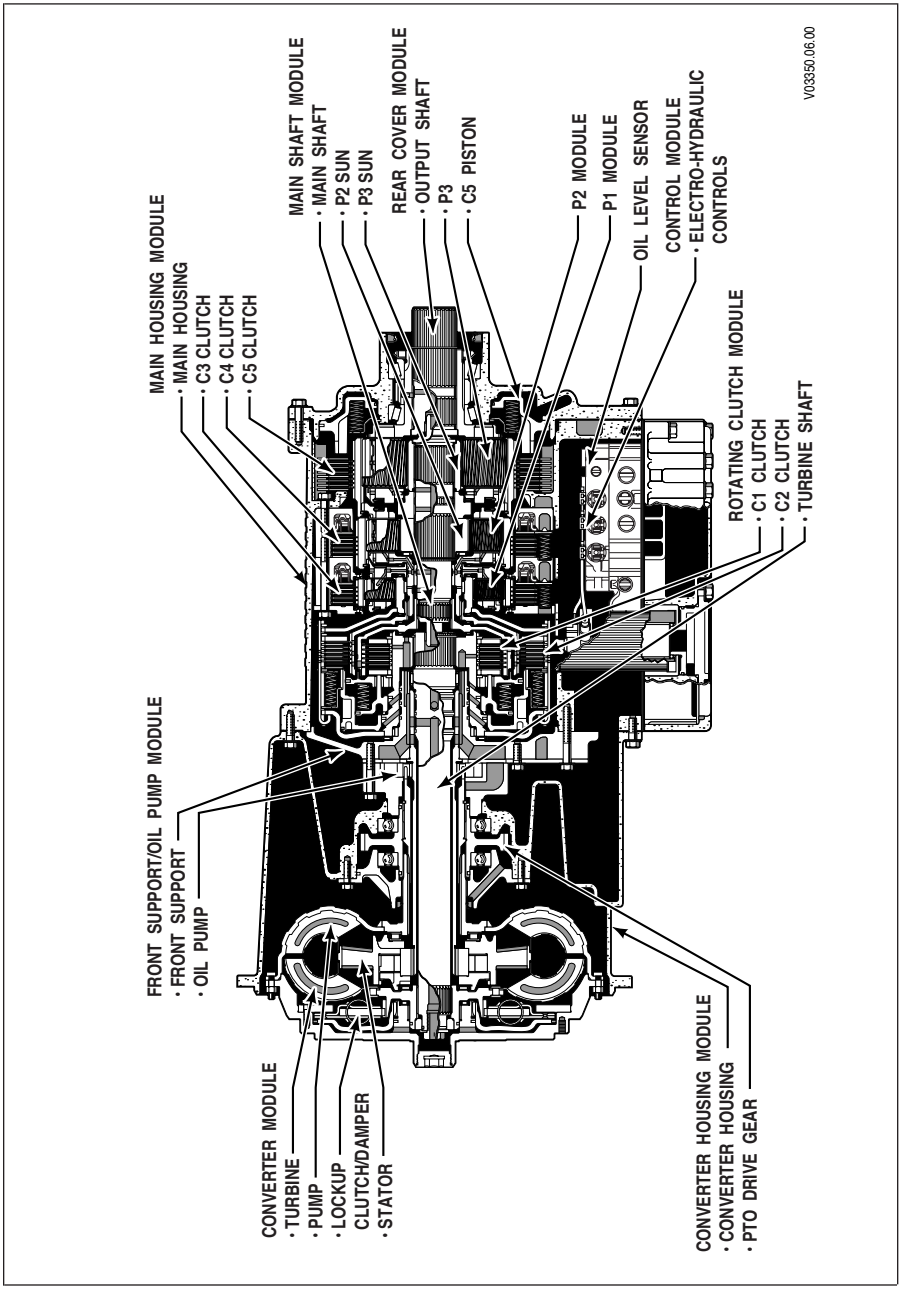

Figure 1–1. 3000 Product Family Transmission—Cross Section (With PTO Provision)

https://truckmanualshub.com/

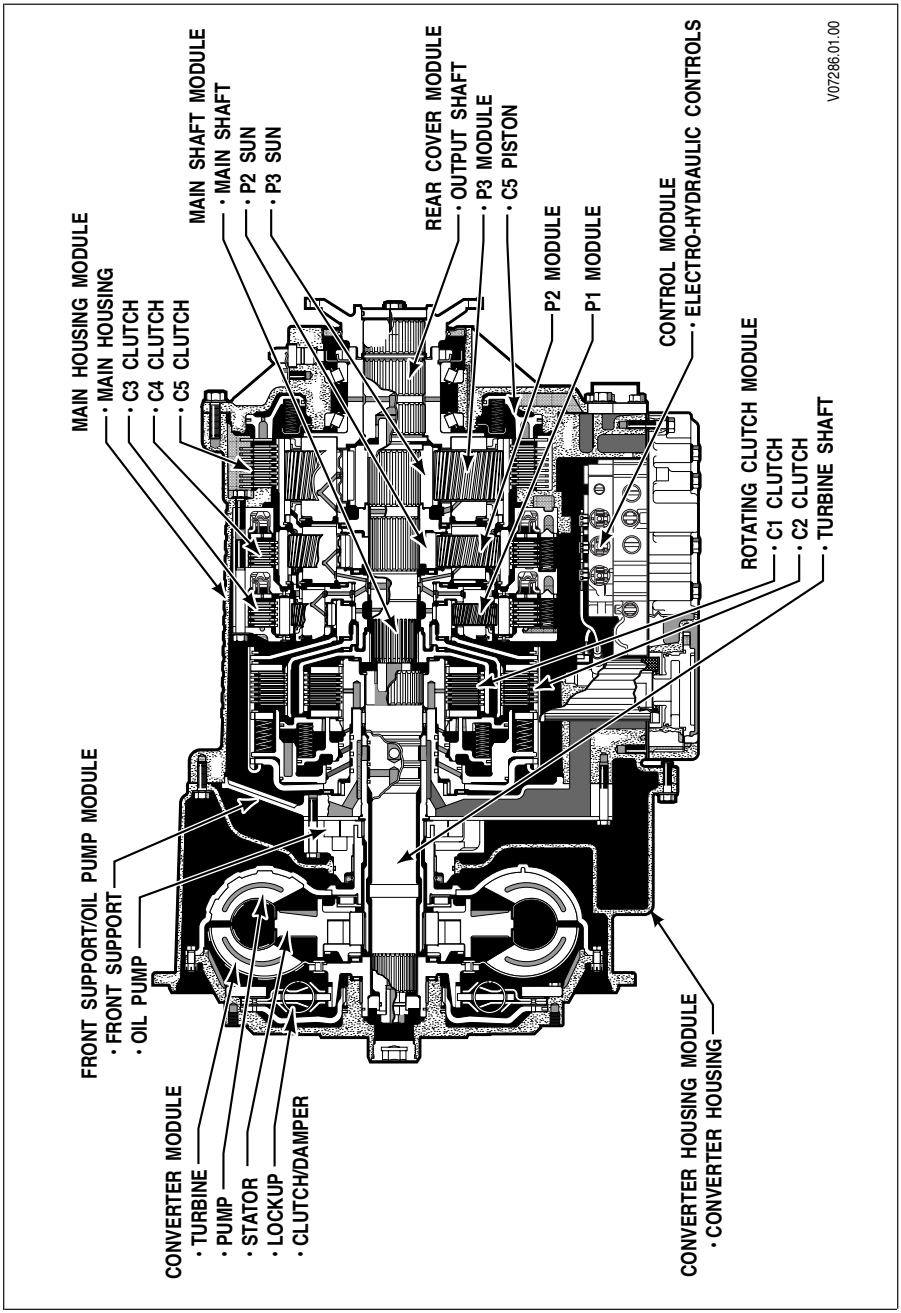

Figure 1–2. 4000 Product Family Transmission—Cross Section

https://truckmanualshub.com/

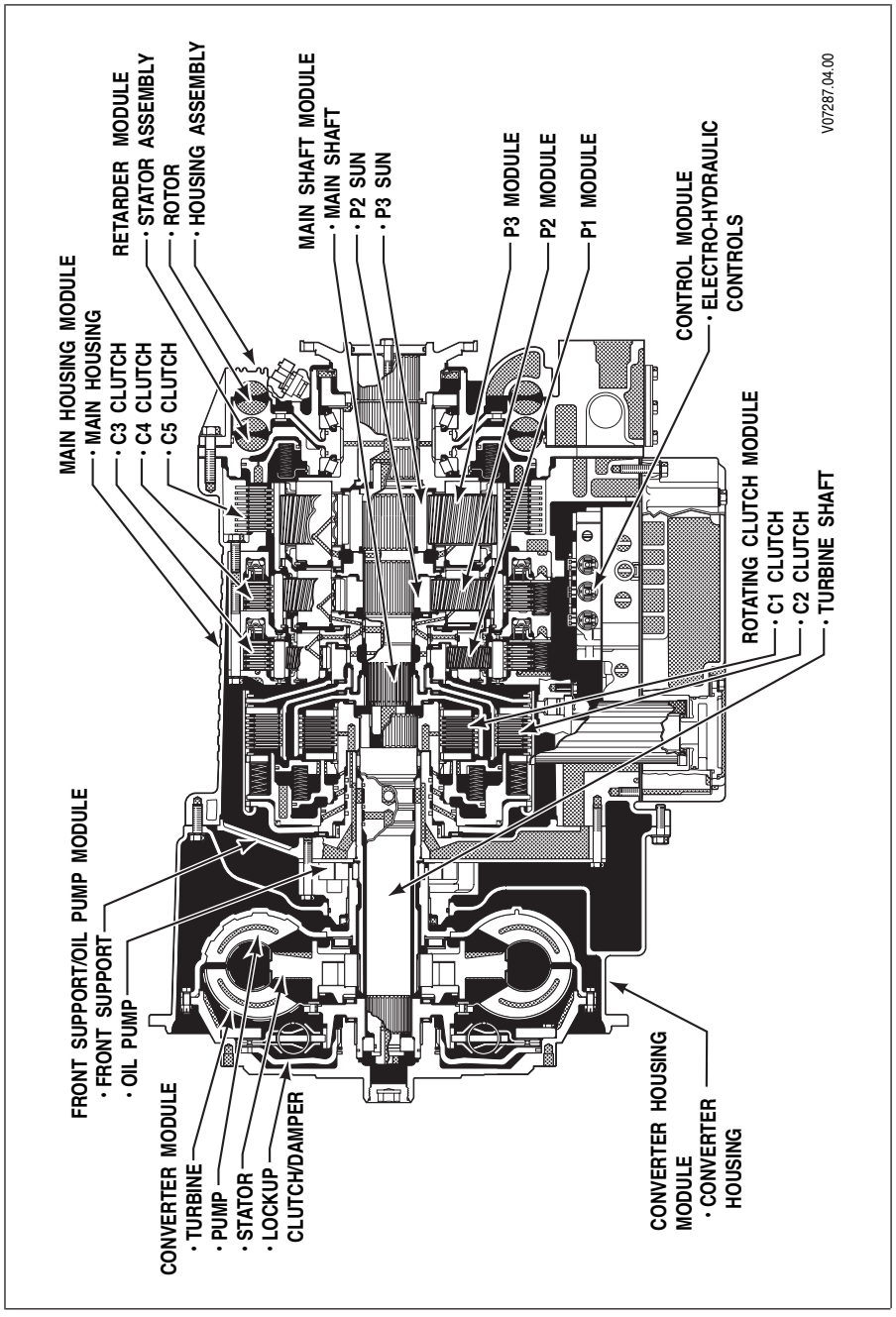

Figure 1–3. 4000 Product Family Transmission—Cross Section (With Retarder)

https://truckmanualshub.com/

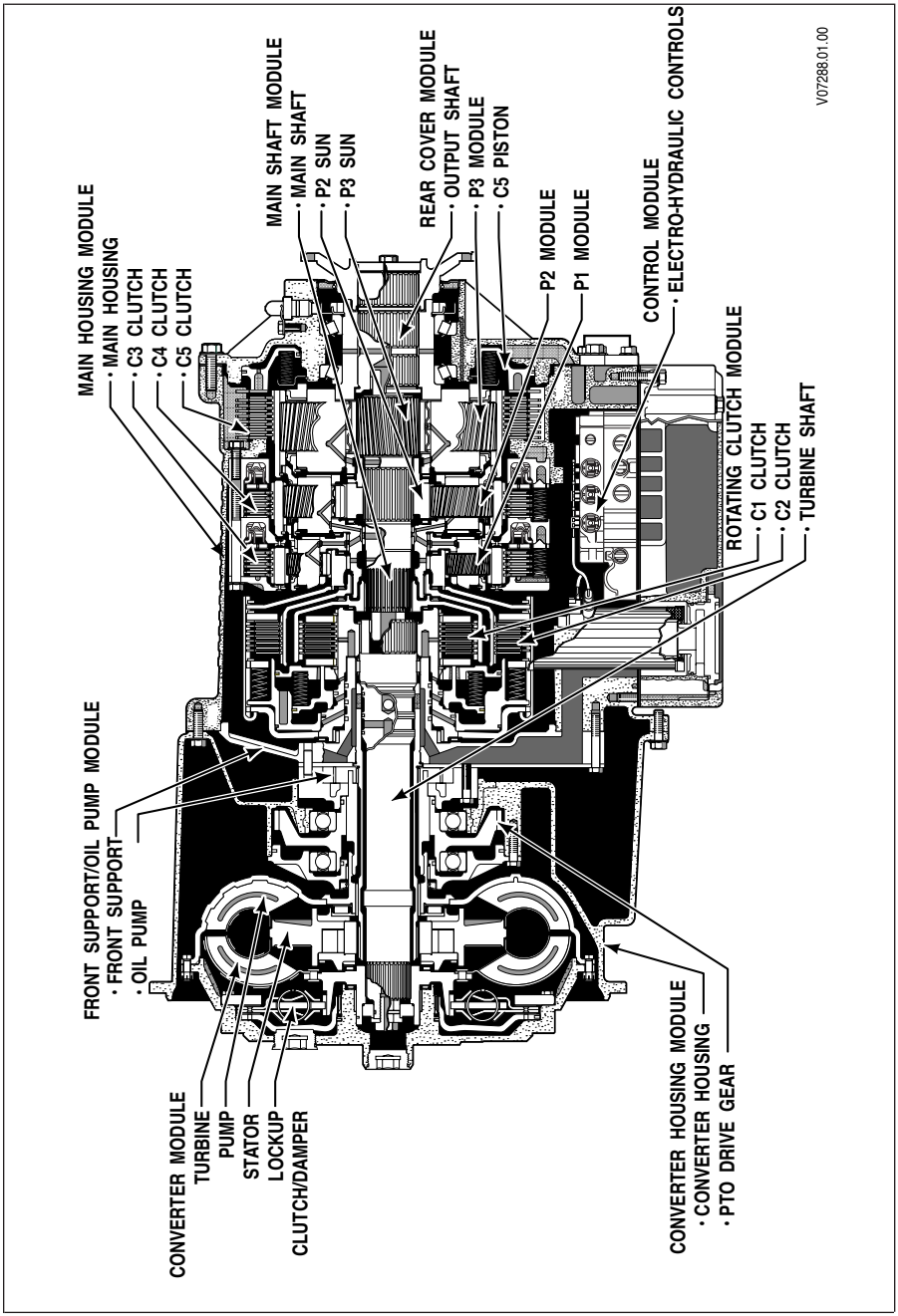

Figure 1–4. 4000 Product Family Transmission—Cross Section (With PTO Provision)

https://truckmanualshub.com/

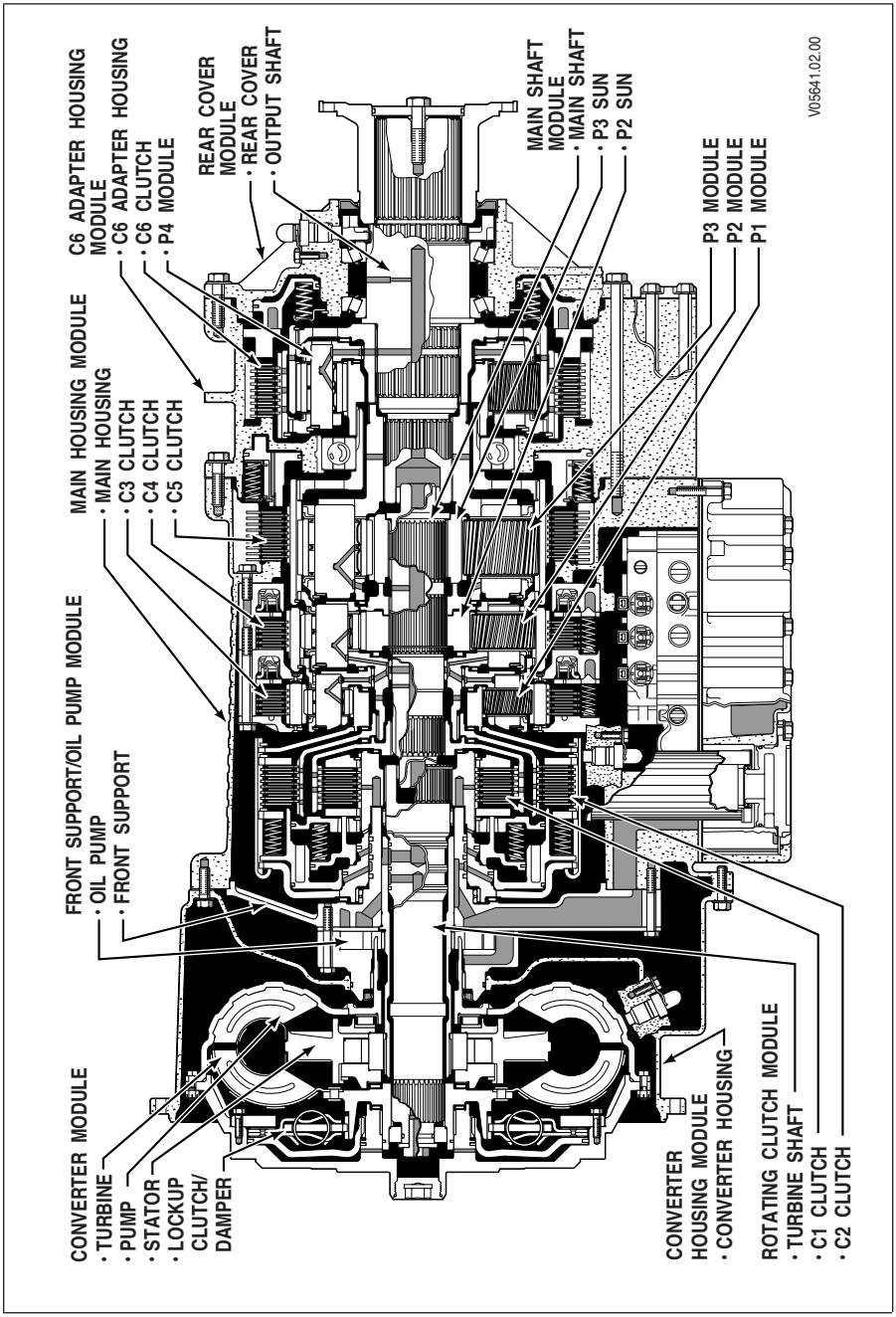

Figure 1–5. 4000 Product Family—Cross Section (7-Speed)

https://truckmanualshub.com/

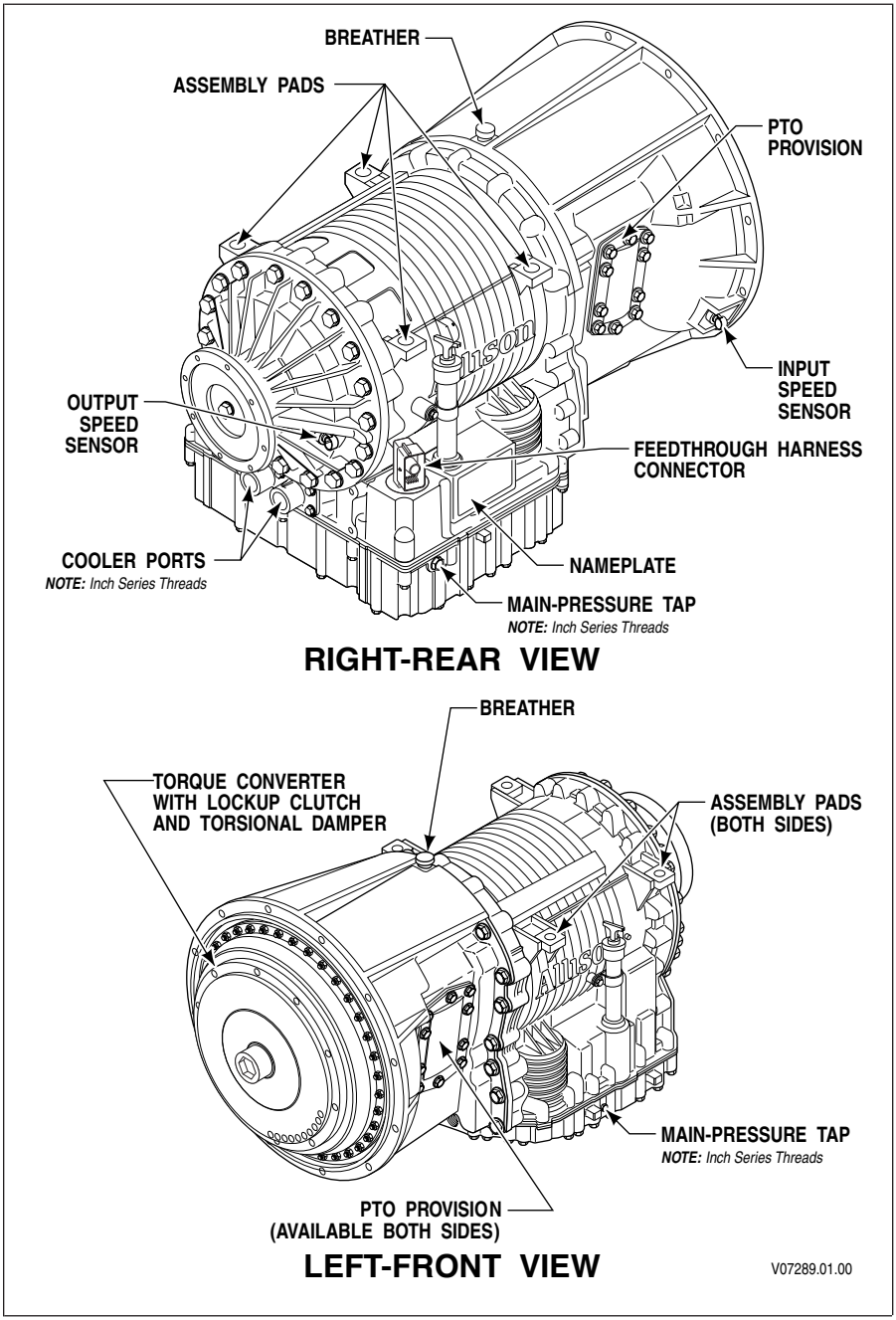

Figure 1–6. 3000 Product Family (With PTO Provision)

https://truckmanualshub.com/

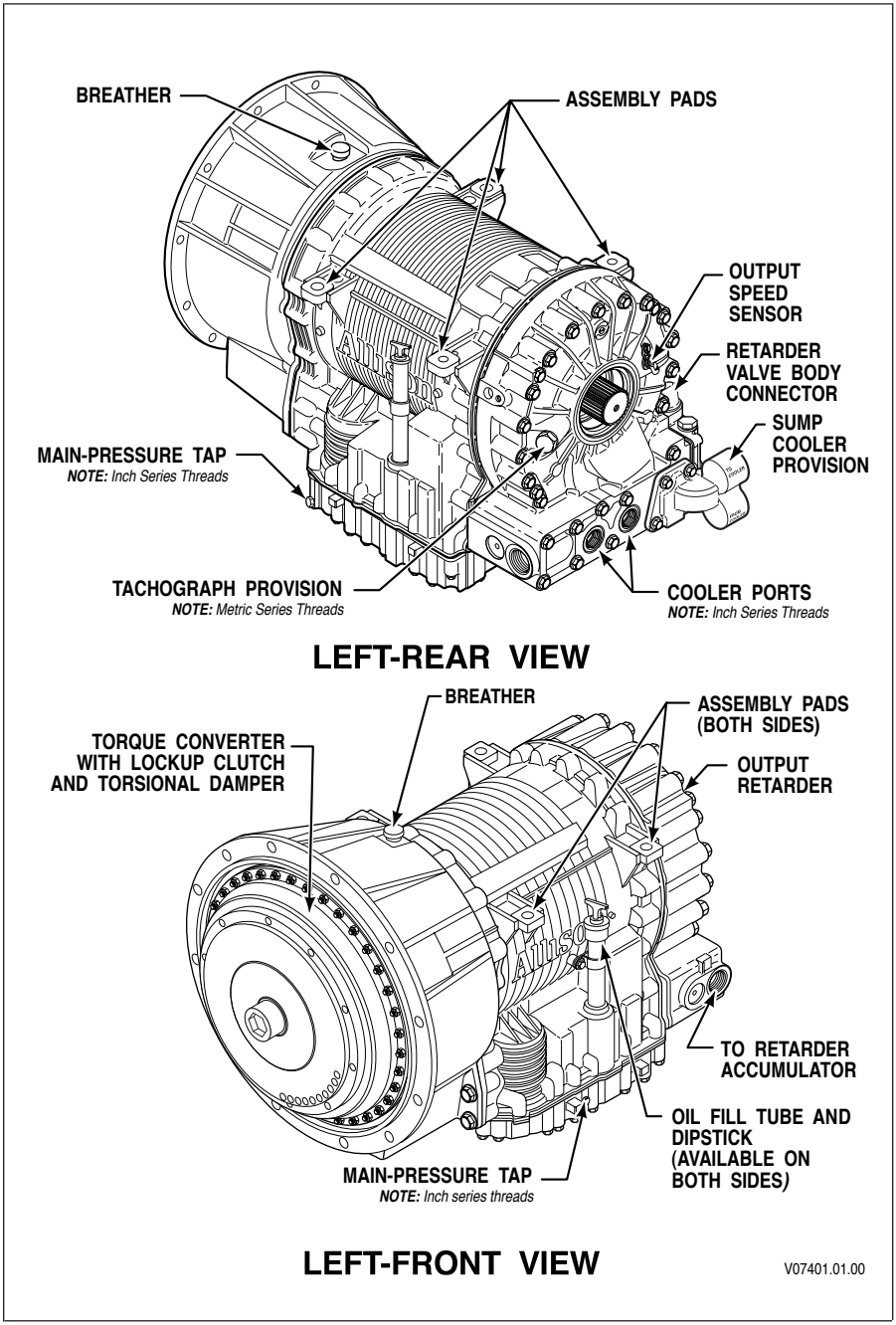

Figure 1–7. 3000 Product Family (With Retarder)

https://truckmanualshub.com/

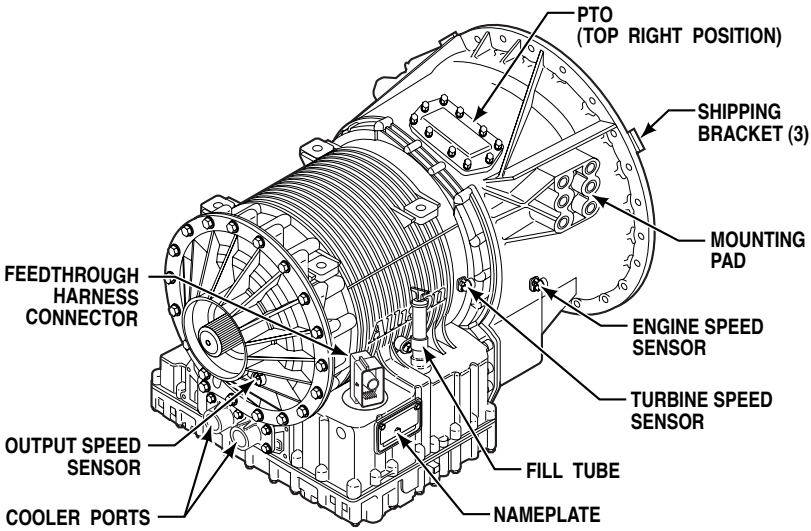

RIGHT-REAR VIEW

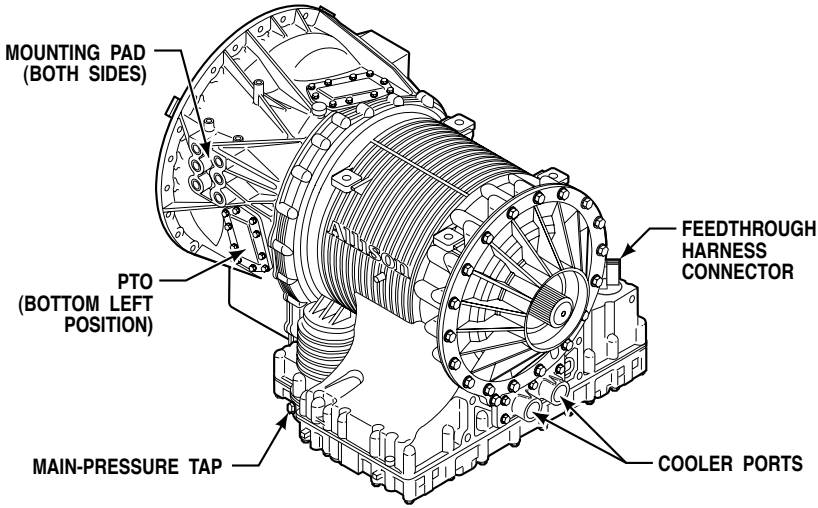

LEFT-REAR VIEW

V07291.01.00

Figure 1–8. 4000 Product Family (With PTO Provision)

https://truckmanualshub.com/

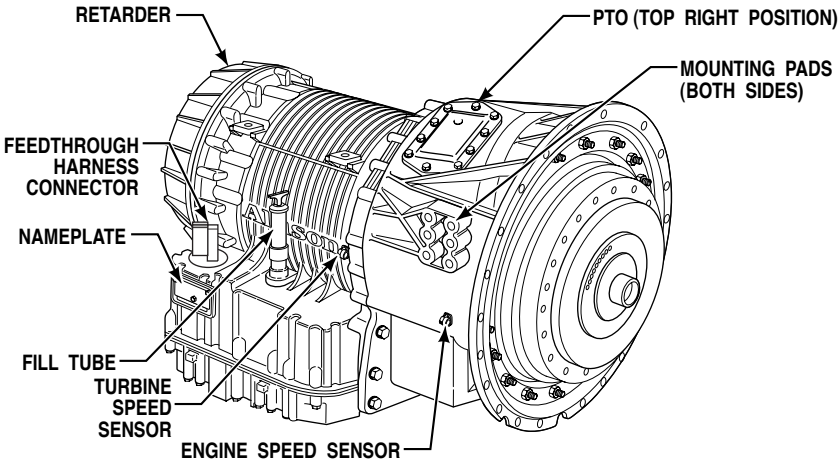

RIGHT-FRONT VIEW

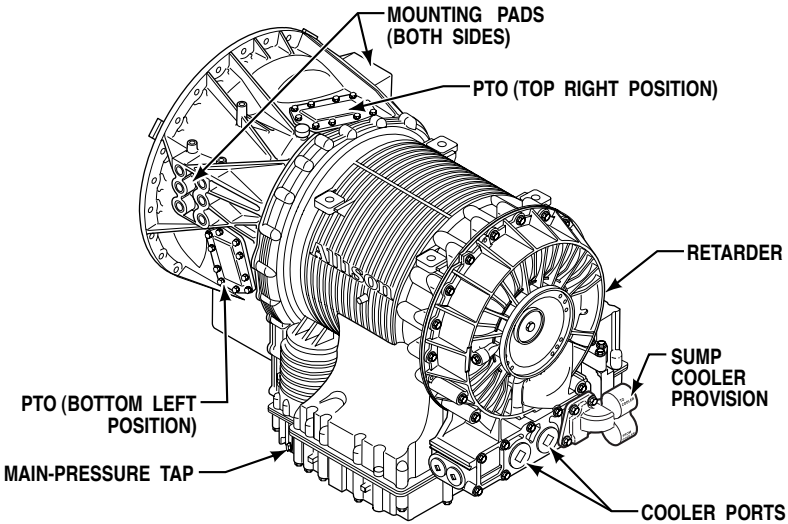

LEFT-REAR VIEW

V07292.01.00

Figure 1–9. 4000 Product Family (With Retarder and PTO Provision)

https://truckmanualshub.com/

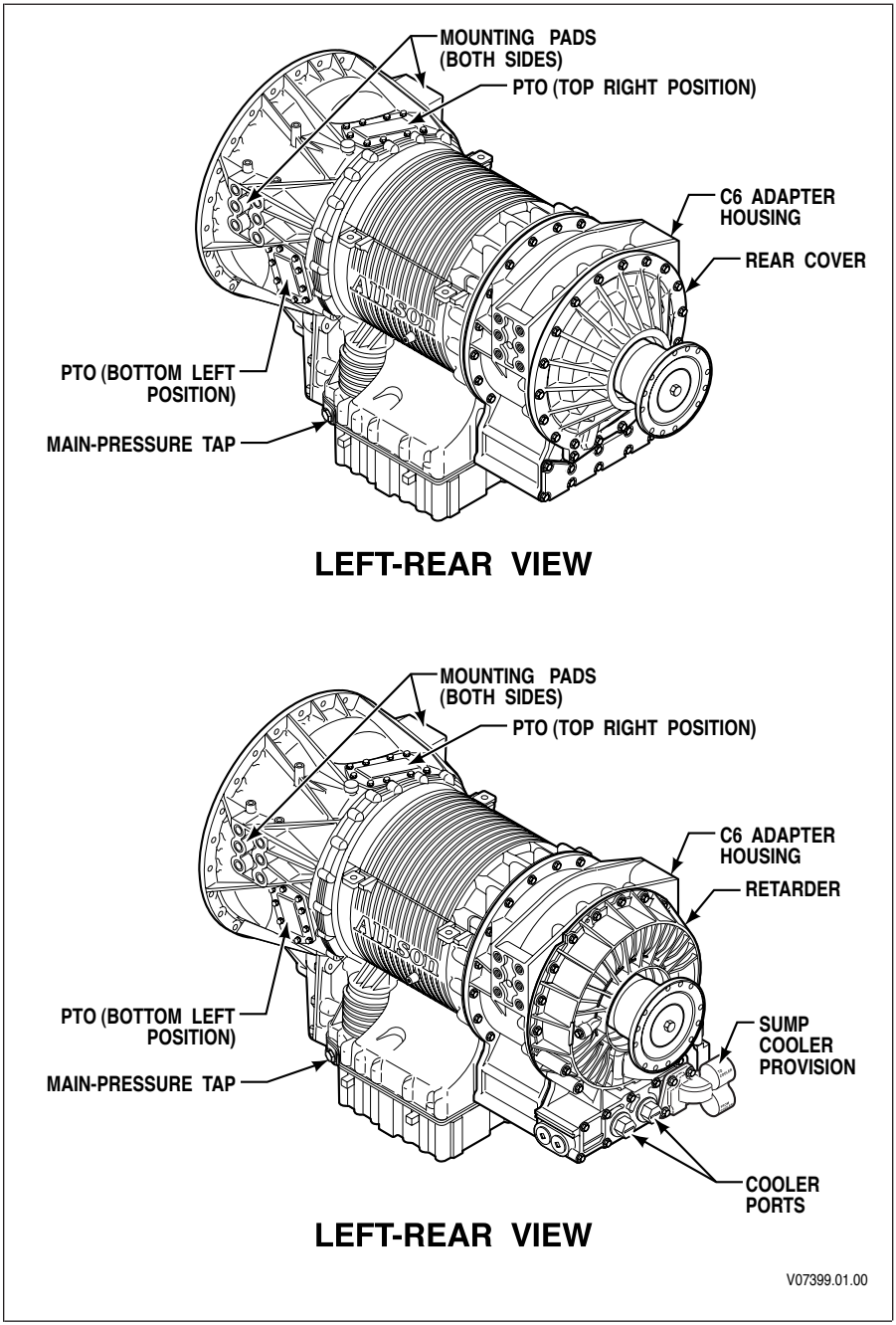

Figure 1–10. 4000 Product Family (7-Speed)

https://truckmanualshub.com/

Section II	PREVENTIVE MAINTENANCE	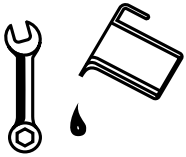

2–1. PERIODIC INSPECTION AND CARE

a. Transmission Inspection. Clean and inspect the exterior of the transmission at regular intervals. Severity of service and operating conditions determine the frequency of these inspections. Inspect the transmission for:

- Loose bolts—transmission and mounting components.
- Fluid leaks—repair immediately.
- Loose, dirty, or improperly adjusted throttle sensor.
- Damaged or loose hoses.
- Worn, frayed, or improperly routed electrical harnesses.
- Worn or damaged electrical connectors.
- Dented, worn or out-of-phase driveline U-joints and slip fittings.
- Clogged or dirty breather (vent assembly).
- Check transmission fluid for evidence of engine coolant.

b. Vehicle Inspection. Check the vehicle cooling system occasionally for evidence of transmission fluid. Transmission fluid in the vehicle cooling system indicates a faulty oil cooler.

c. Welding.

CAUTION: When welding on the vehicle:
- DO NOT WELD on the vehicle without disconnecting from the TCM all control system wiring harness connectors.
- DO NOT WELD on the vehicle without disconnecting TCM battery power and ground leads.
- DO NOT WELD on any control components.
- DO NOT CONNECT welding cables to any control components.

A label describing on-vehicle welding precautions (ST2067EN) is available from your authorized Allison service dealer and should be installed in a conspicuous place. A vehicle used in a vocation that requires frequent modifications or repairs involving welding **must** have an on-vehicle welding label.

https://truckmanualshub.com/

2–2. IMPORTANCE OF PROPER TRANSMISSION FLUID LEVEL

Transmission fluid cools, lubricates, and transmits hydraulic power. Always maintain proper fluid level. If fluid level is too low, the torque converter and clutches do not receive an adequate supply of fluid and the transmission overheats. If the level is too high, the fluid aerates—causing the transmission to shift erratically and overheat. Fluid may be expelled through the breather or dipstick tube when the fluid level is too high.

2–3. TRANSMISSION FLUID CHECK

a. Electronic Fluid Check Procedure. Fluid level can be electronically displayed when the transmission contains the optional oil level sensor (OLS). Fluid level can be displayed on the shift selector or Allison DOC™. However, no oil level sensor diagnostics take place unless the OLS is "autodetected" by the Allison 4th Generation control system. Frequently check for the presence of oil level diagnostics if the transmission is known to contain an OLS. If an OLS is not detected during the first 49 engine starts, the control system concludes that no OLS is present. If an OLS is known to be present, but has not been detected, then troubleshoot the OLS circuit. After the OLS circuit is repaired, reset "autodetect" (refer to TS3989EN, Allison 4th Generation Controls Troubleshooting Manual for detailed troubleshooting procedures).

- Displaying Fluid Level Information. Use the following procedure to display fluid level information.
  - — For a pushbutton shift selector: Simultaneously press the ↑ **(Up)** and ↓ **(Down)** arrow buttons once.
  - — For a lever shift selector: Press the **DISPLAY MODE** button once.
  - — For the Allison DOC™ diagnostic tool: Refer to the Allison DOC™ User Guide.
- Fluid Level Display Criteria. As soon as fluid level information is requested, the TCM checks to see if conditions are right to allow display. Certain operating conditions must have been met for a period of two minutes before fluid level is displayed. These operating conditions are:
  - — Engine at idle
  - — Sump fluid temperature at 60–104°C (140–220°F)
  - — Transmission output shaft stopped
  - — Transmission in **N** (Neutral)
  - — Oil level sensor functioning properly

https://truckmanualshub.com/

NOTE: To optimize the accuracy of the electronic fluid level measurement, be sure sump temperature is in the normal operating range of 71–93°C (160–200°F).

If the two minute period has elapsed before the fluid level data request, information is displayed immediately. However, if the two minute period has not elapsed, there will be a countdown display before fluid level information displays. The countdown display flashes constantly on the monitor digit. Countdown starts at 8 and decreases sequentially to 1 during the two minute period. When fluid level data is requested, and the two minute countdown is in process, the flashing display shows the number corresponding to the countdown progress. For example—if the fluid level data was requested in the middle of the two minute countdown period, the display would flash a 5 or a 4 and decrease to 1.

- Shift Selector Display. Fluid level information is displayed two characters at a time as in Table 2–1:

Table 2–1. Fluid Level Shift Selector Display

Display Sequence	Interpretation of Display
oL oK	Fluid level is correct
oL Lo 01	Fluid level is 1 quart low
oL HI 01	Fluid level is 1 quart high

The shift selector display will also show “invalid for display” codes two characters at a time. An “invalid for display” code is returned when fluid level data is requested, but an operational condition has not been met. The “invalid for display” condition interrupts the two minute countdown (momentary increase in engine speed does not affect the countdown). The “invalid for display” codes and their meaning are:

Table 2–2. Invalid For Display Codes

Display Sequence	Interpretation of Display
oL–50	Engine rpm too low
oL–59	Engine rpm too high
oL–65	**N** (Neutral) not selected
oL–70	Sump fluid temperature too low
oL–79	Sump fluid temperature too high
oL–89	Output shaft rotation
oL–95	Sensor failure

https://truckmanualshub.com/

NOTE: Report sensor failure to a distributor or dealer in your area. Consult the telephone directory for the Allison Transmission distributor or dealer near you.

The countdown is restarted when the condition causing the "invalid for display" code is corrected. The countdown is not restarted if there is a momentary increase in engine rpm which may generate a code 59. "Invalid for display" messages are as follows:

- On Allison diagnostic tools, "Invalid for display" messages are shown in the Oil (±) field of the Data Monitor.

Table 2–3. Invalid for Display Messages

		DDR Message
OL	—	SETTLING TIME X
OL	—	ENGINE SPEED LO
OL	—	ENGINE SPEED HI
OL	—	SELECT **N** (NEUTRAL)
OL	—	SUMP TEMP LO
OL	—	SUMP TEMP HI
OL	—	OUTPUT SPEED HI
OL	—	CHECK CODES

- Exiting the Fluid Level Mode. Exit as follows:
  - — For a pushbutton shift selector, press the **N** (Neutral) pushbutton once.
  - — For a lever selector, press the **MODE** button once or move the lever.
  - — For Allison DOC™, follow directions in the Allison DOC™ User Guide.

b. Manual Fluid Check Procedure.

WARNING: To help avoid personal injury or property damage caused by sudden and unexpected vehicle movement, do not check the fluid level until you:

1. Put the transmission in **N** (Neutral).
2. Apply the parking brake and emergency brakes and make sure they are properly engaged.
3. Chock the wheels and take any other steps necessary to keep the vehicle from moving.

Clean all dirt from around the end of the fluid fill tube before removing the dipstick. Do not allow dirt or foreign matter to enter the transmission. Dirt or

https://truckmanualshub.com/

foreign matter in the hydraulic system may cause undue wear of transmission parts, make valves stick, and clog passages. Check the fluid level using the following procedure and report any abnormal fluid levels to your service management.

c. Cold Check Procedure. The purpose of the cold check is to determine if the transmission has enough fluid to be operated safely until a hot check can be made.

> **CAUTION:** The fluid level rises as fluid temperature rises. DO NOT fill above the "COLD CHECK" band if the transmission fluid is below normal operating temperatures. During operation, an overfull transmission can become overheated, leading to transmission damage.

1. Park the vehicle on a level surface. Apply the parking brake and chock the wheels.
2. Run the engine for at least one minute. Shift to **D** (Drive), then to **N** (Neutral), and then to **R** (Reverse) to fill the hydraulic system.
3. Shift to **N** (Neutral) and allow the engine to idle (500–800 rpm).
4. With the engine running, remove the dipstick from the tube and wipe the dipstick clean.
5. Insert the dipstick into the tube until it stops and remove. Check the fluid level reading. Repeat the check procedure to verify the reading.
6. If the fluid level is within the "COLD CHECK" band, the transmission may be operated until the fluid is hot enough to perform a "HOT RUN" check. If the fluid level is not within the "COLD CHECK" band, add or drain as necessary to bring it to the middle of the "COLD CHECK" band.
7. Perform a hot check at the first opportunity after the normal operating sump temperature of 71°C–93°C (160°F–200°F) is reached.

d. Hot Check Procedure.

> **CAUTION:** When performing the Hot Check procedure, the fluid must be at operating temperature to be sure of an accurate check and help prevent transmission damage. The fluid level rises as temperature increases. During operation, an overfull transmission can become overheated leading to transmission damage.

1. Operate the transmission in **D** (Drive) until normal operating temperatures are reached:
   - Sump temperature 71°C–93°C (160°F–200°F)
   - Converter-out temperature 82°C–104°C (180°F–220°F)

https://truckmanualshub.com/

- If the transmission temperature gauge is not present, check fluid level when the engine water temperature gauge has stabilized and the transmission has been operated under load for at least one hour.

2. Park the vehicle on a level surface and shift to **N** (Neutral). Apply the parking brake and chock the wheels. Allow the engine to idle (500–800 rpm).
3. With the engine running, remove the dipstick from the tube and wipe clean.
4. Insert the dipstick into the tube until it stops. Then remove it. Check fluid level reading.
5. Repeat the check procedure to verify the reading.

NOTE: Safe operating level is within the “HOT RUN” band on the dipstick. The “HOT RUN” band is between the “HOT FULL” and the “HOT ADD” bands. Refer to Figure 2–1.

---

6. If the fluid level is not within the “HOT RUN” band, add or drain as necessary to bring the fluid level to within the “HOT RUN” band.

https://truckmanualshub.com/

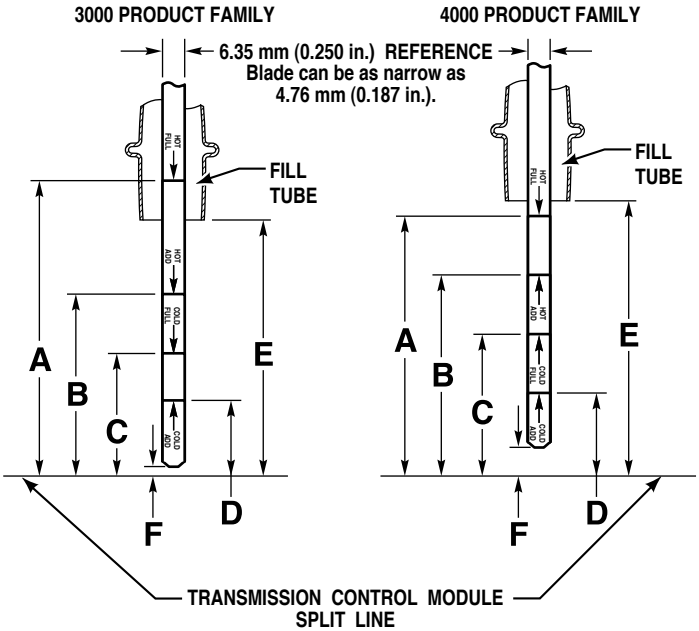

OIL SUMP	TRANSMISSION/SUMP DESCRIPTION	DIMENSION A	DIMENSION B	DIMENSION C	DIMENSION D	DIMENSION E	DIMENSION F**
2.00 in. and 4.00 in.****	4000 PRODUCT FAMILY	106.7 mm (4.20 in.)	76.2 mm (3.00 in.)	66.0 mm (2.60 in.)	*	132.6 mm (5.22 in.)	13.8 mm (0.54 in.)
2.00 in.***	3000 PRODUCT FAMILY	101.6 mm (4.00 in.)	73.7 mm (2.90 in.)	50.8 mm (2.00 in.)	*	86.6 mm (3.41 in.)	5.9 mm (0.23 in.)
4.00 in.***	3000 PRODUCT FAMILY	101.6 mm (4.00 in.)	63.5 mm (2.50 in.)	45.7 mm (1.80 in.)	*	86.6 mm (3.41 in.)	5.9 mm (0.23 in.)

NOTE: *Calibrate level marking locations with respect to transmission control module split line and fill tube.*
Scale none.
**Dimension determined by installation.*
***Reference dimension only. Actual dimension to be determined by installation.*
****Reference drawing AS66-60.*
*****Reference drawing AS67-60.*

V07301.00.01

Figure 2–1. Standard 3000 and 4000 Product Family Dipstick Markings

https://truckmanualshub.com/

e. Consistency of Readings. Always check the fluid level at least twice, with the engine running. Consistency (repeatable readings) is important to maintaining accuracy of the readings. If inconsistent readings persist, check the transmission breather to be sure it is clean and unclogged. If readings are still inconsistent, contact your nearest Allison distributor or dealer.

2–4. KEEPING FLUID CLEAN

Prevent foreign material from entering the transmission by using clean containers, fillers, etc. Lay the dipstick in a clean place while filling the transmission.

CAUTION: Containers or fillers that have been used for antifreeze solution or engine coolant must **NEVER** be used for transmission fluid. Antifreeze and coolant solutions contain ethylene glycol which, if put into the transmission, can cause the clutch plates to fail.

2–5. FLUID RECOMMENDATIONS

The hydraulic fluid (oil) used in the transmission directly affects transmission performance, reliability, and durability. Only a fluid meeting TES 295 or DEXRON®–III specifications recommended for use in 3000 and 4000 Product Family transmissions. TranSynd™ is a fully synthetic transmission fluid developed by Allison Transmission and Castrol Ltd. and is fully qualified to the Allison Transmission TES 295 specifications.

To make sure a fluid is qualified for use in Allison transmissions, check for fluid license or approval numbers on the container, or consult the lubricant manufacturer. Consult your Allison Transmission dealer or distributor before using other fluid types.

CAUTION: Disregarding minimum fluid temperature limits can result in transmission malfunction or reduced transmission life.

When choosing the optimum viscosity grade of fluid, duty cycle, preheat capabilities, and/or geographical location must be taken into consideration. Table 2–4 lists the minimum fluid temperatures at which the transmission may be safely operated without preheating the fluid. Preheat with auxiliary heating equipment or by running the equipment or vehicle with the transmission in **N** (Neutral) for a minimum of 20 minutes before attempting range operation.

https://truckmanualshub.com/

Table 2–4. Transmission Fluid Operating Temperature Requirements

	Ambient Temperature Below Which Preheat is Required	
Viscosity Grade	**Celsius**	**Fahrenheit**
TranSynd™/SAE 0W–20*	–30	–22
DEXRON®–III	–25	–13
SAE 10W	–20	–4
SAE 15W–40	–15	5
SAE 30W	0	32
SAE 40W	10	50
*"Arctic" as defined by MIL-L-46167B		(Ref. SIL 13-TR-90)

2–6. TRANSMISSION FLUID AND FILTER CHANGE INTERVALS

a. Frequency.

CAUTION: Transmission fluid and filter change frequency is determined by the severity of transmission service. More frequent changes can be necessary than recommended in the general guidelines when operating conditions create high levels of contamination or overheating.

Table 2–5 and Table 2–7, Recommended Fluid/Filter Change Intervals, is a general guide for fluid and filter change intervals.

NOTE: Mixture is defined as the quantity of oil remaining in the transmission after a standard fluid change combined with the quantity of TranSynd™ required to fill the transmission to the proper level. A mixture of TranSynd™ or TES 295 equivalent vs non TranSynd™, other than as defined in this paragraph does not meet the requirements that permit the eligibility for the recommendations given in this schedule.

Table 2–5. Recommended Fluid/Filter Change For 3000 Product Family

SEVERE VOCATION				GENERAL VOCATION			
	Filters				Filters		
Fluid	Main	Internal	Lube/ Auxiliary	Fluid	Main	Internal	Lube/ Auxiliary
Schedule 1. Non-TranSynd™/Non-TES 295 Fluid							
12,000 Miles (20 000 km) 6 Months 500 Hours	12,000 Miles (20 000 km) 6 Months 500 Hours	Overhaul	12,000 Miles (20 000 km) 6 Months 500 Hours	25,000 Miles (40 000 km) 12 Months 1000 Hours	25,000 Miles (40 000 km) 12 Months 1000 Hours	Overhaul	25,000 Miles (40 000 km) 12 Months 1000 Hours
Recommendations in Schedule 2 are based upon the transmission containing 100 percent TranSynd™ or TES 295 fluid. 3000 Product Family filter change intervals in Schedule 2 are only valid with the use of Allison Gold series filters. Flushing machines are not recommended or recognized due to variation and inconsistencies with assuring removal of 100 percent of the used fluid.							
Schedule 2. TranSynd™/TES 295 Fluid							
75,000 Miles (120 000 km) 36 Months 3000 Hours	75,000 Miles (120 000 km) 36 Months 3000 Hours	Overhaul	75,000 Miles (120 000 km) 36 Months 3000 Hours	150,000 Miles (240 000 km) 48 Months 4000 Hours	75,000 Miles (120 000 km) 36 Months 3000 Hours	Overhaul	75,000 Miles (120000 km) 36 Months 3000 Hours

https://truckmanualshub.com/

https://truckmanualshub.com/

Table 2–6. Recommended Fluid/Filter Change Intervals For 4000 Product Family

SEVERE VOCATION				GENERAL VOCATION			
	Filters				Filters		
Fluid	Main	Internal	Lube/ Auxiliary	Fluid	Main	Internal	Lube/ Auxiliary
INITIAL FILTER CHANGE INTERVAL: Main/Lube—8000 km (5000 miles) / 200 hours							
Schedule 1. Recommended Fluid and Filter Change Intervals (Non-TranSynd™/Non-TES 295 Fluid)							
12,000 Miles (20 000 km) 6 Months 500 Hours	12,000 Miles (20 000 km) 6 Months 500 Hours	Overhaul	12,000 Miles (20 000 km) 6 Months 500 Hours	25,000 Miles (40 000 km) 12 Months 1000 Hours	25,000 Miles (40 000 km) 12 Months 1000 Hours	Overhaul	25,000 Miles (40 000 km) 12 Months 1000 Hours
NOTE: The following recommendations in Schedule 2 and 3 based upon the transmission containing 100 percent TranSynd™ or TES 295 fluid. Filter change intervals are valid only if Allison Transmission supplied filters are used. 4000 Product Family filter change intervals in Schedule 2 and 3 are valid only with the use of Allison Transmission Gold series filters. Flushing machines are not recommended or recognized due to variation and inconsistencies with assuring removal of 100 percent of the used fluid.							
4 inch Control Module (3.5 inch approximately)—Requires filter kit P/N 29540494							
Schedule 2. Recommended Fluid and Filter Change Intervals (TranSynd™/TES 295 Fluid)							
75,000 Miles (120 000 km) 36 Months 3000 Hours	75,000 Miles (120 000 km) 36 Months 3000 Hours	Overhaul	75,000 Miles (120 000 km) 36 Months 3000 Hours	150,000 Miles (240 000 km) 48 Months 4000 Hours	75,000 Miles (120 000 km) 36 Months 3000 Hours	Overhaul	75, 000 Miles (120 000 km) 36 Months 3000 Hours

https://truckmanualshub.com/

Table 2–6. Recommended Fluid/Filter Change Intervals For 4000 Product Family *(cont'd)*

SEVERE VOCATION				GENERAL VOCATION			
	Filters				Filters		
Fluid	Main	Internal	Lube/ Auxiliary	Fluid	Main	Internal	Lube/ Auxiliary
2 inch Control Module (1.75 inch approximately)—Requires filter kit P/N 29540493							
Schedule 3. Recommended Fluid and Filter Change Intervals (TranSynd™/TES 295 Fluid)							
50,000 Miles (80 000 km) 24 Months 2000 Hours	50,000 Miles (80 000 km) 24 Months 2000 Hours	Overhaul	50,000 Miles (80 000 km) 24 Months 2000 Hours	150,000 Miles (240 000 km) 48 Months 4000 Hours	50,000 Miles (80 000 km) 24 Months 2000 Hours	Overhaul	50,000 Miles (80 000 km) 24 Months 2000 Hours

Severe Vocation: All Retarders, On/Off-Highway, Refuse, Transit, and Intercity Coach with duty cycle greater than one stop per mile.

General Vocation: Intercity Coach with duty cycle less than or equal to one stop per mile.

Local conditions, severity of operation, or duty cycle may require more or less frequent change intervals that differ from the published recommended fluid change intervals of Allison Transmission. Transmission protection and fluid change intervals can be optimized by the use of fluid analysis. Filters must be changed at or before recommended mileage, months, or elapsed hour intervals (whichever occurs first).

https://truckmanualshub.com/

b. Abnormal Conditions. Transmission fluid must be changed whenever there is evidence of dirt in the fluid or the fluid is discolored, which indicates a high temperature condition. Fluid analysis will also reveal a high temperature condition. Local conditions, severity of operation, or duty cycle may require more or less frequent fluid or filter changes.

c. Fluid Analysis. Transmissions used in high cycle rate applications should use fluid analysis to make sure fluid is changed as soon as needed. Transmission protection and fluid change intervals can be optimized by monitoring fluid oxidation according to the tests and limits shown in Table 2–7. Consult your local telephone directory for fluid analysis firms. To make sure of consistent and accurate fluid analysis, use only one fluid analysis firm. Refer to the Technician's Guide for Automatic Transmission Fluid, GN2055EN, for additional information.

Table 2–7. Fluid Oxidation Measurement Limits

Test	Limit
Viscosity	±25 percent change from new fluid
Total Acid Number	+3.0 change from new fluid
Solids	2 percent by volume maximum

2–7. TRANSMISSION FLUID CONTAMINATION

a. Fluid Examination. At each fluid change, examine the drained fluid for evidence of dirt or water. A normal amount of condensation will appear in the fluid during operation.

b. Water. Obvious water contamination of the transmission fluid or transmission fluid in the heat exchanger water indicates a leak between the water and fluid areas of the cooler. Inspect and pressure test the cooler to confirm the leak. Replace leaking coolers.

NOTE: Cooler water can also be contaminated by engine oil. Be sure to locate the actual source of cooler water contamination.

c. Engine Coolant. Engine coolant in the transmission hydraulic system requires immediate action to prevent malfunction and possible serious transmission damage. Completely disassemble, inspect, and clean the transmission. Remove all traces of the coolant and varnish deposits resulting from engine coolant contamination (ethylene glycol).

Any trace of glycol or greater than 0.2 percent water contamination requires complete disassembly and clean up of the transmission and replacement of seals, gaskets, clutch plates, and bearings. Solenoid resistance should be measured and

https://truckmanualshub.com/

checked against the specifications. Solenoids not within specification should be replaced. Refer to Service Information Letter 18-TR-98, Rev A.

d. Metal. Metal particles in the fluid (except for minute particles normally trapped in the oil filter) indicate internal transmission damage. If these particles are found in the sump, the transmission must be disassembled and closely inspected to find their source. Metal contamination requires complete transmission disassembly. Clean all internal and external hydraulic circuits, cooler, and all other areas where the particles could lodge.

CAUTION: After flushing the cooler, be sure to check the external cooler circuit restriction. If circuit pressure drop is above specification, the cooler has excessive trapped particles and must be replaced.

2–8. TRANSMISSION FLUID AND FILTER CHANGE PROCEDURE

a. Drain Fluid.

NOTE: Do not drain the transmission if replacing only the filters.

WARNING: Avoid contact with hot fluid or the sump when draining transmission fluid. Direct contact with hot fluid or the hot sump may result in bodily injury.

1. Drain the fluid when the transmission is at normal operating sump temperature—71°C–93°C (160°F–200°F). Hot fluid flows quicker and drains more completely.
2. Remove the drain plug from the oil pan and allow the fluid to drain into a suitable container.
3. Examine the fluid as described in Section 2–7, TRANSMISSION FLUID CONTAMINATION, Paragraph a. Fluid Examination.

b. Replace Filters. Refer to Figure 2–2.

1. Remove twelve bolts 1, two filter covers 2, two gaskets 3, two O-rings 4, two O-rings 5, and two filters 6 from the bottom of the control module.
2. When reinstalling parts, lubricate and install new O-rings 4 and 5 on each cover. Lubricate O-ring inside filter 6 and push filter onto each cover 2. Install new gaskets 3 on each cover 2 and align bolt holes in gasket with holes in cover.

https://truckmanualshub.com/

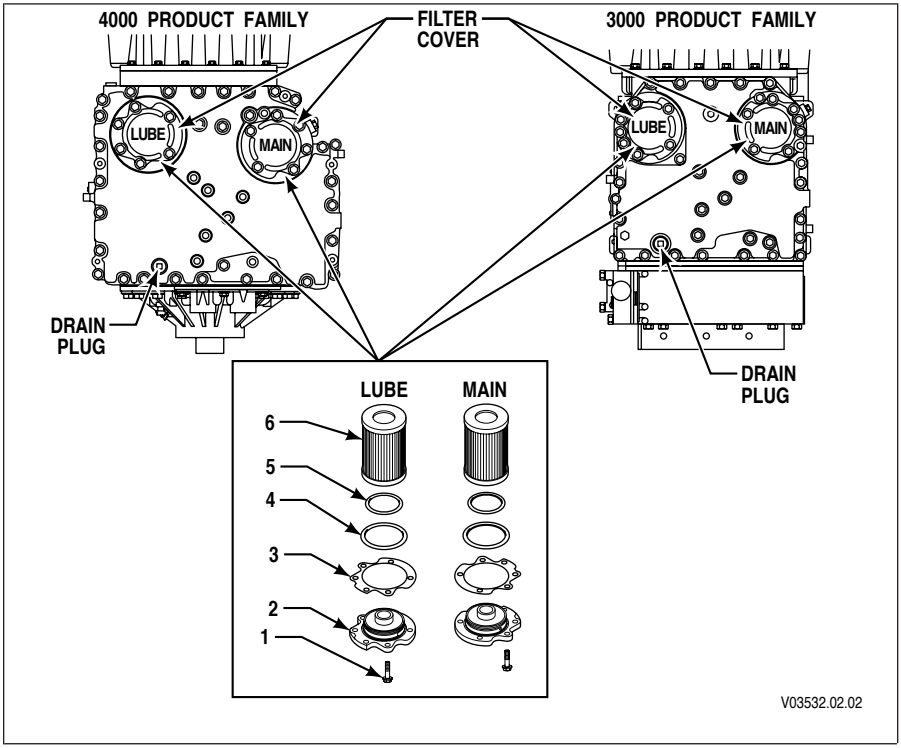

Figure 2–2. Location of Filters for Service

3. Install filter cover assemblies into the filter compartments. Align each filter/cover assembly with the holes in the bottom of the control module. Push the cover assemblies in by hand to seat the seals.

> **CAUTION:** Do not use the bolts to draw the filter covers to the control module. Do not use an impact wrench to tighten the bolts. Using an impact wrench to tighten the bolts may cause stripped threads and expensive parts replacement. Use a torque wrench to tighten the bolts.

4. Install six bolts into each cover assembly and tighten to 51–61 N•m (38–45 lb ft).
5. Replace the drain plug O-ring. Install the drain plug and tighten to 25–32 N•m (18–25 lb ft).

c. Refill Transmission. Refer to Table 2–8 for fluid refill quantities. The amount of refill fluid is less than the amount used for the initial fill. Fluid remains in the external circuits and transmission cavities after draining the transmission.

https://truckmanualshub.com/

After refill, check the fluid level using the procedure described in Section 2–3, TRANSMISSION FLUID CHECK, Paragraph b. Manual Fluid Check Procedure.

Table 2–8. Transmission Fluid Capacity

		Initial Fill*		Refill*	
Transmission	**Sump**	**Liters**	**Quarts**	**Liters**	**Quarts**
3000 Product Family	4 inch	27	29	18	19
	2 inch	25	26	16	17
4000 Product Family	4 inch**	45	48	37	39
	2 inch**	38	40	30	31

* Approximate quantities, do not include external lines and cooler hose.
** For transmissions with PTO add 2.8 liters (3 quarts)

2–9. FLUID LEAK DIAGNOSIS

a. Finding the Leak.

1. Identify the fluid. Determine whether the fluid is engine oil, automatic transmission fluid, or hydraulic fluid from a particular vehicle system.
2. Operate the vehicle to reach normal operating temperature and park the vehicle. Inspect the vehicle to identify the source of the leak. Refer to the following list for possible points of transmission fluid leaks and their causes.
   - Transmission mating surfaces:
     - — Attaching bolts not correctly aligned
     - — Improperly installed or damaged gasket
     - — Mating surface(s) damaged
   - Housing leak:
     - — Fill tube or plug seal damaged or missing
     - — Fill tube bracket dislocated
     - — Oil cooler connector fittings loose or damaged
     - — Output shaft seals worn-out or damaged
     - — Pressure port plugs loose
     - — Porous casting
   - Leak at converter end:
     - — Converter seal damaged
     - — Seal lip cut—check converter hub for damage
     - — Garter spring missing from seal

https://truckmanualshub.com/

- — Converter leak in weld area or O-ring seal
- — Porous casting

- Fluid comes out of fill tube:
  - — Overfilled—incorrect dipstick
  - — Plugged vent
  - — Water or coolant in fluid—fluid appears milky
  - — Incorrect electronic fluid indication
  - — Drain-back holes plugged

3. Visually inspect the suspected area. Inspect all gasket mating surface for leaks.
4. If the leak still cannot be identified, clean the suspected area with a degreaser, steam, or spray solvent. Clean and dry the area. Operate the vehicle for several miles at varying speeds. Inspect the vehicle for leaks. If the leak source still cannot be identified, use the powder method, and/or the black light and dye method as explained below.

b. Powder Method.

1. Clean the suspected area.
2. Apply an aerosol-type white powder to the suspected area.
3. Operate the vehicle under normal operating conditions.
4. Visually inspect the suspected area and trace the leak path over the white powder.

c. Black Light and Dye Method. A dye and black light kit for finding leaks is available. Refer to the manufacturer's directions when using the kit. Refer to the kit directions for the color of the fluid/dye mix.

1. Pour the specified amount of dye into the transmission fill tube.
2. Operate the vehicle under normal operating conditions.
3. Direct the black light toward the area suspected of leaking. Dyed fluid will appear as a brightly colored path leading to the leak.

d. Repairing the Leak. Once the leak has been traced back to its source, inspect the leaking part for the following conditions, and repair the leaking part.

- Gaskets:
  - — Fluid level/pressure is too high
  - — Plugged vent or drain-back holes
  - — Improperly tightened fasteners or damaged threads
  - — Warped flanges or sealing surfaces

https://truckmanualshub.com/

  - Scratches, burrs, or other damage to sealing surfaces
  - Damaged or worn-out gasket
  - Cracked or porous casting
  - Improper sealant used, where applicable
- Seals:
  - Fluid level/pressure is too high
  - Plugged vent or drain-back hole
  - Damaged seal bore
  - Damaged or worn-out seal
  - Improper seal installation
  - Cracks in component
  - Output shaft surface scratched, nicked, or damaged
  - Loose or worn-out bearing causing excess seal wear
- Sealing Flange:
  - Inspect the sealing flange for bends; replace the sealing flange if bent.

2–10. BREATHER

a. Location and Purpose. The breather is located on top of the transmission converter housing. The breather prevents air pressure buildup within the transmission and its passage must be kept clean and open.

b. Maintenance. The amount of dust and dirt encountered will determine the frequency of breather cleaning. Use care when cleaning the transmission.

> **CAUTION: DO NOT SPRAY STEAM, WATER, OR CLEANING SOLUTION DIRECTLY AT THE BREATHER**. Spraying steam, water, or cleaning solution at the breather can force water or cleaning solution into the transmission and contaminate the transmission fluid.

c. Replacement. Always use a correctly sized wrench to remove or replace the breather. Using pliers or a pipe wrench can crush or damage the breather stem and produce metal particles which could enter the transmission. Tighten the breather to 12–16 N•m (9–12 lb ft).

https://truckmanualshub.com/

2–11. TROUBLESHOOTING

a. CHECK TRANS Light.

NOTE: Strip pushbutton shift selectors cannot display or clear diagnostic codes.

The **CHECK TRANS** light is usually located on the vehicle's instrument panel.

When the light is "ON" and the shift selector display is flashing, shifts are being inhibited by the TCM.

- This occurs when the TCM senses abnormal conditions in the transmission.
- During this time, the digit on the shift selector displays the range in which the transmission is locked.
- The transmission may continue to operate with inhibited shifts.
- The TCM will not respond to shift selector requests.
- Direction changes and shifts to and from neutral will not occur.
- If the ignition is turned "OFF" and then "ON" while the **CHECK TRANS** light is illuminated, the transmission will remain in neutral until the diagnostic code is cleared.

Whenever the **CHECK TRANS** light is illuminated, the TCM logs a diagnostic code in memory. The diagnostic codes can be accessed through the shift display or the Allison DOC™.

NOTE: Diagnostic codes can be logged without illuminating the **CHECK TRANS** light. This occurs when the TCM senses a problem but determines that the problem will not cause immediate transmission damage or dangerous performance.

https://truckmanualshub.com/

b. Diagnostic Codes.

Table 2–9. Diagnostic Codes Overview

Code List Position	DTC	Active*	Historic **	Check Trans	Failure Record**	Description**
d1	P0880	Y	Y	N	Y	TCM Power Input Signal
d2	P2723	Y	Y	Y	Y	Pressure Control Solenoid Stuck Off
d3	P0727	N	Y	N	Y	Engine Speed Input Circuit No Signal
d4	P0610	N	Y	N	Y	TCM Vehicle options (Trans ID) Error
d5	—	—	—	—	—	—

* On Shift Selector, Y = Mode Indicator (LED) illuminated
** Accessible only by Allison DOC™.

Diagnostic codes are stored in memory. Up to five codes can be stored, with the most recent code stored displayed first.

Diagnostic codes consist of the letter “P” or “U” followed by four numbers. The letter “P” indicates a transmission internal problem while a “U” indicates a problem in a vehicle system or the transmission to vehicle interface.

- The first two digits indicate the type of problem.
- **Code List Position (shift selector only).** The position which a code occupies in the code list. Positions are displayed as “d1” through “d5” (Code List Position 1 through Code List Position 5).
- **DTC.** The diagnostic trouble code number referring to the general condition or area of fault detected by the TCM. “Double click” on the numerical code in the DTC column to link to the specific troubleshooting instructions for the DTC.
- **Active Indicator.** Indicates when a diagnostic code is active. The MODE indicator LED on the shift selector is illuminated or the diagnostic tool displays **Y** when the DTC is active.
- **Historic Indicator.** Indicates when the DTC has met sufficient criteria to be stored in the long term memory. “Sufficient criteria” may mean the DTC occurred over a specific span of time or over multiple test cycles.

https://truckmanualshub.com/

- **Check Trans Indicator.** Indicates when the TCM is requesting the **CHECK TRANS** light as a result of the DTC.
- **Failure Records Indicator.** Indicates when Failure Records are present. “Double click” on the **Y** in the Failure Records column to display failure record information.
- **Description.** Provides a brief description of the DTC. “Double click” on the DTC description to link to the specified troubleshooting instructions for the DTC.

NOTE: Diagnostic codes are displayed two characters or digits at a time. For example, code C1312 is displayed as d1, C, 13, 12. Code list position = d1. First pair, “Blank” C. Second pair of characters = 13. Third pair of characters = 12. Each character pair is displayed for about one second.

When using the shift selector to retrieve trouble codes, if the mode indicator (LED) is illuminated, the displayed code is active. If the mode indicator is not illuminated, the displayed code is inactive. In normal operating mode, an illuminated mode indicator signifies secondary mode operation.

c. Clearing Trouble Codes Using Shift Selector.

NOTE: Strip pushbutton shift selectors cannot display or clear diagnostic codes.

During installation, “false” codes can be recorded in the TCM’s memory. Clear these codes before road testing the vehicle. Use the shift selector to clear the codes (Refer to Figure 2–3).

- Enter the diagnostic mode on pushbutton selectors by pressing the ↑ **(Up)** and ↓ **(Down)** arrow simultaneously. Simultaneously press both buttons twice if there is an oil level sensor present.
- With a lever selector, enter the diagnostic mode by momentarily pressing the **MODE** button. Press twice if there is an oil level sensor present.
- To clear all active indicators, press and hold the **MODE** button approximately 3 seconds until the mode indicator (LED) flashes.
- To remove all codes, press and hold the **MODE** button for approximately 10 seconds until the mode indicator (LED) flashes again.

https://truckmanualshub.com/

d. Retrieving Troubleshooting Codes.

NOTE: Strip pushbutton shift selectors cannot display or clear diagnostic codes.

After road testing the vehicle, check for diagnostic codes. Retrieve the codes by using the shift selector refer to Figure 2–3.

NOTE: Diagnostic codes are displayed two characters or digits at a time. For example, code C1312 is displayed as d1, C, 13, 12. Code list position = d1. First pair, “Blank” C. Second pair of characters = 13. Third pair of characters = 12. Each character pair is displayed for about one second.

- Enter Diagnostic Mode.
- The display will list the code’s logged position (d1, d2, d3, etc.), then follow with the code letter designator (C, P, or U), the first two numbers of the code, and then the last two numbers of the code (this display sequence repeats until the **MODE** button is pressed again).
- Momentarily press the **MODE** button to move to the next code stored in memory.
- When the **MODE** button is pressed after displaying the code in the d5 position, the code in the d1 position is displayed.

NOTE: You can also use Allison DOC™ to clear and retrieve the troubleshooting codes. Refer to the Allison DOC™ for PC–Service Tool User Guide for specific instructions.

https://truckmanualshub.com/

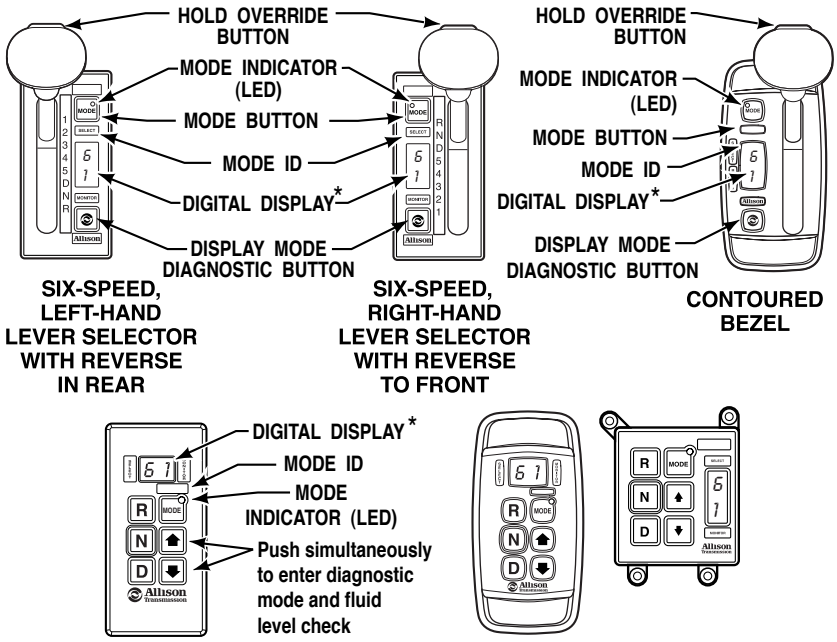

*** NOTE:** *The first number displayed is highest forward range available and second number is range attained in selected position.*
Visually check to confirm range selected. If display is flashing, shift is inhibited. V07343.03.01

Figure 2–3. Shift Selector

e. Troubleshooting When No Diagnostic Codes Are Present.

- Always start with the basics:
  - — Make sure the shift selector is in the appropriate range.
  - — Make sure the fluid level is correct.
  - — Make sure batteries are properly connected and charged.
  - — Make sure electrical connections are properly made.
  - — Inspect support equipment for proper installation and operation.
- If the troubleshooting charts refer you to an Electronic Control check, use the diagnostic code troubleshooting information that best applies to the situation.
- Use the transmission's individual clutch-apply circuit pressure taps when necessary.

https://truckmanualshub.com/

f. Troubleshooting Intermittent Diagnostic Codes. Intermittent codes are a result of conditions which are not always present.

When conditions causing the code exist, the code is logged in memory. The code stays in memory until it is manually cleared or cycled out.

When intermittently occurring codes exist, check for the following items:

- Dirty, damaged, or corroded harness connectors and terminals
- Terminals not fully seated in connectors
- Damaged harnesses (due to poor routing, chafing, excessive heat, tight bends, etc.)
- Improperly mounted electronic control components
- Poor connector seals (where applicable)
- Exposed harness wires
- EMI generating components and accessories
- Loose ground connections

To help locate intermittent problems it sometimes helps to place the appropriate tester on the suspect component or circuit and simulate operating conditions—wiggle, pull, bump, and bend while watching the tester.

g. Exiting Diagnostic Mode.

NOTE: Strip pushbutton shift selectors cannot display or clear diagnostic codes.

To exit the diagnostic mode, do one of the following:

- Do nothing; wait until the calibrated time has passed and the system automatically returns to normal operation.
- Using a pushbutton shift selector, simultaneously press the ↑ **(Up)** and ↓ **(Down)** arrow buttons.
- Using a pushbutton shift selector, press **N** (Neutral).
- Using a lever shift selector, press the **MODE** button once.
- If using a lever shift selector, move the selector lever to any position other than the one it was in when the diagnostic display mode was activated.

https://truckmanualshub.com/

2–12. TRANSMISSION STALL TEST

a. Purpose. Stall testing is performed to determine if a vehicle performance complaint is due to an engine or transmission malfunction. Stall testing is a troubleshooting procedure only—never perform a stall test as a general check or during routine maintenance.

Transmission stall speed is the maximum engine rpm attainable when the engine is at full throttle and the torque converter turbine is not moving, or "stalled." After a transmission stall test, compare the actual full throttle engine speed at torque converter turbine stall with specifications established by the vehicle manufacturer.

NOTE: Engine speed data can be obtained from the engine manufacturer or from the equipment dealer or distributor. Some engine manufacturers provide a programmable parameter to limit engine speed when the transmission output speed is 0 rpm, such as at a stop. This parameter should be set to a higher value than the expected transmission stall speed before performing the stall test.

---

b. Stall Testing Preparation. If a transmission stall test is to be performed, make sure the following preparations have been made before conducting the transmission stall test:

1. The manufacturer concurs with performing a full-throttle transmission stall test.
2. The engine programmable parameter for 0 rpm transmission output speed is set higher than the value expected at transmission stall speed.
3. The vehicle is in an area in which a transmission stall test can be safely performed.
4. Make sure the fuel control linkage goes to full throttle and does not stick when released.
5. Make sure the engine air induction system and exhaust system have no restrictions.
6. Perform a cold check of the transmission fluid level and adjust as necessary.
7. Connect Allison DOC™ to the vehicle diagnostic data connector or install an accurate tachometer (do not rely on the vehicle tachometer).
8. Install a temperature gauge with the probe in the transmission converter-out (to cooler) line. Allison DOC™ displays sump temperature only.
9. Install wheel chocks
10. A driver is in the driver's position.
11. The vehicles brakes are fully locked.

https://truckmanualshub.com/

WARNING: To help avoid personal injury, such as burns, from hot transmission fluid and/or to help avoid equipment damage, do not stall the torque converter for more than ten seconds maximum and monitor transmission fluid temperature. Immediately return the engine to idle if converter out (to cooler) temperature exceeds 150°C (300°F). Operating the transmission at high engine power at transmission stall or near stall conditions causes a rapid rise in the transmission fluid temperature. The fluid in the transmission torque converter is absorbing all of the engine power and the vehicle cooling system cannot dissipate the excessive heat load. Extended operation under high heat load conditions causes transmission and cooling system damage, and can possibly fail hydraulic lines causing leaking high temperature fluid.

WARNING: To help avoid personal injury and equipment damage while conducting a transmission stall test, the vehicle must be positively prevented from moving. Apply the parking brake, the service brake, and chock the wheels securely. Warn personnel to keep clear of the vehicle and its travel path.

c. Performing a Transmission Stall Test.

1. Start the engine. While in neutral let the transmission warm to normal operating temperature:
   - Sump temperature 71–93°C (160–200°F)
   - Converter out temperature 82–104°C (180–220°F)
2. Perform a hot check of the transmission fluid level and adjust as necessary.
3. Turn all engine accessories **OFF**.
4. Place Allison DOC™ diagnostic tool in clutch test mode. Use the shift selector to select 4th range. Using 4th range reduces the torque imposed on the transmission driveline. Do not perform a transmission stall test in Reverse.

CAUTION: To help avoid transmission or driveline damage, full throttle stall tests must not be performed in **R** (Reverse) range, all models, or low ranges, 7-speed models.

5. Notify personnel in the area to keep clear of the vehicle.
6. Slowly increase engine rpm until engine speed stabilizes.
7. Record engine speed.

https://truckmanualshub.com/

CAUTION: The transmission stall test procedure causes a rapid rise in transmission fluid temperature that can damage the transmission. Never maintain a stall condition once engine speed stabilizes or converter out (to cooler) temperature exceeds 150°C (300°F). During a stall condition, converter out temperature rises much faster than the internal (sump) temperature. Never use sump fluid temperature to determine the length of the stall condition. If the stall test is repeated, do not let the engine overheat.

8. Record converter out (to cooler) temperature.
9. Reduce the engine speed to idle and shift the transmission to neutral.
10. Raise engine speed to 1200–1500 rpm for 2 minutes to cool transmission fluid.
11. At the end of two minutes, record converter out (to cooler) temperature.
12. Proceed to the Neutral Cool Down Check, Paragraph 2–12 item g.

d. Driving Transmission Stall Test.

NOTE: If the vehicle is equipped with a smoke controlled or an emission controlled engine or engine control programming inhibiting engine acceleration, the following stall test procedure can be used.

WARNING: To help avoid personal injury and/or equipment damage, a driving transmission stall test must be performed by a trained driver and a qualified technician.

e. Driving Transmission Stall Test Preparation. If a driving transmission stall test is to be performed, make sure the following preparations have been made before conducting the test.

1. The manufacturer concurs with performing a full-throttle transmission stall test.
2. The engine programmable parameter for 0 rpm transmission output speed is set higher than the value expected at transmission stall speed.
3. The vehicle is in an area in which the transmission stall test can be safely performed.
4. Make sure the fuel control linkage goes to full throttle and does not stick when released.
5. Inspect the engine air induction system and exhaust system to make sure there are no restrictions.

https://truckmanualshub.com/

6. Perform a cold check of the transmission fluid level and adjust as necessary.
7. Connect Allison DOC™ to the vehicle diagnostic data connector.
8. Install an accurate tachometer (do not rely on the vehicle tachometer).
9. Install a temperature gauge with the probe in the transmission converter-out (to cooler) hose. Allison DOC™ displays sump temperature only.

f. Performing A Driving Transmission Stall Test.

> **CAUTION:** The transmission stall test procedure causes a rapid rise in transmission fluid temperature that can damage the transmission. Never maintain a stall condition once engine speed stabilizes or converter out (to cooler) temperature exceeds 150°C (300°F). During a stall condition, converter out temperature rises much faster than the internal (sump) temperature. Never use sump fluid temperature to determine the length of the stall condition. If the stall test is repeated, do not let the engine overheat.

1. Start the engine. While in Neutral let the transmission warm to normal operating temperature:
   a. Sump temperature 71–93°C (160–200°F)
   b. Converter out temperature 82–104°C (180–220°F)
2. Perform a hot check of the transmission fluid level and adjust as necessary.
3. Turn all engine accessories **OFF**.
4. While located in an isolated area, begin the driving transmission stall test.
5. Select a hold range that will limit road speed (usually 2nd or 3rd range). Never perform a driving stall test in Reverse or Low range (seven speed models)
6. Operate the engine at 100 percent full throttle, maximum governed speed.
7. With the engine at maximum governed speed, begin gradually applying the vehicle service breaks while maintaining 100 percent full throttle. When the vehicle comes to a complete stop, record engine speed.
8. Record converter out (to cooler) temperature.
9. Reduce the engine speed to idle and shift the transmission to neutral.
10. Raise engine speed to 1200–1500 rpm for two minutes to cool transmission fluid. At the end of two minutes, record converter out (to cooler) temperature.
11. Proceed to the Neutral Cool Down Check paragraph 2–12 item g.

https://truckmanualshub.com/

g. Neutral Cool-Down Check Procedure.

1. At the end of two minutes the converter out (to cooler) fluid temperature should return to within normal operating temperature range.
2. If the transmission fluid does not cool within two minutes, the cause could be a stuck torque converter stator or an issue with the transmission cooler, lines or fittings.

h. Transmission Stall Test Results.

NOTE: Environmental conditions, such as ambient temperature, altitude, engine accessory loss variations, etc., affect the power input to the converter. Due to such conditions, stall speed can vary from specification by 150 rpm and still be accepted as within published stall speed.

- If engine speed with the transmission stalled is more than 150 rpm below the stall speed specification an engine issue is indicated.
- If engine stall speed is more than 150 rpm above specification, a transmission issue is indicated.
- Conditions that can exist to cause stall speed to 150 rpm above specification could be:
  - — Transmission fluid cavitation or aeration. Verify proper fluid level using the oil level sensor, if equipped or dipstick.
  - — Slipping clutch.
  - — Torque converter malfunction.
  - — Sticking or damaged torque converter valve.
- A low stall speed (at least 33 percent lower than published stall speed) could indicate an engine issue or a freewheeling stator in the torque converter.

https://truckmanualshub.com/

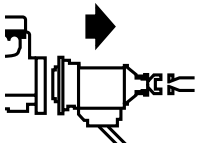

REMOVING TRANSMISSION

Section III

3–1. DRAINING TRANSMISSION

Drain the transmission fluid before removing the transmission from the vehicle.

1. Remove the drain plug from the oil pan. Examine the drained fluid for evidence of contamination (refer to Section 2–7, TRANSMISSION FLUID CONTAMINATION, Paragraph a. Fluid Examination). Reinstall the drain plug.
2. Remove the transmission fill tube if it interferes with transmission removal. Plug the fill tube hole in the main housing to keep dirt from entering the transmission.

NOTE: A significant amount of fluid may drain from the hydraulic lines when they are disconnected from the transmission.

3. Disconnect all hydraulic lines from the transmission. Remove the lines from the vehicle if they interfere with transmission removal. Plug all openings to keep dirt from entering the hydraulic system.
4. If an integral cooler is used, drain coolant from cooler and disconnect coolant hoses. Remove the hoses from the vehicle if they interfere with transmission removal. Plug all openings to keep dirt from entering the cooling system.

3–2. DISCONNECTING CONTROLS

1. Disconnect or completely remove controls. If controls are not removed from the transmission, position them so that they do not interfere with transmission removal.
2. Disconnect the external wiring harness at the feedthrough harness connector. Loosen the bolt that retains the 20-way connector to the transmission feedthrough connector. Refer to Figure 3–1 or Figure 3–2. Prevent dirt or moisture from entering a disconnected connector. Position the wiring harness so it does not interfere with transmission removal.
   — For 3000 Product Family transmissions, disconnect the input (engine) and output speed sensors.

https://truckmanualshub.com/

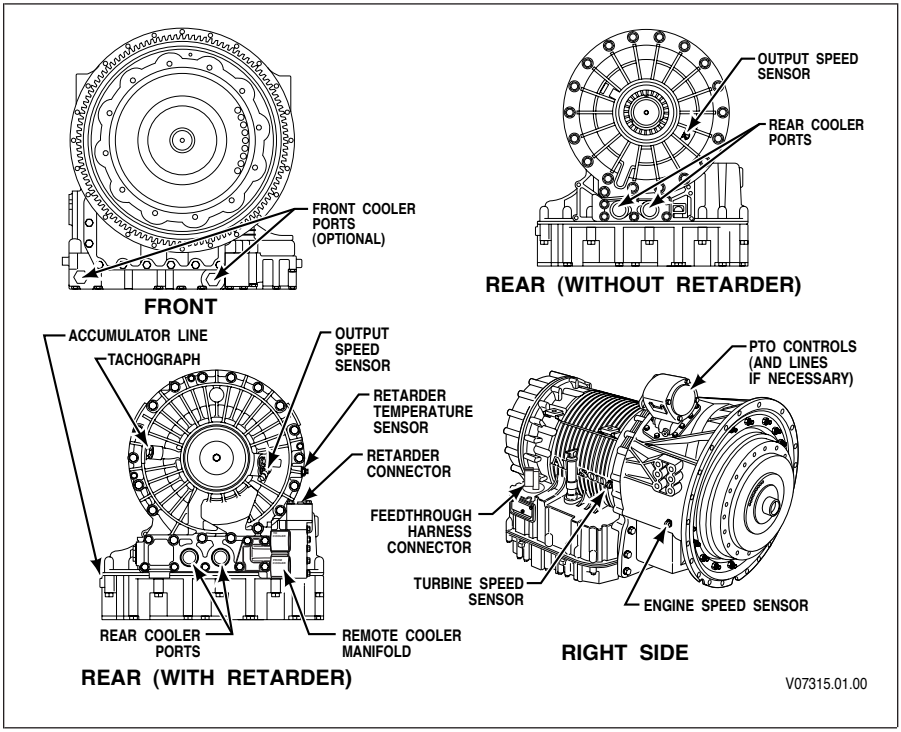

Figure 3–1. 4000 Product Family Disconnect Locations

— For 4000 Product Family transmissions, disconnect the input (engine), turbine, and output speed sensors (refer to Figure 3–1).

NOTE: There may be residual transmission fluid in the retarder-accumulator hydraulic line.

---

3. If a retarder is used, disconnect the retarder accumulator hydraulic line from the retarder. Disconnect any cooling lines.

   — Disconnect the wiring harness from the retarder temperature thermistor, the output speed sensor, and the retarder valve body connector. If used, disconnect the tachograph cable from the port on the rear of the retarder housing (refer to Figure 3–2).

4. If a PTO(s) is used, disconnect the PTO(s) wiring harness.

https://truckmanualshub.com/

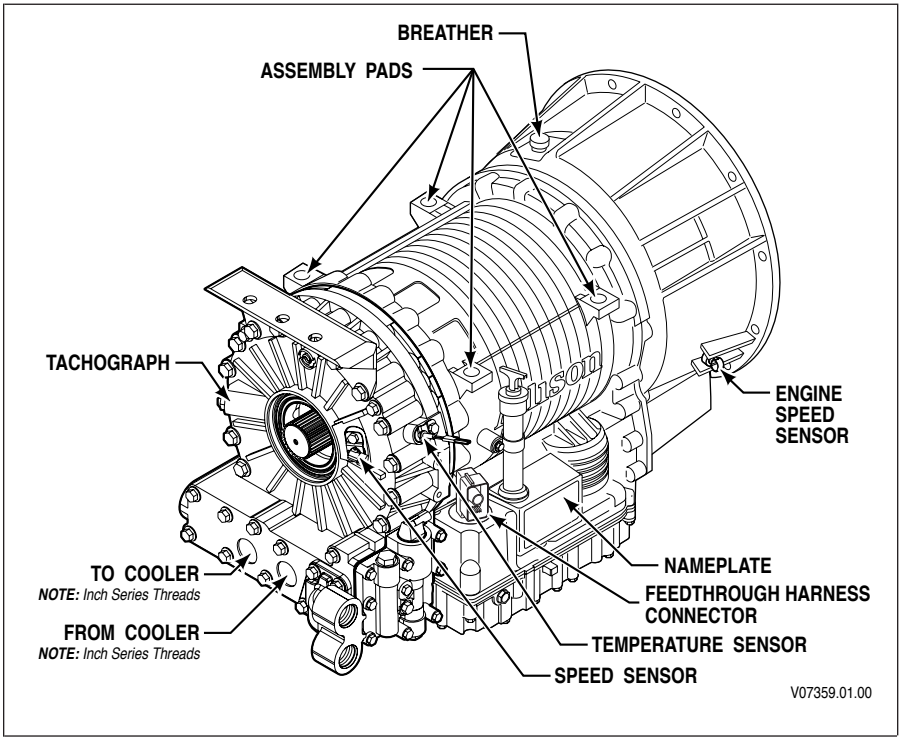

Figure 3–2. 3000 Product Family Disconnect Locations

3–3. UNCOUPLING FROM DRIVELINE, ENGINE, AND VEHICLE

1. Disconnect the vehicle drive shaft from the transmission output flange or yoke. Position the disconnected shaft to avoid interference when removing the transmission.
2. If PTO equipped, disconnect PTO connections such as:
   a. PTO hydraulic hoses
   b. PTO-powered equipment drive shaft
3. If transmission mountings support the rear of the engine, place a jack or other support under the engine.
4. Securely support the transmission with a hoist, jack, or other suitable removal equipment.
5. Remove all bolts, nuts, washers, spacers, and supports that attach the transmission to the vehicle and the engine.

https://truckmanualshub.com/

3–4. REMOVING THE TRANSMISSION

1. Move the transmission away from the engine, approximately 110 mm (4.35 inches), until it is completely clear of the engine. If used, remove the adapter ring and/or gasket.
2. Raise or lower the transmission as necessary to remove it from the vehicle.

3–5. REMOVING OUTPUT FLANGE OR YOKE

If replacing the transmission, you may need to transfer the output flange or yoke to the replacement transmission. Remove the output flange or yoke by removing the M14 x 2.0 x 70 bolt, retainer plug, and O-ring.

https://truckmanualshub.com/

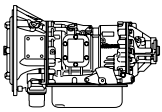

TRANSMISSION PREPARATION

Section IV

4–1. CHECKING INPUT COMPONENTS

a. Bolt Holes. Check all bolt holes on the front of the transmission and rear of the engine that are used in connecting the transmission to the engine. The threads must be undamaged and the holes free of chips or foreign material.

b. Pilot Boss. Check the pilot boss (at the center of the flywheel) for damage or raised metal that prevents free entry into the crankshaft hub (or adapter).

c. Starter Ring Gear. Check the starter ring gear for excessive wear or damage.

d. Transmission Mounting Flange. Check the transmission mounting flange for raised metal, dirt, or if used, pieces of gasket material.

e. Transmission-to-Engine Mounting Flange. Inspect the transmission-to-engine mounting flange for raised metal, burrs, or pieces of gasket material (if used). Remove any of these defects. Inspect the threaded holes for damaged threads.

4–2. INSTALLING OUTPUT FLANGE OR YOKE

a. Output Oil Seal. Check the output oil seal for leaks or damage. Refer to the latest edition of the approved Service Manual for replacement instructions. If not replacing the oil seal, lubricate it with high-temperature grease or transmission fluid.

CAUTION: DO NOT attempt to polish the oil seal contact surface on the flange or yoke. Scratches or machine-type lead can cause the seal to leak.

b. Check Flange or Yoke. Check the flange or yoke for damage or wear. The oil seal contact surface must be smooth and regular to prevent oil leaking past the seal. Rotate the flange or yoke after installation to check for binding.

https://truckmanualshub.com/

c. Install Output Flange or Yoke.

- Install flange or yoke onto output shaft. Install the large O-ring on the retainer plug. Insert one bolt into the bolt hole in the plug. Install a small O-ring over the threads of the bolt so that the O-ring seats against the retainer plug. Install retainer plug and bolt into the flange or yoke.
- Tighten bolt to 70–80 N•m (52–59 lb ft).

4–3. INSTALLING PTO

Access to the PTO mounting pads and the space available to maneuver the transmission determine whether the PTO should be installed before or after the transmission is installed.

CAUTION: DO NOT use cork or other soft gaskets to install the PTO. Use only the shims/gaskets listed in the appropriate parts catalogs. Refer to Table 8–1 for the latest publication number.

NOTE: DO NOT use sealing compounds—they are usually incompatible with automatic transmission fluid.

a. Install Guide Pins. Guide pins are included in the PTO manufacturers installation kit. Determine the required position of the guide pins in relation to the mounted position of the PTO. The guide pins must align with the two blind holes in the PTO pad. Install two headless guide pins into the converter-housing PTO pad. Tighten the pins.

b. Install Gasket. Install the special gasket over the guide pins—ribbed surface away from the transmission.

c. Mount the PTO. Mount the PTO on the guide pins, meshing the PTO driven gear with the transmission PTO drive gear. Retain the PTO by installing a bolt in the top bolt hole. Install the remaining bolts. Tighten all bolts to 51–61 N•m (38–45 lb ft).

4–4. INSTALLING FILL TUBE AND SEAL

a. Location.

- 3000 Product Family—fill tube may be mounted on either the right or left side. The unused fill tube provision must have a plug to fill the tube opening.
- 4000 Product Family—fill tube is on the right side.

https://truckmanualshub.com/

CAUTION: Install the fill tube bracket with the correct length bolt. A bolt that is too long may cause cracks and leaks in the main housing. Refer to the appropriate parts catalog for the correct bolt.

b. Installation. Install the fill tube seal into the main housing. Insert the fill tube through the seal. Align the tube bracket with its bolt location. Install the fill tube bolt and tighten to 24–29 N•m (18–21 lb ft).

- On 3000 Product Family transmissions, the unused hole is blocked using a fill tube seal and a new plug. Install the fill tube seal into the unused fill tube hole. Install the new plug so that the underside of the plug head contacts the fill tube seal.

4–5. CHECKING PLUGS AND OPENINGS

Carefully check all sides and the bottom of the transmission for loose or missing plugs.

a. Pressure Plugs. Check that 0.4375–20 UNF-2A pressure plugs are tightened to 10–13 N•m (7–10 lb ft).

b. Fluid Drain Plug. Check that the drain plug is tightened to 25–32 N•m (18–24 lb ft).

c. Cleanliness. Check the openings into which the cooler lines connect for deformities or obstructions. Check the transmission electrical connectors for cleanliness. Clean electrical connectors with LPS cleaner only (refer to SIL 17-TR-94).

https://truckmanualshub.com/

Section V	PREPARING VEHICLE FOR TRANSMISSION INSTALLATION	

5–1. ENGINE, TRANSMISSION ADAPTATION REQUIREMENTS

You must make sure a new transmission installation can be adapted to the vehicle's engine. The measurements described in this section provide correct transmission-to-engine adaptation. Refer to Figure 5–1 or Figure 5–2 and/or AS67–020. Typical arrangement of adaptation components is shown in Figure 5–4.

a. Measuring Equipment. The following measuring equipment is required:

- 600 mm (24 inch) precision caliper
- 50–100 mm (2–4 inch) telescoping gauge
- 25–76 mm (1–3 inch) outside micrometer
- Dial indicator and mounting attachments—base, posts, and clamps
- 0–150 mm (0–6 inch) depth micrometer

b. Flywheel Housing Pilot Bore Diameter. The flywheel housing pilot bore diameter must measure:

- 3000 Product Family—447.68–447.81 mm (17.625–17.630 inches)
- 4000 Product Family—511.18–511.30 mm (20.125–20.130 inches)

c. Flywheel Housing Bore Runout. Flywheel housing bore runout cannot exceed 0.51 mm (0.020 inch) TIR.

d. Flywheel Housing Face Squareness. The flywheel housing face cannot be out-of-square more than 0.51 mm (0.020 inch) TIR.

e. Crankshaft Hub Pilot or Adapter Diameter. The crankshaft hub pilot or hub adapter pilot diameter must measure between 50.94–50.99 mm (2.006–2.008 inches).

f. Crankshaft Hub Pilot or Adapter Squareness. The crankshaft hub or hub adapter cannot be out-of-square more than 0.13 mm (0.005 inch) TIR.

g. Crankshaft Hub Pilot or Adapter Concentricity. The crankshaft hub pilot or the hub adapter pilot concentricity cannot exceed 0.13 mm (0.005 inch) TIR.

https://truckmanualshub.com/

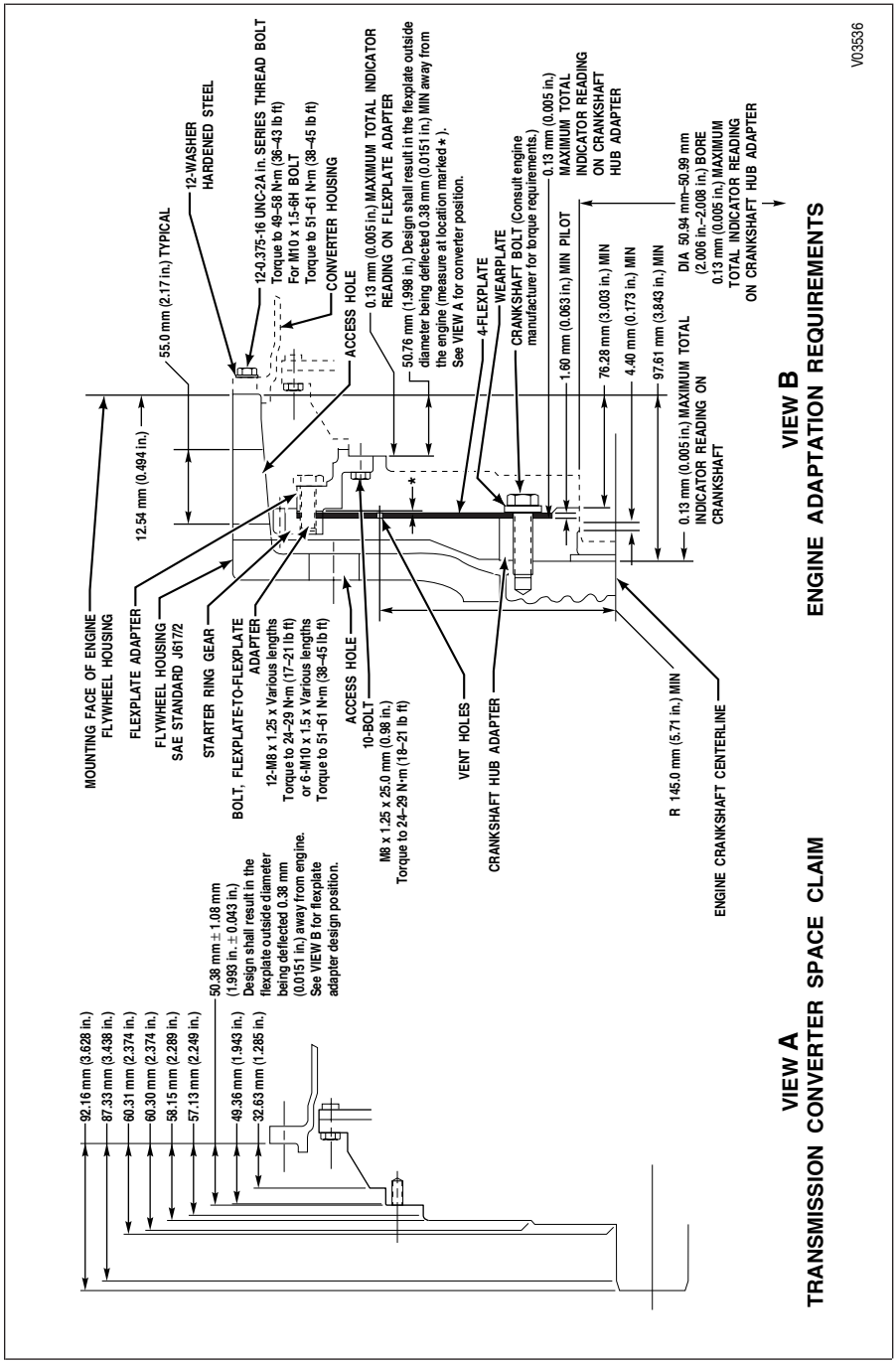

Figure 5–1. 3000 Product Family Engine Adaptation

https://truckmanualshub.com/

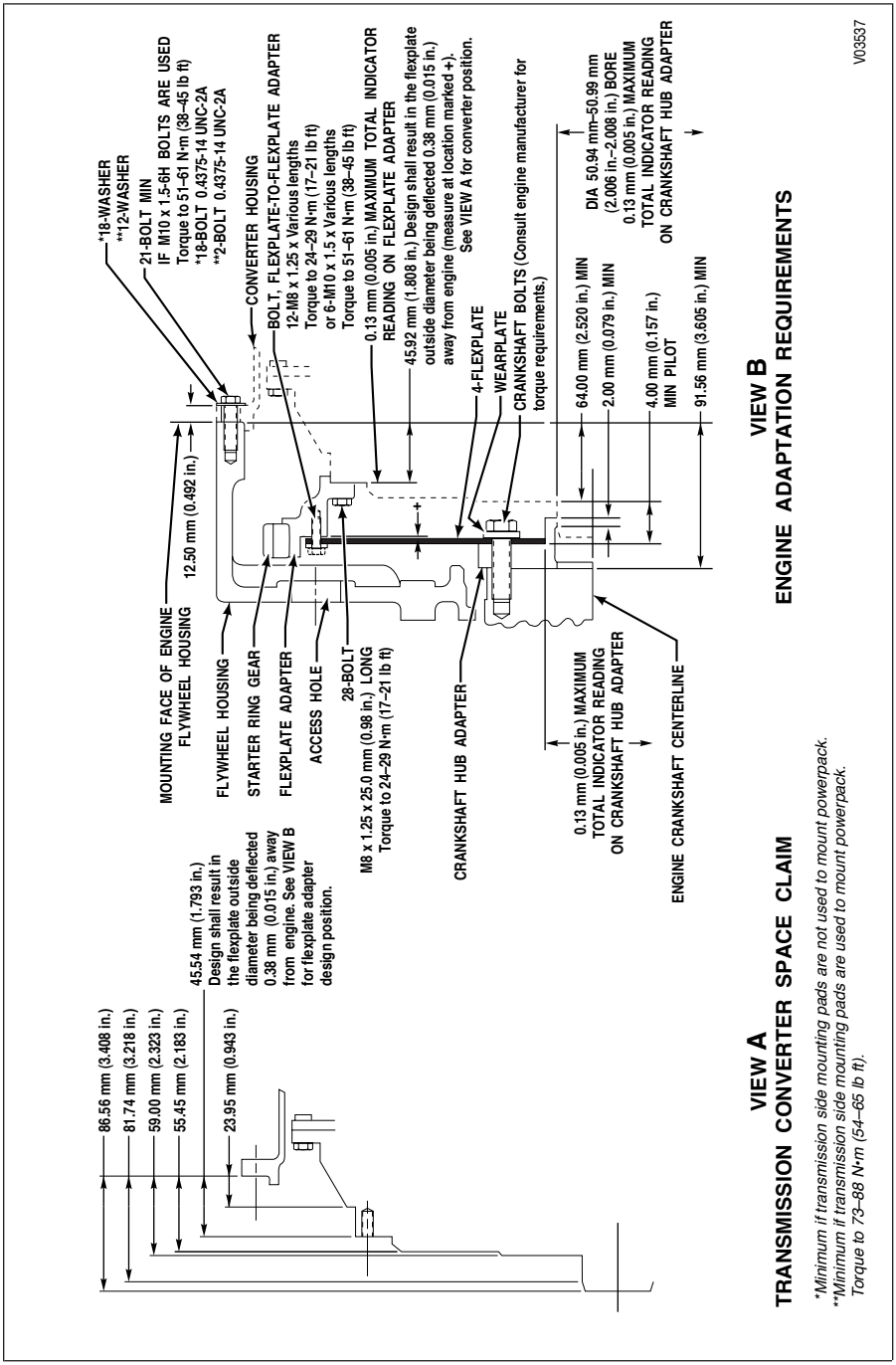

Figure 5–2. 4000 Product Family Engine Adaptation

https://truckmanualshub.com/

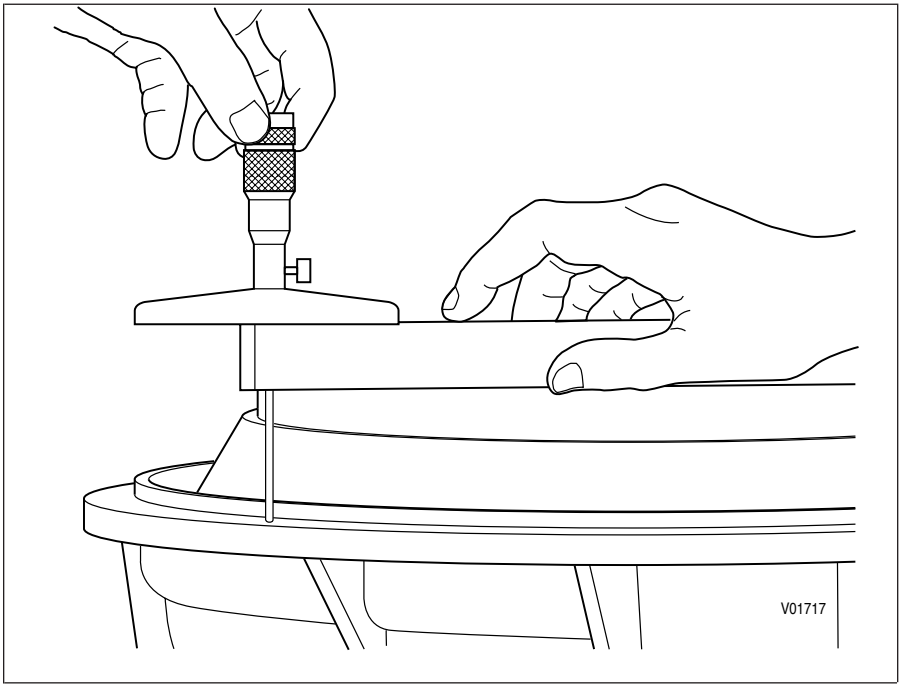

Figure 5–3. Converter Axial Location Measurement

h. Flexplate Bolt Hole Flatness. Flexplate flatness in the area of the bolt holes is not a measurement required for the 3000 and 4000 Product Family transmissions.

i. Torque Converter Axial Location. Using a depth gauge, measure from the face of the torque converter housing to the torque converter flexplate adapter mounting face. The torque converter axial location should measure:

- 3000 Product Family—49.36–50.38 mm (1.943–1.983 inch)
- 4000 Product Family—45.54 mm (1.793 inch)

5–2. CHECKING FLEXPLATE DRIVE ASSEMBLY

a. Flexplate Inspection. Check the flexplate for cracks, distortion, or elongated bolt holes. Replace a worn or damaged flexplate.

b. Engine Crankshaft End Play. Make sure engine crankshaft end play is within the engine manufacturer's specifications.

https://truckmanualshub.com/

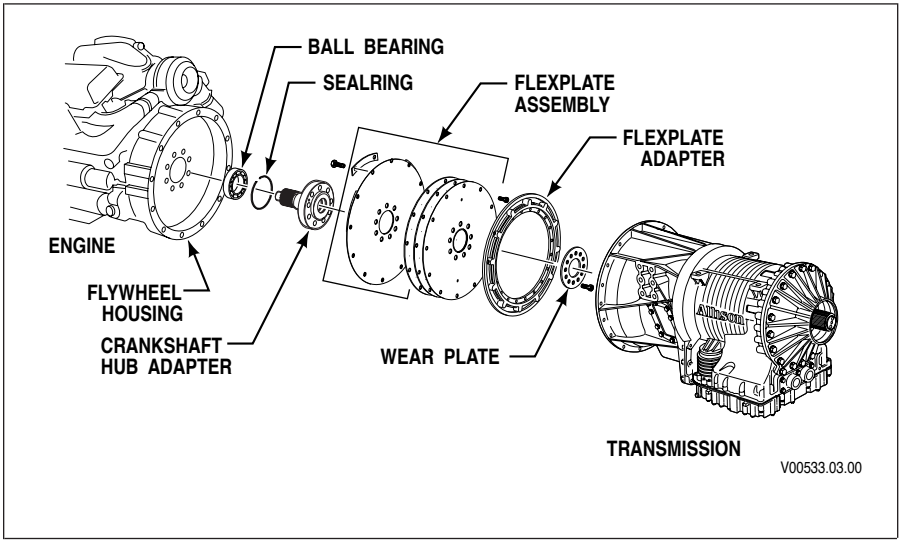

Figure 5–4. Arrangement of Adaptation Components

NOTE: When assembling the flexplate to the crankshaft hub or hub adapter, ensure the outer flexplate bolt holes are aligned.

c. Flexplate Assembly Installation. Install the flexplate onto the engine crankshaft hub using the bolts and torque values specified for that engine. Refer to Figure 5–1 or Figure 5–2 for the proper position of an installed flexplate.

5–3. CHASSIS AND DRIVELINE INSPECTION

Inspect the chassis and driveline components for the following conditions, and correct them as appropriate:

- Transmission mounts—broken or worn-out
- Bolts and other hardwar—damaged, missing, or incorrect
- Isolators (rubber mounts)—damaged or missing
- Driveline angles—runout, or balance which does not conform to the manufacturer's recommendations
- Driveline yoke slip joints:
  - — freedom of movement
  - — damaged or worn-out
  - — correctly lubricated
  - — correctly indexed

https://truckmanualshub.com/

- Driveline midship or hanger bearings—damaged or misaligned
- Universal joints:
  - — freedom of movement
  - — damaged or worn-out
  - — correctly lubricated
  - — correctly indexed
- Vehicle differential backlash—manufacturer's specification
- Universal joint coupling—alignment and differential damage
- Cross-frame members and rear support members—condition and location
- PTO-driven equipment shafts and couplings—damaged or misaligned
- Auxiliary transmission:
  - — shaft alignment
  - — alignment of yoke or flange
  - — backlash
  - — fluid leaks

5–4. COOLER, FILTER, AND LINES

a. Inspection. Perform the following and correct any faulty conditions:

- Transmission fluid cooler and related coolant lines:
  - — Inspect for contamination—clean and flush as necessary
  - — Inspect for deterioration
  - — Inspect for faulty connectors or kinks
  - — Clean and flush transmission fluid cooler, both coolant and oil sides. Pressure check both sides using a 276 kPa (40 psi) air supply.
- Hydraulic lines:
  - — Inspect for contamination—clean and flush as necessary
  - — Inspect for deterioration
  - — Inspect for faulty connectors or kinks

b. After Overhaul. A complete cleanup of the transmission system after an overhaul cannot be assumed. Repeated cleaning and flushing may not remove all debris from the transmission fluid cooler system. Replace the transmission "from cooler" (lube) filter after 8000 km (5000 miles). Refill the transmission to the correct fluid level (refer to Section 2–3, TRANSMISSION FLUID CHECK).

https://truckmanualshub.com/

5–5. CHECKING CONTROLS

a. Inspection. Inspect the following and correct any faulty conditions:

- Shift selector:
  - — improper operation
  - — poor electrical connections
  - — improper harness routing
- Cab and chassis wiring harness:
  - — poor electrical connections
  - — frayed insulation
  - — wiring damage
- Throttle sensor components, if present:
  - — freedom of movement
  - — improper routing
  - — bellows damage
  - — improper or loose cable mounting
- PTO controls, if present:
  - — damage
  - — wear
  - — improper operation
  - — lubrication
  - — electrical harness connections and wiring damage
- Temperature gauge:
  - — capillary tube damage (if used)
  - — sensor damage
- Retarder Controls:
  - — damage
  - — wear
  - — poor electrical connections
  - — frayed insulation
  - — wiring damage

https://truckmanualshub.com/

- Fluid pressure gauge tubing:
  - — damage
  - — kinks
  - — improper routing

b. Throttle Position Sensor (TPS) Adjustment—Using Diagnostic Tool. When properly installed by the equipment manufacturer, the TPS should not require adjustment. Confirm that the throttle sensor has been installed to manufacterers specifications (refer to Figure 5–6) before adjusting the throttle position sensor. The idle position should be approximately 8.9 mm or 0.97 volts or higher, and full throttle position should be approximately 35.7 mm or 3.889 volts or lower. The TPS is self-calibrating, meaning there is no optimum closed position or wide open position. As long as the travel is within 8.5–35.7 mm range the TPS is set properly. A total stroke of 15.2–22.9 mm **must be maintained.**

Watch the TPS movements as the controls move it through a full stroke. Be sure the following conditions do not exist:

- Misalignment or obstruction to smooth movement through the full stroke.
- Idle and full throttle positions are not within an error zone (refer to Figure 5–5).

Error codes occur if the idle position is less than 2.5 mm, or when the full throttle position is more than 40.6 mm. When idle or wide open throttle positions are in the error zones, the TCM will log a code. When a TPS code is logged, the TCM assumes a default throttle setting which will negatively effect shift quality.

c. Hitch-Pin Throttle Position Sensor Installation.

- Install the throttle sensor body as follows:
  1. Clamp cable end using clamp and shims (refer to Figure 5–6).
  2. Secure the sensor body using the mounting holes provided.
  3. Install a heat shield if any part of the throttle sensor is near the exhaust manifold, turbochargers, or any other heat source.
- Adjust the throttle sensor as follows:
  1. The engine fuel lever must be at the closed throttle position.
  2. Install the hitch pin cable end of the sensor to the engine fuel lever with brackets so that at the idle position the cable end is 11–17 mm (0.44–0.67 inch) from its fully retracted position, and at wide open throttle the cable end is pulled 15.2–22.9 mm (0.60–0.90 inch) from the idle position.
  3. Check the stroke distance of the throttle sensor, from closed to wide open. Stroke distance must be from 15.2–22.9 mm (0.60–0.90 inch).

https://truckmanualshub.com/

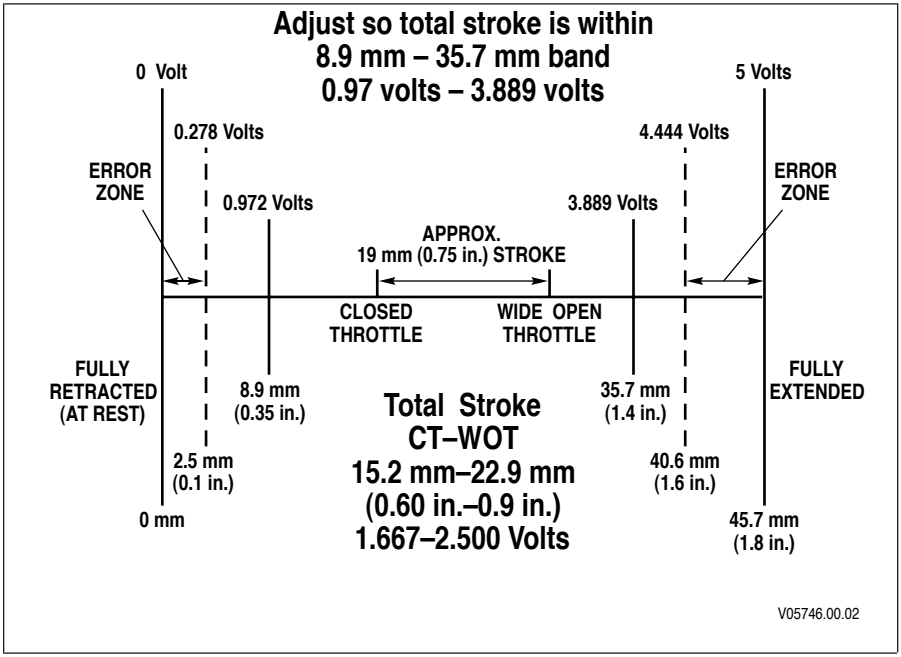

Figure 5–5. Throttle Position Determination Diagram

4. Recheck for zero clearance at the fuel lever. Make sure that the 15.2–22.9 mm (0.60–0.90 inch) dimension has not changed.
5. Design throttle sensor linkage brackets and levers to nominal dimensions so that the system stays within tolerance bands throughout its operating life.

NOTE: The throttle position signal may be provided via communication link on electronically controlled engines.

---

https://truckmanualshub.com/

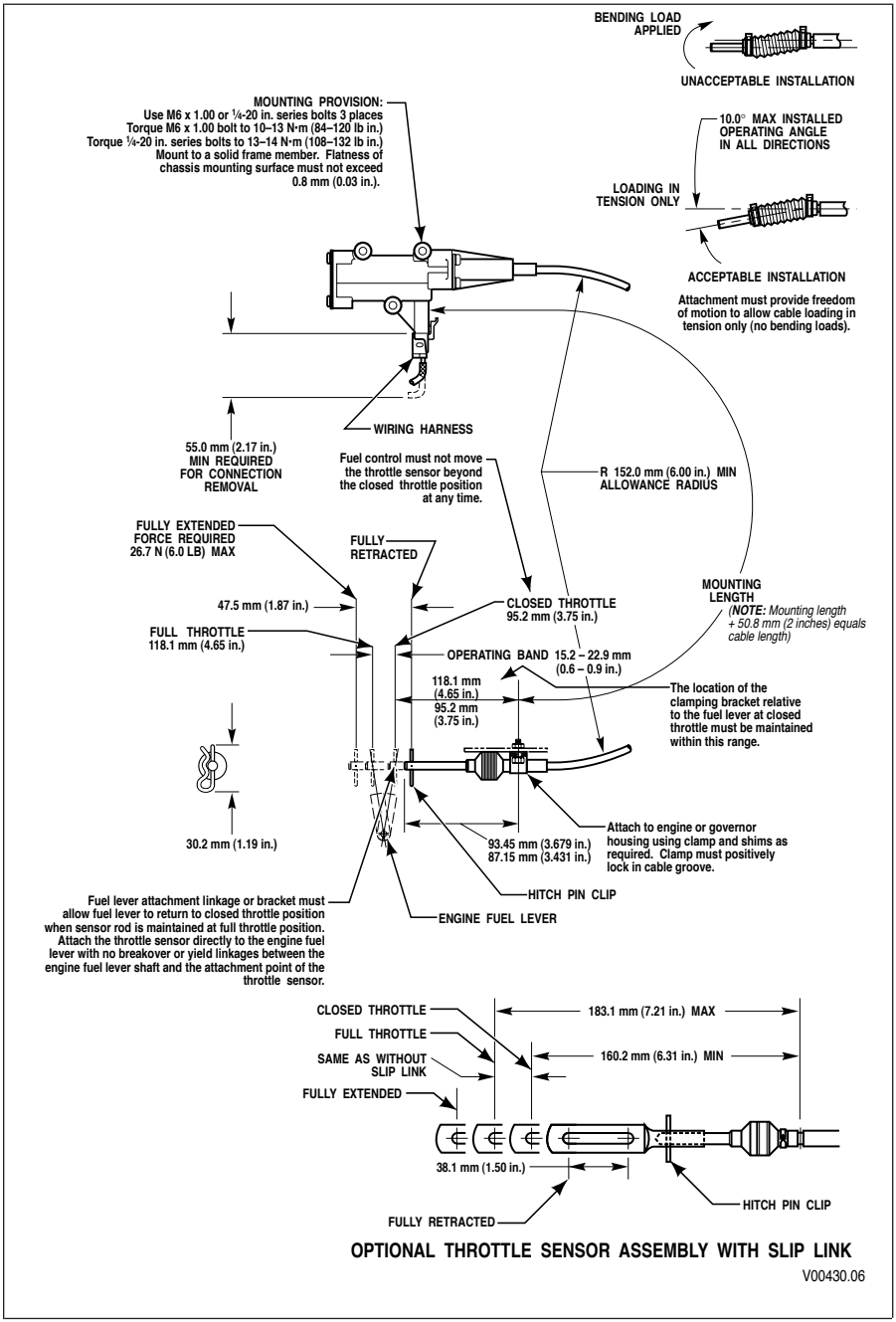

Figure 5–6. Hitch-Pin Throttle Position Sensor Installation Diagram

https://truckmanualshub.com/

Section VI — INSTALLING TRANSMISSION INTO VEHICLE

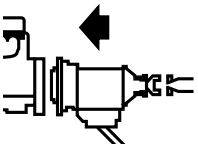

6–1. HANDLING

a. Preventing Damage. Handle the transmission carefully to prevent damage to components in the installation path.

b. Control of Transmission Movements. Use a hoist or transmission jack that allows precise control of transmission movements during installation.

6–2. MOUNTING TO ENGINE

Use the following procedure to mount the transmission to the engine: (Reference Figure 5–4):

1. Align one of the flexplate's bolt holes with the access opening in the engine flywheel housing.
2. Lubricate the center pilot boss with molybdenum disulfide grease (Molycote G, or equivalent).
3. Install a headless guide bolt into one of the flexplate bolt holes in the flexplate adapter or torque converter mounting lug (refer to Figure 5–3). Align the guide bolt with the flexplate hole at the access opening.
4. Push the transmission toward the engine while guiding the pilot boss on the torque converter into the flexplate hub adapter and the guide bolt into the hole on the flexplate.
5. Seat the transmission squarely against the engine flywheel housing—no force is required. If interference is encountered, move the transmission away from the engine and investigate the cause.
6. Align the bolt holes in the converter housing with those in the engine flywheel housing.
7. Install all transmission-to-engine bolts finger tight.

CAUTION: The entire converter housing circumference must be flush against the engine flywheel housing before tightening any bolts. DO NOT use the bolts to seat the housing.

https://truckmanualshub.com/

8. Tighten four bolts at equally-spaced intervals around the converter housing bolt circle. Use the torque specified by the engine or vehicle manufacturer — usually M10 x 1.5-6H bolts tightened to 51–61 N•m (38–45 lb ft) or $^{7}/_{16}$-14 bolts tightened to 73–88 N•m (54–65 lb ft) or $^{3}/_{8}$-16 bolts tightened to 49–58 N•m (36–43 lb ft).
9. Remove the flexplate guide bolt through the engine flywheel housing access opening. Replace it with a self-locking bolt. Tighten the bolt finger tight.

NOTE: DO NOT tighten any flexplate-to-flexplate adapter bolts until all of the bolts have been installed and tightened finger tight.

10. Rotate the engine crankshaft to install the remaining self-locking bolts into the flexplate adapter. After all bolts have been installed finger tight, tighten M8 bolts to 24–29 N•m (18–21 lb ft) and M10 bolts to 51–61 N•m (38–45 lb ft).
11. Install the flywheel housing access cover, if used.

6–3. INSTALLING TRANSMISSION MOUNTING COMPONENTS

CAUTION: Use the type and grade of mounting bolts recommended by the vehicle manufacturer.

1. Install all bolts, washers, spacer, isolators, or supports required to support the transmission in the vehicle frame.
2. Tighten the bolts to the torque values recommended by the vehicle manufacturer.

6–4. COUPLING TO DRIVELINE

1. Couple the driveline companion flange or universal joint yoke to the flange or yoke on the transmission. Use the bolts and torque values recommended by the vehicle manufacturer.
2. Check the universal joint angularity of all U-joints in the driveline. Determine if they are within specification.

6–5. CONNECTING OUTPUT RETARDER ACCUMULATOR

The output retarder is connected to the vehicle air system by an air supply line attached to the retarder control solenoid mounted on the end of the retarder accumulator (refer to Figure 6–1).

https://truckmanualshub.com/

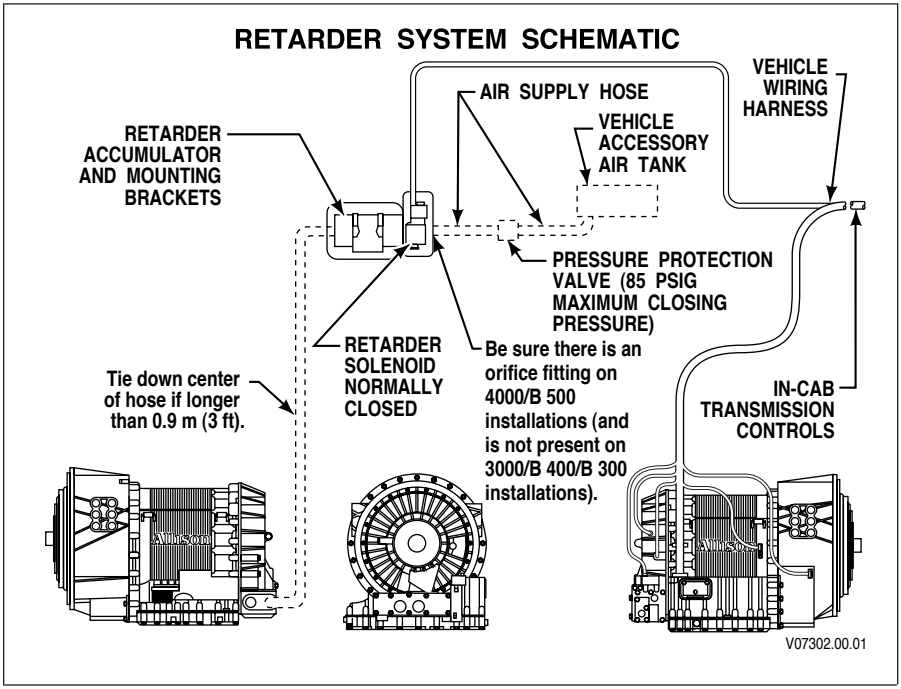

Figure 6–1. Output Retarder Accumulator Installation

NOTE: Make sure a pressure protection valve is correctly installed between the vehicle brake air system and the accumulator control solenoid.

---

1. Connect the air supply hose fitting to the retarder air control solenoid. Tighten the fitting to 16–22 N•m (12–16 lb ft).
2. Connect the hydraulic hose between the retarder and the accumulator. Tighten hose fittings to 68–81 N•m (50–60 lb ft).

6–6. CONNECTING POWER TAKEOFF CONTROLS

If not already mounted, mount the PTO(s) onto the transmission (refer to Section 4–3, INSTALLING PTO).

1. Check the PTO harness routing for kinks and sharp bends. Avoid routing the cable close to exhaust pipes or manifold. The PTO harness must not rub or interfere with adjacent parts.
2. Connect controls to the PTO.
3. Check for proper PTO control operation.

https://truckmanualshub.com/

CAUTION: PTO units using transmission main pressure to engage the PTO gear must have a positive main pressure shut-off at the solenoid valve when the PTO is not engaged. Failure to provide this feature may cause inadvertent clutch apply and PTO damage.

4. Couple the PTO output to its driven equipment. Check couplings or universal joints for correct assembly and alignment. If the driven component is not a direct mount arrangement, check the PTO drivelines for angularity, phasing, and offsets.

6–7. CONNECTING PARKING BRAKE CONTROL

1. Connect and properly adjust the parking brake.
2. If present, adjust the brake shoe-to-drum clearance as specified by the manufacturer.

This does not apply to 4000 Product Family transmissions.

6–8. CONNECTING COOLER

Refer to Figure 6–2 for typical cooler port locations on the transmission and recommended torque for cooler line fittings.

6–9. CONNECTING ELECTRICAL COMPONENTS

NOTE: Allison Transmission electronic control systems are designed and manufactured to comply with all FCC and other guidelines regarding radio frequency interference/electromagnetic interference (RFI/EMI) for transportation electronics. Manufacturers, assemblers, and installers of radio-telephone or other two-way communication radios have the sole responsibility to correctly install and integrate those devices into Allison Transmission-equipped vehicles to customer satisfaction. For further information, refer to TS3989EN, the Allison 4th Generation Controls Troubleshooting Manual.

- Remove the cover from the transmission feedthrough connector and carefully connect the transmission external wiring harness to the 20-way transmission feedthrough connector. Keep dirt and debris out of the connector. Tighten the connector bolt to 2.0–3.2 N•m (18–28 lb inch). DO NOT OVER TORQUE.
- Connect the external wiring harness.
  - For the 4000 Product Family, connect engine, turbine, and output speed sensors, retarder control connector (if retarder is present), and the retarder temperature sensor.

https://truckmanualshub.com/

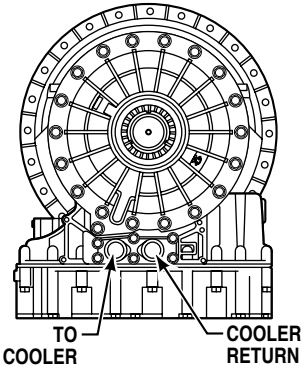

TORQUE 54–68 N•m (40–50 lb ft)

REAR VIEW

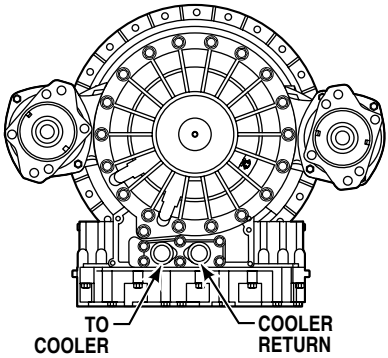

TORQUE 54–68 N•m (40–50 lb ft)

REAR VIEW

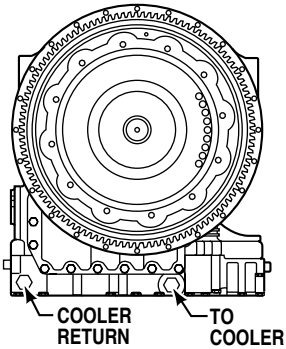

TORQUE 54–68 N•m (40–50 lb ft)

FRONT VIEW

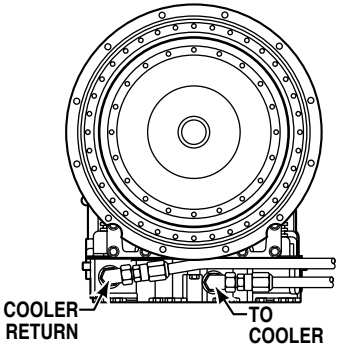

TORQUE 34–47 N•m (25–35 lb ft)

FRONT VIEW

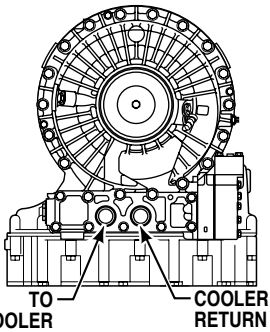

TORQUE 68–81 N•m (50–60 lb ft)

REAR VIEW

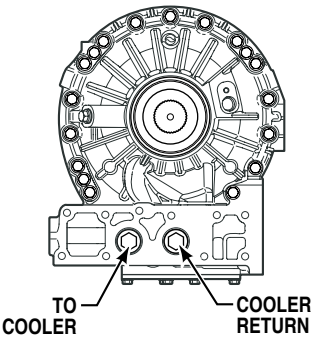

TORQUE 68–81 N•m (50–60 lb ft)

REAR VIEW

NOTE: *All torque values apply to cooler fittings*

V07293.01.00

Figure 6–2. Torque Values of Typical Fluid Cooler Lines

https://truckmanualshub.com/

  - For the 3000 Product Family, connect the retarder temperature thermistor, the output speed sensor, and the retarder valve body connector. Also the tachograph cable, if used, to the port on the rear of the retarder housing.
- If used, connect the PTO(s) connector(s). The PTO connector is NOT part of the Allison Transmission external wiring harness.
- Make sure the speed sensors, the PTO connector, and other connections are securely seated and latched by pulling on the connector—NOT THE WIRES.
- The transmission has a sump fluid temperature sensor on the internal wiring harness. A retarder fluid temperature sensor is installed in the retarder on retarder-equipped models. Actual temperature reading can be made with diagnostic tool. Hot fluid conditions in the sump or retarder are read through the diagnostic tool by programming an output function.
- A temperature gauge may be installed in the “To Cooler” line. No temperature gauge installations are available on integral cooler installations. If equipped for them, install a temperature probe—capillary tube and bulb or thermocouple.
- If equipped with a capillary tube and bulb:
  - Tightened the adapter tight enough to prevent leakage.
  - Install the bulb into the adapter and tighten the nut.
  - Check the capillary tube for interference with other parts that might chafe or damage the tube.
- If equipped with a thermocouple:
  - Long tubes may require support clips or brackets.
  - Install the thermocouple and connect the leads.
- Install and connect other electrical components such as heaters.
  - If equipped, install the pressure gauge tube or line.
  - Check that all unused hydraulic openings are plugged.

6–10. CONNECTING SPEEDOMETER DRIVE

The TCM, through the VIM, provides an electronic speedometer speed signal. If used, consult the OEM for connection procedures.

6–11. FILLING HYDRAULIC SYSTEM

1. Select a transmission fluid—refer to Section 2–5, FLUID RECOMMENDATIONS.
2. Fill the transmission with the required amount of fluid—refer to Table 2–8.

https://truckmanualshub.com/

3. Run the engine for about one minute and check the fluid level—refer to Section 2–3, TRANSMISSION FLUID CHECK, Paragraph c. Cold Check Procedure.

6–12. INSTALLATION CHECKLIST

Complete the Installation Checklist. Refer to Section 7.

https://truckmanualshub.com/

CHECKS AND ADJUSTMENTS

Section VII

7–1. INSTALLATION CHECKLIST

Use this checklist after transmission installation. As items are checked, mark them off this list.

- **Torque Values:**
  - — All control module bolts—51–61 N•m (38–45 lb ft)
  - — Speed sensor bolts—24–29 N•m (18–21 lb ft)
  - — Flexplate-to-crankshaft hub bolts—consult engine manufacturer specifications
  - — Flexplate-to-flexplate adapter bolts—51–61 N•m (38–45 lb ft)
  - — Fluid drain plug—25–32 N•m (18–24 lb ft)
  - — Fluid fill tube bracket—24–29 N•m (18–21 lb ft)
  - — Control module pressure taps—10–13 N•m (7–10 lb ft)
  - — Cooler fittings:

    #12, 34–47 N•m (25–35 lb ft)

    #16, 54–68 N•m (40–50 lb ft)

    #20, 68–81 N•m (50–60 lb ft)
  - — Cooler port cover bolts—51–61 N•m (38–45 lb ft)
  - — Flexplate adapter-to-converter cover bolts—24–29 N•m (18–21 lb ft)
  - — Output flange bolt—70–80 N•m (52–59 lb ft)
  - — PTO cover bolts—51–61 N•m (38–45 lb ft)
  - — PTO mounting bolts—51–61 N•m (38–45 lb ft)
  - — Breather—12–16 N•m (9–12 lb ft)
  - — PTO pressure hose to transmission—10–13 N•m (7–10 lb ft)
  - — 20-Way transmission feedthrough connector bolt—2.0–3.2 N•m (18–28 lb inch)
  - — Rear cover bolts—90–110 N•m (66–81 lb ft)

https://truckmanualshub.com/

— TPS to transmission bracket M6 bolts—10–13 N•m (84–120 lb inch)
$^{1}/_{4}$-20 bolts—12–15 N•m (108–132 lb inch)

- **Cooler Fluid Lines and Air Hose for:**
  — No leaks
  — Connection tightnes
  — Correct routing
- **Throttle sensor for:**
  — Proper adjustment
  — Correct routing of cable and harness
- **Driveline for:**
  — Proper indexing of universal joints
  — Proper drive shaft angles
  — Driveline backlash
  — Lubricated universals and slip-joints
- **Hydraulic System for:**
  — Recommended fluid—TranSynd™ or DEXRON®-III
  — Correct fluid level in transmission
  — Dipstick correctly calibrated—Refer to Figure 2–1
  — Fill tube tight
  — Fill tube cap tight
  — Breather clean and free of restrictions
  — No fluid leaks during operation
- **Instruments and Electrical Equipment for:**
  — Proper wiring and electrical connections
  — Instruments, gauges, and lights work correctly
  — Shift Selector display is on and **CHECK TRANS** light is off
  — Fluid temperature gauge
- **Power Takeoff (if installed) for:**
  — Controls connected and operative
  — Correctly coupled to driven equipment
  — Lubrication line correctly installed and routed—if used

https://truckmanualshub.com/

7–2. ROAD TEST AND VEHICLE OPERATION CHECKLIST

a. Driveability.

NOTE: Refer to the latest edition of the 3000 and 4000 Product Family Operator's Handbooks or Owner's Manuals for operating instructions. Refer to Section 8–2, SERVICE LITERATURE for the latest publication number.

Drive-away checks are performed to verify proper transmission and support equipment installation and operation. The following steps outline drive-away check procedures:

1. Check fluid—fill the transmission with the appropriate fluid.
2. Start the vehicle—check for proper system response during start-up.
   a. Turn on the vehicle's master/ignition switch.
   b. The **CHECK TRANS** light should come on.
   c. Start the engine.
   d. The **CHECK TRANS** light should go off.
   e. "N" should appear in the shift selector display.
3. Clear Trouble Codes—during installation, it is common for "false" codes to be stored in the electronic control's TCM. These codes must be cleared prior to road testing the vehicle.
4. Road Test the Vehicle—allow the electronic control time to "converge" shifts.
5. Check for Proper Operation—check all components for proper mounting and operation, and check for transmission fluid leaks at gasket surfaces, lines, and hoses.
6. Recheck for Trouble Codes—use the Allison DOC™ or the shift selector to determine if codes were set during the road test. Refer to Section 2–11 Troubleshooting.
7. Troubleshoot—if codes exist after the road test, problems must be found and corrected (refer to TS3989EN, Allison 4th Generations Controls Troubleshooting Manual).

b. Service and Maintenance. Refer to the current issue of the 3000 and 4000 Product Family Service Manuals for detailed transmission service and maintenance instructions. Refer to the latest issue of the Allison 4th Generation Controls Troubleshooting Manual for detailed electronic control system troubleshooting. Refer to Table 8–1 for the latest publication number.

https://truckmanualshub.com/

c. **Road Test Checklist.** Complete the following checklist.

- **Neutral Start Circuit**:
  - — Starts only in **N** (Neutral)
- **Instruments:**
  - — **CHECK TRANS** light and shift selector display
  - — Transmission fluid pressure gauge—if used
  - — Speedometer
  - — Temperature gauge—if used
  - — Reverse warning system—if used
- **Transmission Fluid:**
  - — Fluid level meets specifications—cold, neutral, level
  - — No leaks
- **No-Load Governed Engine Speed:**
  - — No-load governed speed of engine
  - — Adjust governor as necessary—refer to the manufacturer's specifications for the engine-transmission being tested
- **Output Retarder:**
  - — Operation of the output retarder, if installed, while descending a grade or slowing on a level road
- **PTO—if installed:**
  - — PTO operation—Refer to the appropriate Operator's Manual. Refer to Table 8–1 for the latest publication number.
- **Shift Sequence:**
  - — Transmission upshifts and downshifts smoothly through all ranges
- **Other Checks:**
  - — Stall test
  - — Shift quality
- **Comments:**

_____

_____

_____

_____

https://truckmanualshub.com/

CUSTOMER SERVICE

Section VIII

8–1. OWNER ASSISTANCE

There are distributors and dealers around the world ready to stand behind every Allison Transmission product. Any situation that arises in connection with the sale, operation, or service of your transmission will be handled by the distributor or dealer in your area.

Refer to the Worldwide Sales and Service Directory SA2229EN for a current listing of Allison Transmission authorized distributors and service dealers.

8–2. SERVICE LITERATURE

Additional service literature is available as shown in the following table. This service literature provides fully illustrated instructions for the operation, maintenance, service, overhaul, and parts support of your transmission. To make sure that you get maximum performance and service life from your transmission, you may order publications from:

SGI Inc.
Attn: Allison Literature Fulfillment Desk
8350 Allison Avenue
Indianapolis, IN 46268
TOLL FREE: 888–666–5799
INTERNATIONAL: 317–471–4995

https://truckmanualshub.com/

Table 8–1. Available Service Literature

Transmission Model	3000 Product Family	4000 Product Family
Automatic Transmission Fluid Technician's Guide	GN2055EN	GN2055EN
Allison DOC™ For PC–Service Tool User Guide	GN3433EN	GN3433EN
Operator's Manual*	OM3656EN	OM3656EN
Operator's Manual (Emergency Vehicle Series)*	OM3749EN	OM3749EN
Operator's Manual (Highway Series)*	OM3750EN	OM3750EN
Operator's Manual (Pupil Transport/Shuttle Series)*	OM3751EN	OM3751EN
Operator's Manual (Rugged Duty Series)*	OM3752EN	OM3752EN
Operator's Manual (Specialty Series)*	OM3753EN	OM3753EN
Operator's Manual (Motorhome Series)*	OM3349EN	OM3349EN
Parts Catalog*	PC2150EN	PC2456EN
Parts Catalog CD-ROM	CD2150EN	CD2456EN
Principles of Operation	PO4016EN	PO4016EN
Service Manual	SM4013EN	SM4014EN
Electronic Troubleshooting Manual	TS3989EN	TS3989EN
Worldwide Sales and Service Directory*	SA2229EN	SA2229EN
*Also Available On The Internet At ***www.allisontransmission.com***		

https://truckmanualshub.com/

Allison Transmission®

MT4015EN 200509 www.allisontransmission.com Printed in USA 200509