https://truckmanualshub.com/

Original instructions

Electric pallet truck

EXU - H-18
EXU - H-20

0161 0162 2354 2356

1152 801 15 17 EN - 02/2021 - 14

first in intralogistics

https://truckmanualshub.com/

https://truckmanualshub.com/

Address of manufacturer and contact details ▷

STILL GmbH
Berzeliusstraße 10
22113 Hamburg, Germany
Tel. +49 (0) 40 7339-0
Fax: +49 (0) 40 7339-1622
Email: info@still.de
Website: http://www.still.de

https://truckmanualshub.com/

https://truckmanualshub.com/

1 Introduction

Your industrial truck 2
General 2
CE labelling 3
Copyright and property rights 3
EC declaration of conformity 4
Identification label 5
Rules for the operating company of industrial trucks 5
Eco-design requirements for electric motors and variable speed drives 6
Spare parts list 7
Permissible use 8
Description of use and climatic conditions 8
Unauthorised use 9
Explanation of symbols used 9
Disposing of components and batteries 9

2 Safety

Safety regulations 12
Safety regulations for handling consumables 13
Permissible consumables 13
Oils 13
Hydraulic fluid 14
Battery acid 14
Disposal of consumables 15
Emissions 16
Noise emission values 16
Vibration values for upper limbs 16
Residual dangers, residual risks 17
Stability 17
Definition of responsible persons 18
Operating company 18
Specialist 18
Drivers 18
Safety tests 20
Regular safety inspection of the truck 20

https://truckmanualshub.com/

3 Overviews

Truck overview 22
Overview 22

Control and display components 23
Tiller 23
Battery charge indicator 24
Digicode option (LFM Go) 26

Markings 28
Location of markings 28
Serial number 29

4 Use

Description 32

List of checks prior to start-up 34

Checks and actions prior to commissioning 35
Charging a Gel or Lead battery (wall-mounted charger) 35
Checking the brake 35
Checking the emergency stop 36
Checking the horn 36
Checking the anti-crush safety device 37

Truck operating instructions 38

Driving 40
Driving safety guidelines 40
Defining directions 41
Start-up 41
Driving 43
Driving on upward and downward slopes 44
OptiSpeed 44
Braking 45
Parking brake 45
Creep Speed function 46
Standby (optional) 46

Operating the FleetManager™ option 48
Description of the FleetManager option 48
Commissioning a truck equipped with the FleetManager™ option 49
FleetManager™ option: Colour code for the LEDs 50
Disconnecting a truck equipped with the FleetManager™ option 52

https://truckmanualshub.com/

Transporting loads 54
Load handling safety rules. 54
Grabbing a loading unit 54
Transporting pallets or other containers 55
Lifting 56
Main lift-Base lift 57
Load handling 57
Using Autolift (option) 60

Using the folding platform (option) 63

Cold store usage (option) 64
Designation 64

Stopping the truck 66

Handling the battery 67
Battery type 67
Order picking 67
Opening/closing the battery cover 68
Charging the battery using an external charger 69
On-board charger 70
Using the charger 71
Gel or Lead batteries: Adjusting the on-board charger 73
Changing the battery 73
Gel and lead side access batteries: changing the battery using a trolley 75
Side access battery: changing the battery using a moveable support 77

Handling the truck in an emergency 79
Towing the truck 79

Handling the truck in specific situations 81
Slinging the truck 81
Lifting the truck 81
Transporting the truck 82
Transporting the machine 83
Transporting the truck in the lift 83
Driving on loading bridges 83

5 Maintenance

General maintenance information 86
General 86
Servicing and maintenance personnel training and qualification. 87
Battery maintenance staff 87

https://truckmanualshub.com/

Maintenance operations that do not require special training . . . 87
Ordering spare parts and consumables . . . 87

Maintenance safety guidelines . . . 88
Servicing and maintenance measures . . . 88
Working on the electrical equipment . . . 88
Safety devices . . . 88

Technical specifications for inspection and maintenance . . . 89

Access to the technical compartment . . . 90

Accessing the reducer and the brake . . . 93

Maintenance plan as required . . . 94

1000-hour/annual maintenance plan . . . 95

3000-hour maintenance plan . . . 96

Chassis, bodywork and fittings . . . 97
Clean the truck . . . 97
Clean the battery and its compartment . . . 98
General information on battery maintenance . . . 99
Folding platform maintenance . . . 100

Steering and wheels . . . 101
Servicing wheels and rollers . . . 101
Adjusting the height of the stabilisers . . . 101
Maintaining the reinforced stabilisers (option) . . . 102
Regular maintenance of the transmission gear . . . 103

Electrical equipment . . . 104
Servicing the electrical system . . . 104
Fuses . . . 104
Battery maintenance . . . 105
Checking the condition of cables, terminals and battery connector . . . 107
Servicing the pump motor . . . 107
Service the on-board charger . . . 107
Cleaning the sensors for the Autolift option . . . 108

Hydraulic systems . . . 109
Oil level check . . . 109
Hydraulic circuit, draining the circuit . . . 110

Lift mast . . . 111
Specific mast maintenance . . . 111

Commissioning and storage . . . 114
Storage of truck . . . 114
Permanent Putting Out of Commission (Destruction) . . . 115

https://truckmanualshub.com/

6 Technical specifications

EXU-H datasheet 118
Technical datasheet EXU-H 20S (option) 122

https://truckmanualshub.com/

https://truckmanualshub.com/

1

Introduction

https://truckmanualshub.com/

Your industrial truck

General

The truck described in these operating instructions corresponds to the applicable standards and safety regulations.

If the truck is to be operated on public roads, it must conform to the existing national regulations for the country in which it is being used. The driving permit must be obtained from the appropriate office.

The truck has been fitted with state-of-the-art technology. Following these operating instructions will allow the truck to be handled safely. By complying with the specifications in these operating instructions, the functionality and the approved features of the truck will be retained.

Get to know the technology, understand it and use it safely - these operating instructions provide the necessary information and help to avoid accidents and to keep the truck ready for operation beyond the warranty period.

Therefore:

– Before commissioning the truck, read the operating instructions and follow the instructions.

– Always follow all of the safety information contained in the operating instructions and on the truck.

https://truckmanualshub.com/

CE labelling

The manufacturer uses CE labelling to indicate that the truck complies with the standards and regulations valid at the time of marketing. The supplied EC declaration of conformity confirms this. The CE labelling is attached to the nameplate.

An independent structural change or an addition to the tow tractor can compromise safety, thereby invalidating the EC declaration of conformity.

The EC declaration of conformity must be carefully stored and made available to the responsible authorities.

▷

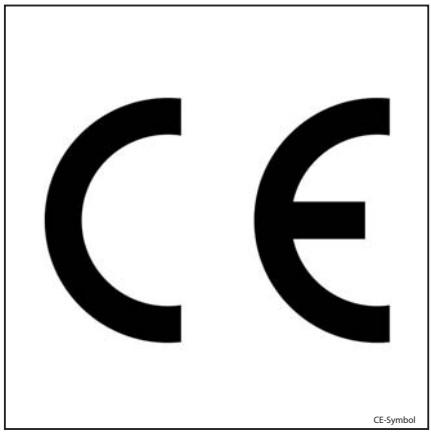

CE-Symbol

Copyright and property rights

This manual - and any excerpts thereof - may not be reproduced, translated or transmitted in any form to third parties without the express written permission of the manufacturer.

https://truckmanualshub.com/

EC declaration of conformity

Declaration

STILL GmbH
Berzeliusstrasse 10
22113 Hamburg

GERMANY

We declare that the machine

Industrial truck	**according to these operating instructions**
Model	**according to these operating instructions**

conforms to the latest version of the Machinery Directive 2006/42/EC.

Person authorised to compile the technical documents:

See EC compliance declaration

STILL S.A.S.

The manufacturer declares that the truck complies with the requirements of the EC directives valid at the time of marketing. This is confirmed by the EC declaration of conformity and by the EC labelling on the nameplate.

An independent structural change or addition to the truck can compromise safety, thus invalidating the EC declaration of conformity.

The EC declaration of conformity must be carefully stored and made available to the relevant authorities.

https://truckmanualshub.com/

Identification label

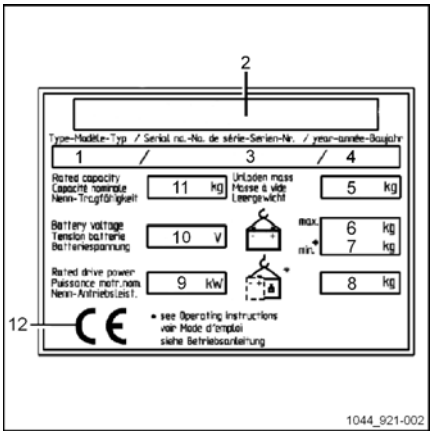

NOTE

Indicate the serial number for all technical enquiries.

1 Model
2 Manufacturer
3 Serial number
4 Year of manufacture
5 Unladen weight (without battery) in kg
6 Maximum battery weight
7 Minimum battery weight (for a lithium-ion battery, the weight of the ballast container is included)
8 Additional weight (ballast weight) in kg
9 Nominal motor power (kW)
10 Battery voltage in V
11 Nominal capacity in kg
12 EC conformity symbol

Rules for the operating company of industrial trucks

In addition to these operating instructions, a code of practice containing additional information for the operating companies of industrial trucks is also available.

This guide provides information for handling industrial trucks:

- Information on how to select suitable industrial trucks for a particular area of application
- Prerequisites for the safe operation of industrial trucks
- Information on the use of industrial trucks
- Information on transport, initial commissioning and storage of industrial trucks

https://truckmanualshub.com/

Internet address and QR code

▷

The information can be accessed at any time by pasting the address **https://m.still.de/vdma** in a web browser or by scanning the QR code.

Eco-design requirements for electric motors and variable speed drives

All motors in this industrial truck are exempt from Regulation (EU) 2019/1781 because these motors do not meet the description given in Article 2 "Scope", Item (1) (a) and because of the provisions in Article 2 (2) (h) "Motors in cordless or battery-operated equipment" and Article 2 (2) (o) "Motors designed specifically for the traction of electric vehicles".

All variable speed drives in this industrial truck are exempt from Regulation (EU) 2019/1781 because these variable speed drives do not meet the description given in Article 2 "Scope", Item (1) (b).

https://truckmanualshub.com/

Spare parts list

The spare parts list can be downloaded by entering the address **https://sparepartlist.still.eu** into a web browser or by scanning the QR code displayed to the side.

When the web page is open, please type in the following password: **Spareparts24!**

On the next screen, please enter your email address and truck serial number to receive the link by email. Then download the spare parts list.

2511

https://truckmanualshub.com/

Permissible use

The truck described in these operating instructions is suitable for lifting and transporting loads.

The truck should only be used for the purposes for which it was designed, as described in these instructions.

If the truck needs to be used for purposes other than those specified in these instructions, you should first:

- Obtain permission from the manufacturer
- Obtain permission from the competent authorities, if applicable

The purpose of obtaining these permissions in advance is to limit danger as far as possible.

Description of use and climatic conditions

Normal use

– Indoor and outdoor use.

– Ambient temperature in tropical and Nordic regions ranging from -10°C to 45°C

– Start capability from -10°C to 45°C.

– Maximum start time of 20 seconds

– Use at up to 2000 metres above sea level.

Special use (partly with special measures) for trucks equipped with Gel or Lead batteries

– Use, for example, in the event of abrasive dust (such as AL203), lint, acid, leach, salt and incombustible substances.

– Ambient temperature in tropical regions up to 55 °C.

– Start capability at -25°C.

– Use at up to 3,500 metres above sea level.

https://truckmanualshub.com/

Unauthorised use

Any danger caused as a result of unauthorised use becomes the responsibility of the operator or driver and not that of the manufacturer.

Use for purposes other than those described in these operating instructions is prohibited.

Transporting people is prohibited.

The forklift truck should not be used in areas where there is a risk of fire, explosion or corrosion, or in areas that are particularly dusty.

Stacking or unstacking is not permissible on inclined surfaces or ramps.

Explanation of symbols used

⚠ DANGER

Compulsory procedure that must be followed to avoid life-threatening danger or physical harm.

⚠ WARNING

Compulsory procedure that must followed to avoid injury.

⚠ CAUTION

Compulsory procedure that must be followed to avoid damage to and/or destruction of equipment.

NOTE

For technical requirements that require special attention.

ENVIRONMENT NOTE

To prevent environmental damage.

Disposing of components and batteries

The truck is made up of different materials.

If components or batteries must be replaced and scrapped, they must be:

- disposed of
- treated or
- recycled in accordance with regional and national regulations

NOTE

The documentation provided by the battery manufacturer must be observed when disposing of batteries.

ENVIRONMENT NOTE

We recommend working with a waste management company when disposing of components and batteries.

https://truckmanualshub.com/

https://truckmanualshub.com/

2

Safety

https://truckmanualshub.com/

Safety regulations

These operating instructions, which come with the truck, must be communicated to all those concerned and in particular to personnel responsible for maintenance and driving. The employer must make sure that the forklift operator has properly understood all the safety information.

Please observe the directives and safety regulations attached, in particular:

- Information concerning the use of materials handling trucks
- Regulations concerning traffic lanes and working areas
- Appropriate behaviour, rights and responsibilities of the driver
- Use in particular areas
- Information about the weight and dimensions of pallets or any other container
- Information concerning starting, driving and braking
- Information concerning maintenance and repair
- Regular checks and technical inspections
- Recycling of lubricants, oils and batteries
- Residual risks.

Care is recommended both for the user and the person in charge (employer) with regard to adhering to all safety rules concerning the use of material-handling trucks.

When instructing forklift operators, we recommend the following points are emphasized:

- The features of the truck
- The special accessories
- The specific features of the working environment.

Train the user in how to drive the truck, until it is under proper control.

Then, and only then, proceed to transferring pallets.

Forklift truck stability is guaranteed when the unit is used correctly.

https://truckmanualshub.com/

Safety regulations for handling consumables

Permissible consumables

⚠ WARNING

Consumables can be dangerous.

It is necessary to follow the safety regulations when handling these substances.

Refer to the maintenance data table for the permissible substances necessary for operation.

Oils

⚠ DANGER

Oils are flammable!

- Follow the statutory regulations
- Do not allow oils to come into contact with hot motor parts.
- No smoking, fires or flames!

⚠ DANGER

Oils are toxic!

- Avoid contact and consumption
- In case of inhalation of steam or fumes, breathe fresh air immediately.
- After contact with the eyes, rinse thoroughly with water (for at least 10 minutes) and then consult an eye specialist.
- If swallowed, do not induce vomiting. Seek immediate medical attention.

⚠ WARNING

Prolonged intensive contact with the skin can result in loss of skin oils and cause irritation.

- Avoid contact and consumption.
- Wear protective gloves!
- After any contact, wash the skin with soap and water and then apply a skin care product.
- Immediately change soaked clothing and shoes.

⚠ WARNING

There is a risk of slipping on spilled oil, particularly when combined with water!

- Collect spilled oil immediately using an oil-binding agent and dispose of it in accordance with regulations.

ENVIRONMENT NOTE

Oils are water pollutants!

Always store oil in containers that comply with the applicable regulations.

Avoid spilling oils.

Collect spilt oil immediately using an oil binding agent and dispose of it in accordance with regulations.

Dispose of old oils according to the applicable regulations.

https://truckmanualshub.com/

Hydraulic fluid

⚠ WARNING

During operation of the forklift truck, hydraulic fluids are pressurised and are hazardous to your health.

- Do not spill these fluids!
- Follow the statutory regulations
- Do not allow the fluids to come into contact with hot motor parts.
- Do not allow to come into contact with the skin.
- Avoid inhaling the spray
- Penetration of pressurised fluids into the skin is particularly dangerous if these fluids escape at high pressure due to leaks in the hydraulic system. In case of such injury, seek medical advice immediately.
- To avoid injury, use appropriate personal protective equipment (e.g. protective gloves, industrial goggles, skin protection and skin care products).

ENVIRONMENT NOTE

Hydraulic fluid is a water-polluting substance!

Always store hydraulic fluid in containers complying with the regulations.

Avoid spilling.

Spilt hydraulic fluid should be removed with oil-binding agents at once and disposed of according to the regulations.

Dispose of old hydraulic fluid according to regulations.

Battery acid

⚠ WARNING

Battery acid contains dissolved sulphuric acid. This is toxic.

- Avoid contact and consumption.
- In case of injury, seek medical advice immediately.

⚠ WARNING

Battery acid contains dissolved sulphuric acid. This is corrosive.

- When working with battery acid, always wear protective clothing and eye protection.
- Do not allow any acid to get onto the clothing or skin or into the eyes; if this does happen, rinse immediately with plenty of clean water.
- In case of injury, seek medical advice immediately.
- Immediately rinse away spilt battery acid with plenty of water.
- Follow the statutory regulations

ENVIRONMENT NOTE

- Dispose of used battery acid in line with the applicable regulations.

https://truckmanualshub.com/

Disposal of consumables

ENVIRONMENT NOTE

Materials that have to be disposed of following maintenance, repair and cleaning must be systematically collected and disposed of in accordance with regulations. Observe the national regulations for your country. Work may only be carried out in areas designated for this purpose. Take care to minimise, as far as possible, any impact on the environment.

- Any spillage of fluids such as hydraulic oil, brake fluid or gear lubricant oil must be immediately soaked up with an oil-binding agent.
- The regulations for disposal of used oil are applicable.
- Any spillage of battery acid must be neutralised immediately.

https://truckmanualshub.com/

Emissions

Noise emission values

Calculated during the test cycle performed in accordance with standard EN12053.

Acoustic pressure level in the driver's compartment			
EXUH 18, EXUH 20, EXUH 20S	L_{PAZ}	=	59 dB (A)
Uncertainty	K_{PA}	±	2.5 dB (A)

NOTE

Lower or higher noise values may occur when using industrial trucks, e.g. due to the mode of operation, environmental factors and other sources of noise.

Vibration values for upper limbs

These values were determined following tests using trucks with standard equipment according to the datasheet (driving over test course with humps).

Specified characteristics for upper limb vibrations	
Vibration values	< 2.5 m/s^2

NOTE

The vibration characteristics for bodily vibrations cannot be used to determine the actual vibration load level during operation. This depends on the operating conditions (state of ground, mode of operation etc.) and should therefore be determined on site, if applicable. It is mandatory to specify the hand-arm vibrations even where the values do not indicate any hazard, as in this case.

https://truckmanualshub.com/

Residual dangers, residual risks

Despite all operational precautions and compliance with standards and rules, the possibility of additional risks when using the truck cannot be entirely excluded.

The truck and all its components comply with the regulations relating to current applicable safety rules.

Persons in the vicinity of the truck must be particularly cautious and react immediately in the event of any malfunction, incident, breakdown etc.

⚠ WARNING

Personnel in contact with the truck must be informed of the risks related to using the truck.

These operating instructions draw your attention to the safety rules.

The risks are:

- Escape of consumables due to leaks, ruptured lines and tanks etc.
- Risk of accident when driving over difficult ground such as slopes, soft or irregular surfaces or in poor visibility etc.
- Falling, tripping etc. when moving on the industrial truck, especially in the wet, with leaking consumables or icy surfaces.
- Loss of stability due to the load being unstable or the load slipping etc.
- Risk of fire and explosion due to batteries and electrical voltages.
- Human error - Disregarding safety regulations.

It is important to adjust the speed of the truck depending on the load and ground conditions.

The stability of the truck has been tested to the latest standards. These standards only take account of the static and dynamic tilting forces that can arise during operation that complies with the specifications and operating rules. Risks caused by misuse or incorrect operation that jeopardise the stability cannot be ruled out in extreme situations.

Stability

Stability is only guaranteed if the industrial truck is used according to the indicated recommendations.

It is not guaranteed in the event of:

– cornering at high speeds

– moving with a load that is protruding to the side (e.g. sideshift)

– turning and driving diagonally on descents or ascents

– driving on descents or ascents with the load on the downhill side

– loads that are too wide or too heavy

– driving with an unstable load

– ramp edges or steps.

https://truckmanualshub.com/

Definition of responsible persons

Operating company

The operating company is the natural or legal person or group who operates the truck or on whose authority the truck is used.

The operating company must ensure that the truck is only used for its intended purpose and in compliance with the safety guidelines set out in these operating instructions.

The operating company must ensure that all users read and understand the safety information in these instructions.

The operating company is responsible for the scheduling and correct performance of regular safety checks.

It is recommended that these checks comply with national performance specifications.

Specialist

A specialist is deemed to be:

- A person whose experience and technical training has allowed him to develop relevant knowledge of industrial trucks
- A person who is also familiar with national health and safety regulations and generally recognised technical directives and conventions (standards, VDE regulations, technical regulations of other European Union member states or countries that are signatories to the treaty that established the European Economic Area). This expertise allows him to assess the condition of industrial trucks in terms of health and safety

Drivers

This truck may only be driven by suitable persons who are at least 18 years of age, have been trained in driving, have demonstrated their skills in driving and handling loads, and have been specifically designated to drive the truck. Specific knowledge of the truck is also necessary.

Driver rights,duties and rules of behaviour

The driver must be duly informed of his rights and duties.

The driver must be granted the required rights.

The driver must wear protective equipment (protection suit, safety helmet, industrial goggles and protective gloves) that is appropriate for the conditions, the task and the load to be lifted. The driver must also wear safety footwear to be able to drive and brake in complete safety.

The driver must be familiar with the operating instructions and have access to them at all times.

The driver must:

- Have read and understood the operating instructions
- Have familiarised himself with safe operation of the truck
- Be physically and mentally able to drive the truck safely

⚠ DANGER

The use of drugs, alcohol or medications that affect reactions impair the ability to drive the truck.

Individuals under the influence of the above-mentioned substances are not permitted to perform work of any kind on or with the truck.

https://truckmanualshub.com/

Prohibition of use by unauthorised persons

The driver is responsible for the truck during working hours. He must not allow unauthorised persons to operate the truck.

When leaving the truck, the driver must secure it against unauthorised use.

https://truckmanualshub.com/

Safety tests

Regular safety inspection of the truck

Safety inspection based on time and extraordinary incidents ▷

The operating company (see chapter entitled "Definition of responsible persons") must ensure that the truck is checked by a specialist at least once a year or after noteworthy incidents.

As part of this inspection:

- A full check of the technical condition of the truck in terms of accident safety must be performed
- The truck must be thoroughly checked to detect any damage that may have been caused by improper use
- A test log must be created.

The results of the inspection must be retained until at least a further two inspections have been carried out.

The inspection date is indicated by an adhesive label on the truck.

– Arrange for the service centre to perform periodic safety inspections on the truck.

– Observe the guidelines for tests carried out on the truck in accordance with FEM 4.004.

The operator is responsible for ensuring that any defects are remedied immediately.

– Contact your service centre.

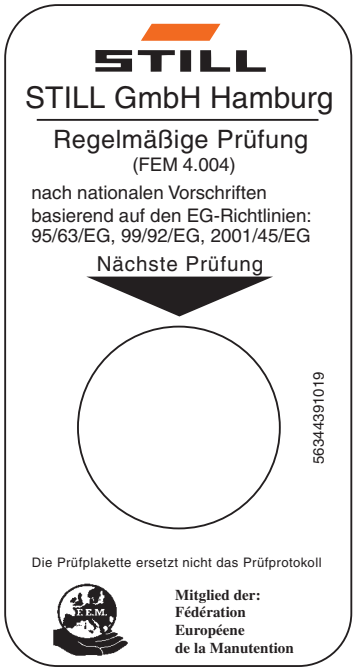

0000_003-001_V3

NOTE

Observe the regulations in force in your country.

https://truckmanualshub.com/

3

Overviews

https://truckmanualshub.com/

Truck overview

Overview

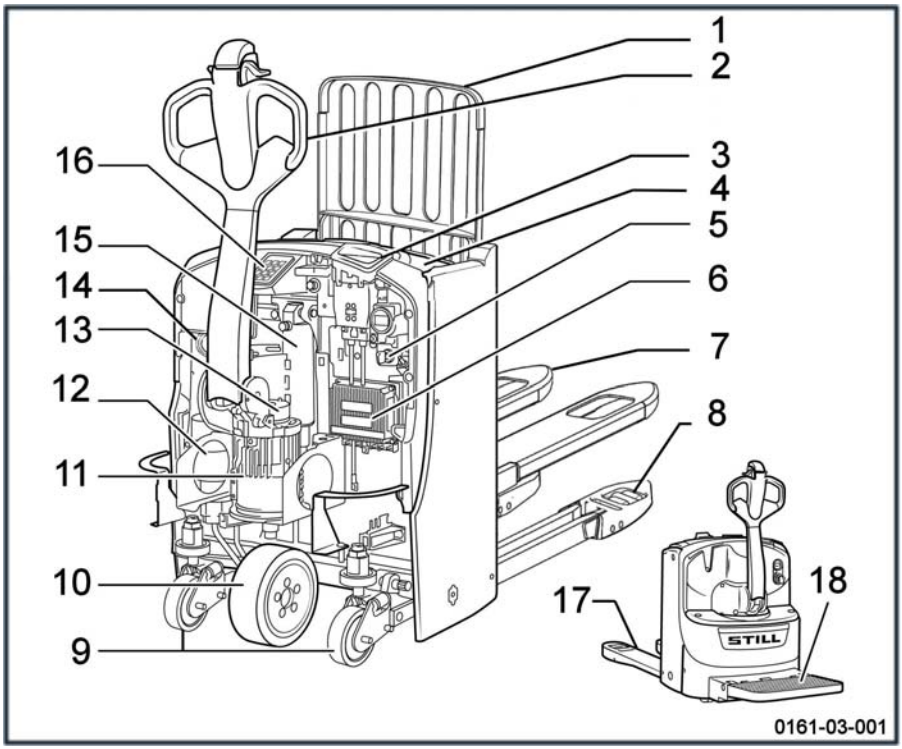

1	Backrest*	10	Drive wheel
2	Tiller	11	Traction motor
3	Battery connector handle (emergency stop)	12	Pump unit
4	Battery cover	13	Electromagnetic brake
5	Ignition key	14	Horn
6	Traction controller	15	Lift cylinder
7	Fork arms	16	Digicode*
8	Load wheels	17	Load arms
9	Stabiliser wheels	18	Platform*

*Option

https://truckmanualshub.com/

Control and display components

Tiller

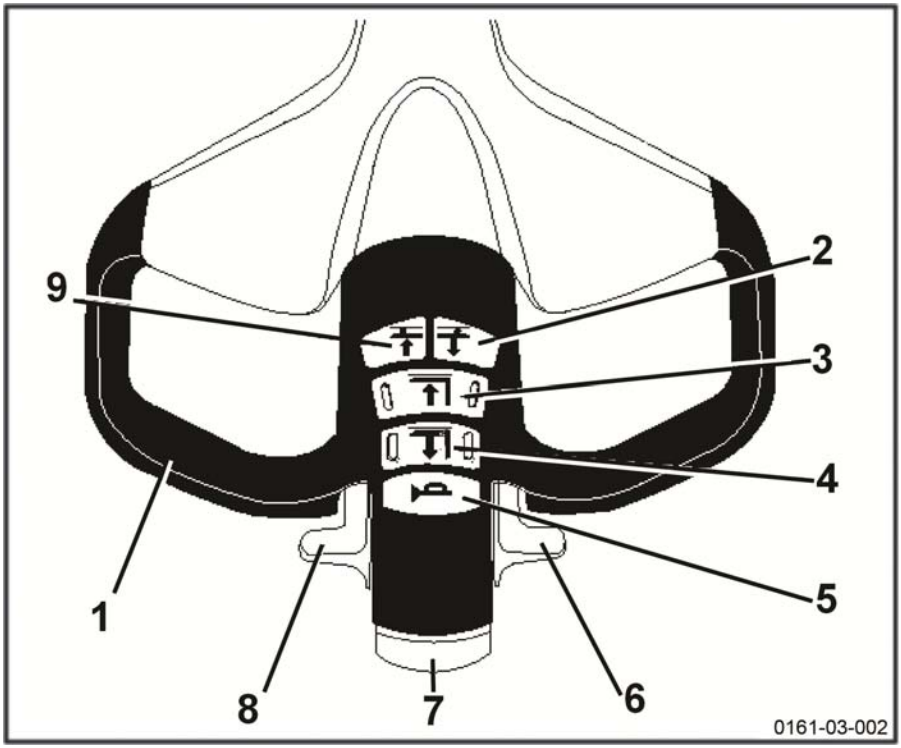

1	Handle	6	Travel throttle valve
2	Load arm lifting	7	Anti-crush safety feature
3	Proportional lowering of fork arms	8	Travel throttle valve
4	Proportional lifting of fork arms	9	Lowering the load arms
5	Horn		

https://truckmanualshub.com/

Battery charge indicator

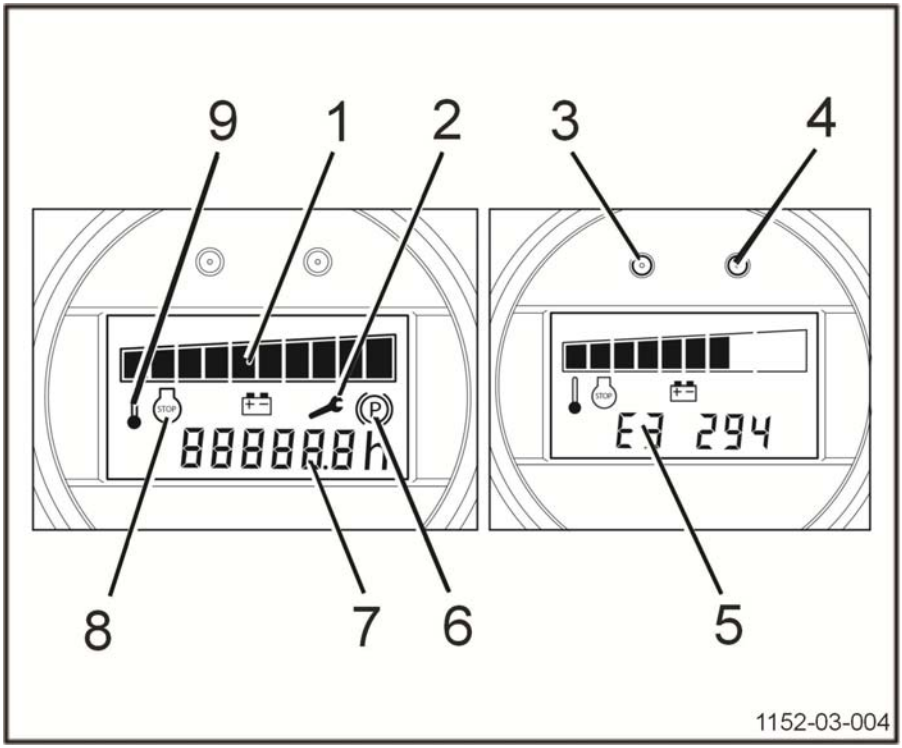

	DESCRIPTION	EXPLANATION	COMMENTS / SCREEN MESSAGES
1	Battery charge level represented by 10 bars	Full charge: 100% Low charge: 10% Discharged : 0%	91% - 100%: 10 bars 1% - 10%: 1 bar 0%: 1 flashing bar (lift function not permitted). NB: To protect the battery, 0% corresponds to max. 80% discharge.
2	Service alarm (red)	**1)**Flashing: less than 50 hours truck operation until the next service **2)**Constant: service date overdue	
3	Red indicator light	Switched on: default or alarm	

https://truckmanualshub.com/

	DESCRIPTION	EXPLANATION	COMMENTS / SCREEN MESSAGES
4	Green indicator light	Switched off: truck switched off Switched on: truck switched on	
5	Breakdown code	E3 294	These codes help the After Sales Service to decide on the appropriate response from the service engineer
6	Fault or brake wear (air gap)		Do not operate the truck
7	Hourmeter	Indicates the number of operating hours of the machine	- The meter runs from when the truck is switched on and a control is used. - When counting, the dot next to the tenths of an hour flashes. -The hourmeter displays hours and tenths of an hour. - When the power supply is disconnected, the hours are stored in the memory.
8	STOP alarm (red)	Misc. problems	Do not operate the truck
9	T° alarm (red)	Constant: control module overheating	-> Truck is stopped In general, wait a few minutes and then continue.

https://truckmanualshub.com/

Digicode option (LFM Go)

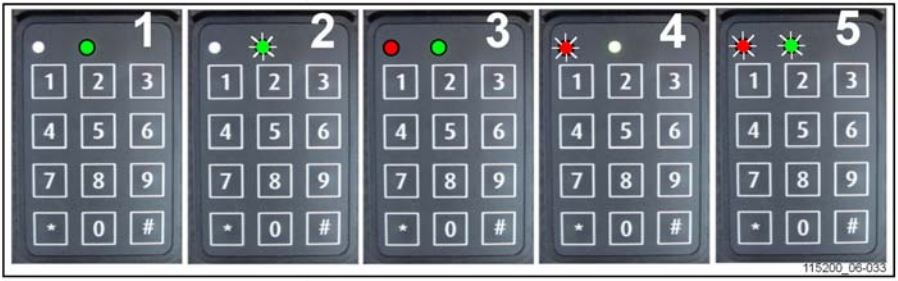

1 Switch ON (operating mode)
2 Switch OFF and awaiting code
3 Programming mode active
4 Key fault or incorrect code
5 Time delay of automatic switch-off

Operation	Key in	LED status	Notes
USE			
ON	* 0 0 0 0 0 # or * 1 2 3 4 5 # (by default)	○ red off ● continuous green (1)(correct PIN) ● red flashing ○ green off (4)(incorrect PIN)	0 0 0 0 0 or 1 2 3 4 5 PIN code by default
OFF	# (3 seconds)	○ red off ● green flashing (2)	Truck power off

PROGRAMMING (truck switch OFF only (2))			
ADMINISTRATOR CODE ESSENTIAL FOR ALL DIGICODE SETTINGS	* 0 0 0 0 0 0 0 0 # (by default)	● continuous red ● continuous green (3)	Once the diodes have gone out, the electronic key automatically reverts to "operating mode"
New operator code	* 0 * 4 5 6 7 8 #	○ red off ● green flashing (2) (code accepted)	Example of new operator code: 45678
Allocating operator codes	* 2 * 5 4 3 2 1 #	○ red off ● green flashing (2) (code accepted)	*2*: operator reference 10 options from 0 to 9
Deleting operator codes	* 2 * #	○ red off ● green flashing (2) (deletion accepted)	*2*: operator reference (between 0 and 9)
Modifying administrator codes	* * 9 * 1 2 3 4 5 6 7 8 #	○ red off ● green flashing (2) (code accepted)	
Restoring the initial administrator code			To reactivate the default administrator code (00000000), please contact your agent or nearest dealer.

https://truckmanualshub.com/

PROGRAMMING (truck switch OFF only (2))			
Activating the automatic switch-off	* * 2 * 1 #	● red flashing ● green flashing (5) (5 s before switch-off)	Power switches off automatically after 10 mins (600 s by default) if the truck is not being used.
Setting the time delay of the automatic switch-off	* * 3 * 6 0 #	○ red off ● green flashing (2) (value accepted)	Example: automatically switches off after 1 min. (60s) when not used. Minimum setting = 10 s / maximum = 3000 s
Deactivating the automatic switch-off	* * 2 * 0 #	○ red off ● green flashing (2) (command accepted)	

https://truckmanualshub.com/

Markings

Location of markings

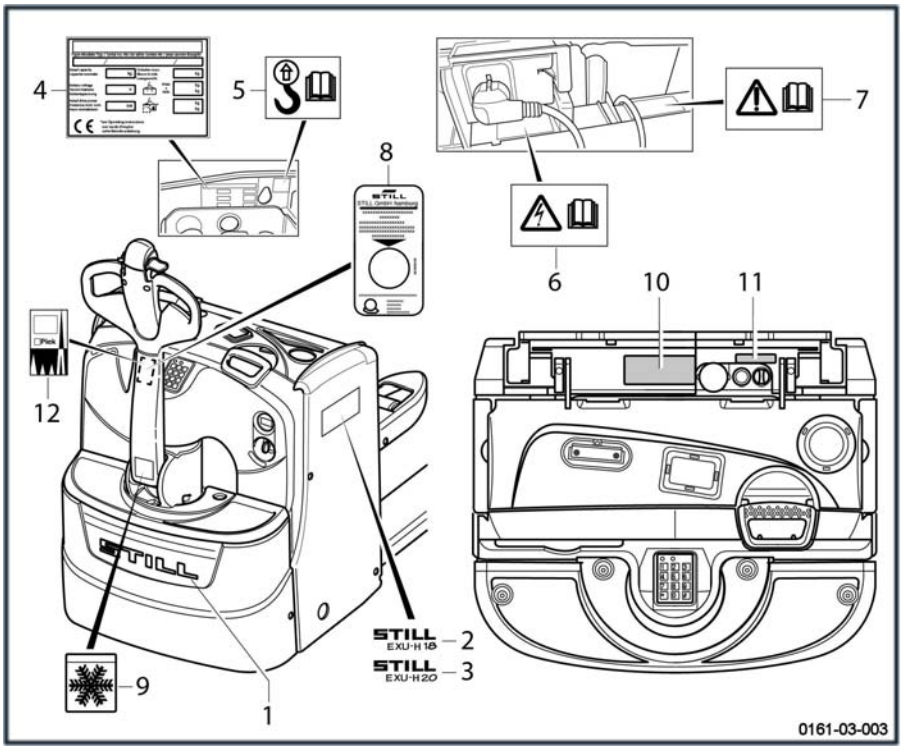

1	Brand label	8	Warranty label (for Germany only) on the inside of the tiller
2	EXU H 18 model label	9	Cold store label
3	EXU H 20 model label	10	Capacity label
4	Identification label	11	"Automatic lifting and lowering" label (option)
5	Slinging label	12	PIEK label (option) on the outside of the tiller
6	ELECTRICAL DANGER label		
7	DANGER INSTRUCTIONS label		

https://truckmanualshub.com/

Serial number

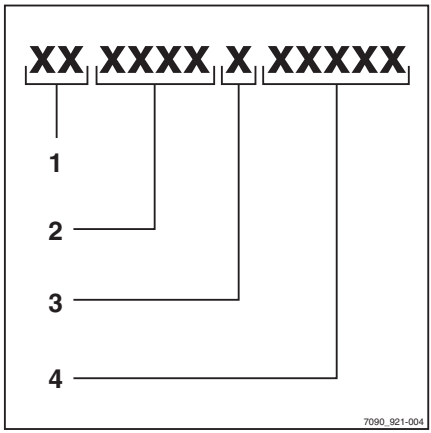

NOTE

Indicate the serial number for all technical enquiries.

The serial number contains the following information:

1 Production location

2 Type

3 Year of production

4 Count number

https://truckmanualshub.com/

https://truckmanualshub.com/

4

Use

https://truckmanualshub.com/

Description

The pallet trucks EXU-H18 and EXU-H20 are made up of a high lift (fork arm) and a low lift (load arm).

The fork arms are used to level the pallet thus limiting incorrect posture during load handling.

The pallet can reach a height of 800 mm above the ground.

EXU-H capacity

EXU-H18: 1800 kg maximum on the load arms and 800 kg maximum on the fork arms

EXU-H20: 2000 kg maximum on the load arms and 800 kg on the fork arms

EXU-H20*: 2000 kg on the load arms and 800 kg on the fork arms.

*S: Folding platform

Applications

- pallet truck

- rolling lift table/levelling table (height 800 mm)

- order picking

- double stacking (occasional for this type of truck), it is possible to load an empty pallet on the load arms

Driving

Drive is provided by a 1.2 kW asynchronous traction motor.

The motor unit is driven by the truck controller, which incorporates the transistor speed controller.

The power supply to the traction motor is controlled by an electronic controller with microprocessor, which provides complete control of speed, acceleration and braking.

Power is supplied by a 24 volt lead-acid battery.

Two types of battery removal are available

- Vertical removal (2Pzs BS) on EXU-H18 and (2Pzs DIN) on EXU-H20
- Side removal (2Pzs DIN) available as an **option** on EXU-H20 and EXU-H20S.

Steering

A long, robust, ergonomic tiller allows the operator to direct the drive/steering wheel effortlessly.

For safety reasons a gas spring automatically returns the tiller to the upper position when it is released.

The speed of the truck is limited to 6 km/h in both directions of travel (key in the Hare position).

The speed of the truck is limited to 4 km/h in both directions of travel (key in the Tortoise position).

Lifting system

The cylinder activates the lift shaft, which transmits the movement to the push rods.

These activate the wheel clevises, resulting in the load arms lifting.

All the joint pins are treated for anti-wear and anti-corrosion properties. The joint rings are self-lubricating.

Pump motor power:

- EXU-H18, EXU-H20 and EXU-H20S: 1.2 kW

Braking system

- counter-current, upon accelerator release
- counter-current by reversing the drive direction
- counter-current, controlled by the anti-crush safety button
- electromagnetic safety device, controlled by the emergency stop handle

https://truckmanualshub.com/

- electromagnetic safety device, controlled by the upper or lower position of the tiller
- electromagnetic parking, applied when supply is cut.

Stabilisers

The 5-point chassis has 2 suspended stabilisers which compensate for ground irregularities.

Operator's seat

The standard equipment at the operator's seat comprises:

- an office compartment for storing rolls of film and adhesive, gloves, pens etc.
- a clip for attaching documents together
- a battery disconnection handle (emergency stop) located in the driver's place
- an hour meter/discharge indicator
- a 3-position ignition key (stop/tortoise/hare)
- a tiller with the following controls: forward/reverse travel, accelerator, lifting/lowering of the fork arms (proportional control), lifting/lowering of the load arms, horn and safety reverser
- OptiSpeed: variable speed according to tiller position.

As OPTIONS:

- autolift (automatic lifting and lowering of fork arms)
- load backrest
- digicode
- cold store
- Fleet Manager
- reinforced stabilisers
- on-board charger
- accessory holder

https://truckmanualshub.com/

List of checks prior to start-up

⚠ WARNING

Damage or other defects on the truck or attachments (special equipment) can result in accidents.

If damage or other faults are noticed on the truck or attachments (special equipment) during the following inspections, do not use the truck until it has been properly repaired. Do not remove or disable the safety systems and switches. Do not change the pre-set values.

Before start-up, ensure that the truck operates correctly.

To do this, perform the following checks:

- The load arms must not show any signs of noticeable damage (for example: bending, cracks, significant wear).
- Check that there are no signs of leaking consumables under the truck.
- Do not restrict the field of vision. Ensure the visible area specified by the manufacturer is observed.
- Attachment parts (special equipment) must be properly secured and function according to their operating instructions.
- Damaged or missing stickers must be replaced in compliance with the marking position table.
- The roller channels must be coated in a visible layer of grease.
- The wheels must show no signs of defects or heavy wear. They must be mounted correctly.
- Check that there are no foreign objects that could hinder the operation of the wheels and rollers.
- The warning devices (horn etc.) must work.
- The battery hood must be closed.
- Check that the hoods are correctly positioned.
- The operator must be qualified to drive the truck. The operator must be able to reach the controls and operate them (especially the anti-crush device). Do not obstruct access to the controls.

Please inform your supervisor if you notice any defects.

https://truckmanualshub.com/

Checks and actions prior to commissioning

Charging a Gel or Lead battery (wall-mounted charger)

▷

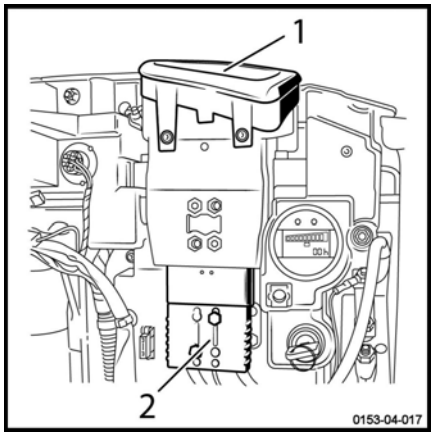

- Open the cover.
- Leave it open.
- Remove the battery disconnection handle (1) from the truck plug (2).
- Connect the wall-mounted charger.

Checking the brake

▷

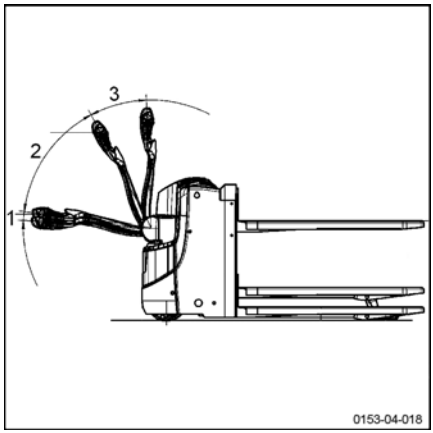

NOTE

Perform this check on a flat surface.

- Drive the machine forward
- Tilt the tiller in areas (1) and (3)

In these two areas, the machine is braked and the drive unit is no longer powered.

Releasing the tiller in the drive area (2) sends the tiller into the area (3) and cuts traction.

https://truckmanualshub.com/

Checking the emergency stop

▷

- Pull the emergency stop handle (4) upwards.
- The power supply to the machine is cut off.
- The electrical controls and motors are disabled.
- The electromagnetic brake is applied.
- Reconnect the emergency stop handle (4) to restore the circuits.

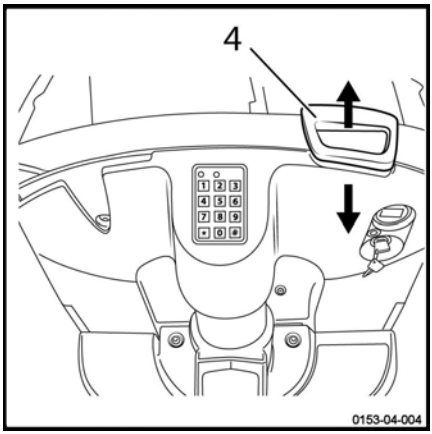

Checking the horn

▷

- Press the horn button (5) located on the upper part of the tiller.
- The horn sounds.

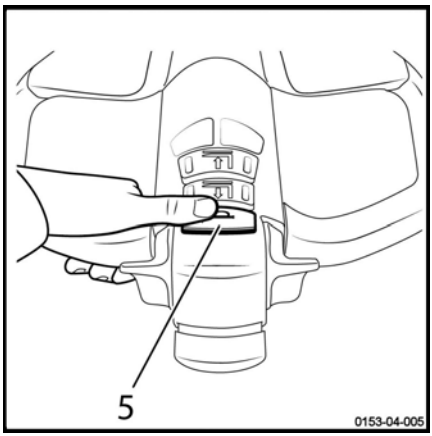

https://truckmanualshub.com/

Checking the anti-crush safety device

Anti-crush safety function

The machine moves in the opposite direction when the anti-crush button (2) is pressed.

If the truck is being operated in narrow areas (such as in a lift for example), the operator may get stuck against the wall if care is not taken. Without an anti-crush safety device, the tiller could injure the operator.

The truck immediately moves off in the opposite direction when the anti-crush device on the tiller head comes into contact with the driver's body. When the operator moves away from the anti-crush safety device, the machine stops even if a drive direction is selected again.

Normal operation may be resumed after releasing the drive switches.

Checking the anti-crush safety device ▷

⚠ WARNING

Ensure that the test zone is free of people and objects, both in front of and behind the truck.

– Move the drive switch (1) or (3) to move the truck towards you.

– Operate the anti-crush safety device (2).

The truck stops and accelerates in the opposite drive direction.

– Release the anti-crush safety button.

The truck stops.

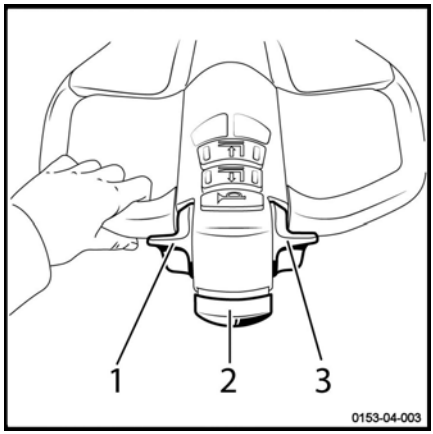

https://truckmanualshub.com/

Truck operating instructions

The trucks are designed for indoor and outdoor use in non-hazardous atmospheres. The temperature should be between -10°C and +45°C and the relative humidity of the air less than 95%.

NOTE

A cold store option is available for lower temperatures.

The places where the truck is used must comply with the applicable regulations (condition of the ground, lighting etc.).

The trucks must be used on dry, clean and flat ground.

Before using the truck, it is essential to check the working environment. This check can take the form of visual inspection.

The work area must be clear. The truck's path must be free of obstacles and people.

The forklift operator must be alert to anything that might prevent manoeuvres being carried out safely. The following may create a potential danger:

- A person near the truck
- The forklift operator must not use an MP3 player or any other electrical equipment that could impair awareness of his/her surroundings
- There must be no signs of oil or grease on the floor

The forklift operator must take care when transporting a load. The load dimensions can interfere with manoeuvres and restrict the field of vision. The speed of the truck must also be reduced as the truck could tip over when breaking or cornering.

The loads must be consistent, with a maximum recommended height of 2 m.

For uses other than those shown above, please consult the After-Sales Service Centre.

It is important to use pallets that are in good condition.

Speed must be reduced when moving over obstacles to prevent the truck from becoming unbalanced and vibrations in the forklift operator's arms.

The trucks can drive across ramps and shallow inclines. With an initial lift, they can cross larger obstacles.

WARNING

Risk of loss of stability

– Always adapt your driving to the ground conditions (uneven surfaces etc.), particularly hazardous working areas and the load.

NOTE

- *To prevent the bottom of the load lift system from scraping the ground, always move the load arms to the raised position before setting off*
- *Always switch off the ignition before leaving the truck*

WARNING

Risk of injury

Always keep your hands on the controls. Never put your hands near moving parts and assemblies without first lowering the load arms to the ground and disconnecting the battery.

For effective protection, safety shoes must be worn.

WARNING

Driving safety guidelines:

– The driver must drive slowly around corners and when entering narrow passageways.

– The driver must always maintain a safe braking distance from vehicles or people in front of him.

– The driver must avoid stopping suddenly, making U-turns too quickly and overtaking in dangerous areas with poor visibility.

https://truckmanualshub.com/

⚠ CAUTION

Risk of injury

Before using a side access truck, check that the battery is correctly locked.

https://truckmanualshub.com/

Driving

Driving safety guidelines

Behaviour when driving

Operators must obey the same rules within the plant as on the road. They must drive at speeds appropriate for the driving conditions.

Therefore, they must drive slowly:

- When cornering
- Through narrow passageways
- Through swing doors
- In low-visibility areas
- When the roadway is uneven

Operators must always maintain a safe braking distance from vehicles or people in front of them. They must always maintain control of the truck. They must avoid sudden stops, making fast U-turns, overtaking other vehicles in potentially hazardous or low-visibility areas.

Driving the truck while sitting on top of it is prohibited.

These trucks are designed to be used as a pallet truck. Therefore:

- Never sit on the truck to drive it
- The truck must not be used as a stepladder
- This truck is not designed to transport people
- The operator must always stay within the truck clearance
- Stay in the safety area (working area defined by the manufacturer)
- Ensure the stability of the truck and do not exceed its maximum capacity

Use of a telephone or radio with the truck is permitted.

However, do not use these devices when driving as they may distract you.

Take a test drive on an open surface.

NOTE

Drivers must wear safety shoes that fit properly to be able to drive and brake in complete safety.

https://truckmanualshub.com/

Defining directions

Names used in the text: forward travel (1), reverse travel (3), to the right (2) and to the left (4) refer to component installation position with respect to the driver's compartment.

The load is positioned at the back.

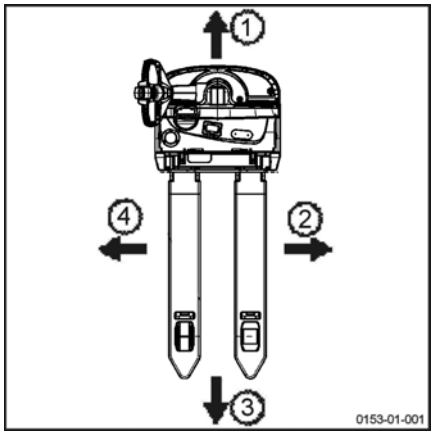

Start-up

- Connect the battery plug , if necessary
- Keep the tiller in the vertical position.
- Put the throttle in neutral (centre position).
- Insert the ignition key (1) and turn it to the desired position or enter the 5-figure code then validate using the # key on the digicode keyboard (default code = 00000).

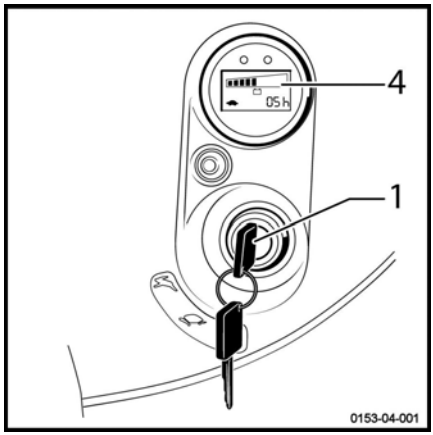

NOTE

With the digicode option, when the key is turned to the 0 position the truck is in tortoise mode. The truck will still function if the key is removed.

https://truckmanualshub.com/

Selecting the driving mode

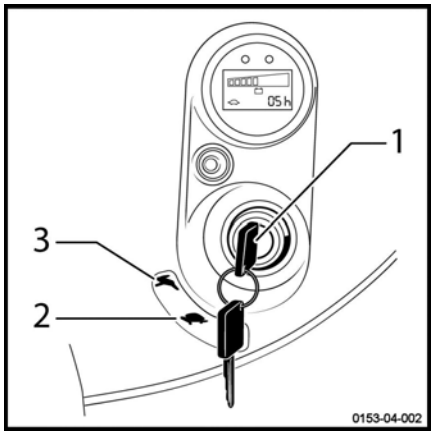

NOTE

The ignition key may be turned to two different positions to choose the driving mode.

"Tortoise" position (2) : gentle acceleration and deceleration; max. speed: 4 km/h

"Hare" position (3) : strong acceleration and deceleration; max. speed: 6 km/h

– Check the battery charge with the combined indicator (4) and change or charge the battery if necessary.

– Turn the ignition key (1) to the "hare" position (3) for normal driving mode.

NOTE

Perform a visual check on the truck before starting.

https://truckmanualshub.com/

Driving

– Turn the ignition key to the `Tortoise` position (slow acceleration and deceleration) or the `Hare` position (faster acceleration and deceleration).

– Lower the tiller in (2) zone. ▷

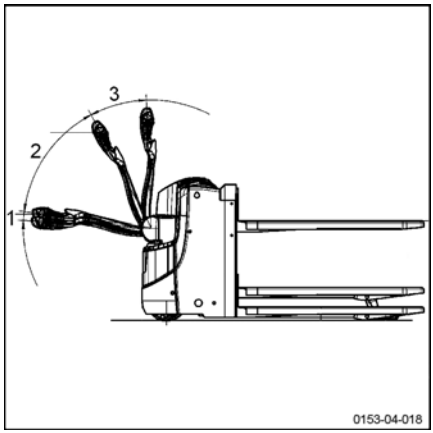

NOTE

The truck is in the drive position in the (2) position. In the lower (1) or upper (3) the brake is applied and the traction motor is switched off.

NOTE

Always operate the travel throttle slowly, as the truck reacts immediately. Abrupt starts or braking or reversal of direction of travel must be avoided at all costs.

Forward travel

– Press with your thumb on the lower part of the throttle.

– The speed increases with the movement of the throttle; speed is limited to 4 or 6 km/h depending on the position of the key.

– When the control throttle is released, the truck brakes electrically.

Reverse travel

– Press with your thumb on the upper part of the throttle.

– The speed increases with the movement of the throttle; speed is limited to 4 or 6 km/h depending on the position of the key.

– When the control throttle is released, the truck brakes electrically.

Reversing the direction of travel

– Release the throttle.

– Operate it progressively in the opposite direction until the required speed is reached.

https://truckmanualshub.com/

Driving on upward and downward slopes

Slopes should always be approached with the load facing towards the top of the slope. Only slopes marked as clear traffic routes compatible with the truck's technical specifications can be safely used.

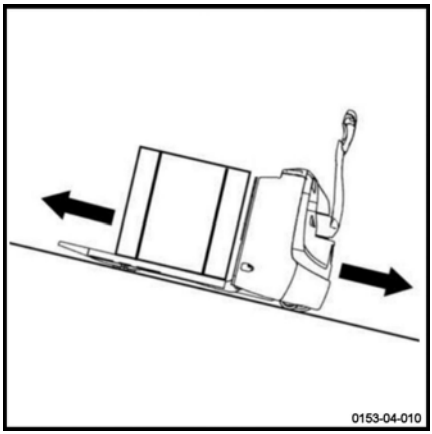

⚠ DANGER

The operator must ensure that the ground is clean and has a non-slip surface.

Never travel across slopes or make a U-turn on a slope!

Do not park the truck on a slope.

Reduce speed when going down slopes.

Please observe the maximum gradients defined as suitable for laden and unladen transport.

OptiSpeed

– Lower the tiller.

NOTE

The truck is only in a driving position in areas (2) & (3). In the lower (4) or upper (1) zone, the brake is applied and the traction motor is switched off.

In zone (3) the truck can be used at full speed. The traction speed is proportional to the throttle activation.

In zone (2) the maximum authorised speed varies according to the angle of the tiller.

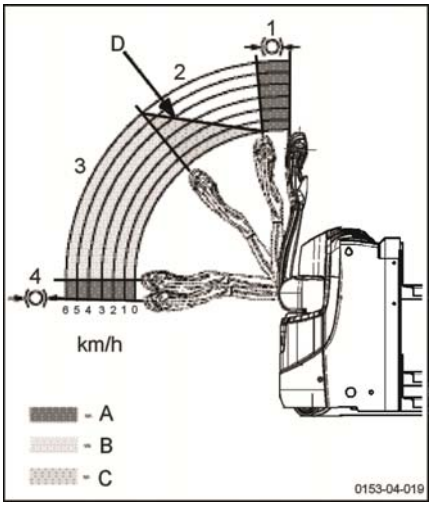

A	Braking range
B	Unlimited driving range
C	Driving range speed limiter
D	Maximum speed charasteristic

https://truckmanualshub.com/

Braking

▷

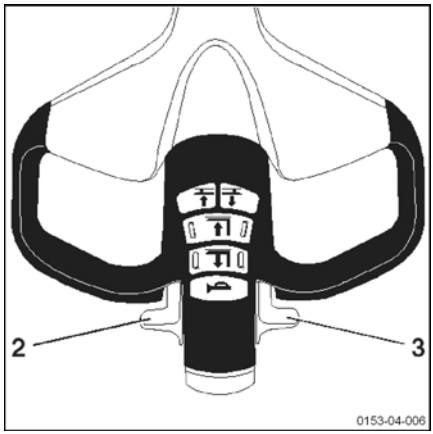

⚠ WARNING

The quality of the floor surface affects the braking distance of the truck.

To be taken into consideration when driving.

Gentle braking

– During operation, release throttle (2) or (3).

Moderate braking

– Switch throttle (2) or (3) in the opposite direction of travel.

Parking brake

▷

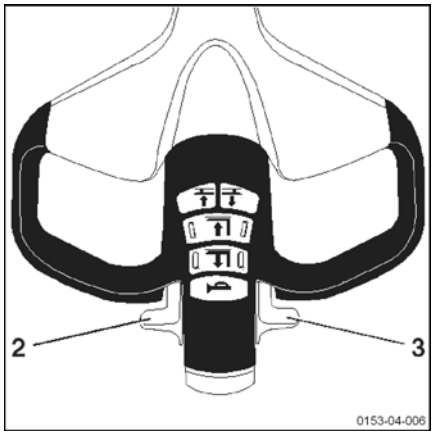

– Release the drive direction switch (2) or (3).

The truck is braked with the electromagnetic brake when its speed approaches 0 km/h or when the tiller returns to the vertical position.

https://truckmanualshub.com/

Creep Speed function

This function makes it possible to manoeuvre the truck in confined spaces.

The tiller remains in the vertical position.

– Press the Creep Speed button (1) (tortoise icon) on the tiller. Hold the button down.

– Gently move the drive switch forwards or backwards depending on the manoeuvre to be performed.

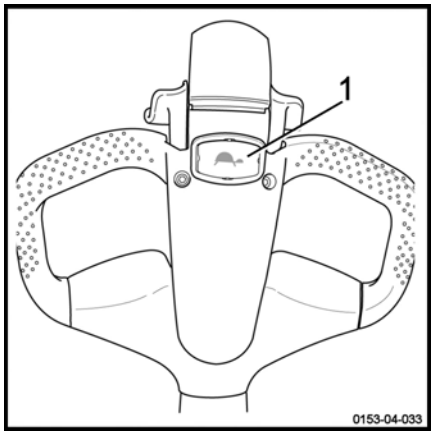

NOTE

The traction speed can be set between 0.5 and 1.5 km/h. Contact the After-Sales Service to change this.

The Creep Speed function cancels automatically when the tiller is in the drive position.

CAUTION

Danger of forklift operator being trapped by the truck.

Gently move the drive switch to adjust the truck speed. This prevents it moving too quickly towards the operator.

NOTE

If the operator releases the Creep Speed button and/or the drive switch, the vertical position of the tiller applies the emergency brake again.

Standby (optional)

The truck can be put in energy-saving mode to prolong the service life of the battery when it is not in use.

After a certain period of inactivity, the truck switches off. To restart the truck, you must switch it off and then switch it on again, using the key.

This time period can be configured between 0 and 10 minutes. This function is disabled by default.

https://truckmanualshub.com/

Timeout can be adjusted. Please call the After-Sales Service Centre.

https://truckmanualshub.com/

Operating the FleetManager™ option

Description of the FleetManager option

The FleetManager option allows you to control access to the truck. The option is a fleet management system.

You can access the system:

- Either by using a keypad
- Or by using a reading device for a transponder or an RFID card

The fleet manager sets the access details via the web interface. This affects the transponder cards or PIN codes for the corresponding trucks. It is possible to change the amount of time for which the access authorisation is valid.

Software is also available.

Additional options:

- Shock sensor
- Tools for wireless data management:
  - GSM[2]GPRS[1] module with antenna

The options available on the truck are:

- Access control
- Access control and shock sensor
- Access control and GPRS module
- Access control, shock sensor and GPRS module

[1] GPRS: General Packet Radio Service

[2] GSM: Global System for Mobile Communication

Shock sensor

This sensor allows you to record the shocks received by the truck.

If the truck receives a shock, it is possible to configure a speed reduction.

The fleet manager is the only person who is able to change certain parameters.

NOTE

Replace the sensor if it is faulty.

GSMGPRS module

The module consists of a GSM modem and an antenna.

The module allows you to:

- Access truck information remotely
- Use geolocation

The data is stored on a server.

Data is transmitted by Bluetooth (default) or by GSM module (optional).

https://truckmanualshub.com/

Commissioning a truck equipped with the FleetManager™ option

Commissioning a truck equipped with a keypad or an electronic key ▷

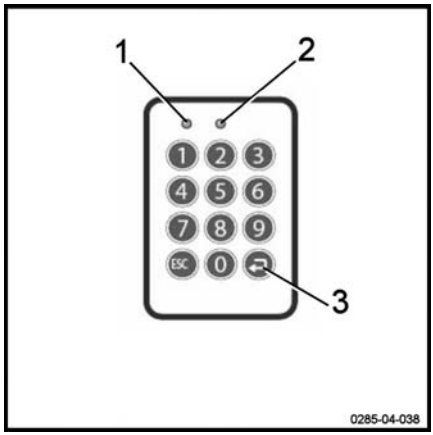

– Turn the switch key to start the truck.

– Enter the PIN code on the keypad. The PIN code consists of five to eight digits.

By default, no PIN code is given as a factory setting.

If the PIN code is correct, the LED (1) is not lit. The LED (2) flashes slowly at two-second intervals (green colour).

No acoustic signal sounds.

– Press the Enter key (3) to confirm.

The truck is now ready for use.

NOTE

In the configuration, the fleet manager can specify that the operator must enter a preliminary code when logging in. The operator can then assess the state of the truck.

Commissioning a truck equipped with an RFID reading device ▷

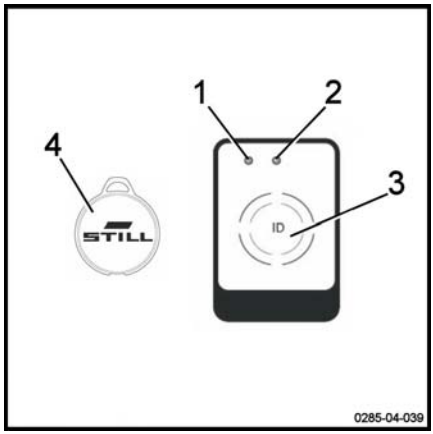

– Turn the switch key to start the truck.

– Place the RFID transponder card or the RFID transponder (4) in front of the reading device (3).

If the card is correct, the LED (1) is not lit. The LED (2) flashes slowly at two-second intervals (green colour).

Two acoustic signals sound.

The truck is now ready for use.

https://truckmanualshub.com/

FleetManager™ option: Colour code for the LEDs

The LEDs can have different statuses and different colours. Below is the list of the most common messages and their meanings.

Malfunction			Cause	Solution
LED status		Signal transmitter		
LED 1	LED 2			
Lit continuously Red colour	Off	A long acoustic signal sounds	**Reading device variant:** no valid access authorisation	Generate a valid access authorisation using the interface
			Keypad variant: no valid access authorisation for the PIN code entered	
			Keypad variant: PIN code entered incorrect or not confirmed using the Enter key	Re-enter the PIN code
Lit continuously Red colour	Flashes once Green colour	A long acoustic signal sounds	The operator has been granted access authorisation. But the period of validity has expired.	Use the interface to enter a new period of validity
			The date of the truck is incorrect	Update the date of the truck
Flashes quickly Yellow colour	Lit continuously Green colour		Memory is 80% full	Clear the memory
Flashes quickly Red colour	Flashes quickly Red colour	A long acoustic signal sounds upon activation	There are several possible causes: - Reading device or keypad not accessible - GPRS module not accessible - Built-in rechargeable battery flat - Memory full	Contact the After-Sales Service Centre

https://truckmanualshub.com/

Malfunction			Cause	Solution
LED status		Signal transmitter		
LED 1	LED 2			
Flashes quickly Red colour	Lit continuously Green colour		A shock has occurred	Reset the shock
Flashes quickly Blue colour	Off		The truck is connected via a Bluetooth link. The operating data is being read. The reading process can take up to five minutes.	The truck is switched on but is not moving. Wait for all of the relevant data to be read. As soon as the LEDs change to a different status, resume work.

https://truckmanualshub.com/

Disconnecting a truck equipped with the FleetManager™ option

NOTE

Operators must not log off intentionally while driving.

WARNING

Access to the truck must be disabled.

Unauthorised users are not allowed to use the truck.

Disconnecting a truck equipped with a keypad or electronic key

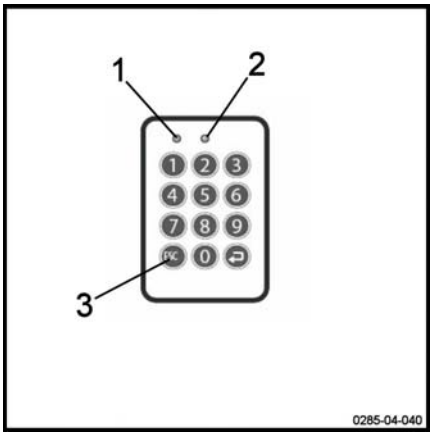

– Park the truck in a safe place.

– Press the button (3) to log off. Keep the button pressed in.

No LEDs light up. A long acoustic signal sounds.

The LED (1) lights up for a second (red colour). The LED (2) is not lit. A long acoustic signal sounds.

The LED (1) is no longer lit. The LED (2) flashes slowly at two-second intervals (green colour). No acoustic signal sounds.

The truck is disabled.

– Turn the switch key to the off position to switch the truck off completely.

https://truckmanualshub.com/

Disconnecting a truck equipped with an RFID reading device ▷

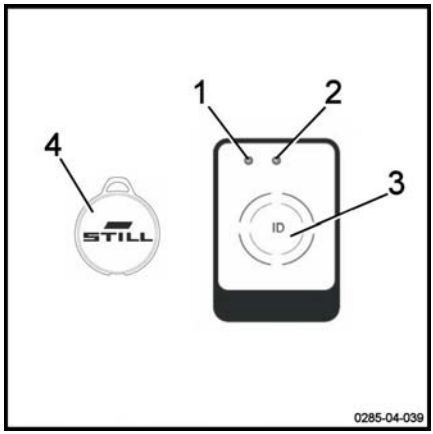

– Park the truck in a safe place.

– Briefly place the RFID card or the RFID transponder (4) in front of the reading device (3).

The LED (1) lights up for a second (red colour). The LED (2) is not lit. A long acoustic signal sounds.

The LED (1) is no longer lit. The LED (2) flashes slowly at two-second intervals (green colour). No acoustic signal sounds.

The truck is disabled.

– Turn the switch key to the off position to switch the truck off completely.

https://truckmanualshub.com/

Transporting loads

Load handling safety rules

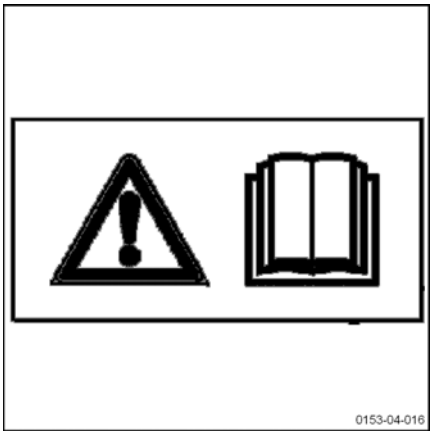

⚠ WARNING

Closely follow the following instructions before picking up loads. Never touch or stand on moving parts of the truck (e.g. lifting device, pushing devices, work installations or devices for picking up loads).

⚠ WARNING

Take care not to trap hands or feet when operating the truck.

Grabbing a loading unit

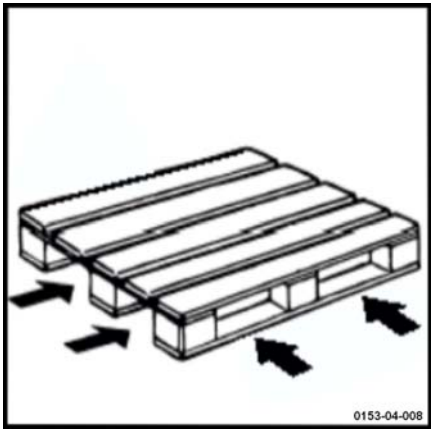

Watch out for the following elements:

- the load must be well-balanced and centred correctly between the fork arms
- the fork arms must be sufficiently slid underneath the load to guarantee stability.

The load must not protrude too far over the fork arms, nor should the fork arms protrude too far out from the load.

https://truckmanualshub.com/

Transporting pallets or other containers ▷

As a general rule, loading units must be transported one by one (e.g. pallets). Transporting several loading units at a time is only authorised:

- when the safety preconditions are fulfilled.
- by order of the monitoring agent.

The forklift operator must ensure that the loading unit is properly packaged. He must only move loading units that have been carefully prepared and that meet the safety requirements.

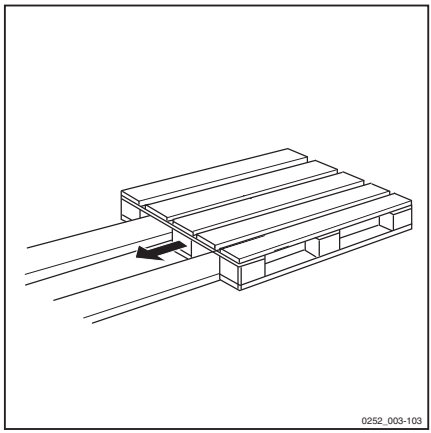

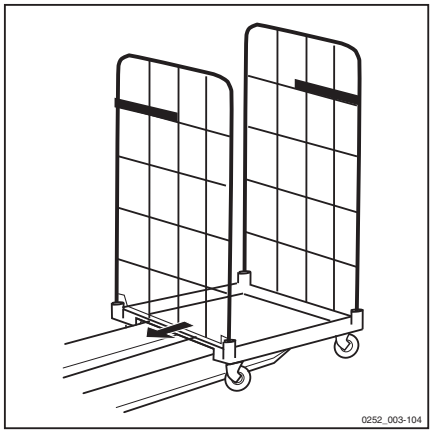

https://truckmanualshub.com/

Lifting

⚠ WARNING

Risk of injury

The safety regulations must be strictly adhered to.

It is strictly forbidden to touch or stand on moving parts (e.g. lifting device, pushing devices, work installations, load lifting devices).

The pallet truck has two lift systems:

1-Main lift (forks)

The maximum load is 800 kg at a distance of 600 mm from the centre of the load. The lift reaches a maximum height of 800 mm.

⚠ WARNING

The illustrations are only examples. Only the values shown on your truck's capacity label should be taken into consideration.

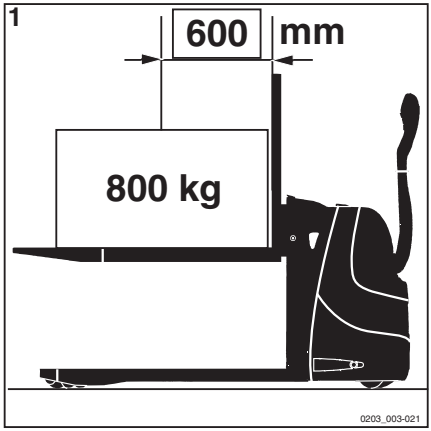

2-Base lift (load arms)

- Maximum load EXU-H18: 1800 kg at a distance of 600 mm from the centre of the load.

- Maximum load EXU-H20: 2000 kg at a distance of 600 mm from the centre of the load.

⚠ CAUTION

The total load (main lift+base lift) must not exceed 1800 kg on the EXU-H18 and 2000 kg on the EXU-H20.

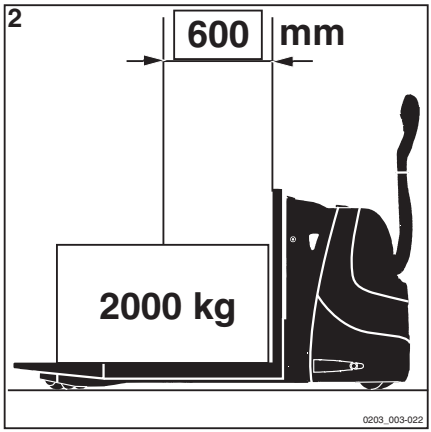

https://truckmanualshub.com/

Main lift-Base lift

Main Lift

▷

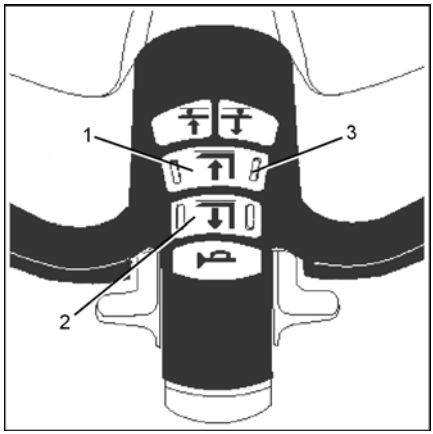

Fork arms lifting

– Press the proportional control button (2).

Fork arms lowering

– Press the proportional control button (1).

NOTE

A groove (3) is present on each side of the button. This helps you to feel the button and to identify it even if there is not much light.

The fork arms are lowered to the lowest position. It is always possible to stop the movement of the forks by releasing the buttons.

Base lift

▷

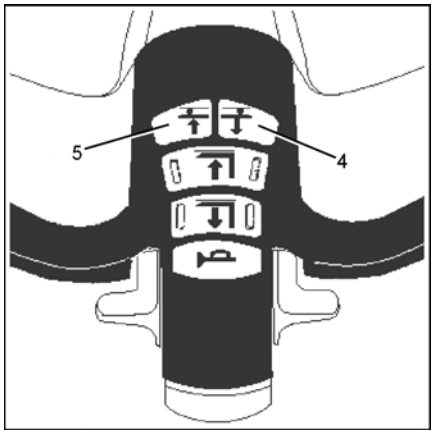

Lifting the load arms

– Press button (4).

Lowering the load arms

– Press button (5).

Load handling

⚠ CAUTION

Risk of injury

Safety shoes must be worn.

Transporting people is strictly prohibited.

https://truckmanualshub.com/

⚠ CAUTION

Risk of falling

Be careful not to touch adjacent loads or loads positioned at the side or in front of the load being handled.

The loads are to be stacked so that they are aligned with a small space between each of them and so that they do not catch each other.

Before picking up a load

Ensure that its weight does not exceed the truck's capacity.

– Refer to the nominal capacity specified on the truck's identification label.

– You must also make sure that the load is stable, well-balanced and centred between the load arms in order to avoid dropping any part of the load.

– Check that the width of the load is compatible with the width of the load arms.

Picking up a load

▷

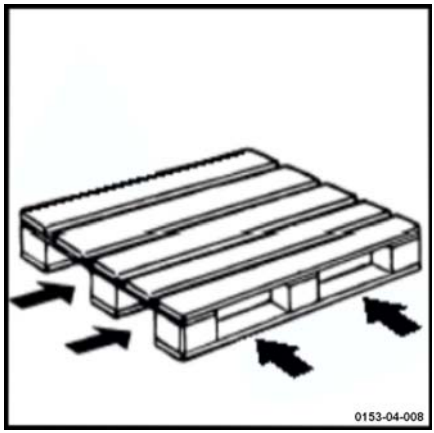

– Approach the load carefully.

– Lower the load arms so that they can easily be inserted into the pallet.

– Insert the load arms under the load.

– If the load is shorter than the load arms, position it so that the end of the load overhangs the end of the load arms by a few centimetres, in order to avoid hooking the load in front.

– Raise the load a few centimetres from its support.

– Withdraw the load slowly and in a straight line.

Transporting a load

Observe the following recommendations:

- Drive forwards for optimum visibility
- Travel up or down slopes with the load uphill Do not travel across the slope or make a U-turn

https://truckmanualshub.com/

- Reverse travel is used for setting down the load Adjust your speed.
- Do not drive with an unstable load
- Raise the forks slightly in order to pass obstacles
- Be careful of low passageways, low doorways, scaffolding, pipes etc.
- Check that the width of the load is not greater than the width of the aisle

Setting a load down on the ground

– Carefully move the truck to the desired area.

– Carefully move the load into the unloading area.

– Lower the load until the load arms are free.

– Withdraw the truck in a straight line.

– Raise the load arms again several centimetres.

⚠ CAUTION

Risk of falling

Be careful to keep clear of other loads at the side of or behind the truck.

Before leaving the truck

NOTE

Always stop the truck on level ground away from traffic routes.

– Ensure the load arms are in the lower position.

– Switch off the ignition, then remove the key or press # on the electronic key for 3 seconds.

– In the event of a prolonged standstill, pull on the emergency stop handle.

https://truckmanualshub.com/

Using Autolift (option)

NOTE

Training on how to use this option is required before use.

WARNING

Risk of accident!

Ensure that there is nobody in the work area.

Description of the Autolift option

The Autolift option enables automatic lifting and automatic lowering of the forks. The forks are adjusted to the ideal height depending on the load added or removed from the pallet.

The truck is equipped with sensors (A) that enable the load on the forks to be detected and the height to be adjusted.

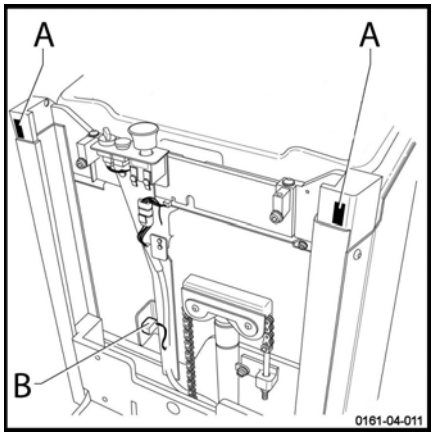

NOTE

SAFETY: When loading from a pallet, the automatic lowering function is fitted with a sensor that stops the fork arms at a sufficient height to avoid crushing the operator's feet. In addition, an audible alarm (B) sounds for each automatic lifting or lowering operation.

WARNING

Risk of crushing feet.

It is advisable to wear safety shoes.

Do not put your feet underneath the forks.

https://truckmanualshub.com/

The enclosure for the Autolift option

The enclosure for the Autolift option consists of:

- An emergency off switch (1)
- An activation button (2)
- A selector switch for stopping/automatic lifting/automatic lowering (3)

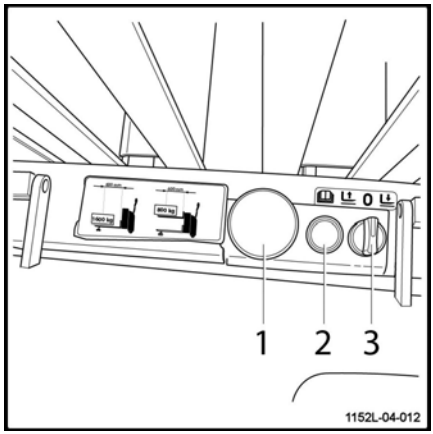

Loading and unloading

DANGER

In case of danger, press the emergency off switch (1).

NOTE

A beep sound warns the operator during automatic lifting and lowering.

NOTE

Traction is authorised when the button (3) is in the automatic lifting or automatic lowering position. A beep will then sound before the truck starts.

NOTE

The lifting/lowering controls of the tiller are deactivated if the drive direction selector is not in the neutral position.

- **Automatic lowering**

– Select the automatic lowering function with the button (3)

– Press the activation button (2)

The pallet lowers automatically as the packets are loaded on to the forks.

NOTE

SAFETY: In lowering mode, a sensor stops the fork arms at 200 mm from the ground to avoid trapping the operator's feet.

- **Automatic lifting**

– Select the automatic lifting function with the button (3)

https://truckmanualshub.com/

– Press the activation button (2)

The pallet lifts automatically as the packets are unloaded.

The upper level of the load is aligned at 800 mm from the ground. Two gauges are used for the levelling.

https://truckmanualshub.com/

Using the folding platform (option)

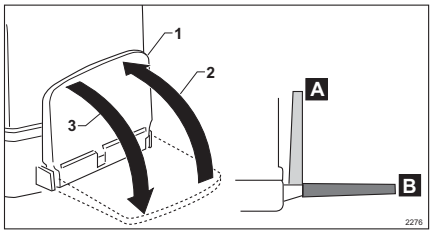

There are two positions for the folding platform (1):

- Position A: platform raised
- Position B: platform lowered

In pedestrian mode, the platform is raised. The maximum authorised speed is 6 km/h.

In ride-on mode, the platform is lowered. The maximum authorised speed is 6 km/h.

Driving in ride-on mode

To use the truck in ride-on mode, proceed as follows:

– Lower the platform (1) in the direction indicated by the arrow (3)

Once the job is complete, it is necessary to raise the platform.

– Raise the platform (1) in the direction indicated by the arrow (2)

Driving in pedestrian mode

The platform (1) is raised. The operator walks alongside the truck.

⚠ DANGER

Risk of injury.

Ensure that the platform is raised correctly before walking alongside the truck.

Ensure that the platform is correctly in the vertical position.

⚠ DANGER

Risk of injury.

In pedestrian mode, stay sufficiently far away from the truck. The truck must not be able to strike the operator's feet.

Wear safety shoes.

https://truckmanualshub.com/

Cold store usage (option)

Designation

Your truck is fitted with special equipment for use in cold stores. It can be used for two operating ranges and carries a cold store label.

The cold store equipment for the truck consists of using specialised oils (for the hydraulic installation and the gears) suitable for cold stores.

Proper usage

Operating range 1: permanent use in areas with temperatures of –5 °C and for short periods of time down to –10 °C. Parking outside the cold store.

Operating range 2: alternating use indoors and outdoors in compliance with the rules below, temperature range from –32 °C to +40 °C. Parking outside the cold store. This use requires hydraulic oil for cold stores as given on the list of maintenance characteristics.

Use

General

The change in temperature between the cold indoors and the heat outside causes condensation. This water can freeze when the truck goes back into the cold store and jam the moving parts of the truck. This is why the length of time the truck remains in the different temperature areas given below for the two operating ranges must be strictly adhered to.

The temperature of the traction batteries must never fall to the temperature of the cold store, otherwise they will stop working.

Prior to start-up

⚠ CAUTION

The truck must be dry and at operating temperature before being used in the cold store.

https://truckmanualshub.com/

– Drive the truck for approximately 5 minutes and operate the brakes several times to ensure the truck operates safely.
– Operate all the lifting functions several times. This warming up phase is required to allow the oil to reach operating temperature.

Use

Operating range 1

Permanent use in areas with temperatures of–5 °C and for short periods of time down to –10 °C.

Operating range 2

Alternating use indoors with temperatures down to –32 °C and outside with temperatures up to +25 °C for short periods of time even up to +40 °C. The truck must not leave the cold area for more than 10 minutes, because this length of time is not long enough for the formation of condensation. If the truck stays outside for longer than 10 minutes, it must remain outside for long enough to allow the condensation to run away. This generally takes at least 30 minutes.

⚠ DANGER

If the condensation freezes in the cold store, the moving parts that have become jammed must not be freed by hand.

Parking

– Always park the truck outside the cold store.

⚠ CAUTION

The batteries must not remain discharged or unused in the cold store overnight.

– Charge the battery outside the cold store and use a spare battery.

https://truckmanualshub.com/

Stopping the truck

⚠ WARNING

Do not stop the truck on a slope, or if this is absolutely necessary, make sure it is safely secured using chocks.

Never leave the truck with the load in the raised position.

Stopping the truck

– Bring truck to a controlled stop.

– Lower the forks.

– Switch off the ignition then remove the key or press the # button on the digicode for 2 seconds.

– Pull the emergency stop handle.

Restarting work

– Put the key back in the ignition or enter the 5-digit code on the electronic key (default code: 12345).

– Press the emergency stop handle.

https://truckmanualshub.com/

Handling the battery

Battery type

Trucks can be fitted with different types of battery. Comply with the information indicated on your battery's type plate, as well as with its features.

⚠ WARNING

The weight and size of the battery influence the stability of the truck.

The new battery must weigh the same as the old one. Do not remove extra weight or change its position.

⚠ CAUTION

Be careful not to damage any wiring when replacing the battery.

Order picking

Maintenance personnel

The battery must be replaced by specially trained personnel. Personnel must follow the manufacturer's instructions for the battery, the charger and the truck.

It is also necessary to follow the battery maintenance instructions.

Fire protection measures

⚠ WARNING

Do not smoke or create a flame when handling batteries. There must be no combustible material or tools that produce sparks within a minimum radius of 2 m around the truck and the battery charger.

The work area must be well ventilated. Fire extinguishers must be provided and located near the work area.

https://truckmanualshub.com/

Parking the truck securely

When the battery is being worked on, the truck must be parked safely. The truck can only be restarted when the covers and connectors have been put back in the operating position.

Opening/closing the battery cover

Opening

– Park the truck.

– Lower the load arms.

– Turn the key switch off.

– Lift the cover (1). ▷

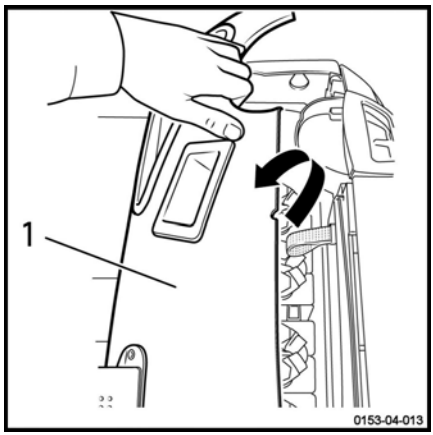

Closing

⚠ CAUTION

Keep fingers away from moving parts to avoid any risk of them being trapped.

– Close the cover (1).

https://truckmanualshub.com/

Charging the battery using an external charger

⚠ CAUTION

The battery may be damaged if discharged beyond a given limit.

– Immediately charge the battery.

– Safely park the truck

– Before charging, check the condition of the battery cable and the charging cable and replace these cables if necessary.

– Disconnect the battery connector (4). ▷

– Connect the battery plug to the charge station connector.

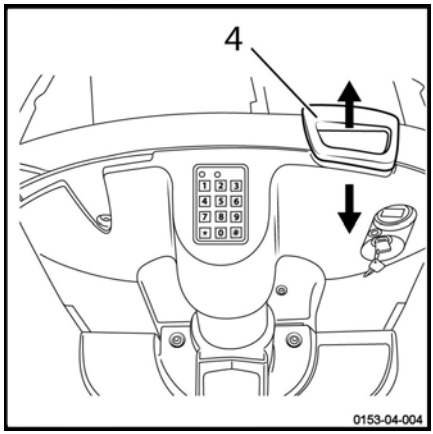

⚠ WARNING

Only disconnect the battery connector from the battery charger when both the battery charger and truck are switched off.

NOTE

Follow the instructions provided by the battery and battery charger manufacturers (equalising charge)

⚠ WARNING

Risk of damage, short circuit or explosion.

Do not place metal objects or tools on the battery. No smoking!

⚠ WARNING

The electrolyte (diluted sulphuric acid) is toxic and very caustic.

Follow the safety regulations when handling battery acid.

⚠ WARNING

Explosive gases are generated during battery charging.

– Ensure the work area is well-ventilated.

https://truckmanualshub.com/

On-board charger

Precautions for installation and use

The on-board charger means you no longer have to use a charging room. In fact, this charger can be connected to any 2P+T 230 V 16 A socket. However, before charging this way, the user must ensure that the location selected for charging satisfies all the required safety guarantees:

- The electrical installation must comply with standard NF C 15 100.
- The electric wall socket must be a 2 pole + earth 16 A 230 V type that is correctly connected and protected.
- Before charging, check the condition of the connections and cables (retighten, as required).
- Charging must be carried out in an area where there is no condensation or pollution as well as sufficient ventilation.
- The charger must not be exposed to oil, grease and other similar substances.
- Charging must be carried out with the truck stopped.
- The increase in the temperature of the unit in relation to the ambient temperature is 10°C maximum. That of the expelled air is 25°C maximum. Wait 10 minutes after stopping the charger before touching the unit.
- Since the charger is cooled by forced ventilation, do not block the air inlets and outlets. There must be sufficient air circulation to the outside.

Electrical characteristics of the charger

Mains voltage	190 V < U < 260 V
Network frequency	50 / 60 Hz +/-1% (automatic adaptation) No inrush current to the mains connection
Maximum output power	1040 W +/-3%
Maximum output current	35 A +/-2%
Nominal battery voltage	24V
Tolerance on the voltage of bearing U	1%

Battery characteristics

Battery type	Gel or open lead-acid battery
Number of components	12 2 V components
Capacity	140 Ah minimum to 375 Ah maximum (adaptation of the charging curve by a selector)

General conditions for use

Storage temperature	-45° C to +80° C
Operating temperature	-15° C to +40° C
Relative humidity	90%
Weight	2 kg
Volume	1.4 litres

Electrical safety

- Protection against inversion of battery polarity: the charger is protected by an output relay. After reconnecting the battery in the right direction, the charger restarts charging without requiring human intervention.
- Mains protection: by a 250 V 10 A 5x20 timed fuse. The mains fuse is fitted directly to the electronic card. The user is not authorised to replace this fuse. If this fuse is faulty, the charger must be returned to the service centre.

Relay

A 2x1.5 mm^2 lead is used to connect the safety relay. The relay has a maximum cut-off power of 16 A.

- Contact A: blue wire
- Contact B: brown wire

https://truckmanualshub.com/

- When the charger is neither connected to the mains nor the battery, the "contact A" and "contact B" outputs are electrically insulated from one another.
- When the charger is connected to the battery only, the "contact A" and "contact B" outputs are electrically connected.
- When the charger is connected to the mains and the battery, the "contact A" and "contact B" outputs are electrically insulated from one another.
- When the charger is connected to the mains only, the "contact A" and "contact B" outputs are electrically insulated from one another.

(see wiring diagram)

Other charging characteristics

Maintenance charges

If the charger stays connected to the mains, it restarts a charging cycle every 48 hours after the end of the previous charge in order to compensate for self-discharge.

Partial recharging

The charger adapts automatically to the battery discharge situation and therefore allows any type of partial charging to be carried out ("opportunity charging").

The overcharging calculation takes into account partial recharging. The mixture is always sufficient, without needless water consumption, which prevents premature wear of the batteries (often due to overlong charging periods) and reduces the need for maintenance.

Protection during charging

Mains micro-break protection

If the mains power is cut off, all the charging parameters in progress are stored in the memory for 13 minutes. As soon as the mains power returns, charging resumes from the point (I, U) at which it was cut off, with the number of Ah already injected stored in the memory.

If the cut-off period is longer than 13 minutes (the truck could have been used), a complete charging cycle is initialised.

Time protection

If during phases I1 + P + U > 16H, the charger becomes faulty. This can happen when a battery has a short-circuited component. Simply reset the mains to cancel the fault.

Temperature safety

Since the charger is cooled by ventilation, the air inlets and outlets must never be blocked.

The fan runs when the mains power is connected. It stops when charging is complete or when the mains power is disconnected.

The charger supplies reduced power if the ambient temperature exceeds the usage temperature range, in order to protect itself (the charging period will be extended in this case).

The charger stops if the micro-controller detects a temperature measurement fault.

Using the charger

Before charging, it is necessary to ensure that the location selected for charging satisfies all of the safety requirements.

NOTE

The charger is compatible with wet lead and gel batteries with a maximum capacity of 400 Ah.

The charger is designed:

– To be incorporated in the truck

– To stay permanently connected to the battery

– To operate in all positions

– To stay connected to the mains during periods when the truck is not being used to ensure the availability of the machine

https://truckmanualshub.com/

⚠ CAUTION

Do not disconnect the battery connector during charging (green indicator light flashes).

The truck cannot be operated during charging.

The on-board charger is intended for recharging the battery.

– Switch off the truck.

Do not pull the emergency stop handle. This operation cuts off the circuits and stops the battery from charging.

– Open the cover of the battery compartment to ensure good ventilation.

– Connect the cord to the mains socket.

– Connect the charger plug to a mains wall socket.

Phase	Green LED	Red LED
Mains socket disconnected	Off	Off
Charging phases	Flashing	Off
Stopped / Equalisation / Maintenance phase	Continuously lit	Off
Charging process too long	Off	Continuously lit
Charger polarity reversed (+bat and -bat charger cables reversed, with the battery remaining normally connected to the truck assembly)	Continuously lit	Continuously lit
Battery polarity reversed	Off	Off
Selector in neutral position	Flashing	Flashing

– Avoid interrupting the charging procedure until it is complete (to optimise battery service life).

⚠ CAUTION

It is strictly prohibited to use an on-board charger other than the one recommended.

⚠ CAUTION

Risk of damage to the mains cable resulting in electric shock and/or burns!

Park the truck sufficiently close to the mains wall socket to ensure that the mains cable on the on-board charger is not taut when connected and charging.

⚠ CAUTION

Risk of damage to the mains cable due to frequent operator handling. Risk of electric shock and/or burns!

The mains cable must be checked regularly as part of periodic statutory checks and maintenance operations.

https://truckmanualshub.com/

Gel or Lead batteries: Adjusting the on-board charger

- When the truck is delivered with its battery, the charger settings are adjusted in the factory.
- The adjustment depends on the selected battery.

Charging curve selector

The curve is selected using the selector located on the front face of the charger.

The curve selector is protected by a cap.

The four thin lines indicate neutral positions. The charger does not flow and the two diodes flash simultaneously to indicate that no curve has been selected.

The four thick lines indicate the four charging curves:

- open lead-acid battery with a capacity below 210 Ah
- open lead-acid battery with a capacity greater than 210 Ah
- gel battery with a capacity below 210 Ah
- gel battery with a capacity greater than 210 Ah

If the battery is changed during the service life of the truck, it is essential to ensure that the charger settings correspond to the new battery type. Any modification to the settings must be carried out by a qualified technician.

▷

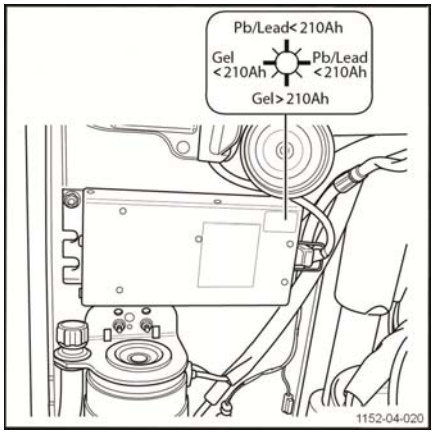

Changing the battery

Maintain a safe distance for battery removal to avoid damaging the truck.

https://truckmanualshub.com/

– Open the battery compartment (1). ▷

– Unplug the battery connector (2).

In order to avoid short-circuits, it is recommended that batteries with polar terminals or unprotected connections be covered with a rubber mat.

– Unlock the battery.

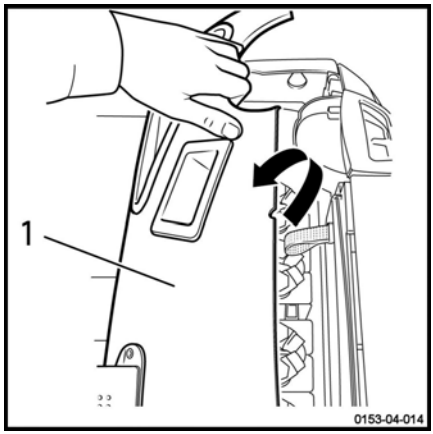

– Attach the lifting device (1) correctly to the battery (2) (see the lifting device user manual), then remove it from the truck. ▷

– The lifting device must exercise vertical traction in order to avoid the boot being damaged. The hooks must be placed so that they cannot fall on the battery cells when the lifting device is slackened.

⚠ CAUTION

Use small hooks for slinging the battery.

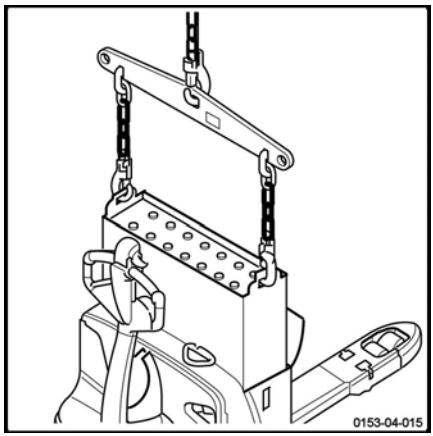

https://truckmanualshub.com/

Gel and lead side access batteries: changing the battery using a trolley

Positioning the truck

- On level ground, move the pallet truck close to the trolley (2).
- Align the battery compartment with the empty space on the trolley (1).
- Using the load arm lifting/lowering controls, adjust the height of the battery compartment to that of the edge of the trolley (3).
- Switch off the ignition and pull the emergency stop handle.

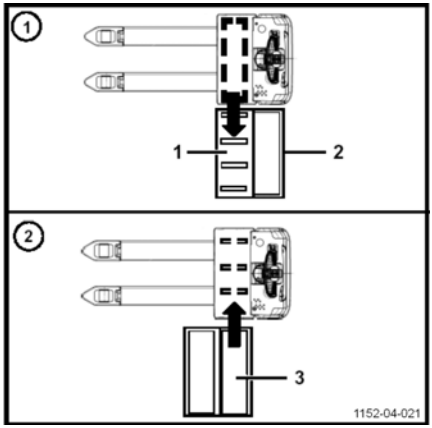

CHANGING THE BATTERY

REMOVE THE DISCHARGED BATTERY:

- Open the battery case cover.
- Fit the battery connector on the cells.
- Push the lever towards the battery(A) then lift the notch (B).
- Lift the lever(C) to release the battery
- Raise the opposite stop of the lever.
- Pull the discharged battery onto the trolley (2).
- Turn the lock on the trolley to the "closed" position to lock the battery on the trolley (2).
- Connect the charged battery (3) to the truck using an extension lead.

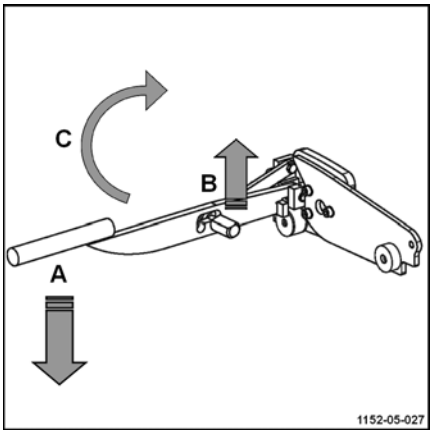

NOTE

Use a fairly long extension lead to allow the truck to move.

- Connect the battery connector and then switch on the ignition.
- Move the truck forwards or backwards to align the battery compartment with the charged battery (3).
- Switch off the ignition and pull the emergency stop handle.
- Disconnect and remove the extension lead.

https://truckmanualshub.com/

– Turn the retaining lock of the charged battery.

INSTALL THE CHARGED BATTERY:

– Fully insert the charged battery in its compartment.
– Fold the stop down.
– Lift the lever slightly and then unlock the notch.
– Fold the lever down to lock the battery.
– Connect the recharged battery.
– Close the battery cover.

⚠ CAUTION

Place the cables correctly above the battery to prevent them from being damaged when a battery is removed from or inserted into its compartment.

⚠ CAUTION

During operations to fit the battery, keep your fingers away from moving parts to avoid any risk of them being trapped. We recommend the use of gloves.

⚠ CAUTION

Before using this machine, ensure that the battery is correctly installed and that its cover is correctly locked.

https://truckmanualshub.com/

Side access battery: changing the battery using a moveable support

⚠ CAUTION

During operations to fit the battery, keep your fingers away from moving parts to avoid any risk of them being trapped. We recommend the use of gloves.

Positioning the truck

- On level ground, move the pallet truck close to the moveable support
- Switch off the ignition and pull the emergency stop handle.

CHANGING THE BATTERY

REMOVE THE DISCHARGED BATTERY:

- Open the battery case cover.
- Fit the battery connector on the cells.
- Push the lever towards the battery(A) then lift the notch (B). ▷
- Lift the lever (C)to release the battery
- Lift the stop
- Pull the discharged battery onto the moveable support.
- Lock the discharged battery on the moveable support using the hook.
- Release the moveable support by lifting up the 2 wheel locks with your foot and take the discharged battery to the charging station.

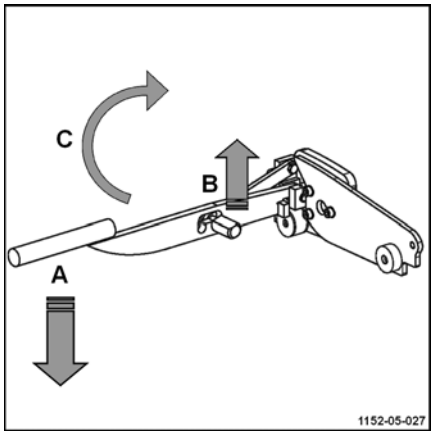

INSTALL THE CHARGED BATTERY:

- Fully insert the charged battery in its compartment.
- Fold the stop down.
- Lift the lever slightly and then unlock the notch.
- Fold the lever down to lock the battery.
- Connect the recharged battery.
- Close the battery cover.

https://truckmanualshub.com/

Handling the battery

⚠ CAUTION

Before using the machine, ensure that the battery is correctly installed and that its cover is correctly locked.

https://truckmanualshub.com/

Handling the truck in an emergency

Towing the truck

It is not possible to tow the truck with no electrical function. The electromagnetic brake remains in the closed position.

You may tow the truck with a rigid connection (tow bar) if the truck to be towed can no longer be braked. Check that the towing vehicle is sufficiently powerful to pull and brake the truck being towed.

Moving with no battery

NOTE

In the event of an electrical fault or no battery, it is possible to unlock the brake manually.

CAUTION

Risk of damaging the truck.

This procedure must be carried out by authorised personnel.

– Remove the load if necessary.

– Disconnect the battery connector.

– Remove the hood of the technical compartment.

Two M5 X 30 screws are required.

– Screw the screws into the brake (2) in the holes (3).

This will unlock the brake.

– Close the hood of the technical compartment.

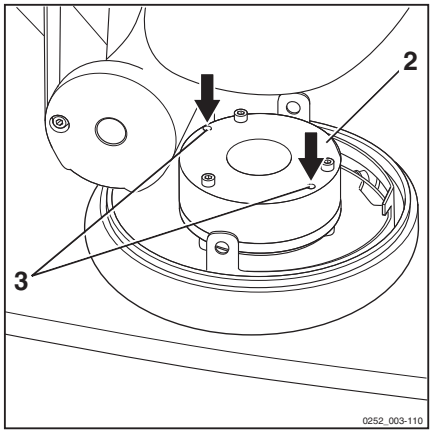

CAUTION

Risk of injury.

The truck must only be towed at creep speed.

– After towing, chock the truck to prevent it from moving.

– Remove the hood of the technical compartment.

https://truckmanualshub.com/

– Unscrew and remove the two screws to re-establish brake operation.
– Close the hood of the technical compartment.

https://truckmanualshub.com/

Handling the truck in specific situations

Slinging the truck

▷

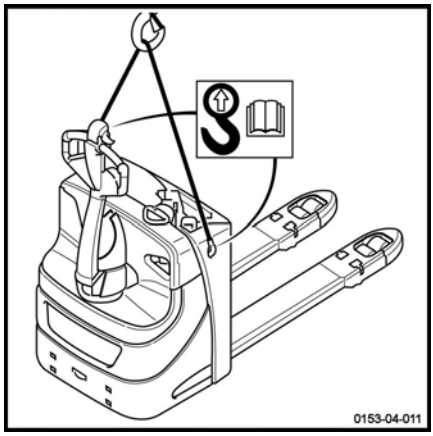

⚠ CAUTION

Risk of injury

Use a hoist and hooks of sufficient capacity. Refer to the load weight shown on the truck's data plate.

– Attach a sling or a hook to the 2 points indicated (3). ▷

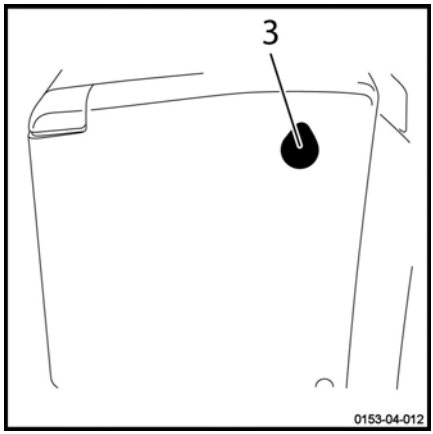

⚠ CAUTION

Risk of damage to the truck

It is strictly prohibited to sling the truck by the tiller or other points not designed for this.

Wedge battens between the chassis and slings to prevent damage.

⚠ DANGER

Danger to life!

No-one should be under a raised load.

Lifting the truck

To lift the truck, its sub-assemblies or additional equipment, lifting devices must be hooked only to the appropriate lifting points. When jacking, take appropriate measures (using chocks or wooden blocks) to prevent the truck from slipping or tipping over.

https://truckmanualshub.com/

Jacking

The truck must be jacked and chocked in order to perform certain maintenance operations. Always make sure:

- To use a jack with an adequate lifting capacity,
- Make sure that the truck is parked on level ground and is secured against rolling and tipping.

⚠ WARNING

Electrical hazards

Disconnect the battery connector before lifting the truck.

Lifting by the chassis

▷

– Position the truck so that the fork arms touch the wall.

– Lift up the truck until the wheels are no longer in contact with the ground.

– Raise the truck with chocks.

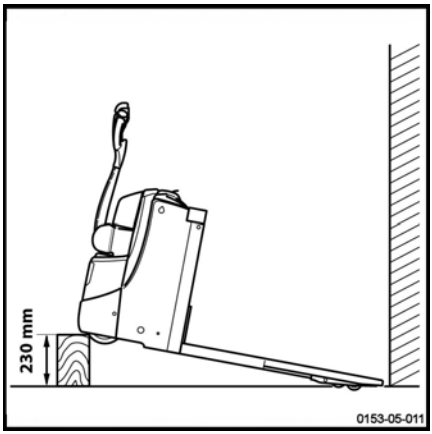

Transporting the truck

⚠ CAUTION

Always switch off the ignition and disconnect the battery.

Never tie down or sling the truck by the control unit or other points not designed for this.

⚠ CAUTION

Risk of damage to the truck.

Use a hoist and woven **NON METALLIC** slings with an adequate lifting capacity. Refer to the load weight shown on the truck's capacity plate.

The lifting operations must be performed by qualified personnel.

Trucks are generally transported by road or by rail.

https://truckmanualshub.com/

The truck must be suitably protected from the effects of the weather during transport and storage.

To load or unload the truck, use an inclined plane or a mobile ramp.

If the truck is out of service or if the battery has been removed, sling the truck. See **Chapter 4 Slinging the truck**.

Transporting the machine

If the truck has to be transported, please ensure that it is properly chocked and protected against bad weather.

⚠ WARNING

Risk of truck losing stability

Exercise great care when moving a truck that has no battery and is equipped with reinforced stabilisers.

⚠ DANGER

Danger of death.

Do not stand within the hoist's operating radius or below the lifted truck.

Transporting the truck in the lift

The truck must only be taken in lifts with an adequate loading capacity that are designed for this purpose, and for which authorisation has been received from the operator. Inside the lift, the truck must be immobilised so that no part is in contact with the wall of the lift cage.

A minimum safety distance of 100 mm from the walls of the lift must always be observed.

Anyone transported with the truck must only enter the lift after the truck has been correctly immobilised and they must exit the lift first.

Driving on loading bridges

Before crossing a loading bridge, the operator must make sure it is properly attached and secured and its load capacity is sufficient. Cross the loading bridge slowly and carefully. The driver must be sure that the vehicle to be entered is secured sufficiently against movement and that it can support the load of the forklift truck.

The lorry driver and lift truck operator must coordinate the departure time of the lorry.

https://truckmanualshub.com/

https://truckmanualshub.com/

5

Maintenance

https://truckmanualshub.com/

General maintenance information

General

The following instructions contain all the information required for servicing your truck. Carry out the various maintenance work in compliance with the maintenance plan. This will ensure that your truck is reliable and in good working order and that the warranty remains valid.

Service plan

▷

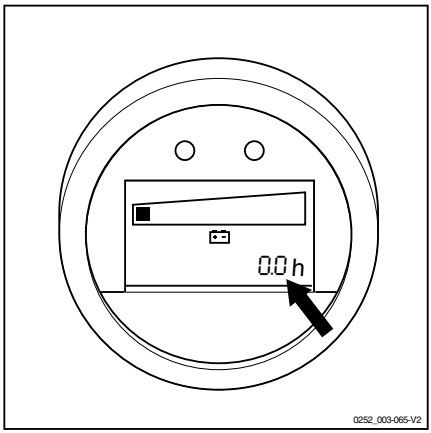

Maintenance work must be carried out according to the hour meter. Please consult the truck's maintenance plan.

The service plan is followed by advice to facilitate work.

Maintenance intervals must be reduced if the truck is used under harsh conditions (extreme heat or extreme cold, large quantities of dust).

Grade and quantity of lubricants and other consumables

Only lubricants and other consumables specified in these operating instructions are authorised for use during maintenance work.

Lubricants and other consumables required for truck maintenance are listed in the maintenance specifications table.

Never mix different qualities of grease or oil. If it is absolutely necessary to change brands, make sure to flush thoroughly beforehand.

Before changing any filters or working on the hydraulic system, thoroughly clean the surface and the areas around the part.

All containers used to pour oil must be clean.

https://truckmanualshub.com/

Servicing and maintenance personnel training and qualification

Truck maintenance must only be carried out by qualified and authorised personnel.

The annual inspection for prevention of accidents at work must be carried out by a person qualified to do so. The person carrying out this inspection must provide their expertise and opinion without being influenced by economic factors or company internal issues. Safety is the only critical deciding factor.

The person responsible for carrying out the inspection must have sufficient knowledge and experience to be able to assess the condition of the truck and the efficiency of the protective installations in accordance with the technical regulations and principles established for checking industrial trucks.

Battery maintenance staff

Batteries must only be recharged, maintained and changed by specially trained personnel. Personnel must follow the manufacturer's instructions of the battery, the battery charger and the truck.

It is essential to follow the battery maintenance instructions and the battery charger operating instructions.

Maintenance operations that do not require special training

Simple maintenance operations such as checking the hydraulic fluid level or checking the battery electrolyte level can be carried out by persons with no special training.

A specific qualification is not necessary.

Refer to the maintenance section of this manual for further information.

Ordering spare parts and consumables

Spare parts are provided by our spare parts service department. You will find the information required to place an order in the spare parts and fitting catalogue.

Only use spare parts recommended by the manufacturer.

Unauthorised spare parts may increase the risk of accidents due to faults relating to quality or incorrect choices. Anyone who uses non-compliant spare parts must assume full responsibility in the event of an accident.

https://truckmanualshub.com/

Maintenance safety guidelines

Servicing and maintenance measures

To avoid accidents during servicing and maintenance operations, take all necessary safety measures. For example:

– Ensure that there is no risk of the truck moving or starting up unexpectedly. For this reason, remove the battery connector.

Working on the electrical equipment

Operations on the truck's electrical system must only be carried out when there is no voltage supply.

Operating checks, testing and adjustment work on parts supplied with voltage must only be carried out by personnel:

- who have received detailed instructions
- who have been authorised to perform this work
- who have taken the necessary precautionary measures.

Rings, metal bracelets etc., must be removed before carrying out any operations on electric components.

Remove the electric equipment (which comprises electric components such as the traction controller) before carrying out any welding operations. This precaution prevents this electric equipment from being damaged.

Operations on the electric system require the consent of the manufacturer.

Safety devices

After any repair or maintenance work, it is necessary:

- to refit all safety devices
- to check these for correct operation.

https://truckmanualshub.com/

Technical specifications for inspection and maintenance

Unit	Item/Lubricant	Capacities/Setting values
Main hydraulic system	Hydraulic oil	Maximum level 0.97 l Minimum level 0.92 l
Reducer	Reducer oil	0.9 litre maximum
Traction and pump motor	Fuses	Power 125 A, Quantity: 1
Control cable harness	Fuses	Control 7.5 A, Quantity: 1
Traction motor	Maintenance-free	1.2 kW (AC)
Pump motor	Maintenance-free	EXU–H18, EXU–H20, EXU–H20S: 1.2 kW
Battery	Distilled water	As required
Joints	Lithium grease	As required

https://truckmanualshub.com/

Access to the technical compartment

– Fully raise the pallet truck's load arms to facilitate these operations.

⚠ CAUTION

Before removing anything from the truck

– Turn the key switch off.

– Pull the battery connector handle (emergency stop handle).

Opening the lower cover

– Unscrew the 2 screws (1) that hold the cover in place.

– Unclip the cover at both ends

– Raise and pull back the lower cover.

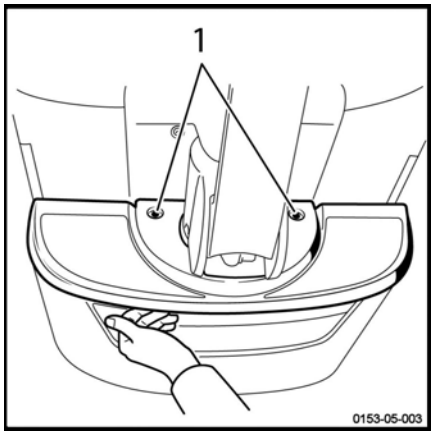

https://truckmanualshub.com/

Opening the front cover

After removing the lower cover:

– Unscrew the 4 screws (2) that hold the cover in place.

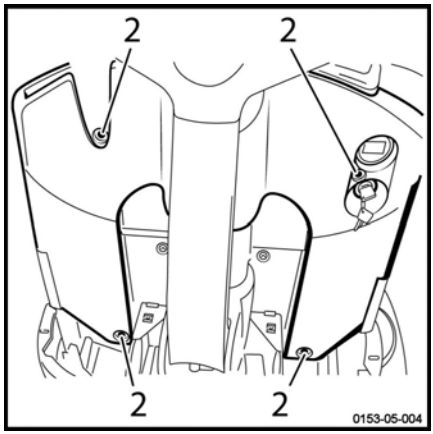

Accessing the pump unit

After removing the front cover:

– Remove the plastic cover by unscrewing the 2 screws (3) to provide easy access to the pump unit.

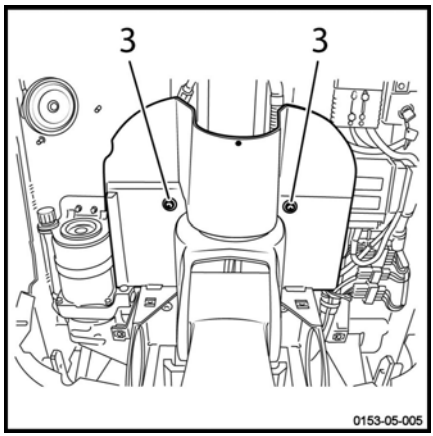

https://truckmanualshub.com/

– Then remove the mounting bracket (4) ▷

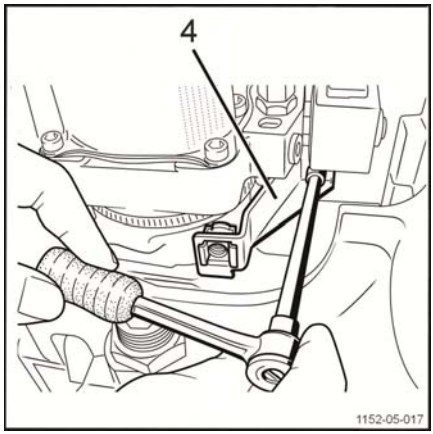

https://truckmanualshub.com/

Accessing the reducer and the brake

To access the reducer and the brake:

– Turn the tiller to the right or left-hand stop.

– Unscrew the 2 screws (3) ▷

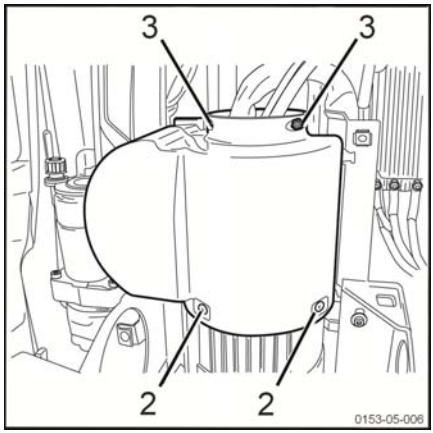

– Unscrew the 2 screws (2) located either side of the two 1/2 covers. ▷

– Remove the two 1/2 covers.

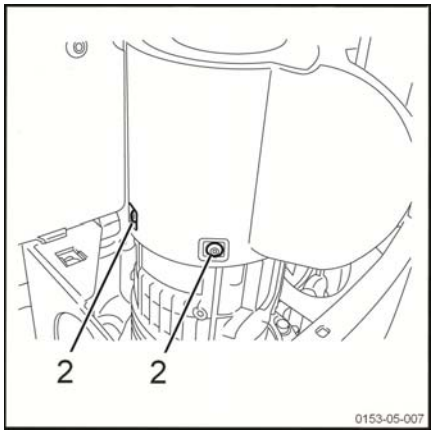

https://truckmanualshub.com/

Maintenance plan as required

Depending on the application, environmental conditions and driving style, the following procedures should be carried out as required
Preparation
Cleaning the truck
Chassis and equipment
Checking the brake operation
Checking the condition of the roller frame
Wheels
Checking the wheels for wear
Electrical equipment
Checking the condition of the cables, connections and battery connectors
Check the battery acid level and the electrolyte level
Checking the fuses
Transmission
Regularly checking the transmission gear
Lift mast
Checking the load lift system

https://truckmanualshub.com/

1000-hour/annual maintenance plan

Maintenance operations every 1000 hours
Depending on the application, environmental conditions and driving style, the following procedures should be carried out every 1000, 2000, 4000, 7000 and 8000 hours
Preparation
Clean the truck (if necessary)
Check the error codes (using the diagnostic tool)
Traction motor
Check that the cables and bundling are in good condition
Transmission
Check for any possible oil leaks from the transmission gear
Grease the sprocket
Steering/wheels/braking
Check the level of wear on the tyre tread of the wheels
Check the brake air gap
Check the tightness of the nuts
Electrical equipment
Clean and blow out the electrical plate
Check the mounting of the electrical connections
Check the condition of the on-board charger
Check that the cables and fuses are secure
Check and adjust the battery electrolyte level
Check the lift height switch
Clean the sensors for the automatic lifting function
Hydraulic system
Check the system oil level
Check the circuit for leaks
Load lift system
Check the level of wear on the rings and clevis pins
Oil or generously grease the rings and clevis pins
Final tasks
Check the general condition of the forks and the chassis

https://truckmanualshub.com/

3000-hour maintenance plan

Additional maintenance operations every 3000 hours
Depending upon use, environmental conditions and driving style, the following procedures must be performed every 3000, 6000 and 9000 hours
Information
Carry out all 1000-hour maintenance work
Transmission
Drain the transmission gear oil
Hydraulic system
Clean the return line filter for the circuit
Replace the breather filter for the circuit
Drain the hydraulic system

https://truckmanualshub.com/

Chassis, bodywork and fittings

Clean the truck

Washing instructions

▷

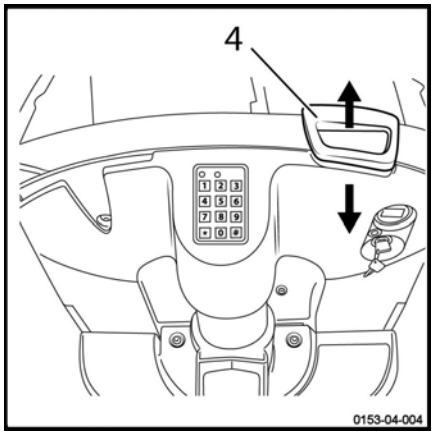

– Always park the truck as specified.

– Disconnect the battery connector (4).

⚠ CAUTION

– Disconnect the battery connector when washing the truck.

Washing the exterior of the truck

⚠ WARNING

Do not use inflammable fluids for cleaning. Observe the above safety precautions for preventing sparks through shorts (disconnecting the battery connector). When the truck is being cleaned, carefully cover all vulnerable components, particularly electric components. Observe the manufacturer's instructions for handling the cleaners.

– Clean the truck exterior with water and cleaning agents soluble in water (sponge, rags).

– Clean especially the oil filler openings and the surrounding area.

– Grease the required assemblies (mast, controls and joints).

Cleaning the electrical system

⚠ WARNING

Do not aim the steam cleaning device directly on electric motors and other electric components, brakes and bearings.

NOTE

Use only dry cleaning agents as cleaning agents. Do not remove covers, etc.

– Clean electrical components with a non-metallic brush and and blow dry with a weak jet of air.

https://truckmanualshub.com/

After washing the truck.

- Dry the truck thoroughly (eg with compressed air).
- Take the truck back into operation according to instructions.

If moisture has penetrated the motors despite the precautionary measures, dry them first with compressed air; if not, there is the risk of short circuits! The truck must ONLY then be turned on and taken into operation to prevent any damage due to corrosion.

Clean the battery and its compartment ▷

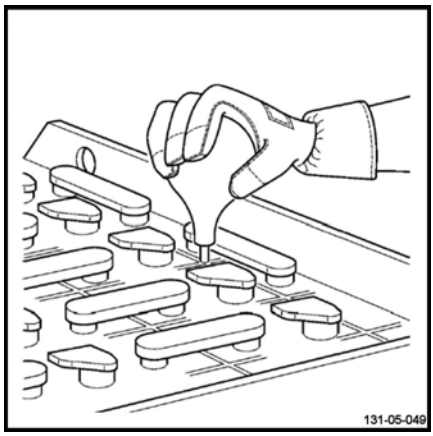

⚠ WARNING

Risk of injury

This task must be carried out by a person wearing acid-resistant protective gloves and industrial goggles. Follow the safety regulations described in previous chapters.

ENVIRONMENT NOTE

Do not pour acid-bearing wash water down the drain. For more information, see the battery instructions.

Gel battery

- Check for traces of sulphate in the compartment and frame.
- If there is only minimal sulphate build-up, just wipe the top of the cells with a damp cloth.
- If sulphate build-up is heavy, you will need to take out the battery, jet wash it and clean the frame.

Lead battery

- Check that there are no electrolytes at the bottom of the compartment by connecting the rubber suction bulb supplied with the battery to the plastic pump tube.

https://truckmanualshub.com/

– Pump off any electrolyte that may have spilled between the cells.

– Clean the top of the cells with a damp cloth.

⚠ CAUTION

In case of heavy sulphate build-up or excessive electrolyte spillage, please contact the After-Sales Service Centre.

General information on battery maintenance

⚠ DANGER

Risk of injury

Before carrying out any operations on the electric installation, turn the truck power supply off. Disconnect the battery connector.

Precautions to be taken during battery maintenance

The plugs on the battery cells must always be dry and clean.

Neutralise any spilt battery acid immediately.

The battery terminals and lugs must be clean, lightly covered with grease for terminals and securely tightened.

Charging the battery

During the charging process, the surface of the battery cells must be clear to ensure sufficient ventilation.

Do not place metal objects on the battery.

The battery cover must remain open during charging. See the chapter entitled **Battery charging using an external charger.**

Battery type

Lead or gel batteries are used. It is advisable to choose a compatible charger.

Before charging, ensure that the charger is suitable for the type of battery.

⚠ CAUTION

Gel batteries are subject to specific charging, maintenance and treatment instructions. A non-compatible charger may result in a battery failure.

Observe the manufacturer's recommendations.

NOTE

- *The discharge indicators used to check the battery must also be suitable for the type of battery.*
- *Contact the relevant After-Sales Service Centre.*

Charging the battery

– Park the truck in an area without condensation or pollution and with sufficient ventilation.

– Stop the truck.

– Pull the emergency stop handle.

– Open the battery hood.

– Do not disconnect the battery plug.

⚠ CAUTION

Do not expose the charger to water, rain, oils, grease or any similar substances.

The charger becomes hot during the operation.

https://truckmanualshub.com/

⚠ CAUTION

Do not obstruct the ventilation. Allow the charger to cool down for 10 minutes after charging is complete before touching it. Do not use the charger out of the truck.

Folding platform maintenance

The folding platform must be checked regularly. The following operations must be carried out at least every three months or every 500 hours.

– Check that the folding platform operates correctly

– Clean and lubricate the articulated parts of the platform

https://truckmanualshub.com/

Steering and wheels

Servicing wheels and rollers

Check the tyres and the wear on the wheels and rollers

The tyre tread on the drive wheel (1), the stabilising wheel (2) and the rollers (3) must not be damaged.

Dimensions	
Drive wheel	230 x 75 mm
Stabiliser wheels	125 x 40 mm
Single rollers	85 x 100 mm
Dual rollers	85 x 80 mm

– Replace damaged or worn wheels with new wheels, and damaged or worn rollers with new ones.

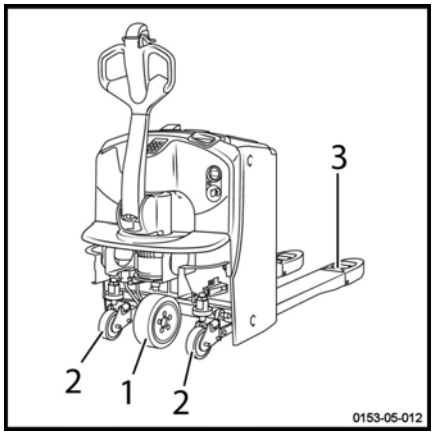

⚠ CAUTION

A wrongly adjusted stabilising wheel can lead to stability problems.

This adjustment must be carried out by our service department.

Adjusting the height of the stabilisers

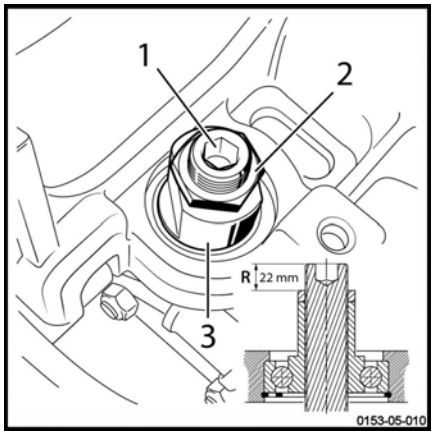

NOTE

Adjusting the clevis (1) with new drive wheel and stabiliser wheels R = 22 mm.

PLEASE NOTE:

- Lower the stabilisers to stabilise the truck.
- Lift the stabilisers if the truck often encounters obstacles and if grip must be improved.

Follow the instructions below to adjust the height of the stabilisers:

– Loosen the lock nut (2) (36 spanner) by holding the ball bearing (3) by its flat surface (36 spanner)

https://truckmanualshub.com/

– Tighten the clevis (1) using a 14 mm Allen key to lower the wheel or loosen the clevis (1) using a 14 mm Allen key to lift the wheel
– After adjustment, lock the clevis (1) with the lock nut (2) tightened to a torque of **35 Nm**

NOTE

To screw, unscrew or lock the clevis (1) always hold the ball bearing (3) by its flat surface (36 spanner) during the procedure.

Maintaining the reinforced stabilisers (option) ▷

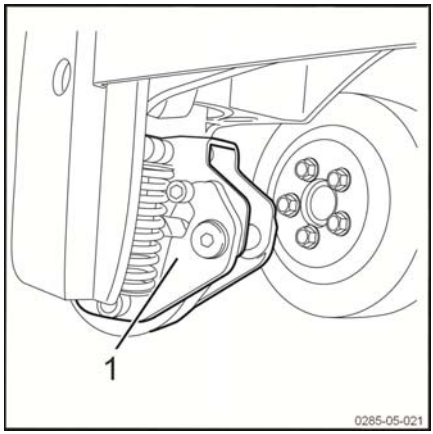

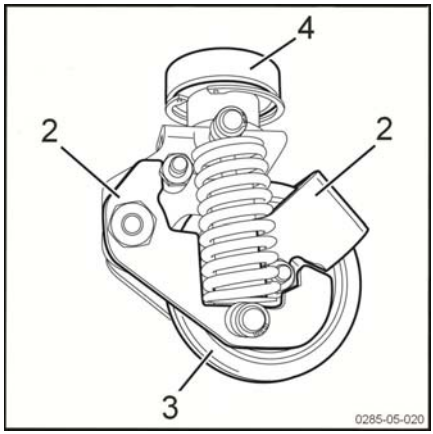

Trucks may be equipped with two damper stabilisers (1). They ensure the dynamic stability of the truck.

Stabilisers do not require any specific maintenance or adjustment work. Wheel wear (drive wheel and stabiliser wheel) is automatically compensated.

However, it is necessary to check the condition of the stabilisers:

- No significant damage to the superstructure (2)
- The damper cylinder pins must not be twisted
- No oil leakage must be present on the damper cylinder. This cylinder must be inside the spiral spring
- No damage to the rollers (3). The wheels must rotate freely
- No locking at the level of the upper bearing (4)
- Ensure that the wheel nuts are correctly tightened

WARNING

Risk of loss of dynamic stability

The dynamic behaviour of the device must be monitored, particularly when turning. The behaviour of the truck must be the same when cornering, whether turning to the left or right. If there is a difference in behaviour, please contact the After-Sales Service Centre. Only the technician can replace the two stabilisers if deemed necessary.

https://truckmanualshub.com/

Regular maintenance of the transmission gear

To increase the service life of the transmission gear, 2 grease nipples (1) have been added to its turntable.

It is therefore possible to regularly lubricate the transmission gear.

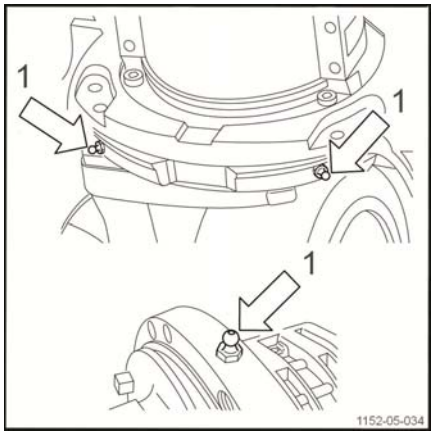

NOTE

Use the lubricants recommended by the manufacturer.

https://truckmanualshub.com/

Electrical equipment

Servicing the electrical system

Checking the cable and fuse connection mountings ▷

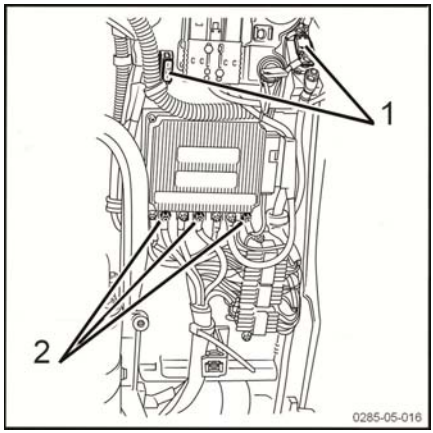

⚠ WARNING

Stop the truck and disconnect the battery before carrying out the following checks.

- Remove the front hood.
- Check the condition of the fuses (1).
- Check that the cable terminals (2) are properly fitted.
- Retighten all cable mounting screws.

Fuses ▷

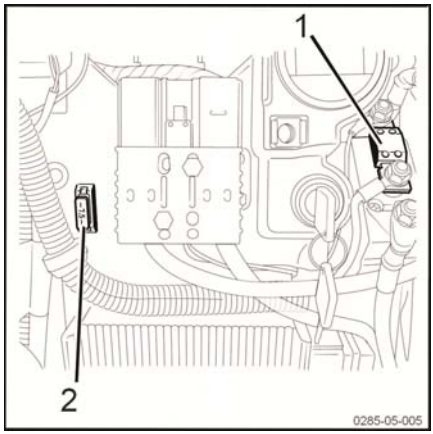

⚠ CAUTION

Electricity danger

Before carrying out any work on the electric installation, turn the power supply off. Disconnect the battery connector for this purpose.

- Remove the front cover to gain access to the fuses.
- Check that the following two fuses are correctly secured:

The 125A fuse (1) protects the traction and lifting power circuit.

The 7.5 A fuse (2) protects the control circuits.

This operation should preferably be carried out by the After-Sales Service Centre.

https://truckmanualshub.com/

Battery maintenance

The operations described below relate to lead batteries with liquid electrolyte. For batteries with gel electrolyte, which are said to be "maintenance-free", please refer to the manufacturer's instructions.

⚠ WARNING

Avoid contact with the acid. Do not create a short-circuit. Refer to the recommendations in the daily checks section. The electrolyte contains sulphuric acid, which is a hazardous product. Wear gloves and goggles when working on the battery. In case of contact with eyes or skin, rinse immediately with clean water, then seek medical advice if necessary. Charging the battery releases hydrogen, which can create an explosive mixture. Do not create sparks, do not smoke and keep naked flames away from a battery which is being charged or has recently been charged. To prevent the accumulation of hydrogen, keep the battery cover open during charging. Charge the battery in a well-ventilated room. Do not place metal objects on the battery: there is a risk of creating a short-circuit.

⚠ CAUTION

Before commencing work, unplug the battery connector by pulling the emergency stop handle.

Electrical equipment, testing electrolyte level and topping up with water

- This check and any topping up required should be carried out every week, after charging an open lead battery only.
- Turn off the key switch, open the cover and disconnect the battery connector.
- Check the level, which should be up to the base of the plug, slightly above the splash guard.
- Add demineralised water to top up cells with a low water level.
- Then refit the plugs.

https://truckmanualshub.com/

⚠ CAUTION

Only top up with demineralised water. Never top up before charging (risk of overflow). Do not overfill the cells.

NOTE

For more information, refer to the instructions supplied with the battery.

Electrical equipment: checking the electrolyte density ▷

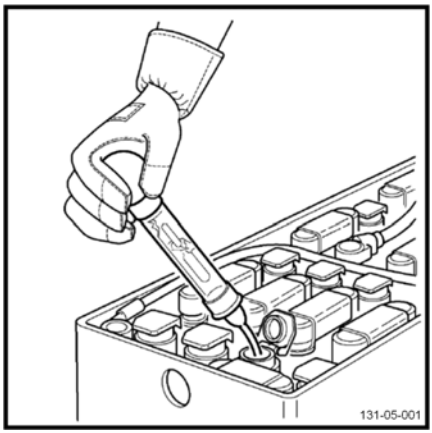

Measuring the density gives an accurate indication of the charging status of each cell in an open lead battery only. This measurement can be taken before or after charging:

- Minimum density of an 80% discharged battery: 1.14
- High density, battery 100% charged: 1.29 to 1.32 (depending on make)

– We recommend a reading every 1 or 2 weeks.

– Note down the values read in your battery monitoring logbook.

– Lift the cover over each cell plug as described above.

– Carefully record the specific gravity of each cell with the hydrometer.

– Close the various stoppers after measurement.

NOTE

If the density in the cells differs or it is very low in certain cells, contact our service engineers. Allowing the battery charge to fall below the threshold of 1.14 is very detrimental to its service life.

https://truckmanualshub.com/

Checking the condition of cables, terminals and battery connector

▷

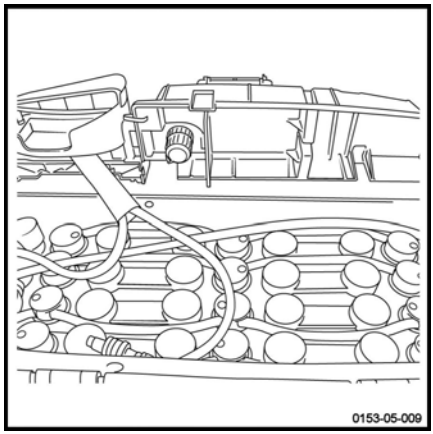

- Check that the cable insulation is undamaged and that there are no signs of overheating at the connections.
- Check that the "+" and "-" output terminals are not sulfated (presence of white salt).
- Check the condition of the power outlet contacts and the presence of the keying pin.
- Check the condition of the locking tab on the battery connector.

⚠ CAUTION

The points mentioned above can cause serious incidents. In the event of a fault, please contact the After-Sales Service.

Servicing the pump motor

Checking the electrical connections

▷

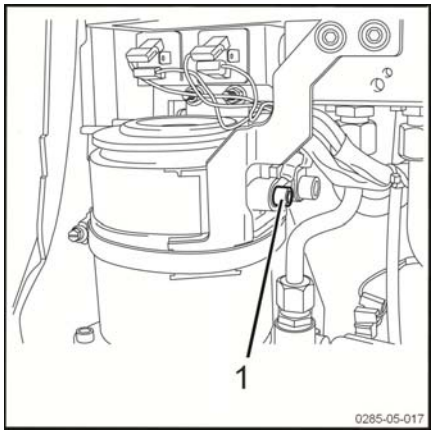

- Check the mounting, condition and insulation of the pump motor cables (1).
- Eliminate any traces of oxidation.
- Replace faulty cables.

NOTE

Oxidised connections and faulty cables will result in a drop in voltage, leading to malfunctions.

Service the on-board charger

It is necessary to check the on-board charger. Proceed as follows:

- Connect the cord to the 220 V mains.

https://truckmanualshub.com/

– Check that the green indicator light on the display is flashing and that the red one is off (charging in progress).
– Check that the truck is immobilised (traction and lifting not permitted) as long as the cord is connected to the 220 V supply.
– Disconnect the mains cord.

NOTE

In the event of a fault, do not work on the charger. Contact the After-Sales Service Centre.

Cleaning the sensors for the Autolift option ▷

To ensure the correct operation of the Autolift option, the sensors must be cleaned regularly.

– Clean the sensors (A) thoroughly using a soft cloth.

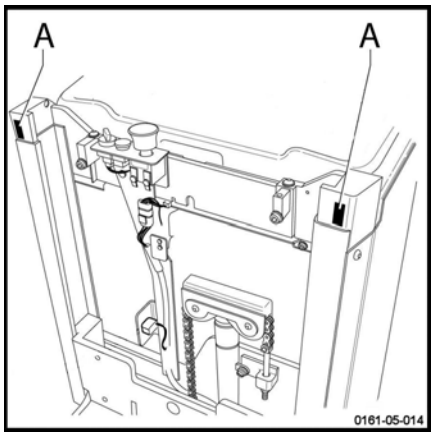

https://truckmanualshub.com/

Hydraulic systems

Oil level check

- Lower the load arms completely.
- Switch off the ignition and pull the emergency stop handle.
- Pull back the cover of the technical compartment (see description in "Access to the technical compartment").
- The oil level must be in the centre between the minimum and maximum marks on the tank for correct use of the truck functions.
- Top up if necessary.
- Replace and tighten the plug afterwards.

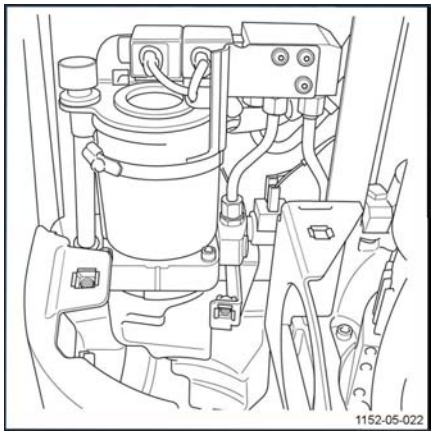

⚠ CAUTION

Only use hydraulic oil that complies with the specifications (see lubrication table).

https://truckmanualshub.com/

Hydraulic circuit, draining the circuit

Draining the circuit

▷

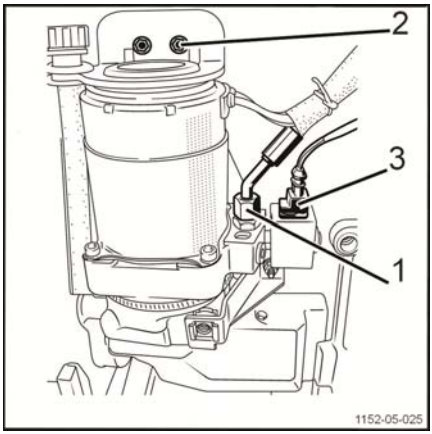

- Lower the load arms to the ground to eliminate pressure in the hydraulic circuit.
- Switch off the ignition and unplug the battery connector.
- Disconnect the power supply to the solenoid valve (3).
- Disconnect the cylinder supply hose (1).
- Remove the 2 screws (2) that hold the upper support (angle bracket) in place.
- Lift out the hydraulic unit.
- Remove the unit's upper support and the filler tube/breather.
- Unscrew the tank's mounting clip.
- Remove the tank.
- Drain the oil.

Filling up

- Fit new seals on the tank and couplings.
- Refit the unit in the technical compartment with its tube and upper support.
- Connect the pipes and the power supply.
- Unscrew the filler plug.
- Fill up the tank through the filler hole.
- Tighten the plug.
- Operate the lifting system several times.

⚠ CAUTION

Always use hydraulic oil in accordance with the specifications (see lubrication table).

https://truckmanualshub.com/

Lift mast

Specific mast maintenance

Check the condition of the mast and the chain mountings ▷

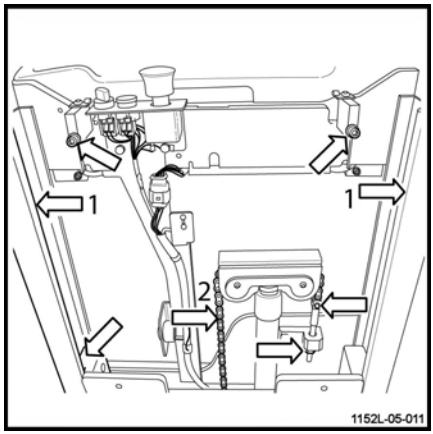

- Thoroughly clean the mast guide rails (1) and the chain (2).
- Inspect surfaces for wear and check rotation of rollers.
- Check the condition and wear of the chain, especially around the return pulleys.
- Check the mounting of the chain anchor bars.
- Replace any worn chains, or any chain that is stretched by 3% or more.
- Check the mounting flange of the cylinder on the mast.
- Check the mechanical mast stops.
- Check the mountings of the chain's two return pulleys.
- Check the condition and mounting of the mast end-of-travel sensors.

Adjust the length of the mast chain ▷

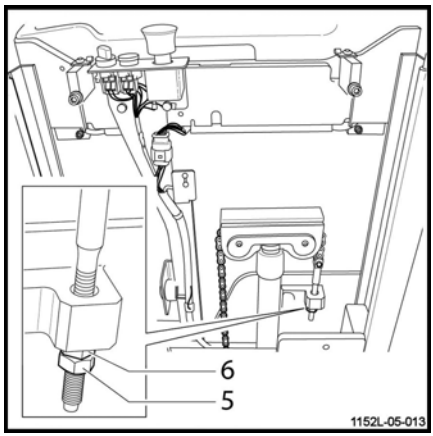

NOTE

Depending on the use of the truck, the chains are liable to stretch and as a result they have to be adjusted regularly.

- Lower the mast completely.
- Unscrew the locknut (5).
- Place the chain under slight tension by tightening the nut (6).
- Retighten the locknut (5).

https://truckmanualshub.com/

⚠ CAUTION

Deterioration or destruction of the equipment.

After this adjustment, check that the lifting carriage does not reach the mechanical stop at the top of the mast. If it does, slacken the chain slightly or replace it. We advise you to entrust this operation to a specialist within our network.

Clean and lubricate the chain ▷

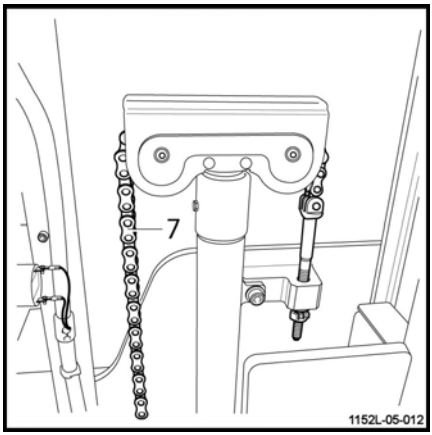

NOTE

If the lifting chain is too dirty, clean it.

- Place a recipient underneath the elevator.
- Clean using a paraffin-based product (petroleum, gas-oil etc.). Observe the manufacturer's safety instructions.
- If you use a steam jet, do not use any additives.
- Dry the chain (7) and its joints immediately with compressed air. Move the chain frequently during this operation.
- Lubricate the chain (7) immediately using a special aerosol chain lubricant.

⚠ CAUTION

Deterioration or destruction of the equipment.

The chain is a safety device. Using cold detergents, chemical products, acid or chlorinated products could destroy it.

NOTE

Use of high pressure liquid cleaning devices is not advisable.

https://truckmanualshub.com/

Lubricate the mast

▷

– Coat the guidance surfaces, the return pulleys and the chain with a special aerosol chain lubricant.

NOTE

For equipment that is used in the food industry, use a dry lubricant instead of an aerosol.

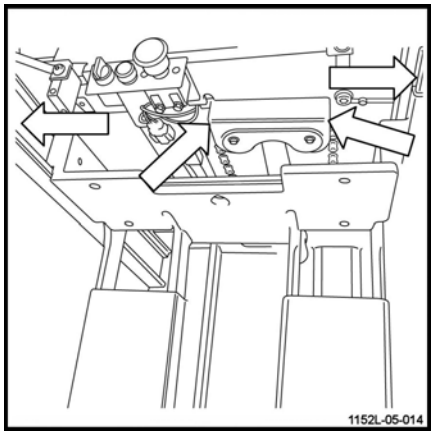

Check the condition of the mast protector mountings

▷

It is important to check the condition of the mast guard plate (3) and the tightness of its mountings (1) and (2).

⚠ WARNING

Risk of serious injury and/or serious damage to equipment

Keep hands away from moving parts and assemblies without first lowering the equipment to the ground and disconnecting the battery.

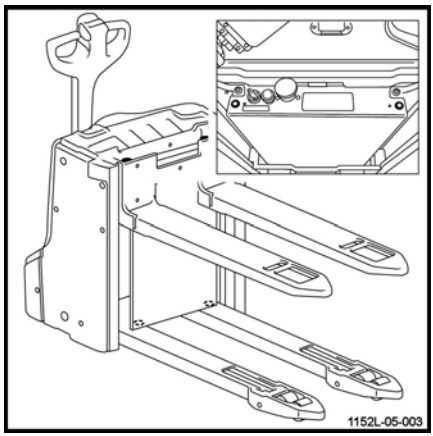

https://truckmanualshub.com/

Commissioning and storage

Storage of truck

Precautions should be taken if the truck must not be used for a reasonably long period. The operations depend on the length of time it is unused.

Long-term truck storage

The following work must be carried out on the truck to prevent corrosion if it needs to be stored for a long period of time. If the truck is to be stored for more than two months, it must be positioned in a clean and dry area. The area must be well-ventilated with no risk of freezing.

The following operations must be performed:

– Clean the truck thoroughly.

– Check the hydraulic oil level and refill if necessary.

– Lower the forks onto a suitable support (e.g. a pallet) until the chains are slack.

– Coat any unpainted metal parts with a thin layer of oil or grease.

– Grease all hinges and joints.

– Check battery condition and electrolyte density. Maintain the battery in accordance with the manufacturer's requirements. (Follow the instructions).

– Spray contacts with an aerosol product designed for contacts.

– Raise and chock the truck: the wheels must not touch the ground in order to prevent irreversible deformation of the tyres.

– Cover the truck with a cotton cover to protect it from dust.

⚠ CAUTION

We recommend that you do not use a plastic sheet as this encourages condensation to form.

Consult the service department for further measures to take if the truck must be stored for a longer period of time.

Recommissioning after storage

If the truck has been stored for more than six months, it must be checked carefully before being recommissioned. This check is similar to the workplace accident prevention inspection. It is therefore necessary to check all points and systems that are important for truck safety.

Carry out the following operations:

– Clean the truck thoroughly.

– Grease all hinges and joints.

– Check the condition and density of electrolyte, and, if necessary, recharge the battery.

– Check that there are no traces of condensation water in the hydraulic oil. Drain if necessary.

– Carry out the same maintenance work as for the first time it was commissioned.

– Commission the truck.

– In particular, check the following during start-up:

- traction, control and steering.
- brakes (service brake and parking brake).
- lifting device.

https://truckmanualshub.com/

Permanent Putting Out of Commission (Destruction)

When scrapping the truck, it is necessary to:

- Remove the various parts of the truck (covers, battery, chains, motors etc.)
- Sort out the components depending on their type: pipes, rubber components, lubricants, aluminium, iron etc.
- Before scrapping the truck, notify the competent authorities of your country in writing.
- After receiving the authorisation from the competent authorities, remove any components according to national standards.

NOTE

The client is solely responsible for any irregularities he has committed during or after the scrapping of the truck's components and the removal of components.

https://truckmanualshub.com/

https://truckmanualshub.com/

6

Technical specifications

https://truckmanualshub.com/

EXU-H datasheet

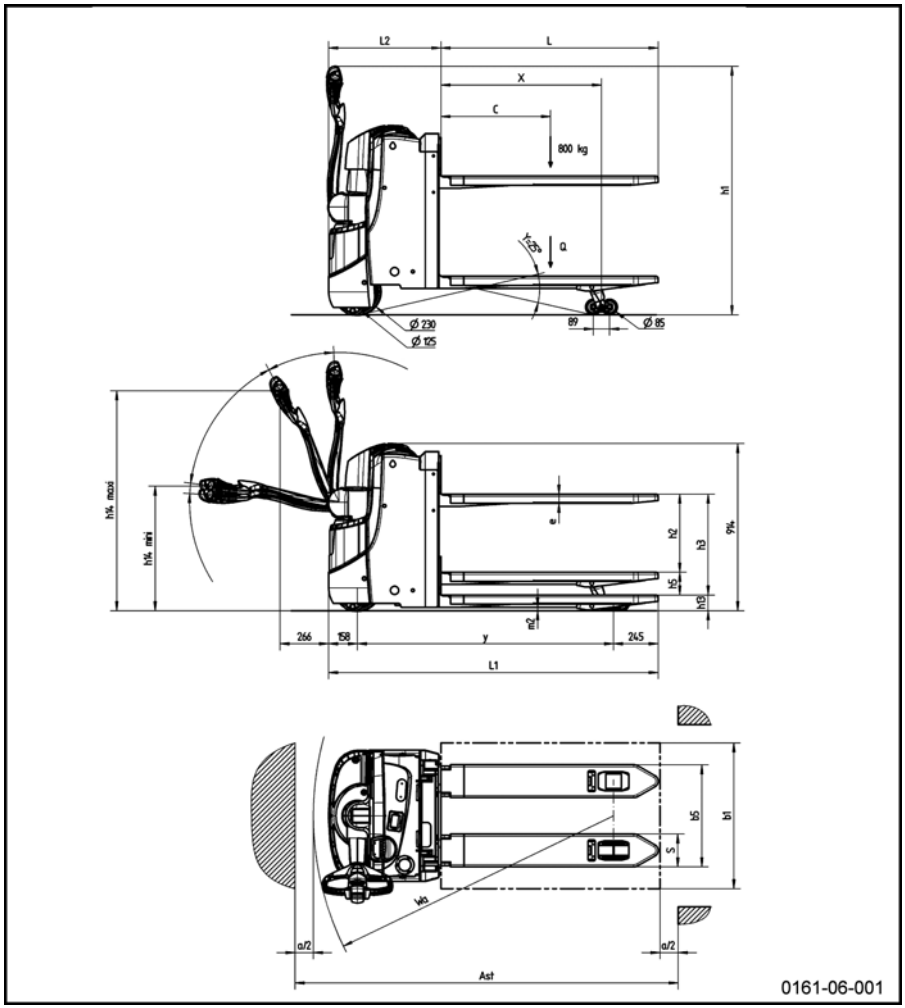

https://truckmanualshub.com/

DESIGNATION				
1.1	Manufacturer		STILL GmbH	
1.2	Model type		EXU–H 18	EXU-H 20
1.3	Method of propulsion: battery, diesel, petrol, LPG, mains power		Battery	
1.4	Driving: manual, pedestrian, standing, seated, order picking		Pedestrian	
1.5	Fork arms/load arms nominal capacity	Q (kg)	800/1800	800/2000
1.6	Centre of gravity	C (mm)	600	
1.8	Distance from load wheel axle to load mating face (±5 mm)	X (mm) 1150 lowered/raised	950/890	
1.9	Wheelbase (±5 mm)	y (mm) 1150 lowered/raised	1404/1338	

WEIGHT				EXU–H 18	EXU-H 20
			Battery		
2.1	Weight in working order (±10%)	kg	BS	556	
			2 Pzs	603	
2.2	Load per laden axle, drive side/load side (±10%)	kg	BS	856/1539	
			2 Pzs	937/1664	
2.3	Load per unladen axle, drive side/load side (±10%)	kg	BS	411/145	
			2 Pzs	458/145	

WHEELS				EXU–H 18	EXU-H 20
3.1	Tyres: polyurethane, rubber			C+P/P	
3.2	Drive wheel dimensions (width at the ground)	Øxl (mm)		230 x 75 POLYURETHANE	
3.3	Wheel sizes, load side	Øxl (mm)		Ø85 x 90 (bogies = 85 x 65)	
3.4	Additional wheels (dimensions)	Øxl (mm)	Stabilisers	125 x 40	
3.5	Number of wheels at drive side/load side (x = drive wheel)			1x+ 2 / 2 (4 in bogies)	
3.6	Drive side track width (± 5 mm)	mm		482	
3.7	Load side track width (± 5 mm)	mm	Mobile chassis 520/560	340/380	

DIMENSIONS			EXU–H 18	EXU-H 20
4.2	Lowered mast height (height of tiller - highest point of the truck) (max)	h1 (mm)	1370	
4.3	Free lift (max)	h2 [mm]	550	

https://truckmanualshub.com/

4.4	Lift (± 5 mm) (max)	h3 (mm)		675	
4.6	Initial lift (± 5 mm)	h5 (mm)		125	
4.9	Height of tiller in driving position (min/max)	h14(mm)		720/1240	
4.15	Height at the ends of the fork in the lower position (max)	h13 (mm)		85	
4.19	Total length (± 5 mm)	L1 (mm)	**Battery**	EXU–H 18	EXU-H 20
			BS	1807	
			2 Pzs	1882	
4.20	Length to load mating face (±5 mm)	L2 (mm)	BS	617	
			2 Pzs	692	
4.21	Total width (± 5 mm)	b1/b2 (mm)		720	
4.22	Fork arm dimensions	s/e/l (mm)		180/50/1190	
4.25	Outside fork arm spread (± 5 mm)	b5 (mm)		520/560	
4.32	Ground clearance at centre of wheelbase (min/max)	m2 (mm)		20/145	
4.33	Aisle width with a 1000 x 1200 pallet crosswise	Ast (mm)	**Battery**	EXU–H 18	EXU-H 20
			BS	2045	
			2 Pzs	2120	
4.34	Aisle width with an 800 x 1200 pallet lengthwise	Ast (mm)	BS	2095	
			2 Pzs	2170	
4.35	Turning radius (mini) (lowered/raised forks)	Wa (mm)	BS	1645/1585	
			2 Pzs	1720/1660	

PERFORMANCE DATA			EXU–H 18	EXU-H 20
5.1	Transfer speed when laden/unladen (5%)	km/h	6/6	
5.2	Base lift lifting speed laden/unladen (± 10%)	m/s	0.035/0.041	0.035/0.041
	Main lift lifting speed laden/unladen (± 10%)	m/s	0.115/0.184	
5.3	Base lift lowering speed laden/unladen (± 10%)	m/s	0.062/0.031	0.062/0.031
	Main lift lowering speed laden/unladen (± 10%)	m/s	0.326/0.13	
5.8	Maximum gradient when laden/unladen, 5 minutes	%	12/24	10/24
5.9	Acceleration time when laden/unladen (d = 10 m)	s	8.45/7.1	8.8/7.1
5.10	Service brake		Electromagnetic	

https://truckmanualshub.com/

DRIVE				EXU–H 18	EXU-H 20
6.1	Traction motor, hourly output	kW	AC motor	1.2	
6.2	Lift motor at 15% utilisation	kW	DC motor	1.2	
6.3	Battery type in accordance with	(except Li-ion)	BS	DIN 43 535 A	
			2 Pzs	DIN 43 535	
6.4	Battery voltage and capacity (dis-charge in 5 h)	V/Ah	BS	24/160	
			2 Pzs	24/190	
			Li-ion 82 Ah	24/82	/
			Li-ion 164 Ah	23/164	/
			Li-ion 205 Ah	23/205	/
			Li-ion 410 Ah	23/410	/
6.5	Battery weight (± 10%)	kg	BS	144	
			2 Pzs	191	
			Li-ion 82 Ah	150	/
			Li-ion 164 Ah	170	/
			Li-ion 205 Ah	110	/
			Li-ion 410 Ah	151	/
6.6	Energy consumption according to standardised VDI cycle	kWh / h		0.38	

OTHER			EXU–H 18	EXU-H 20
8.1	Speed control	AC controller	LAC	
8.4	Noise level at operator's ears (± 5 dB(A))	dB (A)	59	

https://truckmanualshub.com/

Technical datasheet EXU-H 20S (option)

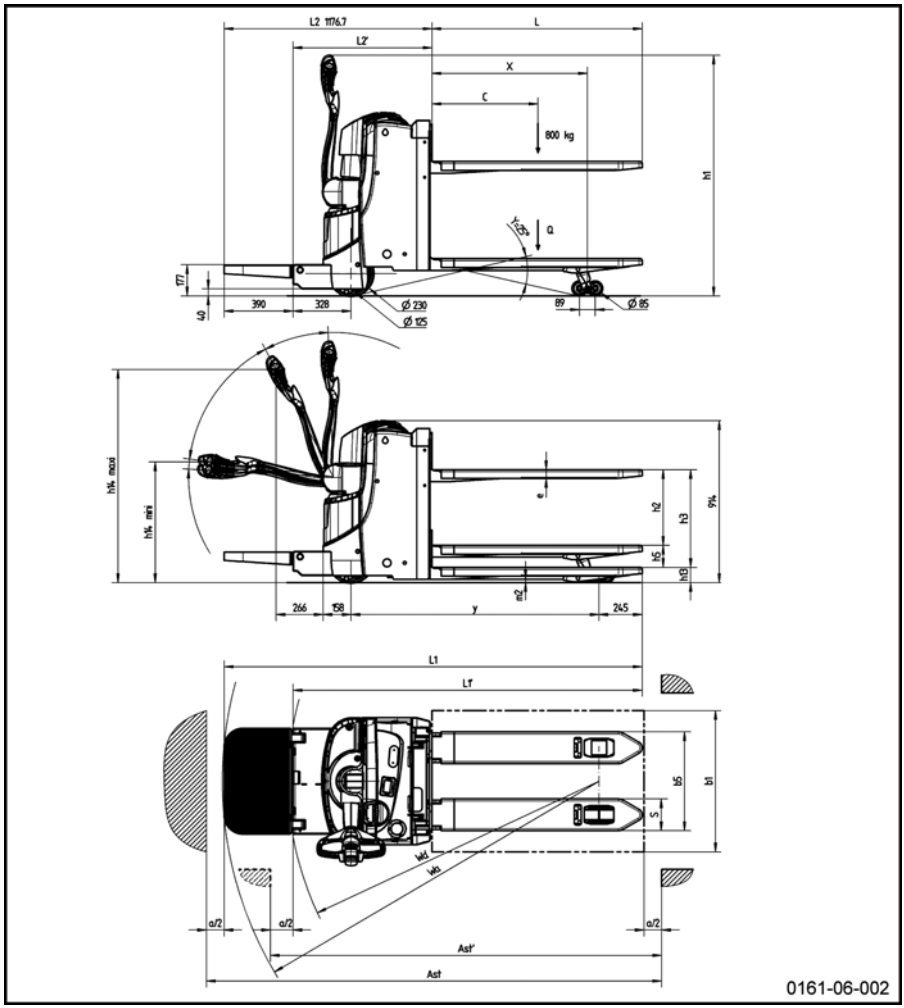

https://truckmanualshub.com/

DESIGNATION			
1.1	Manufacturer		STILL GmbH
1.2	Model type		EXU-H 20S
1.3	Method of propulsion: battery, diesel, petrol, LPG, mains power		Battery
1.4	Driving: manual, pedestrian, standing, seated, order picking		Pedestrian
1.5	Fork/load arm nominal capacity	Q (kg)	800/2000
1.6	Centre of gravity	C (mm)	600
1.8	Distance from load wheel axle to load mating face (±5 mm)	X (mm)	950/890
1.9	Wheelbase (±5 mm)	y (mm)	1404/1338

WEIGHT			EXU-H 20S
2.1	Weight in working order (±10%)	kg	645
2.2	Load per laden axle, drive side/load side (±10%)	kg	982/1664
2.3	Load per unladen axle, drive side/load side (±10%)	kg	500/145

WHEELS				EXU-H 20S
3.1	Tyres: polyurethane, rubber			C+P/P
3.2	Drive wheel dimensions (width at the ground)	Øxl (mm)		230 x 75 POLYURETHANE
3.3	Wheel sizes, load side	Øxl (mm)		Ø85 x 90 (bogies = 85 x 65)
3.4	Additional wheels (dimensions)	Øxl (mm)	Stabilisers	125 x 40
3.5	Number of wheels at drive side/load side (x = drive wheel)			1x+ 2 / 2 (4 in bogies)
3.6	Drive side track width (± 5 mm)	mm		482
3.7	Load side track width (± 5 mm)	mm	Mobile chassis 52/56	340/380

DIMENSIONS			EXU-H 20S
4.2	Mast lowered height (tiller height - truck highest point) (max)	h1 (mm)	1370
4.3	Free lift (max)	h2 [mm]	550
4.4	Lift unladen/laden (± 5 mm) (max)	h3 (mm)	675
4.6	Initial lift (± 5 mm)	h5 (mm)	125
4.9	Height of tiller in driving position (min/max)	h14(mm)	720/1240

https://truckmanualshub.com/

Technical datasheet EXU-H 20S (option)

4.15	Height at the ends of the fork in the lower position (max)	h13 (mm)		85
4.19	Total length (± 5 mm)	L1 (mm)		2367
4.20	Length to load mating face (±5 mm)	L2 (mm)	Pedestrian/ride-on	787/1177
4.21	Total width (± 5 mm)	b1/b2 (mm)		720
4.22	Fork arm dimensions	S/e/l (mm)		180/50/1190
4.25	Outside fork arm spread (± 5 mm)	b5 (mm)		520/560
4.32	Ground clearance at centre of wheelbase (min/max)	m2 (mm)		20/145
4.33	Aisle width with a 1000 x 1200 pallet crosswise (± 20 mm)	Ast (mm)	Pedestrian/ride-on	2160/2532
4.34	Aisle width with an 800 x 1200 pallet lengthwise (± 20 mm)	Ast (mm)	Pedestrian/ride-on	2210/2582
4.35	Turning radius (± 20 mm)	Wa (mm)	**Pedestrian**	
			lowered forks / raised forks	1760/1700
			Ride-on	
			lowered forks / raised forks	2132/2072

PERFORMANCE DATA			EXU-H 20S
5.1	Transfer speed when laden/unladen (5%)	km/h	6.00/6.00
5.2	Base lift lifting speed laden/unladen (10 %)	m/s	0.035/0.041
	Main lift lifting speed laden/unladen (10 %)	m/s	0.115/0.184
5.3	Base lift lowering speed laden/unladen (10 %)	m/s	0.062/0.031
	Main lift lowering speed laden/unladen (10 %)	m/s	0.326/0.13
5.8	Maximum gradient when laden/unladen, 5 minutes	%	10/24
5.9	Acceleration time when laden/unladen (d = 10 m)	s	8.8/7.1
5.10	Service brake		Electromagnet-ic

DRIVE				EXU-H 20S
6.1	Traction motor, hourly output	kW	AC motor	1.2
6.2	Lift motor, at 10% operation	kW	DC motor	1.2

https://truckmanualshub.com/

6.3	Battery type in accordance with DIN 46 531 / 35 /36 A, B, C, no	2 Pzs		DIN 43 535
6.4	Battery voltage and capacity (discharge in 5 h)	V/Ah	2 Pzs	24/190
6.5	Battery weight (10%)	kg	2 Pzs	191
6.6	Energy consumption according to standardised VDI cycle	kWh / h		0.38

OTHER			EXU-H 20S
8.1	Speed control	AC controller	LAC
8.4	Noise level at operator's ears (± 5 dB(A))	dB (A)	59

https://truckmanualshub.com/

https://truckmanualshub.com/

A

Accessing the reducer and the brake. . . . 93
Access to the technical compartment. . . . 90
Address of manufacturer. I
Adjusting the height of the stabilisers
Stabilisers. 101
Adjusting the on-board charger 73
After washing the truck. 98
Anti-crush safety device
Checking. 37
Description of the function. 37
Autolift
Enclosure. 61
Loading and unloading. 61
Use. 60

B

Battery. 67
Charging a Gel or Lead battery (wall-mounted charger). 35
Cleaning the battery. 98
Type. 67
Battery acid. 14
Battery charge indicator. 24
Battery electrolyte density. 106
Battery maintenance. 105
Brake
Checking the brake. 35
Braking. 45
Braking system. 32

C

CE labelling. 3
Changing the battery. 73
Charger
Using the charger. 71
Charging the battery. 99
Checking the anti-crush safety device. . . . 37
Checking the cables, terminals and battery connector. 107
Checking the electrical connections. . . . 107
Checking the emergency stop. 36
Checking the horn. 36
Checks prior to start-up. 34
Check the tyres and the wear on the wheels and rollers. 101
Cleaning the electrical system. 97
Cleaning the sensors for the Autolift option. 108
Clean the truck. 97
Climatic conditions. 8
Consumables. 13
Battery acid safety instructions. 14
Disposal. 15
Oil Safety Information. 13
Safety information for handling hydraulic fluid. 14
Contact details. I
Copyright and property rights. 3

D

Definition of responsible persons. 18
Description of the Autolift option. 60
Description of use. 8
Destruction. 115
Digicode option (LFM Go). 26
Directions
Defining directions. 41
Display components. 23
Disposing of components and batteries. . . . 9
Driver rights,duties and rules of behaviour. 18
Drivers. 18
Driving. 32, 40, 43
Driving on loading bridges. 83
Driving on upward and downward slopes. 44
Driving safety guidelines. 40

E

EC declaration of conformity. 4
Electrolyte level and battery water top-up. 105
EXU-H datasheet. 118

F

FleetManager™
Colour code for the LEDs. 50
Commissioning a truck equipped with a keypad or an electronic key. 49
Commissioning a truck equipped with an RFID reading device. 49
Description. 48
Disconnecting a truck equipped with a keypad or electronic key. 52
Disconnecting a truck equipped with an RFID reading device. 53

https://truckmanualshub.com/

Disconnecting the truck. 52
Start-up. 49
Folding platform
Driving in pedestrian mode. 63
Driving in ride-on mode. 63
Maintenance. 100
Use. 63
Fuses. 104

G

Gel and lead side access batteries: changing the battery using a trolley. 75
Gel battery. 98
General. 2
General information on battery maintenance. 99
General maintenance information
General. 86

H

Handling the truck in specific situations. . . 81
Hydraulic circuit, draining the circuit. . . . 110
Hydraulic fluid. 14

I

Identification label. 5

J

Jacking. 82

L

Lead battery. 98
Lifting. 56
Base lift. 57
Main Lift. 57
Lifting system. 32
Lifting the truck. 81, 82
Load handling. 57
Load handling safety rules. 54

M

Maintaining the reinforced stabilisers (option). 102
Maintenance plan
1000-hour/annual maintenance plan . . 95
3000 hours. 96
As required. 94
Markings. 28
Mast / chains
Adjust the length of the mast chain. . 111
Check the condition of the mast and the chain mountings. 111
Check the condition of the mast protector mountings. 113
Clean and lubricate the chain. 112
Lubricate the mast. 113

N

Noise emission values. 16

O

Oil level check. 109
Oils. 13
Opening/closing the battery cover. 68
Operating company. 18
Operating devices. 23
Operator's seat. 33
OptiSpeed. 44
Ordering spare parts and consumables. . . 87
Order picking. 67
Overview. 22
Overviews. 0

P

Parking brake. 45
Permanent Putting Out of Commission. . 115
Permissible use. 8
Precautions to be taken during battery maintenance. 99
Prohibition of use by unauthorised persons. 19

R

Regular maintenance of the transmission gear. 103
Residual dangers, residual risks. 17

S

Safety devices. 88
Safety Inspection. 20
Selecting the driving mode. 42
Serial number. 29
Service the on-board charger. 107
Servicing and maintenance measures. . . . 88
Servicing the electrical system. 104
Servicing the pump motor. 107
Servicing wheels and rollers. 101

https://truckmanualshub.com/

Side access battery: changing the battery using a moveable support. 77
Slinging the truck. 81
Spare parts list. 7
Specialist. 18
Stabilisers. 33
Stability. 17
Start-up. 41
Steering. 32
Symbols used. 9

T

Technical datasheet EXU-H 20S (option). 122
Technical specifications for inspection and maintenance. 89
Towing the truck. 79
Transporting the machine. 83
Transporting the truck. 82
Transporting the truck in the lift. 83
Truck operating instructions. 38

U

Unauthorised use. 9

V

Vibrations
Vibration values for upper limbs. 16

W

Washing instructions. 97
Washing the exterior of the truck. 97
Working on the electrical equipment. 88

https://truckmanualshub.com/

https://truckmanualshub.com/

https://truckmanualshub.com/