https://truckmanualshub.com/

100+ YEARS OF GLOBAL
TRUST & COMMITMENT

Next Step To Future

XD 30

3.0 Ton Diesel Truck

WHY BUY ME?

- Contemporary forklift – in terms of superior ergonomics & outlook
- Safe forklift - in terms of unobstructed operator visibility
- High performance engine in it's class
- High performance Transmission & Hydraulic systems in its class

TOLL FREE NUMBER- 1800 270 1123

https://truckmanualshub.com/

BRAND HISTORY

1917

Founded in **1917**; starts in 1918 the production of cars

1933

In **1933**,acquisition by FIAT Group

1937

In **1937** The Plants Of Milan And Brescia Are Unified And The agricultural Machinery Division Of Suzzarals Incorporated With TheGrowth Of 3 New Segments :
1.Buses, Trucks, **2.**Rail Equipment, Agricultural Tractors, Forklift Trucks, Marine Engines
3.Engine Pumps And Cooling Systems

1957

In **1957** OM becomes FIAT Carrelli Elevatori, belonging to IVECO Division

1961

In **1961** PIMESPO, Piccola Industria Meccanica sul Po was born in Luzzara, manufacturing WH Trucks

1981

In **1981** FIAT IVECO acquires PIMESPO.

1992

In **1992** LINDE Group acquires from FIAT the Forklift Division.

2002

In **2002** the Company changes his name into OM Carrelli Elevatori keeping the Brand OM PIMESPO.

2005

In **2005** Luzzara becomes a Plant for the whole STILL Group

2006

In **2006** Linde, Still and OM are unified into the KION Group.

2017

In **2017**, OM launched in Indian market.

https://truckmanualshub.com/

OVERALL DIMENSIONS AND SPECIFICATIONS FOR XD 30

SPECIFICATION	1.1	Model	Unit	XD30
	1.2	Power type		Diesel
	1.3	Load Capacity	Q(Kg)	3000
	1.4	Load Capacity at MFH	Kg	2400
	1.5	Load center	C(mm)	500
	1.6	Axle centre to fork face	X(mm)	484
	1.7	Wheel Base	Y(mm)	1700
WEIGHT	2.1	Service Weight	kg	4400
	2.2	Axle loading, laden front / rear	kg	6610 / 580
	2.3	Axle loading, unladen front / rear	kg	1820 / 2640
WHEEL & TYRES	3.1	Tyre		Cushion
	3.2	Front Tyres Size - Two		28 x 9-15
	3.3	Rear Tyres Size - Two		6.50 x 10
	3.4	Front Track Width	b10(mm)	1000
	3.5	Rear Track Width	b11(mm)	970
DIMENSIONS AND OVERALL SIZES	4.1	Mast lift,Forward / Backward - Degree	α / β	6°/ 6°
	4.2	Mast Minimum Overall Height	h1(mm)	2180
	4.3	Free lift	h2(mm)	1525
	4.4	Lift height	h3(mm)	4500
	4.5	Mast Maximum Overall Height with LBR	h4(mm)	5150
	4.6	Overhead Guard Height	h6(mm)	2108
	4.7	Seat Height	h7(mm)	1070
	4.8	Overall Length	L1(mm)	3780
	4.9	Length to Face of Forks	L2(mm)	2710
	4.10	Overall Width	b1(mm)	1225
	4.11	Fork Arms Dimensions	s/e/l(mm)	45/125/1070
	4.12	Fork Carriage Width	b3(mm)	1100
	4.13	Ground Clearance below Mast(laden)	m1(mm)	135
	4.14	Ground Clearance Centre of Wheelbase(laden)	m2(mm)	140
	4.15.1	Working aisle width with pallet 1000 x 1200 crossways****	Ast(mm)	4144
	4.15.2	Working aisle width with pallet 800 x 1200 lengthways****	Ast(mm)	4344
	4.16	Turning Radius	Wa(mm)	2460
PERFORMANCE	5.1	Drive Speed laden/unladen	km/h	16.5/17
	5.2	Lifting Speed laden/unladen	mm/s	520 / 595
	5.3	Lowering Speed laden/unladen	mm/s	475 / 390
	5.4	Drawbar Pull Tractive Effort (at 2km/h) with / without load	KN	15 / 10
	5.5	Gradeability (at 2km/h) laden/unladen	%	20
	5.6	Service Brake		Mechanical /Hydraulic
ENGINE	6.1	Engine Manufacturer/Engine Type		Mitsubishi S4S
	6.2	Engine Power in compliance with ISO 1585	kW	35.3
	6.3	Rated Number of Revolutions	r/min	2250
	6.4	Cylinder Number/Displacement	cm^3	4/3331
OTHERS	7.1	Transmission type		Automatic
	7.2	Volume fuel tank	L/Kg	52/45

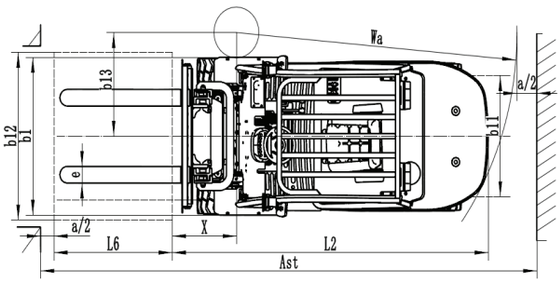

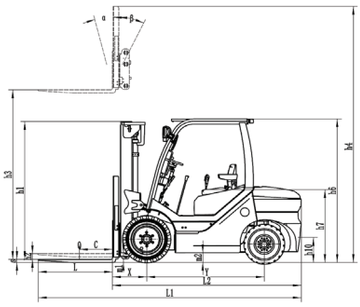

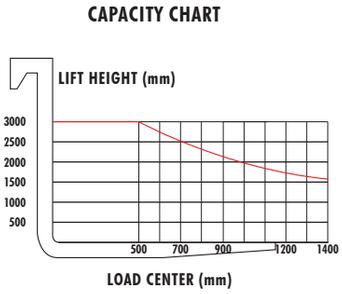

https://truckmanualshub.com/

100+ CUSTOMER
TOUCH POINTS FOR SALES & SERVICE

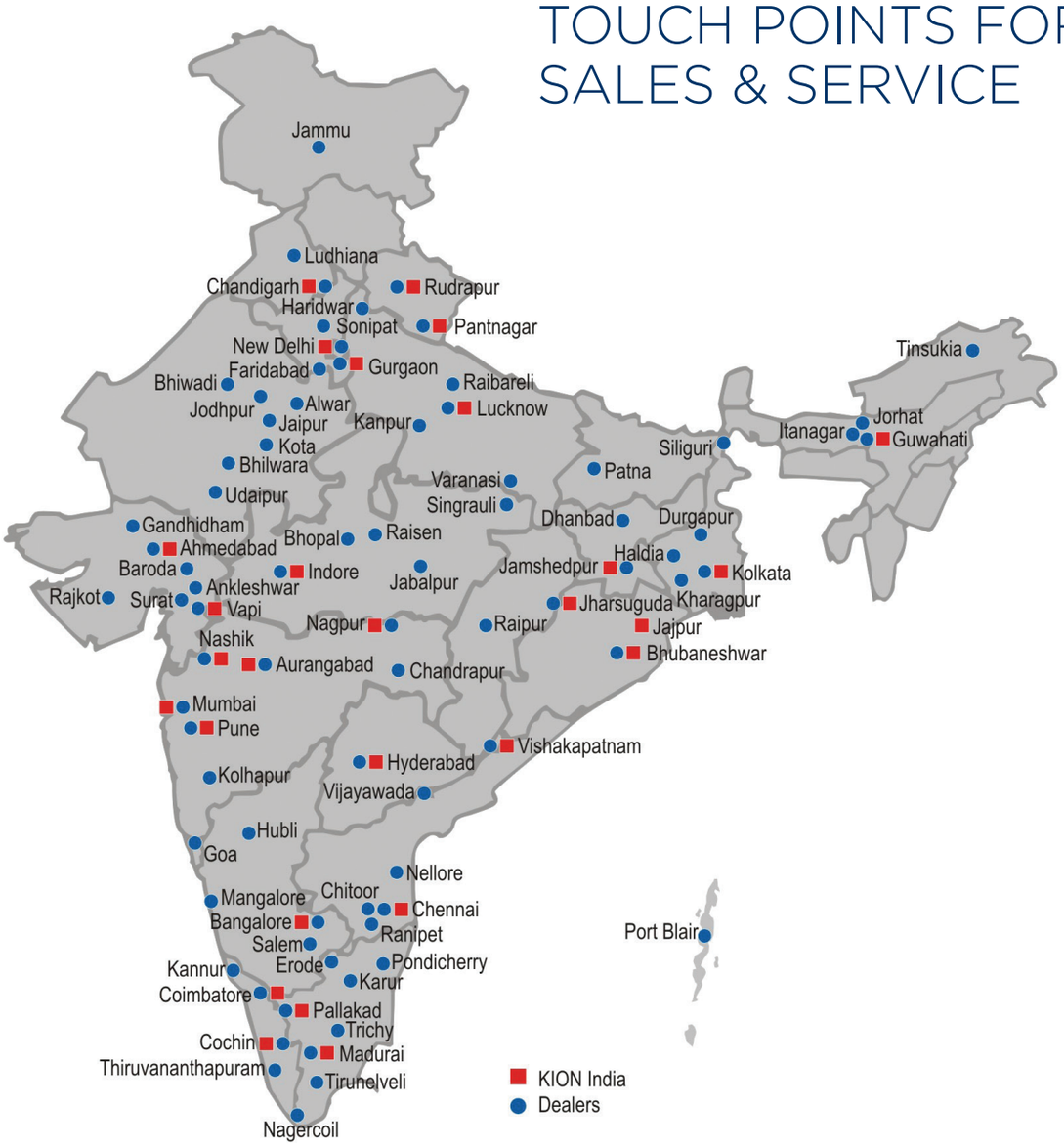

Address :
KION INDIA Private Limited, 5/4 Chandan Nagar,
Pune Nagar Road, Pune-411014 | Ph. No. 020 67342101/194/130/153/129
TOLL FREE NUMBER- 1800 270 1123

TÜV NORD
TÜV India Private Ltd.
ISO 9001

F:MKT KION 302.140.00