AR530

OPERATING WEIGHT	ENGINE OUTPUT	SHOVEL CAPACITY
7,050 kg	**80 kW (107 HP)**	**1.3 - 1.5 m³**

weycor
BY ATLAS WEYHAUSEN

https://truckmanualshub.com/

FIRST IMPRESSIONS COUNT!

weycor wheel loaders are more than the sum of their parts. They reflect true passion, a fascination with technology and 'Made in Germany' quality. It's thanks to the innovative spirit of our people, their dedication to detail and their passion for powerful engine technology that this new generation of wheel loaders has been developed.

7,050* KG OPERATING WEIGHT

80 KW (107 HP) ENGINE OUTPUT

1.3 M^3 SHOVEL CAPACITY

Operating data

Shovel capacity	**1.3 m³**
Track width	**1,640 mm**
Turning radius (outer shovel edge)	**4,716 mm**
Tear out force	**6,800 daN**
Torque	**5,590 daN**
Tipping load, straight	**5,577 kg**
Tipping load, articulated	**4,948 kg**
Lifting capacity at ground level	**6,000 daN**
Operating weight	**7,050 kg**

Specifications

Differing data for use of pallet forks (500 mm distance to center of gravity)*	
Static tipping load, straight and articulated	**4,070 kg**
Lifting capacity	**5,100 daN**
Payload 80% even surface**	**3,256 kg**
Payload 60% uneven surface***	**2,442 kg**

Sound level	
Average sound power level L_WA(1)	**100.0 dB(A)**
Guaranteed sound power level L_WA(2)	**101.0 dB(A)**
Sound pressure level L_PA(3)	**75.0 dB(A)**
Vibration values hand/arm/whole body vibration(4)	**< 2.5/0.5 m/s²**

* Travel with load only permitted close to the ground. ** According to ISO 8313 and EN 474-3. *** According to ISO 14396, EU RL97/68/EC.
(1) According to 2000/14/EG & appendixes. (2) According to 2000/14/EG & appendixes. (3) According to ISO 6396. (4) According to ISO 8041.

Important Information on Shovel Size / Shovel Contents:

The details contained in this brochure relate solely to the weycor shovels referred to in the respective data sheet, with the associated technical parameters and configurations on which the respective CE approval for the device is based. The volume of the specific usable shovel depends on the material-specific bulk weights (t/m³) of the shovel contents, which you can take as approximations from the data sheet's TABLE OF SPECIFIC WEIGHTS IN t/m³. Regardless of this, neither the wheel loader's permissible working weight nor its permissible tipping loads may be exceeded. If the wheel loader is equipped with shovels that are not manufactured and licenced by Atlas Weyhausen GmbH, the buyer and / or the operator is solely responsible for compliance with the relevant statutory regulations and licensing requirements – particularly those relating to road-traffic and road-traffic-licensing law.

* The operating weight may vary with different equipment.
All technical information refers exclusively to the standard device.

https://truckmanualshub.com/

DETAILS THAT MAKE AN IMPRESSION

It is demanding to meet the new legal requirements for exhaust emissions. The challenge is to create also tangible benefits for our customers. We are proud to have achieved both in the development of the current wheel loader generation: more power - less consumption, plus a number of others innovations that really make a difference on tough construction sites.

Comfortable cabin
In addition to the excellent circumferential visibility in the wheel loader, its clearly arranged controls and its ergonomic design.

Easy maintenance
Low-maintenance and quick, easy servicing is achieved by central, consolidated, easy-to-reach service points.

Powerful drive unit
weycor wheel loaders are equipped with state-of-the-art engines which combine high power reserves for challenging operations with up-to-date low emission values.

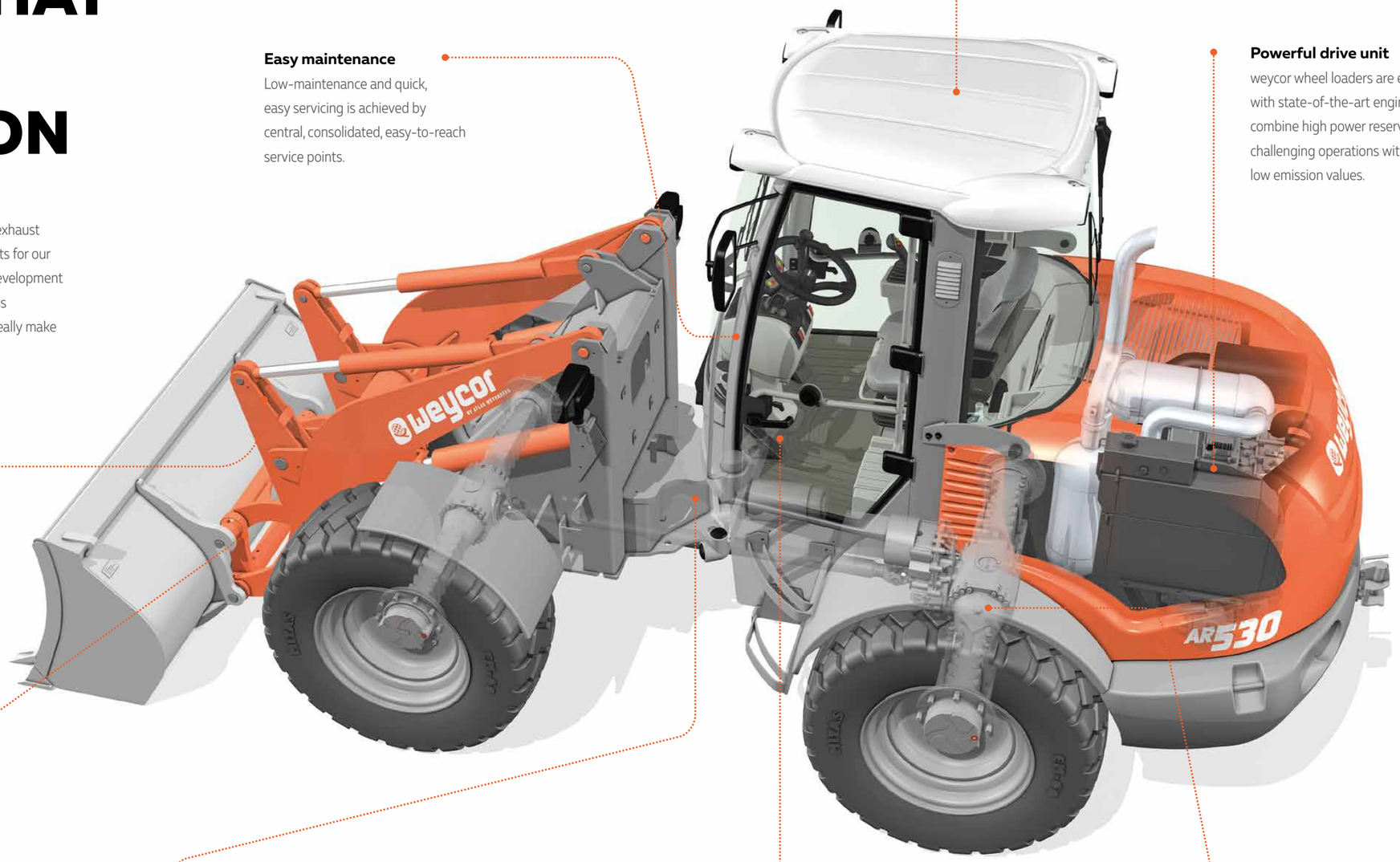

State of the art kinematics
weycor Z-kinematics is characterised by high frictional forces and excellent lifting heights. The very good parallel guide provides the optimal prerequisites for using pallet forks. When the hoist is lowered with the shovel, the shovel returns automatically to the digging position. The boom that is tapered towards the top provides the best possible view of the attachment and working area at all times, even under difficult operating conditions.

Hydraulic quick-change attachment
By allowing you to change the wheel loader's attachments in a few seconds, it turns the vehicle into an all-rounder.

Articulated-pendulum joint
In weycor wheel loaders, we use robust, low-maintenance articulated-swivel joints almost exclusively in conjunction with rigid axes. With an oscillation of ±12° in the rear carriage and an articulation angle of 40°, these provide outstanding cross-country mobility, protect the ground and offer extreme manoeuvrability. With their low centre of gravity, weycor wheel loaders have a high tilt stability even under extreme conditions.

Inching Pedal
As the only manufacturer, our wheel loaders have a separate inching pedal as standard. This prevents the possibility of moving against the operating brake, in contrast to the combination of a brake/inch pedal. A generously proportioned inching range facilitates precise distribution of shearing and lifting forces. The result: less wear and lower fuel consumption.

Spring-loaded brake
The spring-loaded or negative brake in weycor wheel loaders is a closed brake system (oil bath multiple-disc brake) which holds the wheel loader securely in position on a slope when the brake or inch function is activated and automatically locks all four wheels when the engine is at a standstill. The multiple-disc brake runs in the oil bath and is particularly low-maintenance and low-wearing as a result.

https://truckmanualshub.com/

INNOVATIVE ENGINE TECHNOLOGY

TCD 3.6 L4 – intelligent efficient
We have been convinced of the quality of Deutz engines for over 40 years. Our cooperation with Deutz also offers numerous benefits for the AR 530: such as the electronic engine control with intelligent connection to the drive management. This ensures the best engine performance with low fuel consumption.

Mighty performance
80 kW at a maximum of 2,200 rpm

Compliance with emission standards
Standard: DPF + SCR / current EU Stage V

Deutz engine technology: TCD 3.6 L4
Water-cooled 4-cylinder inline engine with cooled, external exhaust gas recirculation with turbocharging and with charge air cooling. The powerful Common Rail injection system and the electronic engine control (EMR) with intelligent link to the drive management ensure optimum engine performance at low fuel consumption. Through the use of the diesel particulate filter, the engines comply with the EU Stage V emissions standard.

https://truckmanualshub.com/

TECHNICAL DATA

Engine	
Model	TCD 3.6 L4
Design	water-cooled
Output	80 kW (107 HP) at 2,200 rpm
Max. torque	430 Nm at 1,600 rpm
Cubic capacity	3,621 cm^3
Number of cylinders	4 in line

Electrical system	
Operating voltage	12 V
Battery	12 V / 100 Ah
Generator	14 V / 95 A
Starter	12 V / 3,2 kW

Drive

Output-regulated hydrostatic drive with pressure cut off and closed circuit acting on all 4 wheels.
Speed with standard tires:
Operating speed range 0–6.5 km/h
Road speed range 0–20 km/h
1st and 2nd hydraulic gear can be engaged under load, forward/backward travel also. Forward/backward travel, speed ranges and off-position operational via weycor joystick. Drive operated by accelerator and separate inching pedal for best distribution of the hydraulic power for thrust and lifting forces.

Brakes

Standard brake: Multi-disc brake in oil bath acting on all 4 wheels. Supplementary brake functions via inching pedal and hydrostatic drive acting on all 4 wheels.
Parking brake: Parking brake as springloaded brake acting on all 4 wheels. In case of standstill of engine the spring-loaded brake is automatically reactivated.

Axles

Rigid axles with planetary reduction gears in wheel hubs, connecting electrically 100%- differential lock in front and rear axle.

Steering

- Fully hydraulic center pivot steering
- Front and rear wheels follow the same track
- Steering angle of 40° to each side, ±12° angular movement at rear of vehicle
- Operating pressure of steering hydraulics 175 bar
- Emergency steering function

Tires (Special tires upon request)

Standard: 405/70 R24 EM-01 – Construction machine tires for clay, sand, gravel, asphalt, roads, gardening and landscaping

Special tires: 460/70 R24 – Construction machine tires for clay, sand, gravel, fields and greenland, fortified roads

Hydraulic system

- Gear pump for loading and steering hydraulics
- Priority valve favoring steering hydraulics
- Lowering brake dependent of load
- Two lifting and tipping cylinders each
- 3rd hydraulic section serial
- Loading hydraulic hydraulically pre-activated by weycor joystick, including float position
- Operating pressure 230 bar, Delivery of pump 85.8 l/min

Fuel/oil capacities	
Diesel	130 Liter
Hydraulic oil	98 Liter
Engine oil	8.8 Liter
Front axle	6.5 Liter
Rear axle	6.2 Liter
Gear oil	2.5 Liter
Cooling liquid	17 Liter
AdBlue	10 Liter

Loading equipment

- Powerful and solid Z-kinematics with high tear out force
- Hydraulic quick change device
- Activation of all functions by weycor joystick
- Parallel movement while using pallet forks
- Automatic shovel return to excavation position
- Locking device acc. to German StVZO for road travel

Lifting	**5.1 s**
Lowering	**3.6 s**
Tipping	**1.2 s**

Equipment – Series

- Rear driving mirrors, foldable
- Heatable rear screen
- Comfortable access to cab from both sides
- Activation of all functions by weycor joystick
- Control lights for speed range, forward/backward travel
- Lights acc. to German StVZO for road travel
- Individually adjustable driver's seat with adjustable right arm rest
- Water heating with heat exchange and 4-stage fan
- Front windscreen ventilation, variable output
- Sound absorbing ROPS cab
- Windscreen wipe and wash unit in front and rear
- Sun visor, coat hook, ceiling lamp, stow facility
- Adjustable steering column
- Heat protection glazing with largetinted screens
- Control lights for engine oil pressure, overheating, hydraulic oil temperature, battery power, parking brake and air filter
- Central dashboard with indicators for preheating, engine temperature, fuel, working hour meter

Equipment – Option

- 4th hydraulic section front or rear
- Stability damping system
- Slow drive inching pedal
- High speed version 40 km/h
- Extended lifting frame
- Load check valve for lifting and working cylinders
- Trailer coupling
- Main battery switch
- Corrosion prevention against salt
- Special paintings and oils
- Warning beacon
- Anti-theft-device with code stick
- Heatable and air cushioned seats
- Radio
- Doors with sliding windows, left and right side
- Air conditioning
- FOPS-II-roof
- LED work light
- DPF
- Reverse gear alarm
- 12 V socket 2-pin
- 12 V socket 13-pin
- Bucket level indicator

https://truckmanualshub.com/

TECHNICAL DATA

	AR 530 with standard shovel	AR 530 with pallet forks
A	5,752 mm	6,034 mm
B	2,838 mm	2,838 mm
C	4,455 mm	4,031 mm
C1	3,512 mm	3,346 mm
C2	2,663 mm	1,636 mm
D	81 mm	76 mm
E	732 mm	513 mm
E1	-	1,252 mm
E2	-	644 mm
F	566 mm	566 mm
G	2,286 mm	2,286 mm
H	2,092 mm	2,092 mm
I	2,250 mm	1,080 mm
R	2,141 mm	2,141 mm
R1	4,104 mm	4,104 mm

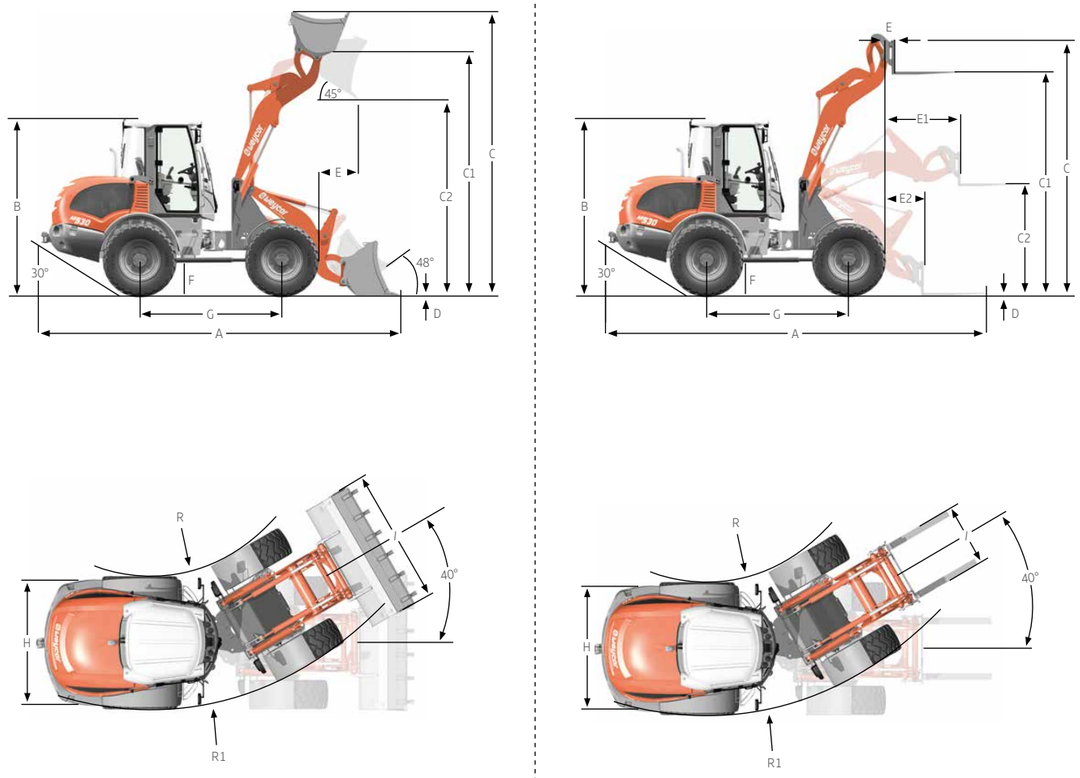

With standard shovel

With pallet forks

Specific gravity for material handling weight (t/m³)							
Construction				**Industry**		**Landscaping, Agriculture**	
Concrete	1.9	Sand (watery)	2.1	Ember	0.7	Agricultural crop	0.7
Soil (dry)	1.5	Sandstone	2.4	Brown coal briquette	0.8	Grain	0.6
Soil (watery)	2.0	Shale	2.2	Ferrous product	7.8	Hay	0.3
Rock (fill)	2.4	Sediment	2.1	Iron ore	2.3	Potash	1.1
Granite	1.8	Crushed stone	1.5	Cullet	1.9	Compost	1.0
Limestone	1.6	De-icing salt	1.3	Gas coke	0.4	Flour	0.5
Gravel (dry)	1.9	Clay	1.6	Timber	0.8	Clay (watery)	2.3
Gravel (watery)	2.1	Cement	1.7	Mineral coal	1.2	Phosphate fertiliser	2.2
Loam	1.7	Clinker (stacked)	1.8	Paper	0.9	Turf (watery)	1.1
Plaster	2.2			Slag	1.0	Turf (dry)	0.4
Sand (dry)	1.9			Slag concrete	2.7	Mineral fertiliser	1.0

en_01_2021_004

You can find our current product range and more exciting details at: **www.weycor.de**

Under our policy of continuous improvement, we reserve the right to change specifications and design without prior notice, errors expected. The technical data refer only to the standard version, illustrations do not necessarily show the standard version of the machine. Not all products are available in all markets.

weycor is a brand of ATLAS WEYHAUSEN GMBH.

ATLAS WEYHAUSEN GMBH · D - 27793 Wildeshausen
Phone +49 (0) 44 31 - 98 10 · info@weycor.de · **www.weycor.de**

weycor BY ATLAS WEYHAUSEN