https://truckmanualshub.com/

Husqvarna®

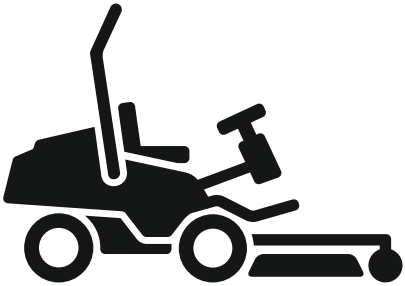

P 535HX

EN Operator's manual 2-69

https://truckmanualshub.com/

Contents

Introduction....2
Safety....12
Assembly....26
Operation....30
Maintenance....39
Troubleshooting....56
Transportation, storage and disposal....60
Technical data....63
Service....67
EC Declaration of Conformity....68

Introduction

Pre-delivery inspection and product numbers

Note: A pre-delivery inspection has been done of this product. Make sure that you receive a signed copy of the pre-delivery inspection document from your champion.

Service agent contact information:	
This operator's manual belongs to product with product number / serial number:	
/	
Engine:	
Transmission:	

Product description

The product is a front mower with hybrid technology. The power sources are a diesel engine and a 48 V system with batteries, motors and generator. The product has headlights and an easy to use touch display. The speed is adjusted with forward and rearward pedals. The product has all-wheel drive (AWD) and automatic brake. You can use the product with different types of cutting decks or other Husqvarna approved equipment.

Intended use

The product is made for operation in commercial areas. Use the product with cutting decks to cut grass, or with other equipment for other tasks. Speak to your Husqvarna dealer for more information about which cutting decks or equipment that are available. The product does not operate when the temperature in the 48 V batteries is less then 0 °C/32 °F. For winter use, we recommend you to park your product indoors with an ambient temperature temperature more than 0 °C.

Insure your product

Make sure that you have insurance coverage for your new product. Speak to your insurance company if you are not sure. We recommend a fully comprehensive insurance that includes third party, fire, damage, theft and liability.

https://truckmanualshub.com/

Product overview

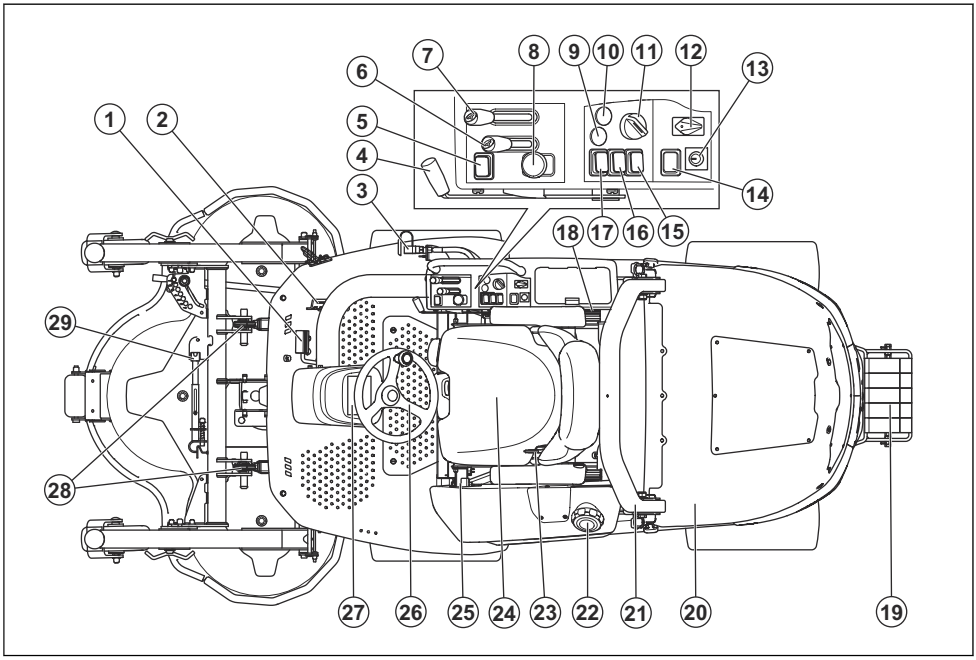

1. Forward pedal
2. Rearward pedal
3. Hydraulic coupling and power outlet for the auxiliary system.
4. Manual parking brake
5. Power switch for the auxiliary (AUX) system
6. Lever for the auxiliary system, for example cutting height for the cutting deck models with the mark X
7. Lever for the hydraulic lifting arms, for example to lift or lower the cutting deck or other equipment
8. PTO (Power Take Off) button
9. Start button for the electrical drive
10. Start button for the hybrid drive
11. Power key
12. PTO speed switch
13. Optional speed switch
14. Optional switch for accessories
15. Optional switch for accessories
16. Power switch for the power outlet
17. Power switch for the headlights
18. Type plate
19. Counterweight (accessory)
20. Main switch, 12 V
21. ROPS (roll over protective structure)
22. Fuel tank cap
23. Seat belt
24. 48 V servicing plug
25. Charging socket for the power supply
26. PTO shaft (below bottom plate)
27. Display
28. Hydraulic lifting arms
29. Service stay, Combi cutting decks

https://truckmanualshub.com/

Electrical system

Electrical system overview 48 V

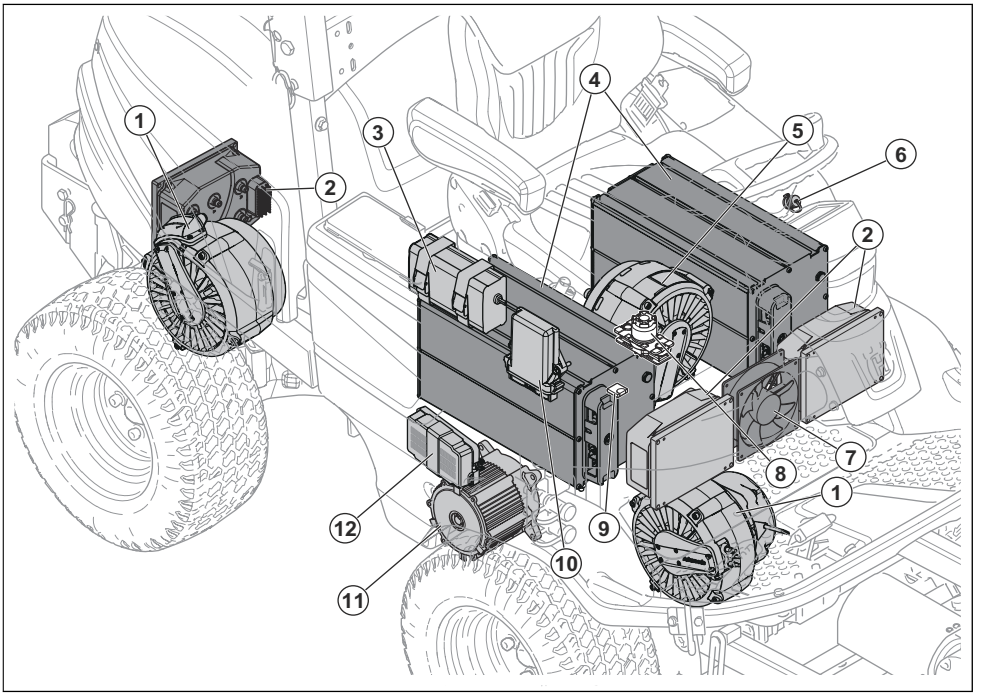

1. Wheel motors
2. Motor controls
3. DC/DC converter, 48 V / 12 V
4. Batteries
5. Generator
6. Charging socket for the power supply
7. Cooling fan for the 48 V batteries
8. Servicing plug
9. Fuse
10. Vehicle control unit (VCU)
11. Electrical motor for hydraulic pump
12. Motor control unit for the hydraulic system

https://truckmanualshub.com/

Electrical system overview 12 V

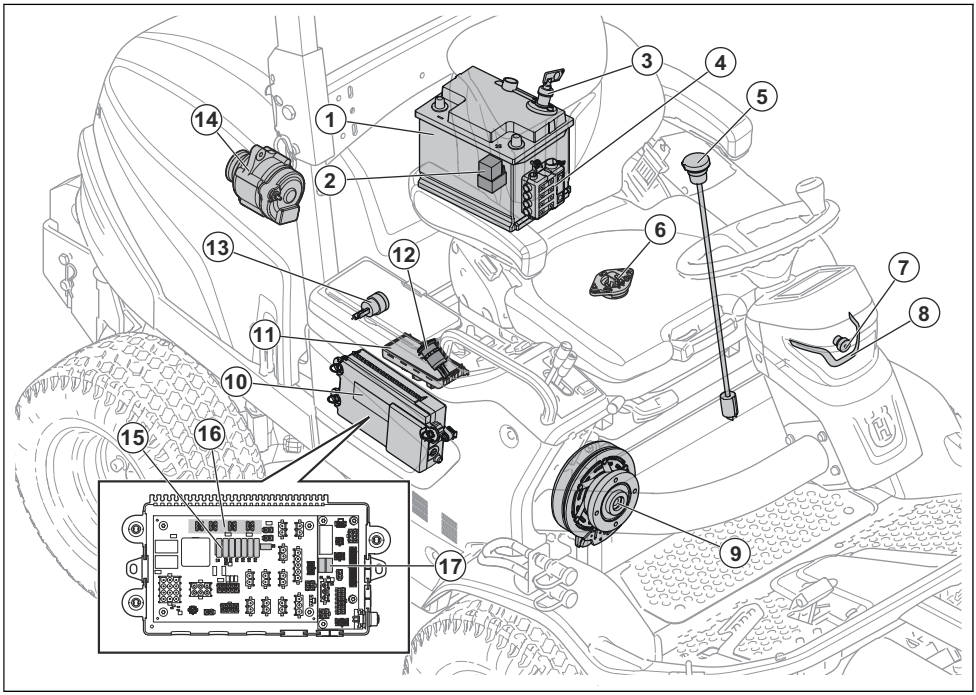

1. Battery, 12 V
2. Glow plug relay, engine
3. Main switch, 12 V
4. Fuses, 12 V electrical system
5. Fuel level sensor
6. Operator presence control (OPC)
7. High beam light
8. Work light
9. PTO clutch
10. Fuse box
11. Mower control module
12. USB outlet, 5 V
13. Power outlet, 12 V
14. 12 V generator
15. Fuses
16. Connection terminal for optional accessories
17. Fuses

https://truckmanualshub.com/

Fuse overview

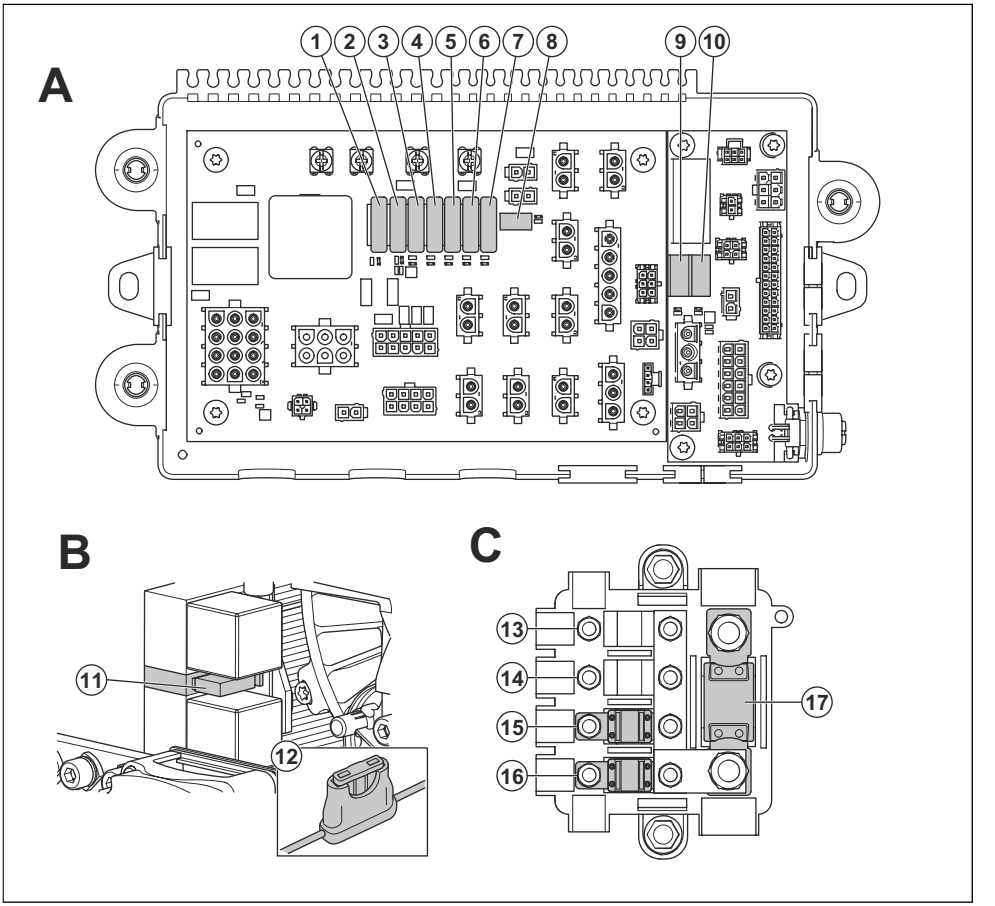

A: Fuse box. Refer to *To replace the fuses in the fuse box on page 46* for how to replace a fuse.

B: Fuses, 48 V electrical system. Refer to *To replace the fuses of the 48 V electrical system on page 46* for how to replace a fuse.

C: Fuses, 12 V electrical system. Refer to *To replace the fuses of the 12 V electrical system on page 46* for how to replace a fuse.

1. 12 V power to the mower control module , 20 A.
2. Display power, 5 A.
3. Ignition power, 5 A.
4. J14, 12 V warning light, 10 A.
5. J16, 12 V optional switch, optional out, optional power, 10 A.
6. Parking brake/seat, USB, 12 V outlet, 10 A.
7. Light power, 10 A.
8. Cabin power, auto fuse.
9. 12 V battery, 10 A.
10. Mower control module AUX, 10 A.
11. 48 V to pre-charge relay, 10 A.
12. 48 V to battery charger in, 10 A.
13. Available position.
14. Available position.
15. 12 V to fuse box, 50 A.
16. 12 V to glow plug relay, 50 A.
17. 12 V main fuse, 150 A

https://truckmanualshub.com/

Display overview

The display shows the status of the product. When an indication light comes on, an information box will show with information and instructions. Also refer to *Display - Troubleshooting on page 58*.

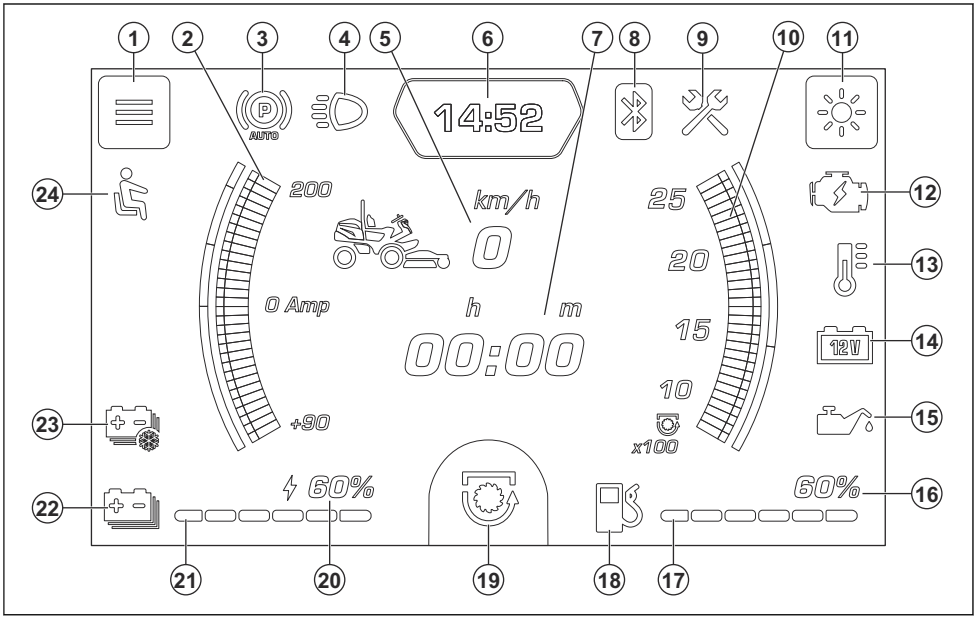

1. Time, language and system menu. This symbol shows on the display when the product is stationary for more than 6 seconds.
2. Gauge for the electrical drive
3. Automatic parking brake indicator (Green) / Manual parking brake indicator (Red)
4. Work light or high beam light indicator
5. Speed in km/h when in operation / Total operation time when in idle position
6. Clock
7. Hour meter
8. Bluetooth® indicator
9. Service indicator
10. Gauge for the PTO speed
11. Screen brightness adjustment. This symbol shows on the display when the product is stationary for more than 6 seconds.
12. Generator fault indicator
13. Engine temperature indicator
14. Battery indicator, 12 V
15. Oil pressure indicator
16. Fuel level status, %
17. Fuel level status, bar
18. Fuel level indicator
19. PTO button indicator, engaged/disengaged
20. Battery level status, %
21. Battery level status, bar
22. Battery level indicator, 48 V
23. Battery temperature indicator
24. Operator presence control (OPC)

Display guides and gauges

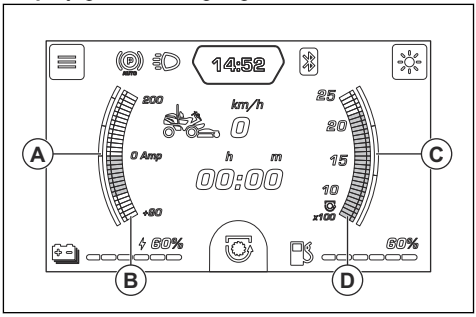

- (A): The blue field in the guide is the charge and the upper half of the guide is the discharge.
- (B): The charge or discharge from the 48 V batteries. The batteries charge when the indication is in the lower half of the gauge.
- (C): The green field in the guide shows the recommended PTO speed. If the load is to high, the

https://truckmanualshub.com/

PTO rpm drops and can cause decreased performance or an engine stop.

- (D): The PTO speed in rpm.

Total operation time and hour meter

The total operation time (A) of the engine shows on the display when the product is in idle position. The hour meter (B) shows the operation time in hours and minutes when hybrid drive is on. The trip meter is automatically set to 0 when the engine is off for more than 6 hours.

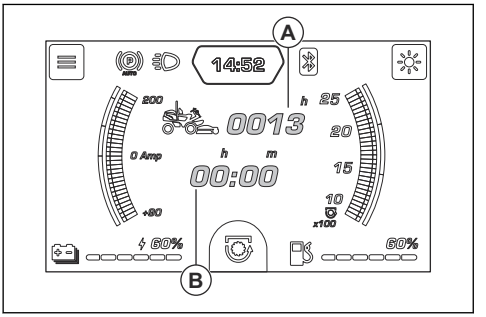

Hybrid system

During operation, the 48 V batteries are charged by the generator when the engine is on. The 48 V batteries are also charged by the wheel motors through regenerative braking. The engine also charges the 12 V battery. The state of charge of the 48 V batteries shows on the display. You can connect the power supply to the product to increase the charge of the the 48 V batteries during stops. Refer to *Display guides and gauges on page 7*.

Mower control module

The product has a mower control module that gives the operator information about the product. The information shows on the display on the instrument panel. Refer to *Display overview on page 7*.

The mower control module enables the servicing dealer to connect to the product when they do servicing.

Vehicle control unit (VCU)

The VCU controls the different units in the 48 V system, such as motors and batteries.

Cooling fans for the electrical system

The cooling fan for the 48 V batteries prevents the temperature in the 48 V batteries to become too hot.

Note: The cooling fan for the 48 V batteries can continue to operate for until an hour after the power key is set to OFF.

The cooling fan for the motor control unit for the hydraulic system operates when the power key is in the ON position. You find the cooling fan for the motor control unit for the hydraulic system directly above the motor control unit for the hydraulic system.

Refer to *Electrical system overview 48 V on page 4* to see where the cooling fan for the 48 V batteries and the motor control unit for the hydraulic system is on the product.

Headlights

The product has a work light and a high beam light.

Push the power switch to position (A) to make the lights go off. Push the power switch to position (B) to make the work light come on. Push the power switch to position (C) to also make the high beam light come on.

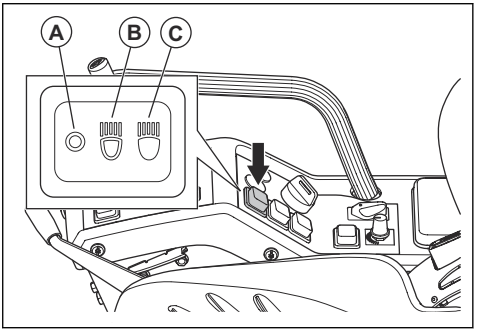

The work light stays on for 3 minutes after the power key is set to STOP. When the headlights are on, the display shows the headlight symbol. Refer to *Display overview on page 7*.

Power outlet

The voltage of the power outlet is 12 V. The power outlet has a fuse. Refer to *Fuse overview on page 6*.

Set the power outlet to ON or OFF with the power switch found on the control panel.

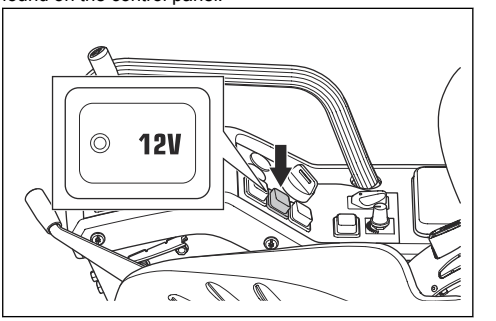

https://truckmanualshub.com/

Operator presence control (OPC)

The OPC is engaged when the operator lifts from the seat. The OPC indicator in the display comes on. The OPC engages the safety circuit. Refer to *Safety circuit on page 21*.

PTO (Power Take-Off) button

The PTO button engages and disengages the PTO clutch and the cutting deck or other equipment connected to it. The correct start conditions must be obeyed to engage the drive of the blades. Refer to *Safety circuit on page 21* for the correct start conditions.

- Pull the PTO button out to engage the drive to the blades or other equipment.

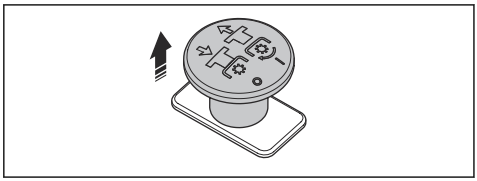

- Push the PTO button in to disengage the drive to the blades or other equipment.

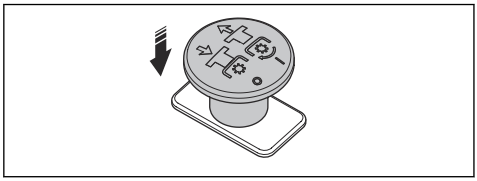

PTO speed switch

The PTO speed switch can be set in 3 positions for operation with different types of cutting decks or other equipment. When the PTO button is engaged, the engine speed is supplied to the cutting deck or other equipment that is attached to the PTO shaft. Refer to *To set the PTO speed on page 35* and *Technical data on page 63*.

Note: For operation with cutting decks, use the high PTO speed.

Forward and rearward pedals

The speed is gradually adjusted with 2 pedals. The left pedal (A) is used to move forward, and the right pedal (B) is used to move rearward. The product brakes when the pedals are released.

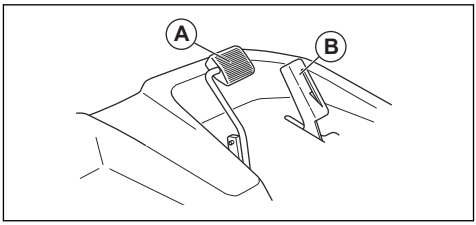

Lever for the hydraulic lifting arms

The lever for the hydraulic lifting arms is used to lift and lower the cutting deck and other equipment.

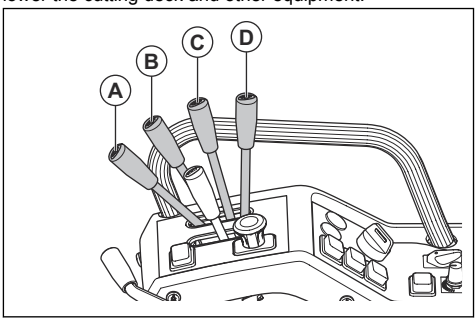

WARNING: It is possible to lower the hydraulic lifting arms after you stopped the product. Make sure to stop the product where the cutting deck or other equipment can be lowered safely.

- (A) Float position (mow position), the cutting deck or other equipment follows the ground independently of the product.
- (B) To lower the cutting deck or other equipment.
- (C) Neutral position.
- (D) To lift the cutting deck or other equipment.

Auxiliary power switch (AUX)

The auxiliary power switch has different functions for different cutting decks and for other equipment. Refer to

https://truckmanualshub.com/

the operator's manual of the cutting deck or other equipment.

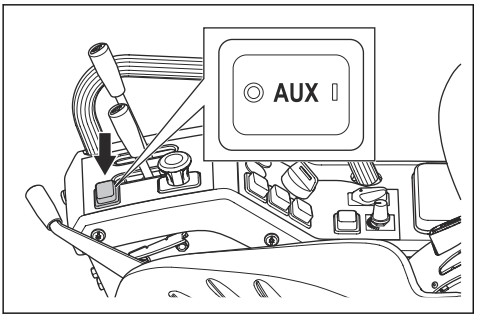

Cutting deck

With this product you can use the Combi cutting decks or the R180 cutting deck. Refer to *Technical data on page 63*.

The Combi cutting decks operate with BioClip or rear discharge. The R180 cutting decks operate with rear discharge. BioClip cuts the grass into smaller pieces (mulch), that works as a fertilizer to the lawn. When the BioClip plug is removed, the cutting deck discharges the grass rearward.

Symbols on the product

WARNING: This product can be dangerous and cause serious injury or death to the operator or others. Be careful and use the product correctly.

Read the operator's manual carefully and make sure that you understand the instructions before use.

Keep persons and animals at a safe distance from the work area.

Remove the power key before you do maintenance on the product.

Rotating blades. Keep body parts away from the cutting deck when the engine is on.

Warning: rotating parts. Keep body parts away.

Warning: rotating belt pulley. Keep body parts away when the engine is on.

Warning: risk of crush injuries.

Warning: risk of crush injuries. The lift arms will move with great force, keep body parts away.

Look out for thrown objects and ricochets.

Hot surface.

Never use the product if persons, especially children, or animals, are in the vicinity.

Look behind you before and while you move the product rearward.

Never cut grass across a slope. Do not cut grass on ground that slopes more than 10°. See *To cut grass on slopes on page 16*.

Never carry passengers on the product or equipment.

Rsk of injury if the product overturns.

Move forward.

N

Neutral gear.

Move rearward.

Apply parking brake.

https://truckmanualshub.com/

Release parking brake.

Always use approved hearing protection.

Float position.

Parking brake.

Power off.

Push in the PTO button.

Pull out the PTO button.

Fuel.

Oil level.

This product is in accordance with applicable EC directives.

Noise emission to the environment according to the European Community's Directive. The product's emission is specified in the Technical data chapter and on the label.

Scannable code

Environmental mark. The product or package of the product is not domestic waste. Recycle it at a recycling station for electrical and electronic equipment.

Do not use the seat belt if the ROPS is down.

Always use the seat belt when the ROPS is up.

yyyywwxxxxx

The rating plate shows the serial number. **yyyy** is the production year, **ww** is the production week.

Note: Other symbols/decals on the product refer to certification requirements for some commercial areas.

Type plate

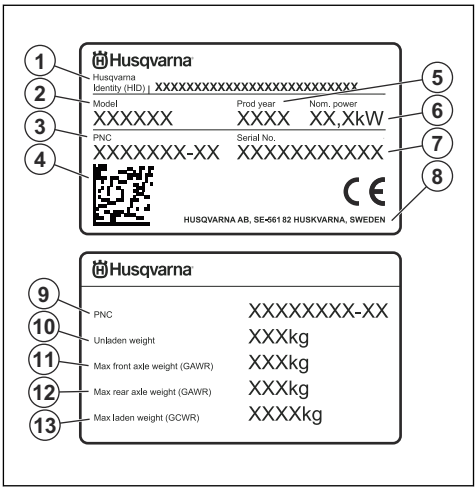

1. Husqvarna Identity (HID) with article number, factory and line, date, sequence number and control number
2. Model name
3. Product number code (PNC)
4. Scannable code
5. Production year
6. Rated power
7. Serial number with production date, year, week and sequence number
8. Manufacturer and manufacturer address
9. Product number code (PNC)

https://truckmanualshub.com/

10. Product weight, unladen
11. Maximum front axle weight (GAWR)
12. Maximum rear axle weight (GAWR)
13. Maximum laden weight (GCWR)

Euro V Emissions

WARNING: Tampering with the engine voids the EU type-approval of this product.

Product liability

As referred to in the product liability laws, we are not liable for damages that our product causes if:

- the product is incorrectly repaired.
- the product is repaired with parts that are not from the manufacturer or not approved by the manufacturer.
- the product has an accessory that is not from the manufacturer or not approved by the manufacturer.
- the product is not repaired at an approved service center or by an approved authority.

Safety

Safety definitions

Warnings, cautions and notes are used to point out specially important parts of the manual.

WARNING: Used if there is a risk of injury or death for the operator or bystanders if the instructions in the manual are not obeyed.

CAUTION: Used if there is a risk of damage to the product, other materials or the adjacent area if the instructions in the manual are not obeyed.

Note: Used to give more information that is necessary in a given situation.

General safety instructions

WARNING: This product can cut off hands and feet and throw objects. Serious injury or death may occur if you do not obey the safety instructions.

WARNING: Do not continue to use a product with damaged cutting equipment. Damaged cutting equipment can throw objects and cause serious injury or death. Replace damaged blades immediately.

WARNING: This product produces an electromagnetic field during operation. This

https://truckmanualshub.com/

field may under some circumstances interfere with active or passive medical implants. To reduce the risk of serious or fatal injury we recommend persons with medical implants to consult their physician and the medical implant manufacturer before operating this product.

WARNING: Read the warning instructions that follow before you use the product.

- Do not use the product with cutting decks or other equipment that is not approved by Husqvarna.
- Do not apply too much load to the product. For example do not tow or lift more than the product is approved for.
- Always be careful and use your common sense. Avoid all situations which you consider to be beyond your capability. If you feel uncertainty about the operating procedures after you read the operator's manual, consult an expert before you continue.
- Read and understand the operator's manual and the instructions on the product carefully before you start the product.
- Learn how to use the product and its controls safely and learn how to stop the product quickly.
- Learn to recognize the safety decals.
- Keep the product clean to make sure that you can clearly read signs and stickers.
- Keep in mind that the operator will be held responsible for accidents that involve other persons or their property.
- Do not transport passengers. The product must only be used by one person.

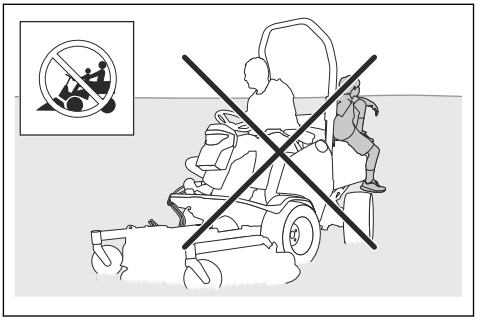

https://truckmanualshub.com/

- Do not let the product stay unsupervised with the engine or the electrical motors on. Always stop the blades, apply the parking brake, stop the engine and the electrical motors, and remove the power key before you let the product stay unsupervised.
- Only use the product in daylight or in other well-lit conditions. Keep the product at a safe distance from holes or other irregularities in the ground. Look out for other possible risks.
- Do not use the product in bad weather, for example in fog, in rain, moist or in wet locations, strong winds, intense cold, risk of lightning, etc.
- Find and mark stones and other fixed objects to prevent collision.
- Clear the area of objects such as stones, toys, wires, etc. that may become caught in the blades and be thrown out.

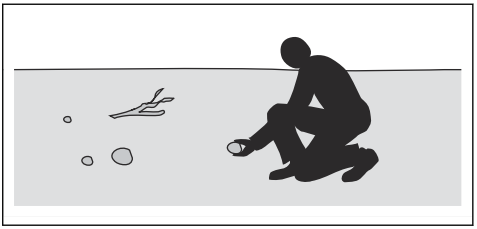

- Do not let children or other persons not approved for operation of the product to use or do servicing on it. Local laws may regulate the age of the user.
- Make sure that nobody else is in the vicinity of the product when you start the electrical motors and the engine, engage the drive or start to move the product.
- Keep an eye on the traffic when you mow near a road or move across a road.
- Do not use the product if you are fatigued, while under the influence of alcohol or drugs, medicine or anything that can have a negative effect on your vision, alertness, coordination or judgement.
- Always park the product on a level surface with the engine and the electrical motors stopped.

https://truckmanualshub.com/

Safety instructions regarding children

WARNING: Read the warning instructions that follow before you use the product.

- Serious accidents can occur if you are not on your guard for children in the vicinity of the product. Children may come near the product when you do not see them. It is very possible that children do not stay where you last saw them.
- Keep children away from the area to be mowed. Make sure that an adult is responsible for the children.
- Keep an eye out and stop the product if children enter the work area. Be very careful near corners, bushes, trees or other objects that prevents a clear view.
- Before and while you move the product in reverse, look behind you and look down to make sure there are no small children in the vicinity of the product.
- Do not let children ride along. They can fall off and get seriously injured or prevent safe maneuvering of the product.
- Do not let children operate the product.

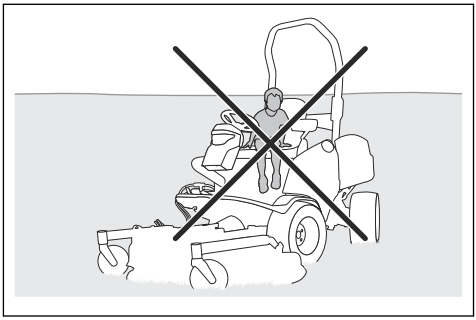

Safety instructions for operation

WARNING: Do not touch the engine or exhaust system during or directly after operation. The engine and the exhaust system become very hot during operation. Risk of burn injuries, fire and damage to property or adjacent areas. When you operate the product, keep away from bushes and other objects.

WARNING: Do not touch the power electronics during or directly after operation. The batteries, generator, motor controls, fuses or

https://truckmanualshub.com/

electrical cables become very hot during operation. Risk of burn injuries, electrical shock, fire and damage to property or adjacent areas.

WARNING: Read the warning instructions that follow before you use the product.

- Always look down and behind you before and while you move in reverse. Look out for large and small obstacles.
- Decrease the speed before you turn around a corner.
- Stop the blades when you move across areas that you do not cut.
- Push the PTO button to disengage the drive on the cutting deck or other equipment before you lift from the seat.

CAUTION: Read the caution instructions that follow before you use the product.

- Before you operate the product, clear the cold air intake of the engine from grass and dirt. If the cold air intake is blocked, there is a risk of engine damage.
- Before you operate the product, make sure that the air intake to the battery cooling system is not blocked. There is a risk of damage to the batteries if they get too hot.
- Move around stones and other larger objects carefully and make sure that the blades do not hit the objects.
- Be careful if you operate the product near water. Do not use the ROPS and the seat belt near water.
- Do not operate the product across objects. Stop and examine the product and cutting deck if you operate the product across or into an object. If it is necessary, make repairs before you restart.

To cut grass on slopes

WARNING: Read the warning instructions that follow before you use the product.

- To cut grass on slopes increases the risk that you can not control the product and that it overturns. This can

https://truckmanualshub.com/

cause injury or death. It is necessary to cut the grass carefully on all slopes. If you cannot reverse up a slope or if you do not feel safe, do not cut it.

- Remove stones, branches and other obstacles.
- Cut up and down the slope, not from side to side.
- Do not move down a slope with the cutting deck lifted.
- Do not operate the product on ground that slopes more than 10°.

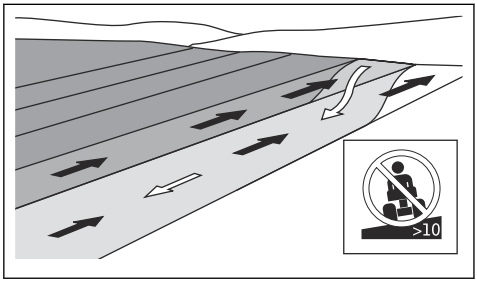

- Do not start or stop on a slope.
- Move smoothly and slowly on slopes.
- Do not make sudden changes in speed or direction.
- Do not turn more than necessary. Turn slowly and gradually when you move down a slope. Move at low speed. Turn the wheel carefully.
- Look out for and do not move across furrows, holes and bumps. There is a higher risk that the product overturns on ground that is not flat. Long grass can hide obstacles.
- Do not cut grass near edges, ditches or banks. The product can suddenly overturn if a wheel moves across the edge of a steep slope or a ditch, or if an edge gives way. If the product falls into water, there is a risk of drowning.

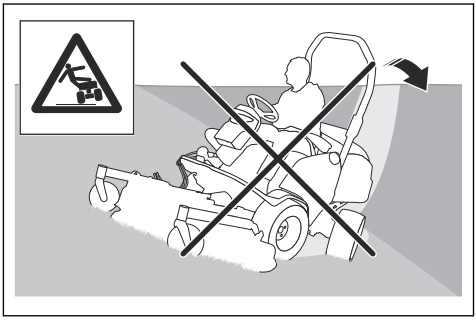

- Do not mow wet grass. It is slippery, and tires can lose their grip so that the product skids.
- Do not put your foot on the ground to try to make the product more stable.
- Move very carefully if an accessory or other object is attached that can make the product less stable.
- To make the product more stable, attach the counterweights. Speak to your dealer for more information.

https://truckmanualshub.com/

Personal protective equipment

WARNING: Read the warning instructions that follow before you use the product.

- Use approved personal protective equipment when you use the product. Personal protective equipment cannot fully prevent injury but it decreases the degree of injury if an accident does occur. Let your dealer help you select the right equipment.
- Use approved hearing protection that provides adequate noise reduction. Long-term exposure to noise can result in permanent hearing impairment. Husqvarna recommends that operators use hearing protectors when using products for a longer coherent time of a day. Continual and regular users should have their hearing checked regularly. Note that hearing protectors limit the ability to hear sounds and warning signals.
- Use approved eye protection. If you use a visor, you must also use approved protective goggles. Approved protective goggles must agree with the ANSI Z87.1 standard in the USA or EN 166 in EU countries.

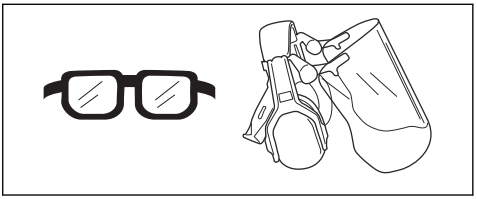

- Always wear protective shoes or protective boots. Steel toes are recommended. Do not use the product barefoot.

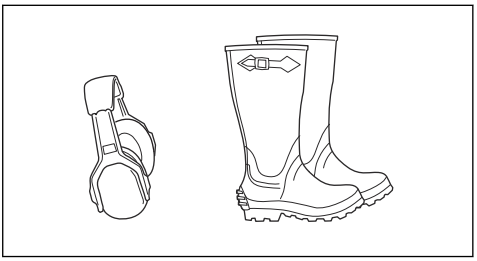

- Wear gloves when necessary, for example when you attach, examine or clean the cutting equipment.
- Do not wear loose-fitting clothing, jewelry or other items that can get caught in moving parts.
- Keep first aid equipment and fire extinguisher close at hand.

Battery safety

WARNING: Read the warning instructions that

https://truckmanualshub.com/

follow before you use the product.

General:

- Read all safety warnings and all instructions. Failure to follow the warnings and instructions may result in electric shock and fire and/or serious injury.
- Regular check that the batteries are intact. Damaged or modified batteries may exhibit unpredictable behavior resulting in fire, explosion or risk of injury. Never repair or open damaged batteries.
- A damaged battery can cause an explosion and cause injury. If the battery has a deformation or is damaged, do not use the product and speak to an approved Husqvarna service agent.
- Do not dismantle, open or shred batteries.
- Do not subject batteries to mechanical shock.
- Do not expose cells or batteries to heat or fire. Avoid storage in direct sunlight.
- Do not short circuit batteries. Do not keep batteries in storage where they can short circuit each other or be short circuited by other metal objects.
- Do not allow battery content to come in contact with the skin or eyes. If contact has been made, wash the affected area with copious amounts of water and seek medical advice.
- Do not use any battery which is not designed for use with the equipment.
- Do not mix cells of different manufacture, capacity, size or type within a device.
- Keep cells or batteries out of the reach of children.
- Keep the battery clean and dry.
- Use only the battery in the application for which it was intended.

12 V battery:

- Observe the plus (+) and minus (-) marks on the battery and equipment, and ensure correct use.
- Always purchase the correct battery for the equipment.
- Wipe the battery terminals with a clean dry cloth if they become dirty.

48 V batteries:

- The Husqvarna 48 V batteries, are exclusively used as power supply for the Husqvarna hybrid P 535HX.

https://truckmanualshub.com/

To avoid injury, the battery must not be used as a power source for other devices.

- Never use batteries or appliances that is faulty, modified or damaged.
- Never attempt to modify or repair the appliances or the batteries. Entrust all repairs to your authorized servicing dealer only.

Fuel safety

WARNING: Be careful with fuel. It is very flammable, and can cause injury and damage to property.

WARNING: Read the warning instructions that follow before you use the product.

- Do not fill the fuel tank indoors.
- Diesel and diesel fumes are poisonous and very flammable. Be careful with diesel to prevent injury or fire.
- Do not remove the fuel tank cap or fill the fuel tank when the engine is on.
- Do not smoke when you fill fuel.
- Do not fill fuel near sparks or naked flames.
- If there are leaks in the fuel system, do not start the engine until the leaks are repaired.
- Do not fill above recommended fuel level. The heat from the engine and the sun makes the fuel expand and the fuel overflows if the tank is filled too much.
- Do not fill too much. If you spill fuel on the product, clean up the spill and wait until it is dry before you start the engine. If you spill on your clothing, change it.
- Store fuel in approved containers only.
- Store the product and fuel in such a way that there is no risk that fuel leaks or fumes can cause damage.
- Drain off the fuel in an approved container outdoors and away from naked flames.

Safety devices on the product

WARNING: Read the warning instructions that follow before you use the product.

- In this section the product’s safety features, its purpose and how checks and

https://truckmanualshub.com/

maintenance should be carried out to ensure that it operates correctly. See instructions under the heading *Product overview on page 3* to find where these parts are located on your product.

- The life span of the product can be reduced and the risk of accidents can increase if product maintenance is not carried out correctly and if service and/or repairs are not carried out professionally. If you need further information please contact your nearest servicing dealer.
- Never use a product with defective safety components. The product's safety equipment must be inspected and maintained as described in this section. If your product fails any of these checks, contact your service agent to get it repaired.
- All servicing and repair work on the product requires special training. This is especially true of the product's safety equipment. If your product fails any of the checks described below you must contact your service agent. When you buy any of our products we guarantee the availability of professional repairs and service. If the retailer who sells your product is not a servicing dealer, ask him for the address of your nearest service agent.

To do a check of the power key switch and the start buttons

1. Park the product on a level surface.
2. Start the product. Refer to *To start the product on page 33*.
3. Make sure that the display comes on when you turn the power key to the ON position.
4. Make sure that the electrical system starts when you push the start button for the electrical drive.
5. Make sure that the engine starts when you push the start button for the hybrid drive.
6. Make sure that the electrical system comes off and the engine stops immediately when you turn the power key to STOP.

Safety circuit

The engine can only be started when:

https://truckmanualshub.com/

- The main switch is in the ON position and the power key is in the ON position.

The engine must stop in the situations that follow:

- The operator lifts from the seat while the product moves.
- The operator lifts from the seat while the product is stationary and the manual parking brake is disengaged.

The drive to the cutting deck or other equipment must stop in the situation that follow:

- The operator lifts from the seat while the PTO button is engaged and the manual parking brake is engaged.

To do a check of the safety circuit

1. Park the product on a level surface with the engine on and the manual parking brake disengaged.
2. Carefully lift from the seat. The engine stops.
3. Park the product on a level surface with the engine on, PTO button engaged and the manual parking brake engaged.
4. Carefully lift from the seat. The drive to the cutting deck or other equipment stops.

Do this check daily. If the engine, or drive to the cutting deck or other equipment does not stop correctly, do not use the product and speak to your Husqvarna service agent.

To do a check of the forward pedal and rearward pedal

1. Start the product. Refer to *To start the product on page 33*.
2. Make sure that the forward pedal and rearward pedal are not blocked and can be operated freely.
3. Push the forward pedal carefully to move forward.
4. Release the forward pedal to brake. Make sure that the brake engages when the forward pedal is released.

Note: The product has an automatic brake that engages when you release the pedals. For more brake power when you decrease the speed, push the other pedal.

https://truckmanualshub.com/

5. Do the same procedure for the rearward pedal.

Parking brake

The product has a manual parking brake and an automatic parking brake. The automatic parking brake engages when the product is stationary.

WARNING: The automatic parking brake is not sufficient to park the product safely. Do a check of the manual parking brake daily and adjust it if it is necessary.

To do a check of the manual parking brake

1. Park the product on a hard surface that slopes.

   WARNING: Do not park the product on a grass slope when you do a check of the parking brake.

2. Pull the parking brake lever fully rearward into the parking brake holder.

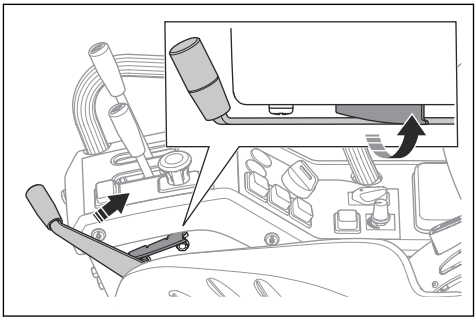

3. If the product starts to move, let an approved service agent adjust the parking brake.
4. Pull the parking brake from the parking brake holder and forward to release the parking brake.

Roll Over Protection Structure (ROPS)

ROPS is a protective frame that decreases the risk of injury if the product overturns. Use the ROPS and the seat belt when you operate the product.

Seat belt

The seat belt prevents injury if accidents occur or the product overturns. Use the seat belt only when the ROPS is engaged. Make sure that the seat belt is correctly attached and not damaged.

https://truckmanualshub.com/

Protective covers

Missing or damaged protective covers increase the risk of injury on moving parts and hot surfaces. Do a check of the protective covers before you operate the product. Make sure that the protective covers are correctly attached and do not have cracks or other damages. Replace damaged protective covers.

Muffler

The muffler keeps the noise levels to a minimum and sends the exhaust fumes away from the operator.

Do not use the product if the muffler is missing or defective. A defective muffler increases the noise level and the risk of fire.

WARNING: The muffler becomes very hot during and after use and when the engine operates at idle speed. Be careful near flammable materials and/or fumes to prevent fire.

To do a check of the muffler

- Examine the muffler regularly to make sure that it is attached correctly and not damaged.

Safety instructions for maintenance

WARNING: The product is heavy and can cause injury or damage to property or the adjacent area. Do not do maintenance on the engine or the cutting deck without the conditions that follow:

- The main switch is off.
- The servicing plug is removed, when maintenance is done on the 48 V system.
- The product is parked on a level surface.
- The manual parking brake is applied.
- The power key is removed.
- The cutting deck is disengaged. For maintenance on the cutting deck, also remove the drive shaft from the PTO shaft on the product.

WARNING: The exhaust fumes from the engine

https://truckmanualshub.com/

contain carbon monoxide, an odorless, poisonous and very dangerous gas. Do not use the hybrid drive in closed spaces or spaces with not sufficient air flow, only use the electrical drive.

WARNING: Read the warning instructions that follow before you use the product.

- For best performance and safety, do maintenance on the product regularly as given in the maintenance schedule. Refer to *Maintenance schedule on page 39*.
- Electrical shocks can cause injuries. Do not touch the electrical cables when the main switch is on. For maintenance on the electrical cables to the 48 V system, the servicing plug must be removed also.
- Do not start the product if the protective covers are removed. There is a high risk of injury caused by moving or hot parts.
- Let the product become cool before you do maintenance near the engine.
- The blades are sharp and can cause cuts. Wind protection around the blades or use protective gloves when you do work on the blades.
- Always put the cutting deck in servicing position to clean it (applies only to the Combi cutting decks). Do not park the product near the edge of a ditch or slope to get access to the cutting deck.

CAUTION: Read the caution instructions that follow before you use the product.

- Do not turn over the engine.
- Make sure that all nuts and bolts are tightened correctly and that the equipment is in good condition.
- Do not change the adjustment of governors. If the engine speed is too high, the product components can become damaged. Refer to *Technical data on page 63* for highest permitted engine speed.
- The product is approved only with the equipment supplied or recommended by the manufacturer.

https://truckmanualshub.com/

Transport safety

- Use an approved transport vehicle for transportation of the product.
- A markets national or local regulations can set limit to the transportation of the product.
- The operator of the transport vehicle is responsible to attach the product safely during transport. Refer to *To safely attach the product on a trailer for transport on page 60*.

Note: To move the product with the power off, the automatic parking brake must be disengaged. Refer to *To tow the product on page 61*.

Assembly

To attach the cutting deck - Combi 155, R180

Note: Make sure that the cutting deck is put on level ground before you attach the cutting deck.

1. Put the lever for the hydraulic lifting arms to the position (B) to lower the lifting arms.

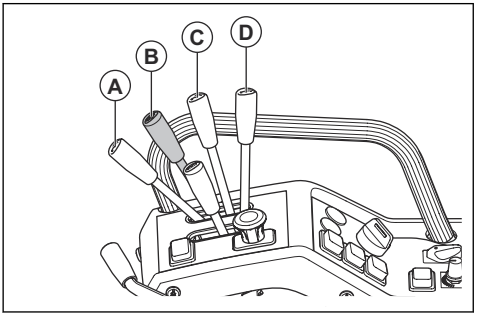

WARNING: Do not put the lever for the hydraulic lifting arms to the float position (A). The hydraulic force can cause injury.

2. Carefully move the product into position in front of the cutting deck.
3. Put the lifting arms into the joint of the cutting deck.

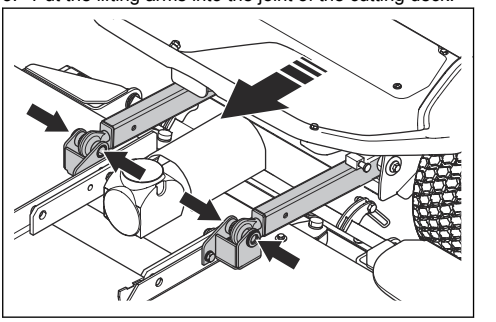

4. Apply the parking brake.
5. Turn the power key to the STOP position.
6. Install the bolts (A) and attach the pins (B) on the lifting arms.
   a) For the Combi cutting deck:

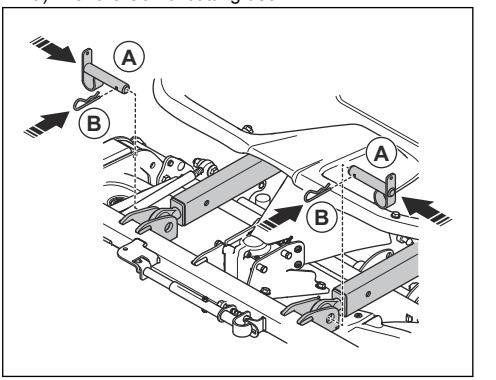

https://truckmanualshub.com/

b) For the R180 cutting deck:

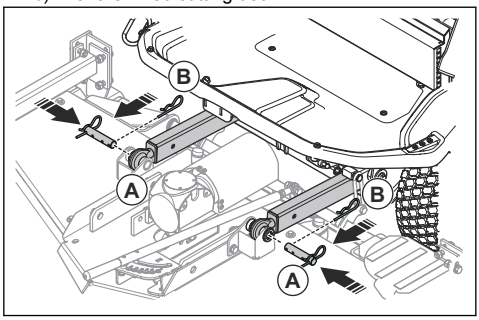

7. Remove the 2 screws and remove the bottom plate.

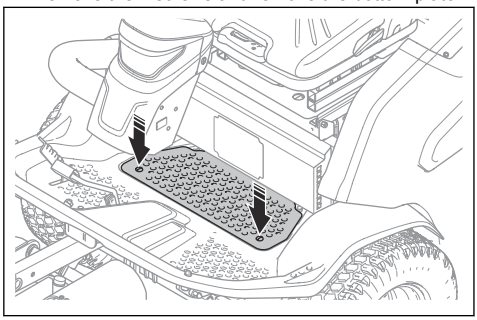

8. Pull back the coupling of the drive shaft and attach the drive shaft to the PTO shaft on the product.

Note: Make sure that the arrow on the symbol points to the product.

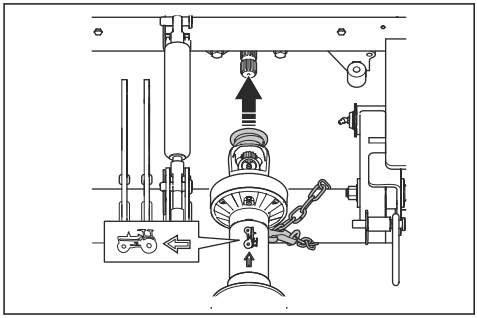

9. Put the rear locking chain around the lifting beam.
10. Attach the locking chain to the drive shaft.
11. Pull back the coupling of the drive shaft and attach the drive shaft to the bevel gear shaft of the cutting deck.

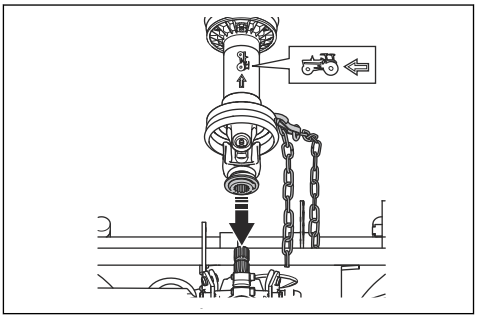

12. Fold the rubber casing onto the shaft joint.
13. Put the front locking chain around the cross pipe.
14. Attach the front locking chain to the drive shaft.
15. Attach the bottom plate and tighten the screws.
16. Start the electrical drive. Refer to *To start the product on page 33*.
17. Move the lever for the hydraulic lifting arms rearward to lift the cutting deck. Lift until the pivot wheels of the cutting deck do not touch the ground.
18. Apply the parking brake.
19. Turn the power key to the STOP position.
20. Attach the lifting eyelets.

    a) For the Combi cutting deck: Pull the spring (A) and attach the lifting eyelets to the cutting deck (B).

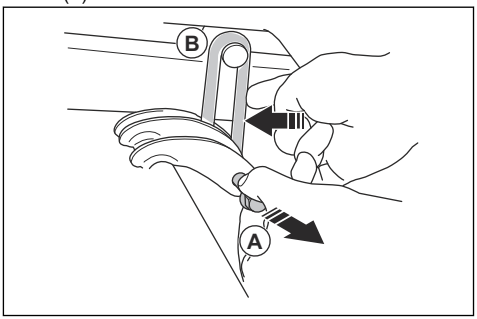

https://truckmanualshub.com/

b) For the R180 cutting deck: Attach the lifting eyelets to the cutting deck (A) with the bolt (B) and the pin (C).

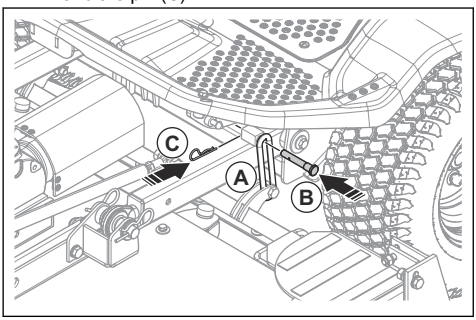

21. Do a check of the parallelism of the cutting deck. Refer to *To do a check of the parallelism of the cutting deck on page 52* and *To do a check of the parallelism of the cutting deck on page 54*.

To attach the cutting deck - Combi 155 X

1. Do step 1-20 in *To attach the cutting deck - Combi 155, R180 on page 26*.
2. Put the hydraulic hoses from the cutting deck through the loop.

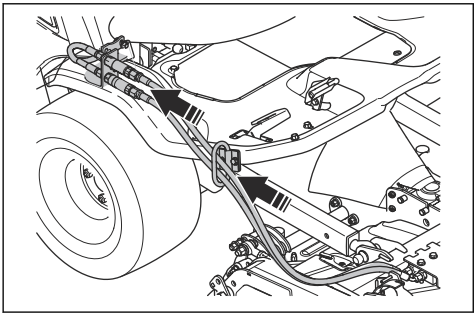

3. Attach the hydraulic hoses to the coupling on the product.

Note: The position of the hydraulic hoses controls the operation function of the cutting height lever. To change the operation function of the cutting height lever, change the position of the hydraulic hoses.

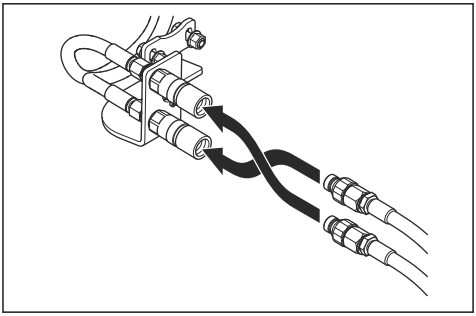

To remove the cutting deck

1. Park the product on level ground.
2. Apply the parking brake.
3. Move the lever for the hydraulic lifting arms rearward to fully lift the cutting deck.
4. Turn the power key to the STOP position.
5. For the Combi 155 X cutting deck, release the couplings and disconnect the hydraulic hoses.
6. Release the lifting eyelets.
   a) For the Combi cutting decks: Pull the spring (A) to release the lifting eyelets (B) on the cutting deck.

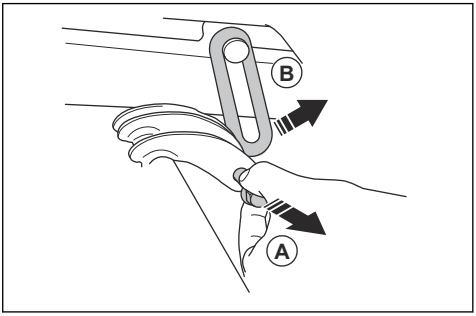

   b) For the R180 cutting deck: Remove the pin (A) and the bolt (B) to release the lifting eyelets on the cutting deck (C).

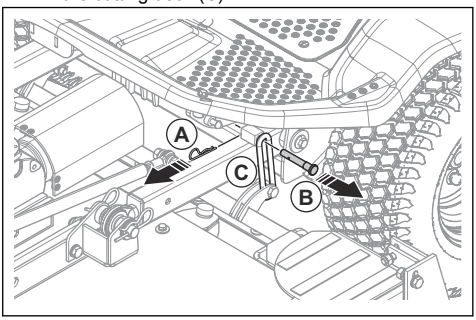

https://truckmanualshub.com/

7. Start the electrical drive. Refer to *To start the product on page 33*.
8. Put the lever for the hydraulic lifting arms to the position (B) to lower the lift arms.

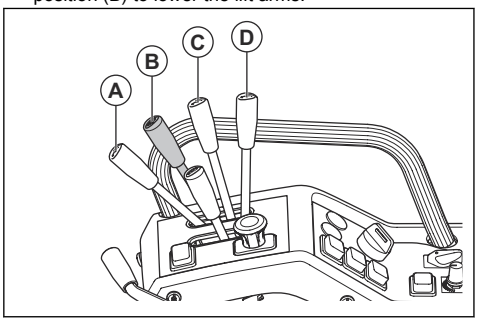

WARNING: Do not put the lever for the hydraulic lifting arms to the float position (A). The hydraulic force can cause injury.

9. Turn the power key to the STOP position.
10. Remove the 2 screws and remove the bottom plate.

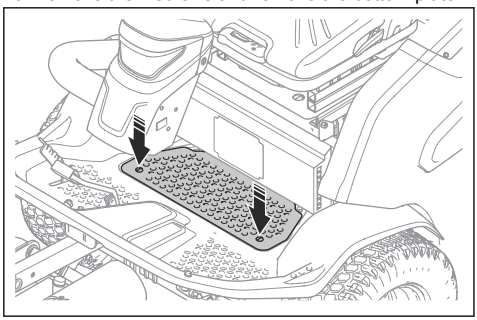

11. Pull back the rubber casing from the shaft joint.
12. Pull back the couplings of the drive shaft and remove the drive shaft from the PTO shaft on the product.
13. Pull back the couplings of the drive shaft and remove the drive shaft from the bevel gear shaft of the cutting deck.
14. Remove the locking chains.
15. Remove the pins (A) and the bolts (B) from the lifting arms (C) and joints of the cutting deck (D).

a) For the Combi cutting decks:

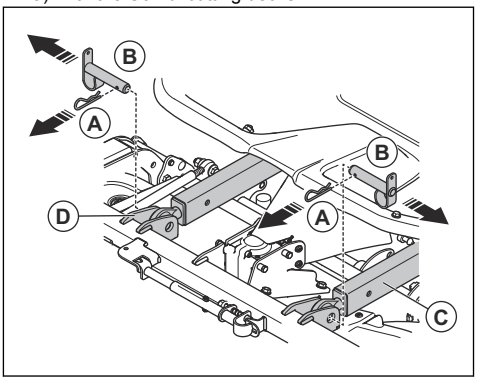

b) For the R180 cutting deck:

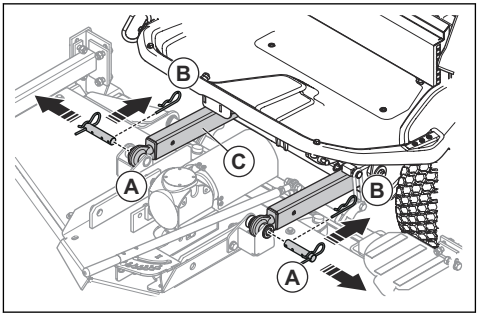

To put the Roll Over Protection Structure (ROPS) in position for the first time

For the transportation of the product from the factory, the ROPS is folded above the seat.

1. Remove the screws that attaches the ROPS to the product.

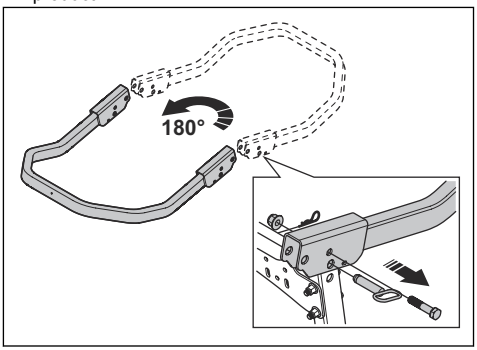

2. Turn the ROPS 180 degrees.
3. Install the ROPS with the screws.

https://truckmanualshub.com/

4. Engage or disengage the ROPS. Refer to *To engage and disengage the Roll Over Protection Structure (ROPS) on page 30*.

To engage and disengage the Roll Over Protection Structure (ROPS)

- Remove the 2 bolts that hold the ROPS and fold it rearwards to disengage. Engage the ROPS in the opposite sequence.

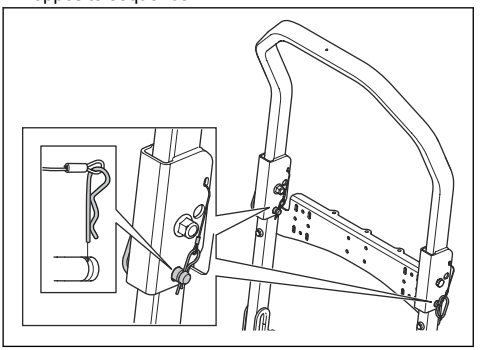

WARNING: Obey the following instructions for the ROPS and the seat belt.

- Do not use the seat belt if the ROPS is disengaged.

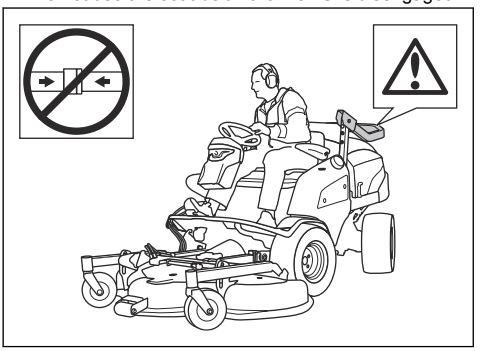

- Always use the seat belt when the ROPS is engaged.

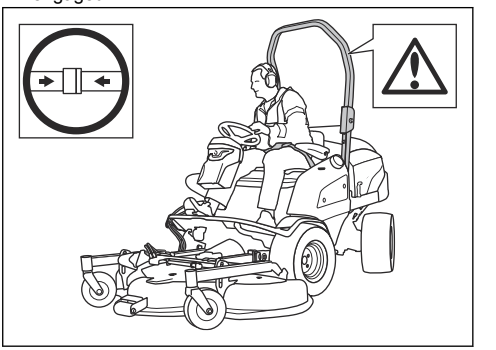

- Make sure that the ROPS is correctly attached and not damaged.

Operation

Introduction

WARNING: Before you operate the product, you must read and understand the safety chapter.

Display

Time, language and system menu

When you start the product for the first time, the language and time menu open automatically. After that first time, you can get access to the time, language and system menus through the display.

- Push the time, language and system symbol.

Note: This symbol shows on the display when the product is stationary for more than 6 seconds.

https://truckmanualshub.com/

To set the time on the display

1. Push the symbol for time, language and system on the display.
2. Push the time symbol.
3. Push the "+" or "-" to set the hours and minutes.

To select language

1. Push the symbol for time, language and system on the display.
2. Push the language symbol.
3. Push a language.

To see system information and to do a factory reset

1. Push the symbol for time, language and system on the display.
2. Push the symbol for system information.
3. Push "factory reset" to reset time and language.

To adjust the brightness of the display

1. Push the brightness symbol on the display.
2. Push the "+" or "-" to adjust the brightness of the display.

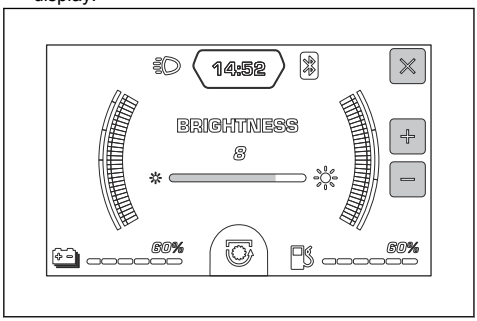

To connect the power supply (accessory)

WARNING: An incorrectly used, broken or a defective power supply can cause an electrical shock, overheating or battery leakage. Regularly examine that the power supply and the batteries are not damaged.

CAUTION: Do not use the power supply in conditions where temperatures are below 0°C or above 40°C.

- Connect the power supply to a grounded mains socket and to the product.

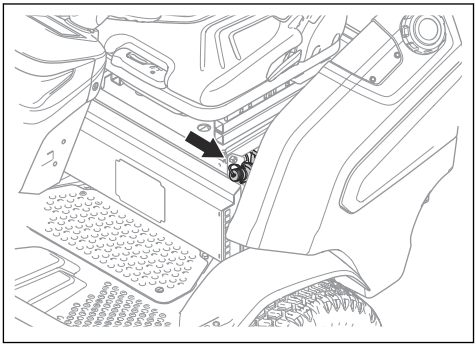

To fill fuel

WARNING: Diesel fuel is very flammable. Be careful and refuel outdoors. Refer to *Fuel safety on page 20*.

WARNING: Do not use the fuel tank as a support area.

CAUTION: Incorrect type of fuel can result in engine damage.

- To agree with the emission regulations, the diesel fuel needs to agree with the standard EN590 or ASTM D975 and have a Sulphur content of less than 500ppm or 0,05% of weight. Refer to the Kubota Operators Manual for further information regarding fuel quality.
- Use diesel fuel with a minimum cetane rating of 45. Do not use diesel fuel that has a RME mix that contains more than 5% in mineral oil-based fuels.

Note: It is necessary to use fuel for cold weather if the temperature is below 0°C / +32°F. Speak to your Husqvarna servicing dealer for more information.

https://truckmanualshub.com/

- Do a check of the fuel level before each use and refuel if necessary.
- Do not fill fuel above the maximum level mark on the fuel tank.

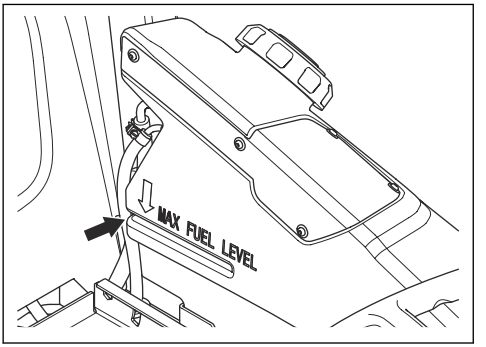

To adjust the seat

WARNING: Do not adjust the seat during operation of the product.

- To adjust the seat forward and rearward, push the lever (A) below the front edge of the seat. Move the seat (B) to the correct position.

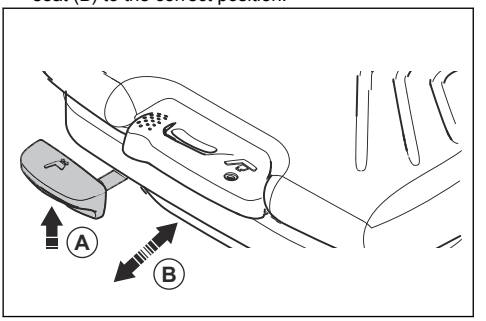

- To adjust the suspension of the seat, pull the lever (C) to the left. Push the lever up for more suspension and push the lever down for less suspension. Push the lever until the arrow is in the middle of the window (D), for the correct suspension in relation to the weight of the operator.

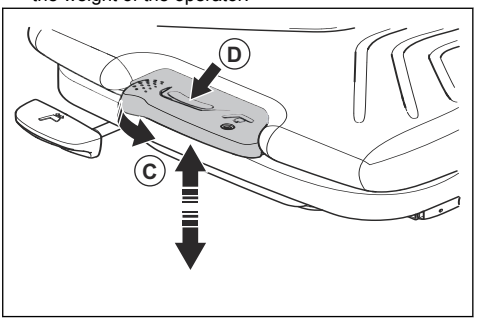

- To adjust the backrest, push the lever (E) to the left of the seat. Move the backrest to the correct position.

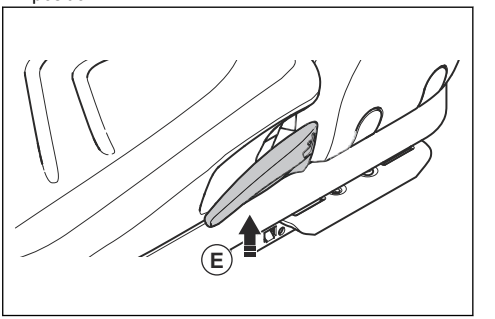

Note: The backrest can also be fully lowered and used as rain protection.

WARNING: Do not fold the complete seat for rain protection. Water can cause damage to the 48 V batteries.

- To adjust the lumbar support, turn the lever (F) to the left of the backrest. Turn the lever counterclockwise for more support.

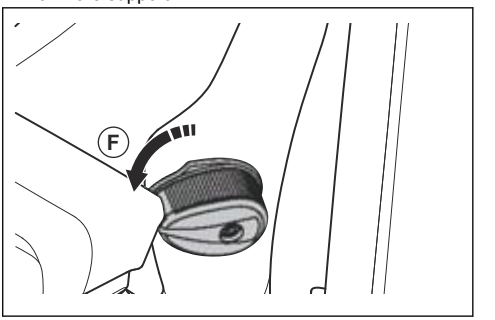

https://truckmanualshub.com/

- To adjust the armrests up and down, turn the adjustment screw.

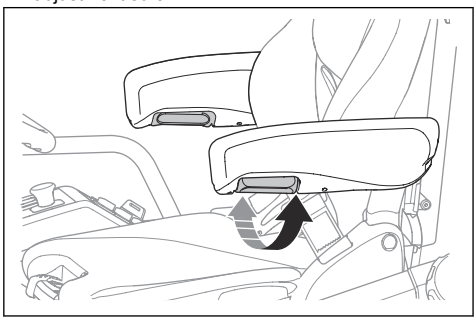

To apply and release the parking brake

1. To apply the parking brake, pull the parking brake lever fully rearward into the parking brake holder.

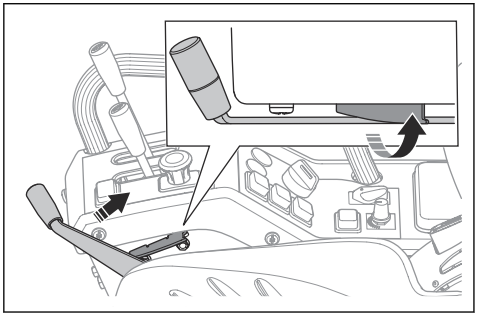

2. To release the parking brake, move the parking brake lever fully forward.

To start the product for the first time

To start the product for the first time, you must first install the servicing plug and the main switch.

1. Get the servicing plug and the main switch from the plastic bag at the steering wheel.
2. Install the servicing plug. Refer to *To remove and install the servicing plug on page 45*.
3. Install the main switch. Refer to *Product overview on page 3* and *To start the product on page 33*.

To start the product

1. Push down and turn the main switch to the ON position.

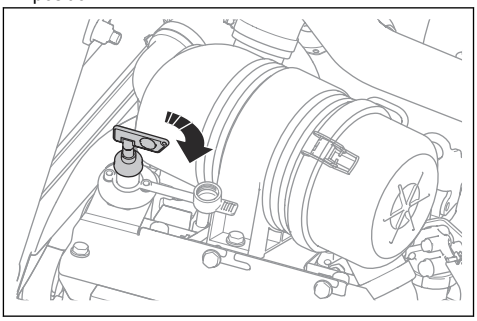

2. Turn the power key to the ON position. Wait until the symbols and gauges show on the display.

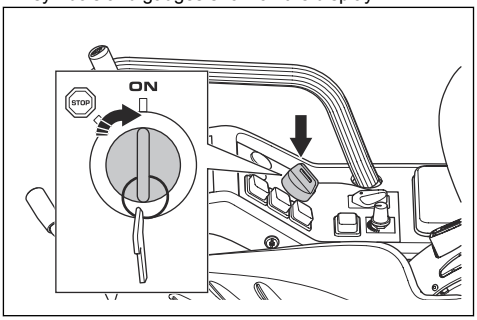

Note: The product is on but does not move if you push the forward or rearward pedals.

Note: The product is on for 3 minutes. To operate the product after 3 minutes, turn the power key again.

3. Push the start button for the electrical drive (A). The motor for the hydraulic system starts and then stops again.

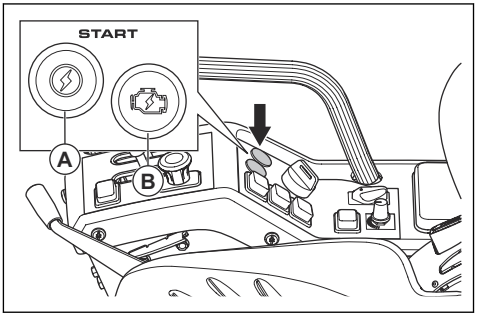

https://truckmanualshub.com/

CAUTION: Do not use the product if the temperature in the 48 V batteries are less than 0 °C/32 °F.

WARNING: When the hydraulic motor stops, the product is in operation and without noise. If the manual parking brake is not engaged, the product moves if you push the forward or rearward pedal.

Note: If you get a fault indication when the product is in electrical drive, you must push the start button for the electrical drive again. For example if you lift from the seat and the manual parking brake is not engaged.

4. Push the start button for the hybrid drive (B) to start the engine.

Note: You can also start the hybrid drive directly, without the electrical drive is on, if the product is stationary.

To stop the product

1. Park the product on level ground.
2. Apply the manual parking brake.
3. If the cutting deck is engaged, push the PTO button to disengage the drive on the cutting deck.

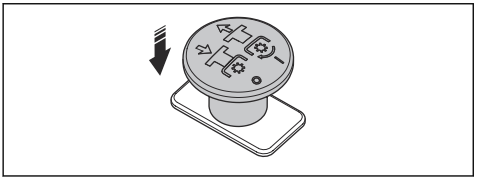

4. Push the lever for the hydraulic lifting arms forward to lower the cutting deck to the ground.

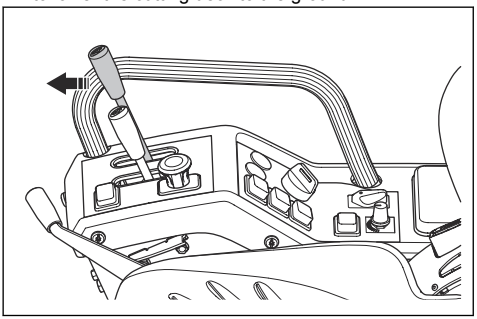

5. Turn the power key to the STOP position. The hydraulic system pressure releases.

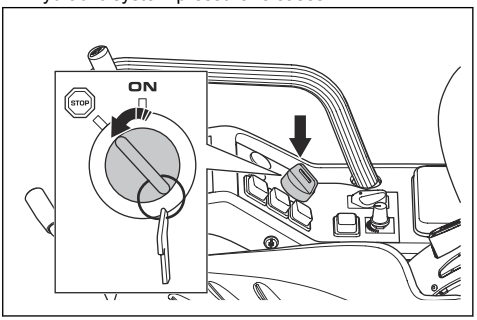

Note: To stop the hybrid drive only, push the start button for the electrical drive.

6. At the end of operation or when you do maintenance on the product, turn the main switch to OFF.

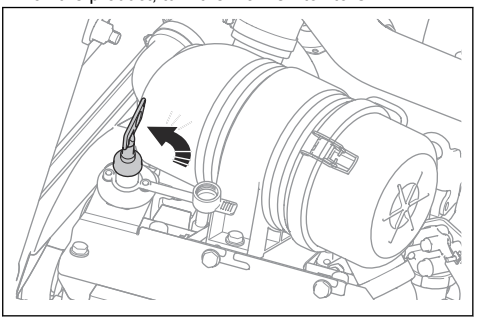

To operate the product

1. Start the product. Refer to *To start the product on page 33*.
2. Release the parking brake.

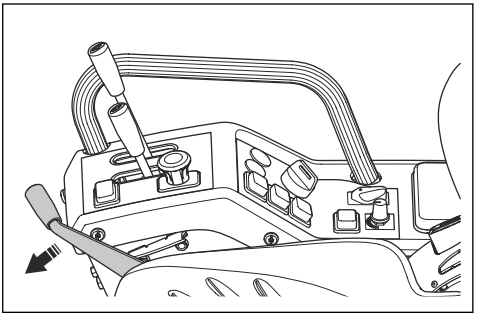

https://truckmanualshub.com/

3. Carefully push down 1 of the speed pedals. The speed increases the more the pedal is pushed down. Use pedal (A) to move forward, and pedal (B) to move rearward.

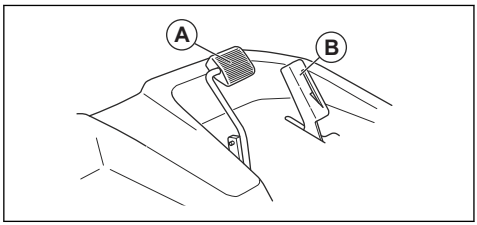

4. Release the pedal to brake. To brake harder, push down the other speed pedal.

To lower the cutting deck to the float position

1. Start the electrical drive. Refer to *To start the product on page 33*.
2. Move the lever for the hydraulic lifting arms forward to lower the cutting deck to the float position.

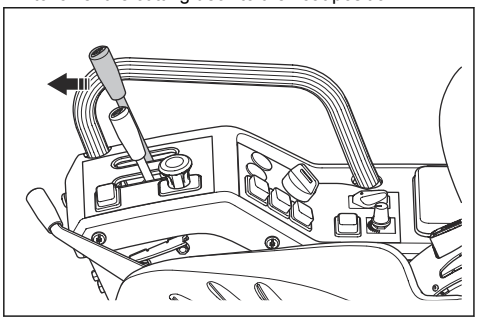

3. Start the hybrid drive. Refer to *To start the product on page 33*.
4. Pull the PTO button out to engage the drive on the cutting deck blades.

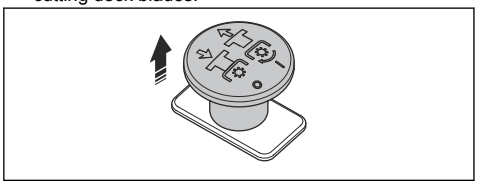

To lift the cutting deck

1. Start the electrical drive. Refer to *To start the product on page 33*.
2. If the cutting deck is engaged, push the PTO button in to disengage the drive on the cutting deck.

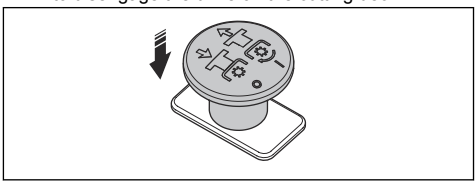

3. Move the lever for the hydraulic lifting arms rearward to lift the cutting deck.

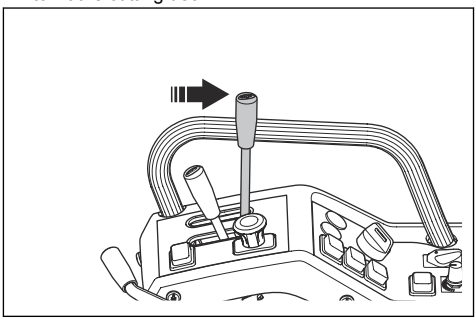

To set the PTO speed

Turn the PTO speed switch to (A), (B) or (C).

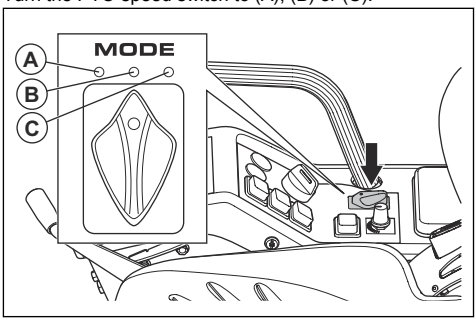

- (A) Low speed.
- (B) Reduced speed.
- (C) High speed.

Note: Refer to *Technical data on page 63* for the PTO speed rpm.

To adjust the ground pressure of the hydraulic lifting arms

The hydraulic lifting arms has a gas spring that helps to increase or decrease the ground pressure from the pivot wheel on the cutting deck.

1. Remove the cutting deck. Refer to *To remove the cutting deck on page 28*.
2. Apply the parking brake.

https://truckmanualshub.com/

3. Move the lever for the hydraulic lifting arms rearward to fully lift the hydraulic lifting arms.
4. Turn the power key to the STOP position.
5. To increase or decrease the ground pressure, remove the pin and the bolt and move the gas spring to 1 of the positions.

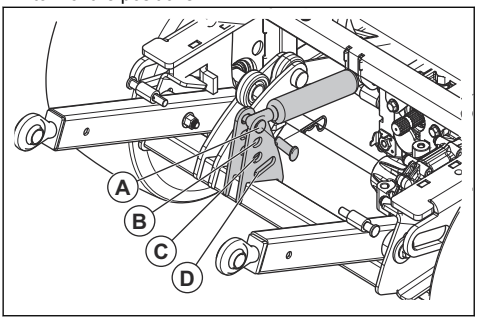

a) Use position (A) for the lowest ground pressure. Position (A) is used for example when a cutting deck is attached to the product.
b) Use position (B) or (C) for increased ground pressure.
c) Use position (D) to disengage the gas spring. Position (D) is used for example when a snow blade is attached to the product.

To adjust the cutting height - Combi 155

1. Park the product on level ground.
2. Apply the parking brake.
3. Move the lever for the hydraulic lifting arms rearward to fully lift the cutting deck.
4. Turn the power key to the STOP position.
5. Remove the cutting height adjustment knob on the side of the cutting deck.
6. Put the cutting height adjustment knob in 1 of the holes on the adjustment plate.

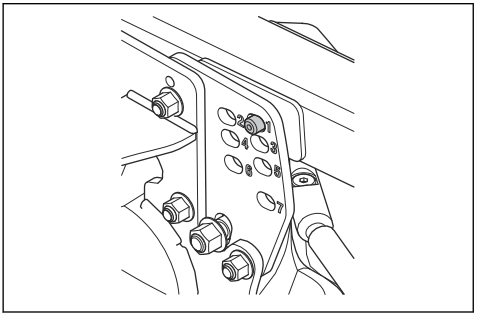

Note: The cutting height is shown with the numbers 1-7. Refer to the table below.

7. Tighten the cutting height adjustment knob.
8. Do steps 5-7 on the other side of the cutting deck.
9. Remove the locking pin on the cutting height adjustment lever in the top left corner of the cutting deck.

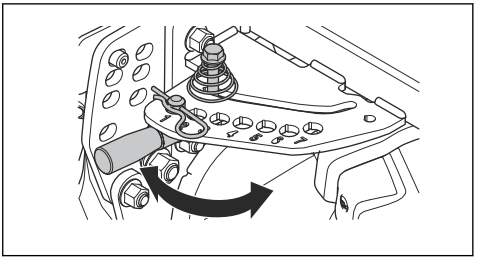

10. Push the cutting height adjustment lever down and pull the lever horizontally.
11. Put the lever in the hole with the same number as on the adjustment plate.

Note: Make sure the same number is selected on all 3 adjustment points.

12. Attach the locking pin on the cutting height adjustment lever.
13. Adjust the parallelism of the cutting deck. Refer to *To adjust the parallelism of the cutting deck on page 53*.

Number	Cutting height, mm/in
1	30/1.2
2	40/1.6
3	52/2
4	64/2.5
5	76/2.3
6	93/3.7
7	112/4.4

To adjust the cutting height - Combi 155 X

1. Park the product on level ground.
2. Move the lever for the hydraulic lifting arms forward to lower the cutting deck to ground position.
3. Set the auxiliary power switch to position "1".

https://truckmanualshub.com/

4. Move the lever for the auxiliary system forward and rearward to adjust the cutting height.

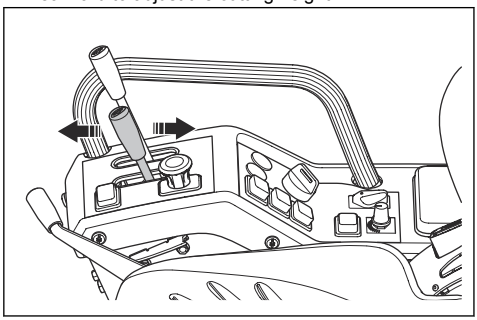

Note: The selected cutting height is shown with the numbers 1-7 on the cutting deck. Refer to the table below.

5. Adjust the parallelism of the cutting deck. Refer to *To adjust the parallelism of the cutting deck on page 53*.

Number	Cutting height, mm/in
1	30/1.2
2	40/1.6
3	52/2
4	64/2.5
5	76/2.3
6	93/3.7
7	112/4.4

To adjust the cutting height - R180

1. Park the product on level ground.
2. Apply the parking brake.
3. Move the lever for the hydraulic lifting arms rearward to fully lift the cutting deck.
4. Turn the power key to the STOP position.
5. Remove the locking pin on the adjustment lever for cutting height.

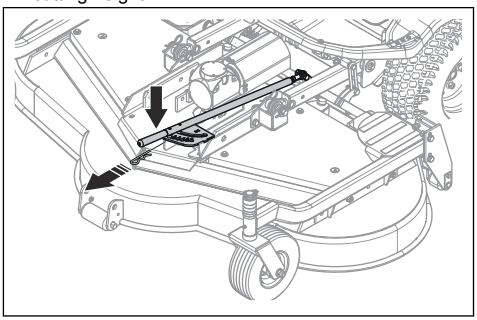

6. Lift the adjustment lever for cutting height and pull the lever horizontally. Refer to the table below for which cutting height that agrees with which number.
7. Attach the locking pin on the adjustment lever for cutting height.
8. Hold the front wheel with 1 hand and remove the locking pin with the other hand.
9. Move the distance rings up or down, refer to the table below. The distance rings have 2 thicknesses, (A) is 15 mm/0.6 in. thick and (B) is 10 mm/0.4 in. thick.

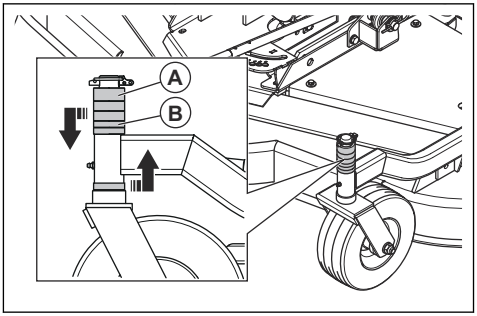

10. Attach the locking pin on top of the front wheel.
11. Do step 8-10 again with the second wheel.
12. Adjust the parallelism of the cutting deck. Refer to *To adjust the parallelism of the cutting deck on page 55*.

Number	Distance rings, above/below	Cutting height, mm/in.
1	3xA+3xB/0	30/1.2
2	3xA+2xB/1xB	40/1.6
3	3xA+1xB/2xB	50/2.0
4	3xA/3xB	60/2.4
5	2xA/1xA+3xB	75/3.0
6	1xA/2xA+3xB	90/3.5

https://truckmanualshub.com/

To get a good cutting result

- For best performance, do maintenance on the product regularly as given in the maintenance schedule. Refer to *Maintenance schedule on page 39*.
- Do not cut a wet lawn. Wet grass can give a bad cutting result.
- Start with a high cutting height and decrease it gradually.
- Cut with blades that rotate at high speed (highest permitted engine speed, see *Technical data on page 63*). Move the product forward at low speed. If the grass is not too high and thick, you can get a good cutting result also at a higher speed.
- Cut the grass in an irregular pattern.
- To get the best cutting result, cut the grass frequently and use the BioClip function.

https://truckmanualshub.com/

Maintenance

Introduction

WARNING: Before you do any maintenance work you must read and understand the safety chapter.

Maintenance schedule

* = General maintenance done by the operator. The instructions are not given in this operator's manual.

X = Maintenance done by the operator. The instructions are given in this operator's manual.

O = Maintenance done by the service agent. The instructions are not given in this operator's manual.

Note: If more than one time interval is identified in the table, the shortest time interval is for the first maintenance only.

Maintenance	Daily	Weekly	First 50 hours	Maintenance interval in hours		
				200	400	800
Make sure that nuts and screws are tightened.	*					
Make sure that there are no fuel, water or oil leaks.	*					
Clean the product. Refer to *To clean the product on page 42*.	X					
Make sure that the safety devices are not defective. Refer to *Safety devices on the product on page 20*.	X					
Lubricate as shown in the quick maintenance guide. Refer to *Quick maintenance guide on page 41*.		X				
Make sure that the fuel hoses and the couplings are clean and not damaged.			*	*		
Make sure that the hoses for the cooling system and the couplings are clean and not damaged.			*	*		
Examine the 12 V battery.		*				
Do a check of the electrical connections and cables.			*	*		
Control the pedal linkage, adjust and grease.				O		
Examine and adjust the brake wire.				O		
Make sure that the cold air intake of the battery cooling system is not blocked.	X		X	X		
Clean the battery cooling system.			X	X		
Examine the connections of the 48 V batteries. Make sure that the 48 V batteries are not loose.			*	*		
Check and update the product to the newest software.				O		
Do a check of the tension of the PTO belts and make sure the belts are not worn.			X	X		
Replace the PTO belts.					O	
Hydraulic system						
Make sure that the hydraulic hoses and the hydraulic couplings are clean and not damaged.			*	*		
Do a check of the oil level in the hydraulic oil tank.		X				

https://truckmanualshub.com/

Maintenance	Daily	Weekly	First 50 hours	Maintenance interval in hours		
				200	400	800
Replace the hydraulic oil filter.			X		X	
Replace the hydraulic oil.					X	
Engine						
Make sure that the cold air intake of the engine is not blocked.	*					
Do a check of the coolant level.	*					
Replace the coolant.						O
Do a check of the engine oil level.			X	X		
Replace the engine oil and oil filter.			X	X		
Clean the air filter.		X				
Replace the air filter.				X		
Replace the primary fuel filter and prefilter.				X		
Replace the alternator belt						O
Cutting deck						
Clean the cutting deck, below the belt covers and below the cutting deck.	X					
Examine the cutting deck for damages.	X					
Examine the blades in the cutting deck. Refer to *To examine the blades on page 52* and *To examine the blades on page 53*.		X				
Replace the blades.				X		
Examine the belt of the cutting deck for damages.			*	*		
Replace the belt of the cutting deck.					X	
Do a check of the oil and oil level in the bevel gear.					*	
Replace the oil in the bevel gear.					X	
Do a check of the parallelism of the cutting deck.			X	X		
Wheels and transmissions						
Examine and tighten the wheel nuts with the correct torque (84 Nm).			*	*		
Make sure that the tire pressure is correct (1.5 bar).		X				
Replace the oil in the transmissions.						O
Do a check of the oil in the transmissions. Clean the magnetic plug, if applicable.					O	

To reset the service indicator

Note: The service indicator is comes on after 50, 200, 400 and 800 hours.

1. Stop the product on a level surface.
2. Push the start button for the electrical drive.
3. Pull the PTO button out.
4. Apply and release the manual parking brake 10 times in less than 30 seconds.

https://truckmanualshub.com/

Quick maintenance guide

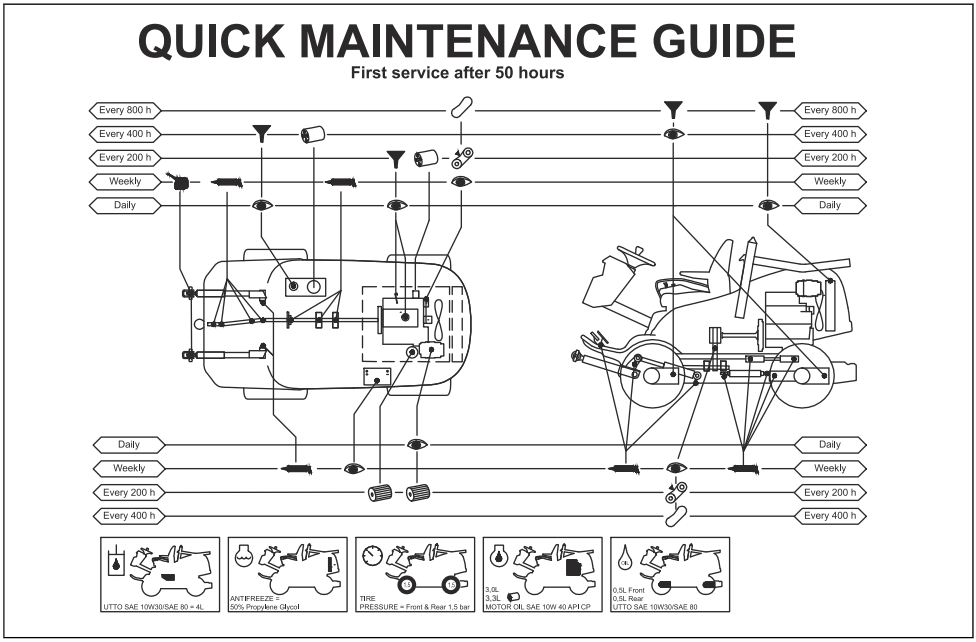

Quick maintenance guide - Combi cutting decks

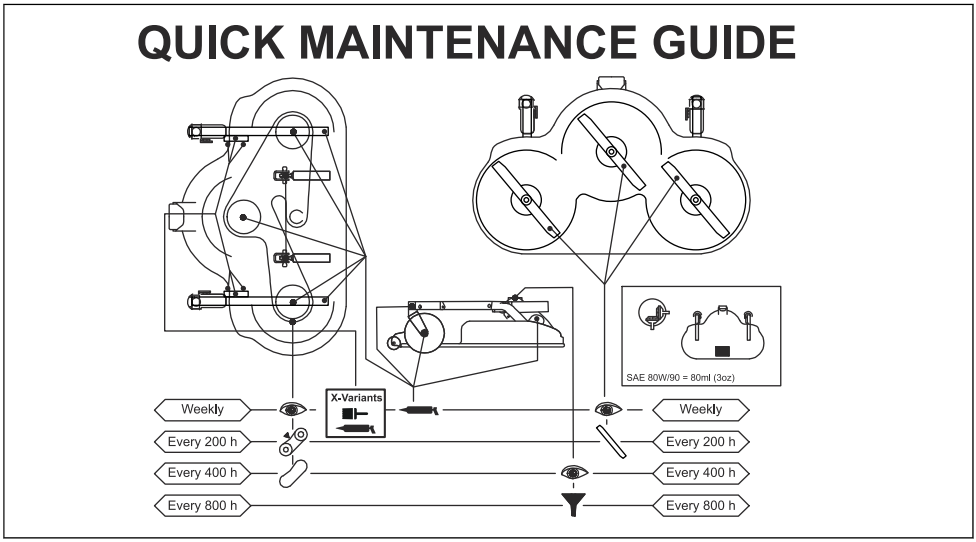

https://truckmanualshub.com/

Quick maintenance guide - R180 cutting deck

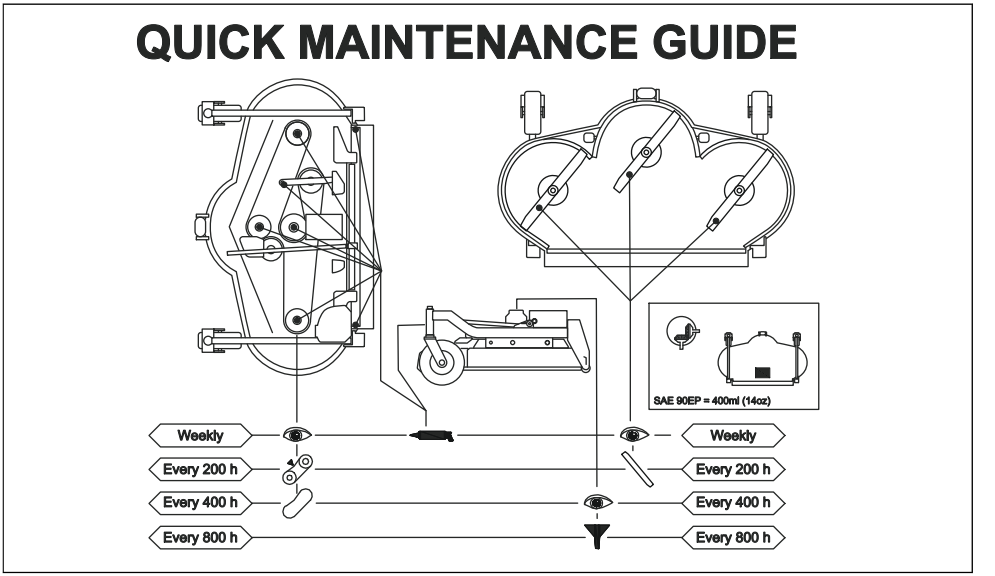

Symbols on the quick maintenance guide

Replace the filter

Replace the oil

Examine visually or do a check of the oil level

Lubricate the grease nipple with grease

Lubricate with engine oil

Do a check of the condition and tension of the drive belt

Replace the drive belt

Replace the blades

Lubrication, general information

- Remove the power key to prevent accidental movements during lubrication.
- Use engine oil when you lubricate with an oil can.
- When you lubricate with grease, use a chassis or ball bearing grease that prevents corrosion. Remove unwanted grease after lubrication.
- Lubricate 2 times a week if you operate the product daily.
- Do not spill lubricant on the drive belts or the grooves of the belt pulleys. If you do spill, clean with alcohol. If the friction between the drive belt and the pulley is not sufficient after you clean with alcohol, replace the drive belt.

CAUTION: Do not use gasoline or other petroleum products to clean drive belts.

To clean the product

WARNING: Turn the power key to the STOP position and turn the main switch to OFF before you clean the product.

https://truckmanualshub.com/

CAUTION: Do not use a high-pressure washer or a steam cleaner. Water can go into bearings and electrical connections and cause damage to the product.

Clean the product after use. Let the product cool down before you clean it.

- Before you clean the product with a wet cloth, clean the product with a soft brush or compressed air. Remove grass cuttings and dirt on and around the transmission.
- Use a wet cloth to clean the product. Clean plastic parts with a clean and dry cloth.
- Do not use water or detergents near electrical components or bearings. Liquids can cause damage to the electrical components and bearings.
- To clean the cutting deck, put the cutting deck in service position, if possible, and hose it down with water.
- When the product is clean, start the cutting deck for a short period to remove the remaining water.

To clean the cold air intakes

CAUTION: Clean the cold air intakes daily or more frequently if necessary. A blocked cold air intake can make the product become too hot.

To clean the cold air intake of the battery cooling system

- Make sure that the cold air intake grille is not blocked. Remove grass and dirt with a soft brush.

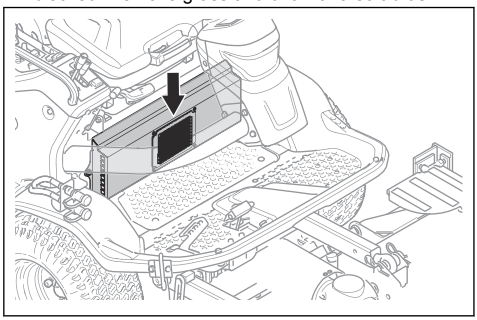

To clean the cold air intake of the right side cover

- Make sure that the cold air intake grille is not blocked. Remove grass and dirt with a soft brush.

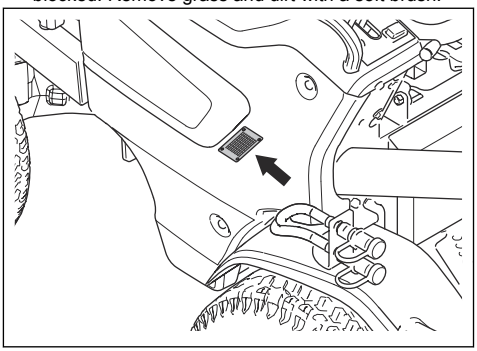

To clean the cold air intake of the engine

- Make sure that the cold air intake grille is not blocked. Remove grass and dirt with a soft brush.

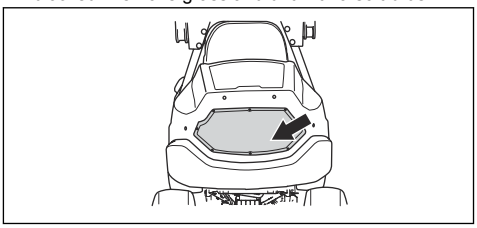

To clean the battery cooling system

1. Remove the cover to the battery cooling system. Refer to *To remove the cover of the battery cooling system on page 44*.
2. Use compressed air to clean the cooling fins and the filters on the sides of the cover.

To clean the engine and the muffler

Keep the engine and muffler free from grass cuttings and dirt. Grass cuttings soaked in fuel or oil on the engine can increase the fire risk and the risk that the engine becomes too hot. Let the engine cool before it is cleaned. Clean with water and a brush.

Grass cuttings around the muffler dry quickly and are a fire risk. Use a brush or remove the grass cuttings with water when the muffler is cold.

https://truckmanualshub.com/

To remove the covers

To remove and install the front cover of the steering column

1. Remove the 2 screws and tilt the front cover of the steering column forward.

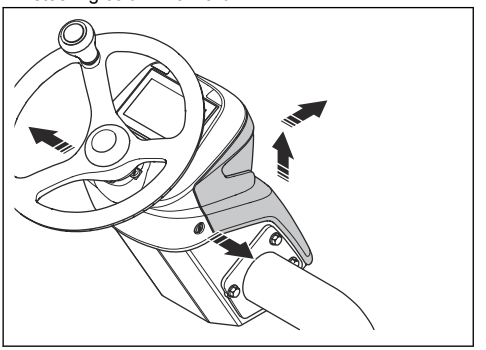

2. Disconnect the wires.

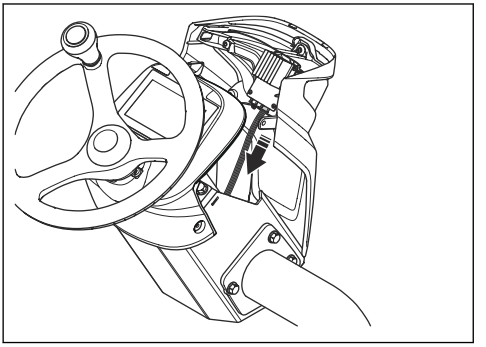

3. Hold the front cover of the steering column in a vertical position and remove it.

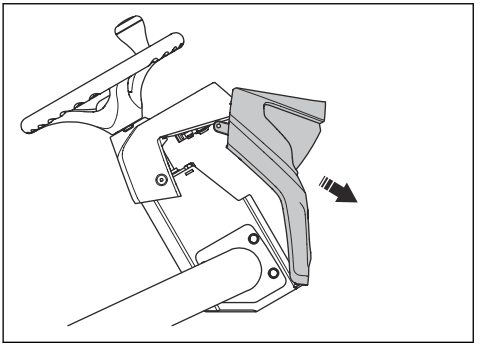

4. Install in opposite sequence.

To remove the cover of the battery cooling system

1. Remove the 2 screws and remove the cover.

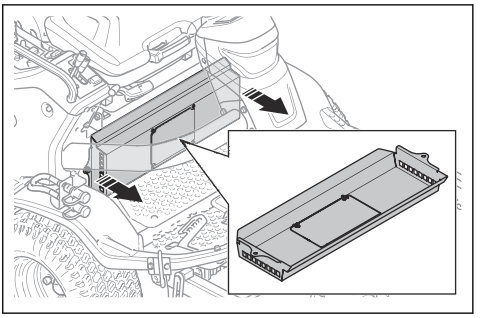

To remove the bottom plate

1. Remove the 2 screws and lift off the bottom plate.

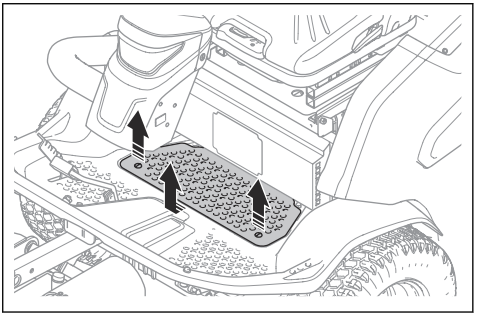

To remove the sevice lid

1. Turn and remove the 2 screws and remove service lid.

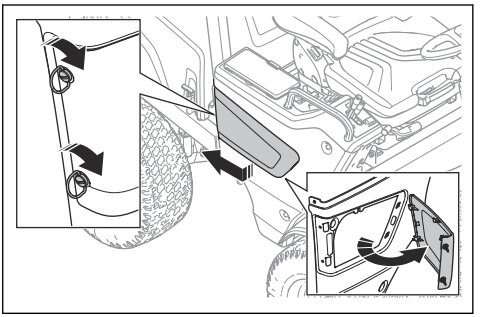

https://truckmanualshub.com/

To remove the cover of the fuse box

1. Turn and remove the 3 screws and remove the cover.

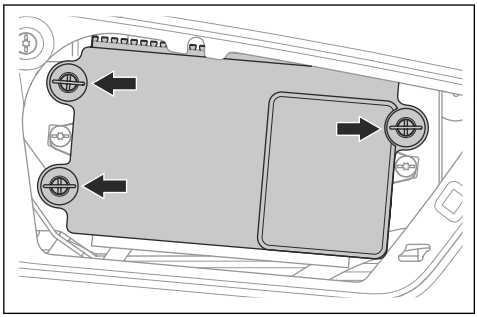

To remove the right side cover

1. Remove the 5 screws and remove the side cover.

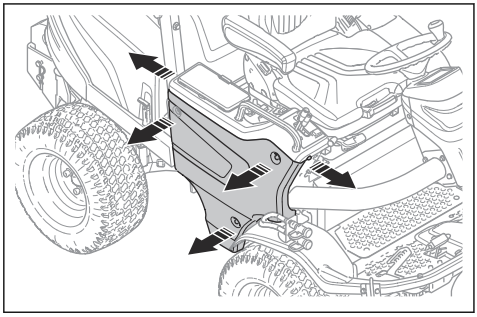

To open and remove the engine cover

1. Remove the rubber straps on the right and the left side of the engine cover.
2. Open the engine cover rearward.

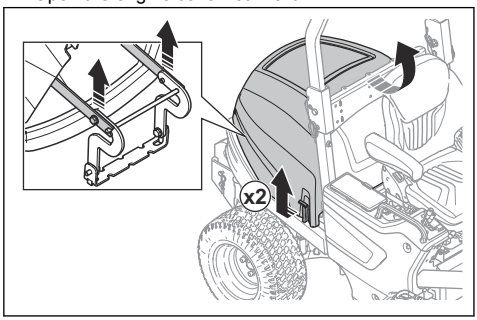

Note: Loosen the bolts to remove the engine cover fully.

3. To get full access to the engine, tilt the seat forward.

To remove the transmission cover

1. Remove the screws.

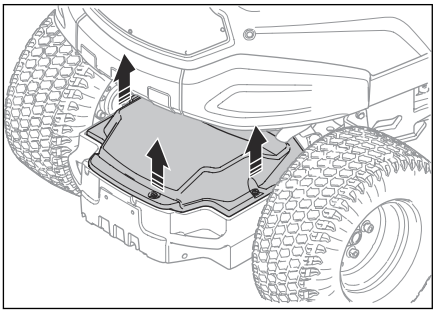

2. Lift and remove the transmission cover.

To tilt the seat forward

- Pull the locking lever up and tilt the seat forward.

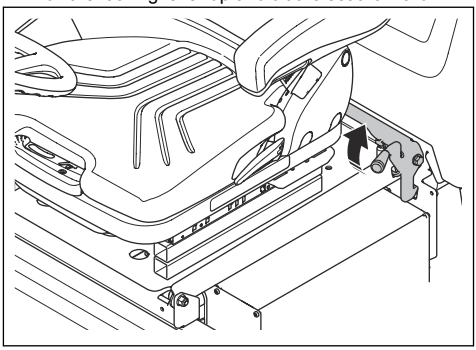

To remove and install the servicing plug

1. Tilt the seat forward. Refer to *To tilt the seat forward on page 45*.
2. Turn the servicing plug counterclockwise to remove it.

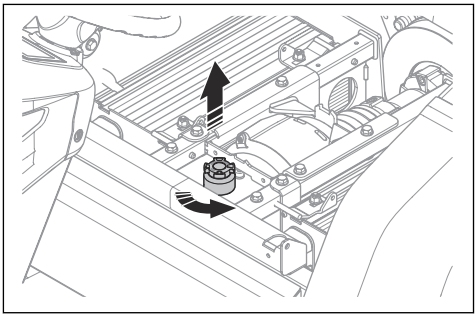

3. Put the servicing plug in position and turn it clockwise to install it.

https://truckmanualshub.com/

To replace the headlights

1. Remove the front cover of the steering column. Refer to *To remove and install the front cover of the steering column on page 44*.
2. Remove the 3 screws of the headlights.

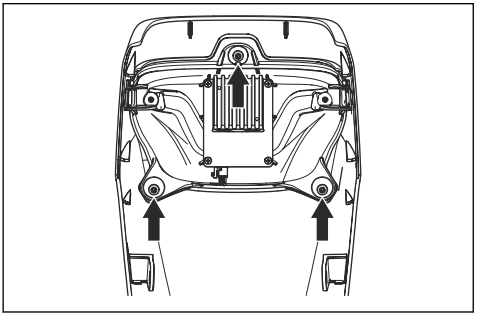

3. Remove the headlights.
4. Assemble in opposite sequence.

Fuses

To replace a blade fuse

A broken blade fuse is identified by a burned connector.

1. Pull out the blade fuse from the holder.
2. Replace the broken blade fuse with a new blade fuse of the same type.

Note: If the blade fuse breaks again a short period after you replace it, there is a short circuit. Repair the short circuit before you operate the product again. Let an approved service agent help you.

To replace a bolt-down fuse

A broken bolt-down fuse is identified by a burned connector.

1. Turn the main switch to OFF.

WARNING: Make sure that there is no voltage before you touch the bolt-down fuse. To touch a bolt-down fuse with voltage can result in electrical shock and serious injury.

2. Remove the 2 screws and the bolt down fuse from the holder.
3. Replace the broken bolt down fuse with a new bolt down fuse of the same type.

Note: If the bolt-down fuse breaks again a short period after you replace it, there is a short circuit. Repair the short circuit before you operate the product again. Let an approved service agent help you.

To replace the fuses in the fuse box

A broken fuse is identified by a burned connector.

1. Remove the service lid. Refer to *To remove the sevice lid on page 44*.
2. Remove the cover to the fuse box. Refer to *To remove the cover of the fuse box on page 45*.
3. Pull out the fuse from the holder.
4. Replace the broken fuse. Refer to *To replace a blade fuse on page 46*.
5. Install the covers.

To replace the fuses of the 48 V electrical system

You find the fuses of the 48 V electrical system behind the battery cooling system.

1. Remove the servicing plug. Refer to *To remove and install the servicing plug on page 45*.
2. Remove the cover to the battery cooling system. Refer to *To remove the cover of the battery cooling system on page 44*.
3. Remove the 2 screws on the top of the battery cooling system and tilt the battery cooling system forward.

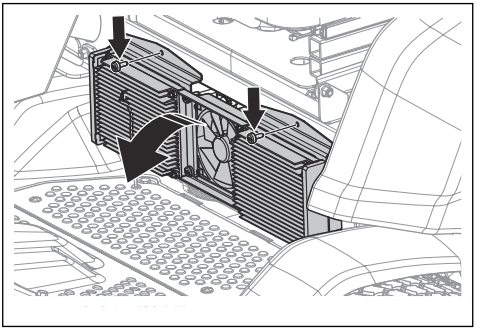

4. Replace the fuse. Refer to *Fuse overview on page 6* and *To replace a blade fuse on page 46*.
5. Install the battery cooling system and the cover in opposite sequence.

To replace the fuses of the 12 V electrical system

You find the fuses on the side of the 12 V battery.

1. Open the engine cover. Refer to *To open and remove the engine cover on page 45*.
2. Turn the main switch to OFF.

https://truckmanualshub.com/

3. Push the snap locks on each side of the fuse cover and pull out the fuse cover.

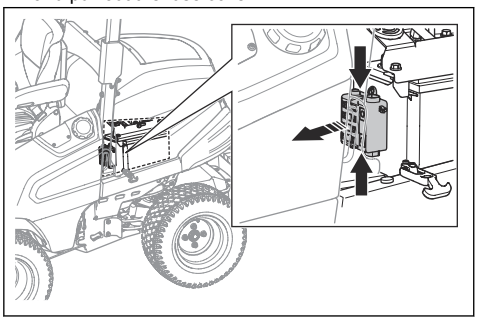

4. Replace the fuse. Refer to *To replace a bolt-down fuse on page 46*.
5. Install in the opposite sequence.

To clean and replace the air filter

CAUTION: Do not start the engine when the air filter is removed.

1. Remove the engine cover.
2. Loosen the 2 latching devices that hold the air filter cover.

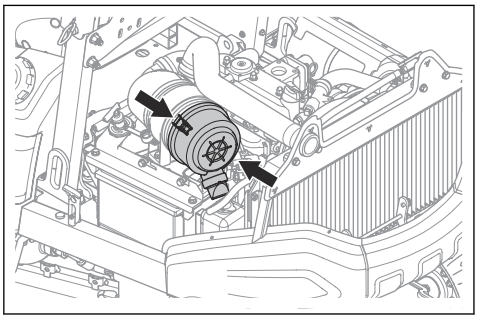

3. Remove the the air filter cover.
4. Remove the air filter cartridge from the filter housing.

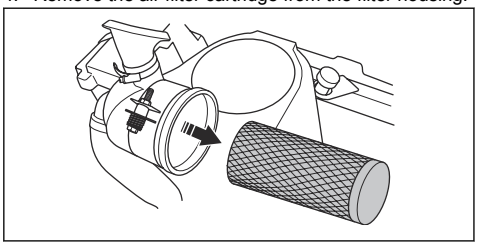

5. Clean the inner surface of the air filter housing with a dry cloth.
6. Hit the air filter cartridge carefully against a hard surface. Replace the air filter if it does not become clean or if it is damaged.
7. Put the air filter cartridge in its initial position in the filter housing. Make sure that the air filter cartridge is correctly installed on the top of the air intake.
8. Install the air filter cover and make sure that the particle collector points down.

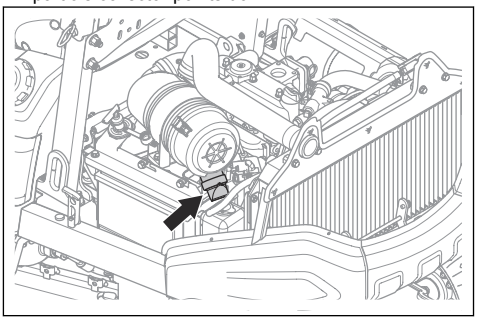

To do a check of the engine oil level

1. Park the product on level ground and stop the engine.
2. Open the engine cover.
3. Loosen the dipstick and pull it out.
4. Clean the oil from the dipstick.
5. Put the dipstick in the dipstick opening. Do not tighten it.
6. Pull the dipstick out and read the oil level.
7. The oil level must be between the marks on the dipstick. If the level is near the ADD mark, fill oil to the FULL mark.

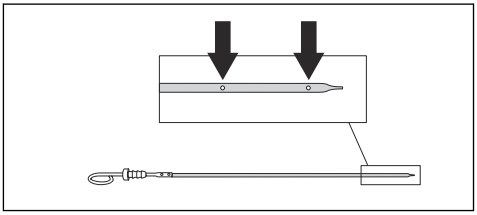

8. Slowly fill the oil through the dipstick opening.

Note: See *Technical data on page 63* of engine oil recommended. Do not mix different types of oil.

9. Tighten the dipstick correctly before you start the engine. Start and idle the engine for approximately 30 seconds. Stop the engine. Wait 30 seconds and do a check of the oil level again.

https://truckmanualshub.com/

To change the engine oil and the oil filter

If the engine is cold, start the engine for 1–2 minutes before you drain the engine oil. This makes the engine oil warm and easier to drain.

WARNING: Do not operate the engine for more than 1–2 minutes before you drain the engine oil. The engine oil becomes very hot and can cause burn injuries. Let the engine become cool down before you drain the engine oil.

WARNING: If you spill engine oil on your body, clean with soap and water.

1. Put a container below the oil drain plug on the left side of the engine.

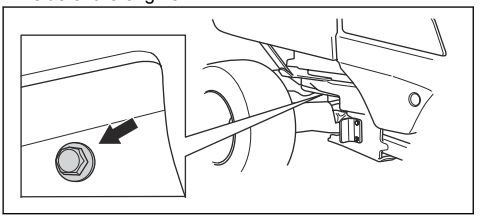

2. Remove the oil drain plug.
3. Remove the dipstick.
4. Drain the oil into the container.
5. Put a new gasket on the oil drain plug. Attach the oil drain plug and tighten it.
6. Turn the oil filter counterclockwise to remove it.

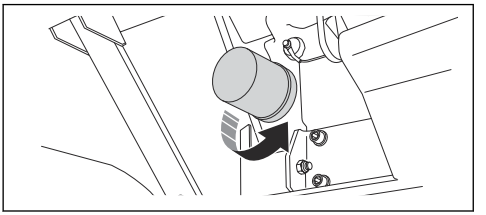

7. Lightly lubricate the rubber seal on the new oil filter with new oil.
8. To attach the oil filter, turn it clockwise by hand until the rubber seal is in position, then tighten a half turn more.
9. Fill with new oil as given in *Technical data on page 63*.
10. Start the engine and let it run at idle speed speed for 3 minutes.
11. Stop the engine and make sure that the oil filter does not leak.
12. Do a check of the oil level.

Note: For safe disposal of used engine oil, see *Disposal on page 61*.

To replace the fuel prefilter

You find the fuel prefilter below the engine housing on the left side of the product.

WARNING: Use protective gloves to prevent skin irritation. Fuel can come from the fuel filter and onto your skin.

1. Remove the screw to the clamp that holds the fuel prefilter in position.
2. Pull the fuel filter out from the clamp.
3. Loosen the screws to the hose clips.
4. Move the hose clips away from the fuel prefilter with a pair of flat pliers.
5. Pull off the fuel prefilter from the hose ends. There is a risk of a small fuel leak.

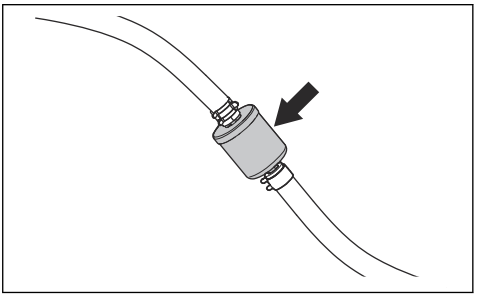

6. Make sure that the new fuel prefilter is in the correct direction for the fuel flow. Push the new fuel prefilter into the ends of the hoses. Apply liquid detergent to the ends of the fuel prefilter to make the connection easier.
7. Push the hose clips against the fuel prefilter.

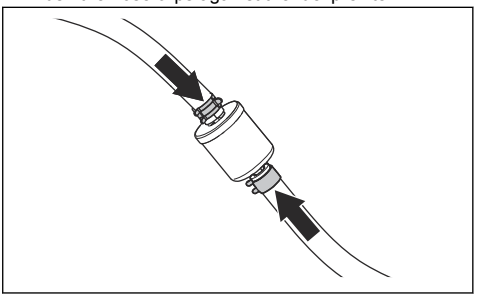

8. Tighten the screws to the hose clips and install the fuel prefilter in the clamp.

To replace the primary fuel filter

1. Open the engine cover to access the primary fuel filter.

https://truckmanualshub.com/

2. Lift up the expansion tank and put it to the side.

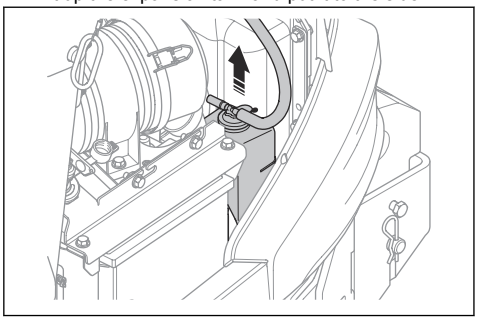

3. Remove the air filter. Refer to *To clean and replace the air filter on page 47*.
4. Clean the area near the primary fuel filter before you open it.
5. Close the lever on the fuel filter holder.

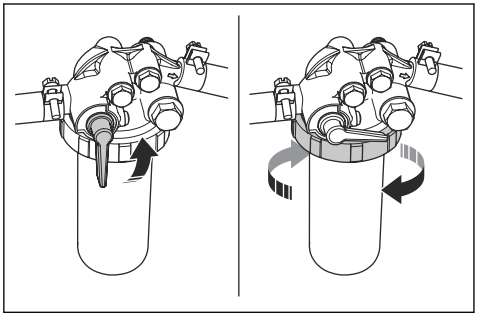

6. Use a pliers wrench or a special tool to turn the nut of the filter housing counterclockwise.
7. Remove the nut of the filter housing and the filter housing.
8. Remove the paper filter from the filter housing.
9. Put a new paper filter in the filter housing.
10. Turn the nut of the filter housing clockwise to attach the filter housing. Tighten the nut of the filter housing carefully.
11. Install the air filter and expansion tank in opposite sequence.

The hydraulic system

To keep the hydraulic system clean

WARNING: Oil is dangerous to the environment and leakage can cause damage to the lawn. Repair oil leaks immediately.

- Before you disconnect parts of the hydraulic system, make sure that the parts and the area around them are clean.
- Use clean containers when you fill new oil.
- Only use clean oil that has been kept in sealed containers.
- Do not use drained oil again.
- Obey the oil and filter change intervals specified in the maintenance schedule. Refer to *Maintenance schedule on page 39*.

Make sure that contamination does not go into the hydraulic system. Particles can cause wear, damage and malfunctions. If dirt enters the system, the filters will get blocked and will not operate correctly.

Do not open the hydraulic system unless it is necessary. The risk of contamination increases each time the hydraulic system is opened.

To do a check of the oil level in the hydraulic system

1. Remove the service lid. Refer to *To remove the sevice lid on page 44*
2. Remove the right side cover. Refer to *To remove the right side cover on page 45*.
3. Do a check of the oil level in the sight glass. The oil level must be near the mark in the middle of the sight glass.

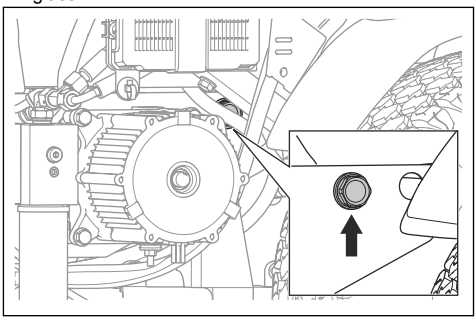

4. If the oil level is too low, fill the hydraulic system with hydraulic oil. Refer to *To fill the hydraulic system on page 49*.

To fill the hydraulic system

1. Remove the service lid. Refer to *To remove the sevice lid on page 44*
2. Remove the right side cover. Refer to *To remove the right side cover on page 45*.

https://truckmanualshub.com/

3. Remove the side hose (A) from the coupling.

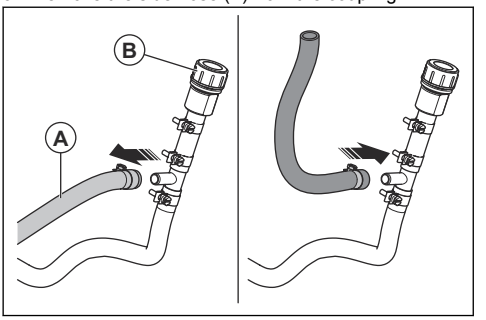

4. Make sure that the opening in the coupling is closed or attach a hose to the coupling and hold it up.
5. Open the lid (B).
6. Use a funnel to fill the hydraulic oil into the opening. Fill until the level is at the mark in the middle of the sight glass.

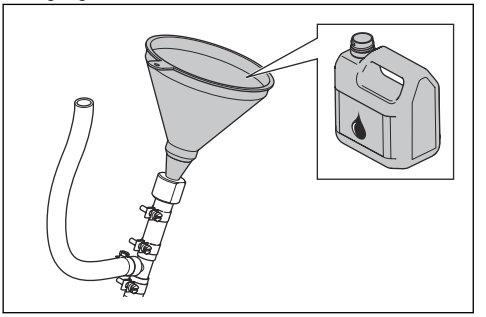

7. Install the lid, the side hose and the covers in opposite sequence.

To drain the hydraulic system

1. Remove the service lid. Refer to *To remove the sevice lid on page 44*
2. Remove the right side cover. Refer to *To remove the right side cover on page 45*.
3. Open the lid for the hydraulic system. Refer to *To fill the hydraulic system on page 49*.
4. Remove the drain plug and drain the hydraulic oil.

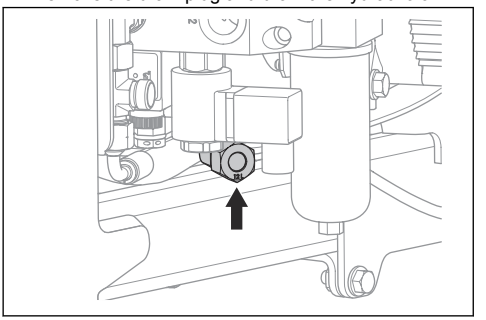

5. Install the lid, drain plug and covers in opposite sequence.

To replace the hydraulic oil filter

1. Drain the hydraulic system. Refer to *To drain the hydraulic system on page 50*.
2. Turn the hydraulic oil filter counterclockwise to remove it.

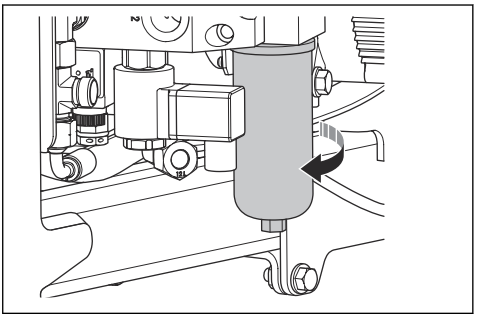

3. Install a new hydraulic oil filter in opposite sequence and fill the hydraulic system. Refer to *To fill the hydraulic system on page 49*.

To adjust the PTO-belts

1. Release the lock nut (A).
2. Tighten the adjustment screw (B) until the sleeve is against the frame bracket (C).
3. Hold the adjustment screw (B) and tighten the lock nut (A).

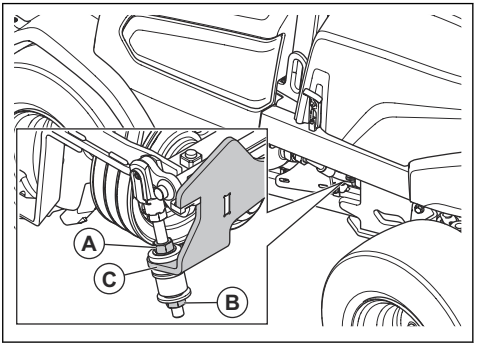

https://truckmanualshub.com/

Tire pressure

Refer to *Technical data on page 63* for the correct tire pressure.

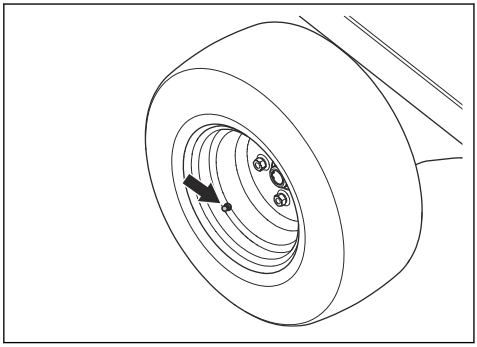

Combi cutting decks

To put the cutting deck in service position

1. Obey steps 1–13 in *To remove the cutting deck on page 28*.
2. Remove the service stay from the cutting deck.

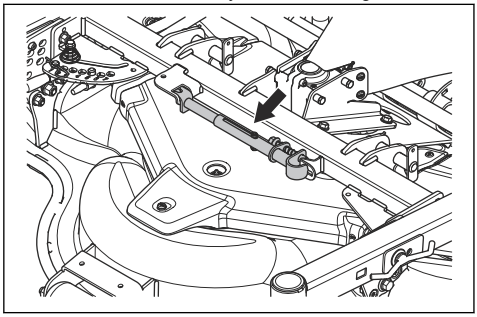

WARNING: Attach the service stay and the safety straps at all times when the cutting deck in service position. To not use the service stay or safety straps correctly can result in serious injury or death.

3. Attach the service stay to the red attach point below the bottom plate.

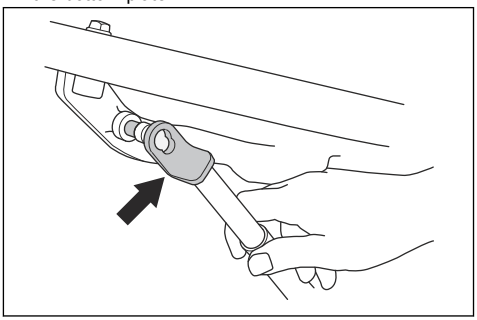

4. Pull the pin on the other end of the service stay. Attach the service stay to the red mark on cross tube on the cutting deck.

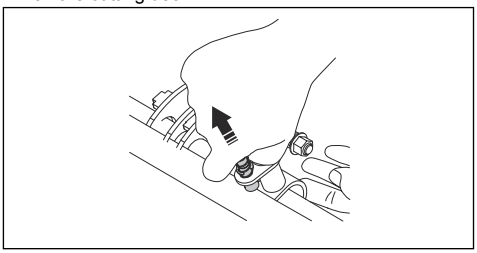

5. Start the engine.
6. Move the lever for the hydraulic lifting arms rearward to fully lift the cutting deck.
7. Attach 1 end of the the safety straps around the pipe adjacent to the steering column (A).
8. Attach the other end of the safety strap around the pivoting wheels of the cutting deck (B).

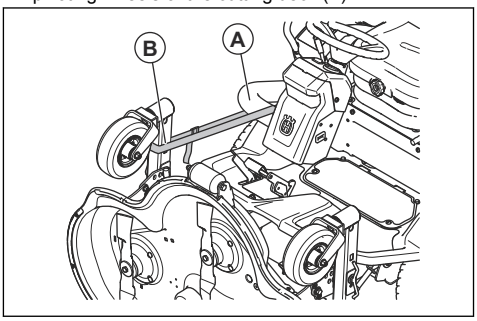

To put the cutting deck in mow position, follow the instructions in the opposite sequence.

To remove and attach the BioClip plug

1. Put the cutting deck in servicing position.

https://truckmanualshub.com/

2. Remove the 3 screws that hold the BioClip plug and remove the plug.

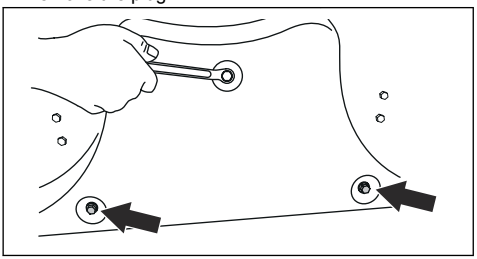

3. Attach 3 M8x15 mm screws in the screw holes for the BioClip plug to prevent damage to the threads.
4. Put the cutting deck in mow position.
5. Attach the BioClip plug in the opposite sequence.

To examine the blades

CAUTION: Damaged or incorrectly balanced blades can cause damage to the product. Replace damaged blades. Let an approved service agent help you sharpen and balance blunt blades.

1. Put the cutting deck in servicing position.
2. Look at the blades to see if they are damaged and if it is necessary to sharpen them.

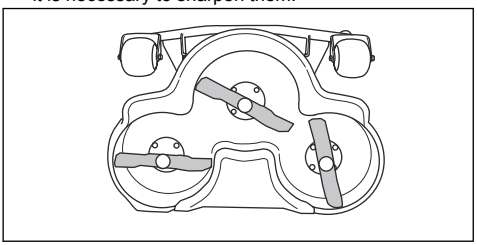

3. Tighten the blade bolts with tightening torque (8.15-8.56 kpm / 59-62 lbft) 80-84 Nm.

To replace the blades

1. Put the cutting deck in servicing position.
2. Lock the blade with a wooden block (A).

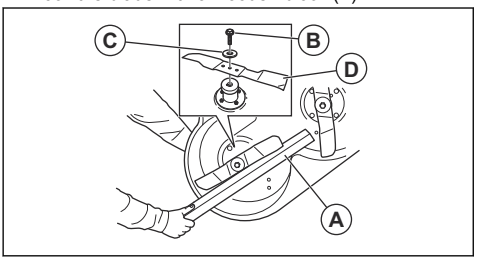

3. Loosen and remove the blade bolt (B), the washers (C) and the blade (D).
4. Assemble the new blade with the ends that have an angle in the direction of the cutting deck.

WARNING: Incorrect blade type can cause objects to eject from the cutting deck and cause serious injury. Use only the blades given in *Technical data on page 63*.

5. Attach the blade, the washer and the bolt. Tighten the bolt with a torque of (8.15-8.56 kpm / 59-62 lbft) 80-84 Nm.

To do a check of the oil level in the bevel gear of the cutting deck

1. Park the product on a level surface.
2. Lower the cutting deck to mow position.
3. Put a clean metal rod through the oil fill plug. The metal rod must be a minimum of 100 mm long and maximum 3 mm in diameter.

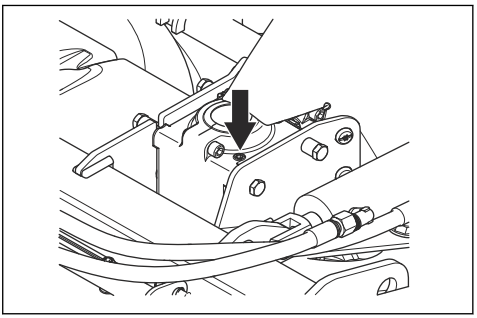

4. Lower the metal rod to the bottom of the gear housing.
5. Pull the dipstick out and read the oil level.
6. Measure the part of the metal rod that is have oil on it. There must be oil on 78-82 mm of the metal rod.
7. Fill with hydraulic oil if the oil level is less than 78 mm of the metal rod. Refer to *Technical data on page 63* for recommended oil.

To replace the oil in the bevel gear of the cutting deck

1. Remove the cutting deck. Refer to *To remove the cutting deck on page 28*.
2. Put the cutting deck on its front edge and drain the oil through the oil fill plug.
3. Let the oil run out into a container.
4. Fill with 80 ml new hydraulic oil as given in *Technical data on page 63*.

To do a check of the parallelism of the cutting deck

1. Do a check of the air pressure in the tires. Refer to *Tire pressure on page 51*.

https://truckmanualshub.com/

2. Park the product on a level surface.
3. Lower the cutting deck to mow position.
4. Set the cutting height lever to the middle position.
5. Measure the distance between the ground and the front and rear edges of the cutting deck.
   a) Combi 155 must be measured in 2 areas. Make sure that the rear edge is 6–9 mm (1/4 - 3/8 in.) higher than the front edge.

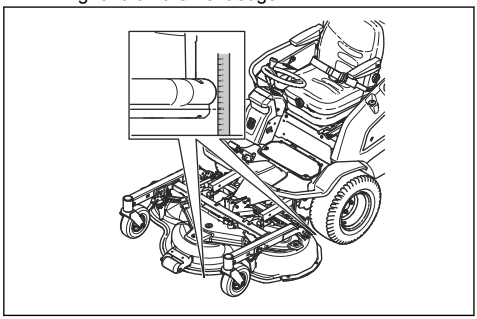

   b) Combi 155 X must be measured in 4 areas. Make sure that the rear edge is 6–9 mm (1/4 - 3/8 in.) higher than the front edge.

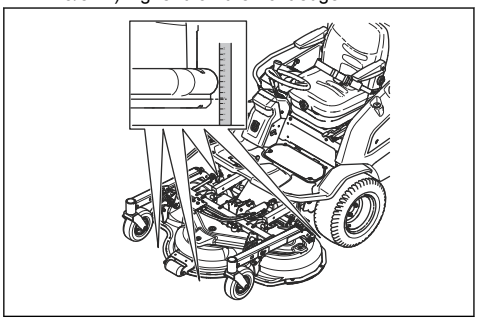

To adjust the parallelism of the cutting deck

1. Turn the track rod to extend it or make it shorter. Extend the track rod to lift the rear edge of the cover. Make the track rod shorter to lower the rear edge of the cover.

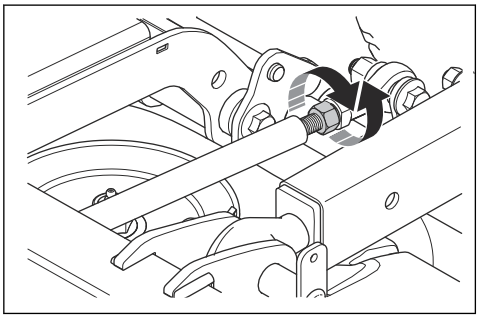

2. Tighten the nuts on the track rod.
3. Do a check of the parallelism. Refer to *To do a check of the parallelism of the cutting deck on page 52*.
4. Attach the front cover.

To replace the belt on the cutting deck

1. Remove the 3 screws that holds the belt cover.
2. Remove the belt cover.
3. Attach the service stay to the tension spring.
4. Push the service stay and remove the belt.

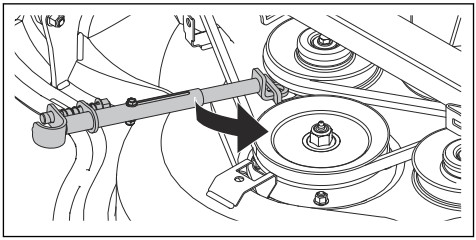

5. Attach the belt around the pulleys as shown in the illustration.

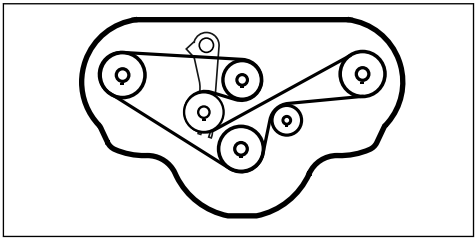

Cutting deck - R180

To examine the blades

WARNING: Damaged or incorrectly balanced blades can cause damage to the product. Replace damaged blades. Let an approved service agent help you sharpen and balance blunt blades.

1. Look at the blades to see if they are damaged and if it is necessary to sharpen them.
2. Tighten the blade bolts with tightening torque 125 Nm (12.75 kpm / 92 lbft).

https://truckmanualshub.com/

To replace the blades

1. Lock the blade with a wooden block (A).

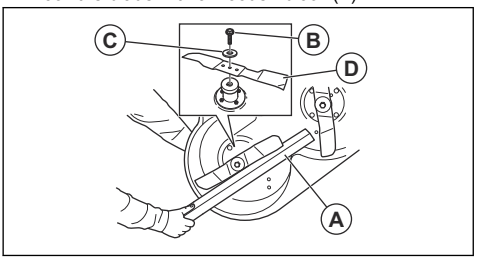

2. Remove the bolt (B), the washers (C) and the blade (D).
3. Assemble the new blade with the ends that have an angle in the direction of the cutting deck.

WARNING: Incorrect blade type can cause objects to eject from the cutting deck and cause serious injury. Only use approved blades. Refer to *Technical data on page 63*.

4. Attach the blade, the washer and the bolt. Tighten the bolt with a torque of 125 Nm (12.75 kpm / 92 lbft).

To do a check of the oil level in the bevel gear of the cutting deck

1. Park the product on a level surface.
2. Lower the cutting deck to float position.
3. Do a check of the oil level in the sight glass of the bevel gear. The oil level must be near the mark in the middle of the sight glass.
4. If the oil level is too low, fill with oil to the middle of the sight glass. Refer to *Technical data on page 63* for the correct oil.

To replace the oil in the bevel gear of the cutting deck

1. Remove the cutting deck. Refer to *To remove the cutting deck on page 28*.
2. Remove the sight glass.
3. Drain the oil. Use a suction device with a plastic hose. Make sure that the plastic hose gets the oil at the bottom of the bevel gear.

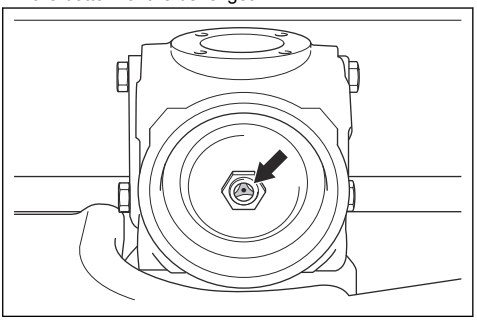

To do a check of the parallelism of the cutting deck

1. Do a check of the air pressure in the tires. Refer to *Tire pressure on page 51*.
2. Park the product on a level surface.
3. Lower the cutting deck to float position.
4. Set the adjustment lever for cutting height to the middle position.
5. Measure the distance between the ground and the front and rear edges of the cutting deck. The distance is measured in 2 areas. Make sure that the rear edge is 6–9 mm (1/4 - 3/8 in.) higher than the front edge.

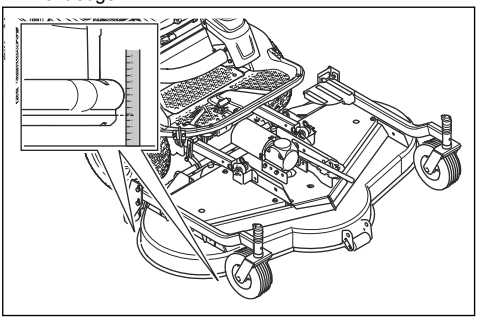

https://truckmanualshub.com/

To adjust the parallelism of the cutting deck

1. Loosen the lock nut.

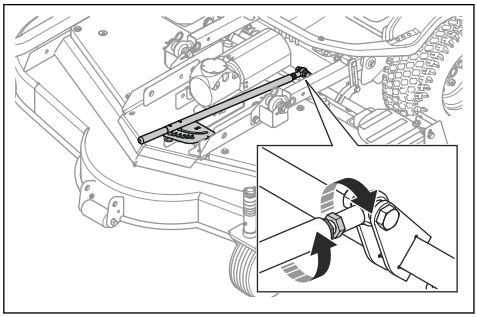

2. Turn the track rod to extend it or make it shorter. Extend the track rod to lift the rear edge of the cover. Make the track rod shorter to lower the rear edge of the cover.
3. Tighten the lock nut.
4. Do a check of the parallelism. Refer to *To do a check of the parallelism of the cutting deck on page 54*.

To replace the belt on the cutting deck

WARNING: Only do work on the belt with the power off and the drive shaft removed.

WARNING: Use eye protection when you do work on the cutting deck. The belt tension spring can break and cause injury.

1. Remove the belt covers.
2. Loosen the nut to the belt tension spring.

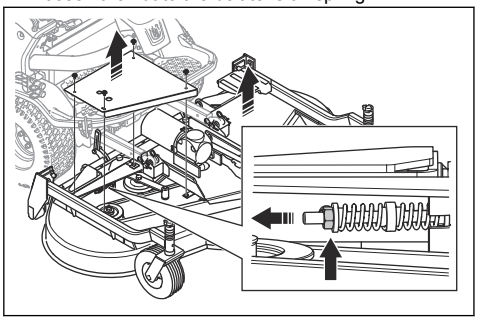

3. Remove the belt.
4. Install the belt around the pulleys as shown in the illustration.

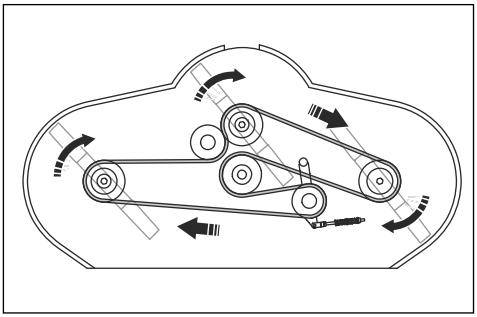

5. Tighten the nut until the belt has the correct tension.

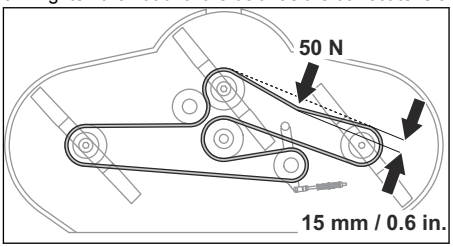

To charge the 12 V battery

Charge the battery if it is too weak to start the engine, and during storage of the product.

1. Open the engine cover. Refer to *To open and remove the engine cover on page 45*.
2. Turn the main switch to OFF.
3. Loosen the 2 screws to the air filter holder. Put the air filter holder and the air filter to the side.

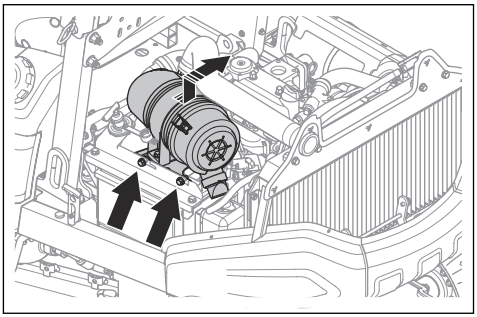

4. Remove the negative cable from the battery.
5. Remove the positive cable from the battery.
6. Use a standard battery charger to charge the battery.
7. Install the cables and air filter holder in opposite sequence.

https://truckmanualshub.com/

To replace the 12 V battery

1. Disconnect the battery. Refer to *To charge the 12 V battery on page 55*.
2. Remove the 2 screws on the battery holder.
3. Lift the battery holder and remove the battery.
4. Replace the battery with a battery of the same type and voltage.
5. Install the battery, battery holder and air filter in the opposite sequence.

Troubleshooting

Troubleshooting

If you cannot find a solution to your problems in this manual, speak to your Husqvarna service agent.

Problem	Cause
You can start the product, but you cannot operate it.	The temperature in the 48 V batteries is less than 0 °C/32 °F.
The starter motor does not turn the engine.	The main switch is in off position.
	The PTO button is engaged.
	The parking brake is not applied. Refer to *To apply and release the parking brake on page 33*.
	The main fuse is blown. Refer to *Fuse overview on page 6*.
	The power key is defective.
	The connection between the cable and the battery is bad.
	The battery is too weak. Refer to *To replace the 12 V battery on page 56*.
	The starter motor is defective.
	The OPC sensor is defective or the operator is not in the seat.
The engine does not start when the starter motor turns the engine.	There is no fuel in the fuel tank. Refer to *To fill fuel on page 31*.
	There is air in the fuel system.
	No fuel enters the fuel injectors.
	The engine is defective.
The engine does not run smoothly.	The fuel filter is clogged. Refer to *To replace the primary fuel filter on page 48*.
	The air filter is clogged. Refer to *To clean and replace the air filter on page 47*.
	The fuel tank venting is blocked.
	The fuel pressure is too low.
	The fuel injection pipe is loose.
	The engine is defective.
	There is incorrect fuel type in the fuel tank.
	The fuel injector is defective.
	The fuel injection pump is defective.
	The fuel pump is defective.

https://truckmanualshub.com/

Problem	Cause
The engine is too hot.	The engine has too high load.
	The coolant level is too low.
	The engine oil level is too low.
	The cold air intake or the cooling fins are blocked.
The product releases black smoke.	The fuel injector is defective.
	The fuel injection pump is defective.
	The air filter is clogged. Refer to *To clean and replace the air filter on page 47*.
	There is incorrect fuel type in the fuel tank.
The product releases blue smoke.	The engine oil level is too high.
	The engine is defective.
The product releases white smoke.	The cylinder in the engine is defective.
	Coolant water enters into the combustion chamber.
The engine apparently has no power.	The air filter is clogged. Refer to *To clean and replace the air filter on page 47*.
	The fuel filter is clogged. Refer to *To replace the primary fuel filter on page 48*.
	There is air in the fuel system.
	The fuel pressure is too low.
	The fuel pump is defective.
	The the fuel injection pump is not synchronized.
	The engine is defective.
The 12 V battery does not charge.	The 12 V battery is defective. Speak to your Husqvarna service agent.
	The connection at the cable connectors on the 12 V battery terminals is bad.
	The DC/DC charger is defective.
	The 12 V generator is defective
There is vibration in the product.	The blades are loose. Refer to *To examine the blades on page 52*.
	One or more of the blades are not balanced. Refer to *To replace the blades on page 52*.
	The engine is loose.
	The bevel gear is loose.
	The hydraulic pump is loose.
	The engine is defective.
	The drive shaft is defective.
	The vibration damping units and/or rubber connectors are worn out.

https://truckmanualshub.com/

Problem	Cause
The cutting result is unsatisfactory.	The blades are blunt or damaged. Refer to *To replace the blades on page 52*.
	The grass is long or wet. Refer to *To get a good cutting result on page 38*.
	The cutting deck is not parallel to the ground. Refer to *To do a check of the parallelism of the cutting deck on page 52* and *To do a check of the parallelism of the cutting deck on page 54*.
	There is grass blockage in the cutting deck. Refer to *To clean the product on page 42*.
	The tire pressure is different on the right and left sides. Refer to *Tire pressure on page 51*.
	The pivoting wheels have different tire pressure on the right and left sides. Refer to *Technical data on page 63*.
	The product is operated at too high speed. Refer to *To get a good cutting result on page 38*.
	The engine speed is too low. Refer to *Technical data on page 63*.
	The belt tension is not correct.
The 48 V batteries does not charge.	The battery temperature is less than 0 °C.
	The power supply is not correctly connected.
	The connectors of the power supply are dirty or damaged.
The 48 V batteries are too hot.	The battery cooling system is dirty. Refer to *To clean the battery cooling system on page 43*.
	The battery cooling fan is defective.
	The batteries are dirty.

Display - Troubleshooting

Symbol	Name	Shows on the display	Cause / Action
	Critical error	The symbol and information text shows.	Operate the product to where you can park safely. Do not use the product and speak to your Husqvarna servicing dealer.
	Engine is too hot	The symbol shows.	The engine temperature is too high. Speak to your Husqvarna servicing dealer if the problem stays.
	Oil pressure low	The symbol shows.	The oil pressure is low. Do not use the product and speak to your Husqvarna servicing dealer.
	Generator fault indicator	The symbol is yellow.	The 48 V generator is too hot.
		The symbol is red.	The 48 V generator has a fault.

https://truckmanualshub.com/

Symbol	Name	Shows on the display	Cause / Action
	Hybrid mode disabled	The symbol shows.	Speak to your Husqvarna servicing dealer.
12V	12 V battery level indicator	The symbol shows.	Low voltage. Refer to *To charge the 12 V battery on page 55*.
	48 V batteries level indicator	The symbol is white.	The batteries level is in the correct range.
		The symbol is yellow.	The batteries level is low.
		The symbol is red.	The batteries are empty.
	Battery temperature indicator	The symbol shows.	The 48 V batteries are too cold.
	48 V batteries overcharged	The symbol shows.	The 48 V batteries are fully charged and no more charge is accepted. For example when you go down a slope when the 48 V batteries are fully charged. Start the hybrid drive to decrease the batteries level.
	48 V batteries reserve	The symbol shows.	The hybrid mode is disabled and the 48 V batteries reserve is used (<20%). The 48 V batteries can only be charged with the power supply. Do not use the product and speak to your Husqvarna servicing dealer if this symbol shows.
	PTO button indicator	The symbol shows.	The PTO button is engaged. Refer to *PTO (Power Take-Off) button on page 9*.
		The symbol is yellow.	Incorrect start or stop procedure. Refer to *To stop the product on page 34*.
	PTO button indicator	The symbol shows.	The PTO button is engaged but there is no drive to the blades or other equipment. Refer to *PTO (Power Take-Off) button on page 9*.
P AUTO	Parking brake indicator	The symbol shows (green).	The automatic parking brake is engaged.
P	Parking brake indicator	The symbol shows (red).	The manual parking brake is engaged.
	OPC indicator	The symbol is yellow.	The operator presence control (OPC) is engaged. For example if the operator lifts from the seat. Refer to *Operator presence control (OPC) on page 9*.
		The symbol is red.	The seat microswitch is engaged and the PTO button is engaged. The drive to the blades or other equipment stops automatically. Refer to *Safety circuit on page 21*.
	Service indicator	The symbol shows.	Servicing is necessary. Speak to your Husqvarna servicing dealer.

https://truckmanualshub.com/

Symbol	Name	Shows on the display	Cause / Action
	Fuel level	The symbol is white.	The fuel level is in the correct range.
		The symbol is yellow.	The fuel level is low.
		The symbol is red.	The fuel tank is empty.
	Bluetooth®	The symbol shows.	A Bluetooth® device is connected to the product.

Note: The symbols and the positions of the symbols on the display can be different between different models.

Transportation, storage and disposal

Transportation of batteries

- The supplied 48 V batteries obey the requirements of the Dangerous Goods Legislation.
- Obey the special requirement for packaging and labels for commercial transportation by third parties and forwarding agents.
- Speak to a person with special training in dangerous material before you send the product. Obey all applicable national regulations.
- Use tape on open contacts when you put the battery in a package. Put the battery in a tight package to prevent movement.

To safely attach the product on a trailer for transport

Before you attach the product, you must read and understand the safety chapter. Refer to *Transport safety on page 26*.

WARNING: The parking brake is not sufficient to lock the product during transport. Attach the product tightly to the load area.

Equipment: 4 approved straps and 4 wheel chocks.

1. Park the product in the center of the load area.

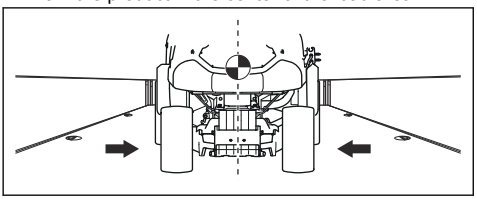

WARNING: For transport in transport vehicles with a cover. Make sure that the product is cool before you put the product in the transport vehicle.

2. Make sure that the center of gravity of the product is above the wheel axle of the transport vehicle. If a trailer is used for transport, make sure that the down force on the tow bar is correct.

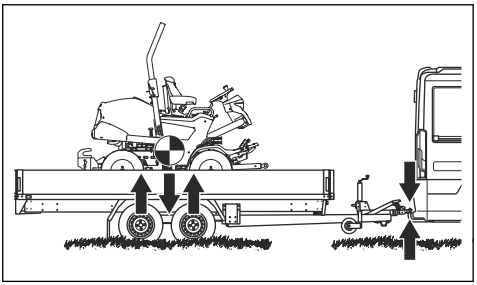

3. Apply the parking brake.
4. Lower the cutting deck to the float position.
5. Remove all loose objects.

https://truckmanualshub.com/

6. Put the first strap through the rear transmission frame.

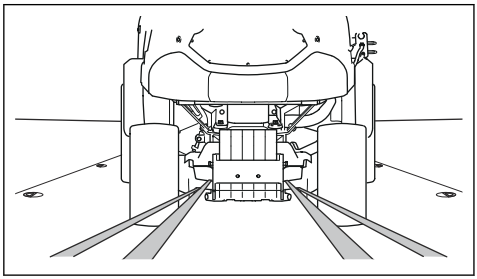

7. Put the second strap through the rear transmission frame.
8. Attach the straps to the load area.
9. Tighten the straps rearward to attach the product to the load area.
10. Attach the third strap to 1 of the transport eyelets.

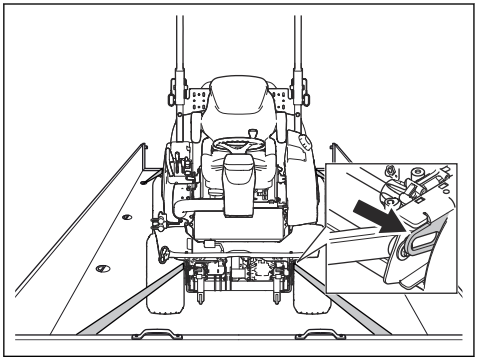

11. Attach the fourth strap to the other transport eyelet.
12. Attach the strap to the load area.
13. Tighten the strap forward to attach the product to the load area.
14. Put the wheel chocks in front of and behind the rear wheels.

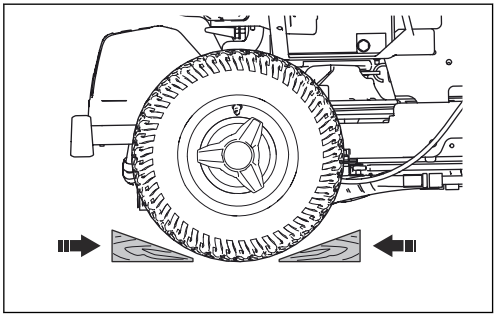

To tow the product

To move the product with the power off, the automatic parking brake must be disengaged. To disengage the automatic parking brake, it is necessary to use a special servicing tool.

- Speak to your service agent to get access to the special servicing tool that is necessary to disengage the automatic parking brake.

Storage

Prepare the product for storage at the end of the season and before more than 30 days of storage.

WARNING: Remove grass, leaves and other flammable materials from the product to decrease the risk of fire. Let the product become cool before you put it in storage.

- Turn the main switch to OFF.
- Clean the product, refer to *To clean the product on page 42*. Fill in paint damages to prevent corrosion.
- Examine the product for worn or damaged parts and tighten loose screws and nuts.
- Fully charge the batteries (12 V battery and 48 V batteries) before storage. Make sure that the charge of the batteries is 50 % or more during storage.

Note: The 48 V batteries in the product goes into sleep mode when it is in storage.

- Lubricate all grease nipples, joints and axles.
- Keep the product in a clean and dry area. Put a protective cover on the product.

Note: A protective cover for protection of your product during storage or transport is available at your dealer.

- Keep the product in a locked area to prevent access for children or persons that are not approved.
- Keep the product and the power supply in a dry and frost-free area.
- If you will use the product, keep the product in storage where the ambient temperature is between 0 °C/32 °F and 50°C/122 °F. If you will not use the product, you can keep the product in storage where the ambient temperature is between -20 °C/-4 °F and 50°C/122 °F.
- Keep the product out of sunlight.
- Do not keep the product in areas where static electricity can occur.

Disposal

- Chemicals can be dangerous and must not be discarded on the ground. Always discard used chemicals at a service center or an applicable disposal location.
- When the product is worn out, send it to the dealer or to an applicable disposal location.

https://truckmanualshub.com/

- Oil, grease and the batteries can have negative effects on the environment. Obey the local disposal requirements and applicable regulations.
- Do not discard the batteries as domestic waste.
- Send the batteries to a Husqvarna service agent or discard it at a disposal location for used batteries.

https://truckmanualshub.com/

Technical data

	P 535HX
Dimensions	Refer to *Product dimensions on page 66*.
Weight without cutting deck, with empty tanks, kg	790
Tire dimensions	20x10-10
Tire pressure, kPa/bar/PSI	150/1.5/22
Max. slope, degrees	10
Engine	
Brand/Model	Kubota D1105
Nominal engine output, kW @ 3000 rpm [1]	17.8
Displacement, cm^3	1123
Max. engine speed, rpm	3000
Diesel fuel, min. octane grade[2]	45
Tank volume up to max fuel level, l	22
Oil, API class CF-4 or better	Class SAE10W-40[3]
Oil volume incl. filter, l	3.3
Oil volume excl. filter, l	3
Start motor	Electric start 12 V
Cooling system	
Cooling system capacity, l	4.1
Antifreeze	50% propylene glycol
Hydraulic system	
Working pressure, bar	110-130
Max. oil flow, l/min	7.8
Hydraulic tank capacity, l	4
Hydraulic system capacity, l	4.6
Transmission	
Brand	Benevelli

[1] The power rating of the engine indicated is the average net output (at specified rpm) of a typical production engine for the engine model measured to SAE standard J1349/ISO1585. Mass production engines may differ from this value. Actual power output for the engine installed on the final product will depend on the operating speed, environmental conditions and other values.

[2] To meet the emission regulations, the fuel need to meet the standard EN590 or ASTM D975 and have a Sulphur content of less than 500ppm or 0,05% of weight. Please refer to the Kubota Operators Manual for further information regarding fuel quality

[3] P 535HX is delivered with fossil free oil. Husqvarna recommends you to contiue to use fossil free oil.

https://truckmanualshub.com/

	P 535HX
Model	TX2
Oil, class	UTTO SAE 10W-30 / SAE 80
Oil capacity front, total, l	0.5
Oil capacity rear, total, l	0.5
Electrical system, 12 V	
Type	12 V, negative earthed
Battery	12 V, 60 Ah AGM type
Electrical system, 48 V	
Battery	52 V (nominal), 2x40 Ah, Li-Ion type
Generator, peak/continuous power, kW	9.5/4.5
Drive motors, peak/continuous power, kW	9.5/4.5
Lamps	
Headlight	LED, 1200 lm
Work light	LED, 550 lm
Cutting deck	
PTO speed, rpm, low/reduced/high	1600/2100/2400
Type	Combi 155
	Combi 155 X
	R180

P 535HX	Combi 155	Combi 155 X	R180
Noise emissions[4]			
Sound power level, measured dB(A)	104	104	102
Sound power level, guaranteed dB(A)	105	105	103
Sound levels[5]			
Sound pressure level at the operators ear, dB(A)	88	88	87
Vibration levels[6]			
Vibration level on the steering wheel, m/s^2	1.2	1.2	1.4

[4] Noise emissions in the environment measured as sound power (L_{WA}) in conformity with EC directive 2000/14/EC.
[5] Noise pressure level according to EN ISO 5395. Reported data for noise pressure level has a typical statistical dispersion (standard deviation) of 1.2 dB(A).
[6] Vibration level according to EN ISO 5395. Reported data for vibration level has a typical statistical dispersion (standard deviation) of 0.2 m/s^2 (steering wheel) and 0.8 m/s^2 (seat).

https://truckmanualshub.com/

P 535HX	Combi 155	Combi 155 X	R180
Vibration level in the seat, m/s^2	0.1	0.1	0.1

Cutting deck	Combi 155	Combi 155 X	R180
Cutting width, mm	1550	1550	1800
Cutting height, mm	30-112, 7 positions	30-112, 7 positions	30-90, 6 positions
Width, mm	1631	1631	1870
Weight, kg	155	163	250
Length, mm	563	563	1335
Blade			
Article number	5441758-10	5441758-10	5994215-01

WARNING: To use a cutting deck that is not approved for the product can cause objects to eject at high speed and cause serious injury. Do not use other cutting deck types than specified in this owner's manual.

Radio frequency data

	P 535HX
Frequency range, MHz	2402-2480
Output power[7], dBm	-1.5

[7] Measured at 2440 MHz.

https://truckmanualshub.com/

Product dimensions

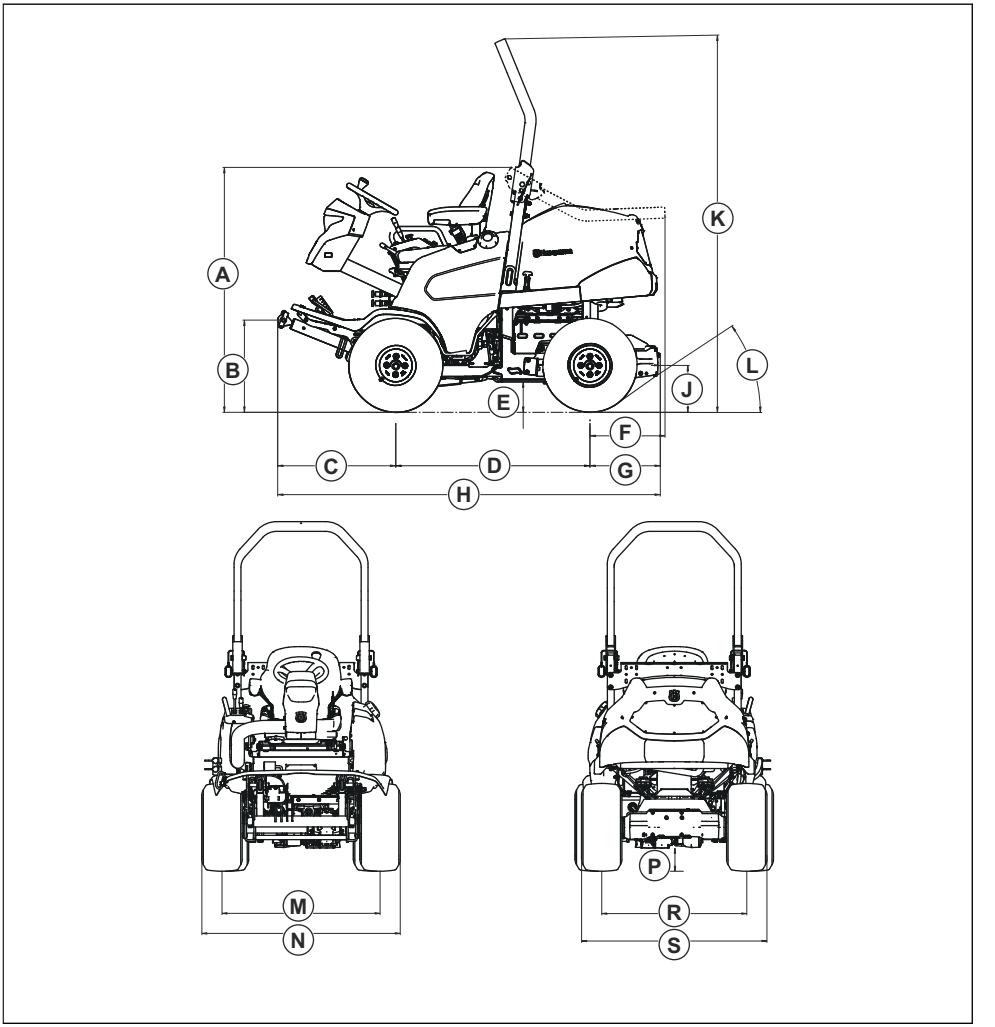

Dimensions, mm P 535HX							
A	1337	**E**	166	**J**	250	**N**	1157
B	503	**F**	410	**K**	2038	**P**	134
C	645	**G**	384	**L**	35°	**R**	846
D	1060	**H**	2089	**M**	922	**S**	1081

https://truckmanualshub.com/

Recommended cutting decks and other equipment

Refer to *Technical data on page 63* for information about which cutting decks that are available for this product. Speak to your Husqvarna dealer for more information about the cutting decks or other equipment that are available.

Accessories

Instructions for maintenance of optional equipment or accessories are not given in this operator's manual. See the operator's manual for the accessory or equipment for instructions.

Service

Do a yearly check at an authorized service center to make sure that the product functions safely and at its best during high season. The best time to do a servicing or overhaul of the product is low season.

When you send an order for the spare parts, give information about the purchase year, model, type, and serial number.

Always use original spare parts.

https://truckmanualshub.com/

EC Declaration of Conformity

Husqvarna AB, SE-561 82 Huskvarna, Sweden, tel: +46-36-146500, declares that the **ride-on lawn mower Husqvarna P 535HX** from 2020's serial numbers and onwards (the year is clearly stated in plain text on the rating plate with subsequent serial number), comply with the requirements of the COUNCIL'S DIRECTIVE:

- of May 17, 2006 "relating to machinery" **2006/42/EC**
- of May 8, 2000 "relating to the noise emissions in the environment by equipment for use outdoors" **2000/14/EC**
- of June 8, 2011 "restriction of use of certain hazardous substances in electrical and electronic equipment" **2011/65/EU**.
- of 16 April, 2014 "relating to radio equipment" **2014/53/EU**.

Information regarding noise emissions and the mowing width, refer to Technical data.

The following harmonized standards and/or regulations have been applied:

EN ISO 12100, EN ISO 13849-1, EN ISO 5395-1, EN ISO 5395-3, UN ECE R10, EN ETSI 301 489-1, -17, EN 300 328, IEC EN 61000-6-4, IEC EN 61000-6-2, EN 50581

If not otherwise stated, the above listed standards are the latest published versions at the time when this Declaration of Conformity was signed.

Notified body: **0404, RISE SMP Svensk Maskinprovning AB, Box 7035, SE-750 07 Uppsala** has issued reports regarding the assessment of conformity according to annex VI of the COUNCIL'S DIRECTIVE of May 8, 2000 "relating to the noise emissions in the environment by equipment for use outdoors" 2000/14/EC.

The certificate has the number: 01/901/327

Huskvarna, 2020-05-22

Claes Losdal, Development Manager/Garden Products (Authorized representative for Husqvarna AB and responsible for technical documentation)

https://truckmanualshub.com/

Registered trademarks

The *Bluetooth®* word mark and logos are registered trademarks owned by *Bluetooth SIG, inc.* and any use of such marks by Husqvarna is under license.

https://truckmanualshub.com/

https://truckmanualshub.com/

https://truckmanualshub.com/

Husqvarna®

www.husqvarna.com

Original instructions

1141503-26

2020-06-09