https://truckmanualshub.com/

INTRODUCTION

To help you enjoy your Isuzu C series engine for many years to come, please follow these recommendations:

- Read and understand this Operation Manual before you operate the machine to ensure that you follow safe operating practices and maintenance procedures.
- Keep this Operation Manual in a convenient place for easy access.
- If this Operation Manual is lost or damaged, order a new one from your Isuzu Distributor.
- Make sure this manual is transferred to subsequent owners. This manual should be considered a permanent part of the engine and remain with it.
- Constant efforts are made to improve the quality and performance of Isuzu products, so some details included in this Operation Manual may differ slightly from your engine. If you have any questions about these differences, please contact your Isuzu Distributor.
- The specifications and components (instrument panel, fuel tank, etc.) described in this manual may differ from ones installed on your machine. Please refer to the manual provided by the manufacturer of these components.

https://truckmanualshub.com/

RECORD OF OWNERSHIP

Take a few moments to record the information you need when you contact Isuzu for service, parts or literature.

Engine model: _____

Engine serial No.: _____

Date purchased: _____

Dealer: _____

Dealer phone: _____

SYMBOL EXPLANATION

The following symbols are used throughout this manual to identify specific engine model information

This symbol indicates information pertaining to the following indirect injection engines:

- 3CH1-NGZG01
- 3CH1-SDZP01
- 3CJ1-NGZG01
- 3CJ1-SDZP01

All of the models conform to the engine emission regulations (EPA 2013 rules).

This symbol indicates information pertaining to the following direct injection engines:

- 3CE1

This model conform to the engine emission regulations (EPA 2013 rules).

https://truckmanualshub.com/

TABLE OF CONTENTS

Introduction i
Record of Ownership ii
Symbol Explanation ii
Table of Contents iii
Isuzu Engine After Service 1
Isuzu Genuine Parts 2
Emission-Related Installation Instructions (REF) 2
Installation of Nonroad Engines into Equipment 2
Allowable Air Intake Restriction and Exhaust Back Pressure 2
Allowable Air Intake Restriction 2
Allowable Exhaust Back Pressure 2

Safety 3
Safety Statements 3
Safety Precautions 4
Before You Operate 4
During Operation and Maintenance 4
Product Overview 13
Isuzu C series Engine Features and Applications 13
Component Identification 14
Location of Labels 17
Function of Major Engine Components 18
Function of Cooling System Components 20
Electronic Control System 21
Main Electronic Control Components and Features 24

https://truckmanualshub.com/

TABLE OF CONTENTS

Gauges and Indicators 26
Gauges 26
Indicators 27
Gauges and Indicators of Electronic Control System 28
Gauges 28
Indicators 28
Controls 29
Key Switch 29
Glow Plugs 30
Governor Lever 30
Engine Stop Solenoid (IDI Engines) 31
Speed Control of Electronically Controlled Engines 31
Electronic Engine Speed Control 32

Before You Operate 35
Diesel Fuel 36
Diesel Fuel Specifications 36
Filling the Fuel Tank 41
Priming the Fuel System 42
Engine Oil 43
Engine Oil Specifications 43
Engine Oil Viscosity 44
Checking Engine Oil 44
Adding Engine Oil 44
Engine Oil Capacity (Typical) 45
Engine Coolant 46
Engine Coolant Specifications 47
Filling Radiator with Engine Coolant 47
Daily Check of the Cooling System 48
Engine Coolant Capacity (Typical) 48
Daily Checks 49
Visual Checks 49
Check Diesel Fuel, Engine Oil and Engine Coolant Levels 49
Check Engine Speed Control 49
Check Operator’s Console 50
Check Indicators 50

Engine Operation 53
Starting Engine 54
Cold Start Device 56
High-altitude Injection Control Device 56
Checking the Engine During Operation 57
Adjust Engine Speed 59
Shutting Down the Engine 60

https://truckmanualshub.com/

Periodic Maintenance 61
Precautions 62
The Importance of Periodic Maintenance 62
Performing Periodic Maintenance 62
The Importance of Daily Checks 62
Keep a Log of Engine Hours and Daily Checks 62
Isuzu Replacement Parts 62
Tools Required 62
Ask Your Isuzu Distributor For Help 62
Required EPA/ARB Maintenance USA Only 62
EPA/ARB Installation Requirements USA Only 63
Tightening Fasteners 63
Standard Torque Chart 63
Periodic Maintenance Schedule 64
Periodic Maintenance Chart 64
Periodic Maintenance Procedures 66
After Initial 50 Hours of Operation 66
Every 50 Hours of Operation 71
Every 250 Hours of Operation 75
Every 500 Hours of Operation 79
Every 1000 Hours of Operation 83
Every 1500 Hours of Operation 85
Every 2000 Hours of Operation 86
Every 3000 Hours of Operation 87
Troubleshooting 89
Troubleshooting Chart 90
Troubleshooting of Electronic Control System 92
Fault Detection Capability 92
Troubleshooting Information 94
List of Possible Faults of Electronically Controlled Engines 95
Long-Term Storage 99
Before You Place the Engine In Long-Term Storage 100
Returning the Engine to Service 101
Specifications 103
Engine General Specifications 104
Principal Engine Specifications 105

https://truckmanualshub.com/

This Page Intentionally Left Blank

https://truckmanualshub.com/

ISUZU ENGINE AFTER SERVICE

Please feel free to contact your Isuzu distributor for periodical inspection and maintenance.

https://truckmanualshub.com/

ISUZU GENUINE PARTS

The Isuzu genuine parts are identical with those of used in the engine production, and accordingly, they are warranted by Isuzu Motors Limited.
The Isuzu genuine parts are supplied by the Isuzu distributors or the authorized parts suppliers. Please designate "Isuzu Genuine Parts" when you need engine parts.

ISUZU
GENUINE PARTS

EMISSION-RELATED INSTALLATION INSTRUCTIONS (REF)

Failing to follow these instructions when installing a certified engine in a piece of nonroad equipment violates Federal Law (40 CFR1068.105(B)), subject to fines or other penalties as described in the clean air act.

Installation of Nonroad Engines into Equipment

To ensure engines operate under the certified configurations, Isuzu has established defined application requirements when installing any certified engine into a piece of equipment. The instructions outlined below are included in our certification process and any failure to comply will be considered tampering.

Isuzu certifies engines to operate under variable speed or constant speed conditions. Engines certified as constant speed are prohibited from installation into variable speed applications. The emission control information label will identify an engine certified as constant speed.

Allowable Air Intake Restriction and Exhaust Back Pressure

Resistance to intake airflow and exhaust gas flow is generated in the intake and exhaust systems. Exceeding the limitations will affect the operation of an engine and its certified configuration. Refer to the installation requirements and limitations of the Isuzu C series Application Manual for the engine being equipped with these systems.

Allowable Air Intake Restriction

Engine model	Allowable air intake restriction ≤ kPa (mmAq)	
	Initial upper limit	Upper limit for air cleaner replacement
All models	2.94 (300)	6.23 (635)

Allowable Exhaust Back Pressure

Engine model	Allowable exhaust back pressure ≤ kPa (mmAq)	
	Initial upper limit	Upper limit for exhaust system cleaning
3CH1, 3CJ1	9.81 (1000)	11.77 (1200)
3CE1	12.75 (1300)	15.30 (1560)

https://truckmanualshub.com/

SAFETY

SAFETY STATEMENTS

Isuzu is concerned for your safety and your machine's condition. Safety statements are one of the primary ways to call your attention to the potential hazards associated with Isuzu C series engine operation. Follow the precautions listed throughout the manual before operation, during operation and during periodic maintenance procedures for your safety, the safety of others and to protect the performance of your engine. Keep the labels from becoming dirty or torn and replace them if they are lost or damaged. Also, if you need to replace a part that has a label attached to it, make sure you order the new part and label at the same time.

This safety alert symbol appears with most safety statements. It means attention, become alert, your safety is involved! Please read and abide by the message that follows the safety alert symbol.

⚠ DANGER

DANGER indicates a hazardous situation which, if not avoided, *will* result in death or serious injury.

⚠ WARNING

WARNING indicates a hazardous situation which, if not avoided, *could* result in death or serious injury.

⚠ CAUTION

CAUTION indicates a hazardous situation which, if not avoided, *could* result in minor or moderate injury.

NOTICE

NOTICE indicates a situation which can cause damage to the machine, personal property and/or the environment or cause the equipment to operate improperly.

https://truckmanualshub.com/

SAFETY PRECAUTIONS

Before You Operate

NOTICE

- Never permit anyone to operate the engine or driven machine without proper training.

- Read and understand this Operation Manual before you operate or service the machine to ensure that you follow safe operating practices and maintenance procedures.
- Machine safety signs and labels are additional reminders for safe operating and maintenance techniques.
- See your Isuzu Distributor for additional training.

During Operation and Maintenance

⚠ DANGER

Scald Hazard!

- **Never remove the radiator cap if the engine is hot. Steam and hot engine coolant will spurt out and seriously burn you. Allow the engine to cool down before you attempt to remove the radiator cap.**
- **Tighten the radiator cap securely after you check the radiator. Steam can spurt out during engine operation if the cap is loose.**
- **Always check the level of the engine coolant by observing the reserve tank.**
- **Failure to comply will result in death or serious injury.**

⚠ DANGER

Explosion Hazard!

- **Keep the area around the battery well-ventilated. While the engine is running or the battery is charging, hydrogen gas is produced which can be easily ignited.**
- **Keep sparks, open flame and any other form of ignition away while the engine is running or battery is charging.**
- **Never short out the battery terminals, including when checking the remaining battery charge. This will result in a spark and may cause an explosion or fire. Use a hydrometer to check the remaining battery charge.**
- **If the electrolyte is frozen, slowly warm the battery before you recharge it.**
- **Failure to comply will result in death or serious injury.**

Sudden Movement Hazard!

- **Never start the engine by shorting out the starter terminal and the battery terminal (Jump-start). The machine may move suddenly if the machine safety circuit is released, but the gear is still engaged.**
- **Failure to comply will result in death or serious injury.**

https://truckmanualshub.com/

⚠ DANGER

Fire and Explosion Hazard!

- **Diesel fuel is extremely flammable and explosive under certain conditions.**

- **When you remove any fuel system component to perform maintenance (such as changing the fuel filter) place an approved container under the opening to catch the fuel.**
- **Never use a shop rag to catch the fuel. Vapors from the rag are flammable and explosive.**
- **Wipe up any spills immediately.**
- **Wear eye protection. The fuel system is under pressure and fuel could spray out when you remove any fuel system component.**
- **Only use the key switch to start the engine.**
- **Never jump-start the engine. Sparks caused by shorting the battery to the starter terminals may cause a fire or explosion.**
- **If the unit has an electric fuel pump, in the case of DI engine, since air is automatically bled, by keeping the key of the starter switch in the ON position for 10 to 15 seconds, the fuel system can be primed. If this is an IDI engine, keep the key in the ON position (within 15 seconds) until fuel without bubbles comes out from the air bleeding bolt. Here, do not turn the key to the START position.**
- **If the unit has a mechanical fuel pump, when you prime the fuel system, operate the fuel priming lever of the mechanical fuel pump several times until the fuel filter cup is filled with fuel. On top of that, operate the fuel feed pump for several times until fuel without bubbles comes out from the air bleeding bolt.**
- **Never use diesel fuel as a cleaning agent.**
- **Never remove the fuel cap with the engine running.**

⚠ DANGER (Continued)

- **Only fill the fuel tank with diesel fuel. Filling the fuel tank with gasoline may result in a fire and will damage the engine.**
- **Never refuel with the engine running.**
- **Keep sparks, open flames or any other form of ignition (match, cigarette, static electric source) well away when refueling.**
- **Never overfill the fuel tank.**
- **Fill the fuel tank. Store any containers containing fuel in a well-ventilated area, away from any combustibles or sources of ignition.**
- **Be sure to place the diesel fuel container on the ground when transferring the diesel fuel from the pump to the container. Hold the hose nozzle firmly against the side of the container while filling it. This prevents static electricity buildup which could cause sparks and ignite fuel vapors.**
- **Never place diesel fuel or other flammable material such as oil, hay or dried grass close to the engine during engine operation or shortly after shutdown.**
- **Before you operate the engine, check for fuel leaks. Replace rubberized fuel hoses every two years or every 2000 hours of engine operation, whichever comes first, even if the engine has been out of service. Rubberized fuel lines tend to dry out and become brittle after two years or 2000 hours of engine operation, whichever comes first.**
- **When you prime the fuel system, operate the fuel priming lever of the mechanical fuel pump several times until the fuel filter cup is filled with fuel.**
- **Failure to comply will result in death or serious injury.**

https://truckmanualshub.com/

⚠ DANGER

Crush Hazard!

- **When you need to transport an engine for repair, have a helper assist you to attach it to a hoist and load it on a truck.**
- **Never stand under a hoisted engine. If the hoist mechanism fails, the engine will fall on you, causing death or serious injury.**
- **Failure to comply will result in death or serious injury.**

⚠ WARNING

Sever Hazard!

- **Keep hands and other body parts away from moving/rotating parts such as the cooling fan, flywheel or PTO shaft.**
- **Wear tight-fitting clothing and keep your hair short or tie it back while the engine is running.**
- **Remove all jewelry before you operate or service the machine.**
- **Never start the engine in gear. Sudden movement of the engine and/or machine could cause death or serious personal injury.**
- **Never operate the engine without the guards in place.**
- **Before you start the engine make sure that all bystanders are clear of the area.**
- **Keep children and pets away while the engine is operating.**
- **Check before starting the engine that any tools or shop rags used during maintenance have been removed from the area.**
- **Failure to comply could result in death or serious injury.**

⚠ WARNING

Exhaust Hazard!

- **Never operate the engine in an enclosed area such as a garage, tunnel, underground room, manhole or ship's hold without proper ventilation.**
- **Never block windows, vents, or other means of ventilation if the engine is operating in an enclosed area. All internal combustion engines create carbon monoxide gas during operation. Accumulation of this gas within an enclosure could cause illness or even death.**
- **Make sure that all connections are tightened to specifications after repair is made to the exhaust system.**
- **Failure to comply could result in death or serious injury.**

⚠ WARNING

Alcohol and Drug Hazard!

- **Never operate the engine while you are under the influence of alcohol or drugs.**
- **Never operate the engine when you are feeling ill.**
- **Failure to comply could result in death or serious injury.**

https://truckmanualshub.com/

⚠ WARNING

Exposure Hazard!

- **Wear personal protective equipment such as gloves, work shoes, eye and hearing protection as required by the task at hand.**

- **Never wear jewelry, unbuttoned cuffs, ties or loose-fitting clothing when you are working near moving/rotating parts such as the cooling fan, flywheel or PTO shaft.**
- **Always tie back long hair when you are working near moving/rotating parts such as a cooling fan, flywheel, or PTO shaft.**
- **Never operate the engine while wearing a headset to listen to music or radio because it will be difficult to hear the alert signals.**
- **Failure to comply could result in death or serious injury.**

⚠ WARNING

Burn Hazard!

- **Wait until the engine cools before you drain the engine coolant. Hot engine coolant may splash and burn you.**

- **If you must drain the engine oil while it is still hot, stay clear of the hot engine oil to avoid being burned.**
- **Always wear eye protection.**
- **Keep your hands and other body parts away from hot engine surfaces such as the muffler, exhaust pipe, turbocharger (if equipped) and engine block during operation and shortly after you shut the engine down. These surfaces are extremely hot while the engine is operating and could seriously burn you.**
- **Failure to comply could result in death or serious injury.**

⚠ WARNING

Burn Hazard!

- **Batteries contain sulfuric acid. Never allow battery fluid to come in contact with clothing, skin or eyes. Severe burns could result. Always wear safety goggles and protective clothing when servicing the battery. If battery fluid contacts the eyes and/or skin, immediately flush the affected area with a large amount of clean water and obtain prompt medical treatment.**

- **Failure to comply could result in death or serious injury.**

⚠ WARNING

High-Pressure Hazard!

- **Avoid skin contact with the high-pressure diesel fuel spray caused by a fuel system leak such as a broken fuel injection line. High-pressure fuel can penetrate your skin and result in serious injury. If you are exposed to high-pressure fuel spray, obtain prompt medical treatment.**

- **Never check for a fuel leak with your hands. Always use a piece of wood or cardboard. Have your Isuzu Distributor repair the damage.**
- **Failure to comply could result in death or serious injury.**

https://truckmanualshub.com/

⚠ WARNING

Shock Hazard!

- **Turn off the battery switch (if equipped) or disconnect the negative battery cable before servicing the electrical system.**
- **Check the electrical harnesses for cracks, abrasions, and damaged or corroded connectors. Always keep the connectors and terminals clean.**
- **Failure to comply could result in death or serious injury.**

⚠ WARNING

Entanglement Hazard!

- **Stop the engine before you begin to service it.**
- **Never leave the key in the key switch when you are servicing the engine. Someone may accidentally start the engine and not realize you are servicing it. This could result in a serious injury.**
- **If you must service the engine while it is operating, remove all jewelry, tie back long hair, and keep your hands, other body parts and clothing away from moving/rotating parts.**
- **Failure to comply could result in death or serious injury.**

⚠ WARNING

Sudden Movement Hazard!

- **Engaging the transmission or PTO at an elevated engine speed could result in unexpected movement of the equipment.**
- **Failure to comply could result in death or serious injury.**

⚠ CAUTION

Coolant Hazard!

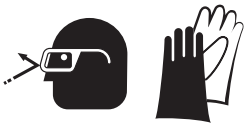

- **Wear eye protection and rubber gloves when you handle long life or extended life engine coolant. If contact with the eyes or skin should occur, flush eyes and wash immediately with clean water.**
- **Failure to comply may result in minor or moderate injury.**

⚠ CAUTION

Flying Object Hazard!

- **Always wear eye protection when servicing the engine and when using compressed air or high-pressure water. Dust, flying debris, compressed air, pressurized water or steam may injure your eyes.**
- **Failure to comply may result in minor or moderate injury.**

⚠ CAUTION

- **When using a 120 V system only, push the change-over switch to the right (120 V).**
- **The main switch should always be kept in the ON position during operation.**
- **Before starting the engine, always turn the switches on the working instruments (lighting apparatus, motor, etc.) to their OFF position. If the switches are not OFF, the sudden application of load when the engine is started could be very dangerous.**

https://truckmanualshub.com/

NOTICE

- Only use diesel fuels recommended by Isuzu for the best engine performance, to prevent engine damage and to comply with EPA/ARB warranty requirements.
- Only use clean diesel fuel.
- Never remove the primary strainer (if equipped) from the fuel tank filler port. If removed, dirt and debris could get into the fuel system causing it to clog.

- Only use the engine oil specified. Other engine oils may affect warranty coverage, cause internal engine components to seize and/or shorten engine life.
- Prevent dirt and debris from contaminating the engine oil. Carefully clean the oil cap/dipstick and the surrounding area before you remove the cap.
- Never mix different types of engine oil. This may adversely affect the lubricating properties of the engine oil.
- Never overfill the engine with engine oil.
- Always keep the oil level between the upper and lower lines on the oil cap/dipstick.
- Never overfill. Overfilling may result in white exhaust smoke, engine overspeed or internal damage.

- Only use the engine coolant specified. Other engine coolants may affect warranty coverage, cause an internal buildup of rust and scale and/or shorten engine life.
- Prevent dirt and debris from contaminating the engine coolant. Carefully clean the radiator cap and the surrounding area before you remove the cap.
- Never mix different types of engine coolants. This may adversely affect the properties of the engine coolant.

NOTICE

Never attempt to adjust the low or high idle speed limit screw. This may impair the safety and performance of the machine and shorten its life. If adjustment is ever required, contact your Isuzu Distributor.

If any problem is noted during the visual check, the necessary corrective action should be taken before you operate the engine.

New engine break-in:

- On the initial engine start-up, allow the engine to idle for approximately 15 minutes while you check for proper engine oil pressure, diesel fuel leaks, engine oil leaks, coolant leaks, and for proper operation of the indicators and/or gauges.
- During the first hour of operation, vary the engine speed and the load on the engine. Short periods of maximum engine speed and load are desirable. Avoid prolonged operation at minimum or maximum engine speeds and loads for the next four to five hours.
- During the break-in period, carefully observe the engine oil pressure and engine temperature.
- During the break-in period, check the engine oil and coolant levels frequently.

If any indicator fails to illuminate when the key switch is in the ON position, see your Isuzu Distributor for service before operating the engine.

Never hold the key in the START position for longer than 15 seconds or the starter motor will overheat.

https://truckmanualshub.com/

NOTICE

If the engine fails to start:
Wait until the engine comes to a complete stop before you attempt to start it again. Engaging the starter while the engine is still rotating will result in damage to the starter and flywheel.

Never use an engine starting aid such as ether. Engine damage will result.

Never engage the starter motor while the engine is running. This may damage the starter motor pinion and/or ring gear.

Make sure the engine is installed on a level surface. If a continuously running engine is installed at an angle greater than (30°) in any direction or if an engine runs for short periods of time (less than three minutes) at an angle greater than (35°) in any direction, engine oil may enter the combustion chamber causing excessive engine speed and white exhaust smoke. This may cause serious engine damage.

If any indicator illuminates during engine operation, stop the engine immediately. Determine the cause and repair the problem before you continue to operate the engine.

The illustrations and descriptions of optional equipment in this manual, such as the operator's console, are for a typical engine installation. Refer to the documentation supplied by the optional equipment manufacturer for specific operation and maintenance instructions.

NOTICE

Observe the following environmental operating conditions to maintain engine performance and avoid premature engine wear:

- Avoid operating in extremely dusty conditions.
- Avoid operating in the presence of chemical gases or fumes.
- Avoid operating in a corrosive atmosphere such as salt water spray.
- Never install the engine in a floodplain unless proper precautions are taken to avoid being subject to a flood.
- Never expose the engine to the rain.
- The standard range of ambient temperatures for the normal operation of Isuzu engines is from -15 °C (+5 °F) to +45 °C (+113 °F).
- If the ambient temperature exceeds +45 °C (+113 °F) the engine may overheat and cause the engine oil to break down.
- If the ambient temperature is below -15 °C (+5 °F) the engine will be hard to start and the engine oil may not flow easily.
- Contact your Isuzu Distributor if the engine will be operated outside of this standard temperature range.
- Contact your Isuzu Distributor if the engine will be operated at high altitude. High altitude reduces engine power, de-stabilizes operation and generates exhaust gas that exceeds the specification amount in design.

https://truckmanualshub.com/

NOTICE

- When the engine is operated in dusty conditions, clean the air cleaner element more frequently.
- Never operate the engine with the air cleaner element(s) removed. This may allow foreign material to enter the engine and damage it.

The maximum air intake restriction, in terms of differential pressure measurement, must not exceed 0.90 psi (6.23 kPa; 635 mmAq). Clean or replace the air cleaner element if the air intake restriction exceeds the above mentioned value.

For maximum engine life, Isuzu recommends that when shutting the engine down, you allow the engine to idle, without load, for five minutes. This will allow the engine components that operate at high temperatures, such as the turbocharger (if equipped) and exhaust system, to cool slightly before the engine itself is shut down.

- Never attempt to modify the engine's design or safety features such as defeating the engine speed limit control or the diesel fuel injection quantity control.
- Modifications may impair the engine's safety and performance characteristics and shorten the engine's life. Any alterations to this engine may void its warranty. Be sure to use Isuzu genuine replacement parts.

Protect the air cleaner, turbocharger (if equipped) and electric components from damage when you use steam or high-pressure water to clean the engine.

Never use high-pressure water or compressed air at greater than 28 psi (193 kPa; 19686 mmAq) or a wire brush to clean the radiator fins. Radiator fins damage easily.

NOTICE

Establish a periodic maintenance plan according to the engine application and make sure you perform the required periodic maintenance at intervals indicated. Failure to follow these guidelines will impair the engine's safety and performance characteristics, shorten the engine's life and may affect the warranty coverage on your engine.

Consult your Isuzu Distributor for assistance when checking items marked with a ●.

Make it a habit to perform daily checks. *See Daily Checks in the Before You Operate Section of this manual.*

Periodic maintenance prevents unexpected downtime, reduces the number of accidents due to poor machine performance and helps extend the life of the engine.

The tightening torque in the *Standard Torque Chart in the Periodic Maintenance Section of this manual* should be applied only to the bolts with a "7" head. (JIS strength classification: 7T)

- Apply 60 % torque to bolts that are not listed.
- Apply 80 % torque when tightened to aluminum alloy.

https://truckmanualshub.com/

NOTICE

- Always be environmentally responsible.

- Follow the guidelines of the EPA or other governmental agencies for the proper disposal of hazardous materials such as engine oil, diesel fuel and engine coolant. Consult the local authorities or reclamation facility.
- Never dispose of hazardous materials irresponsibly by dumping them into a sewer, on the ground, or into ground water or waterways.
- Failure to follow these procedures may seriously harm the environment.

NOTICE

Precautions for handling desiccant

Disposal:

This material is disposable as non-flammable. however, the bag is flammable and if it is necessary, then tear the bag and discard the bag and the contents separately.
It is desirable to bury the contents in the bag under ground.
Dispose in accordance with the disposal standards for industrial waste defined by local laws and regulations.

Handling:

The contents of the bag do not leak out in the normal use.
Take the following emergency measures, however, if the contents leak out.

- If the contents get on the skin, rinse thoroughly with running water.
- If the contents get in the eyes, rinse thoroughly with water. Consult with doctors when any abnormalities are found.
- If the contents get in the mouth, rinse thoroughly with water. Drink water to dilute if the content is swallowed, though a small amount is harmless. Consult with doctors when any abnormalities are found.

Characteristics of materials:

• Calcium Chloride ($CaCl_2$)	Approx. 57 %
• Grain Polysaccharide	Approx. 28 %
• Grain Skins	Approx. 9 %
• Ethylene Polymer (Bag)	Approx. 5 %

Hazard information:

• Explosiveness	None
• Inflammability	Inflammable
• Combustibility	None
• Oxidation	None

https://truckmanualshub.com/

PRODUCT OVERVIEW

ISUZU C SERIES ENGINE FEATURES AND APPLICATIONS

Isuzu C series engine is environmentally friendly and is designed to:

- Lower the amount of exhaust gas emissions.
- Reduce engine noise and vibration.
- Be easy to start thanks to the specially designed fuel injection pump and combustion system.
- Be economical to run because diesel fuel and engine oil consumption are reduced.
- Be easy to operate due to the minimum amount of required maintenance and their compact design.
- Be durable and reliable due in part to the newly designed fuel injection valve and fuel injection pump.

Isuzu C series engine is designed to supply power to a wide variety of driven machines including:

- Construction
- Agriculture
- Power generation

We are sure that you will agree these features provide excellent value in an industrial diesel engine.

These engines are designed to deliver power to driven machines by means of a “direct coupled drive” or “belt drive.” In direct coupled drive engine applications, the engine’s flywheel housing or end plate is coupled directly to the driven machine. In belt drive engine applications, a belt drive is used to power the driven machine. If you have applications that require a belt drive and/or front power take-off (PTO), please contact your Isuzu Distributor.

The engine is designed for a wide range of applications. Options, such as fuel tank, control panel, indicators, gauges and alarms, are available to customize the application.

Since designing the application and installing the engine require special knowledge and skill, always consult your Isuzu Distributor for these services. They will help you:

- Select optional equipment. Optional equipment should be selected to match the work conditions and environment.
- Maximize engine performance with a minimum amount of downtime and safety related incidents by carefully matching the characteristics of the engine with the driven machine.
- Plan for safe fuel piping, exhaust piping, electrical wiring, ventilation and accurate engine installation.
- Design your applications so they meet requirements of the local authorities.

https://truckmanualshub.com/

COMPONENT IDENTIFICATION

3CH1-NGZG01, 3CH1-SDZP01, 3CJ1-NGZG01

Figure 1 shows where major indirect injection engine components are located.

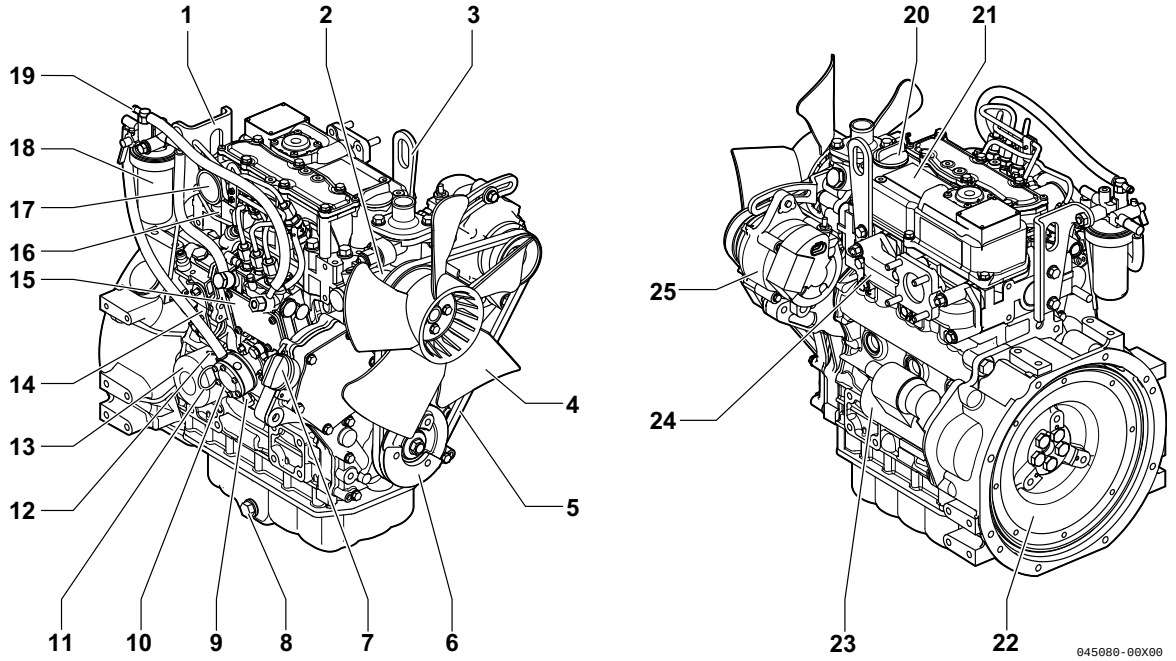

1 – Lifting eye (flywheel end)
2 – Engine coolant pump
3 – Lifting eye (engine cooling fan end)
4 – Engine cooling fan
5 – V-belt
6 – Crankshaft V-pulley
7 – Side filler port (engine oil)
8 – Drain plug (engine oil)*
9 – Fuel inlet
10 – Mechanical fuel pump
11 – Dipstick (engine oil)
12 – Fuel priming lever
13 – Engine oil filter
14 – Governor lever
15 – Fuel injection pump
16 – Intake manifold
17 – Air intake port (from air cleaner)
18 – Fuel filter
19 – Fuel return to fuel tank
20 – Top filler port (engine oil)
21 – Rocker arm cover
22 – Flywheel
23 – Starter motor
24 – Exhaust manifold
25 – Alternator

Figure 1

** Engine oil drain plug location may vary based on oil pan options.*

https://truckmanualshub.com/

3CJ1-SDZP01

Figure 2 shows where major indirect injection engine components are located.

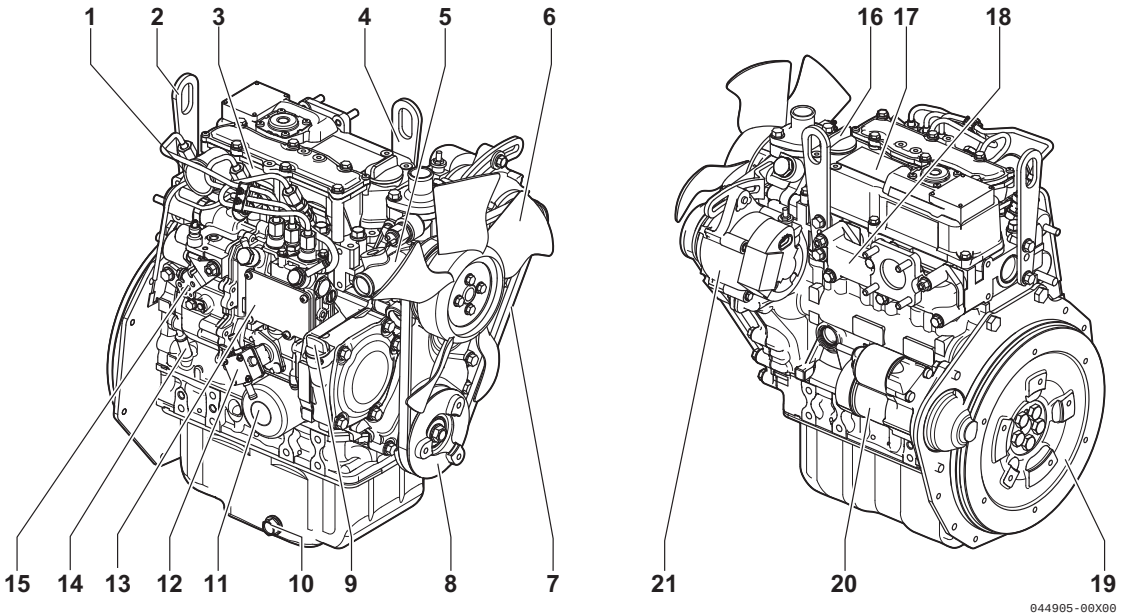

1 – Air intake port (from air cleaner)
2 – Lifting eye (flywheel end)
3 – Intake manifold
4 – Lifting eye (engine cooling fan end)
5 – Engine coolant pump
6 – Engine cooling fan
7 – V-belt
8 – Crankshaft V-pulley
9 – Side filler port (engine oil)
10 – Drain plug (engine oil)*
11 – Engine oil filter
12 – Mechanical fuel pump
13 – Fuel injection pump
14 – Dipstick (engine oil)
15 – Governor lever
16 – Top filler port (engine oil)
17 – Rocker arm cover
18 – Exhaust manifold
19 – Flywheel
20 – Starter motor
21 – Alternator

Figure 2

** Engine oil drain plug location may vary based on oil pan options.*

https://truckmanualshub.com/

3CE1

Figure 3 shows where major direct injection engine components are located.

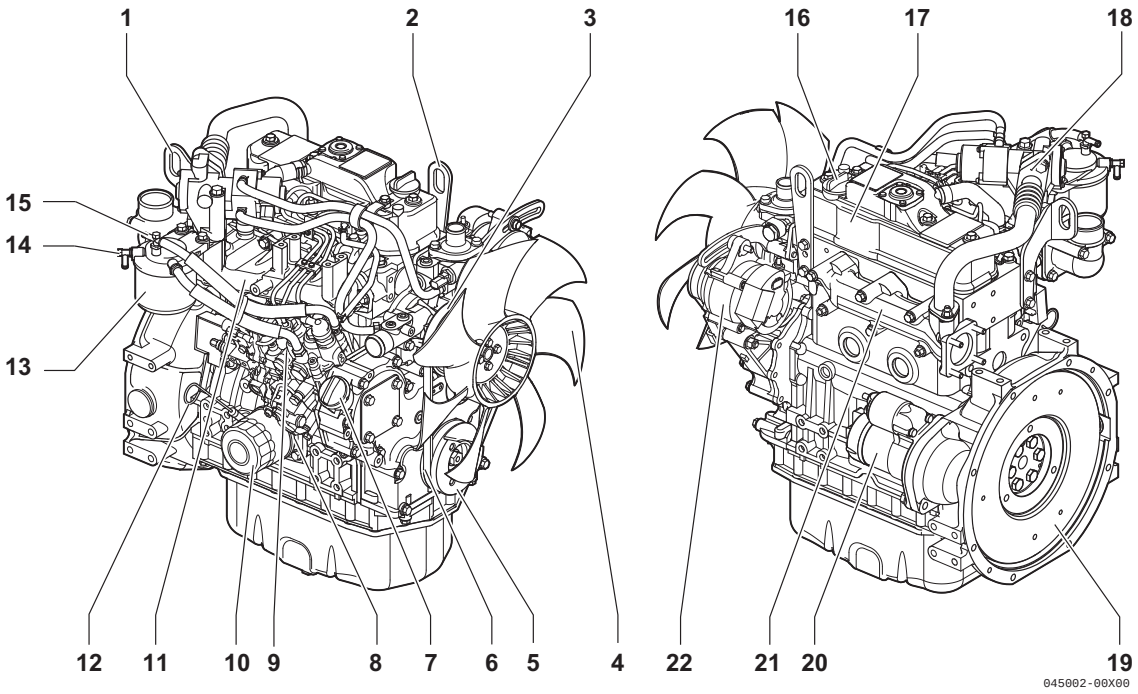

1 – Lifting eye (flywheel end)
2 – Lifting eye (engine cooling fan end)
3 – Engine coolant pump
4 – Engine cooling fan
5 – Crankshaft V-pulley
6 – V-belt
7 – Side filler port (engine oil)
8 – Engine oil cooler
9 – Fuel injection pump
10 – Engine oil filter
11 – Intake manifold
12 – Dipstick (engine oil)
13 – Fuel filter
14 – Fuel return to fuel tank
15 – Fuel inlet
16 – Top filler port (engine oil)
17 – Rocker arm cover
18 – EGR valve
19 – Flywheel
20 – Starter motor
21 – Exhaust manifold
22 – Alternator

Figure 3

** Engine oil drain plug location may vary based on oil pan options.*

https://truckmanualshub.com/

LOCATION OF LABELS

Figure 4 shows the location of regulatory and safety labels on Isuzu C series indirect injection model engine.

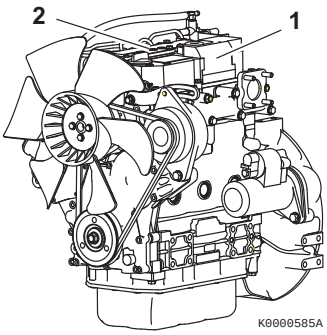

Figure 4

The typical location of the emission control information label is shown **(Figure 4, (1))**.

Typical location of the engine nameplate is shown **(Figure 4, (2))**.

Figure 5 shows the location of regulatory and safety labels on Isuzu C series direct injection model engine.

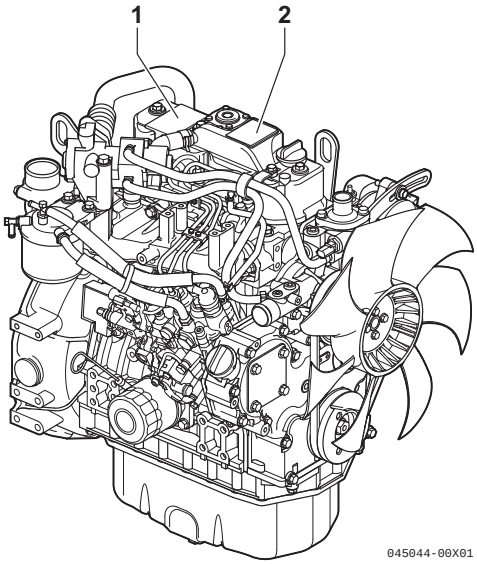

Figure 5

■ Location of labels/nameplates on direct injection model engines

Model	Engine nameplate	EPA/ARB certification label
3CE1	On the top of the locker arm cover (cooling fan end) **Figure 5, (2)**	On the top of the locker arm cover (flywheel end) **Figure 5, (1)**

https://truckmanualshub.com/

FUNCTION OF MAJOR ENGINE COMPONENTS

Components	Functions
Air cleaner	The air cleaner prevents airborne contaminants from entering the engine. Since the air cleaner is application specific, it must be carefully selected by an application engineer. It is not part of the basic engine package as shipped from the Isuzu factory. Periodic replacement of the air cleaner filter element is necessary. *See the Periodic Maintenance Schedule on page 64* for the replacement frequency.
Starter motor	The starter motor is powered by the battery. When you turn the key switch in the operator's console to the START position, the starter motor engages with the ring gear installed on the flywheel and starts the flywheel in motion.
Alternator	The alternator is driven by a V-belt which is powered by the crankshaft V-pulley. The alternator supplies electricity to the engine systems and charges the battery while the engine is running.
Dipstick (engine oil)	The engine oil dipstick is used to determine the amount of engine oil in the crankcase.
Side and top filler port (engine oil)	You can fill the crankcase with engine oil from ***either the side or top filler port*** depending upon which one is most convenient.
Engine oil filter	The engine oil filter removes contaminants and sediment from the engine oil. Periodic replacement of the engine oil filter is necessary. *See the Periodic Maintenance Schedule on page 64* for the replacement frequency.
DI ENGINE Engine oil cooler (if equipped)	The engine oil cooler helps to keep the engine oil cool. Engine coolant from the cooling system is circulated by the coolant pump through an adapter at the base of the engine to the oil cooler and then to the cylinder block and back to the coolant pump.
Fuel tank	The fuel tank is a reservoir that holds diesel fuel. When fuel leaves the fuel tank it goes to the water separator. Next, fuel is pumped to the fuel filter by the electric or mechanical fuel pump. Next the fuel goes to the fuel injection pump. Since fuel is used to keep the fuel injection pump cool and lubricated, more fuel than necessary enters the injection pump. When the injection pump pressure reaches a preset value, a relief valve allows excess fuel to be returned back to the fuel tank. The fuel tank is a required engine component.
Water separator	The water separator removes contaminants, sediment and water from diesel fuel going to the fuel filter. This is a required component of the fuel system and is standard equipment with every engine. The separator is installed between the fuel tank and the fuel pump. Periodically drain the water from the water separator using the drain valve at the bottom of the separator.
Electric fuel pump	The electric fuel pump makes sure there is a constant supply of diesel fuel to the fuel injection pump. The electric fuel pump is electro-magnetic and runs on 12 V DC. An electric fuel pump may be installed as an option or as standard equipment. Standard equipment may vary based on engine model and specification. If an electric fuel pump is installed, turn the key switch to the ON position for 10 to 15 seconds to prime the fuel system.

https://truckmanualshub.com/

Components	Functions
IDI ENGINE Mechanical fuel pump	The mechanical fuel pump is a diaphragm-type of pump and is installed on the fuel injection pump body. The mechanical fuel pump is driven by a cam on the camshaft of the fuel injection pump. An electric fuel pump is available as an option. The mechanical fuel pump is not installed on the fuel injection pump if the electric fuel pump option is installed.
IDI ENGINE Fuel priming lever	If the unit has a mechanical fuel pump, a fuel priming lever on the mechanical fuel pump primes the fuel system. The fuel system needs to be primed before you start the engine for the first time, if you run out of fuel, or if fuel system service is performed. To prime the fuel system, operate the fuel priming lever until the cup in the fuel filter is full of fuel.
Fuel filter	The fuel filter removes contaminants and sediments from the diesel fuel. Periodic replacement of the fuel filter is necessary. *See the Periodic Maintenance Schedule on page 64* for the replacement frequency. ***Please note that the word "diesel" is implied throughout this manual when the word "fuel" is used.***

https://truckmanualshub.com/

FUNCTION OF COOLING SYSTEM COMPONENTS

Components	Functions
Cooling system	The C series engine is liquid-cooled by means of a cooling system. The cooling system consists of a radiator, radiator cap, engine cooling fan, engine coolant pump, thermostat, and reserve tank. ***Note that all cooling system components are required for proper engine operation. Since some of the components are application specific, they must be carefully selected by an application engineer. The application specific items are not part of the basic engine package as shipped from the Isuzu factory.***
• Engine cooling fan	The engine cooling fan is driven by a V-belt which is powered by the crankshaft V-pulley. The purpose of the engine cooling fan is to circulate air through the radiator.
• Engine coolant pump	The engine coolant pump circulates the engine coolant through the cylinder block and cylinder head and returns the engine coolant to the radiator.
• Radiator	The radiator acts as a heat exchanger. As the engine coolant circulates through the cylinder block it absorbs heat. The heat in the engine coolant is dissipated in the radiator. As the engine cooling fan circulates air through the radiator, the heat is transferred to the air.
• Radiator cap	The radiator cap controls the cooling system pressure. The cooling system is pressurized to raise the boiling point of the engine coolant. As the engine coolant temperature rises, the system pressure and the coolant volume increases. When the pressure reaches a preset value, the release valve in the radiator cap opens and the excess engine coolant flows into the reserve tank. As the engine coolant temperature is reduced, the system pressure and volume is reduced and the vacuum valve in the radiator cap opens allowing engine coolant to flow from the reserve tank back into the radiator.
• Reserve tank	The reserve tank contains the overflow of engine coolant from the radiator. If you need to add engine coolant to the system, add it to the reserve tank, not the radiator.
• Thermostat	A thermostat is placed in the cooling system to prevent engine coolant from circulating into the radiator until the engine coolant temperature reaches a preset temperature. When the engine is cold, no engine coolant flows through the radiator. Once the engine reaches its operating temperature the thermostat opens and allows engine coolant to flow through the radiator. By letting the engine warm up as quickly as possible, the thermostat reduces engine wear, deposits and emissions.

https://truckmanualshub.com/

ELECTRONIC CONTROL SYSTEM

3CE1

⚠ WARNING

- **Never use the E-ECU for other purposes than intended or in other ways than specified by Isuzu. Doing so could result in the violation of emission control regulations and will void the product warranty.**
- **Improper use or misuse of the E-ECU may result in death or serious injury due to an abrupt and unexpected increase in engine speed.**

⚠ WARNING

- **Be sure to use the E-ECU in conjunction with the engines whose models or serial numbers are specified by Isuzu.**
  Other E-ECU/engine combinations than specified will void the engine warranty.
- **Improper use or misuse of the E-ECU may result in death or serious injury due to an abrupt and unexpected increase in engine speed.**

⚠ WARNING

- **Replacing the fuel injection pump involves rewriting the fuel injection data in the E-ECU. Be sure to contact your Isuzu Distributor before replacing the fuel injection pump. Failure to rewrite the fuel injection data before replacing the fuel injection pump will void the engine warranty.**
- **Improper use or misuse of the E-ECU may result in death or serious injury due to an abrupt and unexpected increase in engine speed.**

⚠ WARNING

- **Replacing the E-ECU involves migrating the fuel injection data to the existing E-ECU to the new unit. Be sure to contact your Isuzu Distributor before replacing the E-ECU. Failure to migrate the fuel injection data before replacing the E-ECU will void the engine warranty.**
- **Improper use or misuse of the E-ECU may result in death or serious injury due to an abrupt and unexpected increase in engine speed.**

https://truckmanualshub.com/

NOTICE

Shut down the engine if the fault indicator comes on.

Continuing running the engine with the fault indicator being on may result in a serious malfunction of or damage to the engine, and will void the engine warranty.

NOTICE

Do not energize the starter for a period of longer than 15 seconds.

Take a pause of at least 30 seconds between energization of the starter.

Otherwise the starter could suffer damage.

NOTICE

- High-pressure washing not recommended.
- Avoid using high-pressure washing for electronic or electric devices installed in, on or around the engine, including the E-ECU, relays and harness couplers.

Otherwise such devices may suffer malfunction due to water ingress into them.

NOTICE

- Do not plug or unplug the E-ECU for a period of at least 6 seconds after power to the unit has been turned on or off.
- Do not touch connector pins of the E-ECU with bare hands.
  Doing so may result in corrosion of the connector pins and/or damage to the internal circuits of the E-ECU due to static electricity.
- Do not force a measuring probe into the female coupler.
  Doing so may cause contact failure of the connector pins, resulting in malfunction of the E-ECU.
- Take care to prevent water from entering the couplers when plugging or unplugging the connector.
  Water inside the couplers may cause corrosion, resulting in malfunction of the E-ECU.
- Avoid plugging/unplugging the connector more than approx. 10 times.
  Frequent plugging/unplugging of the connector may cause contact failure of the connector pins, resulting in malfunction of the E-ECU.
- Do not use the E-ECU that has ever suffered drop impact.

NOTICE

Always check the battery for proper charge.

Otherwise the electronically controlled engines may fail to start.

https://truckmanualshub.com/

Model 3CE1 engine come with the Exhaust Gas Recirculation (EGR) system to conform to the engine emission regulations (EPA 2013 rules). The EGR system and an electronic governor (Eco-governor) constitute an electronic engine control system.

The electronic engine control system regulates the exhaust gas recirculation flow rate and the fuel injection volume depending on the engine load and speed signals from the engine controller (E-ECU), so that the exhaust gas is kept clean according to the emission control regulations. **Figure 6** illustrates the electronic engine control system.

Features of the electronic engine control system include:

- Engine speed control schemes
  Droop control/Low-idling speed up/Auto deceleration/High-idling speed down/Black smoke suppression
- Starting aid
  Auto preheating/After heating
- Engine failure detection
- CAN communication with the control system of the driven machine

Consult the operation manual for the driven machine for applicability of the features that depends on the machine.

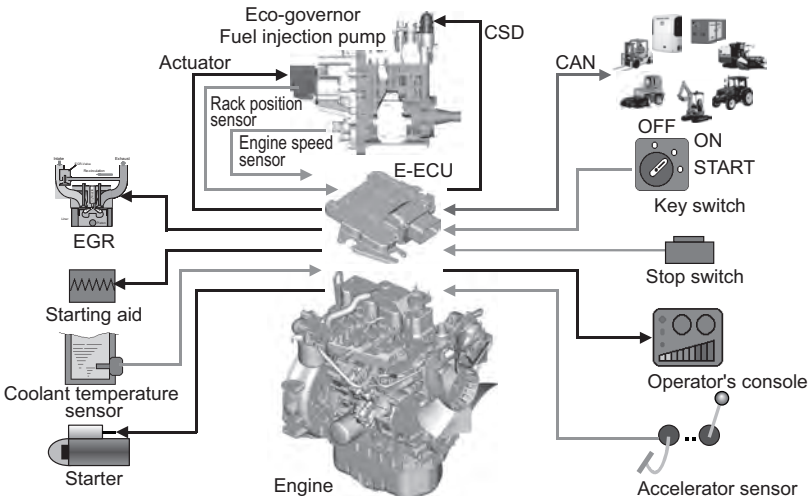

Figure 6

https://truckmanualshub.com/

MAIN ELECTRONIC CONTROL COMPONENTS AND FEATURES

DI ENGINE **3CE1**

Component/feature		Description
Engine controller (E-ECU)		Adjusts the rack position of the fuel injection pump depending on the speed command signal from the accelerator sensor, thus regulating the engine speed and power. The engine controller also regulates the opening of the EGR valve depending on the engine speed and power. It serves as the master station for the following components/control features.
Electronic governor (Eco-governor)		Consists of the engine speed sensor, rack actuator, etc., and is directly connected to the fuel injection pump in order to regulate the rack position of the fuel injection pump depending on the signals communicated with the E-ECU.
Fuel injection pump (for Eco-governor)		Is of single plunger type and equipped with a CSD solenoid valve that allows the fuel injection timing to advance and the injection quantity to increase, thereby improving the cold start performance of the engine.
EGR valve		Controls the exhaust gas recirculation flow rate depending on the engine speed/load signals from the E-ECU. It is installed on the top of the exhaust manifold.
Accelerator sensor		Unlike mechanical governors, the Eco-governor has no governor lever. The accelerator sensor serves as the governor lever to provide the speed command signal (voltage signal) to the E-ECU for engine speed control. It is installed in the operator cabin of the driven machine. Constant speed engines for e.g. generator use do not require accelerator sensors because the engine speed can be shifted via a switch on the operator's console.
	Optional	CAN communication capability is available as an option.
Fault indicator	Optional	Is installed on the operator’s console. If a fault occurs in the E-ECU or Eco-governor, the fault indicator flashes alerting the operator to a fault. The number of flashes and/or the flashing pattern vary depending on the type or source of the fault, enabling quick-fix.
Engine diagnosis tool	Option for service	Allows the operator to troubleshoot the cause of a problem based on detailed information regarding the problem occurring in the E-ECU or Eco-governor. This tool can also be used for data maintenance tasks including programming and mapping. *See Troubleshooting Chart on page 90*.
Engine coolant temperature sensor		Allows the CSD and ERG to be controlled in engine cold-start conditions.

https://truckmanualshub.com/

Component/feature		Description
ON-glow at start	Optional	When the key switch is turned to the ON position, the glow plugs are energized for up to 15 seconds. The duration of energization depends on the engine coolant temperature. The HEAT indicator is on during energization. When the indicator goes out, turn the key switch to the START position to start the engine.
Droop control		Reduces the engine speed by a certain percentage from no load to full (rated) load in steady state operation. The same percentage droop is maintained even when the load increases at any no-load speed.
Isochronous control	Optional	Offers a constant engine speed from no load to full load. The engine speed does not decrease even when the load increases at any no-load speed.
Low-idling speed up		Increases the low-idling speed to up to 1000 min^{-1} (rpm) depending on the engine coolant temperature. When the coolant temperature reaches a predetermined value, this feature returns the engine speed to the normal low idle setting, thus reducing the warm-up time.
High-idling speed down	Optional	Decreases the high-idling speed depending on the engine coolant temperature. When the coolant temperature falls to a predetermined value, this feature returns the engine speed to the normal high idle setting, thus minimizing the emission of white smoke at low temperatures.
Auto deceleration	Optional	Brings the running engine in low idle mode automatically when the accelerator pedal is not operated for a predetermined period of time. When the pedal is operated, i.e., the accelerator sensor is activated, the low idle mode is cancelled.

https://truckmanualshub.com/

GAUGES AND INDICATORS

The operator's console provides you with the means to start and stop the unit and a series of gauges and indicators that inform you about the current status of the engine. This is a required engine component. Since the operator's console is application specific, it must be carefully selected by an application engineer. It is not part of the basic engine package as shipped from the Isuzu factory.

NOTICE

The illustrations and descriptions of optional equipment in this manual, such as the operator's console, are for a typical engine installation. Refer to the documentation supplied by the optional equipment manufacturer for specific operation and maintenance instructions.

Gauges

The following gauges are located on a typical operator's console. Some operator's consoles may not have the gauges described here or may have different gauges.

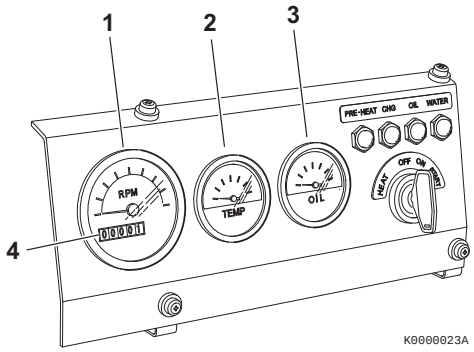

Figure 7

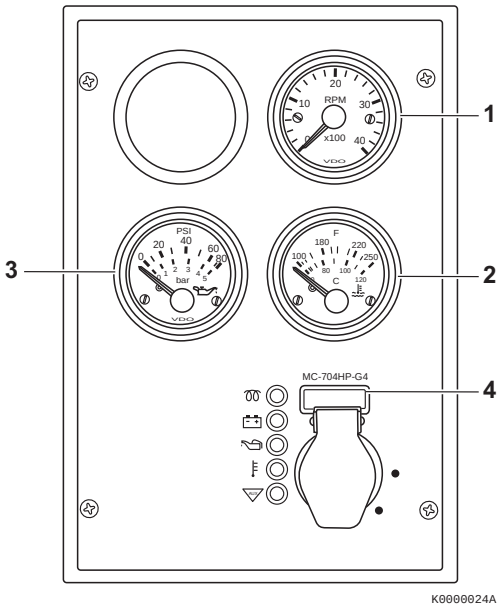

Figure 8

Tachometer - The tachometer display **(Figure 7, (1))** or **(Figure 8, (1))** shows the engine speed in revolutions per minute (RPM).

Engine coolant temperature - The engine coolant temperature display **(Figure 7, (2))** or **(Figure 8, (2))** shows the temperature of the engine coolant.

Engine oil pressure - The engine oil pressure display **(Figure 7, (3))** or **(Figure 8, (3))** shows the pressure of the engine oil.

Hour meter - The hour meter display **(Figure 7, (4))** or **(Figure 8, (4))** shows the total number of hours the engine has run. This is useful for planning the *Periodic Maintenance Procedures on page 66.*

https://truckmanualshub.com/

Indicators

The following indicators are located on a typical operator's console.

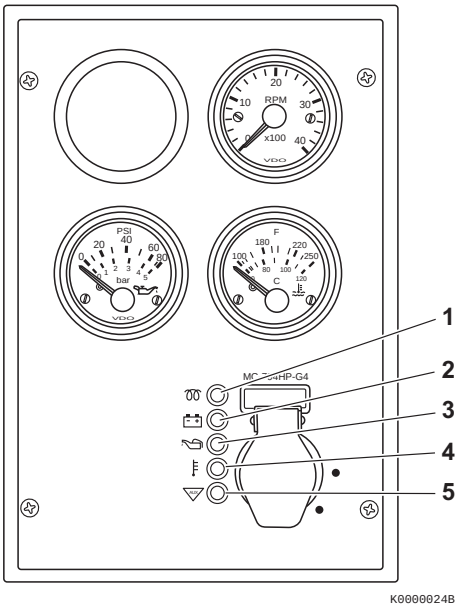

Figure 9

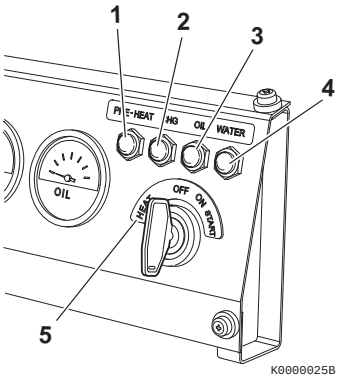

Figure 10

HEAT indicator (Figure 9, (1)) - For the "ON-glow" type of the starter switch that does not have the HEAT position in the counterclockwise direction of the ON position, by turning the key to the ON position, the preheating function automatically activates, and the HEAT indicator **(Figure 9, (1))** lights up. 4 seconds after the indicator turns off is when to start the operation. In the case of 3CE1 (DI), the indicator goes off after 15 seconds. *Please refer to HEAT on page 28 about the HEAT indicator of the electronic controlled engine.*

HEAT indicator (Figure 10, (1)) - When cold starting the engine, in order to activate the glow plug, the starter key needs to be turned to the HEAT position (left side of OFF) **(Figure 10, (5))**. By turning the key to the HEAT position and keeping it at that position, the HEAT indicator **(Figure 10, (1))** lights up, and after 4 seconds, it turns off. The time the indicator turns off is when to start the operation. In the case of 3CE1 (DI), the indicator goes off after 15 seconds.

Battery charge (Figure 9, (2)) or **(Figure 10, (2))** - When the key is turned to the ON position, the charge indicator lights up. When the engine is started, the alternator (or dynamo) generates power, and the battery starts charging. Then the indicator goes off. This indicator will also come on when there is a problem in the charging system. This indicator does not tell you the charging timing (when the battery is low). *See Troubleshooting Chart on page 90*.

Engine oil pressure (Figure 9, (3)) or **(Figure 10, (3))** - This indicator will come on if the engine oil pressure is below or exceeds normal limits. *See Troubleshooting Chart on page 90*.

Engine coolant temperature (Figure 9, (4)) or **(Figure 10, (4))** - This indicator will come on if the engine coolant temperature exceeds normal limits. *See Troubleshooting Chart on page 90*.

Auxiliary (Figure 9, (5)) - Used for special applications.

https://truckmanualshub.com/

GAUGES AND INDICATORS OF ELECTRONIC CONTROL SYSTEM

3CE1

Gauges

The following gauges are located on a typical operator's console of the electronically controlled engines. Some operator's consoles may not have the gauges described here or may have different gauges.

NOTICE

The illustrations and descriptions of optional equipment in this manual, such as the operator's console, are for a typical engine installation. Refer to the documentation supplied by the optional equipment manufacturer for specific operation and maintenance instructions.

Indicators

The following indicators are located on a typical operator's console.

See the Gauges and Indicators section for description of indicators that are not described below.

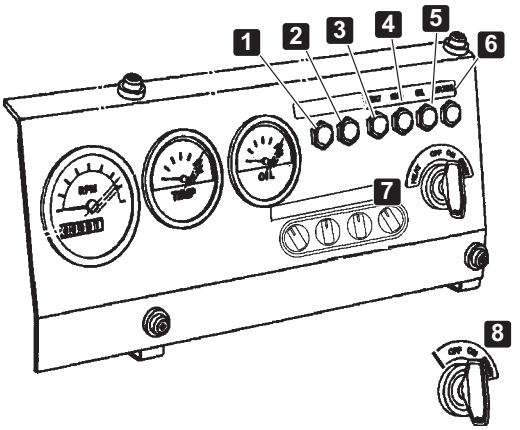

Optional key switch: Turning it to ON energizes the glow plugs automatically.

Figure 11

Figure 11 Typical Operator's Console

Fault (Figure 11, (1)) (optional) - This indicator will flash if a fault occurs in the E-ECU or Eco-governor. The number of flashes and/or the flashing pattern vary depending on the type or source of the fault. *See Troubleshooting Chart on page 90*.

Auxiliary (Figure 11, (2)) - Reserved as an optional fault indicator.

HEAT (Figure 11, (3)) - This indicator will come on when the glow plugs are energized when cold starting the engine. For the electronic controlled engine, by turning the key switch to the ON position **(Figure 11, (7))**, the ECU detects the temperature of the engine coolant, and the HEAT indicator turns on for a preset period of time (Maximum 15 seconds), then the glow plug will be preheated. The time the lamp came off is when to start the operation.
When an optional after heater is installed, it is energized for up to 80 sec. after the engine has started, during which, however, the indicator is not on.

Others (optional) - Other optional indicators including those for indicating the air cleaner is clogged or the water separator is filled with water can also be installed on the console. See the operation manual for the driven machine for details.

Machine events including alarms and faults are all stored in memory of the E-ECU and can be loaded into the service tool.

https://truckmanualshub.com/

CONTROLS

Key Switch

The key switch for the operator's console illustrated in **Figure 12** has three positions - OFF, ON, START and HEAT.

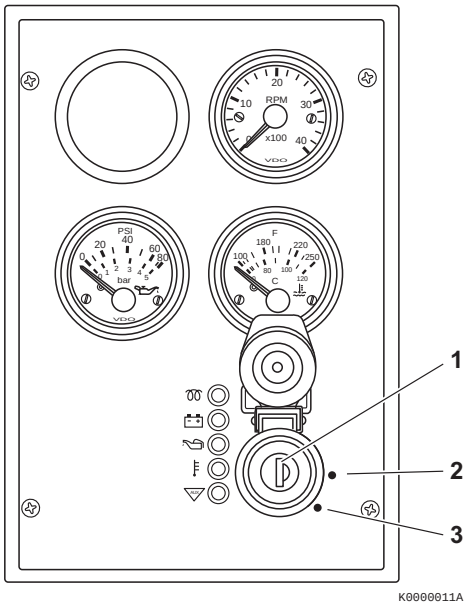

Figure 12

NOTICE

For maximum engine life, Isuzu recommends that when shutting the engine down, you allow the engine to idle, without load, for five minutes. This will allow the engine components that operate at high temperatures, such as the turbocharger (if equipped) and exhaust system, to cool slightly before the engine itself is shut down.

OFF (key straight up and down) **(Figure 12, (1))** and **(Figure 13, (1))** - When you turn the key to this position the engine shuts down. Electric current to the gauges and indicators is shut off. You can insert and remove the key in this position.

ON (Figure 12, (2)) and **(Figure 13, (2))** - This is the position the key will be in when the engine is running. When the engine is not running, use this position to energize the gauges, indicators, electric fuel pump and auxiliary devices.

NOTICE

Never hold the key in the START position for longer than 15 seconds or the starter motor will overheat.

START (Figure 12, (3)) and **(Figure 13, (3))** - Turn the key to this position to start the engine. As soon as the engine starts, release the key and it will automatically return to the ON position. Some key switches may be equipped with a feature that prevents you from turning the key to the START position while the engine is running. When operating a key switch with this feature, you cannot turn the key to the START position without first returning the key to the OFF position.

The key switch for the operator's console illustrated in **Figure 13** has four positions - OFF, ON, START, and HEAT.

https://truckmanualshub.com/

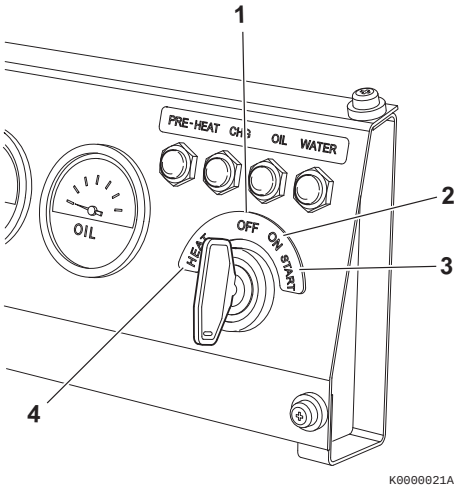

Figure 13

NOTICE

For maximum engine life, Isuzu recommends that when shutting the engine down, you allow the engine to idle, without load, for five minutes. This will allow the engine components that operate at high temperatures, such as the turbocharger (if equipped) and exhaust system, to cool slightly before the engine itself is shut down.

NOTICE

Never hold the key in the START position for longer than 15 seconds or the starter motor will overheat.

HEAT (Figure 13, (4)) - You must turn the key to the HEAT position to activate the glow plug. The indicator will flash for several seconds when you turn the key to HEAT. You can turn the key to START when the indicator goes out.

Glow Plugs

Glow plugs help make the engine easy to start at cold temperatures. During the engine starting sequence, the glow plugs are activated for approximately 4 seconds (15 seconds in case of 3CE1). After the pre-heat indicator goes out, the engine can be started.

These plugs are installed in the cylinder head swirl chambers for IDI engines or in the combustion chambers for DI engines.

Governor Lever

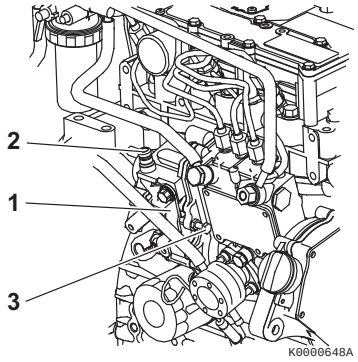

Figure 14

NOTICE

Never attempt to adjust the low or high idle speed limit screw. This may impair the safety and performance of the machine and shorten its life. If adjustment is ever required, contact your Isuzu Distributor.

The governor lever **(Figure 14, (1))** controls the engine speed. The lever is linked to the engine speed control device in the driven machine.

The high idle speed limit screw **(Figure 14, (2))** restricts the maximum engine speed when the engine is operated without a load.

The low idle speed limit screw **(Figure 14, (3))** sets engine speed while it is idling.

https://truckmanualshub.com/

Engine Stop Solenoid (IDI Engines)

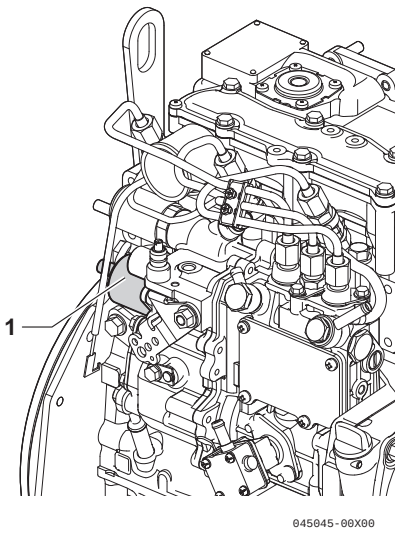

Figure 15

When the key is turned to the ON position, the engine stop solenoid **(Figure 15, (1))** is energized and allows the fuel injection pump to deliver fuel to the engine, allowing the engine to be started. When the key is turned to the OFF position, the engine stop solenoid is de-energized and shuts off the fuel supply from the fuel injection pump to the engine, causing the engine to stop.

Speed Control of Electronically Controlled Engines

3CE1

The electronically controlled engines have no governor lever. For these engines, the position signal of the throttle lever or accelerator pedal of the driven machine is converted into an electric signal by the accelerator sensor **Figure 16**, which is then delivered to the rack actuator of the Eco-governor **Figure 18** through the E-ECU **Figure 17**, allowing the engine speed to be controlled.

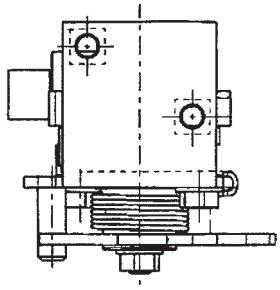

Figure 16

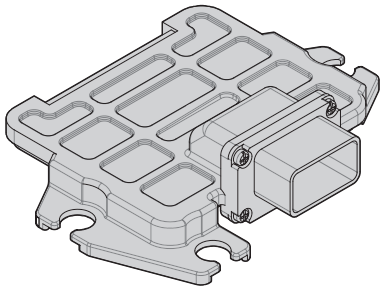

Figure 17

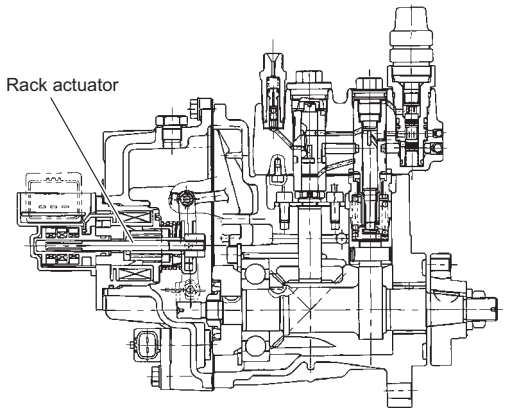

Figure 18

https://truckmanualshub.com/

Electronic Engine Speed Control

3CE1

■ Start and stop of electronic controlled engines

The electronic controlled engines have no engine stop solenoid. The ECU controls the engine start/stop sequence.

■ Engine performance curves

Figure 20 shows typical engine speed curves that outline the relationship between engine speed and load.

Droop control

The VM series engines for general use are designed so that the engine speed is reduced by a certain percentage from 30 % load to full rated load. See curves (1) in **Figure 19** below. The same percentage droop is maintained at any no-load speed.

Isochronous control

The CL series consists of isochronous design engines, the speed of which is kept constant from no load to full rated load. See curves (2) in **Figure 19** below.

Some VM series engines for general use may be custom-engineered and have the isochronous capability. Consult the operation manual for the driven machine for application details of such engines.

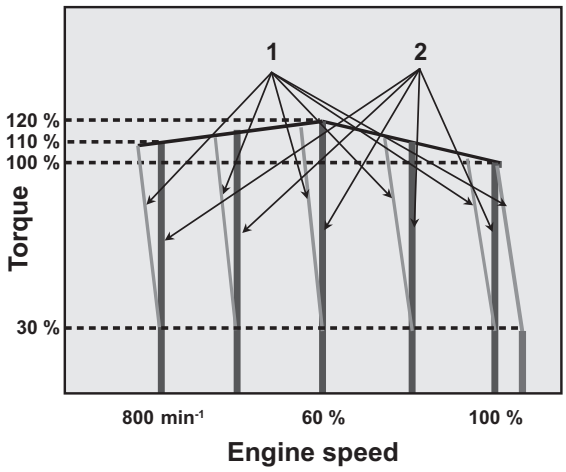

Figure 19

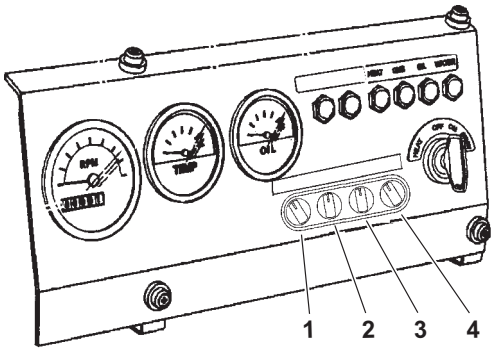

Figure 20

Figure 20 Typical operator's console and switch arrangement

Low-idling speed up

This feature increases the low-idling speed to some extent depending on the engine coolant temperature. When the coolant temperature reaches a predetermined value, this feature returns the engine speed to the normal low idle setting, thus reducing the warm-up time.

https://truckmanualshub.com/

Auto deceleration (optional)

This feature brings the running engine in low idle mode automatically when the accelerator pedal is not operated for a predetermined period of time. When the pedal is operated, i.e., the accelerator sensor is activated, the low idle mode is cancelled.

A certain ON/OFF combination of switches (1) - (4) on the operator's console **Figure 20** will implement this optional feature. For details, see the operation manual for the driven machine.

High-idling speed down (optional)

This feature decreases the high-idling speed depending on the engine coolant temperature. When the coolant temperature falls to a predetermined value, this feature returns the engine speed to the normal high idle setting, thus minimizing the emission of white smoke at low temperatures.

A certain ON/OFF combination of switches (1) - (4) on the operator's console **Figure 20** will implement this optional feature. For details, see the operation manual for the driven machine.

Others

Other optional features can be provided by selecting certain ON/OFF combinations of switches (1) - (4) on the operator's console **Figure 20** will implement this optional feature. For details, see the operation manual for the driven machine.

https://truckmanualshub.com/

This Page Intentionally Left Blank

https://truckmanualshub.com/

BEFORE YOU OPERATE

This section of the Operation Manual describes the diesel fuel, engine oil, and engine coolant specifications and how to replenish them. It also describes the daily engine checkout.

https://truckmanualshub.com/

DIESEL FUEL

Diesel Fuel Specifications

Diesel fuel should comply with the following specifications. The table lists several worldwide specifications for diesel fuels.

Diesel fuel specification	Location
ASTM D975 **No. 1D S15** **No. 2D S15**	USA
EN590:96	European Union
ISO 8217 DMX	International
BS 2869-A1 or A2	United Kingdom
JIS K2204 Grade No. 2	Japan
KSM-2610	Korea
GB252	China

■ Additional technical fuel requirements

- When operating the engine in cold districts or high altitudes, the fuel cetane number should be equal to 45 or higher.
- **The sulfur content must not exceed 15 ppm by volume. A higher sulfur content fuel may cause sulfuric acid corrosion in the cylinders of the engines. Especially in U.S.A. and Canada, Ultra Low Sulfur fuel must be used.**
- Use the fuel that can be used where the temperature is 12 °C (53.6 °F) lower than the expected lowest temperature to prevent the fuel from freezing.
- Bio-diesel fuels. *See Bio-diesel fuels on page 37*.
- Water and sediment in the fuel should not exceed 0.05 % by volume.
- Ash content not to exceed 0.01 % by volume.
- Carbon residue content not to exceed 0.35 % by volume. Less than 0.1 % is preferred.
- Total aromatics content should not exceed 35 % by volume. Less than 30 % is preferred.
- PAH (Polycyclic Aromatic Hydrocarbons) content should be below 10 % by volume.
- Metal content of Mg, Si, and Al should be equal to or lower than 1 mass ppm. (Test analysis method JPI-5S-44-95)
- The diesel fuel should be free from Zn and Na.
- Lubricity: Wear mark of WS1.4 should be Max. 0.018 in. (460 µm) at HFRR test.

■ Precautions and concerns regarding the use of diesel fuel

- Never use kerosene.
- Never mix kerosene or used engine oil with the diesel fuel.
- Never use residual fuels that cause diesel fuel filter clogging and carbon deposits on the nozzles.
- Never use fuels stored for long time in a drum can or the like.
- Never keep fuel in containers with zinc plating on the inside.
- Never use fuels purchased from unauthorized dealer.
- Fuel additives are not recommended. Some fuel additives may cause poor engine performance. Consult your Isuzu representative for more information.

https://truckmanualshub.com/

■ Bio-diesel fuels

General description of biodiesel

1. Biodiesel is a renewable, oxygenated fuel made from agricultural and renewable resources such as soybeans or rapeseeds. Biodiesel is a fuel comprised of methyl or ethyl ester oxygenates of long chain fatty acids derived from the transesterification of vegetable oils, animal fats, and cooking oils. It contains no petroleum-based diesel fuel but can be blended at any level with petroleum-based diesel fuel. In case it is not blended with petroleum-based diesel fuel such biodiesel is referred to as “B100”, which means that it consists of 100 % (pure) biodiesel. However, most common biodiesel is blended with conventional (petroleum-based) diesel fuel. The percentage of the blend can be identified by its name. For example, “B7” consists of 7 % biodiesel and 93 % conventional diesel fuel. The unprocessed vegetable oil is not considered as diesel fuel.
2. Advantages of biodiesel:
   - Biodiesel produces less visible smoke and a lower amount of particulate matter.
   - Biodiesel is biodegradable and nontoxic.
   - Biodiesel is safer than conventional diesel fuel because of its higher flash point.

   Following the increased interest in the reduction of emissions and the reduction of the use of petroleum distillate based fuels; many governments and regulating bodies encourage the use of biodiesel.
3. Disadvantages of biodiesel:

   Concentrations that are higher than 7 % of biodiesel (higher than B7) can have an adverse affect on the engine’s performance, its integrity and/or durability. The risk of problems occurring in the engine increases as the level of biodiesel blend increases. The following negative affects are exemplary and typical for the usage of high concentrated biodiesel blends:
   - Biodiesel can accelerate the oxidation of Aluminum, Brass, Bronze, Copper and Zinc.
   - Biodiesel damages, and finally seeps through certain seals, gaskets, hoses, glues and plastics.
   - Certain natural rubbers, nitride and butyl rubbers will become harder and more brittle as degradation proceeds when used with biodiesel.
   - The deteriorated biodiesel creates deposits in the engines.
   - Due to its natural characteristic, biodiesel will decrease the engine output by approximately 2 percent (in case of B20) comparing to conventional (petroleum-based) diesel fuel.
   - The fuel consumption ratio will increase by approximately 3 percent (in case of B20) comparing to conventional diesel fuel.

Approved engines

Isuzu C series engine can be operated with biodiesel with concentrations up to B20. In case of using biodiesel fuel up to B7 concentrations, no special preparations etc. have to be made and the original operating conditions and service intervals as stated in the operating manuals apply. In case of running below indicated engines with biodiesel concentrations from B8 to B20, the required operating conditions *(see below* ***Conditions for the operation with biodiesel (from B8 to B20)*** *)* have to be observed.

Other than the following listed engines cannot be run with biodiesel:

- 3CE1, 3CH1 and 3CJ1 Tier 4

https://truckmanualshub.com/

Approved fuel

In case of using biodiesel (only concentrations up to B20) such fuel should comply with the below recommended standards. However, raw pressed vegetable oils are not considered to be biodiesel and are not acceptable for use as fuel in any concentration in Isuzu engines.

1. EN14214 (European standard) and/or ASTM D-6751 (American standard).
   In North America, biodiesel and biodiesel blends must be purchased from the BQ-9000 accredited producers and BQ-9000 certified distributors.
2. All applicable engines can be operated with biodiesel fuel up to B20 (20 % bio-fuel blend) as a maximum concentration.
   (For your information: In Japan, the legally allowed maximum concentration for on-road applications is B5.)

Conditions for the operation with biodiesel (from B8 to B20)

When operating your applicable Isuzu C series engine with biodiesel blends concentrated above B8, we seriously recommend observing the following operation, service and maintenance conditions:

1. The original service interval of the below stated services as indicated in the respective Isuzu engine standard operation manual, the application manual and the service manual should be halved (please refer to your own manuals for the each service interval):
   - Replacement interval of engine oil filter, engine oil and the fuel filter.
   - Cleaning interval of the water separator
   - Drain interval of the fuel tank.
2. It is required to inspect, clean and adjust the fuel injector every 1000 operating hours.
3. Before using the bio-diesel fuel of B10 or higher, replace the following parts.
   - Fuel hose (The hose must be replaced every 2 years or 2000 hours regardless of the bio fuel type.)
   - O-ring of fuel filter
   - O-ring of water separator
   - When replacing a diaphragm type fuel feed pump to an electronic type, replace to the feed pump and the pump cover instructed to the attached list.
   - If the water separator is not attached, it needs to be attached.

   Please refer to the attached list of exchange parts for details.
4. Please use only biodiesel fuel that is appropriate to the intended operation environment of the engines. This especially applies if the operating ambient temperature falls below 0 degree centigrade.
5. In particular, operation with biodiesel requires daily maintenance as follows:
   - Please daily check the engine oil level. If the oil level rises above the oil level of the previous day, the engine oil needs to be immediately replaced.
   - Please daily check the water level of the water separator. If the water level rises above the “max” indicator, an immediate drain of the water separator is required.
6. Biodiesel blends up to B20 can only be used for a limited time of up to 3 months of the date of biodiesel manufacture. Therefore biodiesel needs to be used at latest within 2 months from the time of filling the tank or within 3 months from the time of production by the fuel supplier, whichever comes first.
7. Before a long-term storage without operating the engine, the biodiesel needs to be drained out completely and the engine has to be run for 30 minutes with conventional diesel fuel as indicated in your operation manual.

https://truckmanualshub.com/

■ KIT parts list for B10 through B 20

		3CH1, 3CJ1	3CE1
		5-8640-2407-0	**5-8640-2408-0**
Fuel oil tank - / - Fuel oil tank	No.	(1)	(1)
	Length	2000	2000
	Part No.	5-8640-2241-0	5-8640-2241-0
	Part name	FO-T CMP	FO-T CMP
	Number	2	2
Fuel feed pump - Fuel oil filter	No.	(3)	(4)
	Length	450	1000
	Part No.	5-8640-2242-0	5-8640-2247-0
	Part name	FO-T CMP	FO-T CMP
	Number	1	1
Fuel oil filter - Fuel injection pump	No.	(6)	(5)
	Length	270	220
	Part No.	5-8640-2243-0	5-8640-2248-0
	Part name	FO-T CMP	FO-T CMP
	Number	1	1
Fuel injection pump - Fuel oil filter	No.	(11)	(7)
	Length	450	300
	Part No.	5-8640-2244-0	5-8640-2249-0
	Part name	FO-T CMP	FO-T CMP
	Number	1	1
Cap, fuel injection nozzle	Part No.	No need	5-8640-1423-0 5-8640-0112-0
	Part name		CAP CLIP
	Number		1 1
Fuel injection nozzle -Fuel injection nozzle	No.	No need	(13)
	Length		115
	Part No.		5-8640-1791-0
	Part name		FO-T CMP
	Number		2
Fuel injection nozzle - Fuel injection pump	No.	(16)	(17)
	Length	150	Formed pipe
	Part No.	5-8640-2245-0	5-8640-2250-0
	Part name	FO-T CMP	FO-T CMP
	Number	1	1
Fuel oil filter		Need to change only O-ring. P44: 5-8640-2246-0 --> A	No need (Because of cartridge type)
Water separator		Need to change only O-ring. P44: 5-8640-2246-0 --> B	Need to change only O-ring. G75 : 5-8640-2251-0 --> C P16 : 5-8640-1755-0 --> D P7 : 5-8640-2252-0 --> E G65 : 5-8640-2418-0 --> C (Need only for TAIYO-GIKEN)

	5-8640-2409-0
Fuel feed pump	Electric feed pump: 5-8640-0024-0 Cover assy, feed pump: 5-8640-1927-0

https://truckmanualshub.com/

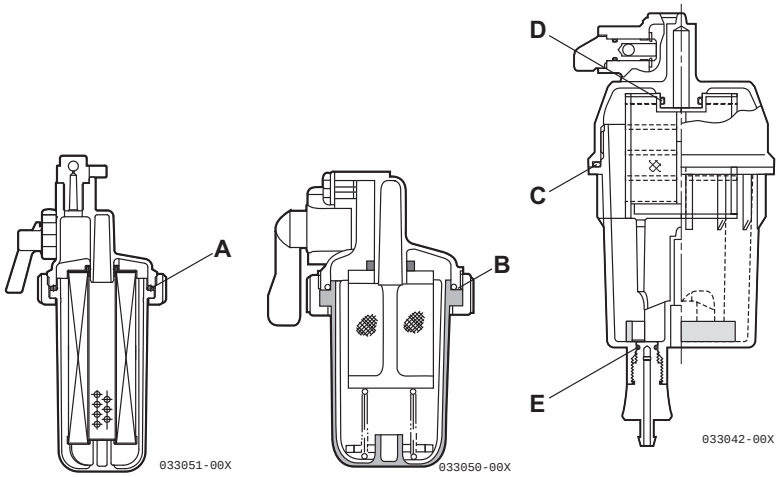

	Part number
A	5-8640-2246-0 (P44)
B	5-8640-2246-0 (P44)
C	5-8640-2251-0 (G75)
D	5-8640-1755-0 (P16)
E	5-8640-2252-0 (P7)

https://truckmanualshub.com/

Filling the Fuel Tank

⚠ DANGER

Fire and Explosion Hazard!

- **Diesel fuel is flammable and explosive under certain conditions.**

- **Only fill the fuel tank with diesel fuel. Filling the fuel tank with gasoline may result in a fire and will damage the engine.**
- **Never refuel with the engine running.**
- **Wipe up all spills immediately.**
- **Keep sparks, open flames or any other form of ignition (match, cigarette, static electric source) well away when refueling.**
- **Never overfill the fuel tank.**
- **Fill the fuel tank. Store any containers containing fuel in a well-ventilated area, away from any combustibles or sources of ignition.**
- **Be sure to place the diesel fuel container on the ground when transferring the diesel fuel from the pump to the container. Hold the hose nozzle firmly against the side of the container while filling it. This prevents static electricity buildup which could cause sparks and ignite fuel vapors.**
- **Never place diesel fuel or other flammable material such as oil, hay or dried grass close to the engine during engine operation or shortly after shutdown.**
- **Before you operate the engine, check for fuel leaks. Replace rubberized fuel hoses every two years or every 2000 hours of engine operation, whichever comes first, even if the engine has been out of service. Rubberized fuel lines tend to dry out and become brittle after two years or 2000 hours of engine operation, whichever comes first.**
- **Failure to comply will result in death or serious injury.**

NOTICE

- Only use diesel fuels recommended by Isuzu for the best engine performance, to prevent engine damage and to comply with EPA/ARB warranty requirements.
- Only use clean diesel fuel.
- Never remove the primary strainer (if equipped) from the fuel tank filler port. If removed, dirt and debris could get into the fuel system causing it to clog.

Note that a typical fuel tank is shown. The fuel tank on your equipment may be different.

1. Clean the area around the fuel cap **(Figure 1, (1))**.
2. Remove the fuel cap from the fuel tank **(Figure 1, (2))**.
3. Observe the fuel level sight gauge **(Figure 1, (3))** and stop filling when gauge shows fuel tank is full. Never overfill the fuel tank.
4. Replace the fuel cap **(Figure 1, (1))**, hand tighten. Over tightening the fuel cap will damage it.

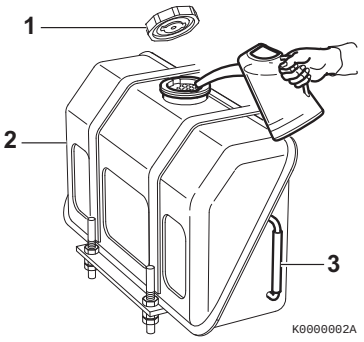

Figure 1

https://truckmanualshub.com/

Priming the Fuel System

⚠ DANGER

Fire and Explosion Hazard!

- **Diesel fuel is flammable and explosive under certain conditions.**

- **If the unit has an electric fuel pump, when you prime the fuel system, turn the key switch to the ON position for 10 to 15 seconds to allow the electric fuel pump to prime the system.**
- **If the unit has a mechanical fuel pump, when you prime the fuel system, operate the fuel priming lever of the mechanical fuel pump several times until the fuel filter cup is filled with fuel.**
- **Failure to comply will result in death or serious injury.**

IDI ENGINE

The fuel system needs to be primed under certain conditions:

- Before starting the engine for the first time
- After running out of fuel and fuel has been added to the fuel tank
- After fuel system maintenance such as changing the fuel filter and draining the water separator, or replacing a fuel system component.

To prime the fuel system if an electric fuel pump is installed:

1. Turn the key to the ON position for 10 to 15 seconds. This will allow the electric fuel pump to prime the fuel system.
2. Never use the starter motor to crank the engine in order to prime the fuel system. This may cause the starter motor to overheat and damage the coils, pinion and/or ring gear.

To prime the fuel system if a mechanical fuel pump is installed:

1. Operate the fuel priming lever **(Figure 2, (1))** several times until the fuel filter cup **(Figure 2, (2))** is filled with fuel.
2. Never use the starter motor to crank the engine in order to prime the fuel system. This may cause the starter motor to overheat and damage the coils, pinion and/or ring gear.

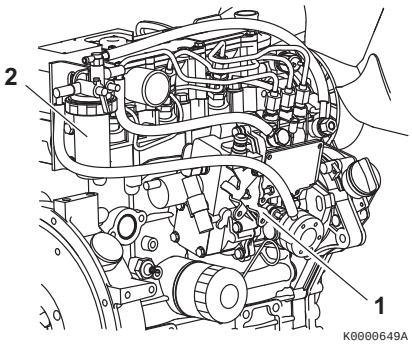

Figure 2

https://truckmanualshub.com/

The fuel system needs to be primed under certain conditions:

- Before starting the engine for the first time
- After running out of fuel and fuel has been added to the fuel tank
- After fuel system maintenance such as changing the fuel filter and draining the water separator, or replacing a fuel system component.

To prime the fuel system:

1. Turn the key to the ON position for 10 to 15 seconds. This will allow the electric fuel pump to prime the fuel system.
2. Never use the starter motor to crank the engine in order to prime the fuel system. This may cause the starter motor to overheat and damage the coils, pinion and/or ring gear.

ENGINE OIL

NOTICE

- Only use the engine oil specified. Other engine oils may affect warranty coverage, cause internal engine components to seize and/or shorten engine life.
- Prevent dirt and debris from contaminating the engine oil. Carefully clean the oil cap/dipstick and the surrounding area before you remove the cap.
- Never mix different types of engine oil. This may adversely affect the lubricating properties of the engine oil.
- Never overfill. Overfilling may result in white exhaust smoke, engine overspeed or internal damage.

Engine Oil Specifications

Use an engine oil that meets or exceeds the following guidelines and classifications:

■ Service categories

- API service categories CD, CF, CF-4, CI-4 (Use an API CF or higher quality oil for electronically controlled engines.)
- ACEA service categories E-3, E-4, and E-5
- JASO service category DH-1

■ Definitions

- API classification (American Petroleum Institute)
- ACEA classification (Association des Constructeurs Européens d’Automobilies)
- JASO (Japanese Automobile Standards Organization)

https://truckmanualshub.com/

Note:

- *Be sure the engine oil, engine oil storage containers, and engine oil filling equipment are free of sediments and water.*
- *Change the engine oil after the first 50 hours of operation and then at every 250 hours thereafter.*
- *Select the oil viscosity based on the ambient temperature where the engine is being operated. See the SAE Service Grade Viscosity Chart* **(Figure 3)**.
- *Isuzu does not recommend the use of engine oil "additives."*

■ Additional technical engine oil requirements:

The engine oil must be changed when the Total Base Number (TBN) has been reduced to 1.0 mgKOH/g. TBN (mgKOH/g) test method; JIS K-201-5.2-2 (HCI), ASTM D4739 (HCI).

Engine Oil Viscosity

Select the appropriate engine oil viscosity based on the ambient temperature and use the SAE service grade viscosity chart in **Figure 3**.

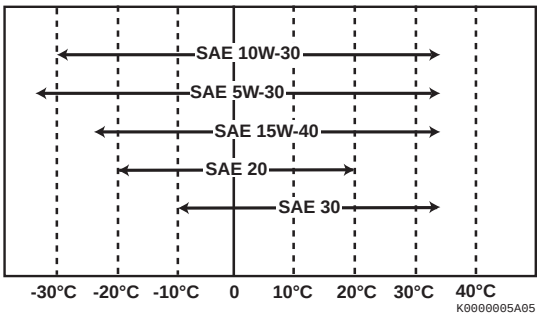

Figure 3

Checking Engine Oil

1. Make sure engine is level.
2. Remove dipstick **(Figure 4, (1))** and wipe with clean cloth.
3. Fully reinsert dipstick.
4. Remove dipstick. The oil level should be between upper **(Figure 4, (2))** and lower **(Figure 4, (3))** lines on the dipstick.
5. Fully reinsert dipstick.

Adding Engine Oil

1. Make sure engine is level.
2. Remove oil cap **(Figure 4, (4))**.
3. Add indicated amount of engine oil at the top or side engine oil filler port **(Figure 4, (5))**.
4. Wait three minutes and check oil level.
5. Add more oil if necessary.
6. Reinstall oil cap **(Figure 4, (4))** and hand-tighten. Over-tightening may damage the cap.

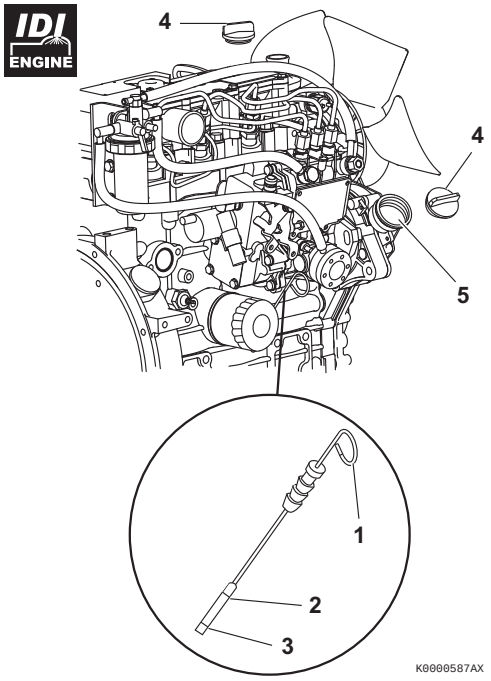

https://truckmanualshub.com/

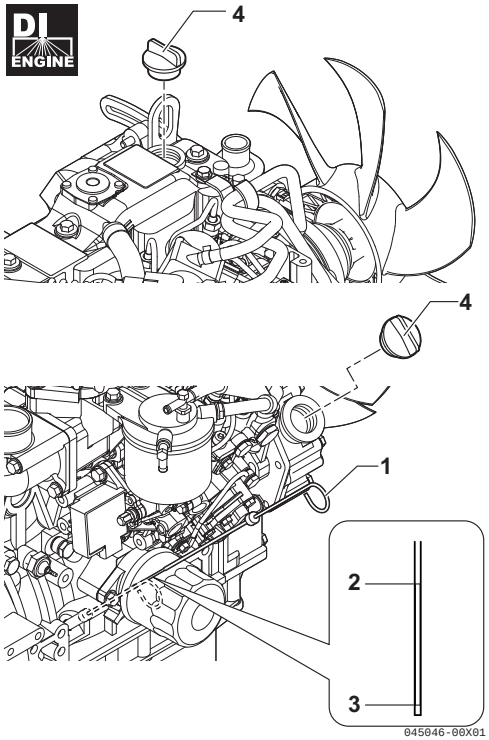

Figure 4

⚠ CAUTION

To refuel the engine oil, refuel slowly after removing the dipstick and both caps. If you refuel rapidly, the oil intrusion to the intake occurs through the PCV valve of the valve cover. It will result in an oil hammer at engine start, which may cause damage to the engine.

Engine Oil Capacity (Typical)

Note: These are the engine oil capacities associated with a "Deep Standard" oil pan. Oil capacity will vary dependent upon which optional oil pan is used. Refer to the operation manual provided by the driven machine manufacturer for the actual engine oil capacity of your machine.

The following are the engine oil capacities for various Isuzu C series engine.

IDI ENGINE **Engine oil capacity (typical)**	
Engine model	**Dipstick upper limit/lower limit**
3CH1-NGZG01 3CH1-SDZP01	3.6/1.9 qt (3.4/1.8 ℓ)
3CJ1-NGZG01	3,0/1,6 qt (2,8/1,5 ℓ)
3CJ1-SDZP01	3.1/1.7 qt (2.9/1.6 ℓ)

DI ENGINE **Engine oil capacity (typical)**	
Engine model	**Dipstick upper limit/lower limit**
3CE1	7.1/4.1 qt (6.7/3.9 ℓ)

https://truckmanualshub.com/

ENGINE COOLANT

⚠ DANGER

Scald Hazard!

- **Never remove the radiator cap if the engine is hot. Steam and hot engine coolant will spurt out and seriously burn you. Allow the engine to cool down before you attempt to remove the radiator cap.**
- **Tighten the radiator cap securely after you check the radiator. Steam can spurt out during engine operation if the cap is loose.**
- **Always check the level of the engine coolant by observing the reserve tank.**
- **Failure to comply will result in death or serious injury.**

⚠ WARNING

Burn Hazard!

- **Wait until the engine cools before you drain the engine coolant. Hot engine coolant may splash and burn you.**
- **Failure to comply could result in death or serious injury.**

⚠ CAUTION

Coolant Hazard!

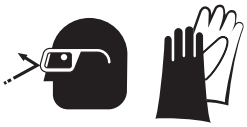

- **Wear eye protection and rubber gloves when you handle long life or extended life engine coolant. If contact with the eyes or skin should occur, flush eyes and wash immediately with clean water.**
- **Failure to comply may result in minor or moderate injury.**

NOTICE

- Only use the engine coolant specified. Other engine coolants may affect warranty coverage, cause an internal buildup of rust and scale and/or shorten engine life.
- Prevent dirt and debris from contaminating the engine coolant. Carefully clean the radiator cap and the surrounding area before you remove the cap.
- Never mix different types of engine coolants. This may adversely affect the properties of the engine coolant.

https://truckmanualshub.com/

Engine Coolant Specifications

Use a Long Life Coolant (LLC) or an Extended Life Coolant (ELC) that meets or exceeds the following guidelines and specifications.

- ASTM D6210, D4985 (US)
- JIS K-2234 (Japan)
- SAE J814C, J1941, J1034 or J2036 (International)

■ Alternative engine coolant

If an Extended or Long Life Coolant is not available, alternatively, you may use an ethylene glycol or propylene glycol based conventional coolant (green).

NOTICE

- Always use a mix of coolant and water. Never use water only.
- Mix coolant and water per the mixing instructions on the coolant container.
- Water quality is important to coolant performance. Isuzu recommends that soft, distilled or demineralized water be used to mix with coolants.
- Never mix extended or long life coolants and conventional (green) coolants.
- Never mix different types and/or colors of extended life coolants.
- Replace the coolant every 1000 engine hours or once a year.

Filling Radiator with Engine Coolant

Fill the radiator and reserve tank as follows. This procedure is for filling the radiator for the first time or refilling it after it is flushed. Note that a typical radiator is illustrated.

1. Check to be sure the radiator drain plug is installed and tightened or the drain valve **(Figure 5, (1))** is closed. Also make sure the coolant drain plug **(Figure 6, (1))** in the cylinder block is closed.

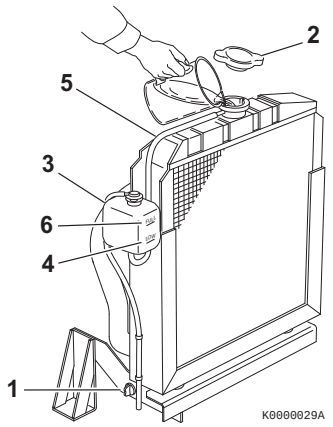

Figure 5

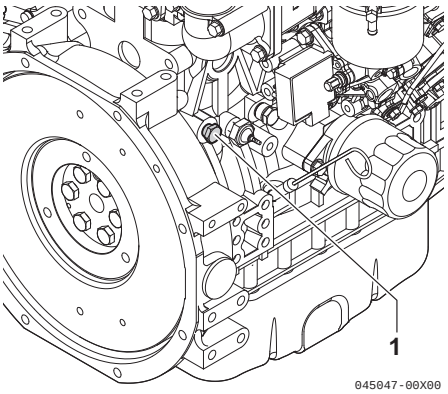

Figure 6

https://truckmanualshub.com/

2. Remove the radiator cap **(Figure 5, (2))** by turning it counterclockwise about 1/3 of a turn.
3. Pour the engine coolant slowly into the radiator until it is even with the lip of the engine coolant filler port. Make sure that air bubbles do not develop as you fill the radiator.
4. Reinstall the radiator cap **(Figure 5, (2))**. Align the tabs on the back side of the radiator cap with the notches on the engine coolant filler port. Press down and turn the cap clockwise about 1/3 of a turn.
5. Remove the cap of the reserve tank **(Figure 5, (3))**, and fill it to the LOW (COLD) mark **(Figure 5, (4))** with engine coolant. Reinstall the cap.
6. Check the hose **(Figure 5, (5))** that connects the reserve tank **(Figure 5, (3))** to the radiator. Be sure it is securely connected and there are no cracks or damage. If the hose is damaged, engine coolant will leak out instead of going into the reserve tank.
7. Run the engine until it reaches operating temperature. Check the level of engine coolant in the reserve tank When the engine is running and the engine coolant is at normal temperature, the coolant level in the reserve tank should be at or neat the FULL (HOT) mark **(Figure 5, (6))**. If the coolant is not at the FULL (HOT) mark, add coolant to the reserve tank to bring the coolant level to the FULL (HOT) mark.

Daily Check of the Cooling System

1. Check the level of engine coolant in the reserve tank. When the engine is cold, the coolant level in the tank should be at or slightly above the LOW (COLD) mark **(Figure 5, (4))** on the coolant reserve tank.

   If the coolant level is at the FULL (HOT) mark **(Figure 5, (6))** when the engine is cold, the coolant will expand when it becomes hot and possibly spray out of the overflow hose.
2. Add additional engine coolant to the reserve tank if necessary.
3. Check the radiator hoses for cracks, abrasions, cuts or other damage. Replace as necessary.

Engine Coolant Capacity (Typical)

Note: Capacities listed are for the engine only without a radiator. Refer to the operation manual provided by the driven machine manufacturer for actual engine coolant capacity on your machine.

The following are the engine coolant capacities for various Isuzu C series engine.

IDI ENGINE **Engine coolant capacity (typical)**	
Engine model	**Engine coolant capacity**
3CH1-NGZG01 3CH1-SDZP01	1.0 qt (0.9 ℓ)
3CJ1-NGZG01	1.0 qt (0.9 ℓ)
3CJ1-SDZP01	1.1 qt (1.0 ℓ)

DI ENGINE **Engine coolant capacity (typical)**	
Engine model	**Engine coolant capacity**
3CE1	2.1 qt (2.0 ℓ)

https://truckmanualshub.com/

DAILY CHECKS

Before you begin any job, make sure the Isuzu C series engine is in good operating condition. Make sure you check the following items before you start your shift and have any repairs completed before you start work.

⚠ WARNING

High-Pressure Hazard!

- **Avoid skin contact with the high-pressure diesel fuel spray caused by a fuel system leak such as a broken fuel injection line. High-pressure fuel can penetrate your skin and result in serious injury. If you are exposed to high-pressure fuel spray, obtain prompt medical treatment.**
- **Never check for a fuel leak with your hands. Always use a piece of wood or cardboard. Have your Isuzu Distributor repair the damage.**
- **Failure to comply could result in death or serious injury.**

NOTICE

Make it a habit to perform daily checks. *See Daily Checks in the Before You Operate Section of this manual.*

Periodic maintenance prevents unexpected downtime, reduces the number of accidents due to poor machine performance and helps extend the life of the engine.

Visual Checks

1. Check for engine oil leaks.
2. Check for fuel leaks.
3. Check for engine coolant leaks.
4. Check for damaged or missing parts.
5. Check for loose, missing or damaged fasteners.
6. Check the electrical harnesses for cracks, abrasions, and damaged or corroded connectors.
7. Check hoses for cracks, abrasions, and damaged, loose or corroded clamps.
8. Check and clean radiator fins as necessary. *See Check and clean radiator fins on page 76.*
9. Check the water separator for presence of water and contaminants. If you find any water or contaminants, drain the water separator. *See Drain water separator on page 71*. If you have to drain the water separator frequently, drain the fuel tank and check for the presence of water in your fuel supply. *See Drain fuel tank on page 75*.

NOTICE

If any problem is noted during the visual check, the necessary corrective action should be taken before you operate the engine.

Check Diesel Fuel, Engine Oil and Engine Coolant Levels

Follow the procedures in *Diesel Fuel on page 36*, *Engine Oil on page 43* and *Engine Coolant on page 46* to check these levels.

Check Engine Speed Control

Check the engine speed control for smooth operation, adjust and lubricate or clean as necessary. *See Check and adjust the governor lever and engine speed control (except electronically controlled engines) on page 77*.

https://truckmanualshub.com/

Check Operator's Console

Before you operate the engine you should make sure that all of the indicators are functioning properly.

Check Indicators

Isuzu C series engine are available with various operator's consoles. In the below Figures, three types of typical operator's console including the one for electronic controlled engines are shown as examples.

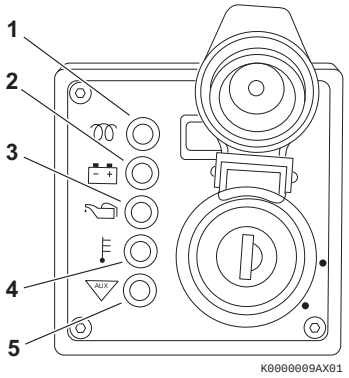

Figure 7

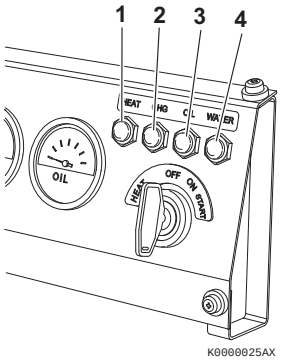

Figure 8

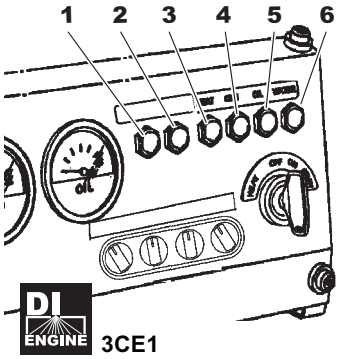

Figure 9

HEAT

Figure 8 shows a typical indicator arrangement on the operator's console. With the specification of standard glow (preheat), as you turn the key switch to the HEAT position, the HEAT indicator is turned on for 4 seconds, showing that the glow plugs are energized. When the indicator goes off, turn the key switch to START position and start the engine. In the case of 3CE1 (DI), the indicator goes off after 15 seconds.

Figure 7 shows an indicator arrangement with the specification for ON-glow. As you turn the key switch to ON position, the HEAT indicator is turned on for 4 seconds. When the indicator goes off, turn the key switch to the START position and start the engine. In the case of 3CE1 (DI), the indicator goes off after 15 seconds.

Figure 9 shows an operator's console of an electronic controlled engine. The electronic controlled engine has an ON-glow specification. Depending on the water temperature, the heat indicator will turn on for 15 seconds at the longest, and preheats the glow plugs. When the indicator goes off, turn the key switch to the START position and start the engine.

https://truckmanualshub.com/

Battery charge (Figure 7, (2)) or **(Figure 8, (2))** or **(Figure 9, (4))** - Stays on until the engine is running and the alternator is supplying charging current. This indicator does not indicate whether the battery is discharged.

Engine oil pressure (Figure 7, (3)) or **(Figure 8, (3))** or **(Figure 9, (5))** - Stays on until the engine is running and the oil pressure is within normal limits.

Engine coolant temperature (Figure 7, (4)) or **(Figure 8, (4))** or **(Figure 9, (6))** - Stays on momentarily. Comes back on if engine overheats.

Auxiliary (Figure 7, (5)) or **(Figure 9, (2))** - Stays on momentarily. Used for special applications.

Here is a summary of how these indicators function. The table shows what happens when you turn the key in a certain direction (e.g., OFF to ON).

Fault indicator (Figure 9, (1)) (optional) - Illuminates for approx. 2 sec. when the key switch is turned to ON, and stays off while the engine is running. If a fault occurs in the Eco-governor system or during energization of the E-ECU, this indicator will flash in a certain pattern to indicate what fault has occurred. See the troubleshooting section for details.

https://truckmanualshub.com/

Indicator			OFF to HEAT	OFF to ON	ON to OFF
HEAT **Figure 7, (1)** **Figure 8, (1)** **Figure 9, (3)**	ON-glow type	Glow	NA	IDI (3CH1, 3CJ1) turns off after indicating for 4 seconds. DI (3CE1) turns off after indicating for 15 seconds. Note that, for electronic control type engines (3CE1), the indicators are controlled from 1 to 15 seconds depending on the temperature of cooling water.	OFF
	HEAT position available on key switch	Glow	IDI (3CH1, 3CJ1) turns off after indicating for 4 seconds. DI (3CE1) turns off after indicating for 15 seconds.	OFF	OFF
Battery charge **Figure 7, (2)** **Figure 8, (2)** **Figure 9, (4)**			NA	ON	OFF (Stays on until alternator is supplying charging current. Remains on if there is a problem in the charging system. This indicator does not indicate whether the battery is discharged.)
Engine oil pressure **Figure 7, (3)** **Figure 8, (3)** **Figure 9, (5)**			NA	ON	OFF (Stays on until oil pressure reaches normal operating pressure. Remains on, or comes back on, if there is a problem in the lubrication system.)
Engine coolant temperature **Figure 7, (4)** **Figure 8, (4)** **Figure 9, (6)**			NA	ON	OFF (Stays on momentarily. Comes back on if there is a problem in the cooling system.)
Auxiliary **Figure 7, (5)** **Figure 9, (2)**			NA	ON	OFF
Fault (optional) **Figure 9, (1)** 3CE1			NA	Lights for 2 sec. only.	OFF (Flashes or intermittently lights if a fault occurs in the E-ECU or Eco-governor.)

https://truckmanualshub.com/

ENGINE OPERATION

This section of the Operation Manual describes the procedures for starting the engine, checking engine performance during operation, and shutting the engine down.

https://truckmanualshub.com/

STARTING ENGINE

Use the following procedure to start the engine. Note that two typical operator's consoles are shown for illustrative purposes only.

1. Make sure you follow the procedures stated in the *Daily Checks on page 49*.
2. Before first starting electronically controlled engines 3CE1: The E-ECU of the electronically controlled engines shown above needs to be initialized at initial power up. When the fault indicator comes on at initial power up, the E-ECU has finished initialization. Then always turn the key switch to the OFF position once before starting the engine. (The E-ECU has usually been initialized before the driven machine is delivered).
   From the second power up, make sure the fault indicator is on for 2 sec. when turning the key switch to the ON position.
3. Make sure the water separator fuel valve **(Figure 1, (1))** is in the ON position **(Figure 1, (2))**.

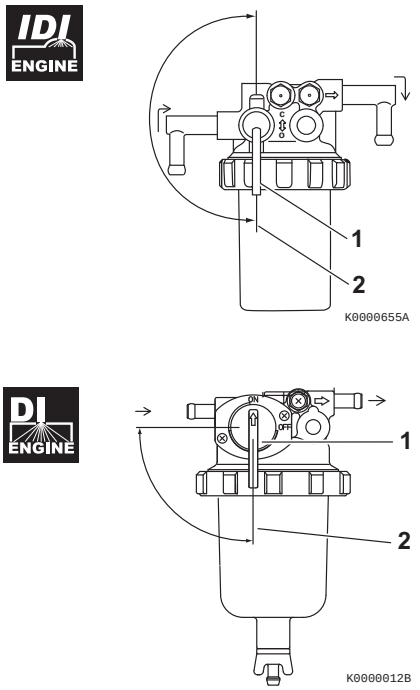

Figure 1

4. Set the transmission (if equipped) in the NEUTRAL position.
5. Disengage the PTO (if equipped).
6. Set the engine speed control to the mid-position.

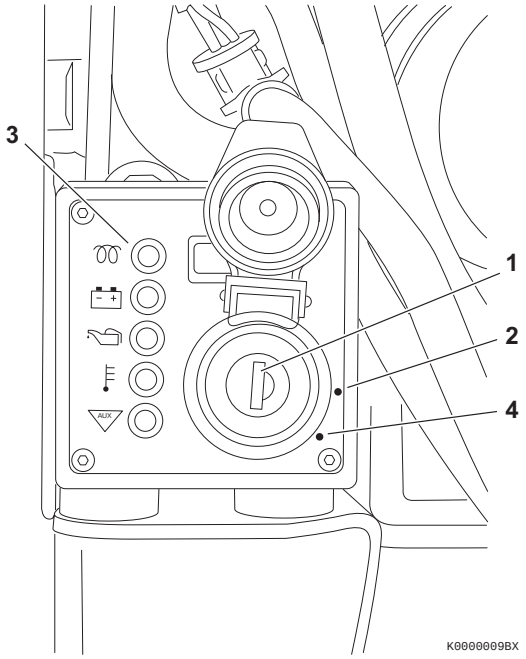

Figure 2

NOTICE

Never use an engine starting aid such as ether. Engine damage will result.

7. Insert the key into the key switch **(Figure 2, (1))** or **(Figure 3, (1))**.

https://truckmanualshub.com/

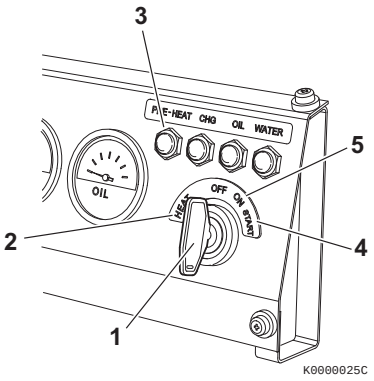

Figure 3

8. Turn the key to the ON position **(Figure 2, (2))** or the HEAT position **(Figure 3, (2))**. The pre-heat indicator **(Figure 2, (3))** flashes for several seconds and then goes out. After the pre-heat indicator goes out you can start the engine.

   Note: The glow plugs are used to assist starting in cold weather conditions. If you are operating your engine in normal or warm weather conditions, you may bypass the Pre-Heat/Heat functions and go directly to Start.

NOTICE

Never hold the key in the START position for longer than 15 seconds or the starter motor will overheat.

9. Turn the key clockwise to the START position **(Figure 2, (4))** or **(Figure 3, (4))**. Release the key as soon as the engine starts. It will return to the ON position **(Figure 2, (2))** or **(Figure 3, (5))**.

   Note: The starter of electronically controlled engines 3CE1 will start with a delay of approx. 0.5 sec. after the key switch has been turned to the ON position. This is because the E-ECU self-diagnostics has run and is not a failure.

10. If the engine fails to start:
    1- Wait until the engine comes to a complete stop before you attempt to start it again. Engaging the starter while the engine is still rotating will result in damage to the starter and flywheel.

    Note: Some key switches are equipped with an interlock that will not allow you to re-engage the starter without first turning the key to the OFF position.

    2- Wait at least 30 seconds before you attempt to start the engine again. This procedure will allow the battery voltage to recover and prevent damage to the starter motor due to the low battery voltage.

https://truckmanualshub.com/

COLD START DEVICE

WARNING

Sudden Movement Hazard!

- **Engaging the transmission or PTO at an elevated engine speed could result in unexpected movement of the equipment.**
- **Failure to comply could result in death or serious injury.**

The cold start device on direct injection models improves engine starting at lower temperatures.

- If the engine cooling system temperature is below 5 °C (41 °F), the cold start device automatically advances the fuel injection timing and slightly increases the fuel injection volume.
- The engine idle speed will be slightly elevated for approximately the first 5 minutes of operation.
- When the cold start device is activated, you may notice a slight increase in the amount of exhaust smoke. This is normal.
- Never engage the transmission or PTO while the cold start device is activated or unexpected movement of the machine may result.

HIGH-ALTITUDE INJECTION CONTROL DEVICE

3CH1, 3CJ1

This series has a high-altitude injection control device installed. It suppresses black smoke when operating at high altitudes and at the same time aims to control particulate matter.

The device consists of an output control solenoid that is attached to the fuel injection pump and a solenoid driver (with an atmospheric pressure sensor) that is assembled on the implement side. The output control solenoid actuates at engine start. (It does not actuate during engine operation.) At engine start, the starter operates and the engine starts running. 4 seconds after the starter turns off, the solenoid driver measures the atmospheric pressure and determines whether to actuate the solenoid. (The solenoid is energized during normal operation, but it is turned off during the start of the control device.) If at this time the atmospheric pressure sensor determines that the altitude is 2624 ft (800 m) or more, the control device operates. It reduces the fuel injection amount and thus controls the occurrence of black smoke. Because of this reduction in the injection amount, the output decreases. At 5500 ft (1676 m), the decrease in output (i.e. torque) is 20 % of the maximum at low altitudes. Therefore, only apply medium to low load when operating at high altitudes.

NOTICE

The injection control device does not actuate during engine operation. (Switch operation is not performed.) Therefore, when the control device is not yet operating and the machine is moved to a high altitude during operation, or when the control device is already operating and the machine is moved to a low altitude, turn the key switch to OFF (engine stop). This resets the control device. After re-starting the engine, the necessity for injection control is again determined.

https://truckmanualshub.com/

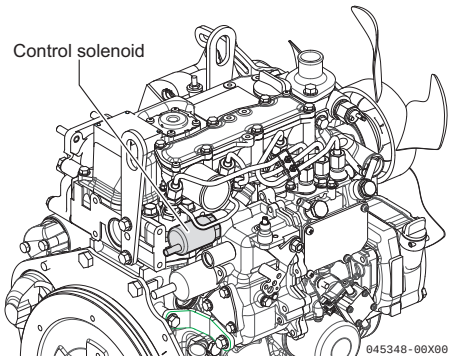

Figure 4

CHECKING THE ENGINE DURING OPERATION

⚠ WARNING

High-Pressure Hazard!

- **Avoid skin contact with the high-pressure diesel fuel spray caused by a fuel system leak such as a broken fuel injection line. High-pressure fuel can penetrate your skin and result in serious injury. If you are exposed to high-pressure fuel spray, obtain prompt medical treatment.**
- **Never check for a fuel leak with your hands. Always use a piece of wood or cardboard. Have your Isuzu Distributor repair the damage.**
- **Failure to comply could result in death or serious injury.**

NOTICE

Make sure the engine is installed on a level surface. If a continuously running engine is installed at an angle greater than (IDI = 25°, DI = 30°) in any direction or if an engine runs for short periods of time (less than three minutes) at an angle greater than (IDI = 30°, DI = 35°) in any direction, engine oil may enter the combustion chamber causing excessive engine speed and white exhaust smoke. This may cause serious engine damage.

https://truckmanualshub.com/

NOTICE

New engine break-in:

- On the initial engine start-up, allow the engine to idle for approximately 15 minutes while you check for proper engine oil pressure, diesel fuel leaks, engine oil leaks, coolant leaks, and for proper operation of the indicators and/or gauges.
- During the first hour of operation, vary the engine speed and the load on the engine. Short periods of maximum engine speed and load are desirable. Avoid prolonged operation at minimum or maximum engine speeds and loads for the next four to five hours.
- During the break-in period, carefully observe the engine oil pressure and engine temperature.
- During the break-in period, check the engine oil and coolant levels frequently.

NOTICE

Never engage the starter motor while the engine is running. This may damage the starter motor pinion and/or ring gear.

1. While the engine is running, check the gauges for normal indications. The gauges shown in **Figure 6** and **Figure 5** are provided for illustrative purposes only.

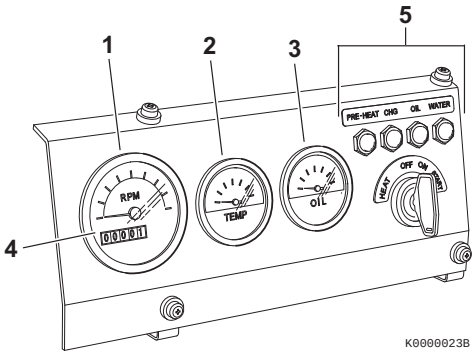

Figure 5

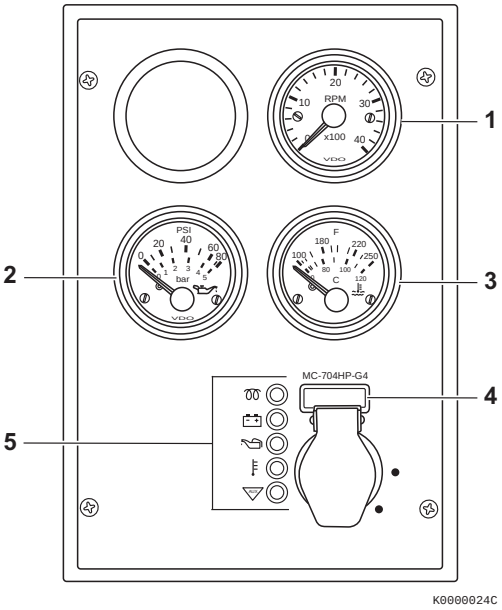

Figure 6

- **Tachometer (Figure 6, (1))** or **(Figure 5, (1))** -Make sure the engine speed is within normal limits.
- **Engine oil pressure (Figure 6, (2))** or **(Figure 5, (3))** - Make sure the engine oil pressure is within normal limits. *See Principal Engine Specifications on page 105.*
- **Engine coolant temperature (Figure 6, (3))** or **(Figure 5, (2))** - Make sure the engine coolant temperature is within normal limits.
- **Hour meter** - The hour meter display **(Figure 6, (4))** or **(Figure 5, (4))** shows the total number of hours the engine has run. This is useful for planning periodic maintenance operations. *See Periodic Maintenance Schedule on page 64*.
- If any of the gauges shows an out of normal limits condition, shut down the engine and have the necessary repairs performed.

https://truckmanualshub.com/

2. After the engine has reached operating temperature, all of the indicators **(Figure 6, (5))** or **(Figure 5, (5))** should be off. If any of the indicators are on, shut down the engine and have the necessary repairs performed.
3. Check for white or black smoke from the exhaust system. A small amount of white exhaust smoke is normal on start-up of a cold engine. Black exhaust smoke could mean the engine is overloaded or is being over-fueled. If either of these conditions persists, contact your Isuzu Distributor.
4. Check for abnormal sounds or vibration. In some applications the engine and its mounting may start to resonate and cause unusual vibrations at certain engine speeds. Avoid running the engine at these speeds. If the abnormal sounds or vibration cannot be resolved, shut down the engine and have the necessary repairs performed. Contact your Isuzu Distributor.
5. Check for any fuel, engine coolant or engine oil leaks. If any leaks are found shut down the engine and have the necessary repairs performed.
6. Check the fuel level during operation. If the fuel level runs low, stop the engine and refuel.

ADJUST ENGINE SPEED

NOTICE

New engine break-in:

- On the initial engine start-up, allow the engine to idle for approximately 15 minutes while you check for proper engine oil pressure, diesel fuel leaks, engine oil leaks, coolant leaks, and for proper operation of the indicators and/or gauges.
- During the first hour of operation, vary the engine speed and the load on the engine. Short periods of maximum engine speed and load are desirable. Avoid prolonged operation at minimum or maximum engine speeds and loads for the next four to five hours.
- During the break-in period, carefully observe the engine oil pressure and engine temperature.
- During the break-in period, check the engine oil and coolant levels frequently.

Use the engine speed control to adjust the engine speed for the task that will be performed.

https://truckmanualshub.com/

SHUTTING DOWN THE ENGINE

NOTICE

For maximum engine life, Isuzu recommends that when shutting the engine down, you allow the engine to idle, without load, for five minutes. This will allow the engine components that operate at high temperatures, such as the turbocharger (if equipped) and exhaust system, to cool slightly before the engine itself is shut down.

Follow these steps to shut down the engine:

1. Disengage the PTO and/or set the transmission to NEUTRAL (if equipped).
2. Set the engine speed control to its lowest setting.
3. Run the engine at low idle speed for at least five minutes before you shut it down.

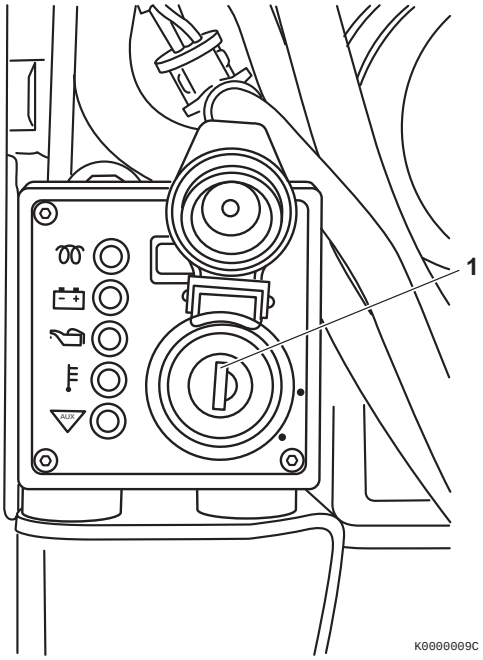

Figure 7

4. Turn the key to the OFF position **(Figure 7, (1))** or **(Figure 8, (1))** and remove it from the key switch.

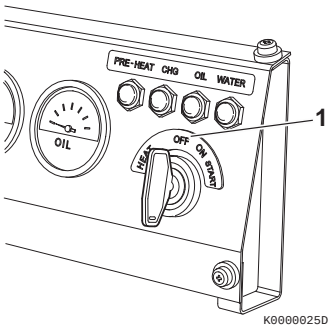

Figure 8

5. If the engine will not be used for six months or longer, follow the additional instructions in *Long-Term Storage on page 99*.

https://truckmanualshub.com/

PERIODIC MAINTENANCE

This section of the Operation Manual describes the procedures for proper care and maintenance of the engine.

https://truckmanualshub.com/

PRECAUTIONS

The Importance of Periodic Maintenance

Engine deterioration and wear occurs in proportion to length of time the engine has been in service and the conditions the engine is subject to during operation. Periodic maintenance prevents unexpected downtime, reduces the number of accidents due to poor machine performance and helps extend the life of the engine.

Performing Periodic Maintenance

⚠ WARNING

Exhaust Hazard!

- **Never operate the engine in an enclosed area such as a garage, tunnel, underground room, manhole or ship's hold without proper ventilation.**
- **Never block windows, vents, or other means of ventilation if the engine is operating in an enclosed area. All internal combustion engines create carbon monoxide gas during operation. Accumulation of this gas within an enclosure could cause illness or even death.**
- **Make sure that all connections are tightened to specifications after repair is made to the exhaust system.**
- **Failure to comply could result in death or serious injury.**

Perform periodic maintenance procedures in an open, level area free from traffic. If possible, perform the procedures indoors to prevent environmental conditions, such as rain, wind, or snow, from damaging the machine.

The Importance of Daily Checks

Periodic Maintenance Schedules assume that the daily checks are performed on a regular basis. Make it a habit of performing daily checks before the start of each shift. *See Daily Checks on page 49.*

Keep a Log of Engine Hours and Daily Checks

Keep a log of the number of hours the engine is run each day and a log of the daily checks performed. Also note the date, type of repair (e.g., replaced alternator), and parts needed for any service needed between the periodic maintenance intervals. Periodic maintenance intervals are every 50, 250, 500, 1000, 1500, 2000 and 3000 engine hours. Failure to perform periodic maintenance will shorten the life of the engine.

Isuzu Replacement Parts

Isuzu recommends that you use "Isuzu genuine parts" when replacement parts are needed. Genuine replacement parts help ensure long engine life.

Tools Required

Before you start any periodic maintenance procedure make sure you have the tools you need to perform all of the required tasks.

Ask Your Isuzu Distributor For Help

Our professional service technicians have the expertise and skills to help you with any maintenance or service related procedures you need help with.

Required EPA/ARB Maintenance USA Only

To maintain optimum engine performance and compliance with the Environmental Protection Agency (EPA) Regulations Non-Road Engines and the California Air Resources Board (ARB, California), it is essential that you follow the *Periodic Maintenance Schedule on page 64* and *Periodic Maintenance Procedures on page 66*.

https://truckmanualshub.com/

EPA/ARB Installation Requirements USA Only

The following are the installation requirements for the EPA/ARB. Unless these requirements are met, the exhaust gas emissions will not be within the limits specified by the EPA and ARB.

Therefore, periodically perform the maintenance and cleaning of air cleaner and muffler.

Maximum Exhaust Gas Restriction shall be:

- 3CH1, 3CJ1: 1.71 PSI (11.8 kPa; 1200 mm Aq) or less
- 3CE1: 2.22 PSI (15.3 kPa, 1560 mm Aq) or less

Maximum air intake restriction shall be 0.90 PSI (6.23 kPa; 635 mmAq) or less. Clean or replace the air cleaner element if the air intake restriction exceeds the above mentioned value.

Note: EGR-equipped engines have a range of allowable intake and exhaust restrictions; a minimum and a maximum value.

Tightening Fasteners

Use the correct amount of torque when you tighten fasteners on the machine. Applying excessive torque may damage the fastener or component and not enough torque may cause a leak or component failure.

NOTICE

The tightening torque in the *Standard Torque Chart in the Periodic Maintenance Section of this manual* should be applied only to the bolts with a “7” head. (JIS strength classification: 7T)

- Apply 60 % torque to bolts that are not listed.
- Apply 80 % torque when tightened to aluminum alloy.

STANDARD TORQUE CHART

Thread Size × Pitch mm		M6 × 1.0	M8 × 1.25	M10 × 1.5	M12 × 1.75	M14 × 1.5	M16 × 1.5
Tightening torque	in.-lb	96.0 ± 9.0	–	–	–	–	–
	ft-lb	–	19.0 ± 2.0	36.0 ± 4.0	65.0 ± 7.0	101.0 ± 7.0	167.0 ± 7.0
	N•m	10.8 ± 1.0	25.5 ± 2.9	49.0 ± 4.9	88.3 ± 9.8	137.0 ± 9.8	226.0 ± 9.8
	kgf/m	1.1 ± 0.1	2.6 ± 0.3	5.0 ± 0.5	9.0 ± 1.0	14.0 ± 1.5	23.0 ± 2.0

Note: Torque values shown in this manual are for clean, non-lubricated fasteners unless otherwise specified.

https://truckmanualshub.com/

PERIODIC MAINTENANCE SCHEDULE

Daily and periodic maintenance is important to keep the engine in good operating condition. The following is a summary of maintenance items by periodic maintenance intervals. Periodic maintenance intervals vary depending on engine application, loads, diesel fuel and engine oil used and are hard to establish definitively. The following should be treated only as a general guideline.

NOTICE

Establish a periodic maintenance plan according to the engine application and make sure you perform the required periodic maintenance at intervals indicated. Failure to follow these guidelines will impair the engine's safety and performance characteristics, shorten the engine's life and may affect the warranty coverage on your engine.

Consult your Isuzu Distributor for assistance when checking items marked with a ●.

Periodic Maintenance Chart

○: Check ◇: Replace ●: Contact your Isuzu Distributor

System	Check item	Daily	Periodic maintenance interval						
			Every 50 hours	Every 250 hours	Every 500 hours	Every 1000 hours	Every 1500 hours	Every 2000 hours	Every 3000 hours
Cooling system	Check and refill engine coolant	○							
	Check and clean radiator fins			○					
	Check and adjust cooling fan V-belt		○ 1st time	○ 2nd and after					
	Change coolant					◇ or every 1 year which-ever comes first			
Cylinder head	Check and adjust intake/exhaust valve clearance					●			
Electrical equipment	Check indicators	○							
	Check battery and recharge		○						
Engine oil	Check engine oil level	○							
	Drain and fill engine oil		◇ 1st time	◇ 2nd and after					
	Replace engine oil filter								

https://truckmanualshub.com/

○: Check ◇: Replace ●: Contact your Isuzu Distributor

System	Check item	Daily	Periodic maintenance interval						
			Every 50 hours	Every 250 hours	Every 500 hours	Every 1000 hours	Every 1500 hours	Every 2000 hours	Every 3000 hours
Engine speed control	Check and adjust governor lever and engine speed control	○		○					
Emission control warranty	Inspect, clean and test fuel injection nozzle, if necessary						●		
	DI ENGINE Inspect, clean and test EGR valve								●
	Inspect crankcase breather system						●		
Fuel	Check and refill fuel tank level	○							
	Drain fuel tank			○					
	Drain water separator		○						
	Check water separator	○							
	Clean water separator				○				
	Replace fuel filter				◇				
Hoses	Check and replace fuel hoses and engine coolant hoses							◇ or every 2 years.	
Intake and exhaust	Clean or replace air cleaner element			○	◇				
Complete engine	Overall visual check daily	○							

Note: These procedures are considered normal maintenance and are performed at the owner's expense.

https://truckmanualshub.com/

PERIODIC MAINTENANCE PROCEDURES

After Initial 50 Hours of Operation

Perform the following maintenance after the initial 50 hours of operation.

- **Replace engine oil and engine oil filter**
- **Check and adjust cooling fan V-belt**

■ Replace engine oil and engine oil filter

⚠ WARNING

Burn Hazard!

- **If you must drain the engine oil while it is still hot, stay clear of the hot engine oil to avoid being burned.**
- **Always wear eye protection.**
- **Failure to comply could result in death or serious injury.**

⚠ WARNING

Sudden Movement Hazard!

- **Engaging the transmission or PTO at an elevated engine speed could result in unexpected movement of the equipment.**
- **Failure to comply could result in death or serious injury.**

NOTICE

- Only use the engine oil specified. Other engine oils may affect warranty coverage, cause internal engine components to seize and/or shorten engine life.
- Prevent dirt and debris from contaminating the engine oil. Carefully clean the oil cap/dipstick and the surrounding area before you remove the cap.
- Never mix different types of engine oil. This may adversely affect the lubricating properties of the engine oil.
- Never overfill. Overfilling may result in white exhaust smoke, engine overspeed or internal damage.

NOTICE

- Always be environmentally responsible.
- Follow the guidelines of the EPA or other governmental agencies for the proper disposal of hazardous materials such as engine oil, diesel fuel and engine coolant. Consult the local authorities or reclamation facility.
- Never dispose of hazardous materials irresponsibly by dumping them into a sewer, on the ground, or into ground water or waterways.
- Failure to follow these procedures may seriously harm the environment.

https://truckmanualshub.com/

The engine oil on a new engine becomes contaminated from the initial break-in of internal parts. It is very important that the initial oil change is performed as scheduled.

Note: The oil drain plug may be in another location if an optional oil pan is used.

Drain the engine oil as follows:

1. Make sure the engine is level.
2. Start the engine and bring it up to operating temperature.
3. Stop the engine.
4. Remove one of the oil filler caps **(Figure 1, (1))** to vent the engine crankcase and allow the engine oil to drain more easily.
5. Position a container under the engine to collect waste oil.

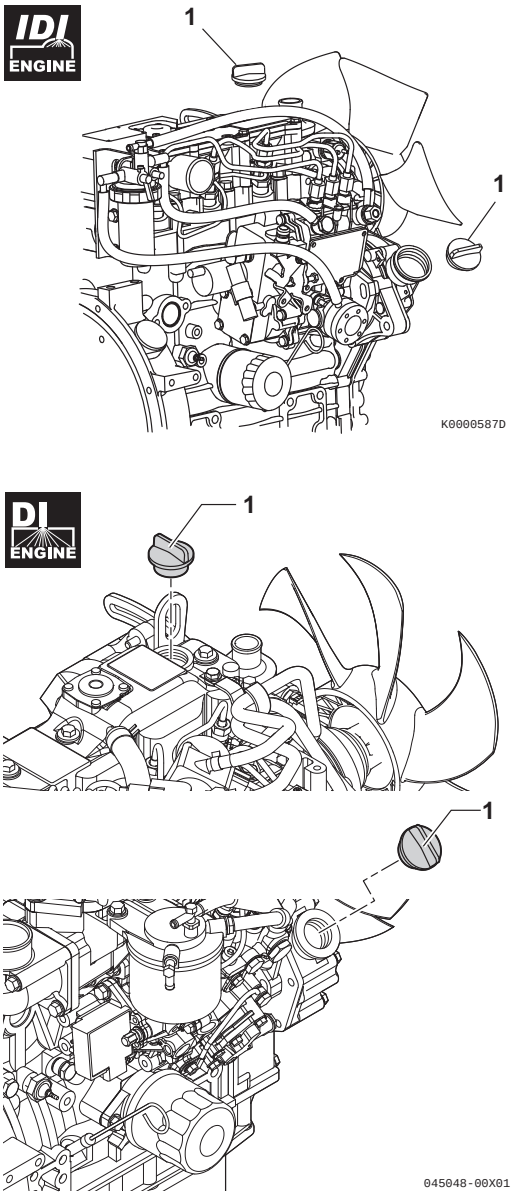

Figure 1

https://truckmanualshub.com/

6. Remove the oil drain plug **(Figure 2, (1))** from the engine oil pan. Allow oil to drain.
7. After all oil has been drained from the engine, reinstall the oil drain plug **(Figure 2, (1))** and tighten to 40 - 47 ft-lb (53.9 - 63.7 N·m, 5.5 - 6.5 kgf/m).
8. Dispose of used oil properly.

■ Replace the engine oil filter

⚠ CAUTION

To refuel the engine oil, refuel slowly after removing the dipstick and both caps. If you refuel rapidly, the oil intrusion to the intake occurs through the PCV valve of the valve cover. It will result in an oil hammer at engine start, which may cause damage to the engine.

1. Turn the engine oil filter **(Figure 2, (2))** counterclockwise **(Figure 2, (3))** using an oil filter wrench.
2. Clean the engine oil filter mounting face.
3. Lightly coat the gasket on the new oil filter with engine oil. Install the new engine oil filter manually by turning it clockwise **(Figure 2, (4))** until it contacts the mounting surface. Tighten to 14 - 17 ft-lb (19.6 - 23.5 N·m, 2.0 - 2.4 kgf/m) or one additional turn using the oil filter wrench.

IDI ENGINE **Engine oil filter part No.**	
Engine model	**Part No.**
3CH1, 3CJ1	5-8640-0632-0 (68×65L)

DI ENGINE **Engine oil filter part No.**		
Engine model	**Part No.**	
	Standard	**Dust proof***
3CE1	5-8640-1515-0 (80×80L)	5-8640-1495-0 (80×100L)

** Consult the operation manual for the driven machine for applicability of the dust proof filter.*

4. Add new engine oil to the engine through either of the oil filler ports as specified in *Adding Engine Oil on page 44*.

NOTICE

- Never overfill the engine with engine oil.
- Always keep the oil level between the upper and lower lines on the oil cap/dipstick.

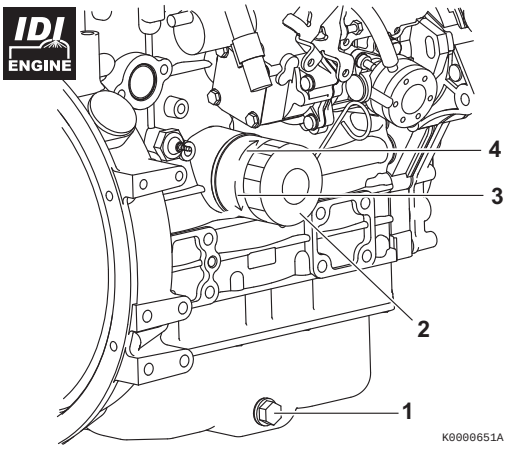

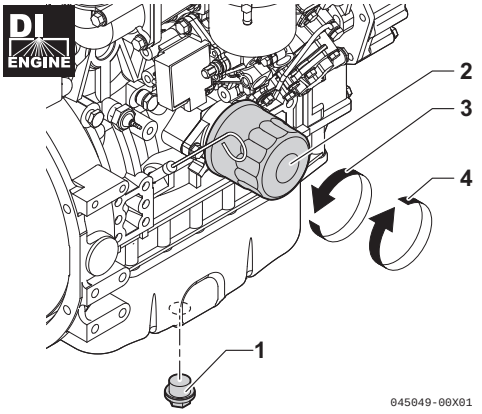

Figure 2

5. Warm up the engine by running it for 5 minutes and check for any engine oil leaks.
6. After engine is warm, shut it off and let it sit for 10 minutes.
7. Recheck the engine oil level.
8. Add engine oil to engine oil filler port **(Figure 3, (5))** as needed until the level is between the upper **(Figure 3, (2))** and lower lines **(Figure 3, (3))** shown on the dipstick **(Figure 3, (1))**.

https://truckmanualshub.com/

9. Reinstall the oil filler cap **(Figure 3, (4))**. If any engine oil is spilled, wipe it away with a clean cloth.

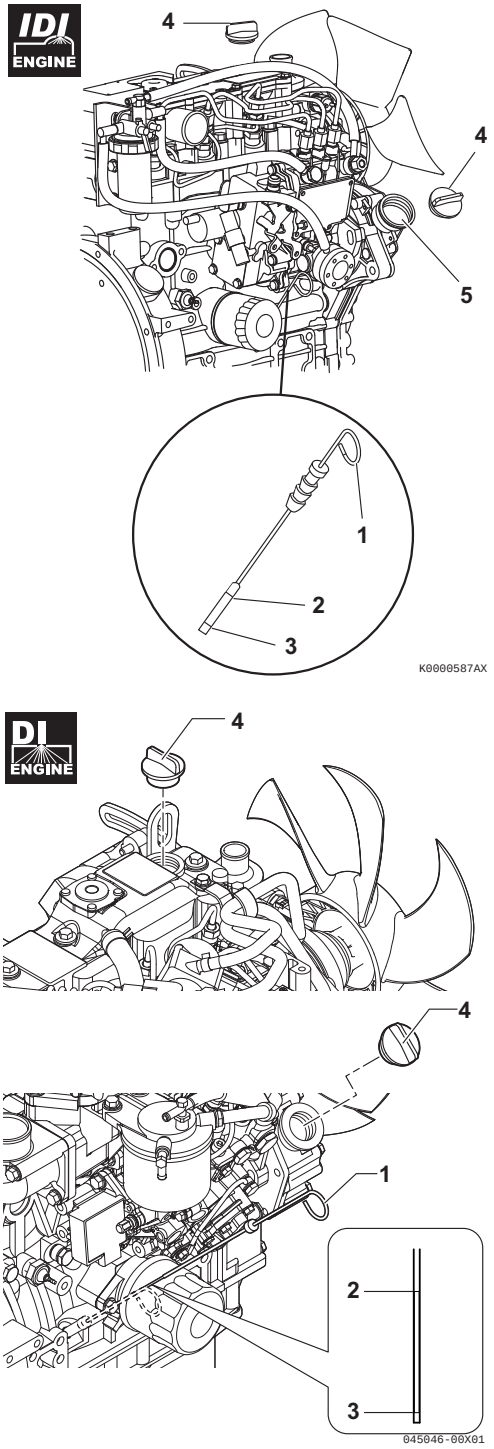

Figure 3

■ Check and adjust cooling fan V-belt

The V-belt will slip if it does not have the proper tension. This will prevent the alternator from generating sufficient power. Also, the engine will overheat due to the engine coolant pump pulley slipping.

Check and adjust the V-belt tension (deflection) as follows:

1. Press the V-belt down with your thumb with a force of approximately 22 ft-lb (98 N·m, 10 kgf/m) to check the deflection.

   There are three positions to check for V-belt tension **(Figure 4, (A), (B) and (C))**. You can check the tension at whichever position is the most accessible. The proper deflection of a used V-belt at each position is:

Used V-belt tension		
A	**B**	**C**
3/8 - 1/2 in. (10 - 14 mm)	1/4 - 3/8 in. (7 - 10 mm)	5/16 - 1/2 in. (9 - 13 mm)

Note: A "Used V-Belt" refers to a V-belt which has been used on a running engine for five minutes or more.

https://truckmanualshub.com/

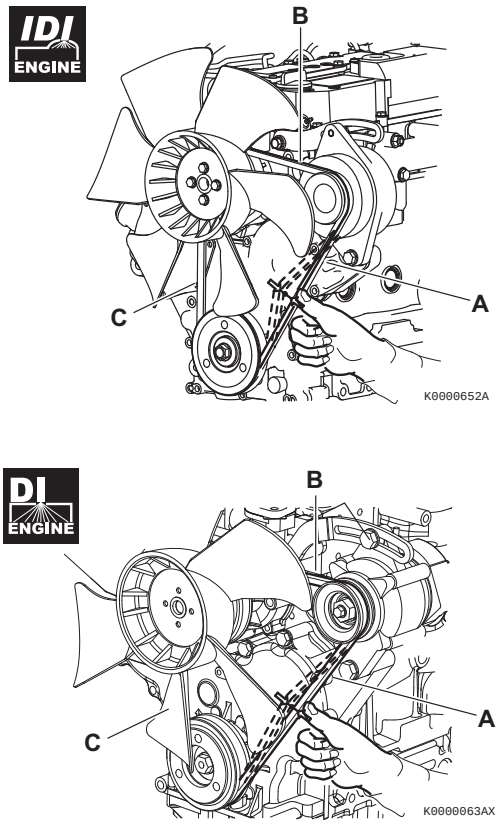

Figure 4

2. If necessary, adjust the V-belt tension. Loosen the adjusting bolt **(Figure 5, (1))** and related bolts and/or nuts, then move the alternator **(Figure 5, (2))** with a pry bar **(Figure 5, (3))** to tighten the V-belt to the desired tension. Then tighten the adjusting bolts and/or nuts.

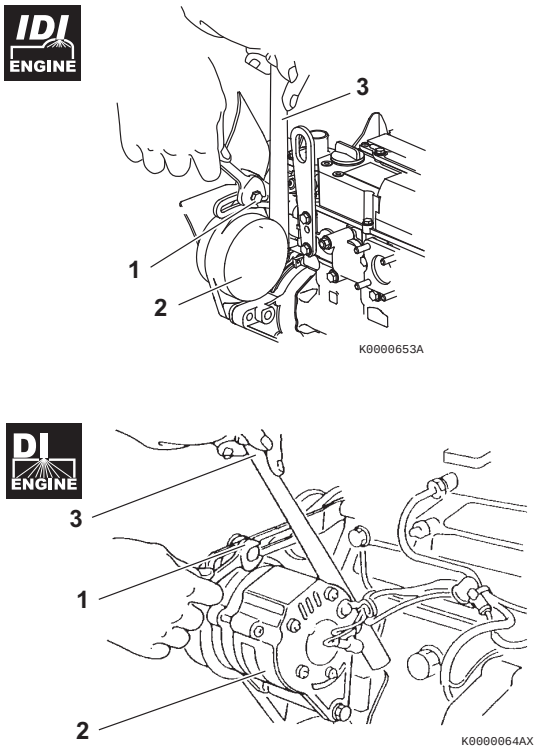

Figure 5

3. Tighten the V-belt to the proper tension. There must be clearance **(Figure 6, (1))** between the V-belt and the bottom of the pulley groove. If there is no clearance **(Figure 6, (2))** between the V-belt and the bottom of the pulley groove, replace the V-belt.

https://truckmanualshub.com/
TNV_OperationManual_T4(under 19kW).book Page 71 Wednesday, June 17, 2015 11:23 AM

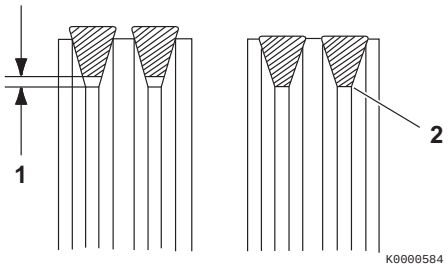

Figure 6

4. Check the V-belt for cracks, oil or wear. If any of these conditions exist, replace the V-belt.
5. Install the new V-belt. Refer to the table for proper tension.

New V-belt tension		
A	B	C
5/16 - 7/16 in. (8 - 12 mm)	3/16 - 5/16 in. (5 - 8 mm)	1/4 - 7/16 in. (7 - 11 mm)

6. After adjusting, run the engine for 5 minutes or more. Check the tension again using the specifications for a used V-belt.

Used V-belt tension		
A	B	C
3/8 - 1/2 in. (10 - 14 mm)	1/4 - 3/8 in. (7 - 10 mm)	5/16 - 1/2 in. (9 - 13 mm)

Every 50 Hours of Operation

After you complete the initial 50 hour maintenance procedures, perform the following procedures every 50 hours thereafter.

- **Drain water separator**
- **Check battery**

■ Drain water separator

⚠ DANGER

Fire and Explosion Hazard!

- **Diesel fuel is flammable and explosive under certain conditions.**

- **When you remove any fuel system component to perform maintenance (such as changing the fuel filter) place an approved container under the opening to catch the fuel.**
- **Never use a shop rag to catch the fuel. Vapors from the rag are flammable and explosive.**
- **Wipe up any spills immediately.**
- **Wear eye protection. The fuel system is under pressure and fuel could spray out when you remove any fuel system component.**
- **Failure to comply will result in death or serious injury.**

NOTICE

If no water drips when the water separator drain valve is opened, loosen the air vent screw on the top of the water separator by using a screwdriver to turn it counterclockwise 2 - 3 turns.

This may occur if the water separator is positioned higher than the fuel level in the fuel tank. After draining the water separator, be sure to tighten the air vent screw.

https://truckmanualshub.com/

NOTICE

- Always be environmentally responsible.

- Follow the guidelines of the EPA or other governmental agencies for the proper disposal of hazardous materials such as engine oil, diesel fuel and engine coolant. Consult the local authorities or reclamation facility.
- Never dispose of hazardous materials irresponsibly by dumping them into a sewer, on the ground, or into ground water or waterways.
- Failure to follow these procedures may seriously harm the environment.

Drain the water separator whenever there are contaminants, such as water, collected in the bottom of the cup. Never wait until the scheduled periodic maintenance if contaminants are discovered.

The separator cup is made from semi-transparent material. In the cup is a red-colored float ring. The float ring will rise to the surface of the water to show how much needs to be drained. Also, some optional water separators are equipped with a sensor to detect the amount of contaminants. This sensor sends a signal to an indicator to alert the operator.

IDI ENGINE Drain the water separator as follows:

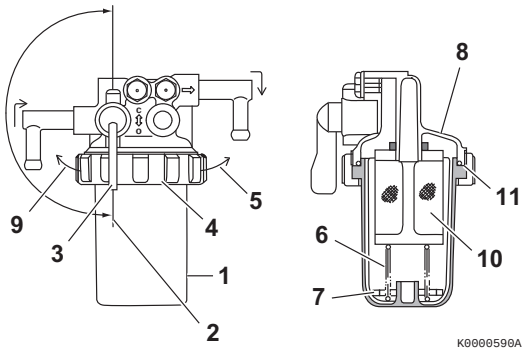

Figure 7

1. Position an approved container under the water separator **(Figure 7, (1))** to collect the contaminants.
2. Close **(Figure 7, (2))** the fuel valve **(Figure 7, (3))**.
3. Turn the retaining ring **(Figure 7, (4))** to the left **(Figure 7, (9))**.
4. Carefully remove the cup **(Figure 7, (1))**. Remove the retaining spring **(Figure 7, (6))** and float **(Figure 7, (7))** from the cup. Pour the fuel into an approved container and dispose of waste properly. Hold the bottom of the cup with a shop towel to prevent the fuel from dripping. Wipe up any spills immediately.
5. Clean the inside of the cup.
6. Inspect the condition of the mesh filter **(Figure 7, (10))**. Clean the mesh filter if necessary.
7. Inspect the condition of the O-ring **(Figure 7, (11))**. Replace the O-ring if necessary.
8. Put the float **(Figure 7, (7))** and retaining spring **(Figure 7, (6))** inside the cup.

https://truckmanualshub.com/

9. Reinstall the cup to the mounting flange **(Figure 7, (8))** and turn the retaining ring **(Figure 7, (4))** to the right **(Figure 7, (5))**. hand-tighten only.
10. Open the fuel valve **(Figure 7, (3))**.
11. Be sure to prime the diesel fuel system when you are done. *See Priming the Fuel System on page 42*.
12. Check for fuel leaks.

DI ENGINE Drain the water separator as follows:

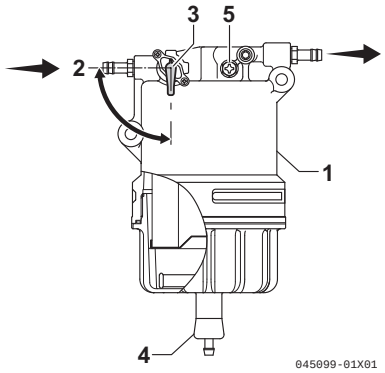

Figure 8

1. Position an approved container under the water separator **(Figure 8, (1))** to collect water and contaminants drained from the water separator.
2. Close **(Figure 8, (2))** the fuel valve **(Figure 8, (3))**.
3. Open the drain valve **(Figure 8, (4))** at the bottom of the water separator. Drain any water collected inside. If no water comes out, loosen the air vent screw **(Figure 8, (5))** at the top of the water separator by turning it counterclockwise 2 - 3 turns.
4. If still no water comes out, open the fuel valve **(Figure 8, (3))**.
5. After draining the water separator, hand-tighten the drain valve.

Tightening torque	1 - 2 N·m (0.1 - 0.2 kgf·m)

6. Be sure to tighten the air vent screw if it is loosened.
7. Open the fuel valve.
8. Be sure to prime the diesel fuel system. *See Priming the Fuel System on page 42*.
9. Check for fuel leaks.

■ Check battery and recharge

⚠ DANGER

Explosion Hazard!

- **Never short out the battery terminals, including when checking the remaining battery charge. This will result in a spark and may cause an explosion or fire. Use a hydrometer to check the remaining battery charge.**
- **If the electrolyte is frozen, slowly warm the battery before you recharge it.**
- **Failure to comply will result in death or serious injury.**

⚠ WARNING

Burn Hazard!

- **Batteries contain sulfuric acid. Never allow battery fluid to come in contact with clothing, skin or eyes. Severe burns could result. Always wear safety goggles and protective clothing when servicing the battery. If battery fluid contacts the eyes and/or skin, immediately flush the affected area with a large amount of clean water and obtain prompt medical treatment.**
- **Failure to comply could result in death or serious injury.**

https://truckmanualshub.com/

NOTICE

- Always be environmentally responsible.

- Follow the guidelines of the EPA or other governmental agencies for the proper disposal of hazardous materials such as engine oil, diesel fuel and engine coolant. Consult the local authorities or reclamation facility.
- Never dispose of hazardous materials irresponsibly by dumping them into a sewer, on the ground, or into ground water or waterways.
- Failure to follow these procedures may seriously harm the environment.

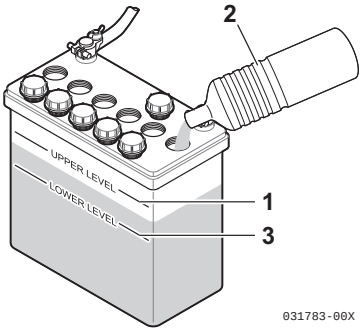

Figure 9

- When the amount of fluid nears the lower limit **(Figure 9, (3))**, fill with distilled water **(Figure 9, (2))** so it is at the upper limit **(Figure 9, (1))**. If operation continues with insufficient battery fluid, the battery life is shortened, and the battery may overheat and explode. During the summer, check the fluid level more often than specified.
- If the engine cranking speed is so slow that the engine does not start, recharge the battery.
  Use a specialized battery charger to recharge the battery with a voltage of 8 volts or less.
  Charging the battery by booster even with a voltage of 8 bolts or less will generate an abnormally high voltage and destroy electrical equipment.
  Further, in the electronic control engine, when unavoidably using a rapid charger to recharge, do not insert and turn the starter key to ON position while the battery is being charged.
  Avoid using a charger equipped with a boost function (cell start support) to start the engine. The ECU may be damaged by applied excessive voltage.
- If the engine still will not start after charging, have your Isuzu Distributor check the battery and the engine's starting system.
- If operating the machine where the ambient temperature could drop to -15 °C (5 °F) or less, remove the battery from the machine at the end of the day. Store the battery in a warm place until the next use. This will help start the engine easily at low ambient temperatures.

https://truckmanualshub.com/

Every 250 Hours of Operation

Perform the following maintenance every 250 hours of operation.

- **Drain fuel tank**
- **Replace engine oil and engine oil filter**
- **Check and clean radiator fins**
- **Check and adjust cooling fan V-belt**
- **Check and adjust the governor lever and engine speed control**
- **Clean air cleaner element**

■ Drain fuel tank

⚠ DANGER

Fire and Explosion Hazard!

- **Diesel fuel is flammable and explosive under certain conditions.**

- **When you remove any fuel system component to perform maintenance (such as changing the fuel filter) place an approved container under the opening to catch the fuel.**
- **Never use a shop rag to catch the fuel. Vapors from the rag are flammable and explosive.**
- **Wipe up any spills immediately.**
- **Wear eye protection. The fuel system is under pressure and fuel could spray out when you remove any fuel system component.**
- **Failure to comply will result in death or serious injury.**

NOTICE

- Always be environmentally responsible.

- Follow the guidelines of the EPA or other governmental agencies for the proper disposal of hazardous materials such as engine oil, diesel fuel and engine coolant. Consult the local authorities or reclamation facility.
- Never dispose of hazardous materials irresponsibly by dumping them into a sewer, on the ground, or into ground water or waterways.
- Failure to follow these procedures may seriously harm the environment.

Note that a typical fuel tank is illustrated.

1. Position an approved container under the diesel fuel tank **(Figure 10, (1))** to collect the contaminants.

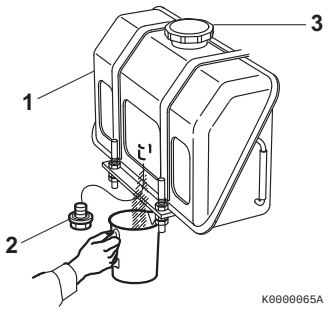

Figure 10

2. Remove the fuel cap **(Figure 10, (3))**.
3. Remove the drain plug **(Figure 10, (2))** to drain the contaminants (water, dirt, etc.) from the bottom of the tank.
4. Drain the tank until clean diesel fuel with no water or dirt flows out. Reinstall and tighten the drain plug firmly.
5. Reinstall the fuel cap.
6. Check for leaks.

https://truckmanualshub.com/

■ Replace engine oil and engine oil filter

NOTICE

- Only use the engine oil specified. Other engine oils may affect warranty coverage, cause internal engine components to seize and/or shorten engine life.
- Prevent dirt and debris from contaminating the engine oil. Carefully clean the oil cap/dipstick and the surrounding area before you remove the cap.
- Never mix different types of engine oil. This may adversely affect the lubricating properties of the engine oil.
- Never overfill. Overfilling may result in white exhaust smoke, engine overspeed or internal damage.

NOTICE

- Always be environmentally responsible.
- Follow the guidelines of the EPA or other governmental agencies for the proper disposal of hazardous materials such as engine oil, diesel fuel and engine coolant. Consult the local authorities or reclamation facility.
- Never dispose of hazardous materials irresponsibly by dumping them into a sewer, on the ground, or into ground water or waterways.
- Failure to follow these procedures may seriously harm the environment.

Change the engine oil every 250 hours of operation after the initial change at 50 hours. Replace the engine oil filter at the same time.

See Replace engine oil and engine oil filter on page 66.

■ Check and clean radiator fins

⚠ CAUTION

Flying Object Hazard!

- **Always wear eye protection when servicing the engine and when using compressed air or high-pressure water. Dust, flying debris, compressed air, pressurized water or steam may injure your eyes.**
- **Failure to comply may result in minor or moderate injury.**

Dirt and dust adhering to the radiator fins reduce the cooling performance, causing overheating. Make it a rule to check the radiator fins daily and clean as needed.

Note that a typical radiator is shown in **Figure 11** for illustrative purposes only.

- Blow off dirt and dust from fins and radiator with 28 PSI (0.19 MPa, 2 kgf/cm^2) or less of compressed air **(Figure 11, (1))**. Be careful not to damage the fins with the compressed air.

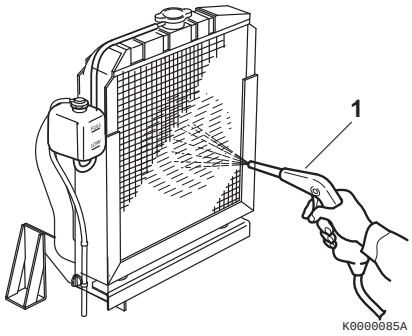

Figure 11

- If there is a large amount of contamination on the fins, apply detergent, thoroughly clean and rinse with tap water.

https://truckmanualshub.com/

NOTICE

Never use high-pressure water or compressed air at greater than 28 PSI (193 kPa; 19686 mmAq) or a wire brush to clean the radiator fins. Radiator fins damage easily.

■ Check and adjust cooling fan V-belt

Check and adjust the cooling fan V-belt every 250 hours of operation after the initial 50 hour V-belt maintenance. *See Check and adjust cooling fan V-belt on page 69.*

■ Check and adjust the governor lever and engine speed control (except electronically controlled engines)

The governor lever and engine speed control (throttle lever, accelerator pedal etc.), are connected together by a cable or linkage. If the cable becomes stretched, or the linkage wears or loosens, the governor lever may not respond to a change in the position of the engine speed control.

NOTICE

Never attempt to adjust the low or high idle speed limit screw. This may impair the safety and performance of the machine and shorten its life. If the idle speed limit screws require adjustment, see your Isuzu Distributor.

1. Check that the governor lever **(Figure 12, (1))** makes firm contact with the high idle stop **(Figure 12, (2))** and the low idle speed limit screw **(Figure 12, (3))** when the engine speed control is in the full speed or low idle speed positions.
2. If the governor lever does not make proper contact with the high idle stop or the low idle speed limit screw, adjust the throttle cable or linkage as necessary.

Note: Do not force the throttle cable or linkage to move. This may damage the the governor lever, the throttle cable or linkage and cause irregular operation of the engine speed control.

NOTICE

The engine speed control (throttle lever, accelerator pedal etc.), should be equipped with stops to prevent the application of excessive pressure by the governor lever to either the high idle stop or low idle speed limit screw.

See your Isuzu Distributor for the adjustment procedures for your specific engine or machine.

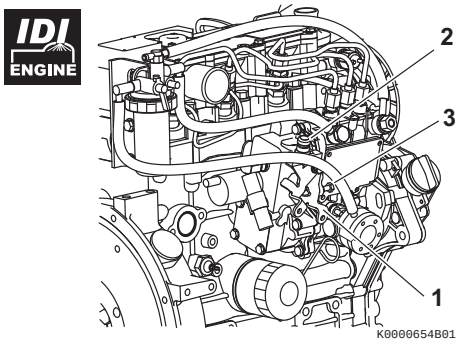

Figure 12

https://truckmanualshub.com/

■ Clean air cleaner element

⚠ CAUTION

Flying Object Hazard!

- **Always wear eye protection when servicing the engine and when using compressed air or high-pressure water. Dust, flying debris, compressed air, pressurized water or steam may injure your eyes.**
- **Failure to comply may result in minor or moderate injury.**

Note that a typical air cleaner is shown in **Figure 13** and **Figure 14** for illustrative purposes only.

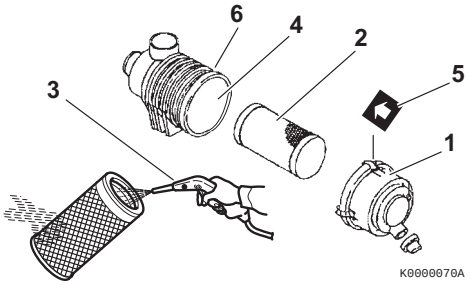

Figure 13

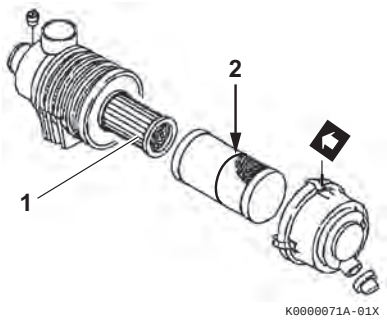

Figure 14

The engine performance is adversely affected when the air cleaner element is clogged with dust. Be sure to clean the air filter element periodically.

1. Unlatch and remove the air cleaner cover **(Figure 13, (1))**.
2. Remove the element **(Figure 13, (2))** (outer element if equipped with two elements).
3. Blow air **(Figure 13, (3))** through the element from the inside out using 42 - 71 PSI (0.29 - 0.49 MPa, 3.0 - 5.0 kgf/cm^2) compressed air to remove the particulates. Use the lowest possible air pressure to remove the dust without damaging the element.
4. If the air cleaner is equipped with a double element, only remove and replace the inner element **(Figure 14, (1))** if the engine lacks power or the dust indicator actuates (if equipped).

   Note: The inner element should not be removed when cleaning or replacing the outer element. The inner element is used to prevent dust from entering the engine while servicing the outer element.
5. Replace the element with a new one if the element is damaged, excessively dirty or oily.
6. Clean inside of the air cleaner cover.
7. Reinstall the element into the air cleaner case **(Figure 13, (4))**.

   *Note: If there is a red line **(Figure 14, (2))** in the outer element, reinsert the element until the overlap position of red line and end face of the air cleaner case.*
8. Reinstall the air cleaner cover making sure you match the arrow **(Figure 13, (5))** on the cover with the arrow on the case **(Figure 13, (6))**.
9. Latch the air cleaner cover to the case.

NOTICE

- When the engine is operated in dusty conditions, clean the air cleaner element more frequently.
- Never operate the engine with the air cleaner element(s) removed. This may allow foreign material to enter the engine and damage it.

https://truckmanualshub.com/

Every 500 Hours of Operation

Perform the following maintenance every 500 hours of operation.

- **Replace air cleaner element**
- **Replace fuel filter (element)**
- **Clean water separator**

■ Replace air cleaner element

NOTICE

The maximum air intake restriction, in terms of differential pressure measurement, must not exceed 0.90 PSI (6.23 kPa; 635 mmAq). Clean or replace the air cleaner element if the air intake restriction exceeds the above mentioned value.

Replace the air cleaner element **(Figure 13, (2))** every 500 hours even if it is not damaged or dirty.

When replacing the element, clean the inside of the air cleaner case **(Figure 13, (4))**.

If the air cleaner is equipped with a double element, *only remove and replace the inner element* **(Figure 14, (1))** *if the engine lacks power or the dust indicator actuates (if equipped).* This is in addition to replacing the outer element.

■ Replace fuel filter (element)

⚠ DANGER

Fire and Explosion Hazard!

- **Diesel fuel is flammable and explosive under certain conditions.**

- **When you remove any fuel system component to perform maintenance (such as changing the fuel filter) place an approved container under the opening to catch the fuel.**
- **Never use a shop rag to catch the fuel. Vapors from the rag are flammable and explosive.**
- **Wipe up any spills immediately.**
- **Wear eye protection. The fuel system is under pressure and fuel could spray out when you remove any fuel system component.**
- **Failure to comply will result in death or serious injury.**

NOTICE

For maximum engine life, Isuzu recommends that when shutting the engine down, you allow the engine to idle, without load, for five minutes. This will allow the engine components that operate at high temperatures, such as the turbocharger (if equipped) and exhaust system, to cool slightly before the engine itself is shut down.

NOTICE

- Always be environmentally responsible.

- Follow the guidelines of the EPA or other governmental agencies for the proper disposal of hazardous materials such as engine oil, diesel fuel and engine coolant. Consult the local authorities or reclamation facility.
- Never dispose of hazardous materials irresponsibly by dumping them into a sewer, on the ground, or into ground water or waterways.
- Failure to follow these procedures may seriously harm the environment.

---

https://truckmanualshub.com/

IDI ENGINE

Replace the fuel filter element at specified intervals to prevent contaminants from adversely affecting the diesel fuel flow.

1. Stop the engine and allow it to cool.
2. Close the fuel valve of the water separator.
3. Turn the retaining ring **(Figure 15, (1))** to the left **(Figure 15, (5))**.

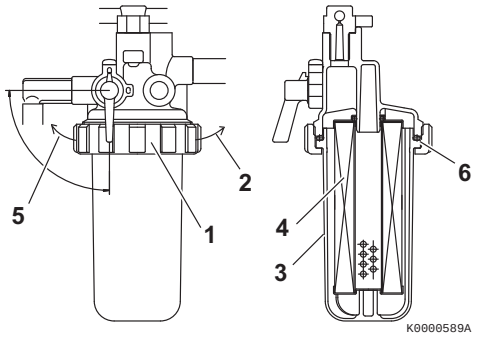

Figure 15

4. Carefully remove the cup **(Figure 15, (3))**. Pour the fuel into an approved container and dispose of waste properly. Hold the bottom of the cup with a shop towel to prevent the fuel from dripping. Wipe up any spills immediately.
5. Remove the fuel filter element **(Figure 15, (4))** by pulling it down.
6. Replace the fuel filter element with a new one.

Applicable fuel filter element part No.		
Engine model	**Part No.**	
	Standard	**Dust proof***
3CH1, 3CJ1	5-8640-0778-0	5-8640-1510-0

** This is a fuel filter for DI, and should be installed with a different filter bracket. Consult the operation manual for the driven machine for applicability of the dust proof filter.*

7. Wash the inside of the cup.
8. Check the condition of the O-ring **(Figure 15, (6))**. Replace if necessary.
9. Install the cup to the mounting flange and turn the retaining ring **(Figure 15, (1))** to the right **(Figure 15, (2))**. Hand-tighten only.
10. Open the fuel valve of the water separator.
11. Prime the fuel system. *See Priming the Fuel System on page 42.*
12. Check for fuel leaks.

DI ENGINE

Replace the fuel filter at specified intervals to prevent contaminants from adversely affecting the diesel fuel flow.

1. Stop the engine and allow it to cool.
2. Close the fuel valve of the water separator.
3. Remove the fuel filter using a filter wrench to turn it to the left **(Figure 16, (1))**. When removing the fuel filter, carefully hold it to prevent the fuel from spilling. Wipe up all spilled fuel.

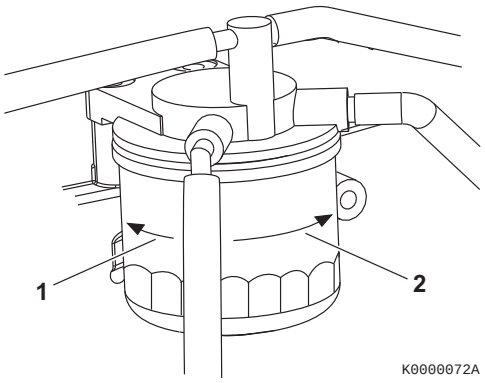

Figure 16

4. Clean the filter mounting surface and apply a small amount of diesel fuel to the gasket of the new fuel filter.
5. Install the new fuel filter. Hand-tighten it to the right **(Figure 16, (2))** until it comes in contact with the mounting surface. Use a filter wrench and tighten to 14 - 17 ft-lb (19.6 - 23.5 N·m, 2.0 - 2.4 kgf/m) or one additional turn using the filter wrench.

Applicable fuel filter part No.		
Engine model	**Part No.**	
	Standard	**Dust proof***
3CE1	5-8640-1510-0	5-8640-1496-0

** Consult the operation manual for the driven machine for applicability of the dust proof filter.*

6. Open the fuel valve of the water separator.
7. Prime the fuel system. *See Priming the Fuel System on page 42.*
8. Check for fuel leaks.

https://truckmanualshub.com/

■ Clean water separator

⚠ DANGER

Fire and Explosion Hazard!

- **Diesel fuel is flammable and explosive under certain conditions.**

- **Never use diesel fuel as a cleaning agent.**
- **When you remove any fuel system component to perform maintenance (such as changing the fuel filter) place an approved container under the opening to catch the fuel.**
- **Never use a shop rag to catch the fuel. Vapors from the rag are flammable and explosive.**
- **Wipe up any spills immediately.**
- **Wear eye protection. The fuel system is under pressure and fuel could spray out when you remove any fuel system component.**
- **Failure to comply will result in death or serious injury.**

NOTICE

- Always be environmentally responsible.

- Follow the guidelines of the EPA or other governmental agencies for the proper disposal of hazardous materials such as engine oil, diesel fuel and engine coolant. Consult the local authorities or reclamation facility.
- Never dispose of hazardous materials irresponsibly by dumping them into a sewer, on the ground, or into ground water or waterways.
- Failure to follow these procedures may seriously harm the environment.

IDI ENGINE Periodically clean the water separator element and inside cup.

1. Position an approved container under the cup **(Figure 17, (1))** of the water separator to collect the contaminants.

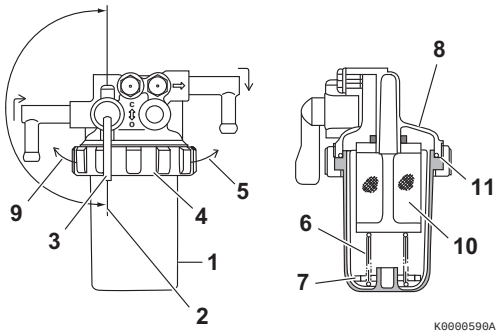

Figure 17

2. Close **(Figure 17, (2))** the fuel valve **(Figure 17, (3))**.
3. Turn the retaining ring **(Figure 17, (4))** to the left **(Figure 17, (9))**.
4. Carefully remove the cup **(Figure 17, (1))**. Remove the retaining spring **(Figure 17, (6))** and float **(Figure 17, (7))** from the cup. Pour the fuel into an approved container and dispose of waste properly. Hold the bottom of the cup with a shop towel to prevent the fuel from dripping. Wipe up any spills immediately.
5. Remove the element by pulling it down **(Figure 17, (10))**.
6. Wash the inside of the element and cup with new fuel. If the element is damaged or broken, replace with a new one.

Applicable mesh filter part No.	
Engine model	**Part No.**
3CH1, 3CJ1	5-8640-0832-0

7. Attach the element to the main body.
8. Inspect condition of the O-ring **(Figure 17, (11))**. Replace if necessary.

https://truckmanualshub.com/

9. Put the float **(Figure 17, (7))** and retaining spring **(Figure 17, (6))** inside the cup.
10. Install the cup to the mounting flange **(Figure 17, (8))** and turn the retaining ring **(Figure 17, (4))** to the right **(Figure 17, (5))**. Hand-tighten only.
11. Open the fuel valve **(Figure 17, (3))**.
12. Prime the fuel system. *See Priming the Fuel System on page 42.*
13. Check for fuel leaks.

DI ENGINE Periodically clean the water separator element and inside the cup.

1. Position an approved container under the cup **(Figure 18, (1))** of the water separator to collect the contaminants.
2. Close **(Figure 18, (2))** the fuel valve **(Figure 18, (3))**.
3. Loosen the drain valve **(Figure 18, (4))** and drain the contaminants. *See Drain water separator on page 71.*
4. Turn the cup **(Figure 18, (1))** to the left **(Figure 18, (10))** and remove the cup **(Figure 18, (1))**. If equipped, disconnect the sensor wire from the cup before removing the cup.
5. Carefully hold the cup to prevent fuel from spilling. If you spill any fuel, clean up the spill completely.

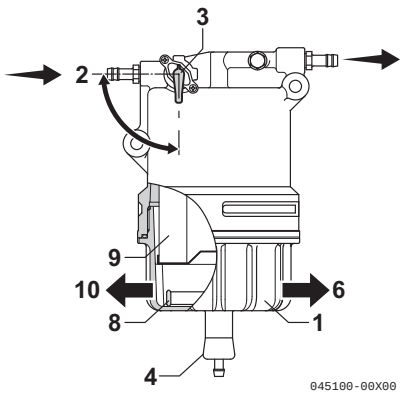

Figure 18

6. Remove the float ring **(Figure 18, (8))** from the cup. Pour the contaminants into the container and dispose of it properly.
7. Clean the element **(Figure 18, (9))** and inside cup. Replace the element if it is damaged.

Applicable element part No.	
Engine model	**Part No.**
3CE1	5-8640-2106-0

8. Install the element into the top of body.
9. Position the float ring in the cup.
10. Check the condition of the O-ring. Replace if necessary.
11. Install the cup to the body by tightening the cup to the right **(Figure 18, (6))** to 18 - 22 N·m (1.8 - 2.2 kfg·m).
12. Close the drain valve. Reconnect the sensor wire if equipped.
13. Open the fuel valve **(Figure 18, (3))**.
14. Prime the fuel system. *See Priming the Fuel System on page 42*
15. Check for leaks.

https://truckmanualshub.com/

Every 1000 Hours of Operation

Perform the following maintenance every 1000 hours of operation.

- **Change coolant**
- **Check and adjust intake/exhaust valve clearance**

⚠ DANGER

Scald Hazard!

- **Never remove the radiator cap if the engine is hot. Steam and hot engine coolant will spurt out and seriously burn you. Allow the engine to cool down before you attempt to remove the radiator cap.**
- **Tighten the radiator cap securely after you check the radiator. Steam can spurt out during engine operation if the cap is loose.**
- **Always check the level of the engine coolant by observing the reserve tank.**
- **Failure to comply will result in death or serious injury.**

⚠ WARNING

Burn Hazard!

- **Wait until the engine cools before you drain the engine coolant. Hot engine coolant may splash and burn you.**
- **Failure to comply could result in death or serious injury.**

⚠ CAUTION

Coolant Hazard!

- **Wear eye protection and rubber gloves when you handle long life or extended life engine coolant. If contact with the eyes or skin should occur, flush eyes and wash immediately with clean water.**
- **Failure to comply may result in minor or moderate injury.**

NOTICE

- Always be environmentally responsible.
- Follow the guidelines of the EPA or other governmental agencies for the proper disposal of hazardous materials such as engine oil, diesel fuel and engine coolant. Consult the local authorities or reclamation facility.
- Never dispose of hazardous materials irresponsibly by dumping them into a sewer, on the ground, or into ground water or waterways.
- Failure to follow these procedures may seriously harm the environment.

■ Change coolant

Engine coolant contaminated with rust or water scale reduces the cooling effect. Even when extended life engine coolant is properly mixed, the engine coolant gets contaminated as its ingredients deteriorate. Drain, flush and refill the cooling system with new coolant every 1000 hours or once a year, whichever comes first.

https://truckmanualshub.com/

1. Allow engine and coolant to cool.
2. Remove the radiator cap **(Figure 19, (1))**.
3. Remove the drain plug or open the drain valve **(Figure 19, (2))** at the bottom of the radiator and drain the engine coolant.

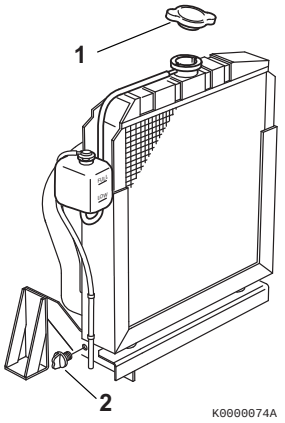

Figure 19

4. Drain the coolant from the engine block.
   - On models not equipped with an oil cooler, remove the coolant drain plug **(Figure 20, (1))** from the engine block.

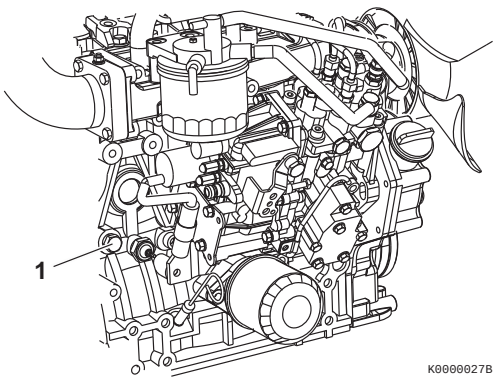

Figure 20

5. After draining the engine coolant, flush the radiator and engine block to remove any rust, scale and contaminants. Then reinstall and tighten the drain plug or close the drain valve in the radiator. Reinstall and tighten the engine block drain plug.
6. Fill radiator and engine with engine coolant. *See Filling Radiator with Engine Coolant on page 47.*

■ Check and adjust intake/exhaust valve clearance

Improper intake/exhaust valve clearance will cause the engine to run noisily, resulting in poor engine performance and engine damage. Proper adjustment is necessary to maintain the correct timing for opening and closing the valves. See your Isuzu Distributor to inspect and adjust the intake/exhaust valve clearance.

https://truckmanualshub.com/

Every 1500 Hours of Operation

Perform the following maintenance every 1500 hours of operation.

- **Inspect, clean and test fuel injection nozzle, if necessary**
- **Inspect crankcase breather system**

■ Inspect, clean and test fuel injection nozzle

⚠ WARNING

High-Pressure Hazard!

- **Avoid skin contact with the high-pressure diesel fuel spray caused by a fuel system leak such as a broken fuel injection line. High-pressure fuel can penetrate your skin and result in serious injury. If you are exposed to high-pressure fuel spray, obtain prompt medical treatment.**
- **Never check for a fuel leak with your hands. Always use a piece of wood or cardboard. Have your Isuzu Distributor repair the damage.**
- **Failure to comply could result in death or serious injury.**

Proper operation of the fuel injectors is required to obtain the optimum injection pattern for full engine performance. The EPA/ARB requires that you have the injectors inspected, cleaned and tested every 1500 hours. See your Isuzu Distributor for this service.

This procedure is considered normal maintenance and is performed at the owner's expense. This procedures is not covered by the Isuzu Mortors Limited Warranty.

■ Inspect crankcase breather system

Proper operation of the crankcase breather system is required to maintain the emission requirements of the engine. The EPA/ARB requires that you have the crankcase breather system inspected every 1500 hours. See your Isuzu Distributor for this service.

https://truckmanualshub.com/

Every 2000 Hours of Operation

Perform the following maintenance every 2000 hours of operation.

- **Check and replace fuel hoses and engine coolant hoses**

■ Check and replace fuel hoses and engine coolant hoses

⚠ DANGER

Scald Hazard!

- **Never remove the radiator cap if the engine is hot. Steam and hot engine coolant will spurt out and seriously burn you. Allow the engine to cool down before you attempt to remove the radiator cap.**
- **Tighten the radiator cap securely after you check the radiator. Steam can spurt out during engine operation if the cap is loose.**
- **Always check the level of the engine coolant by observing the reserve tank.**
- **Failure to comply will result in death or serious injury.**

⚠ WARNING

Burn Hazard!

- **If you must drain the engine oil while it is still hot, stay clear of the hot engine oil to avoid being burned.**
- **Always wear eye protection.**
- **Failure to comply could result in death or serious injury.**

⚠ CAUTION

Coolant Hazard!

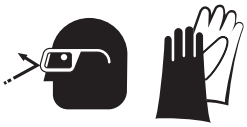

- **Wear eye protection and rubber gloves when you handle long life or extended life engine coolant. If contact with the eyes or skin should occur, flush eyes and wash immediately with clean water.**
- **Failure to comply may result in minor or moderate injury.**

NOTICE

- Always be environmentally responsible.
- Follow the guidelines of the EPA or other governmental agencies for the proper disposal of hazardous materials such as engine oil, diesel fuel and engine coolant. Consult the local authorities or reclamation facility.
- Never dispose of hazardous materials irresponsibly by dumping them into a sewer, on the ground, or into ground water or waterways.
- Failure to follow these procedures may seriously harm the environment.

■ Check and replace fuel hoses and engine coolant hoses

Regularly check the fuel system and engine coolant system hoses. If they are cracked or degraded, replace them. Replace the hoses at least every two years. See your Isuzu Distributor to replace fuel hoses and engine coolant system hoses.

https://truckmanualshub.com/

Every 3000 Hours of Operation

Perform the following maintenance every 3000 hours of operation.

- **Inspect, clean and test EGR valve**

  3CE1

■ Inspect, clean and test EGR valve

3CE1

The EGR valve is a key component for cleaning exhaust gas.

To prevent the valve from deteriorating in exhaust gas recirculation performance due to carbon accumulation, inspect, clean and test the valve at least every 3000 hours.

Consult your Isuzu Distributor for this service.

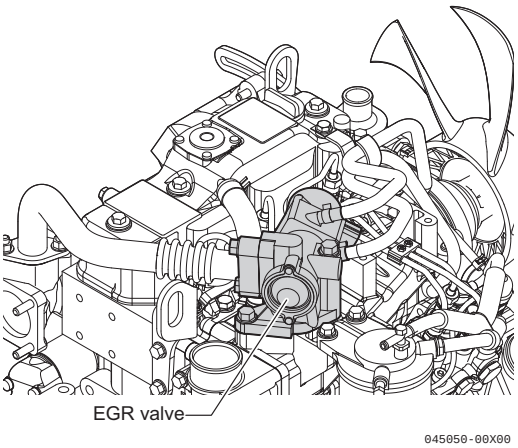

Figure 21

https://truckmanualshub.com/

This Page Intentionally Left Blank

https://truckmanualshub.com/

TROUBLESHOOTING

If a problem occurs, stop the engine immediately. Refer to the SYMPTOM column in the Troubleshooting Chart to identify the problem.

NOTICE

If any indicator fails to illuminate when the key switch is in the ON position, see your Isuzu Distributor for service before operating the engine.

If any indicator illuminates during engine operation, stop the engine immediately. Determine the cause and repair the problem before you continue to operate the engine.

https://truckmanualshub.com/

TROUBLESHOOTING CHART

Symptom	Probable cause	Action	Refer to
Indicator turns ON - engine running			
Engine oil pressure indicator	Low level of engine oil	Check and adjust oil level as necessary	*Checking Engine Oil on page 44*
	Too high an oil level		
	Clogged engine oil filter	Replace engine oil filter	*Replace engine oil and engine oil filter on page 66*
Engine coolant indicator	Low engine coolant level	Add engine coolant	*Filling Radiator with Engine Coolant on page 47*
	Dirty radiator fins	Clean the radiator fins	*Check and clean radiator fins on page 76*
	Engine coolant leaking	See Isuzu Distributor	–
	V-belt loose or damaged	Adjust V-belt or replace	*Check and adjust cooling fan V-belt on page 69*
	Contaminated engine coolant	See Isuzu Distributor	–
	Faulty engine coolant pump		–
Battery Indicator	V-belt loose or damaged	Adjust V-belt or replace	*Check and adjust cooling fan V-belt on page 69*
	Battery failure	Check battery condition	*Check battery and recharge on page 73*
	Faulty alternator	See Isuzu Distributor	–
Indicator does not turn ON - key switch is turned to ON (OFF → ON) - engine not running			
	Faulty electrical wiring or faulty indicator	See Isuzu Distributor	–
Indicator stays ON - key switch is turned from start to ON (START → ON) - engine not running			
Battery indicator stays ON	Faulty alternator	See Isuzu Distributor	–
Engine oil pressure indicator stays ON	Faulty engine oil pressure switch		–
	No or low level of engine oil	Check and adjust oil level as necessary	*Checking Engine Oil on page 44*
	Clogged engine oil filter	Replace engine oil filter	*Replace engine oil and engine oil filter on page 66*

https://truckmanualshub.com/

Symptom	Probable cause	Action	Refer to
Engine does not Start			
Starter motor operates but engine does not start	No diesel fuel	Refuel and prime fuel system	*Filling the Fuel Tank on page 41*
	Air in fuel system	Prime fuel system	*Priming the Fuel System on page 42*
	Improper diesel fuel	Replace with recommended diesel fuel	*Diesel Fuel Specifications on page 36*
	Clogged fuel filter	Replace fuel filter	*Replace fuel filter (element) on page 79*
	Poor fuel injection	See Isuzu Distributor	–
	Compressed air leakage from intake/exhaust valves		–
	Faulty engine stop solenoid		–
Starter motor does not operate or rotates too slowly (engine can be turned manually)	Battery needs charging	Check electrolyte, recharge	*Check battery and recharge on page 73*
	Faulty cable connection at battery terminals	Clean terminals, retighten	–
	Faulty starter switch	See Isuzu Distributor	–
	Faulty starter motor		–
Engine cannot be manually turned	Inner parts seized or damaged		–
White or black exhaust smoke			
Black exhaust smoke	Engine overloaded	Reduce load	–
	Clogged air cleaner element	Clean element or replace	*Clean air cleaner element on page 78*
	Improper diesel fuel	Replace with recommended diesel fuel	*Diesel Fuel Specifications on page 36*
	Faulty spraying of fuel injection	See Isuzu Distributor	–
	Excessive intake/exhaust valve clearance		–
	Faulty EGR valve		–
White exhaust smoke	Improper diesel fuel	Replace with recommended diesel fuel	*Diesel Fuel Specifications on page 36*
	Faulty spray pattern of fuel injection	See Isuzu Distributor	–
	Fuel injection timing delay		–
	Engine burning oil		–

https://truckmanualshub.com/

TROUBLESHOOTING OF ELECTRONIC CONTROL SYSTEM

3CE1

⚠ WARNING

- **Never use the E-ECU for other purposes than intended or in other ways than specified by Isuzu. Doing so could result in the violation of emission control regulations and will void the product warranty.**
- **Replacing the fuel injection pump involves rewriting the fuel injection data in the E-ECU. Be sure to contact your Isuzu Distributor before replacing the fuel injection pump. Failure to rewrite the fuel injection data before replacing the fuel injection pump will void the engine warranty.**
- **Replacing the E-ECU involves migrating the fuel injection data to the existing E-ECU to the new unit.**
  Be sure to contact your Isuzu Distributor before replacing the E-ECU.
  Failure to migrate the fuel injection data before replacing the E-ECU will void the engine warranty.
- **Improper use or misuse of the E-ECU may result in death or serious injury due to an abrupt and unexpected increase in engine speed.**

Fault Detection Capability

The E-ECU has a fault detection capability. *See List of Possible Faults of Electronically Controlled Engines on page 95*.

A fault indicator (Optional) is located on the operator's console as shown in **Figure 1**.

This indicator comes on at power up of the E-ECU and goes out after 2 sec.

Once a fault is detected, then the indicator flashes in certain patterns, providing fault information to the operator.

NOTICE

Shut down the engine if the fault indicator comes on. Continuing running the engine with the fault indicator being on may result in a serious malfunction of or damage to the engine, and will void the engine warranty.

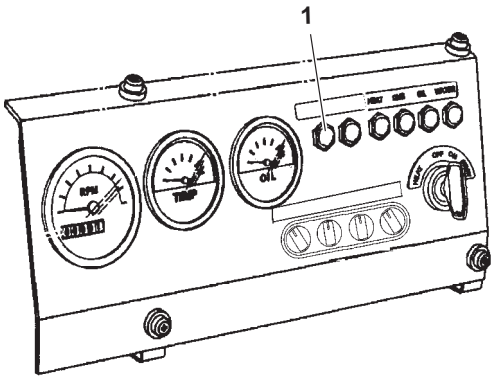

1 – Fault indicator

Figure 1

Figure 1 Typical Operator's Console

https://truckmanualshub.com/

Figure 2 exemplifies flashing patterns that represent an accelerator fault (5 flashes) or EGR valve fault (1 to 3 flashes) occurring at power up. If multiple faults occur simultaneously, the indicator indicates all the faults in order of smaller to larger number of flashes.

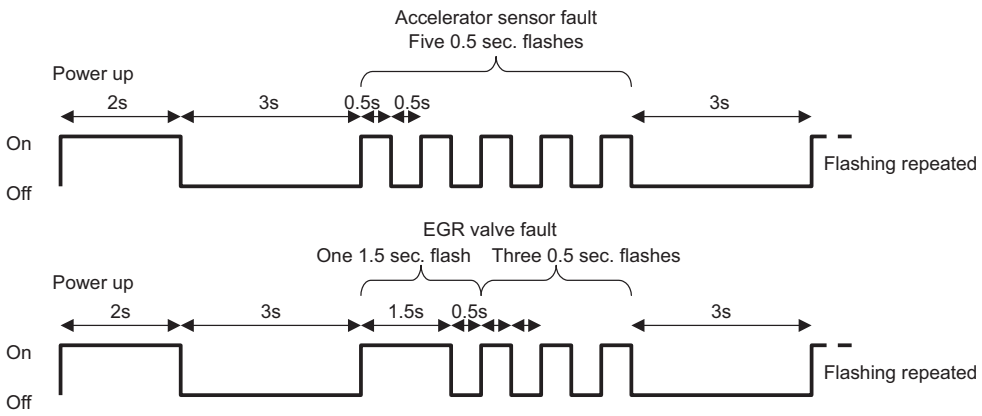

Figure 2

NOTICE

If the fault indicator comes on, check and note the flashing pattern, shut down the engine without delay and contact your Isuzu Distributor.

https://truckmanualshub.com/

TROUBLESHOOTING INFORMATION

If your engine does not operate properly, refer to the troubleshooting chart or consult your Isuzu Distributor.

Supply the Isuzu Distributor with the following information:

- Model name and serial number of your engine
- The driven machine type (tractor, generator, skid steer loader), manufacturer's name, model and serial number
- How long the engine has been in service (the number of engine hours or the number of calendar months)
- Operating conditions when problem occurs:
  - Engine RPM
  - Color of exhaust smoke
  - Type of diesel fuel
  - Type of engine oil
  - Flashing patterns of indicators (When an electronically controlled engine and the fault indicator are used)
  - Any abnormal noises or vibration
  - Operating environment such as high altitude or extreme ambient temperatures, etc.
- Engine maintenance history and previous problems
- Other factors that contribute to the problem

https://truckmanualshub.com/

LIST OF POSSIBLE FAULTS OF ELECTRONICALLY CONTROLLED ENGINES

3CE1

No.	Fault (alarm) location	Fault/alarm condition	Engine status	Reset condition	Availability of detection features	No. of flashes/flashing pattern of fault indicator
1	Coolant temperature sensor	Sensor voltage is over 4.8 V or under 0.2 V	Continues to run at a coolant temperature of 30 °C	Voltage returns to normal	Standard	4
2	Accelerator sensor	Sensor voltage is over 4.8 V or under 0.2 V	Continues to run at 1500 min^{-1} (rpm)	Voltage returns to normal	Default	5
3	Speed sensor	Engine start switch (E8) is on, but engine speed is zero	Is shut down. (When optional auxiliary speed sensor is equipped: Auxiliary speed senor works in place of faulty speed sensor and engine continues to run at up to 1800 min^{-1} (rpm). If auxiliary sensor also fails, engine is shut down.	Key switch is turned to OFF	Standard	6
		Engine speed momentarily decreased to lower than specified lower limit				
4	Rack position sensor	Rack position relative to rack actuator is without specified limits.	Continues to run without rack position sensing at up to 150 % of low idling speed or 80 % of high idling speed, whichever is lower	Key switch is turned to OFF	Standard	7
5	Rack actuator	Rack actuator output is without specified limits	Is shut down	Key switch is turned to OFF	Standard	8
		Engine accelerates even though rack actuator output is minimized				
		Engine stalls while rack position sensor fails				
6	EGR valve	LOW status was detected even though port was off	Continues to run at up to 92 % of rated power output and up to 1800 min^{-1} (rpm)	Key switch is turned to OFF	Default	1-3
		HIGH status was detected even though port was on				
7	CSD solenoid valve	LOW status was detected even though port was on	Continues to run while CSD feature is canceled	Key switch is turned to OFF	Standard	1-4
		HIGH status was detected even though port was off				
8	Starting aid relay	LOW status was detected even though port was off	Continues to run while starting aid relay is off	Key switch is turned to OFF	Optional	1-5
		HIGH status was detected even though port was on				

https://truckmanualshub.com/

No.	Fault (alarm) location	Fault/alarm condition	Engine status	Reset condition	Availability of detection features	No. of flashes/flashing pattern of fault indicator
9	Main relay	Power cannot be turned off even though main relay is off	Continues to run normally	Relay returns to normal. This fault will persist even if key switch is turned to OFF.	Default	1-6
10	Rack actuator relay	LOW status was detected even though port was off HIGH status was detected even though port was on	Is shut down	Key switch is turned to OFF	Standard	1-7
11	Oil pressure switch	Oil pressure switch is not turned on while engine is stopped	Continues to run normally. (Other option can be selected).	Key switch is turned to OFF	Optional	2-1
12	Power supply voltage	An ECU supply voltage of under 10.0 V was detected An ECU supply voltage of over 16.0 V was detected	Continues to run normally	Voltage returns to normal	Standard	2-3
13	ECU temperature (alarm)	ECU temperature is over 105 °C	Continues to run normally. (Other option can be selected).	Temperature returns to normal; under 100 °C (other optional setting is allowed)	Optional	2-5
14	Oil pressure	Oil pressure switch is not turned off while engine is running	Continues to run normally. (Other option can be selected).	Pressure returns to normal	Optional	3-1
15	Battery charge (alarm)	Battery changing switch is not turned off while engine is running	Continues to run normally	Key switch is turned to OFF	Optional	3-2
16	Battery charging switch	Battery changing switch is not turned off while engine is running	Continues to run normally	Key switch is turned to OFF	Optional	2-2
17	Coolant temperature (alarm)	Coolant temperature is over 110 °C	Continues to run normally. (Other option can be selected).	Temperature returns to normal; under 105 °C (other optional setting is allowed)	Standard	3-6

https://truckmanualshub.com/

No.	Fault (alarm) location	Fault/alarm condition	Engine status	Reset condition	Availability of detection features	No. of flashes/flashing pattern of fault indicator
18	ECU-ROM	Flash ROM checksum error occurred	Is shut down	Key switch is turned to OFF	Standard	4-1
19	ECU-EEPROM	Reading/writing error occurred	Continues to run normally			
		Checksum error occurred				
21	ECU-sub CPU	Communication with sub microcomputer failed	Continues to run normally			
22	ECU-mapping format	Mapping format is invalid	Is shut down			
23	ECU-temperature sensor	Sensor voltage is over 4.6 V or under 1.0 V	Continues to run normally	Temperature returns to normal		

https://truckmanualshub.com/

This Page Intentionally Left Blank

https://truckmanualshub.com/

LONG-TERM STORAGE

This section of the Operation Manual describes the procedures necessary to place the engine into long-term storage (six months or longer) and how to place it back into operation.

https://truckmanualshub.com/

BEFORE YOU PLACE THE ENGINE IN LONG-TERM STORAGE

⚠ DANGER

Explosion Hazard!

- **Never short out the battery terminals, including when checking the remaining battery charge. This will result in a spark and may cause an explosion or fire. Use a hydrometer to check the remaining battery charge.**
- **If the electrolyte is frozen, slowly warm the battery before you recharge it.**
- **Failure to comply will result in death or serious injury.**

⚠ WARNING

Burn Hazard!

- **Batteries contain sulfuric acid. Never allow battery fluid to come in contact with clothing, skin or eyes. Severe burns could result. Always wear safety goggles and protective clothing when servicing the battery. If battery fluid contacts the eyes and/or skin, immediately flush the affected area with a large amount of clean water and obtain prompt medical treatment.**
- **Failure to comply could result in death or serious injury.**

⚠ CAUTION

Flying Object Hazard!

- **Always wear eye protection when servicing the engine and when using compressed air or high-pressure water. Dust, flying debris, compressed air, pressurized water or steam may injure your eyes.**
- **Failure to comply may result in minor or moderate injury.**

NOTICE

Protect the air cleaner, turbocharger (if equipped) and electric components from damage when you use steam or high-pressure water to clean the engine.

Perform the next Preventive Maintenance procedure. For example, if there are 10 hours remaining before the 250 hour maintenance, you should do the maintenance before you place the engine in storage.

See Periodic Maintenance Schedule on page 64.

1. Flush the radiator and refill with Long Life Engine Coolant. *See Engine Coolant Specifications on page 47* for engine coolant specifications and *See Filling Radiator with Engine Coolant on page 47* for the procedure for draining and refilling the cooling system.
2. Clean the exterior of the engine so it is free of grease and oil.
3. Drain the fuel tank or make sure it is completely full. *See Filling the Fuel Tank on page 41*.
4. Lubricate exposed parts of the engine speed control system.
5. Protect the air cleaner, muffler and electrical components (alternator, starter motor, switches, EGR valve, controller) from water and dust.
6. Disconnect the negative (-) battery cable to prevent the battery from discharging.
7. Check the battery fluid and add distilled water as required. *See Check battery and recharge on page 73.*
8. Charge the battery once a month during storage.
9. Rotate the engine without starting, every four to six months.

https://truckmanualshub.com/

RETURNING THE ENGINE TO SERVICE

1. Perform the *Daily Checks on page 49*.
2. The engine should be pre-oiled before startup. Crank the engine, leaving the fuel system shut off so the engine will not start, for 15 seconds. Then pause for 30 seconds. Repeat the procedure until you have cranked the engine for a total of one minute. This will circulate the oil in the engine's lubrication system.
3. Prime the fuel system. *See Priming the Fuel System on page 42*.
4. Start the engine. Allow the engine to idle for approximately 15 minutes while you check for:
   - Proper oil pressure
   - Fuel, engine oil, or coolant leaks
   - Proper operation of the indicators and/or gauges.
5. Avoid prolonged operation at minimum or maximum engine speeds and loads for the remainder of the first hour of operation.

https://truckmanualshub.com/

This Page Intentionally Left Blank

https://truckmanualshub.com/

SPECIFICATIONS

https://truckmanualshub.com/

ENGINE GENERAL SPECIFICATIONS

Type	Vertical in-line, water cooled, 4-cycle diesel engine	
Combustion system	Direct injection models	Direct injection
	Indirect injection models	Swirl chamber (ball-type)
Starting system	Electric starting	
Cooling system	Radiator	
Lubricating system	Forced lubrication with trochoid pump	
PTO position	Flywheel end	
Direction of rotation	Counterclockwise viewed from flywheel end	

Note:

- *The information described in Principal Engine Specifications is for a “standard” engine. To obtain the information for the engine installed in your driven machine, please refer to the manual provided by the driven machine manufacturer.*
- *Engine rating conditions are as follows (SAE J1349, ISO 3046/1):*
  - *Atmospheric condition: Room temperature 25 °C (77 °F), atmospheric pressure 29.53 in. Hg (100 kPa, 750 mm Hg), relative humidity 30 %*
  - *Fuel temperature at fuel injector pump Inlet: 40 °C (104 °F)*
  - *Fuel feeding pressure: 20 ± 10 kPa (net) after engine break-in has been performed with the cooling fan, air cleaner and muffler installed to the engine.*
  - *With cooling fan, air cleaner, muffler: Isuzu standard*
  - *After the engine break-in period. Output allowable deviation: ± 3 %*
  - *1 PS = 0.7355 kW*
  - *1 hp SAE (Society of Automotive Engineers) = 0.7457 kW*

■ Engine family

The following is an explanation of the Engine Family field designation:

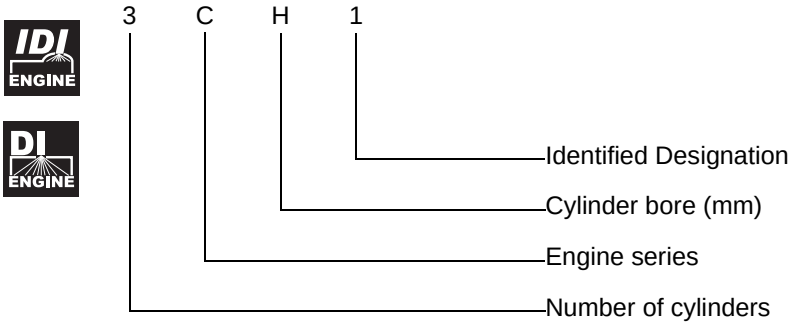

https://truckmanualshub.com/

PRINCIPAL ENGINE SPECIFICATIONS

■ 3CH1-NGZG01, 3CH1-SDZP01

Engine model		3CH1-NGZG01	3CH1-SDZP01
Type		Vertical in-line 4-cycle diesel engine	
Combustion system		Ball-type swirl chamber (IDI)	
Aspiration		Naturally aspiration	
No. of cylinders		3	
Bore × stroke	mm	ø80 × 84	
Displacement	L	1.266	
Engine rotation speed	min^{-1}	1800	3000
Continuous rated output	kW	9.7	–
	PS	13.2	
Rated output (Gross)	kW	10.7	17.8
	PS	14.6	24.2
High idling	min^{-1}	1925	3235
Engine weight (dry)	kg	130	99/117
Compression ratio		23.1	
PTO position		Flywheel end	
Direction of rotation		Counterclockwise viewed from flywheel end	
Speed governor		Mechanical, centrifugal type (all speed governor)	
Cooling system		Liquid-cooled with radiator	
Lubricating system		Forced lubrication with trochoid pump	
Normal oil pressure at rated engine speed	MPa	0.34	
Normal oil pressure at low idle speed	MPa	0.06	
Starting system		Electric starting (starter motor: DC12 V - 1.1 kW)	
Charging system		Alternator: 12 V, 40 A	
Recommended battery capacity		12 V 433CCA	
Starting aids		Glow plug (3 or 4 seconds)	
Dimensions (L × W × H)	mm	567 × 427 × 532	523 × 427 × 532
Engine oil pan capacity	L	3.4/1.8 (Dipstick upper limit/lower limit)	
Engine coolant capacity	L	0.9 (Engine only)	
Standard cooling fan	mm	ø335 × 6 blade pusher-type *1	
Crank V-pulley dia./ Fan V-pulley dia.	mm	ø110/ø100 *1	
Top clearance	mm	0.778 ± 0.069 (consider oil clearance)	

*1: *May vary depending on the driven machine.*

https://truckmanualshub.com/

■ 3CE1

Engine model		3CE1	
Type		Vertical in-line 4-cycle diesel engine	
Combustion system		Direct injection (DI)	
Aspiration		Naturally aspiration	
No. of cylinders		3	
Bore × stroke	mm	ø88 × 90	
Displacement	L	1.642	
Engine rotation speed	min^{-1}	1500	1800
Continuous rated output	kW	13.0	14.3
	PS	17.7	19.4
Output (Gross)	kW	14.3	15.7
	PS	19.4	21.3
High idling	min^{-1}	1600	1915
Engine weight (dry)	kg	158	
Compression ratio		19.1	
PTO position		Flywheel end	
Direction of rotation		Counterclockwise viewed from flywheel end	
Speed governor		Mechanical governor (all-speed governor)	
Cooling system		Liquid-cooled with radiator	
Lubricating system		Forced lubrication with trochoid pump	
Normal oil pressure at rated engine speed	MPa	0.294	
Normal oil pressure at low idle speed	MPa	0.059	
Starting system		Electric starting (starter motor: DC12 V - 1.7 kW)	
Charging system		Alternator: 12 V, 40 A	
Recommended battery capacity		12 V 413CCA	
Starting aids		Glow plug (15 seconds)	
Dimensions (L × W × H)	mm	608 × 532 × 709	
Engine oil pan capacity	L	6.7/3.9 (Dipstick upper limit/lower limit)	
Engine coolant capacity	L	2.0 (Engine only)	
Standard cooling fan	mm	ø360 × 6 blade pusher-type *1	
Crank V-pulley dia./ Fan V-pulley dia.	mm	ø120/ø90 *1	
Top clearance	mm	0.73 ± 0.06 (consider oil clearance)	

*1: *May vary depending on the driven machine.*

https://truckmanualshub.com/

■ 3CJ1-NGZG01

Engine model		3CJ1-NGZG01		
Type		Vertical in-line 4-cycle diesel engine		
Combustion system		Ball-type swirl chamber (IDI)		
Aspiration		Naturally aspiration		
No. of cylinders		3		
Bore × stroke	mm	ø74 × 77		
Displacement	L	0.993		
Engine rotation speed	min^{-1}	2400	2500	3000
Continuous rated output	kW	–		
	PS			
Rated output (Gross)	kW	11.2	11.6	14.2
	PS	15.2	15.8	19.3
High idling	min^{-1}	2595	2700	3210
Engine weight (dry)	kg	98/103		
Compression ratio		23.1		
PTO position		Flywheel end		
Direction of rotation		Counterclockwise viewed from flywheel end		
Speed governor		Mechanical, centrifugal type (all speed governor)		
Cooling system		Liquid-cooled with radiator		
Lubricating system		Forced lubrication with trochoid pump		
Normal oil pressure at rated engine speed	MPa	0.34		
Normal oil pressure at low idle speed	MPa	0.06		
Starting system		Electric starting (starter motor: DC12 V - 1.0 kW)		
Charging system		Alternator: 12 V, 40 A		
Recommended battery capacity		12 V 433CCA		
Starting aids		Glow plug (3 seconds)		
Dimensions (L × W × H)	mm	504 × 441 × 542		
Engine oil pan capacity	L	2.8/1.5 (Dipstick upper limit/lower limit)		
Engine coolant capacity	L	0.9 (Engine only)		
Standard cooling fan	mm	ø310 × 5 blade pusher-type *1		
Crank V-pulley dia./ Fan V-pulley dia.	mm	ø110/ø100 *1		
Top clearance	mm	0.778 ± 0.069 (consider oil clearance)		

*1: *May vary depending on the driven machine.*

https://truckmanualshub.com/

■ 3CJ1-SDZP01

Engine model		3CJ1-SDZP01
Type		Vertical in-line 4-cycle diesel engine
Combustion system		Ball-type swirl chamber (IDI)
Aspiration		Naturally aspiration
No. of cylinders		3
Bore × stroke	mm	ø74 × 77
Displacement	L	0.993
Engine rotation speed	min^{-1}	3000
Continuous rated output (Gross)	kW	13.6
	PS	18.5
Rated output (Gross)	kW	14.9
	PS	20.3
High idling	min^{-1}	3175
Engine weight (dry)	kg	110
Compression ratio		23.5
PTO position		Flywheel end
Direction of rotation		Counterclockwise viewed from flywheel end
Speed governor		Mechanical, centrifugal type (all speed governor)
Cooling system		Liquid-cooled with radiator
Lubricating system		Forced lubrication with trochoid pump
Normal oil pressure at rated engine speed	MPa	0.34
Normal oil pressure at low idle speed	MPa	0.06
Starting system		Electric starting (starter motor: DC12 V - 1.2 kW)
Charging system		Alternator: 12 V, 40 A
Recommended battery capacity		12 V 433CCA
Starting aids		Glow plug (4 seconds)
Dimensions (L × W × H)	mm	556 × 422 × 568
Engine oil pan capacity	L	3.4/1.8 (Dipstick upper limit/lower limit)
Engine coolant capacity	L	1.0 (Engine only)
Standard cooling fan	mm	ø310 × 5 blade pusher-type *1
Crank V-pulley dia./ Fan V-pulley dia.	mm	ø100/ø90 *1
Top clearance	mm	0.708 ± 0.070 (consider oil clearance)

*1: *May vary depending on the driven machine.*