Kenworth

T170 / T270 / T370 and Hybrid
2011 Body Builders Manual

KENWORTH®

A PACCAR COMPANY

https://truckmanualshub.com/

https://truckmanualshub.com/

Kenworth Medium Duty Body Builders Manual

Models: T170/T270/T370 and Hybrid

For 2011 Model Year and Later with 2010 EPA Compliant Engines

Body Builder's Manual Contents

https://truckmanualshub.com/

SECTION 1 — INTRODUCTION

SCOPE 1-1

SECTION 2 — SAFETY AND COMPLIANCE

SAFETY SIGNALS 2-1
Warnings, Cautions, and Notes 2-1
FEDERAL MOTOR VEHICLE SAFETYSTANDARDS COMPLIANCE 2-2
Incomplete Vehicle Certification 2-2
Noise and Emissions Requirements 2-3
Fuel System 2-4
Compressed Air System. 2-4
Exhaust and Exhaust After-treatment System 2-4
Cooling System 2-5
Electrical System 2-6
Air Intake System 2-8
Charge Air Cooler System 2-8

SECTION 3 — DIMENSIONS

ABBREVIATIONS AND DEFINITIONS 3-1
OVERALL DIMENSIONS 3-3
DETAIL VIEWS 3-5
DETAIL VIEWS 3-6
Back of Cab: Flush Mounted Flood Lamps – T270/370 3-6
DETAIL VIEWS 3-7
Crossmember Locations – T170 3-7
DETAIL VIEWS 3-8
Crossmember Locations – T170 3-8
COMPONENTS. 3-9
Frame Rail Configurations - T170/270/370. 3-9
Battery Box – T270/370 3-10
Battery/Tool Box – T270/370 3-10
22-inch Fuel Tanks — T270/370. 3-11
24.5-inch Fuel Tanks — T270/370 3-11
Rectangular Fuel Tank 3-12
Battery Box – T270/370 3-13
Battery/Access Step – T170. 3-13
Horizontal Exhaust/Muffler 3-14
Step/DPF Box Assembly RH Under Cab – T270/370. 3-15
Horizontal Muffler-Vertical Tailpipe on Cab. 3-15
RH Back of Cab Independent Muffler — T270/T370 3-16
RIDE HEIGHTS 3-17
REAR SUSPENSION LAYOUTS. 3-19
KENWORTH AG210L SINGLE REAR AXLE 3-19
KENWORTH AG400L TANDEM REAR AXLE. 3-20
REYCO 79KB SINGLE REAR AXLE. 3-21
Optional Reyco 79KB Suspensions 3-21
REYCO 102 TANDEM REAR AXLE 3-22
Optional Reyco 102 Suspension 3-22
HENDRICKSON HAS SINGLE REAR AXLE 3-23
Optional Hendrickson HAS Single Suspensions 3-23
HENDRICKSON PRIMAAX SINGLE REAR AXLE 3-24
Optional Hendrickson Promaax Single Suspensions. 3-24
HENDRICKSON HAS TANDEM SUSPENSION 3-25
Optional Hendrickson HAS Tandem Suspensions 3-25
HENDRICKSON RT TANDEM SUSPENSION 3-26
Optional Hendrickson RT Tandem Suspensions 3-26
CHALMERS 854-40 TANDEM SUSPENSION 3-27
Optional Chalmers Tandem Suspensions 3-27
TIRE DATA. 3-28
FRAME AND CAB RELATED HEIGHTS. 3-28

https://truckmanualshub.com/

GROUND CLEARANCES 3-28
PTO CLEARANCES 3-33

SECTION 4 — EXHAUST & AFTERTREATMENT

EXHAUST AND AFTER-TREATMENT INFORMATION 4-1
GENERAL GUIDELINES FOR DEF SYSTEM 4-3
INSTALLATION REQUIREMENTS AND DIMENSIONS FOR DEF SYSTEM 4-3
MEASUREMENT REFERENCE POINTS 4-4
GENERAL EXHAUST INFORMATION 4-9
EXHAUST INFORMATION 4-18

SECTION 5 — FRAME LAYOUTS

FRAME LAYOUTS 5-1
COMMON OPTIONAL COMPONENTS 5-2
FRAME LAYOUT INDEX 5-4

SECTION 6 — BODY MOUNTING

FRAME INFORMATION 6-1
CRITICAL CLEARANCES 6-1
Rear Wheels and Cab 6-1
Body Mounting Using Brackets 6-2
Frame Sill 6-2
Brackets 6-2
Mounting Holes 6-3
Frame Drilling 6-3
Hole Location Guidelines 6-4
BODY MOUNTING USING U–BOLTS 6-4
Spacers 6-4
Rear Body Mount 6-6
HYBRID CLEARANCES 6-6
Hybrid PEC 6-6
Hybrid Battery Box 6-7

SECTION 7 — FRAME MODIFICATIONS

FRAME MODIFICATIONS 7-1
Introduction 7-1
DRILLING RAILS 7-1
Location and Hole Pattern 7-1
MODIFYING FRAME LENGTH 7-2
Frame Insert 7-2
Changing Wheelbase 7-3
Crossmembers 7-4
WELDING 7-5
TORQUE REQUIREMENTS 7-7

SECTION 8 - ELECTRICAL

ELECTRICAL 8-1
ACCESSING GAUGES AND SWITCHES 8-10
OPTIONAL SWITCHES, AIR VALVES AND GAUGES 8-20
ADDITIONAL SPARE CIRCUITS 8-23
Additional Spare Circuits for Wiring 8-23
OPTIONAL BODY BUILDER HARNESS 8-24
Circuits Wired Through the Ignition 8-26
Connecting Ignition Circuits 8-26
Circuits Wired to Battery 8-26
BODY BUILDER POWER DISTRIBUTION CENTER 8-29
INSTALLING A THIRD BATTERY (NOT AVAILABLE ON HYBRID) 8-30

https://truckmanualshub.com/

WIRING FOR A LIFTGATE 8-31
Liftgate Power Source 8-31
Connecting the Liftgate Power 8-32
270 AMP ALTERNATOR (RECOMMENDED HOOKUP). 8-33
Engine Connections 8-33
REMOTE PTO/THROTTLE HARNESS 8-34
TRAILER CABLE CONNECTIONS 8-40

SECTION 9 - ROUTING

ROUTING 9-1
ROUTING REQUIREMENTS 9-2
Routing of Wires and Hoses near Exhaust System 9-4

APPENDIX A - VEHICLE IDENTIFICATION

VIN Location. A-1
Chassis Number Locations A-1
VEHICLE IDENTIFICATION LABELS A-2
Tire/Rim and Weight Rating Data Label A-2
Incomplete Vehicle Certification Label A-2
Components and Weights Label A-2
Noise Emission Label. A-3
Paint Identification Label A-3
COMPONENT IDENTIFICATION A-3
Engine Identification. A-3
Transmission Identification A-4
Front Axle Identification A-4
Rear Axle Identification A-4

https://truckmanualshub.com/

FIGURES

FIGURE 2-1. Incomplete Vehicle Certification Document . . . 2-2
FIGURE 2-2. Locations of Certification Labels - Driver's Door and Frame . . . 2-2
FIGURE 2-3. West Coast Mirror OAT sensor, located in overmold on mirror harness. . . . 2-6
FIGURE 2-4. Aerodynamic Mirror OAT Sensor Location . . . 2-7
FIGURE 2-5. Instrument Cluster for T170/T270/T370 used with EPA2010 Emission compliant engines. . . . 2-7
FIGURE 3-1. Prospector Turn Circle Analysis . . . 3-2
FIGURE 3-2. T170/T270/T370 Overall Height, and Length Dimensions . . . 3-3
FIGURE 3-3. Top of Cab View, T270/T370, Roof Mounted Options . . . 3-5
FIGURE 3-4. Side of Cab View, T270/370, Roof Mounted Options . . . 3-5
FIGURE 3-5. Flush Mounted Flood Lamp Locations . . . 3-6
FIGURE 3-6. T170 Crossmember Location . . . 3-7
FIGURE 3-7. T170 Crossmember Location . . . 3-8
FIGURE 3-8. Frame Rail Dimensions and Properties . . . 3-8
FIGURE 3-9. T270/370 Battery Box Measurements] . . . 3-10
FIGURE 3-10. T270/370 Battery/Tool Box Measurements . . . 3-10
FIGURE 3-11. T270/370 22" Fuel Tank Mounting Measurements . . . 3-11
FIGURE 3-12. T270/370 24.5" Fuel Tank Mounting Measurements. With and without steps. . . . 3-11
FIGURE 3-13. Rectangular Fuel Tank Measurements . . . 3-12
FIGURE 3-14. T270/370 Battery Box Measurements. . . . 3-13
FIGURE 3-15. T170 Battery Box/Cab Access Step Measurements . . . 3-13
FIGURE 3-16. Horizontal Exhaust Muffler/DPF Measurements . . . 3-14
FIGURE 3-17. T270/T370 RH Step/DPF Box Assembly for Use with Vertical Tailpipe (left) or Horizontal Tailpipe . . . 3-15
FIGURE 3-18. T270/370 Vertical Tailpipe on Right Side of Cab . . . 3-15
FIGURE 3-19. T270/T370 with Vertical Muffler/DPF Behind RH Side of Cab . . . 3-16
FIGURE 4-1. Measurement Location of DEF Supply Module (Pump) . . . 4-4
FIGURE 4-2. Measurement Location of DEF Dosing Module (Injector) . . . 4-4
FIGURE 4-3. Orientation of Dosing Module . . . 4-5
FIGURE 4-4. RH Under Cab Exhaust with Small or Medium Tanks. . . . 4-5
FIGURE 4-5. Horizontal Series Exhaust with Small or Medium Tanks. . . . 4-6
FIGURE 4-6. Vertical Exhaust with Small or Medium Tanks. . . . 4-6
FIGURE 4-7. Horizontal Crossover Exhaust system with Small or Medium Tanks. . . . 4-7
FIGURE 4-8. Routing DEF Lines and DEF Trap . . . 4-8
FIGURE 4-9. Isometric View of Right Hand Under DPF and SCR with Single SOC Tailpipe . . . 4-10
FIGURE 4-10. Top View of Right Hand Under DPF and SCR with Single SOC Tailpipe . . . 4-10
FIGURE 4-11. Right View of Right Hand Under DPF and SCR with Single SOC Tailpipe . . . 4-11
FIGURE 4-12. Back View of Right Hand Under DPF and SCR with Single SOC Tailpipe . . . 4-11
FIGURE 4-13. Isometric view of Horizontal DPF and SCR with Horizontal Tailpipe. . . . 4-12
FIGURE 4-14. Top view of Horizontal DPF and SCR with Horizontal Tailpipe . . . 4-12
FIGURE 4-15. Right view of Horizontal DPF and SCR with Horizontal Tailpipe . . . 4-13
FIGURE 4-16. Back view of Horizontal DPF and SCR with Horizontal Tailpipe . . . 4-13
FIGURE 4-17. Isometric view of Horizontal (Series) DPF and SCR with Horizontal Tailpipe . . . 4-14
FIGURE 4-18. Top view of Horizontal (Series) DPF and SCR with Horizontal Tailpipe . . . 4-14
FIGURE 4-19. Right view of Horizontal (Series) DPF and SCR with Horizontal Tailpipe . . . 4-15
FIGURE 4-20. Back view of Horizontal (Series) DPF and SCR with Horizontal Tailpipe . . . 4-15
FIGURE 4-21. Isometric view of Vertical Independent DPF and SCR . . . 4-16
FIGURE 4-22. Top view of Vertical Independent DPF and SCR. . . . 4-16
FIGURE 4-23. Right view of Vertical Independent DPF and SCR . . . 4-17
FIGURE 4-24. Back view of Vertical Independent DPF and SCR. . . . 4-17
FIGURE 5-1. DEF Tank Dimensions. . . . 5-3
FIGURE 6-1. Minimum Clearance Between Top of Rear Tires and Body Structure Overhang . . . 6-1
FIGURE 6-2. Minimum Back of Cab Clearance . . . 6-1
FIGURE 6-3. Spacer Between Frame Sill and Body Rail - Rubber or Plastic. . . . 6-2
FIGURE 6-4. High Compression Spring . . . 6-2
FIGURE 6-5. Rubber Spacer Between Brackets, Between the Mounting Bolt and Upper Bracket . . . 6-2
FIGURE 6-6. Crossmember-Gusset Hole Pattern Requirements. . . . 6-3

https://truckmanualshub.com/

FIGURE 6-6. Hole Locations Guidelines for Frame Rail and Bracket . . . 6-3
FIGURE 6-7. Acceptable U-Bolt Mounting with Wood and Fabricated Spacers . . . 6-4
FIGURE 6-8. Clearance Space for Air Lines and Cables . . . 6-5
FIGURE 6-9. Example of Fishplate Bracket at Rear End of Body, used with U-Bolts . . . 6-6
FIGURE 6-10. Clearance zones around Hybrid Power Electronics Carrier (PEC) . . . 6-6
FIGURE 6-11. Clearance zones around the Hybrid Battery Box located LH Under Cab . . . 6-7
FIGURE 7-1. Detail of Frame Extension and Joint Welding . . . 7-2
FIGURE 7-2. Frame Insert . . . 7-2
FIGURE 7-3. Comparison of Original, Shortened, and Extended Wheelbases . . . 7-4
FIGURE 7-4. Crossmember Added when Distance Exceeds 60 inches (1524 mm) . . . 7-4
FIGURE 7-5. Heat Treated Frame Rail Warning . . . 7-5
FIGURE 8-1. J1939 Data link Wiring . . . 8-1
FIGURE 8-2. Kenworth B-Cab Dash . . . 8-2
FIGURE 8-3. Diesel Exhaust Fluid Gauge . . . 8-2
FIGURE 8-4. Multiplexed Instrumentation Block Diagram. . . . 8-3
FIGURE 8-5. CECU Location.. . . . 8-4
FIGURE 8-6. Main Instrument Panel . . . 8-5
FIGURE 8-7. Instrumentation Harness Interface Diagram . . . 8-7
FIGURE 8-8. Firewall Air Junction Block (view from inside of cab) . . . 8-8
FIGURE 8-9. Air Filter Restriction Sensor on Firewall Air Junction Block (view from inside of cab). . . . 8-8
FIGURE 8-10. Fuel Filter Restriction Pressure Gauge Sensor Location (typical) . . . 8-9
FIGURE 8-11. Telltale Symbol Standard Cards . . . 8-14
FIGURE 8-12. Blank Telltale Tray . . . 8-16
FIGURE 8-13. Telltale Icons. (continued on page 8-18). . . . 8-17
FIGURE 8-14. Spare switches wired to Power . . . 8-19
FIGURE 8-15. Optional Switches.. . . . 8-20
FIGURE 8-16. Switch and Wiring for Customer Installed Beacon Lamp in the Chassis Harness. . . . 8-21
FIGURE 8-17. Switch and Wiring for Customer Installed Beacon Lamp in the IP Harness. . . . 8-21
FIGURE 8-18. Switch and Wiring for Customer Installed Flood Lamp in the Chassis Harness.. . . . 8-22
FIGURE 8-19. Location of Standard Body Harness Connection . . . 8-24
FIGURE 8-20. Body Junction Harness. 8-25
FIGURE 8-21. ePTO Harness Location . . . 8-28
FIGURE 8-22. Location of Body Builder Distribution Module on Hybrid . . . 8-29
FIGURE 8-23. Detail of Body Builder Power Distribution Module . . . 8-29
FIGURE 8-24. Adding a Third Battery . . . 8-30
FIGURE 8-25. Adding a Third Battery . . . 8-31
FIGURE 8-26. Liftgate Circuit Breaker Inside Battery Box . . . 8-32
FIGURE 8-27. P27-6180 Fuse Holder. . . . 8-33
FIGURE 8-28. Battery Harness Jumper.. . . . 8-33
FIGURE 8-29. PACCAR PX-6 and PX-8. . . . 8-34
FIGURE 8-30. Wiring for Customer Installed Throttle Control at End of Frame. . . . 8-35
FIGURE 8-31. Cab Load Center (mPDC). . . . 8-37
FIGURE 8-32. SAE J560 Trailer Connector . . . 8-40
FIGURE 8-33. ISO 3731 Trailer Connector. . . . 8-40
FIGURE 8-34. Junction Box . . . 8-41
FIGURE 9-1. Clamp and Butterfly Clamp . . . 9-1
FIGURE 9-2. Butterfly Tie . . . 9-1
FIGURE 9-3. Tie Strap . . . 9-1
FIGURE 9-4. Heavy Duty (HD) Mount. . . . 9-2
FIGURE 9-5. Definition of measurements. . . . 9-4
FIGURE A-1. Vehicle Identification Number (VIN).. . . . A-1
FIGURE A-2. Drivers Door and Door Frame Labels. . . . A-2
FIGURE A-4. Front Axle Identification . . . A-4
FIGURE A-5. Rear Axle Identification. . . . A-4

https://truckmanualshub.com/

Section 1
Introduction

SCOPE

This manual was created to provide body builders with appropriate information and guidelines useful in the body planning and installation process. This information will be helpful when installing bodies or other associated equipment.

This manual contains appropriate dimensional information, guidelines for mounting bodies, guidelines for modifying frames, electrical wiring information, and other information useful in the body installation process. This manual is specific to chassis with 2010 engines.

The intended primary users of this manual are body builders who install bodies and associated equipment on Kenworth T170/T270/T370 Medium Duty vehicles. Dealers who sell and service the vehicle will also find this information useful.

This Body Builders' Manual can be very useful when specifying a vehicle, particularly when the body builder is involved in the vehicle definition and ordering process. Early in the process, professional body builders can often contribute valuable information that reduces the ultimate cost of the body installation.

In the interest of continuing product development, Kenworth reserves the right to change specifications or products at any time without prior notice. It is the responsibility of the user to ensure that he is working with the latest update. The most current update is available through your local Kenworth dealer.

If you require additional information or reference materials, please contact your local Kenworth dealer.

https://truckmanualshub.com/

Page Intentionally Left Blank.

https://truckmanualshub.com/

SAFETY SIGNALS

There are a number of alerting messages in this book. Please read and follow them. They are there for your protection and information. These alerting messages can help you avoid injury to yourself or others and help prevent costly damage to the vehicle.

Key symbols and “signal words” are used to indicate what kind of message is going to follow. Pay special attention to comments prefaced by “WARNING”, “CAUTION”, and “NOTE.” Please do not ignore any of these alerts.

Warnings, Cautions, and Notes

WARNING

When you see this word and symbol, the message that follows is especially vital. It signals a potentially hazardous situation which, if not avoided, could result in death or serious injury. This message will tell you what the hazard is, what can happen if you do not heed the warning, and how to avoid it.

Example:
WARNING! Be sure to use a circuit breaker designed to meet liftgate amperage requirements. An incorrectly specified circuit breaker could result in an electrical overload or fire situation. Follow the liftgate installation instructions and use a circuit breaker with the recommended capacity.

CAUTION

Signals a potentially hazardous situation which, if not avoided, could result in minor or moderate injury or damage to the vehicle.

Example:
CAUTION: Never use a torch to make a hole in the rail. Use the appropriate drill bit.

NOTE

Provides general information: for example, the note could warn you about how to avoid damaging your vehicle or how to drive the vehicle more efficiently.

Example:
Note: Be sure to provide maintenance access to the battery box and fuel tank fill neck.

Signals the location of a high voltage electrical components

Example:
HAZARDOUS VOLTAGE: To reduce the risk of possible serious injury (Shock, Burn or Death): Components marked with High Voltage should be avoided. Service must be performed by qualified personnel only.

Please take the time to read these messages when you see them, and remember:

WARNING!
Indicates a potentially hazardous situation which, if not avoided, could result in death or serious injury.

CAUTION:
Signals a potentially hazardous situation which, if not avoided, could result in minor injury or damage to the vehicle.

NOTE:
Useful information that is related to the topic being discussed.

https://truckmanualshub.com/

FEDERAL MOTOR VEHICLE SAFETY STANDARDS COMPLIANCE

As an Original Equipment Manufacturer (OEM), Kenworth Truck Co. ensures that our products comply with all applicable U.S. or Canadian Federal Motor Vehicle Safety Standards. However, the fact that this vehicle has no fifth wheel and that a Body Builder (Intermediate or Final Stage Manufacturer) will be doing additional modifications means that the vehicle was incomplete when it left the build plant. See next section and Appendix A for additional information.

Incomplete Vehicle Certification

An Incomplete Vehicle Document is shipped with the vehicle, certifying that the vehicle is not complete. See Figure 2–1. In addition, affixed to the driver's side door frame or edge is an Incomplete Vehicle Certification label. See Figure 2–2. For further information on Vehicle Certification and Identification, see APPENDIX A "VEHICLE IDENTIFICATION."

NOTE

These documents list the U.S. or Canadian Federal Motor Vehicle Safety Standard regulations that the vehicle complied with when it left the build plant. You should be aware that if you add, modify or alter any of the components or systems covered by these regulations, it is your responsibility as the Intermediate or Final Stage Manufacturer to ensure that the complete vehicle is in compliance with the particular regulations upon completion of the modifications.

FIGURE 2-1. Incomplete Vehicle Certification Document

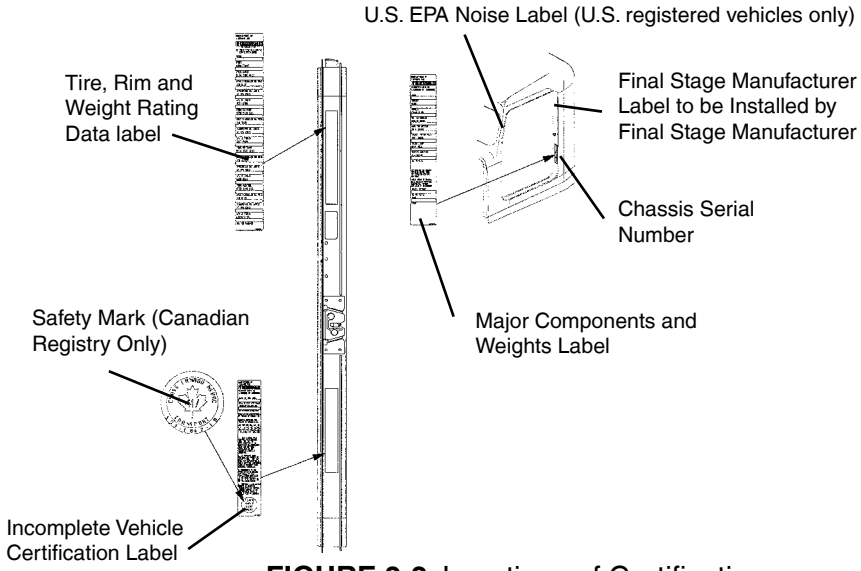

FIGURE 2-2. Locations of Certification Labels - Driver's Door and Frame

As the Intermediate or Final Stage Manufacturer, you should retain the Incomplete Vehicle Document for your records. In addition, you should record and retain the manufacturer and serial number of the tires on the vehicle. Upon completion of the vehicle (installation of the body and any other modifications), you should affix your certification label to the vehicle as required by Federal law. This tag identifies you as the "Intermediate or Final Stage Manufacturer" and certifies that the vehicle complies with Federal Motor Vehicle Safety Standards. (See Figure 2–2.) Be advised that regulations affecting the intermediate and final stage manufacturer may change without notice. Ensure you are referencing the most updated copy of the regulation during the certification and documentation processes.

In part, if the final stage manufacturer can complete and certify the vehicle within the instruction in the incomplete vehicle document (IVD) the certification label would need a statement that reads, "This vehicle has been completed in accordance with the prior manufacturers, IVD where applicable. This vehicle conforms to all applicable Federal Motor Vehicle Safety Standards [and Bumper and Theft Prevention Standards if applicable] in effect in (month, year)."

However, if the vehicle can not be completed and certified with in the guidance provided in the IVD, the final stage manufacturer must ensure the vehicle conforms to all applicable Federal Motor Vehicle Safety Standards (FMVSS). The final stage manufactures certification label would need a statement that reads, "This vehicle conforms to all applicable Federal Motor Vehicle Safety Standards [and Bumper and Theft Prevention Standards if applicable] in effect in (month, year)."

https://truckmanualshub.com/

These statements are just part of the changes to the new certification regulation. Please refer to the Feb 15, 2005 final rule for all of the details related to this regulation. You can contact NTEA Technical Services Department at 1-800-441-NTEA for a copy of the final rule (DocID 101760).

For Canadian final stage manufacturers see:

http://www.gazette.gc.ca/archives/p2/2002/2002-02-13/html/sor-dors55-eng.html; and
http://www.tc.gc.ca/acts-regulations/regulations/crc-c1038/menu.htm for the regulations.

Or contact:

Transport Canada
Tower C, Place de Ville, 330 Sparks Street
Ottawa, Ontario K1A 0N5
(613) 990-2309
TTY: 1-888-675-6863

Noise and Emissions Requirements

NOTE

2010 Automotive engines have been tested and EPA/CARB certified with a complex integrated system. This system is comprised of several emissions control devices including, but not limited to, a Diesel Particulate filter (DPF) and a Selective Catalyst Reduction (SCR) system.

The body builder must not modify or relocate any devices included in the emissions system. Doing so may result in the voiding of all warranties and the occurrence of an emissions noncompliance event that may be considered tampering and punishable by the assessment of penalties by the EPA and ARB as well as the need for remedial measures. Modification of the emissions system can only be done with the preapproval of Cummins and/or Kenworth. Body builders' first point of contact concerning emissions systems modifications will be Kenworth.

It is possible to relocate the DEF tank, however the relocation requirements need to be followed. Any variance from the relocation requirements may cause the emissions control components/systems to operate improperly potentially resulting in engine de-rate. See page 4-3 for relocation requirements.

NOTE

Some 2010 engine emissions certified vehicles will be equipped with an On-Board Diagnostics (OBD) system. The OBD system is designed to detect malfunctions of any engine or vehicle component that may increase exhaust emissions or interfere with the proper performance of the OBD system itself.

The OBD system consists of computer program on one or more of the vehicle's Electronic Control Units (ECUs). This program uses information from the control system and from additional sensors to detect malfunctions. When a malfunction is detected, information is stored in the ECU(s) for diagnostic purposes. A Malfunction Indicator Light (MIL) is illuminated in the dash to alert the driver of the need for service of an emission-related component or system.

To ensure compliance to emissions regulations, the final configuration of certain features of the completed vehicle must meet specific requirements. This section describes requirements relevant for only the most common or critical modifications done by body builders. For a complete description of acceptable modifications, see the application guidance available from the manufacturer of the engine installed in the chassis.

https://truckmanualshub.com/

Fuel System

The following are highlights of some of the more common or critical aspects of this system.

The overall system restriction may not exceed the restriction limitations set forth by the engine manufacturer for both supply and return.

- Ensure that fuel lines are not pinched or can potentially be damaged when installed between body and frame
- Fuel lines must be routed and secured without dips or sags
- There must be easy access to filter(s) and fill cap
- The tank vent may not obstructed
- Added accessories (heaters, generators) cannot introduce air into system
- Fuel tank must be located so that the full level is not above cylinder head
- “Ultra Low Sulfur Fuel Only” labels must be present on the dash and fuel fill
- Modification of the pressure side secondary filter and plumbing is not allowed without engine manufacturer approval
- Body installation of fuel tank or routing of lines must not cause significant increase in fuel temperature
- Fuel hoses shall meet or exceed OEM supplied hose material construction specifications

Compressed Air System

The following are highlights of some of the more common or critical aspects of this system.

- Air system modification must meet applicable FMVSS regulations
- Compressed Air tank may not be modified (exception – addition or removal of fittings or relocation of the tank)
- Added devices or bodywork may not interfere with or rub air lines
- Air supply to the engine doser may not be restricted or disconnected
- Air lines should be routed, protected from heat, and properly secured to prevent damage from other components
- Care should be taken so that air lines do not rub against other components
- Care should be taken to protect the air system from heat sources.

Exhaust and Exhaust After-treatment System

The following are highlights of some of the more common or critical aspects of this system.

- The following after-treatment and exhaust system components may not be modified:
  - DPF assembly
  - SCR Catalyst assembly
  - Exhaust pipes between the engine and after-treatment devices (DPF, SCR Catalyst) and between after-treatment devices
  - NO_x Sensor

https://truckmanualshub.com/

- The following modifications may only be done within the guidelines of the “DEF System Relocation Guide.”
  - Modifications to Diesel Exhaust Fluid (DEF) throttle, suction, or pressure lines
  - Modification or relocation of the DEF tank
  - Modification of coolant lines to and from the DEF tank
- All DEF and coolant lines should be routed, protected, and properly secured to prevent damage during vehicle operation or other components
- If relocation of the DCU is necessary, use existing frame brackets and mount inside of frame flanges where necessary. Do not extend the harnesses
- The DPF, the SCR catalyst, or their mounting may not be modified
- The NO_x sensor may not been relocated or altered in any way
- Exhaust pipes used for tailpipes/stacks must be properly sized, and must prevent water from entering the exhaust system
- Ensure adequate clearance between the exhaust and body panels, hoses, and wire harnesses
- The body in the vicinity of the DPF must be able to withstand temperatures up to 400°C (750°F)
- Do not add thermal insulation to the external surface of the DPF
- The SCR water drain hole may not be blocked
- Allow adequate clearance (25mm (1 inch)) for servicing the DPF sensors, wiring, and clamped joints
- Drainage may not come in contact with the DPF, SCR catalyst, sensors or wiring
- Allow sufficient clearance for removing sensors from DPF. Thermistors require four inches. Other sensors require one inch
- Wiring should be routed, protected from heat, and properly secured to prevent damage from other components
- The exhaust system from an auxiliary power unit (APU) must not be connected to any part of the vehicle after-treatment system or vehicle tail pipe.

Cooling System

The following are highlights of some of the more common or critical aspects of this system.

- Modifications to the design or locations of fill or vent lines, heater or defroster core, and surge tank are not recommended
- With the exception of post-thermostat installation, additional accessories plumbed into the engine cooling system are not permitted, and may void vehicle warranty
- Coolant level sensor tampering will void warranty
- When installing auxiliary equipment in front of the vehicle, or additional heat exchangers, ensure that adequate air flow is available to the vehicle cooling system. Refer to engine manufacturer application guidelines for further detail
- When installing FEPTO drivelines, the lower radiator anti-recirculation seal must be retained with FEPTO driveline clearance modification only
- Changes made to cooling fan circuit and controls are not allowed, with the exception of AC minimum fan on time parameter
- See owner’s manual for appropriate winter front usage

https://truckmanualshub.com/

Electrical System

The following are highlights of some of the more common or critical aspects of this system.

- Electrical harnesses providing battery power and electronic control signals to engine and emissions control/ vehicle OBD components including datalinks may not be spliced. These emissions control/vehicle OBD components include the following:
  - throttle pedal
  - vehicle speed sensor
  - after-treatment wiring
- If the alternator or battery is substituted, it must meet the requirements of the engine manufacture's guidelines. This includes alternator ground voltage drop and alternator ground cable effectiveness. See the engine manufacture's guidelines for recommended test procedure. Additionally the maximum voltage differential and the peak-peak voltage differential between the engine ECM block ground stud and battery negative terminal may not exceed 500 mV under any combination of loads or operating conditions.
- Installation of aftermarket transfer-cases must address the vehicle speed sensor position. The standard position of the speed sensor is at the transmission tail shaft. When a transfer-case is added it is best to relocate the sensor to the axle side output shaft of the transfer-case. This is typically accomplished by adding a tone wheel into the driveline yoke assembly.
- Wiring extensions for the after-treatment wiring are available for relocating the DEF tank from your dealer via Paccar Parts. For relocation of DEF tank, refer to the after-treatment section of this manual.
- The emission system requires an accurate Outside Air Temperature (OAT) reading in order to properly run its control algorithms. The OAT sensor is located in the driver's side mirror assembly on Kenworth trucks and is shown in the figures below. If the body builder needs to modify the mirror assembly in any way, it is important the OAT sensor stay positioned on the mirror assembly. Running the vehicle without the OAT sensor connected will cause the MIL lamp to illuminate. If needed, a replacement sensor can be ordered from your Kenworth dealer.

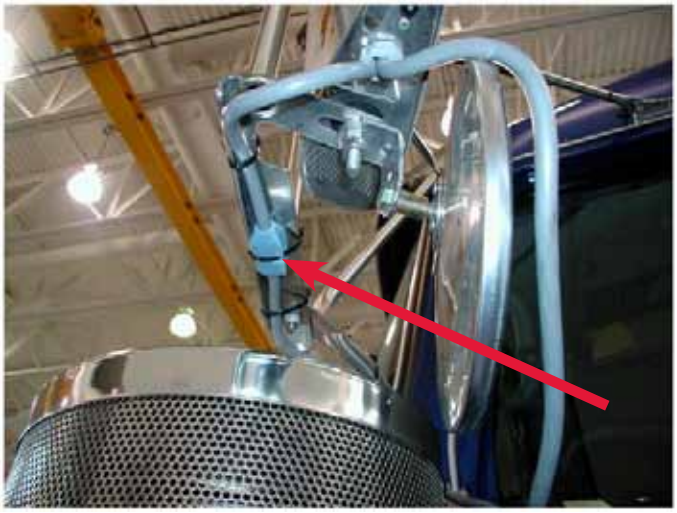

FIGURE 2-3: West Coast Mirror OAT sensor, located in overmold on mirror harness.

https://truckmanualshub.com/

FIGURE 2-4: Aerodynamic Mirror OAT Sensor Location

- Coolant Sensor considerations are given in the Cooling section above
- The OBD/Diagnostic connector port is located below the dash to the left of the steering wheel. This connector or its location may not be changed.
- Vehicles using EPA 2010 compliant engines must be equipped with a Malfunction Indicator Lamp (MIL) lamp. This lamp is required to be an engine outline symbol as defined by ISO (International Standards Organization). The figure below shows the instrument cluster and MIL lamp position. Note this lamp location is fixed with respect to the controls and its location may not be changed if you are updating the warning lamp cards. The MIL lamp will not be used with Medium Duty vehicles until 2013.

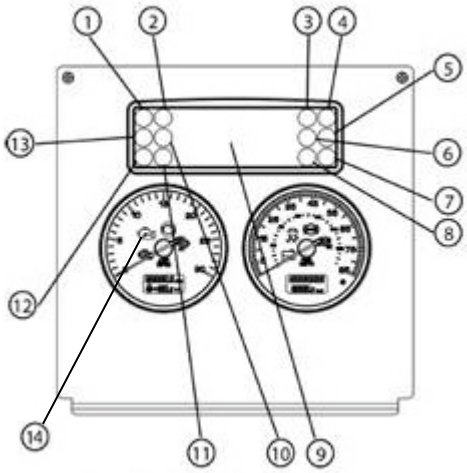

1	PTO	5	High Exhaust System Temperature (HEST)	10	Brake Fail
2	Wait to Start	6	Fasten Seat Belts	11	High Beam
3	Malfunction Indicator Lamp (MIL)	7	RH Turn Signal	12	LH Turn Signal
4	Engine Brake	8	Park Brake	13	Check Transmission
		9	Multi-Function Display	14	Check Engine Light

FIGURE 2-5: Instrument Cluster for T170/T270/T370 used with EPA2010 Emission compliant engines. The Check Engine lamp is symbol 21 and the MIL is symbol 8.

- In addition to the sensors and lamps above, the emission system also depends on signals from the exhaust DPF (Diesel Particulate Filter), SCR (Selective Catalytic Reduction), and NOx sensor. Wiring between these devices, the Dosing Control Unit (DCU) and engine ECM should not be tampered with or altered in any way.

https://truckmanualshub.com/

Air Intake System

The following are highlights of some of the more common or critical aspects of this system.

- The air intake screen may not be blocked, either fully or partially
- Modification to the air intake system may not restrict airflow. For example, pipe diameter may not be reduced
- All sensors must be retained in existing locations
- To retain system seal, proper clamp torque must be used. Refer to service manual for proper clamp torque

Charge Air Cooler System

The following are highlights of some of the more common or critical aspects of this system.

- The Charge Air Cooler may not be modified
- The installation of engine overspeed shutdown devices must not introduce restriction in the intake system
- All plumbing associated with the charge air cooler may not be modified

https://truckmanualshub.com/

DIMENSIONS

This section is designed to provide enough information to successfully layout chassis in the body planning process. Only typical truck layouts and configurations are shown. Optional equipment may not be depicted. Please contact your local Kenworth dealer if more information is desired.

ABBREVIATIONS AND DEFINITIONS

Throughout this section, and in other sections as well, abbreviations and specific terminology are used to describe certain characteristics on your vehicle. The charts below list the abbreviated terms used and provide definitions for terminology used.

TABLE 3-1. Abbreviations Used

AF	After Frame – Frame rail overhang behind rear axle or measured from the centerline of tandem
BOC	Back of Cab
BOF	Bottom of Rail
CA	Back of cab to centerline of rear axle or centerline of tandems on tandem suspension
FS	Front suspension height from centerline of axle up to the bottom of the frame rail
OAL	Overall Vehicle Length
SOC	Side of Cab
RS	Rear suspension height from centerline of axle up to the bottom of the frame rail
WB	Centerline of front axle to centerline of rear axle or centerline of tandems on tandem suspension

TABLE 3-2. Definitions

GAWR	The maximum allowable weight each axle assembly is designed to carry, as measured at the tires, therefore including the weight of the axle assembly itself. GAWR is established by considering the rating of each of its components (tires, wheels, springs, axle and steering system), and rating the axle on its weakest link. The GAWR assumes that the load is equal on each side.
LADEN	This is the weight condition of the truck with the front and rear axles loaded to their Gross Axle Weight Rating, GAWR.
UNLADEN	This is the weight condition of the truck delivered from the PACCAR factory. This is without the following: body, driver, and tools. It does include fluids, but no fuel.

https://truckmanualshub.com/

Prospector Turn Circle Analysis:

Please see Figure 3-1 as an example of Kenworth's turn circle calculation made in Prospector for your specific chassis. Your local Kenworth dealer can provide this information to you.

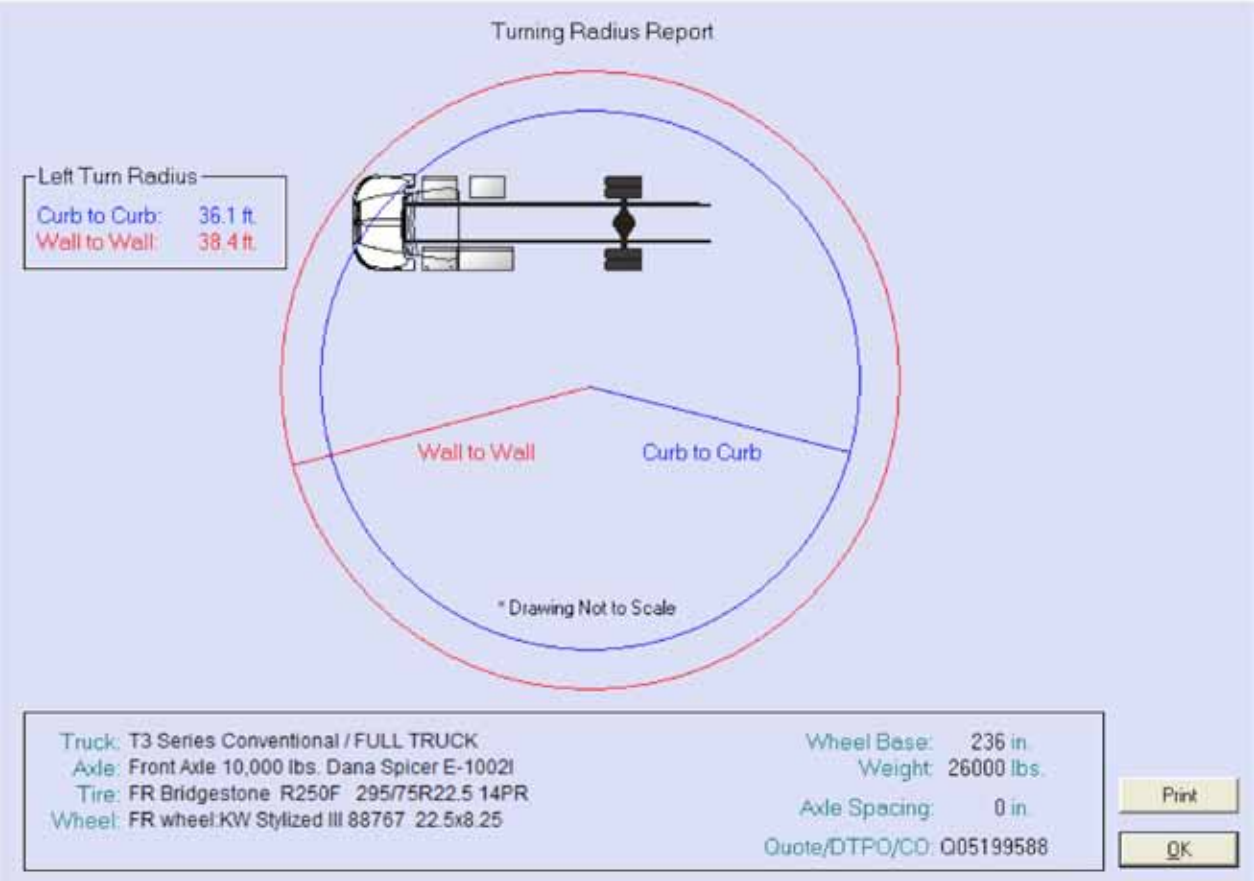

FIGURE 3-1. Prospector Turn Circle Analysis

Please consult your local Kenworth Dealer for this information, as it is chassis specific.

https://truckmanualshub.com/

OVERALL DIMENSIONS

This section includes drawings and charts of the following medium duty models: T170, T270 and T370.

On the pages that follow, detail drawings show particular views of each vehicle with dimensions being in inches and (mm). They illustrate important measurements critical to designing bodies of all types. See the “Table of Contents” at the beginning of the manual to locate the drawing that you need.

Kenworth also offers .dxf files and frame layouts of ordered chassis four weeks prior to build. Please speak to your sales person to request this feature when specifying your chassis.

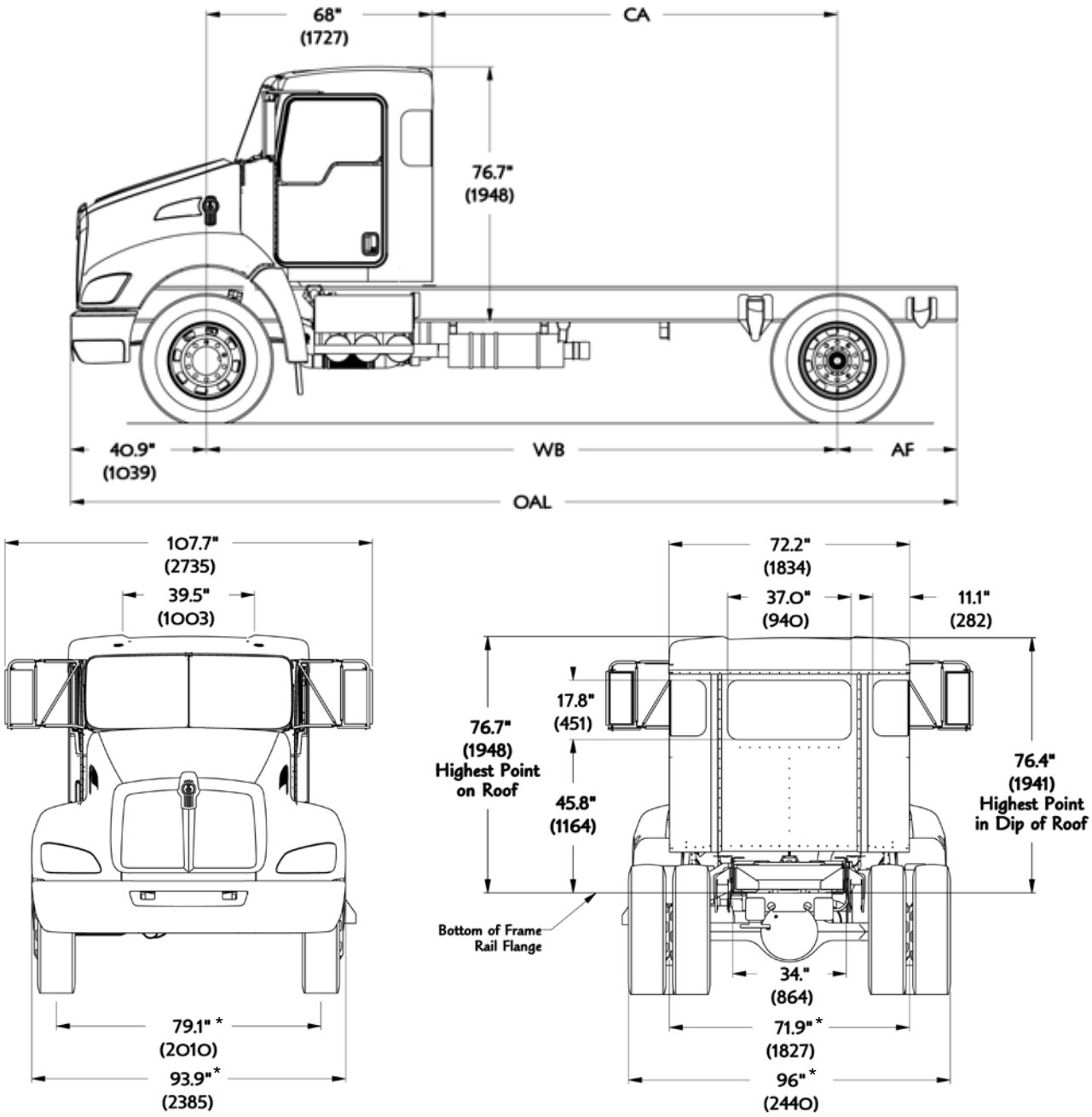

* Dimensions are typical. Measurements will vary with axle, brake drum, tires and wheel selections

FIGURE 3-2. T170/T270/T370 Overall Height, and Length Dimensions [inches (mm)]

https://truckmanualshub.com/

TABLE 3-3. Hydraulic Brake Vehicles. T170 Single Rear Axle: Overall Fore-Aft Dimensions [inches (mm)]

WB	OAL	AF	CA
153 (3886)	235.9 (5992)	55 (1397)	72 (1829)
162 (4115)	240.9 (6119)	55 (1397)	77 (1956)
176 (4470)	280.9 (7135)	64 (1626)	108 (2743)
188 (4775)	304.9 (7745)	76 (1930)	120 (3048)
206 (5232)	328.9 (8354)	82 (2083)	138 (3505)
218 (5537)	352.9 (8964)	94 (2388)	150 (3810)
236 (5994)	376.9 (9573)	100(2540)	168 (4267)
245 (6223)	384.9 (9777)	99 (2515)	177 (4496)

TABLE 3-4. Hydraulic Brake Vehicles. T270/370 with Single Rear Axle: Overall Fore-Aft Dimensions [inches (mm)]

WB*	OAL	AF	CA
153 (3886)	235.9 (5992)	55 (1397)	72 (1829)
162 (4115)	240.9 (6119)	55 (1397)	77 (1956)
176 (4470)	280.9 (7135)	64 (1626)	108 (2743)
188 (4775)	304.9 (7745)	76 (1930)	120 (3048)
206 (5232)	328.9 (8354)	82 (2083)	138 (3505)
218 (5537)	352.9 (8964)	94 (2388)	150 (3810)
236 (5994)	376.9 (9573)	100 (2540)	168 (4267)
245 (6223)	384.9 (9777)	99 (2515)	177 (4496)
254 (6452)	424.9 (10793)	130 (3302)	186 (4724)
260 (6604)	448.9 (11402)	148 (3759)	192 (4877)
272 (6909)	462.9 (11758)	150 (3810)	204 (5182)
* Air Brake Vehicles. T270/T370 wheelbases for Single Rear Axle begin at 140 inches. Tandem Rear axles begin at 175 inches. Wheelbase on Air Brake vehicles available in 1-inch increments.			

https://truckmanualshub.com/

DETAIL VIEWS

Top of Cab: Roof Mounted Options – T270/370

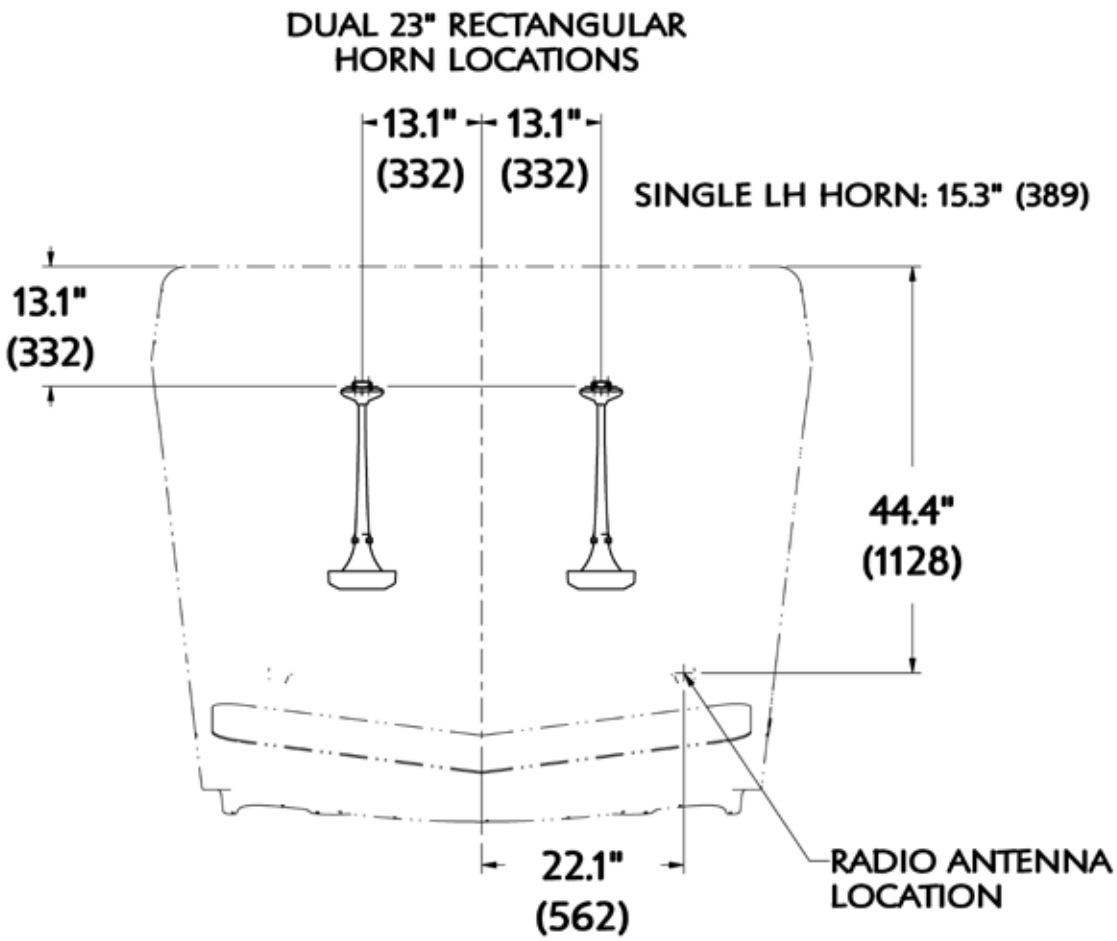

FIGURE 3-3. Top of Cab View, T270/T370, Roof Mounted Options

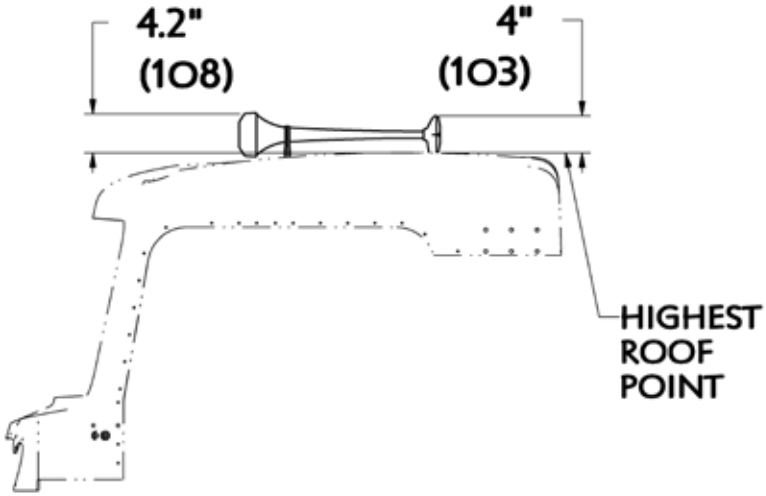

FIGURE 3-4. Side of Cab View, T270/370, Roof Mounted Options

https://truckmanualshub.com/

DETAIL VIEWS

Back of Cab: Flush Mounted Flood Lamps – T270/370

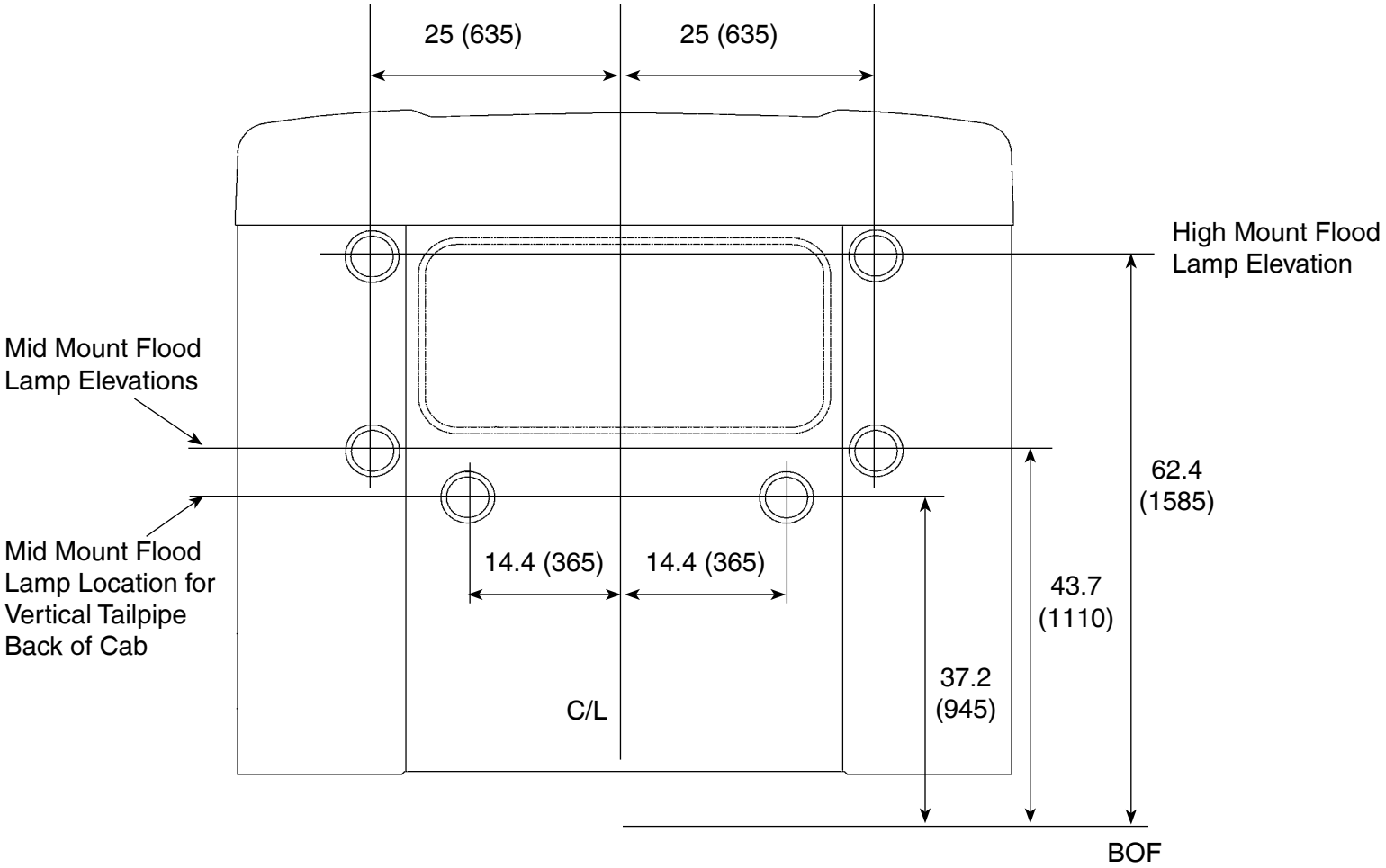

FIGURE 3-5. Flush Mounted Flood Lamp Locations [inches (mm)]

https://truckmanualshub.com/

DETAIL VIEWS

Crossmember Locations – T170

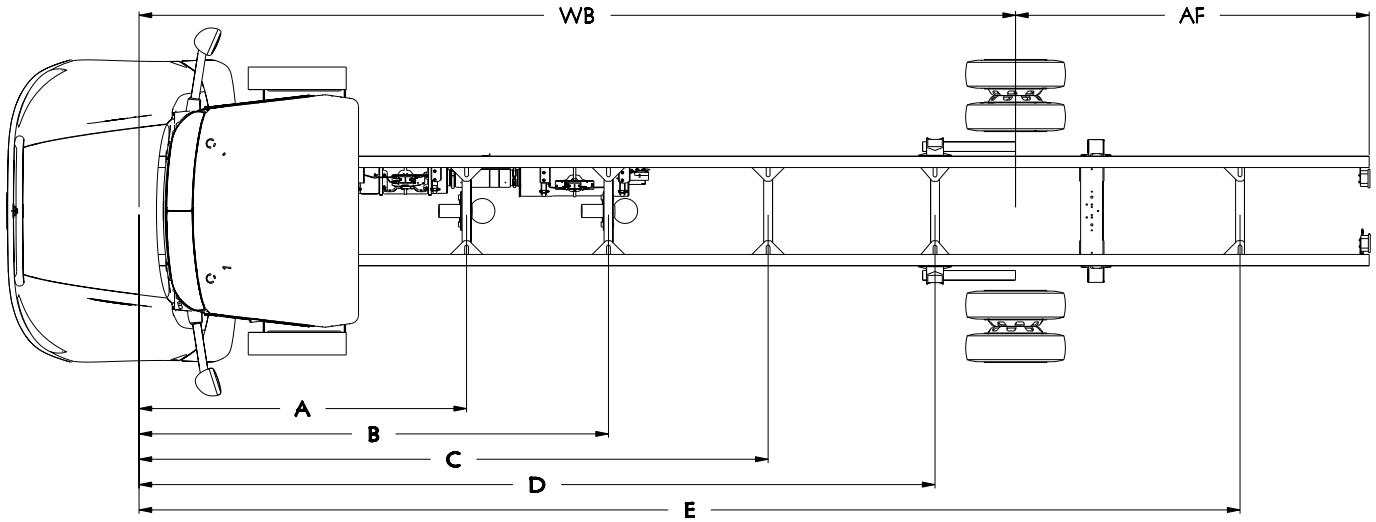

FIGURE 3-6. T170 Crossmember Location

TABLE 3-5 T170 Cross member. Location: measured from front axle centerlines [inches (mm)]

WB	A	CB	B	CB	C	D	E
206	101.8 (2585)	Y	121.1(3075)	Y			1.) For without a square end of frame cross-member with an AF range of 80 (2032) to 125(3175) a crossmember is installed at: E=WB+64.4”(1636mm)
218	101.8 (2585)	Y	121.1(3075)	Y			
236	101.8 (2585)	Y	121.1(3075)	Y			
245	101.8 (2585)	Y	121.1(3075)	Y			
254	101.8 (2585)	Y	162 (4125)	Y			2.) For AF range of 126 (3200) to 173(4394) a 2nd crossmember is installed at: E=WB+112.4”(2855 mm)
260	101.8 (2585)	Y	162 (4125)	Y			
272	101.8 (2585)	Y	162 (4125)	Y			
Y SPL100 Driveline centerbearing (CB) is mounted on this crossmember.							

https://truckmanualshub.com/

DETAIL VIEWS

Crossmember Locations – T170

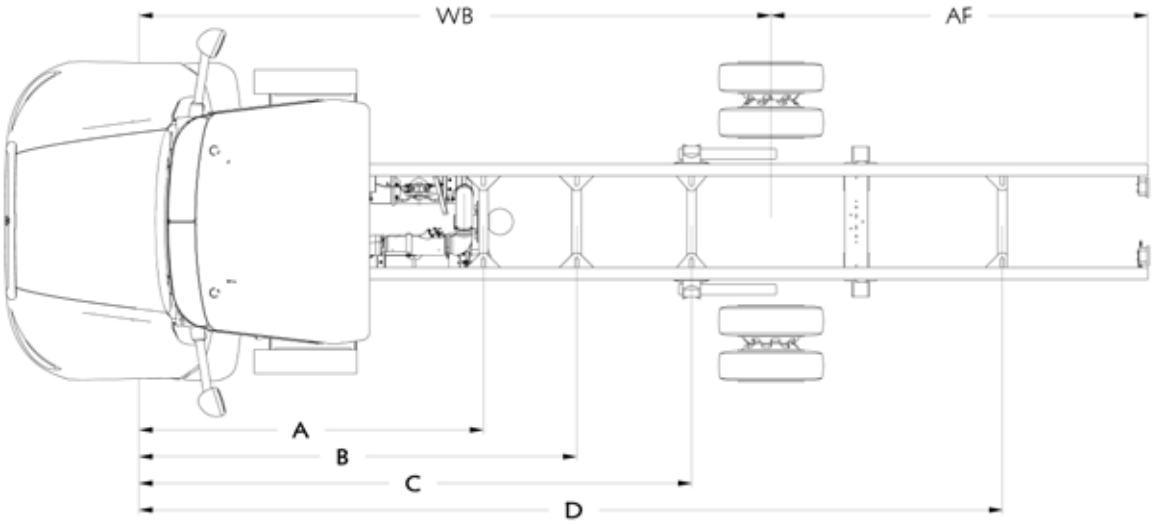

FIGURE 3-7. T170 Crossmember Location

TABLE 3-6 T170 Cross member. Location: measured from front axle centerlines [inches (mm)]

WB	A	CB	C	D	E
153	101.8 (2585)	Y			1.) For without a square end of frame crossmember with an AF range of 80 (2032)to 125(3175) a crossmember is installed at: E=WB+64.4”(1636mm)
162	101.8 (2585)	Y			
176	101.8 (2585)	Y			2.) For AF range of 126 (3200) to 173(4394) a 2nd crossmember is installed at: E=WB+112.4”(2855 mm)
188	101.8 (2585)	Y			
Y SPL100 Driveline center bearing (CB) is mounted on this cross member					

https://truckmanualshub.com/

COMPONENTS

This section includes detail drawings and charts showing particular vehicle components with dimensions in inches and (millimeters). They illustrate important measurements critical to designing bodies of all types. See the “Table of Contents” at the beginning of the manual to locate the drawing that you need.

Frame Rail Configurations - T170/270/370

Note: Bottom of frame rail is a reference point that you can use to determine estimated heights of components and ground clearances.

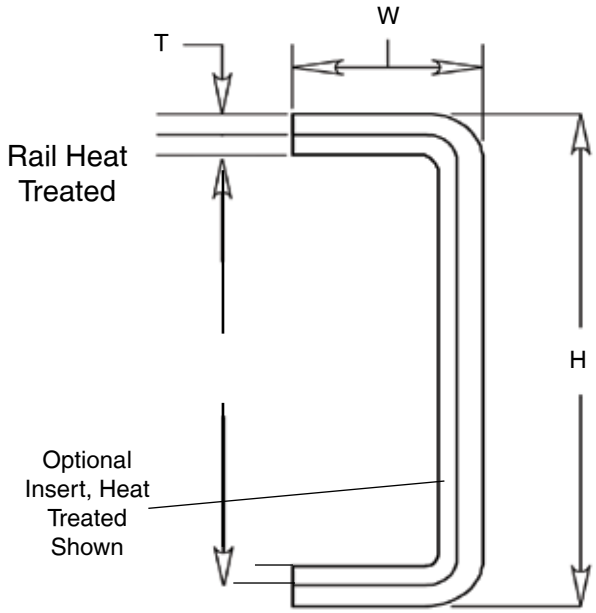

FIGURE 3-8. Frame Rail Dimensions and Properties [inches (mm)]

TABLE 3-7. Frame Rail Properties

Frame Rail or Insert (1)(2)	Model	Section Modulus per Rail, cu.in.	RBM per Rail lbs-Inch	Weight per Inch per Pair, lbs	Height H, inch (mm)	Flange Width W, inch (mm)	Thickness T, inch (mm)
9-7/8 Frame Rail	T170/T270	9.88	1,251,767	2.10	9.88 (251)	3.46 (87.8)	0.25 (6.4)
10-5/8 Frame Rail	T270/T370	14.8	1,776,000	2.90	10.63 (270)	3.46 (87.8)	0.31 (7.9)
10-3/4 Frame Rail	T270/T370	17.8	2,132,000	3.50	10.75 (273)	3.46 (87.8)	0.38 (9.5)
9-7/8 Insert ONLY for 10-5/8 Frame Rail (2)(3)	T270/T370	9.57	1,149,000	2.00	9.88 (251)	2.88 (73.0)	0.25 (6.4)
10-5/8 Frame Rail with 9-7/8 Insert	T270/T370	23.4	2,925,000	4.96	10.63 (270)	3.46 (87.8)	0.56 (14.3)
10-3/4 Frame Rail with 9-7/8 Insert	T270/T370	27.4	3,281,000	5.50	10.75 (273)	3.46 (87.8)	0.63 (15.9)

(1) Yield Strength: 120,000 PSI
(2) Frame rails and inserts are heat treated.
(3) Full inserts start ahead of the steering gear and end at the end of frame.
(4) Partial inserts start 25 inches behind the center line of the front axle and end at the end of the frame.

https://truckmanualshub.com/

Battery Box – T270/370

Parallel Battery Box LH Under Cab for air braked truck or hydraulic braked truck with an accessory air system.

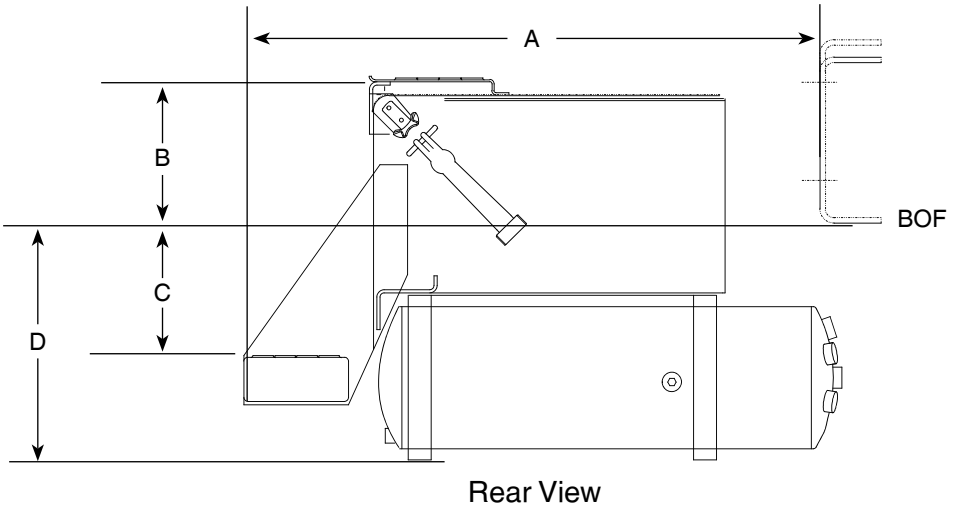

FIGURE 3-9. T270/370 Battery Box Measurements [inches (mm)]

TABLE 3-8. T270/370 Battery Box Measurements [inches (mm)]

Type	A, inch (mm)	B, inch (mm)	C, inch (mm)	D, inch (mm)
Hybrid	33.4 (848)	6.7 (170)	9.5 (241)	15.8 (401)
Non-Hybrid	33.4 (848)	8.5 (215)	9.3 (236)	13.4 (354)

Battery/Tool Box – T270/370

Parallel Battery Box LH Under Cab for Hydraulic braked Truck without an Accessory Air System or Tool Box Under Cab.

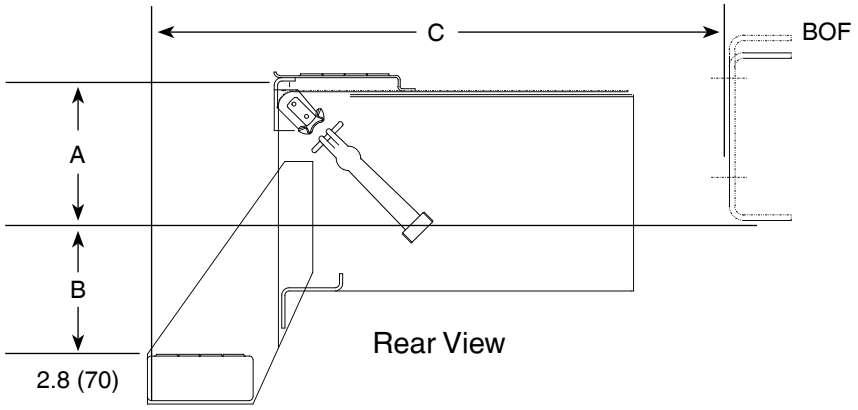

FIGURE 3-10. T270/370 Battery/Tool Box Measurements [inches (mm)]

TABLE 3-9. T270/370 Battery Box/Toolbox Dimensions [inches (mm)]

Type	A, inch (mm)	B, inch (mm)	C, inch (mm)
Non-Hybrid Battery Box	8.5 (215)	9.4 (239)	33.4 (848)
Hybrid Battery Box	8.5 (215)	9.5 (241.6)	33.4 (848)
Toolbox	9.3 (236)	9.2 (233)	33 (848)

https://truckmanualshub.com/

22-inch Fuel Tanks — T270/370

Round Fuel Tank Mounting

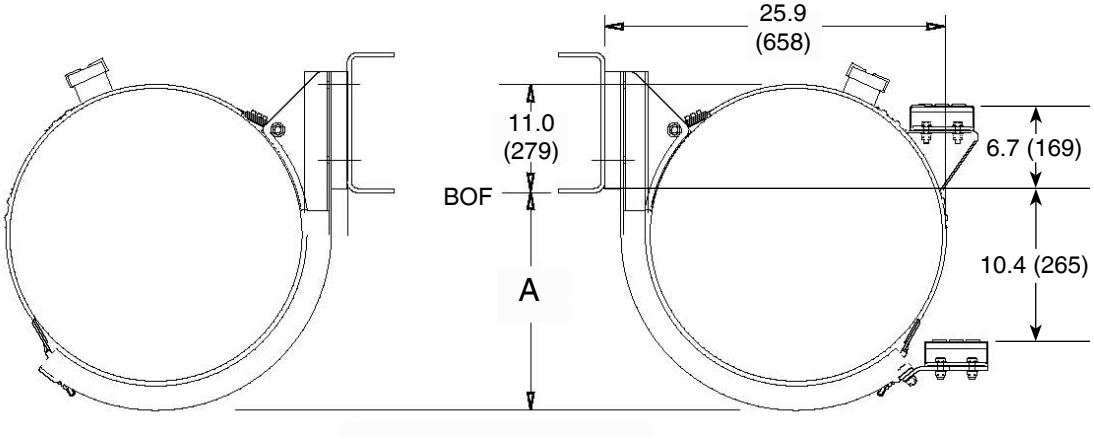

REAR VIEW
LEFT SIDE BEHIND CAB

REAR VIEW
RIGHT SIDE UNDER CAB

FIGURE 3-11. T270/370 22” Fuel Tank Mounting Measurements [inches (mm)]

22” Fuel Tank Height	A, inch (mm)
Standard	16.3 (416)
Raised 1 Inch	15.3 (389)

24.5-inch Fuel Tanks — T270/370

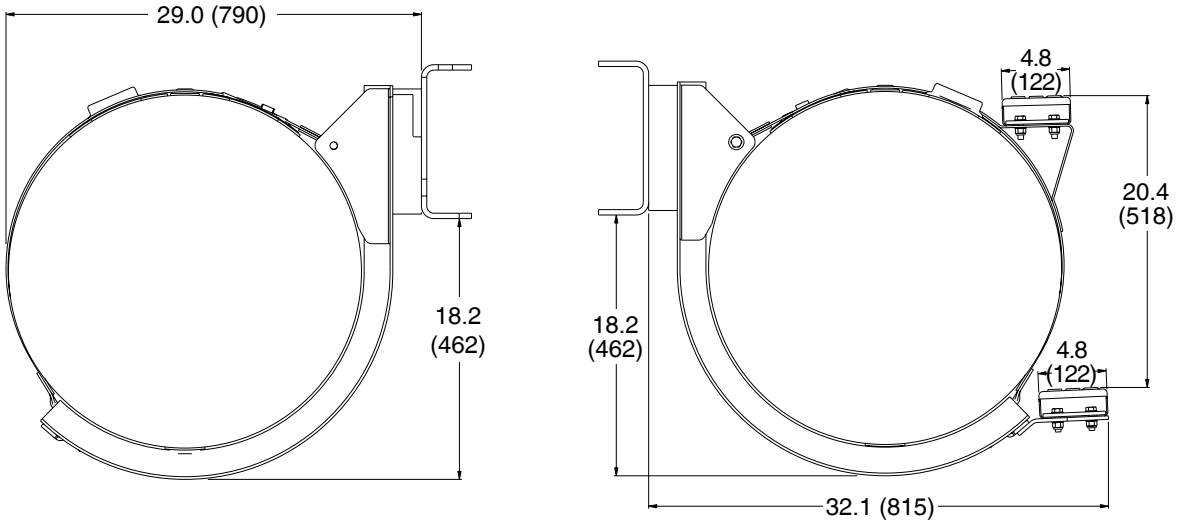

NO STEPS

WITH STEPS

FIGURE 3-12. T270/370 24.5” Fuel Tank Mounting Measurements. With and without steps. [inches (mm)]

https://truckmanualshub.com/

Rectangular Fuel Tank

Rectangular Fuel Tank Mounting

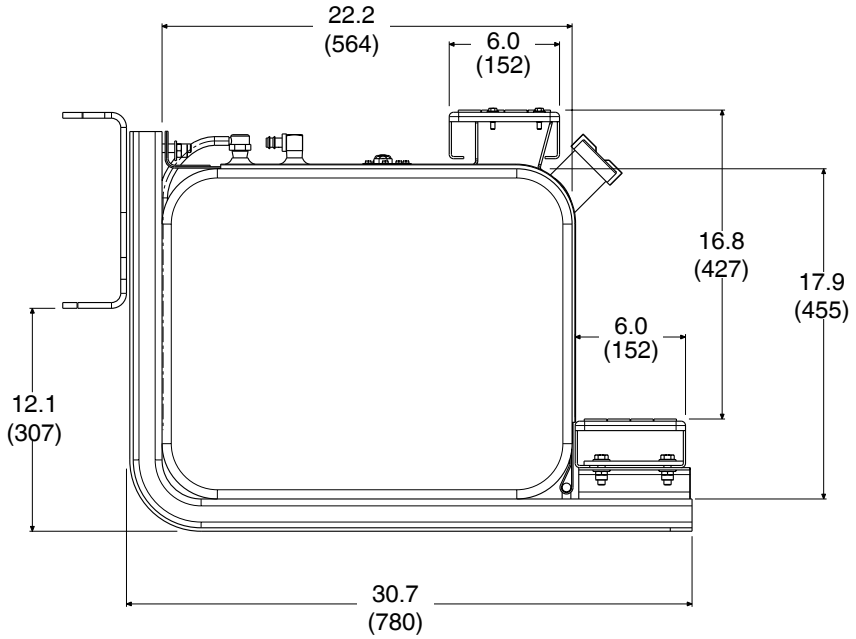

FIGURE 3-13. Rectangular Fuel Tank Measurements [inches (mm)]

https://truckmanualshub.com/

Battery Box – T270/370

Cantilever Battery Box Back of Cab.

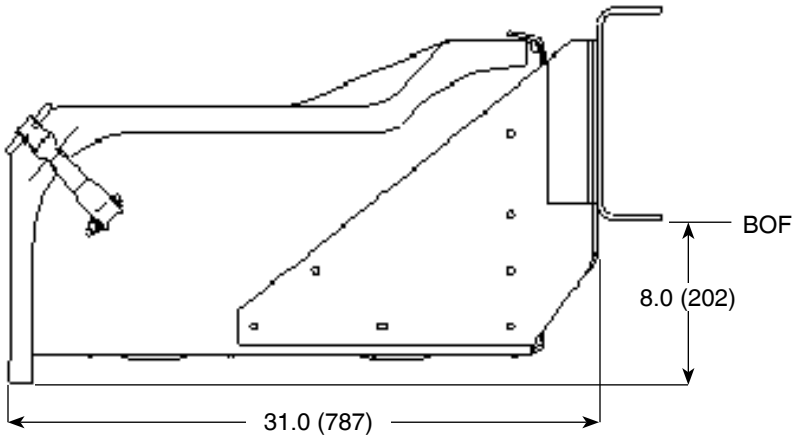

Rear View

FIGURE 3-14. T270/370 Battery Box Measurements [inches (mm)]

Battery/Access Step – T170

Parallel Battery Box LH Under Cab or Cab Access RH under Cab.

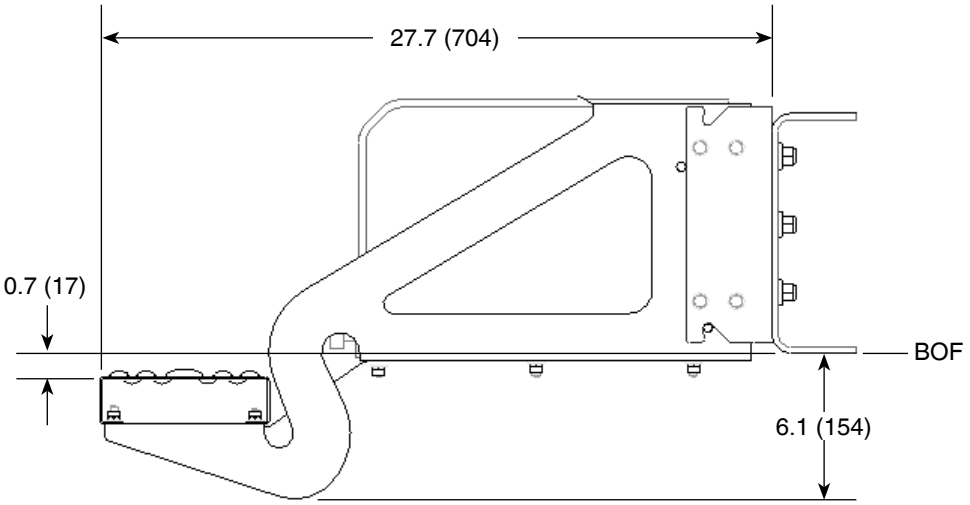

Rear View – Battery Box LH under shown, Cab Access Step RH under is opposite.

FIGURE 3-15. T170 Battery Box/Cab Access Step Measurements [inches (mm)]

https://truckmanualshub.com/

Horizontal Exhaust/Muffler

Horizontal Exhaust Muffler/DPF Mounting

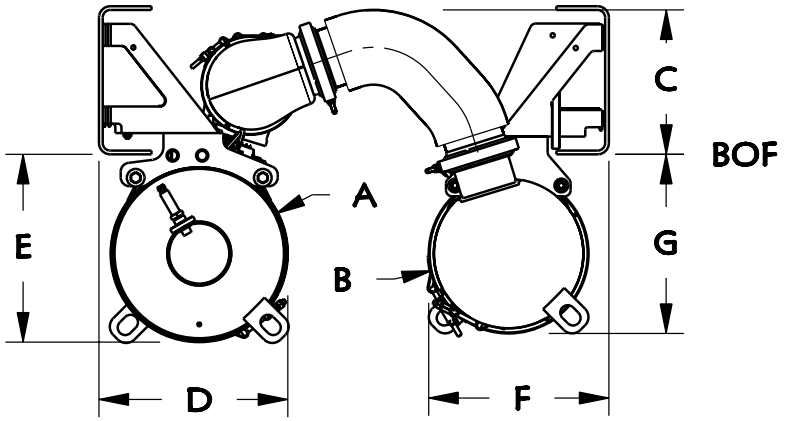

T170

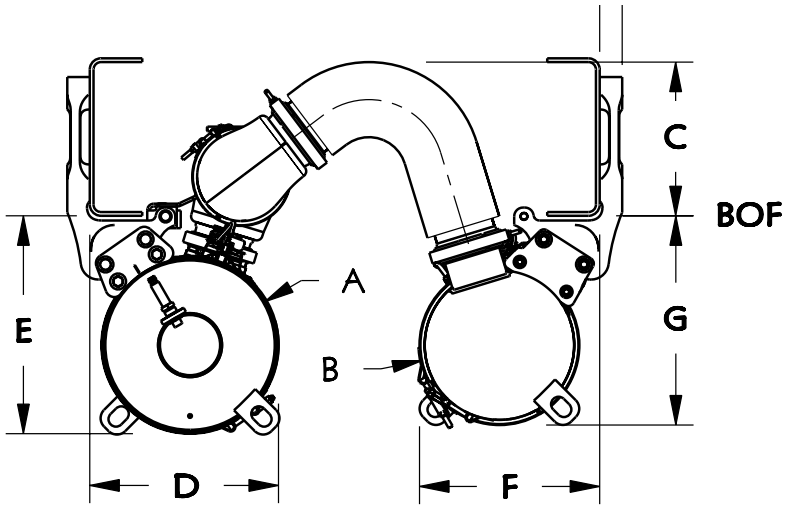

T270/370

FIGURE 3-16. Horizontal Exhaust Muffler/DPF Measurements [inches (mm)]

TABLE 3-10. RH Under Frame Horizontal Exhaust Mounting

Model	A Inch (mm)	B Inch (mm)	C Inch (mm)	D Inch (mm)	E Inch (mm)	F Inch (mm)	G Inch (mm)	H Inch (mm)
T170	5.7 (145)	5.3 (134)	9.6 (245)	12.6 (320)	12.5 (318)	12 (305)	11.9 (303)	N/A
T270/370	5.7 (145)	5.3 (134)	10.2 (260)	12.5 (318)	14.4 (366)	12 (305)	13.6 (354)	1.5 (38)

https://truckmanualshub.com/

Step/DPF Box Assembly RH Under Cab – T270/370

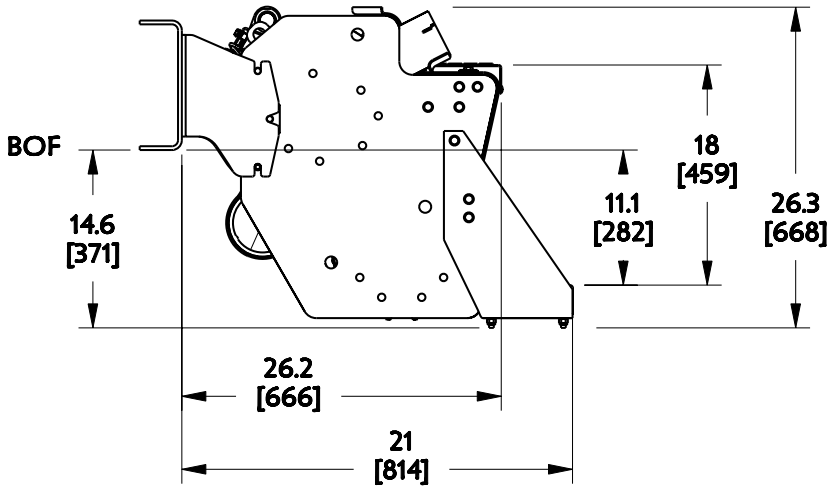

FIGURE 3-17. T270/T370 RH Step/DPF Box Assembly for Use with Vertical Tailpipe (left) or Horizontal Tailpipe (right) [inches (mm)]

Horizontal Muffler-Vertical Tailpipe on Cab – T270/370

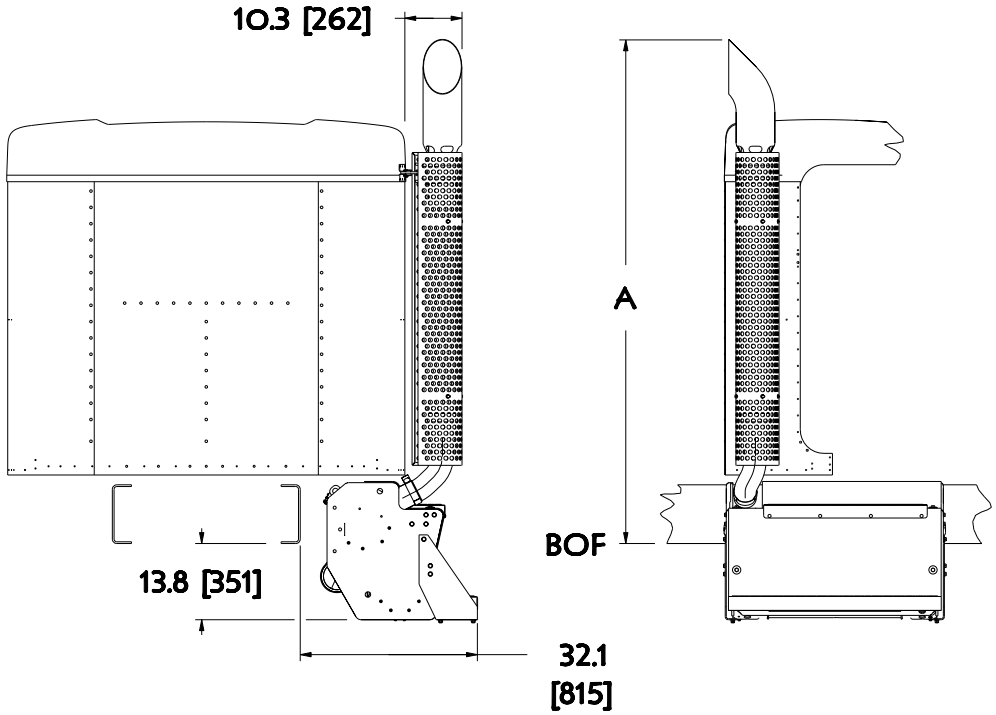

FIGURE 3-18. T270/370 Vertical Tailpipe on Right Side of Cab [inches (mm)]

https://truckmanualshub.com/

RH Back of Cab Independent Muffler — T270/T370

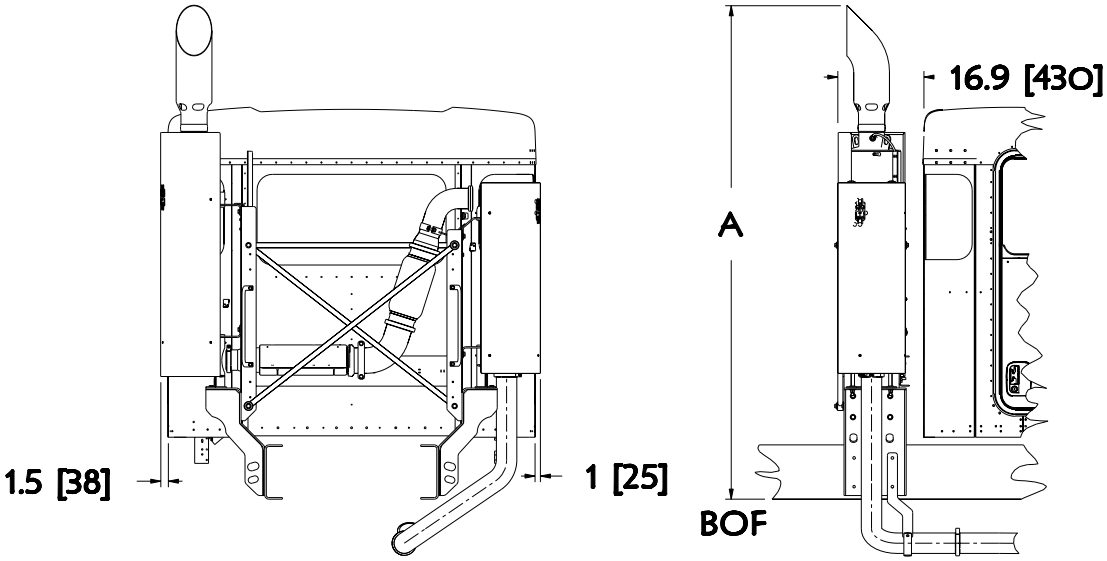

FIGURE 3-19. T270/T370 with Vertical Muffler/DPF Behind RH Side of Cab [inches [mm]]

TABLE 3-11. Vertical Tail Pipe Height Dimensions.

	Vertical Tail Pipe RH Side of Cab		Independent Vertical DPF/SCR Back of Cab	
Vertical Tail Pipe	**A Bottom of Rail (BOF) to Top of Tail Pipe (mm)**	**A Bottom of Rail (BOF) to Top of Tail Pipe (inch)**	**A Bottom of Rrail (BOF) to Top of Tail Pipe (mm)**	**A Bottom of Rail (BOF) to Top of Tail Pipe (inch)**
24” Curved	2220	87.4	2520	99.2
30” Curved	2372	93.4	2672	105.2
36” Curved	2525	99.4	2824	111.2
42” Curved	2677	105.4	2977	117.2
45” Curved	2753	108.4	N/A	N/A
48” Curved	2830	111.4	N/A	N/A
54” Curved	2982	117.4	N/A	N/A
60” Curved	3134	123.4	N/A	N/A

https://truckmanualshub.com/

RIDE HEIGHTS

The front (FS) and rear (RS) suspension ride heights are provided as a basic tool to determine overall height of the cab, height of exhaust components, and frame heights. The heights are calculated from the centerlines of the axles. Please be sure to include the tire radius dimension to determine overall height. Note: frame rail height itself will not affect the overall height as all components are located from the bottom of the rail.

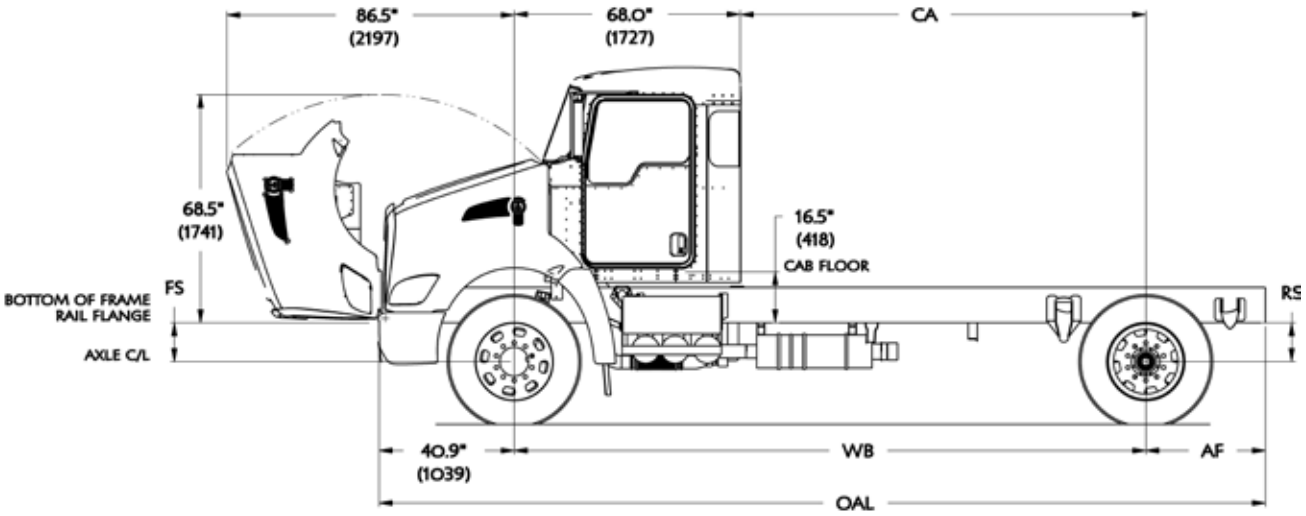

TABLE 3-12. Estimated Front Suspension Ride Heights

		FS: Estimated Front Ride Height	
Model	**Front Suspension**	**Laden inch (mm)**	**Unladen inch (mm)**
T170 (4x2)	8K Taper Leaf	6.4 (163)	7.4 (188)
T270/370 Non-Driving Front Axles (4x2 & 6x4)	8K Taperleaf with 19.5” Wheels	7.4 (188)	8.4 (213)
	8K Taperleaf with 22.5” Wheels	7.8 (198)	8.8 (224)
	10K Taperleaf with 19.5” Wheels	7.4 (188)	8.5 (216)
	10K Taperleaf with 22.5” Wheels	7.8 (198)	8.9 (226)
	12K Taperleaf with 22.5” Wheels	7.8 (198)	9.2 (234)
	13.2K Taperleaf with 22.5” Wheels	8.4 (213)	9.9 (251)
	14.6K Taperleaf with 22.5” Wheels	8 (203)	9.9 (251)
	16K Taperlead with 22.5” Wheels	8.5 (216)	10.3 (262)
T270/T370 4x4 & 6x6 w/ PX-6	10K Taperleaf with 22.5” Wheels	14.8 (376)	15.6 (396)
	12K Taperleaf with 22.5” Wheels	14.6 (371)	15.8 (401)
	13K Taperleaf with 22.5” Wheels	15.8 (401)	17.2 (437)
	14K Taperleaf with 22.5” Wheels	15.6 (396)	17.2 (437)
T270/T370 4x4 & 6x6 w/ PX-8 or Export ISC	10K Taperleaf with 22.5” Wheels	15.6 (396)	16.4 9 417)
	12K Taperleaf with 22.5” Wheels	15.4 (391)	16.6 (422)
	13K Taperleaf with 22.5” Wheels	15.8 (104)	17.2 (437)
	14K Taperleaf with 22.5” Wheels	15.6 (396)	17.2 (437)
	16K Taperleaf with 22.5” Wheels	15.1 (384)	16.8 (427)

https://truckmanualshub.com/

TABLE 3-13. Estimated Rear Suspension Ride Heights

Model	Rear Suspension (# Rear Axles)	RS: Estimated Rear Ride Height	
		Laden inch (mm)	Unladen, inch (mm)
T170 4x2	Reyco 79KB 13.5K (Single)	5.9 (150)	8.1 (206)
T270/370 4x2 & 6x4	Reyco 79KB 20K Capacity (Single)	6.6 (168)	9.0 (229)
	Reyco 79KB 21K Capacity (Single)	6.6 (168)	9.0 (229)
	Reyco 79KB with Helper 23K Capacity (Single)	6.6 (168)	9.0 (229)
	Reyco 79KB with Helper 26K Capacity (Single)	8.2 (208)	11.3 (287)
	Hendrickson HAS 21K/23K Air (Single)	7.8 (198)	
	Reyco 102 Multileaf 40K Capacity (Tandem)	8.0 (203)	9.6 (244)
	Hendrickson HAS 402 Air (Tandem)	7.8 (198)	
	Hendrickson RT-403 40K Capacity (Tandem)	7.6 (193)	8.6 (218)
	Chalmers 854-40-XL 40K Capacity (Tandem)	6.9 (175)	9.3 (236)
	Chalmers 854-40-XL-HS 40K Capacity (Tandem)	7.6 (193)	9.3 (236)
	Kenworth AG210L 21 K Air (Single)	6.5 (165)	6.5 (165)
	Kenworth AG400L 40K (Tandem)	8.5 (216)	8.5 (216)
T270/T370 4x4 & 6x6	Reyco 79KB 20K (Single)	14.5 (368)	16 (406)
	Reyco 79KB 21K (Single)	14.5 (368)	16 (406)
	Reyco 79KB 23K (Single)	14.5 (368)	16 (406)
	Reyco 79KB 26K (Single)	14.5 (368)	16 (406)
	Primaax EX 23K (Single)	15.5 (394)	15.5 (394)
	Primaax EX 26K (Single)	15.5 (394)	15.5 (394)
	Primaax EX 40K (Tandem)	15.5 (394)	15.5 (394)
	Chalmers 854-40-XXH-HS	15.5 (394)	17.2 (437)

https://truckmanualshub.com/

REAR SUSPENSION LAYOUTS

The rear suspension layouts are provided as a tool to help layout bodies prior to arrival. The applicable dimensions are shown. Be sure to check the axle spacing that is shown, as alternate spacings may exist and could change some of the dimensions. The dimensions shown below are the most typical installations, in special cases some hole locations will move. If you are planning on using the holes shown for your body installation, please confirm with your local KW dealer that the drawing below will be the installation used on your specific truck. Ensure that proper torque is used to reinstall any suspension components. See Table 7-1 and 7-2 on page 7-7.

It would be recommended to order the frame layout of your chassis along with your truck order. This can be done on any Kenworth truck, and will be provided 4 weeks ahead of the build schedule.

If there are hole locations that are not detailed please work with your local Kenworth Dealer to request that information.

If you would like details on the frame drilling with optional spacings, please contact your local Kenworth dealer.

KENWORTH AG210L SINGLE REAR AXLE

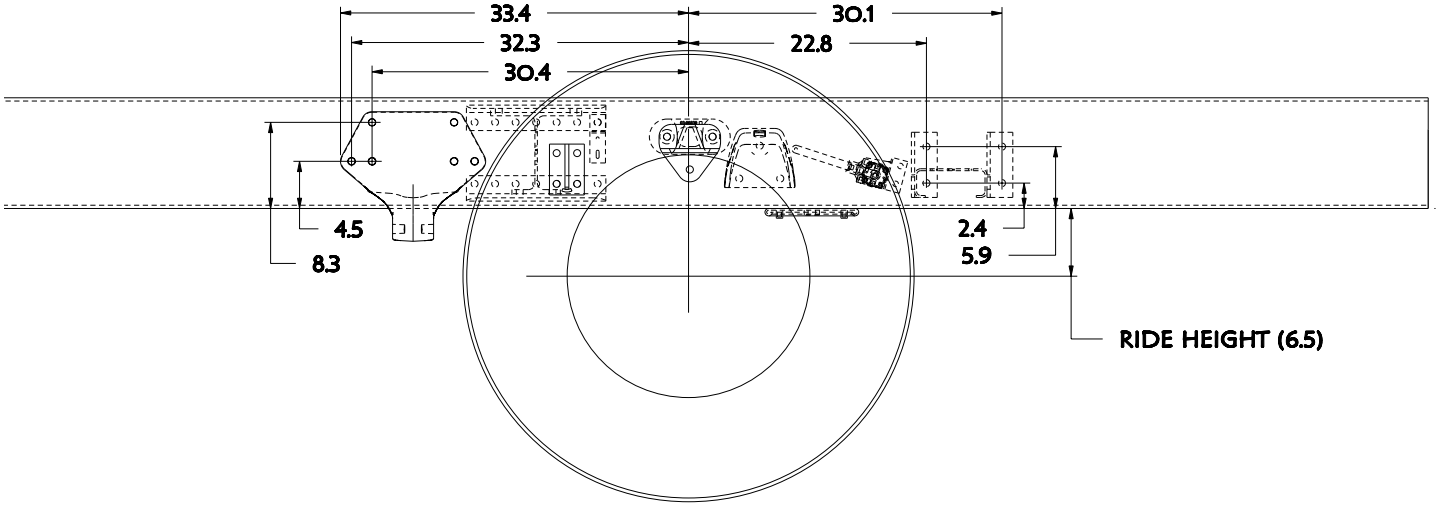

TABLE 3-14. Optional Kenworth Single Suspension

	Rating	Axle Spacing	Laden Ride Height	Unladen Ride Height
Kenworth AG210L	21K	–	6.5”	6.5”

https://truckmanualshub.com/

KENWORTH AG400L TANDEM REAR AXLE

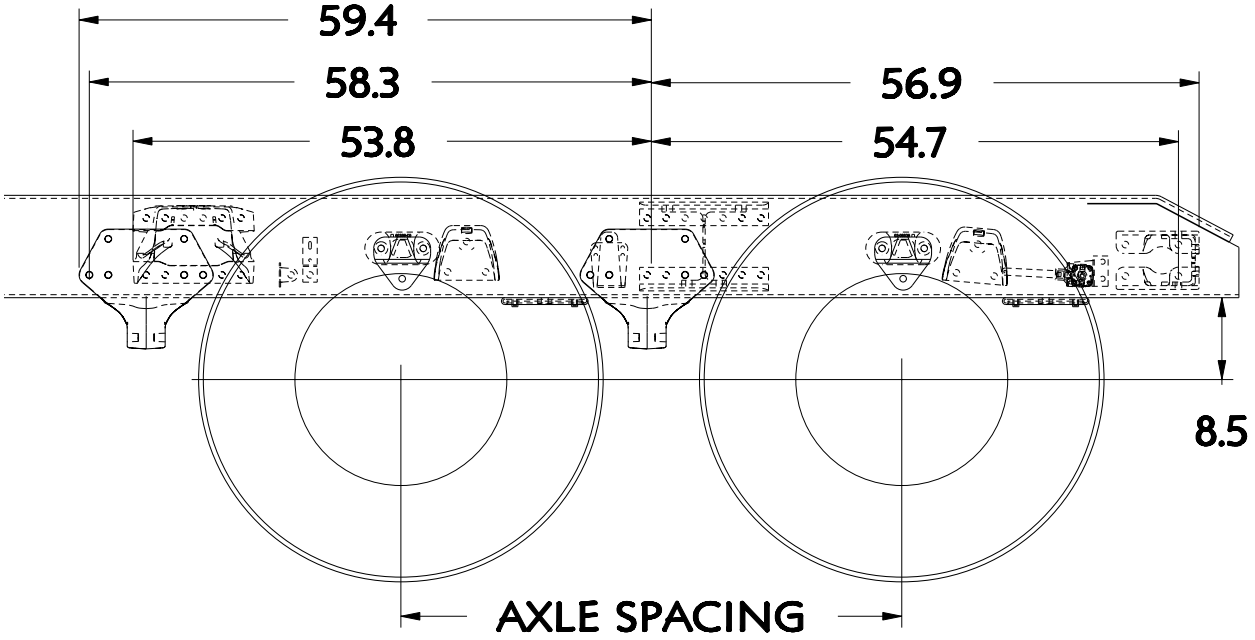

TABLE 3-15. Optional Kenworth Tandem Suspension

	Rating	Axle Spacing	Laden Ride Height	Unladen Ride Height
Kenworth AG400L	40K	52”	8.5”	8.5”

https://truckmanualshub.com/

REYCO 79KB SINGLE REAR AXLE

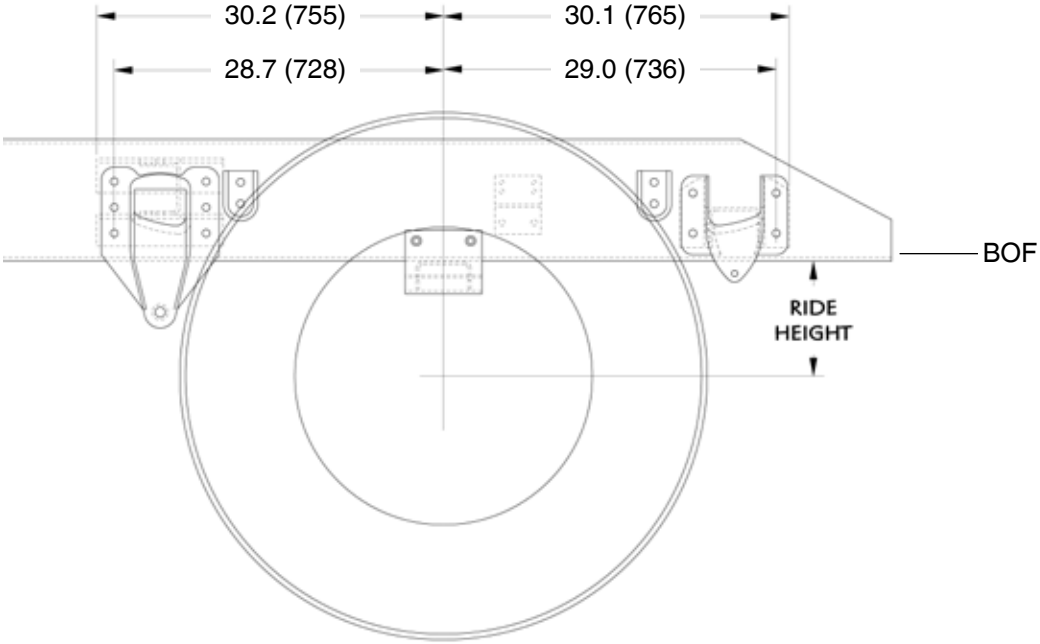

Optional Reyco 79KB Suspensions

TABLE 3-16. Rear Suspension Options

Suspension Type	Rating	Axle Spacing	Laden Ride Height	Unladen Ride Height
Reyco 79KB single (4x2)	13.5K	-	5.9”	8.1”
Reyco 79KB single (4x2)	20K	-	6.6”	9.0”
Reyco 79KB single (4x2)	21K	-	6.6”	9.0”
Reyco 79KB single (4x2)	23K	-	6.6”	9.0”
Reyco 79KB single (4x2)	26K	-	8.2”	11.3”
Reyco 79KB single (4x4)	20K	-	14.5”	16”
Reyco 79KB single (4x4)	21K	-	14.5”	16”
Reyco 79KB single (4x4)	23K	-	14.5”	16”
Reyco 79KB single (4x4)	26K	-	14.5”	16”

https://truckmanualshub.com/

REYCO 102 TANDEM REAR AXLE

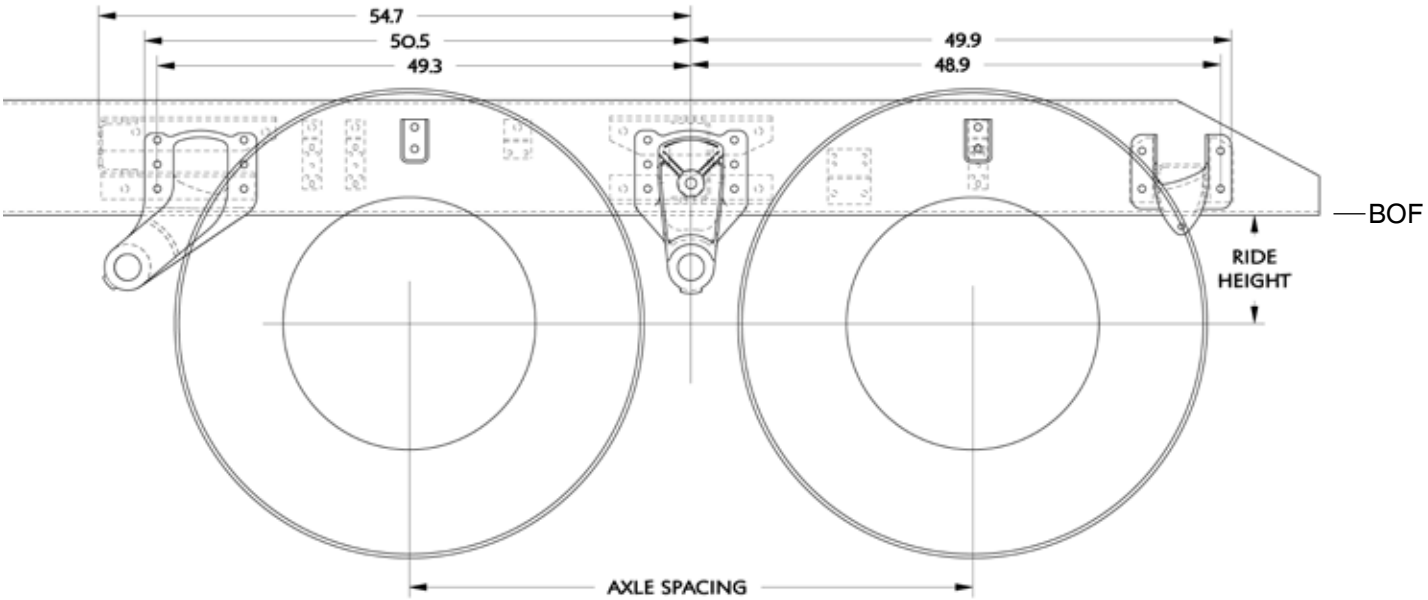

Optional Reyco 102 Suspension

TABLE 3-17. Rear Suspension Options

Suspension Type	Rating	Axle Spacing	Laden Ride Height	Unladen Ride Height
Reyco 102 Tandem	40K	52”	8.0”	9.6”

https://truckmanualshub.com/

HENDRICKSON HAS SINGLE REAR AXLE

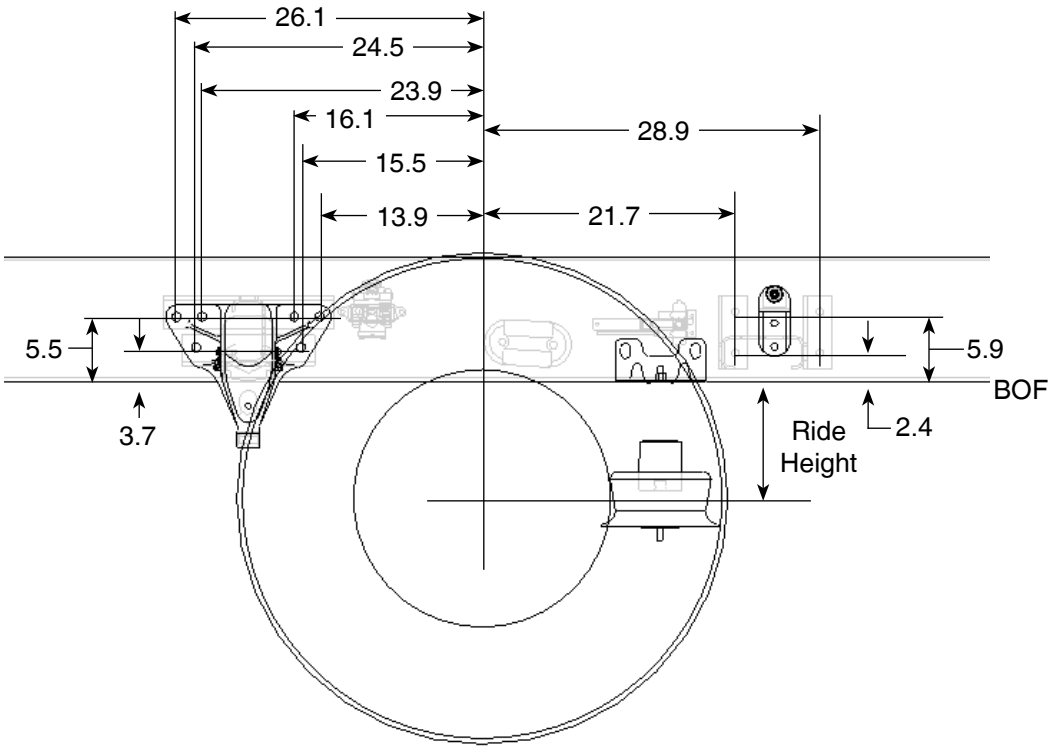

Optional Hendrickson HAS Single Suspensions

TABLE 3-18. Rear Suspension Options

Suspension Type	Rating	Axle Spacing	Laden Ride Height	Unladen Ride Height
Hendrickson HAS 210L	21K	-	7.8”	7.8”
Hendrickson HAL 230L	26K	-	7.8”	7.8”

https://truckmanualshub.com/

HENDRICKSON PRIMAAX SINGLE REAR AXLE

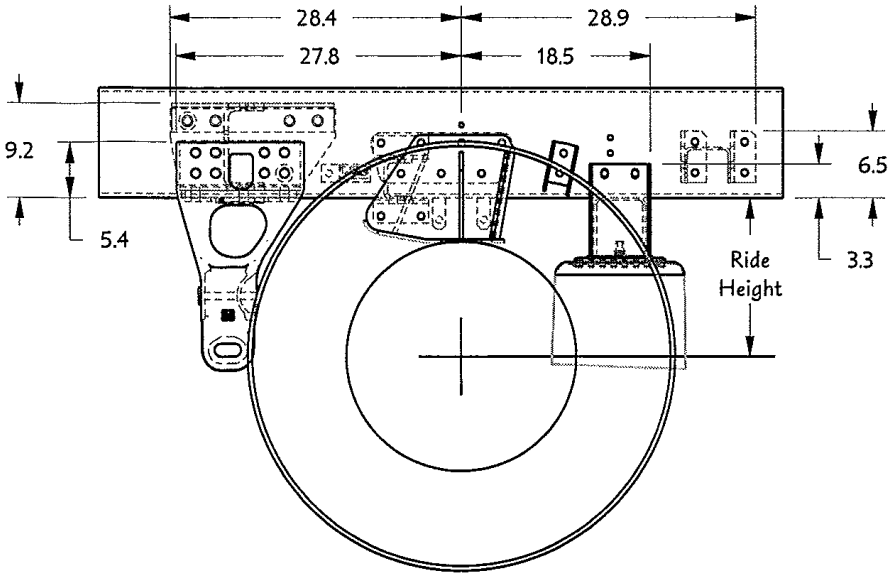

Optional Hendrickson Primaax Single Suspensions

TABLE 3-18-1. Rear Suspension Options

Suspension Type	Rating	Axle Spacing	Laden Ride Height	Unladen Ride Height
Hendrickson Primaax (4x4)	23K	-	15.5”	15.5”
Hendrickson Primaax (4x4)	26K	-	15.5”	15.5”

https://truckmanualshub.com/

HENDRICKSON HAS TANDEM SUSPENSION

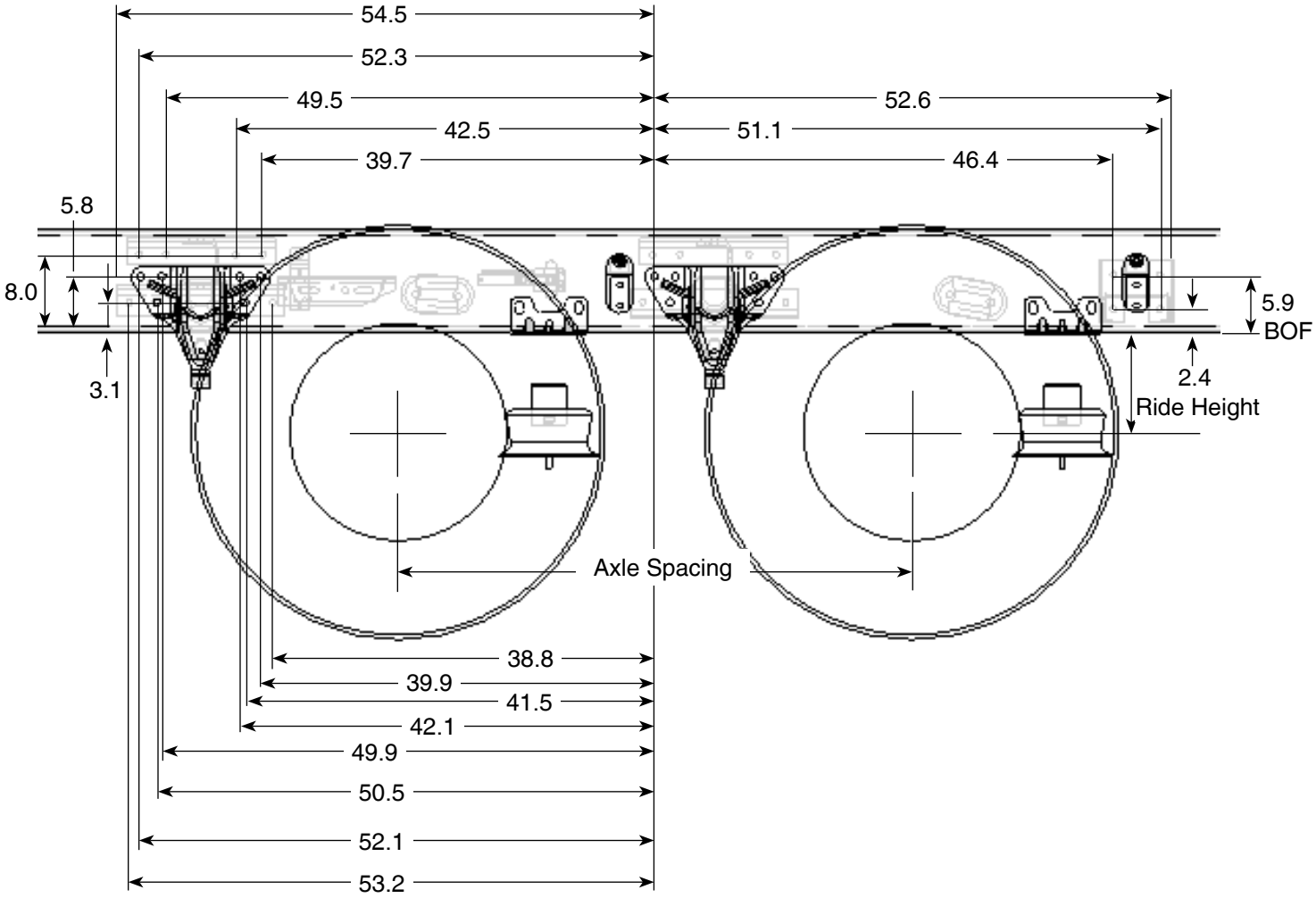

Optional Hendrickson HAS Tandem Suspensions

TABLE 3-19. Rear Suspension Options

Suspension Type	Rating	Axle Spacing	Laden Ride Height	Unladen Ride Height
Hendrickson HAS 402 tandem	40K	52”	7.8”	7.8”

https://truckmanualshub.com/

HENDRICKSON RT TANDEM SUSPENSION

Shown with a 54” Axle Spacing Without Track Rods

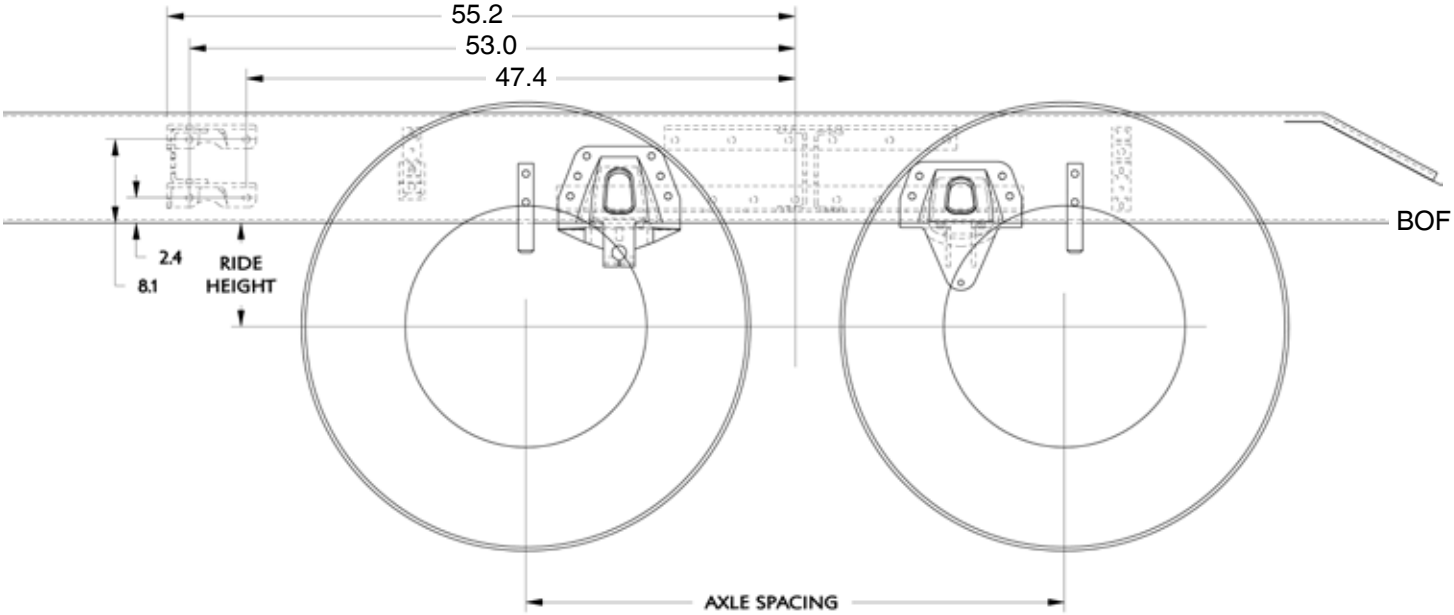

Optional Hendrickson RT Tandem Suspensions

TABLE 3-20. Rear Suspension Options

Suspension Type	Rating	Axle Spacing	Laden Ride Height	Unladen Ride Height
Hendrickson RT403 6” saddle	40K	52”	7.6”	8.6”

https://truckmanualshub.com/

CHALMERS 854-40 TANDEM SUSPENSION

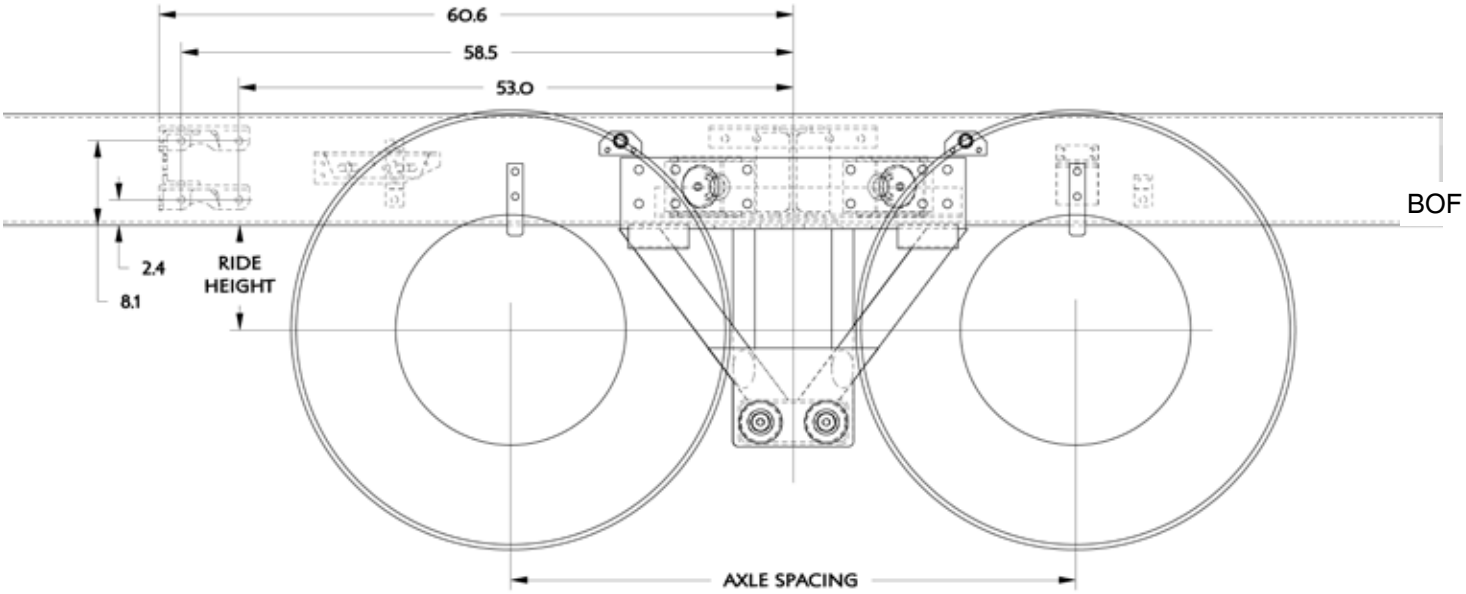

Optional Chalmers Tandem Suspensions

TABLE 3-21. Rear Suspension Options

Suspension Type	Rating	Axle Spacing	Laden Ride Height	Unladen Ride Height
Chalmers 854-40-XL (6x4)	40K	54”	6.9”	9.3”
Chalmers 854-40-XL-HS (6x4)	40K	54”	7.6”	9.3”
Chalmers 854-40-XXH-HS (6x6)	40K	54”	15.5”	17.2”

https://truckmanualshub.com/

TIRE DATA

For dimensions for your particular Bridgestone tire, visit the Bridgestone website, www.bridgestonetrucktires.com.

FRAME AND CAB RELATED HEIGHTS

The bottom of the frame rail (BOF) at the front and rear axle can be used as a reference point to estimate vertical heights. Use the following to calculate estimates for frame and cab related heights, such as top of frame rail, step height, top of exhaust pipe, etc.:

1.) Tire radius data from the manufacturer

2.) Front and rear suspension ride heights in this section

3.) Frame rail heights defined in this section if needed

4.) Component dimensions from bottom of rail defined in this section if needed

Note that there are many factors that will affect heights including, but not limited to, front and rear axle loading and tire pressure. Placement of frame components such as fuel tanks, will affect loads on the front axle and rear axle, as well as distribution to the left and right side of the vehicle. Heights calculated from this information are estimates only.

GROUND CLEARANCES

To calculate estimates for ground clearance for mounted components using the underside of the bottom of the frame rail as a reference use the following:

1.) Tire radius data from the manufacturer

2.) Front and rear suspension ride heights in this section

3.) Component dimensions from bottom of rail defined in this section

Ground clearances, like height calculations, are affected by factors including, but not limited to, front and rear axle loading and tire pressure. Placement of frame components, such as fuel tanks, will affect loads on the front axle and rear axle, as well as distribution to the left and right side of the vehicle. Ground clearances calculated from this information are estimates only.

https://truckmanualshub.com/

GROUND CLEARANCE (4X2, 6X4)

This information is provided as a reference, not all optional equipment is included. In order to calculate the height on your specific chassis, please use the ride height information provided on page 3-17 and 3-18. For comparison the FS value shown is 11.4” unladen and 10.4” laden.

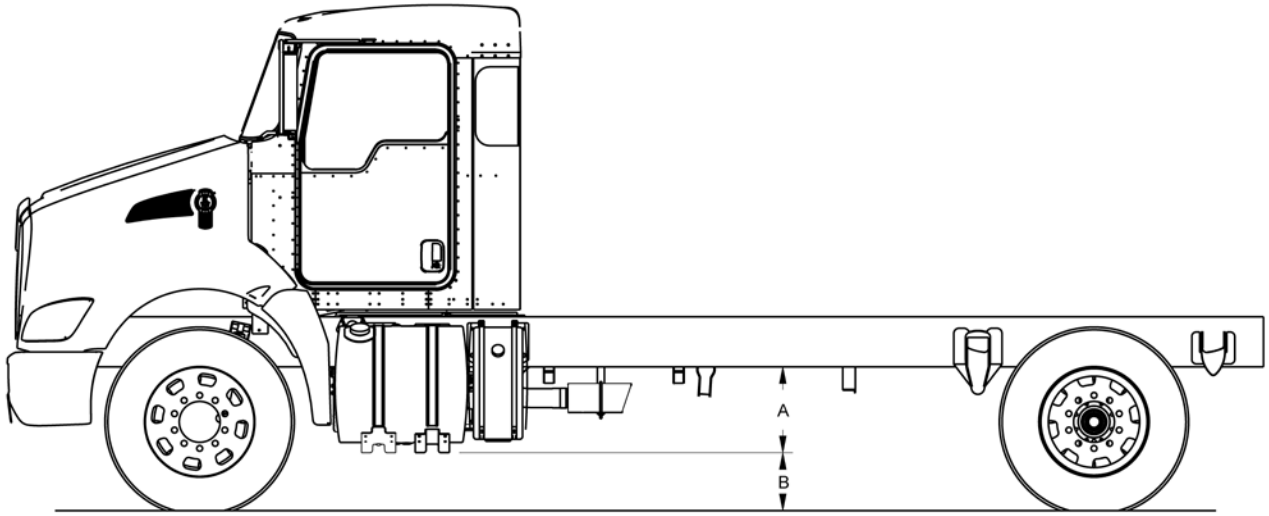

TABLE 3-22. Ground Clearance for Fuel and DEF Tanks (4x2, 6x4)

Front Suspension	Front Tires	Rear Suspension	Rear Tires	Component	Dim “A” (Bottom of Rail Down to Lowest Part on Component)	Dimension “B”	
						Unladen	Laden
12K Taperleaf 54”	R250F 11R22.5 14PR	HAS230L	M711 11R22.5 14PR	45 Gal Rect Fuel Tank	12.1	17.2	15
				Def Tank For Above Rect Fuel Tank	12.1	17.2	15
				22” Dia Round Alum Fuel Tank	16.3	13.0	10.8
				Def Tank For Above 22” Fuel Tank	15.3	14.0	11.8
				24.5” Dia Round Alum Fuel Tank	18.2	11.1	8.9
				Def Tank For Above 24.5”Fuel Tank	15.8	13.5	11.3

https://truckmanualshub.com/

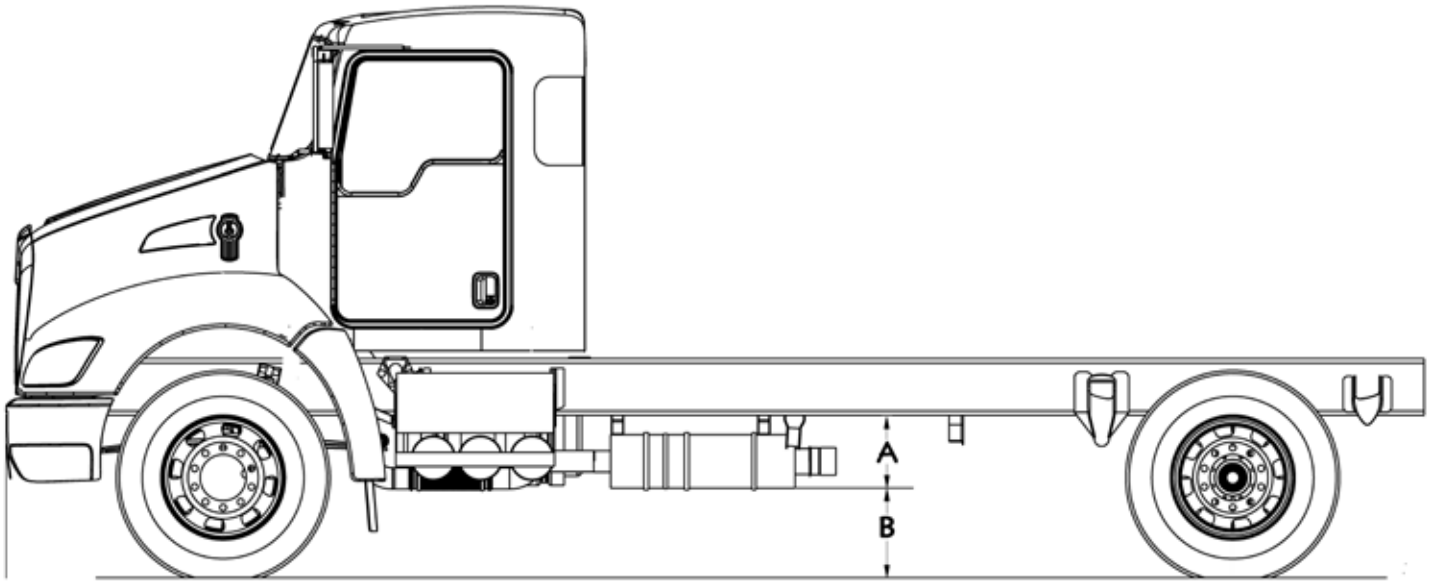

TABLE 3-23. Ground Clearance for Battery Box & DPF/SCR (4x2, 6x4)

Front Suspension	Front Tires	Rear Suspension	Rear Tires	Component	Dim "A" (Bottom of Rail Down to Lowest Part on Component)	Dimension "B"	
						Unladen	Laden
12K Taper Leaf 54"	R250F 11R22.5 14PR	HAS230L	M711 11R22.5 14PR	LH Under Battery Box (w/air tanks)	13.9	15.4	13.2
				RH Under DPF/ SCR Box	13.8	15.5	13.3

https://truckmanualshub.com/

GROUND CLEARANCE (4X4, 6X6)

This information is provided as a reference, not all optional equipment is included. In order to calculate the height on your specific chassis, please use the ride height information provided on page 3-17 and 3-18. For comparison the FS value shown is 15.8” unladen and 14.5” laden.

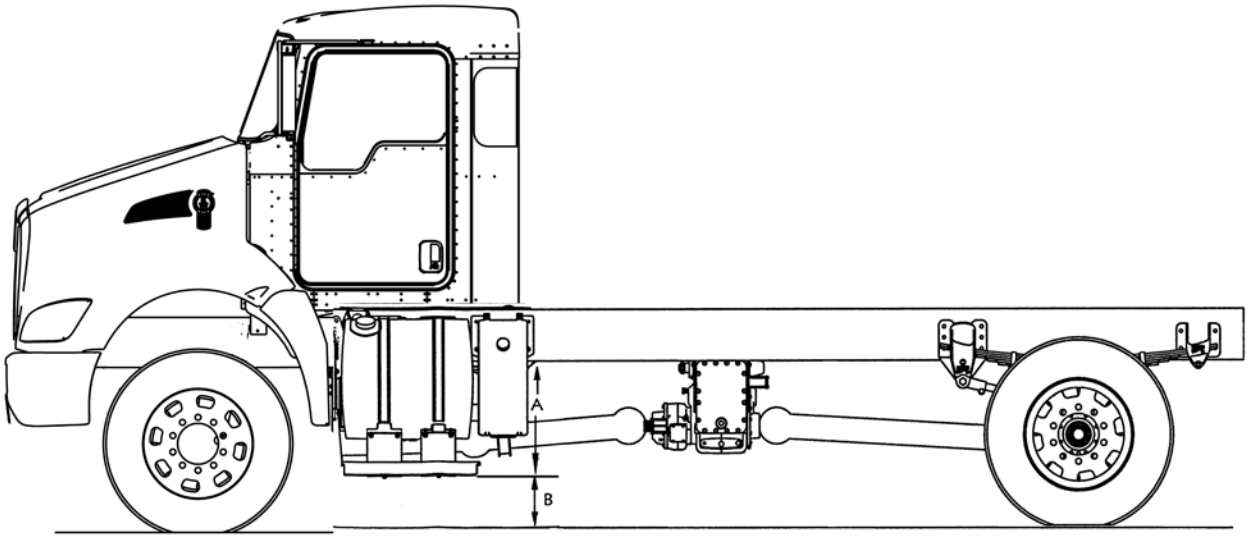

TABLE 3-24. Ground Clearance for Fuel and DEF Tanks (4x4, 6x6)

Front Suspen-sion	Front Tires	Rear Suspen-sion	Rear Tires	Component	Dim “A” (Bottom of Rail Down to Lowest Part on Component)	Dimension “B”	
						Unladen	Laden
12K Taperleaf 54”	R250F 11R22.5 14PR	Reyco 79KB	M711 11R22.5 14PR	45 Gal Rect Fuel Tank	12.1	24.2	21.9
				Def Tank For Above Rect Fuel Tank	12.1	24.2	21.9
				3rd Cab Access Step for Above 22” Fuel Tank	22.0	14.3	12.0
				22” Dia Round Alum Fuel Tank	16.3	20.0	17.7
				Def Tank For Above 22” Fuel Tank	15.3	21.0	18.7
				3rd Cab Access Step for Above 22” Fuel Tank	23.0	13.3	11.0
				24.5” Dia Round Alum Fuel Tank	18.2	18.1	15.8
				Def Tank For Above 24.5”Fuel Tank	15.8	20.5	18.2
				3rd Cab Access Step for Above 24.5” Fuel Tank	24.2	12.1	9.8

https://truckmanualshub.com/

GROUND CLEARANCE (4X4, 6X6)

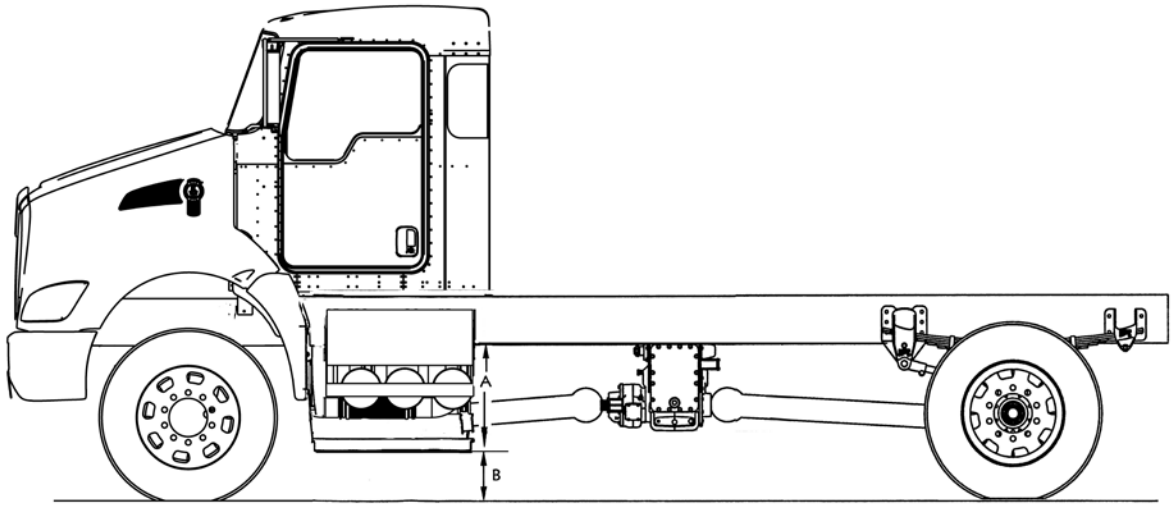

TABLE 3-25. Ground Clearance for Battery Box & DPF/SCR (4x4, 6x6)

Front Suspension	Front Tires	Rear Suspension	Rear Tires	Component	Dim "A" (Bottom of Rail Down to Lowest Part on Component)	Dimension "B"	
						Unladen	Laden
12K Taperleaf 54"	R250F 11R22.5 14PR	HAS230L	M711 11R22.5 14PR	LH Under Battery Box (w/air tanks)	13.9	22.4	20.1
				3rd Cab Access Step for Above Battery Box	21.9	14.4	12.1
				RH Under DPF/SCR Box	15.5	20.8	18.5
				3rd Cab Access Step For Above DPF/SCR Box	23.5	12.8	10.5
				Transfer Case with PX-6 Engine	18.5	17.8	15.5
				Transfer Case with PX-8 or Export ISC Engine	19.2	17.1	14.8

https://truckmanualshub.com/

PTO CLEARANCES

The following visuals are provided to help aid in determining PTO locations and clearances. For specific dimensions please work through your local Kenworth dealer. Multiple PTO's are shown for layout purposes only. Power equipment, i.e., drive shafts & power pumps are not included. Body builders should select the appropriate PTO for their application and customer requirements. NOTE: Installations depict multiple PTOs. PTO locations shown below are for reference only. Some PTOs may interfere with frame rail and/or other components.

In order to ensure the PTO area remains clear of air equipment, electrical and emissions equipment, Kenworth recommends always ordering PTO controls, even when installing the PTO aftermarket. Kenworth does offer a variety of factory installed PTOs. Contact your local dealer for assistance.

Automatic Transmission – Allison 2000:

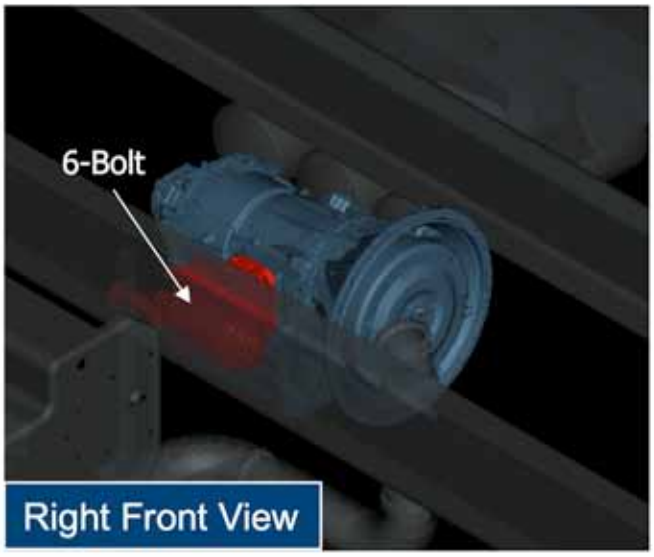

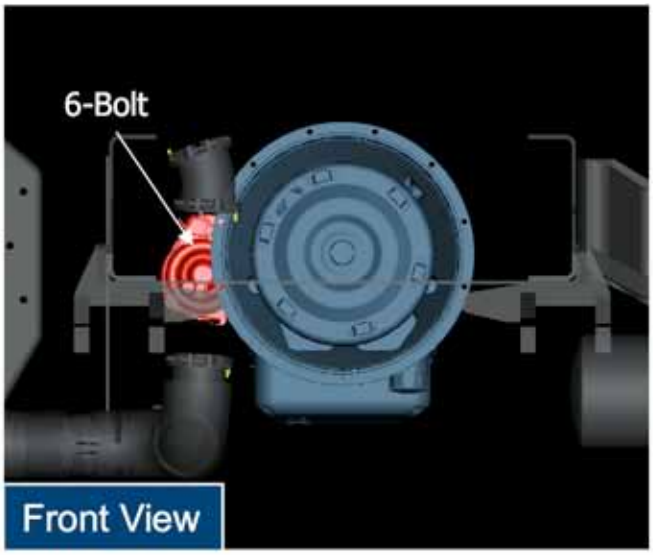

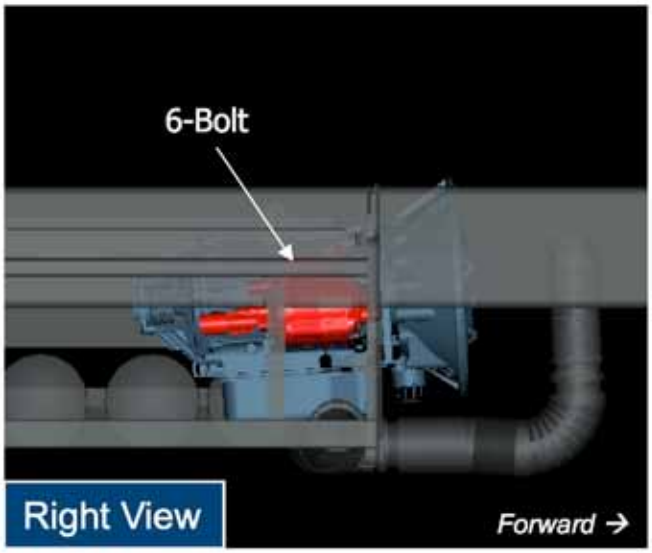

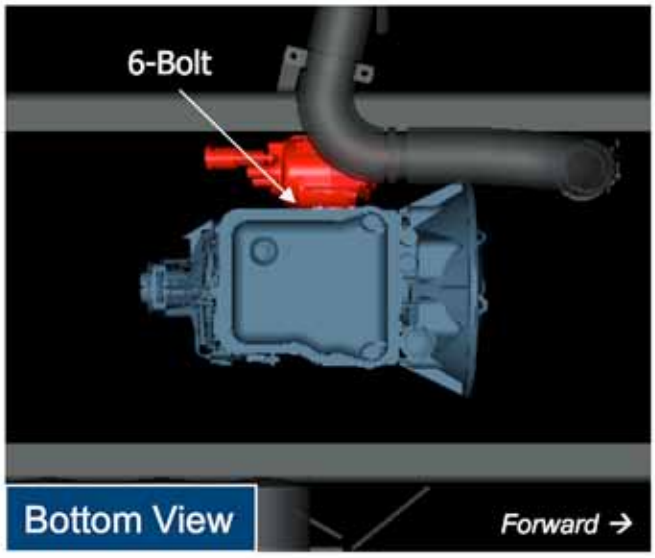

https://truckmanualshub.com/

Automatic Transmission – Allison 3000RDS:

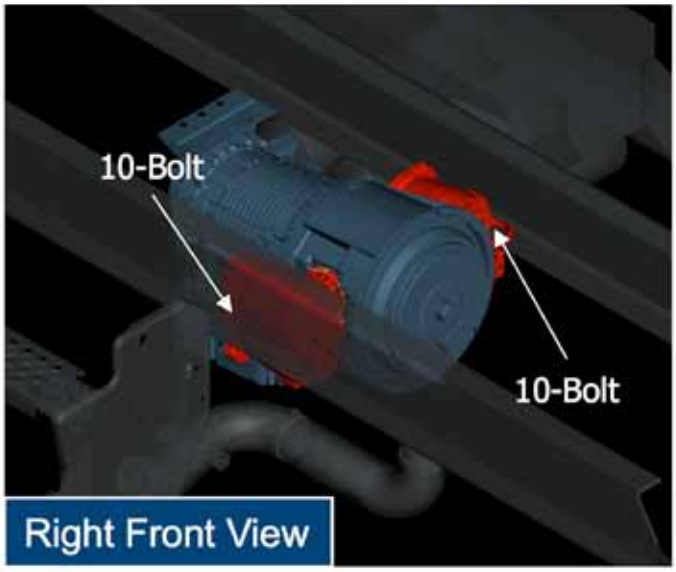

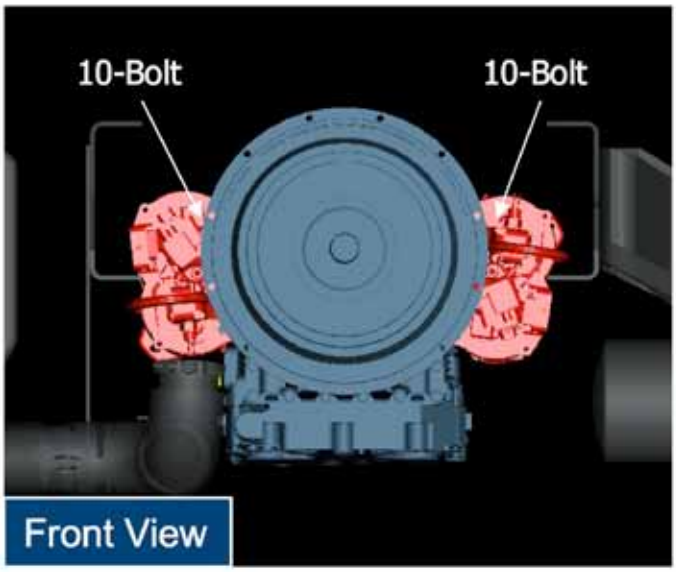

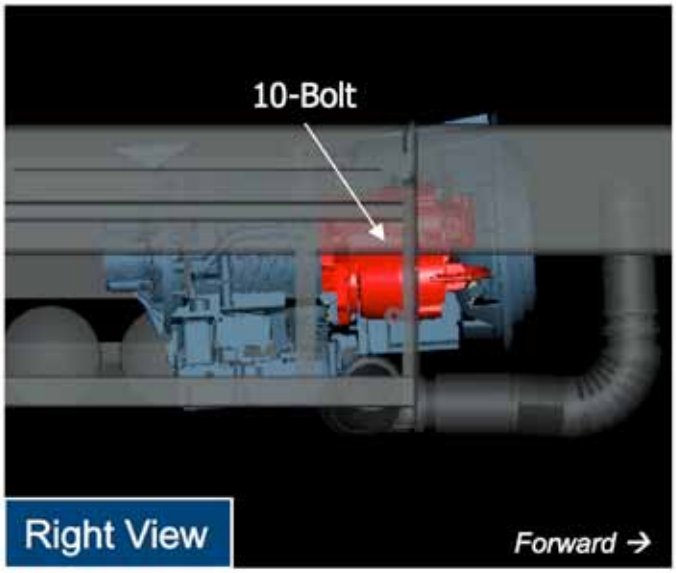

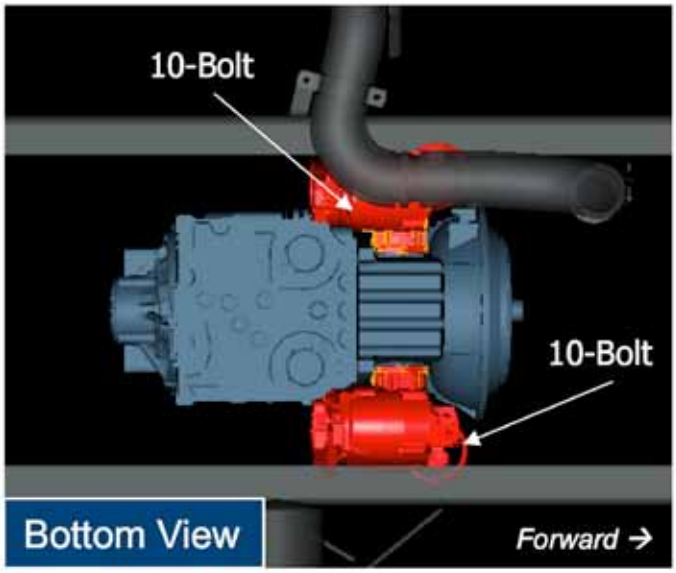

https://truckmanualshub.com/

Manual Transmission:

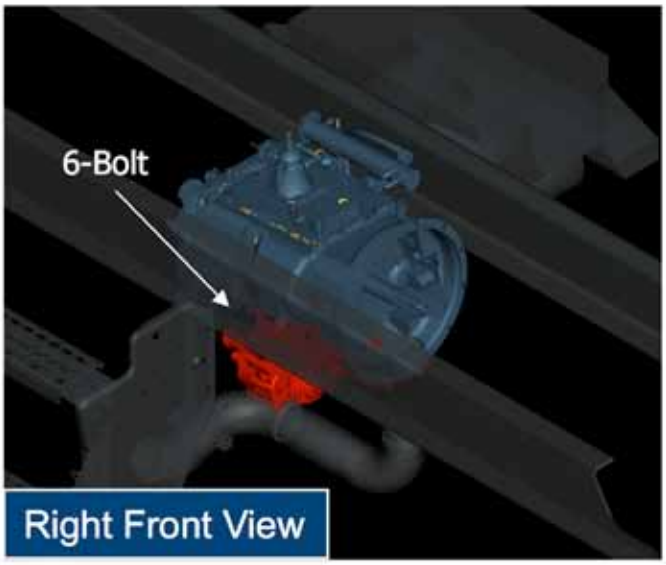

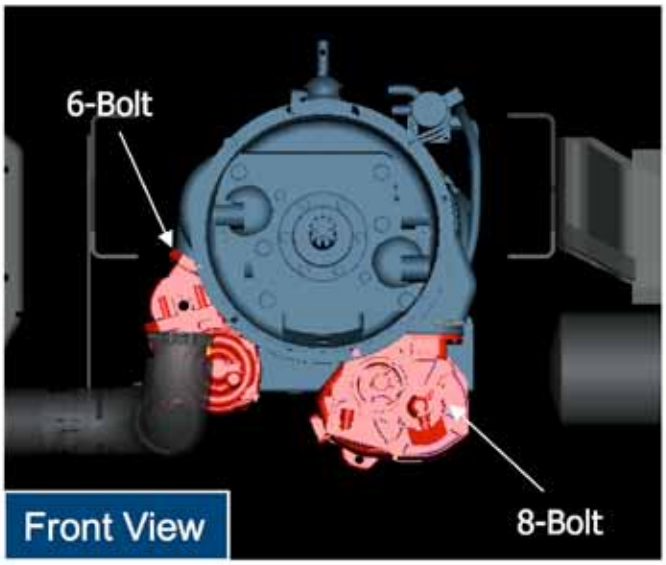

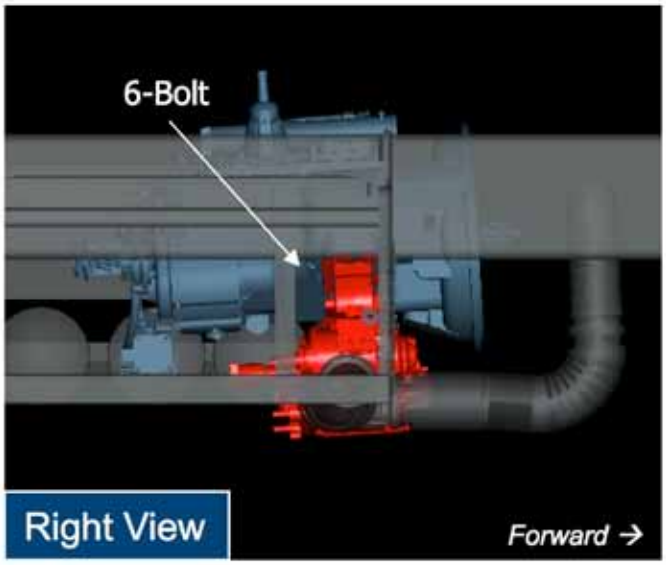

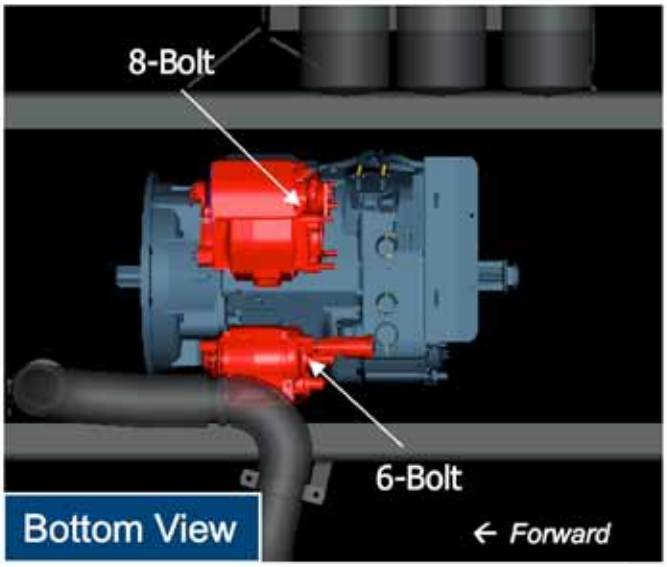

https://truckmanualshub.com/

EXHAUST AND AFTER-TREATMENT INFORMATION

The following section is designed to give you information regarding the exhaust and after-treatment systems on Kenworth chassis.

All Kenworth's equipped with 2010 emission level engines will utilize Selective Catalyst Reduction (SCR). SCR is a process in which Diesel Exhaust Fluid (DEF) is injected into the exhaust down stream of the engine. DEF is converted to ammonia by the heat of the exhaust system. Inside of the SCR canister a catalyst causes a chemical reaction to occur between the ammonia and NOx, turning it into water and nitrogen. For more information on the specific details of how SCR works, please contact your local Kenworth dealer.

DEF System Schematic:

On most Kenworth chassis the DEF Supply Module (or pump) is integrated into the DEF tank. Kenworth does not allow relocation of this pump. The following schematic details how the DEF lines route to the after-treatment system.

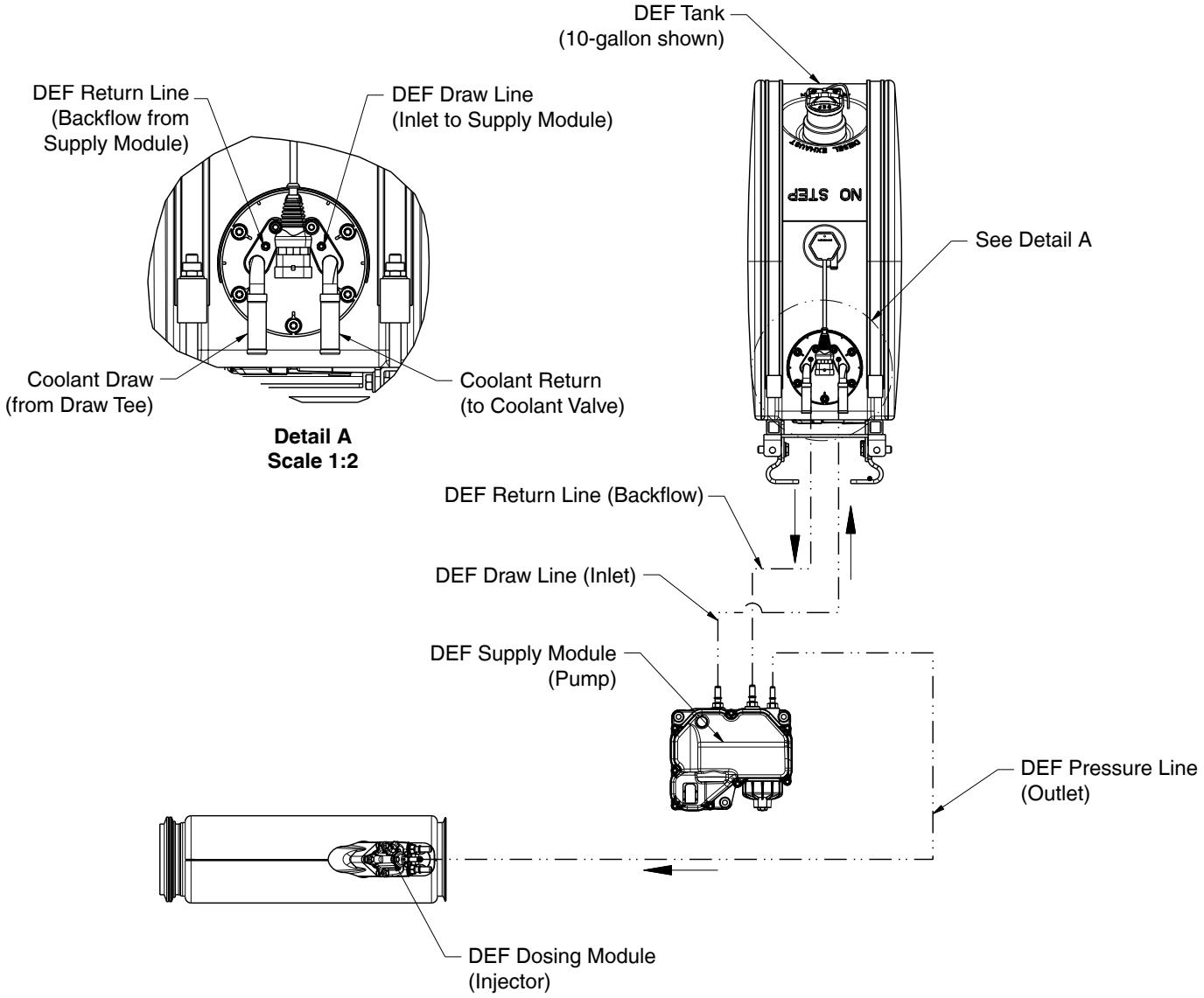

https://truckmanualshub.com/

DEF will freeze at approximately 11° F. In order to keep DEF from freezing all tanks will be heated with engine coolant. The following schematic shows the routing of these lines. The coolant lines that run to and from the SCR system must not be tampered with, or used for a source of heat and/or cooling for other components on the chassis. It is critical that the system is not compromised in any manner.

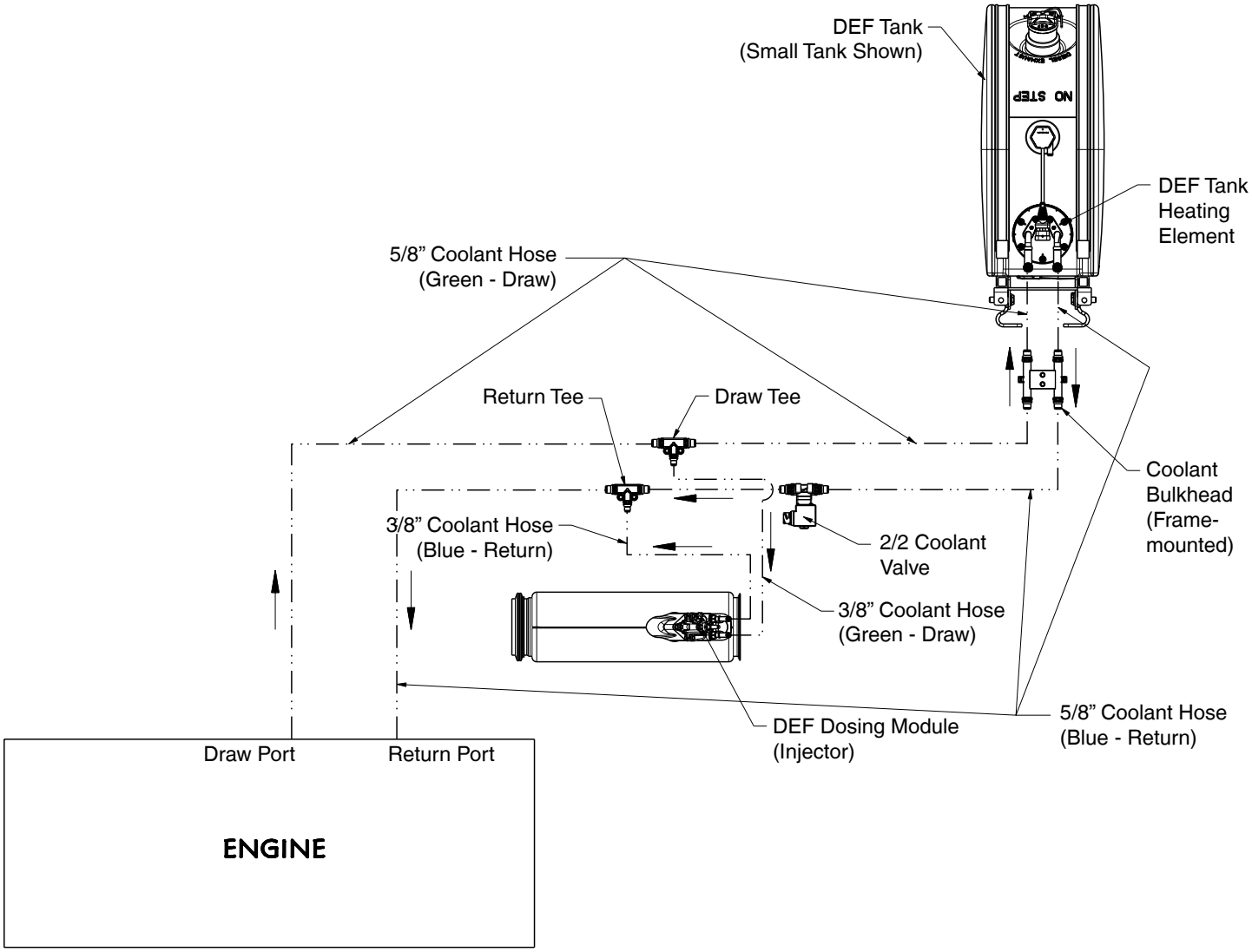

https://truckmanualshub.com/

GENERAL GUIDELINES FOR DEF SYSTEM

The installation of the DEF tank is a critical component of the SCR system. While Kenworth does not recommended relocating the DEF tank, there are applications and body installations that will require it. The guidelines below must be strictly followed by any entity relocating the tank. Failure to follow the guidelines completely and accurately may result in engine shutdown situations.

Kenworth offers a variety of DEF tank sizes to meet every application. The DEF tank volume is regulated by the E.P.A. Kenworth advises against modifying the tank volume after the truck has been delivered from the factory.

- Total DEF capacity **must** meet or exceed 6% of the usable fuel capacity on the truck. The calculation to determine DEF capacity is:

  Minimum DEF Tank Volume = Useable Fuel Capacity (gal) x 0.06

  Example: For a truck with 100 useable gallons of fuel, the equation is
  DEF required = 100 x 0.06 = 6 gallons or more of DEF.

PACCAR-approved DEF hoses are required when retrofitting for system to function properly. The use of unapproved hoses for DEF lines will void warranty and may cause engine shutdown situations. The DEF pump (or Supply Module) can not be relocated from the DEF tank. In addition, the Medium Duty Rectangular DEF Tank, that is used to meet clear back of cab requirements, cannot be relocated.

INSTALLATION REQUIREMENTS AND DIMENSIONS FOR DEF SYSTEM

When relocating any DEF system components, the locations must meet the guidelines below. Failure to comply may result in non-conformance to EPA standards and engine shutdown.

DEF piping relative heights: In order to ensure proper functionality of DEF system, the height differences in the guidelines below must be followed during line routing and component placement.

With all relocating procedures, general clearances and routing guidelines must be followed. See section 9 of this manual for general routing guidelines.

When relocating the components the maximum pressure DEF hose length, from Supply module to Dosing Module, is 3 meters (118”).

Maintain a minimum of 3” clearance to shielded exhaust components when routing DEF lines to prevent possible melting.

If the DEF tank is relocated the coolant lines will need to be modified. During this process if the tank is moved forward on the chassis (ie closer to the engine) it is necessary to remove excess coolant lines and maintain the original routing path. If the tank is moved rearward on the chassis the additional length of cooling line required to complete the installation must be installed in a straight section of the existing coolant routing lines. This process will minimizes the change in coolant flow by minimizing changes in restrictions. Increase in restriction occur with excessive line length and bends. Work with your local Kenworth dealer if you are unsure about the coolant line modifications.

https://truckmanualshub.com/

MEASUREMENT REFERENCE POINTS

For all relocation procedures, the measurement points will referenced in the guidelines are taken from the following specific points:

Supply Module: The supply module is commonly called a pump. The measurement point on the supply module is the top of the DEF fluid pressure line. See Figure 4-1.

FIGURE 4-1: Measurement Location of DEF Supply Module (Pump)

Dosing Module: The dosing module is commonly called an injector, this injector is located on the SCR mixing pipe which is between the DPF and SCR canister. The measurement point on the dosing module is the top of the DEF fluid pressure line. See Figure 4-2.

FIGURE 4-2: Measurement Location of DEF Dosing Module (Injector)

The following relocation guidelines are dependant on exhaust configuration and DEF tank type and location.

The Dosing Module should not need to be relocated. However if it is removed for any reason, it is critical that the module be reinstalled at the correct orientation. Figure 4-3 below illustrates the correct installation orientations. The angle references the vertical plane.

https://truckmanualshub.com/

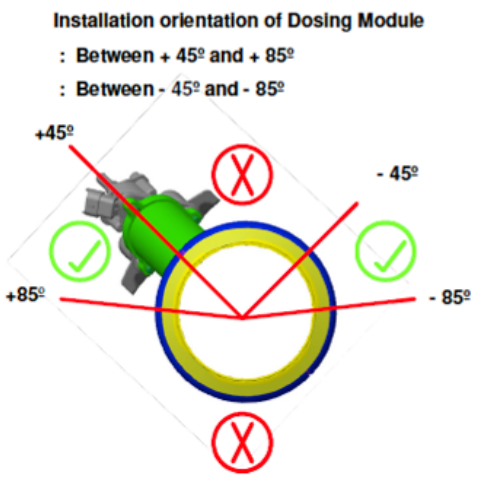

FIGURE 4-3: Orientation of Dosing Module

Right Hand Under DPF and SCR with Rectangular Small or Medium DEF Tanks

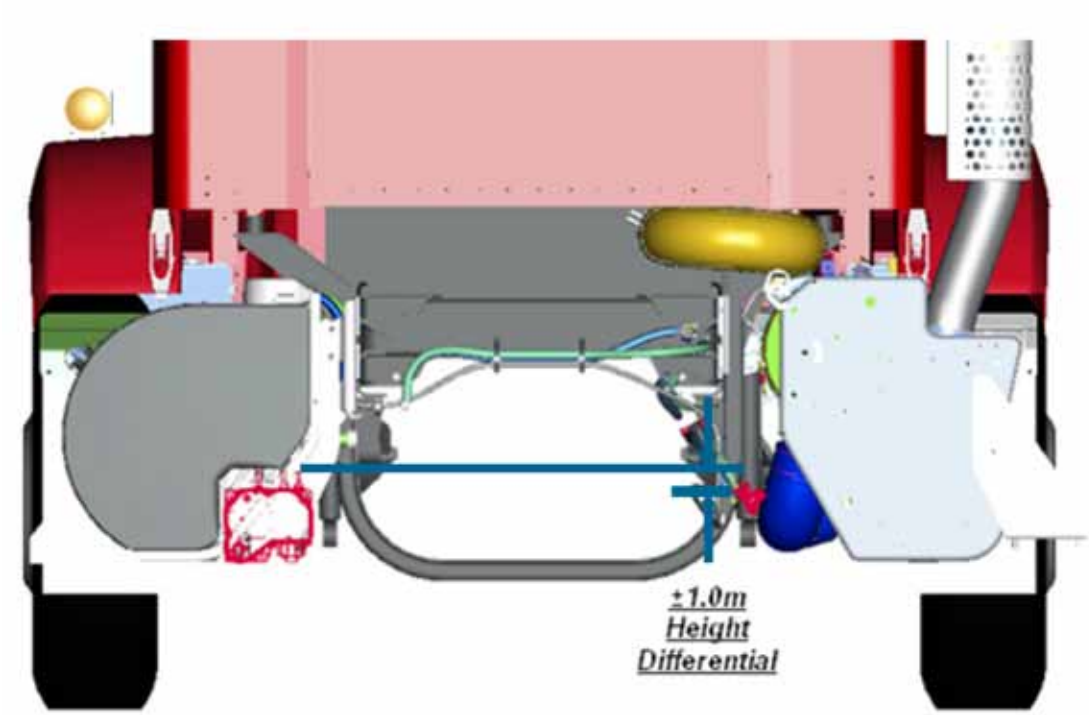

FIGURE 4-4: RH Under Cab Exhaust with Small or Medium Tanks.

The height differential between the supply module and dosing module can not exceed one meter. The supply module is integrated into the DEF tank assembly, separation of the module from the tank is not allowed.

When relocating the components the maximum pressure DEF hose length, from Supply module to Dosing Module, is 3 meters (118”).

DEF Pressure hose must include a “trap” in the routing if Dosing Module is below the highest point of the Supply Module (See Figure 4-8 on page 4-8).

https://truckmanualshub.com/

Horizontal Series DPF and SCR with Rectangular Small or Medium DEF Tanks

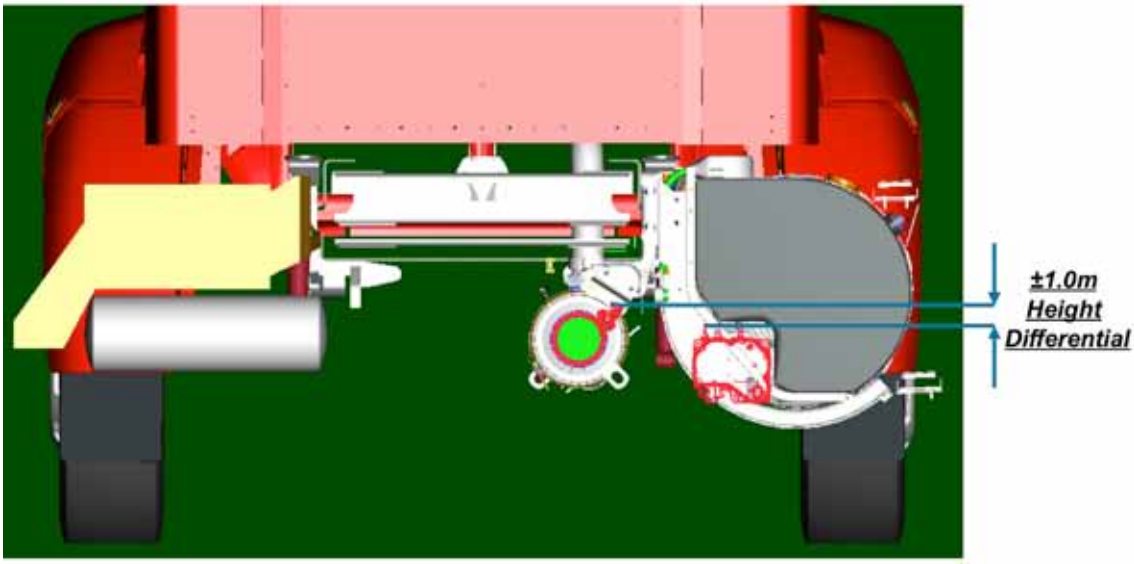

FIGURE 4-5: Horizontal Series Exhaust with Small or Medium Tanks.

The height differential between the supply module and dosing module cannot exceed one meter. The supply module is integrated into the DEF tank assembly, separation of the module frm the tank is not allowed.

When relocating the components the maximum pressure DEF hose length, from Supply module to Dosing Module is 3 meters (118”).

DEF Pressure hose must include a “trap” in the routing if Dosing Module is below the highest point of the Supply Module (See Figure 4-8 on page 4-8).

Vertical DPF and SCR with Rectangular Small or Medium DEF Tanks

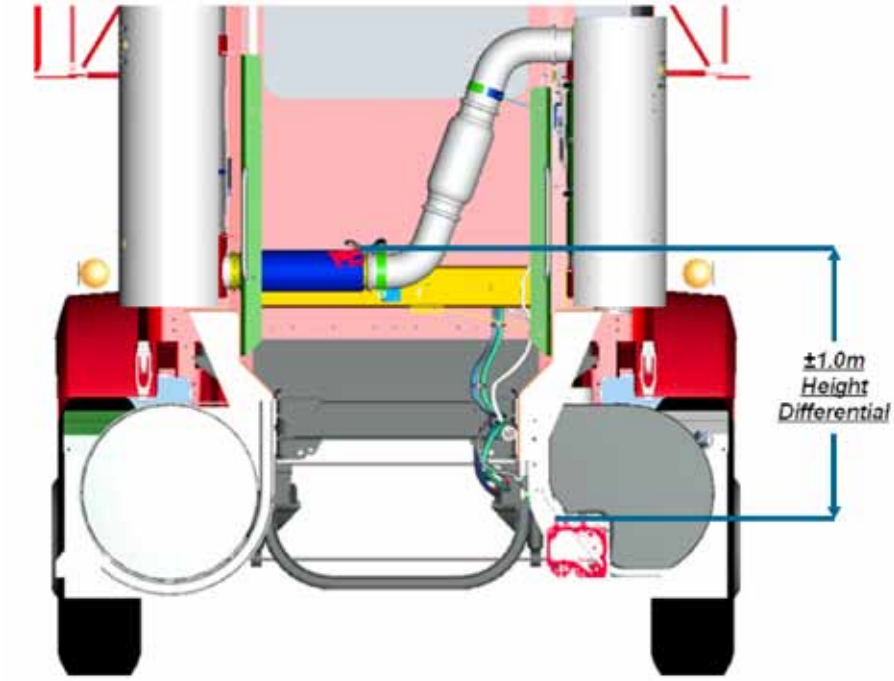

FIGURE 4-6: Vertical Exhaust with Small or Medium Tanks.

https://truckmanualshub.com/

The height differential between the supply module and dosing module can not exceed one meter. The supply module is integrated into the DEF tank assembly, separation of the module from the tank is not allowed.

When relocating the components the maximum pressure DEF hose length, from Supply module to Dosing Module, is 3 meters (118”).

Horizontal Crossover Exhaust System Rectangular Small or Medium DEF Tanks

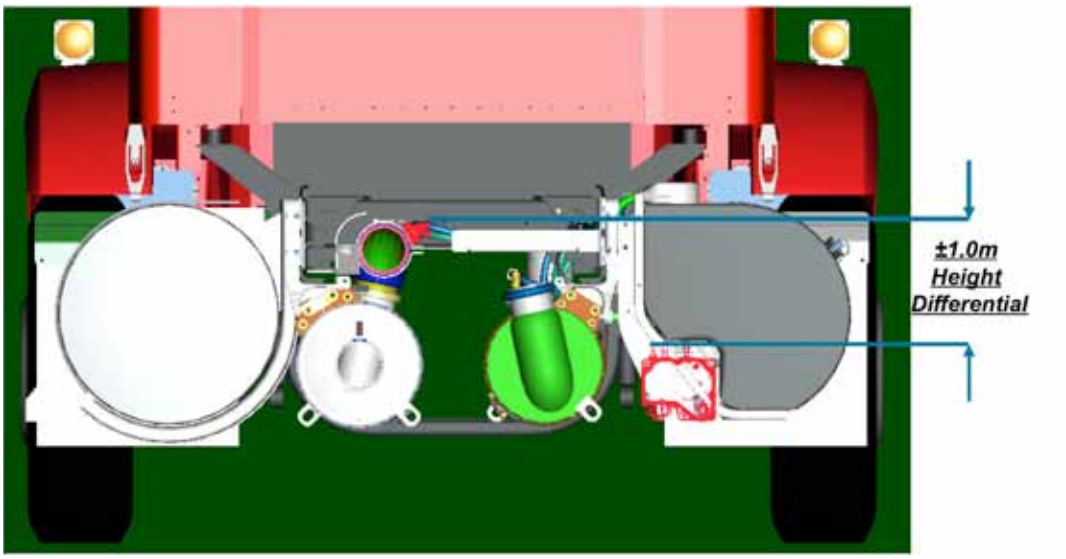

FIGURE 4-7: Horizontal Crossover Exhaust system with Small or Medium Tanks.

The height differential between the supply module and dosing module can not exceed one meter. The supply module is integrated into the DEF tank assembly, separation of the module from the tank is not allowed.

When relocating the components the maximum pressure DEF hose length, from Supply module to Dosing Module, is 3 meters (118”).

DEF Pressure hose must include a “trap” in the routing if Dosing Module is below the highest point of the Supply Module (See Figure 4-8 on page 4-8).

https://truckmanualshub.com/

Routing to the Dosing Module (Injector)

It is important for the function of the dosing module to ensure that the dosing module is not routed downstream of DEF lines or components. If this is unavoidable (for example on RH under exhaust systems) or Horizontal (Series) Exhaust a routing trap must be installed. A minimum of 12” of line length must be routed below the dosing module, in order to catch any leftover DEF when system is purged.

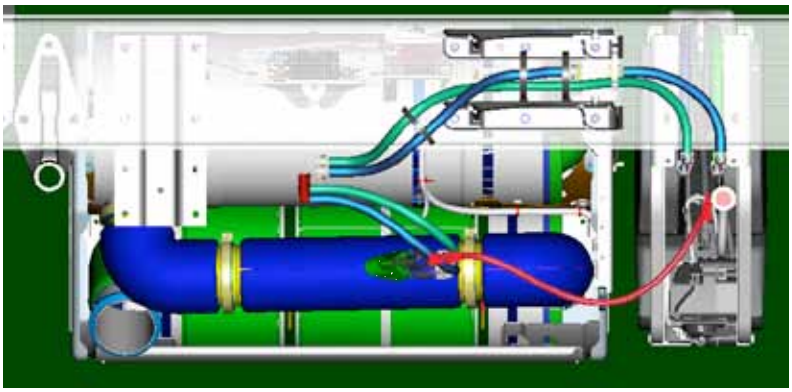

FIGURE 4-8: Routing DEF Lines and DEF Trap

https://truckmanualshub.com/

GENERAL EXHAUST INFORMATION

Kenworth will offer four main DPF and SCR exhaust systems on Medium Duty chassis in 2010. A Right Hand Under DPF and SCR system, in which both canisters are located underneath the cab access step, a Horizontal (Series) system where DPF, SCR and tailpipe are installed by the right hand rail, and an Independent DPF and SCR located vertically back of cab on stanchion brackets.

RH Under DPF and SCR

Horizontal DPF and SCR with Horizontal Tailpipe

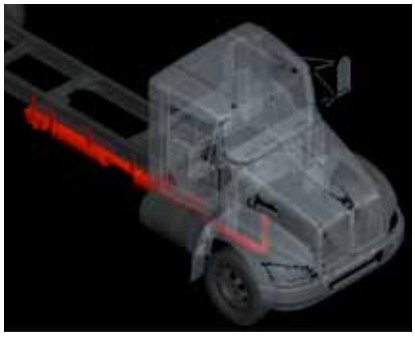

Horizontal (Series) DPF and SCR with Horizontal Tailpipe

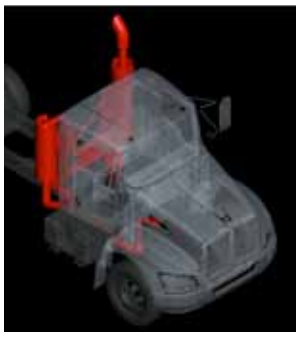

Vertical Independent DPF and SCR

The following images depict the typical exhaust routings for each system, and can be used to determine exhaust routing paths for systems you choose. Dimensional information can be found in Section 5 of this manual.

Body Builders must not modify (including altering, substituting, and relocating) the DPF and SCR canisters. The exhaust piping after it exits the SCR canister may be modified, however using smaller diameter piping or piping with numerous bends is not recommend as the backpressure requirements of the system may be exceeded.

https://truckmanualshub.com/

Right Hand Under DPF and SCR on Daycab with Single Side of Cab Tailpipe

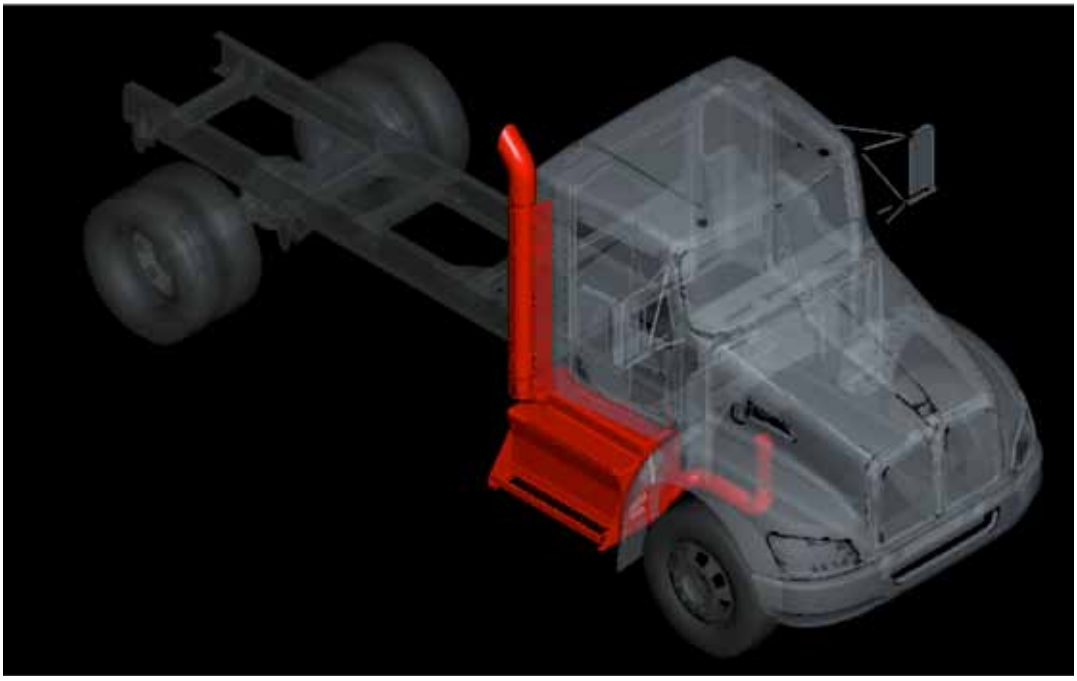

FIGURE 4-9: Isometric View of Right Hand Under DPF and SCR with Single SOC Tailpipe

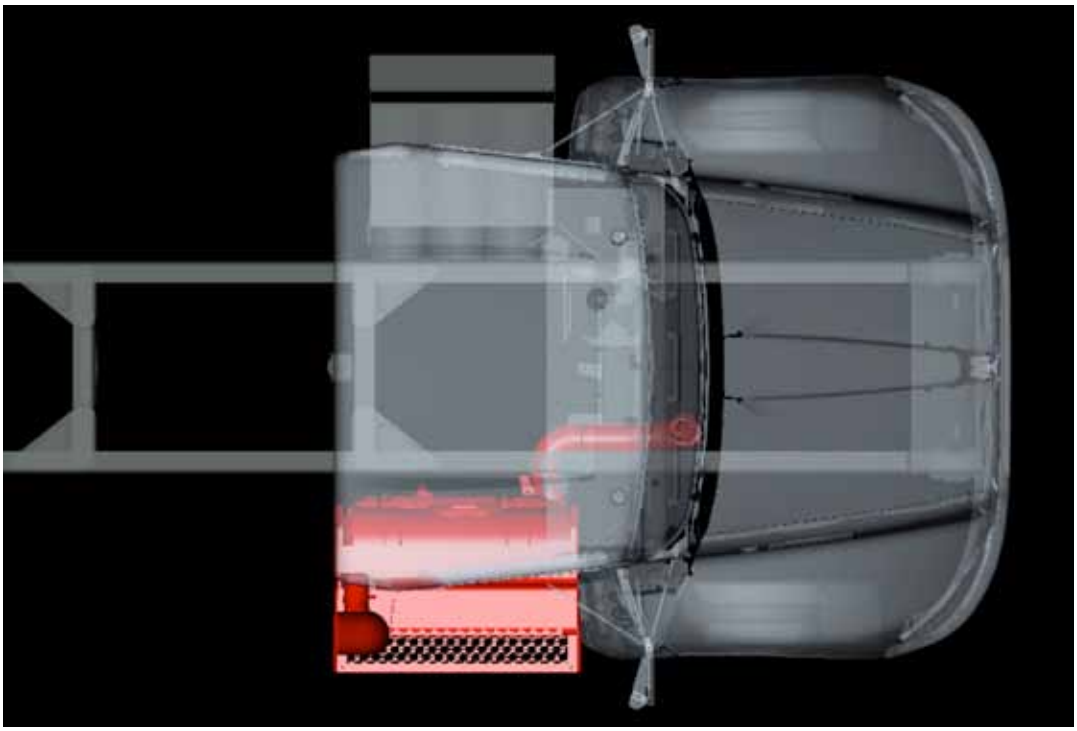

FIGURE 4-10: Top View of Right Hand Under DPF and SCR with Single SOC Tailpipe

https://truckmanualshub.com/

FIGURE 4-11: Right View of Right Hand Under DPF and SCR with Single SOC Tailpipe

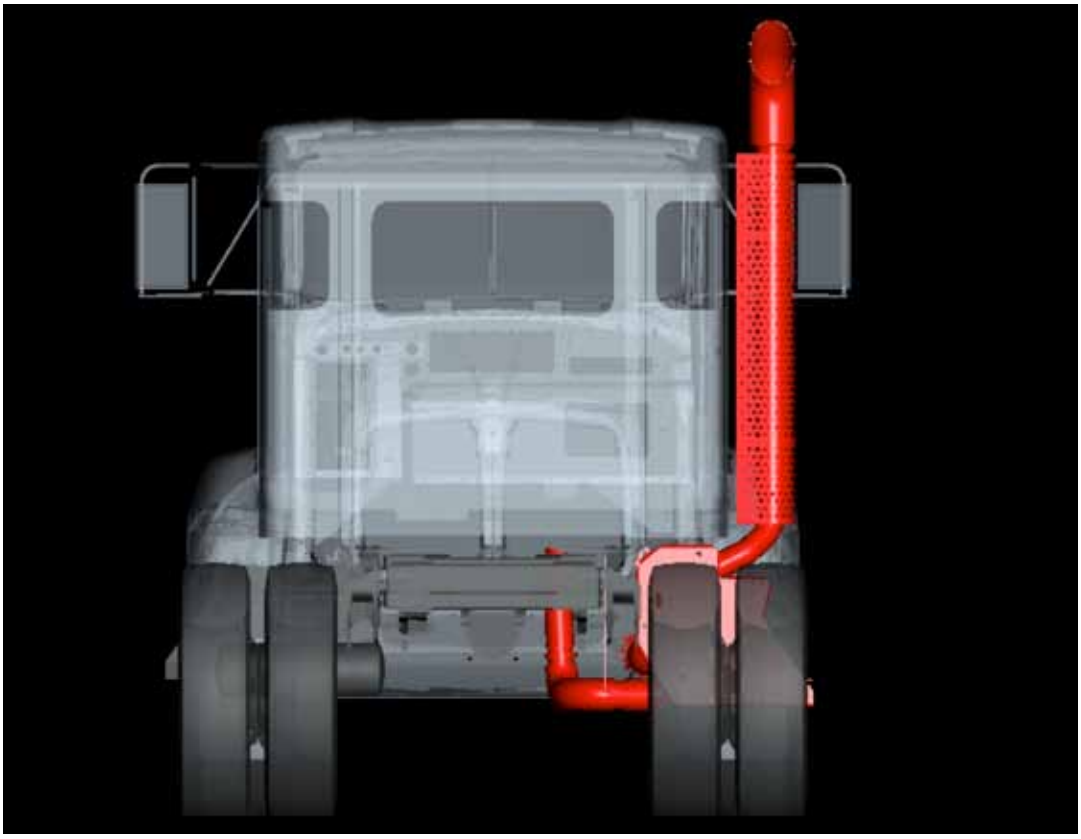

FIGURE 4-12: Back View of Right Hand Under DPF and SCR with Single SOC Tailpipe

https://truckmanualshub.com/

Horizontal DPF and SCR with Horizontal Tailpipe

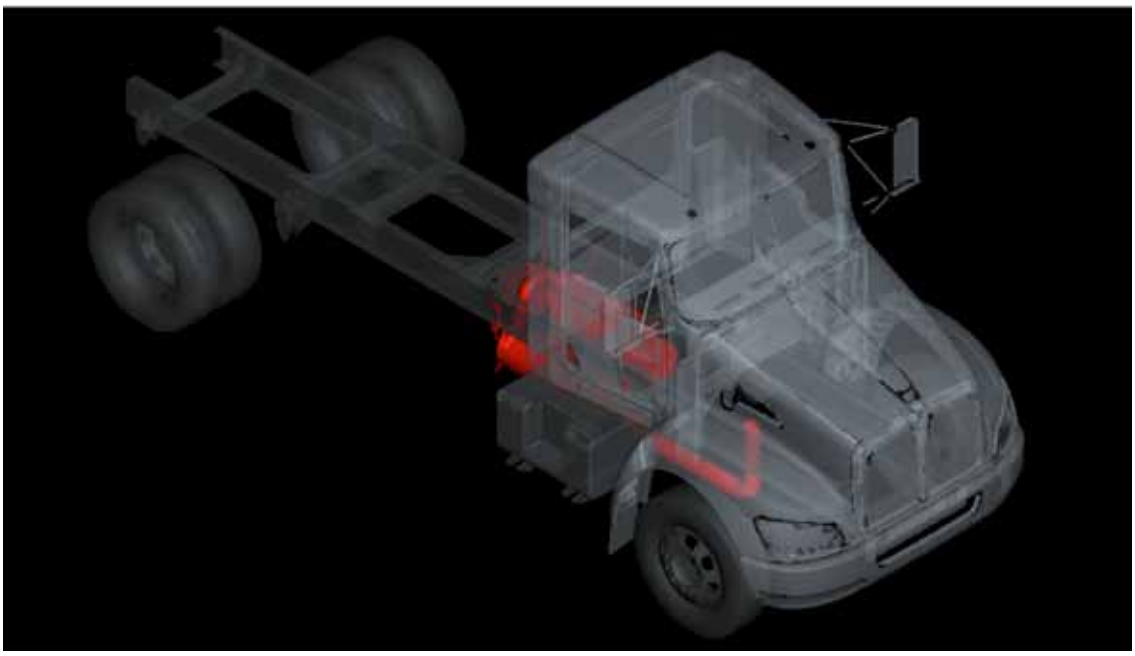

FIGURE 4-13: Isometric view of Horizontal DPF and SCR with Horizontal Tailpipe

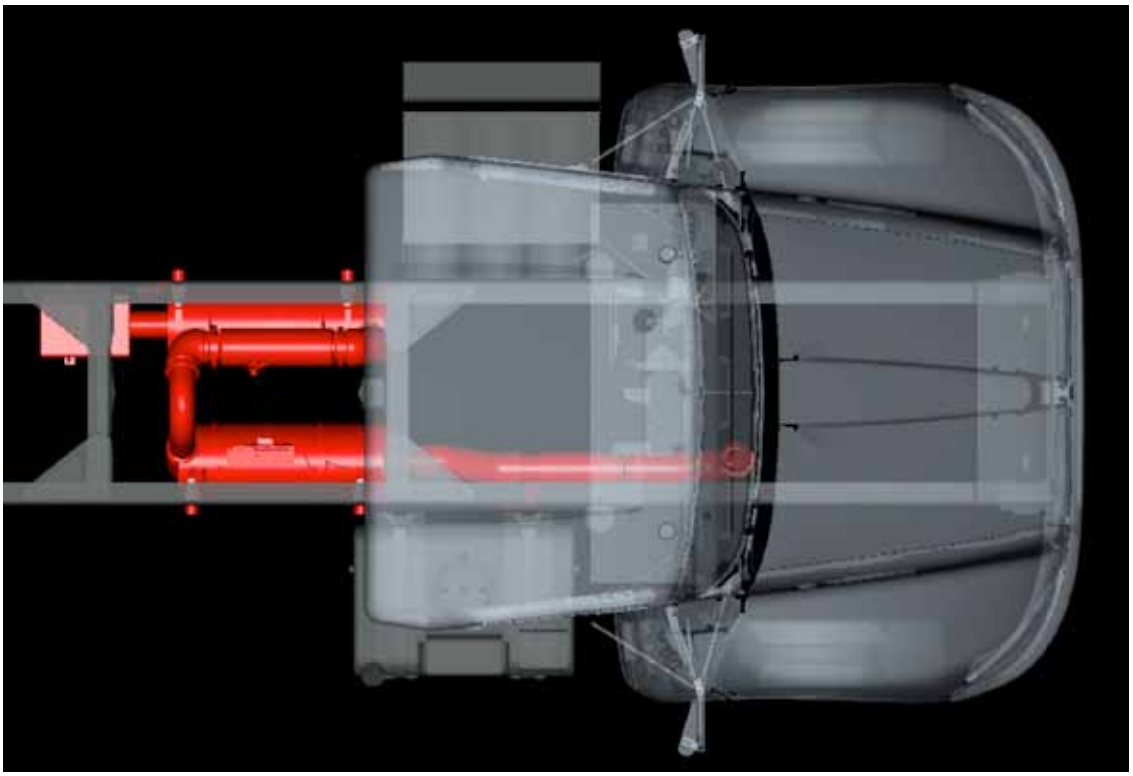

FIGURE 4-14: Top view of Horizontal DPF and SCR with Horizontal Tailpipe

https://truckmanualshub.com/

FIGURE 4-15: Right view of Horizontal DPF and SCR with Horizontal Tailpipe

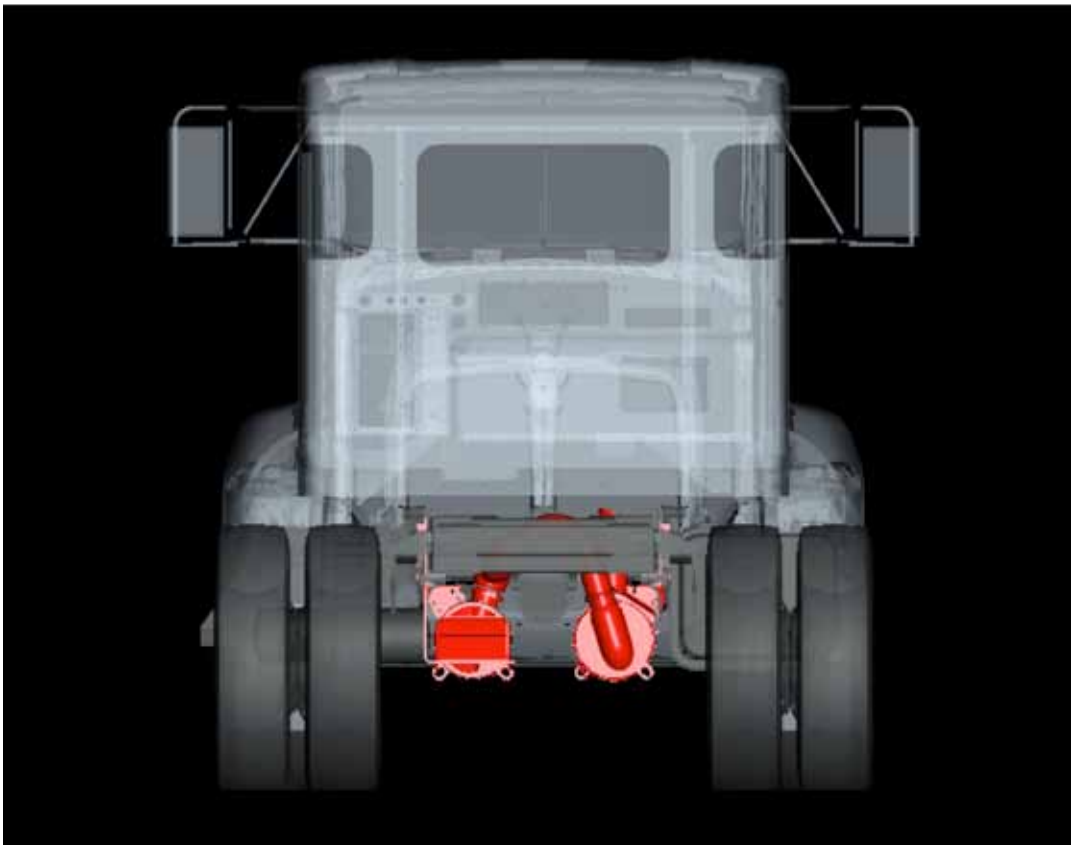

FIGURE 4-16: Back view of Horizontal DPF and SCR with Horizontal Tailpipe

https://truckmanualshub.com/

Horizontal (Series) DPF and SCR with Horizontal Tailpipe

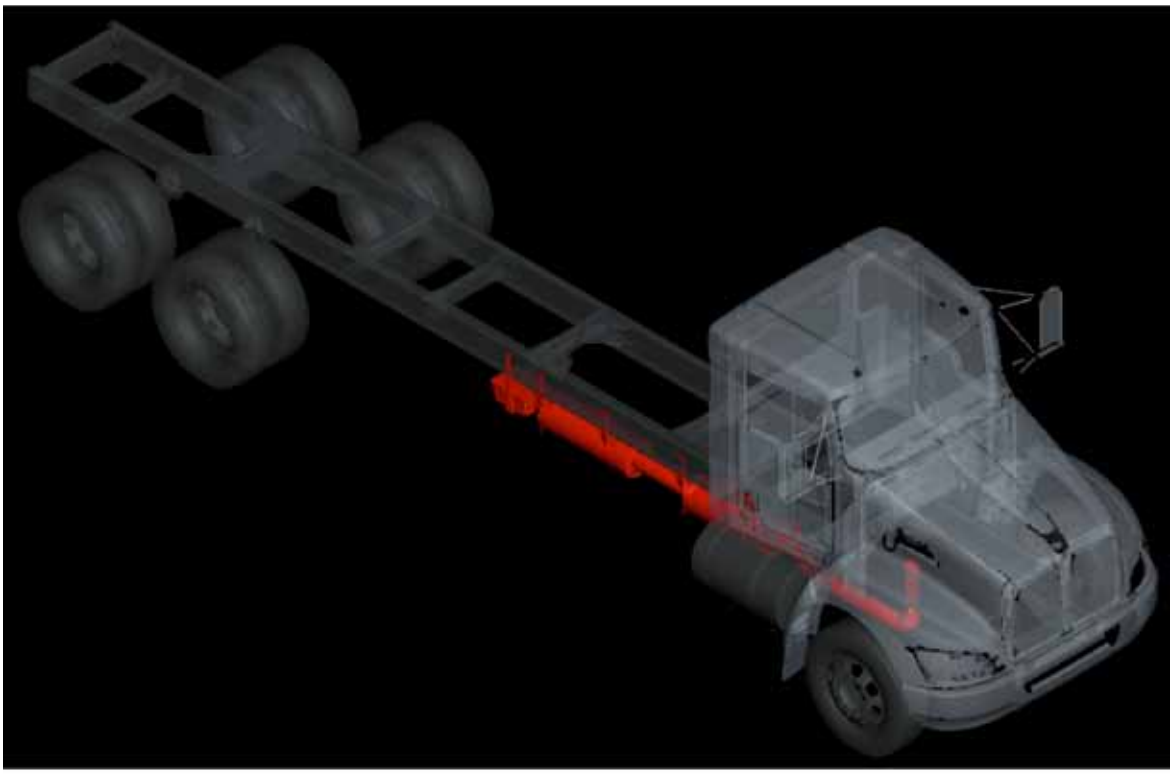

FIGURE 4-17: Isometric view of Horizontal (Series) DPF and SCR with Horizontal Tailpipe

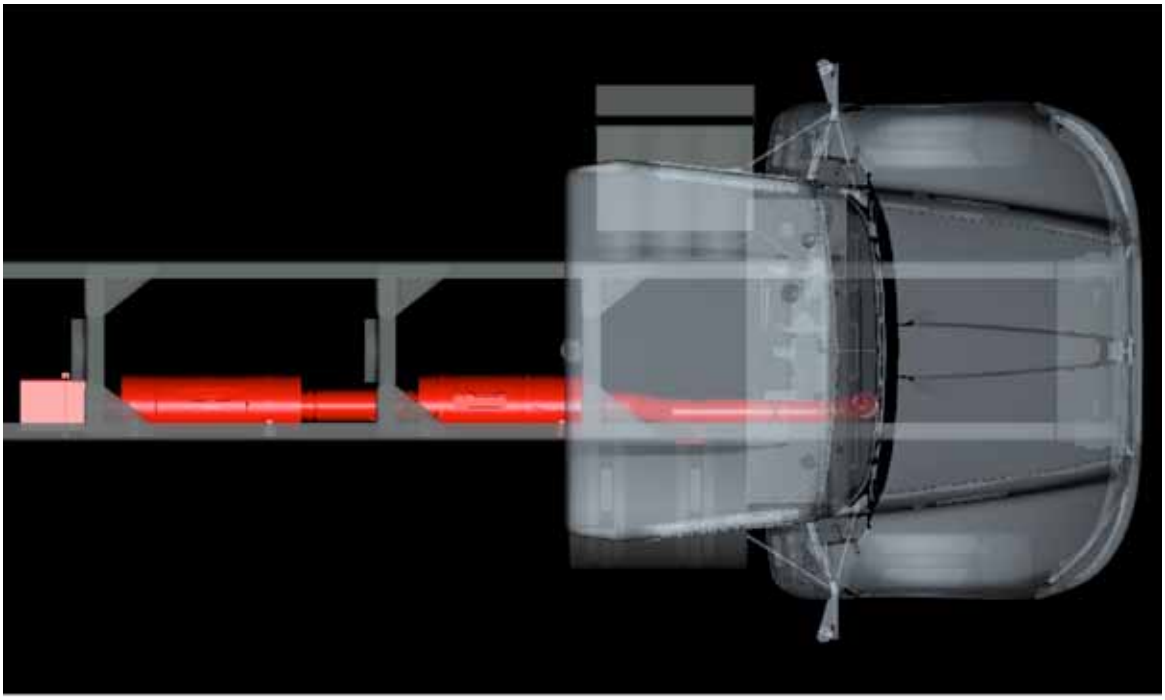

FIGURE 4-18: Top view of Horizontal (Series) DPF and SCR with Horizontal Tailpipe

https://truckmanualshub.com/

FIGURE 4-19: Right view of Horizontal (Series) DPF and SCR with Horizontal Tailpipe

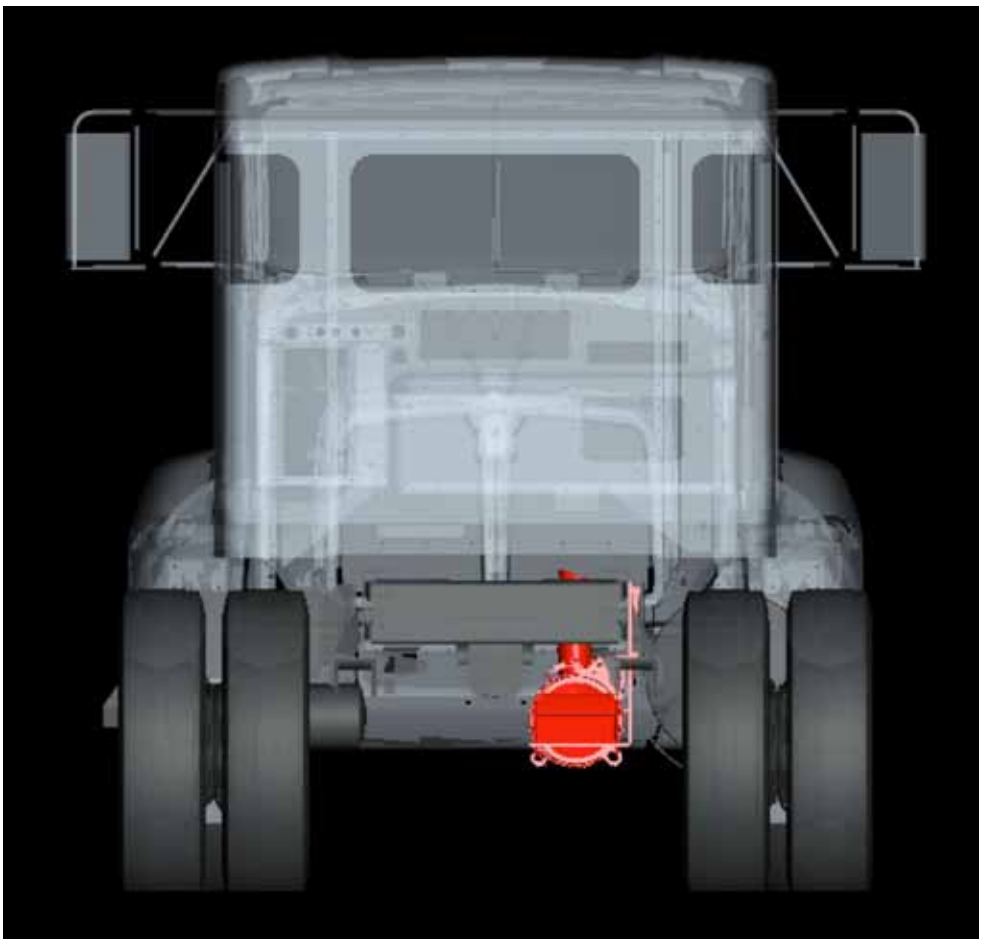

FIGURE 4-20: Back view of Horizontal (Series) DPF and SCR with Horizontal Tailpipe

https://truckmanualshub.com/

Vertical Independent DPF and SCR

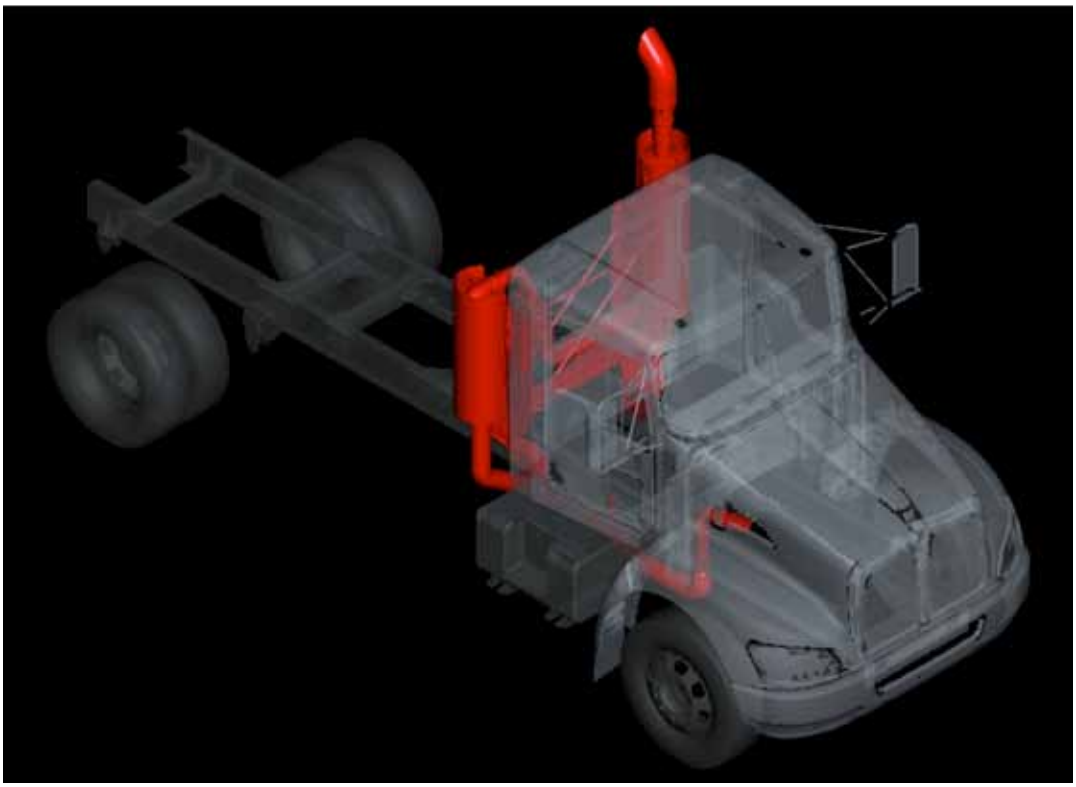

FIGURE 4-21: Isometric view of Vertical Independent DPF and SCR

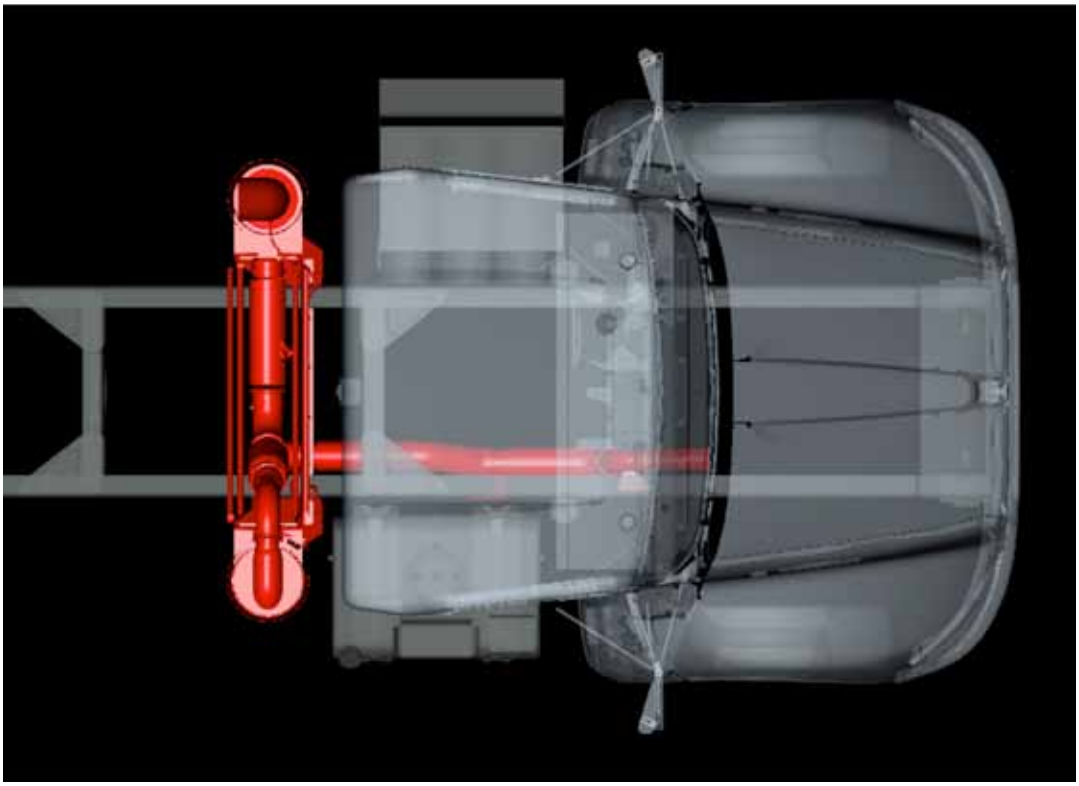

FIGURE 4-22: Top view of Vertical Independent DPF and SCR

https://truckmanualshub.com/

FIGURE 4-23: Right view of Vertical Independent DPF and SCR

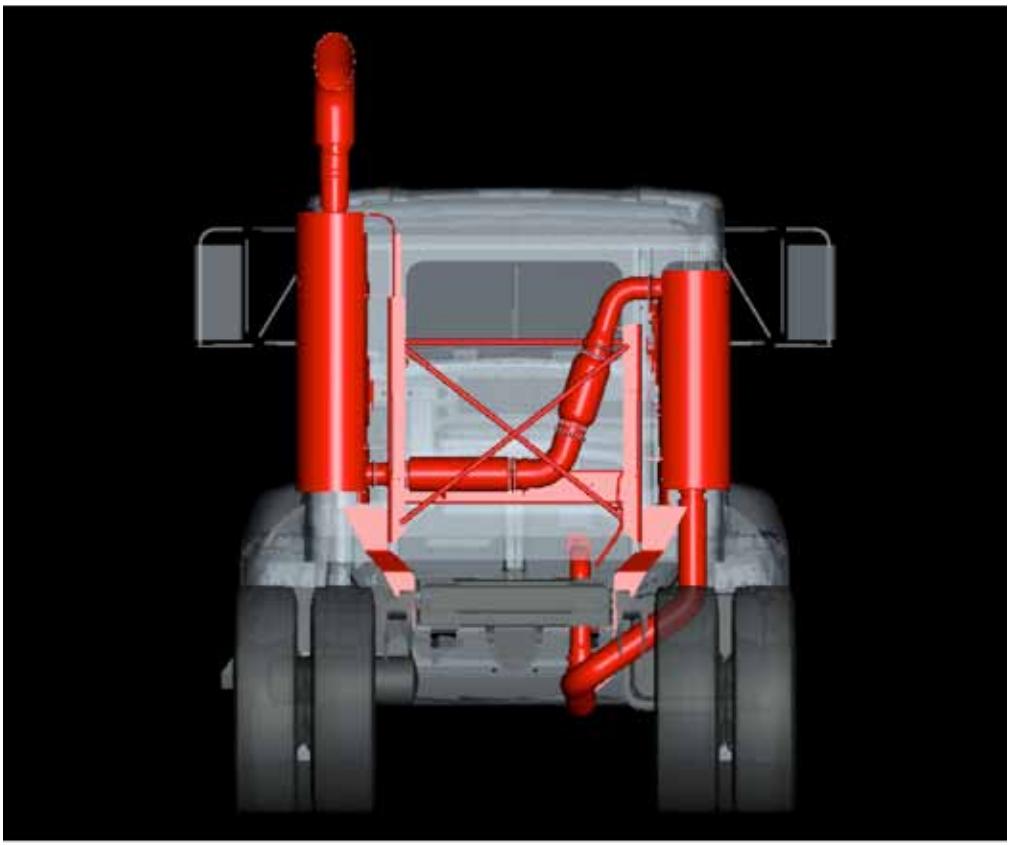

FIGURE 4-24: Back view of Vertical Independent DPF and SCR

https://truckmanualshub.com/

EXHAUST INFORMATION

This section includes information on how to calculate tailpipe heights, and reference information for PTO clearance. Optional equipment is not shown.

Tailpipe Stack Height Calculation

TABLE 4-1. Stack Height

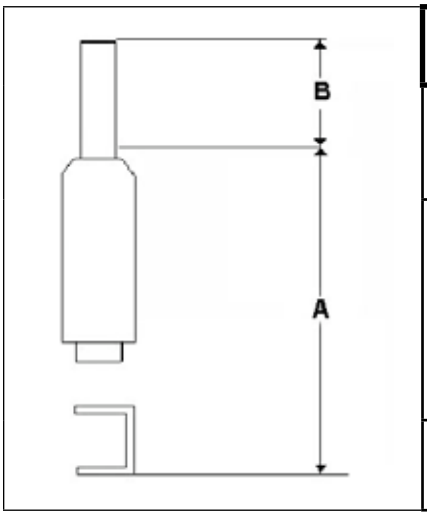

Dimension A	
DPF mounted independent back of cab	76.5”
Tailpipes side of cab mount, DPF RH under Tailpipes back of cab mount, DPF RH under	68.0”
DIMENSION “B” IS THE TAILPIPE LENGTH.	

TABLE 4-2. Unladen Stack Height

For approximate unladen stack height (12,000 pound springs) use the following frame heights:

Tire Size	Top of Rail	Ft. Suspension
11R24.5	43.5”	12K
11R22.5	42.5”	12K
285/75R24.5	42”	12K
295/75R22.5	41.5”	12K
425/65R22.5	43.2”	20K
385/65R22.5	42.4”	20K

*Use Prospector frame heights for more accurate results.

Sample: Tailpipe height 13’6”	=	Desired overall stack height	=	162.0”
	(–)	Prospector frame height	(–)	43.5”
	(+)	Frame rail depth	(+)	10.6”
	(–)	Dimension ‘A’ from chart	(–)	68.6”
	=	Tail pipe length	=	60.5”

https://truckmanualshub.com/

FRAME LAYOUTS

The dimensions in the frame layout section are intended to aid in layout of the chassis, and to help determine the best possible combination of fuel tanks, battery boxes, the diesel particulate filter (DPF), SCR canister, and Diesel Exhaust Fluid (DEF) tank. For your application, the layouts focus on the under cab area, with appropriate dimensional information included for pertinent back of cab components. Not all optional equipment is included in this section. Additional components may be placed on the rail behind components shown. The Back of Cab components are shown primarily for reference. For more specific requirements please work with your local Kenworth Dealer. Please read the instructions carefully.

The following dimensions are consistent across the entire section to aid in the comparison of one layout option versus another.

TABLE 5-1. Dimension Index.

A = Air Dryer	F1 = Fuel Tank RHS
B = Battery box	F2 = Fuel Tank LHS
D = DEF tank	H = Hybrid PEC
E1 = Exhaust, DPF	T = Tool Box
E2 = Exhaust, SCR	
E3 = Exhaust, Diffuser	

The layouts are organized by type, specifically the arrangement of under cab components. The visual index that follows will give you a quick overview of the layouts that are included. Using the index locate the layout that you are interested in, then turn to the specified pages. The charts that follow are then model specific. It is important that the correct chart is used for accurate dimensional information.

Visual Index

Symbol	Description
	RHUC DPF/SCR
	Horizontal Crossover DPF/SCR
	Horizontal In-Series DPF/SCR
	Vertical DPF/SCR
	Parallel Battery Box with Air Dryer

Symbol	Description
	In Cab Battery Box
	Cantilever Battery Box
	DEF Tank
	Fuel Tank
	Hybrid Power Electronic Carrier

https://truckmanualshub.com/

COMMON OPTIONAL COMPONENTS

The frame layouts that follow contain the minimum frame requirements to be operational (fuel tanks, battery box, and after-treatment components). All layouts are shown with standard length battery boxes unless otherwise noted. Dimensions for these components have been provided below to help complete the frame layout for chassis with more fuel tanks, additional tool boxes, etc.

TABLE 5-2. Fuel Tank Overall Length (in)

Fuel Tank Overall Length (in)		
	Fuel Tank Diameter	
Gallons	**22”**	**24.5”**
45	N/A	N/A
56	35.6	28.1
75	47.3	N/A
100	62.2	N/A
120	74.3	N/A

https://truckmanualshub.com/

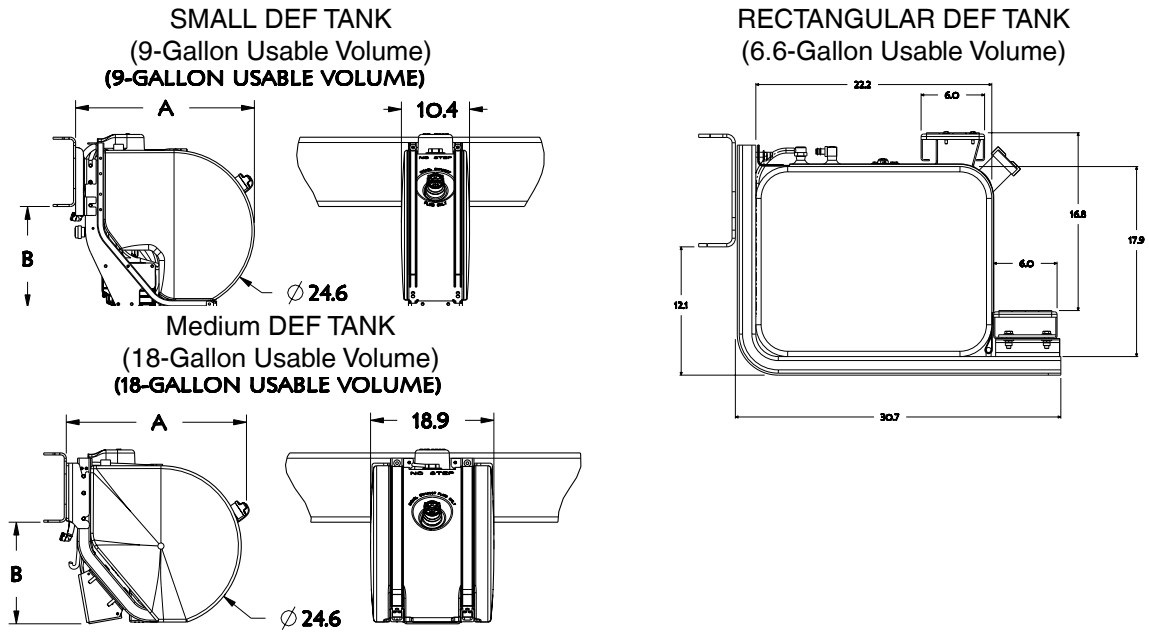

FIGURE 5-1. DEF Tank Dimensions.

TABLE 5-3. DEF Tanks Systems

Description	Usable Volume, Gallons	Fuel Tank Diameter	A	B
Small DEF Tank	9	22”	27.4	15.3
		24.5”	27.4	15.8
Medium DEF Tank	18	22”	27.7	15.0
		24.5”	27.7	15.5
Rectangular DEF Tank	6.6	N/A	see Figure 5-1	see Figure 5-1

Acronyms Index

Throughout the Frame Layout section you will see these acronyms. They are defined here to help you decode the layouts.

BOC	Back Of Cab
CBOC	Clear Back Of Cab
DEF	Diesel Exhaust Fluid
DSOC	Dual Side Of Cab

LHUC	Left Hand Under Cab
RHUC	Right Hand Under Cab
SOC	Side Of Cab

https://truckmanualshub.com/

FRAME LAYOUT INDEX

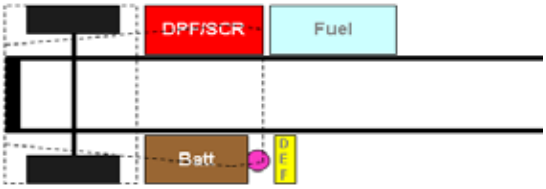

D1 is used with RHUC DPF/SCR, vertical SOC tailpipe, RH BOC fuel tank, LHUC battery box, and LH BOC DEF tank. Chart located on page 5-10.

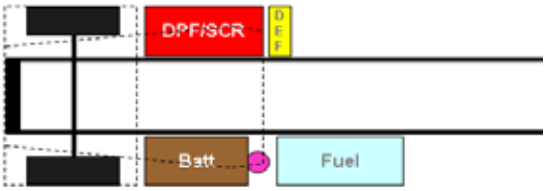

D2 is used with RHUC DPF/SCR, vertical SOC tailpipe, LH BOC fuel tank, LHUC battery box, and RH BOC DEF tank. Chart located on page 5-11.

D3 is used with RHUC DPF/SCR, vertical SOC tailpipe, LHUC cylindrical fuel tank, LH BOC cantilever battery box, and RH BOC cylindrical DEF tank. Chart located on page 5-12.

D4 is used with RHUC DPF/SCR, vertical SOC tailpipe, LHUC rectangular fuel tank with LHUC rectangular DEF tank, and LH BOC cantilever battery box. Chart located on page 5-13.

D5 is used with RHUC DPF/SCR, vertical SOC tailpipe, LHUC rectangular fuel tank with LHUC rectangular DEF tank, and in cab battery box. Chart located on page 5-14.

https://truckmanualshub.com/

D6 is a Clear BOC configuration used with RHUC DPF/SCR, vertical SOC tailpipe, LHUC 24.5” x 56gal fuel tank with LHUC Small DEF tank, and in cab battery box. Chart located on page 5-15.

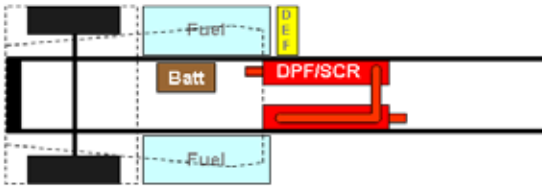

D7 is used with horizontal Crossover DPF/SCR, LH horizontal tailpipe, LHUC and RHUC cylindrical fuel tanks, RH BOC cylindrical DEF tank, and in cab battery box. Chart located on page 5-16.

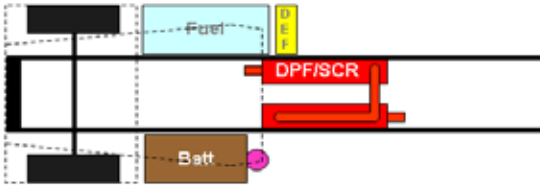

D8 is used with horizontal Crossover DPF/SCR, LH horizontal tailpipe, RHUC cylindrical fuel tank, RH BOC cylindrical DEF tank, and LHUC battery box. Chart located on page 5-17.

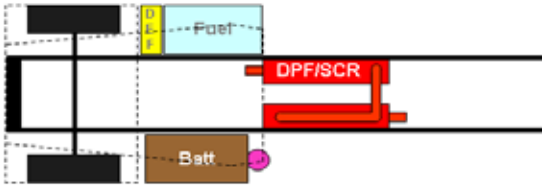

D9 is used with horizontal Crossover DPF/SCR, LH horizontal tailpipe, RHUC rectangular fuel tank, RHUC rectangular DEF tank, and LHUC battery box. Chart located on page 5-18.

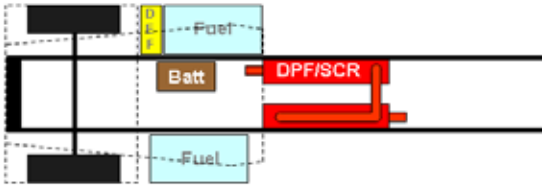

D10 is used with horizontal Crossover DPF/SCR, LH horizontal tailpipe, RHUC & LHUC rectangular fuel tanks, RHUC rectangular DEF tank, and in cab battery box. Chart located on page 5-19.

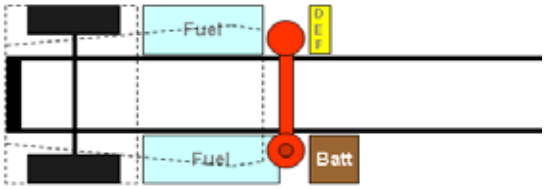

D11 is used with Vertical-Vertical DPF/SCR, LH vertical tailpipe, LHUC and RHUC cylindrical fuel tanks, RH BOC cylindrical DEF tank, and LH BOC cantilever battery box. Chart located on page 5-20.

https://truckmanualshub.com/

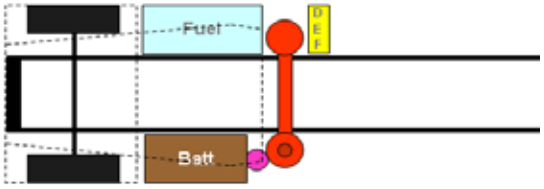

D12 is used with Vertical-Vertical DPF/SCR, LH vertical tailpipe, RHUC cylindrical fuel tank, RH BOC cylindrical DEF tank, and LHUC battery box. Chart located on page 5-21.

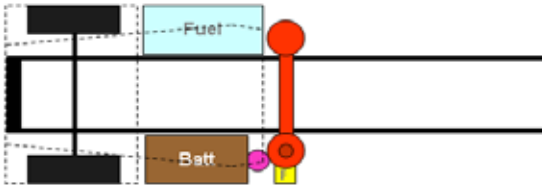

D13 is used with Vertical-Vertical DPF/SCR, LH vertical tailpipe, RHUC cylindrical fuel tank, LH BOC cylindrical DEF tank, and LHUC battery box. Chart located on page 5-22.

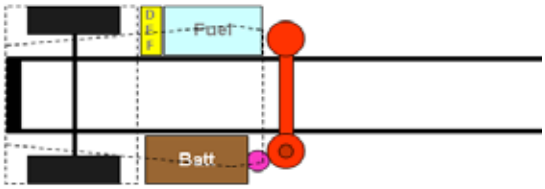

D14 is used with Vertical-Vertical DPF/SCR, LH vertical tailpipe, RHUC rectangular fuel tank, RHUC rectangular DEF tank, and LHUC battery box. Chart located on page 5-23.

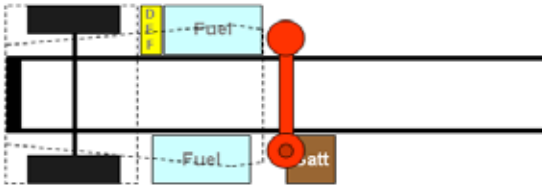

D15 is used with Vertical-Vertical DPF/SCR, LH vertical tailpipe, RHUC & LHUC rectangular fuel tanks, RHUC rectangular DEF tank, and LH BOC cantilever battery box. Chart located on page 5-24.

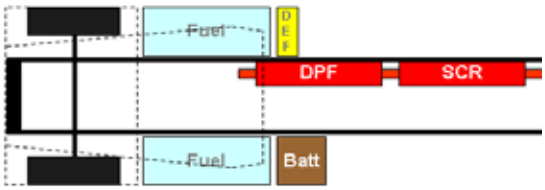

D16 is used with horizontal In-Series DPF/SCR, RH horizontal tailpipe, LHUC and RHUC cylindrical fuel tanks, RH BOC cylindrical DEF tank, and LH BOC cantilever battery box. Chart located on page 5-25.

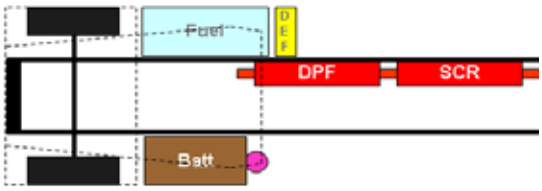

D17 is used with horizontal In-Series DPF/SCR, RH horizontal tailpipe, RHUC cylindrical fuel tank, RH BOC cylindrical DEF tank, and LHUC battery box. Chart located on page 5-26.

https://truckmanualshub.com/

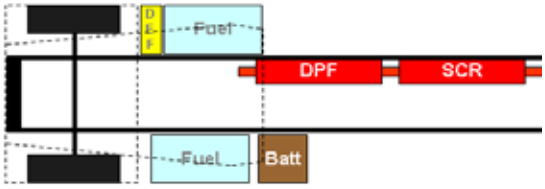

D18 is used with horizontal In-Series DPF/SCR, RH horizontal tailpipe, RHUC & LHUC rectangular fuel tanks, RHUC rectangular DEF tank, and LH BOC cantilever battery box. Chart located on page 5-27.

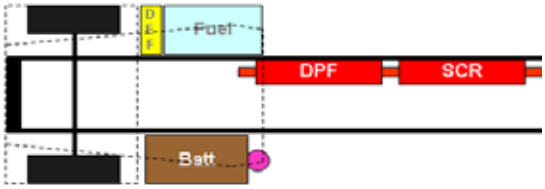

D19 is used with horizontal In-Series DPF/SCR, RH horizontal tailpipe, RHUC rectangular fuel tank, RHUC rectangular DEF tank, and LHUC battery box. Chart located on page 5-28.

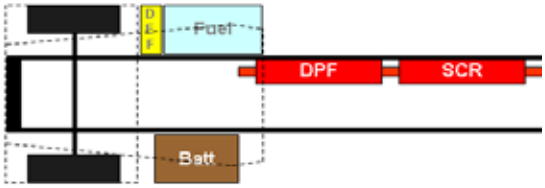

D20 is a T170 specific configuration used with horizontal In-Series DPF/SCR, RH horizontal tailpipe, RHUC rectangular fuel tank, RHUC rectangular DEF tank, and LHUC battery box. Chart located on page 5-29.

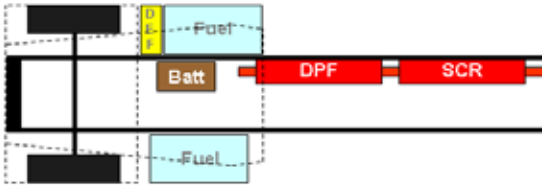

D21 is a T170 specific configuration used with horizontal In-Series DPF/SCR, RH horizontal tailpipe, RHUC & LHUC rectangular fuel tanks, RHUC rectangular DEF tank, and in cab battery box. Chart located on page 5-30.

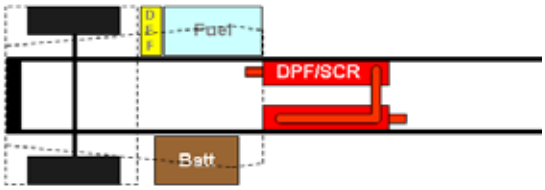

D22 is a T170 specific configuration used with horizontal Crossover DPF/SCR, LH horizontal tailpipe, RHUC rectangular fuel tank, RHUC rectangular DEF tank, and LHUC battery box. Chart located on page 5-31.

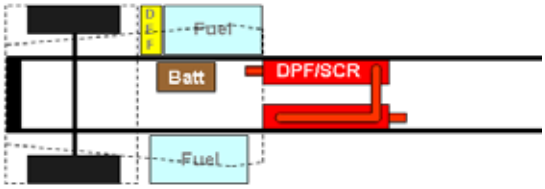

D23 is a T170 specific configuration used with horizontal Crossover DPF/SCR, LH horizontal tailpipe, RHUC & LHUC rectangular fuel tanks, RHUC rectangular DEF tank, and in cab battery box. Chart located on page 5-32.

https://truckmanualshub.com/

Hybrids

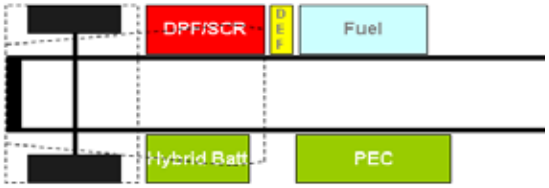

H1 Hybrid configuration used with RHUC DPF/SCR, vertical SOC tailpipe, RH BOC DEF tank with RH BOC fuel tank, LHUC hybrid battery box, and LH BOC Hybrid PEC. Chart located on page 5-33.

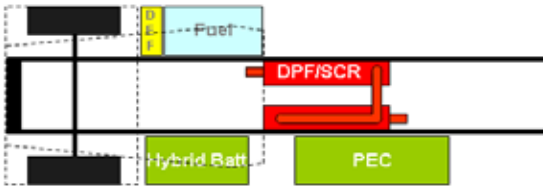

H2 is a Hybrid configuration used with horizontal Crossover DPF/SCR, LH horizontal tailpipe, RHUC rectangular fuel tank, RHUC rectangular DEF tank, LHUC hybrid battery box, and LH BOC hybrid PEC. Chart located on page 5-34.

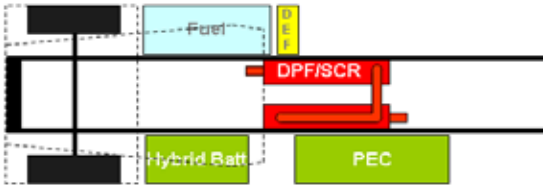

H3 is a Hybrid configuration used with horizontal Crossover DPF/SCR, LH horizontal tailpipe, RHUC cylindrical fuel tank, RH BOC cylindrical DEF tank, LHUC hybrid battery box, and LH BOC hybrid PEC. Chart located on page 5-35.

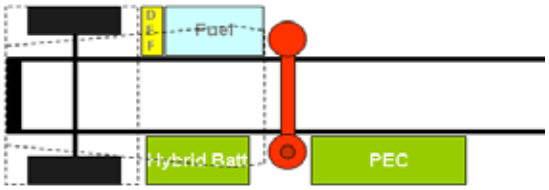

H4 is a Hybrid configuration used with Vertical-Vertical DPF/SCR, LH vertical tailpipe, RHUC rectangular fuel tank, RHUC rectangular DEF tank, LHUC hybrid battery box, and LH BOC hybrid PEC. Chart located on page 5-36.

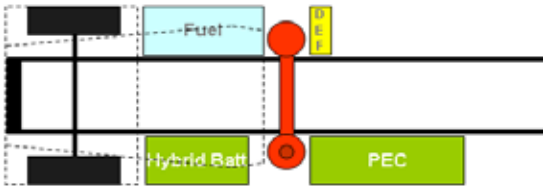

H5 is a Hybrid configuration used with Vertical-Vertical DPF/SCR, LH vertical tailpipe, RHUC cylindrical fuel tank, RH BOC cylindrical DEF tank, LHUC hybrid battery box, and LH BOC hybrid PEC. Chart located on page 5-37.

https://truckmanualshub.com/

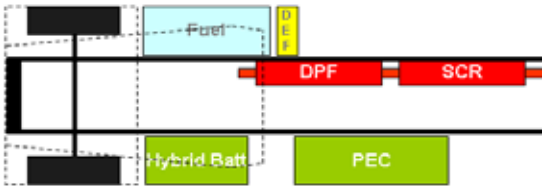

H6 is a Hybrid configuration used with In-Series DPF/SCR, RH horizontal tailpipe, RHUC cylindrical fuel tank, RH BOC cylindrical DEF tank, LHUC hybrid battery box, and LH BOC hybrid PEC. Chart located on page 5-38.

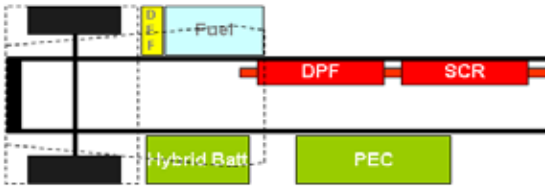

H7 is a Hybrid configuration used with horizontal In-Series DPF/SCR, RH horizontal tailpipe, RHUC rectangular fuel tank, RHUC rectangular DEF tank, LHUC hybrid battery box, and LH BOC hybrid PEC. Chart located on page 5-39.

https://truckmanualshub.com/

D1

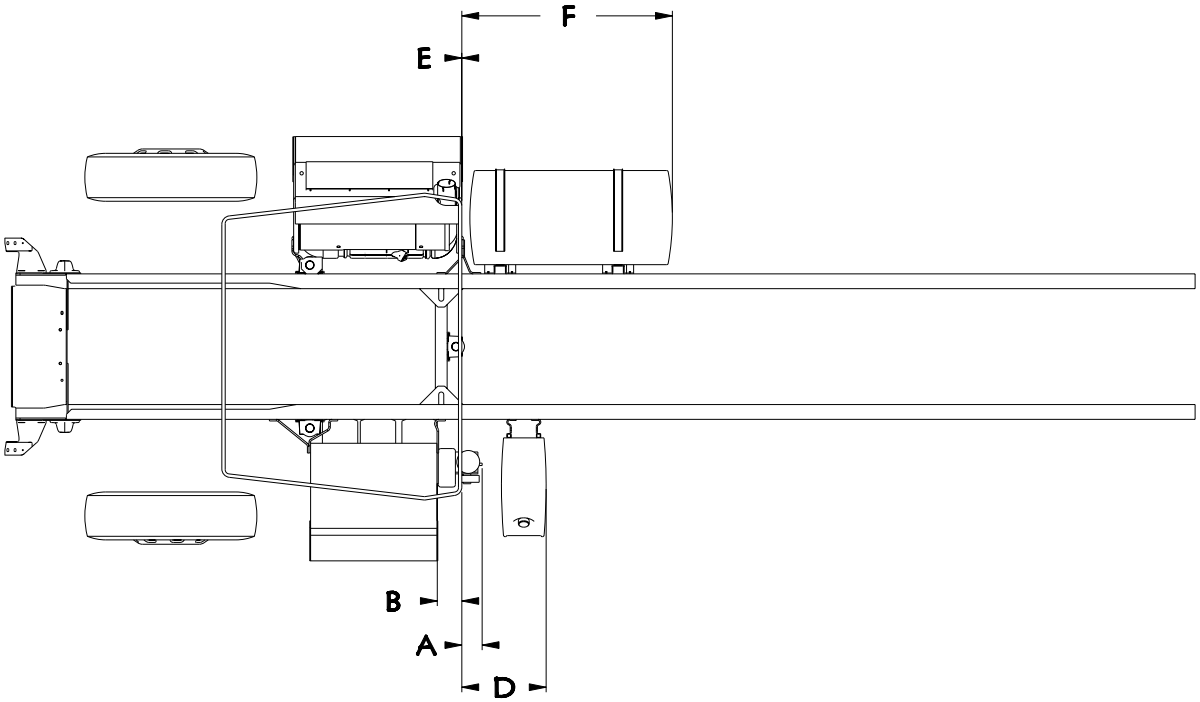

Dimension E (BOC to DPF/SCR) = 0.0in
Dimension A (BOC to Air Dryer) = 7.7in
Dimension B (BOC to Battery Box) = -5.4in

TABLE 5-4.

Fuel Tank Size		Fuel Tank Length (in)	Dimension F BOC to Fuel Tank, (in)	Dimension D BOC to DEF Tank (in)*		
				DEF Tank Size		
Diameter	Gallons			Small	Medium	Rectangular
22” Diameter Tank	56	35.6	37.5	19.7	29.5	N/A
	75	47.3	49.2			
	100	62.2	64.1			
Rectangular Tank	45	28.0	29.9	N/A	N/A	17

*The DEF tank is moved forward approximately 8.3” with a frame rail mounted air dryer.

https://truckmanualshub.com/

D2

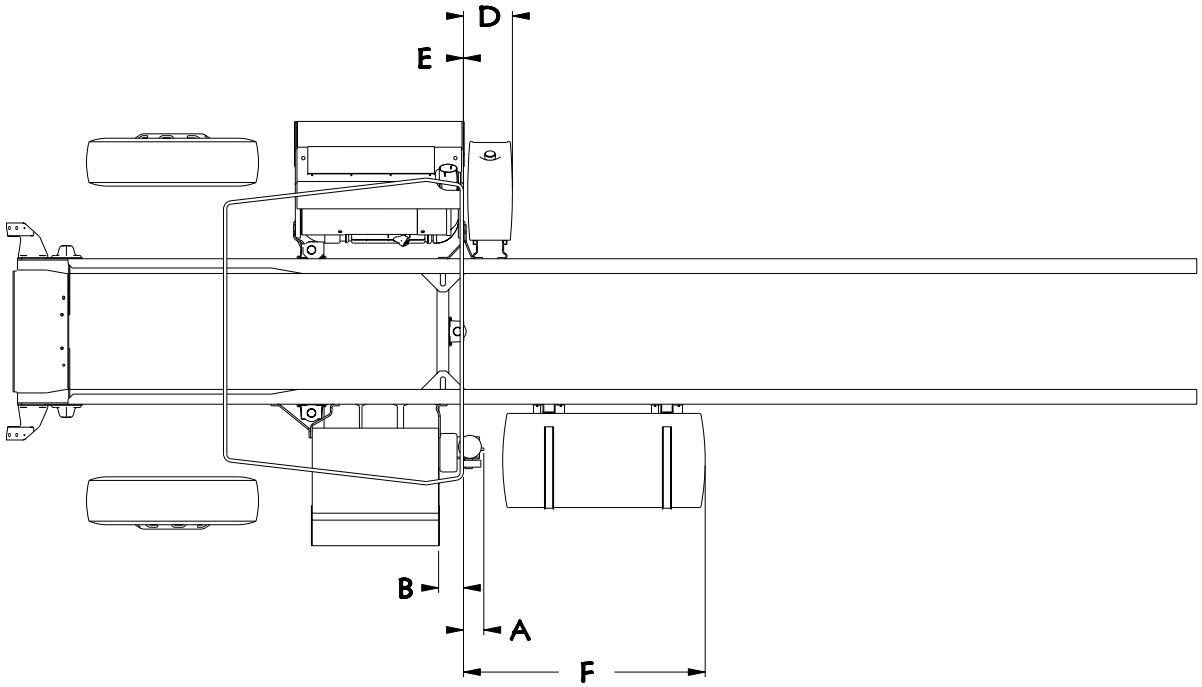

Dimension E (BOC to DPF/SCR) = 0.0in
Dimension A (BOC to Air Dryer) = 7.7in
Dimension B (BOC to Battery Box) = -5.4in

TABLE 5-5.

Fuel Tank Size		Fuel Tank Length (in)	Dimension F BOC to Fuel Tank, (in)*	Dimension D BOC to DEF Tank (in)		
				DEF Tank Size		
Diameter	Gallons			Small	Medium	Rectangular
22” Diameter Tank	56	35.6	44.8	14.2	24	N/A
	75	47.3	56.5			
	100	62.2	71.4			
Rectangular Tank	45	28.0	37.2	N/A	N/A	14.3

*The Fuel tank is moved forward approximately 13” with a frame rail mounted air dryer.

https://truckmanualshub.com/

D3

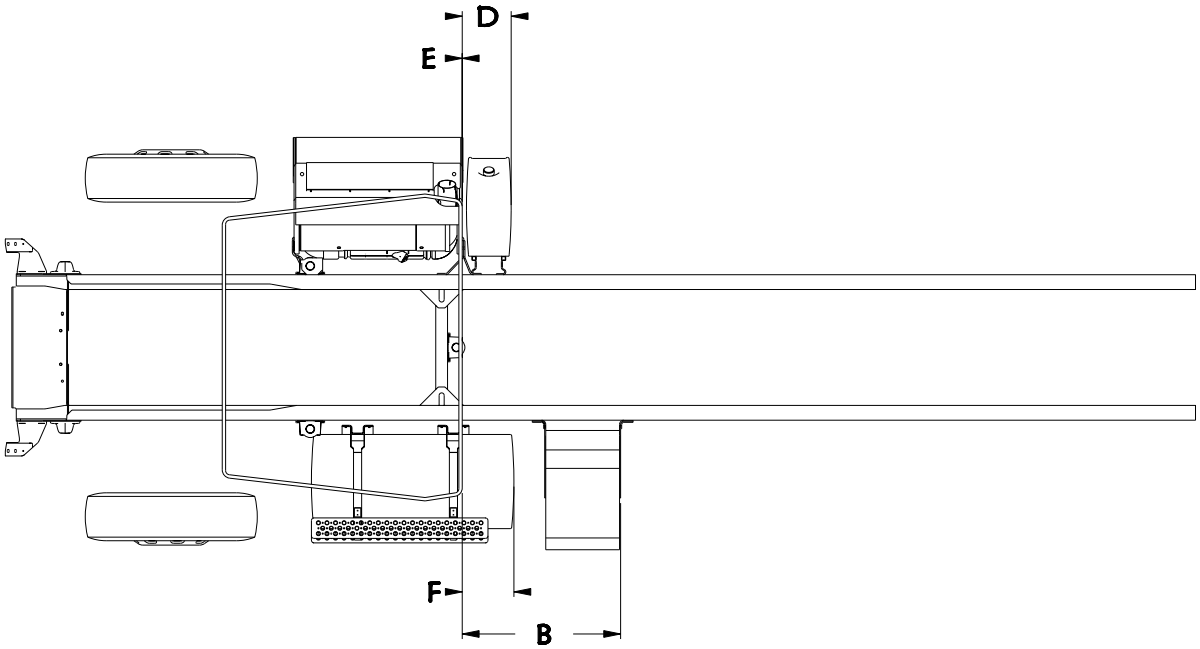

Dimension E (BOC to DPF/SCR) = 0.0in

TABLE 5-6.

Fuel Tank Size		Fuel Tank Length (in)	Dimension F BOC to Fuel Tank, (in)	Dimension B BOC to Battery Box, (in)	Dimension D BOC to DEF Tank (in)	
					DEF Tank Size	
Diameter	Gallons				Small	Medium
22” Diameter Tank	56	35.6	0.4	21.1	14.2	24
	75	47.3	12.1	32.8		
	100	62.2	27.0	47.7		
	120	74.3	39.1	59.8		

*Subtract 5.7 inches for the extended Daycab.

NOTE: DIMENSION “B” IS CALCULATED USING A CANTILEVER SIZED BATTERY BOX. OPTIONAL BOXES WILL AFFECT THIS DIMENSION.

https://truckmanualshub.com/

D4

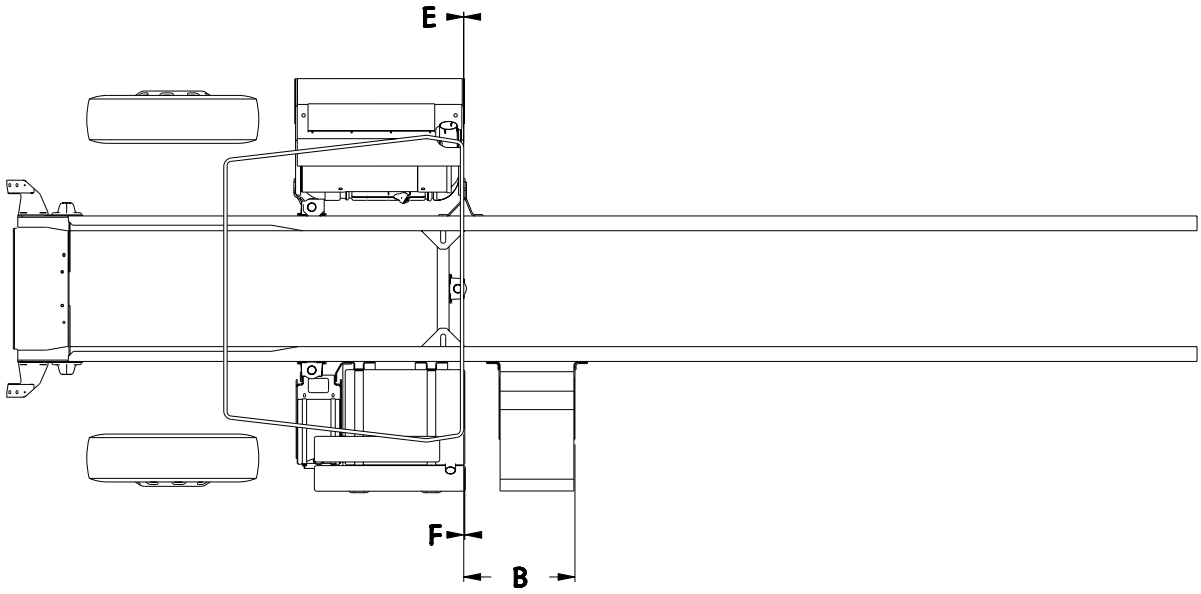

Dimension E (BOC to DPF/SCR) = 0.0in
Dimension F (BOC to Fuel Tank) = 0.2in
Dimension B (BOC to Battery Box) = 26.0in

This configuration is only available with a Rectangular Fuel Tank and Small DEF Tank.

https://truckmanualshub.com/

D5

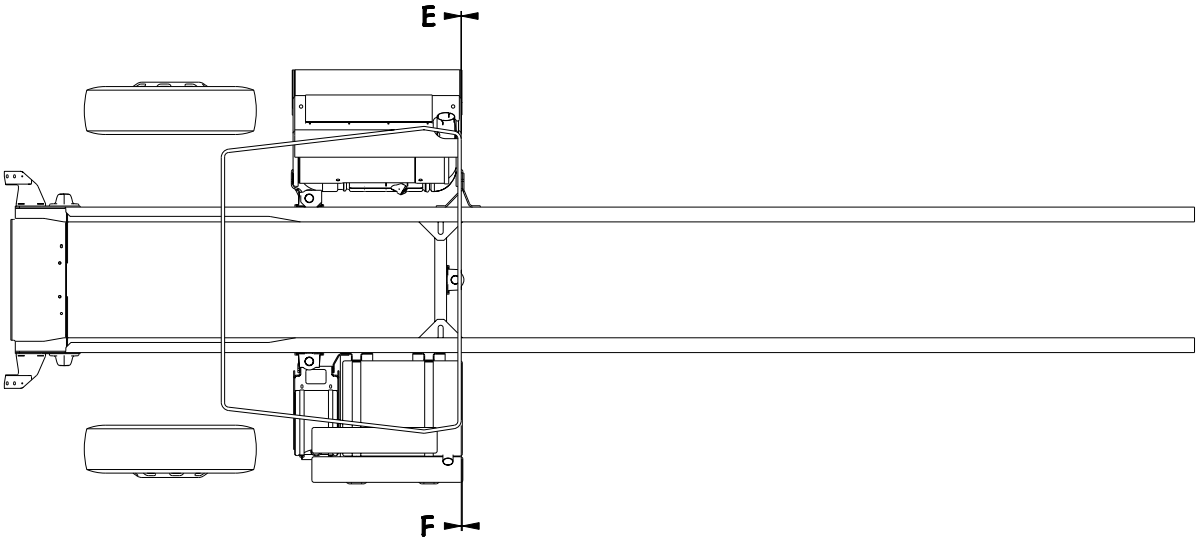

Dimension E (BOC to DPF/SCR) = 0.0in
Dimension F (BOC to Fuel Tank) = 0.2in

This configuration is only available with a Rectangular Fuel Tank and Small DEF Tank.

https://truckmanualshub.com/

D6

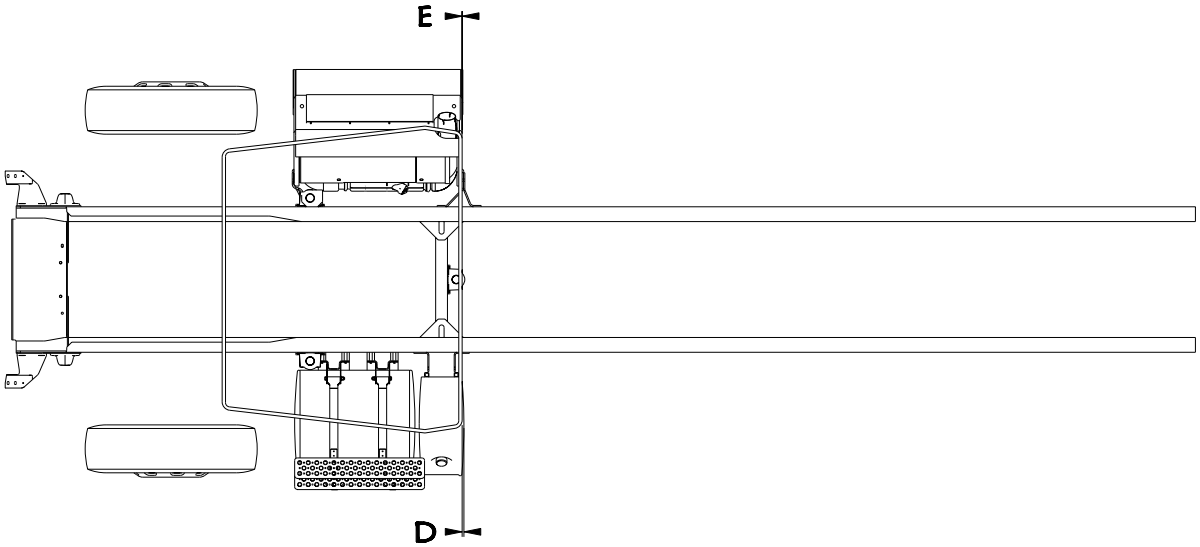

Dimension E (BOC to DPF/SCR) = 0.0in
Dimension D (BOC to DEF Tank) = 0.4in

This configuration is only available with a Rectangular Fuel Tank and Small DEF Tank.

https://truckmanualshub.com/

D7

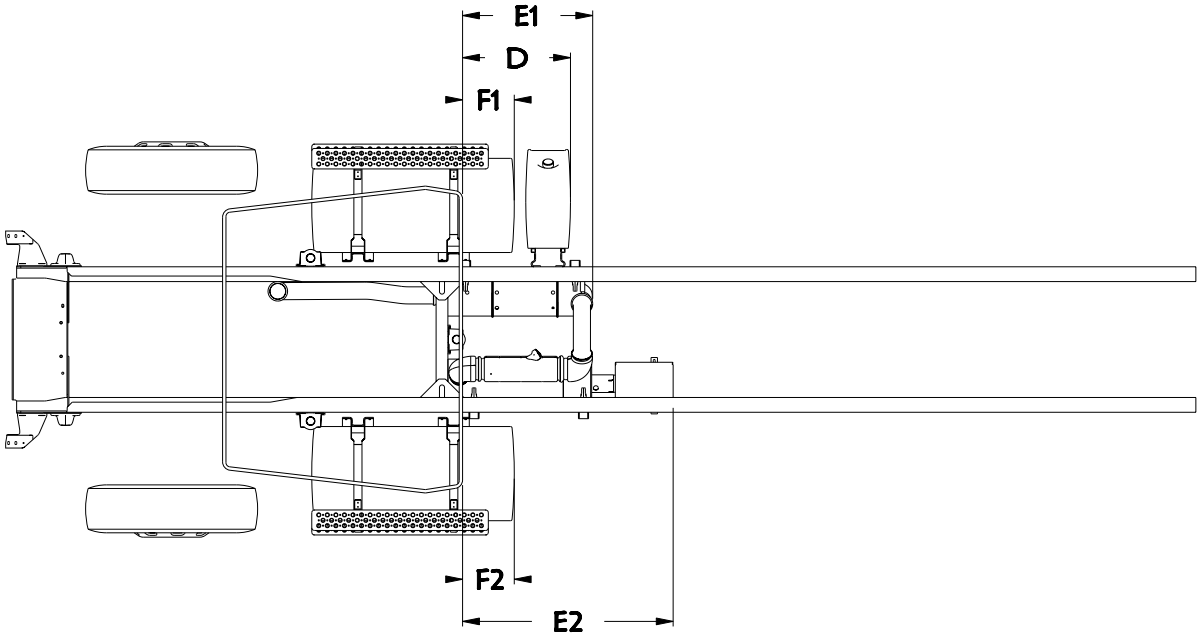

Hydraulic Brakes

Dimension E1 (BOC to DPF/SCR) = 30in
Dimension E3 (BOC to Diffuser) = 49.2in

Air Brakes

Dimension E1 (BOC to DPF/SCR) = 46.5in
Dimension E3 (BOC to Diffuser) = 65.7in

TABLE 5-7.

Fuel Tank Size		Fuel Tank Length (in)	Dimension F1 BOC to RH Fuel Tank, (in)	Dimension F2 BOC to LH Fuel Tank, (in)	Dimension D BOC to DEF Tank (in)	
					DEF Tank Size	
Diameter	Gallons				Small	Medium
22” Diameter Tank	56	35.6	0.4	0.4	11.4*	21.2*
	75	47.3	12.1	12.1	25.2*	25.0*
	100	62.2	27.0	27.0	39.0	48.8
	120	74.3	39.1	39.1	50.0**	59.8**
24.5” Diameter Tank	56	28.1	-11.0	-11.0	0.5	N/A

* Add 2.8” with Air Brakes
** Add 8.3” with Air Brakes

https://truckmanualshub.com/

D8

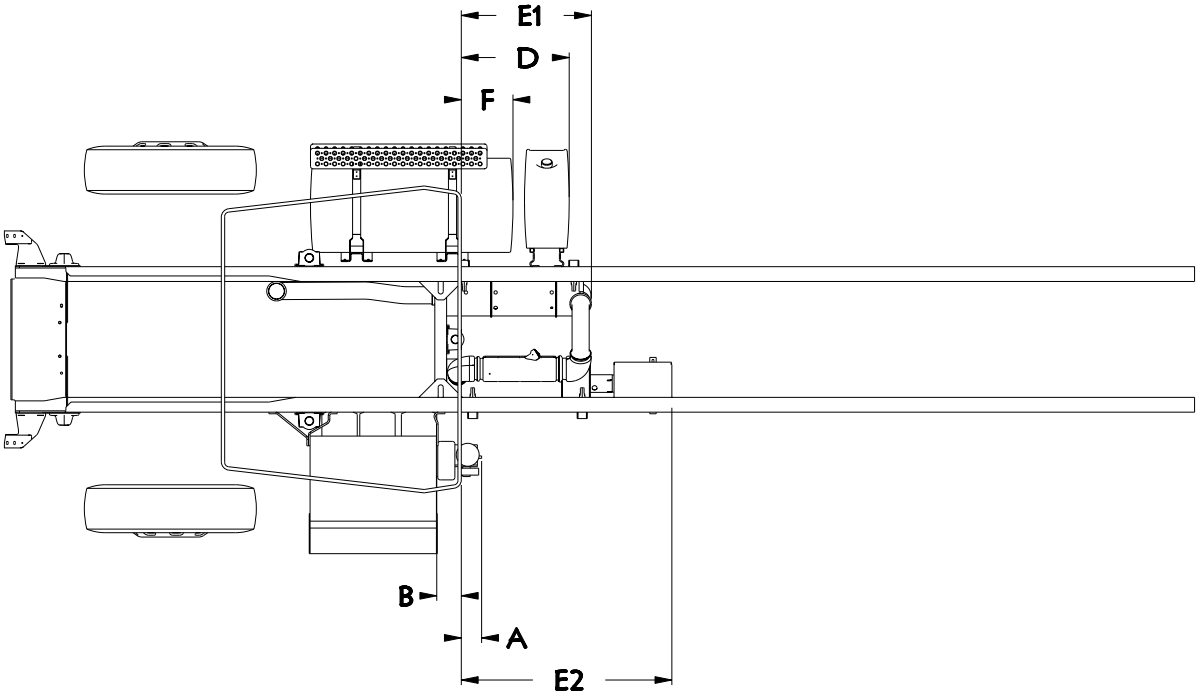

Air or Hydraulic Brakes

Dimension A (BOC to Air Dryer) = 7.7in
Dimension B (BOC to Battery Box) = -5.4in

Hydraulic Brakes only

Dimension E1 (BOC to DPF/SCR) = 30in
Dimension E3 (BOC to Diffuser) = 49.2in

Air Brakes only

Dimension E1 (BOC to DPF/SCR) = 46.5in
Dimension E3 (BOC to Diffuser) = 65.7in

TABLE 5-8.

Fuel Tank Size		Fuel Tank Length (in)	Dimension F BOC to RH Fuel Tank, (in)	Dimension D BOC to DEF Tank (in)	
				DEF Tank Size	
Diameter	Gallons			Small	Medium
22” Diameter Tank	56	35.6	0.4	11.4*	21.2*
	75	47.3	12.1	25.2*	35.0*
	100	62.2	27.0	39.0	48.8
	120	74.3	39.1	50.0**	59.8**
24.5” Diameter Tank	56	28.1	-11.0	0.4	N/A

* Add 2.8” with Air Brakes

** Add 8.3” with Air Brakes

https://truckmanualshub.com/

D9

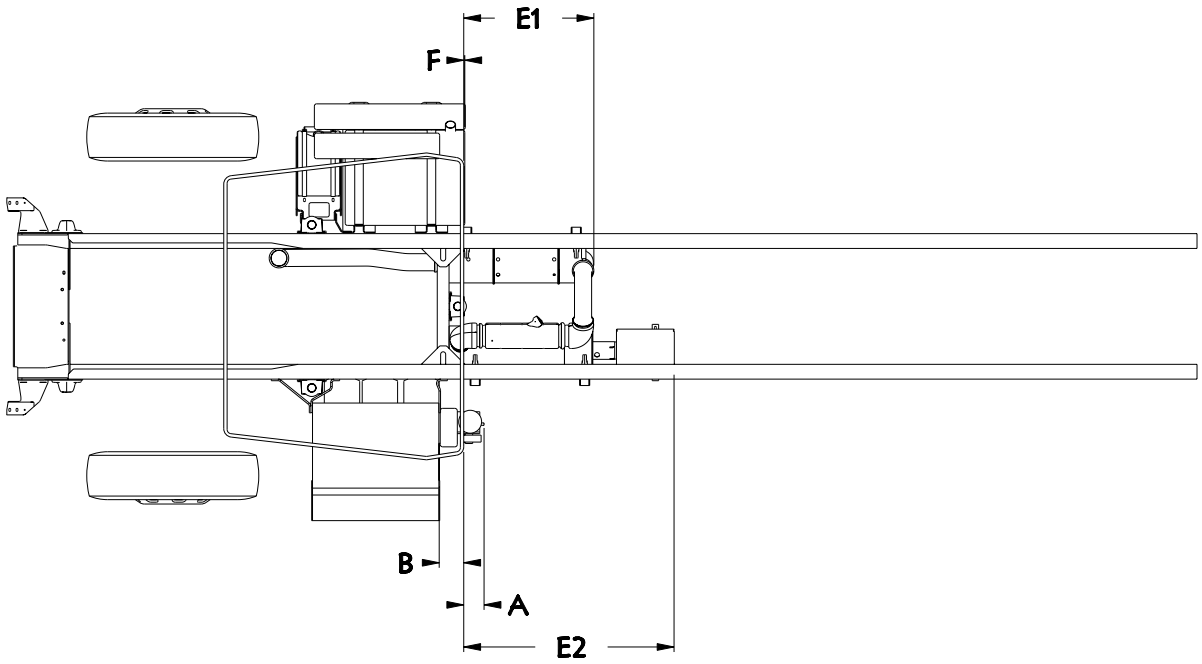

Air or Hydraulic Brakes

Dimension A (BOC to Air Dryer) = 7.7in
Dimension B (BOC to Battery Box) = -5.4in
Dimension F (BOC to Fuel Tank) = 0.2in

Hydraulic Brakes only

Dimension E1 (BOC to DPF/SCR) = 30in
Dimension E3 (BOC to Diffuser) = 49.2in

Air Brakes only

Dimension E1 (BOC to DPF/SCR) = 46.5in
Dimension E3 (BOC to Diffuser) = 65.7in

This configuration is only available with a Rectangular Fuel Tank and Small DEF Tank.

https://truckmanualshub.com/

D10

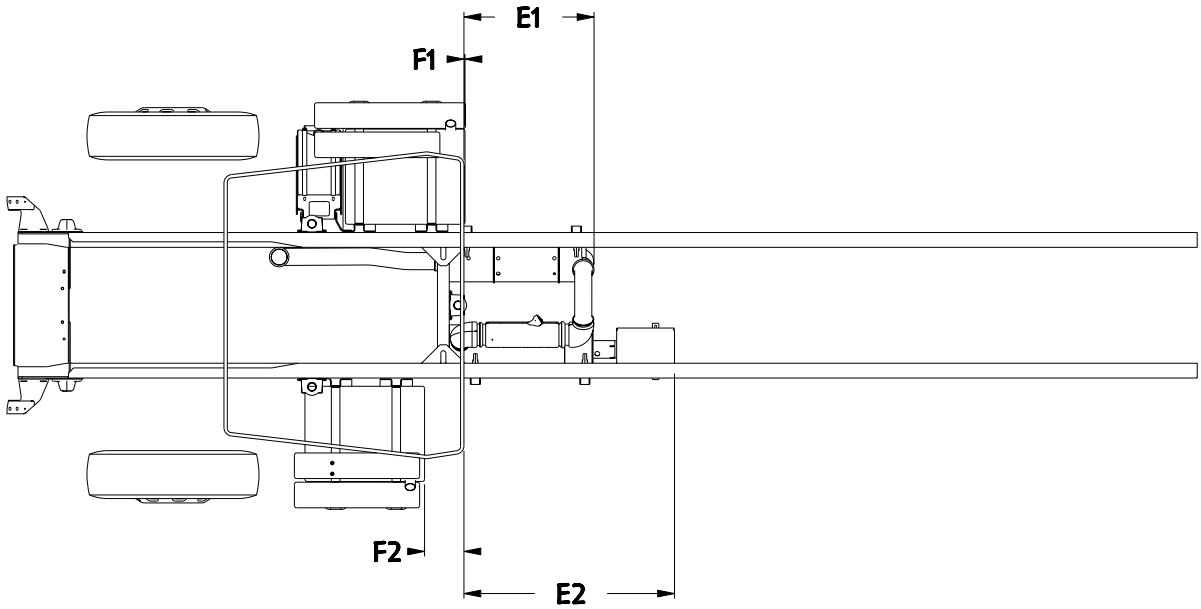

Air or Hydraulic Brakes

Dimension F1 (BOC to RH Fuel Tank) = 0.2in
Dimension F2 (BOC to LH Fuel Tank) = -6.4in

Hydraulic Brakes only

Dimension E1 (BOC to DPF/SCR) = 30in
Dimension E3 (BOC to Diffuser) = 49.2in

Air Brakes only

Dimension E1 (BOC to DPF/SCR) = 46.5in
Dimension E3 (BOC to Diffuser) = 49.2in

This configuration is only available with a Rectangular Fuel Tank and Small DEF Tank.

https://truckmanualshub.com/

D11

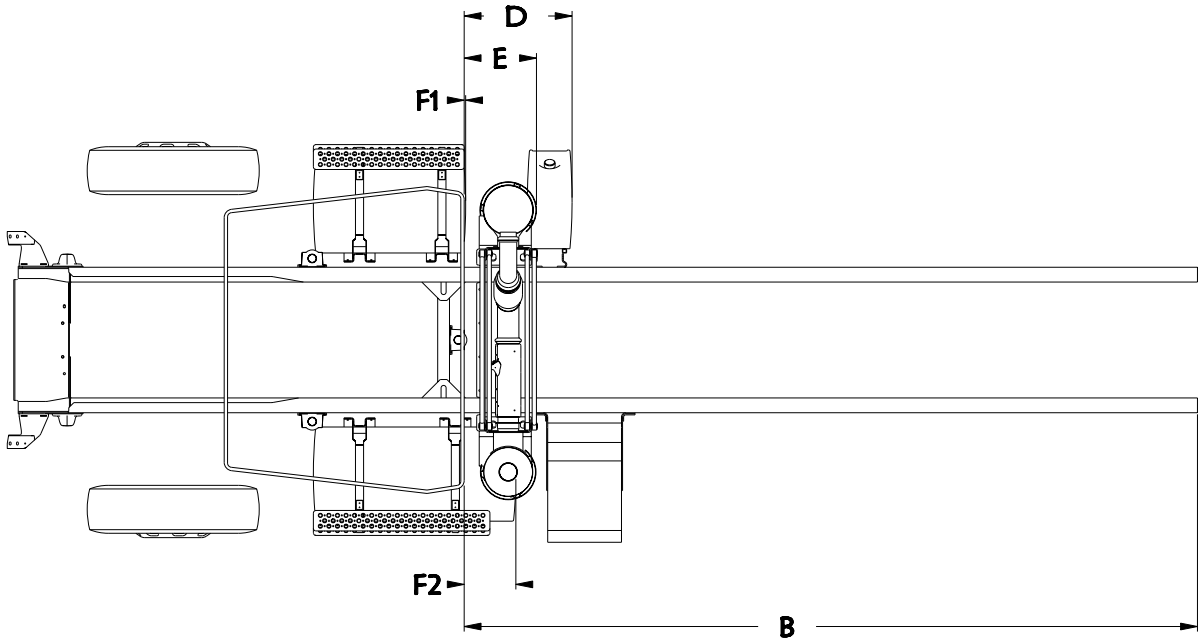

Dimension E (BOC to DPF/SCR) = 16.8in

TABLE 5-9.

Fuel Tank Size		Fuel Tank Length (in)	Dimension F1 BOC to RH Fuel Tank, (in)	Dimension F2 BOC to LH Fuel Tank, (in)	Dimension B BOC to Battery Box, (in)	Dimension D BOC to DEF Tank (in)	
						DEF Tank Size	
Diameter	Gallons					Small	Medium
22” Diameter Tank	56	35.6	0.4	0.4	32.8	30.7	40.5
	75	47.3	N/A	12.1	32.8	N/A	N/A
	100	62.2	N/A	27.0	47.4	N/A	N/A
	120	74.3	N/A	39.1	59.8	N/A	N/A
24.5” Diameter Tank	56	28.1	-11.0	-11.0	32.8	0.4	N/A

https://truckmanualshub.com/

D12

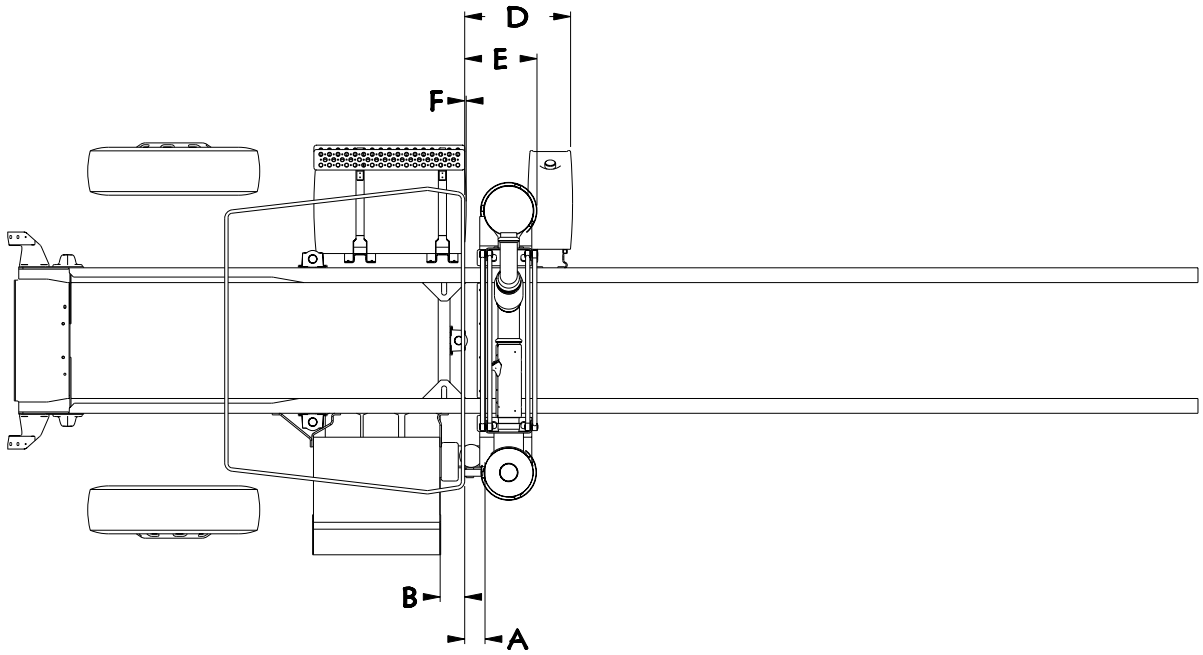

Dimension E (BOC to DPF/SCR) = 16.8in
Dimension A (BOC to Air Dryer) = 7.7in
Dimension B (BOC to Battery Box) = -5.4in

TABLE 5-10.

Fuel Tank Size		Fuel Tank Length (in)	Dimension F1 BOC to RH Fuel Tank, (in)	Dimension D BOC to DEF Tank (in)	
				DEF Tank Size	
Diameter	Gallons			Small	Medium
22” Diameter Tank	56	35.6	0.4	30.7	40.5
	75	47.3	N/A	N/A	N/A
	100	62.2	N/A	N/A	N/A
	120	74.3	N/A	N/A	N/A
24.5” Diameter Tank	56	28.1	-11.0	0.4	N/A

https://truckmanualshub.com/

D13

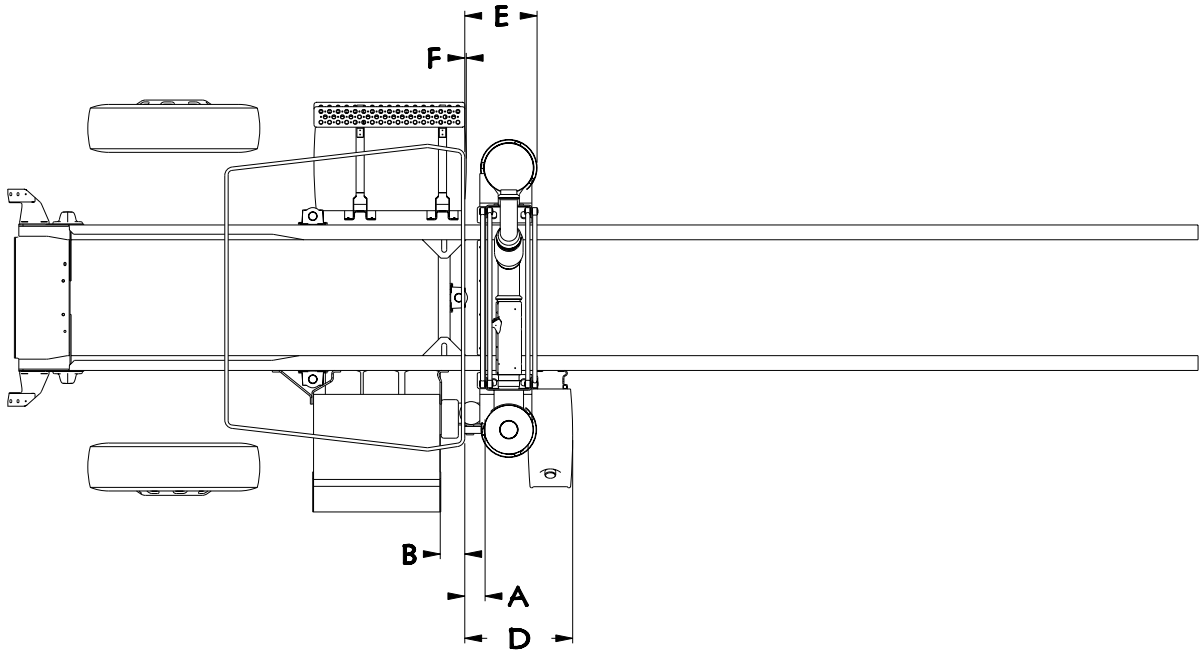

Dimension E (BOC to DPF/SCR) = 16.8in
Dimension A (BOC to Air Dryer) = 7.7in
Dimension B (BOC to Battery Box) = -5.4in

TABLE 5-11.

Fuel Tank Size		Fuel Tank Length (in)	Dimension F1 BOC to RH Fuel Tank, (in)	Dimension D BOC to DEF Tank (in)
				DEF Tank Size
Diameter	Gallons			Small
22” Diameter Tank	56	35.6	0.4	25.2
	75	47.3	N/A	
	100	62.2	N/A	
	120	74.3	N/A	
24.5” Diameter Tank	56	28.1	-11.0	

*The DEF tank is moved forward approximately 8.3” with a frame rail mounted air dryer.

https://truckmanualshub.com/

D14

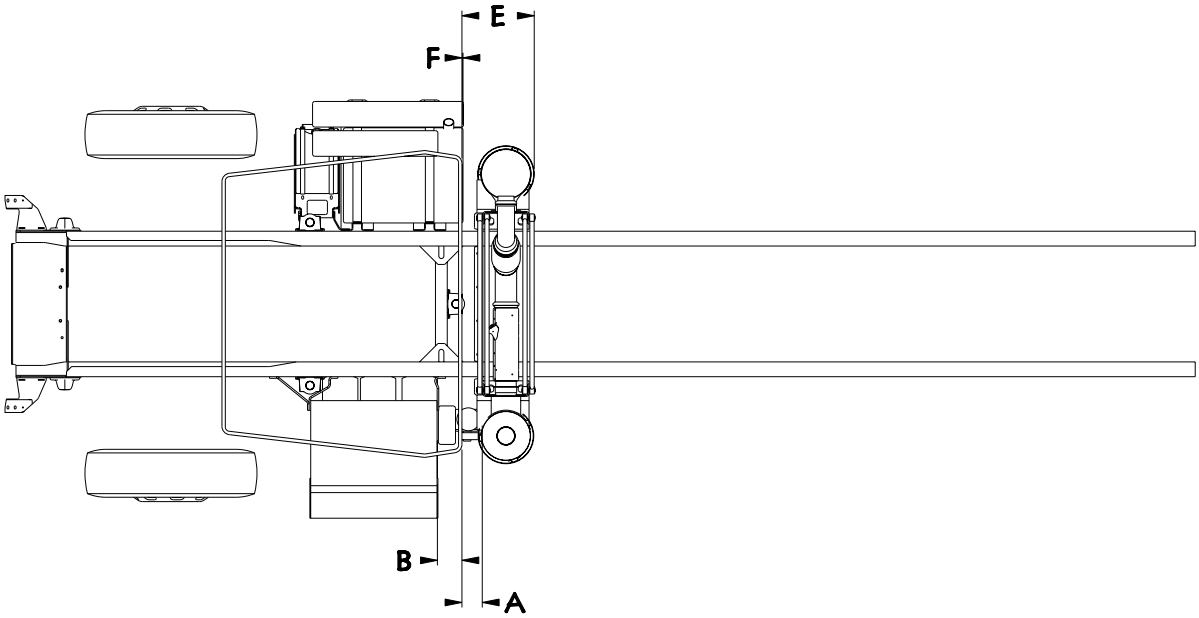

Dimension A (BOC to Air Dryer) = 7.7in
Dimension B (BOC to Battery Box) = -5.4in
Dimension E (BOC to DPF/SCR) = 16.8in
Dimension F (BOC to Fuel Tank) = 0.2in

This configuration is only available with a Rectangular Fuel Tank and Small DEF Tank.

https://truckmanualshub.com/

D15

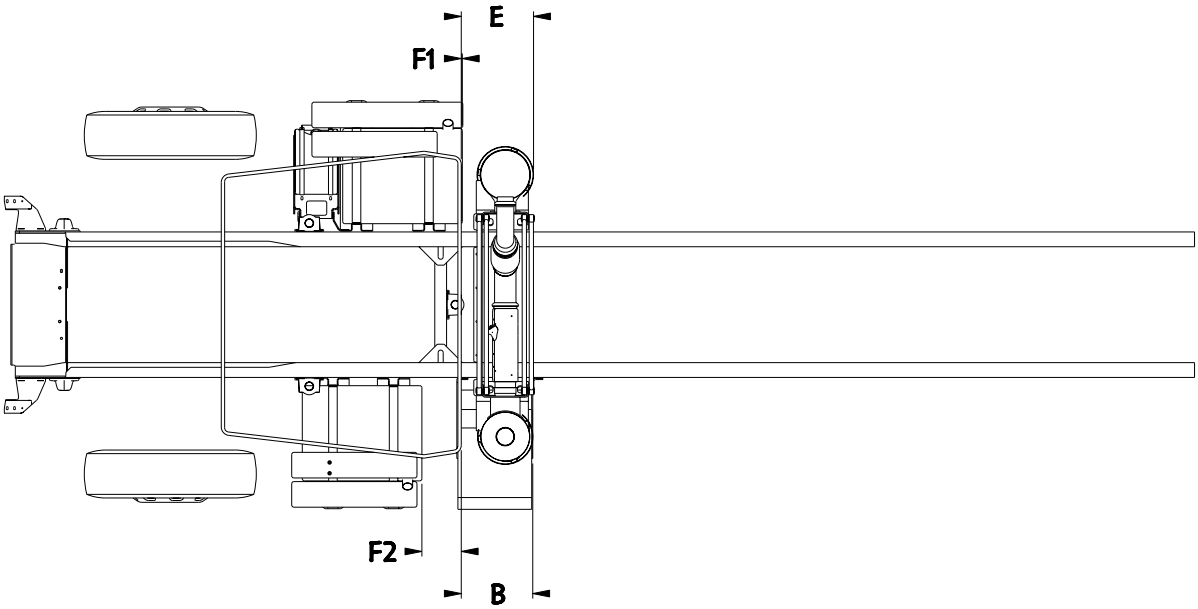

Dimension E (BOC to DPF/SCR) = 16.8in
Dimension F1 (BOC to RH Fuel Tank) = 0.2in
Dimension F2 (BOC to LH Fuel Tank) = -6.4in
Dimension B (BOC to Battery Box) = 16.7in

This configuration is only available with a Rectangular Fuel Tank and Small DEF Tank.

https://truckmanualshub.com/

D16

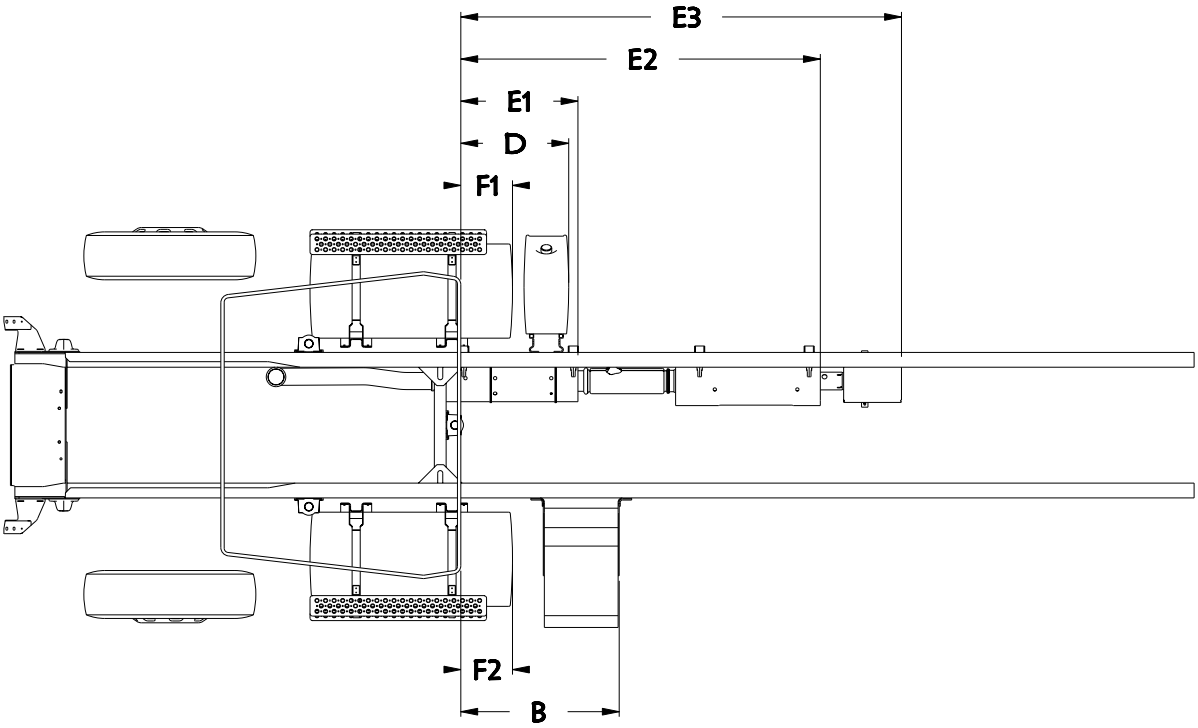

Dimension E1 (BOC to DPF) = 27.2in
Dimension E2 (BOC to SCR) = 83.8in
Dimension E3 (BOC to Diffuser) = 103.0in

TABLE 5-12.

Fuel Tank Size		Fuel Tank Length (in)	Dimension F1 BOC to RH Fuel Tank, (in)	Dimension F2 BOC to LH Fuel Tank, (in)	Dimension B BOC to Battery Box, (in)	Dimension D BOC to DEF Tank (in)	
						DEF Tank Size	
Diameter	Gallons					Small	Medium
22” Diameter Tank	56	35.6	0.4	0.4	26.0	11.4	21.2
	75	47.3	12.1	12.1	30.5	25.2	35.0
	100	62.2	27.0	27.0	48.0	39.0	48.8
	120	74.3	39.1	39.1	64.6	50.0	59.8
24.5” Diameter Tank	56	28.1	-11.0	-11.0	15.0	0.4	N/A

https://truckmanualshub.com/

D17

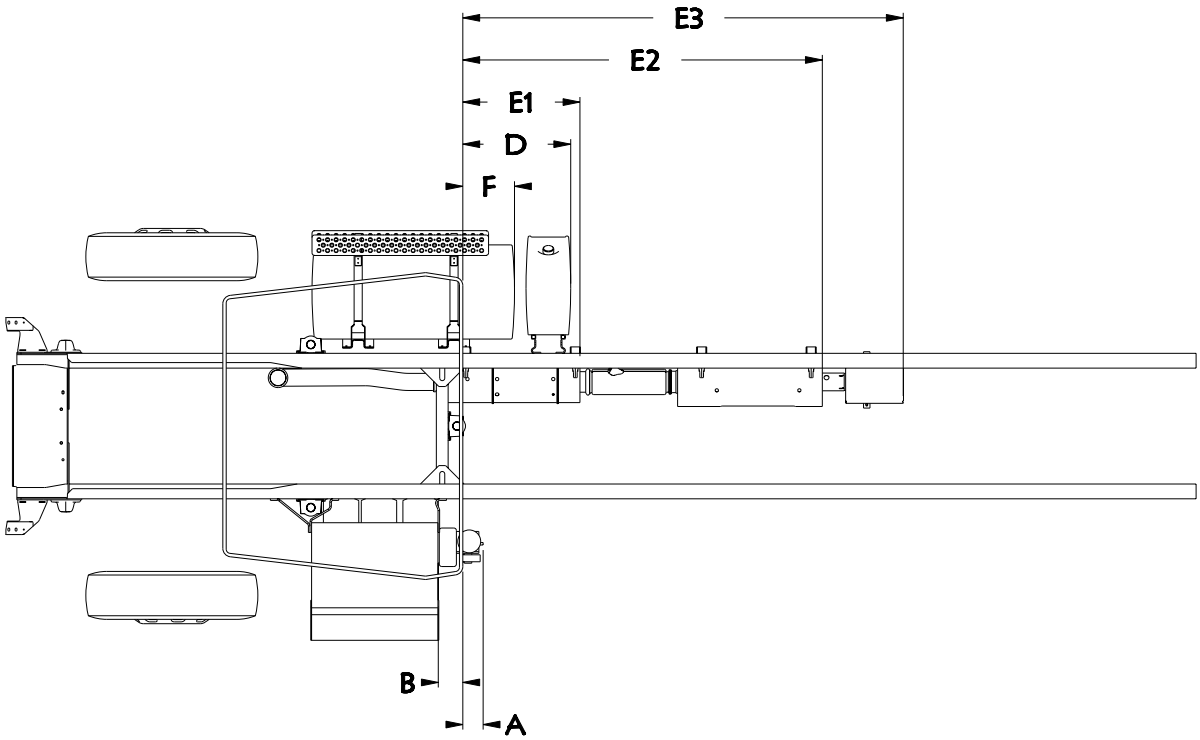

Dimension A (BOC to Air Dryer) = 7.7in
Dimension B (BOC to Battery Box) = -5.4in
Dimension E1 (BOC to DPF) = 27.2in
Dimension E2 (BOC to SCR) = 83.8in
Dimension E3 (BOC to Diffuser) = 103.0in

TABLE 5-13.

Fuel Tank Size		Fuel Tank Length (in)	Dimension F BOC to RH Fuel Tank, (in)	Dimension D BOC to DEF Tank (in)	
				DEF Tank Size	
Diameter	Gallons			Small	Medium
22” Diameter Tank	56	35.6	0.4	11.4	21.2
	75	47.3	12.1	25.2	35.0
	100	62.2	27.0	39.0	48.8
	120	74.3	39.1	50.0	59.8
24.5” Diameter Tank	56	28.1	-11.0	0.4	N/A

https://truckmanualshub.com/

D18

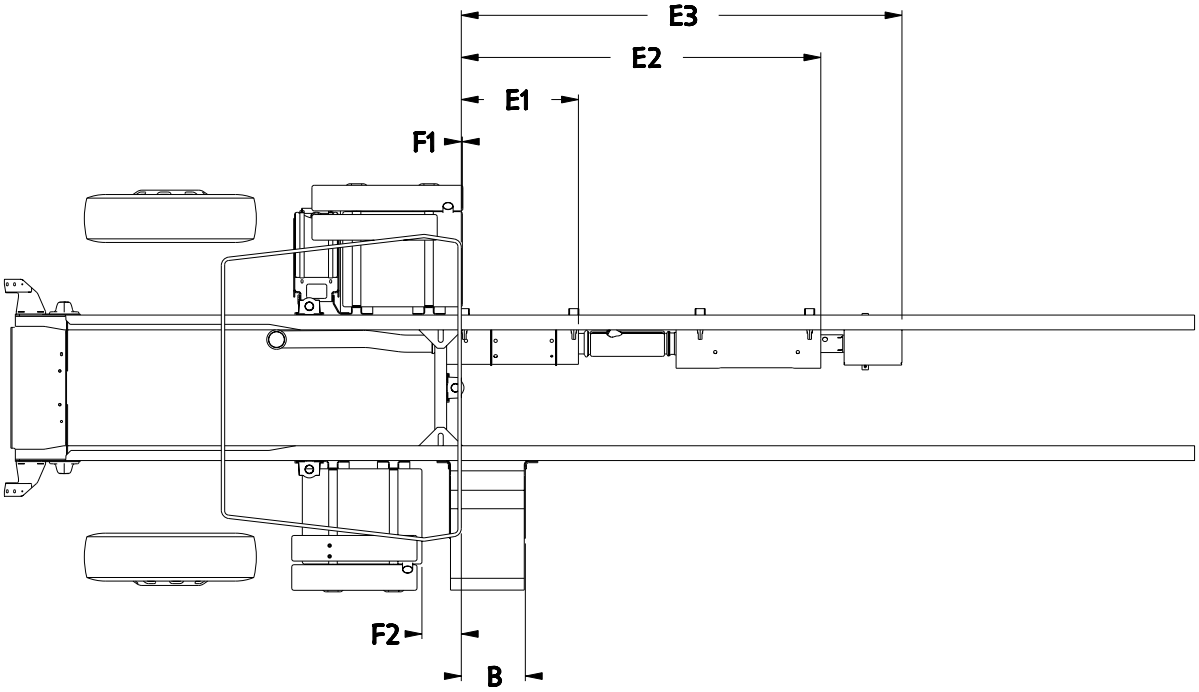

Dimension E1 (BOC to DPF) = 27.2in
Dimension E2 (BOC to SCR) = 83.8in
Dimension E3 (BOC to Diffuser) = 103.0in
Dimension F1 (BOC to RH Fuel Tank) = 0.2in
Dimension F2 (BOC to LH Fuel Tank) = -6.4in
Dimension B (BOC to Battery Box) = 15.0in

This configuration is only available with a Rectangular Fuel Tank and Small DEF Tank.

https://truckmanualshub.com/

D19

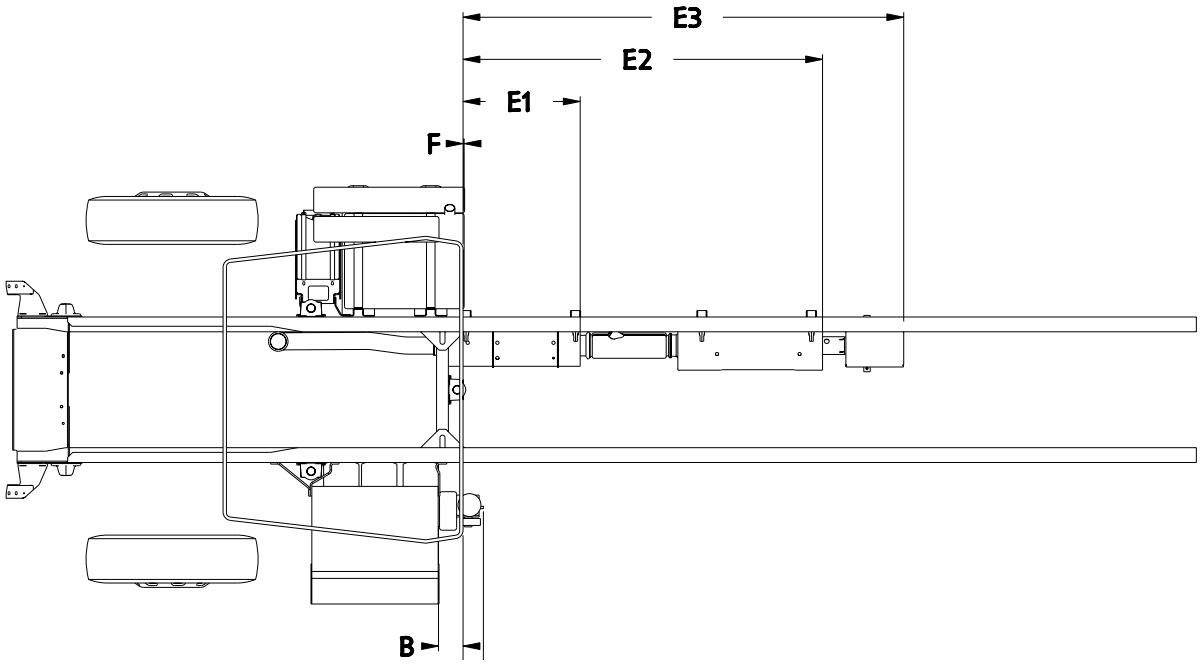

Dimension A (BOC to Air Dryer) = 7.7in
Dimension B (BOC to Battery Box) = -5.4in
Dimension E1 (BOC to DPF) = 27.2in
Dimension E2 (BOC to SCR) = 83.8in
Dimension E3 (BOC to Diffuser) = 103.0in
Dimension F (BOC to Fuel Tank) = 0.2in

This configuration is only available with a Rectangular Fuel Tank and Small DEF Tank.

https://truckmanualshub.com/

D20

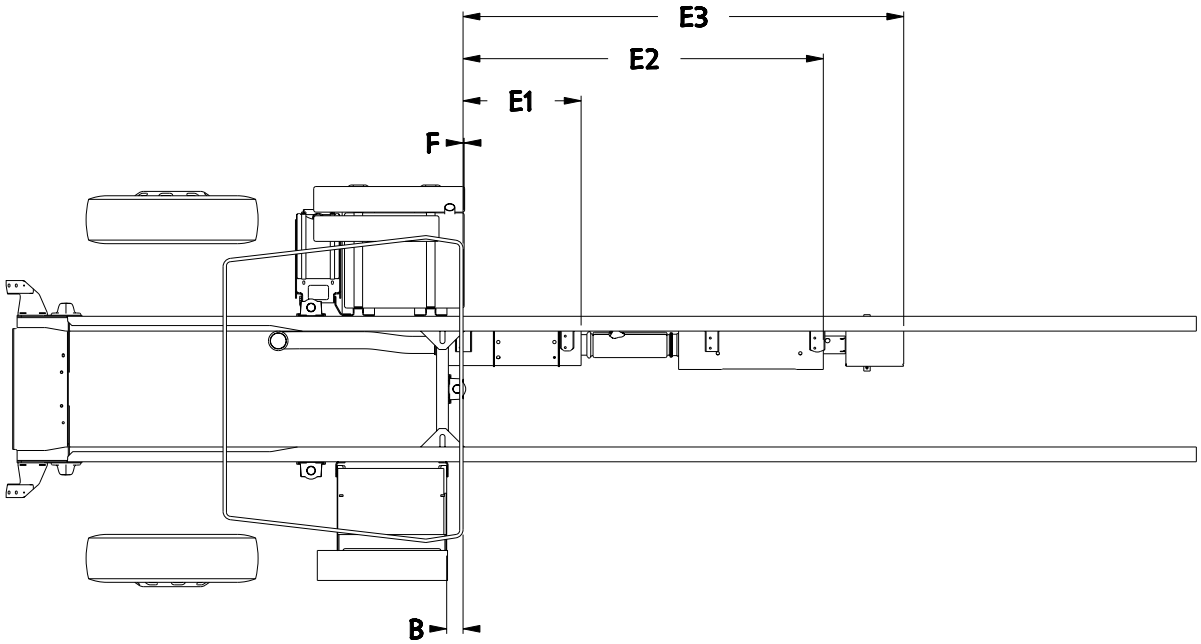

Dimension B (BOC to Battery Box) = -3.8in
Dimension E1 (BOC to DPF) = 27.2in
Dimension E2 (BOC to SCR) = 83.8in
Dimension E3 (BOC to Diffuser) = 103.0in
Dimension F (BOC to Fuel Tank) = 0.2in

This configuration is only available with a Rectangular Fuel Tank and Small DEF Tank.

https://truckmanualshub.com/

D21

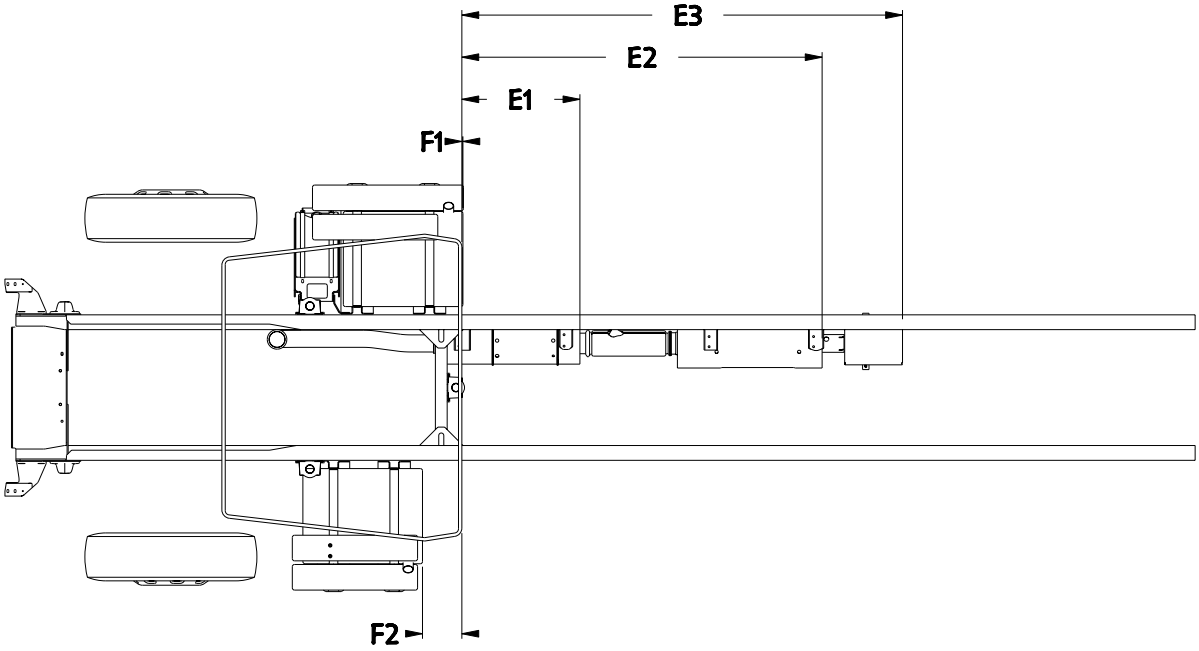

Dimension E1 (BOC to DPF) = 27.2in
Dimension E2 (BOC to SCR) = 83.8in
Dimension E3 (BOC to Diffuser) = 103.0in
Dimension F1 (BOC to RH Fuel Tank) = 0.2in
Dimension F2 (BOC to LH Fuel Tank) = -6.4in

This configuration is only available with a Rectangular Fuel Tank and Small DEF Tank.

https://truckmanualshub.com/

D22

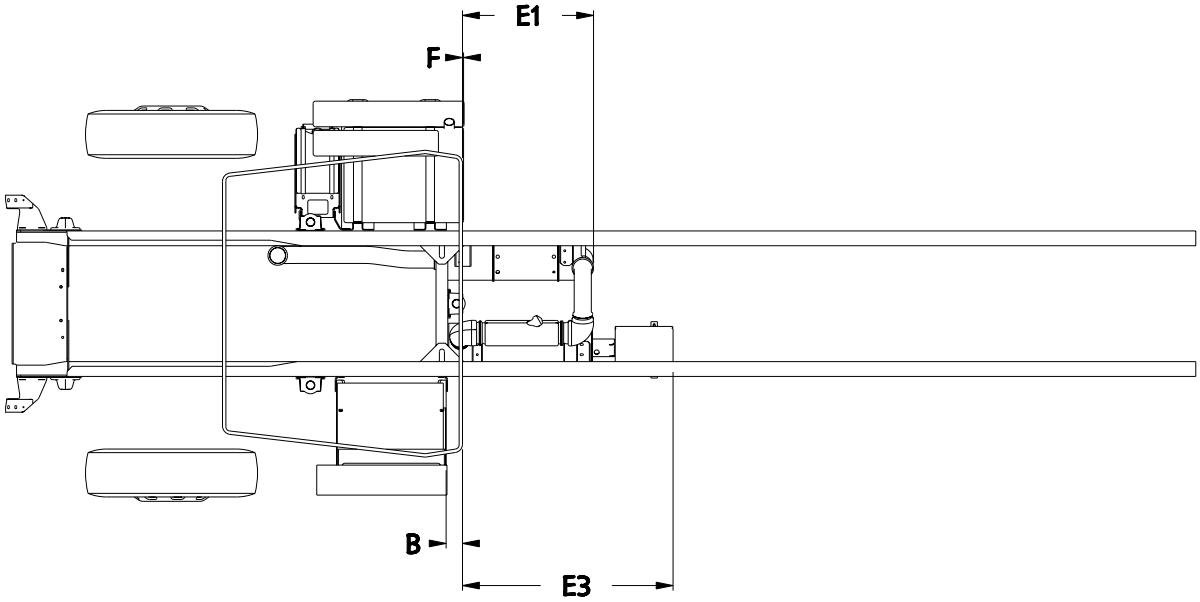

Dimension B (BOC to Battery Box) = -3.8in
Dimension E1 (BOC to DPF/SCR) = 30in
Dimension E3 (BOC to Diffuser) = 49.2in
Dimension F (BOC to Fuel Tank) = 0.2in

This configuration is only available with a Rectangular Fuel Tank and Small DEF Tank.

https://truckmanualshub.com/

D23

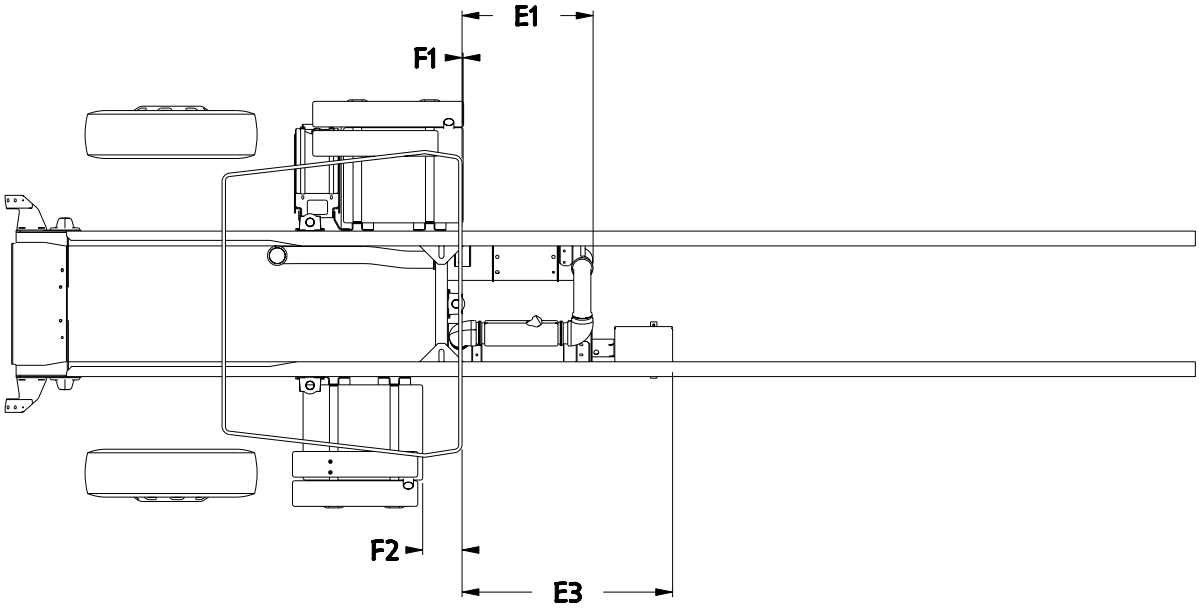

Dimension E1 (BOC to DPF/SCR) = 30in
Dimension E3 (BOC to Diffuser) = 49.2in
Dimension F1 (BOC to RH Fuel Tank) = 0.2in
Dimension F2 (BOC to LH Fuel Tank) = -6.4in

This configuration is only available with a Rectangular Fuel Tank and Small DEF Tank.

https://truckmanualshub.com/

H1 Hybrid

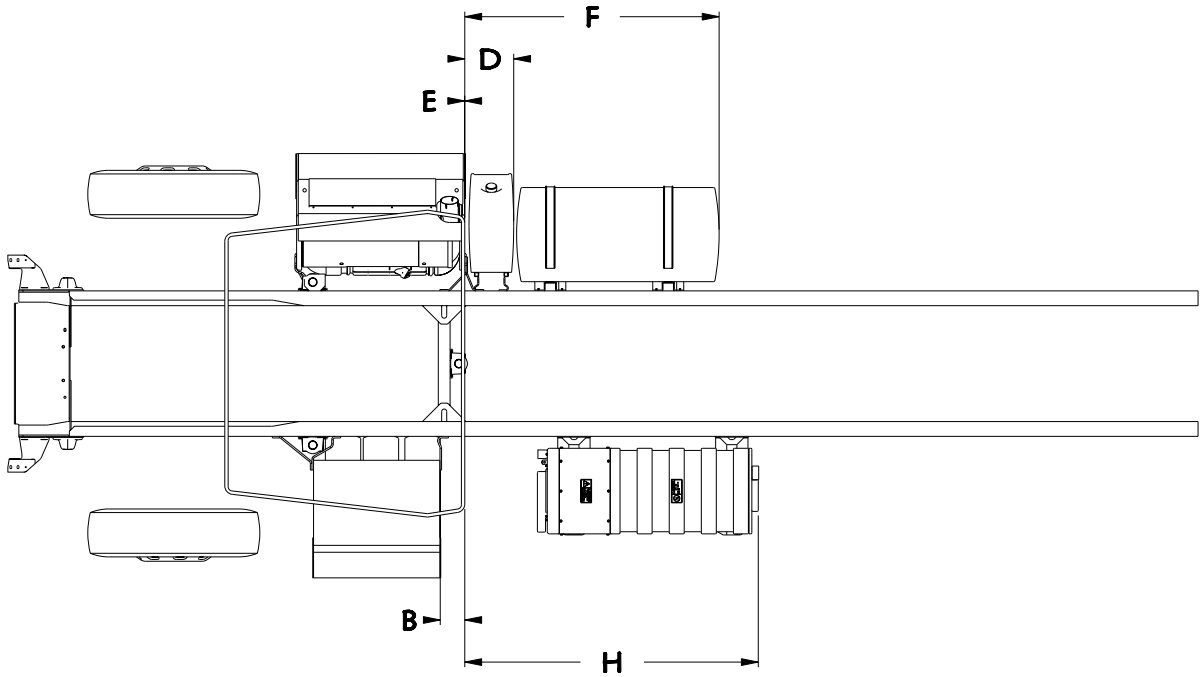

Dimension E (BOC to DPF/SCR) = 0.0in
Dimension H (BOC to Hybrid Battery Box) = -2.8in

TABLE 5-14.

Fuel Tank Size		Fuel Tank Length (in)	Dimension F BOC to Fuel Tank, (in)*	Dimension D BOC to DEF Tank (in)		
				DEF Tank Size		
Diameter	Gallons			Small	Medium	Rectangular
	56	35.6	50.5	14.2	24	N/A
	75	47.3	62.2			
	100	62.2	77.1			
Rectangular Tank	45	28.0	42.9	N/A	N/A	11.5

*Fuel Tank is moved rearward approximately 10in when using the Medium DEF tank

Hybrid PEC		
Wheelbase	PEC Length	DIM P (BOC to PEC)
153–185	56.1	63.1
186–260		68.6
261–280		63.1
281–315		68.6

https://truckmanualshub.com/

H2 Hybrid

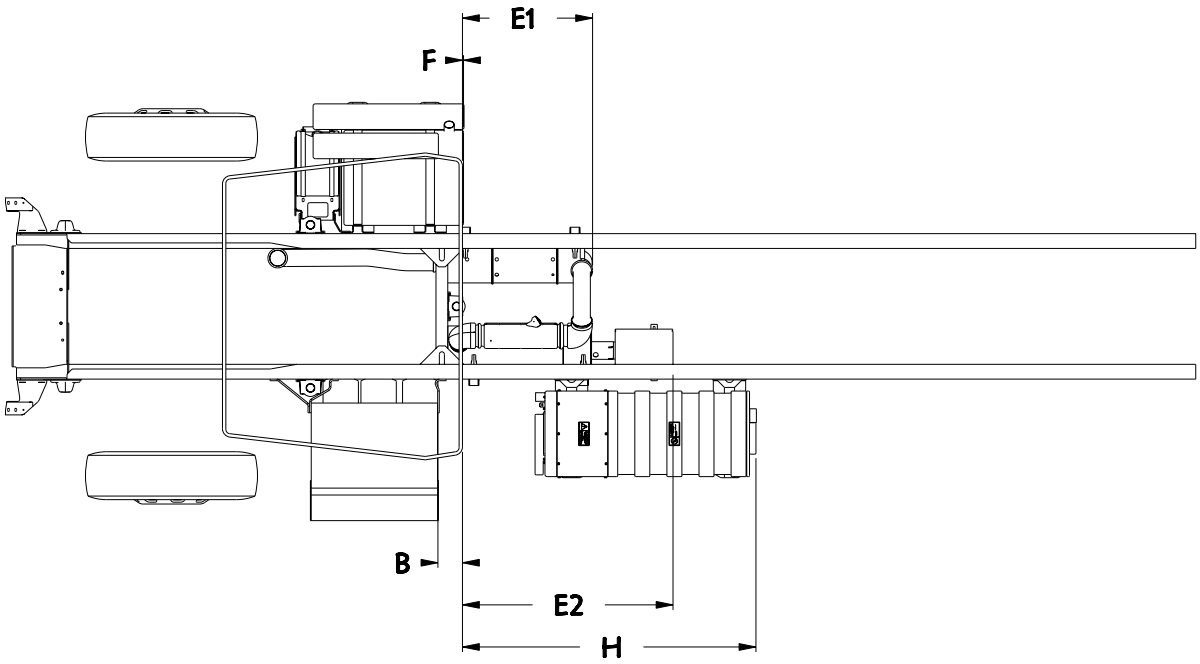

Air or Hydraulic Brakes

Dimension F (BOC to RH Fuel Tank) = 0.2in
Dimension H (BOC to Hybrid Battery Box) = -2.8in

Hydraulic Brakes only

Dimension E1 (BOC to DPF/SCR) = 30in
Dimension E3 (BOC to Diffuser) = 49.2in

Air Brakes only

Dimension E1 (BOC to DPF/SCR) = 46.5in
Dimension E3 (BOC to Diffuser) = 65.7in

TABLE 5-15.

Hybrid PEC		
Wheelbase	**PEC Length**	**DIM P (BOC to PEC)**
153–185	56.1	63.1
186–260		68.6
261–280		63.1
281–315		68.6

https://truckmanualshub.com/

H3 Hybrid

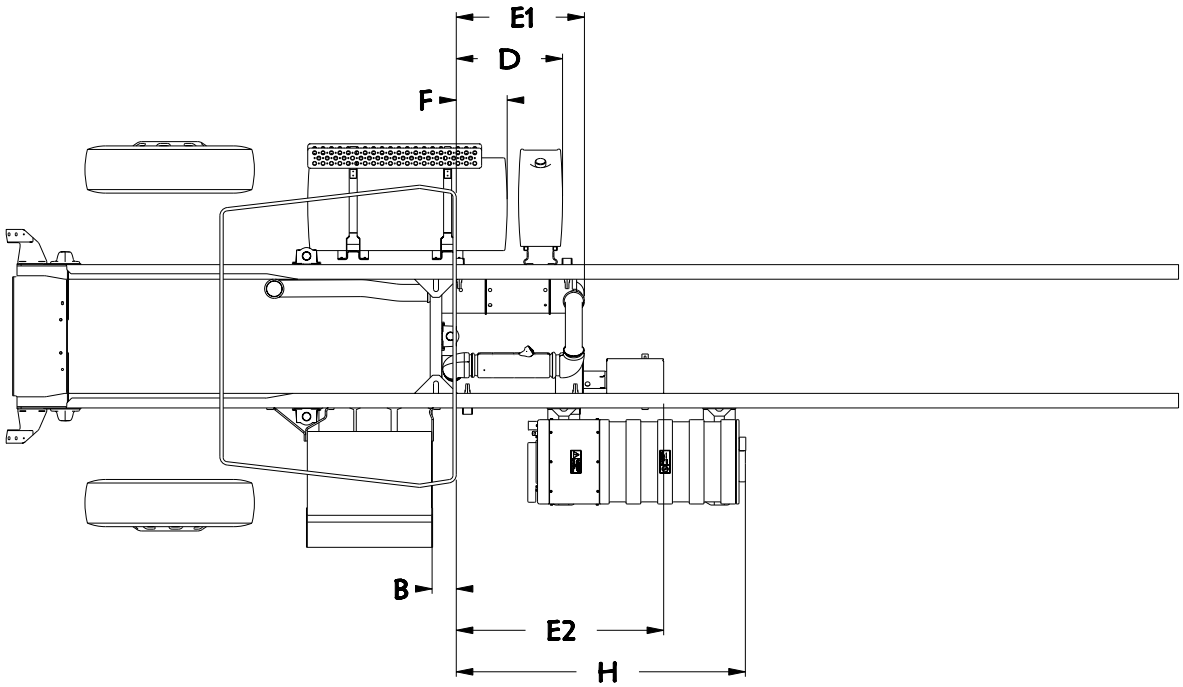

Air or Hydraulic Brakes

Dimension H (BOC to Hybrid Battery Box) = -2.8in

Hydraulic Brakes only

Dimension E1 (BOC to DPF/SCR) = 30in
Dimension E3 (BOC to Diffuser) = 49.2in

Air Brakes only

Dimension E1 (BOC to DPF/SCR) = 46.5in
Dimension E3 (BOC to Diffuser) = 65.7in

TABLE 5-16.

Fuel Tank Size		Fuel Tank Length (in)	Dimension F BOC to RH Fuel Tank, (in)	Dimension D BOC to DEF Tank (in)	
				DEF Tank Size	
Diameter	Gallons			Small	Medium
22” Diameter Tank	56	35.6	0.4	11.4*	21.2*
	75	47.3	12.1	25.2*	35.0*
	100	62.2	27.0	39.0	48.8
	120	74.3	39.1	50.0**	59.8**
24.5” Diameter Tank	56	28.1	-11.0	0.4	N/A

* Add 2.8” with Air Brakes
** Add 8.3” with Air Brakes

Hybrid PEC		
Wheelbase	PEC Length	DIM P (BOC to PEC)
153–185	56.1	63.1
186–260		68.6
261–280		63.1
281–315		68.6

https://truckmanualshub.com/

H4 Hybrid

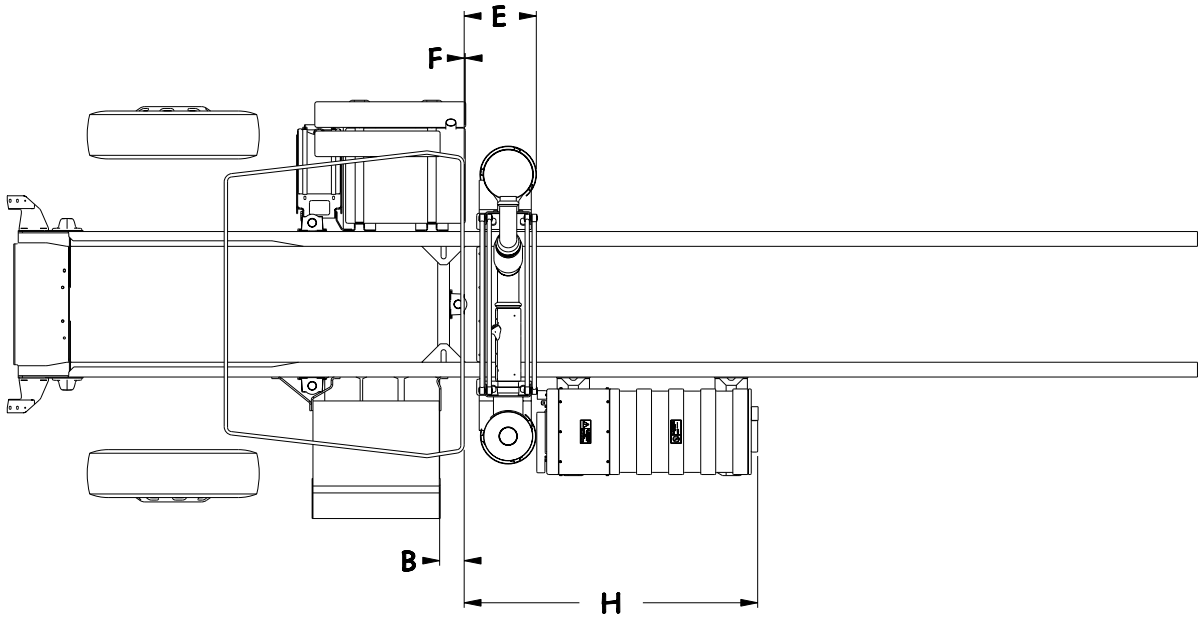

Dimension E (BOC to DPF/SCR) = 16.8in
Dimension F (BOC to RH Fuel Tank) = 0.2in
Dimension H (BOC to Hybrid Battery Box) = -2.8in

TABLE 5-17.

Hybrid PEC		
Wheelbase	**PEC Length**	**DIM P (BOC to PEC)**
153–185	56.1	63.1
186–260		68.6
261–280		63.1
281–315		68.6

https://truckmanualshub.com/

H5 Hybrid

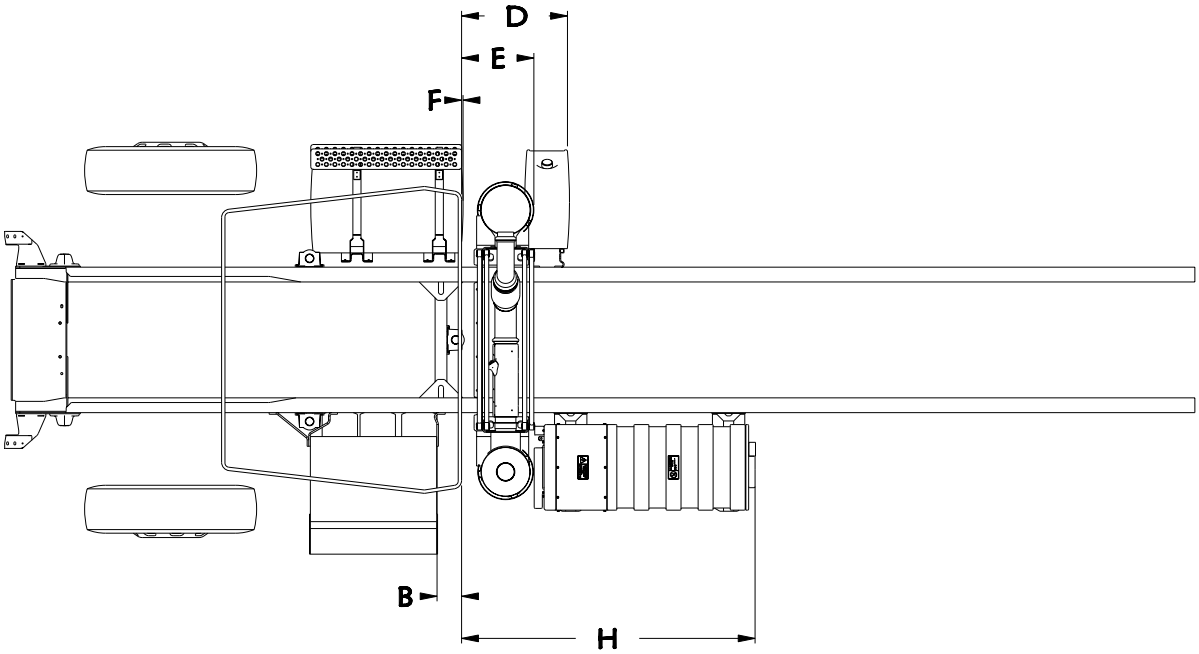

Dimension E (BOC to DPF/SCR) = 16.8in
Dimension H (BOC to Hybrid Battery Box) = -2.8in

TABLE 5-18.

Fuel Tank Size		Fuel Tank Length (in)	Dimension F BOC to RH Fuel Tank, (in)	Dimension D BOC to DEF Tank (in)	
				DEF Tank Size	
Diameter	Gallons			Small	Medium
22” Diameter Tank	56	35.6	0.4	25.2	35.0
	75	47.3	N/A	N/A	N/A
	100	62.2	N/A	N/A	N/A
	120	74.3	N/A	N/A	N/A
24.5” Diameter Tank	56	28.1	-11.0	0.4	N/A

Hybrid PEC		
Wheelbase	PEC Length	DIM P (BOC to PEC)
153–185	56.1	63.1
186–260		68.6
261–280		63.1
281–315		68.6

https://truckmanualshub.com/

H6 Hybrid

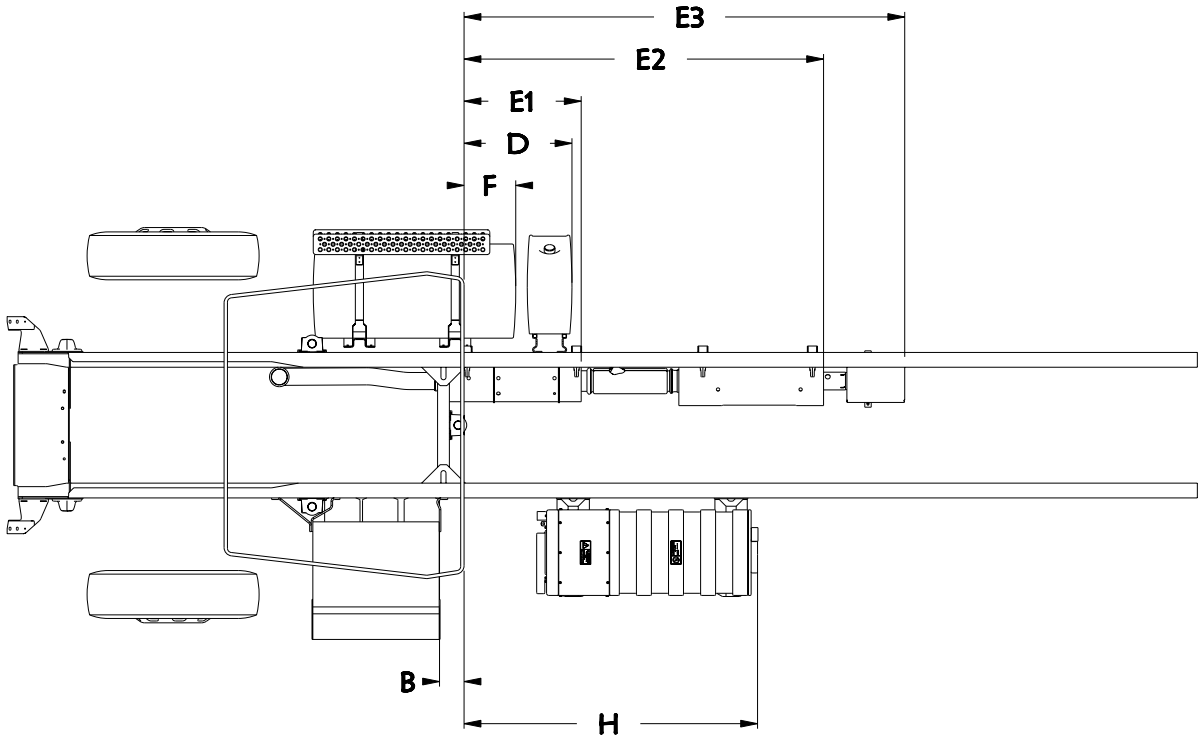

Dimension E1 (BOC to DPF) = 27.2in
Dimension E2 (BOC to SCR) = 83.8in
Dimension E3 (BOC to Diffuser) = 103.0in
Dimension H (BOC to Hybrid Battery Box) = -2.8in

TABLE 5-19.

Fuel Tank Size		Fuel Tank Length (in)	Dimension F BOC to RH Fuel Tank, (in)	Dimension D BOC to DEF Tank (in)	
				DEF Tank Size	
Diameter	Gallons			Small	Medium
22” Diameter Tank	56	35.6	0.4	11.4	21.2
	75	47.3	12.1	25.2	35.0
	100	62.2	27.0	39.0	48.8
	120	74.3	39.1	50.0	59.8
24.5” Diameter Tank	56	28.1	-11.0	0.4	N/A

Hybrid PEC		
Wheelbase	PEC Length	DIM P (BOC to PEC)
153–185	56.1	63.1
186–260		68.6
261–280		63.1
281–315		68.6

https://truckmanualshub.com/

H7 Hybrid

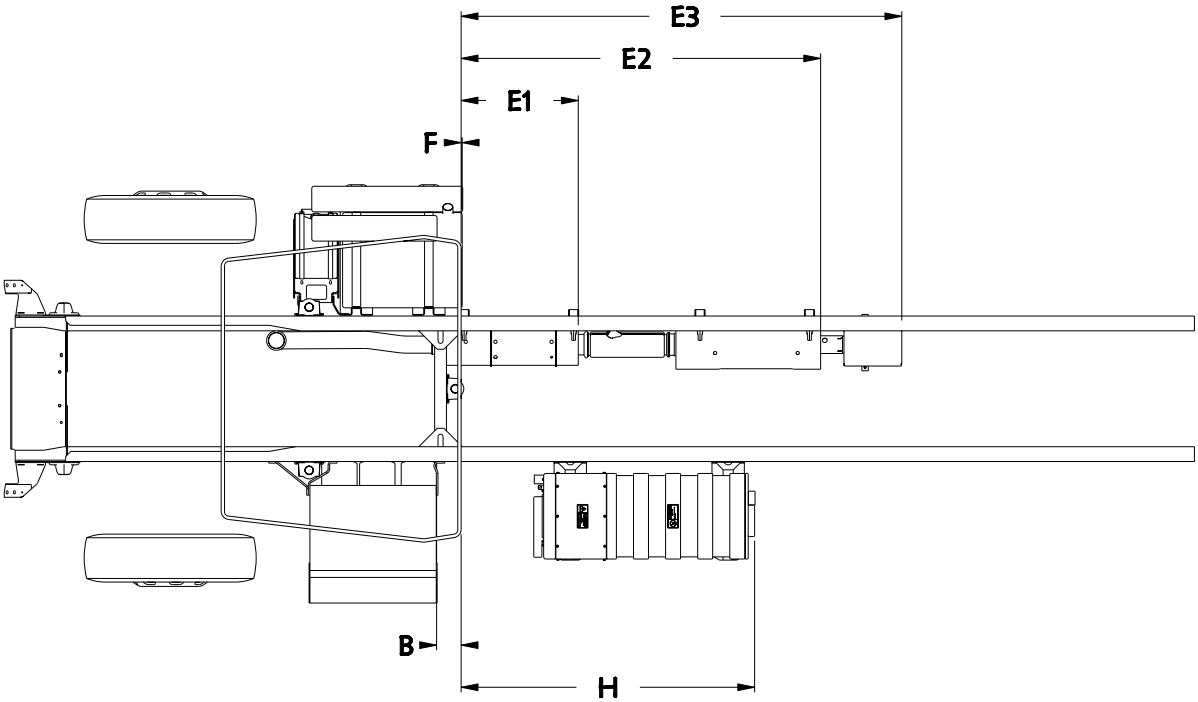

Dimension E1 (BOC to DPF) = 27.2in
Dimension E2 (BOC to SCR) = 83.8in
Dimension E3 (BOC to Diffuser) = 103.0in
Dimension F (BOC to RH Fuel Tank) = 0.2in
Dimension H (BOC to Hybrid Battery Box) = -2.8in

TABLE 5-20.

Hybrid PEC		
Wheelbase	**PEC Length**	**DIM P (BOC to PEC)**
153–185	56.1	63.1
186–260		68.6
261–280		63.1
281–315		68.6

https://truckmanualshub.com/

Page Intentionally Left Blank.

https://truckmanualshub.com/

CRITICAL CLEARANCES

Rear Wheels and Cab

CAUTION: **Insufficient clearance between rear tires and body structure could cause damage to the body during suspension movement. Allow at least 8 inches clearance (See Figure 6–1.)**

Normal suspension movement could cause contact between the tires and the body. To prevent this, mount the body so that the minimum clearance between the top of the tire and the bottom of the body is 8 inches (203 mm). This should be measured with the body empty. See Figure 6–1.

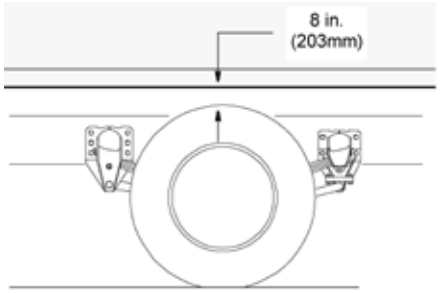

FIGURE 6-1. Minimum Clearance Between Top of Rear Tires and Body Structure Overhang

CAUTION: **Maintain adequate clearance between back of cab and the front (leading edge) of mounted body. Failure to do so could cause damage to the cab, body or both during cab & body movement. See Figure 6–2.**

Note: **Be sure to provide maintenance access to battery box and fuel tank fill neck.**

The true distance from the centerline of the front axle to the back of the cab is 68 inches (1727 mm). It is recommended that the leading edge of the body be mounted a minimum of 4 inches (102 mm) behind the cab. The result is a minimum back–of–cab clearance of 72 inches (1829 mm) from the front axle to the leading edge of the body.

See SECTION 3 “DIMENSIONS” for further details on dimensions and clearances. Also, see APPENDIX B “WEIGHT DISTRIBUTION” for explanation of back–of–cab (BOC) / CA calculations.

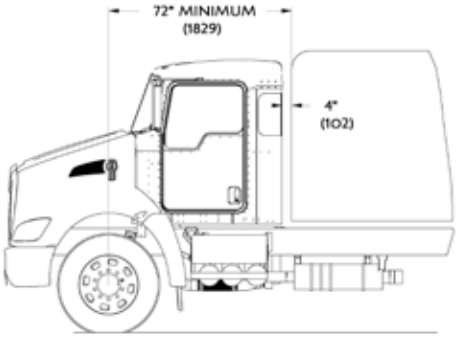

FIGURE 6-2. Minimum Back of Cab Clearance

WARNING: **If the frame rail flanges are modified or damaged, the rail may fail prematurely and cause an accident. When mounting a body to the chassis, DO NOT drill holes in the upper or lower flange of the frame rail. Mount the body using body mounting brackets or U-bolts. Failure to comply may result in personal injury, death, equipment or property damage.**

https://truckmanualshub.com/

Body Mounting Using Brackets

CAUTION: **Always install a spacer between the body subframe and the top flange of the frame rail. Failure to do so could result in corrosion due to dissimilar materials.**

Installation of a spacer between the body subframe and the top flange of the frame rail will help prevent premature wear of the components due to chafing or corrosion.

Frame Sill

If the body is mounted to the frame with brackets, we recommend that the frame sill spacer be made from a strip of rubber or plastic (delrin or nylon). These materials will not undergo large dimensional changes during periods of high or low humidity. The strip will be less likely to fall out during extreme relative motion between body and chassis. See Figure 6–3.

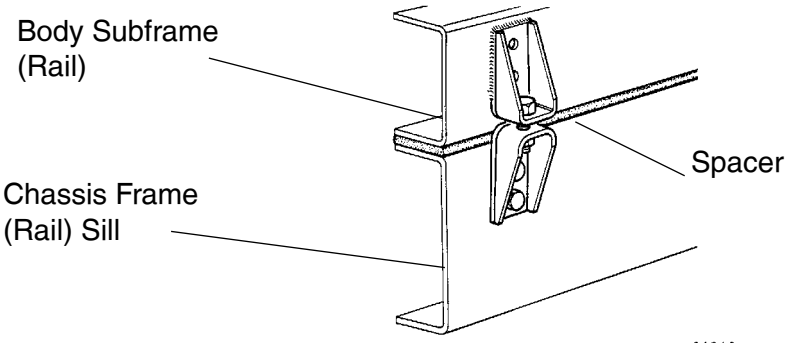

FIGURE 6-3. Spacer Between Frame Sill and Body Rail - Rubber or Plastic

Brackets

When mounting a body to the chassis with brackets, we recommend designs that offer limited amount of relative movement, bolted securely but not too rigid. Brackets should allow for slight movement between the body and the chassis. For instance, Figure 6–4 shows a high compression spring between the bolt and the bracket.

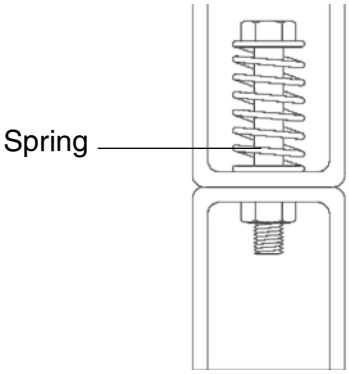

FIGURE 6-4. High Compression Spring Between the Mounting Bolt and Upper Bracket

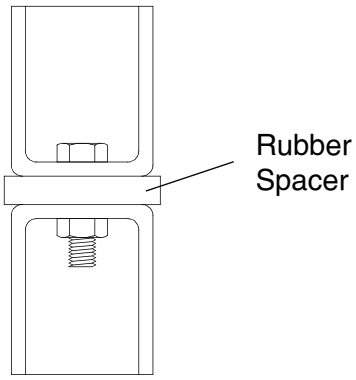

FIGURE 6-5. Rubber Spacer Between Brackets

Another possibility is mounting a rubber spacer between the brackets. See Figure 6–5.

These designs will allow relative movement between the body and the chassis during extreme frame racking situations. Extreme frame racking, with rigid mountings, could cause damage to the body. This is particularly true with tanker installations.

https://truckmanualshub.com/

Mounting Holes

When installing the lower bracket on frame rails the mounting holes in the chassis frame bracket and frame rail must comply with the general spacing and location guidelines illustrated in Figure 6–6. The hole diameter should not exceed the bolt diameter by more than .060 inches (1.5 mm).

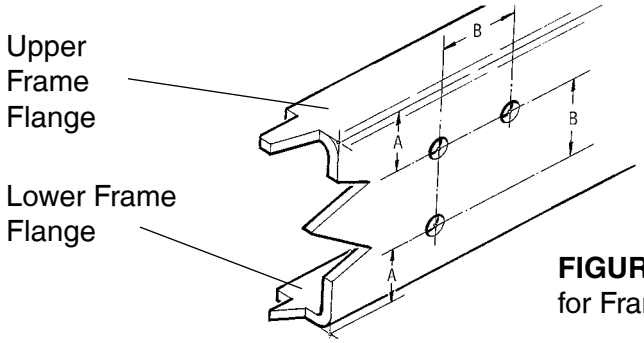

FIGURE 6-6. Hole Locations Guidelines for Frame Rail and Bracket

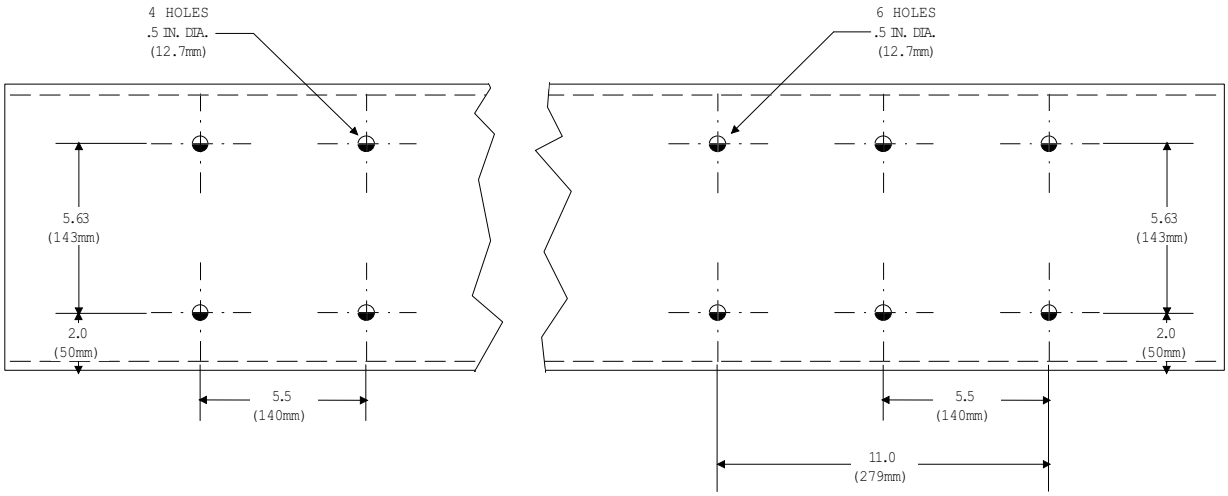

FIGURE 6-6. Crossmember-Gusset Hole Pattern Requirements [inch (mm)]

Frame Drilling

WARNING: **When mounting a body to the chassis, DO NOT drill holes in the upper or lower flange of the frame rail. If the frame rail flanges are modified or damaged, the rail could fail prematurely and cause an accident. Mount the body using body mounting brackets or U–bolts.**

CAUTION: **Use care when drilling the frame web so the wires and air lines routed inside the rail are not damaged. Failure to do so could lead to equipment damage and cause an inoperable electrical or air system circuit.**

WARNING: **Do not drill new holes any closer than 2 inches (50 mm) to existing holes. Frame drilling affects the strength of the rails and if not done properly, can cause the frame rails to fail and cause an accident.**

https://truckmanualshub.com/

Hole Location Guidelines

Holes must be located from the flange as indicated in Figure 6–7. They must be no closer than 2 inches (50 mm) to each other.

CAUTION: **Any unused holes must have the correct size bolts installed and torqued properly. Failure to do so can cause the frame rails to crack around the holes.**

Note: **If your design permits placement of body mounting brackets at crossmember locations, you can use the crossmember gusset bolt holes for body mounting. See Figure 6-8**

BODY MOUNTING USING U–BOLTS

Spacers

If the body is mounted to the frame with U–bolts, use a hardwood sill (minimum 0.5 inch (12 mm) thick) between the frame rail and body frame to protect the top surface of the rail flange.

WARNING: **Do not allow the frame rails or flanges to deform when tightening the U–bolts. It will weaken the frame and could cause an accident. Use suitable spacers made of steel or hardwood on the inside of the frame rail to prevent collapse of the frame flanges.**

Use a hardwood spacer between the bottom flange and the U–bolt to prevent the U–bolt from notching the frame flange. See Figure 6–8.

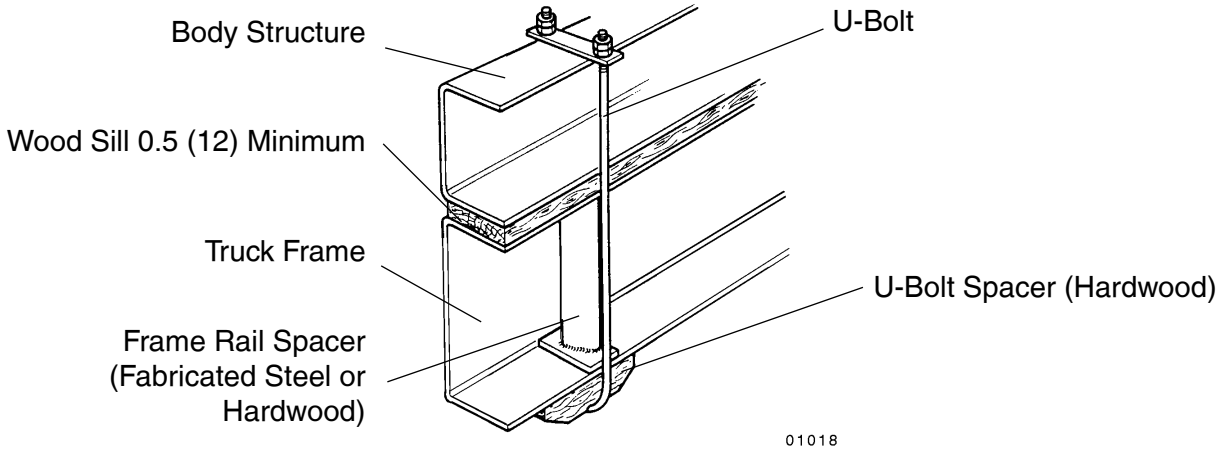

FIGURE 6-7. Acceptable U-Bolt Mounting with Wood and Fabricated Spacers [inch mm)]

WARNING: **Do not allow spacers and other body mounting parts to interfere with brake lines, fuel lines, or wiring harnesses routed inside the frame rail. Crimped or damaged brake lines, fuel lines, or wiring could result in loss of braking, fuel leaks, electrical overload or a fire. Carefully inspect the installation to ensure adequate clearances for air brake lines, fuel lines, and wiring. See Figure 6–9.**

CAUTION: **Mount U–bolts so they do not chafe on frame rail. Failure to do so could result in premature wear of the U-bolt or frame rail and cause an accident.**

https://truckmanualshub.com/

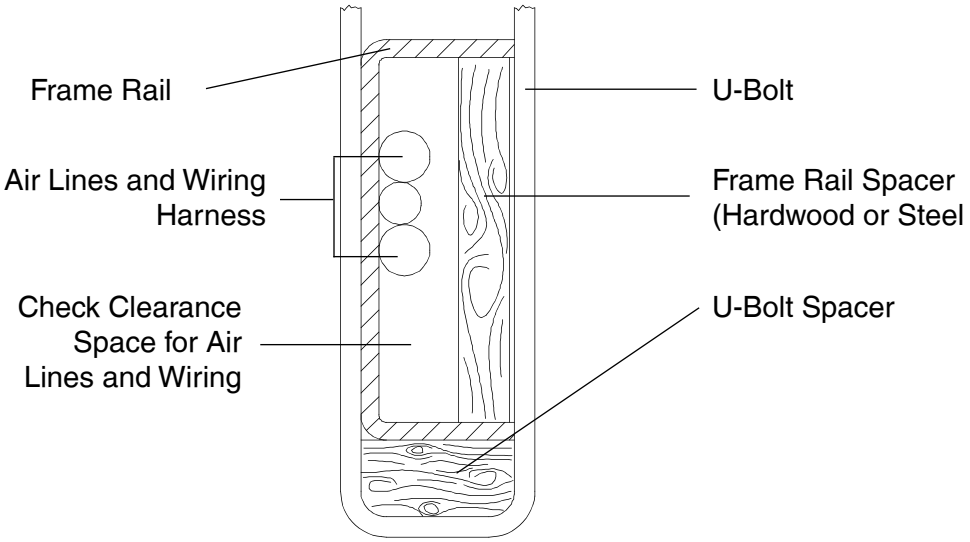

FIGURE 6-8. Clearance Space for Air Lines and Cables

WARNING:

Do not notch frame rail flanges to force a U–bolt fit. Notched or damaged frame flanges could result in premature frame failure. Use a larger size U–bolt. Use a hardwood spacer as shown in Figure 6-9.

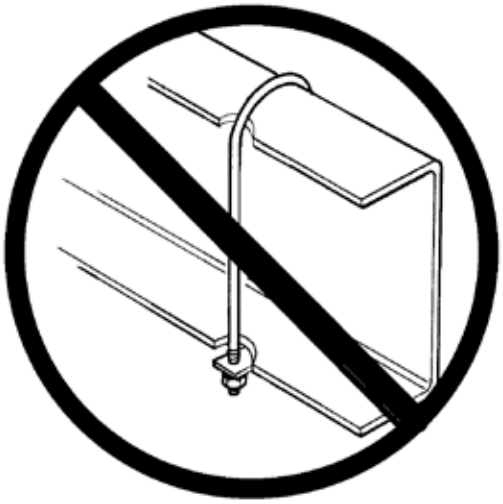

https://truckmanualshub.com/

Rear Body Mount

When U–bolts are used to mount a body we recommend that the last body attachment be made with a “fishplate” bracket. See Figure 6–9. This provides a firm attaching point and helps prevent any relative fore or aft movement between the body and frame. Refer to Figure 6-6 for mounting hole location guidelines.

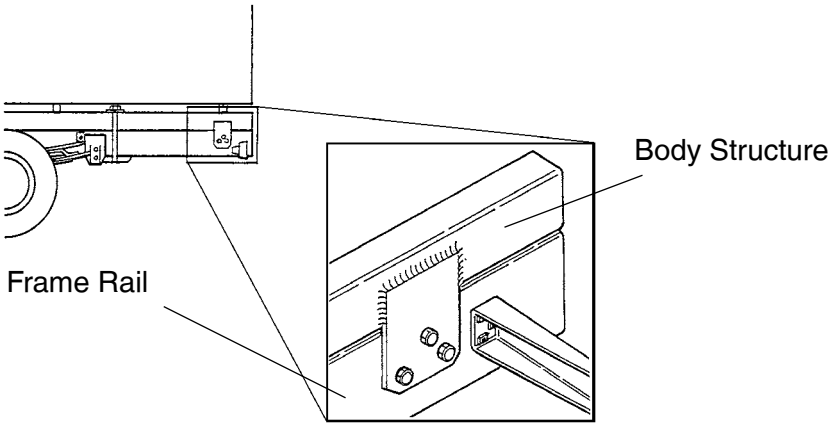

FIGURE 6-9. Example of Fishplate Bracket at Rear End of Body, used with U-Bolts

HYBRID CLEARANCES

Hybrid PEC

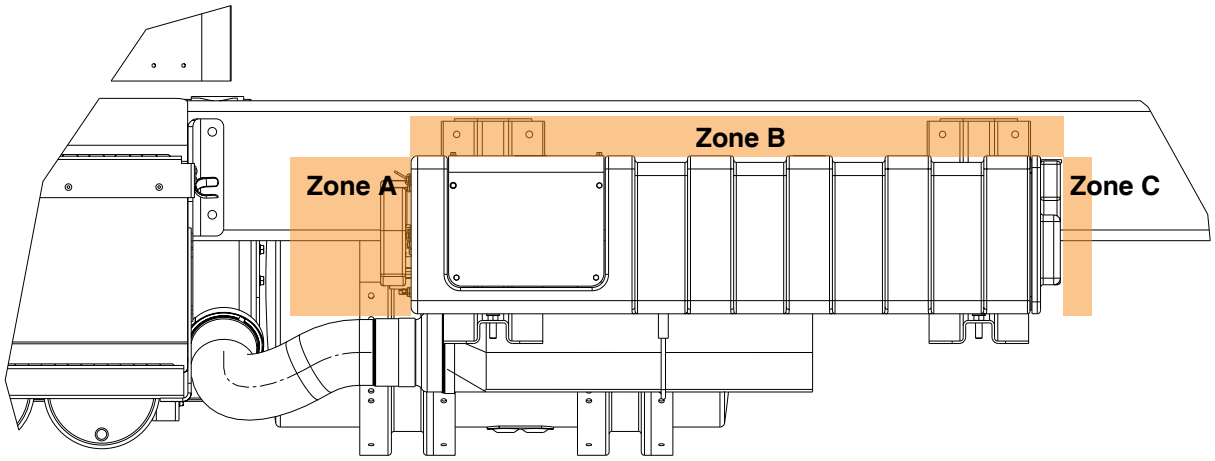

FIGURE 6-10: Clearance zones around Hybrid Power Electronics Carrier (PEC)

HAZARDOUS VOLTAGE: To reduce the risk of possible serious injury (Shock, Burn or Death): Components marked with High Voltage should be avoided. Service must be performed by qualified personnel only.

https://truckmanualshub.com/

Clearances
For vehicles equipped with a Hybrid PEC, frame mounted components or body installations must allow a minimum clearance of 10.9” in front of the PEC (Zone A), 3” above the PEC (Zone B), and 2” behind the PEC (Zone C).

Refer to Section 9 of this manual for information on the routing requirements of the High Voltage and Low Voltage Hybrid cables and wires.

Service Access
Adequate access must be maintained to allow for service of the air cleaner and easy access to the service switch on the front side of the PEC, as well as removal of the PEC unit for service

Hybrid Battery Box

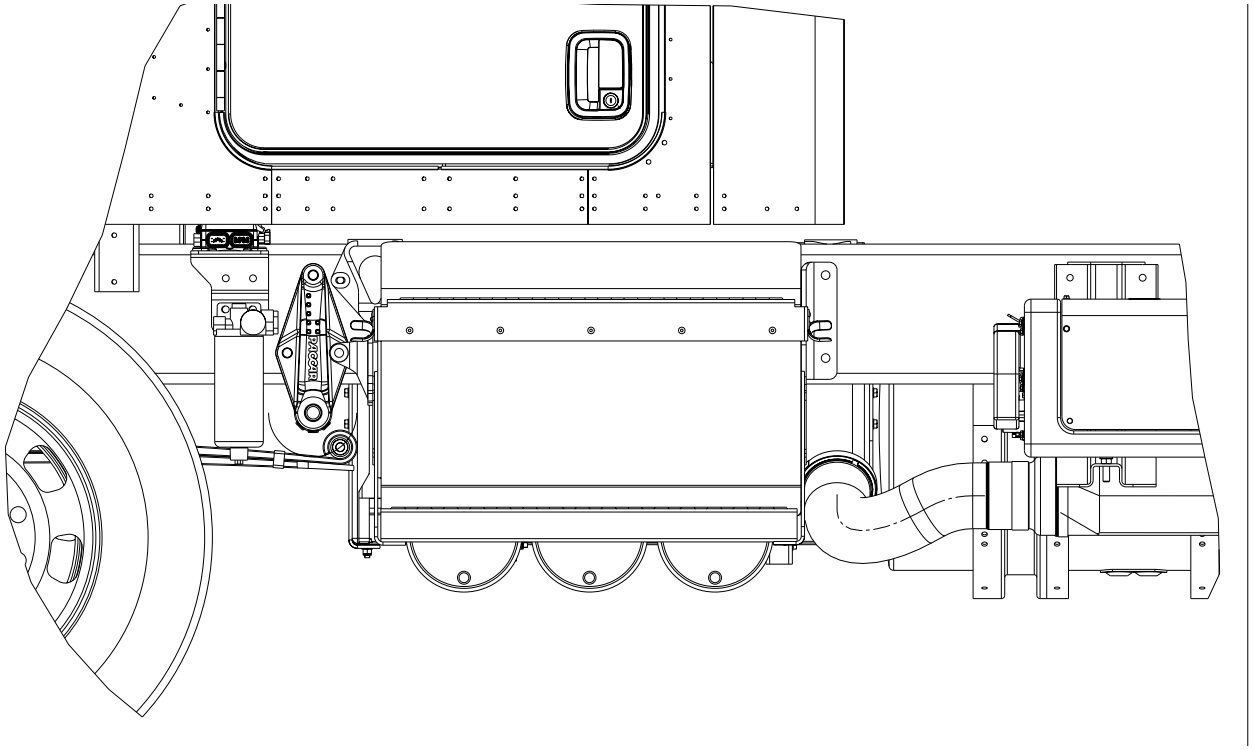

FIGURE 6-11: Clearance zones around the Hybrid Battery Box located LH Under Cab

Clearances
For vehicles equipped with a Hybrid Battery Box, frame mounted components or body installations must allow a minimum clearance of 4” behind the rear surface of the box and must not extend below the battery box in any way.

Remote Installation – Hybrid PEC
Hybrid vehicles have an option for additional cables to allow for a remote installation of the hybrid system PEC. The intention of this option is to allow a body builder to control the location of the PEC within the body if desired. Requirements that must be met when relocating the PEC are outlined below.

Eaton Installation Guide
Eaton provides guidelines for OEMs and body builders to follow for the integration of their hybrid components. All requirements under the Power Electronic Carrier (PEC) section of the Eaton installation guide must be met. The current version of the Installation Guide can be found on the Eaton website at www.Roadranger.com.

https://truckmanualshub.com/

Clearances
Minimum clearances as outlined in the PEC Clearances section of this document must be followed.

Mounting
The PEC must be mounted to a rigid platform or structure with all four (4) of the PEC mounting studs secured and properly torqued (see Eaton Installation Guide for torque specifications). The 4 nuts that are installed between the factory provided frame bracket and the PEC housing must be retained on the PEC studs when relocating the PEC as they are integral to the PEC assembly.

Airflow Requirements
The PEC unit is air cooled and requires unrestricted air flow to the air inlet duct on the front of the PEC and the air exhaust duct on the rear of the PEC. The temperature of the air entering the PEC must be the same temperature as the ambient air temperature, thus ducting or otherwise providing intake air that has been heated above ambient temperature is not permitted.

Service Access
Adequate access must be maintained to allow for service of the air cleaner and easy access to the service switch on the front side of the PEC, as well as removal of the PEC unit for service

Warning: The PEC is not to be used or installed in a manner susceptible to being used as a step or seat.

HAZARDOUS VOLTAGE: To reduce the risk of possible serious injury (Shock, Burn or Death): Components marked with High Voltage should be avoided. Service must be performed by qualified personnel only.

https://truckmanualshub.com/

Page Intentionally Left Blank.

https://truckmanualshub.com/

FRAME MODIFICATIONS

Introduction

The T170/T270/T370 offers multiple wheelbase configurations from the factory. So, in most cases frame modifications to produce a particular wheelbase should not be necessary.

However, some installations may require slight modifications, while other installations will require extensive modifications. For example an existing dealer stock chassis may need to have the wheelbase changed to better fit a customer's application. The modifications may be as simple as shortening or lengthening the frame cutoff, or they may be as complex as changing the wheelbase.

DRILLING RAILS

Location and Hole Pattern

If holes need to be drilled to attach anything to the rail, see SECTION 6 "BODY MOUNTING" for more information. Follow the general spacing and hole location guidelines on Page 6–4, Figure 6–7.

WARNING: When mounting a body to the chassis, DO NOT drill holes in the upper or lower flange of the frame rail. If the frame rail flanges are modified or damaged, the rail could fail prematurely and cause an accident. Mount the body using body mounting brackets or U–bolts.

WARNING: Do not drill new holes any closer than 2 inches (50 mm) to existing holes. Frame drilling affects the strength of the rails and if not done properly can cause the frame rails to fail and cause an accident.

CAUTION: An appropriately sized bolt and nut must be installed and torqued properly in all unused frame holes. Failure to do so could result in frame crack initiation around the hole.

CAUTION: Use care when drilling the frame web so the wires and air lines routed inside the rail are not damaged. Failure to do so could lead to equipment damage and cause an inoperable electrical or air system circuit.

CAUTION: Never use a torch to make holes in the rail. Use the appropriate diameter drill bit. Heat from a torch will affect the material properties of the frame rail and could result in frame rail cracks.

CAUTION: Hole diameter should not exceed the bolt diameter by more than .060 inches (1.5 mm). Oversized holes could result in excessive frame wear around the hole.

Hole pattern dimensions for crossmember designs are illustrated in Page 6–5, Figure 6–8.

Hole diameter should not exceed the bolt diameter by more than .060 inches (1.5 mm).

https://truckmanualshub.com/

MODIFYING FRAME LENGTH

The frame cutoff after the rear axle can be shortened to match a particular body length. Using a torch is acceptable; however, heat from a torch will affect the material characteristics of the frame rail. The affected material will normally be confined to within 1 to 2 inches (25 to 50 mm) of the flame cut and may not adversely affect the strength of the chassis or body installation.

The frame cutoff can be lengthened by adding frame extenders.

When extending 10.5” frame rails, the additional sections can be welded to the existing rails. The joint should be welded and reinforced as illustrated in Figure 7–1.

Note: See page 7-5 **for more information on welding frames.**

WARNING: **Do not drill new holes any closer than 2 inches (50 mm) to existing holes. Frame drilling affects the strength of the rails and if not done properly can cause the frame rails to fail and cause an accident.**

Frame Insert

A frame insert must be added after welding a frame rail extension to compensate for lost strength. The insert should be of the same material as the frame member, or of steel, and at least equal to the frame rail in thickness. Attachment of the insert to the frame should be made with Ream-Fit heat-treated bolts, 5/8 in. (16 mm) diameter or the next larger size. Both the reinforcement and frame holes should be reamed to provide a fit of from .001 in. to .003 in. (.025 to .076 mm) clearance. Do not weld reinforcing members. The insert should span a distance of at least 24.21 in. (615 mm) on either side of the crack to ensure an even distribution of stresses. Cut the ends of the insert at 45° as shown in Figure 7–2 unless the insert extends to the end of the frame.

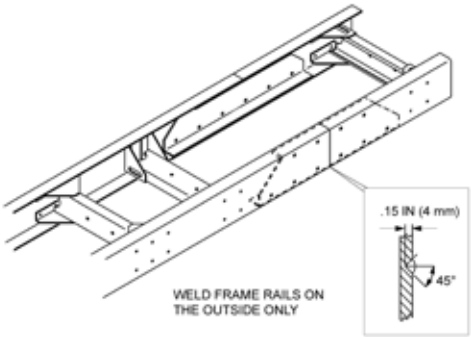

FIGURE 7-1. Detail of Frame Extension and Joint Welding

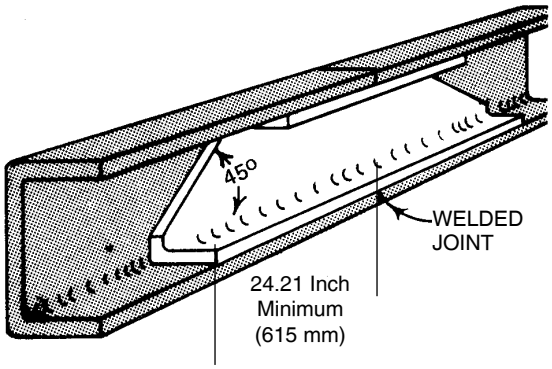

FIGURE 7-2. Frame Insert

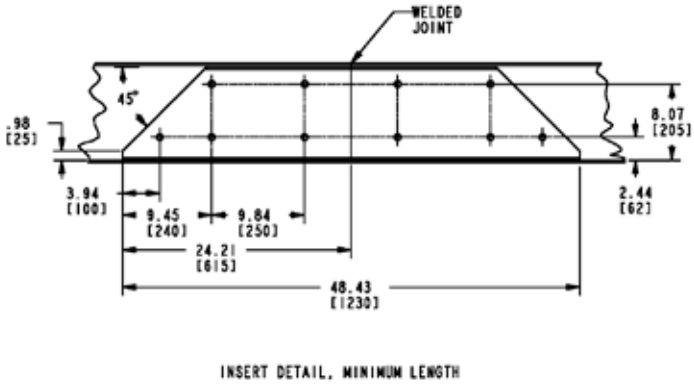

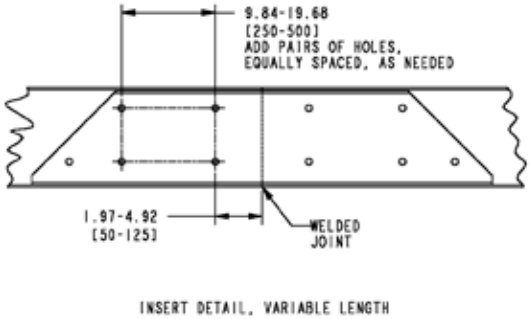

https://truckmanualshub.com/

Where possible, use existing bolt holes to attach the insert to the frame. Bolt holes must not be located closer to the frame flanges than the present bolt pattern.

If the insert is placed in a section of the main frame where few bolts are located, additional bolts are required. Use the following guideline for locating additional bolt holes.

Changing Wheelbase

We do not recommend modifying the wheelbase. Occasionally, however, a chassis wheelbase will need to be reduced or lengthened. When this needs to be done there are a few guidelines that should to be considered.

WARNING: When changing the wheelbase, be sure to follow the driveline manufacturer's recommendations for driveline length or angle changes. Incorrectly modified drivelines can fail prematurely due to excessive vibration and could cause personal injury and/or an accident.

WARNING: When changing the wheelbase, a continuous blank frame insert/outsert must be added in the area of the new rear suspension mounting bolts. All new mounting holes must pass through the original rail, rear suspension crossmembers and the insert/outsert. Failure to do so could cause excessive stress in the original rail due to additional holes.

Before changing the wheelbase the driveline angles of the proposed wheelbase need to be examined to ensure that no harmful vibrations are created. Consult the driveline manufacturer for appropriate recommendations.

WARNING: Do not drill new holes any closer than 2 inches (50 mm) to existing holes. Frame drilling affects the strength of the rails, and if not done properly can cause the frame rails to fail and cause an accident.

Before the rear suspension is relocated, check the new location of the spring hanger brackets. The new holes for the spring hanger brackets must not overlap existing holes and should not come any closer than 2 inches (50 mm) to existing holes in the frame.

WARNING: When relocating a suspension bracket, do not mount it on the extended (added) section of a frame rail. The suspension loading could result in premature failure of the added section splice. This could cause an accident. Use care when planning the wheelbase so that the rear suspension bracket is always mounted on the original rail section. See Figure 7–3.

If you are extending the wheelbase, you may also have to extend the frame length to accommodate a body. When you reposition the rear suspension spring hangers, do not mount them on the added extended portion of the rail. The relocated rear suspension bracket should be located on the original frame rails. See Figure 7–3.

When reducing the wheelbase, we recommend that the suspension be moved forward and relocated on the original rail. The rail behind the suspension can then be cut to achieve the desired frame cutoff. See Figure 7–3.

WARNING: When changing the wheelbase & frame inserts are used, crossmembers require replacement and/or adjustment or in order to maintain the original frame rail spacing. Failure to do so could cause damage to rear suspension components & lead to an accident

WARNING: When changing the wheelbase & frame outserts are used, the rear suspension requires replacement to compensate for the original frame width caused by the outserts. Failure to do so could cause damage to rear suspension components & lead to an accident.

When inserts longer than the minimum length are required, extra pairs of bolt holes shall be added, evenly spaced, resulting in bolt spacings of not less than 9.8 inches (250mm) or more than 19.7 inches (500mm) along the length of the insert, as shown in Figure 7-2: Insert Detail, Variable Length.

https://truckmanualshub.com/

WARNING: **Do not drill new holes any closer than 2 inches (50 mm) to existing holes. Frame drilling affects the strength of the rails and if not done properly can cause the frame rails to fail and cause an accident.**

Before the rear suspension is relocated, check the new location of the spring hanger brackets. The new holes for the spring hanger brackets must not overlap existing holes and should not come any closer than 2 inches (50 mm) to existing holes.

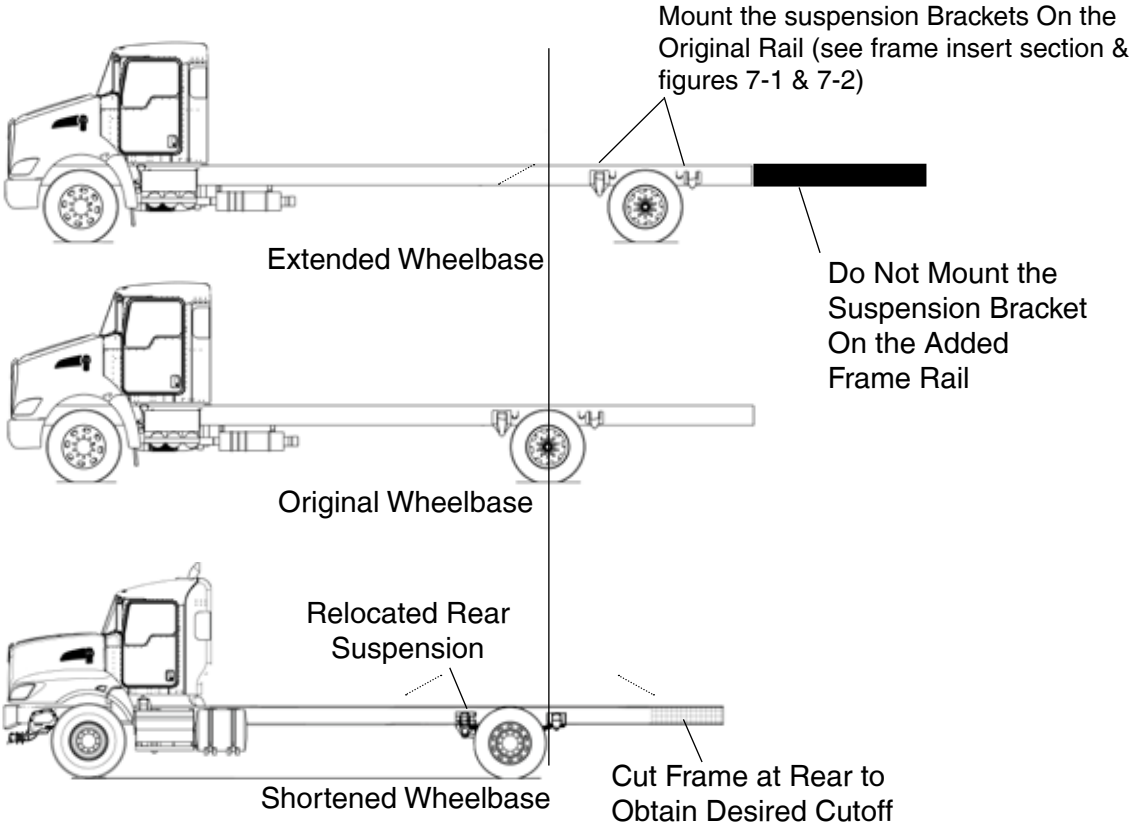

FIGURE 7-3. Comparison of Original, Shortened, and Extended Wheelbases

Crossmembers

After changing a wheelbase, an additional crossmember may be required to maintain the original frame strength. The maximum allowable distance between adjacent crossmembers is 60 inches (1524 mm). If the distance between adjacent crossmembers exceeds this dimension, add a crossmember between them. See Figure 7–4.

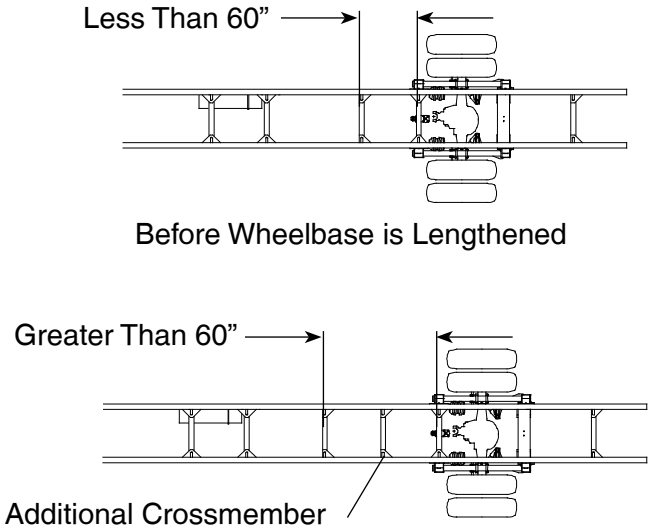

FIGURE 7- 4. Crossmember Added when Distance Exceeds 60 inches (1524 mm)

https://truckmanualshub.com/

WELDING

The 9.875” and 10.62” rails along with the 9.875” insert are heat treated; therefore, it is not weldable.

The 9.875 (9-7/8) inch rail, 10.62 (10-5/8) inch rail and the 9.88 (9-7/8) insert for the 10.62 inch rail are heat treated; therefore are not weldable. Welding can affect frame rail strength leading to a failure resulting in serious injury and /or an accident. Rail failures resulting from such modifications are not warrantable.

To determine if the frame rails are heat treated:

1. Check for heat treat caution labels on the frame rails. See figure 7-5.

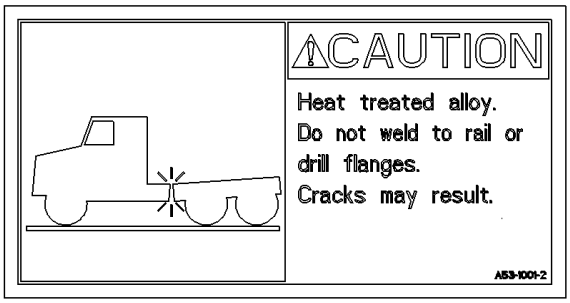

FIGURE 7-5. Heat Treated Frame Rail Warning

Kenworth DOES NOT recommend frame welding. The high heat of welding nullifies the special heat treatment of the rails, greatly reducing the tensile strength of the frame rail. If a frame member becomes cracked from overloading, fatigue, surface damage or a collision, the only permanent repair is to replace the damaged frame member with a new part.

The following information is provided (for temporary emergency repair). Prior to welding a cracked frame rail, the area should be beveled (V’d out) to allow for a better weld. To prevent spreading of the crack, a 7 to 9 mm (1/4 in. to 3/8 in.) dia. hole should be drilled at the end of the crack. Widen the crack along its full length by using two hack saw blades together. When welding steel frames use the shielded arc method. When welding aluminum frames use either the tungsten inert gas (TIG) or consumable electrode method. Be sure to obtain full weld penetration along the entire length of the crack.

Precautions

CAUTION:

Before welding, disconnect the negative terminal battery cable. Failure to comply may result in equipment damage.

CAUTION:

Before welding, disconnect the alternator terminals. Failure to do so may result in damage to the voltage regulator and/or alternator.

CAUTION:

To prevent damage to electrical equipment, disconnect battery cables before arc-welding on a truck, and be sure that the welding ground lead is connected to the frame. Bearings and other parts will be damaged if current must pass through them in order to complete the circuit.

https://truckmanualshub.com/

Welding Precautions: All Electronic Engines

Before welding on vehicles with electronic engines, the following precautions should be observed.

1. Disconnect all electrical connections to the vehicle batteries.
2. Disconnect all ECM connectors.
3. Do no use the ECM or engine ground stud for the ground of the welding probe.
4. Ensure that the ground connection for the welder is as close to the weld point as possible. This ensures maximum weld current and minimum risk to damage electrical components on the vehicle.
5. Turn off key.

Note: Bendix ABS, Bosch ABS and Wabco ABS: Disconnect ECU.

https://truckmanualshub.com/

TORQUE REQUIREMENTS

TABLE 7-1. Customary Grade 8 UNF or UNC.

Fastener	Torque	
Size	Nm	Lb.-Ft.
5/16	22–30	16–22
3/8	41–54	30–40
7/16	75–88	55–65
1/2	109–122	80–90
9/16	156–190	115–140
5/8	224–265	165–195
3/4	394–462	290–340
7/8	517–626	380–460
1	952–1129	800-–830
1-1/8	1346–1591	990–1170
1-1/4	1877–2217	1380–1630

Torque values apply to fasteners with clean threads, lightly lubricated, with hardened steel washers, and nylon-insert nuts.

TABLE 7-2. U.S. Customary —Grade 8, Metric Class 10.9

	Torque	
Fastener	Nm	Lb-Ft
M6	9–15	7–11
M8	23–31	17–23
M10	33–43	24–32
M12	75–101	55–75
M14	134–164	99–121
M16	163–217	120–160
M20	352–460	260–340

https://truckmanualshub.com/

Page Intentionally Left Blank.

https://truckmanualshub.com/

ELECTRICAL

Information in this section will cover the following topics:

- Overview of Kenworth's 2010 multiplex instrumentation for Medium Duty Trucks
- Access instructions for the dash, gauges, and switches
- Wiring instructions for alarm and telltale (warning lights)
- Reconfiguring telltale cards
- Spare Switches (standard and adding)
- Spare Relays
- Remote PTO/Throttle harness
- Electrical wire number and color
- Trailer cable connections
- After-treatment Control Modules

MULTIPLEX INSTRUMENTATION

Kenworth utilizes Multiplex instrumentation and wiring to continuously improve our quality and the capability of our trucks. Multiplexing utilizes the industry standard Society of Automotive Engineering (SAE) J1939 data bus to send multiple signals over a single twisted pair of wires instead of individual wires for each function. The advantages are fewer wires, sensors, and connections that provide greater consistency, improved reliability and the ability to use ESA to troubleshoot the instrumentation. The following information is provided to increase your awareness about the Kenworth product, it may be useful in installing telltales (warning lights) and gauges and coordination with other installed equipment.

WARNING!

Don't cut or tap into green/yellow twisted pairs. Only use "T" connectors, and only add approved J1939 components with validated software.

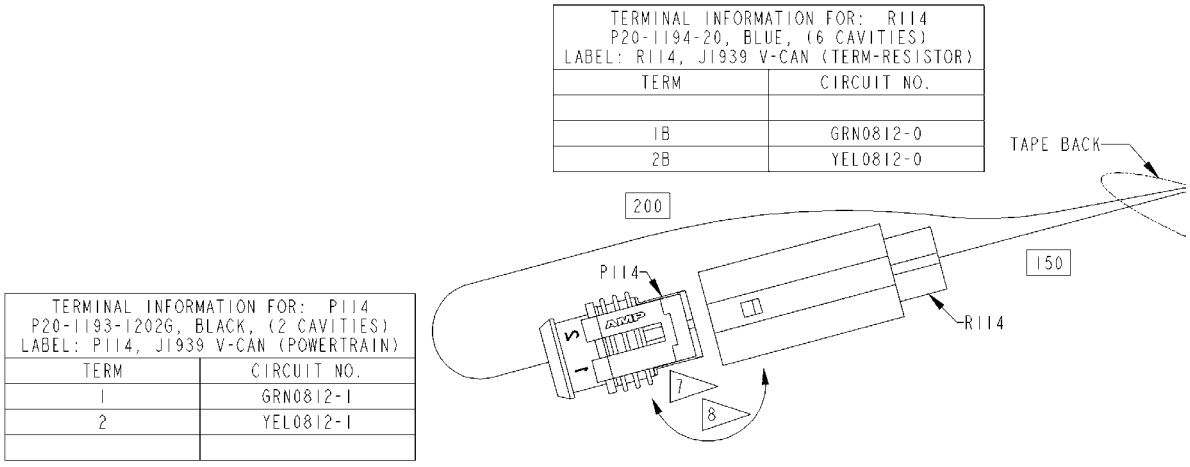

FIGURE 8-1. J1939 Data Link Wiring. Data Bus Access Location: LH side rear of engine.
J1939 Data Link Extension P92-3422 available from PACCAR Parts

https://truckmanualshub.com/

INTERIOR IDENTIFICATION

2010 is the first year that Kenworth has used Multiplex Wiring in our T170, T270 and T370 vehicles. Chassis with this new interior can be identified by appearance, see Figure 8-2. All dashes that resemble the following picture will utilize multiplex wiring.

FIGURE 8-2. Kenworth B-Cab Dash

A 2010 Chassis can quickly be identified by the presence of the Diesel Exhaust Fluid “DEF” gauge. See Figure 8-3.

FIGURE 8-3. Diesel Exhaust Fluid Gauge

Note:

The information contained in this manual is specific to chassis with 2010 engines. For pre-2010 engines please work with your local Kenworth dealer.

https://truckmanualshub.com/

Data Bus Communication

The multiplexed instrumentation system uses several different data links to transmit input/output data from other systems to the Cab Electronic Control Unit (CECU), and ultimately to the Central Instrument Cluster and CVSG Gauges. See Figure 8-4, Multiplexed Instrumentation Block Diagram on page 8-3.

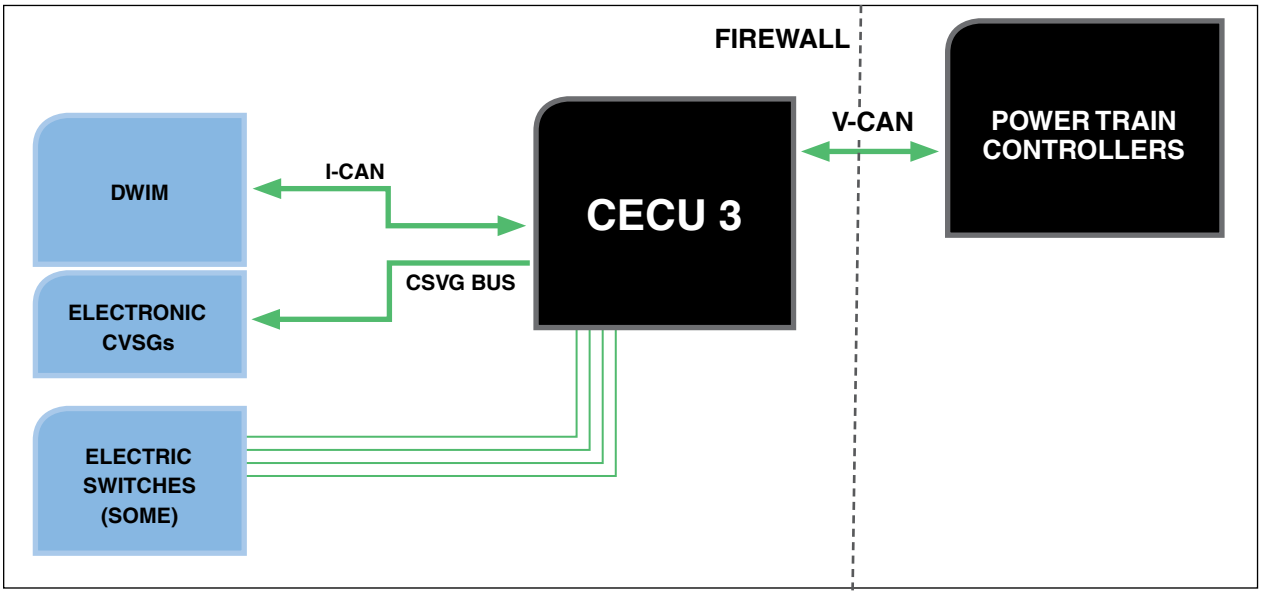

FIGURE 8-4. Multiplexed Instrumentation Block Diagram.

- V-CAN = Vehicle Controller Area Network
  The V-CAN, also referred to as the J1939, is used to transmit data between the transmission, ABS system, engine, etc. to the Cab Electronic Control Unit (CECU).
- I-CAN = Instrumentation Controller Area Network
  The I-CAN provides data link communication from the Cab Electronic Control Unit (CECU) to the Central Instrument Cluster.
- CVSG Bus
  The CVSG bus is a private data bus used to transmit data from the Cab Electronic Control Unit (CECU) to the individual 2-inch gauges. A series of “daisy chained” jumper harnesses link each gauge to another.

https://truckmanualshub.com/

Functional Description

Cab Electronic Control Unit (CECU)

The heart of the multiplexed instrumentation system is the Cab Electronic Control Unit (CECU). The CECU is located behind the center console. See Figure 8-5.

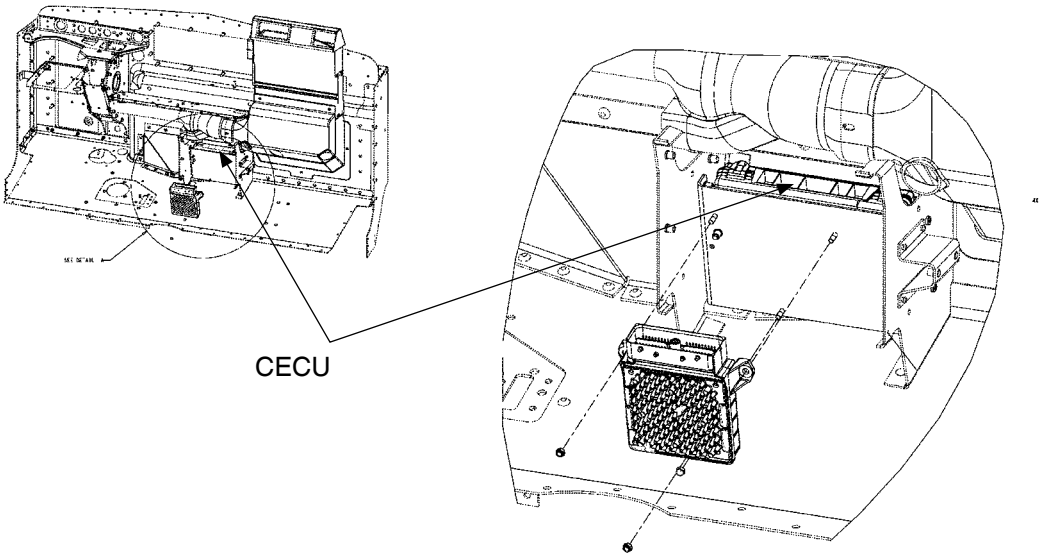

FIGURE 8-5. CECU Location.

Vehicle component inputs are sent to the CECU through the J1939 data bus or conventional wiring. The CECU interprets the various inputs and monitors/controls the functions for each input through the CECU software. Output signals from the CECU provide data for the gauges, warning lamps, audible alarms, and displays inside the cluster.

Central Instrument Panel

The central instrument panel includes the speedometer (including odometer and trip meter) and tachometer (including engine hour meter and outside temperature display), plus a Driver Warning and Indicator Module (DWIM) pre-installed standard and/or editable warning light symbols called “telltale” cards.

Each “telltale” card slides into the left and right sides of the Driver Warning and Indicator Module (DWIM) from the bottom. The standard cards cover most warning light requirements; editable cards can be used for less common components that also require warning lights.

The central instrument cluster receives input data from the CECU via the “I-CAN” (see Figure 8-3) data bus. When the ignition key is first turned ON, the cluster will perform a calibration “power on self-test”.

Power On Self-Test

- Ignition key turned ON
- The speedometer and tachometer gauge pointers move from pointing at zero, counter-clockwise to their mechanical limit (approx. -8°), stay there for one second and go back to pointing at zero
- At the same time, all LED indicators and telltales are switched on together, except for position 4 and 11
- A “Warning” sound sequence is also activated five times without break

https://truckmanualshub.com/

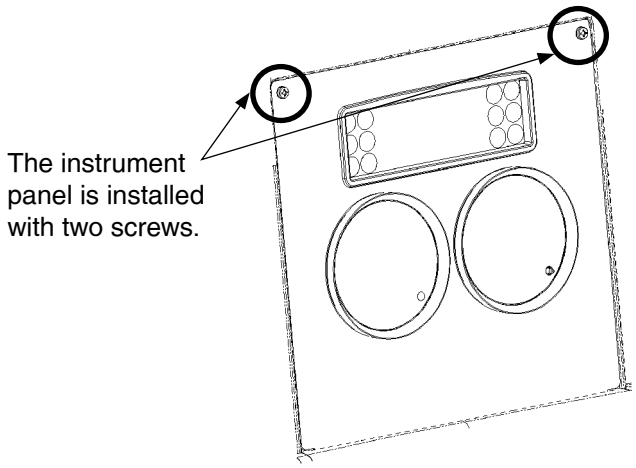

FIGURE 8-6. Main Instrument Panel

CVSG Gauges

The 2” gauges located to the left and right of the main instrument panel are commonly referred to as Commercial Vehicle Smart Gauges (CVSG). Like the central instrument cluster, the 2-inch gauges also receive input data directly from the CECU. CVSG’s are two types, electronic and mechanical. The electronic CVSG’s receive digital data from the CECU via the CVSG data bus. The mechanical gauges (i.e. suspension air pressure, etc.) are driven directly from the air pressure. Both types of gauges receive backlighting signals from the CECU via a 4-wire “daisy chained” jumper harness that links one gauge to another.

When the ignition key is first turned ON, all the electronic 2-inch gauges will perform a calibration “power on self-test”.

Note: The mechanical CVSG do not perform a power on self-test.

Power On Self-Test

- Ignition key turned ON
- The gauge pointers move from pointing at zero, counter-clockwise to their mechanical limit (approx. -5°), stay there for one second and go back to pointing at zero
- At the same time, all telltales in DWIM and main gauges are switched on together, and then switched off together

Additional CVSG gauge information body builders should be aware of:

- The CECU sends gauge information to CVSGs over a data link (blue wire) between the CECU and the gauge (calle CVSG bus)
- CVSG gauges get their power from the CECU
- Yellow = Power wire (9-16 volts)
- White = Ground (return) wire

https://truckmanualshub.com/

- 4-way jumper harnesses link CVSG electronic gauges together, by a daisy chain system. Pin out is as follows:

Pin #	Color	Function
1	**Blue**	Data, backlighting for Electronic Gauges
2	**Brown**	Backlighting for Mechanical Gauges
3	**White**	Return
4	**Yellow**	Power

- Backlighting level for CVSG electronic gauges is sent from the CECU to the gauges via the data link (blue wire).
- Optional CVSG mechanical gauges (i.e. air suspension) are driven mechanically with air pressure hosed to the fitting behind the gauge. There is no red warning lamp and the backlighting is powered through the brown wire from the CECU (a pulse-width modulated signal). The 4-way jumper harness is still used to pass all 4 circuits through the gauge to the next gauge in the chain.
- Gauges can be relocated to any 2-inch open gauge position in the dash. To relocate a gauge unhook the connector at the back and move it to the desired position. Plug the jumper wire in. (See “Accessing Gauges and Switches section below for instructions on physically moving the gauge). The connector will require a firm pull to remove it. When reinstalling the connector ensure that it is fully inserted. Both connector sockets on the rear of the gauge are the same, either one can be used.

https://truckmanualshub.com/

Sensors

Kenworth's chassis contain standard connectors in the wiring harnesses for gauges even when they were not specified on a particular chassis. The following diagram shows the locations of standard connectors in the wiring harnesses. This allows you to easily locate connectors to add gauges. To add an electronic gauge install the sensor (available from your local Kenworth dealer) in the noted location, plug in the wiring harness, and then install the gauge in the dash. The gauge will then need to be activated. Your local Kenworth dealer can easily activate the gauge using Kenworth's Electronic Service Analyst (ESA).

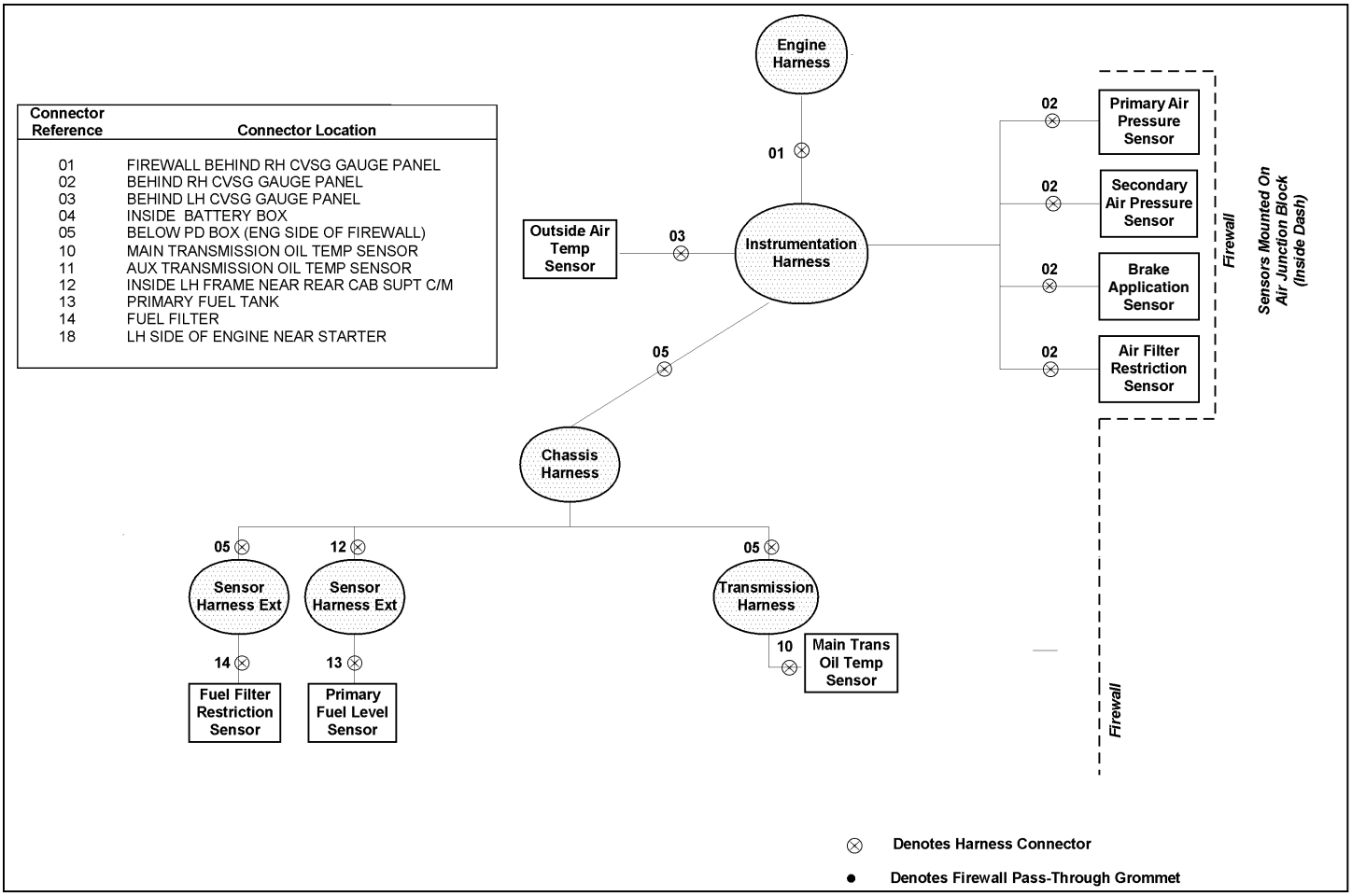

FIGURE 8-7. Instrumentation Harness Interface Diagram

https://truckmanualshub.com/

The following diagrams show the location of sensors on the firewall junction block. This is to aid in locating these sensors. Primary Air sensor is located on the primary air block, the Secondary Air Sensor is located on the secondary air block, the Application Air Sensor is located by the brake application block. See Figure 8-8.

The Air Filter Restriction Sensor is located near the brake application sensor, see Figure 8-9.

The Fuel Filter Restriction Sensor is located near the fuel filter, see Figure 8-10.

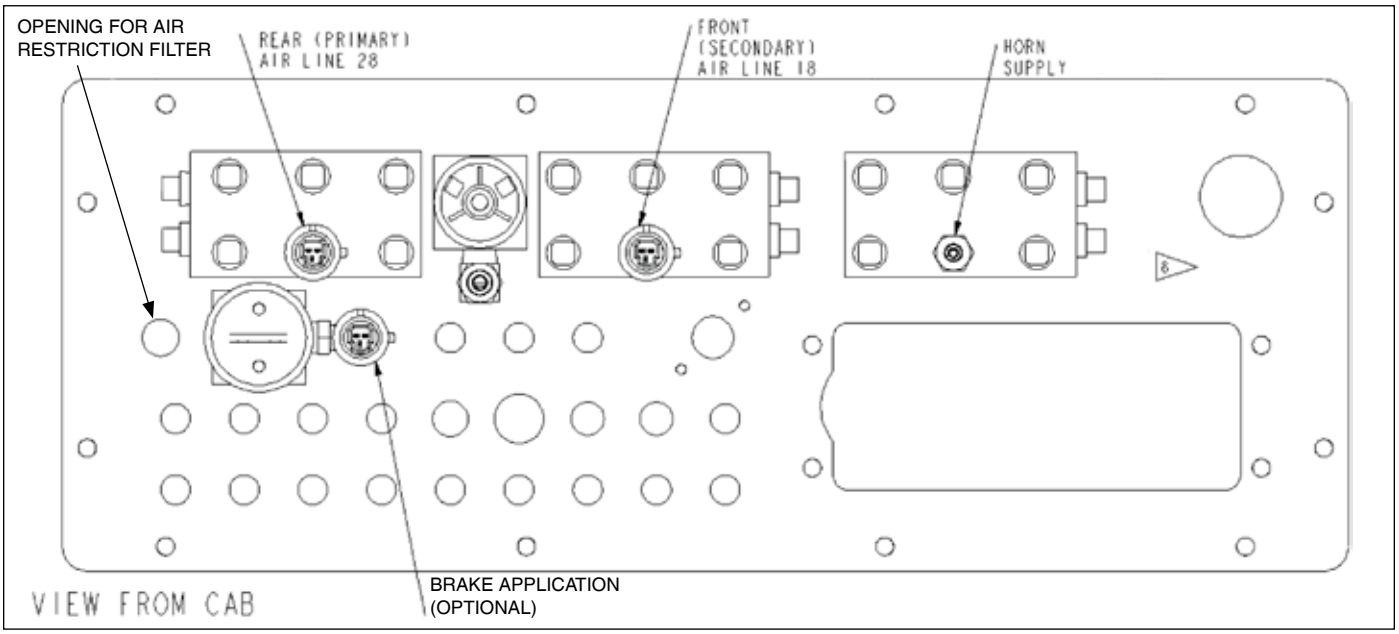

FIGURE 8-8. Firewall Air Junction Block (view from inside of cab)

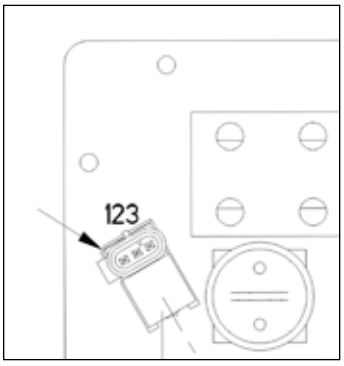

FIGURE 8-9. Air Filter Restriction Sensor on Firewall Air Junction Block (view from inside of cab)

https://truckmanualshub.com/

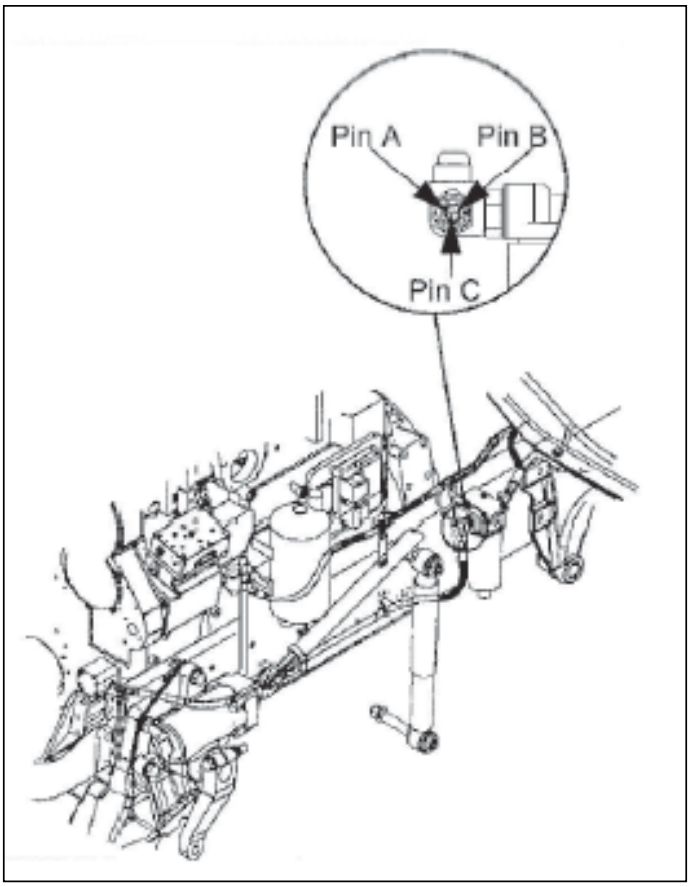

FIGURE 8-10. Fuel Filter Restriction Pressure Gauge Sensor Location (typical)

https://truckmanualshub.com/

ACCESSING GAUGES AND SWITCHES

In order to access and install components described later on in the manual, you will need to know how to correctly remove the dash panels without causing damage.

1. Removal of the main panels is accomplished by unscrewing the two top screws in each panel.

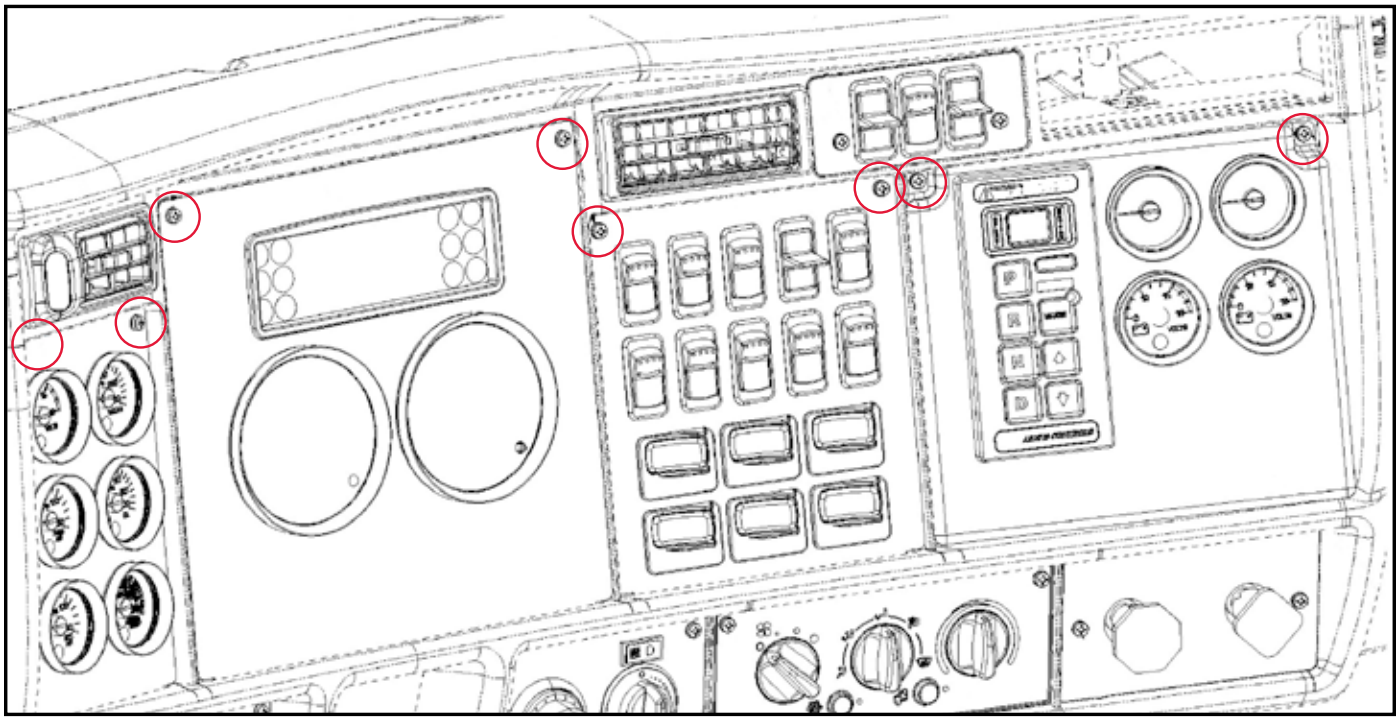

https://truckmanualshub.com/

2. Then lift the panel out of the dash and unclip the main harness.

3. To remove the gauges, unscrew the gauge collar.

https://truckmanualshub.com/

4. To remove a switch push in the tabs on both sides of the switch and pull out the top section to disconnect the switch.

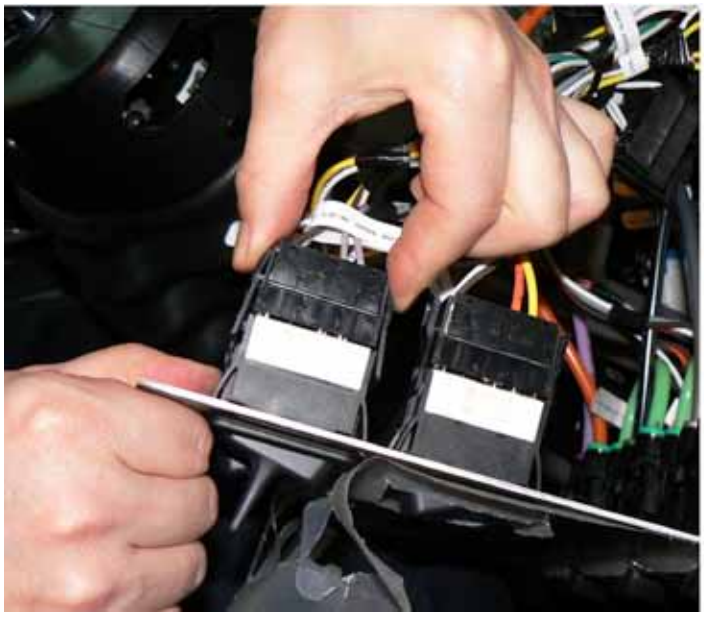

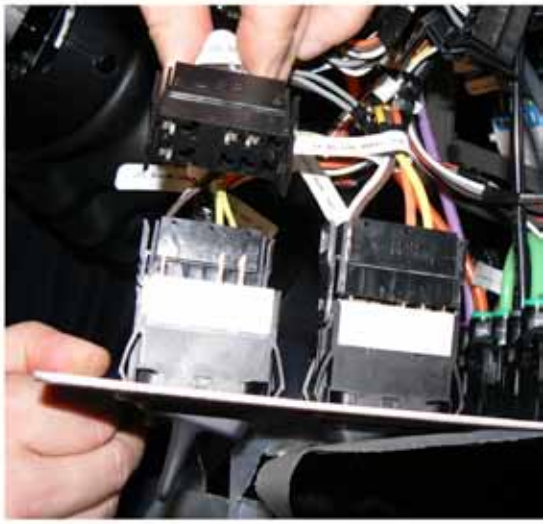

5. Pinch the bottom tabs to release the switch from the panel.

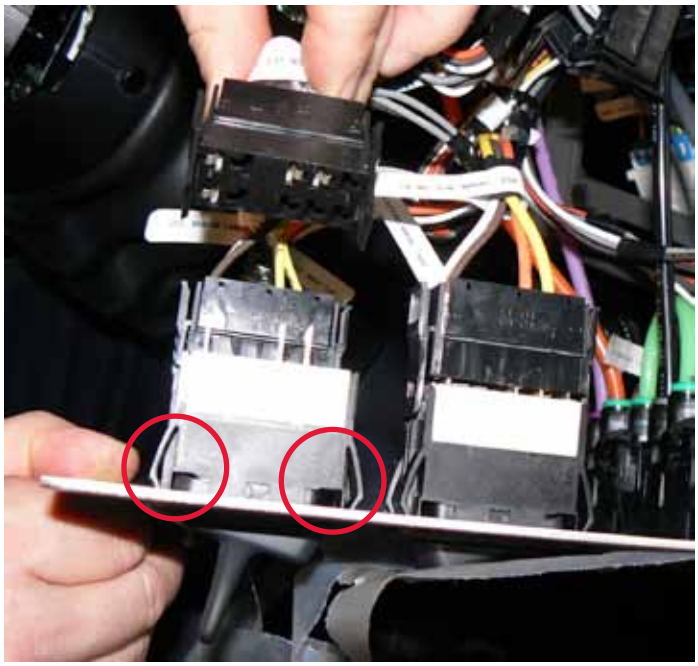

https://truckmanualshub.com/

6. The fuse box is located behind the far right panel.

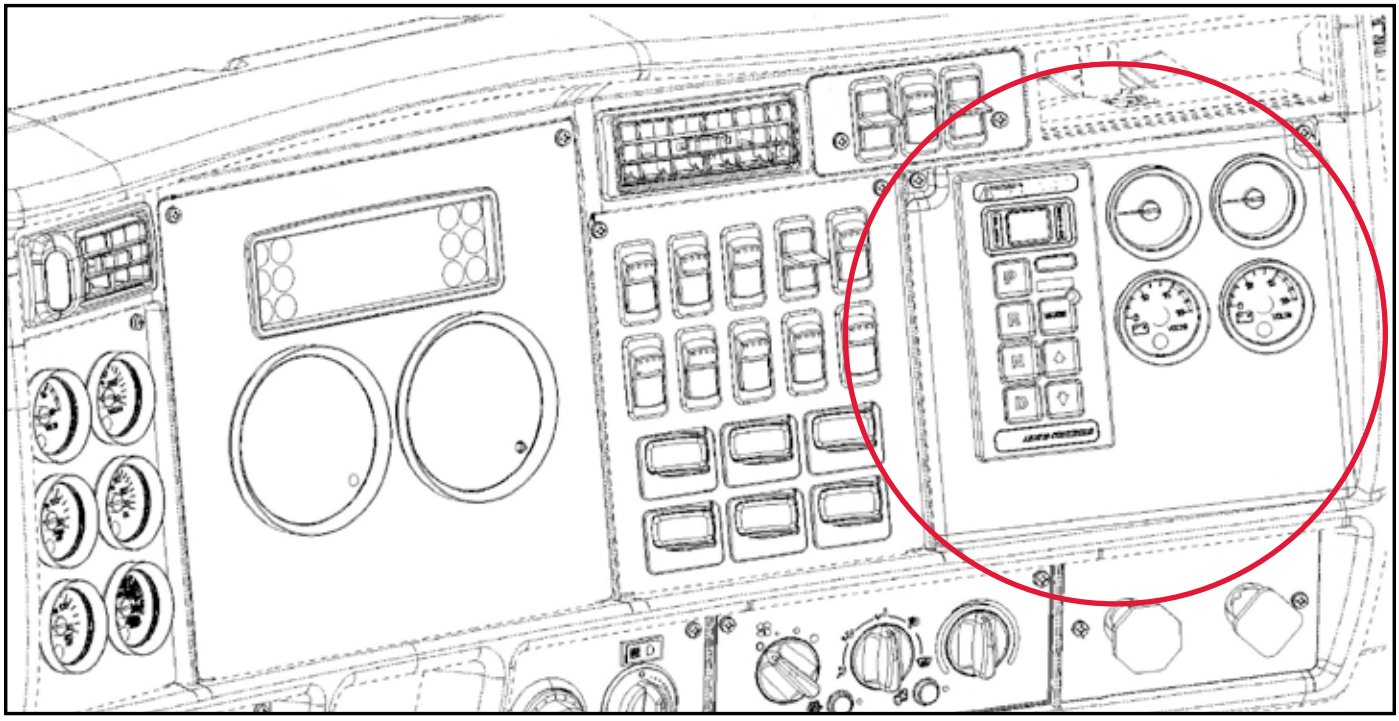

7. To access the fuse box remove the face plate as described in the previous steps. Push in the two side tabs and flip the cover open.

https://truckmanualshub.com/

TELLTALE SYMBOLS

Kenworth's interior allows Body Builders to customize the dash telltale symbols (warning lights). The editable telltale symbols are located on removable cards inside the baseline cluster. This section will describe how to replace and insert editable cards, as well as how to activate the telltale lights.

Note the numbers 1 – 12 on Figure 8-11. These are how the positions are identified in Table 8-1 and on the instrument panel harness breakouts for the "editable" telltales behind the right hand cluster.

To remove the editable cards follow steps 1-3 in the instructions for accessing gauges and switches (page 8-10). The access cards have a positive lock. To remove the card push inwards on the lock with your thumb and pull the card out with pliers. Figure 8-11 below details the cards. To reinstall a card slide it in either by hand or with pliers.

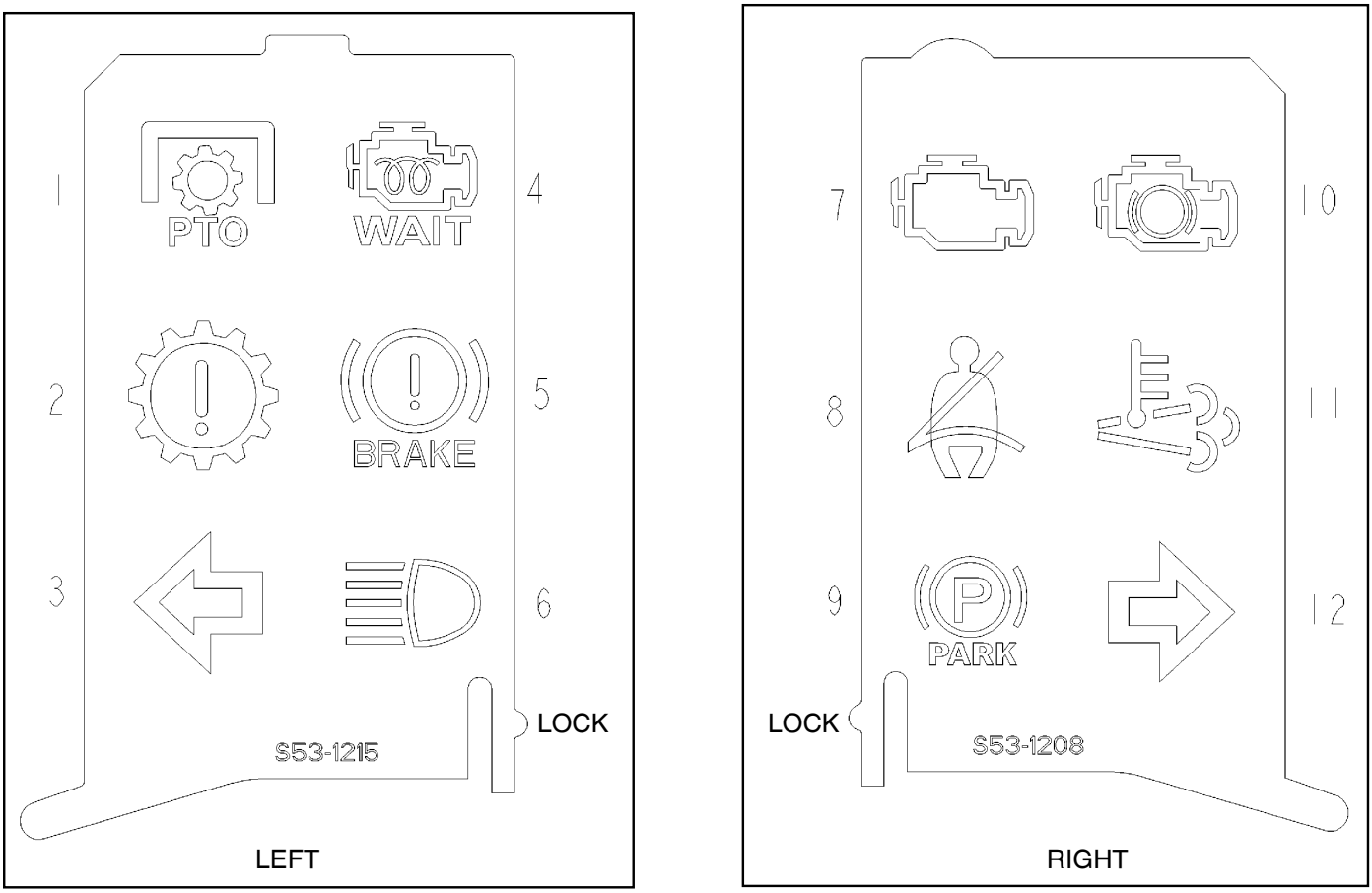

FIGURE 8-11. Telltale Symbol Standard Cards

Note:

The numbers 1–12 on Figure 8-11. These are how the positions are identified in Table 8-1 and on the instrument panel breakouts for the "editable" telltales behind the right hand cluster.

https://truckmanualshub.com/

TABLE 8-1. Telltales Position and Color

Position	Standard Function	Use	Light Color	Editable or Fixed?
1	PTO	Illuminates to Indicate PTO is Engaged	Green	Editable
2	Check Transmission	Illuminates During Transmission Fault	Yellow	Editable
3	Left Turn Arrow	Illuminates to Indicate Left Trun Signal is Applied	Green	Fixed
4	Wait To Start	Illuminates when Driver needs to Wait Before Starting Engine	Yellow	Fixed
5	Brake Fail	Illuminates When the Hydraulic Brake ECU Determines Fault	Red	Editable
6	High Beam	Illuminates to Indicate High Beam Lights are Applied	Blue	Fixed
7	Malfunction Indicator Lamp (MIL)	Illuminates to Indicate a Malfunction in Emissions System (After 2013)	Yellow	Fixed
8	Fasten Seat Belt	Used with Seatbelt Warning Option	Red	Fixed
9	Park Brake	Illuminates to Indicate the Park Brake is Applied	Red	Fixed
10	Engine Brake	Illuminates to Indicate Engine Brake Active	Green	Fixed
11	Hest	Indicates Exhuast After Treatment Filter Regeneration	Yellow	Fixed
12	Right Turn Arrow	Illuminates to Indicate Right Turn Signal is Applied	Green	Fixed

Note:

Only the positions labeled as “editable” in the chart above can be changed. You must apply the standard icons on the editable card on all the positions that read “fixed”.

The wait to start and malfunction indicator lamp are part of the emission control system. They must not be removed or altered.

If a connector is already connected to the editable Position in the IP harness, that Position cannot be used for another function.

In order to activate the editable lights (either on the standard card or the editable card) locate the wiring connections on pigtail connectors behind the right hand side gauge panel. The wires will be labeled and tagged with position numbers. For example for position 1 the breakout label will be green and have the following text: “TELLTALE POS 1”. The color of the tag corresponds to the color of the light. When these circuits are either grounded or powered the light in the dash will turn on.

All cards come with standard editable telltale lights, even if the chassis you have was not ordered with related components.

https://truckmanualshub.com/

The standard trays are shown above (in Figure 8-11). Editable trays are also available from your local Kenworth dealer. The left and right trays are shown in Figure 8-12 below.

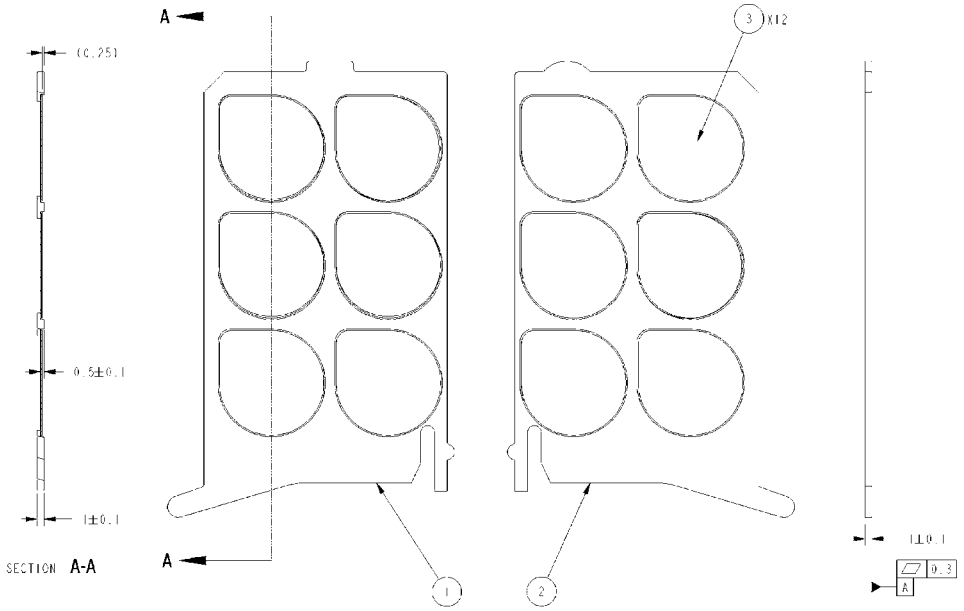

FIGURE 8-12. Blank Telltale Tray

https://truckmanualshub.com/

Your local Kenworth dealer will also sell a sheet of telltale light icons to install on the editable card. The symbols that are available are shown in Figure 8-13 below.

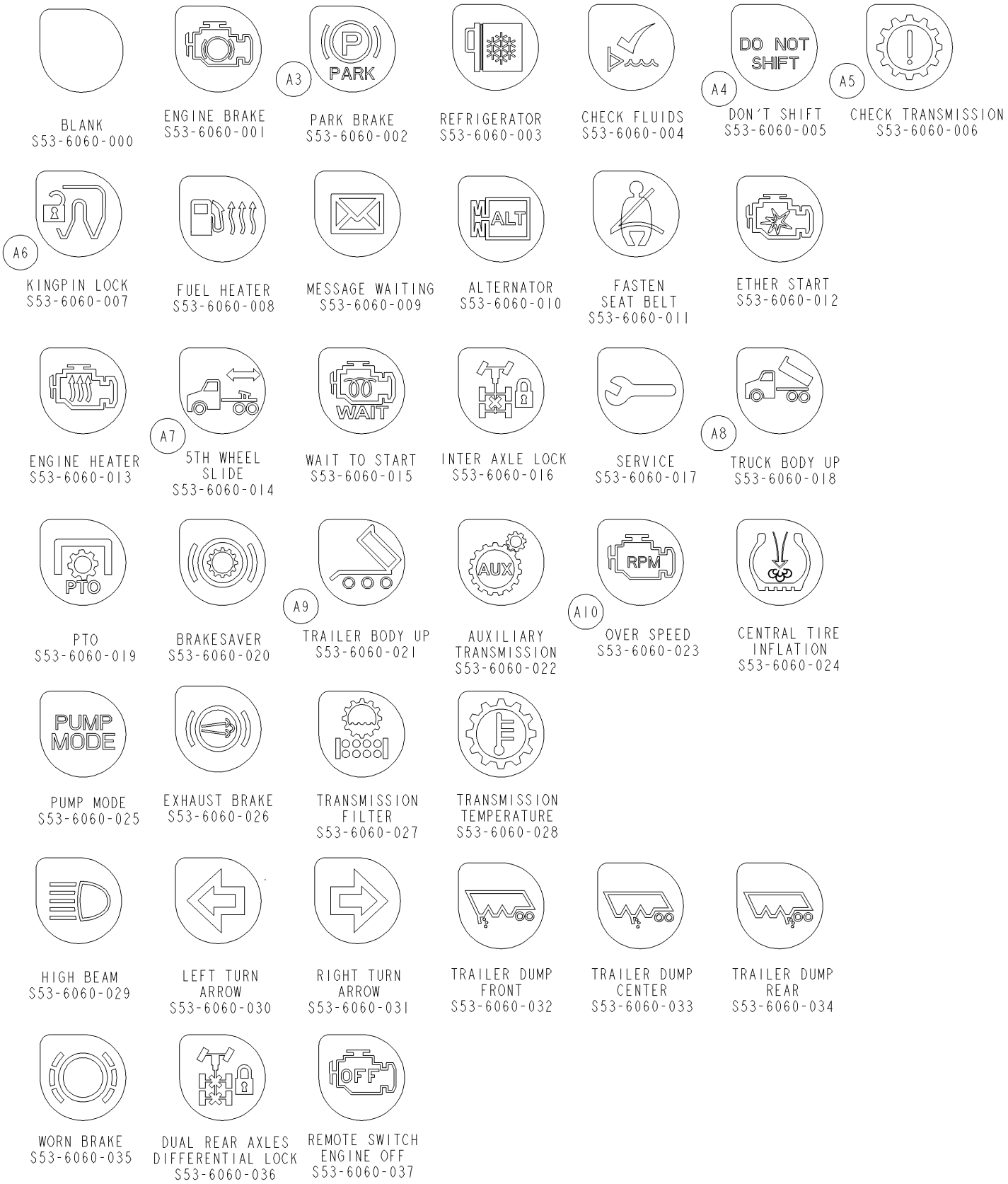

FIGURE 8-13. Telltale Icons. (continued on page 8-18).

https://truckmanualshub.com/

FIGURE 8-13 CONTINUED. Telltale Icons

THE TELLTALES CAN THEN BE PEELED OFF OF THE SHEET AND APPLIED DIRECTLY TO THE CARD. The color of the telltale is controlled by the light, all of the icons are clear. Please see Table 8-1 to determine the position and color of the telltales. (Positions are shown on Figure 8-12)

https://truckmanualshub.com/

ALARMS

There are three spare Alarm female ¼” slide connector breakouts behind the speedo-tach cluster near the speedo-tach connector labeled:

- Alarm 1A
- Alarm 1B
- Alarm 2

When these circuits are either grounded or powered an alarm sound in the dash will turn on. Alarm 1 and Alarm 2 have two different tones.

SPARE SWITCHES FACTORY INSTALLED

Kenworth provides the option of coding for up to 3 spare switches with standard fuse locations in the central electrical panel. These switches receive power from the Accessory bus. Switches 1 – 3 are fused by separate 15A circuit protection devices (fuse or circuit breaker). The location of these circuit protection devices are labeled on the central electrical panel cover. For example “SPARE ACC SWITCH #1” is the label for spare switch #1.

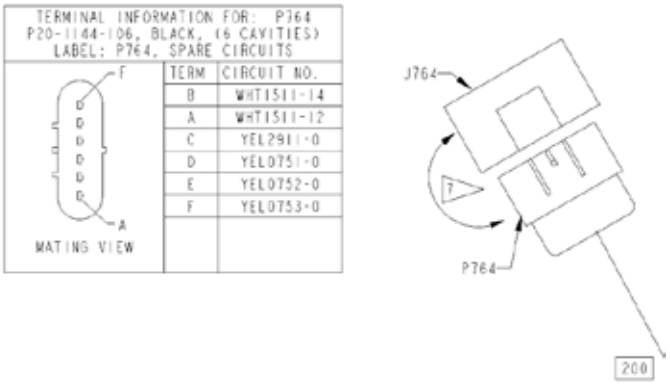

FIGURE 8-14. Spare switches wired to Power. Sales Codes: 8208495 (2 spare), 8208496 (3 spare). Location: LH Rail Approx. 400mm back of cab.

TABLE 8-2. Chassis Harness.

Fuse	Fuse size	Buss	Fuse Description	Switch Connector Description**	Chassis Connector Description***	Chassis Connector Terminal
F15	15A	ACC	Spare ACC Switch 1	J07, Spare ACC SW#1	P764, Spare Circuits	D
F33*	15A	Spare ACC	Spare ACC Switch 2	J08, Spare ACC SW#2	P764, Spare Circuits	E
F32*	15A	Spare ACC	Spare ACC Switch 3	J12, Spare ACC SW#3	P764, Spare Circuits	F

* Fuses F32 and F33 require “Spare Accessory” relay K5.
** Spare Switches are located in dash area 4 and use a lighted rocker switch P27-1127-031
*** Spare Switches are wired to 6-way Packard connector on LH Frame rail Back of Cab near 9-way Trailer/body connector. Fuse F15, F32 and F33 will accept an optional Polyswitch for circuit protection.

https://truckmanualshub.com/

OPTIONAL SWITCHES, AIR VALVES AND GAUGES

The number of optional switches, air valves and gauges has changes for Kenworth Medium Duty vehicles. The below chart provides a total count based on model type.

TABLE 8-3. Optional Switches, Air Valves and Gauges.

Model	Brake System	Max. Number of Optional Switches	Max. Number of Optional Air Valves	Max. Number of Optional Gauges
T170	Hyd	9	6	5
T270	Hyd	9	6	5
	Air	9	6	3
T370	Hyd	9	6	5
	Air	9	6	3

Model With Hybrid Transmission	Brake System	Max. Number of Optional Switches	Max. Number of Optional Air Valves	Max. Number of Optional Gauges
T170	Hyd	N/A	N/A	N/A
T270	Hyd	6	3	3
	Air	6	3	1
T370	Hyd	6	3	3
	Air	6	3	1

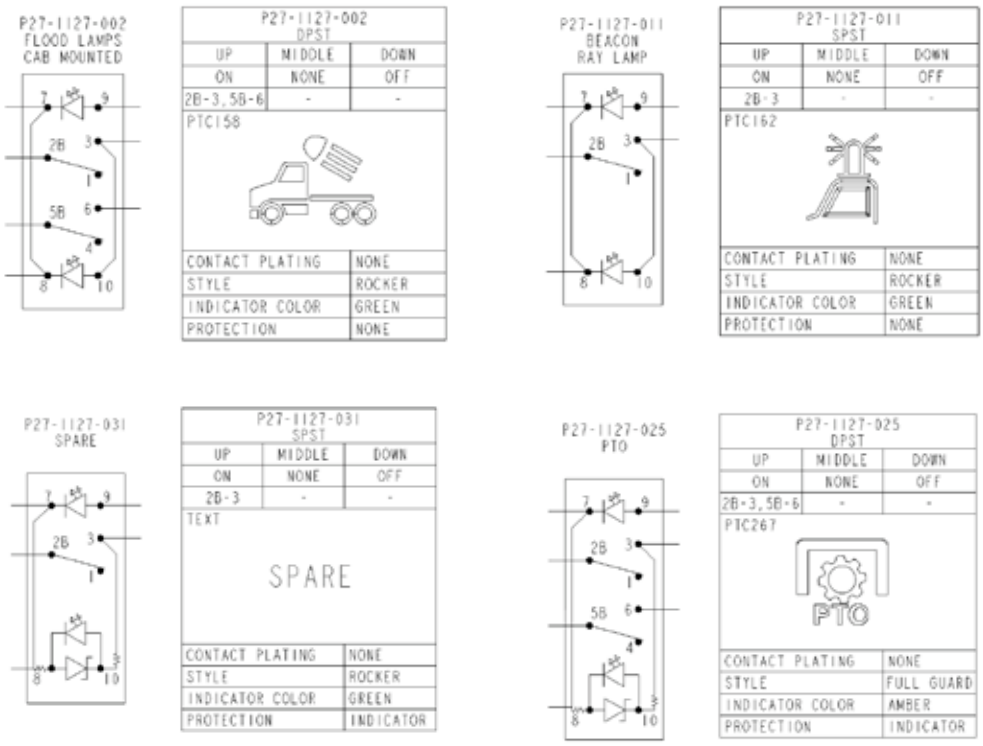

FIGURE 8-15. Optional Switches.

https://truckmanualshub.com/

TABLE 8-4. Optional Switches.

Description	Switch Style	Contacts	Indicator Color	Part Number
Flood Lamps Cab Mounted	Rocker	DPST	Green	P27-1127-002
Beacon Lamp	Rocker	SPST	Green	P27-1127-011
PTO	Full Guard Rocker	DPST	Amber	P27-1127-025
Spare	Rocker	SPST	Green	P27-1127-031

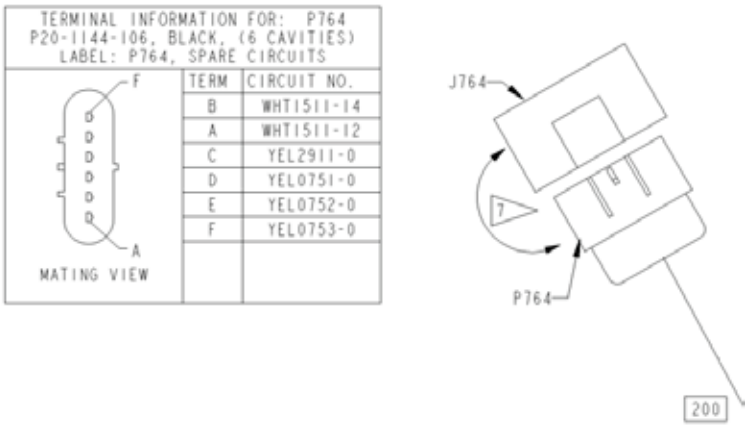

FIGURE 8-16. Switch and Wiring for Customer Installed Beacon Lamp in the chassis Harness. Sales Code 9080202. External Location: LH Rail Approx 400mm Back of Cab.

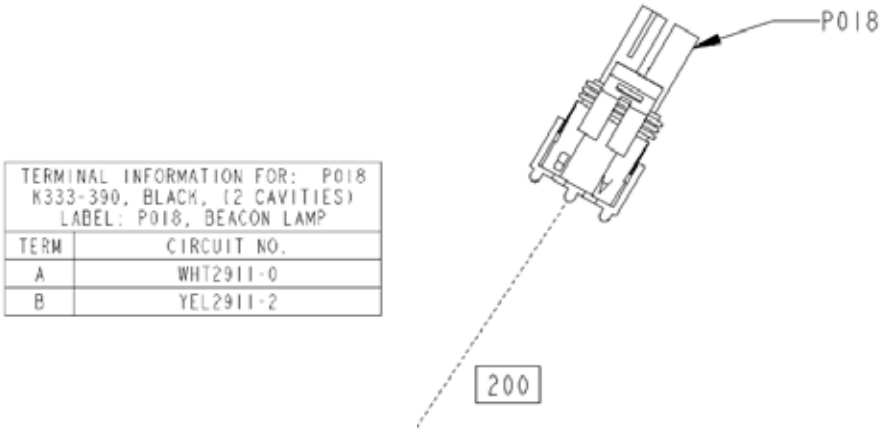

FIGURE 8-17. Switch and Wiring for Customer Installed Beacon Lamp in the IP Harness. Same codes and locations as Chassis Harness above. Internal Location: Behind Speedo/Tach Panel.

https://truckmanualshub.com/

TABLE 8-5. Switch and Wiring for Customer Installed Beacon Lamp.

Fuse	Fuse size	Buss	Fuse Description	Switch Connector Description**	Cab Connector Description***	Chassis Connector Description****	Chassis Connector Terminal
F28*	15A	Spare ACC	Beacon Lamp	J13, Beacon Lamp SW	P018, Beacon Lamp	P764, Spare Circuits	C

* Fuse F28 requires “Spare Accessory” relay K5.
** Beacon Lamp Switch is located in dash area 4 and use a lighted rocker switch P27-1127-011.
*** Beacon Lamp Switch is wired to both a 2-way Packard Weatherpack connector in the cab behind dash area 2 (LH Gauge Panel) and
**** wired to the 6-way Packard connector on LH Frame rail Back of Cab near 9-way Trailer/body connector.
(Both switched power and ground is provided in the cab and chassis connectors).
Fuse F28 will accept an optional Polyswitch for circuit protection.
Optional Switch Panel Harness (P92-4122-1xxxxx) is used for Beacon Lamp Switch.

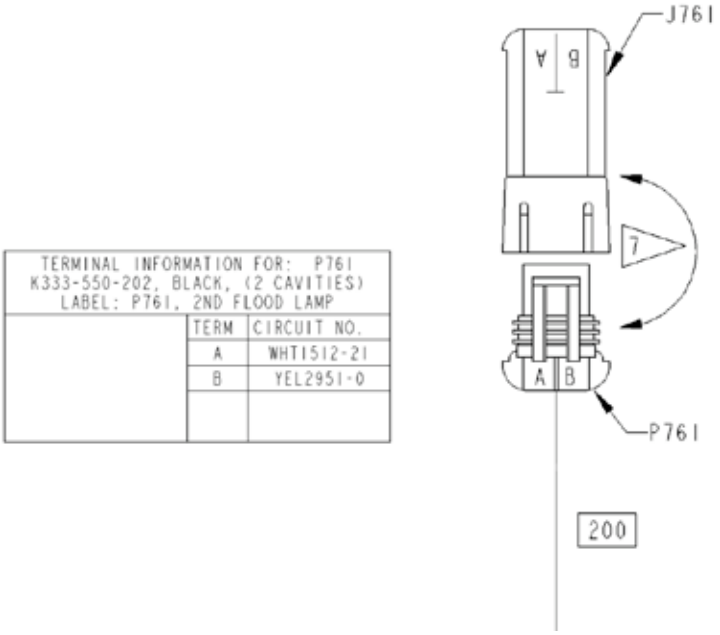

FIGURE 8-18. Switch and Wiring for Customer Installed Flood Lamp. Chassis Harness. Sales Code 9058037. Location: LH Rail Approx 400mm Back of Cab.

TABLE 8-6. Switch and Wiring for Customer Installed Flood Lamp.

Fuse	Fuse size	Buss	Fuse Description	Switch Connector Description**	Chassis Connector Description***	Chassis Connector Terminal
F53	15A	Batt	2nd Flood Lamp	J19, 2nd Flood Lamp SW	P7641, 2nd Flood Lamp	B

** Flood Lamp Switch is located in dash area 4 and use a lighted rocker switch P27-1127-002.
*** Flood Lamp Switch is wired to a 2-way Packard Metripack connector on LH Frame rail Back of Cab near 9-way Trailer/body connector.)Both switched power and ground is provided in the chassis connector).

https://truckmanualshub.com/

ADDITIONAL SPARE CIRCUITS

If you just need spare power, wire into one of the spare circuits we provide.

WARNING!

Do not install an electrical circuit that requires more amperage (electrical capacity) than what is available in the specific chassis circuit. An overloaded circuit could cause a fire.

Compare the amperage requirements of the new circuit to the electrical current capacity of the existing chassis circuit before adding the body or other equipment.

When adding an electrical circuit, you must know the current capacity (amperes) of each circuit.

The capacity of the existing system in the chassis must be enough to power the additional circuit. The new circuit will require a certain amount of power to operate; so, the existing (battery or alternator) power source must have the capacity to provide additional power or the new circuit will not function properly.

Check the current (ampere) demand of the circuit to be added. Compare it to the current capacity of the circuit you are connecting into. The current carrying capacity of the wires, controls, switches, and circuit breakers that provide current to the circuit must be equal to or greater than the demand of the added circuit otherwise these components may not work properly. See Table 8-7 for relevant circuit information.

Additional Spare Circuits for Wiring

Depending on options ordered for the truck, there may be up to five spare circuits with labeled connectors available in the dash harness. See Table 8-7 for circuit information, circuit CAPACITY, connector breakout locations and location to install fuses in fuse panel. For unused spare circuits, since these are separate circuits; you will not affect existing circuits in the chassis by connecting to them.

They include:

- 3 spare battery circuits
- 2 spare ignition circuits

Note:

Some spare circuits may be used with factory installed options. For specific chassis questions please work with your Kenworth Dealer.

TABLE 8-7. Additional Spare Circuits for Wiring.

Spare Circuit Powered Through	Label on Connector	Minimum Wire Gauge	Dash Harness Connector Behind Dash Panel 4			
			Circuit	Wire Color	Capacity (Amperes). Install a fuse of appropriate rating	Numbered Location on fuse panel behind dash
Ignition	Spare IGN 1; 15 amps	14	ORN1221-0	Orange	15	F81
Ignition	Spare IGN 2; 15 amps	14	ORN1222-0	Orange	15	F80
Battery	Spare Batt 1; 15 amps	14	RED1211-0	Red	15	F49
Battery	Spare Batt 2; 15 amps	14	RED1212-0	Red	15	F50
Battery	Spare Batt 3; 20 amps	12	RED1213-0	Red	20	F29

https://truckmanualshub.com/

OPTIONAL BODY BUILDER HARNESS

Through the use of an optional body harness and additional spare circuits, we have tried to reduce the complexity associated with adding common circuits to a body installation.

Note:

The most common circuits that body builders may need are pre-connected to this optional wiring harness.

The optional body harness can be connected to the chassis harness through a standard connector mounted on the left hand frame rail directly behind the battery box. See Figure 8–20.

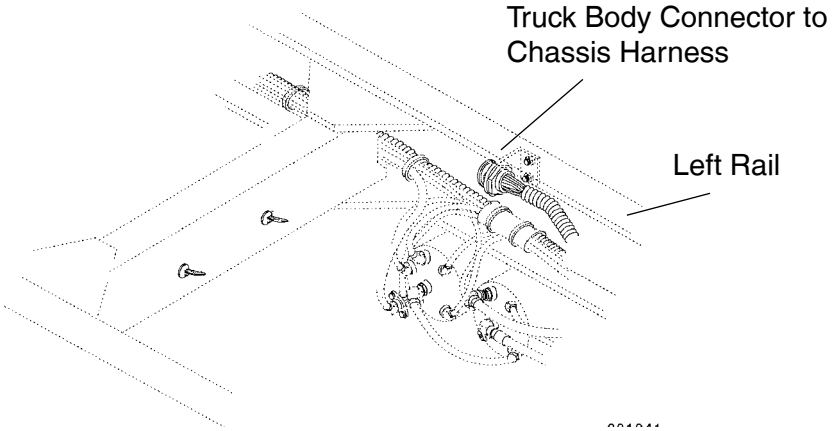

FIGURE 8-19. Location of Standard Body Harness Connection

For shipping purposes the body harness is coiled and shipped loose in the cab. The body harness wire ends are tagged with circuit markers, identifying the connecting circuit. See Figure 8–21 on the next page.

CAUTION:

Body Builder Power and Return (Ground)

All body builder Power and Return lines must be connected directly to battery terminals and be properly fused. Using the frame as a Return (Ground) is not allowed. Using the frame as a Return could result in the creation of ground loops and damage electronic devices on the truck.

https://truckmanualshub.com/

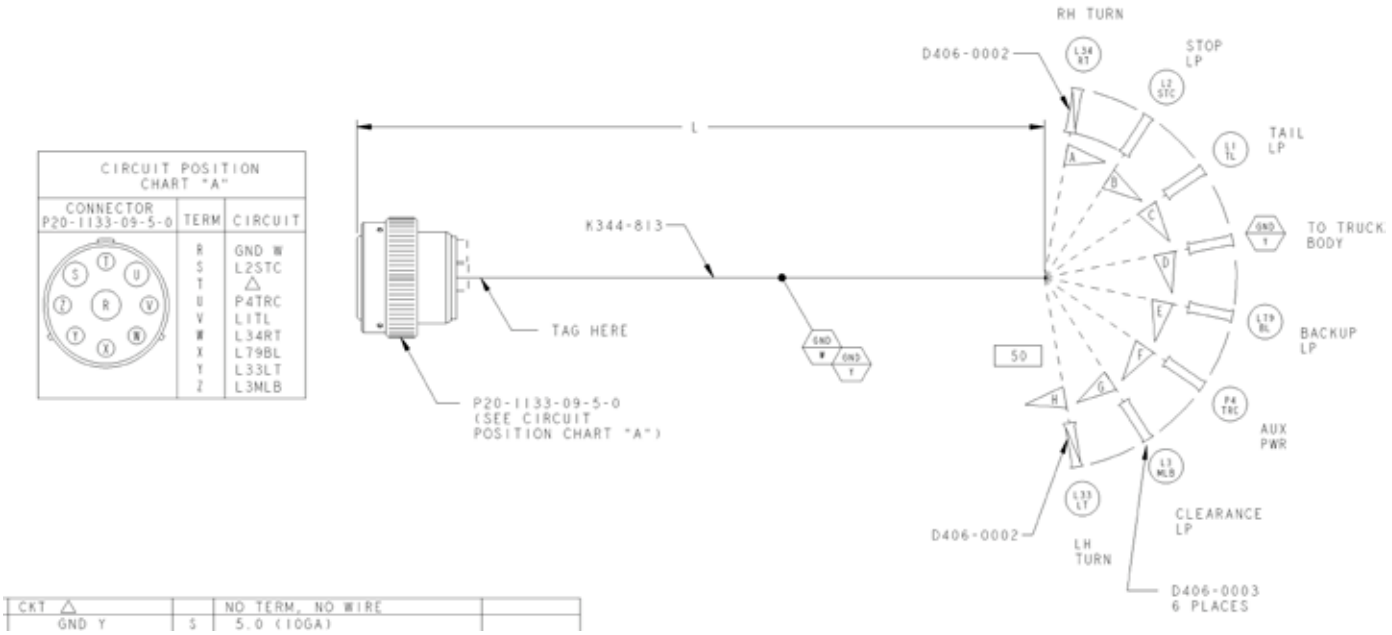

FIGURE 8-20. Body Junction Harness. Sales Code: 9090312. Location: LH Rail Approx 500mm Back of Cab.

TABLE 8-8. Body Junction Harness.

Harness – Body Junction (P92-1922-xxxxx					**Harn-Front Chas (P92-3997xxxxxxxxx)**				
Wire Description	**Function**	**Pin**	**Circuit**	**Wire Color**	**Circuit**	**Wire Color**	**CAPACITY (Amperes)**	**FUSE LOCATION**	**Comments**
Backup LP	TRLR/BB Back-up Lamp/Alarm	X	L79BL	Pink/ White	YEL2960	Yellow	10A	F71	Dedicated Fuse
RH Turn	Right Turn Signal Lamp	W	L34RT	Green/ Black	YEL2312	Yellow	10A	F24	Shared w/ Front Turn LP
LH Turn	Left Turn Sig-nal Lamp	Y	L33LT	Yellow/ Black	YEL2311	Yellow	10A	F77	Shared w/ Front Turn LP
Aux PWR	Auxiliary Power, body or Trailer (IGN)	U	P4TRC	Blue	ORN5100	Orange	15A	F79	Dedicated Fuse
Clearance LP	Marker/Clear-ance Lamps (TRLR/BB Tail Lamp)	Z	L3MLB	Black	YEL9130	Yellow	10A	F17	Dedicated Fuse
Stop LP	Stop Lamps	S	L2STC	Red	YEL9120	Yellow	25A	F52	Shared w/ Chas Stop LPS
Tail LP	Tail/Park Lamps	V	L1TL	Brown	YEL2411	Yellow	10A	F22	Shared w/ Chas Tail LPS
GND	Ground	R	GND	White	WHT1512	White			
TRLR Hotline	ABS/Hotline TRLR Batt	T	Blank	Blank	RED9920	Red	15A	F36	Dedicated Fuse

https://truckmanualshub.com/

Circuits Wired Through the Ignition

The Backup Lamp circuit is powered on when the ignition key is turned to the ON position.

After the connections are made by splicing into the optional body harness, the body components will have power when the similar chassis components receive power.

For instance, when the right hand turn signal is activated and the right hand turn signal light flashes on the cab, the right hand turn signal light on the installed body will also flash.

Connecting Ignition Circuits

Ignition circuits are tagged as follows:

Right Turn Signal - The right turn signal wire is tagged RH TURN and is green/black.
Left Turn Signal - The left turn signal wire is tagged LH TURN and is yellow/black.
Backup Lamp - The backup lamp wire is tagged BACKUP LP and is pink/white.
Ground - The ground wire is tagged GND and is white.
Auxiliary Power - (Standard config for chassis built after first quarter, 1998)

The auxiliary power circuit wire is tagged AUX PWR and is blue. Used for TRLR ABS if there is a trailer.

Do not use for other purposes if auxiliary power is used for trailer applications.

This aux power circuit is a 15 ampere capacity circuit in the ignition circuit. Install a 15 ampere fuse in the fuse panel (locations F79) behind the dash panel. This aux power circuit can be used only when the ignition switch is ON.

Circuits Wired to Battery

The following circuits are wired directly to the battery through a fuse and switch.

Auxiliary Power - optional if there are no trailer connections.
Brake Lamp
Tail Lamp
Clearance Lamps
Right and Left Turn Signal

When the optional body harness is properly connected, the similar circuit in the body will also have power. If the chassis clearance lamps are activated, the body clearance lamps will also be activated.

Auxiliary Power in Battery Circuit

The auxiliary power circuit is a 15 ampere capacity circuit connected directly to the battery. Install a 15 ampere fuse in the fuse panel location F36 behind the dash. Use this circuit whenever you need power for auxiliary equipment. There is continuous power to this circuit (when the batteries are charged) even when the engine is off.

For example, if the van body has interior lights or floodlights, these can be wired to the auxiliary power circuit and switched ON from inside the van.

Connecting Battery Circuits

Battery circuits are tagged as follows:

Auxiliary Power (optional w/o TRLR connections) - The auxiliary power circuit wire is tagged AUX PWR and is blue.
Brake Lamp - The brake lamp wire is tagged STOP LP and is red.
Tail Lamp - The tail lamp wire is tagged TAIL LP and is brown.
Clearance Lamps - The clearance lamp wire is tagged CLEARANCE LP and is black.

https://truckmanualshub.com/

Hybrid Utility Connector

Hybrid utility trucks come equipped with a utility connector to interface with the body builder's body controller. The breakout for the utility connector is 3000mm long and can be located, bundled up, by the transmission (see Figure 8-22). The length of the body builder's mating harness must not exceed 2500mm. Pins 7 and 8 are J1939 communication lines and must be a twisted, shielded, jacketed pair of wires. Pin 6 is the drain wire for the shield.

Pins 1&2

Pins 1&2 are part of a Park Brake and Hood Switch interlock circuit. A ground signal is applied to pin 1 and with both the hood closed and the park brake applied the circuit will be completed and a signal will appear on pin 2.

Pin 3

Pin 3 is Battery Power and is rated for 10 Amps. The fuse is located inside the Vehicle Electronics Carrier (VEC) in position F6. Pin 3 is live at key on.

Pin 4

Not Used.

Pin 5

Pin 5 is Ground.

Pin 6

Pin 6 is the drain wire for the J1939 CAN line. The drain wire must only be connected to Pin 6. Do not connect the other end of the drain wire.

Pin 7&8

Pins 7&8 are J1939-11 Vehicle CAN (VCAN) lines. Pin 7 is LOW and Pin 8 is HIGH.

https://truckmanualshub.com/

Note:

All VCAN lines must conform to J1939-11 guidelines; this includes using a jacketed, shielded, twisted pair of wires. Keep the VCAN lines away from high current, rapidly switching loads and the wires connected to these devices. For more details about 1939-11 VCAN specifications please refer to SAE J1939-11.

PTO

Hybrid trucks have the option of two different PTO operation modes; they can be outfitted with either an Electronic PTO or a Mechanical PTO.

ePTO

EPTO uses the Hybrid Systems electric motor to turn the PTO gear in the transmission. A 3 way connector is provided on the Transmission Harness to interface with the PTO. The connector provides the positive and negative signals to engage the PTO and an interlock to insure the PTO is engaged. The interlock circuit is a ground signal. This is typically done with a ball switch on the PTO. One side of the ball switch would be connected to ground and the other to Pin A.

ePTO 3 way connector

Pin A is for PTO interlock negative signal
Pin B is for PTO solenoid Neg
Pin C is for PTO solenoid Pos

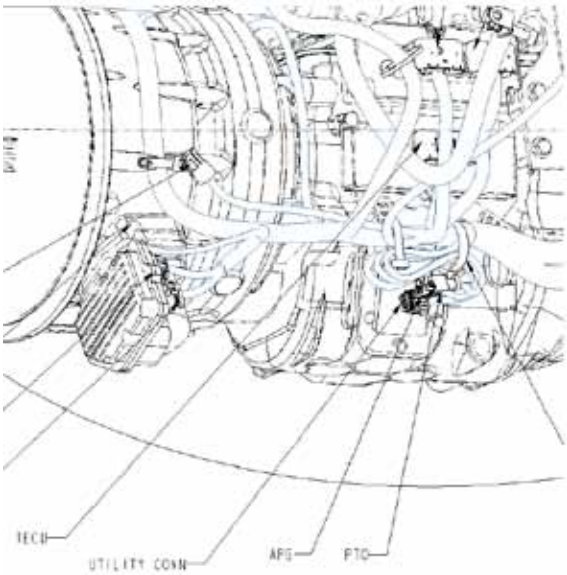

FIGURE 8-21. ePTO Harness Location

mPTO

MPTO operates like a normal PTO with the exception of the use of a PTO interlock circuit. The interlock circuit is a ground signal. This is typically done with a ball switch on the PTO. One side of the ball switch would be connected to ground and the other to terminal P206 located LH side of the transmission on the hybrid transmission harness.

https://truckmanualshub.com/

BODY BUILDER POWER DISTRIBUTION CENTER

For 2010 Medium Duty Hybrid vehicles the Hybrid Battery Box will include a Body Builder Power Distribution Center.

Through the addition of a battery box mounted body builder power distribution module, we have simplified the integration of body-related electrical systems to the vehicle batteries.

The module provides the following:

- 3 Midi fuse locations with M8 output studs
- 6 ATO/ATC fuse locations with 8-32 output screws
- Ground busbar with 3M8 studs and 6 8-32 screws
- 200A maximum load

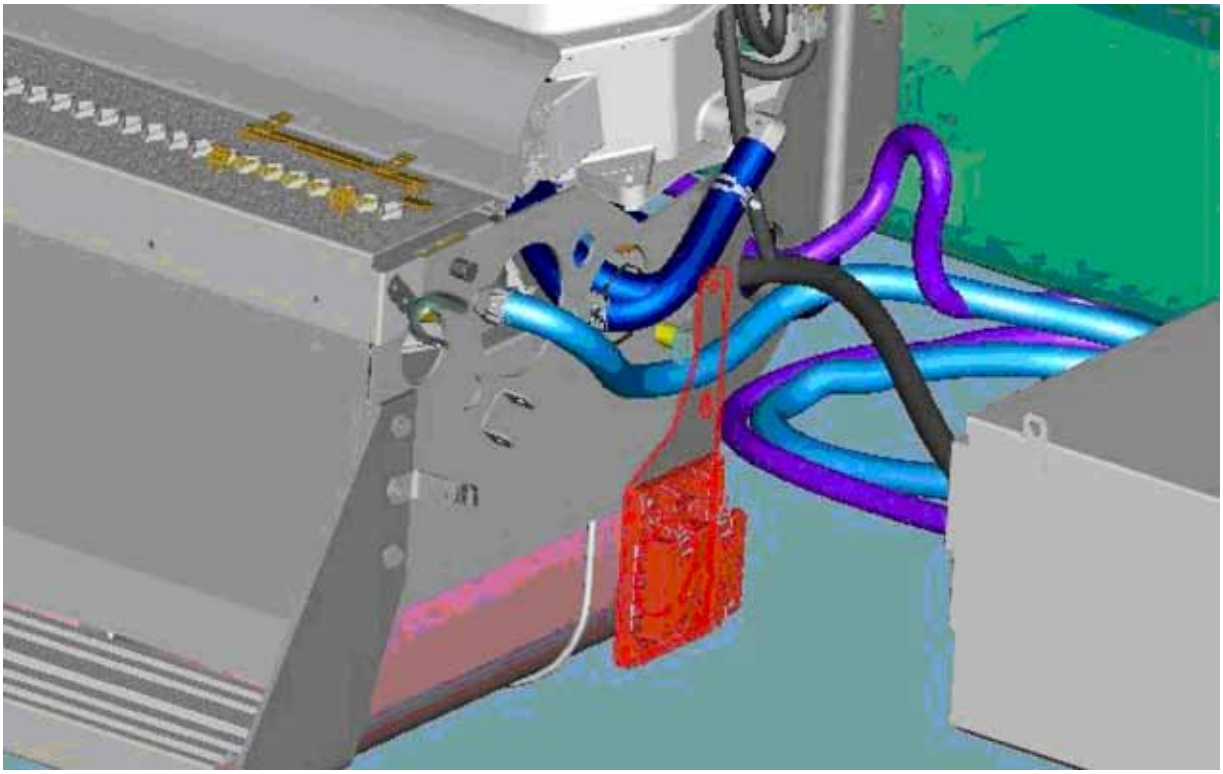

FIGURE 8-22. Location of Body Builder Distribution Module on Hybrid

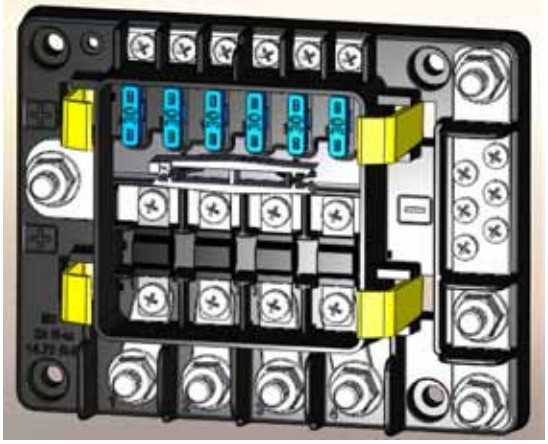

FIGURE 8-23. Detail of Body Builder Power Distribution Module

https://truckmanualshub.com/

INSTALLING A THIRD BATTERY (NOT AVAILABLE ON HYBRID)

A third battery is a published option and can be ordered with your vehicle. If this was not done, use Figure 8-25 and 8-26 as guides for installing a third battery.

You will need the following additional parts to install the third battery:

TABLE 8-9. Third Battery Installation Parts for Parallel Battery Box LH Under Cab

Item	T170 Qty	T270/370 Qty	Part Number	Description
1	1	1	P27-6100-111	Battery - GRP 31 w/Threaded Posts
2	1	1	K396-1010-008	Jumper Cable, Positive
3	1	1	K395-1020-008	Jumper Cable, Negative
4	0	1	N63-1002	Battery Pad
5	0	2	N20-1025	Battery Retainer, lower
6(1)	0	4	W34-1070-060	Bolt - Hex M8 X 60
7(1)	0	4	K169-162-8CA	Nut - Hex Metric
8(1)	0	8	K363-338-2-312	Washer - Flat
9	0	1	N20-1001	Battery Retainer, Upper
10	1	0	15-05609	Battery Hold - Down
11	1	0	15-05719	Battery Hold - Down Hook
12	1	0	27-00791-005	Locknut
13	1	0	27-00428-005	Washer - Flat 5/16
14	0	1	K041-804-275CA	Bolt - Hex M10 X 275
15	0	1	K363-3	Washer - Cupped
16	0	1	4023	Button
17(2)	1	1	K396-1710-008	Jumper Cable, Positive
18	1	1	K333-46-18	Ring Terminal, 1/4”

Note:(1) For T270/370 with hydraulic brakes use these to install both item 5, otherwise use the existing fasteners.
(2) Use this in place of item 2 when liftgate wiring is required.

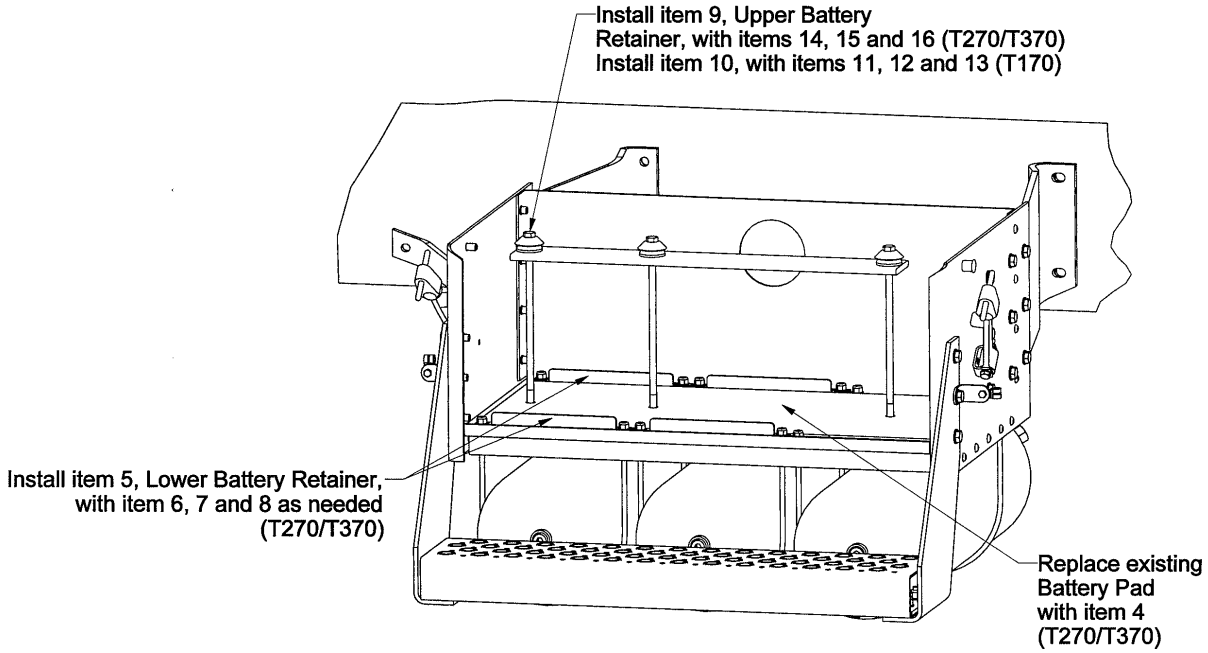

FIGURE 8-24. Adding a Third Battery

https://truckmanualshub.com/

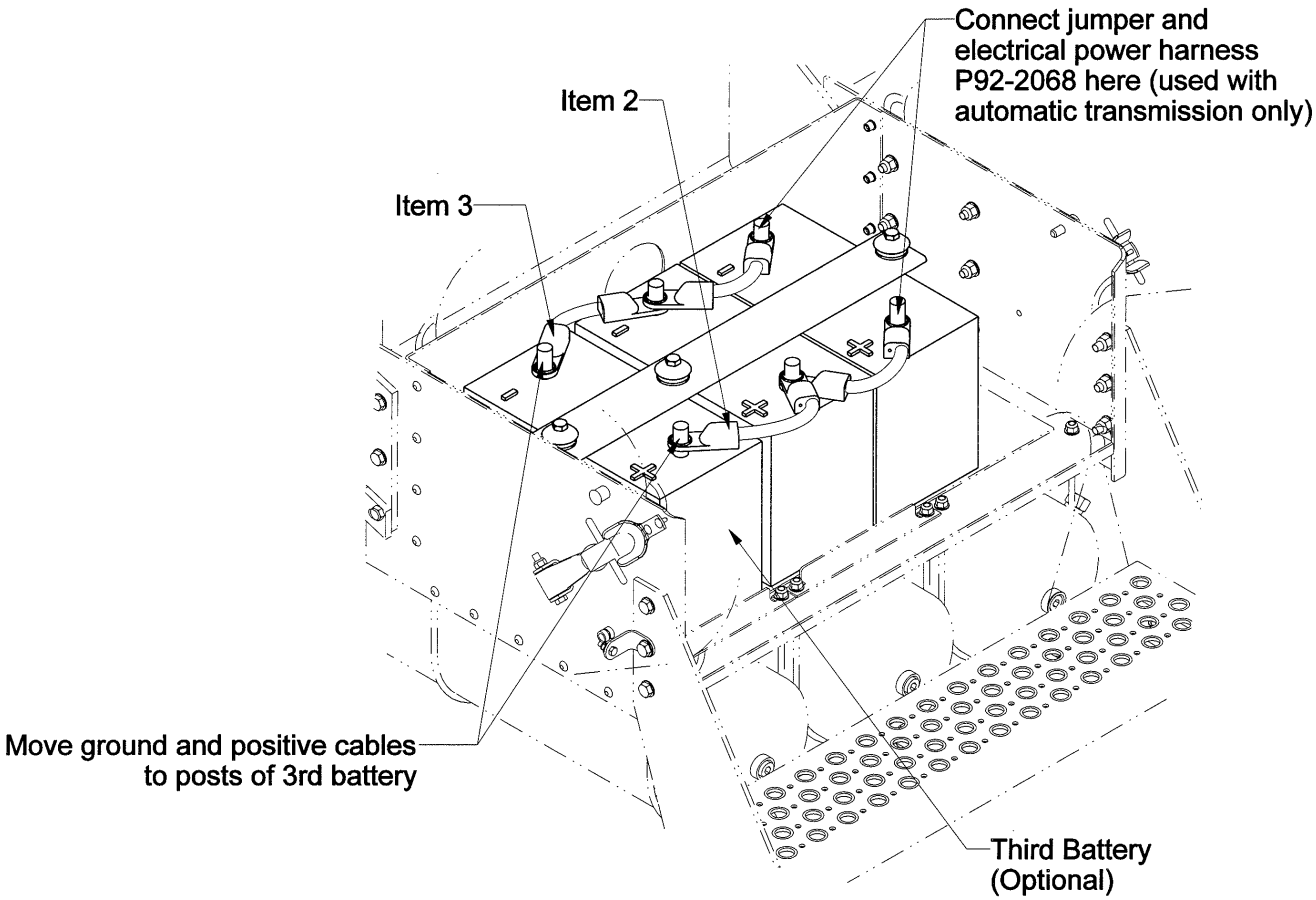

FIGURE 8-25. Adding a Third Battery

WIRING FOR A LIFTGATE

CAUTION: **Consult the liftgate manufacturer's installation instructions for details concerning wiring for their product and specific model.**

A liftgate will usually require current much greater than 10 amperes. Typically, 100 to 150 amperes is required and some models require more than 150 amperes. For a liftgate installation a third battery is required for adequate power.

Note: **A liftgate installation must have a dedicated circuit to distribute power to the liftgate.**

Liftgate Power Source

Liftgate motors will typically use DC power. A convenient power source is the battery. Use Figure 8-27 as a guide. Install the circuit breaker inside the battery box on the rear panel.

WARNING! **DO NOT use a circuit breaker of lower capacity than the liftgate amperage requirements. If you do, it could result in an electrical overload or fire. Follow the liftgate installation instructions and use a circuit breaker with capacity recommended by the liftgate manufacturer.**

https://truckmanualshub.com/

Connecting the Liftgate Power

Follow these instructions to connect the liftgate to the third battery. See Figure 8-26.

1. Install the third battery.
2. Positive battery jumper cable with ring terminal breakout wire, item 17 in Table 8-9, page 8-30, should be installed instead of item 2.
3. Install circuit breaker
4. Shorten the ring terminal breakout wire on positive battery jumper cable, item 17, to length as needed for routing to the circuit breaker. Install ring terminal, item 18 as needed. Route the wire per routing requirements in Section 7.
5. Connect the ring terminal breakout wire to the circuit breaker.

The positive battery jumper cable with ring terminal breakout, item 17, and the ring terminal, item 18, are in Table 8-9, page 8-30. These are available form PACCAR Parts.

The remainder of the wiring installation should be in accordance with the liftgate manufacturer's installation instructions.

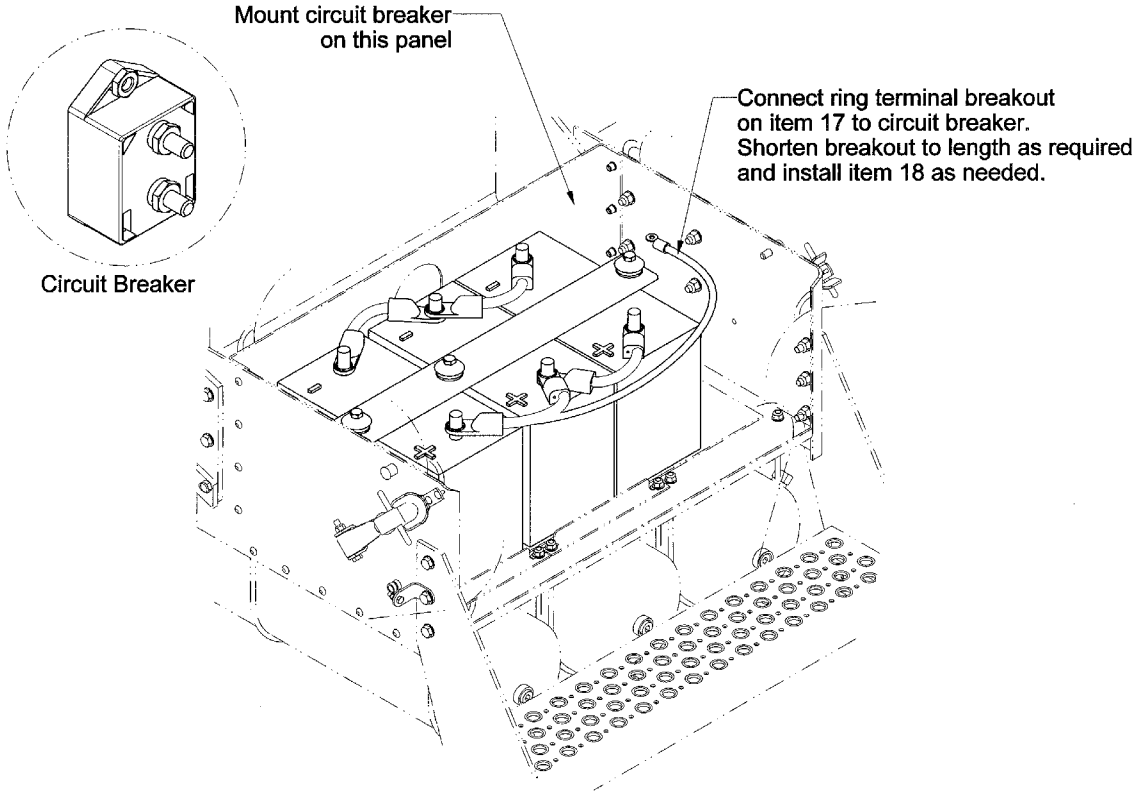

FIGURE 8-26. Liftgate Circuit Breaker Inside Battery Box

https://truckmanualshub.com/

270 AMP ALTERNATOR (RECOMMENDED HOOKUP)

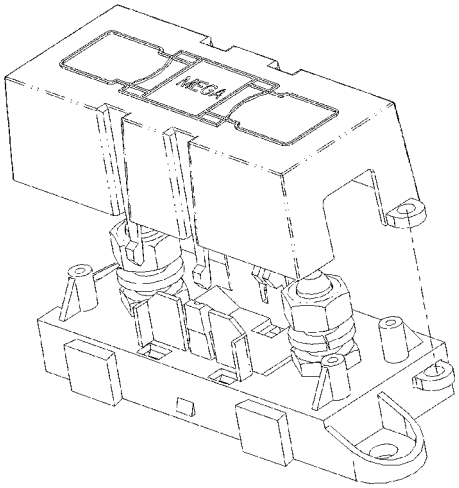

FIGURE 8-27: P27-6180 Fuse Holder.

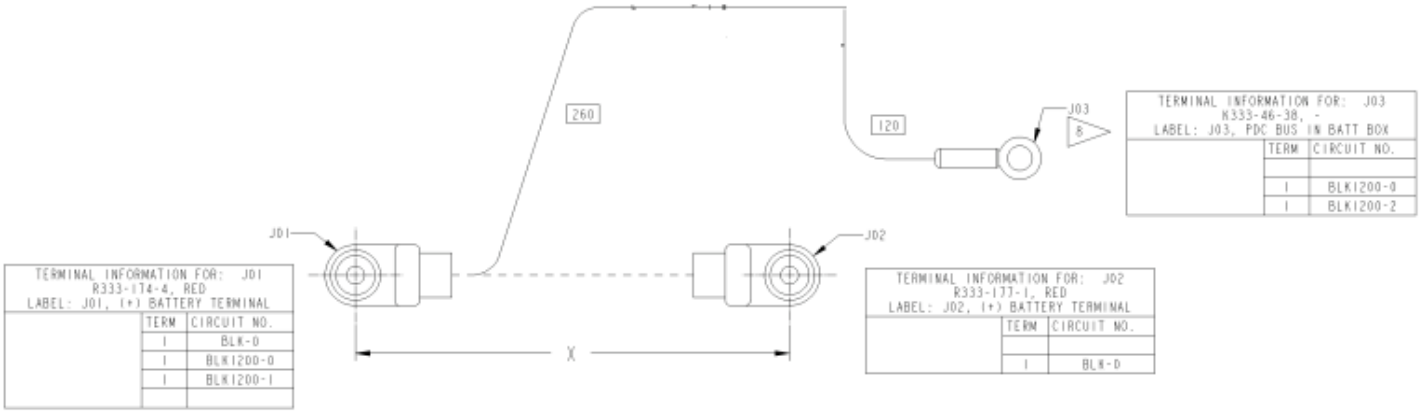

FIGURE 8-28: Battery Harness Jumper, Part No. P92-2683-100000.

- Use three batteries
- Use P27-6180-150 Mega Fuse (Mount in Battery Box to provide Body Power).
- Use P92-2683-10000 to provide power from batteries to Mega Fuse.
- Tie Body Ground circuits to additional ground stud located on the lower outboard (driver side) of firewall at cover plate.

Engine Connections

Electronic engines have the ability to send and receive control and warning signals from the components on the chassis and body. Consult the appropriate body builder manual before making connections to the engine electronic control unit (ECU) or to other electronic engine components.

https://truckmanualshub.com/

REMOTE PTO/THROTTLE HARNESS

This option provides a connection from the engine ECU for remote control of engine throttle and PTOs. Options that extend the wiring to the end of frame also exist, however controls are not provided. A 12-pin Deutsch connector (Deutsch P/N DT06-12SA-P012) is included. See Figure 8-30 below for wiring harness connector pin outs.

Adding Electrical Options

WARNING!

Follow the engine manufacturer's guidelines for use of these circuits. See your engine manufacturer to verify that the engine is programmed correctly for the intended applications. Failure to properly program the engine or wire these circuits could cause an accident.

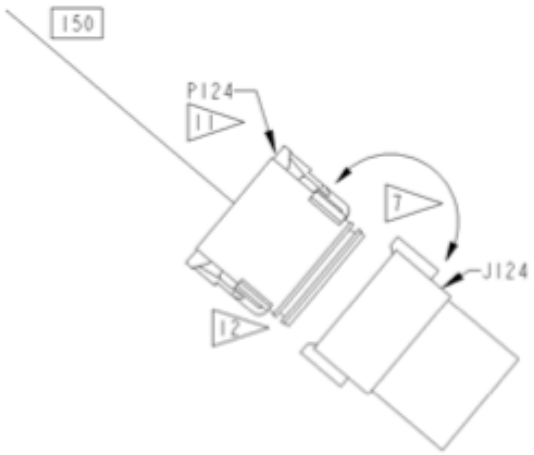

TERMINAL INFORMATION FOR: P124
16-06777, GRAY, (12 CAVITIES)
LABEL: P124, REMOTE PTO/THROTTLE CONTROLS

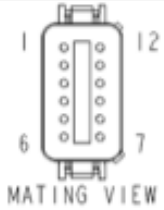

TERM	CIRCUIT NO.
6	GRA3143-1
7	ORN1229-0
8	WHT1513-4
8	WHT1513-5
3	GRN3115-4
4	BLU3144-0
5	GRA3511-2
9	GRA3149-0
10	VIO3144-0
11	GRN3144-0
12	GRA3143-0

FIGURE 8-29. PACCAR PX-6 and PX-8.

https://truckmanualshub.com/

TABLE 8-10. Multifunction Engine Connector

Engine Harness – PACCAR PX-6 & PX-8			KW Harn Conn Pin Outs			KW mPDC in Cab		
Circuit Function Name	**Engine ECM Pin #**	**KW Circuit Number**	**Wire Color**	**Wire Gauge**	**Pin #**	**Fuse Location**	**Fuse Description**	**Fuse Rating**
Not Used	None	None	None	None	1			
Not Used	None	None	None	None	2			
Common Return #1	19	GRN3115	Green	18	3			
Remote Throttle Sensor Signal	56	BLU3144	Blue	18	4			
PTO On/Off	39	GRA3511	Gray	18	5			
Remote Throttle Enable	None	GRA3143	Gray	18	6*			
Power – Ignition	None	ORN1229	Orange	18	7	F62	Indicator IGN	10A
Engine Ground	None	WHT1513	White	18	8			
Torque Limit Switch	26	GRA3149	Gray	18	9			
Remote Throttle Sensor Supply (+5V)	52	VIO3144	Violet	18	10			
Remote Throttle Sensor Return	43	GRN3144	Green	18	11			
Remote Throttle On/Off	40	GRA3143	Gray	18	12			

* Remote Throttle Enable Circuit runs from Pin6 of MF Eng Connector (P124) to Firewall 47-way connector pin 11 (P103).

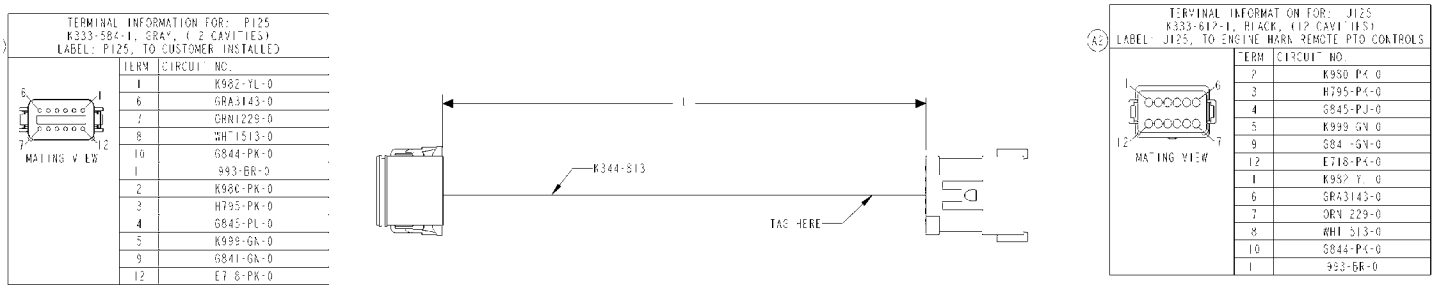

FIGURE 8-30: Wiring for Customer Installed Throttle Control at End of Frame**.** Sales Code: 1900976 Requires 1900082 (Multi-function engine connector.

https://truckmanualshub.com/

TABLE 8-11: Remote Throttle Wiring to End of Frame

Engine Harness – Paccar PX-6 and PX-8						Extension Harness		
Circuit Function Name	**Engine ECM Pin #**	**KW Circuit Number**	**Wire Color**	**Wire Gauge**	**Pin #**	**KW Circuit Number**	**Wire Color**	**Wire Gauge**
Not Used	None	None	None	None	1	Y982-YL	Yellow	16
Not Used	None	None	None	None	2	K980-PK	Pink	16
Common Return #1 (Switch)	19	GRN3115	Green	18	3	H795-PK	Pink	16
Remote Throttle Sensor Signal	56	BLU3144	Blue	18	4	G845-PU	Purple	16
PTO On/Off	39	GRA3511	Gray	18	5	K999-GN	Green	16
Remote Throttle Enable	None	GRA3143	Gray	18	6*	GRA3143	Gray	16
Power – Ignition	None	ORN1229	Orange	18	7	ORN1229	Orange	16
Engine Ground	None	WHT1513	White	18	8	WHT1513	White	16
Torque Limit Switch	26	GRA3149	Gray	18	9	G841-GN	Green	16
Remote Throttle Sensor Supply (+5V)	52	VIO3144	Violet	18	10	G844-PK	Pink	16
Remote Throttle Sensor Return	43	GRN3144	Green	18	11	993-BR	Brown	16
Remote Throttle On/Off	40	GRA3143	Gray	18	12	E718-PK	Pink	16

* Remote Throttle Enable Circuit runs from Pin 6 of MF Eng. Connector (P124) to Firewall 47-way connector pin 11 (P103).

WARNING!

To prevent emissions functions of the engine from modifying torque or speed during PTO operation, be sure to connect the PTO sensor wire to the appropriate engine controller input.

https://truckmanualshub.com/

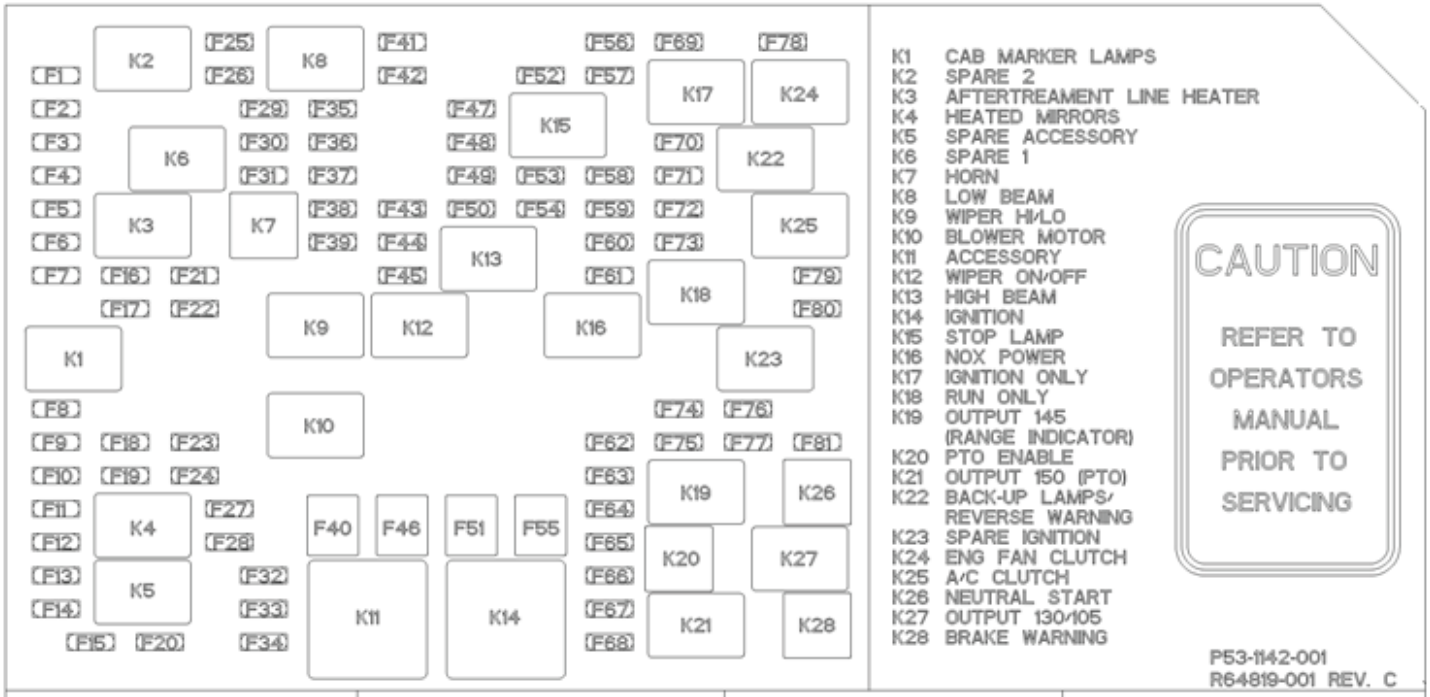

FIGURE 8-31. Cab Load Center (mPDC)

https://truckmanualshub.com/

ELECTRICAL WIRE NUMBER AND COLOR

GENERAL WIRE LABELS

Kenworth introduced a new electrical wire numbering system in 2007. This wire number system uses only 10 different colors and only one striped wire color. These colors determine a circuits FUNCTION as follows:

R/W	Direct Battery Power
RED	Protected Battery Power
ORG	IGN/ACC/Start Power
YEL	Activated Power
BRN	Indicator Illumination, Backlighting
BLK	Load Return
GRY	Control
VIO	Reference Voltage
BLU	Sensor Signal
GRN	Sensor common not connected to GND
WHT	Ground

Each wire has at a minimum a 7 character label, the first three characters are the circuits color as listed above, the remaining four are numerical which relate to the load the wire services. See Table 8-12 for the general categories.

TABLE 8-12. Wire Number General Categories

To identify similarly labeled wires a suffix can be added.

For example: YEL2950-1 would be a yellow wire indicating it is activated power. The 2950 indicates the load, in this case fog lamps, the -1 is a suffix used to differentiate similarly labeled circuit.

https://truckmanualshub.com/

DATA BUS WIRE COLORS

Data Bus wiring has its own color scheme as follows:

Data-bus high-side wires

- VIO – J1587 & J1708
- ORG – J1922
- YEL – J1939
- RED – OEM
- GRY – CAN
- BLU – Single-wire bus

Data-bus low-side wires

- GRN – All Data-bus low-side wires

TRAILER/BODY BUILDER WIRE COLORS

Trailer Wires have their own wiring scheme as follows:

TABLE 8-13. Trailer Wire Colors

Color	Circuit
White	Ground
Black	Clearance ID Marker lamps
Yellow	Left turn lamps
Red	Stop lamps
Light green	Right turn lamps
Brown	Tail lamps
Light blue	ABS power Auxiliary

To identify specific circuits contact your local Kenworth Dealer.

https://truckmanualshub.com/

TRAILER CABLE CONNECTIONS

Kenworth offers may different trailer connection options. The SAE J560 connector is shown in Figure 8-33, the ISO 3731 connector is shown in Figure 8-34.

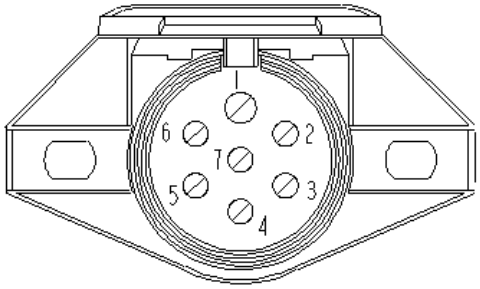

FIGURE 8-32: SAE J560 Trailer Connector

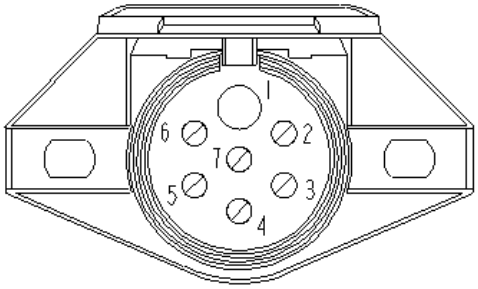

FIGURE 8-33: ISO 3731 Trailer Connector

There are three basic configurations for trailer connections, they are detailed below. Work with your local Kenworth dealer to identify which setup will be ideal for your intended application. Your local dealer can also identify and provide the wiring diagrams for any chassis that has been built.

For the configurations below the following circuits will be dedicated pin locations:

TABLE 8-14: SAE J560 Connector

SAE J560 Connector	
Pin	**Circuit**
1	Ground
2	Marker Lamp Trailer
3	Left Turn Trailer
4	Stop Lamp Trailer
5	Right Turn Trailer
6	Tail Lamp Trailer
7	Trailer ABS Power or Trailer Hotline

TABLE 8-15: ISO 3731 Connector

ISO 3731 Connector	
Pin	**Circuit**
1	Ground
2	Optional Switched Circuit
3	Trailer ABS Warning Laåmp
4	Optional Switched Circuit
5	-
6	-
7	Trailer ABS Power

Below is a description of how the cab ABS and trailer ABS control units interface to turn on the trailer ABS warning lamp. When there is no direct connection, the Power Line Carrier (PLC) is used to transmit the signal. PLC defines that the trailer and cab ABS controllers are communicating via signals transmitted on their power circuits.

1. J560 with Full Truck &/or Tractor Kit (standard configuration):

   This option provides a single SAE J560 connector at the noted location(s).

   – Trailer ABS power is received on pin 7 of the SAE J560 connector.

   – Trailer ABS signal is on pin 7 of the SAE J560 via “PLC for trucks”

   – Ground is on pin 1 of the SAE J560 connector.

2. J560 & ISO 3731 with Full Truck &/or Tractor Kit:

   This option provides two connectors: a SAE J560 and an ISO 3731 connector at the noted location(s):

   – Trailer ABS power is on pin 7 of the SAE J560 & ISO 3731 connectors.

   – Trailer ABS signal can be received on pin 7 of the SAE J560 & ISO 3731 via “PLC for trucks”

https://truckmanualshub.com/

– Trailer ABS warning lamp circuit can be received on pin 3 of the ISO 3731 connector.

– Ground is on pin 1 of the SAE J560 & ISO 3731 connectors.

3. J560 Hotline & ISO 3731 with Full Truck &/or Tractor Kit:

   This option provides two connectors: a SAE J560 and a ISO 3731 connector at the noted location(s)

   – Trailer ABS power is on pin 7 of the ISO 3731 connector.

   – Trailer ABS signal is on pin 7 of the ISO 3731 via “PLC for trucks”

   – Trailer ABS warning lamp circuit is on pin 3 of the ISO 3731 connector.

   – Trailer Hotline is provided on pin 7 of the SAE J560 connector. This may be either battery powered or switched.

   – Ground is on pin 1 of both the SAE J560 & ISO 3731 connectors.

Note:

Kenworth provides option variations within the above combinations. This may include up to (2) spare circuits on pins 2 & 4 of the ISO 3731 connector which may or may not be switched.

In addition to these configurations an optional junction box is available mounted either behind the cab or at the end of frame. See Figure 8-35.

FIGURE 8-34. Junction Box

Circuits provided inside the junction box are:

- Ground, Circuit code: WHT1512 (8AWG)
- Tail Lamp Trailer, Circuit code: YEL2421 (12AWG)
- Marker Lamp Trailer, Circuit code: YEL9130 (12AWG)
- Left Turn Trailer, Circuit code: YEL9111 (12AWG)
- Stop Lamp Trailer, Circuit code: YEL9120 (8AWG)
- Right Turn Trailer, Circuit code: YEL9112 (12AWG)
- ABS Power (switched), Circuit code: ORN5100 (8AWG)

These circuits are terminated with ring terminals attached to one side of a terminal strip. To connect to the circuits use a ring terminal for a #10 screw.

https://truckmanualshub.com/

Page Intentionally Left Blank.

https://truckmanualshub.com/

ROUTING

Introduction

This section specifies the general requirements for securing hoses and electrical wires to present an orderly appearance, facilitate inspection and maintenance, and prevent potential damage to these lines.

Definitions

Bundle: Two or more air, electrical, fuel, or other lines tied together to form a unitized assembly.

Clamp: A cushioned rigid or semi-rigid, anti-chafing device for containing the bundle and securing it to the frame or other structural support. Standard clamps have a black elastomer lining. High temperature clamps (e.g., those used with compressor discharge hose) have a white or red elastomer lining (most applications for these are called out in the bills of material). An assembly of two clamps fastened together to separate components is referred to as a “butterfly” clamp. Note: the metal portion of clamps shall be stainless steel or otherwise made capable, through plating or other means, of passing a 200 hour salt spray test per ASTM B117 without rusting.

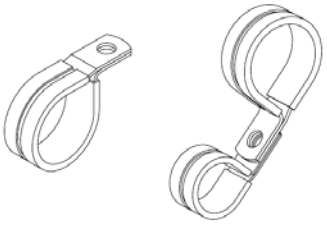

FIGURE 9-1. Clamp and Butterfly Clamp

Butterfly Tie: A tough plastic (nylon or equivalent) locking dual clamp tie strap used to separate bundles or single lines, hoses, etc. These straps must be UV stable. (Tyton DCT11)

FIGURE 9-2. Butterfly Tie

Tie Strap: A tough plastic (nylon, or equivalent) locking strap used to tie the lines in a bundle together between clamps or to otherwise secure hoses and wires as noted below. These straps must be UV stable.

FIGURE 9-3. Tie Strap

Heavy Duty (HD) Mount: A black rigid device used for securing a tie strap to the frame or other structural support. Mounts are made of impact modified, heat stabilized UV resistant nylon capable of continuous operation between temperatures 220°F (150°) and -40°F (-40°).

https://truckmanualshub.com/

Note: **Heavy duty tie straps 0.50in (12.7mm) wide (Tyton T255ROHIR or similar) shall be used whenever HD mounts are specified, although 0.25in (6.4mm) tie straps may be used in some specified applications.**

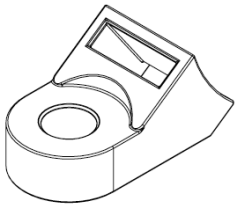

FIGURE 9-4. Heavy Duty (HD) Mount.

Excess of material: More than 3 inches of slack for every 14 inch section of hose routing, except for air conditioner hoses. See section 4.1.3 for air conditioner hose requirements.

Shortness of material: Less than 1 inch of slack on a 14 inch section of hose routing.

ROUTING REQUIREMENTS

Wiring

Electrical ground wire terminals must be securely attached and the complete terminal surface must contact a clean bare metal surface. See R414-558 for grounding wire connection practice. Apply electrical contact corrosion inhibitor Nyogel 759G grease (made by William F. Nye, Inc., New Bedford, MA) per R414-558.

Don't bend wires or use tie straps within 3 inches (75 mm) of (connected) wire connectors or plugs.

Wires in Bundles

Electrical wires (other than the exceptions covered below) running parallel with air or coolant hose bundles, may be included in the bundle if they are isolated from the hoses with a covering of convoluted plastic tubing.

EXCEPTIONS:

Battery cables (including jump start cables) may be bundled with or tied to the charging wire harness. They shall **not** be bundled with or tied directly to any other components, including hoses, wires, or bundles. They shall be separated from other routed components using butterfly ties at intervals not exceeding 14 inches (356 mm). Battery strap (W84-1000) tie down shall be used without exception to secure battery cables to frame mounted or other major component (e.g. engine, tmsn, etc.) mounted standoffs at intervals not exceeding 14 inches (356 mm). The (positive) battery cable shall be covered with convoluted plastic tubing from terminal to terminal.

110/220 volt wires for engine heaters, oil pan heaters, transmission oil heaters and battery pad warmers, shall **not** be included in any hose/wire bundle with a fuel hose. Individual heater wires not in a bundle shall be separated from other components by using butterfly clamps or butterfly ties at intervals not exceeding 14 inches (356 mm). Heater wires with a secondary covering shall be covered with convoluted tubing whether they are in bundles or not.

https://truckmanualshub.com/

Wires Crossing other Components

Electrical wires crossing over other components, such as lines, bolt heads, fittings, engine components lifting eyes, engine block, cylinder head, etc., close enough to rub shall be isolated with a covering of convoluted tubing **and** separated from the component by using butterfly clamps, butterfly ties, or plastic sheathing. 110/220 volt engine heater wiring shall be installed with butterfly ties or butterfly clamps.

Piping

Use no street elbows in air brake, water, fuel, or hydraulic systems unless specified on the piping diagram and the build instructions.

Use no elbows in the air brake system unless specified on the air piping diagram and the build instructions.

Hoses Crossing Components

Hoses crossing over other components close enough to rub shall be protected with a secured covering of convoluted plastic tubing (KW part number K344-813), another section of hose, or plastic sheathing (KW part number K213-1312). The usage of butterfly ties, or butterfly clamps are also recommended.

Air Compressor Discharge Hoses

Wires or hoses shall not be tied to the high temperature air compressor discharge hose. Hoses and wires may be routed across the air compressor discharge hose at a distance of 18 inches (457 mm) or greater from the compressor discharge port. In this case the crossing hoses and wires shall be “butterfly” clamped to the air compressor discharge hose and covered with convoluted tubing at the clamp point (use high temperature clamps on the compressor hose).

Bundles

HD mount and tie strap, or clamp shall be located at intervals not to exceed 14 inches (356 mm) along the bundle.

Regular tie straps shall be located at intervals not to exceed 7 inches (178 mm) between HD mount or clamps. Extra tie straps may be used as needed to contain the hoses and wires in the bundle.

Routing of Wires and Hoses near Moving Components

Wires and Hoses shall be routed away from moving components, such as fans, shackle links, drivelines, steering linkages, etc. so that there is at least 0.5 inches (12.7 mm) clearance when the component is operating at its **maximum** travel limits.

A minimum clearance of 1.0 inchs (25.4) shall be maintained between steering axle tires (and associated rotating parts) in all positions and routed components, such as hoses, oil lines, wires, pipes, etc.

https://truckmanualshub.com/

Routing of Wires and Hoses near Exhaust System

TABLE 9-1. Exhaust – System Clearance

Description	Shielded	Unshielded
Coolant hoses, HVAC hoses and tubing, and electrical wires within 15” of the turbo and/or over 15” from the turbo	2” minimum	3” minimum
Fuel hoses		
within 15” of the turbo	n/a	4” minimum
over 15” from the turbo	2” minimum	3” minimum
Fuel tanks and hydraulic tanks		
crossing tank	n/a	2” minimum
parallel to tank	n/a	2” minimum
end of tank	n/a	1” minimum
aluminum/ceramic-coated exhaust pipe crossing tank	n/a	1.5” minimum
Air hose		
nylon	3” minimum	8” minimum
wire braid	2” minimum	3” minimum
Electrical wires (located at or down line of the DPF)	3” minimum	8” minimum

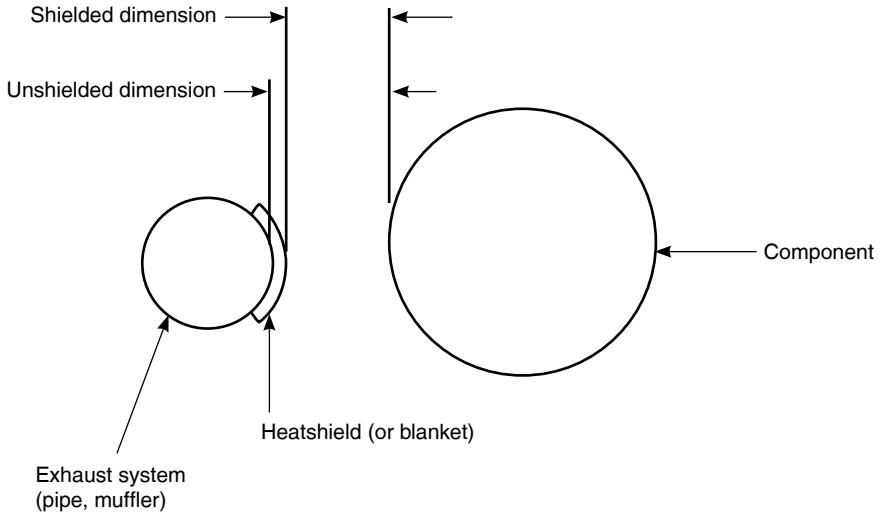

FIGURE 9-5. Definition of measurements.

https://truckmanualshub.com/

VEHICLE IDENTIFICATION NUMBER

A 17–character number (numeral and letter combination) forms the Vehicle Identification Number (VIN) which includes the Chassis Number. It contains among other information, the model year (4), assembly plant (5), and vehicle serial number (6). See Figure A–1.

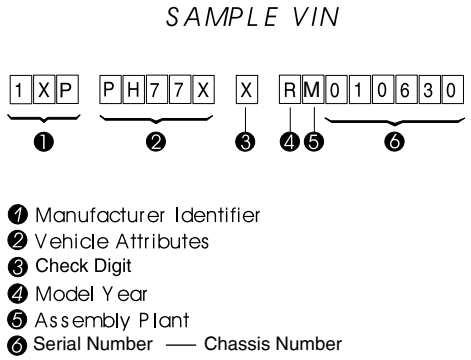

FIGURE A-1. Vehicle Identification Number (VIN).

The model year (4) is designated by an alphanumeric code in the tenth character position in the VIN. See Table A-1 and Figure A–1.

Code	Year
5	2005
6	2006
7	2007
8	2008
9	2009

Code	Year
A	2010
B	2011
C	2012
D	2013

TABLE A-1. Model Year (Code) Designations.

VIN Location

The VIN is marked on the Incomplete Vehicle Certification Label (on trucks). It is located either on the driver's door edge or door frame. See Figure A–2.

Chassis Number Locations

The Chassis Number comprises the last six characters of the VIN.

- The vehicle chassis number is shown in multiple locations.
- Left side of cab, lower right corner of door frame: stamped plate.
- Tire, Rim, and Weight Rating Data label.
- Major Components and Weights label.
- Noise Emission label.
- Paint Identification label.

https://truckmanualshub.com/

VEHICLE IDENTIFICATION LABELS

Vehicle Identification Labels are located on the driver's side door edge or on either the driver's or passenger's side door frames. See Figure A-2. Labels include Vehicle Certification, Components and Weights, Tire/Rim and Weight Rating Data, Noise Emissions, and Paint Identification. Quantity and location of labels may differ based on Complete/Incomplete vehicle, and Single/Dual certification.

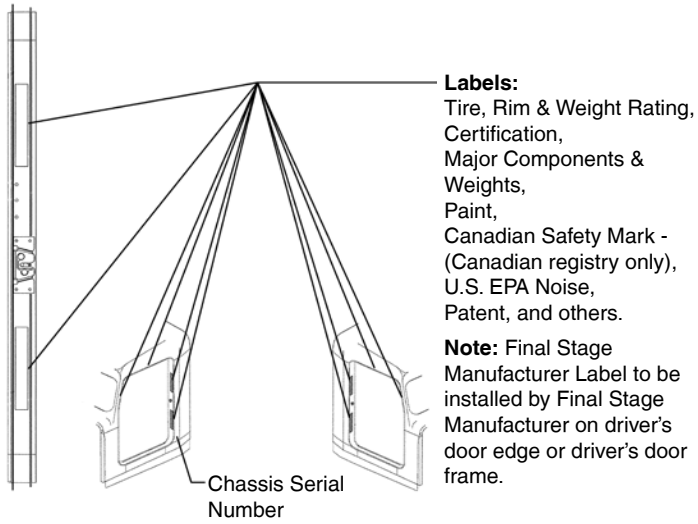

FIGURE A-2. Drivers Door and Door Frame Labels

Tire/Rim and Weight Rating Data Label

The Tire/Rim and Weight Rating Data Label is used in conjunction with the Incomplete Vehicle Certification Label on Incomplete Vehicles. It contains chassis serial number and the following information:

- GVWR — Gross Vehicle Weight Rating
- GAWR FRONT and REAR — Gross Axle Weight Ratings for Front and Rear Axle
- TIRE/RIM SIZES AND INFLATION PRESSURES — Tire/Rim Sizes and Cold Pressure Minimums

Note: **GVWR is the TOTAL WEIGHT the vehicle is designed to carry. This includes the weight of the empty vehicle, loading platform, occupants, fuel, and any load.**

Incomplete Vehicle Certification Label

The Incomplete Vehicle Certification Label contains the chassis VIN, date of manufacture, and listing of applicable motor vehicle safety standards.

Components and Weights Label

The Major Components and Weights Label includes chassis weight and gross weight information, as well as model and serial numbers for the vehicle, engine, transmission, and axles.

https://truckmanualshub.com/

Noise Emission Label

The Noise Emission Label contains the chassis serial number, date of manufacture, and information regarding US noise emission regulations. This label is not provided on Canadian registered vehicles.

Paint Identification Label

The Paint Identification Label contains the paint colors used by the factory to paint the truck. It lists frame, wheels, cab interior and exterior colors. This label is located either underneath the dash to the left of the steering column support, inside the glovebox, or on the passenger's door frame.

COMPONENT IDENTIFICATION

Each of the following components has their own identification label.

Engine Identification

The engine serial number is stamped on a plate located on the left front of the engine. For further information, please refer to the Engine Operation and Maintenance Manual (included in the glove compartment of each vehicle).

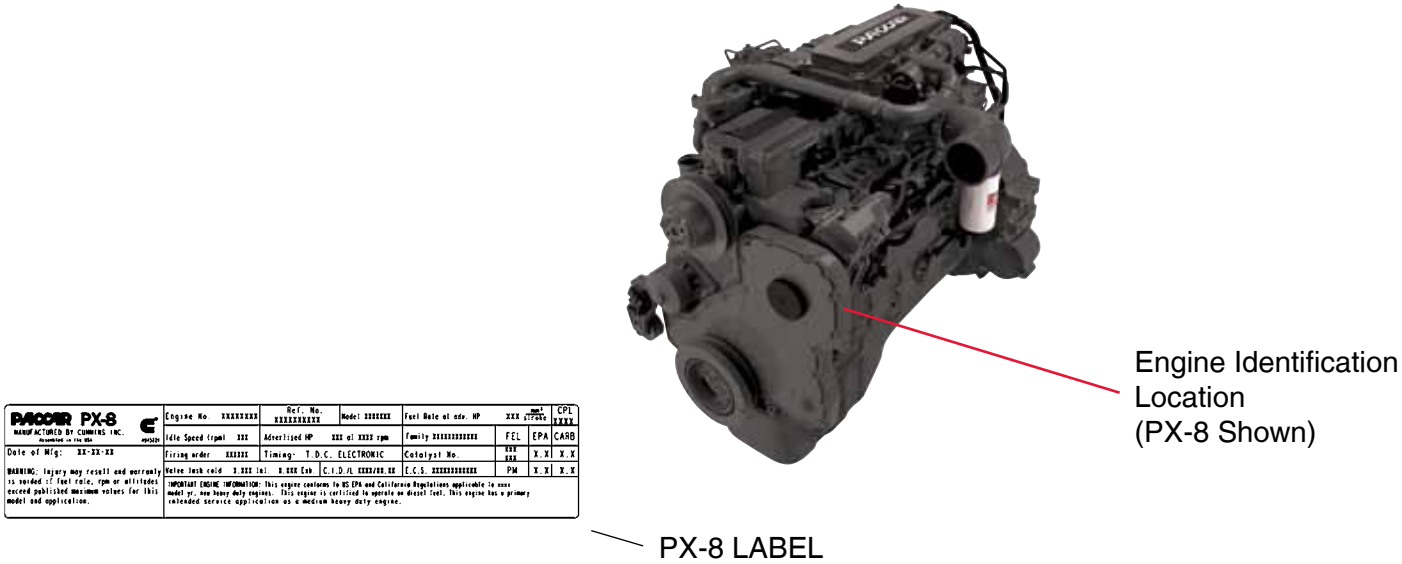

Figure A-3. Engine Identification Location

https://truckmanualshub.com/

Transmission Identification

The transmission identification number is stamped on a tag affixed to the right forward side of the transmission case. It includes among other specifications the transmission model, serial, and part number.

Front Axle Identification

The front axle has a identification tag located on the front axle beam. It includes the axle model, part number and serial number.

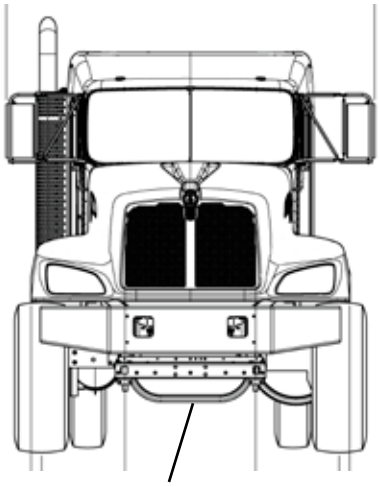

FIGURE A-4. Front Axle Identification

Rear Axle Identification

The rear axle identification numbering system includes two labels or stamps.

1. Axle Housing Number Tag, located on the left forward side of the housing arm. This tag identifies the axle housing.

2. Axle Differential Carrier Identification, located on the top side of the differential carrier. The following information is either stamped, or marked with a metal tag: Model No., Carrier Production Assembly No., Carrier Assembly Serial No., Gear Ratio, Axle Specifications Number and OEM part number and country of origin.

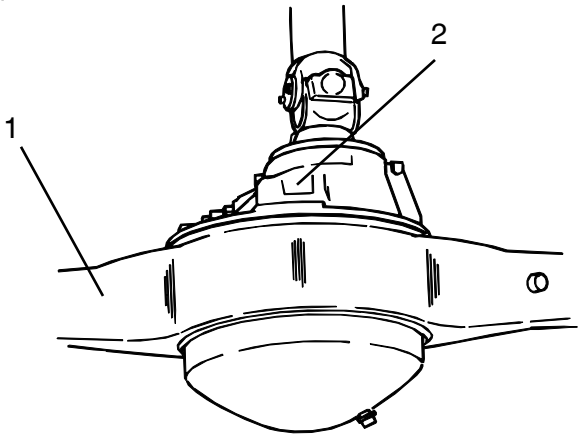

FIGURE A-5. Rear Axle Identification

Note:

Illustrated identification tag locations are typical. Actual locations may vary by axle manufacturer and with single versus tandem axles.

https://truckmanualshub.com/

KENWORTH®

A PACCAR COMPANY

Kenworth Truck Company
P.O. Box 1000
Kirkland, WA 98083
(425) 828-5000