https://truckmanualshub.com/

SHIFT_ is an English word from a Japanese car company that best embraces our values and the mission of this corporation. No matter where you are in the world, SHIFT_ is the way we express who we are, how we work and what we are trying to accomplish.
Everything we touch, we SHIFT_ And everything we SHIFT_ we try to make better and uniquely Nissan.

Visit our websites at:
www.nissan.co.uk
www.nissan-lcv.co.uk

Dealer stamp:

SHIFT_business

We take all our environmental responsibilities very seriously - innovation comes today with a deep respect for the environment. Our engines are now much more inobtrusive and their emissions have been considerably reduced. All our vehicles are designed with recycling in mind and are on target to reach 95% recyclability. This brochure is for general guidance only and its content do not in any way constitute an offer or representation from Nissan. Every effort has been made to ensure that the content of this publication is correct at the time of going to press. This brochure has been produced featuring prototypes vehicles exhibited at motor shows. In accordance with the company's policy of continuously improving its products, Nissan Europe reserves the right to change at any time the specifications and the vehicles described and shown in this publication. Nissan dealers will be informed of any such modifications as quickly as possible. Please check with your Nissan dealer to receive the most up-to-date information. Because of the limitations of the printing processes used, the colours shown in this brochure may differ slightly from the actual colours of the paint and interior trim materials used. All rights reserved. Reproduction in whole or part of this brochure without the written consent of Nissan Europe is forbidden. Benefits and services are provided by RAC Motoring Services and/or RAC Insurance Limited. RAC Motoring Services (Company No. 01424399, Head Office: 8 Surrey Street, Norwich, NR1 3NG) in respect of insurance mediation activities only and RAC Insurance Limited (Company No. 2355834, Head Office: 8 Surrey Street, Norwich, NR1 3NG) are authorised and regulated by the Financial Services Authority within the jurisdiction of the Financial Ombudsman Service and the Financial Services Compensation Scheme. Calls may be monitored and/or recorded.

This brochure is made from chlorinefree paper. Part number 99999-53100.
Printed in June 2008.

NISSAN NEW CABSTAR

TECHNICAL SPECIFICATIONS

https://truckmanualshub.com/

GRADES

Whatever your requirement there is a New Cabstar to suit your business. Available in three wheelbases and with a choice of three-seat single cab or six-seat double cab, New Cabstar can be specified as a dropside, tipper or as a chassis cab ready for conversion. Each model is equipped with a refined Common Rail diesel engine, with either 5 or 6 speed gear box, which can cope with the most demanding payload.

Mandatory speed limiter on 4.5T models
* Standard on 4.5T at no cost
# When vehicle equipped with optional AC

NB: 4.5T GVW conversions are by special arrangement

BASIC

SWB 3.4T GVW
2.5DCI 110PS 5 SPEED

SINGLE TILT CAB
SINGLE REAR WHEELS

SAFETY & SECURITY
- Driver airbag
- Keyless entry
- Alarm
- Immobiliser
- Front bumper with shock absorber
- Lockable tilting cabin system
- Reinforced cabin structure
- Seatbelts with pretensioners

COMFORT AND CONVENIENCE
- Radio CD player
- Power windows
- Numerous storage areas including:
  - A4 storage
  - chilled cup holders and glove box#
  - documents glove box
  - overhead storage
  - foldaway centre clipboard tray (in the back of middle seat)
  - tilt cabin for easy servicing

OPTIONS
- Metallic Paint
- Digital Tachograph
- Front Air Conditioning

3.4 & 3.5T BODY OPTIONS
- Chassis
- Tipper
- Dropside

BASIC+

SWB 3.5T GVW
2.5DCI 130PS 5 SPEED

SWB 4.5T GVW
2.5DCI 130PS 6 SPEED
3.0DCI 150PS 6 SPEED

SINGLE TILT CAB
TWIN REAR WHEELS

ADDITIONAL SPEC TO BASIC GRADE

SAFETY & SECURITY
- ABS with EBD

OPTIONS
- Metallic Paint
- Digital Tachograph*
- Passenger airbag
- Front Air Conditioning
- Limited slip differential and reinforced suspension

3.5T BODY OPTIONS
- Chassis
- Tipper
- Dropside
- Box
- Freezer / Chiller Box

PRO

MWB 3.5T GVW
2.5DCI 130PS 6 SPEED

MWB 4.5T GVW
2.5DCI 130PS 6 SPEED
3.0DCI 150PS 6 SPEED

SINGLE TILT CAB
OR DOUBLE FIXED CAB
TWIN REAR WHEELS

ADDITIONAL SPEC TO BASIC+ GRADE

COMFORT AND CONVENIENCE
- Easy Hill Start
- Power and heated mirrors
- Battery high capacity 110 Ah/12V

OPTIONS
- Metallic Paint
- Digital Tachograph*
- Passenger airbag
- Front Air Conditioning
- Limited slip differential and reinforced suspension

3.5T BODY OPTIONS
- Chassis
- Tipper
- Dropside
- Box van (Single cab only)
- Freezer / Chiller Box (Single cab only)

PRO+

LWB 3.5T GVW
2.5DCI 130PS 6 SPEED
3.0DCI 150PS 6 SPEED

LWB 4.5T GVW
2.5DCI 130PS 6 SPEED
3.0DCI 150PS 6 SPEED

SINGLE TILT CAB
OR DOUBLE FIXED CAB
TWIN REAR WHEELS

ADDITIONAL SPEC TO PRO GRADE

COMFORT AND CONVENIENCE
- Rear heater (Double cab versions)

OPTIONS
- Metallic Paint
- Digital Tachograph*
- Passenger airbag
- Front Air Conditioning

3.5T BODY OPTIONS
- Chassis
- Tipper (Double cab only)
- Dropside
- Box van (Single cab only)
- Freezer / Chiller Box (Single cab only)

https://truckmanualshub.com/

NEW CABSTAR TECHNICAL DATA SHEET

CAB			Single Cab	Single Cab	Single Cab	Double	Single Cab	Double	Single Cab	Double	Single Cab	Double	Single Cab	Double
ENGINE			YD25DDTi (Lo)	YD25DDTi (Mi)			YD25DDTi (Mi)		ZD30 Kai (Hi)		YD25DDTi (Mi)		ZD30 Kai (Hi)	
TRANSMISSION			M5-35A (5 sp)	M5-35A (5 sp)	6S380 (6 sp)		6S380 (6 sp)		6S380 (6 sp)		6S380 (6sp)			
GVW			3.4	3.5							4.5			
REAR WHEELS			SINGLE	TWIN							TWIN			
WHEELBASE			SWB	SWB	MWB	MWB	LWB	LWB	LWB	LWB	SWB	MWB	LWB	MWB	LWB	SWB	MWB	LWB	MWB	LWB
ENGINE PERFORMANCE (according to EC 80/1269 directive)														
Maximum engine power		kW(hp)/rpm	81 (110) @ 3.600	96 (130) @ 3.600			96 (130) @ 3.600		110 (150) @ 3.400		96 (130) @ 3.600		110 (150) @ 3.400	
Maximum engine torque		Nm/rpm	250 @ 1.600	270 @ 1.800			270 @ 1.800		350 @ 1.600		270 @ 1.800		350 @ 1.600	
Emission class			Euro4 (70/220/EEC amended by 2003/76/EC)								Euro4 (70/220/EEC amended by 2003/76/EC)			
ENGINE DESCRIPTION														
No. of cylinders, configuration			4, in line				4, in line		4, in line		4, in line		4, in line	
Valves per cylinder			4, DOHC				4, DOHC		4, DOHC		4, DOHC		4, DOHC	
Air intake system			Turbo intercooler				Turbo intercooler		Turbo intercooler		Turbo intercooler		Turbo intercooler	
Control system			ECCS				ECCS		ECCS		ECCS		ECCS	
Engine displacement		cc	2488				2488		2953		2488		2953	
Bore x Stroke		mm	89 x 100				89 x 100		96 x 102		89 x 100		96 x 102	
Compression ratio			16.5 :1				16.5 :1		16.9 : 1		16,5 : 1		16,9 : 1	
Fuel type			Diesel				Diesel		Diesel		Diesel		Diesel	
Fuel supply			Direct Injection + Common Rail				Direct Injection + Common Rail		Direct Injection + Common Rail		Direct Injection + Common Rail		Direct Injection + Common Rail	
Emission control system			EGR + Catalyst				EGR + Catalyst		EGR + Catalyst		EGR + Catalyst		EGR + Catalyst	
Electrical system		V	12				12		12		12		12	
Starter		Kw	2.2				2.2		2.5 (option 2.8)		2.2		2,5 (option 2,8)	
Alternator		Amps	130				130		135		130		135	
TRANSMISSION SPECIFICATION														
Clutch type			Dry, single plate with Hydraulic control								Dry, single plate with Hydraulic control			
Transmission type			5 speed M/T	5 speed M/T	6 speed M/T		6 speed M/T		6 speed M/T		6 speed M/T			
Gear ratio	1st		4.660	4.660	5.357		5.357		5.357		5.357			
	2nd		2.930	2.930	3.154		3.154		3.154		3.154			
	3rd		1.380	1.380	2.041		2.041		2.041		2.041			
	4th		1.000	1.000	1.365		1.365		1.365		1.365			
	5th		0.830	0.830	1.000		1.000		1.000		1.000			
	6th		N/A	N/A	0.790		0.790		0.790		0.790			
	Rev		4.094	4.094	4.830		4.830		4.830		4.830			
Final Drive type			Single reduction of hypoid type								Single reduction of hypoid type			
Final Drive Ratio			4.111	4.111	4.111		4.111		4.375		4.111		4.375	

https://truckmanualshub.com/

NEW CABSTAR TECHNICAL DATA SHEET

CAB			Single Cab	Single Cab	Single Cab	Double		Single Cab	Double	Single Cab	Double
ENGINE			YD25DDTi (Lo)	YD25DDTi (Mi)				YD25DDTi (Mi)		ZD30 Kai (Hi)	
TRANSMISSION			M5-35A (5 sp)	M5-35A (5 sp)	6S380 (6 sp)			6S380 (6 sp)		6S380 (6 sp)	
GVW			3.4	3.5							
REAR WHEELS			SINGLE	TWIN							
WHEELBASE			SWB	SWB	MWB	MWB		LWB	LWB	LWB	LWB
CHASSIS											
Frame type			C Section steel longitudinal side members and riveted cross members								
Frame width		mm	752								
Section		mm	128 x 52 x 4								
Front Suspension			Independent, Double Wishbone with transversal springs, with shock absorvers and stabilizer bar								
Rear Suspension			Rigid axle, Parabolic leaf spring with shock absorvers and stabilizer bar								
Steering System			Rack & Pinion, Power Assisted								
Turning circle, wall to wall		m	10.58	10.56	11.84	11.92		13.46	13.54	13.46	13.54
Turning circle, curb to curb		m	9.62	9.58	10.86	10.94		12.44	12.54	12.44	12.54
Brakes System			Dual hydraulic circuit with vacuum servo assistance (ABS option)								
Front type			Vented Disc, PF 2 x 48, Øef= 231								
Rear type			Solid Disc, PFC 1 x 46 Øef= 238								
Wheels size	Front		5½ J 15, single	5 J 15, single							
	Rear		5½ J 15, single	5 J 15, twin							
Wheels bolts			5 x M16	5 x M16							
Tyre size			205/70 R 15	195/70 R 15							
FUEL TANK											
Fuel Tank Capacity		ltrs	90, Right side								
PERFORMANCE (at GVW and Std final drive)											
Maximum speed (0% grade) [N2&N3 speed limit at 90 Km/h]		km/h	125	133	133			137		137	
		MPH	78	83	83			85		85	
rpm engine at 90 Km/h			2518	2575	2454			2454		2612	
Max ascending grade		%	43	47	57			96		96	
Max starting ascending grade		%	34	48	77			77		77	
DOOR & SEATING CAPACITY											
Number of seats	1st row		3								
	2nd row		N/A	N/A	N/A	3	3	N/A	3	N/A	3

Single Cab	Double	Single Cab	Double
YD25DDTi (Mi)		ZD30 Kai (Hi)	
6S380 (6sp)			
4.5			
TWIN			
SWB MWB LWB	MWB LWB	SWB MWB LWB	MWB LWB
C Section steel longitudinal side members and riveted cross members			
752			
128 x 52 x 4			
Independent, Double Wishbone with transversal springs, with shock absorvers and stabilizer bar			
Rigid axle, Parabolic leaf spring with shock absorvers and stabilizer bar			
Rack & Pinion, Power Assisted			
10.58 11.87 13.48	11.90 13.51	10.58 11.87 13.48	11.90 13.51
9.58 10.86 12.46	10.89 12.49	9.58 10.86 12.46	10.89 12.49
Dual Hyd circuit with vacuum servo assist, with ABS			
Vented Disc, PF 2 x 52, Øef= 234,6			
Vented Disc, PF 2 x 44, Øef= 241			
5½ J 16, single			
5½ J 16, twin			
6 x M18			
185/75 R 16			
90, Right side			
90		90	
56		56	
2348		2498	
39		59	
31		47	
3			
N/A	3	N/A	3

https://truckmanualshub.com/

NEW CABSTAR CHASSIS VARIANTS

Available in 3.4T, 3.5T and 4.5T GVW variants, with 2.5m, 2.9m and 3.4m wheelbases, single or twin rear wheels and single or double cabs, the New Cabstar offers a truly comprehensive choice to suit your application.

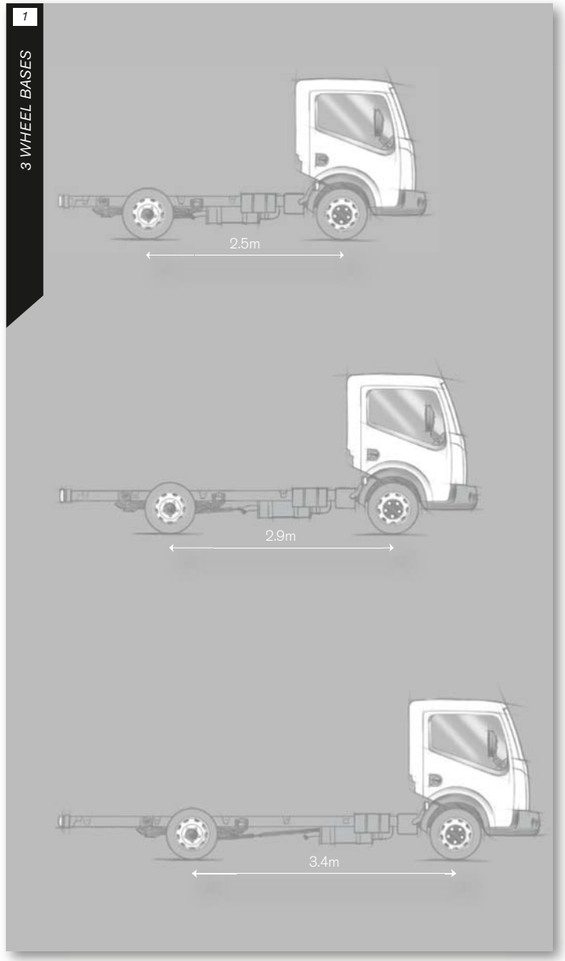

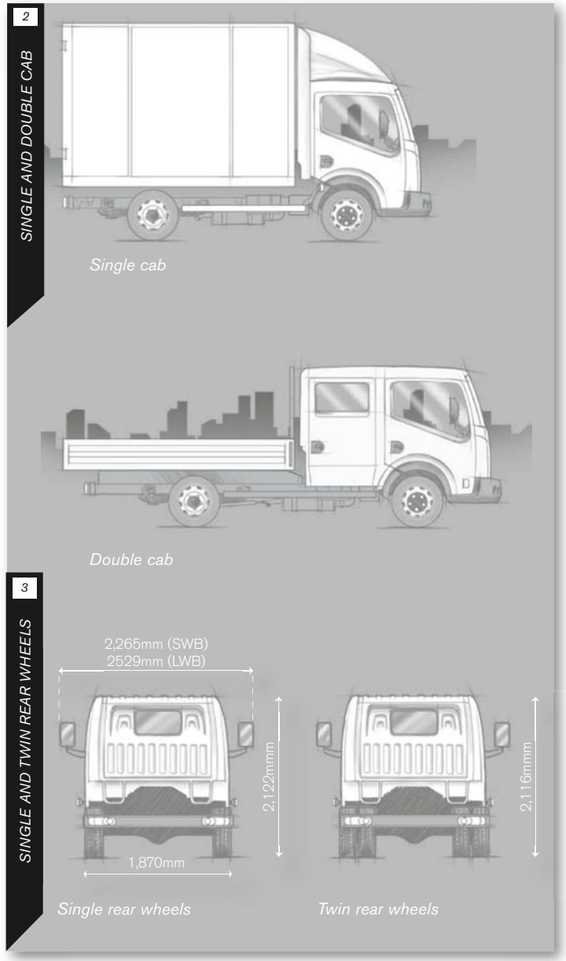

Chassis

		Single Cab					Double Cab		
		SWB		MWB	LWB	LWB	MWB	LWB	LWB
		34.11	35.13	35.13	35.13	35.15	35.13	35.13	35.15
WB	Wheelbase	2,500		2,900	3,400	3,400	2,900	3,400	3,400
AC max	Max body width	2,200		2,200	2,200	2,200	2,200	2,200	2,200
MW	Cabin width inc mirrors	2,265		2,529	2,529	2,529	2,529	2,529	2,529
CW	Cabin width exc mirrors	1,870		1,870	1,870	1,870	1,870	1,870	1,870
Foh	Front overhang	1,062		1,062	1,062	1,062	1,062	1,062	1,062
Roh	Rear overhang	983		1,283	1,583	1,583	1,283	1,583	1,583
LT	Overall length	4,545		5,245	6,045	6,045	5,245	6,045	6,045
IC	Front axle to rear body	650		650	650	650	1,650	1,650	1,650
LC min	Body length min	2,651		3,290	4,115	4,227	2,051	3,129	3,310
LC max	Body length max	3,358	3,476	4,136	4,961	4,961	3,136	3,961	3,961

RW	Rear axle width	1,735	1,818	1,818	1,818	1,816	1,818	1,818	1,816
VD	Front track	1,586	1,573	1,573	1,573	1,573	1,573	1,573	1,573
VT	Rear track	1,518	1,396	1,396	1,396	1,394	1,396	1,396	1,394
H1	Height ({unladen)	2,122	2,116	2,116	2,116	2,116	2,116	2,116	2,116
W	Max length	5,070	5,188	5,848	6,673	6,673	5,808	6,633	6,633

All figures mm

Gross Vehicle Weight	3,400	3,500	3,500	3,500	3,500	3,500	3,500	3,500
Kerb Weight	1,623	1,648	1,677	1,697	1,820	1,852	1,872	1,960
Payload	1,777	1,852	1,823	1,803	1,680	1,648	1,628	1,540
Gross Train Weight	5,400	7,000	7,000	7,000	7,000	7,000	7,000	7,000

All figures kg

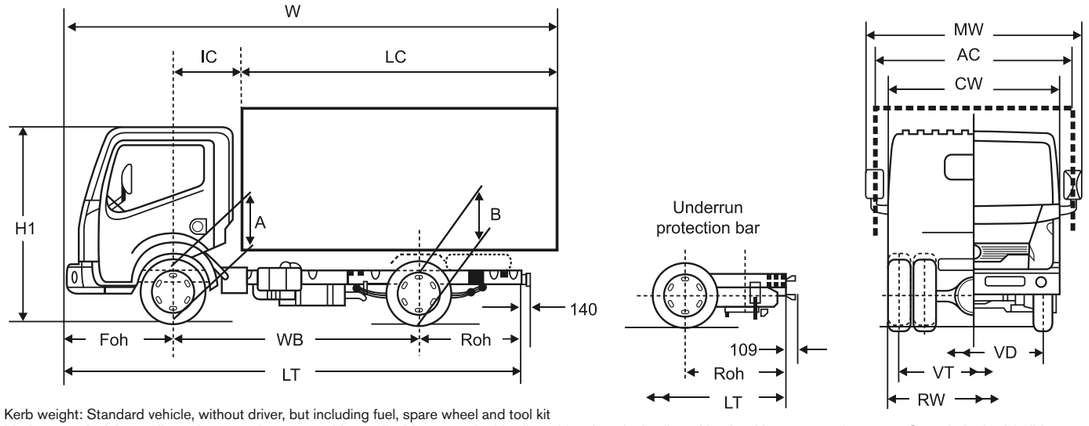

Kerb weight: Standard vehicle, without driver, but including fuel, spare wheel and tool kit
Maximum and minimum dimensions are given as a guide, applicable to standard bodies with uniformly distributed loads without cranes lifts etc. Consult the bodybuilder standards for full details.

https://truckmanualshub.com/

Dropside

		Single Cab					Double Cab		
		SWB		MWB	LWB 130	LWB 150	MWB	LWB 130	LWB 150
		34.11	35.13	35.13	35.13	35.15	35.13	35.13	35.15
WB	Wheelbase	2,500		2,900	3,400	3,400	2,900	3,400	3,400
Wc	Body width	1,900		1,900	1,900	1,900	1,900	1,900	1,900
MW	Cabin width inc mirrors	2,265		2,529	2,529	2,529	2,529	2,529	2,529
CW	Cabin width exc mirrors	1,870		1,870	1,870	1,870	1,870	1,870	1,870
Foh	Front overhang	1,062		1,062	1,062	1,062	1,062	1,062	1,062
Roh	Rear overhang	1,347		1,507	2,010	2,010	1,710	2,010	2,010
LT	Overall length	4,909		5,469	6,472	6,472	5,672	6,472	6,472
IC	Front axle to rear body	687		687	687	687	1,681	1,610	1,610
LC	Body length	3,160		3,720	4,600	4,600	3,000	3,720	3,720
H2	Body height	400		400	400	400	400	400	400
H3	Load bed to floor height	917		917	900	900	901	900	900
RW	Rear axle width	1,816		1,818	1,818	1,816	1,818	1,818	1,818
VD	Front track	1,586		1,573	1,573	1,573	1,573	1,573	1,573
VT	Rear track	1,518		1,396	1,396	1,394	1,396	1,396	1,396
H1	Height (unladen)	2,116		2,116	2,116	2,116	2,116	2,116	2,116

All figures mm

Gross Vehicle Weight	3,400	3,500	3,500	3,500	3,500	3,500	3,500	3,500
Kerb Weight	1,879	1,921	1,978	2,120	2,243	2,095	2,173	2,261
Payload	1,521	1,579	1,522	1,380	1,257	1,405	1,327	1,239
Gross Train weight	5,400	7,000	7,000	7,000	7,000	7,000	7,000	7,000

All figures kg

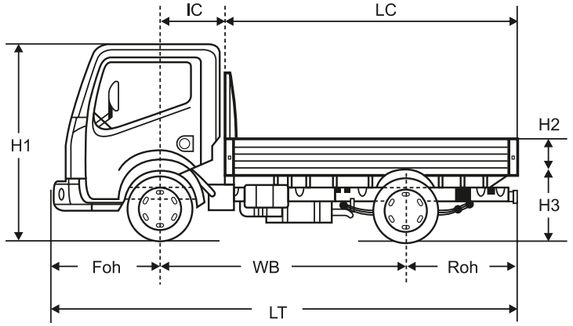

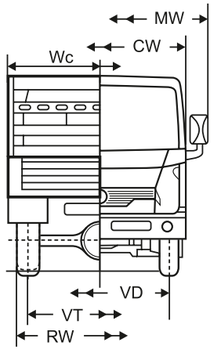

Tipper

		Single Cab			Double Cab		
		SWB	SWB	MWB	MWB	LWB	LWB
		34.11	35.13	35.13	35.13	35.13	35.15
WB	Wheelbase	2,500	2,500	2,900	2,900	3,400	3,400
Wc	Body width	1,900	1,900	1,900	1,900	1,900	1,900
MW	Cabin widthinc mirrors	2,265	2,265	2,529	2,529	2,529	2,529
CW	Cabin width exc mirrors	1,870	1,870	1,870	1,870	1,870	1,870
Foh	Front overhang	1,062	1,062	1,062	1,062	1,062	1,062
Roh	Rear overhang	1,345	1,400	1,300	1,400	1,400	1,400
LT	Overall length	4,900	4,962	5,262	5,362	5,862	5,862
IC	Front axle to rear body	630	700	700	1,610	1,610	1,610
LC	Body length	3,180	3,200	3,500	2,650	3,200	3,200
H2	Body height	400	400	400	400	400	400
H3	Load bed to floor height	920	950	950	950	950	950
RW	Rear axle width	1,735	1,818	1,818	1,818	1,818	1,816
VD	Front track	1,586	1,573	1,573	1,573	1,573	1,573
VT	Rear track	1,518	1,396	1,396	1,396	1,396	1,394
H1	Height (unladen)	2,122	2,116	2,116	2,116	2,116	2,116

All figures mm

Gross Vehicle Weight	3,400	3,500	3,500	3,500	3,500	3,500
Kerb Weight	2,140	2,200	2,240	2,382	2,412	2,510
Payload	1,260	1,300	1,260	1,118	1,088	968
Gross Train weight	5,400	7,000	7,000	7,000	7,000	7,000

All figures kg

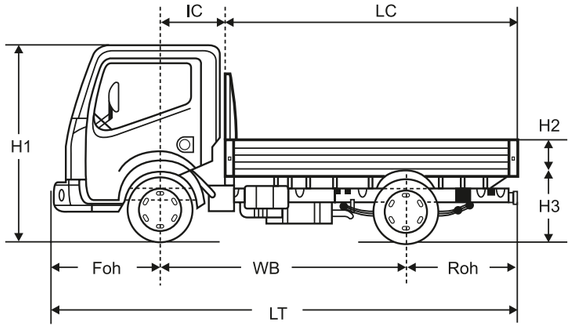

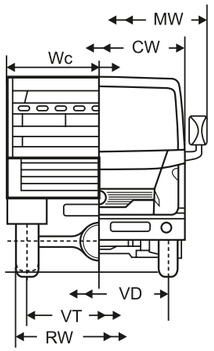

https://truckmanualshub.com/

Box Van

		Single Cab		
		SWB	MWB	LWB
		35.13	35.13	35.15
WB	Wheelbase	2,500	2,900	3,400
Wc	Body width	2,150	2,150	2,150
MW	Cabin width inc mirrors	2,265	2,529	2,529
CW	Cabin width exc mirrors	1,870	1,870	1,870
Foh	Front overhang	1,062	1,062	1,062
Roh	Rear overhang	1,500	1,600	1,750
LT	Overall length	5,062	5,262	6,212
IC	Front axle to rear body	700	700	700
LC	Body length	3,300	3,800	4,450
H2	Body height	2,150	2,150	2,150
H3	Load bed to floor height	880	880	880
RW	Rear axle width	1,818	1,818	1,816
VD	Front track	1,573	1,573	1,573
VT	Rear track	1,396	1,396	1,394
H1	Max Height	2,930	2,930	2,930

All figures mm

Internal Length	3,275	3,725	4,375
Inernal Width	2,075	2,075	2,075
Internal height	2,100	2,100	2,100
Load Volume Mcu	14.3	16.2	19

Gross Vehicle Weight	3,500	3,500	3,500
Kerb Weight	2,078	2,122	2,340
Payload	1,422	1,378	1,160
GrossTrain weight	7,000	7,000	7,000

All figures kg 1 add 75kg for standby 2 subtract 75kg for standby

Freezer / chiller

		Single Cab	
		SWB	MWB
		35.13	35.13
WB	Wheelbase	2,500	2,900
Wc	Body width	2,200	2,200
MW	Cabin width inc mirrors	2,265	2,529
CW	Cabin width exc mirrors	1,870	1,870
Foh	Front overhang	1,062	1,062
Roh	Rear overhang	1,500	1,600
LT	Overall length	4,962	5,262
IC	Front axle to rear body	700	700
LC	Body length	3,300	3,800
H2	Body height	2,200	2,200
H3	Load bed to floor height	880	880
RW	Rear axle width	1,816	1,816
VD	Front track	1,573	1,573
VT	Rear track	1,396	1,396
H1	Height ({unladen)	2,980	2,980

Internal Length	3,164	3,664
Inernal Width	2,074	2,074
Internal height	2,032	2,032
Load Volume Mcu	13.9	15.4

3,500	3,500	3,500
2,264	2,376	2,376
1,236	1,124	1,124
7,000	7,000	7,000

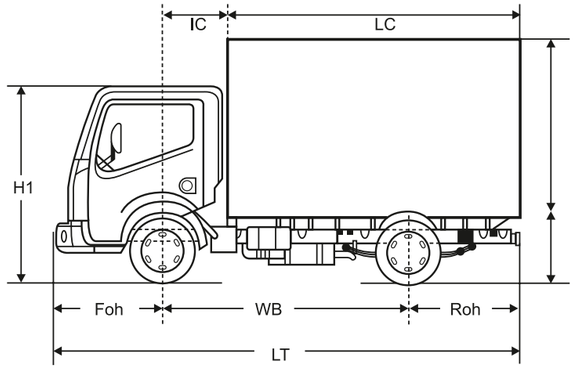

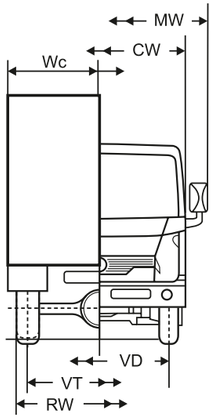

1 add 75kg for standby
2 subtract 75kg for standby

Chassis 4.5T

		Single Cab					Double Cab			
		SWB	MWB	MWB	LWB	LWB	MWB	MWB	LWB	LWB
		45.13	45.13	45.15	45.13	45.15	45.13	45.15	45.13	45.15
WB	Wheelbase	2,500	2,900	2,900	3,400	3,400	2,900	2,900	3,400	3,400
AC max	Max body width	2,200	2,200	2,200	2,200	2,200	2,200	2,200	2,200	2,200
MW	Cabin width inc mirrors	2,265	2,529	2,529	2,529	2,529	2,529	2,529	2,529	2,529
CW	Cabin width exc mirrors	1,870	1,870	1,870	1,870	1,870	1,870	1,870	1,870	1,870
Foh	Front overhang	1,062	1,062	1,062	1,062	1,062	1,062	1,062	1,062	1,062
Roh	Rear overhang	1,183	1,483	1,483	1,883	1,883	1,483	1,483	1,883	1,883
LT	Overall length	4,745	5,445	5,445	6,345	6,345	5,445	5,445	6,345	6,345
IC	Front axle to rear body	650	650	650	650	650	1,650	1,650	1,650	1,650
Lc min	Body length min	3,008	3,730	3,730	4,635	4,635	2,284	2,284	3,361	3,361
Lc max	Body length max	3,475	4,136	4,136	4,961	4,961	3,136	3,136	3,961	3,961

RW	Rear axle width	1,902	1,902	1,914	1,902	1,914	1,902	1,914	1,902	1,914
VD	Front track	1,569	1,569	1,569	1,569	1,569	1,569	1,569	1,569	1,569
VT	Rear track	1,480	1,480	1,492	1,480	1,492	1,480	1,492	1,480	1,492
H1	Height ({unladen)	2,135	2,135	2,135	2,135	2,135	2,135	2,135	2,135	2,135
Y min	Gravity centre min	5,188	5,848	5,848	6,673	6,673	5,848	5,848	6,673	6,673
Y max	Gravity centre max	2,388	2,718	2,718	3,131	3,131	3,218	3,218	3,631	3,631
W	Max length	5,188	5,848	5,848	6,673	6,673	5,848	5,848	6,673	6,673

All figures mm

Gross Vehicle Weight	4500	4500	4500	4500	4500	4500	4500	4500	4500
Kerb Weight	1734	1754	1842	1774	1862	1924	2012	1944	2032
Payload	2766	2746	2658	2726	2638	2576	2488	2556	2468
GrossTrain weight	8000	8000	8000	8000	8000	8000	8000	8000	8000

All figures kg

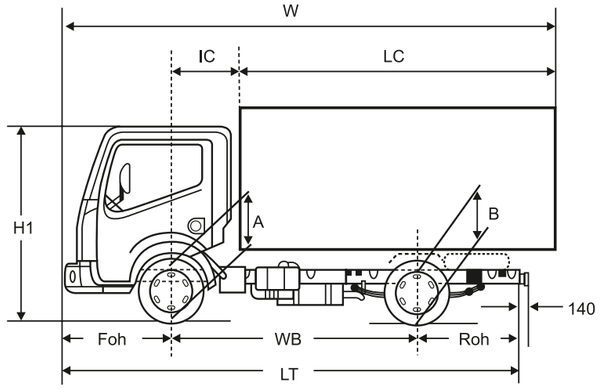

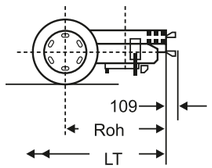

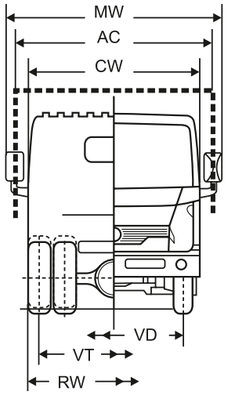

Kerb weight: Standard vehicle, without driver, but including fuel, spare wheel and tool kit. Maximum and minimum dimensions are given as a guide, applicable to standard bodies with uniformly distributed loads without cranes lifts etc. Consult the bodybuilder standards for full details.

https://truckmanualshub.com/

712143-CabstarSpec V4.indd 14-15 30/6/08 12:49:08