www.rtrucks.ru
www.rtrucks.ru
www.rtrucks.ru

E-C1			
CLR-GA	WIRE NAME	POS	TERM/PLUG
		1	87-8737
BR-18	GB28-E1	2	180-9340
BR-18	GB29-E5	3	180-9340
		4	87-8737
		5	87-8737
		6	87-8737
		7	87-8737
BU-18	GB50-E9	8	180-9340
		9	87-8737
		10	87-8737
		11	87-8737
		12	87-8737
		13	87-8737
OY-18	A747-E10	14	180-9340
		15	87-8737
		16	87-8737
		17	87-8737
PK-18	GB33-E11	18	180-9340
		19	87-8737
		20	87-8737
		21	87-8737
		22	87-8737
		23	87-8737
OY-18	994-E16	24	180-9340
BR-18	GB49-E17	25	180-9340
		26	87-8737
		27	87-8737
		28	87-8737
		29	87-8737
		30	87-8737
		31	87-8737
BU-18	995-E18	32	180-9340
		33	180-9340
		34	87-8737
BU-18	C987-E20	35	180-9340
OY-18	A701-E21	36	180-9340
PU-18	A702-E22	37	180-9340
BR-18	A703-E23	38	180-9340
OR-18	A704-E24	39	180-9340
PK-18	A746-E25	40	180-9340
BR-18	GB26-E26	41	180-9340
BU-18	GB27-E27	42	180-9340
		43	87-8737
BR-18	L983-E37	44	180-9340
OR-18	L984-E32	45	180-9340
YL-18	L985-E33	46	180-9340
		47	87-8737
BR-18	E964-E38	48	180-9340
BK-18	E963-E39	49	180-9340
		50	87-8737
		51	87-8737
		52	87-8737
		53	87-8737
BU-18	A705-E40	54	180-9340
OY-18	A706-E41	55	180-9340
		56	87-8737
		57	87-8737
YL-18	E966-E36	58	180-9340
BU-18	E965-E37	59	180-9340
		60	87-8737
PK-18	GB54-E45	61	180-9340
PU-18	GB55-E46	62	180-9340
BR-18	B795-E99	63	180-9340
BK-18	C211-E98	64	180-9340
		65	87-8737
		66	87-8737
		67	87-8737
		68	87-8737
		69	87-8737
		70	87-8737
ACCESSORY TABLE			
QTY	PART NAME		P/N
1	PLUG AS.		160-7690
2	STRAP		35-2093
1	ENDBELL		126-1774

E-C2			
CLR-GA	WIRE NAME	POS	TERM/PLUG
BR-18	GB28-E2	A	180-9340
OR-18	GB29-E8	B	180-9340
OY-18	A747-E10	C	180-9340
ACCESSORY TABLE			
QTY	PART NAME		P/N
1	PLUG AS.		155-2087
1	WEDGE		155-2276

E-C3			
CLR-GA	WIRE NAME	POS	TERM/PLUG
BR-18	GB28-E3	A	180-9340
OR-18	GB29-E7	B	180-9340
PK-18	A746-E25	C	180-9340
ACCESSORY TABLE			
QTY	PART NAME		P/N
1	PLUG AS.		155-2287
1	WEDGE		155-2276

E-C4			
CLR-GA	WIRE NAME	POS	TERM/PLUG
RD-18	C987-E44	A	116-6159
BU-18	GB50-E43	B	116-6159
ACCESSORY TABLE			
QTY	PART NAME		P/N
1	PLUG AS.		116-6158
3	SEAL		100-9874
2	RETAINER		111-2422
1	CAP		116-6161

E-C5			
CLR-GA	WIRE NAME	POS	TERM/PLUG
BR-18	GB26-E26	A	180-9340
BU-18	GB27-E27	B	180-9340
OR-18	994-E16	C	180-9340
ACCESSORY TABLE			
QTY	PART NAME		P/N
1	PLUG AS.		155-2287
1	WEDGE		155-2276

E-C6			
CLR-GA	WIRE NAME	POS	TERM/PLUG
BU-18	995-E18	1	180-9340
PK-18	GB33-E12	2	180-9340
ACCESSORY TABLE			
QTY	PART NAME		P/N
1	PLUG AS.		155-2289
1	WEDGE		155-2281

E-C7			
CLR-GA	WIRE NAME	POS	TERM/PLUG
BR-18	GB28-E4	A	180-9339
OR-18	GB29-E6	B	180-9339
BU-18	GB49-E17	C	180-9339
ACCESSORY TABLE			
QTY	PART NAME		P/N
1	RECEPTACLE AS.		3E-3370
1	WEDGE		3E-3371

E-C8			
CLR-GA	WIRE NAME	POS	TERM/PLUG
BR-18	GB28-E5	A	180-9339
OR-18	GB29-E7	B	180-9339
BU-18	GB50-E42	C	180-9340
ACCESSORY TABLE			
QTY	PART NAME		P/N
1	PLUG AS.		155-2289
1	WEDGE		155-2281

E-C9			
CLR-GA	WIRE NAME	POS	TERM/PLUG
BR-18	GB28-E6	A	180-9339
OR-18	GB29-E8	B	180-9339
BU-18	GB49-E17	C	180-9339
ACCESSORY TABLE			
QTY	PART NAME		P/N
1	RECEPTACLE AS.		3E-3370
1	WEDGE		3E-3371

E-C10			
CLR-GA	WIRE NAME	POS	TERM/PLUG
BU-18	C987-E20	1	180-9340
BU-18	GB53-E13	2	180-9340
ACCESSORY TABLE			
QTY	PART NAME		P/N
1	PLUG AS.		155-2289
1	WEDGE		155-2281

E-C11			
CLR-GA	WIRE NAME	POS	TERM/PLUG
OY-18	A701-E21	1	180-9339
PU-18	A702-E22	2	180-9339
BR-18	A703-E23	3	180-9339
OR-18	A704-E24	4	180-9339
BU-18	A705-E40	5	180-9339
OY-18	A706-E41	6	180-9339
YL-18	L985-E35	7	180-9339
YL-18	L985-E34	8	180-9339
OR-18	L984-E30	9	180-9339
OR-18	L984-E31	10	180-9339
BR-18	L983-E29	11	180-9339
BR-18	L983-E28	12	180-9339
ACCESSORY TABLE			
QTY	PART NAME		P/N
1	RECEPTACLE AS.		3E-3179
1	WEDGE		3E-5180

E-C12			
CLR-GA	WIRE NAME	POS	TERM/PLUG
BU-18	C987-E20	1	180-9340
BU-18	GB53-E13	2	180-9340
ACCESSORY TABLE			
QTY	PART NAME		P/N
1	PLUG AS.		155-2289
1	WEDGE		155-2281

E-C13			
CLR-GA	WIRE NAME	POS	TERM/PLUG
BK-18	E963-E39	A	111-1567
BR-18	E964-E38	B	111-1567
ACCESSORY TABLE			
QTY	PART NAME		P/N
1	RECEPTACLE AS.		100-3320

E-C13			
CLR-GA	WIRE NAME	POS	TERM/PLUG
BU-18	E965-E37	A	111-1567
YL-18	E966-E36	B	111-1567
ACCESSORY TABLE			
QTY	PART NAME		P/N
1	RECEPTACLE AS.		111-2416

E-C14			
CLR-GA	WIRE NAME	POS	TERM/PLUG
BU-18	B795-E99	1	180-9340
BK-18	C211-E98	2	180-9340
ACCESSORY TABLE			
QTY	PART NAME		P/N
1	PLUG AS.		155-2289
1	WEDGE		155-2281

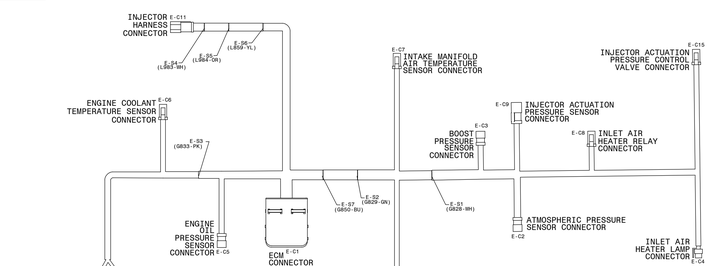

ENGINE HARNESS
222-5905
222-5907
CONNECTOR AND SPLICE LOCATIONS

CATERPILLAR®

RENR7691-04
May 2011

Schematic

C7 On-highway Engine Electrical System

KAL1-UP
SAP1-3955

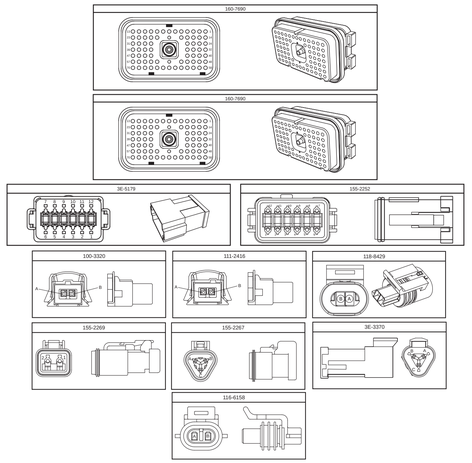

CONNECTORS

Harness And Wire Symbols

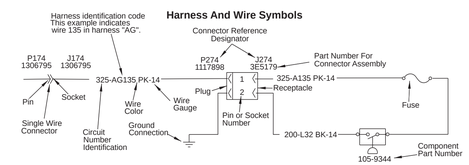

©2011 Caterpillar
All Rights Reserved

Printed in U.S.A.

E-C1			
CLR-GA	WIRE NAME	POS	TERM/PLUG
		1	87-8737
BR-18	GB28-E1	2	180-9340
BR-18	GB29-E5	3	180-9340
		4	87-8737
		5	87-8737
		6	87-8737
		7	87-8737
BU-18	GB50-E9	8	180-9340
		9	87-8737
		10	87-8737
		11	87-8737
		12	87-8737
		13	87-8737
OY-18	A747-E10	14	180-9340
		15	87-8737
		16	87-8737
		17	87-8737
PK-18	GB33-E11	18	180-9340
		19	87-8737
		20	87-8737
		21	87-8737
		22	87-8737
		23	87-8737
OY-18	994-E16	24	180-9340
BR-18	GB49-E17	25	180-9340
		26	87-8737
		27	87-8737
		28	87-8737
		29	87-8737
		30	87-8737
		31	87-8737
BU-18	995-E18	32	180-9340
OY-18	GB58-E48	33	180-9340
		34	87-8737
BU-18	C987-E20	35	180-9340
OY-18	A701-E21	36	180-9340
PU-18	A702-E22	37	180-9340
BR-18	A703-E23	38	180-9340
OR-18	A704-E24	39	180-9340
PK-18	A746-E25	40	180-9340
BR-18	GB26-E26	41	180-9340
BU-18	GB27-E27	42	180-9340
		43	87-8737
BR-18	L983-E37	44	180-9340
OR-18	L984-E32	45	180-9340
YL-18	L985-E33	46	180-9340
		47	87-8737
BR-18	E964-E38	48	180-9340
BK-18	E963-E39	49	180-9340
		50	87-8737
		51	87-8737
		52	87-8737
		53	87-8737
BU-18	A705-E40	54	180-9340
OY-18	A706-E41	55	180-9340
		56	87-8737
		57	87-8737
YL-18	E966-E36	58	180-9340
BU-18	E965-E37	59	180-9340
		60	87-8737
PK-18	GB54-E45	61	180-9340
PU-18	GB55-E46	62	180-9340
BR-18	B795-E99	63	180-9340
BK-18	C211-E98	64	180-9340
		65	87-8737
		66	87-8737
		67	87-8737
		68	87-8737
		69	87-8737
		70	87-8737
ACCESSORY TABLE			
QTY	PART NAME		P/N
1	PLUG AS.		160-7690
2	STRAP		35-2093
1	ENDBELL		126-1774

E-C2			
CLR-GA	WIRE NAME	POS	TERM/PLUG
BR-18	GB28-E2	A	180-9340
OR-18	GB29-E8	B	180-9340
OY-18	A747-E10	C	180-9340
ACCESSORY TABLE			
QTY	PART NAME		P/N
1	PLUG AS.		155-2087
1	WEDGE		155-2276

E-C3			
CLR-GA	WIRE NAME	POS	TERM/PLUG
BR-18	GB28-E3	A	180-9340
OR-18	GB29-E7	B	180-9340
PK-18	A746-E25	C	180-9340
ACCESSORY TABLE			
QTY	PART NAME		P/N
1	PLUG AS.		155-2287
1	WEDGE		155-2276

E-C4			
CLR-GA	WIRE NAME	POS	TERM/PLUG
RD-18	C987-E44	A	116-6159
BU-18	GB50-E43	B	116-6159
ACCESSORY TABLE			
QTY	PART NAME		P/N
1	PLUG AS.		116-6158
3	SEAL		100-9874
2	RETAINER		111-2422
1	CAP		116-6161

E-C5			
CLR-GA	WIRE NAME	POS	TERM/PLUG
BR-18	GB26-E26	A	180-9340
BU-18	GB27-E27	B	180-9340
OR-18	994-E16	C	180-9340
ACCESSORY TABLE			
QTY	PART NAME		P/N
1	PLUG AS.		155-2287
1	WEDGE		155-2276

E-C6			
CLR-GA	WIRE NAME	POS	TERM/PLUG
BU-18	995-E18	1	180-9340
PK-18	GB33-E12	2	180-9340
ACCESSORY TABLE			
QTY	PART NAME		P/N
1	PLUG AS.		155-2289
1	WEDGE		155-2281

E-C7			
CLR-GA	WIRE NAME	POS	TERM/PLUG
BR-18	GB28-E4	A	180-9339
OR-18	GB29-E6	B	180-9339
BU-18	GB49-E17	C	180-9339
ACCESSORY TABLE			
QTY	PART NAME		P/N
1	RECEPTACLE AS.		3E-3370
1	WEDGE		3E-3371

E-C8			
CLR-GA	WIRE NAME	POS	TERM/PLUG
BR-18	GB28-E5	A	180-9339
OR-18	GB29-E7	B	180-9339
BU-18	GB50-E42	C	180-9340
ACCESSORY TABLE			
QTY	PART NAME		P/N
1	PLUG AS.		155-2289
1	WEDGE		155-2281

E-C9			
CLR-GA	WIRE NAME	POS	TERM/PLUG
BR-18	GB28-E6	A	180-9339
OR-18	GB29-E8	B	180-9339
BU-18	GB49-E17	C	180-9339
ACCESSORY TABLE			
QTY	PART NAME		P/N
1	RECEPTACLE AS.		3E-3370
1	WEDGE		3E-3371

E-C10			
CLR-GA	WIRE NAME	POS	TERM/PLUG
BU-18	C987-E20	1	180-9340
BU-18	GB53-E13	2	180-9340
ACCESSORY TABLE			
QTY	PART NAME		P/N
1	PLUG AS.		155-2289
1	WEDGE		155-2281

E-C11			
CLR-GA	WIRE NAME	POS	TERM/PLUG
OY-18	A701-E21	1	180-9339
PU-18	A702-E22	2	180-9339
BR-18	A703-E23	3	180-9339
OR-18	A704-E24	4	180-9339
BU-18	A705-E40	5	180-9339
OY-18	A706-E41	6	180-9339
YL-18	L985-E35	7	180-9339
YL-18	L985-E34	8	180-9339
OR-18	L984-E30	9	180-9339
OR-18	L984-E31	10	180-9339
BR-18	L983-E29	11	180-9339
BR-18	L983-E28	12	180-9339
ACCESSORY TABLE			
QTY	PART NAME		P/N
1	RECEPTACLE AS.		3E-3179
1	WEDGE		3E-5180

E-C12			
CLR-GA	WIRE NAME	POS	TERM/PLUG
BU-18	C987-E20	1	180-9340
BU-18	GB53-E13	2	180-9340
ACCESSORY TABLE			
QTY	PART NAME		P/N
1	PLUG AS.		155-2289
1	WEDGE		155-2281

E-C13			
CLR-GA	WIRE NAME	POS	TERM/PLUG
BR-18	E963-E39	A	111-1567
BR-18	E964-E38	B	111-1567
ACCESSORY TABLE			
QTY	PART NAME		P/N
1	RECEPTACLE AS.		100-3320

E-C13			
CLR-GA	WIRE NAME	POS	TERM/PLUG
BU-18	E965-E37	A	111-1567
YL-18	E966-E36	B	111-1567
ACCESSORY TABLE			
QTY	PART NAME		P/N
1	RECEPTACLE AS.		111-2416

E-C14			
CLR-GA	WIRE NAME	POS	TERM/PLUG
BU-18	B795-E99	1	180-9340
BK-18	C211-E98	2	180-9340
ACCESSORY TABLE			
QTY	PART NAME		P/N
1	PLUG AS.		155-2289
1	WEDGE		155-2281

E-C15			
CLR-GA	WIRE NAME	POS	TERM/PLUG
BR-18	GB28-E2	A	180-9340
OR-18	GB29-E8	B	180-9340
YL-18	994-E16	C	180-9340
ACCESSORY TABLE			
QTY	PART NAME		P/N
1	PLUG AS.		155-2287
1	WEDGE		155-2276

E-C16			
CLR-GA	WIRE NAME	POS	TERM/PLUG
BR-18	GB28-E4	A	180-9339
OR-18	GB29-E6	B	180-9339
BU-18	GB49-E17	C	180-9339
ACCESSORY TABLE			
QTY	PART NAME		P/N
1	RECEPTACLE AS.		3E-3370
1	WEDGE		3E-3371

E-C17			
CLR-GA	WIRE NAME	POS	TERM/PLUG
BU-18	C987-E20	1	180-9340
PK-18	GB33-E13	2	180-9340
ACCESSORY TABLE			
QTY	PART NAME		P/N
1	PLUG AS.		155-2289
1	WEDGE		155-2281

E-C18			
CLR-GA	WIRE NAME	POS	TERM/PLUG
BU-18	E965-E37	A	111-1567
YL-18	E966-E36	B	111-1567
ACCESSORY TABLE			
QTY	PART NAME		P/N
1	RECEPTACLE AS.		111-2416

E-C19			
CLR-GA	WIRE NAME	POS	TERM/PLUG
		A	189-9171
		B	189-9117
		C	189-9117
ACCESSORY TABLE			
QTY	PART NAME		P/N
1	RECEPTACLE AS.		189-9113

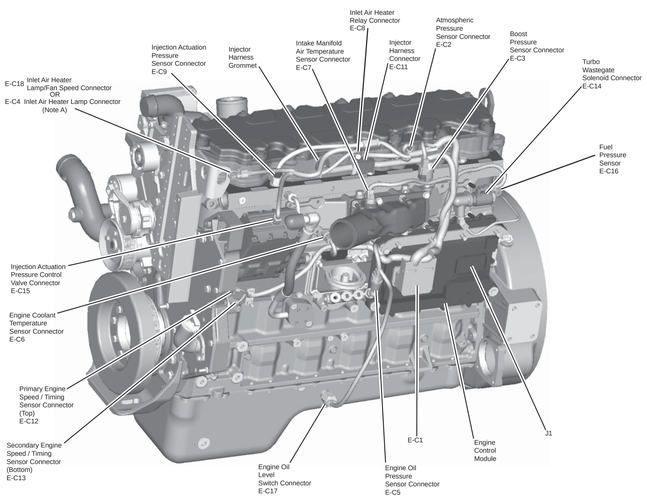

Diagnostic Code Listing					
PID-FMI	Flash Code	Description	PID-FMI	Flash Code	Description
001-11	72	Cylinder #1 Injector current fault	105-00	64	High Intake Manifold Air Temperature Warning
002-11	72	Cylinder #2 Injector current fault	105-03	38	Intake Manifold Air Temperature voltage high
003-11	73	Cylinder #3 Injector current fault	105-04	39	Intake Manifold Air Temperature voltage low
004-11	73	Cylinder #4 Injector current fault	105-11	64	Very High Intake Manifold Air Temperature
005-11	74	Cylinder #5 Injector current fault	108-03	26	Barometric Pressure voltage high
006-11	74	Cylinder #6 Injector current fault	108-04	26	Barometric Pressure voltage low
022-11	42	Primary to Secondary Engine Speed Signal Calibration	110-00	61	High Coolant Temperature Warning
022-13	42	Engine Speed Signal Calibration Not Performed	110-03	27	Coolant Temperature voltage high
030-08	29	PTO Throttle signal invalid	110-04	27	Coolant Temperature voltage low
030-13	29	PTO Throttle out of calibration	110-11	61	Very High Coolant Temperature
032-05	33	Turbo Wastegate Solenoid current low	111-01	62	Low Coolant Level Warning
032-06	33	Turbo Wastegate Solenoid current high	111-02	12	Coolant Level signal invalid
032-11	33	Turbo Wastegate Solenoid current mismatch	111-03	12	Coolant Level voltage high
041-03	21	8 Volt Supply voltage high	111-04	12	Coolant Level voltage low
041-04	21	8 Volt Supply voltage low	111-11	62	Very Low Coolant Level
042-11	18	Injection Actuation Pressure output fault	128-03	44	Secondary Fuel Level voltage high
043-02	71	Key Switch Fault	128-04	44	Secondary Fuel Level voltage low
064-02	34	Secondary Engine Speed loss of signal	164-00	17	Excessive Injection Actuation Pressure
064-11	34	Secondary Engine Speed no pattern	164-02	15	Injection Actuation Pressure Signal Erratic
070-05	49	Inlet Air Heater current low	164-03	15	Injection Actuation Pressure Voltage High
070-06	49	Inlet Air Heater current high	164-04	15	Injection Actuation Pressure Voltage Low
071-00	01	Idle Shutdown Override	164-11	39	Injection Actuation Pressure system fault
071-01	47	Idle Shutdown	168-00	51	Excessive ECM Battery Power
071-14	47	PTO Shutdown	168-01	51	Low ECM Battery Power
084-00	41	Vehicle Overspeed Warning	168-02	51	ECM Battery Power Intermittent
084-01	31	Vehicle Speed loss of signal	173-00	16	High Exhaust Gas Temperature Derate
084-02	36	Vehicle Speed signal invalid	173-11	16	Very High Exhaust Gas Temperature Derate
084-08	36	Vehicle Speed signal out of range	186-04	00	PTO Engine Shutdown Switch Voltage Low
084-10	36	Vehicle Speed signal rate of change	186-14	47	PTO Engine Shutdown Switch Occurrence
084-14	00	Quick Stop Occurrence	190-00	35	Engine Overspeed Warning
091-08	32	Throttle Position Invalid	190-02	34	Primary Engine Speed loss of signal
091-13	28	Throttle Position out of Calibration	190-11	34	Primary Engine Speed no pattern
094-01	63	Low Fuel Pressure Warning	224-11	00	Theft Deterrent Active
094-03	37	Fuel Pressure voltage high	224-14	00	Theft Deterrent Active with Engine Cranking
094-04	37	Fuel Pressure Voltage Low	231-02	58	J1939 Data Incorrect
094-11	63	Low Cranking Fuel Pressure	231-11	58	J1939 Data Link Fault
096-03	00	Fuel Level Voltage High	231-12	58	J1939 Device Not Responding
096-04	00	Fuel Level Voltage Low	231-14	57	Transmission Data Link Derate
100-01	46	Low Oil Pressure Warning	232-03	21	5 Volt Supply voltage high
100-03	24	Oil Pressure voltage high	232-04	21	5 Volt Supply voltage low
100-04	24	Oil Pressure voltage low	246-11	00	Brake Pedal Switch #1 Fault
100-11	46	Very Low Oil Pressure	247-11	00	Brake Pedal Switch #2 Fault
102-01	25	Low Boost Pressure	252-11	59	Engine Software Incorrect
102-02	25	Boost Pressure signal erratic	253-02	56	Check Customer or System Parameters
102-03	25	Boost Pressure voltage high	253-14	56	Truck Manufacturer Parameter Not Programmed
102-04	25	Boost Pressure voltage low	N/A	55	No Diagnostic Code Detected
102-07	25	Boost Pressure not responding			

Related Electrical Service Manuals	
Title	Form Number
Troubleshooting	SENR9517
Systems Operation / Testing and Adjusting	RENR7572

Note A: Connector E-C4 for Harnesses 266-7696 and 266-7698
Connector E-C18 for Harnesses 266-7699 and 283-5607

RENR7691-04
20 Page

www.rtrucks.ru
www.rtrucks.ru
www.rtrucks.ru

www.rtrucks.ru www.rtrucks.ru www.rtrucks.ru

RENR7691-04
20 Page, Color

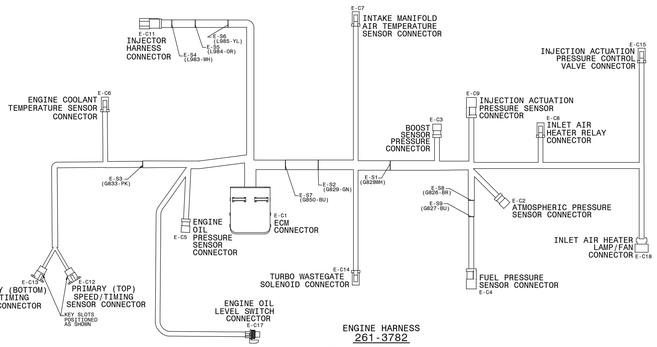

ENGINE HARNESS
261-3782
CONNECTOR AND SPLICE LOCATIONS

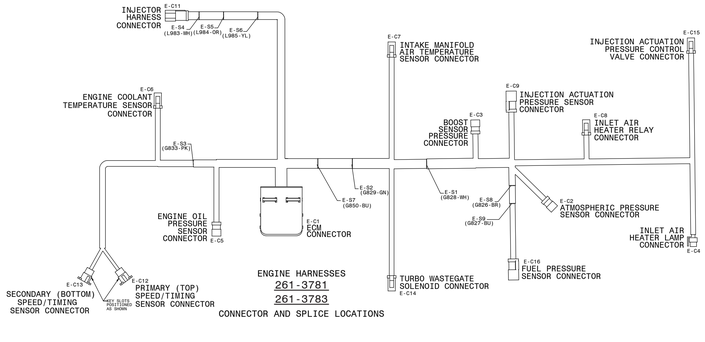

ENGINE HARNESSES
261-3781
261-3783
CONNECTOR AND SPLICE LOCATIONS

ENGINE HARNESS WIRING DIAGRAM

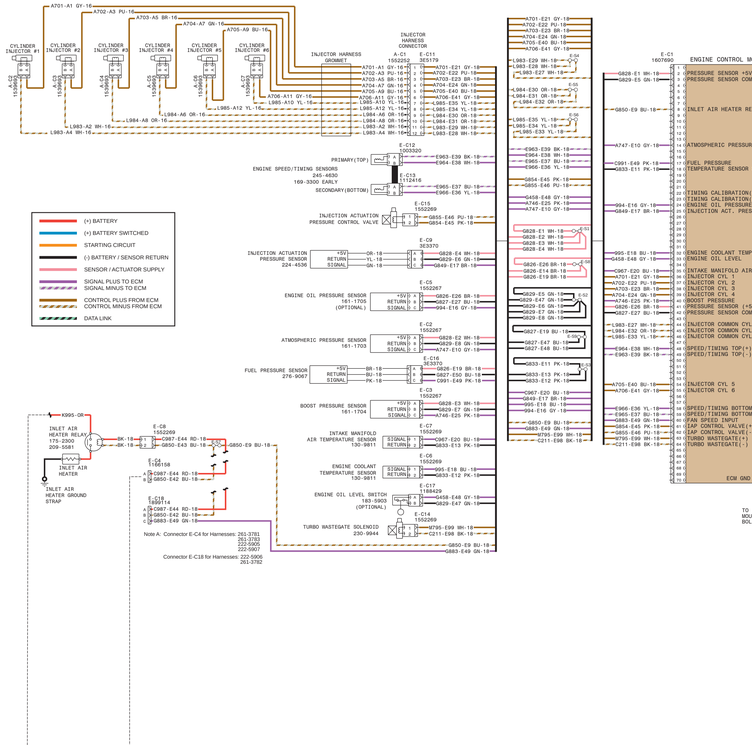

TYPICAL VEHICLE HARNESS WIRING DIAGRAM

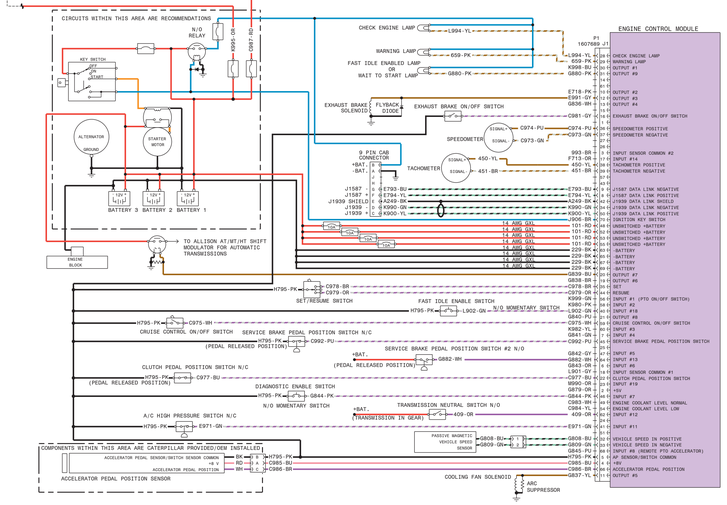

E-C1			
CLR-GA	WIRE NAME	POS	TERM/PLUG
		1	8T-8737
WH-18	GB28-E1	2	180-9340
GN-18	GB29-E5	3	180-9340
		4	8T-8737
		5	8T-8737
		6	8T-8737
		7	8T-8737
BU-18	GB50-E9	8	180-9340
		9	8T-8737
		10	8T-8737
		11	8T-8737
		12	8T-8737
		13	8T-8737
GY-18	A747-E10	14	180-9340
		15	8T-8737
		16	8T-8737
PK-18	C991-E52	17	180-9340
PK-18	GB33-E11	18	180-9340
		19	8T-8737
		20	8T-8737
		21	8T-8737
		22	8T-8737
		23	8T-8737
GY-18	994-E16	24	180-9340
BR-18	GB49-E17	25	180-9340
		26	8T-8737
		27	8T-8737
		28	8T-8737
		29	8T-8737
		30	8T-8737
		31	8T-8737
BU-18	995-E18	32	180-9340
GY-18	G458-E48	33	180-9340
		34	8T-8737
BU-18	C967-E20	35	180-9340
GY-18	A701-E21	36	180-9340
PU-18	A702-E22	37	180-9340
BR-18	A703-E23	38	180-9340
GN-18	A704-E24	39	180-9340
PK-18	A746-E25	40	180-9340
BR-18	G826-E26	41	180-9340
BU-18	G827-E19	42	180-9340
		43	8T-8737
WH-18	L983-E27	44	180-9340
OR-18	L984-E32	45	180-9340
YL-18	L985-E33	46	180-9340
		47	8T-8737
WH-18	E964-E38	48	180-9340
BK-18	E963-E39	49	180-9340
		50	8T-8737
		51	8T-8737
		52	8T-8737
		53	8T-8737
BU-18	A705-E40	54	180-9340
GY-18	A706-E41	55	180-9340
		56	8T-8737
		57	8T-8737
YL-18	E966-E36	58	180-9340
BU-18	E965-E37	59	180-9340
GN-18	G803-E49	60	180-9340
PK-18	G854-E45	61	180-9340
PU-18	G855-E46	62	180-9340
WH-18	M795-E99	63	180-9340
BK-18	C211-E98	64	180-9340
		65	8T-8737
		66	8T-8737
		67	8T-8737
		68	8T-8737
		69	8T-8737
		70	8T-8737
ACCESSORY TABLE			
QTY	PART NAME		P/N
1	PLUG_AS.		160-7690
2	STRAP		3S-2093
1	ENDBELL		126-1774

E-C2			
CLR-GA	WIRE NAME	POS	TERM/PLUG
WH-18	GB28-E2	A	180-9340
GN-18	GB29-E8	B	180-9340
GY-18	A747-E10	C	180-9340
ACCESSORY TABLE			
QTY	PART NAME		P/N
1	PLUG_AS.		155-2267
1	WEDGE		155-2276

E-C3			
CLR-GA	WIRE NAME	POS	TERM/PLUG
BR-18	GB28-E3	A	180-9340
GN-18	GB29-E7	B	180-9340
PK-18	A746-E25	C	180-9340
ACCESSORY TABLE			
QTY	PART NAME		P/N
1	PLUG_AS.		155-2267
1	WEDGE		155-2276

E-C4			
CLR-GA	WIRE NAME	POS	TERM/PLUG
BR-18	GB26-E51	A	180-9339
BU-18	GB27-E19	B	180-9339
PK-18	C991-E52	C	180-9339
ACCESSORY TABLE			
QTY	PART NAME		P/N
1	RECEPTACLE_AS.		3E-3370
1	WEDGE		3E-3371

E-C5			
CLR-GA	WIRE NAME	POS	TERM/PLUG
BR-18	GB26-E50	A	180-9340
BU-18	GB27-E15	B	180-9340
GY-18	994-E16	C	180-9340
ACCESSORY TABLE			
QTY	PART NAME		P/N
1	PLUG_AS.		155-2267
1	WEDGE		155-2276

E-C6			
CLR-GA	WIRE NAME	POS	TERM/PLUG
WH-18	GB28-E4	A	180-9340
GN-18	GB29-E6	B	180-9339
BR-18	GB49-E17	C	180-9339
ACCESSORY TABLE			
QTY	PART NAME		P/N
1	PLUG_AS.		155-2269
1	RECEPTACLE_AS.		3E-3370
1	WEDGE		3E-3371

E-C7			
CLR-GA	WIRE NAME	POS	TERM/PLUG
BU-18	C967-E20	1	180-9340
BU-18	GB50-E43	2	180-9340
YL-18	E966-E36	B	111-1567
ACCESSORY TABLE			
QTY	PART NAME		P/N
1	RECEPTACLE_AS.		111-2416

E-C8			
CLR-GA	WIRE NAME	POS	TERM/PLUG
RD-18	C987-E44	A	180-9340
BU-18	GB50-E42	B	180-9340
ACCESSORY TABLE			
QTY	PART NAME		P/N
1	PLUG_AS.		155-2269
1	RECEPTACLE_AS.		3E-3370
1	WEDGE		3E-3371

E-C9			
CLR-GA	WIRE NAME	POS	TERM/PLUG
WH-18	GB28-E4	A	180-9339
GN-18	GB29-E6	B	180-9339
BR-18	GB49-E17	C	180-9339
ACCESSORY TABLE			
QTY	PART NAME		P/N
1	PLUG_AS.		155-2269
1	RECEPTACLE_AS.		3E-3370
1	WEDGE		3E-3371

E-C11			
CLR-GA	WIRE NAME	POS	TERM/PLUG
BU-18	A701-E21	1	180-9339
PU-18	A702-E22	2	180-9339
BR-18	A703-E23	3	180-9339
GN-18	A704-E24	4	180-9339
BU-18	A705-E40	5	180-9339
GY-18	A706-E41	6	180-9339
YL-18	L985-E35	7	180-9339
YL-18	L985-E34	8	180-9339
OR-18	L984-E30	9	180-9339
OR-18	L984-E31	10	180-9339
WH-18	L983-E29	11	180-9339
WH-18	L983-E28	12	180-9339
ACCESSORY TABLE			
QTY	PART NAME		P/N
1	RECEPTACLE_AS.		3E-5179
1	WEDGE		3E-5180

E-C12			
CLR-GA	WIRE NAME	POS	TERM/PLUG
BK-18	E963-E39	A	111-1567
WH-18	GB64-E38	B	111-1567
ACCESSORY TABLE			
QTY	PART NAME		P/N
1	PLUG_AS.		155-2269
1	WEDGE		155-2261

E-C13			
CLR-GA	WIRE NAME	POS	TERM/PLUG
BU-18	E965-E37	A	111-1567
YL-18	E966-E36	B	111-1567
ACCESSORY TABLE			
QTY	PART NAME		P/N
1	RECEPTACLE_AS.		100-3320

E-C14			
CLR-GA	WIRE NAME	POS	TERM/PLUG
BK-18	C211-E98	1	180-9340
WH-18	M795-E99	2	180-9340
ACCESSORY TABLE			
QTY	PART NAME		P/N
1	PLUG_AS.		155-2269
1	WEDGE		155-2261

E-C15			
CLR-GA	WIRE NAME	POS	TERM/PLUG
PU-18	GB55-E46	1	180-9340
PK-18	GB54-E45	2	180-9340
ACCESSORY TABLE			
QTY	PART NAME		P/N
1	PLUG_AS.		155-2269
1	WEDGE		155-2261

E-C16			
CLR-GA	WIRE NAME	POS	TERM/PLUG
BR-18	GB26-E15	A	180-9339
BU-18	GB27-E48	B	180-9339
PK-18	C991-E49	C	180-9339
ACCESSORY TABLE			
QTY	PART NAME		P/N
1	RECEPTACLE_AS.		3E-3370
1	WEDGE		3E-3371

E-C17			
CLR-GA	WIRE NAME	POS	TERM/PLUG
GY-18	G458-E48	A	123-1198
GN-18	GB29-E47	B	123-1198
ACCESSORY TABLE			
QTY	PART NAME		P/N
1	PLUG_AS.		118-8429

E-C18			
CLR-GA	WIRE NAME	POS	TERM/PLUG
RD-18	C987-E44	A	189-9115
BU-18	GB50-E42	B	189-9115
GN-18	GB50-E43	C	189-9115
ACCESSORY TABLE			
QTY	PART NAME		P/N
1	PLUG_AS.		189-9114
3	SEAL		189-9116

A-C1			
CLR-GA	WIRE NAME	POS	TERM/PLUG
		1	8T-8737
WH-18	GB28-E1	2	180-9340
GN-18	GB29-E5	3	180-9340
		4	8T-8737
		5	8T-8737
		6	8T-8737
		7	8T-8737
BU-18	GB50-E9	8	180-9340
		9	8T-8737
		10	8T-8737
		11	8T-8737
		12	8T-8737
		13	8T-8737
GY-18	A747-E10	14	180-9340
		15	8T-8737
		16	8T-8737
PK-18	C991-E49	17	180-9340
PK-18	GB33-E11	18	180-9340
		19	8T-8737
		20	8T-8737
		21	8T-8737
		22	8T-8737
		23	8T-8737
GY-18	994-E16	24	180-9340
BR-18	GB49-E17	25	180-9340
		26	8T-8737
		27	8T-8737
		28	8T-8737
		29	8T-8737
		30	8T-8737
		31	8T-8737
BU-18	995-E18	32	180-9340
		33	8T-8737
		34	8T-8737
BU-18	C967-E20	35	180-9340
GY-18	A701-E21	36	180-9340
PU-18	A702-E22	37	180-9340
BR-18	A703-E23	38	180-9340
GN-18	A704-E24	39	180-9340
PK-18	A746-E25	40	180-9340
BR-18	G826-E26	41	180-9340
BU-18	G827-E19	42	180-9340
		43	8T-8737
WH-18	L983-E27	44	180-9340
OR-18	L984-E32	45	180-9340
YL-18	L985-E33	46	180-9340
		47	8T-8737
WH-18	E964-E38	48	180-9340
BK-18	E963-E39	49	180-9340
		50	8T-8737
		51	8T-8737
		52	8T-8737
		53	8T-8737
BU-18	A705-E40	54	180-9340
GY-18	A706-E41	55	180-9340
		56	8T-8737
		57	8T-8737
YL-18	E966-E36	58	180-9340
BU-18	E965-E37	59	180-9340
		60	8T-8737
PK-18	GB54-E45	61	180-9340
PU-18	GB55-E46	62	180-9340
BK-18	C211-E98	64	180-9340
		65	8T-8737
		66	8T-8737
		67	8T-8737
		68	8T-8737
		69	8T-8737
		70	8T-8737
ACCESSORY TABLE			
QTY	PART NAME		P/N
1	PLUG		153-9693
1	SEAL		154-0877
1	CLIP		154-3769

A-C2			
CLR-GA	WIRE NAME	POS	TERM/PLUG
GY-16	A701-A1	A	154-2389
WH-16	L983-A2	B	154-2389
ACCESSORY TABLE			
QTY	PART NAME		P/N
1	PLUG		153-9693
1	SEAL		154-0877
1	CLIP		154-3769

A-C3			
CLR-GA	WIRE NAME	POS	TERM/PLUG
PU-16	A702-A3	A	154-2389
WH-16	L983-A4	B	154-2389
ACCESSORY TABLE			
QTY	PART NAME		P/N
1	PLUG		153-9693
1	SEAL		154-0877
1	CLIP		154-3769

A-C4			
CLR-GA	WIRE NAME	POS	TERM/PLUG
BR-16	A703-A5	A	154-2389
OR-16	L984-A6	B	154-2389
ACCESSORY TABLE			
QTY	PART NAME		P/N
1	PLUG		153-9693
1	SEAL		154-0877
1	CLIP		154-3769

A-C5			
CLR-GA	WIRE NAME	POS	TERM/PLUG
GN-16	A704-A7	A	154-2389
OR-16	L984-A8	B	154-2389
ACCESSORY TABLE			
QTY	PART NAME		P/N
1	PLUG		153-9693
1	SEAL		154-0877
1	CLIP		154-3769

A-C6			
BU-16	A705-A9	A	154-2389
YL-16	L985-A10	B	154-2389
ACCESSORY TABLE			
QTY	PART NAME		P/N
1	PLUG		153-9693
1	SEAL		154-0877
1	CLIP		154-3769

A-C7			
CLR-GA	WIRE NAME	POS	TERM/PLUG
GY-16	A706-A11	A	154-2389
YL-16	L985-A12	B	154-2389
ACCESSORY TABLE			
QTY	PART NAME		P/N
1	PLUG		153-9693
1	SEAL		154-0877
1	CLIP		154-3769

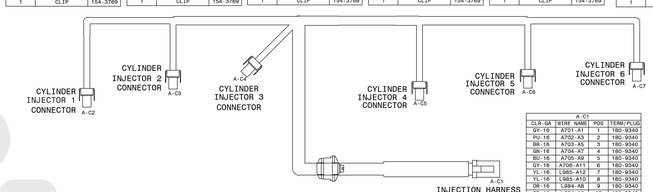

CYLINDER INJECTOR HARNESS
222-5917-05
CONNECTOR AND SPLICE LOCATIONS

A-C1			
CLR-GA	WIRE NAME	POS	TERM/PLUG
GY-16	A701-A1	1	180-9340
PU-16	A702-A2	2	180-9340
BR-16	A703-A5	3	180-9340
GN-16	A704-A7	4	180-9340
BU-16	A705-A9	5	180-9340
GY-16	A706-A11	6	180-9340
YL-16	L985-A12	7	180-9340
YL-16	L985-A10	8	180-9340
OR-16	L984-A8	9	180-9340
OR-16	L984-A6	10	180-9340
WH-16	L983-A4	11	180-9340
WH-16	L983-A2	12	180-9340
ACCESSORY TABLE			
QTY	PART NAME		P/N
1	RECEPTACLE_AS.		155-2252
1	WEDGE		155-2258

www.rtrucks.ru www.rtrucks.ru www.rtrucks.ru