https://truckmanualshub.com/

LIUGONG

CLG375A
Skid Steer Loader

Engine	Yanmar
Gross Power	61.6 kW (82.6 hp) @ 2,400 rpm
Net Power	57.3 kW (76.8 hp) @ 2,400 rpm
Breakout Force	25.5 kN
Rate Load	955 kg
Bucket Capacity	0.5 m^3
Operating Weight	3,420 kg

https://truckmanualshub.com/

CLG375A
Skid Steer Loader

ENGINE

Emission Regulation	Tier 3 / Stage IIIA
Make & Model	Yanmar
Gross Power	61.3 kW (82.6 hp) @ 2,400 rpm
Net Power	57.3 kW (76.8 hp) @ 2,400 rpm
Peak Torque	292.6 N • m @ 1,550 rpm
Number of Cylinders	4
Displacement	3.3 L
Cooling Type	water

ELECTRICAL SYSTEM

System Voltage	12 V
Alternator Output	55 amps

CHAIN TANK

Drive Chain Size	100 HS

TIRES

Ply Type	pneumatic
Tire Size	12 - 16.5
Ply Rating	10

HYDRAULIC SYSTEM

System Type	closed
Standard Flow	84.3 L/min
Optional High Flow	122.1 L/min
Traveling Hydrostatic Pressure	32 MPa
Working Hydrostatic Pressure	20.7 MPa
Hydraulic Cycle Time, total	8.4 seconds

Raise	Dump	Lower (empty, float down)
4.1 sec	2.1 sec	2.2 sec

OPERATING WEIGHT

Operating Weight	3,420 kg

PERFORMANCE

Static Tipping Load	1,910 kg
Rated Load	955 kg
Boom Breakout Force	22 kN
Bucket Breakout Force	25.5 kN
Dump Clearance at Full Height Discharge	2,425 mm
Dump Reach at Full Height Discharge	560 mm
Maximum Dump Angle at Full Height	39°
Maximum Hinge Pin Height	3,105 mm
Bucket Rollback at Ground Level	30°
Ground Clearance	210 mm
Angle of Departure	27°
Front Clearance Radius	2,000 mm

SERVICE CAPACITIES

Fuel Tank	80 L
Engine Oil	10.4 L
Cooling System	20 L
Hydraulic Reservoir	56 L
Hydraulic System Total	60 L
Chain Tanks, Each	12 L

STANDARD EQUIPMENT

General Bucket - 0.65 m³
Control Safety Interlock
Boom Interlock
Quick Coupler
Enclosed ROPS / FOPS Cab with AC
Auxiliary High Flow – 122.1 L/min

OPTIONAL EQUIPMENT

Open ROPS / FOPS Cab
Flow Standard – 84.3 L/min
Solid Tire
Tire Chains

OPTIONAL ATTACHMENTS

4 in 1 Bucket – 0.4 m³	Auger
Rocket Bucket – 0.4 m³	Cold Planer
Scrap Bucket – 350 mm to 650 mm	Snow Blade
Hydraulic Hammer	Pick - up Sweeper
Fork	Hydraulic Shear
Lift Boom	Trencher

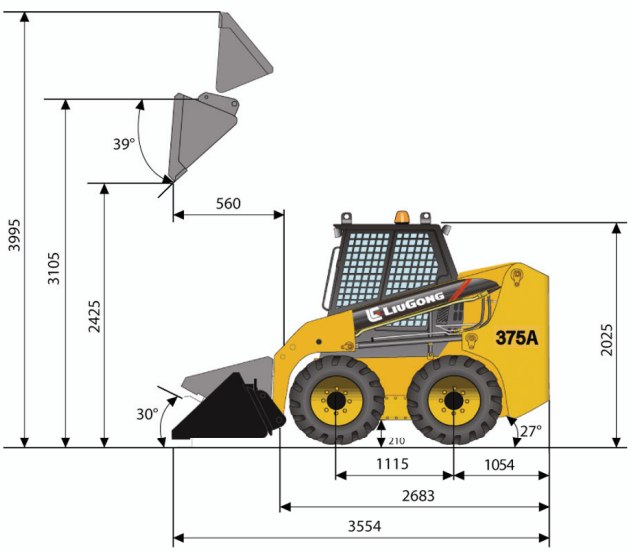

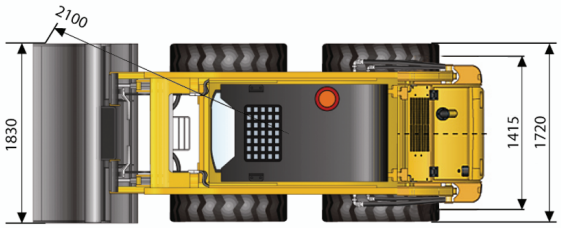

Unit: mm

Guangxi Liugong Machinery Co., Ltd.
No. 1 Liutai Road, Liuzhou, Guangxi 545007, PR China
T: +86 772 388 6124 E: overseas@liugong.com
www.liugong.com

Specifications and designs are subject to change without notice. Machines shown may include optional equipment.