https://truckmanualshub.com/

TADANO

GR-500EXS

(Left-hand drive)

50 Ton Capacity

SPEC. SHEET NO. GR-500E-3-00401/EX-02

HYDRAULIC ROUGH TERRAIN CRANE

DIMENSIONS

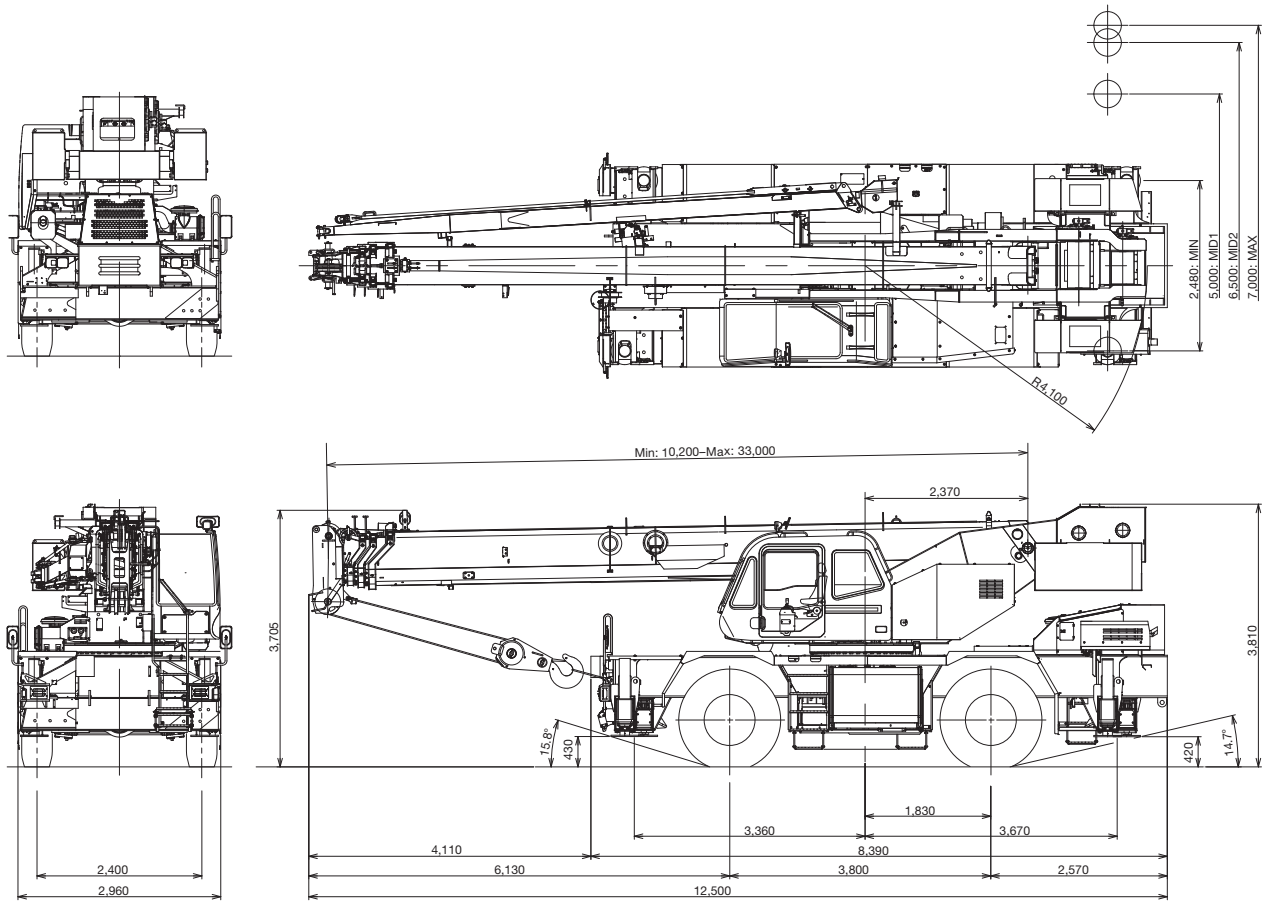

Note : Dimension is with boom angle at -1 degree.

GENERAL DIMENSIONS

Turning radius (445/95 R25 Tires)	
4 wheel steer	6.0 m
2 wheel steer	10.3 m

Overall length	approx. 12,500 mm
Overall width	approx. 2,960 mm
Overall height	approx. 3,810 mm

Specifications are subject to change without notice.

https://truckmanualshub.com/

CRANE SPECIFICATIONS

BOOM
4 section full power partially synchronized telescoping boom of round hexagonal box construction with 5 sheaves at boom head. The synchronization system consists of 1 telescope cylinders, extension cables and retraction cables. Hydraulic cylinder fitted with holding valve. 2 easily removable wire rope guards, rope dead end provided on one side of boom head. Boom telescope sections are supported by wear pads both vertically and horizontally.

Fully retracted length..... 10.2 m
Fully extended length ..... 33.0 m
Extension speed..... 22.8 m in 88 s
Root diameter..... 0.32 m

BOOM ELEVATION
By a pair of double acting hydraulic cylinders with holding valve. Boom angle indicator.

Boom angle ..... -1˚– 80.5˚
Boom raising speed ..... 20˚ to 60˚ in 30 s

JIB
2 stage boom swing around type with triple offset (tilt type). Single sheave at jib head.
Box type top section telescopes from box type bace section which stows alongside base boom section.

Length ..... 8.0 m, 12.7 m
Offset..... 5˚, 25˚, 45˚
Root diameter..... 0.32 m

AUXILIARY LIFTING SHEAVE (SINGLE TOP)
Single sheave mounted to main boom head for single line work(stowable).

Root diameter..... 0.32 m

ANTI-TWO-BLOCK DEVICE
Pendant type over-winding cut out device with audio-visual (FAILURE lamp/BUZZER) warning system.

SLEWING
Hydraulic axial piston motor driven through planetary slewing speed reducer. Continuous 360˚ full circle slewing on ball bearing.
Equipped with manually locked/released slewing brake.
A positive slewing lock for pick and carry and travel modes, manually engaged in cab. Twin slewing system : Free slewing or lock slewing controlled by selector switch on front console.

Slewing speed..... 2.7 min^{-1} {rpm}

WINCH
MAIN WINCH
Variable speed type with grooved drum driven by hydraulic axial piston motor through speed reducer. Power load lowering and raising.
Equipped with automatic brake (neutral brake) and counterbalance valve. Controlled independently of auxiliary winch.
Equipped with cable follower and drum rotation indicator.

MAIN DRUM

Root diameter x wide ..... 0.32 m x 0.69 m
Wire rope diameter x length ..... 16 mm x 182 m
Drum capacity ..... 304 m, 6 layers
Maximum single line pull (1st layer)..... 56.0 kN (5,710 kgf)
Maximum permissible linepull wire strength..... 55.1 kN (5,620 kgf)

AUXILIARY WINCH
Variable speed type with grooved drum driven by hydraulic axial piston motor through speed reducer. Power load lowering and raising.
Equipped with automatic brake (neutral brake) and counterbalance valve. Controlled independently of main winch.
Equipped with cable follower and drum rotation indicator.

AUXILIARY DRUM

Root diameter x wide ..... 0.32 m x 0.484 m
Wire rope diameter x length ..... 16 mm x 100 m
Drum capacity ..... 219.5 m, 6 layers
Maximum single line pull (1st layer)..... 56.0 kN (5,710 kgf)
Maximum permissible linepull wire strength..... 55.1 kN (5,620 kgf)

WIRE ROPE
Nuflex wire (no-spin), extra improved plow steel, preformed, independent wire rope core, right regular lay.

Main & Auxillary..... 16 mm 35 x 7 class

HOOK BLOCKS
50 ton (option)
6 sheaves with swivel hook and safety latch
25 ton (option)
3 sheaves with swivel hook and safety latch
4.5 ton
Weighted hook with swivel and safety latch

HYDRAULIC SYSTEM
PUMPS
2 variable piston pumps for crane functions.
Tandem gear pump for steering, slewing and optional equipment. Powered by carrier engine. Pump disconnect for crane is engaged/disengaged by rotary switch from operator's cab.

CONTROL VALVES
Multiple valves actuated by pilot pressure with integral pressure relief valves.

RESERVOIR
690 liters capacity. External sight level gauge.

FILTRATION
BETA10=10 return filter, full flow with bypass protection, located inside of hydraulic reservoir. Accessible for easy replacement.

OIL COOLER - Air cooled fan type.

CAB AND CONTROLS
Both crane and drive operations can be performed from one cab mounted on rotating superstructure.

Left side, 1 man type, steel construction with sliding door access and safety glass windows opening at side. Door window is powered control. Windshield glass window and roof glass window are shatter-resistant. Wiper and washer (front windshield and roof window). Tinted safety glass and sun visor. Tilt-telescoping steering wheel. Adjustable control lever stands for slewing, boom elevating, boom telescoping, auxiliary winch and main winch. Control lever stands can change neutral positions and tilt for easy access to cab. Foot operated controls: boom telescoping, service brake and engine throttle. 3 way adjustable operator's seat with high back, headrest and armrest. Cab floor mat. Engine throttle knob. Hot water cab heater and air conditioning.

Dash-mounted engine start/stop, monitor lamps, cigarette lighter, drive mode selector switch, parking brake switch, steering mode select switch, power window switch, pump engaged/ disengaged switch, slewing brake switch, boom telescoping/auxiliary winch select switch, outrigger control panel, and slewing free/ lock selector switch.

Instruments - Torque converter oil temperature, engine water temperature, air pressure, fuel, speedometer, tachometer, hour meter and odometer / tripmeter. Engin over-run alarm. Back-up alarm. Low oil pressure/high water temp. Warning device (visual). Rear steer centering light. Hydraulic oil pressure is monitored and displayed on the AML-C display panel.

https://truckmanualshub.com/

CRANE SPECIFICATIONS

TADANO Automatic Moment Limiter
(AML-C) including:

- Control lever lockout function with audible and visual pre-warning
- Number of parts of line
- Boom position indicator
- Outrigger state indicator
- Slewing angle
- Boom angle / boom length / jib offset angle / jib length / load radius / rated lifting capacities / actual loads read out
- Potential lifting height
- Ratio of actual load moment to rated load moment indication
- Permissible load
- Automatic Speed Reduction and Slow Stop function on slewing
- Working condition register switch
- Load radius / boom angle / tip height / slewing range preset function
- External warning lamp
- Tare function
- Main hydraulic oil pressure
- Fuel consumption monitor
- Main winch / auxiliarly winch select
- Drum rotation indicator (audible and visible type) main and auxiliary winch
- On-rubber indicator

TADANO AML-C monitors outrigger extended length and automatically programs the corresponding "RATED LIFTING CAPACITIES" table

Operator's right hand console includes transmission gear selector, slewing lock lever and sight level bubble.
Upper right console includes flood lamp switch, roof washer and wiper switch, emergency outrigger set up key switch, jib status switch, eco mode switch, and air conditioning control switch.

NOTE: Each crane motion speed is based on unladen conditions.

CARRIER SPECIFICATIONS

TYPE
Rear engine, left-hand drive, driving axle 2-way selected type by manual switch, 4x2 front drive, 4x4 front and rear drive.

FRAME
High tensile steel, all welded mono-box construction.

ENGINE

Model	MITSUBISHI 6M60-TL
Type	Direct injection diesel
No. of cylinders	6
Combustion	4 cycle, turbo charged and after cooled
Bore x Stroke, mm	118 x 115
Displacement, liters	7.54
Air inlet heater	24 volt preheat
Air cleaner	Dry type, replaceable element
Oil filter	Full flow with replaceable element
Fuel filter	Full flow with replaceable element
Fuel tank, liters	300, right side of carrier
Cooling	Liquid pressurized, recirculating by-pass
Radiator	Fin and tube core, thermostat controlled
Fan, mm	Suction type, 6-blade, 600 dia.
Starting	24 volt
Charging	24 volt system, negative ground
Battery	2-120 amp. Hour
Compressor, air, l /min	830 at 2,600 min^{-1}
Output, Max. kW (HP)	Gross 200 (267) at 2,600 min^{-1}
Torque, Max. Nm	785 at 1,400 min^{-1}
Capacity, liters	
Cooling water	13
Lubrication	13–15
Fuel	300

TRANSMISSION
Electronically controlled full automatic transmission.
Torque converter driving full powershift with driving axle selector.
6 forward and 2 reverse speeds, constant mesh.
4 speeds - high range - 2-wheel drive; 4-wheel drive
3 speeds - low range - 4-wheel drive

TRAVEL SPEED - 44 km/h

GRADE ABILITY (tanθ) - 92% (at stall), 30% *
* Machine should be operated within the limit of engine crankcase design (17°: MITSUBISHI 6M60-TL)

AXLE
Front: Full floating type, steering and driving axle with planetary reduction.
Rear: Full floating type, steering and driving axle with planetary reduction and inter-wheel rear differential lock.

STEERING
Hydraulic power steering controlled by steering wheel.
3 steering modes available: 2 wheel front, 4 wheel coordinated and 4 wheel crab.

SUSPENSION
Front: Rigid mounted to the frame.
Rear: Semi-elliptic leaf springs.

BRAKE SYSTEMS
Service/Emergency: Air over hydraulic disc brakes on all 4 wheels.
Parking: Spring applied-air released brake acting on input shaft of front axle.
Auxiliary: Electro-pneumatic operated exhaust brake.

TIRES - 445/95R25 Air pressure: 900 kPa

OUTRIGGERS
4 hydraulic, beam and jack outriggers.
Vertical jack cylinders equipped with integral holding valve.
Each outrigger beam and jack is controlled independently from cab.
Beams extend to 7.0 m center-line and retract to within 2.96 m overall width with floats. Outrigger jack floats are attached thus eliminating the need of manually attaching and detaching them. Controls and sight bubble located in superstructure cab. 4 outrigger extension lengths are provided with corresponding "RATED LIFTING CAPACITIES" for crane duty in confined areas.

Min. Extension	2.48 m center to center
Mid. Extension	5.0 m center to center
Mid. Extension	6.5 m center to center
Max. Extension	7.0 m center to center
Float size (Diameter)	0.4 m

COUNTERWEIGHT
Integral with slewing frame Mass... 3,300 kg

https://truckmanualshub.com/

STANDARD EQUIPMENT

- Telematics (machine data logging and monitoring system) with - HELLO-NET via internet (availability depends on countries)
- Eco mode system
- Over unwinding prevention
- Emergency steering system
- Transmission neutral position engine start
- Overshift prevention
- Parking braked travel warning
- Tilt-telescope steering wheel
- Halogen head lamp
- Fenders
- Air dryer
- Water separator with filter (high filtration)
- Air cleaner dust indicator
- Full instrumentation package
- Tire inflation kit
- Towing hooks-Front and rear
- Lifting eyes
- Hook block tie down (front bumper)
- Weighted hook storage compartment
- Winch drum mirror
- Tool storage compartment

OPTIONAL EQUIPMENT

- Wind speed indicator
- Beacon lamp
- Hook block–50 t capacity
  (6 sheaves, swivel type with safty latch. Mass: approx. 460 kg)
- Hook block–25 t
  (3 sheaves, swivel type with safty latch. Mass: approx. 280 kg)
- Attachment sheave for over 47 t lifting

HOISTING PERFORMANCE

LINE SPEEDS AND PULLS

Layer	Main or auxiliary winch - 0.32 m drum	
	Line speeds[1]	Line pulls Available[2]
	m/min	kN (kgf)
1st	106	56.0 (5,710)
2nd	115	51.1 (5,210)
3rd	124	46.7 (4,760)
4th	132	43.1 (4,400)
5th	141	40.0 (4,080)
6th[3]	150	37.3 (3,800)

- Maximum permissible line pull wire strength.
  Main & Auxiliary: 55.1 kN (5,620 kgf) with 35 x 7 class rope.

[1] Line speed based only on hook block, not loaded.
[2] Developed by machinery with each layer of wire rope, but not based on rope strength or other limitations in machinery or equipment.
[3] Sixth layer of wire rope are not recommended for hoisting operations.

DRUM WIRE ROPE CAPACITIES

Wire rope layer	Main drum grooved lagging		Auxiliary drum grooved lagging	
	16 mm wire rope		16 mm wire rope	
	Rope per layer	Total wire rope	Rope per layer	Total wire rope
	m	m	m	m
1	41.8	41.8	29.1	29.1
2	45.3	87.1	31.6	60.7
3	48.8	135.9	34.1	94.8
4	52.3	188.2	36.6	131.4
5	55.9	244.1	39.1	170.5
6	59.4	303.5	41.6	212.1

DRUM DIMENSIONS

Root diameter		320 mm
Length	Main	690 mm
	Auxiliary	484 mm
Flange diameter		530 mm

https://truckmanualshub.com/

GR-500EXS WORKING RANGE CHART

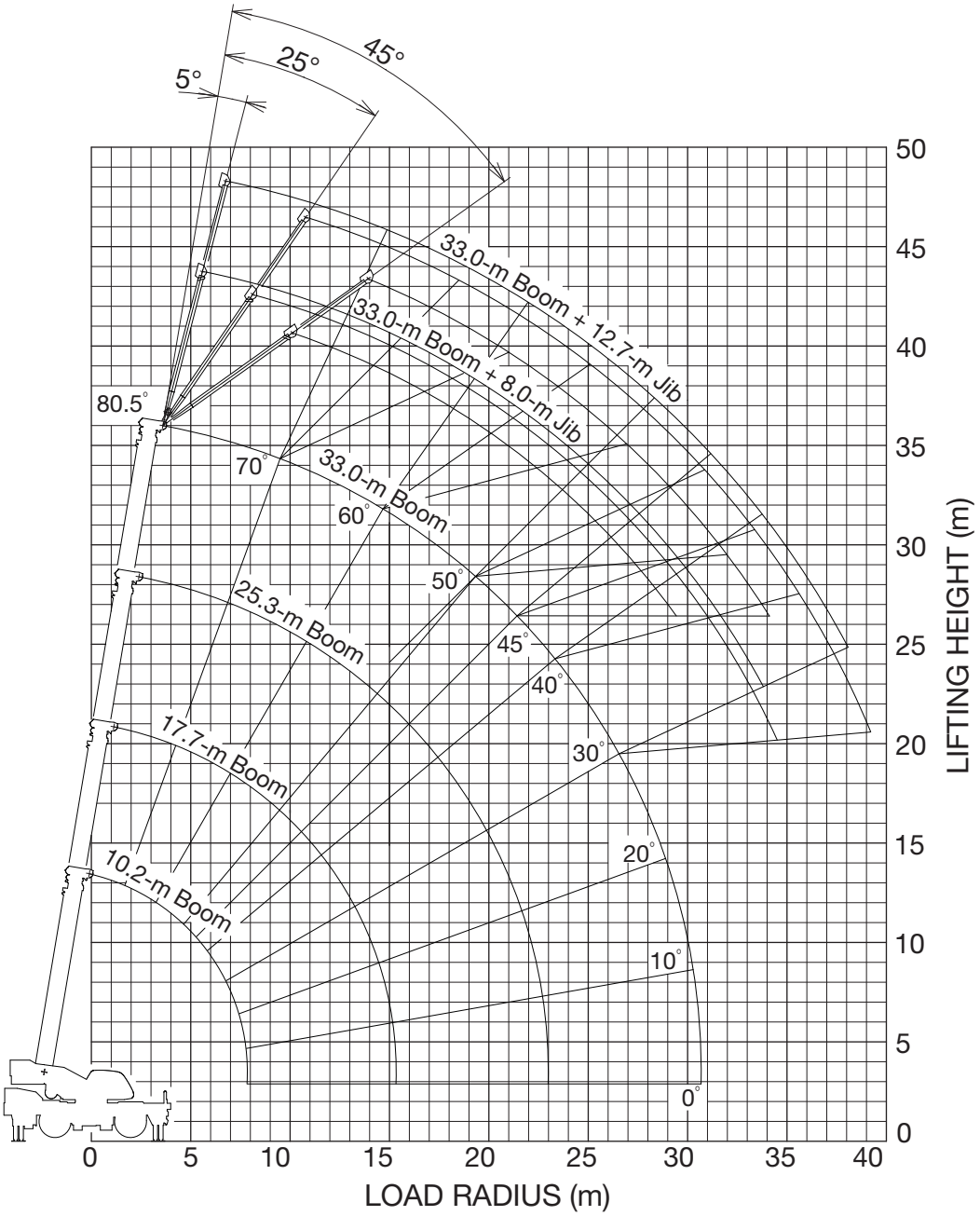

BOOM

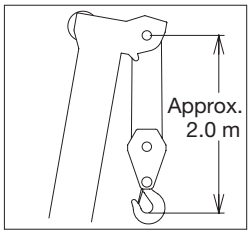

JIB

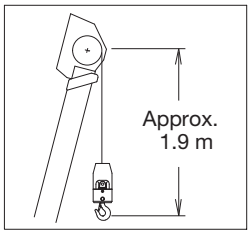

SINGLE TOP

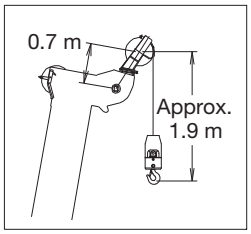

Boom Length

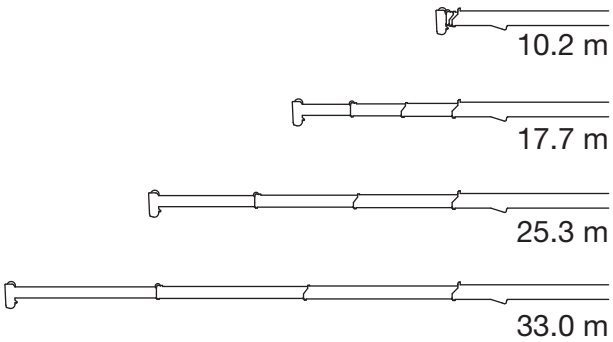

NOTE: Boom and jib geometry shown are for unloaded condition and machine standing level on firm supporting surface. Boom deflection and subsequent radius and boom angle change must be accounted for when applying load to hook.

GR-500EXS RATED LIFTING CAPACITIES

ON OUTRIGGERS FULLY EXTENDED 7.0 m SPREAD
360° ROTATION (Unit: x 1,000 kg)

A / B	10.2 m C		17.7 m C		25.3 m C		33.0 m C	
2.5	66	50.0	77	21.3				
3.0	62	47.4	75	21.3				
3.5	59	43.1	74	21.3	79	16.0		
4.0	56	38.8	72	21.3	78	16.0		
4.5	52	35.2	70	20.9	77	16.0		
5.0	48	32.1	68	20.0	76	15.0	80	9.0
5.5	44	28.5	66	19.2	75	14.2	79	9.0
6.0	40	24.6	65	18.5	74	13.4	78	9.0
6.5	35	21.5	63	17.8	72	12.7	77	9.0
7.0	29	20.0	61	17.1	71	12.1	77	9.0
7.5	21	18.6	59	16.5	70	11.5	76	9.0
8.0			57	16.0	69	11.0	75	9.0
9.0			53	15.1	66	10.1	73	8.4
10.0			49	12.6	64	9.3	71	7.6
11.0			44	10.6	61	8.6	69	6.9
12.0			38	9.0	58	8.0	67	6.3
14.0			25	6.8	52	7.0	63	5.3
16.0					46	5.5	59	4.5
18.0					39	4.4	55	3.9
20.0					30	3.5	50	3.5
22.0					18	2.9	45	2.9
24.0							40	2.4
26.0							33	1.9
28.0							26	1.6
30.0							14	1.3
D	0°							

LIFTING CAPACITIES AT ZERO DEGREE BOOM ANGLE
ON OUTRIGGERS FULLY EXTENDED 7.0 m SPREAD 360° ROTATION

A / C	10.2 m B		17.7 m B		25.3 m B		33.0 m B	
0°	7.9	16.5	15.3	4.2	22.9	2.2	30.5	1.0

ON OUTRIGGERS MID EXTENDED 6.5 m SPREAD
OVER SIDE (Unit: x 1,000 kg)

A / B	10.2 m C		17.7 m C		25.3 m C		33.0 m C	
2.5	65	50.0	77	21.3				
3.0	62	47.0	75	21.3				
3.5	59	41.9	74	21.3	79	16.0		
4.0	56	37.7	72	21.3	78	16.0		
4.5	52	34.2	70	20.9	77	16.0		
5.0	48	31.2	68	20.0	76	15.0	80	9.0
5.5	44	27.5	66	19.2	75	14.2	79	9.0
6.0	40	23.6	65	18.5	74	13.4	78	9.0
6.5	35	20.5	63	17.8	72	12.7	77	9.0
7.0	29	19.0	61	17.1	71	12.1	77	9.0
7.5	21	18.1	59	16.5	70	11.5	76	9.0
8.0			57	16.0	69	11.0	75	9.0
9.0			53	13.3	66	10.1	73	8.4
10.0			48	10.9	64	9.3	71	7.6
11.0			44	9.1	61	8.6	69	6.9
12.0			38	7.8	58	8.0	67	6.3
14.0			25	5.8	52	6.0	63	5.3
16.0					46	4.7	59	4.5
18.0					39	3.7	55	3.7
20.0					30	2.9	50	3.0
22.0					18	2.3	45	2.4
24.0							40	1.9
26.0							33	1.5
28.0							26	1.2
30.0							14	0.9
D	0°							

LIFTING CAPACITIES AT ZERO DEGREE BOOM ANGLE
ON OUTRIGGERS MID EXTENDED 6.5 m SPREAD 360° ROTATION

A / C	10.2 m B		17.7 m B		25.3 m B		33.0 m B	
0°	7.9	16.1	15.3	3.9	22.9	1.8	30.5	0.9

A: Boom length (m)
B: Load radius (m)
C: Loaded boom angle (°)
D: Minimum boom angle (°) for indicated boom length (no load)

https://truckmanualshub.com/

GR-500EXS RATED LIFTING CAPACITIES

ON OUTRIGGERS MID EXTENDED 5.0 m SPREAD
OVER SIDE (Unit: x 1,000 kg)

A / B	10.2 m		17.7 m		25.3 m		33.0 m	
	C		C		C		C	
2.5	66	48.7	77	21.3				
3.0	62	42.7	75	21.3				
3.5	59	37.8	74	21.3	79	16.0		
4.0	56	33.8	72	21.3	78	16.0		
4.5	52	29.8	70	20.9	77	16.0		
5.0	48	25.0	68	20.0	76	15.0	80	9.0
5.5	44	21.4	66	18.6	75	14.2	79	9.0
6.0	40	17.8	65	16.5	74	13.4	78	9.0
6.5	35	15.2	63	14.7	72	12.7	77	9.0
7.0	29	13.1	61	13.2	71	12.0	77	9.0
7.5	21	11.4	59	12.0	70	10.9	76	9.0
8.0			57	10.9	69	10.0	75	9.0
9.0			53	8.8	66	8.5	73	7.9
10.0			48	7.2	63	7.3	71	6.8
11.0			44	6.0	61	6.3	69	6.0
12.0			38	5.1	58	5.3	67	5.2
14.0			25	3.7	52	3.9	63	4.0
16.0					46	2.9	59	3.0
18.0					39	2.2	54	2.3
20.0					30	1.6	50	1.7
22.0					18	1.2	45	1.3
24.0							39	0.9
26.0							33	0.6
D	0°						25°	

LIFTING CAPACITIES AT ZERO DEGREE BOOM ANGLE
ON OUTRIGGERS FULLY EXTENDED 7.0 m SPREAD OVER SIDE

A / C	10.2 m		17.7 m		25.3 m		33.0 m	
	B		B		B		B	
0°	7.9	10.6	15.3	3.1	22.9	1.0	-	-

ON OUTRIGGERS MIN EXTENDED 2.48 m SPREAD
OVER SIDE (Unit: x 1,000 kg)

A / B	10.2 m		17.7 m		25.3 m		33.0 m	
	C		C		C		C	
2.5	66	23.0	77	18.5				
3.0	63	18.1	75	15.1				
3.5	59	14.7	73	12.7	79	10.9		
4.0	56	12.2	72	10.8	78	9.5		
4.5	52	10.3	70	9.4	77	8.3		
5.0	48	8.6	68	8.2	75	7.3	79	6.6
5.5	44	7.2	66	7.2	74	6.5	79	5.9
6.0	40	6.0	64	6.4	73	5.8	78	5.3
6.5	35	5.1	63	5.7	72	5.2	77	4.8
7.0	29	4.4	61	5.1	71	4.7	76	4.3
7.5	21	3.7	59	4.5	69	4.3	75	3.9
8.0			57	4.0	68	3.8	74	3.5
9.0			53	3.1	66	3.2	72	2.9
10.0			48	2.4	63	2.6	70	2.4
11.0			43	1.8	60	2.1	68	2.0
12.0			38	1.4	58	1.6	66	1.6
14.0			25	0.7	52	0.9	62	1.0
D	0°				46°		58°	

LIFTING CAPACITIES AT ZERO DEGREE BOOM ANGLE
ON OUTRIGGERS MIN EXTENDED 2.48 m SPREAD OVER SIDE

A / C	10.2 m		17.7 m		25.3 m		33.0 m	
	B		B		B		B	
0°	7.9	3.4	15.3	0.5	-	-	-	-

A: Boom length (m)
B: Load radius (m)
C: Loaded boom angle (°)
D: Minimum boom angle (°) for indicated boom length (no load)

https://truckmanualshub.com/

GR-500EXS RATED LIFTING CAPACITIES

ON OUTRIGGERS FULLY EXTENDED 7.0 m SPREAD
360° ROTATION (Unit: ×1000 kg)

C	33.0-m Boom + 8.0-m Jib						C	33.0-m Boom + 12.7-m Jib					
	5° Tilt		25° Tilt		45° Tilt			5° Tilt		25° Tilt		45° Tilt	
	R	W	R	W	R	W		R	W	R	W	R	W
80	7.4	4.5	10.0	3.1	11.8	2.2	80	9.2	2.8	12.6	1.4	15.7	1.0
79	8.2	4.5	10.7	3.0	12.5	2.2	79	9.8	2.8	13.4	1.4	16.3	1.0
78	8.9	4.3	11.3	2.9	13.1	2.2	78	10.6	2.8	14.2	1.4	17.1	1.0
77	9.6	4.1	12.0	2.8	13.7	2.2	77	11.4	2.8	14.9	1.4	17.7	1.0
76	10.4	3.9	12.8	2.7	14.4	2.2	76	12.3	2.8	15.7	1.4	18.4	1.0
74	11.8	3.6	14.1	2.6	15.6	2.1	74	13.9	2.8	17.2	1.4	19.8	1.0
72	13.2	3.3	15.4	2.4	16.9	2.0	72	15.4	2.5	18.7	1.4	21.0	1.0
70	14.5	3.1	16.7	2.3	18.1	2.0	70	16.9	2.3	20.1	1.4	22.3	1.0
68	15.8	2.8	18.0	2.2	19.3	1.9	68	18.3	2.2	21.4	1.4	23.5	1.0
65	17.7	2.6	19.8	2.0	20.9	1.8	65	20.5	2.0	23.4	1.3	25.3	1.0
63	19.0	2.4	21.0	1.9	22.0	1.7	63	21.9	1.8	24.8	1.3	26.4	1.0
60	20.9	2.2	22.7	1.8	23.6	1.7	60	23.9	1.7	26.6	1.2	28.1	1.0
58	22.0	2.1	23.8	1.8	24.6	1.6	58	25.2	1.6	27.9	1.2	29.1	1.0
55	23.7	1.9	25.4	1.7	26.0	1.6	55	27.1	1.5	29.6	1.1	30.6	1.0
53	24.9	1.8	26.5	1.6	27.0	1.5	53	28.3	1.4	30.7	1.1	31.5	1.0
50	26.4	1.6	27.9	1.5	28.3	1.5	50	30.1	1.3	32.2	1.1	32.9	1.0
47	27.9	1.5	29.3	1.4	29.5	1.4	47	31.7	1.2	33.7	1.1	34.1	1.0
45	28.9	1.4	30.1	1.3	30.2	1.3	45	32.8	1.2	34.6	1.0	34.9	1.0
43	29.8	1.3	30.9	1.3			43	33.8	1.1	35.5	1.0		
40	31.1	1.2	32.0	1.2			40	35.2	1.0	36.7	1.0		
37	32.3	1.1	33.1	1.0			37	36.5	0.9	37.8	0.9		
35	33.0	1.0	33.8	1.0			35	37.3	0.8	38.5	0.8		
33	33.7	0.9	34.4	0.9			33	38.1	0.8	39.1	0.7		
30	34.7	0.8	35.2	0.8			30	39.2	0.7	40.0	0.6		

ON OUTRIGGERS MID EXTENDED 6.5 m SPREAD
OVER SIDE (Unit: ×1000 kg)

C	33.0-m Boom + 8.0-m Jib						C	33.0-m Boom + 12.7-m Jib					
	5° Tilt		25° Tilt		45° Tilt			5° Tilt		25° Tilt		45° Tilt	
	R	W	R	W	R	W		R	W	R	W	R	W
80	7.4	4.5	10.0	3.1	11.8	2.2	80	9.2	2.8	12.6	1.4	15.7	1.0
79	8.2	4.5	10.7	3.0	12.5	2.2	79	9.8	2.8	13.4	1.4	16.3	1.0
78	8.9	4.3	11.3	2.9	13.1	2.2	78	10.6	2.8	14.2	1.4	17.1	1.0
77	9.6	4.1	12.0	2.8	13.7	2.2	77	11.4	2.8	14.9	1.4	17.7	1.0
76	10.4	3.9	12.8	2.7	14.4	2.2	76	12.3	2.8	15.7	1.4	18.4	1.0
74	11.8	3.6	14.1	2.6	15.6	2.1	74	13.9	2.8	17.2	1.4	19.8	1.0
72	13.2	3.3	15.4	2.4	16.9	2.0	72	15.4	2.5	18.7	1.4	21.0	1.0
70	14.5	3.1	16.7	2.3	18.1	2.0	70	16.9	2.3	20.1	1.4	22.3	1.0
68	15.8	2.8	18.0	2.2	19.3	1.9	68	18.3	2.2	21.4	1.4	23.5	1.0
65	17.7	2.6	19.8	2.0	20.9	1.8	65	20.5	2.0	23.4	1.3	25.3	1.0
63	19.0	2.4	21.0	1.9	22.0	1.7	63	21.9	1.8	24.8	1.3	26.4	1.0
60	20.9	2.2	22.7	1.8	23.6	1.7	60	23.9	1.7	26.6	1.2	28.1	1.0
58	22.0	2.1	23.8	1.8	24.6	1.6	58	25.2	1.6	27.9	1.2	29.1	1.0
55	23.7	1.9	25.4	1.7	26.0	1.6	55	27.1	1.5	29.6	1.1	30.6	1.0
53	24.9	1.8	26.5	1.6	27.0	1.5	53	28.3	1.4	30.7	1.1	31.5	1.0
50	26.4	1.6	27.9	1.5	28.3	1.4	50	30.1	1.3	32.2	1.1	32.9	1.0
47	27.9	1.4	29.2	1.3	29.5	1.2	47	31.7	1.2	33.7	1.0	34.1	1.0
45	28.8	1.2	30.1	1.1	30.2	1.1	45	32.7	1.0	34.6	0.9	34.9	0.9
43	29.7	1.1	30.9	1.0			43	33.7	0.9	35.4	0.8		
40	31.0	0.9	32.0	0.9			40	35.1	0.8	36.6	0.7		
37	32.2	0.8	33.0	0.7			37	36.4	0.6	37.7	0.6		
35	32.9	0.7	33.7	0.6			35	37.2	0.6	38.4	0.5		
33	33.6	0.6	34.3	0.6			33	37.9	0.5	39.0	0.5		
30	34.6	0.5	35.2	0.5			30	39.0	0.4	39.9	0.4		

ON OUTRIGGERS MID EXTENDED 5.0 m SPREAD
OVER SIDE (Unit: ×1000 kg)

C	33.0-m Boom + 8.0-m Jib						C	33.0-m Boom + 12.7-m Jib					
	5° Tilt		25° Tilt		45° Tilt			5° Tilt		25° Tilt		45° Tilt	
	R	W	R	W	R	W		R	W	R	W	R	W
80	7.4	4.5	10.0	3.1	11.8	2.2	80	9.2	2.8	12.6	1.4	15.7	1.0
79	8.2	4.5	10.7	3.0	12.5	2.2	79	9.8	2.8	13.4	1.4	16.3	1.0
78	8.9	4.3	11.3	2.9	13.1	2.2	78	10.6	2.8	14.2	1.4	17.1	1.0
77	9.6	4.1	12.0	2.8	13.7	2.2	77	11.4	2.8	14.9	1.4	17.7	1.0
76	10.4	3.9	12.8	2.7	14.4	2.2	76	12.3	2.8	15.7	1.4	18.4	1.0
74	11.8	3.6	14.1	2.6	15.6	2.1	74	13.9	2.8	17.2	1.4	19.8	1.0
72	13.2	3.3	15.4	2.4	16.9	2.0	72	15.4	2.5	18.7	1.4	21.0	1.0
70	14.5	3.1	16.7	2.3	18.1	2.0	70	16.9	2.3	20.1	1.4	22.3	1.0
68	15.8	2.8	18.0	2.2	19.3	1.9	68	18.3	2.2	21.4	1.4	23.5	1.0
65	17.7	2.5	19.8	2.0	20.9	1.8	65	20.5	2.0	23.4	1.3	25.3	1.0
63	19.0	2.2	21.0	1.9	22.0	1.7	63	21.9	1.8	24.8	1.3	26.4	1.0
60	20.7	1.8	22.6	1.6	23.5	1.4	60	23.8	1.5	26.6	1.2	28.1	1.0
58	21.8	1.5	23.7	1.3	24.5	1.2	58	25.0	1.3	27.8	1.1	29.1	1.0
55	23.5	1.2	25.2	1.1	25.9	1.0	55	26.9	1.0	29.4	0.8	30.5	0.8
53	24.6	1.0	26.2	0.9	26.8	0.8	53	28.0	0.8	30.5	0.7	31.4	0.6
50	26.1	0.8	27.6	0.7	28.1	0.6	50	29.7	0.6	32.0	0.5	32.8	0.5
47	27.6	0.6	29.0	0.5	29.3	0.5	47	31.3	0.5	33.4	0.4		
45	28.6	0.4	29.8	0.4	30.1	0.4							

C: Boom angle (°)
R: Load radius (m)
W: Rated lifting capacity

https://truckmanualshub.com/

GR-500EXS RATED LIFTING CAPACITIES

ON RUBBER STATIONARY (Unit: ×1000 kg)										
A / B	Over Front						360° Rotation			
	10.2 m		17.7 m		25.3 m		10.2 m		17.7 m	
	C		C		C		C		C	
3.0	63	13.9	75	8.1						
3.5	60	12.3	73	8.1						
4.0	56	10.9	73	8.1						
4.5	52	9.8	70	8.1	77	3.4				
5.0	48	8.8	68	7.8	75	3.4	49	4.3		
5.5	44	8.0	66	7.2	74	3.4	44	3.5		
6.0	41	7.3	64	6.6	73	3.4	40	2.8	64	1.9
6.5	36	6.7	63	6.1	72	3.4	35	2.2	62	1.9
7.0	30	5.8	61	5.6	70	3.4	29	1.7	61	1.6
7.5	23	5.1	59	5.2	69	3.4	21	1.3	59	1.3
8.0			57	4.8	68	3.4			57	1.0
9.0			53	4.0	65	3.4			53	0.6
10.0			48	3.3	63	3.4				
11.0			43	2.6	60	3.4				
12.0			38	2.1	58	3.2				
13.0			32	1.9	55	2.8				
14.0			25	1.7	52	2.4				
16.0					46	1.7				
18.0					38	1.1				
20.0					30	0.7				
D	0°				27°		0°		50°	

LIFTING CAPACITIES AT ZERO DEGREE BOOM ANGLE ON RUBBER STATIONARY										
A / C	Over Front						360° Rotation			
	10.2 m		17.7 m		25.3 m		10.2 m		17.7 m	
	B		B				B			
0°	7.9	4.4	15.3	1.1			7.9	0.9		

ON RUBBER CREEP (Unit: x 1,000 kg)										
A / B	Over Front						360° Rotation			
	10.2 m		17.7 m		25.3 m		10.2 m		17.7 m	
	C		C				C		C	
3.0	63	9.1	75	7.2						
3.5	60	7.9	73	7.2						
4.0	56	7.0	72	7.2						
4.5	52	6.2	70	6.7	76	3.1				
5.0	49	5.6	68	6.0	75	3.1	49	3.3		
5.5	44	5.0	66	5.5	74	3.1	44	2.6		
6.0	40	4.5	64	4.9	73	3.1	40	2.1	64	1.3
6.5	35	4.1	63	4.5	72	3.1	35	1.6	62	1.3
7.0	29	3.7	61	4.1	70	3.1	29	1.2	61	1.1
7.5	21	3.4	59	3.8	69	3.1	21	0.9	59	0.9
8.0			57	3.5	68	3.1			57	0.8
9.0			53	2.9	65	3.1				
10.0			48	2.4	63	3.1				
11.0			43	1.9	60	2.8				
12.0			38	1.5	58	2.4				
13.0			32	1.2	55	2.1				
14.0			25	1.0	52	1.8				
16.0					45	1.2				
18.0					38	0.8				
D	0°				30°		0°		51°	

LIFTING CAPACITIES AT ZERO DEGREE BOOM ANGLE ON RUBBER CREEP									
A / C	Over Front						360° Rotation		
	10.2 m		17.7 m		25.3 m		10.2 m		17.7 m
	B		B				B		
0°	7.9	2.4	15.3	0.7			7.9	0.6	

A: Boom length (m)
B: Load radius (m)
C: Loaded boom angle (°)
D: Minimum boom angle (°) for indicated boom length (no load)

https://truckmanualshub.com/

WARNING AND OPERATING INSTRUCTIONS FOR ON RUBBER LIFTING CAPACITIES

1. Rated lifting capacities based on crane stability are according to ISO4305.
2. Rated lifting capacities shown in the chart are based on the condition that crane is set on firm level surfaces. Those above thick lines are based on tire capacity and those below, on crane stability. They are based on actual load radius increased by tire deformation and boom deflection.
3. Rated lifting capacities are based on proper tire inflation, capacity and condition. Damaged tires are hazardous to safe operation of crane.
4. Tires shall be inflated to correct air pressure.

Tires	Air Pressure
445/95R25	900 kPa

5. Over front operation shall be performed within 2 degrees in front of chassis.

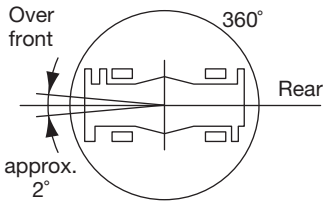

6. Maximum permissible boom length is 25.3 m.
7. When making lift on rubber stationary, set parking brake.
8. For creep operation, travel slowly and keep the lifted load as close to the ground as possible, and especially avoid any abrupt steering, accelerating or braking.
9. Do not operate the crane while carrying the load.
10. Creep is motion for crane not to travel more than 60 m in any 30 minute period and to travel at the speed of less than 1.6 km/h.
11. For creep operation, choose the drive mode and proper gear according to the road or working condition.
12. The mass of the hook (460 kg for 50 t capacity, 280 kg for 25 t capacity, 100 kg for 4.5 t capacity), slings and all similarly used load handling devices must be considered as part of the load and must be deducted from the lifting capacities.
13. For rated lifting capacity of single top, reduce the rated lifting capacities of relevant boom according to a weight reductions for auxiliary load handling equipment. Capacities of single top shall not exceed 4,500 kg including main hook.
14. The lifting capacity data stowed in the Automatic Moment Limiter (AML-C) is based on the standard number of parts of line listed in the chart. Standard number of parts of line for on rubber operation should be according to the following table.

Boom length	10.2 m	10.2 m to 25.3 m	Single top
Number of parts of line	4	4	1

https://truckmanualshub.com/

WARNING AND OPERATING INSTRUCTIONS FOR LIFTING CAPACITIES

GENERAL

1. RATED LIFTING CAPACITIES apply only to the machine as originally manufactured and normally equipped by TADANO LTD. Modifications to the machine or use of optional equipment other than that specified can result in a reduction of capacity.
2. Hydraulic cranes can be hazardous if improperly operated or maintained. Operation and maintenance of this machine must be in compliance with information in the ***Operation and Maintenance Manual*** supplied with the crane. If this manual is missing, order a replacement through the distributor.

SET UP

1. Rated lifting capacities on the chart are the maximum allowable crane capacities and are based on the machine standing level on firm supporting surface under ideal job conditions. Depending on the nature of the supporting surface, it may be necessary to have structural supports under the outrigger floats or tires to spread the loads to a larger bearing surface.
2. For outrigger operation, outriggers shall be properly extended with tires free of supporting surface before operating crane.

OPERATION

1. Rated lifting capacities on outriggers fully extended as determined by ISO4305.
2. Rated lifting capacities above thick lines in the chart are based on crane strength and those below, on its stability.
   They are based on actual load radius increased by boom deflection.
3. The weight of handling device such as hook blocks (460 kg for 50 t capacity, 280 kg for 25 t capacity, 100 kg for 4.5 t capacity), slings, etc., must be considered as part of the load and must be deducted from the lifting capacities.
4. Rated lifting capacities are based on freely suspended loads and make no allowance for such factors as the effect of wind, sudden stopping of loads, supporting surface conditions, inflation of tires, operating speeds, side loads, etc. Side pull on the boom or jib is extremely dangerous.
   Such action can damage the boom, jib or slewing mechanism, and lead to overturning of the crane.
5. Rated lifting capacities do not account for wind on lifted load or boom. We recommend against working under the conditions that the load is out of control due to a strong wind. During boom lift, consider that the rated lifting capacity is reduced by 50% when the wind speed is 9 m/s to 12 m/s; reduced by 70 % when the wind speed is 12 m/s to 14 m/s. If the wind speed is 14 m/s or over, stop operation. During jib lift, stop operation if the wind speed is 9 m/s or over.
6. Rated lifting capacities at load radius shall not be exceeded.
   Do not tip the crane to determine allowable loads.
7. Do not operate at boom lengths, radii or boom angles, where no capacities are shown. Crane may overturn without any load on the hook.
8. When boom length is between values listed, refer to the rated lifting capacities of the next longer and next shorter booms for the same radius. The lesser of the two rated lifting capacities shall be used.
9. When making lifts at a load radius not shown, use the next longer radius to determine allowable capacity.
10. Load per line should not exceed 44.1kN (4,500 kgf) for main winch and auxiliary winch.
11. Check the actual number of parts of line with Automatic Moment Limiter (AML-C) before operation. Maximum lifting capacity is restricted by the number of parts of line of Automatic Moment Limiter (AML-C). Limited capacity is as determined from the formula, Single line pull for main winch 44.1kN (4,500 kgf) x number of parts of line.
12. The boom angle before loading should be greater to account for deflection. For rated lifting capacities, the loaded boom angle and the load radius is for reference only.
13. The 10.2-m Boom length capacities are based on boom fully retracted.
14. Extension or retraction of the boom with loads may be attempted within the limits of the RATED LIFTING CAPACITIES.
    The ability to telescope loads is limited by hydraulic pressure, boom angle, boom length, crane maintenance, etc.
15. For lifting capacity of single top, deduct the weight of the load handling equipment from the rated lifting capacity of the boom.
    For the lifting capacity of single top, the net capacity shall not exceed 4,500 kg including the main boom hook mass attached to the boom.
16. When a jib is removed, set the jib state switch to the REMOVED position.
17. When erecting and stowing jib, be sure to retain it by hand or by other means to prevent its free movement.
18. Use "ANTI-TWO-BLOCK DEVICE" disable switch when erecting and stowing jib and when stowing hook block. While the switch is pushed, the hoist does not stop, even when overwind condition occurs.
19. For boom length 33.0 m or less with jib, rated lifting capacities are determined by loaded boom angle only in the column headed "33.0-m Boom + jib". For angles not shown, use the next lower loaded boom angle to determine allowable capacity.
20. When lifting a load by using jib (aux. winch) and boom (main winch) simultaneously, do the following:
    - Enter the operation status as jib operation, not as boom operation.
    - Before starting operation, make sure that mass of load is within rated lifting capacity for jib.
21. The lifting capacity data stowed in the Automatic Moment Limiter (AML-C) is based on the standard number of parts of line listed in the chart. Standard number of parts of line for on outrigger operation should be according to the following table.

Boom length	10.2 m	10.2 m to 17.7 m	17.7 m to 33.0 m	Single top/ jib
Number of parts of line	13*/12	6	4	1

* With atachment sheave (When the lifting capacity over 47,000 kg)

22. The lifting capacity for over side area differs depending on outrigger extension width. Work with capacity corresponding to the extension width. The lifting capacities for over front and over rear areas are for "outriggers fully extended". However, the areas (angle a and b) differ depending on the outrigger extension width.

Outriggers extended width	6.5 m (middle)	5.0 m (middle)	2.48 m (minimum)
Angle a°	45	25	10
Angle b°	15	10	10

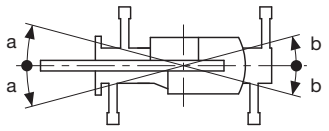

DEFINITIONS

1. Load Radius: Horizontal distance from a projection of the axis of rotation to supporting surface before loading to the center of the vertical hoist line or tackle with load applied.
2. Loaded Boom Angle: The angle between the boom base section and the horizontal, after lifting the rated lifting capacity at the load radius.
3. Working Area: Area measured in a circular arc about the centerline of rotation.
4. Freely Suspended Load: Load hanging free with no direct external force applied except by the hoist line.
5. Side Load: Horizontal side force applied to the lifted load either on the ground or in the air.

https://truckmanualshub.com/

WARNING AND OPERATING INSTRUCTIONS FOR USING THE AUTOMATIC MOMENT LIMITER (AML-C)

1. Set AML select keys in accordance with the actually operating crane conditions and don't fail to make sure, before crane operation, that the displays on front panel are correct.
2. When operating crane on outriggers:
   - Set P.T.O. switch to "ON".
   - Press the outrigger state select key to register for the outrigger operation. If the display agrees with the actual state, press the set key to register. After the completion of the registration, the pop-up window closes.
   - Press the lift state select key to register the lift state to be used (single top / jib / boom).
   - Each time the lift state select key is pressed, the display changes. If the display agrees with the actual state, press the set key to register. After the completion of the registration, the pop-up window closes.
   - When erecting and stowing jib, select the status of jib set (Jib lift indicative symbol flickers).
3. When operating crane on rubber:
   - Set P.T.O. switch to "ON".
   - Press the outrigger state select key to register for the on rubber operation. Each time the outrigger state select key is pressed, the display changes. Select the creep operation, the on rubber state indicative symbol flickers.
   - Press the lift state select key to register the lift state.

   However, pay attention to the following.
   For stationary and creep operation.
   - The front capacities are attainable only when the over front position symbol comes on. When the boom is more than 2 degrees from centered over front of chassis, 360° capacities are in effect.
   - When a load is lifted in the front position and then slewed to the side area, make sure the value of the AUTOMATIC MOMENT LIMITER (AML-C) is below the 360° lifting capacity.
4. This machine is equipped with an automatic slewing stop device.
   (For the details, see Operation and Maintenance Manual.)
   But, operate very carefully because the automatic slewing stop does not work in the following cases.
   - During on rubber operation.
5. During crane operation, make sure that the displays on front panel are in accordance with actual operating conditions.
6. The displayed values of AUTOMATIC MOMENT LIMITER (AML-C) are based on freely suspended loads and make no allowance for such factors as the effect of wind, sudden stopping of loads, supporting surface conditions, inflation of tire, operating speed, side loads, etc.
   For safe operation, it is recommended when extending and lowering boom or slewing, lifting loads shall be appropriately reduced.
7. AUTOMATIC MOMENT LIMITER (AML-C) is intended as an aid to the operator. Under no condition should it be relied upon to replace use of capacity charts and operating instruction. Sole reliance upon AUTOMATIC MOMENT LIMITER (AML-C) aids in place of good operating practice can cause an accident. The operator must exercise caution to assure safety.

GR-500EXS AXLE WEIGHT DISTRIBUTION CHART

	Kilograms		
	GVW	Front	Rear
Basic machine	33,540	15,550	17,990
Add: 1. 50 ton hook block (front bamper)	460	810	-350
2. 25 ton hook block (front bamper)	280	490	-210
Remove: 1. 4.5 ton hook block	-100	-150	50
2. 2-stage jib (8.0 m, 12.7 m)	-780	-1,050	270
3. Auxiliary lifting sheave	-50	-125	75

TADANO

TADANO LTD. (International Sales Division)
4-12, Kamezawa 2-chome,
Sumida-ku, Tokyo 130-0014, Japan

Tel: +81-(0)3-3621-7750
Fax: +81-(0)3-3621-7785
URL http://www.tadano.com/
E-mail info@tadano.com

Printed in Japan
2015-10-2