https://truckmanualshub.com/

OPERATOR'S MANUAL

Original instructions

TL8 Serial No. 200800002~

TL10 Serial No. 201000002~

TL12 Serial No. 201200003~

Book No.AU8E000

OETL8_E-XA

TRACK LOADER

TAKEUCHI

WARNING Read and understand these instructions.
Failure to do so can cause injury or death.

https://truckmanualshub.com/

SAFETY ALERT SYMBOL

This symbol represents the safety alert. The message that follows the symbol contains important information about safety.
Read and understand the message to avoid personal injury or death.

It is the owner or employer's responsibility to fully instruct each operator in the proper and safe operation of all equipment. All persons using this machine should thoroughly familiarize themselves with the contents of this manual.

All operators must be instructed on the proper functions of this machine before running the machine.

Learn and practice correct use of the machine controls in a safe, clear area before operating this machine on a job site.

WARNING

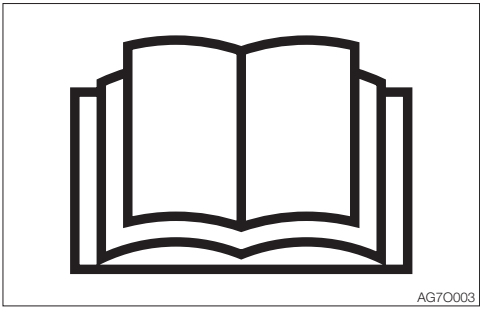

Improper operation, inspection and maintenance of this machine can cause injury or death.
Read and understand this manual before performing any operation, inspection or maintenance on this machine.

Always store this manual near at hand preferably on the machine itself. If it should be lost or damaged, immediately order a new one from your Takeuchi dealer.
When transferring ownership of this machine, be sure to hand this manual to the next owner.

Takeuchi supplies machines complying with the local regulations and standards of the country of export. If your machine has been purchased in another country or from a person or company of another country, it may not have the safety devices or safety standards required for use in your country. Should you have any question about whether your machine complies with the regulations and standards of your country, contact a Takeuchi dealer.

https://truckmanualshub.com/

SIGNAL WORDS

Safety messages appearing in this manual and on machine decals are identified by the words “DANGER”, “WARNING” and “CAUTION”. These signal words mean the following:

⚠ DANGER

DANGER indicates a hazard with a high level of risk which, if not avoided, will result in death or serious injury.

⚠ WARNING

WARNING indicates a hazard with a medium level of risk which, if not avoided, could result in death or serious injury.

⚠ CAUTION

CAUTION indicates a hazard with a low level of risk which, if not avoided, could result in minor moderate injury.

IMPORTANT: The word IMPORTANT is used to alert operators and maintenance personnel about situations which could result in damage to the machine and its components.

It is impossible to foresee every possible circumstance that might involve a potential hazard. The warnings in this manual or on the machine can not cover all possible contingencies. You must exercise all due care and follow normal safety procedures when operating the machine so as to ensure that no damage occurs to the machine, its operators or other persons.

https://truckmanualshub.com/

FOREWORD

This manual describes operation, inspection and maintenance of the machine, as well as safety instructions to be heeded during these operations. If you have any questions about the machine, please contact a Takeuchi sales or service outlet.

MANUAL STORAGE COMPARTMENT

A compartment for storing this manual is provided at the position shown on the diagram below.

Type A

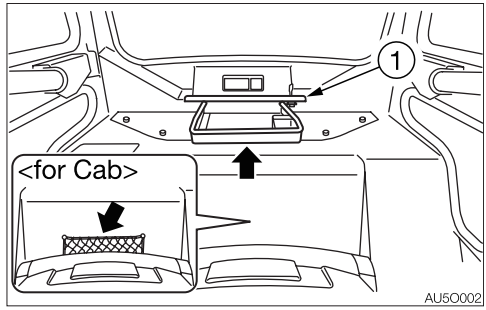

Type B

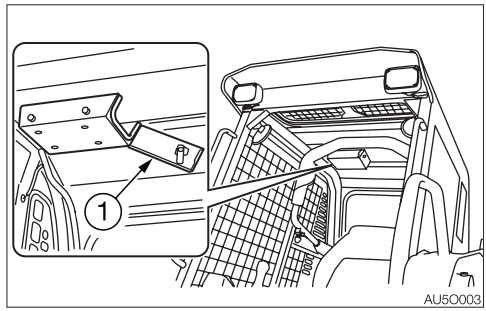

1. Insert the ignition key and turn it counterclockwise to open the cover (1).
2. After using the manual, place it in the plastic pouch and store it back in the manual storage compartment.

https://truckmanualshub.com/

SERIAL NUMBERS

IMPORTANT: Do not remove the machine name plate with the serial number.
Check the serial numbers of the machine and engine and write them down in the spaces below.

Machine number:

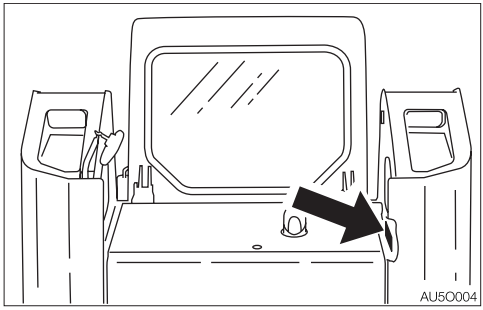

Engine number:

<TL8>

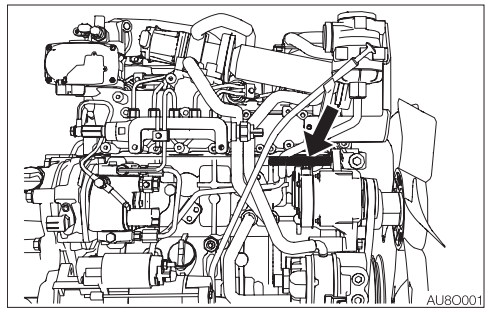

<TL10/TL12>

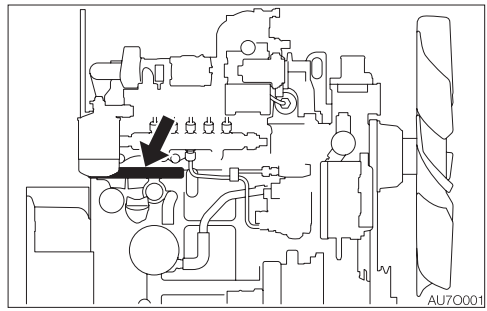

https://truckmanualshub.com/

MACHINE DESCRIPTION

FRONT, REAR, LEFT AND RIGHT

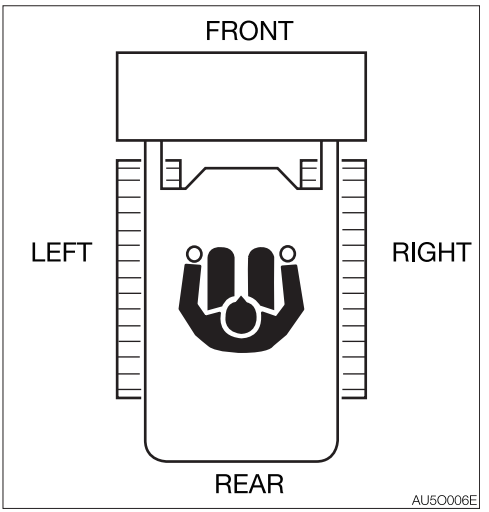

This manual refers the front, rear, left and right of the machine as seen when sitting in the operator's seat with the bucket visible to the front.

DESIGNATED OPERATIONS

Use this machine primarily for the following operations:
- Hauling
- Leveling
- Loading

FEATURES

- Hydrostatic drive system
- Tilt-up canopy and cab with ROPS/FOPS
- Engine emergency stop system
- Low engine noise and exhaust emissions
- Electronic control of auxiliary hydraulic circuit

BREAK-IN PERIOD

When the machine is new, operate the machine for the first 100 hours (as indicated on the hour meter) by following the instructions below.
Using a new machine without a break-in period will lead to quicker deterioration of machine performance and may shorten the machine's service life.
- Sufficiently warm up the engine and hydraulic oil.
- Avoid heavy loads and rapid operations. Operate with a load of about 80% the maximum load.
- Do not abruptly start up, accelerate, change directions, or stop unless necessary.

https://truckmanualshub.com/

https://truckmanualshub.com/

NOTES ON READING THIS MANUAL

Please note that the descriptions and diagrams included in this manual may not be applicable to your machine.
The numbers used in the illustration are with circles around them. The same numbers appear between the parentheses in the text.
(Example: ① → (1))

Symbols used in this manual
The symbols used in this manual have the following meanings.
⃠, ✕ ..... Prohibition
🔒 ..... Lock
🔓..... Unlock

https://truckmanualshub.com/

CONTENTS

Introduction 0-2

Machine description 0-4

Safety 1-1

General precautions 1-2
Precautions when preparing 1-11
Precautions when starting 1-14
Precautions when operating 1-16
Precautions when stopping 1-24
Precautions when transporting 1-25
Precautions on maintenance 1-26
Safety signs (decals) 1-36

Controls 2-1

Names of components 2-2
Covers..... 2-4
Ignition key 2-4
Fuel filler port 2-4
Engine hood 2-5
Rear door 2-5
Cab 2-6
Cab door 2-6
Side Window 2-8
Emergency exit..... 2-9
Fuse box 2-9
Lift arm stopper 2-10
Seat and seat belt 2-12
Seat 2-12
Seat belt 2-13
3-point seat belt (optional) 2-13
Instrument cluster..... 2-14
Warning lamps..... 2-14
Indicators..... 2-15
Meters 2-15
Multi-data display 2-16
Switches 2-24
Ignition switch..... 2-24
Engine shutdown switch 2-24
Horn button 2-24
Float button 2-25
Multifunction buttons 2-26
Auxiliary hydraulic switches..... 2-26
Travel speed button 2-28
Front wiper switch (optional)
Rear wiper switch (optional) 2-29
Front light switch 2-29
Tail light switch..... 2-29
ECO/Power mode select switch 2-30
DPF manual regeneration/inhibit select switch..... 2-30
Auxiliary 1st flow rate select switch 2-32
Parking brake switch (TL12 optional) .. 2-32
Ride control switch (TL10/TL12 optional)..... 2-32
Aux. 2nd/14-pin connector select switch (TL10/TL12 optional)..... 2-33
14-pin connector G/H select switch (optional)..... 2-33
Levers and Pedal..... 2-34
Safety Bar..... 2-34
Throttle lever (TL10/TL12) 2-34
Throttle pedal (optional) 2-34
Right control lever..... 2-35
Left control lever 2-35
Accessories..... 2-36
Air conditioner 2-36
External power socket 2-40
Interior light..... 2-40
Mirrors 2-41
Radio (for cab optional)..... 2-41
Auxiliary hydraulic lines (optional) 2-48
Aux. 2nd lines (TL10/TL12 optional)... 2-50
High-Flow Hydraulic System (If equipped)..... 2-52
Lift arm lower button (TL8) 2-53

Operation 3-1

Before starting operation 3-2
Getting on or off the machine..... 3-2
Walk-around inspection 3-2
Daily inspection..... 3-2
Starting and stopping the engine 3-3
Before starting the engine 3-3
Starting the Engine 3-4
Warming up the engine..... 3-4
Stopping the engine 3-5
Operating the machine 3-6
Lever pattern (ISO)..... 3-6
Lever pattern (H)..... 3-7
Warming up the machine (hydraulic oil) ..3-8
Inspection after warm-up..... 3-9
Traveling the machine 3-10
Stopping travel 3-12
Operating the working equipment..... 3-12
Operating procedures..... 3-14
Prohibited operations..... 3-14
Cautions on operating 3-17
Cautions on traveling on slopes 3-18

https://truckmanualshub.com/

Operations possible with this machine ..3-20
Parking the machine 3-23
Parking 3-23
Inspection and checks after stopping the engine 3-23
Handling in cold climates 3-24
Preparing for cold climates 3-24
Cautions after operations 3-24
After the cold climate 3-24
Handling rubber tracks 3-25
Prohibitions 3-25
Cautions 3-26
Preventing the rubber tracks from coming off 3-26

Transport 4-1

Loading and unloading 4-2
Hoisting the machine 4-3
Securing the machine 4-5

Maintenance 5-1

General 5-2
Maintenance overview 5-2
Cautions on maintenance 5-2
Service data 5-4
Fuel and lubricant table 5-4
Regularly replace the hydraulic oil 5-6
List of consumables 5-7
List of tools 5-8
List of tightening torques 5-9
Safety-critical parts 5-10
Maintenance list 5-12
Walk-around inspection 5-14
Inspecting by opening the engine hood and rear door 5-14
Inspecting by walking around the machine 5-15
Inspecting while sitting in the operator's seat 5-15
Daily inspection (every 10 hours) 5-16
Inspecting and replenishing the coolant 5-16
Inspecting and replenishing the engine oil 5-17
Inspecting the water separator 5-18
Inspecting the fuel level 5-18
Inspecting the hydraulic oil tank level and replenishing 5-19
Lubricating the working equipment 5-20
After the initial 50 hours (only for new machines) 5-21
Replacing the engine oil and the oil filter 5-21
Replacing the hydraulic oil return filter 5-22
Replacing the pilot line filter 5-23
Inspecting and adjusting the fan belt 5-24
Inspecting and adjusting the compressor belt (AC) 5-26
Every 50 hours 5-27
Inspecting and adjusting the track tension 5-27
Draining the water from the fuel tank 5-28
Inspecting the battery fluid level and replenishing 5-29
Inspecting the bucket stoppers (bolts/nuts) 5-30
Every 100 hours 5-31
Cleaning the water separator 5-31
After the initial 250 hours (only for new machines) 5-32
Replacing the travel motor gear oil 5-32
Every 250 hours 5-33
Inspecting and adjusting the fan belt 5-33
Inspecting and adjusting the compressor belt (AC) 5-33
Replacing the air cleaner element 5-34
Cleaning the radiator fins and oil cooler fins 5-35
Cleaning the condenser (AC) 5-35
Cleaning the air filters (AC) 5-36
Inspecting the refrigerant (gas) level (AC) 5-37
Every 500 hours 5-39
Replacing the engine oil and the oil filter 5-39
Replacing the hydraulic oil return filter 5-39
Replacing the pilot line filter 5-39
Replacing the travel motor gear oil 5-39
Replacing the fuel filters 5-39
Adjusting or replacing the bucket stoppers (bolts/nuts) 5-40
Every 1000 hours 5-43
Cleaning the engine cooling system 5-43
Replacing the hydraulic oil and cleaning the suction strainer 5-45
Inspecting and adjusting the engine valve clearance 5-47
Every 1500 hours 5-48
Replacing the oil separator element 5-48

https://truckmanualshub.com/

Inspecting the injector tip 5-48
Inspecting the EGR cooler 5-48
Inspecting the PCV valve (TL10/TL12) .. 5-48
Every 3000 hours 5-49
Inspecting the turbocharger 5-49
Cleaning the DPF 5-49
Inspecting the EGR system 5-49
When required 5-50
Replacing the bucket or attachment .. 5-50
Inspecting and replenishing the windshield washer fluid 5-52
Lubricating the levers 5-52
Inspecting the rubber tracks 5-53
Every year 5-54
Replacing the receiver drier 5-54
Tilting up the canopy (cab) 5-55
Maintenance during extended storage period 5-56

Troubleshooting 6-1

Symptoms that are not malfunctions 6-2
If the engine overheats 6-3
If the battery goes dead 6-4
If a fuse blows 6-6
Inspecting and replacing the fuse 6-6
Inspecting the fusible link 6-7
Restarting after adding fuel 6-8
Bleeding air from the fuel system 6-8
If a warning lamp flashes 6-10
Vehicle error code list 6-12
Engine error code list 6-13
Other symptoms 6-16
Lowering the lift arms to the ground 6-18
Towing 6-19
If the cab or canopy is damaged 6-20

Specifications 7-1

Basic Specifications 7-2
Machine dimensions 7-6
Operating ranges 7-10

Options 8-1

General precautions 8-2
Safety precautions 8-2
Cautions when installing attachments .. 8-2
Cautions when operating attachments ... 8-3
Hydraulic quick-hitch 8-4
Replacing the Bucket or Attachment .. 8-4
Quick-Couplers 8-6
4-Port quick-coupler (TL10/TL12) 8-7
Selecting a lever pattern 8-9
Switching the lever pattern 8-9
Seat (with a switch function) 8-10
Optional equipment mass 8-11

https://truckmanualshub.com/

https://truckmanualshub.com/

SAFETY

https://truckmanualshub.com/

GENERAL PRECAUTIONS

It is your responsibility to observe all pertinent laws and regulations and to follow the manufacture's instructions on machine operation, inspection and maintenance.

Virtually all accidents occur as the result of a failure to observe basic safety rules and precautions.
Most accidents can be prevented by identifying the potentially hazardous situations beforehand.
Read and understand all safety messages which describe how to prevent accidents.
Do not operate the machine until you are sure that you have gained a proper understanding of its operation, inspection and maintenance.

Observe all safety rules

- Operation, inspection and maintenance of this machine must be performed only by a trained and qualified person.
- All rules, regulations, precautions and safety procedures must be understood and followed when performing operation, inspection and maintenance of this machine.
- Do not perform any operation, inspection and maintenance of this machine when under the adverse influence of alcohol, drugs, medication, fatigue or insufficient sleep.

When a problem is found on the machine

If any problem (noise, vibration, smell, disorder of instrument, smoke, oil leak, wrong indication of alarm or unusual indication in the instrument cluster, etc.) is detected during the operation or inspection and maintenance of the machine, immediately inform your sales or service dealer and take proper actions. Do not operate the machine until the trouble is cleared.

Operating temperature range

To maintain the performance of machine and to prevent it from early wear, observe the following operating conditions.

- Do not operate the machine if the ambient temperature is higher than +45°C (+113°F) or lower than –15°C (+5°F).
  - If operated at an ambient temperature of higher than +45°C (+113°F), the engine may overheat and cause the engine oil to degrade.
  - If operated at an ambient temperature of lower than –15°C (+5°F), the parts made of rubber such as gaskets may get hardened to cause an early wear or damage to the machine.
  - If the machine is to be used outside the ambient temperature range described above, consult your sales or a service dealer.

https://truckmanualshub.com/

Wear appropriate clothing and protective equipment

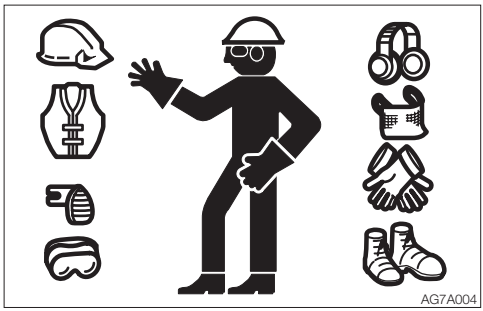

- Do not wear loose clothing or any accessory that can catch on controls or in moving parts.
- Do not wear oily or fuel stained clothing that can easily catch fire.
- Wear a hard hat, safety shoes, safety glasses, filter mask, heavy gloves, ear protection and other protective equipment as required by job conditions. Wear required appropriate equipment such as safety glasses and filter mask when using grinders, hammers or compressed air, as metal fragments or other objects can fly and cause serious injury.
- Use hearing protection when operating the machine. Loud prolonged noise can cause hearing impairments, even the total loss of hearing.

Install a fire extinguisher and first aid kit

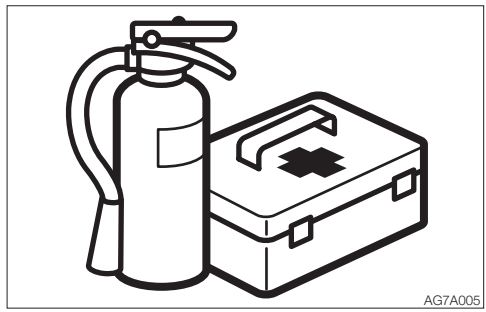

Be prepared for fire and accidents

- Install an extinguisher and a first aid kit, and learn how to use them.
- Lean how to fight a fire and how to deal with accidents.
- Know how to contact emergency assistance and make a list of emergency contacts.

Never remove safety equipment

- Make sure all protective guards, covers, canopies, cabs and doors are in place and secured. Repair or replace damaged parts before operating the machine.
- Know how to use the safety bar, seat belt and other safety equipment and use them properly.
- Never remove any safety equipment except for servicing. Keep all safety equipment in good operating condition.

https://truckmanualshub.com/

Use a signal person and a flag person

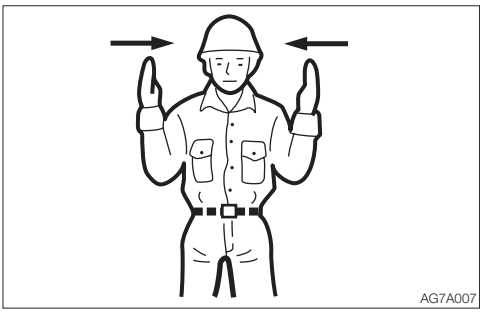

Learn how to use the hand signals required for particular jobs and make sure who has the responsibility for signaling.

- All personnel must fully understand all the signals.
- The operator must respond to signals only from the appointed signal person, but must obey a stop signal at any time from anyone.
- The signal person must stand in a clearly visible location when giving signals.

Cautions when standing up from or leaving the operator's seat

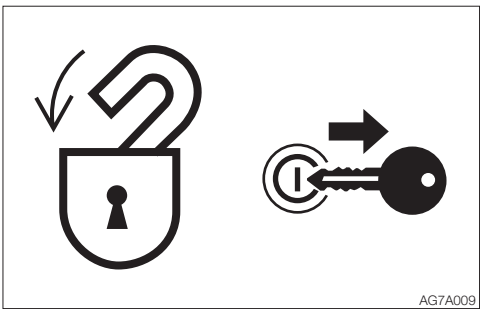

- Before standing up from the operator's seat, lower the bucket to the ground. If the lift arms must be left in a raised position, engage the lift arm stopper, set the safety bar to the lock position and stop the engine.
  If any controls should be accidentally touched when the safety bar is lowered (unlocked), the machine will suddenly move and cause serious injury or death.
- Be careful not to touch the control levers when raising or lowering the safety bar.
- Before leaving the operator's seat, lower the working equipment to the ground, raise the safety bar to engage the lock and stop the engine. Also, be sure to remove the key, lock the door and covers, take it with you and store it in a specified place.

https://truckmanualshub.com/

Avoid fire and explosion hazards

Keep flames away from fuel, oil, grease and antifreeze. Fuel is particularly flammable and dangerous.

- When handling these combustible materials, keep lit cigarettes, matches, lighters and other flames or sources of flames away.
- Do not smoke or permit open flames while handling fuel or working on the fuel system.
- Do not leave the location while refilling with fuel or oil.
- Never remove the fuel cap or add fuel when the engine is running or still hot. Also, do not spill the fuel on the hot surface of the machine or the component of the electric system.
- Clean up spilled fuel or oil immediately.
- Check for fuel, oil leak. Stop all leaks and clean the machine before operating.
- When operating with grinder or welding, move inflammables to a safe place.
- Do not cut or weld on pipes or tubes that contain flammable fluids. Clean thoroughly with nonflammable solvent before cutting or welding.
- Remove all trash or debris from the machine. Make sure that oily rags or other flammable material are not stored on the machine.
- Handle all solvents and dry chemicals (foam type fire extinguisher) according to procedures identified on manufacturer's containers. Work in a well-ventilated area.
- Never use fuel for cleaning purposes. Always use a nonflammable solvent.
- When handling the fuel, washing oil or paint, open the door and windows to ventilate thoroughly.
- Store all flammable fluids and materials in a safe and well-ventilated place.
- The short circuit of the electric system may cause the fire. Check for any loosened connections or damage to the wires every day. Retighten the loosened connector and wire clamp. Fix or change the damaged wire.
- Fire from the pipes:
  Make sure that the clamps, guards and cushions of the hoses and tubes are securely fixed. If not, hoses or tubes may be damaged due to vibration or contact with other parts during operation. This can cause the high-pressure oil to spurt out, resulting in the fire or injury.
- Do not perform the DPF regeneration if the machine is surrounded by flammable items such as plants, trees, dry grass, wastepaper, oil and waste tires. There is a risk of fire due to the high-temperature exhaust gas emitted from the DPF.
  DPF: Diesel Particulate Filter

https://truckmanualshub.com/

Fire prevention

When working in a certain environment, it is impossible to prevent combustible debris from collecting in the machine. This debris, in itself, may cause a fire; however, when mixed with fuel, oil or grease in a hot or confined place, the danger of fire is greatly increased. The following fire prevention guidelines should be used to supplement the operator's fire prevention efforts. In no case should the guidelines be used, or assumed, as replacements for diligent operator efforts at preventing fires (that include regular schedule of cleaning and inspecting the machine as conditions require).

The following guidelines will help to keep your equipment up and running efficiently and keep the risk of fire to a minimum.

1. Maintain a CHARGED fire extinguisher on or near the machine at all times and KNOW HOW TO USE IT.
2. Remove debris and blow out dust regularly from side air intake areas, engine radiator, hydraulic oil cooler, air conditioning condenser core to prevent overheating of the engine and hydraulics and to maintain efficient operation of the machine.
3. Blow off all accumulated debris near hot engine exhaust components (turbocharger and exhaust manifold as well as exhaust pipes and muffler) at the completion of each work shift or more frequently when working in severe conditions where large amounts of combustible debris are present. Engine exhaust systems provide numerous small pockets where flammable debris can gather. Even small accumulations close to hot exhaust components can ignite and smolder.
4. Clean out all accumulated debris (twigs, pine needles, branches, bark, leaves, saw dust, small wood chips) and any other combustible materials from inside the machine belly pans or lower machine structures as well as from areas in proximity to the engine, fuel and hydraulic oil systems no less frequently than at the completion of each work shift.
5. Inspect the machine regularly for any signs of diesel fuel or hydraulic system leakage. Check for worn or damaged fuel or hydraulic lines before starting up any equipment.
6. Clean up any grease, diesel fuel, hydraulic and lubricating oil accumulation and spillage immediately.
7. Steam clean the engine, and belly pan areas at least once a month or more frequently when working in sever conditions where large amounts of combustible debris are present.
8. Use only nonflammable solutions for cleaning the machine and components.
9. Inspect the exhaust system daily for any signs of leakage. Check for worn, cracked, broken or damaged pipes or muffler. Also check for missing or damaged bolts or clamps. Should any exhaust leaks or defective parts be found, repairs must be made immediately. Engine exhaust leaks can cause fires. Do not operate the machine until the exhaust leak is repaired.

https://truckmanualshub.com/

10. During daily operation of the machine, the occurrence of exhaust leaks are usually accompanied by a change or increase in engine exhaust noise levels. These audible warnings cannot be ignored. Should any exhaust leaks occur during operation, the machine must be shut down immediately and not put back to work until the necessary repairs have been completed.
11. Before starting repair work, such as welding, the surrounding area should be cleaned and a fire extinguisher should be close by.
12. Do not use the machine on top of or to push piles of burning timber. A machine fire will likely result.

What to do to prepare for a machine fire

- Prevent the fire from happening in the first place by ensuring that all machine systems are frequently inspected and always well maintained.
- Ensure that any hand held fire extinguishers are charged and in working order. Fire extinguishers require routine care. Follow the manufacturer's instructions for inspection and maintenance shown on the label of the fire extinguisher and in the extinguisher manufacturer's manual.
- Ensure that you follow all national, state / provincial and local regulations dealing with fire fighting in effect in your specific geographic region.
- Ensure that all information necessary for you to immediately contact all sources of help (local fire department, etc) in the event of a fire emergency is recorded and readily available at all times.

What to do if a machine fire occurs

If operating the machine when a fire occurs:

1. Lower all working attachments to the ground.
2. Shut the engine off.
3. Exit the machine. Call for help. Be certain to report a fire immediately.
4. At all times ensure your own personal safety and the safety of anyone that may be in the area. Approach any fire with extreme caution. All fires can be very dangerous and life threatening.

Before deciding to fight the fire, be certain that:

1. The fire is small and not rapidly spreading.
2. There is always a clear, safe escape route.
3. You have received training in the use of the available fire extinguishing devices and are confident that you can operate them effectively.

- Be aware that engine coolant, diesel fuel or hydraulic hoses could fail during a fire. If this happens, hot coolant, fuel or oil could possibly be ignited by the fire.
- If in any doubt about whether or not to fight the fire ? DON'T. Instead stand well clear of the fire and wait for help to arrive.

https://truckmanualshub.com/

- To use a fire extinguisher in the most effectively way, follow the instructions below.
  - Pull the pin at the top of the extinguisher that keeps the handle from being pressed. Break the plastic seal as the pin is pulled.
  - Aim the nozzle at the base of the fire. Do not aim the nozzle at the flames. In order to put out the fire, you must extinguish the fuel, not the flames. Hose nozzles are often clipped to the extinguisher body. Release the hose before taking aim.
  - Squeeze the handle to release the pressurized extinguishing agent. The handle can be released at any time to stop the discharge.
  - Sweep from side to side at the base of the fire until the fire is completely out or the fire extinguisher is empty.
- Only if you can safely do so, open the access panels to the machine in the area of the fire.
- Failing all attempts to access the machine compartment, discharge the extinguisher through the mesh or any available openings on the machine.
- Ensure that the machine and all components have cooled down sufficiently after a fire so that re-ignition does not occur.
- Remain in the area until help arrives.

What to do after a machine fire has occurred

- Before returning the machine to work.
  1. Ensure that the cause of the fire is determined and all appropriate repairs are completed.
  2. Ensure that all extinguishers used in fighting the fire are replaced or recharged.
- Notify your equipment dealer and/or Takeuchi Manufacturing.

https://truckmanualshub.com/

Exhaust fumes from the engine is poisonous

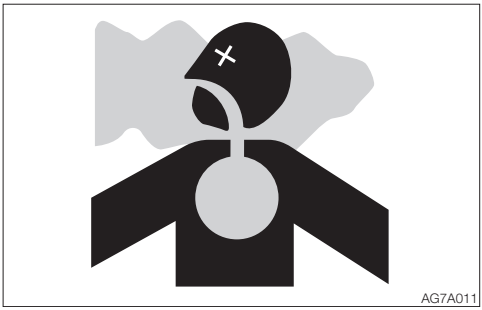

- Do not operate the engine in an enclosed area without adequate ventilation.
- If natural ventilation is not possible, install ventilators, fans, exhaust extension pipes or other venting devices.
- Do not perform the DPF regeneration in poorly-ventilated indoor spaces, as smoke may be generated during the regeneration.

Handling asbestos dust

Inhaling asbestos dust can cause lung cancer. When handling the materials which may contain asbestos, take the following precautions:

- Never use compressed air for cleaning.
- Avoid brushing or grinding parts containing asbestos.
- For clean up, use a vacuum equipped with a high efficiency particulate air filter (HEPA).
- Wear the stipulated respirator if there is no other way to control the dust. When working indoors, install a ventilation system with a macromolecular filter.
- Do not allow unauthorized personnel in the work area while working.
- Follow the rules and environmental standard applicable to the work area.

https://truckmanualshub.com/

Be careful not to get crushed or cut

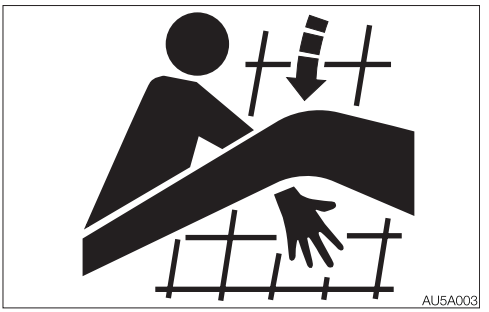

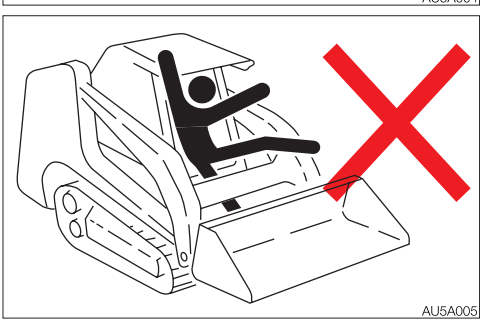

- Never put your hands, feet or other parts of your body between the machine body or bucket and lift arms, or between a cylinder and moving part on the working equipment. The sizes of these gaps change when the machine moves, and a person could suffer severe injury or death.
- The lift arms move closely along the outside of the side screens; never put you arm or other part of your body out of the side screens.
- The lift arms move closely along the canopy/cab; do not stand on or lean against the machine.

Using optional products

- Consult with Takeuchi before installing optional attachments. Depending on the type of attachments or the combination of them, the attachment may come into contact with the operator's compartment or the other parts of the machine. Make sure that the optional attachment installed is not contacted with other parts before use.
- Do not use attachments that have not been approved by Takeuchi. Doing so may compromise safety or adversely affect the machine's operation or service life.
- Takeuchi will not be held responsible for any injuries, accidents or damage to its products caused by the use by a non-approved attachment.

Product usage

Note that the high-output type brush cutter attachment can be used only if it is equipped with the easy brush-cleaning function and the proper cooling system, for a short period of time at a moderate ambient temperature. Pay careful attention not to damage the undercarriage when using such attachment. These precautions also apply to any other high-performance and/or highly functional attachment.

Never modify the machine

Unauthorized modifications to this machine can cause injury or death. Never make unauthorized modifications to any part of this machine.

https://truckmanualshub.com/

PRECAUTIONS WHEN PREPARING

Know the work area

Before starting operation, know the working area condition to ensure a safety operation.

- Inspect the topography and ground condition of the working area, or the structure of the building when working indoors, and take the safety precautions as necessary.
- Be sure to avoid all hazards and obstructions such as ditches, underground lines, trees, cliffs, overhead electrical wires, or places where there is a danger of falling rocks or slides.

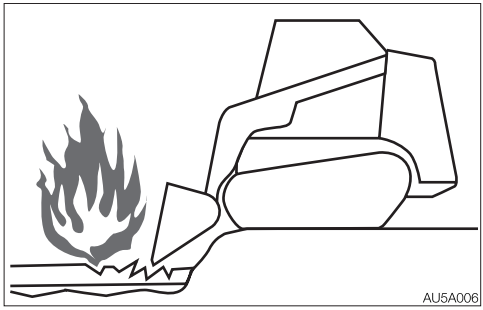

- Check with the administrator for the locations of buried gas pipes, water pipes and power cables. If necessary, determine what specific precautions must be taken to insure safety by consulting with the administrator.
- When working on roads, be sure to consider the safety of pedestrians and vehicles.
  - Use a flag person and/or a signal.
  - Fence off the working area and keep off unauthorized persons.
- When working in water or crossing shallow streams or creeks, check the depth of the water, the solidity of the ground and the water flow speed beforehand.
  Refer to “Cautions on operating” for further instructions.

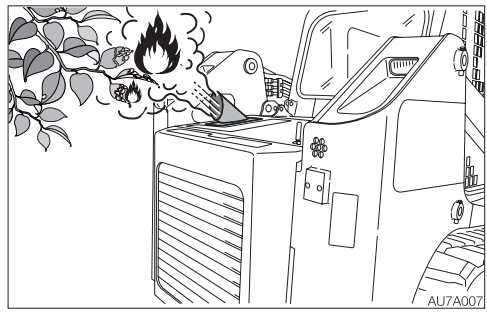

- Do not perform the DPF regeneration if the machine is surrounded by flammable items such as plants, trees, dry grass, wastepaper, oil and waste tires. There is a risk of fire due to the high-temperature exhaust gas emitted from the DPF.
  DPF: Diesel Particulate Filter
- The DPF may automatically perform the regeneration while the engine is left running. Make sure that there are no flammable items around the DPF and the exhaust line, and also that the engine hood is closed to prevent fire. Be careful not to burn yourself on the high-temperature exhaust gas.
- Do not perform the DPF regeneration in poorly-ventilated indoor spaces, as smoke may be generated during the regeneration.

Check the strength of the bridge

When traveling over a bridge or a structure, check the permissible load. If the strength is insufficient, reinforce the bridge or the structure.

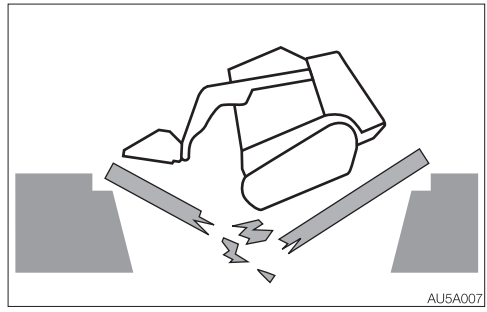

https://truckmanualshub.com/

Always keep the machine clean

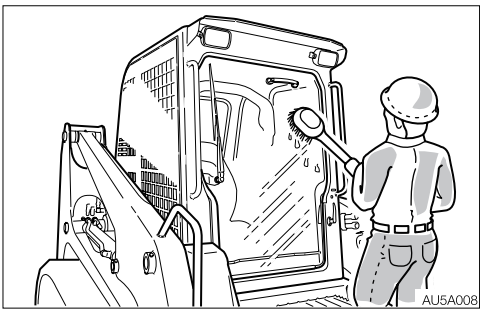

- Clean windows, mirrors and lights to ensure good visibility.
  Adjust the mirror to the best position for the operator to see the rear view (blind spot) from the operator's seat.
- Wipe off any oil, grease, mud, snow or ice, to prevent accidents due to slipping.
- Remove all loose objects and unnecessary devices from the machine.
- Remove any dirt, oil or grease from the engine area to prevent fires.
- Clean around the operator's seat and remove any unnecessary object from the machine.

Perform inspection and maintenance every day

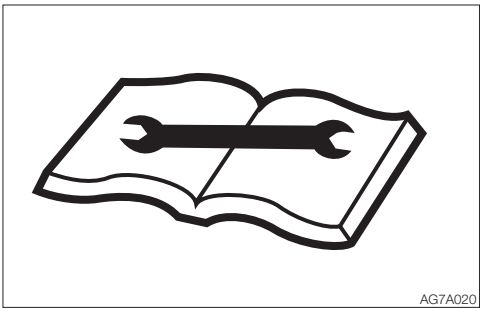

Failure to identify or repair the irregularities or damage on machine can lead to accidents.

- Before operating, perform the specified inspection and make prompt repairs where necessary.
- If a failure occurs and the operation becomes impossible or the engine fails, immediately stop the machine by following the shutdown procedure, and keep machine securely parked until the malfunction is corrected.

https://truckmanualshub.com/

Cautions in the operator's compartment

- Remove mud and grease from shoe soles before entering the operator's compartment.
  Pedaling the machine with the shoes with mud and grease will cause a slip accident.
- Do not leave the parts or tools around the operator's seat.
- Do not leave any plastic bottles in the operator's compartment or attach any suction cups on the window glass. The plastic bottle or suction cup act as a lens and can cause fire.
- Do not use the mobile phone during traveling or working.
- Do not bring combustibles or explosives into the operator's compartment.
- Do not throw cigarette butts out of the windows of the operator's compartment. Doing so may cause a fire if the butt is drawn into the rear portion of the machine.
- After smoking, be sure to tightly close the lid of the ashtray to put out the match or cigarette.
- Do not leave the cigarette lighter in the operator's compartment. When the room temperature rises, the lighter may explore.

Emergency exit

Rear window
If you are trapped inside the cab, remove the rear window to get out.

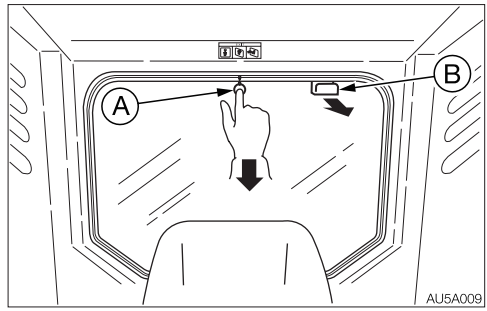

There are two ways to remove the rear window.

In case of emergency
Kick off the rear window. Note that the glass may break. Be careful not to get injured.
- If the glass breaks, it will shatter into pieces. Take great care not to injure yourself with them.
- Remove the glass pieces from the window sill so as not to cut yourself when evacuating. Broken glass will fall from the window, so be careful of your footing and do not slip on the glass.

When necessary
1. Pull off the ring (A) and remove the tip of the rubber wedge.
2. Grasp the tip, pull and remove the entire rubber wedge.
3. Pull the knob (B) toward you and remove the rear window.

https://truckmanualshub.com/

PRECAUTIONS WHEN STARTING

Support your weight in a three point secure stance when getting on/off the machine

- Do not jump on or down from the machine. Never attempt to get on or off the moving machine.
- When getting on or off the cab, first fully open the door to the locked position and check that it does not move (for machines with cab).

- Climb up/down the steps facing the machine and holding the handrail to support your weight in a three point secure stance (hand and feet).
- Never use the safety bar or control levers as hand holds.
- Do not go under the raised lift arms to get in and out of the operator's compartment. Always lower the lift arms to the ground beforehand.

Before starting the machine, ask any unauthorized personnel to leave the area

Do not start the engine until you are sure it is safe to start the machine by checking the following items.

- Walk around the machine and warn the person who is servicing the machine or is walking near the machine. Do not start the machine until you are certain that no one is around the machine.

- Check if there is a "DO NOT OPERATE" alert sign or similar sign is on the cab door, controls or ignition switch. If there is one, do not start the engine or touch any levers.
- Sound the horn to warn people around the machine.

Sit in the operator's seat and start the engine

- Adjust the seat to securely latch it.

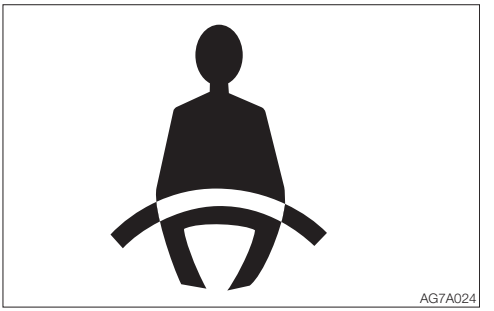

- Fasten the seat belt.
- Check if the parking brake is on and control levers and pedal are in the neutral position.
- Check if the safety bar is in the lock position.
- Make sure that no one is near the machine.
- Start and operate the machine only from the operator's seat.
- Never attempt to start the engine by shorting across the ignition terminals.

https://truckmanualshub.com/

Starting with jumper cables

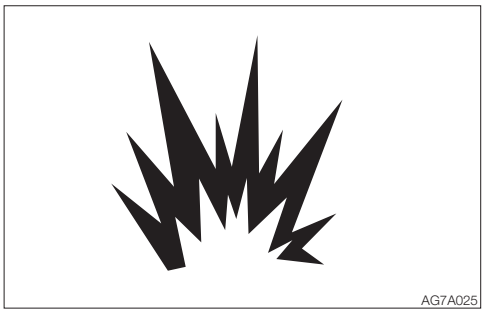

Use jumper cables only in the recommended manner. Improper use of jumper cables can result in battery explosion or unexpected machine motion.
Refer to “If the battery goes dead” for further instructions.

After starting the engine

After starting the engine, perform the operations and checks described below in a safe place with no persons or obstacles in the area. If any malfunction is found, follow the shutdown procedure and report the malfunction.

- Warm up the engine and hydraulic oil.
- Check if all gauges and warning devices are properly working.
- Check for any noises.
- Test the engine speed control.
- Operate each control to ensure they are properly working.

In cold climates

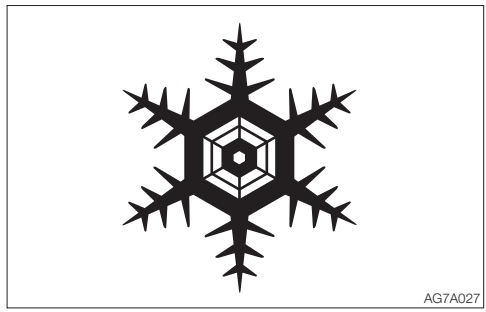

- Be careful of slippery conditions on freezing ground, steps and hand holds.
- In severe cold climates, do not touch any metal parts of the machine with bare hands. The skin will freeze to the metal, resulting in severe injury.
- Do not use ether or starting fluid on this engine. The starting fluids can cause explosion and serious injury or death.
- Warm up the engine and hydraulic oil. If the levers are operated without warming, the machine will not react or move promptly or properly, resulting in accident.

https://truckmanualshub.com/

PRECAUTIONS WHEN OPERATING

Ensure good visibility

- When working in dark places, turn on the machine's working lights and headlights and additional lighting equipment installed, as necessary.
- When visibility is poor due to bad weather (fog, snow, rain or a cloud of dust), stop operating the machine and wait until visibility improves.

Do not permit riders on the machine

Do not allow anyone to ride on any part of the machine at any time while traveling or operating.

Operate the machine only from the operator's seat

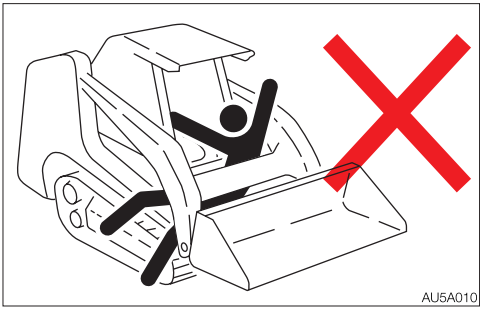

When operating any lever, pedal or switch, always do it while sitting in the operator's seat. Failure to do so could cause serious injury or death.

Check if the work area is safe and secure before operation

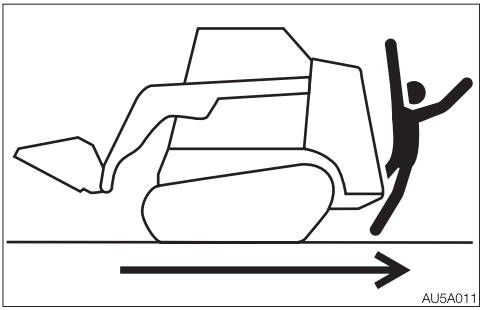

- Confirm the performance limits of the machine.
- Use a signal person at road shoulders, narrow places or where your vision is obstructed.
- Never allow anyone to enter the machine's turning radius and path.
- Signal your intention to move by sounding the horn.
- There is a blind spot in the rear of the machine. Before traveling in reverse, check that the area is safe and clear.

Keep your body inside the operator's cab

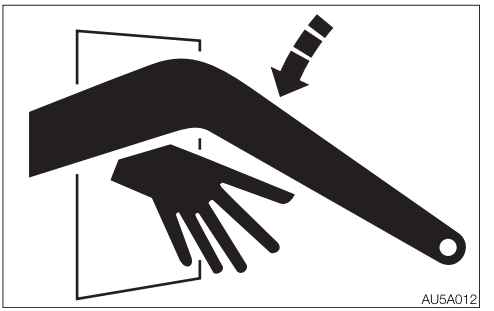

It is dangerous to operate the machine while putting your arms, feet or legs out of the operator's compartment. Never do it.

https://truckmanualshub.com/

Precautions on traveling and turning

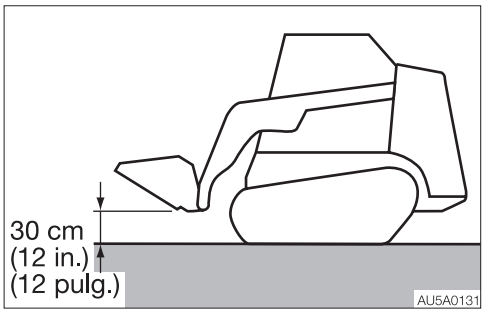

- Traveling and turning should be performed with the bucket cylinder fully retracted and the bucket at a height of approximately 30 cm (12 in.) from the ground.
- Avoid sudden stops, starts and turns. Otherwise, the working equipment may come in contact with the ground, causing the machine to lose its balance and get damaged or to damage the structures in the surrounding area.
- Do not raise the safety bar while traveling. This is dangerous, because raising the safety bar will cause the parking brakes of the travel motors to operate and apply the brakes abruptly.
- Do not switch off the ignition switch while traveling. Doing so will cause sudden braking and is dangerous.
- Before backing up, visually check for safety to the rear. Backing up without checking could result in contact with a worker or obstacle.
- If the working equipment must be operated while traveling, do so with extra care.
- When traveling on rough terrain or when carrying a load, lower the load and travel slowly.

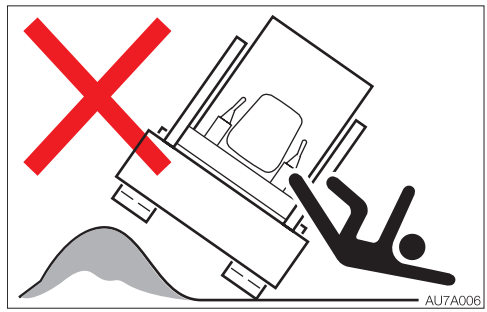

- Avoid crossing over obstacles whenever possible. If you must do so, keep the bucket close to the ground level and travel slowly. Never cross obstacles which will tilt the machine to an angle of 10° or greater.

Safety precautions when performing the DPF regeneration

The DPF may automatically perform the regeneration while the engine is left running. Make sure that there are no flammable items around the DPF and the exhaust line, and also that the engine hood is closed to prevent fire. Be careful not to burn yourself on the high-temperature exhaust gas.
DPF: Diesel Particulate Filter

https://truckmanualshub.com/

Cautions on traveling on slopes

Do not perform any operation on a slope. The machine may lose its balance and tip over if the working equipment is operated on a slope.

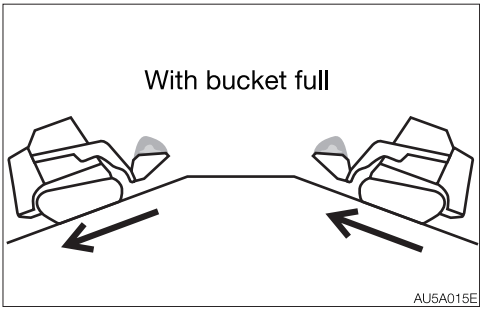

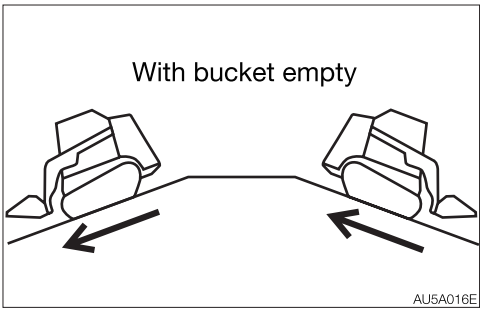

When traveling on slopes of 15 degrees or more, position the heavier end of the machine (front or back, whichever is heavier) pointing up the slope. Also, be careful not to tip over or slide.

- Never travel on slopes that are too steep for the machine to maintain its stability (maximum gradeability: 30°, lateral tipping angle: 15°). Note that in reality, the machine's stability becomes lower than the above values depending on the working condition.
- When traveling on slopes, lower the bucket to a height of 20 to 30 cm (8 to 12 in.) above the ground. In emergencies, lower the bucket to the ground and stop the machine.
- When traveling on slopes or grades, drive slowly in 1st (low) speed. Especially on down slopes, slow down the engine speed and limit the stroke length of the left control lever to less than half. Going down a slope at high speed may lead to loss of control.
- Stopping abruptly on a slope may result in the machine losing its balance and tipping over.

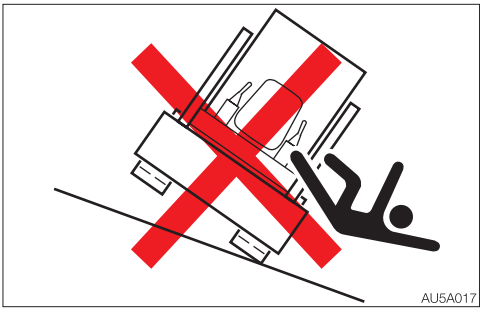

- Do not change directions on slopes or traverse slopes. First return to a flat surface, and then take an alternative path.
- The machine may slip sideways even on a slight slope if the ground is covered with grass or dead leaves, or when traveling on a wet metal plate or frozen surfaces. Make sure the machine is never positioned sideways on slopes.
- If the machine is stalled on the slope, return each control lever to the neutral position before restarting the engine.

https://truckmanualshub.com/

Precautions when the lift arms are in the float mode

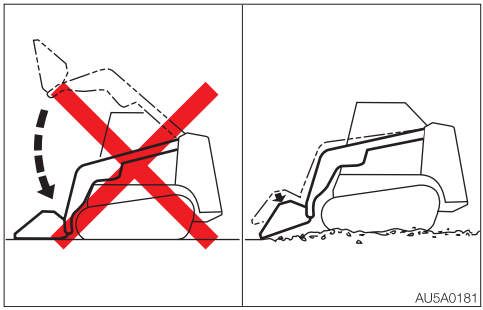

- It is very dangerous to set the lift arms to the float mode while the bucket is raised too high, as the bucket is likely to fall. Lower the bucket to a height of 30 cm (12 in.) or less above the ground before setting the lift arms to the float mode.
- Do not travel forward with the lift arms in the float mode.

Do not drive into materials at high speeds

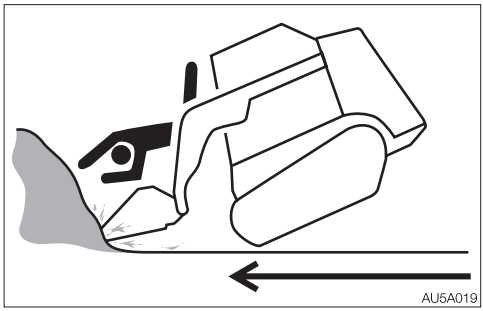

Driving at high speed into the materials you are handling can lead to your body striking the machine or being thrown from the machine. Before working the material, check the conditions of the area and work at low speeds.

Operate the machine on snow or ice with extra care

- When traveling on snow or on frozen surfaces, drive at a low speed and avoid starting, stopping or changing directions abruptly.
- In the snowy area, the road shoulder and objects placed beside the road are buried in the snow and cannot be seen. There is a hazard of the machine tipping over or hitting covered objects, so always carry out operations carefully.
- If the machine enters deep snow, there is a hazard that it may tip over or become buried in the snow.
  Be careful not to drive beyond the road shoulder or to get trapped in a snow drift.
- With frozen ground surfaces, the ground becomes soft when the temperature rises, and this may cause the machine to tip over, resulting in an operator trapped inside the machine.
- When parking the machine on an unstable ground, lower the bucket.

Do not move the bucket over the heads of people

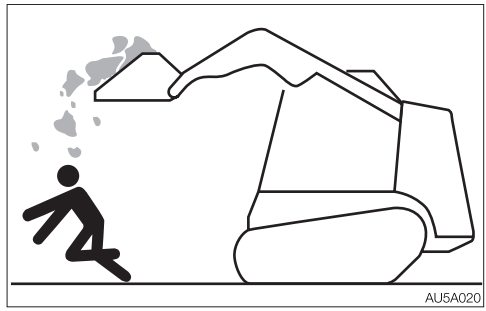

The load spilling or the bucket dropping may occur while the bucket is over the heads of people.

https://truckmanualshub.com/

Take care when handling unstable loads

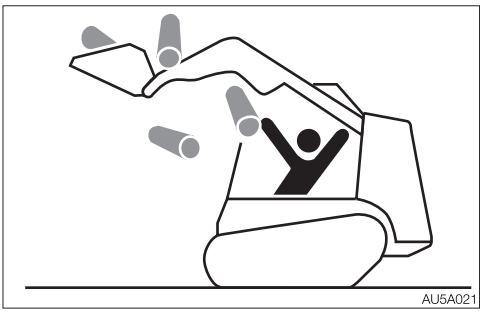

Unstable loads such as round items, cylindrical items, and stacked plates may fall from the bucket. When handling unstable load, do not raise the bucket too high or tilt it backward too far.

Do not suddenly stop or lower the working equipment

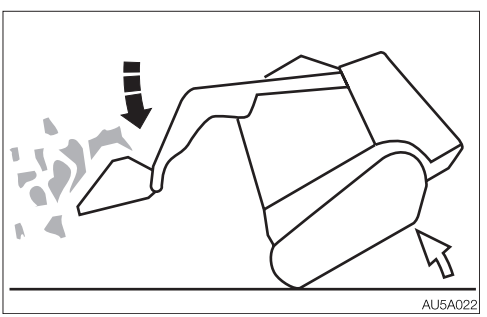

Sudden lowering or stopping of the working equipment could cause the machine to react and tip over. Operate the working equipment carefully, especially when the bucket is loaded.

Avoid overloading and off-center loading

Filling the bucket in excess of the rated loading mass or loading an off-center load could cause the machine to become unstable and result in the machine tipping over. Loading should be done evenly with a load less than the rated loading mass (refer to the table below).

TL8 Rated loading mass	955 kg (2105 lbs)
TL10 Rated loading mass	1090 kg (2403 lbs)
TL12 Rated loading mass	1285 kg (2833 lbs)

https://truckmanualshub.com/

Keep a safe distance from the overhead high-voltage cables

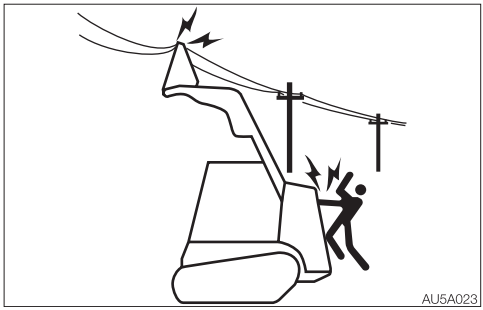

Never bring any part of the machine or loaded material to near to the high voltage cables unless all safety precautions required by the local and national authorities have been installed. If a person comes near to the machine that is discharging sparks or located near to or in contact with the power source, there is a hazard of electric shock and death.

- Always maintain a safe distance between the machine and the high-voltage electric cable.
- Check with the local power company about safe operating procedure before starting operations.
- Consider all cables to be high-voltage cables and treat all cables as energized even though it is known or believed that the power is shut off and the cables are visibly grounded.
- Use a signal person to give warning if the machine approaches too close to the high-voltage electric cables.
- Caution all personnel in the work area not to come close to the machine or the loaded material.

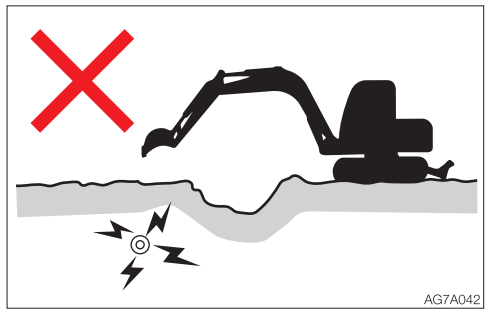

- Pay also careful attention to the high-voltage electric cables buried underground.

Watch out for hazardous working conditions

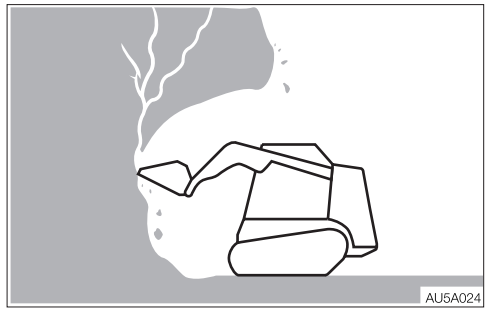

- Never undercut a high bank. Doing so is dangerous as it may cause ground collapse.
- Do not operate in places where there is a danger of falling rocks.
- Do not come close to unstable grounds (cliffs, road shoulders, deep ditches). If the ground should collapse under the weight or vibration of the machine, there is a hazard that the machine may fall or tip over.
  - Remember that the soil after heavy rain or blasting is weak.
  - The ground of top of the embankment and of the circumferences of the excavated ditches are also weak.

https://truckmanualshub.com/

Travel in narrow or crowded places

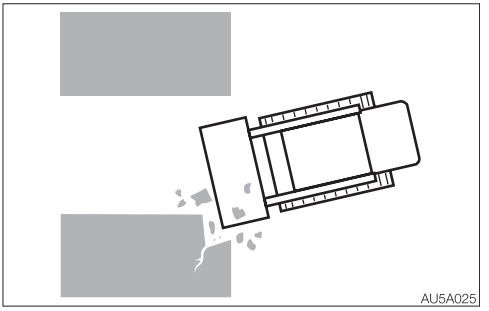

When traveling in narrow sites, crowded places or indoors, operate the machine while carefully looking around the area and maintaining the safe speed to avoid contact accidents.

Precautions when passing through tunnels or going under bridges

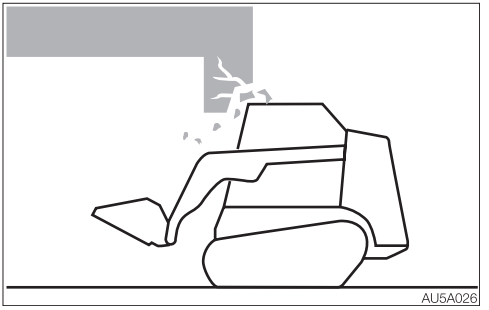

Check the height limit and width limit of tunnels and bridges beforehand to avoid the machine from contact with the ceiling or walls. If contacted, it could result in a serious accident.

Do not enter areas where there is soft ground

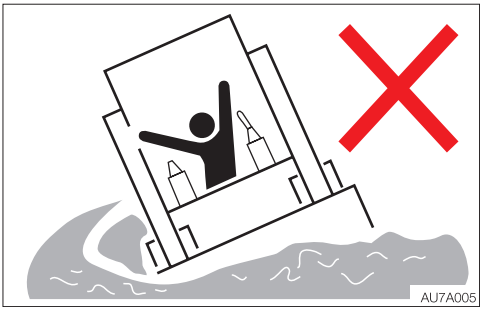

Driving on the soft ground could cause the machine to tilt under its own weight, resulting in a machine tipping over or sinking into the ground.
Do not drive on soft surface such as a back-filled ground.

Loaders are NOT designed for lifting loads

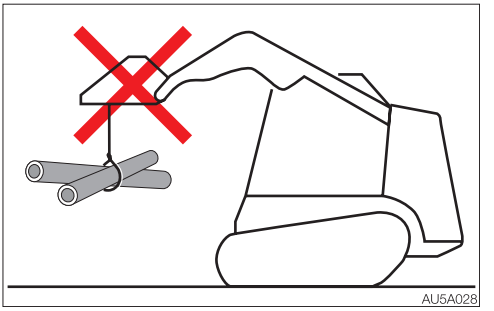

The machine is NOT specifically designed for lifting loads and has no safety devices for crane operation.

https://truckmanualshub.com/

Be careful with flying objects

This machine is not equipped with protective equipment to protect the operator from flying objects. Do not use this machine in places where there are risks of the operator being hit by flying objects.

Cautions when towing

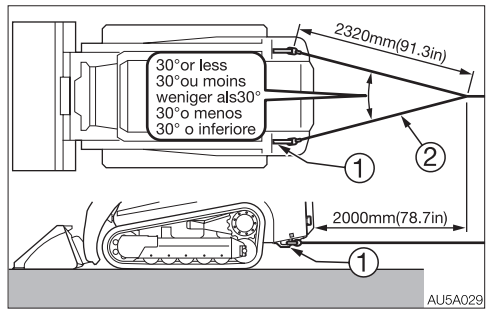

When towing, serious injury or death could result, if performed incorrectly or the wire rope being used is inappropriate or not properly inspected.

- It becomes dangerous if the wire rope breaks or becomes disengaged. Use a wire rope appropriate for the required tractive force.
- Do not use a wire rope that is kinked, twisted or otherwise damaged.
- Do not apply heavy loads abruptly to the wire rope.
- Wear safety gloves when handling the wire rope.
- Make sure there is an operator on the machine being towed as well as on the machine that is towing.
- Never tow on slopes.
- Do not let anyone come near to the wire rope while towing.

https://truckmanualshub.com/

PRECAUTIONS WHEN STOPPING

Park safely

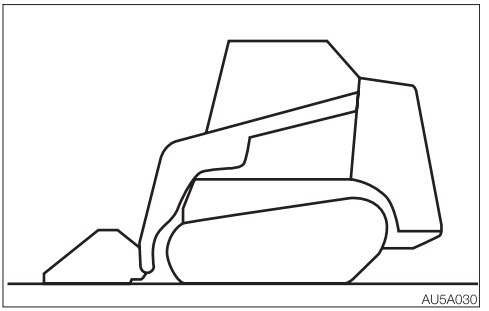

- Park the machine on a flat, rigid and safe ground. Set the parking brake.

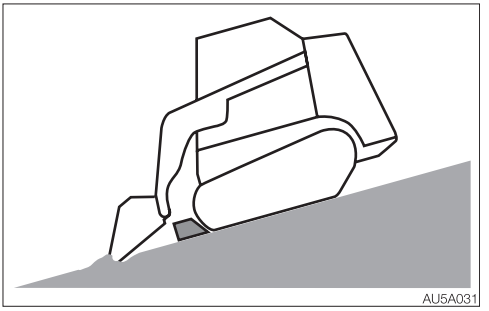

If you must park on a slope or incline, park the machine securely and block the movement of the machine.

- When parking on a street, use barriers, caution signs, lights, etc., so that the machine can easily be seen even at night to avoid collision with other vehicles.

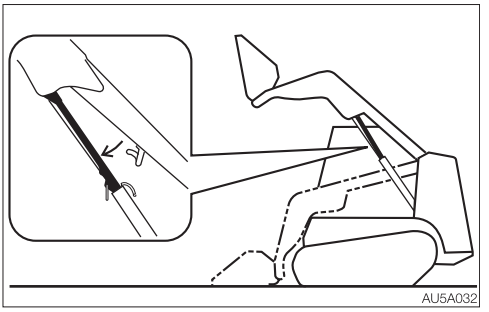

- Never leave the machine with the engine running or the lift arms raised. If the lift arms are left in a raised position, prevent them from falling by engaging the lift arm stopper.

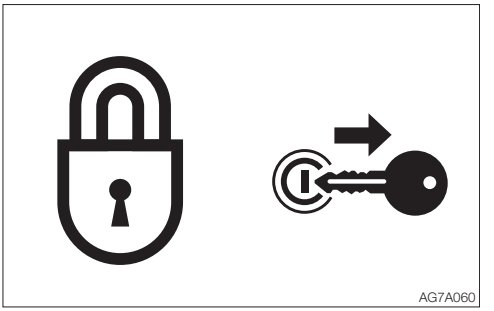

- Before leaving the machine, do the followings:
  1. Lower the bucket to the ground.
  2. Raise the safety bar to the lock position.
  3. Stop the engine and remove the ignition key.
  4. Lock the cab and covers and take the key with you.

PRECAUTIONS WHEN TRANSPORTING

Load/unload the machine safely

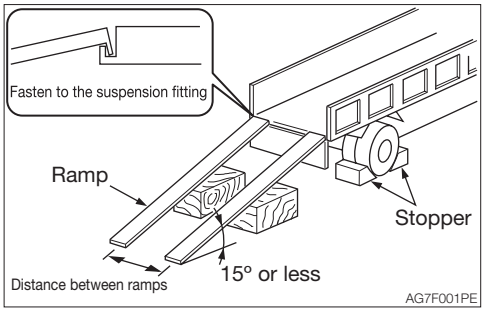

The machine may roll or tip over or fall while being loaded or unloaded. Take the following precautions:

- Select a firm, level surface and keep sufficient distance from road shoulders.
- Secure ramps of adequate strength and size to the truck bed. The slope of the ramps must not exceed 15°. If the rumps are bowed down too low, support them with poles or blocks.
- Keep the truck bed and loading ramps clean of oil, soil, ice, snow, and other materials to prevent the machine from sliding sideways. Clean the tracks.
- Chock the transporter wheels to prevent movement.
- When being loaded or unloaded, travel slowly in 1st (low) gear by following the signal from the signal person.
- Never change courses on the ramp. If it is necessary, move down from the ramps, change the course and then get on the ramps again.
- Do not raise the lift arms on the ramp. The machine may tip over.
- When raising the lift arms on the truck bed, do it slowly as the footing should be unstable.
- Lock the cab door after being loaded, if applicable. Otherwise, the door may open during transport.
- Chock the tracks and secure the machine to the truck bed with wire rope or chain.

Hoist the machine safely

- Know and use correct crane signals.
- Check the hoisting equipment for damaged or missing parts on a daily basis and replace as necessary.
- When hoisting, use a wire rope capable of lifting the machine mass.
- Hoist the machine in such a manner described in the procedure below. Do not do it in any other manner, as it may result in the machine losing its balance.
  Refer to “Hoisting the machine” for further instructions.
- Do not hoist the machine with an operator on it.
- When hoisting, hoist slowly so that the machine does not tip.
- Keep everyone out of the area when hoisting. Do not move the machine over the heads of the persons.

Transport the machine safely

- Know and follow the applicable safety rules, vehicle code and traffic laws when transporting the machine.
- Select the best transport route by considering the length, width, height and weight of the truck with the machine loaded on it.
- Never abruptly start or stop or run at a high speed at the sharp curves during transport. Doing so will move or lose the balance of the loaded machine.

https://truckmanualshub.com/

PRECAUTIONS ON MAINTENANCE

Display a “DO NOT OPERATE” alert sign

Severe injury could result if an unauthorized person should start the engine or touch controls during inspection or maintenance.

- Before performing maintenance, stop the engine, remove the key and take it with you.

- Display a “DO NOT OPERATE” alert sign on easy-to-see locations such as on the ignition switch or on control levers.

Use the correct tools

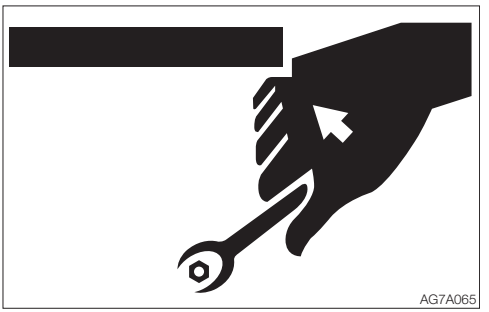

Do not use damaged or weakened tools or tools designed for other purposes. Use tools appropriate for the work involved.

Replace safety-critical parts periodically

- Replace fuel hoses periodically. Fuel hoses wear out over time, even if they do not show any symptom of wear.
- Regardless of the replacement schedule, replace immediately if a symptom of wear is found.
  Refer to “List of safety-critical parts” for further details.

Explosionproof lighting

To prevent an ignition or explosion, use explosion-proof lights when inspecting fuel, oil, coolant or battery fluid. Otherwise, explosion could result causing serious injury or death.

https://truckmanualshub.com/

Prohibit access by unauthorized persons

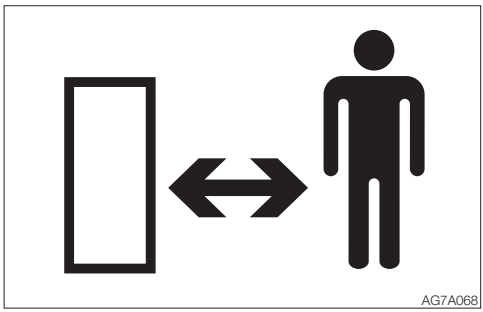

Do not allow unauthorized personnel in the work area while working. Be careful when grinding, welding or using a hammer. You could be injured by flying debris from the machine.

Prepare work area

- Select a firm, level work area. Make sure there is adequate light and, if indoors, ventilation.
- Clear obstacles and dangerous objects. Eliminate slippery areas.

Always keep the machine clean

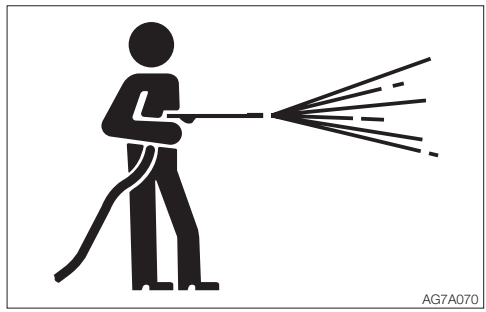

- Clean the machine before performing maintenance.
- Stop the engine before washing the machine. Cover the electrical parts so that water cannot enter. Water on electrical parts could cause short-circuits or malfunctions. Do not use water or steam to wash the battery, electronic control components, sensors, connectors or the operator's compartment.

Stop the engine before performing maintenance

- Avoid lubrication or mechanical adjustments while the machine is moving or while the engine is running when the machine is not moving.
- If maintenance must be performed with the engine running, always work as a two person team communicating each other.
  - One person must sit in the operator's seat so that he/she can immediately stop the engine when necessary. He/she must take care not to touch the lever or pedal unless necessary.
  - The one who performs maintenance must make sure to keep his/her body or clothing away from the moving part of the machine.

https://truckmanualshub.com/

Stay clear of the moving parts

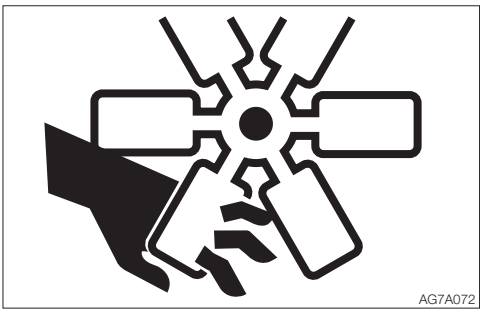

- Stay clear of all rotating and moving parts. If a hand or tool becomes trapped in the rotating or moving part, serious injury or death could result.
- If a tool or other objects is dropped or inserted in the fan or fan belt, it will be flown or cut in pieces. Do not drop or insert anything in the fan or fan belt.

Firmly secure the machine or any component that may fall

- Before performing maintenance or repairs under the machine, lower all moveable working equipment to the ground or in the lowermost position.
- Chock the tracks.
- If you must work beneath the raised machine or equipment, always use arm stopper, wood blocks, jack-stands or other rigid and stable supports. Never get under the machine or working equipment if they are not sufficiently supported. This procedure is especially important when working on hydraulic cylinders.

Precautions when working under the raised lift arms

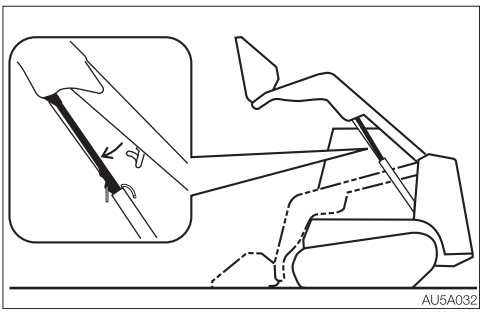

- If you must work under the raised lift arms, use the lift arm stopper to securely support the lift arms. Never position yourself under the lift arms or bucket if they are not securely supported.
- Disconnecting or loosening any faulty hydraulic line, hose, fitting or component or a parts could cause the lift arms to fall.
- Repair or replace the lift arm stopper if it is damaged or any part is missing. Failure to do so may cause the lift arms to fall, resulting in a serious injury or death.

Secure the rear door or radiator when opened

Be sure to secure the rear door or radiator before working the inside. Do not keep the rear door or radiator open on a windy day or if the machine is parked on a slope.

https://truckmanualshub.com/

Precautions on tilting up the canopy (cab)

- Raising or lowering the canopy while the engine is running may cause the machine to move, and cause serious injury or death. Lower the working equipment to the ground and stop the engine before raising or lowering the canopy.
- When the canopy is tilted up, support it firmly with the stopper pin to prevent it from falling.
  Refer to “Tilting up the canopy (cab)” for further instructions.

Place heavy objects in a stable position

When it is necessary to temporally place a heavy object, bucket or an attachment on the ground during removal or installation, be sure to place it in a stable position. Keep off unauthorized persons from the storage place for such object.

Cautions when refueling

- Do not smoke or permit open flames while fueling or near fueling operations.
- Never remove the fuel cap or add fuel when the engine is running or still hot. Do not spill fuel on the hot surface of the machine.
- Fill the fuel tank in a well ventilated place.
- Do not fill the fuel tank to capacity. Allow room for oil expansion.
- Clean up spilled fuel immediately.
- Securely tighten the fuel filler cap. If the fuel cap is lost, replace it only with the genuine cap. Use of a non-approved cap without proper venting may result in pressurization of the tank.
- Never use fuel for cleaning.
- Use the correct grade of fuel for the operating season.

https://truckmanualshub.com/

Handling of hoses

Oil leak or fuel leak can cause a fire.
- Do not twist, bend or hit the hoses.
- Never use twisted, bent or cracked pipes, tubes or hoses; otherwise, they may burst.
- Retighten loose connection.

Be careful with hot and pressurized components

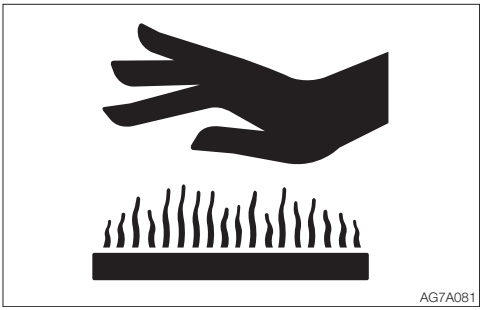

Stop the engine and allow the machine to cool down before performing maintenance.
- The engine, muffler, radiator, hydraulic lines, sliding parts and many other parts of the machine are hot immediately after the engine is stopped. Touching these parts will cause burns.
- The engine coolant, hydraulic oil and other oils are also hot and under high pressure. Be careful not to touch the hydraulic oil when loosening the cap or plug. Working on the machine under these conditions could result in burns or injuries due to the hot oil spurting out.
- The DPF and the exhaust gas emitted from the exhaust line can be very hot while the engine is running or the regeneration is under way, as well as immediately after the engine is stopped. Be careful not to accidentally touch them; doing so could cause burns.

Be careful with hot cooling systems

Do not remove the radiator cap or the drain plug when the cooling water is hot. Stop the engine and wait until the engine and the cooling water cool. Then, slowly loosen the radiator cap to release the internal pressure and remove it.

https://truckmanualshub.com/

Be careful with oil internal pressure

Pressure is maintained in the hydraulic circuit long after the engine has been shut down.

- Completely relieve the internal pressure before performing maintenance work.

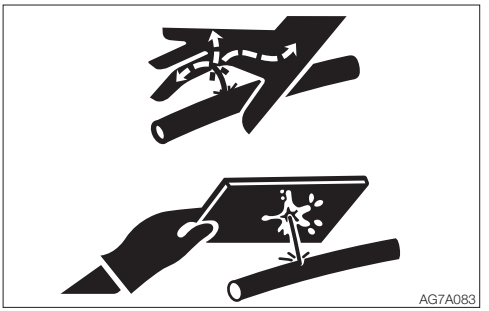

- The hydraulic oil is high enough pressure to penetrate the skin or eyes and cause serious injury, blindness or death.
  Remember that the hydraulic oil escaping from a small hole is almost invisible. When checking for leaks, wear protective goggle and thick gloves, and use a paperboard or plywood to keep your skin from oil spurting.
  If oil penetrates the skin, it must be surgically removed within a few hours by a doctor familiar with this type of injury.

Release pressure before working on the hydraulic system

Oil may spurt out if caps or filters are removed or pipes are disconnected before releasing the pressure in the hydraulic system.

- Gradually loosen the vent plug to relieve tank pressure.
- When removing plugs or screws, or when disconnecting hoses, stand to the side and loosen them slowly to gradually release the internal pressure before removing.
- Oil or plug may spurt out according to the pressure in the travel motor case. Loosen the plug slowly and release the internal pressure.

Be careful with debris when the hammer is being used

When using a hammer, pins may fly out or metal particles may be scattered. This may lead to serious injury.

- If hard metal parts such as pins, bucket teeth or bearings are hit with a hammer, wear protective gear such as safety goggles and gloves.
- When hitting pins or bucket teeth, always check that there is no one in the surrounding area.

https://truckmanualshub.com/

Be careful with the high-pressure grease

In the track adjuster, the grease has been injected under high pressure. If the tension is adjusted without following the prescribed procedure, the grease discharge valve may fly off, resulting in injury.

- Loosen the grease discharge valve slowly. Do not turn it more than one turn.
- Do not put your face, arms, legs or body in front of the grease discharge valve.
- If grease does not come out when the grease discharge valve is loosened, the valve is faulty. Ask a Takeuchi service agent for repair.

Never disassemble the track adjuster

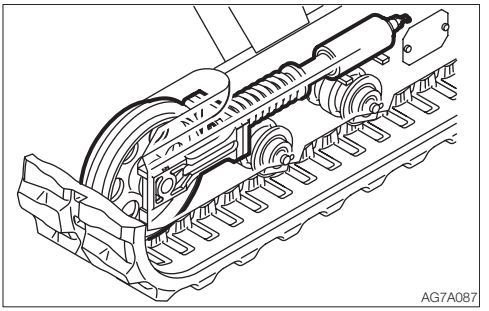

There is a very strong spring contained in the track adjuster. If the track adjuster is accidentally disassembled, the spring can pop out, resulting in serious injury Never disassemble the track adjuster.

Cautions when servicing the air conditioner

If the refrigerant comes in contact with eyes, it damages your eyesight. If the refrigerant comes in contact with skin, it may cause frostbite. Never touch the refrigerant.

Disconnect the battery wiring

Disconnect the battery wiring before working on the electrical system or doing electric welding. Disconnect the negative (–) battery cable first. When reconnecting, connect the negative (–) battery cable last.

https://truckmanualshub.com/

Use caution when handling batteries

- Batteries contain sulfuric acid which will damage the eyes or skin in case of contact.
  - If eye contact occurs, flush immediately with clean water and get prompt medical attention.
  - If accidentally swallowed, drink large quantities of water or milk and call a physician immediately.
  - If acid contacts skin or clothing, wash off immediately with a lot of water.
- Wear protective goggle and gloves when working with batteries.
- Batteries generate flammable hydrogen gas which may explode. Keep away from flame, sparks, fire or lighted cigarettes.
- When checking the level of the battery fluid, use a flashlight.
- Be sure to stop the engine by turning off the ignition switch before inspecting or handling the battery.
- Be careful not to let metal tools or any metal objects come into contact with the battery terminals and cause a short circuit.
- Loose battery terminals may result in sparks. Be sure to fasten terminals tightly.
- Make sure the battery caps are tightened securely.
- Do not charge a battery or jump-start the engine if the battery is frozen; otherwise it may explode. Warm the frozen battery to 15°C (60°F) before use.
- Do not use the battery when the fluid level is below the lower level limit. Doing so will hasten the deterioration of the internal portions of the battery and shorten the battery life. It also can cause rupturing (explosion).
- Do not add the distilled water above the upper level limit. Doing so could cause the fluid to leak. This fluid can cause skin damage if contacted, or can cause the machine components to corrode.
- Use a dampened cloth to clean around the fluid level line and check the fluid level. Do not clean with a dry cloth; otherwise it could cause static electricity to build up, resulting in ignition or explosion.

https://truckmanualshub.com/

Periodically replace the safety-critical parts

- To use the machine safely for a longer period, periodically add oil and perform inspection and maintenance. To improving the safely, replace the safety-critical parts like hoses and seat belts periodically. Refer to “Safety-critical parts to be replaced periodically” for further details.
- The “Safety-critical parts to be replaced periodically” are the parts which deteriorate, wear and fatigue after repeated use and whose properties change over time. While these characters of these parts could cause serious physical or personal damage, judging the remaining life of these part are difficult from external inspection or the feeling when operating.
- Replace the “Safety-critical parts to be replaced periodically” if any defect is found from external inspection, even when they have not reached the time specified interval.

Jump starting with booster cables

- When starting the engine using the booster cables, be sure to connect the cables in the proper order described below. Wrongly connected cables can result in sparking and battery explosion.
  - Do not allow the “machine in trouble” and “rescue machine” to touch each other.
  - Do not allow the positive (+) and negative (–) clips of the booster cables to touch each other or to come in contact with the machine.
  - When connecting, attach the positive booster cable to the positive (+) terminals first. When disconnecting, remove the negative cable from the negative (–) terminal (ground) first.
  - Be sure to connect the clips securely.
  - Connect the last clip of the booster cable to a point as far away from the battery as possible.
- Always wear the protective goggle and gloves when starting the engine by using the booster cables.
- Use the booster cables and clips of a size suited to the capacity of battery. Do not use damaged or corroded booster cables and clips.
- Be sure that the battery of the “rescue machine” has the same capacity as the battery of the “machine in trouble”.

https://truckmanualshub.com/

Have a Takeuchi service agent repair welding

If welding must be performed, make sure that it is done by a qualified person in a properly equipped workplace. To prevent any part from breaking down or being damaged due to overcurrent or sparks, observe the following.

- Disconnect the wiring from the battery before doing electric welding.
- Do not continuously apply 200 V or more.
- The earth ground must be connected within one meter from the welding section. Do not connect the earth ground near to an electronically controlled device/ instrument or connectors.
- Make sure that there are no seals or bearings between the welding section and the earth ground.
- Do not connect the earth ground around the pins for the working equipment or hydraulic cylinders.
- When welding is to be done on the machine body, disconnect the connectors for the electronically controlled devices before working.

Vibrations operators are subject to

According to the results of the tests conducted to determine the vibrations transmitted to the operator by the machine, the upper limbs are subjected to vibrations lower than 2.5 m/s^2 (8.2 ft/s^2) while the seated part of the body is subjected to vibrations lower than 0.5 m/s^2 (1.64 ft/s^2).

Checks after maintenance

- Gradually increase the engine speed from a low idle to maximum speed and check that there is no oil or water leaking from the serviced parts.
- Operate each control lever and check that the machine is operating properly.

Disposing of wastes

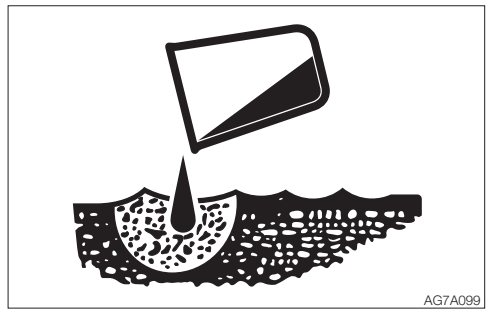

- Always collect oil that is drained from the machine in containers. Improperly disposed waste oil can cause environmental harm.
- Follow appropriate laws and regulations when disposing of harmful objects such as oil, fuel, coolant, solvent, filters and batteries.

Handling of poisonous chemicals

Poisonous chemicals will cause serious injury if directly contacted.
Poisonous chemistry used in this machine includes grease, battery solution, coolant, paint and adhesive agent.
Handle the poisonous chemicals properly with care.

https://truckmanualshub.com/

SAFETY SIGNS (DECALS)

For the safety of the operator and the personnel working around the site, safety signs (decals) are placed at certain locations on the machine as shown below. Walk around the machine with this manual, and check the content and location of these safety signs. Review these signs and the operating instructions in this manual with your machine operators.

- Keep the signs clean and legible. If any of the safety labels is peeling or damaged and becomes difficult to read, replenish it with a new one. Please include your product serial number when ordering a new sign from the Takeuchi service agent.
- When a part/unit to which a safety sign is attached is replenished, a new sign must be attached to the new part/unit.

SAFETY SIGNS (DECALS)

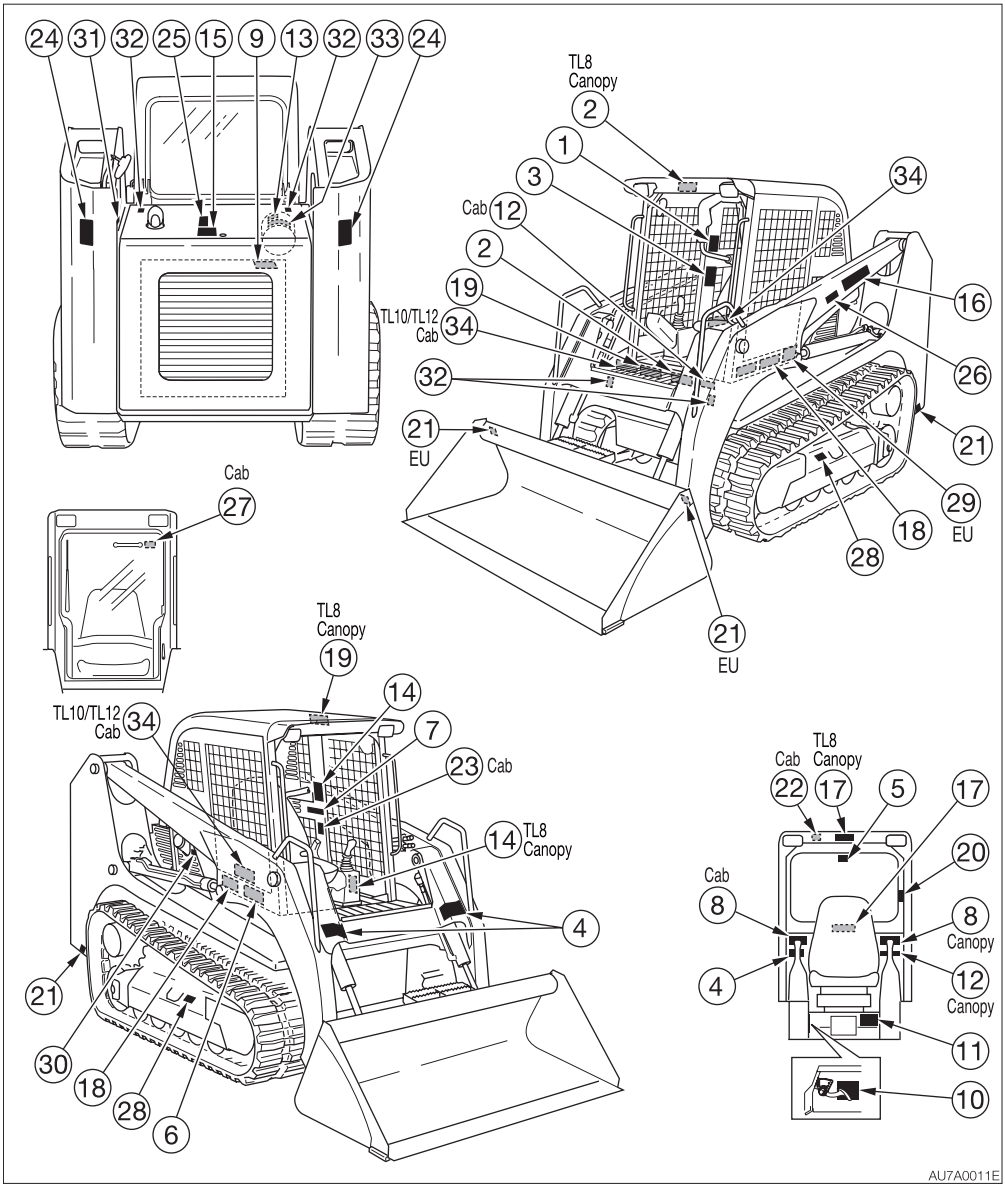

https://truckmanualshub.com/

SAFETY SIGNS (DECALS)

1. No.06593-00012

AVOID DEATH
Before removing seat belt and leaving seat
- Lower lift arms to ground or rest lift arms on stops.
- Stop engine.

2. No.08800-30010

3. No.06593-00013

AVOID INJURY
- Loader can move suddenly and violently
- Always wear seat belt

4. No.06593-00011
AVOID INJURY
- Lift arms move close by window opening
- Never place hands or arms, through screen opening

5. No.08710-86051
Position of Emergency Exit

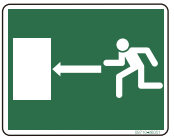

6. No.08800-31005

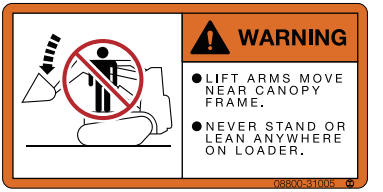

7. No.08810-30026

8. No.03593-13700

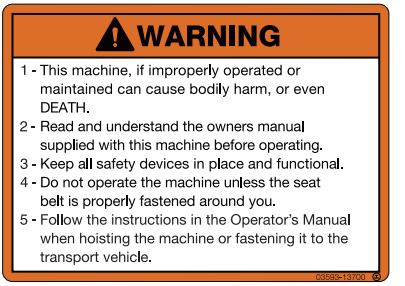

9. No.08820-31135
Sign indicates a burn hazard from spurting hot water or oil if radiator or hydraulic tank is uncapped while hot.
Allow radiator or hydraulic tank to cool before removing cap.

10. No.08810-30020

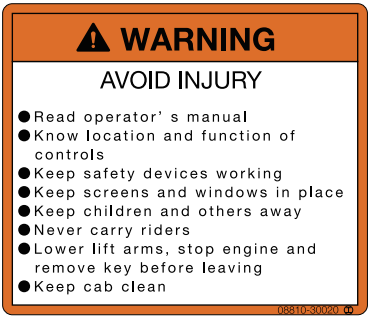

AU7A0021E

<TL8>
11. No.06693-00004

<TL10>
11. No.06893-00004

<TL12>
11. No.06993-00005

12. No.08800-30015

17. No.08800-31018

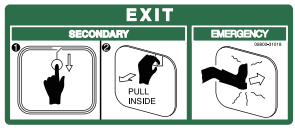

18. No.08810-30046

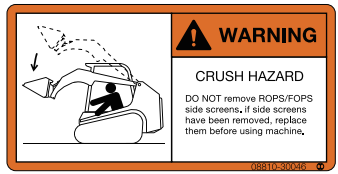

13. No.03393-75040

19. No.08810-31551

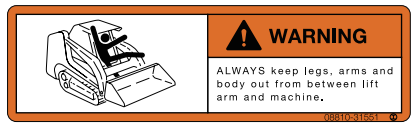

14. No.06893-00035

Sign indicates a crush hazard from falling off of working device. Keep away when the working device is raised.

20. No.03993-00400
For EU
Position of Fire extinguisher

15. No.03793-66006
Hazard of rotating parts
Turn off before inspection and maintenance.

21. No.08810-31549
Tie down point

16. No.06693-00110

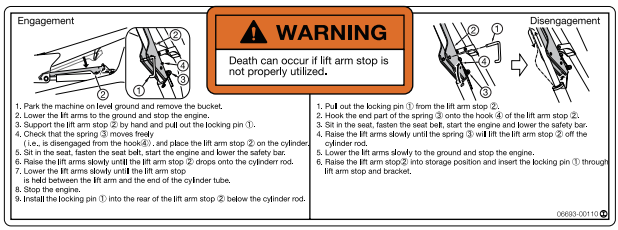

22. No.08810-31554(Cab)
Position of Emergency unlock lever

AU7A0032E

23. No.08810-31556 (Cab)

Warning
Read and understand this manual before performing any operation, inspection or maintenance on this machine.

24. No.08820-31159

Safety Distance
Do not get near or stand within the machine working area.

25. No.05793-03630

Sign indicates a burn hazard from touching heated parts, such as engine, pump, or muffler during or right after operation.
Never touch when hot.

26. No.08820-31046
Safety Distance
Do not get near or stand within the machine working area.

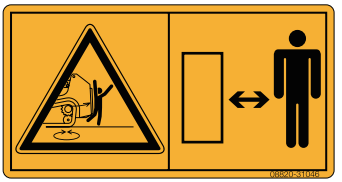

27. No.08810-31557 (Cab)
Hazard from falling window
After raising window, be sure to lock it in place with lock pins.

28. No.05793-00052
Hazard of a flying plug from track adjuster
Read manual before adjusting track for safe and proper handling.

<TL10>
29. No.08800-35003

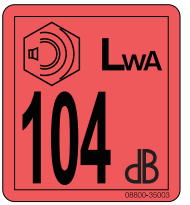

<TL12>
29. No.08710-84350

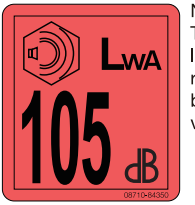

Noise Outside the Cab / for EU
This value indicates the noise level outside the machine and refers to the noise perceived by the persons who are in the vicinity of the work area.

30. No.03593-06600
Diesel fuel

31. No.03593-06700
Hydraulic oil

32. No.03993-00500
Position of hoisting

33. No.06693-00814

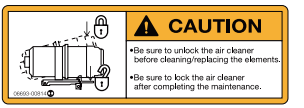

34. No.05693-00090

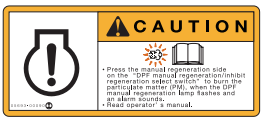

AU7A0042E

https://truckmanualshub.com/

CONTROLS

https://truckmanualshub.com/

NAMES OF COMPONENTS

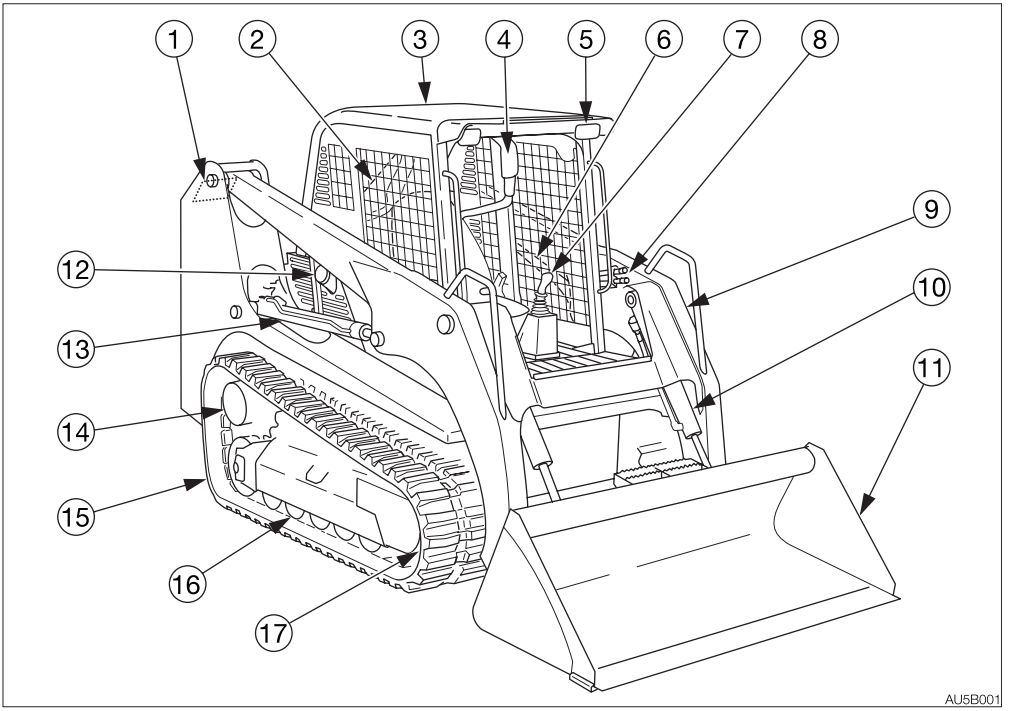

1. Tail light
2. Hydraulic tank
3. Canopy
4. Safety bar
5. Front light
6. Lift arm stopper
7. Left control lever
8. Auxiliary hydraulic lines
9. Lift arms
10. Bucket cylinder
11. Bucket
12. Fuel filler cap
13. Lift cylinder
14. Travel motor
15. Rubber track
16. Track roller
17. Idler

https://truckmanualshub.com/

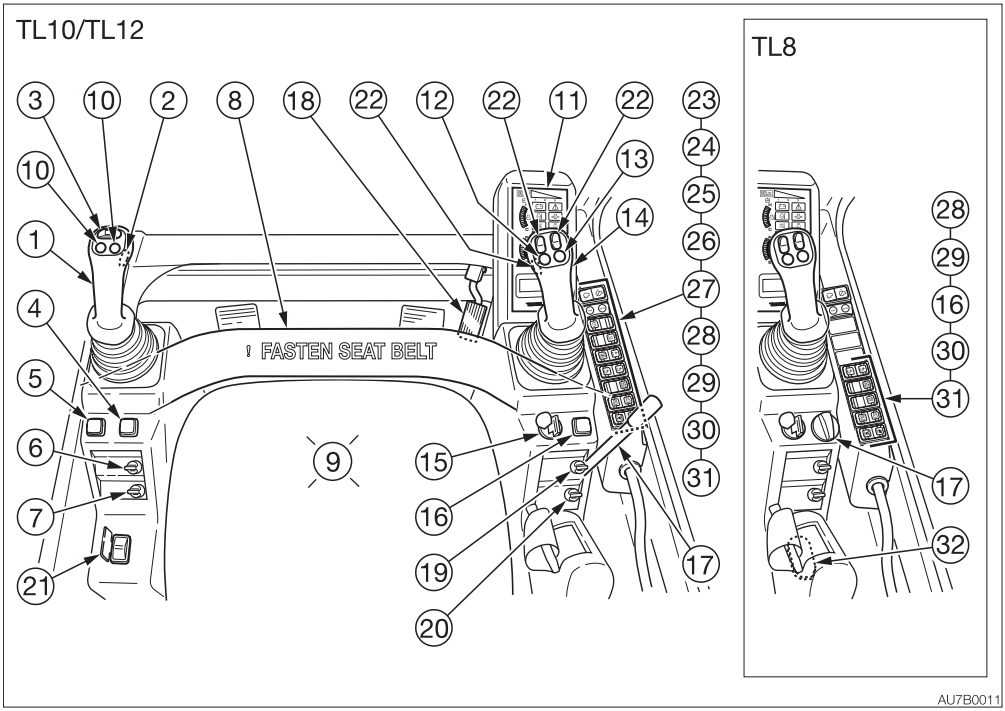

1. Left control lever
2. Travel speed button
3. Slider switch (for auxiliary hydraulic)
4. Detent mode switch (for auxiliary hydraulic)
5. Flow selector switch (Two-way/One-way)
6. Front wiper switch*
7. Rear wiper switch*
8. Safety bar
9. Seat
10. Auxiliary hydraulic buttons
11. Instrument cluster
12. Float button
13. Horn button
14. Right control lever
15. Ignition switch
16. High-flow switch*
17. Throttle lever
18. Throttle pedal*
19. Front light switch
20. Tail light switch
21. Hydraulic quick-hitch switch*
22. Multifunction buttons*
23. Engine shutdown switch
24. Trip/Data switch
25. Parking brake switch*
26. Ride control switch*
27. Aux. 2nd/14-pin connector select switch*
28. 14-pin connector G/H select switch*
29. Aux. 1st flow rate select switch
30. DPF manual regeneration/inhibit select switch
31. ECO/Power mode select switch
32. Lift arm lower button

DPF: Diesel Particulate Filter
*: Subject to the specifications or optional products selected

https://truckmanualshub.com/

COVERS

IGNITION KEY

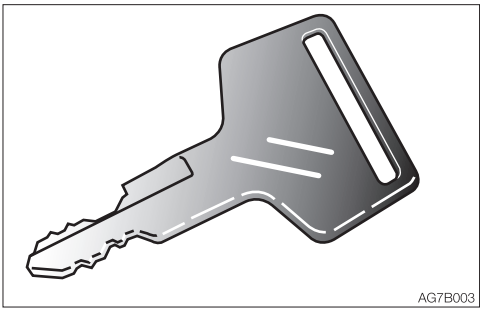

The ignition key is used to start and stop the engine, as well as to lock and unlock the following components:
- Fuel filler cap
- Cab door
- Manual storage compartment
- Engine hood

FUEL FILLER PORT

⚠ WARNING

- **Do not smoke and keep away from heat or flame while filling the fuel tank.**
- **Fill the fuel tank in a well ventilated place, with the engine turned off.**
- **Clean up spilled fuel immediately.**
- **Do not fill the fuel tank to capacity. Allow room for oil expansion.**
- **Securely tighten the fuel filler cap.**

Opening

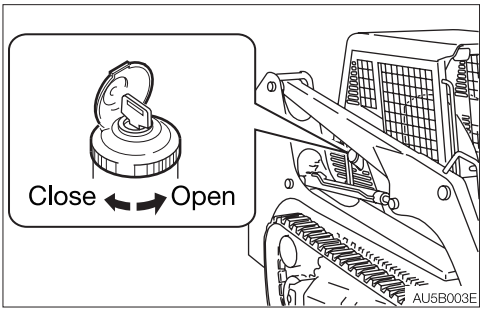

1. Open the cover, insert the key and turn it counterclockwise to unlock the cap.
2. Turn the fuel filler cap counterclockwise and remove it.

Closing

1. Install the fuel filler cap to the fuel filler port, and then turn the cap clockwise to close it.
2. Lock the fuel filler cap.

https://truckmanualshub.com/

ENGINE HOOD

⚠ WARNING

Before opening the engine hood, be sure to stop the engine. If a hand or tool becomes trapped in the rotating or moving part, serious injury could result.

Opening

<TL8>

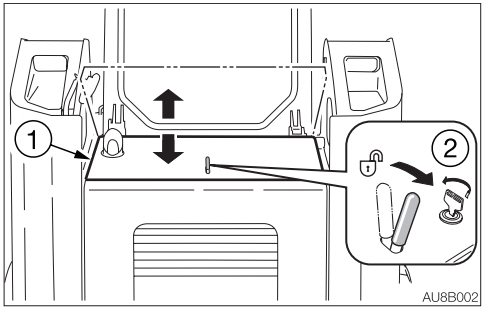

<TL10/TL12>

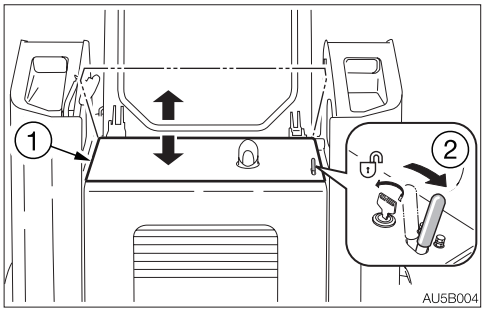

1. Insert the ignition key and turn it counterclockwise to unlock the engine hood (1).
2. Remove the key and pull the lever (2) backward.
3. Open the engine hood (1).

Closing

1. Close the engine hood (1) and press down the edge of it until a click is heard.
2. Insert the ignition key and turn it clockwise to lock the engine hood.

REAR DOOR

⚠ WARNING

- **When opening the rear door, use a stay to securely lock it.**
- **When opening or closing the rear door, be careful not to get your hands or other part of your body caught by the door.**

Opening

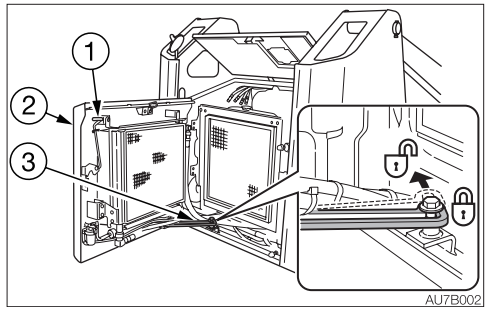

1. Open the engine hood.
2. Lift the lever (1), open the rear door (2) all the way and secure it.
   When the rear door (2) is fully opened, it is secured by the stay (3).

Closing

1. Release the stay (3) while holding the rear door (2).
2. Close the rear door (2) and press down the edge of it until a click is heard.

https://truckmanualshub.com/

CAB

CAB DOOR

⚠ WARNING

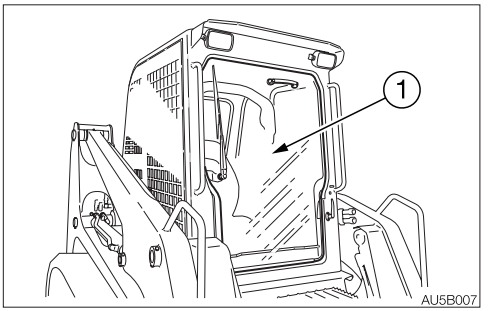

- **When getting on or off the cab, first open the door all the way until it is secured in the catch and check that it does not move.**
- **Be careful not to get your hands, feet or fingers caught by the door (1). If any part of the body is caught, serious injury could result. You could be injured if you touch the latch on the cab side when opening or closing the door.**
- **When you open the door, be sure to lock it in place with the lock pin. The door may fall if it is not locked in place.**
- **When opening or closing the door, grasp the handle securely and move the door slowly. When lowering the door, be careful not to hit your head or get your hands or feet caught by the door.**

Open the door fully and press it against the catch at the back of the cab to secure it in place.
The door must be locked with the lock pin while in operation.

Locking and unlocking

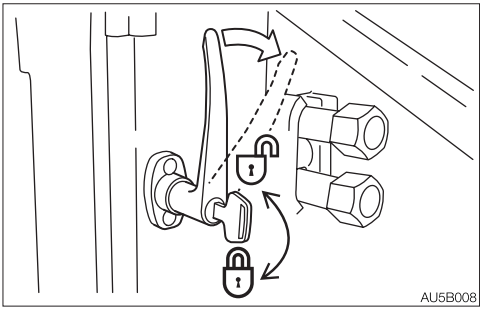

Insert the ignition key and turn it.

Opening (from outside)

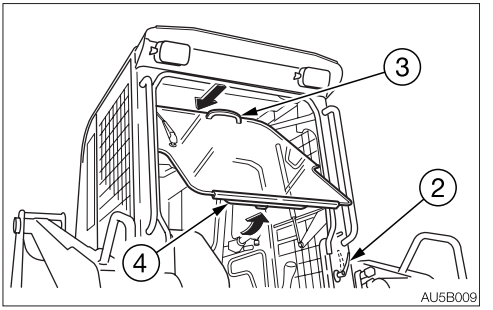

1. Turn the handle (2) clockwise to release the latch.
2. Grasp the handle (3) and push it inward (away from you).
3. Grasp the handle (4) and lift the door.
4. When the door reaches all the way up, firmly push it in to engage the latch.
5. Check that it is securely locked and not moving.

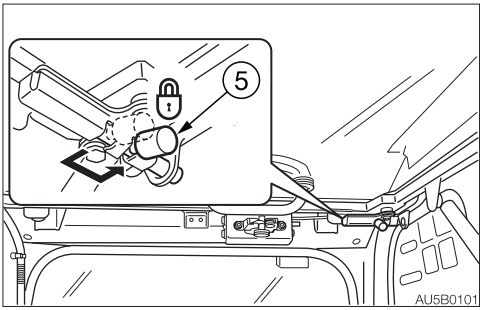

https://truckmanualshub.com/

6. Get in the cab and insert the lock pin (5) into the pin hole on the cab to lock it.

Closing (from inside)

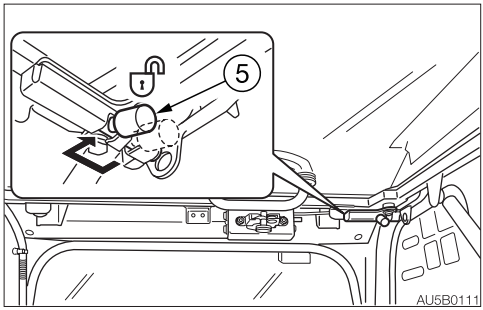

1. Remove the lock pin (5) from the pin hole on the cab to release the door lock.

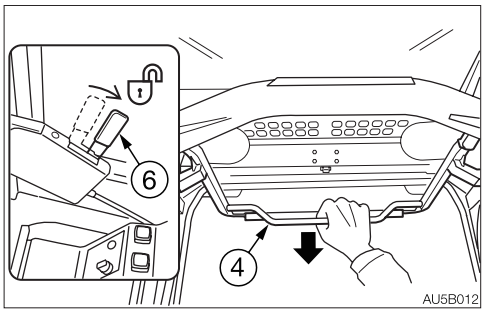

2. Push the release lever (6) to the front to release the latch.
3. Grasp the handle (4) and slowly lower the door.

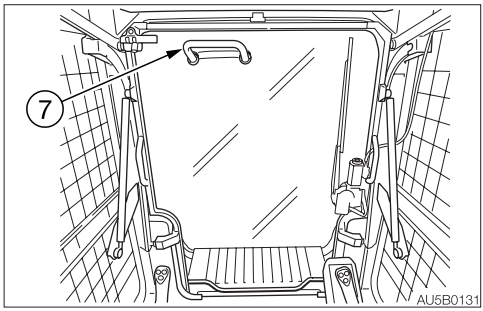

4. When the door reaches all the way down, grasp the handle (7) and firmly push the door in to engage the latch.

Opening (from inside)

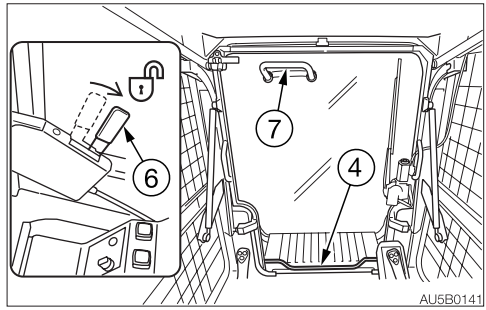

1. Push the release lever (6) to the front to release the latch.

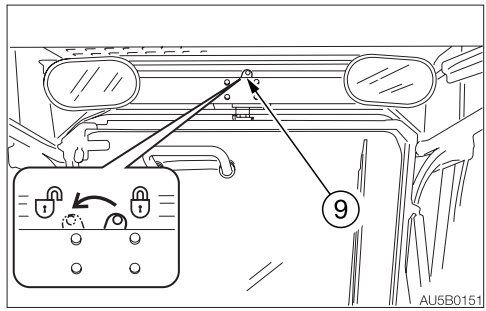

If the release lever (6) does not work, move the emergency unlock lever (9) to the left to release the latch.

2. Pull the handle (7) toward you and open the door.
3. Grasp the handle (4) and lift the door.
4. When the door reaches all the way up, firmly push the door in to engage the latch.
5. Check that the door is securely latched and not moving.
6. Insert the lock pin (5) into the pin hole on the cab to lock it.

https://truckmanualshub.com/

Closing (from outside)

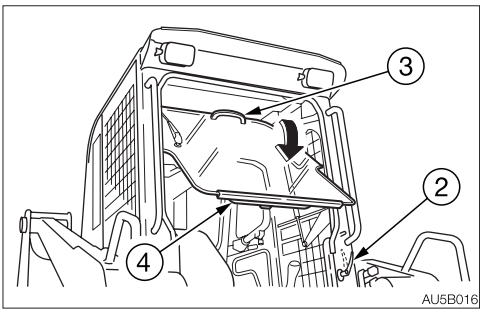

1. Turn the handle (2) clockwise to release the latch.
2. Grasp the handle (4), and slowly lower the door while taking care not to get the hands or feet caught by the door.
3. Grasp the handle (3) and firmly pull the door to latch it.

SIDE WINDOW

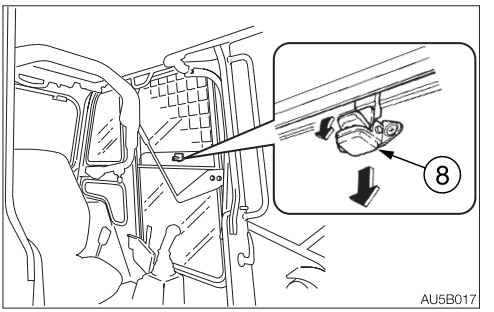

1. Grasp the catch (8), release the lock and open the side window.
2. To close the side window, close it until a click is heard.

https://truckmanualshub.com/

EMERGENCY EXIT

Rear window

If you are trapped inside the cab, remove the rear window to get out.

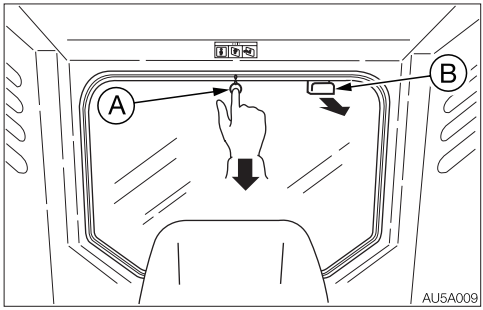

There are two ways to remove the rear window.

In case of emergency

Kick off the rear window. Note that the glass may break. Be careful not to get injured.

- If the glass breaks, it will shatter into pieces. Take great care not to injure yourself with them.
- Remove the glass pieces from the window sill so as not to cut yourself when evacuating. Broken glass will fall from the window, so be careful of your footing and do not slip on the glass.

When necessary

1. Pull off the ring (A) and remove the tip of the rubber wedge.
2. Grasp the tip, pull and remove the entire rubber wedge.
3. Pull the knob (B) toward you and remove the rear window.

FUSE BOX

This box is used to protect the electric system from overcurrent.

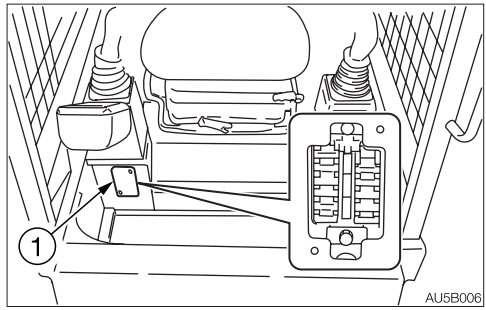

Opening

1. Loosen the screw and remove the cover (1).

Closing

1. Tighten the screw on the cover.

https://truckmanualshub.com/

LIFT ARM STOPPER

DANGER

- **If you must work under the raised lift arms, use the lift arm stopper to securely support the lift arms. Never get under the lift arms and bucket if they are not sufficiently supported.**
- **Immediately repair or replace with a new one if any damage or missing part is found in the lift arm stopper. Failure to do so may cause the lift arm to fall, resulting in a serious injury or death.**

The inspection and maintenance work should be done while the lift arms are lowered. If the lift arms are raised, use an authorized lift arm stopper by observing the following procedures.

Installing the stopper

1. Park the machine on a flat and rigid ground, and remove the bucket.
2. Lower the lift arms to the ground, and stop the engine.

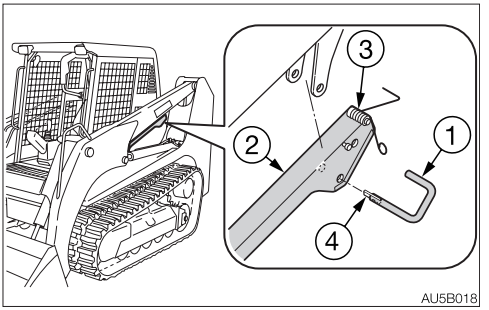

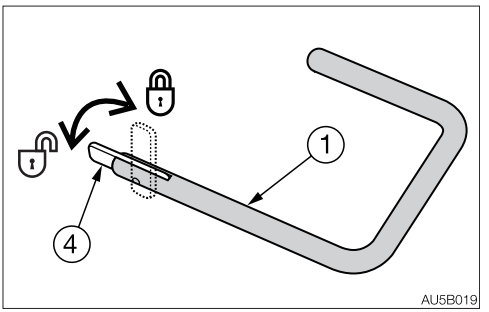

3. Align the orientation of the hook (4) on the tip with that of the lock pin (1).
4. Support the lift arm stopper (2) by hand and pull out the lock pin (1).

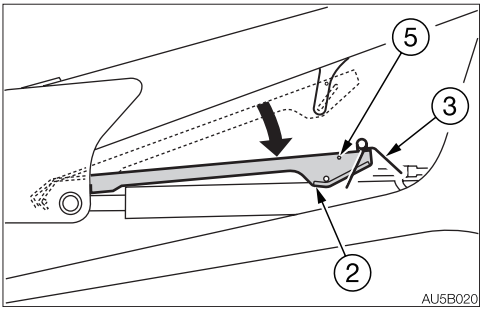

5. Check that the spring (3) moves freely (disengaged from the hook (5)), and then place the lift arm stopper (2) on the cylinder.
6. Sit in the seat, fasten the seat belt, start the engine and lower the safety bar.
7. Raise the lift arms until the lift arm stopper (2) drops onto the cylinder rod.

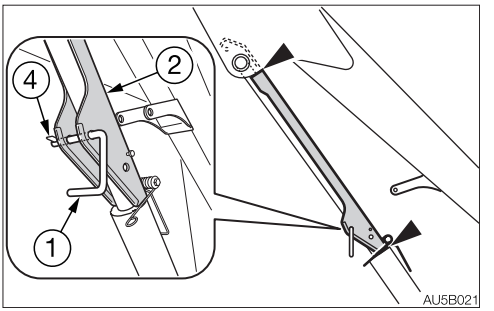

8. Slowly lower the lift arms until the lift arm stopper (2) hits against the edge surface of the cylinder tube and becomes fixed.
9. Stop the engine.
10. Insert the lock pin (1) in the front hole of the lift arm stopper (2) and pass it through under the cylinder rod to the back hole.
11. To prevent the lock pin (1) from falling off, set the hook (4) at a right angle to the lock pin (1).

https://truckmanualshub.com/

Removing the stopper

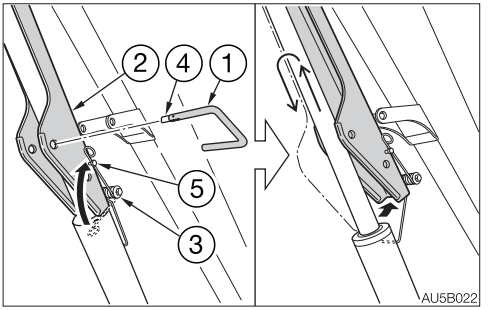

1. Align the orientation of the hook (4) on the tip with that of the lock pin (1).
2. Pull out the lock pin (1) from the lift arm stopper (2).
3. Pick up the end loop of the spring (3) with your fingers, and then hang it onto the hook (5) of the lift arm stopper (2).
4. Sit in the seat, fasten the seat belt, start the engine and lower the safety bar.
5. Raise the lift arms. The lift arm stopper (2) disconnects from the cylinder rod.
6. Lower the lift arms to the ground, and stop the engine.

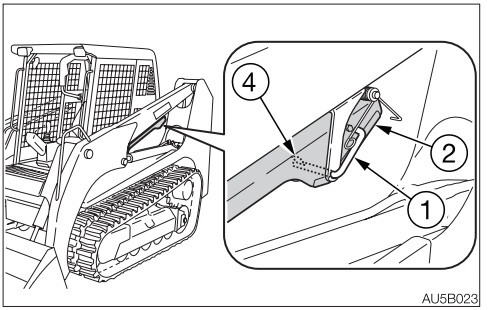

7. Raise the lift arm stopper (2) to the storage position and insert the lock pin (1) through lift arm stopper and bracket.
8. To prevent the lock pin (1) from falling off, set the hook (4) at a right angle to the lock pin (1).

https://truckmanualshub.com/

SEAT AND SEAT BELT

SEAT

⚠ WARNING

- **Adjust and secure the seat.**
- **Do not make any adjustments while operating the machine.**
- **Remember that the backrest returns to the forward position abruptly due to the spring force.**

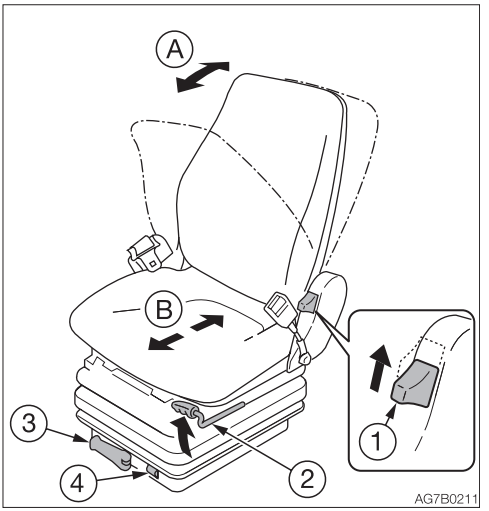

(A) Adjusting the backrest

1. Sit up and sit back in the seat.
2. Pull up the lever (1), recline the backrest by using the spring force. Release the lever (1) at the desired angle to secure the backrest.

(B) Fore-and-aft adjustment

1. Pull up the lever (2) and slide the seat backward or forward to the desired position for operation of machine.
2. Release the lever (2) at the desired position to secure the seat.
   Adjustment range: 15 positions, in 150 mm (5.9 in.)

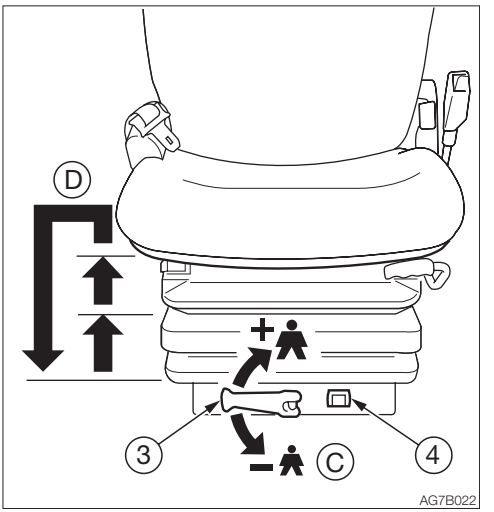

(C) Adjusting according to operator's weight

1. Turn the handle (3) until the scale indicates the weight of operator.
   Adjustment range: 50 to 130 kg (110 to 287 lbs)

(D) Adjusting the height of the seat

Upward

1. Lift the seat to first or second position click-stop.
   Adjustment ranges: 2 positions, in 60 mm (2.36 in.)

Downward

1. First lift the seat to highest position, then the seat can be lowered to lowest position.

https://truckmanualshub.com/

SEAT BELT

⚠ WARNING

Be sure to fasten the seat belt securely before starting the engine.

Fastening the seat belt

1. Adjust the seat to the desired position for operation, sit up and sit back in the chair.
2. Slowly pull out the seat belt to the desired length.
   If pulled out too rapidly, the belt is automatically locked. If this occurs, release the belt and slowly pull the belt again.

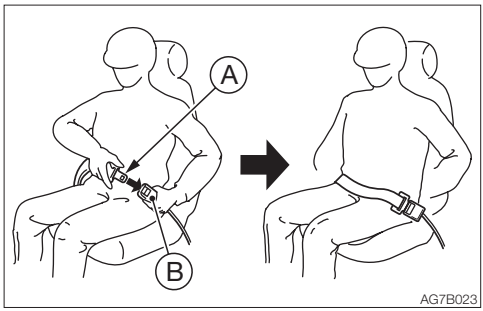

3. Make sure that the belt is not twisted and then insert the tongue plate (A) into the buckle (B) of the seat belt until you hear a clicking sound as it locks in place.
4. Check if the belt is securely locked by pulling it, and arrange the belt around your waist.

Releasing the seat belt

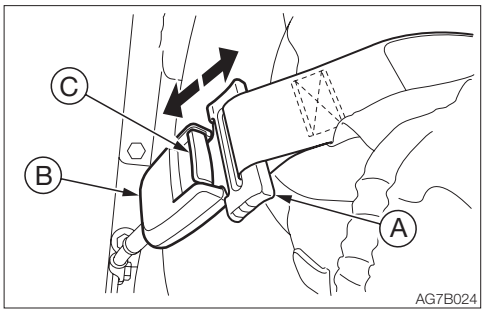

1. Grasp the tongue plate (A) and press the button (C) on the buckle (B).

The seat belt retracts back into its original position.

3-POINT SEAT BELT (OPTIONAL)

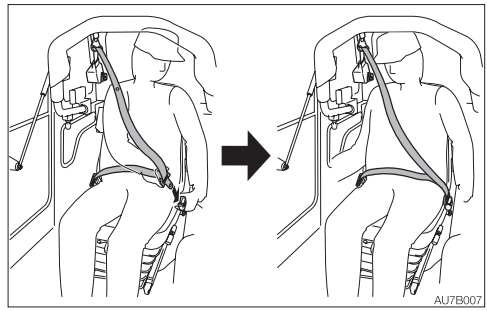

IMPORTANT: To prevent the belt from falling off the shoulder and contacting your arm or neck, wear the belt in such a way that it is rested over the center of your shoulder.

For details on how to use this seat belt, refer to the 2-point seat belt at left.

https://truckmanualshub.com/

INSTRUMENT CLUSTER

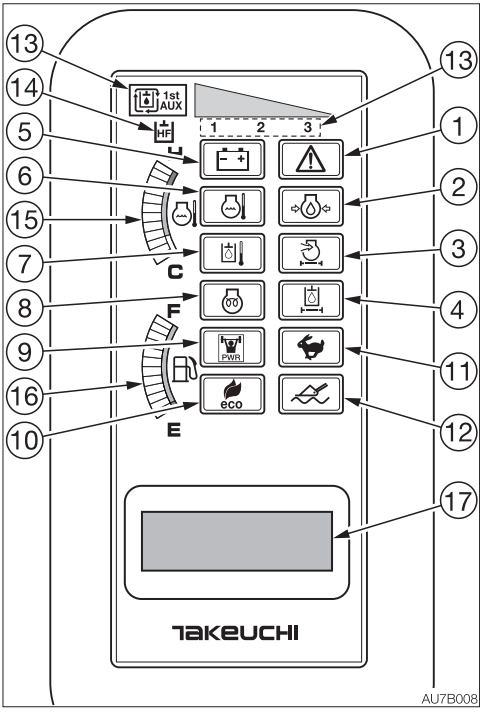

Once the ignition switch is turned to ON, all lamps on the instrument cluster light up and the alarm sounds.
If any of the lamps are not lit, the globes may be blown. Consult your sales or service dealer.

WARNING LAMPS

IMPORTANT: If a warning lamp flashes and an alarm is sounded, immediately stop all operations and check the corresponding component.
Refer to “If a warning lamp flashes” on pages 6-10 and 6-11.

1. **Vehicle and engine emergency lamp**
   This lamp flashes and an alarm sounds if there is a problem with the machine. Get the vehicle or engine error code number from the multi-data display and consult your sales or service dealer referring to the “Vehicle error code list” or “Engine error code list”.

2. **Engine oil pressure warning lamp**
   This lamp flashes and an alarm is sounded if the lubricant oil pressure abnormally low while the engine is running.

3. **Air cleaner warning lamp**
   This lamp flashes and an alarm is sounded if the air cleaner filter is clogged while the engine is running.

4. **Pilot line filter warning lamp**
   This lamp flashes if the pilot line filter is clogged while the engine is running. This lamp may flashes directly after the engine in started in cold weather. This is not a malfunction. The lamp will turn off as the engine warms up.

5. **Battery charge warning lamp**
   This lamp flashes and an alarm is sounded if a problem rises in the charging system while the engine is running.

6. **Coolant temperature warning lamp**
   This lamp flashes and an alarm is sounded if the engine coolant temperature becomes abnormally high while the engine is running.

7. **Hydraulic oil temperature warning lamp**
   This lamp flashes if the hydraulic oil temperature becomes abnormally high while the engine is running.

https://truckmanualshub.com/

INDICATORS

8. Glow lamp
This lamp goes out when the engine preheating is completed.

9. Power mode indicator lamp
This lamp lights up when the Power mode side of the ECO/Power mode select switch is pressed. The maximum engine output is maintained for as long as this lamp is lit.

10. ECO mode indicator lamp
This lamp lights up when the ECO mode side of the ECO/Power mode select switch is pressed. The machine drives with reduced RPM for lower fuel consumption, without compromising workability.

11. Travel speed lamp
This lamp turns on when the travel speed button is set to the 2nd (high) speed.

12. Arm float indicator lamp
This lamp light up when the float button is pressed to set the lift arms to the float mode.

13. Auxiliary 1st flow rate indicator lamp
This lamp lights up to indicate which flow rate setting is selected in the auxiliary 1st.
1 ..... Flow rate setting 1
2 ..... Flow rate setting 2
3 ..... Flow rate setting 3

14. High-flow indicator lamp
Lights up while the high-flow is functioning.

METERS

15. Water temperature gauge
Indicates the temperature of the engine coolant water.
The LED should be within the green range during machine operation.
The red range indicates overheating.

16. Fuel Gauge
Indicates the amount of fuel in the tank.
When the fuel level becomes low, the bottom LED bar flashes eight times, and then the flash cycle is performed twice.
Flash cycle: LED bars turn on in succession from the bottom to the top, and then turn off in succession from the top to the bottom.
Be sure to top off the tank before running out of fuel.

https://truckmanualshub.com/

MULTI-DATA DISPLAY

17. LCD (Liquid Crystal Display)

IMPORTANT: If the vehicle and engine emergency lamp flashes and a number appears on the vehicle or engine error code screen, refer to the “Vehicle error code list” or “Engine error code list” and contact your sales or service dealer for help

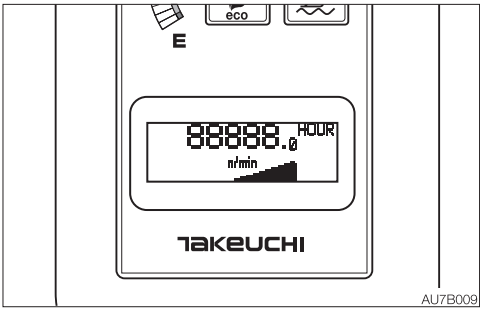

When the ignition switch is turned to ON, the display of hour meter, trip meter or the various data items on the machine appears. The initial screen displays the hour meter, the trip meter or the PM accumulation amount.
PM: Particulate matter

Trip/Data switch

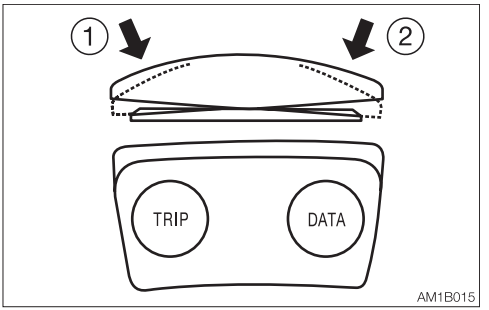

Press either the TRIP (1) side or the DATA (2) side to select a display mode.

- Press the TRIP (1) side to display the hour meter, trip meter or the amount of PM deposition.
- Press the DATA (2) side to display the various data.

TRIP MODE DISPLAY

The display changes as the TRIP (1) side is pressed as follows.
When the ignition switch is turned on, the mode previously set (before the power-off) is displayed

1. Hour meter

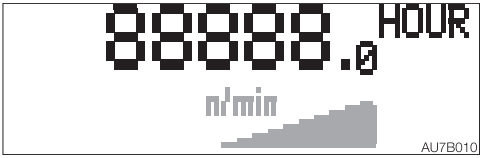

Displays the total engine running time in hours.
The rightmost digit indicates tenths of hours (6 minutes).
Set the inspection and maintenance intervals according to the time displayed on the hour meter.

2. Trip meter

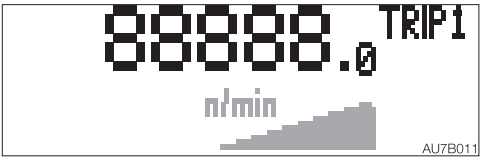

A pattern of desired operating hour can be displayed.
To reset the meter to “0”, press and hold the TRIP side for three seconds.

3. PM accumulation amount

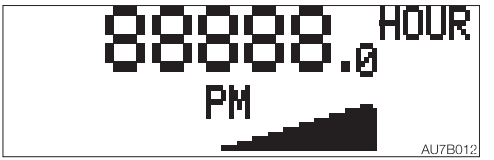

Displays the estimated amount of particulate matter (PM).

4. Returns to the hour meter page.

https://truckmanualshub.com/

DATA MODE DISPLAY

The display changes each time the DATA (2) side is pressed as follows:

1. Engine RPM

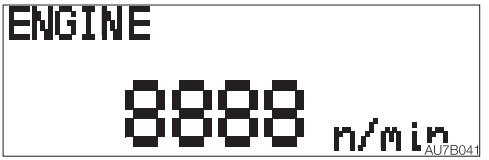

2. Battery voltage

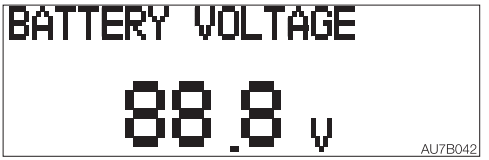

3. Coolant temperature

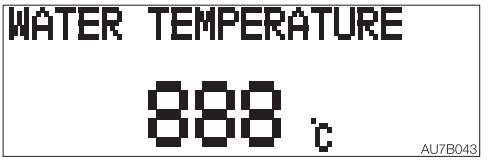

4. Hydraulic oil temperature

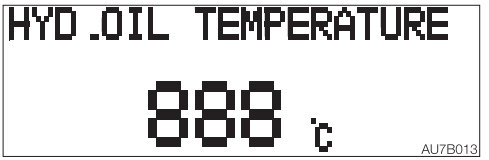

5. Auxiliary 1st flow rate

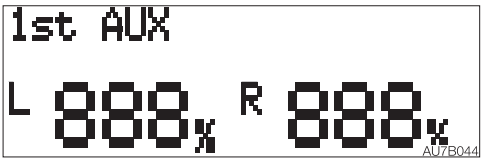

6. Returns to the engine RPM page.

https://truckmanualshub.com/

MAINTENANCE MODE DISPLAY

While in the data mode, press and hold the DATA (2) side for three seconds to enter the maintenance mode. The display changes each time the DATA (2) side is pressed as follows:

1. Vehicle error code

IMPORTANT: If an error code appears, immediately stop the operation and contact your sales or service dealer for help.

Displays four error codes, with the latest code in the left.
Refer to “Vehicle error code list” on page 6-12.

2. Engine error code

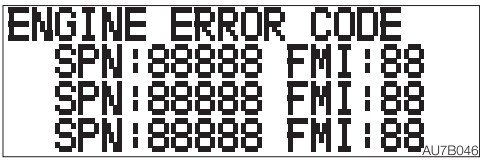

IMPORTANT: If an error code appears, immediately stop the operation and contact your sales or service dealer for help.

Displays three error codes, with the latest code at the top.
Refer to “Engine error code list” on page 6-13.

3. Auxiliary 1st-1 setting information

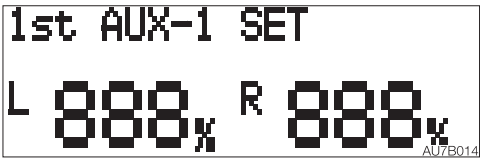

The flow rate of the Aux. 1st is displayed. The flow rate, except the flow rate of the Aux. 2nd, can be changed when the engine is at rest and the ignition switch is set to ON.
The actual flow rate is not in conjunction with the value expressed in percent.
For setting the auxiliary piping flow rate, ask your service or sales dealer.

Changing flow rate

a. Raise the safety bar to the lock position.
b. Press and hold the Aux. 1st flow rate select switch for approximately three seconds to cause the values on the L side to flash.
c. Pressing the TRIP side of the Trip/Data switch decreases the flow rate by 5%. Pressing and holding it for one second decreases the flow rate by 5%. Pressing the DATA side of the Trip/Data switch increases the flow rate by 5%. Pressing and holding it for one second increases the flow rate by 5%.

https://truckmanualshub.com/

<TL8>

Initial condition	LR common, standard flow	Variable range
Auxiliary 1st-1	100%=72L/min (19.0 US gpm)	10 to 100%
Auxiliary 1st-2	75%=54L/min (14.3 US gpm)	10 to 100%
Auxiliary 1st-3	50%=36L/min (9.5 US gpm)	10 to 100%

Initial condition	LR common, high-flow	Variable range
Auxiliary 1st-1	100%=128L/min (33.8 US gpm)	10 to 100%
Auxiliary 1st-2	75%=96L/min (25.4 US gpm)	10 to 100%
Auxiliary 1st-3	50%=64L/min (16.9 US gpm)	10 to 100%

<TL10>

Initial condition	LR common, standard flow	Variable range
Auxiliary 1st-1	100%=77L/min (20.3 US gpm)	10 to 100%
Auxiliary 1st-2	75%=58L/min (15.3 US gpm)	10 to 100%
Auxiliary 1st-3	50%=39L/min (10.3 US gpm)	10 to 100%

Initial condition	LR common, high-flow	Variable range
Auxiliary 1st-1	100%=142L/min (37.5 US gpm)	10 to 100%
Auxiliary 1st-2	75%=107L/min (28.3 US gpm)	10 to 100%
Auxiliary 1st-3	50%=85L/min (22.5 US gpm)	10 to 100%

<TL12>

Initial condition	LR common, standard flow	Variable range
Auxiliary 1st-1	100%=88L/min (23.2 US gpm)	10 to 100%
Auxiliary 1st-2	75%=66L/min (17.4 US gpm)	10 to 100%
Auxiliary 1st-3	50%=44L/min (11.6 US gpm)	10 to 100%

Initial condition	LR common, high-flow	Variable range
Auxiliary 1st-1	100%=153L/min (40.4 US gpm)	10 to 100%
Auxiliary 1st-2	75%=115L/min (30.4 US gpm)	10 to 100%
Auxiliary 1st-3	50%=92L/min (24.3 US gpm)	10 to 100%

The table shows the 1-way flow rate when there is no load.
The above rates vary depending on the conditions. Use them as a rough indication.

d. Press the Aux. 1st flow rate select switch to confirm. At this time, the values on the R side starts flashing. Perform the same operation as for the L side. The section to be set changes each time the Aux. 1st flow rate select switch is pressed.
e. Press and hold the Aux. 1st flow rate select switch for approximately three seconds to end changing flow rate operation.

https://truckmanualshub.com/

4. Auxiliary 1st-2 setting information

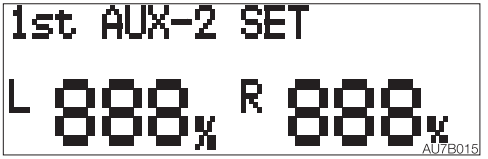

Refer to “Auxiliary 1st-1 setting information” above.

5. Auxiliary 1st-3 setting information

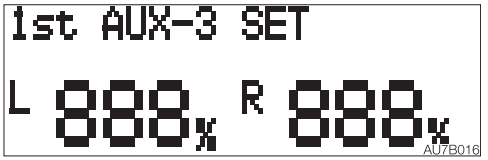

Refer to “Auxiliary 1st-1 setting information” above.

6. Engine model

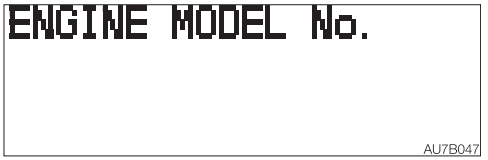

7. Engine serial number

8. Returns to the vehicle error code page.

OTHER DISPLAY

1. Aux. 2nd display (TL10/TL12 optional)

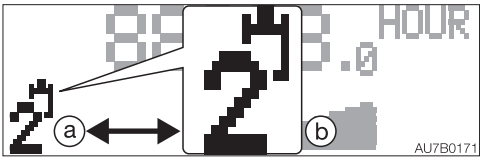

a: Aux. 2nd is selected.
b: Enlarged view

2. 14-pin connector display (optional)

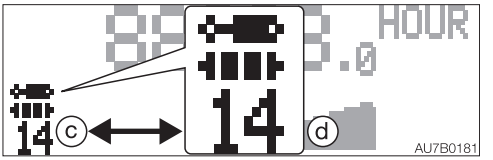

c: 14-pin connector is selected.
d: Enlarged view

3. High-flow display (optional)

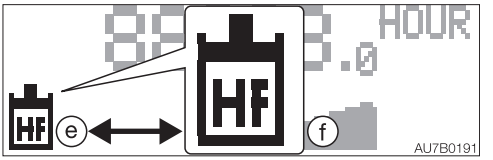

e: High-flow is selected.
f: Enlarged view

4. Parking brake display (TL12 optional)

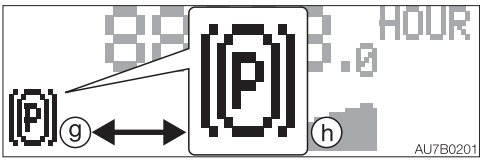

g: Parking brake is on.
h: Enlarged view

https://truckmanualshub.com/

5. Ride control display (TL10/TL12 optional)

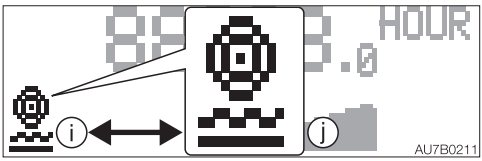

i: Ride control is on.
j: Enlarged view

6. Engine RPM display

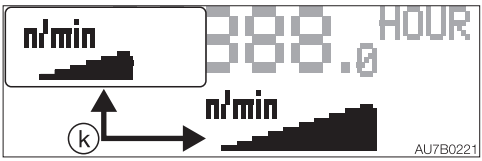

k: The graph changes as the engine RPM changes.

7. Hour meter/Trip meter display

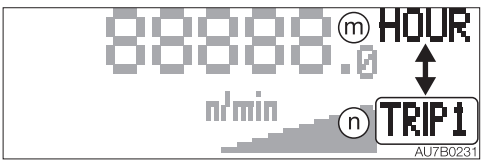

m: Hour meter is selected.
n: Trip meter is selected.

8. ECM warning display
IMPORTANT: If the ECM warning display flashes and a number appears on the engine error code screen, refer to the "Engine error code list" and contact your sales or service dealer for help.

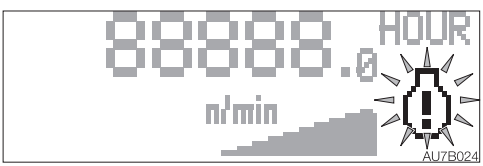

This warning display flashes if the Electronic Control Module (ECM) detects an engine problem while the ignition switch is in the ON position. The data screen appears with an ECM error code indicating the problem just detected. Refer to "Engine error code list" on page 6-13.

9. DPF manual regeneration display
IMPORTANT: Press the manual regeneration side on the DPF manual regeneration/inhibit regeneration select switch to burn the particulate matter (PM), when the DPF manual regeneration lamp flashes and an alarm sounds. If the machine continues to be operated without performing the manual regeneration, the engine power will decrease and eventually the engine will stop running. The ECM warning display will also flash if the DPF needs to be repaired. A number appears on the engine error code screen. Refer to the "Engine error code list" and contact a Takeuchi sales or service dealer for repair.

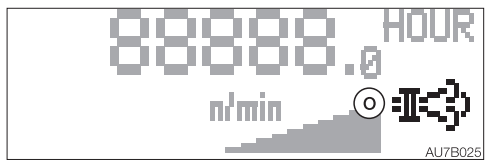

Possible causes for PM accumulation are as follows.
- Light work load is continuously applied.
- The machine of idling state is frequently left unattended.
- Short time operation of less than 30 minutes are continuously performed.

DPF: Diesel Particulate Filter
This device traps particulate matter (PM) and automatically burns off the trapped PM (thus regenerating the filter).

o: The lamp starts flashing and an alarm starts sounding, if the accumulated PM exceeds the limited amount on the DPF. Immediately perform the manual DPF regeneration.
Refer to "DPF manual regeneration/ inhibit select switch" on page 2-30.

https://truckmanualshub.com/

10. DPF regeneration inhibit display

⚠ WARNING

Do not perform the DPF regeneration if the machine is surrounded by flammable items such as plants, trees, dry grass, wastepaper, oil and waste tires. There is a risk of fire due to the high-temperature exhaust gas emitted from the DPF.

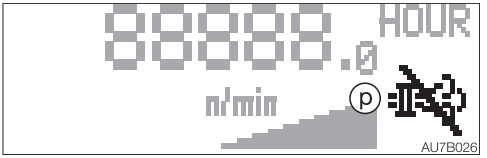

p: DPF generation inhibit is selected.

11. DPF auto regeneration display

⚠ CAUTION

The DPF may automatically perform the regeneration while the engine is left running. Make sure that there are no flammable items around the DPF and the exhaust line, and also that the engine hood is closed to prevent fire. Be careful not to burn yourself on the high-temperature exhaust gas.

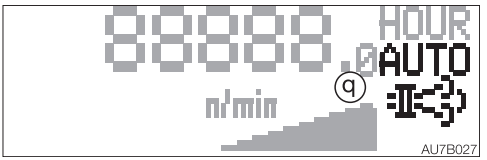

q: DPF auto regeneration is selected. In some cases the engine RPM increases while idling. This shows that the DPF auto regeneration is under way; it is not a failure. Thus, it is not necessary to operate the DPF manual regeneration/inhibit regeneration select switch. The regeneration process is cancelled if the engine is stopped while the auto generation is being performed. The regeneration process automatically resumes when the engine is restarted. If this cycle continues, the auto regeneration cannot be completed and the filter will need to be regenerated manually to complete the auto regeneration. Try not to stop the engine while the auto regeneration is being performed.

https://truckmanualshub.com/

MEMO

https://truckmanualshub.com/

SWITCHES

IGNITION SWITCH

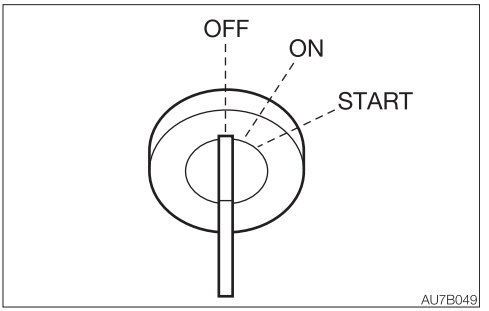

IMPORTANT: Do not repeatedly switch the key from OFF to ON and ON to OFF over a short period. Doing so will cause engine breakdown.

OFF ..... Position for stopping the engine and inserting or removing the key.
ON ..... Position in which the engine is running. At this position, all the electrical equipment is functional. When the coolant temperature is too low, the engine is automatically preheated.
START ..... Position for starting the engine. When the key is released, the switch automatically returns to the ON position.

Note: The engine immediately stops when the ignition switch is turned to the OFF position, but the other electric components take a few seconds before they stop. This is not a failure; it is due to the characteristics of the engine control system.

ENGINE SHUTDOWN SWITCH

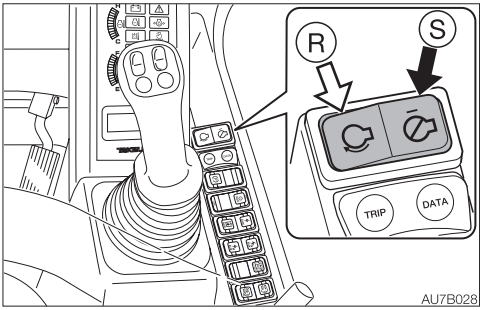

This switch is used to shutdown the engine if it fails to stop, due to machine failure or breakage, when the ignition switch is set to the OFF position.

1. Press the stop symbol side (S) of the switch.
   The engine stops.
2. After use, press the turn symbol side (R) to reset the switch.

HORN BUTTON

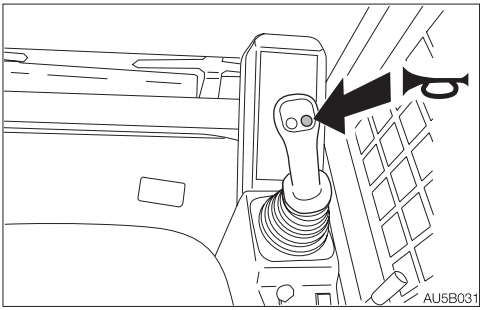

Press the button situated on the right operating lever to blow the horn.

https://truckmanualshub.com/

FLOAT BUTTON

⚠ WARNING

- **It is very dangerous to set the lift arms to the float mode while the bucket is raised too high, as the bucket is likely to fall. Lower the bucket to a height of 30 cm (12 in.) or less above the ground before setting the lift arms to the float mode.**
- **Do not travel forward with the lift arms in the float mode.**

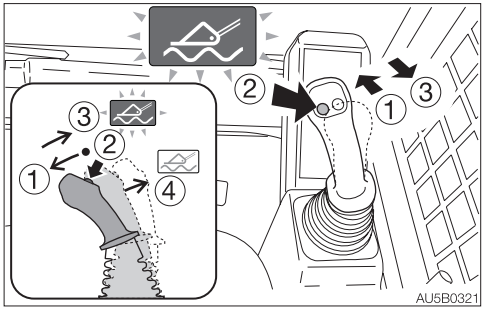

Use this button to set the lift arms to the float mode.

Setting the float mode

Lower the bucket to a height of 30 cm (12 in.) or less above the ground.

1. Tilt the right control lever forward a little. (Lift Arms Lower)
   For the H pattern, tilt the left control lever to the right.
2. Depress the float button while the lever is tilted forward.
   (The arm float indicator lamp will illuminate.)
3. Release the lever.

To cancel the float mode

4. Depress the float button again or tilt the right control lever backward.
   For the H pattern, tilt the left control lever to the left.

Lift arms in the float mode

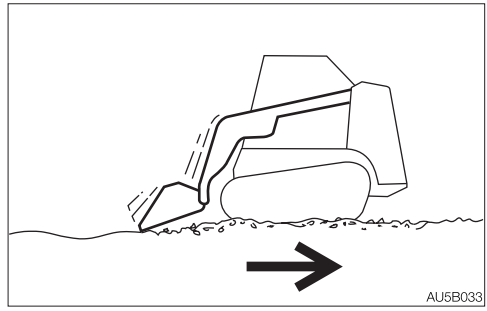

While in the float mode, the bucket moves up and down in response to the “bumps and dips” on the ground surface.

https://truckmanualshub.com/

MULTIFUNCTION BUTTONS

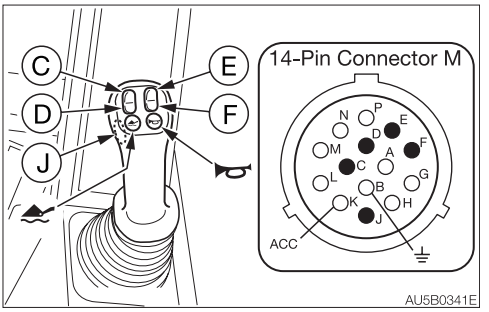

These buttons are used to operate various optional functions.

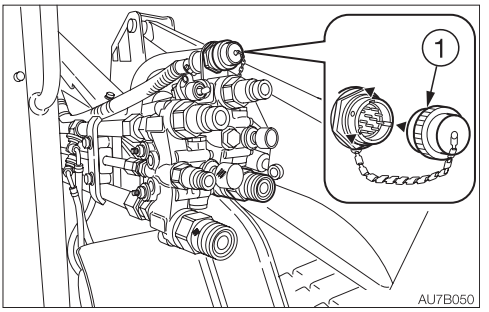

1. Turn the cap (1) counterclockwise and remove it.
2. To install the female connector or the cap (1), align the notches and turn it clockwise to tighten.
   <14-pin connector M>
   HDB34-18-14PN-059
   Total max. Working current: 20 A
   Max. Working current at each terminal: 13 A

AUXILIARY HYDRAULIC SWITCHES

Auxiliary hydraulic buttons (A), (B)

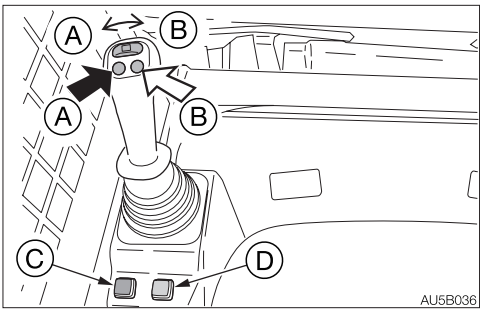

Press auxiliary hydraulic buttons (A) or (B) to control the flow of the oil in the auxiliary hydraulic circuit.
(A).....Hydraulic oil flows to auxiliary hydraulic line (a)
(B) .....Hydraulic oil flows to auxiliary hydraulic line (b)

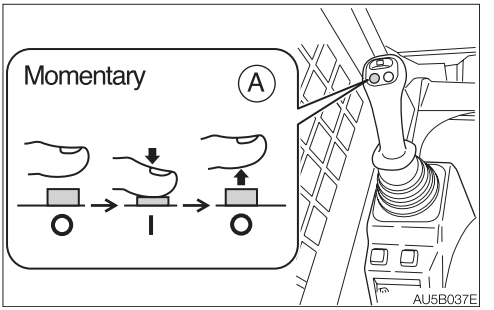

These switches stay on while the buttons are pressed; they turn off when the buttons are released (momentary mode).
Note that the switch (A) can be also operated in the detent mode, in which the switch state alternates between “ON” and “OFF” every time the button is pressed. To switch to the detent mode, use the detent mode switch (D).
If the selector switch (C) has been turned on to select the one-way oil flow, only the switch (A) can be used.
(A).....Hydraulic oil flows to auxiliary hydraulic line (a)
The return oil returns to the hydraulic tank through the line (b).

https://truckmanualshub.com/

Slider Switch (Proportional control)

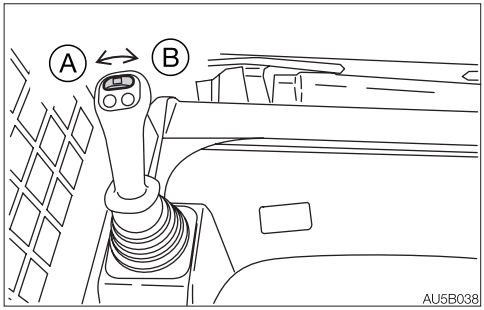

Proportional control allows for slow-to-fast movement of auxiliary functions.
Example: If you move the slider switch half way, the auxiliary function will move at approximately one-half speed.

Detent Mode Switch (D)

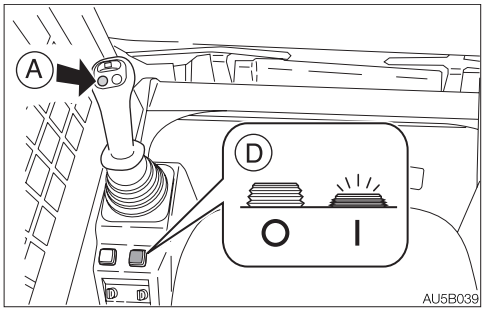

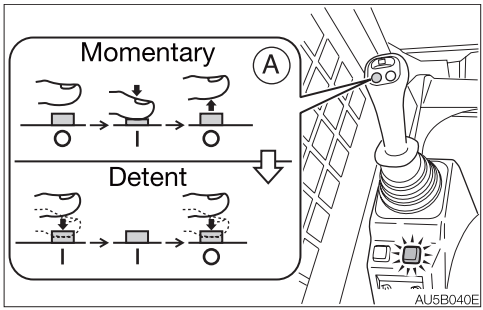

IMPORTANT: Do not operate the machine in the detent mode for a long time. Doing so will increase the hydraulic oil temperature and shorten the service life of the hydraulic units.

Change the operation mode of the auxiliary hydraulic switch (A) as follows.
To set to the detent mode, press the switch until the built-in lamp (orange) lights up to indicate that the auxiliary hydraulic switch (A) is in the detent mode. To change it to the momentary mode, press the switch again until the built-in lamp (orange) goes out.

Flow Selector Switch (C)

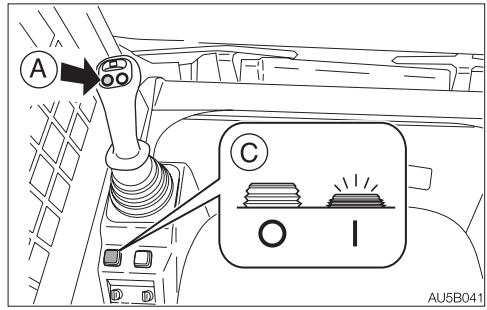

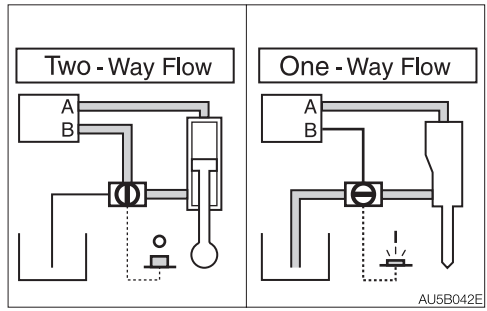

The flow of the auxiliary hydraulic system (lines (a) and (b)) can be set to either one-way or two-way flow.
To set to the one-way mode, press the switch until the built-in lamp (green) lights up to indicate that the auxiliary hydraulic line is in the one-way mode. To change it to the two-way mode, press the switch again until the built-in lamp (green) goes out.

https://truckmanualshub.com/

High-Flow Switch (E) - (If equipped)

<TL8>

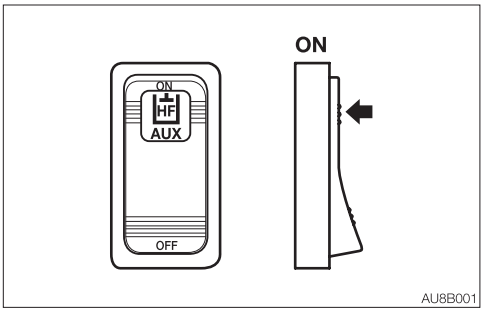

<TL10/TL12>

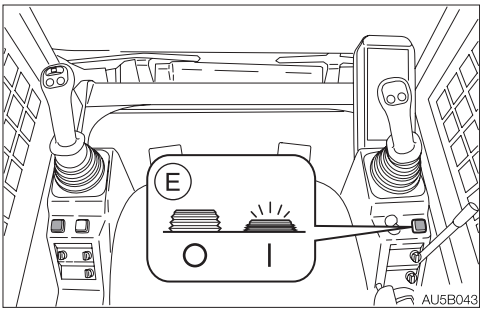

This switch controls the ON/OFF state of the high-flow function set in the auxiliary hydraulic lines. To set the high-flow function to ON, press this switch until the built-in lamp (green) lights up. At the same time, the built-in lamp (green) of the selector switch lights up to indicate that the flow of the auxiliary hydraulic line is changed from two-way to one-way.

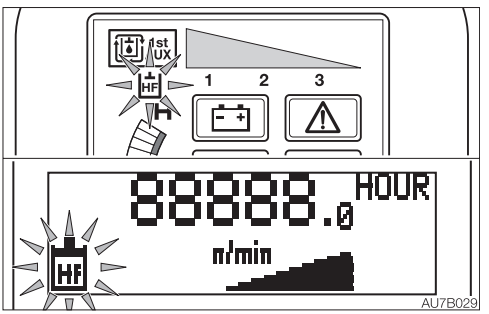

The symbols on the instrument cluster and the display light up when the high-flow switch is pressed. (If an attachment has been connected to the auxiliary piping.)

TRAVEL SPEED BUTTON

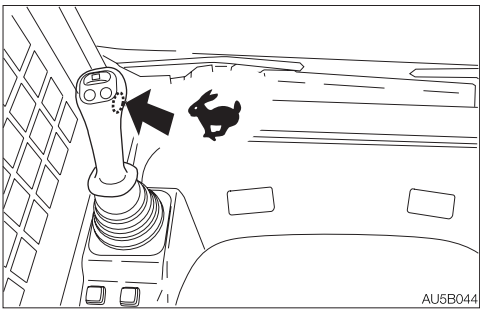

Press this button to set the travel speed to 2nd (high) speed. Press it again to return to 1st (low) speed.

https://truckmanualshub.com/

FRONT WIPER SWITCH (OPTIONAL)
REAR WIPER SWITCH (OPTIONAL)

IMPORTANT: If no washer fluid is discharged, do not operate the washer. Doing so may damage the pump.
IMPORTANT: Operating the wiper with no moisture on the windshield will scratch the glass. Use water or washer fluid when operating the wiper.
IMPORTANT: In cold climates, the wiper blade may freeze to the glass. Operating the wiper forcibly may damage the wiper motor.

Front wiper switch

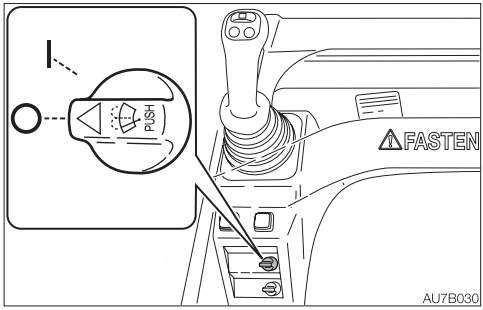

Rear wiper switch

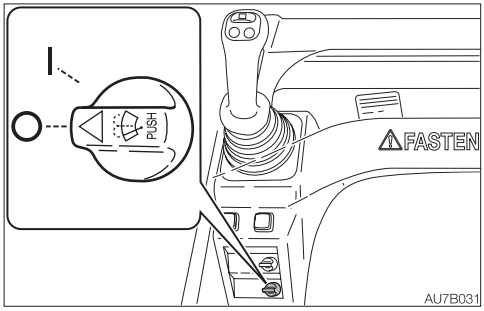

O..... Off
I..... Wiper operates
PUSH..... Sprays washer fluid when pressed. Stops when released.

FRONT LIGHT SWITCH

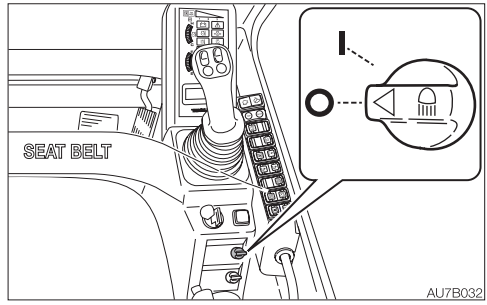

When this switch is turned while the ignition switch is at ON, the lights turn on as follows:

O.....Off
I.....Meter light, front lights and the switches in action will be lit.

TAIL LIGHT SWITCH

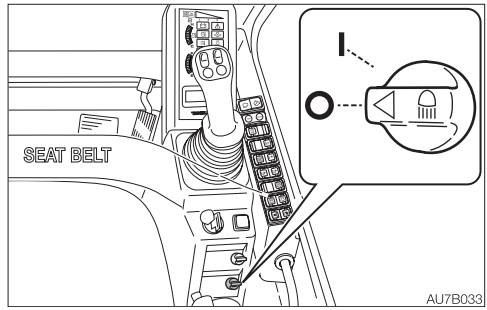

When this switch is turned while the ignition switch is at ON, the lights turn on as follows:

O.....Off
I.....Tail lights and the switches in action will be lit.

https://truckmanualshub.com/

ECO/POWER MODE SELECT SWITCH

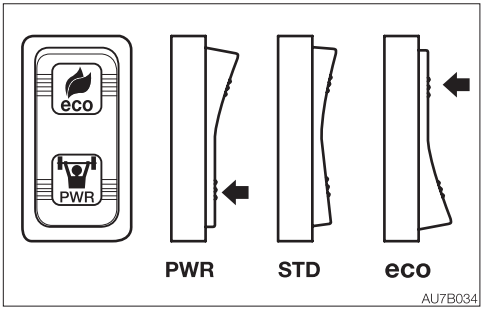

- When the ECO symbol side of the switch is pressed, the ECO mode indicator lamp in the instrument cluster lights up.
  The engine RPM and output are set to economically optimal values to improve the fuel economy.
- STD mode: When the neutral position of the switch is pressed, the ECO or Power mode indicator lamp goes out.
  The engine speed is specified by the throttle lever and the throttle pedal.
- When the PWR symbol side of the switch is pressed, the Power mode indicator lamp in the instrument cluster lights up.
  The maximum engine output is obtained.
  To cancel, either set to the neutral position or to the opposite mode.
  Refer to “Instrument cluster” on page 2-14.

DPF MANUAL REGENERATION/INHIBIT SELECT SWITCH

⚠ WARNING

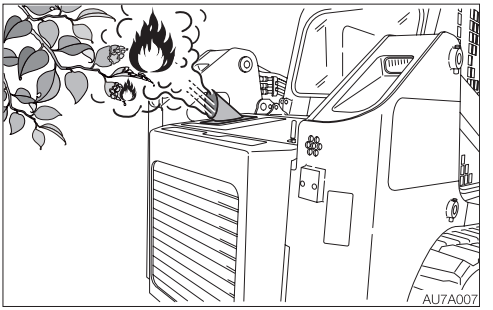

- **The DPF and the exhaust gas emitted from the exhaust line can be very hot while the engine is running or the regeneration is under way, as well as immediately after the engine is stopped. Be careful not to accidentally touch them; doing so could cause burns.**
- **Do not perform the DPF regeneration if the machine is surrounded by flammable items such as plants, trees, dry grass, wastepaper, oil and waste tires. There is a risk of fire due to the high-temperature exhaust gas emitted from the DPF.**
- **Do not perform the DPF regeneration in poorly-ventilated indoor spaces, as smoke may be generated during the regeneration.**
- **Do not perform regeneration when the engine hood is open. There is a risk of fire due to the high-temperature exhaust gas emitted from the DPF.**

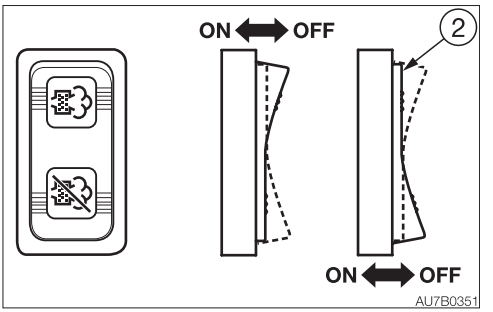

https://truckmanualshub.com/

IMPORTANT: Press the manual regeneration side (2) on the DPF manual regeneration/inhibit regeneration select switch to burn the particulate matter (PM), when the DPF manual regeneration lamp flashes and an alarm sounds. If the machine continues to be operated without performing the manual regeneration, the engine power will decrease and eventually the engine will stop running. The ECM warning display will also flash if the DPF needs to be repaired. A number appears on the engine error code screen. Refer to the "Engine error code list" and contact a Takeuchi sales or service dealer for repair.

- **DPF manual regeneration**
  When the DPF manual regeneration symbol on the display in the instrument cluster starts flashing and an alarm starts sounding, perform the DPF manual regeneration as follows.
  1. Park the machine in a safe place where there is no fire hazard.
  2. Raise the safety bar to the lock position.
  3. Decrease the engine speed to low idling.
  4. Press and hold the manual regeneration side on the DPF manual regeneration/ inhibit regeneration select switch.

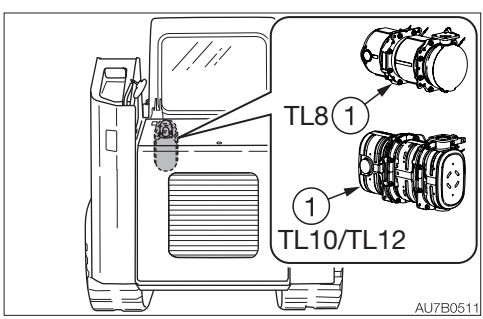

  5. The manual regeneration symbol stops flashing and remains lit to indicate that the engine RPM is automatically increased and the DPF (1) regeneration (PM burning) has started.
  6. Release the switch. Do not leave the machine during regeneration.
     It takes approximately 15 to 20 minutes, depending on the ambient temperature, to complete the regeneration operation.
  7. The manual regeneration symbol goes off to indicate the end of manual regeneration.

Note:
- Do not lower the safety bar and move the control levers during regeneration. Doing so interrupts the regeneration.
- In some cases smoke may be emitted from the tail pipe while the DPF regeneration is being performed. This is not a failure; it is due to burning of the particulate matter (PM).
- In some cases the noise associated with the DPF regeneration operation or cancel operation may change; this is not a failure.
- The DPF manual regeneration can be completed faster while the machine engine is warm rather than cold. Note that the manual regeneration does not start unless the coolant temperature is higher than a set value. The coolant temperature may increase while manual regeneration is being performed.
- Since the DPF regeneration is designed to work only when the accumulated particulate matter (PM) in the filter exceeds a certain amount, it will not start otherwise, even if you attempt to perform manual regeneration.

- **DPF regeneration inhibit (cancel)**
  To cancel the DPF regeneration currently being processed (manual or auto), press the regeneration inhibit symbol side.
  The DPF regeneration inhibit symbol appears on the display, and the regeneration operation must be performed again. Start the manual regeneration procedure from Step (1) above, as soon as possible. Do not press the DPF regeneration inhibit switch unless there is a risk of fire.
  To cancel, press the switch again. Turning the ignition switch to OFF will also cancel the regeneration.
  Refer to "DPF manual regeneration/ regeneration inhibit/auto regeneration display" on pages 2-21.

https://truckmanualshub.com/

AUXILIARY 1ST FLOW RATE SELECT SWITCH

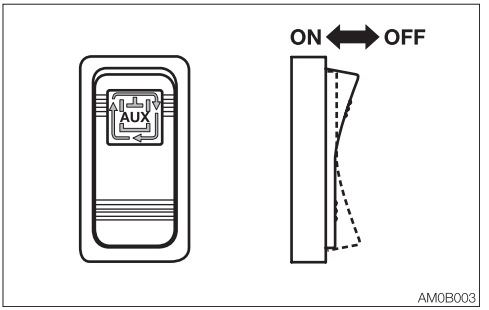

This switch is used to select and set the flow rate of the auxiliary 1st.
The auxiliary 1st flow rate indicator lamp in the instrument cluster lights up to indicate which flow rate setting is selected. The flow rate setting changes each time the ON side of the switch is pressed.
The flow rate setting is done by using this switch and the TRIP/DATA switch.
Refer to “3. Auxiliary 1st-1 setting information” on page 2-18.

PARKING BRAKE SWITCH (TL12 OPTIONAL)

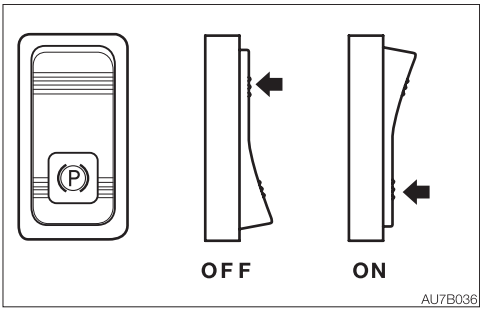

- Pressing the parking brake side engages the parking brake and disables traveling. The working equipment is still operable. The parking brake symbol appears on the display.
- To cancel, press the opposite side of the switch.

Note: The parking brake is automatically activated when the power is turned off or the safety bar is raised.
Refer to “Parking brake display”on page 2-20.

RIDE CONTROL SWITCH (TL10/TL12 OPTIONAL)

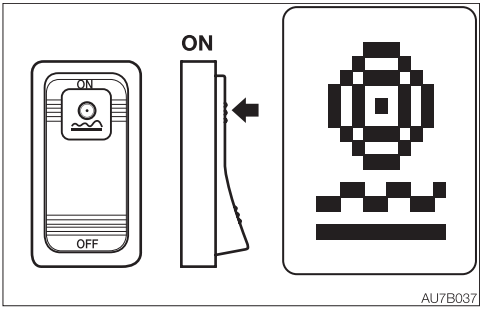

- Pressing the ride control symbol side reduces the lift arm vibration while traveling and keeps the vehicle from shaking (prevention of spilling load). The ride control symbol appears on the display.
- To cancel, press the OFF side of the switch.

Refer to “Ride control display”on page 2-21.

https://truckmanualshub.com/

AUX. 2ND/14-PIN CONNECTOR SELECT SWITCH (TL10/TL12 OPTIONAL)

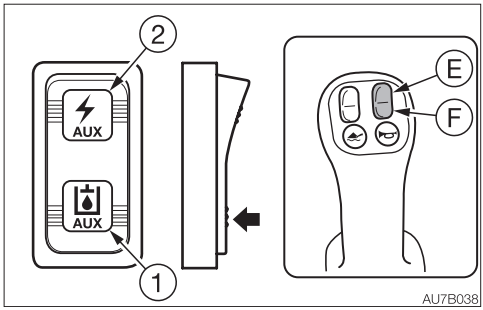

- Pressing the Aux 2nd symbol side (1) assigns the control of Aux. 2nd to the right side of the multifunction buttons. The Aux. 2 symbol appears on the display.
  - Press the front side (E) of the button to discharge from the Aux. 2nd port (e).
  - Press the rear side (F) of the button to discharge from the Aux. 2nd port (f).
    Refer to “Aux. 2nd display” on page 2-20.
    Refer to “Aux. 2nd lines” on page 2-50.
- Pressing the 14-pin symbol side (2) enters the 14-pin mode. The 14-pin symbol appears on the display.
  Refer to “14-pin connector display” on page 2-20.

14-PIN CONNECTOR G/H SELECT SWITCH (OPTIONAL)

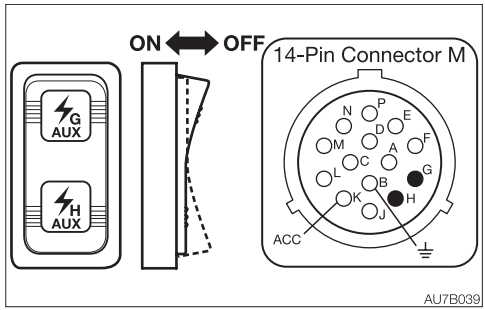

- Pressing the 14-pin G symbol side activates the 14-pin (G).
- Pressing the 14-pin H symbol side activates the 14-pin (H).

https://truckmanualshub.com/

LEVERS AND PEDAL

SAFETY BAR

⚠ WARNING

- **Before leaving the operator's seat, raise the safety bar to engage the lock and stop the engine. If any controls are accidentally touched when the safety bar is not locked, the machine will suddenly move and cause serious injury or death.**
- **Be careful not to touch the control levers and pedal when lowering or raising the safety bar.**

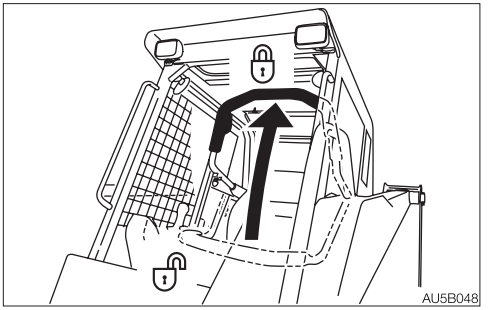

This device is used to lock the functions of control levers and switches listed below.

- Selector switch
- Detent mode switch
- Trip/Data switch
- High-flow switch
- Quick-hitch switch
- Ride control switch
- Aux. 2nd/14-pin connector select switch

When the safety bar is raised, the functions of levers and switches are locked.

THROTTLE LEVER (TL10/TL12)

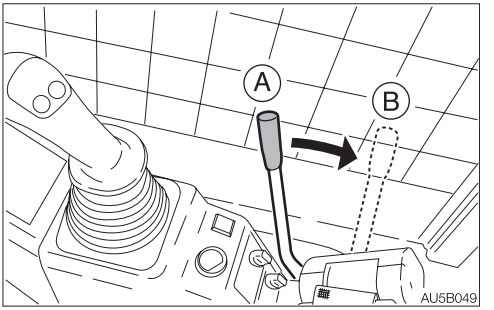

This controls the engine speed.
(A).....Low idling
(B) .....Maximum speed

THROTTLE PEDAL (OPTIONAL)

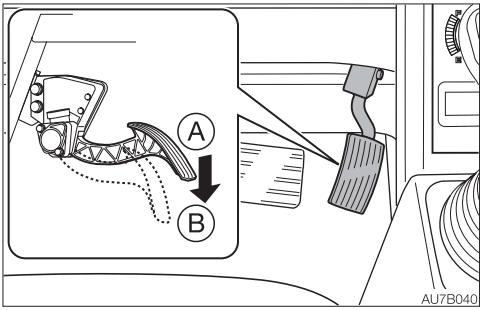

This controls the engine speed.
(A).....Low idling
(B) .....Maximum speed

https://truckmanualshub.com/

RIGHT CONTROL LEVER

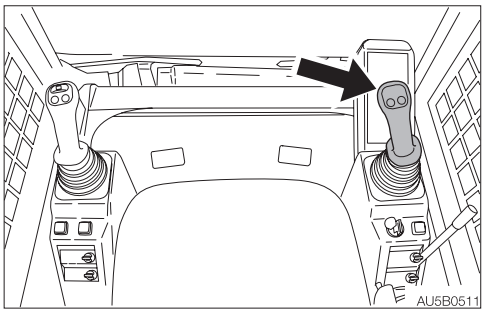

Use this lever to operate the lift arms and bucket.
Refer to “Lever pattern” on page 3-6 and 3-7.
Refer to “Operating the working equipment” on page 3-12.

LEFT CONTROL LEVER

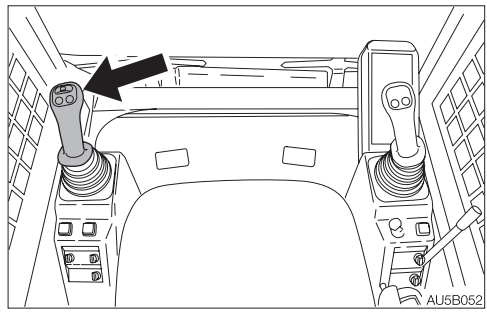

Use this lever to move forward and in reverse and to change directions.
An alarm will sound if the machine is driven in reverse or an abrupt handbrake turn (spin turn) is done.
Refer to “Lever pattern” on page 3-6 and 3-7.
Refer to “Traveling the machine” on page 3-10.

https://truckmanualshub.com/

ACCESSORIES

AIR CONDITIONER

CAUTIONS ON USE

Ventilate periodically

- When using the air conditioner over an extended period of time, open the windows about once each hour to let in fresh air.
- Your eyes may become irritated if you smoke while using the air conditioner. If this happens, open the windows to let in fresh air. Smoking particularly irritates the eyes when the air conditioner is being used. Since the humidity in the cab drops, the cornea becomes dry.
- If the outside air is dirty, set the air conditioner to the circulation mode.

Always maintain good visibility

Working with the dirty windows or fogged windows restricts visibility and is dangerous. Always clean dirt and moisture off the windows before working.

- The windows tend to get foggy when the humidity is high. If this happens, turn on the air conditioner to use outside air and the defroster to get rid of the fog.
- If the air conditioner is set to high when using the defroster, the difference between the external and internal temperatures increases, resulting in frost on the outside of the windows. If this happens, either turn the air conditioner off or turn the temperature control dial clockwise to increase the internal temperature.
- Mist may blow out of the air outlets. This is not a malfunction. When moist air passes through the evaporator on the air conditioner unit, water particles in the air freeze and are emitted as mist.

Do not overcool

For health reasons, the air inside the cab should be kept at a temperature at which you feel a little cool when entering the cab from outside (a difference of 5 to 6°C (41 to 43°F)). Remember to adjust the temperature properly.

Do not turn on the air conditioner until the engine is started

To avoid placing an excessive load on the compressor, wait until the engine is started and is running smoothly before turning on the air conditioner.

Let hot air out first

If the machine has been parked in the sun, open the windows and door to let the hot air out of the cab before using the air conditioner.

Caution on refrigerant (gas)

If the refrigerant comes in contact with skin or eyes, it may cause frostbite or eye damage. Never touch the refrigerant or loosen the parts on the cooling circuit
If the refrigerant gas leaks, keep flames away.

Off-season inspection

Even off season, run the air conditioner for 3 to 5 minutes at least once a week to maintain oil in the various parts of the compressor.

https://truckmanualshub.com/

NAMES OF COMPONENTS

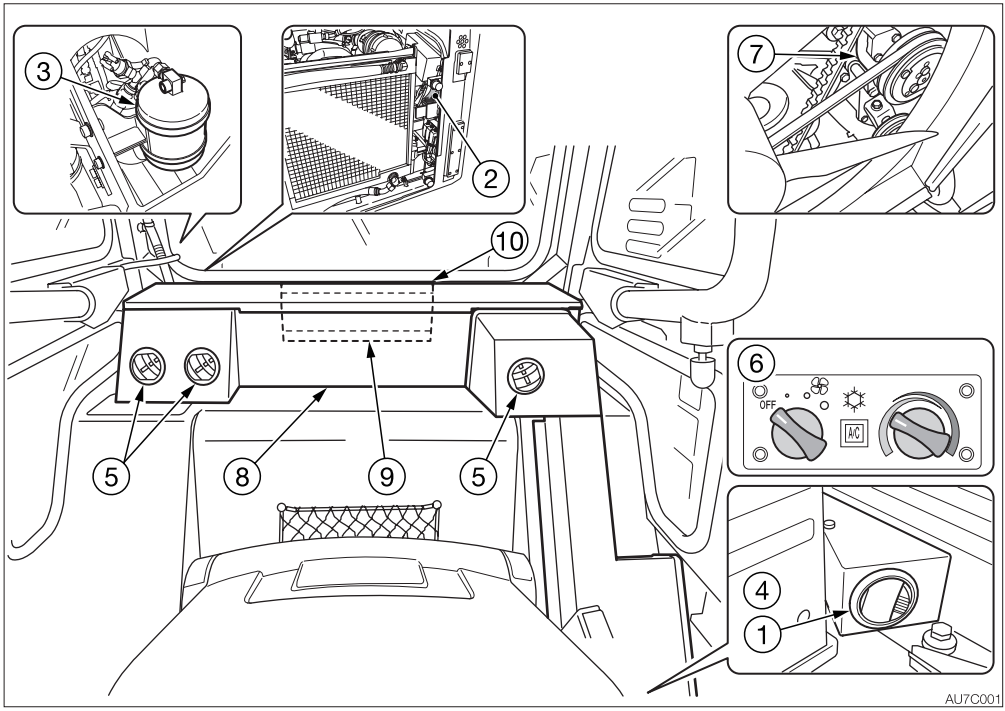

1. Defroster
2. Condenser
3. Receiver drier
4. Foot outlets
5. Rear outlets
6. Control panel
7. Compressor
8. Air conditioner unit
9. Inner filter
10. Outer filter

Control panel

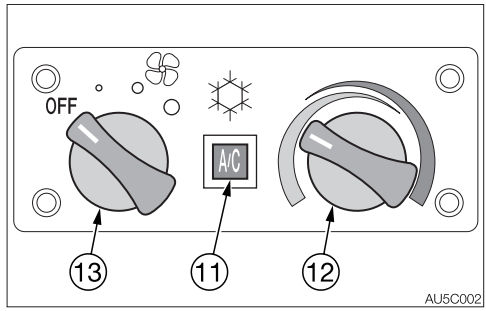

11. Air conditioner switch
12. Temperature control dial
13. Fan switch

https://truckmanualshub.com/

Air conditioner switch

IMPORTANT: To avoid placing an excessive load on the compressor, wait until the engine is started and is running smoothly before turning on the air conditioner.

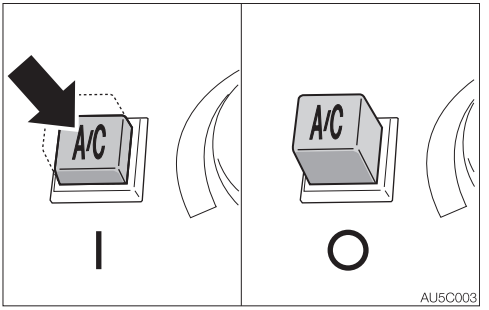

Use this switch to turn on or off the air conditioner. When this switch is pressed while the engine is running and the fan switch is on, the air conditioner turns on. Press this switch again or turn the fan switch off to turn off the air conditioner.
O.....OFF
I.....ON
Note: To prevent leakage of refrigerant gas from the compressor's seal, operate the air conditioner at least once a week, regardless of the season.
Note: The air conditioner will not function if the temperature in the cab is low (3°C (38°F) or lower).

Fan switch

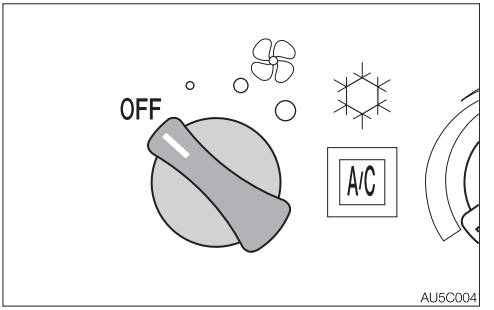

Use this switch to adjust the fan speed in three steps. Turning to the OFF position turns off the air conditioner.
OFF ....Turn off the fan and the air conditioner
∘.....Low
○.....Medium
◯.....High

Temperature control dial

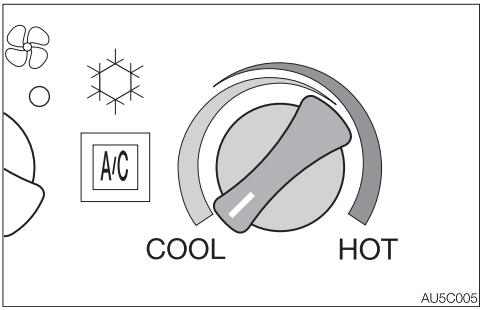

Use this dial to adjust the air temperature.
COOL..... Decrease the temperature
HOT ..... Increase the temperature
Note: No warm air is emitted if the temperature of the engine coolant is low.

https://truckmanualshub.com/

Outlets

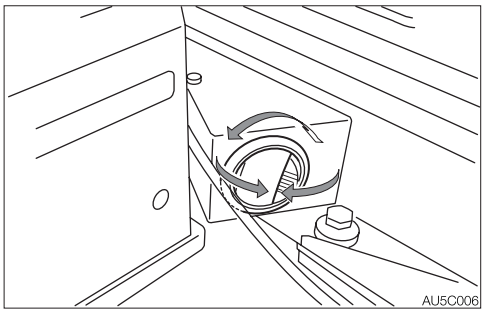

Move the louvers up and down or left and right to adjust the air flow direction and amount.

Operation

Dehumidifying and Heating (in cold climates or when the humidity is high)

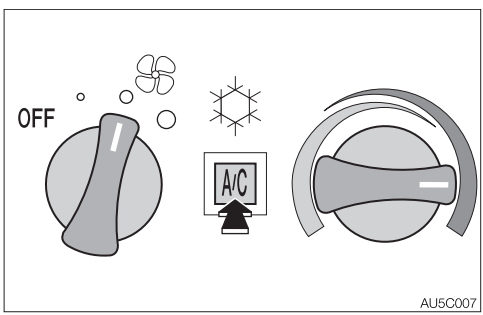

1. Set the desired temperature by turning the temperature control dial to between the center and HOT.
2. Set the fan switch to the desired positions.

Cooling

⚠ CAUTION

- **When the air conditioner is set to the circulation mode, the air in the cab gradually becomes dirty. Switch to the "ventilation" to ventilate once a comfortable temperature is obtained.**
- **Excessive cooling can be harmful to your health. It is best to keep the air inside the cab only about 5 to 6°C (41 to 43°F) cooler than the outside air.**
- **If the machine has been parked in the sun, open the windows and door to let the hot air out of the cab before using the air conditioner.**

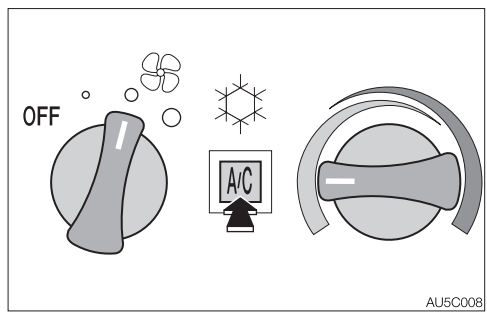

1. Set the desired temperature by turning the temperature control dial to between the center and COOL.
2. Set the fan switch to the desired positions.

Quick cooling

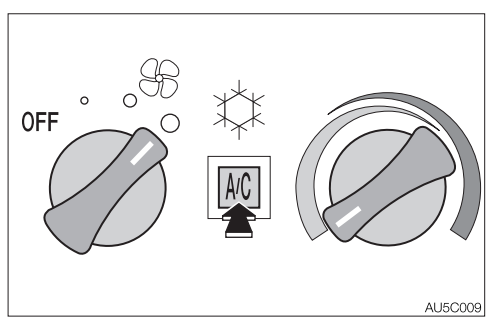

1. Set the temperature control dial to the COOL position.
2. Set the fan switch to High position.

https://truckmanualshub.com/

Defrosting or defogging the windows

Note: If the air conditioner fan is set to High, the difference between the external and internal temperatures increases, resulting in frost on the outside of the windows. If this happens, either turn off the air conditioner or turn the temperature control dial clockwise to increase the internal temperature.

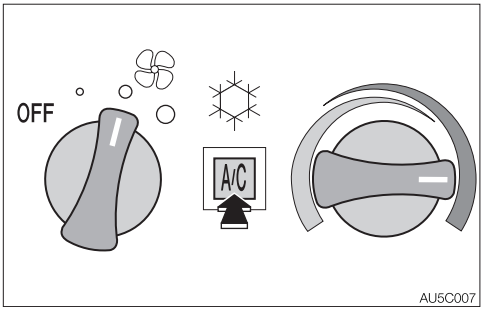

1. Set the desired temperature by turning the temperature control dial to between the center and HOT.
2. Set the fan switch to the desired positions.
3. Arrange the outlets so that they are directed to the front window.

EXTERNAL POWER SOCKET

⚠ WARNING

Use only those electric products which comply with the specifications of this socket.

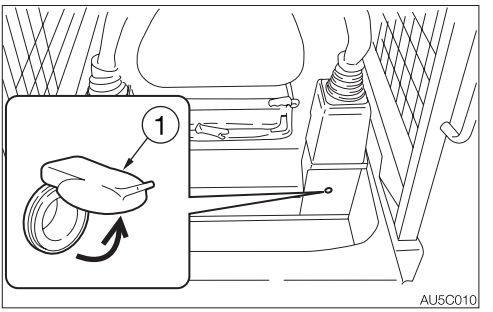

Use this socket to connect the external power supply. When using, be careful not to exceed 12V/5A.
After use, pull out the plug and put the cap (1) on the socket.

INTERIOR LIGHT

IMPORTANT: The battery capacity decreases if the interior light is left on for a long time when the engine is stopped.

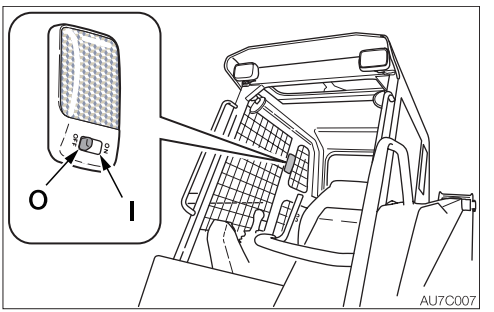

O.....Remains off all the time.
I.....Lights up all the time.

https://truckmanualshub.com/

MIRRORS

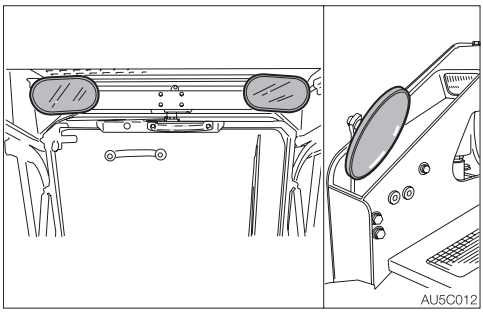

Adjust the rear view mirrors to have a better rear view.

RADIO (FOR CAB OPTIONAL)

CAUTIONS ON USE

- To ensure safe operation of the machine, always be sure to keep the volume of the radio down to a level where you can easily hear sounds from outside the machine.
- Do not use the radio for a long time when the engine is stopped. Doing so will drain the battery and make it difficult or impossible to restart the engine.
- Be careful not to allow water or other liquids to come into contact with the radio. Otherwise, it may result in malfunction.

FEATURES

Features of the Jensen JHD910 mobile audio system include:

- Waterproof
- uV and Corrosion Resistant
- Electronic US/Euro AM/FM Tuner
- 30 Programmable Presets (12 AM, 18 FM)
- Non-Volatile Memory for User Settings and Preset Memories
- 7-Channel NOAA Weather Band
- Weather Alert
- Auxiliary Audio Input
- Headphone Output
- 2-Channel Amplified Audio Output
- Backlit Controls with Selectable Illumination Color
- Daylight Readable Display
- Clock with 30-day Backup Power
- Work Timer
- Audible Beep Confirmation Tone

https://truckmanualshub.com/

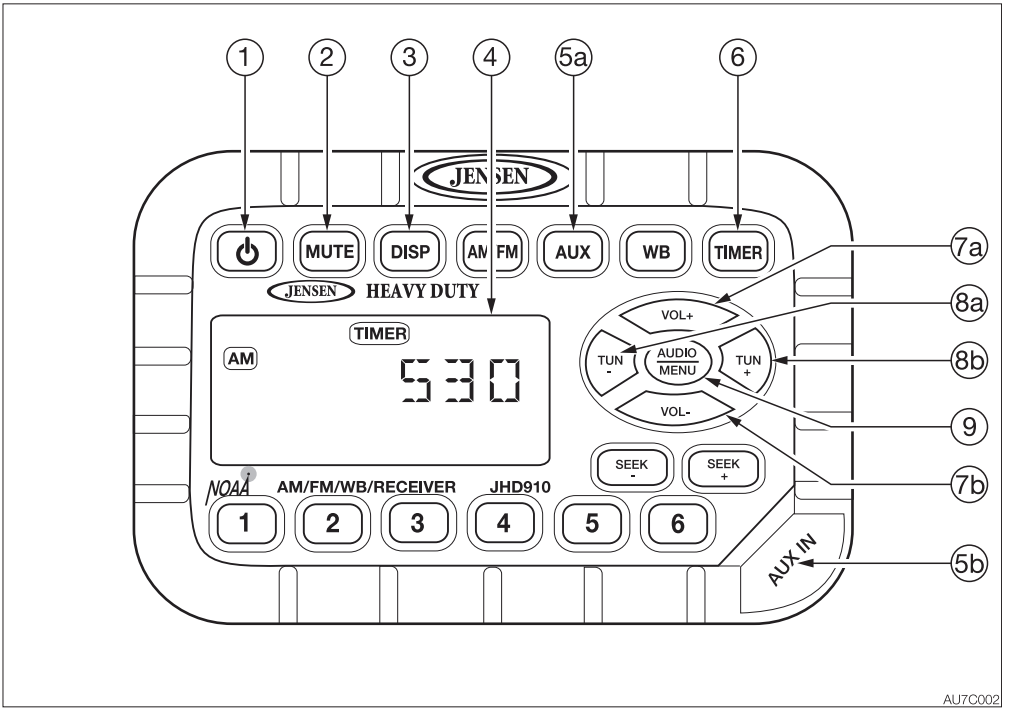

BASIC OPERATION

1. Power

Press the power button (1) momentarily to turn the unit on or off. This button is also used to access the version number of the software. To briefly display the software version on the LCD, press and hold the power button for more than five seconds.

2. Mute

Press MUTE (2) to silence the audio output in tuner, weather band or auxiliary input mode. When the audio output is silenced, “MUTE” will appear in the display. If the mute feature is activated when the unit is turned off, the volume will default to the programmed turn-on level when the unit is turned back on.

3. Display

Press DISP (3) momentarily to toggle the LCD display between function mode (showing tuner, auxiliary input or weather band information, depending on which mode is currently activated) and clock mode (showing the time).

4. Liquid Crystal Display

The Liquid Crystal Display (LCD) panel (4) displays the frequency, time and activated functions.

5. Auxiliary Input Function

To connect a portable audio device (MP3 player, iPOD, etc.) to the JHD910, connect the headphone or line level output of the device to the 1/8" auxiliary input jack of the JHD910 (5b) using the audio patch cord (included). Pres AUX (5a) to select auxiliary input mode.

https://truckmanualshub.com/

6. Timer
Press TIMER (6) momentarily to directly access timer mode. Briefly press TIMER to start the timer function, and the “TIMER” icon will flash in the display. Press TIMER again to stop the timer, and the “TIMER” icon will remain in the display (without flashing). Press the button again briefly to resume the timer, or press and hold it for three seconds to reset it to zero and to remove the “Timer” icon from the display.

7. Volume
Briefly press VOL+ (7a) or VOL– (7b) to adjust the volume up or down one step. Press and hold VOL+ or VOL– for more than one second to continuously adjust the volume level until the button is released. The current volume level (0 to 40) will appear in the display when the volume is adjusted, returning to the default display three seconds after the adjustment is complete.

8. Setting the Clock
To set the clock to display the current time, press DISP for more than three seconds to enter clock setting mode, and the time will flash in the display. Press TUN– (8a) to adjust the hours or TUN+ (8b) to adjust the minutes. When no adjustment is made for ten seconds, the time will be set and normal operation will resume.

9. Audio and Menu Adjustment
Audio Adjustment
Press AUDIO/MENU (9) momentarily to step through the following audio adjustment options: Bass, Treble and Balance (left to right). When the desired option appears in the display, press VOL+ (7a) or VOL– (7b) to adjust that audio feature. When no adjustments have been made for three seconds, the unit will resume normal operation.

Menu Adjustment
Press AUDIO/MENU for more than three seconds to enter menu adjustment mode and adjust any of the menu options: When the desired option appears in the display, press VOL+ or VOL- to adjust that menu option. When no adjustments have been made for three seconds, the unit will resume normal operation. The following menu options may be adjusted using this feature:

- Beep Confirm (On or Off) - Determines if a beep will be heard each time a button is pressed.
- Operation Region (USA or Euro) - Selects the appropriate operating region.
- Clock Display (12 or 24) - Selects a 12-hour or 24-hour clock display.
- Display Brightness (Low, Mid or High) - Determines brightness level of the display.
- Backlight Color (Amber or Green) - Determines the backlight color of the unit.
- Turn On Volume (0-40) - Selects desired volume level for the unit to assume when turned on.
- WB Alert (On or Off) - Determines if the weather band alert feature is activated.

https://truckmanualshub.com/

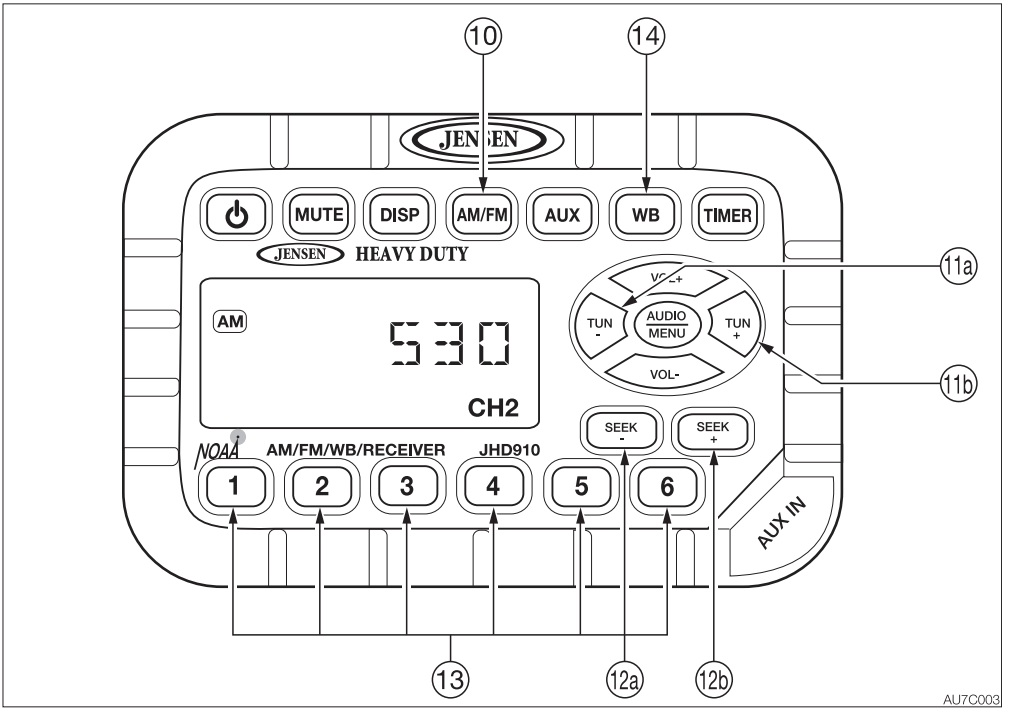

10. Select a Band
Press AM/FM (10) momentarily to directly access tuner mode from any other function mode. When the unit is already in tuner mode, briefly press AM/FM to change between two AM bands (AM1 and AM2) and three FM bands (FM1, FM2 and FM3).
Note: If the unit is programmed for European operation, the sequence will be MW1, MW2, FM1, FM2 and FM3.

11. Manual Tuning
Press TUN– (11a) or TUN+ (11b) momentarily to tune the frequency one step higher or lower. Press and hold TUN+ or TUN– for more than one second to tune continuously in the selected direction until the button is released.

12. Seek Tuning
Press SEEK– (12a) or SEEK+ (12b) momentarily to automatically tune the frequency down or up to the next strong station.

13. Preset Stations
Six numbered preset buttons (13) store and recall stations for each AM and FM band. To store a station, select a band (if needed), then select a station. Hold a preset button for three seconds. The current station will be stored, and the corresponding preset number will appear in the display. To recall a station, select a band (if needed). Press a preset button momentarily, and the unit will tune to the corresponding stored station.
Note: Preset buttons recall channels 1-6 on weather band and cannot be set by the user.

https://truckmanualshub.com/

WEATHER BAND OPERATION

14 Accessing the Weather Band

Press WB (14) to directly access the weather band mode from any other function mode.

What is the NOAA Weather Radio?
This is a nationwide system that broadcasts local weather emergency information 24 hours a day. The U.S. network has more than 530 stations covering the 50 states as well as the adjacent costal waters, Puerto Rico, the U.S. Virgin Islands and the U.S. Pacific Territories. Each local area has its own transmitting station and there are a total of seven broadcasting frequencies used: 162.400MHz (CH1), 162.425MHz (CH2), 162.450MHz (CH3), 162.475MHz (CH4), 162.500MHz (CH5), 162.525MHz (CH6) and 162.550MHz (CH7).

How many stations can I expect to receive?
Since the broadcasts are local weather and information, the transmission power is usually very low (much less than AM or FM stations) so you will usually receive only one station unless you are on the edge of two or more broadcast signals. The most you will receive will be two or three, and that is rare.

Is it possible I won't receive any stations?
Depending on location, it's possible you will receive a very weak signal or none at all. Also, similar to AM and FM signals, weather band signals are subject to surrounding conditions, weather, obstructions of the signal by hills or mountains, etc. If no NOAA signals are found/received, the "NO SIG" icon will flash in the display and the tuner will scan all seven NOAA frequencies every 30 seconds.

How will I know I am tuned to the weather band?
When you select the weather band, the "WB" icon will appear on the display panel, along with the current channel indication. Press TUN+ or TUN– to tune to each of the seven channels until you find the weather band station broadcasting in your area.

NOAA Weather Alert
The Weather Alert function adds an additional level of user safety by automatically switching from the current function mode to weather band mode for a minimum of 60 seconds if a NOAA warning tone (1050 Hz) is received/detected. If no additional warning tone is received for 60 seconds, the unit will switch back to the last known function mode.
The Weather Alert function can be turned "on" or "off" by the Audio/Menu key, as described on page three. When "ON" (default), the Weather Alert icon appears in the display and the weather tuner remains active, even when the radio is turned off (as long as the power is still applied to the radio). If a weather alert is issued, the radio will turn on and play the announcement. for 60 seconds, then turn back off and revert to weather alert monitor mode.
If the Weather Alert function is set to "OFF", no Weather Alert icon appears in the display. The radio will not respond to any weather alerts when it is off and will not automatically switch to the weather band if an alert is issued.
Note: If the unit is programmed for European operation, the WB function will be disabled.

https://truckmanualshub.com/

TROUBLESHOOTING

Problem	Cause	Corrective Action
No power.	Vehicle ignition switch is not on.	If the power supply is connected to the vehicle accessory circuits but the engine is not moving, switch the ignition key to “ACC”.
	The 3A fuse is blown.	Replace the 3A fuse.
No reception	Volume turned down too low.	Adjust volume until sound is heard.
	Wiring not connected properly.	Check wiring connections.
Radio does not work	Antenna cable not connected.	Insert antenna cable firmly.
Volume too high or too low when the radio is turned on	Preset volume is set incorrectly	Use the Menu adjustment (page three) to change preset volume to desired level
LCD display is dark and difficult to read	Radio too hot	Turn radio off and allow to cool down
No WB function	Programmed to “European”	Program to “USA” (setup menu)
Weather alert does not function	Weather alert programmed to “off”	Program to “on” (setup menu)

Note: Proper care and cleaning is essential to optimal operation. The JHD910 may be cleaned with mild detergent/water mixture and a soft cloth to remove grease and grime. Do not pressure wash directly on the radio.

https://truckmanualshub.com/

SPECIFICATIONS

General

Power Supply Requirements .....DC 12 Volts, Negative Ground
Chassis Dimensions .131.6 (W) x 47.5 (D) x 86 (H)
Loading Impedance..4 -8 ohms per channel
Tone Controls .....Bass (at 100 Hz), ±10 dB; Treble (at 10 kHz), ±10 dB
Current Drain .....1.5 Ampere (max)

FM Tuner

Tuning range.....87.5-108.0
FM mono sensitivity..1.5uV
Stereo separation @ 1 kHz .....>25dB

AM Tuner

Tuning range.....522-1710
Sensitivity .....<30uV

Weather Band

Sensitivity ..... <1uV

Amplifier

Total system power...15 Watts Maximum
Signal to Noise .....>70dB

Specifications subject to change without notice.

Note: The manufacturer is not responsible for any radio or TV interference caused by unauthorized modifications to this equipment. Such modifications could void the User's authority to operate the equipment.

This device complies with Part 15 of the FCC rules. Operation is subject to the following two conditions:

1. This device may not cause harmful interference, and
2. This device must accept any interference received, including interference that may cause undesired operation.

Note: Specifications and dimensions may be changed without notice.

https://truckmanualshub.com/

AUXILIARY HYDRAULIC LINES (OPTIONAL)

⚠ WARNING

Oil may spurt out if the caps or filters are removed or pipes disconnected before releasing the pressure in the hydraulic system.

- **When removing plugs or disconnecting hoses, release the internal pressure before removing.**
- **When disconnecting hoses, stand to the side and loosen them slowly to gradually release the internal pressure before removing.**

These lines deliver the hydraulic oil necessary for operating a hydraulic breaker, crusher or other attachments.

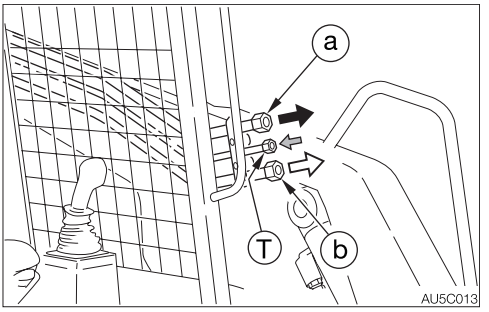

Flow rate .... TL10: 77 L/min* (20.3 US gpm*)
TL12: 88 L/min* (23.2 US gpm*)
Rated Pressure... 21 MPa (3040 psi)
*: The flow rate can be changed.
Refer to “3. Auxiliary 1st-1 setting information” on page 2-18.

Connecting the hydraulic circuits

To connect the attachment hydraulic lines, observe the following procedures:

1. Release the pressure remaining in the lines.
   Refer to “Releasing residual pressure” on page 2-49.
2. Remove the plugs.
3. Connect the attachment hydraulic lines to the ports (a), (b) and (T).
   When a hydraulic breaker is installed:
   a. Connect the supply circuit to the port (a) and the return circuit to the port (b).
   b. Press the selector switch until the built-in lamp lights up to select the one-way flow.
      · The port (T) is used for the drain circuit (when necessary).
4. When connecting is complete, purge air from the hydraulic lines.
   a. Start the engine and run it at a low idle speed with no load for 10 minutes.
   b. With the engine running in low idle, operate the auxiliary hydraulic buttons repeatedly (approx. 10 times) to purge air from the hydraulic lines.
   c. Stop the engine and wait for at least 5 minutes until bubbles escape from the hydraulic oil in the tank.

IMPORTANT: Follow the procedures for purging air as instructed by the attachment manufacturer, if applicable.

5. Check for oil leaks.

Disconnecting the hydraulic circuits

1. Release the pressure remaining in the lines.
   Refer to “Releasing residual pressure” on page 2-49.
2. Disconnect the lines from the ports (a) and (b).
3. Install the plugs.

https://truckmanualshub.com/

Releasing residual pressure
After the auxiliary hydraulic circuits have been used, pressure remains in the circuits. This is called the residual pressure. Release this residual pressure before disconnecting the lines.

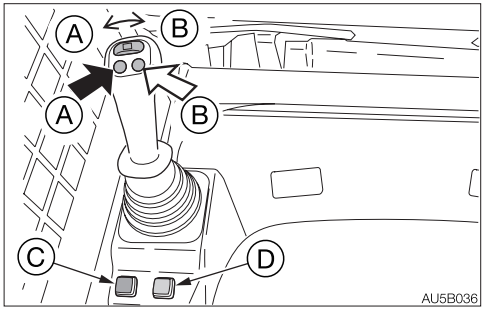

1. Start the engine and lower the safety bar to the released position.
2. Press the auxiliary hydraulic switch (B). (The residual pressure is released from the (a) port line, and pressure is generated in the (b) port line.)
3. Press the selector switch (C) until the built-in lamp lights up to select the one-way flow
   (The residual pressure is released from the (b) port line.)
4. Turn the key to the OFF position.

Operating the auxiliary hydraulic circuits
The auxiliary hydraulic circuits are used for running various attachments (working equipment) such as the breaker and angle bucket. The control of these circuits is performed by operating the auxiliary hydraulic buttons or the slider switch.

1. Select the direction of the hydraulic oil flow by operating the flow selector switch (C). (One-way flow or two- way flow)
   Refer to “Flow selector switch” on page 2-27.

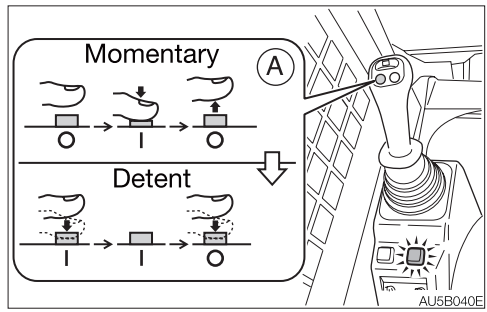

2. Select the operation mode for the auxiliary hydraulic button (A) by operating the detent mode switch (D).
   Refer to “Detent mode switch” on page 2-27.

IMPORTANT: Do not operate the machine in the detent mode for a long time. Doing so will increase the hydraulic oil temperature and shorten the service life of the hydraulic units.

3. Operate the auxiliary hydraulic buttons and slider switch as follows.

Auxiliary hydraulic buttons
➡To discharge from the hydraulic oil port (a) .....Press (A)
⇨To discharge from the hydraulic oil port (b) ..... Press (B)

Auxiliary hydraulic slider switch
➡To discharge from the hydraulic oil port (a) .....Move to (A)
⇨To discharge from the hydraulic oil port (b) .....Move to (B)

If the flow direction has been set to “One-way”, the auxiliary hydraulic button (B) and the (B) side of the slider switch cannot be used; the port (b) is reserved for the return oil circuit in the one-way mode.

https://truckmanualshub.com/

AUX. 2ND LINES (TL10/12 OPTIONAL)

⚠ WARNING

- **Oil may spurt out if the caps or filters are removed or pipes disconnected before releasing the pressure in the hydraulic system.**
  - **When removing plugs or screws, or when disconnecting hoses, stand to the side and loosen them slowly to gradually release the internal pressure before removing.**
- **Do not release pressure:**
  - **When the attachment is not in the rest position.**
  - **During operation of the attachment. (Due to danger of unexpected movement of the attachment)**
- **Do not couple or uncouple when there is a flow or pump pressure in the circuit. Disconnection or connection is allowed only when there is no residual pressure.**
- **Hydraulic fluid, tubes, fittings and quick-couplers can get hot when running machine and attachments. Be careful when connecting and disconnecting quick-couplers.**

IMPORTANT: When the couplings are disconnected, it is suggested to use the protection caps.
IMPORTANT: Before uncoupling, be sure to release the residual pressure.

These lines deliver the hydraulic oil necessary for operating the attachments.

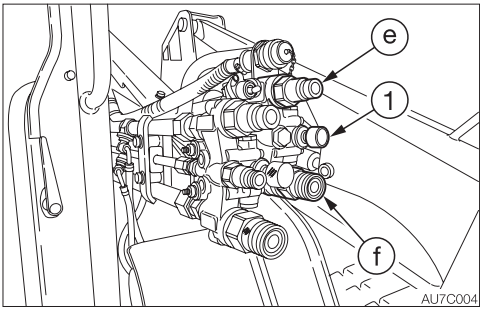

Flow rate .....TL10: 65 L/min (17.2 US gpm)
TL12: 65 L/min (17.2 US gpm)
Rated Pressure... 21 MPa (3040 psi)

Connecting the hydraulic circuits
To connect the attachment hydraulic lines, observe the following procedures:

Releasing residual pressure
After the auxiliary hydraulic circuits have been used, pressure remains in the circuits. This is called the residual pressure. Release this residual pressure before disconnecting the lines.

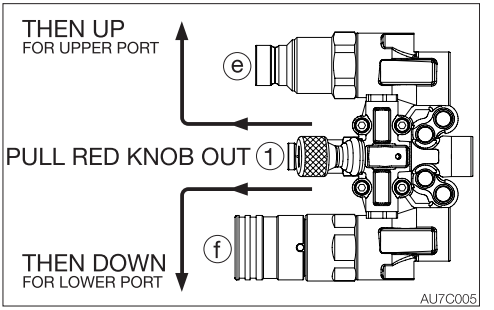

Coupling and uncoupling
1. Before coupling, clean the flat mating surfaces of quick coupling to avoid the inclusion of dirt into the circuit.
2. Release the residual pressure from the upper coupling (e) by pulling the knob (1) outward first and then upward. Release the residual pressure from the lower coupling (f) by pulling the knob (1) outward first and then downward.
3. To couple, push the male half towards the female half or vice versa.
4. To uncouple, pull back in sleeve of the female.
5. When connecting is complete, purge air from the hydraulic lines.
   a. Start the engine and run it at a low idle speed with no load for 10 minutes.
   b. With the engine running in low idle, operate the auxiliary hydraulic buttons repeatedly (approx. 10 times) to purge air from the hydraulic lines.

https://truckmanualshub.com/

c. Stop the engine and wait for at least 5 minutes until bubbles escape from the hydraulic oil in the tank.

IMPORTANT: Follow the procedures for purging air as instructed by the attachment manufacturer, if applicable.

6. Check for oil leaks.

Operating the auxiliary hydraulic circuits

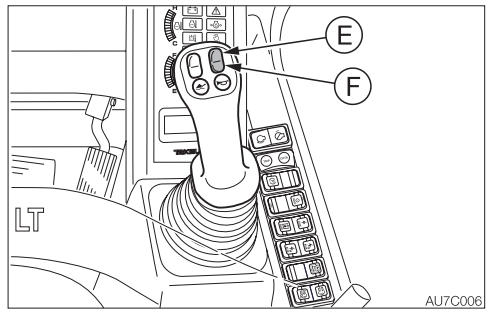

1. Operate the auxiliary hydraulic buttons as follows.

Auxiliary hydraulic buttons

➡To discharge from the hydraulic oil port (e) .....Press (E)

⇨To discharge from the hydraulic oil port (f) .....Press (F)

https://truckmanualshub.com/

HIGH-FLOW HYDRAULIC SYSTEM (IF EQUIPPED)

⚠ CAUTION

Note that the high-output type brush cutter attachment can be used only if it is equipped with the easy brush-cleaning function and the proper cooling system, for a short period of time at a moderate ambient temperature.
Pay careful attention not to damage the undercarriage when using such attachment. These precautions also apply to any other high-performance and/or highly functional attachment.

IMPORTANT: Running the high flow hydraulics for extended periods of time could cause damage to the hydraulics or other systems of the machine due to overheating.
To prevent overheating and reduce the risk of fire, the machine should be cleaned daily.
The standard cooling package is not permitted for use in high airborne debris applications such as mulching mower or land clearing.
IMPORTANT: Do not operate the machine in the detent mode for a long time. Doing so will increase the hydraulic oil temperature and shorten the service life of the hydraulic units.

This high-flow system is designed to provide the specific attachments that require a large volume of oil, such as snow removing equipment and lawn mower, with sufficient oil in one-way.

Flow rate . TL8: 128 L/min* (33.8 US gpm*)
TL10: 142 L/min* (37.5 US gpm*)
TL12: 153 L/min* (40.4 US gpm*)

*: The flow rate can be changed.
Refer to “3. Auxiliary 1st-1 setting information” on page 2-18.

Operating the high-flow system

<TL8>

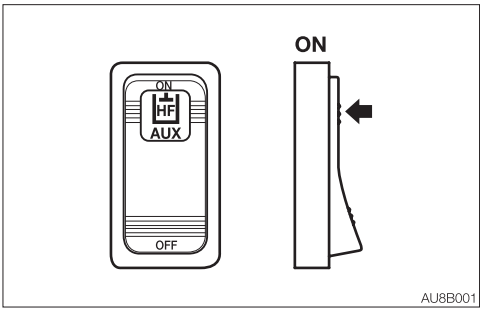

<TL10/TL12>

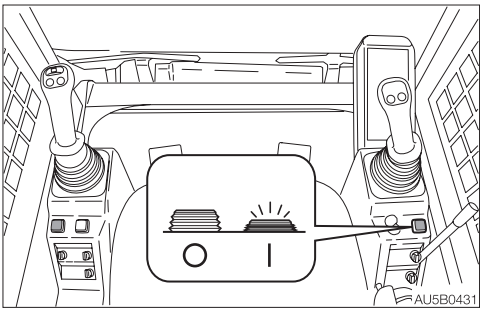

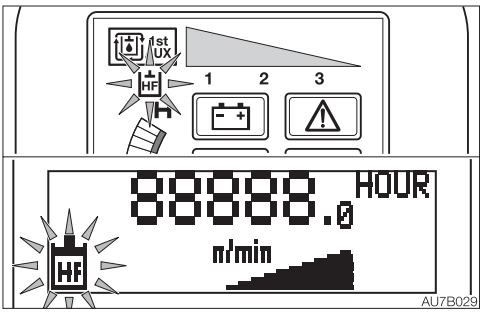

1. Turn on the high-flow switch (lamp lights up).
   The symbols on the instrument cluster and the display light up. (If an attachment has been connected to the auxiliary piping.)

https://truckmanualshub.com/

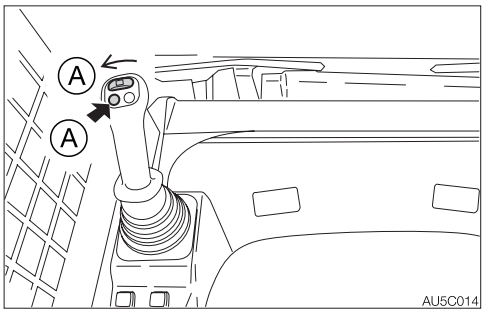

2. Press the auxiliary hydraulic button (A) or slide the slider switch to the left side (A).

LIFT ARM LOWER BUTTON (TL8)

⚠ WARNING

- **Do not leave the operator's seat while the engine is on or while the lift arm is being raised.**
- **Do not lower the lift arm until you are certain that no one is around the machine.**

IMPORTANT: The lift arm can be lowered even when the engine is stopped or the safety lever is in the lock position.

If the lift arm cannot be lowered during a usual operation, press this button to lower it.

Lowering the lift arm

1 Remove the rubber (1) from the top of the button.

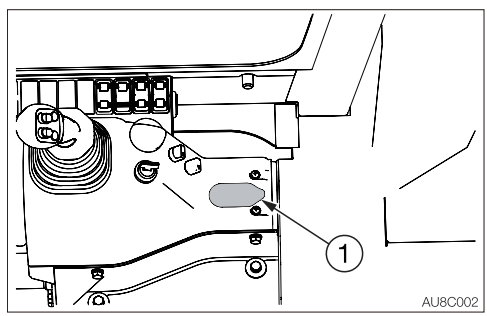

2. Press the lift arm lower button (2) to lower the lift arm.

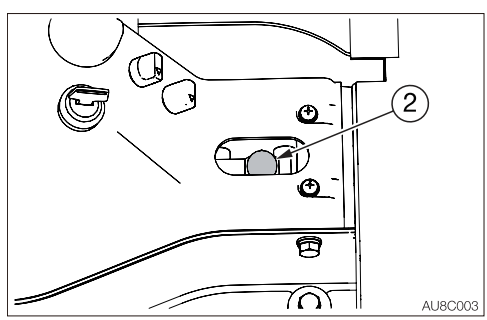

https://truckmanualshub.com/

https://truckmanualshub.com/

OPERATION

https://truckmanualshub.com/

BEFORE STARTING OPERATION

GETTING ON OR OFF THE MACHINE

⚠ WARNING

- **Do not jump on or down from the machine. Never attempt to get on or off the moving machine.**
- **When getting on or off the cab, first fully open the door to the locked position and check that it does not move. (If equipped with a cab door)**

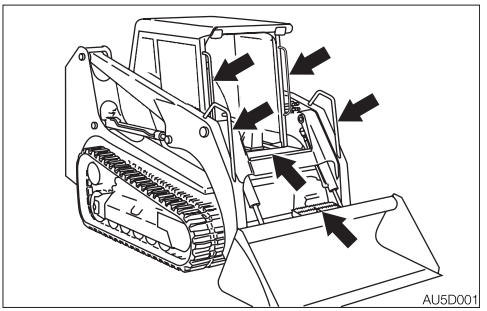

- **Climb up/down the steps facing the machine and holding the handrail to support your weight in a three point secure stance (hand and feet).**
- **Never use the safety bar or control levers as hand holds.**

WALK-AROUND INSPECTION

Perform the walk-around inspections once a day before starting the engine for the first time that day.
Refer to “MAINTENANCE, Walk-around inspection”, on pages 5-14 and 5-15.

DAILY INSPECTION

Perform the daily inspections once a day before starting the engine for the first time.
Refer to “MAINTENANCE, Daily inspection”, on pages 5-16 to 5-20.

https://truckmanualshub.com/

STARTING AND STOPPING THE ENGINE

BEFORE STARTING THE ENGINE

1. Adjust the seat for a comfortable operating position.
2. Fasten the seat belt.

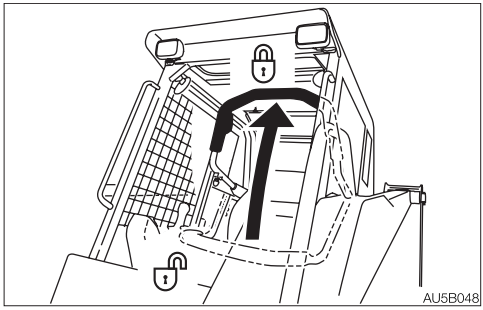

3. Check that the safety bar is in the lock position.

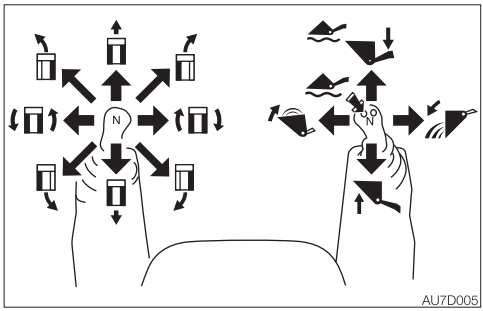

4. Check that all levers and the pedal are in the neutral position.

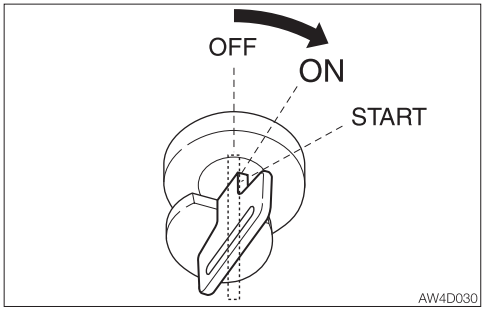

5. Insert the key into the ignition switch, turn it to the ON position, and then perform the following inspections:

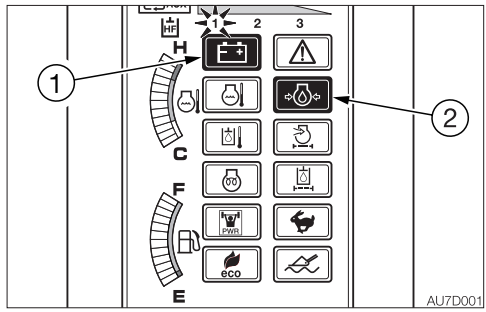

- All warning lamps flash and an alarm is sounded for two seconds. The meters also start functioning. After two seconds, only the battery charge warning lamp (1) and engine oil pressure warning lamp (2) remain flashing, and the other lamps go out. The Aux. 1st flow rate indicator lamp is lit all the time.
- Turn the light switch to check that the front lights, tail lights and meter light turn on.
- Check the fuel level.

If a lamp does not light or the alarm is not sounded, the bulb may be burnt out or a wire may be damaged. Ask a Takeuchi service agent for repair.

STARTING THE ENGINE

⚠ WARNING

- **Clear all personnel from the work area.**
- **Sound the horn to warn people around the machine.**

IMPORTANT: Do not run the starter motor for more than 10 consecutive seconds. If the engine fails to start, wait for 30 seconds, and then try again to start the engine.

Normal starting

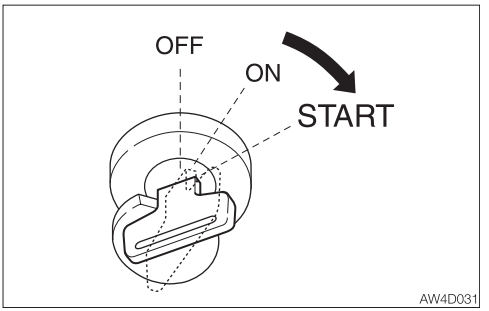

1. Turn the ignition key to the START position and start the engine.
2. Once the engine starts, release the key. The key automatically returns to the ON position.
3. Check that the warning lamps are off.
4. Warm up the engine. Refer to “Warming up the engine” on page 3-4.

Starting in cold climates

⚠ WARNING

Never use starting fluid on this engine, as the starting fluid could cause an explosion.

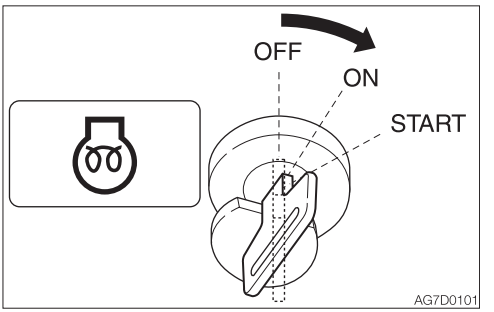

1. Turn the ignition key to the ON position, and confirm that the glow lamp is lit. (The glow lamp stays lit while the coolant temperature is kept at 0°C (32°F) or lower.)
2. After the glow lamp goes out, turn the key to the START position to start the engine.
3. Once the engine starts, release the key. The key automatically returns to the ON position.
4. Check that the warning lamps are off.
5. Warm up the engine. Refer to “Warming up the engine”.

WARMING UP THE ENGINE

IMPORTANT: Avoid racing the engine until it has warmed up.
Do not warm up the engine for a long time (20 minutes or more). When idling is required, occasionally place a load or run the engine at medium speed.

<TL8>

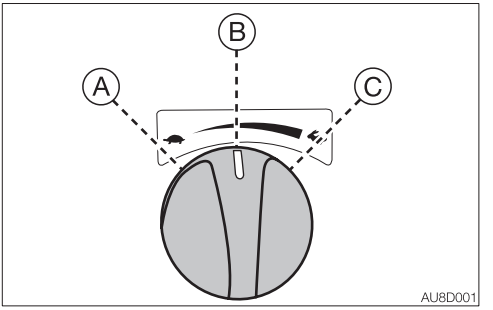

<TL10/TL12>

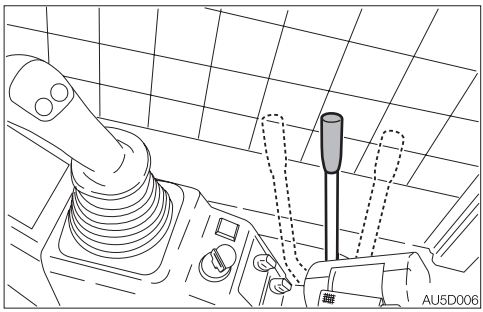

1. Run the engine at medium speed with no load for 5 minutes.

STOPPING THE ENGINE

IMPORTANT: Do not stop the engine suddenly when operating with heavy loads or at the maximum speed. Doing so may cause the engine to overheat or seize. Never stop running the engine suddenly except in emergency.

<TL8>

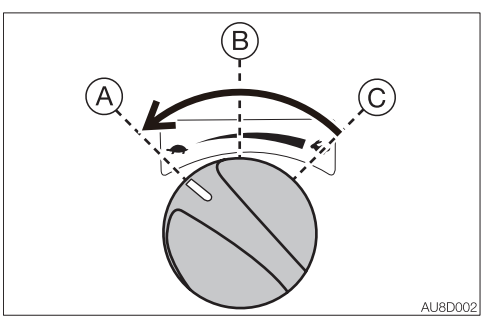

<TL10/TL12>

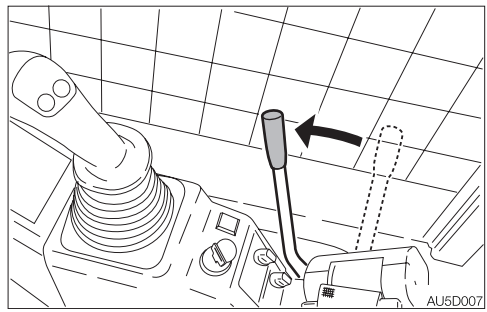

1. Return the throttle lever.
2. Idle the engine for about 5 minutes to gradually let it cool.

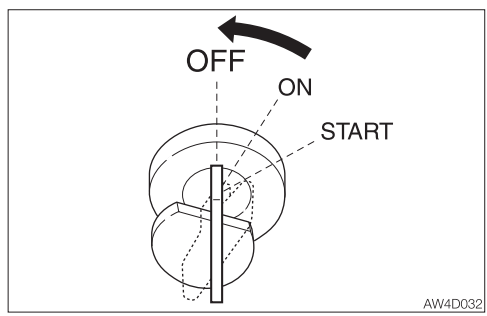

3. Turn the ignition key to the OFF position to stop the engine.

https://truckmanualshub.com/

OPERATING THE MACHINE

LEVER PATTERN (ISO)

⚠ WARNING

Before starting operation, be sure to check which lever pattern you are going to use.

This manual explains the operation by using the ISO pattern described below.

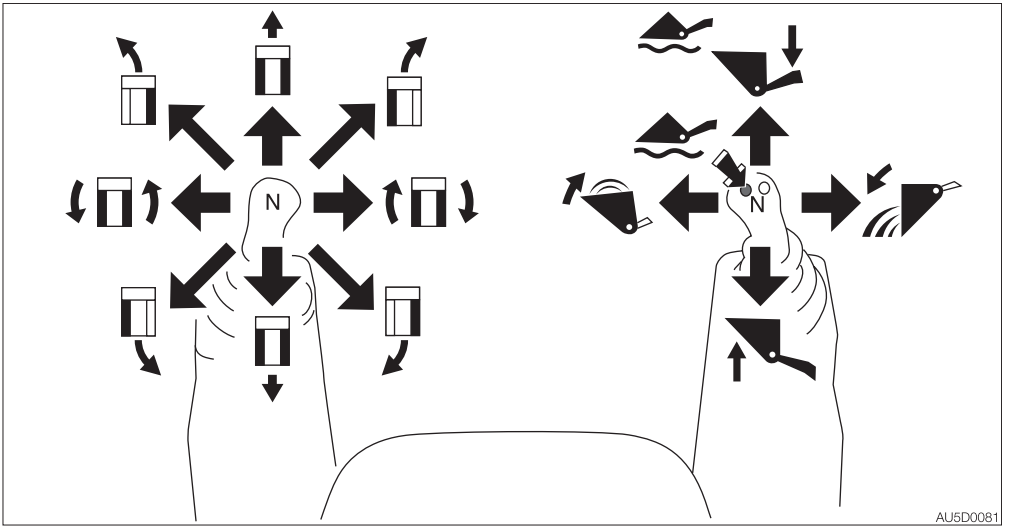

	Travel Forward		Lift Arms Lower
	Travel Reverse		Lift Arms Raise
	Left Spin Turn		Bucket Rollback
	Right Spin Turn		Bucket Dump
	Left Pivot Turn		Lift Arms Float (Tilt the right lever forward and press the float button)
	Right Pivot Turn	N	Neutral
	Right Pivot Turn Reverse		
	Left Pivot Turn Reverse		

https://truckmanualshub.com/

LEVER PATTERN (H)

⚠ WARNING

Before starting operation, be sure to check which lever pattern you are going to use.

This manual explains the operation by using the ISO pattern.

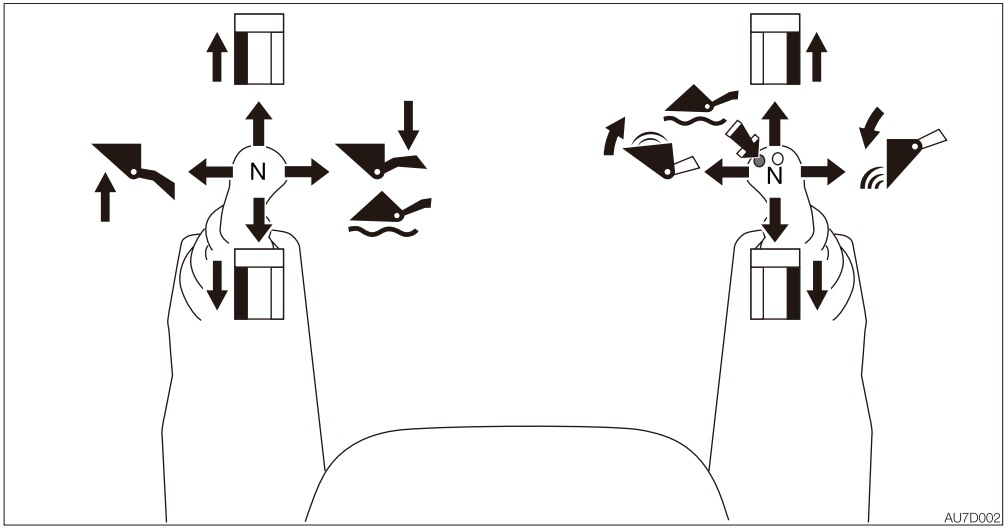

	Travel Forward (Left track)		Travel Forward (Right track)
	Travel Reverse (Left track)		Travel Reverse (Right track)
	Lift Arms Raise		Bucket Rollback
	Lift Arms Lower		Bucket Dump
	Lift Arms Float (Tilt the left control lever to the right)		Lift Arms Float (Push the left lever to the right and press the float button)
N	Neutral	N	Neutral

WARMING UP THE MACHINE (HYDRAULIC OIL)

⚠ WARNING

Operating the working equipment without warming up the machine (hydraulic oil) is dangerous, as the working equipment cannot response to controls quickly or may move in unexpected ways, and the safety devices may not operate properly. Be sure to sufficiently warm up the machine.

IMPORTANT: Do not operate the levers too quickly when the hydraulic oil temperature is below 20°C (68°F). The proper hydraulic oil temperature during operation is 50 to 80°C (122 to 176°F). If operations must be performed at lower temperatures, heat up the hydraulic oil to at least 20°C (68°F).

Normal warm-up
<TL8>

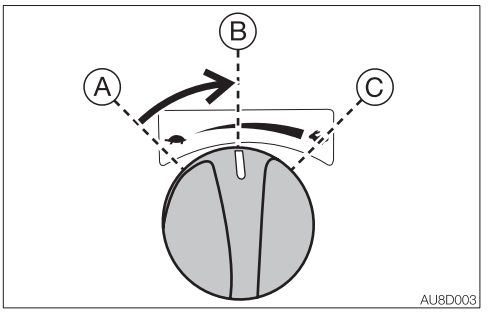

<TL10/TL12>

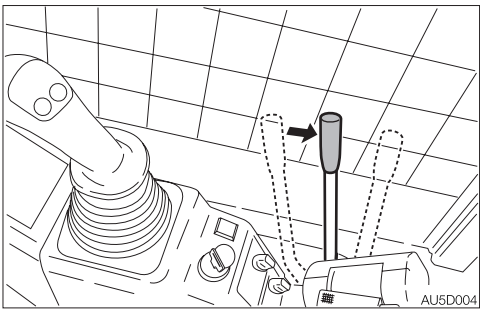

1. Pull the throttle lever to the middle position, then run the engine at medium speed for about 5 minutes with no load.

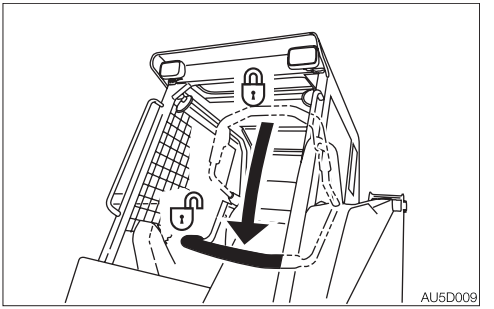

2. Fully lower the safety bar to disengage the lock and lift the bucket from the ground.

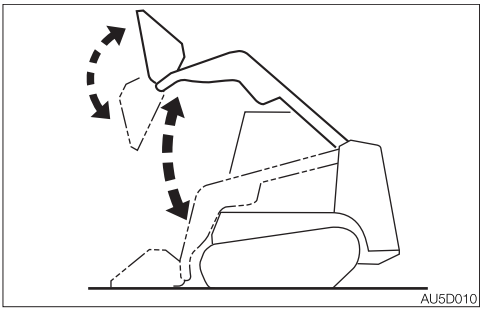

3. Extend and retract each of the cylinders slowly several times with no load.

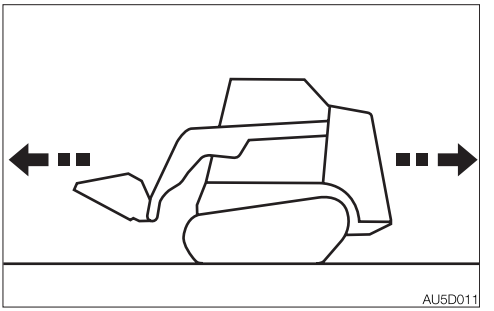

4. Travel slowly forward and in reverse several times.

https://truckmanualshub.com/

Warm-up in cold climates

1. Perform the normal warm-up procedure.

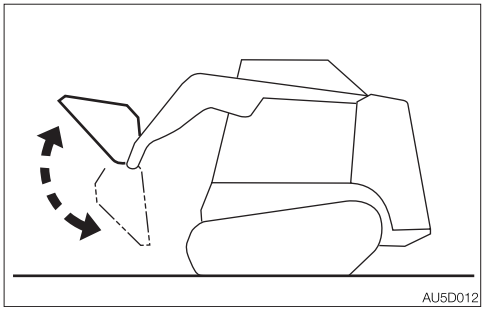

2. Set the bucket cylinder at the stroke end and keep it there.
   Do not keep this condition for more than 30 seconds.
3. Repeat Step 2 until the bucket operating speed becomes normal.

INSPECTION AFTER WARM-UP

After warming up the engine and machine (hydraulic oil), perform the checks and inspections described below, and repair if necessary.

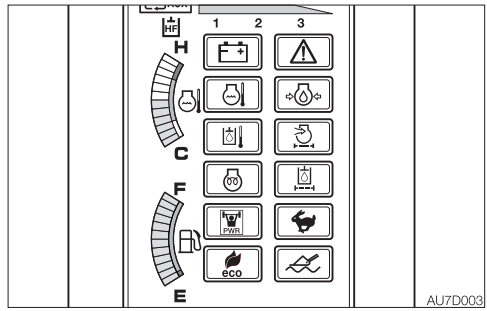

1. Check that the warning lamps and meters are as follows:
   · Are all warning lamps off?
   · Is the indicator on water temperature gauge seen within the green range?
2. Check that there are no irregularities in the exhaust color, sound and vibrations.

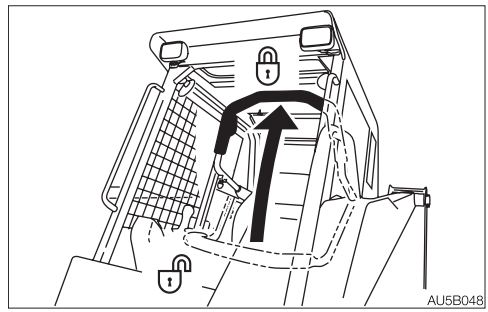

3. Raise the safety bar to the locked position, and then check that the control levers are locked.

https://truckmanualshub.com/

TRAVELING THE MACHINE

⚠ WARNING

- Never allow anyone to enter the machine's slewing radius and path.
- Signal your intention to move by sounding the horn.
- Traveling and turning should be performed with the bucket cylinder fully retracted and the bucket at a height of approximately 30 cm (12 in.) from the ground.
- Avoid sudden stops, starts and turns. Otherwise, the working equipment may come in contact with the ground, causing the machine to lose its balance and get damaged or to damage the structures in the surrounding area.
- Do not raise the safety bar while traveling. This is dangerous, because raising the safety bar will cause the parking brakes of the travel motors to operate and apply the brakes abruptly.
- Do not switch off the ignition switch while traveling. Doing so will cause sudden braking and is dangerous.
- Before backing up, visually check for safety to the rear. Backing up without checking could result in contact with a worker or obstacle.
- If the working equipment must be operated while traveling, do so with extra care.
- When traveling on rough terrain or when carrying a load, lower the load and travel slowly.
- Avoid crossing over obstacles whenever possible. If you must do so, keep the bucket close to the ground level and travel slowly. Never cross obstacles which will tilt the machine to an angle of 10° or greater.
- Clear all obstacles from the path of the machine.

<TL8>

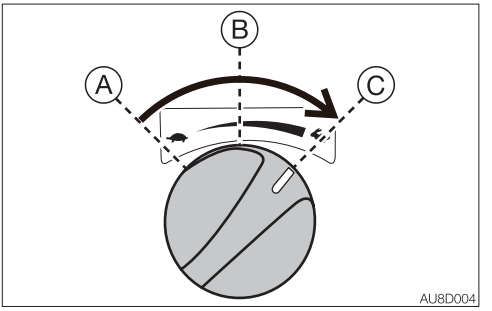

<TL10/TL12>

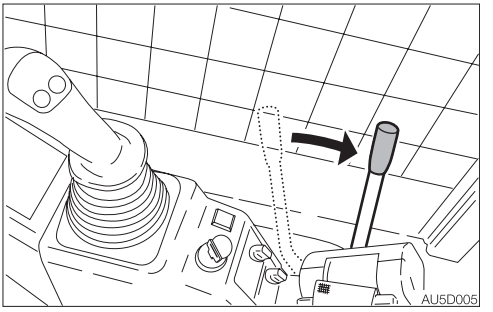

1. Pull the throttle lever and increase the engine speed.

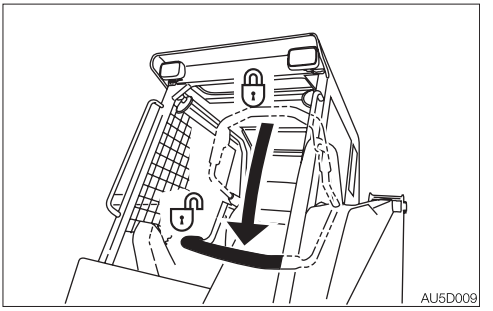

2. Fully lower the safety bar to the unlock position.

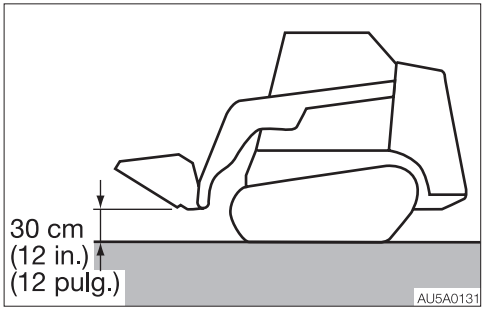

3. Roll back the bucket all the way, and then lift it to 30 cm (12 in.) above the ground.

Moving the machine forward and backward

1. Operate the left control lever as below.

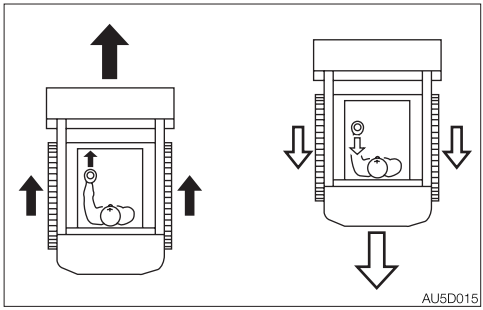

➡ To move forward:
Push the left control lever forward.

⇨ To move backward:
Pull the left control lever backward.

Traveling in 2nd (High) speed

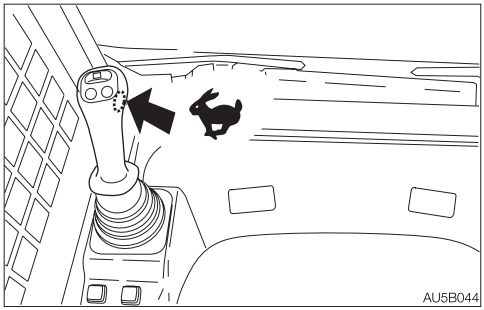

Press the travel speed button on the left control lever to switch to 2nd (high) speed, and press it again to return to 1st (low) speed.

Pivot turn

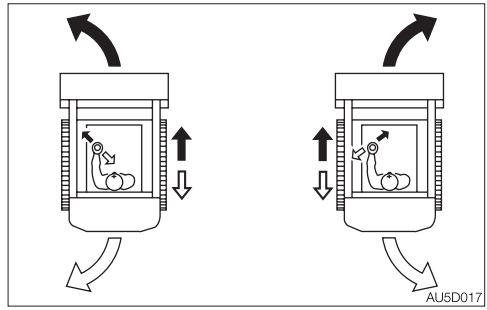

Turning to the left:

➡ To turn forward to the left:
Tilt the left control lever forward to the left.

⇨ To turn backward to the left:
Tilt the left control lever backward to the right.

To turn to the right, operate the left control lever in the opposite way.

Spin turn

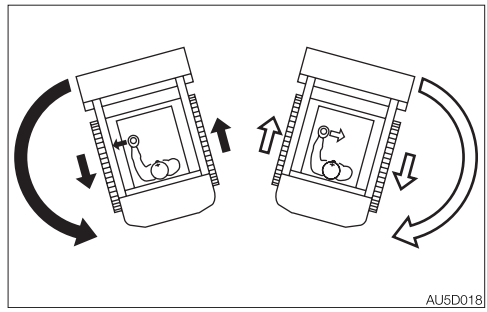

➡ To spin left:
Tilt the left control lever to the left.

⇨ To spin right:
Tilt the left control lever to the right.

https://truckmanualshub.com/

STOPPING TRAVEL

⚠ WARNING

- **Park the machine on a flat, rigid and safe ground. Set the parking brake. If you must park on a slope, chock the tracks to block the machine.**
- **Before standing up from the operator's seat, raise the safety bar to engage the lock.**
  If any controls are accidentally touched when the safety bar is not locked, the machine will suddenly move and cause serious injury or death.

⚠ CAUTION

Never stop running the machine suddenly except in emergency. Stop in good time, if possible.

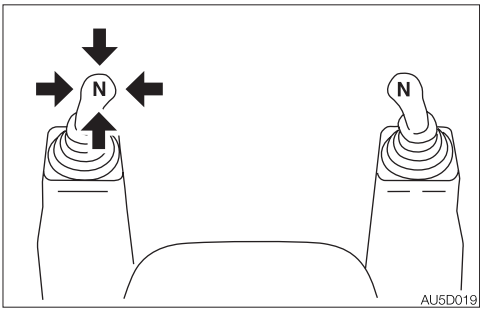

1. Set the left control lever slowly to the neutral position. The machine stops. Braking is automatically applied by the hydrostatic drive system when the left control lever is returned to the neutral position. Full braking is achieved when the safety bar is raised.

OPERATING THE WORKING EQUIPMENT

⚠ WARNING

- **Before starting operation, carefully check which lever pattern you are going to use.**
- **Make sure the bucket is lowered to the ground before putting the lift arms in the float mode. Putting the lift arms in the float mode while they are raised will cause the bucket to fall and is extremely dangerous.**
- **Do not travel forward with the lift arms in the float mode.**
- **When performing the combined operation (bucket operation and the lift arms lowering operation), be careful not to keep performing after the bucket has reached the stroke end. Doing so could cause an unexpected movement of the lift arms such as stopping without lowering. Be careful of this movement of arms.**

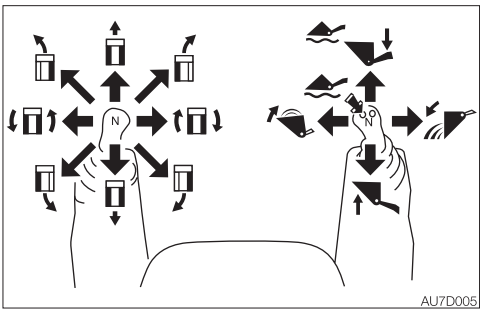

Use the right control lever to operate the lift arms and bucket.
Return the right control lever to the neutral position to stop the lift arms and bucket.

1. Lower the safety bar to the unlock position.

Operating the Lift arms

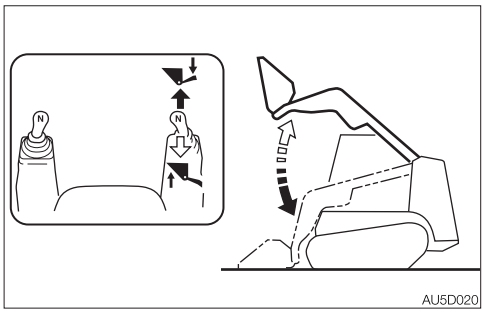

➡ To lower the lift arms:
Push the right control lever forward.

⇨ To raise the lift arms:
Pull the right control lever backward.

Operating the bucket

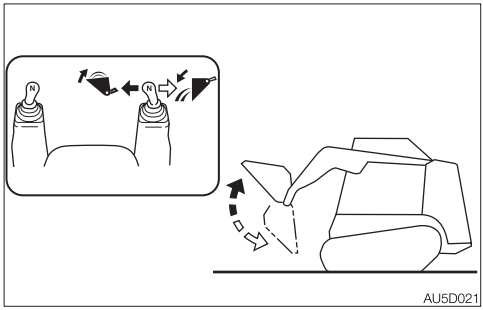

➡ To roll back:
Tilt the right control lever to the left.

⇨ To dump:
Tilt the right control lever to the right.

Operating the lift arms float

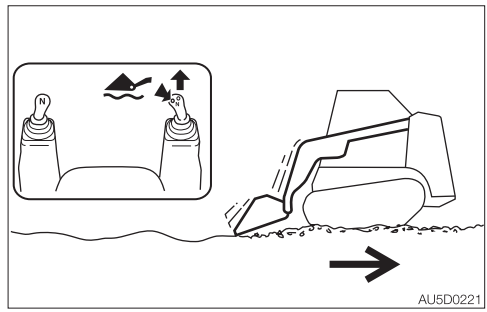

➡ To float the lift arms:
Tilt the right control lever forward a little and depress the float button.
Refer to “Float button” on page 2-25.

https://truckmanualshub.com/

OPERATING PROCEDURES

PROHIBITED OPERATIONS

⚠ WARNING

- **Do not operate on bedrock (hard or soft).**
- **If you must operate the lift arms and/or bucket while traveling, operate at speeds slow enough so that you have complete control at all times.**

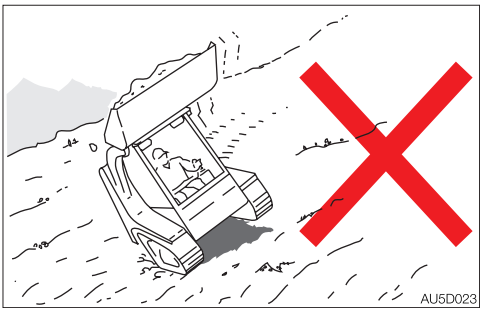

Do not perform any operation on a slope. The machine may lose its balance and tip over if the working equipment is operated on a slope.

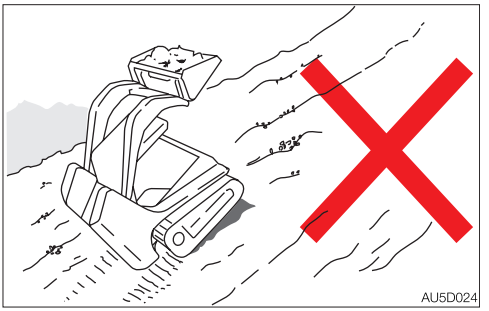

Do not travel or turn with the bucket raised. Keep the bucket as low as possible during traveling.

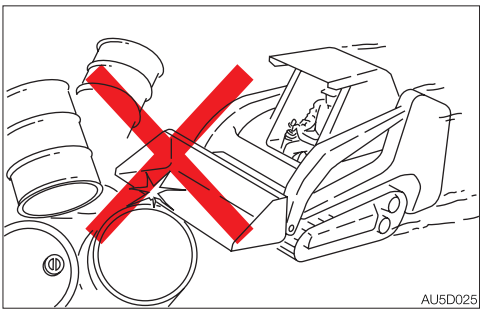

Travel at a speed appropriate for the operating conditions. Travel at low speeds with care in the places where the field of view is obstructed or there are hazardous objects nearby.

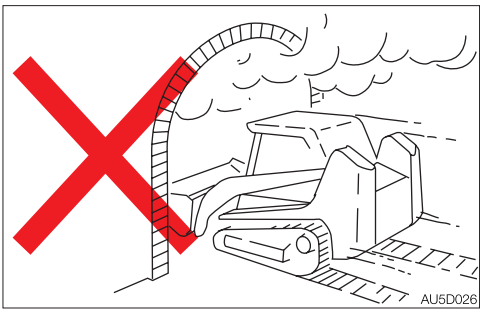

Do not use this machine in areas where there is danger of explosion from volatile gases. Also avoid using the machine where the exhaust gases could come in contact with flammable items.

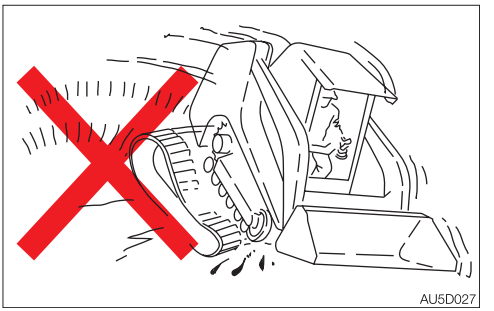

Do not attempt a spin turn or pivot turn at high speeds. Doing so may cause the machine to tip over or the tracks to come off and/or extremely wear.

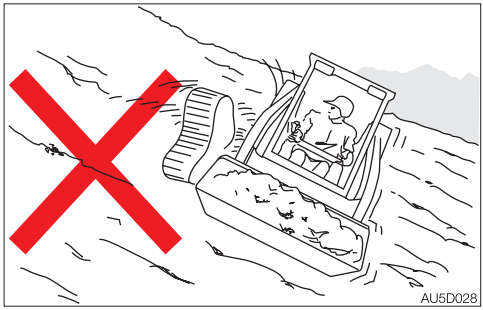

Do not cut across or go diagonally across a slope. Doing so may cause the machine to tip over or the tracks to come off and/or extremely wear.

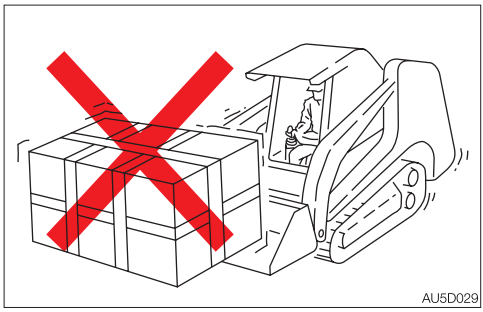

Do not use this machine beyond the specifications or overfill the bucket.

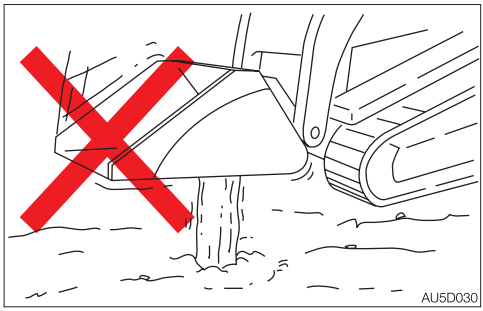

Do not use the downward force of the bucket to drive piles.

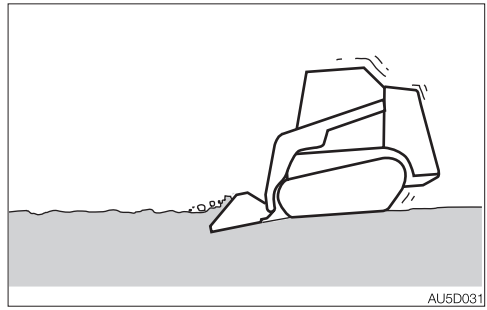

Do not dig down too deeply at a time. Doing so could damage the bucket and the lift arms.

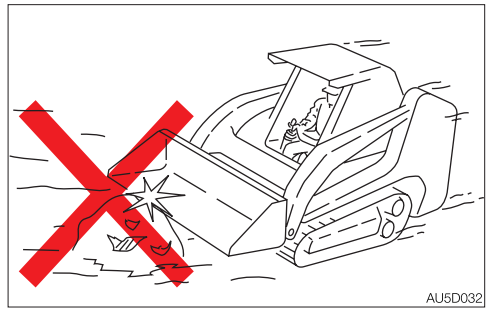

Do not allow the bucket to bump against rocks or the like. Doing so could damage the bucket and/or the cylinder.

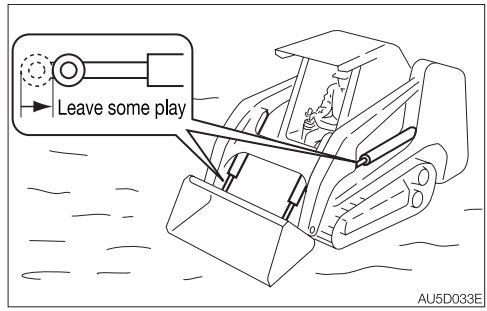

Hydraulic cylinders could be damaged due to excessive force applied, if fully extended or retracted. Allow for a safety margin when operating the cylinders.

https://truckmanualshub.com/

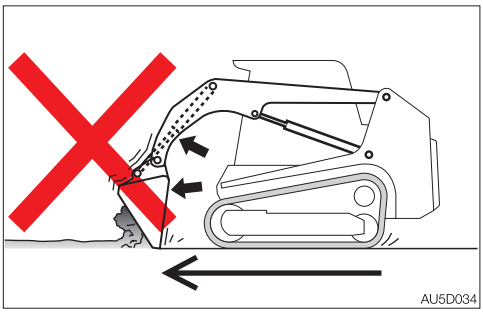

Do not fully extend the bucket cylinders, push the bucket into the ground and move the machine to use the traveling force for digging. Doing so could damage the bucket cylinders.

https://truckmanualshub.com/

CAUTIONS ON OPERATING

Cautions on traveling

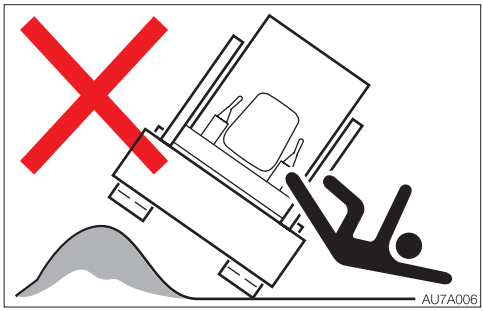

Traveling over obstacles (rocks, stumps, etc.) may put a great load on the machine body and may cause damage to it. Avoid crossing over obstacles whenever possible. If you must do so, keep the bucket near the ground, travel at a low speed, and go over the obstacle at the center of the track.

Cautions on traveling in 2nd (High) speed

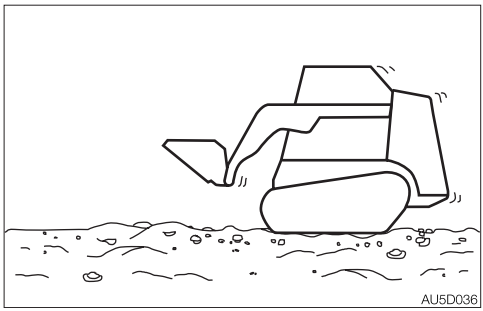

On uneven ground, maintain the low speed and avoid starting, stopping or changing directions abruptly.

Cautions on using machine in water

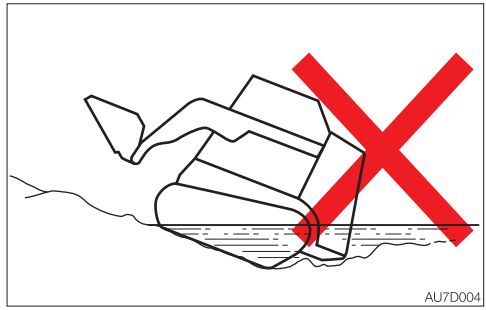

- If the rear of the machine is submerged in water as shown in the figure above, it causes the radiator fan to turn in water, resulting in damage to the fan. The rear of the machine must not be submerged.

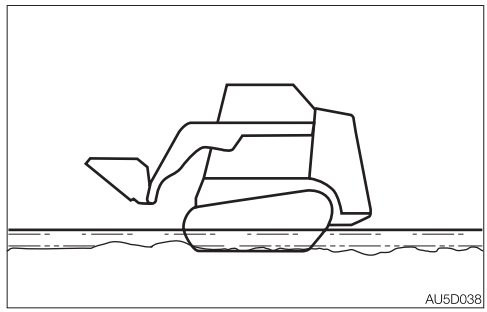

- Allowable water depth
  Use the machine in water only when the water is up to the bottom of the chassis (ground clearance of undercarriage).
- For those parts used in water for a long time, apply enough grease until the old grease is expelled.
- Never submerge the chassis in water or sand. If submerged, contact a Takeuchi service agent for inspection.

https://truckmanualshub.com/

CAUTIONS ON TRAVELING ON SLOPES

⚠ WARNING

- Do not perform any operation on a slope. The machine may lose its balance and tip over if the working equipment is operated on a slope.
- When traveling on a slopes of 15 degrees or more, position the heavier end of the machine (front or back, whichever is heavier) pointing up the slope. Also, be careful not to tip over or slide.
- Never travel on slopes that are too steep for the machine to maintain its stability (maximum gradeability: 30°, lateral tipping angle: 15°). Note that in reality, the machine's stability becomes lower than the above values depending on the working condition.
- When traveling on slopes, lower the bucket to a height of 20 to 30 cm (8 to 12 in.) above the ground. In emergencies, lower the bucket to the ground and stop the machine.
- When traveling on slopes or grades, drive slowly in 1st (low) speed. Especially on down slopes, slow down the engine speed and limit the stroke length of the left control lever to less than half. Going down a slope at high speed may lead to loss of control.
- Stopping abruptly on a slope may result in the machine losing its balance and tipping over.

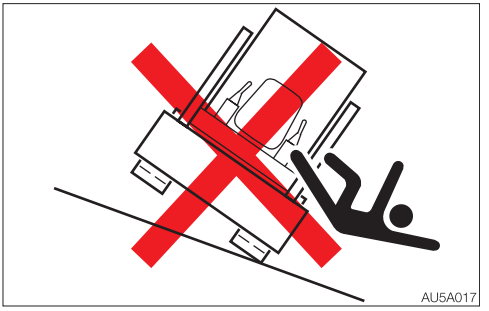

- Do not change directions on slopes or traverse slopes. First return to a flat surface, and then take an alternative path.
- The machine may slip sideways even on a slight slope if the ground is covered with grass or dead leaves, or when traveling on a wet metal plate or frozen surfaces. Make sure the machine is never positioned sideways on slopes.
- If the machine is stalled on the slope, return each control lever to the neutral position before restarting the engine.

Traveling posture on slopes

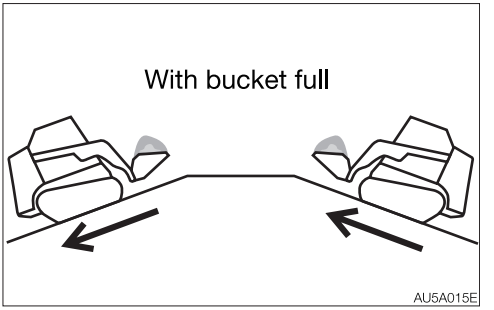

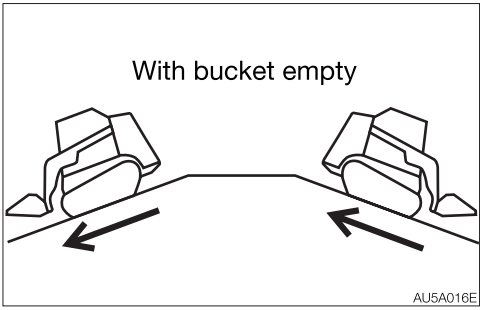

https://truckmanualshub.com/

Braking when descending slopes

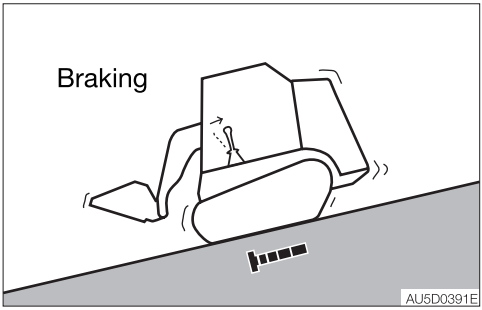

When descending slopes, the brakes are applied automatically once the control levers are returned to the neutral position.

If the engine stops

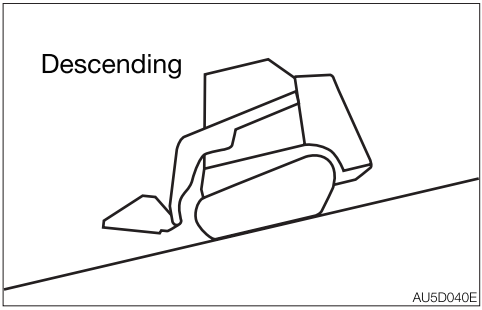

If the engine stops when descending a slope, set the left control lever to the neutral position, stop the machine, then start the engine.

Do not open the door while traveling on slopes (if equipped with cab door)

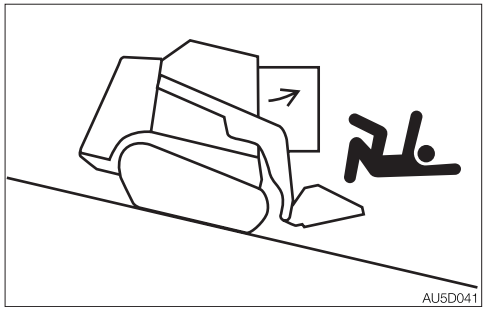

Opening the door while traveling on slopes is dangerous, as the force required to open and close the door changes abruptly. Always keep the door closed when traveling on slopes.

https://truckmanualshub.com/

OPERATIONS POSSIBLE WITH THIS MACHINE

IMPORTANT: Do not fully extend the bucket cylinders, push the bucket into the ground and move the machine to use the traveling force for digging. Doing so could damage the bucket cylinders.

Scooping

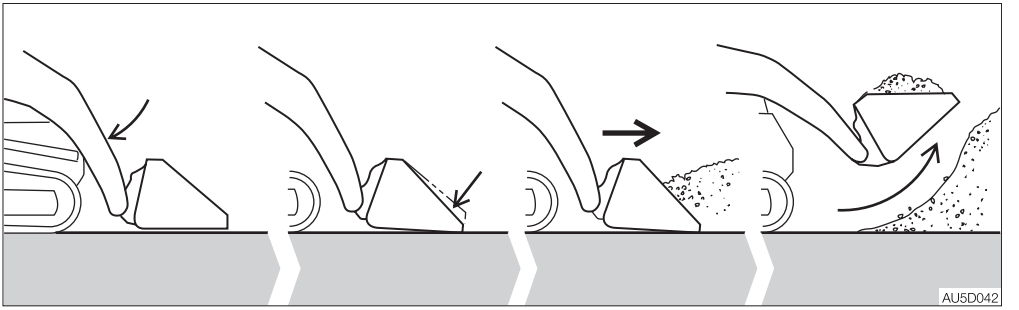

Lower the bucket to the ground and set it parallel to the ground or tilt it slightly downward. Move the machine forward, push the bucket well into the material and scoop it by rolling back the bucket.

Digging

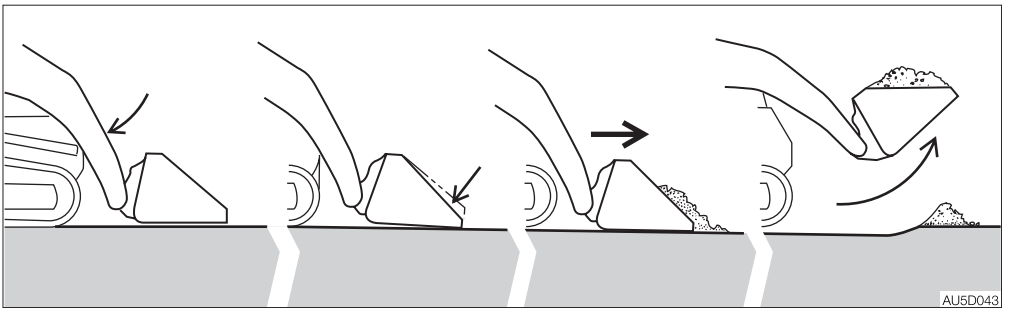

Tilt the bucket forward at an angle appropriate for the ground hardness. Slowly travel forward, dig into the ground with the cutting edge of the bucket. When the bucket is full, tilt it backward.

https://truckmanualshub.com/

Leveling

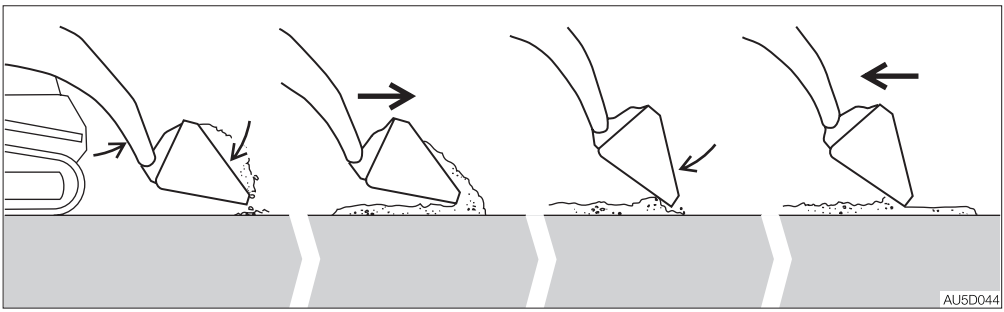

Raise the lift arms and tilt the bucket forward, then release it as the machine is driven forward. Next tilt the bucket forward and lower the front edge until it is slightly above the ground surface, then back the machine over the load that was just released.

Backfilling

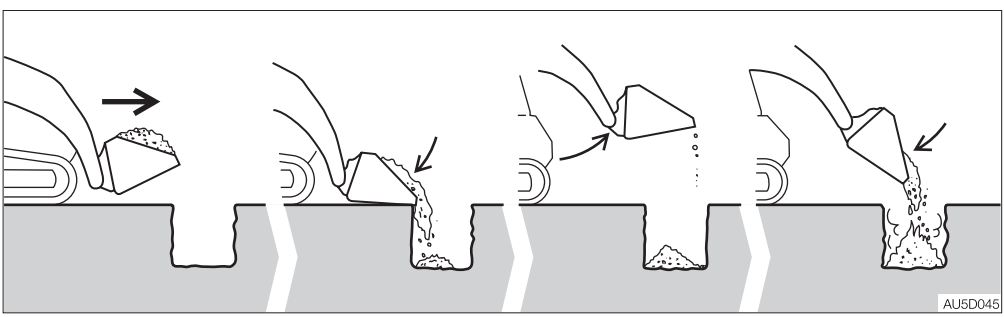

With the bucket lowered, drive near the hole and tilt the front edge of the bucket downward as soon as it passes over the near side of the hole. Raise the bucket and empty the load only when necessary.

https://truckmanualshub.com/

Leveling Operation using the Float position

⚠ WARNING

- **Make sure the bucket is lowered to the ground before floating the lift arms. Floating the lift arms while they are raised will cause the bucket to fall rapidly and is dangerous.**
- **Do not travel forward with the lift arms in the float position.**

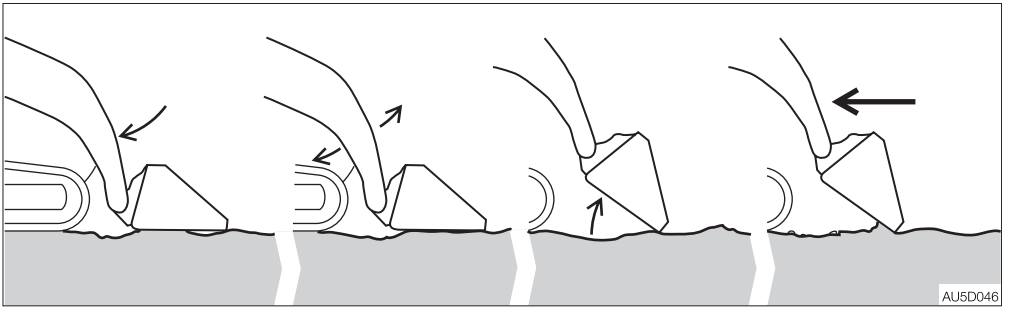

Lower the bucket to the ground before setting the lift arms to the float mode. Tilt the bucket forward to stand it on its cutting edge, and then level the loose ground while driving in reverse.

Loading

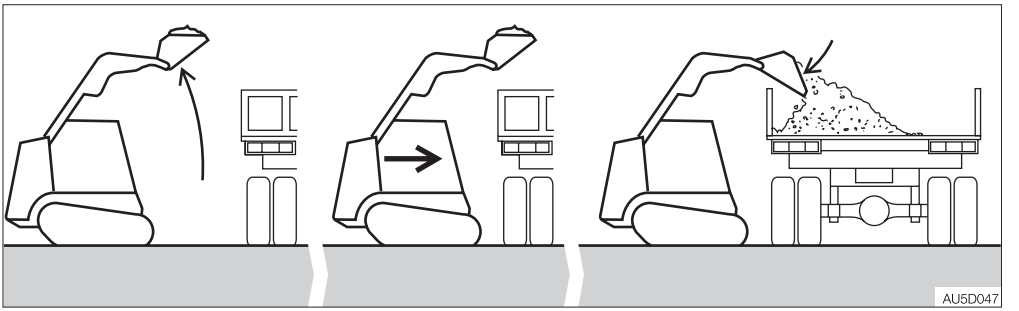

Move the machine, stop close to the truck, and then raise the bucket until its lower edge is well above the truck bed. Slowly move the machine forward and stop at the position where the bucket is to dump. Tilt the bucket forward to release the material in the bucket into the truck bed. When the truck bed is filled to half capacity, use the bucket to spread the load evenly.

https://truckmanualshub.com/

PARKING THE MACHINE

PARKING

⚠ WARNING

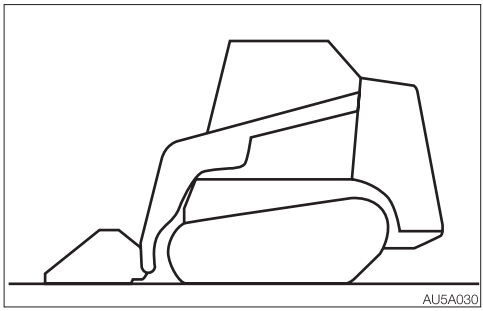

- **Park the machine on a flat, rigid and safe ground. Set the parking brake.**

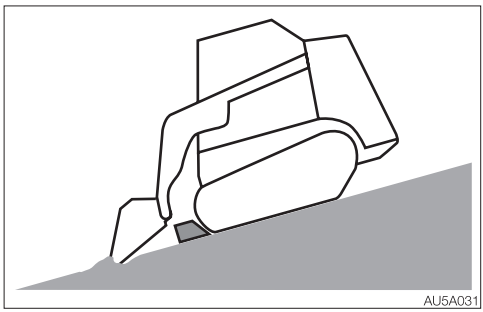

If you must park on a slope or incline, park the machine securely and block the movement of the machine.

- **When parking on a street, use barriers, caution signs, lights, etc., so that the machine can easily be seen even at night to avoid collision with other vehicles.**
- **Before leaving the operator's seat, raise the safety bar to engage the lock and stop the engine.**
- **Never leave the machine with the engine running or the lift arms raised. If the lift arms are left in a raised position, prevent them from falling by engaging the lift arm stopper.**

Before leaving the machine, do the following:

1. Set the control levers to the neutral position.
2. Return the throttle lever to idle the engine at low speed.
3. Lower the bucket to the ground.
4. Raise the safety bar to the lock position.
5. Stop the engine and remove the key.
   Refer to "Stopping the engine" on page 3-5.

INSPECTION AND CHECKS AFTER STOPPING THE ENGINE

1. Check for oil or water leak and inspect the working equipment, covers and undercarriage. If any irregularities are found, repair.
2. Fill up the fuel tank.
   Refer to "Inspecting the fuel level" on page 5-18.
3. Remove any paper scraps or dirt from the engine room.
4. Remove any mud from the undercarriage.

Locking

Be sure to lock the following places:

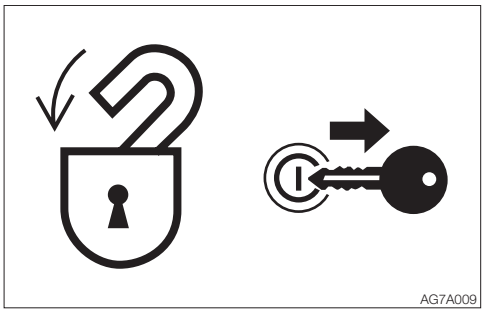

- Fuel filler cap
- Cab door
- Manual storage compartment
- Engine hood

https://truckmanualshub.com/

HANDLING IN COLD CLIMATES

PREPARING FOR COLD CLIMATES

Starting engine in cold climates is not easy, and it becomes more difficult if the coolant freezes. Prepare for cold-climate problems as follows.

Replacing the fuel and lubricant
Replace the hydraulic oil, engine oil and fuel with those intended for cold climates.
Refer to “Fuel and lubricant table” on page 5-4.

Engine coolant

⚠ WARNING

The engine coolant is combustible. Keep away from flame.
Use long-life coolant (antifreeze) and tap water for the engine coolant.

Note: New machines are delivered with JIS Type 2 long-life coolant (antifreeze) at a concentration of 50%.
Refer to “Fuel and lubricant table” on page 5-4.

Battery
As the temperature drops, the battery performance decreases.
Inspect the battery. If it is discharging, contact a Takeuchi service agent to have the battery recharged.
Refer to “Inspecting the battery fluid level and replenishing” on page 5-29.

CAUTIONS AFTER OPERATIONS

Observe the following cautions to prevent mud, water, or the undercarriage from freezing and making it impossible for the machine to move.

- Remove all mud and water from the machine body. In particular, wipe the hydraulic cylinder rod clean to prevent damage to the seal caused by mud or dirt on the rod surface getting inside the seal together with drops of water.
- Park the machine on hard and dry ground. If this is impossible, park the machine on a wooden board placed on ground.
- Drain any water in the fuel tank to prevent it from freezing.
  Refer to “Draining the water from the fuel tank” on page 5-28.
- As the battery capacity drops markedly in low temperatures, cover the battery or remove it from the machine and keep it in a warm place.
  If the electrolyte level is low, add distilled water in the morning before beginning work. To prevent the battery electrolyte from freezing in the night, do not add water after the day’s work.

AFTER THE COLD CLIMATE

When the climate becomes warmer, do as follows:

- Replace the fuel and oil for all parts with those specified in the “Fuel and lubricant table”.
  Refer to “Fuel and lubricant table” on page 5-4.
- If a coolant of “one season type” is used, drain the cooling system completely, clean out the inside of the cooling system thoroughly, and fill with tap water.
  Refer to “Cleaning the engine cooling system” on page 5-43.

https://truckmanualshub.com/

HANDLING RUBBER TRACKS

Rubber tracks have an inherent weakness, lack of strength, due to their use of rubber. Be sure to observe the prohibitions and cautions below to prevent the tracks from being damaged or coming off.

PROHIBITIONS

Do not travel or operate the machine in the following places:

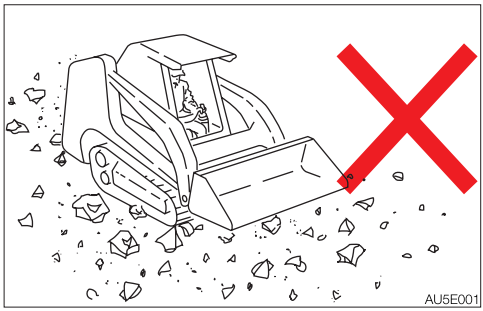

- Traveling and slewing on crushed rock, extremely rough hard rock, steel beams, scrap iron, or near the edges of steel plates will cause damage to the rubber tracks.

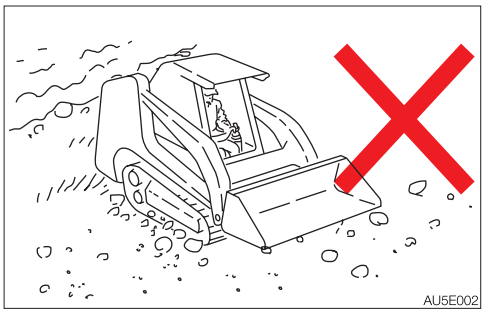

- Traveling on riverbeds or places where there are large numbers of boulders may cause the stones to get caught and damage the tracks or make the tracks come off.
- Do not use the machine on the seashore. The salt may corrode the steel core.

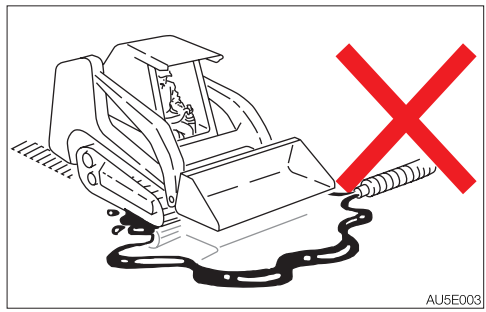

- Do not let fuel, oil, salt or chemical solvents get on the tracks. These substances may corrode the bonding of the steel cores on the tracks, resulting in rust or peeling. If any of these substances gets on the tracks, immediately clean it off with water.

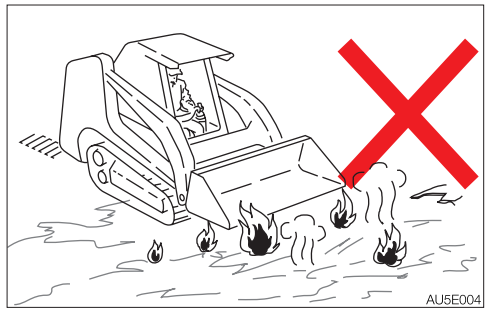

- It will cause an irregular wear or damage to the lugs, if the machine travels on irregular surfaces such as recently paved with asphalt, exposed to a bonfire or of hot iron sheets under the blazing sun.
- Do not move earth in places where the rubber tracks may slip. Doing so may speed up lug wear.

https://truckmanualshub.com/

CAUTIONS

Observe the following cautions when operating the machine:

- Avoid changing course abruptly or spin-turning on concrete surfaces whenever possible. Doing so may wear or damage the rubber tracks.
- Avoid drops that may expose the rubber tracks to strong shocks.
- Salt, potassium chloride, ammonium sulfate, potassium sulfate, and triple superphosphate of lime can damage the tracks. If any of these substances gets on the tracks, wash if off thoroughly with water.
- Do not let the sides of the rubber tracks rub against concrete or walls.
- Be especially careful on snowy or frozen surfaces in winter, as the tracks tend to slip in such conditions.
- Use rubber tracks at temperatures between –25°C to +55°C (–14°F to 131°F).
- When storing the rubber tracks for long periods of time (three months or more), do so indoors in a place not exposed to direct sunlight or rain.

PREVENTING THE RUBBER TRACKS FROM COMING OFF

Observe the following cautions to prevent the track from coming off.

- Always keep the tracks at the proper tension.

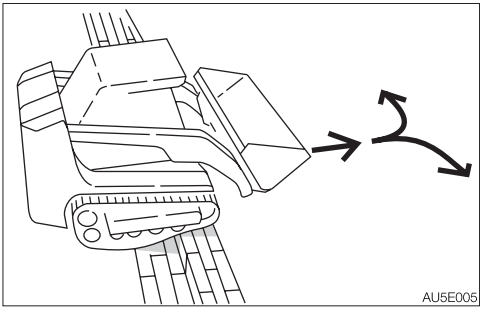

- When traveling over a large step such as a cobblestone or rock (20 cm (8 in.) or deeper), climb up the step at the right angle and do not change courses on top of the step.

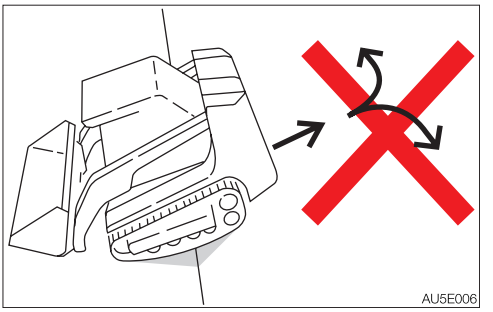

- When climbing in reverse, do not change directions at the point where the slope starts.

https://truckmanualshub.com/

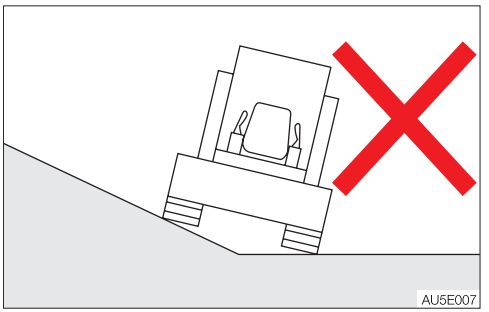

- Avoid traveling by setting one track on a slope or projecting portion and the other track on a flat surface (with the machine at a tilt of 10° or more). Travel with both tracks set on flat surfaces.

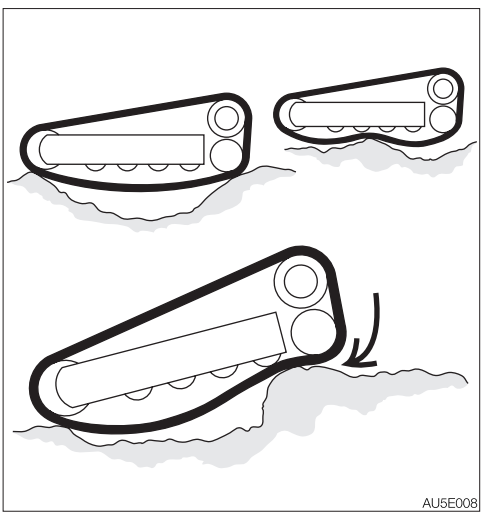

- Do not change directions when the tracks are slack as shown in the figure.

https://truckmanualshub.com/

https://truckmanualshub.com/

TRANSPORT

https://truckmanualshub.com/

LOADING AND UNLOADING

⚠ WARNING

The machine may roll or tip over or fall while being loaded or unloaded. Take the following precautions:

- **Select a firm, level surface and keep sufficient distance from road shoulders.**
- **Secure the ramps of adequate strength and size to the truck bed. The slope of the ramps must not exceed 15°. If the rumps are bowed down too low, support them with poles or blocks.**
- **Keep the truck bed and loading ramps clean of oil, soil, ice, snow, and other materials to prevent the machine from sliding sideways. Clean the tracks.**
- **Chock the transporter wheels to prevent movement.**
- **When being loaded or unloaded, travel slowly in 1st (low) gear by following the signal from the signal person.**
- **Never change courses on the ramp. If it is necessary, move down from the ramps, change the course and then get on the ramps again.**
- **Do not raise the lift arms on the ramp. The machine may tip over.**
- **When raising the lift arms on the truck bed, do it slowly as the footing should be unstable.**
- **Lock the cab door after being loaded, if applicable. Otherwise, the door may open during transport.**
- **Chock the tracks and secure the machine to the truck bed with wire rope or chain.**

When loading or unloading the machine, be sure to use ramps or a platform and follow the procedure below.

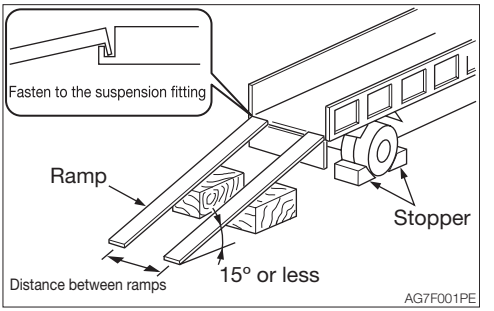

1. Set the parking brake on the transporter and chock the wheels.
2. Fix the ramps securely to the truck bed. The slope of the ramps must not exceed 15°.
3. Align the center of the truck bed with the center of the machine, and of the ramp with the center of the track.
4. Lower the bucket as far as possible without letting it touch the ramps.
5. Set the travel speed to the 1st (low) and slow down the engine speed by operating the throttle lever.

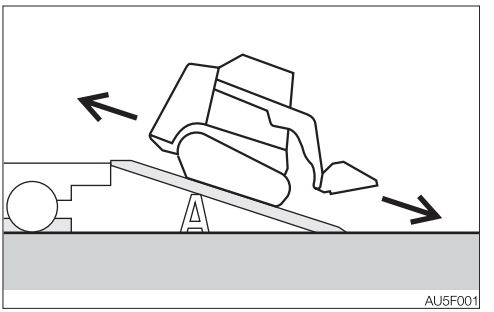

6. When getting on or down the ramps, the bucket must be pointing down the slope.
7. Drive the machine straight toward the ramps and slowly travel up or down the ramps, by following the signal from the signal person.
8. Load the machine at the specified position on the transporter.
   Refer to “Transporting posture” on page 4-4.

https://truckmanualshub.com/

HOISTING THE MACHINE

⚠ WARNING

- **Know and use the correct crane signals.**
- **Check the hoisting equipment for damaged or missing parts on a daily basis and replace as necessary.**
- **When hoisting, use a wire rope capable of lifting the machine mass.**
- **Hoist the machine in such a manner described in the procedure below. Do not do it in any other manner. Doing so is dangerous as it may result in the machine losing its balance.**
- **Do not hoist the machine with an operator on it.**
- **When hoisting, hoist slowly so that the machine does not tip.**
- **Keep everyone out of the area when hoisting. Do not move the machine over the heads of the persons.**

IMPORTANT: This hoisting method applies to machines with standard specifications. This method is not applicable for the machines with non-standard attachments and/or optional products, because the center of gravity differs according to the attachments and optional products installed. Contact your Takeuchi service agent for details.

Hoisting

1. Lower the bucket to the ground.
2. Raise the safety bar to the lock position.
3. Stop the engine, remove the ignition key and get off the machine.
4. Install the wire ropes as shown on the figure below. Install the wire ropes and hoisting attachment without letting them touch the machine body.
5. Hoist the machine slowly until it leaves the ground.
6. Stop hoisting until the machine becomes stable, and then start hoisting the machine slowly again.

Front hook fixing position
<TL8>

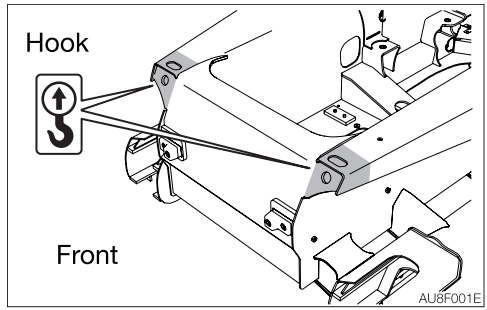

<TL10/TL12>

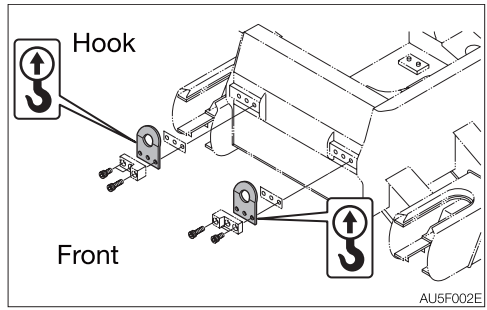

Rear hook fixing position

<TL8>

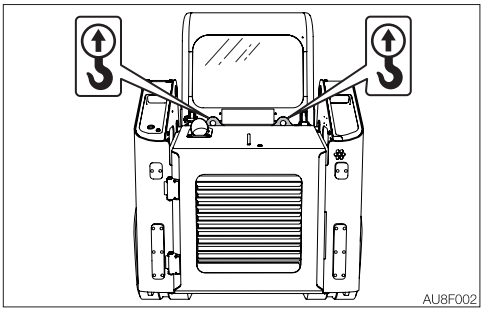

<TL10/TL12>

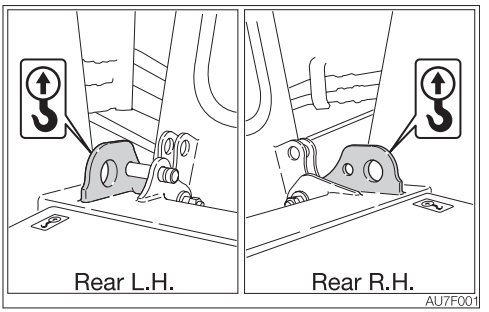

Hoisting posture

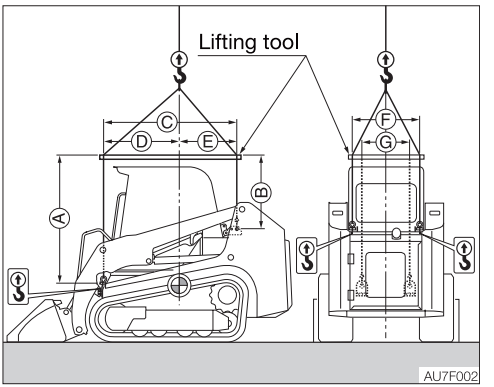

	A	B	C	D	E	F	G
TL8	1520 (59.9)	980 (38.7)	1515 (59.7)	855 (33.7)	660 (25.9)	890 (35.0)	500 (19.7)
TL10	1660 (65.3)	940 (37.1)	1720 (67.7)	985 (38.8)	735 (28.9)	880 (34.7)	630 (24.7)
TL12	1705 (67.1)	950 (37.4)	1895 (74.6)	1110 (43.7)	785 (30.9)	880 (34.7)	615 (24.2)

Unit: mm (inch)

https://truckmanualshub.com/

SECURING THE MACHINE

After loading the machine at the specified position, secure it as described below.

Transporting posture

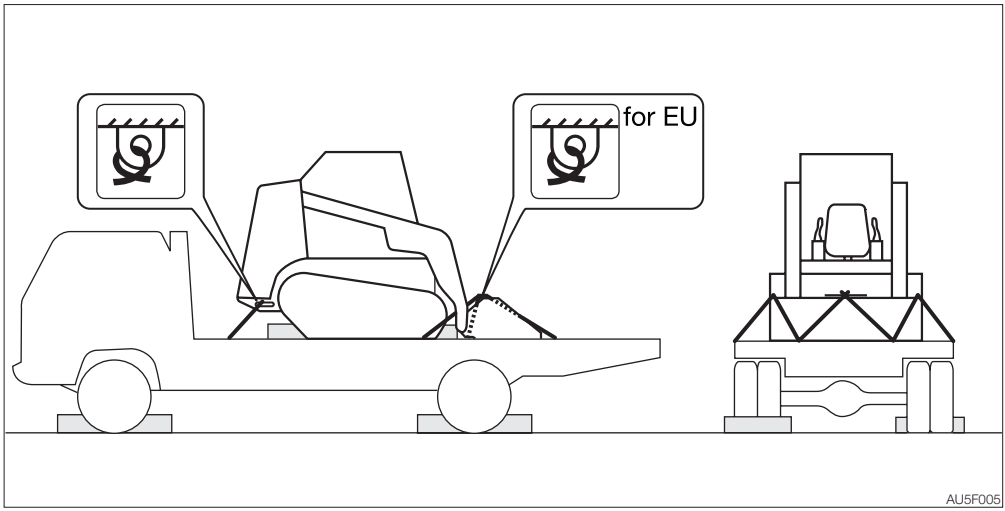

1. Lower the bucket.
2. Raise the safety bar to the lock position.
3. Stop the engine, remove the ignition key and lock all locks.
4. Place the stoppers (chocks) in front and behind the tracks.
5. Install a chain or wire rope over the lower frame of the machine and fasten it securely to prevent the machine from slipping sideways.
6. Secure the bucket with a chain or wire rope.

IMPORTANT: Place a wooden block under the bucket to protect the floor from damage caused by the bucket.

Precautions to be taken during transportation

⚠ WARNING

- **Know and follow the applicable safety rules, vehicle code and traffic laws when transporting the machine.**
- **Select the best transport route by considering the length, width, height and weight of the truck with the machine loaded on it.**
- **Never abruptly start or stop or run at a high speed at the sharp curves during transport. Doing so will move or lose the balance of the loaded machine.**

https://truckmanualshub.com/

https://truckmanualshub.com/

MAINTENANCE

https://truckmanualshub.com/

GENERAL

MAINTENANCE OVERVIEW

To keep the machine in good condition and use if for a long period, perform the inspection and maintenance properly and safely following the procedures recommended by this manual.

The inspection and maintenance items are divided into groups according to the machine's total operating time: every 10 hours (walk-around and daily inspection), every 50 hours, every 250 hours, etc. Refer to the hour meter readings to determine when to schedule an inspection and maintenance. Items for which it is not possible to determine the inspection and maintenance interval are included under "When Required".

When operating the machine in extremely harsh environments (with high dust levels or high temperatures), inspection and maintenance should be performed earlier than the times specified on the Maintenance List.

CAUTIONS ON MAINTENANCE

Do not perform any other inspection and maintenance works than those listed in this manual.
For works not listed in this manual, ask your sales or a service dealer for help.

Keep the machine clean
- Clean the machine before performing inspection and maintenance and try to keep it clean.
- Stop the engine before washing the machine. Cover the electrical parts so that water cannot enter. Water on electrical parts could cause short-circuits or malfunctions. Do not use water or steam to wash the battery, electronic control components, sensors, connectors or the operator's compartment.

Fuel, lubricant and grease
- Choose fuel, lubricant and grease by following to the "Fuel and lubricant table".
- Use fuels, lubricants and greases which do not contain water, and be careful to keep dirt out when changing or replenishing fuel, lubricant or grease.
- Store fuels, lubricants and greases in the prescribed places and in such a way that no water or dirt can get in them.

Cautions on refueling
- If the port includes a strainer, do not remove the strainer when fueling.
- After fueling, be sure to securely tighten the fuel filler cap.
- Do not add more than the specified amount of fuel.

Do not use fuel to clean parts
Do not use fuel to clean parts. Use a non-combustible cleaning agent.

Keep dirt out
When mounting and removing parts, do so in a place where there is no dust, clean the working area and the part, and keep dirt out.

https://truckmanualshub.com/

Clean the installation surfaces

When installing and removing parts, be sure that the surfaces of contact of the parts are clean. If the sealing grooves of the surface of contact are damaged, consult your sales or service dealer for repair or release.

Seals and split pins

- Be sure to replace all seals and cotter pins with new ones.
- When installing, be careful not to damage or twist the seal.

Sealing tape

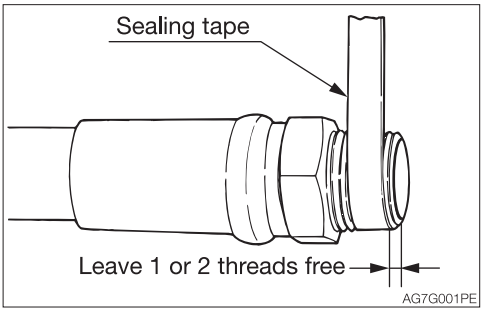

- When wrapping the plug with sealing tape, remove any old sealing tape from the threads and clean the threads.
- Wrap the thread tight with seal tape starting 1 or 2 threads away from the thread end.

Disposing of wastes

- Always collect oil that is drained from the machine in containers. Improperly disposed waste oil can cause environmental harm.
- Follow appropriate laws and regulations when disposing of harmful objects such as oil, fuel, cooling water, coolant, filters and batteries.

Check after maintenance

- Gradually increase the engine speed from a low idle to maximum speed and check that there is no oil or water leaking from serviced parts.
- Operate each control lever and check that the machine is operating properly.

Cautions on handling of battery wiring

- Disconnect the wiring from the both terminals (+ and –) on the battery before working on the electrical system or doing electric welding.
  Always disconnect it from the earth side (–). When connecting, connect the earth side last.
- Do not disconnect the battery wiring while the engine is moving. Otherwise, the electric circuits of the rotary converter or others may be damaged.

https://truckmanualshub.com/

SERVICE DATA

FUEL AND LUBRICANT TABLE

Select the appropriate fuel, lubricant and grease according to the temperature by referring to the table below.
- Regardless of the specified time, change the oil if it becomes too dirty or degraded.
- When refilling, never mix oils of different brands. If a brand is to be changed, replace the whole fuel/oil.

Fuel
Diesel fuel specifications
Diesel fuel should comply with the following specifications. The table lists several worldwide specifications for diesel fuels.

Diesel fuel specification	Location	Diesel fuel specification	Location
ASTM D975 No. 1-D, S15 No. 2-D, S15	USA Canada	ISO 8217DMX	International
EN590: 96	European union	BS2869-A1 or A2	United kingdom

Fuel tank	**Diesel fuel**	To maintain the performance and service life of the engine, always use clean and high-quality fuel. • To avoid freezing in cold climates, use a diesel fuel that still functions when the temperature is at least 12°C (53.6°F) below the lowest expected ambient temperature. • Use a diesel fuel that has a cetane number of 45 or higher. When operating at a very low temperature or at a high altitude, a higher cetane number fuel will be required. • Use fuel with sulfur content of less than 0.05 to 0.0015% by volume. Especially in the U.S.A. and Canada, ultra-low sulfur fuel should be used. A higher sulfur content fuel may cause sulfuric acid corrosion in the cylinders of the engines. • Never mix kerosene, used engine oil, or residual fuels with the diesel fuel. • Poor quality fuel can reduce engine performance and / or cause engine damage. • Fuel additives are not recommended. Some fuel additives may cause poor engine performance.

https://truckmanualshub.com/

Lubricant

Location	Type	Air temperature -4 14 32 50 68 86 104°F -20 -10 0 10 20 30 40°C	When to replace
Engine oil pan	Diesel engine oil API: CJ-4 class or higher	SAE 10W-30	Every 500 hrs. after the initial 50 hrs.
Hydraulic oil tank	Diesel engine oil API: CD, CE or CF class	SAE 10W-30	Every 1000 hrs.
Engine cooling system	Cooling water (water + coolant)** SAE: J814C or J1034	Mixture of 50% coolant	Every 1000 hrs.
Travel reduction gear	Gear oil API: GL-4	SAE 90	Every 500 hrs after the initial 250 hrs*.
Working equipment	Lithium based grease EP-2 NLGI No.2	—	Daily or every 10 hrs.
Levers			When required

* : If the ratio of traveling time to total operating time is high, replace the gear oil earlier than the specified time.

** : For water, use tap water (soft). Do not use well or river water. When the ambient temperature drops below 0°C (32°F), add coolant (antifreeze). Follow the coolant manufacturer's instructions to determine the mixture ratio.

https://truckmanualshub.com/

Volume

<TL8>

Engine oil pan	Engine cooling system	Hydraulic oil tank	Fuel tank	Travel reduction gear
Upper limit 11.2 L (11.8 US qt.) Lower limit 8.2 L (8.7 US qt.)	14 L (14.8 US qt.)	System 58 L (15.3 US gal.) Tank 39 L (10.3 US gal.)	75 L (19.8 US gal.)	1.0 L X 2 (1.06 US qt.) X 2

<TL10>

Engine oil pan	Engine cooling system	Hydraulic oil tank	Fuel tank	Travel reduction gear
Upper limit 13.2 L (13.9 US qt.) Lower limit 8.8 L (9.3 US qt.)	15.5 L (16.4 US qt.)	System 74 L (19.5 US gal.) Tank 48 L (12.7 US gal.)	90 L (23.8 US gal.)	1.6 L X 2 (1.7 US qt.) X 2

<TL12>

Engine oil pan	Engine cooling system	Hydraulic oil tank	Fuel tank	Travel reduction gear
Upper limit 13.2 L (13.9 US qt.) Lower limit 8.8 L (9.3 US qt.)	16.5 L (17.4 US qt.)	System 95 L (25.1 US gal.) Tank 60 L (15.9 US gal.)	108 L (28.5 US gal.)	1.6 L X 2 (1.7 US qt.) X 2

REGULARLY REPLACE THE HYDRAULIC OIL

When a large volume of oil is used in one-way for the attachments, such as snow removing equipment and lawn mowers, the oil deteriorates more quickly than that used for a usual operation. Be sure to replace the hydraulic oil and the return filter elements.

- Failure to replace these in time can lead to damage to the machine and the attachment hydraulic system. To prolong the service life of the hydraulic devices, properly replace the hydraulic oil and the return filter elements according to the table below.
- When replacing the hydraulic oil, clean the suction strainer.

Replacement interval (hours)

Item	Hydraulic oil	Filter element
1st time	—	25
2nd time	—	100
Periodically	500	200

When the operating ratio of snow removing equipment or lawn mower is 100%.

https://truckmanualshub.com/

LIST OF CONSUMABLES

Periodically replace consumables such as filters and elements according to the table below.

System	Item	Part name	Part No.	When to replace
Hydraulic system	Hydraulic oil return filter	Element	15511-03900	Every 500 hrs after the initial 50 hrs.
	Pilot line filter	Element	15511-01001	
Engine lubrication system	Engine oil filter	Cartridge	K1C020-32430	Every 500 hrs after the initial 50 hrs.
	Engine oil separator	Element kit	K1J419-05810	Every 1500 hrs.
Fuel system	Pre-fuel filter	Cartridge	K16631-43560	Every 500 hrs.
	Main fuel filter	Cartridge	K1J301-43170	
Air cleaner system	Air cleaner	Primary (Outer) element	<TL8> 19111-12001	Every 250 hrs or when the warning lamp light up. (Do not clean.)
			<TL10/TL12> 19111-13001	
		Secondary (Inner) element	<TL8> 19111-12002	When the primary elements are replaced.
			<TL10/TL12> 19111-13002	
AC system	Receiver drier		19115-08311	Every year
	Ventilation filter	Element	19115-06052	Once a year or if clogging remains after cleaning

https://truckmanualshub.com/

LIST OF TOOLS

<TL10/TL12>

Code	Part name	Part No.	Remarks
1	Spanner	1690001012	10-12
2	Spanner	1690001113	11-13
3	Spanner	1690001417	14-17
4	Spanner	1690001922	19-22
5	Spanner	1690002427	24-27
6	Spanner	1690100030	30
7	Spanner	1690100041	41
8	Screwdriver	1690220205	(+) (–) replaceable shank
9	L-type wrench	1690830019	19
10	Hammer	1690300330	3/4
11	Monkey wrench	1690400250	250 mm
12	Pliers	1690500200	200 mm
13	Hex.wrench	1690600500	5 mm
14	Hex.wrench	1690600600	6 mm
15	Hex.wrench	1690600800	8 mm
16	Hex.wrench	1690601000	10 mm
17	Hex.wrench	1690601400	14 mm
18	Tool case	1691400001	
19	Case	1691900001	
20	Grease gun	1691060600	600 cc
21	Drain connector	1554512601	

https://truckmanualshub.com/

LIST OF TIGHTENING TORQUES

Nuts and Bolts (for ISO strength category 10.9)

Tighten nuts and bolts at the torques shown on the table below, unless otherwise specified.

- The tightening torques used for the mounted plastic covers are not listed in the table below. Consult your sales or service dealer for details. They will be damaged if over tightened.
- When replacing nuts and bolts, replace them with nuts and bolts of the same size and standards.
- Tighten nuts and bolts alternately (top, bottom, left then right) or in 2 or 3 times so that they are evenly tightened.

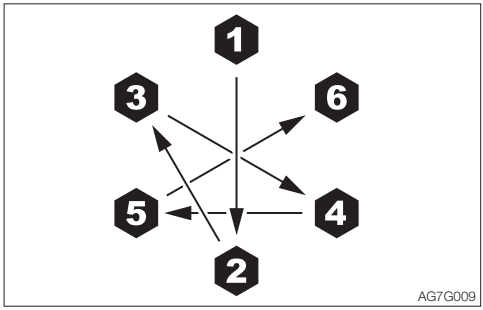

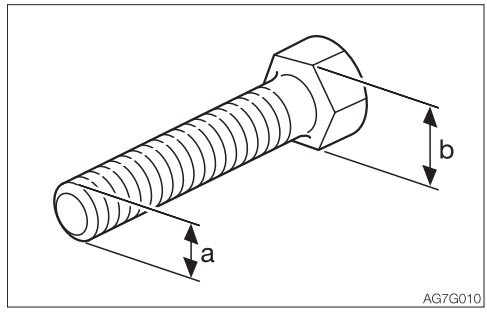

Classification	Head width (b)	Size (a) x pitch	Tightening torque	
			General connection points	
	mm	mm	N·m	ft-lb
Coarse	10	M6 x 1.0	9.8±0.5	7.2±0.4
	12, 13	M8 x 1.25	22.6±1.1	16.6±0.8
	14, 17	M10 x 1.5	47.1±2.4	34.7±1.7
	17, 19	M12 x 1.75	83.4±4.1	61.5±3.0
	19, 22	M14 x 2.0	134.4±6.7	99.1±4.9
	22, 24	M16 x 2.0	207.9±10.4	153.3±7.7
	27, 30	M20 x 2.5	410.9±20.5	303.1±15.1
Fine	12, 13	M8 x 1.0	24.5±1.2	18.1±0.9
	14, 17	M10 x 1.25	50±2.5	36.9±1.8
	17, 19	M12 x 1.5	87.3±4.3	64.4±3.2
	19, 22	M14 x 1.5	135.3±6.8	99.8±5.0
	22, 24	M16 x 1.5	220.6±11	162.7±8.1
	27, 30	M20 x 1.5	452.1±22.6	333.4±16.6

https://truckmanualshub.com/

SAFETY-CRITICAL PARTS

To use the machine safely, periodically perform inspection and maintenance. The safety-critical parts listed below must be periodically replaced for an increased safety.
Serious injury or a fire could result if they are worn or damaged.

List of safety-critical parts

Unit		Safety-critical parts to be replaced periodically	When to replace
Fuel system		Fuel hoses	Every 2 years
		Packing on fuel filler cap	
Engine		Engine oil filter hoses	
Heater & AC systems		Heater hoses	
		Air conditioner hoses	
Hydraulic system	**Main body**	Hydraulic hoses (pump - delivery)	
		Hydraulic hoses (pump - suction)	
		Hydraulic hoses (travel motor)	
	Working equipment	Hydraulic hoses (lift cylinder piping)	
		Hydraulic hoses (bucket cylinder piping)	
		Hydraulic hoses (quick hitch cylinder piping)	
		Hydraulic hoses (pilot valve)	
		Hydraulic hoses (auxiliary piping)	
		Seat belt	Every 3 years

https://truckmanualshub.com/

SAFETY-CRITICAL PARTS

The material of the safety-critical part listed on the left tends to change over time and cause wear or deterioration. It is difficult to determine the degree of deterioration at the periodic inspection, and thus they need to be replaced with new ones after a certain time to maintain their proper performance even if they appear in good condition. Note that regardless of the replacement schedule, replacement must be performed immediately if a symptom of wear is found. If a hose clamp is deformed or cracked, replace it together with the hose immediately.
When replacing the safety-critical parts, ask your sales or service dealer.
In addition to the safety-critical parts, inspect the hydraulic hoses and retighten or replace as necessary. When replacing the hydraulic hoses, replace the O-rings and seals at the same time.
Check the fuel and hydraulic hoses according to the periodic schedule described below.
Refer to “Maintenance”.

Type of inspection	Inspection item
Daily inspection	Leakage from the connecting parts of hydraulic or fuel hoses Damage to cab or canopy - replace*
Monthly inspection	Leakage from the connecting parts of hydraulic or fuel hoses Damaged hydraulic or fuel hoses (cracks, wear and tear)
Annual inspection	Leakage from the connecting parts of hydraulic or fuel hoses Deteriorated, twisted, damaged hydraulic or fuel hoses (cracks, wear and tear) or hoses in contact with other parts of the machine

*: Canopy (TL8) part number: 06684-00012
*: Canopy (TL10) part number: 06884-03100
*: Canopy (TL12) part number: 06984-03100
*: Cab (TL8) part number: 06686-00034
*: Cab (TL10) part number: 06886-04100
*: Cab (TL10, with the polycarbonate front door) part number: 06886-06100
*: Cab (TL12) part number: 06986-08100
*: Cab (TL12, with the polycarbonate front door) part number: 06986-10100

https://truckmanualshub.com/

MAINTENANCE LIST

Inspection and maintenance item	Page
Walk-around inspection	
Inspecting by opening the engine hood and rear door	5-14
Inspecting by walking around the machine	5-15
Inspecting while sitting in the operator's seat	5-15
Daily inspection (every 10 hours)	
Inspecting and replenishing the coolant	5-16
Inspecting and replenishing the engine oil	5-17
Inspecting the water separator	5-18
Inspecting the fuel level	5-18
Inspecting the hydraulic oil tank level and replenishing	5-19
Lubricating the working equipment	5-20
After the initial 50 hours (only for new machines)	
Replacing the engine oil and the oil filter	5-21
Replacing the hydraulic oil return filter	5-22
Replacing the pilot line filter	5-23
Inspecting and adjusting the fan belt	5-24
Inspecting and adjusting the compressor belt (AC)	5-26
Every 50 hours	
Inspecting and adjusting the track tension	5-27
Draining the water from the fuel tank	5-28
Inspecting the battery fluid level and replenishing	5-29
Inspecting the bucket stoppers (bolts/nuts)	5-30
Every 100 hours	
Cleaning the water separator	5-31
After the initial 250 hours (only for new machines)	
Replacing the travel motor gear oil*	5-32
Every 250 hours	
Inspecting and adjusting the fan belt	5-33
Inspecting and adjusting the compressor belt (AC)	5-33
Replacing the air cleaner element	5-34
Cleaning the radiator fins and oil cooler fins	5-35
Cleaning the condenser (AC)	5-35
Cleaning the air filters (AC)	5-36
Inspecting the refrigerant (gas) level (AC)	5-37

*: If the percentage of the traveling time within the total operating time is high, replace the gear oil earlier than the specified time.

https://truckmanualshub.com/

Inspection and maintenance item	Page
Every 500 hours	
Replacing the engine oil and the oil filter	5-39
Replacing the hydraulic oil return filter	5-39
Replacing the pilot line filter	5-39
Replacing the travel motor gear oil*	5-39
Replacing the fuel filters	5-39
Adjusting or replacing the bucket stoppers (bolts/nuts)	5-40
Every 1000 hours	
Cleaning the engine cooling system	5-43
Replacing the hydraulic oil and cleaning the suction strainer	5-45
Inspecting and adjusting the engine valve clearance	5-47
Every 1500 hours	
Replacing the oil separator element	5-48
Inspecting the injector tip	5-48
Inspecting the EGR cooler	5-48
Inspecting the PCV valve (TL10/TL12)	5-48
Every 3000 hours	
Inspecting the turbocharger	5-49
Cleaning the DPF	5-49
Inspecting the EGR system	5-49
When required	
Replacing the bucket or attachment	5-50
Inspecting and replenishing the windshield washer fluid	5-52
Lubricating the levers	5-52
Inspecting the rubber tracks	5-53
Every year	
Replacing the receiver drier	5-54

*: If the percentage of the traveling time within the total operating time is high, replace the gear oil earlier than the specified time.

WALK-AROUND INSPECTION

Perform the following inspections every day before starting the engine for the first time.

⚠ WARNING

- **Before operating, perform the walk-around inspections and make repairs immediately where necessary.**
- **Be sure to secure the rear door or radiator before working the inside. Do not keep the rear door or radiator open on a windy day or if the machine is parked on a slope.**

Before starting the engine, look around the machine and clean any combustibles from the surroundings of the engine. Also, inspect if oil or water is leaking and any nuts or bolts are loosened.

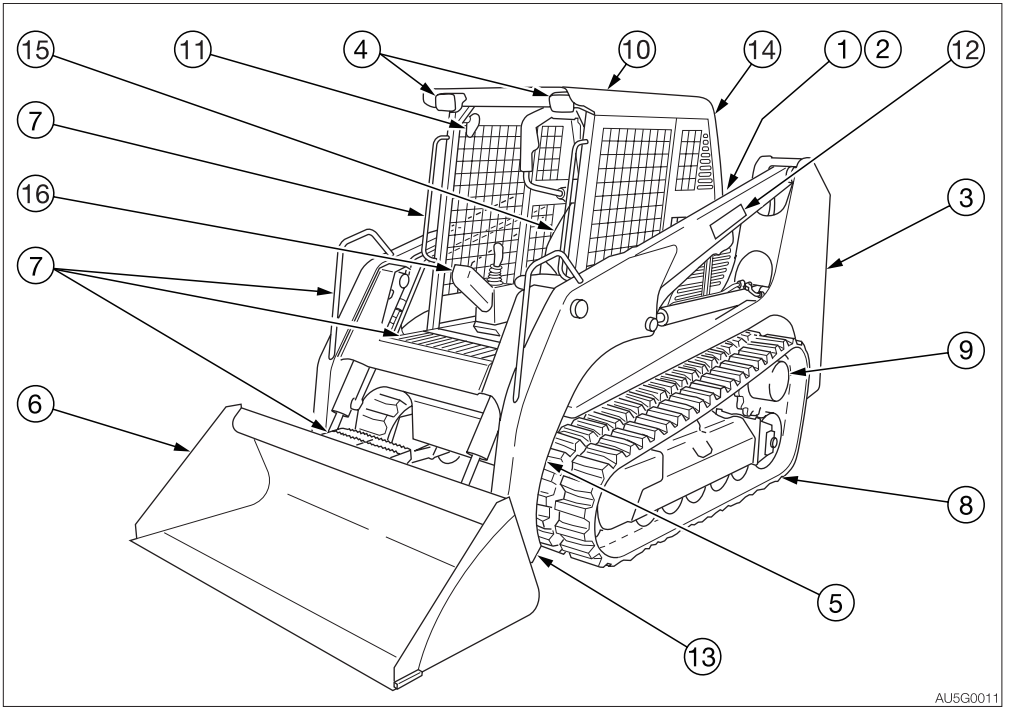

INSPECTING BY OPENING THE ENGINE HOOD AND REAR DOOR

1. Check for any twigs, leaves, oil or other combustible materials around the engine and battery.
2. Check for oil, fuel or engine coolant leakage around the engine.
3. Check for oil leakage from the hydraulic tank, hydraulic devices, hoses or connections.

https://truckmanualshub.com/

INSPECTING BY WALKING AROUND THE MACHINE

4. Check lights for dirt, damage and burnt out bulbs.
5. Check attachments and hoses for damage.
6. Check the bucket for wear, damage and looseness.
7. Check the handrail and steps for damage and loose bolts.
8. Check the tracks, track rollers, idlers and sprockets for damage, wear and loose bolts.
9. Check for oil leakage from the travel motor.
10. Check the canopy, cab and guard for damage and loose nuts and bolts.
11. Check the rear view mirror and room mirror for dirt, damage and angle adjustment.
12. Check the labels for dirt and damage.
13. Check the bucket stoppers for damage and looseness.

INSPECTING WHILE SITTING IN THE OPERATOR'S SEAT

14. Check the windshield for dirt or damage.
15. Check the seat and seat belt for dirt or damage.
    Check the operator's seat for dirt, oil or other combustible materials.
16. Check the monitor, instruments and switches for dirt or damage.

DAILY INSPECTION (EVERY 10 HOURS)

Perform the following inspections every day before starting the engine for the first time.

⚠ WARNING

- **Before operating, perform the daily inspections and make repairs immediately where necessary.**
- **Be sure to secure the rear door or radiator before working the inside. Do not keep the rear door or radiator open on a windy day or if the machine is parked on a slope.**

INSPECTING AND REPLENISHING THE COOLANT

⚠ WARNING

- **Do not remove the radiator cap or the drain plug when the cooling water is hot. Stop the engine and wait until the engine and the radiator cool before slowly loosening the radiator cap and the drain plug to remove them.**
- **Always wear the protective goggle and gloves when handling coolant (antifreeze). If any coolant (antifreeze) comes in contact with eyes or skin, wash it off with clean water. Otherwise, it could result in inflammation.**

Inspection

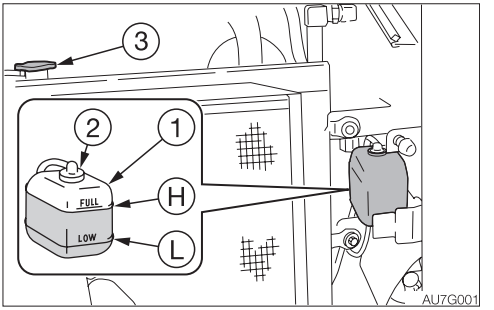

1. Open the rear door.
2. Inspect the cooling water level in the reserve tank (1).
   The level should be between the upper limit (H) and the lower limit (L).
   If it is below the lower limit (L), replenish.

Replenishing

1. Remove the cap (2) of the reserve tank (1).
2. Add cooling water up to the upper limit (H) of the reserve tank (1).
   If the reserve tank (1) is found empty at the inspection, check for water leakage and then the water level in the radiator (3). Add water to the radiator (3) as required, and then to the reserve tank (1).
3. Install the cap (2).

Note: Use only clean water (soft water) to replenish the cooling water loss due to evaporation. Use coolant (antifreeze) and clean water (soft water) of the specified mixing ratio to replenish the cooling water loss due to leaking.

INSPECTING AND REPLENISHING THE ENGINE OIL

⚠ WARNING

Stop the engine and allow the machine to cool down before performing maintenance.

Inspection

<TL8>

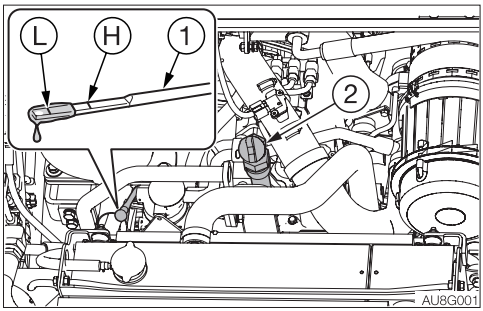

<TL10/TL12>

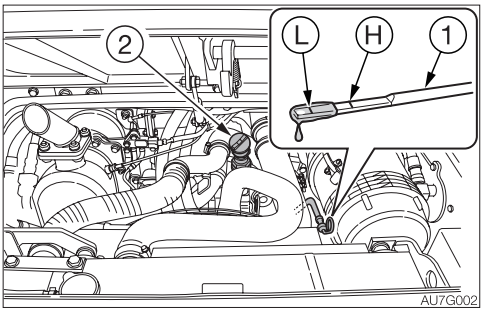

1. Open the engine hood.
2. Take out the dipstick (1) and wipe the oil off with a rag.
3. Fully reinsert the dipstick (1), and then pull it back out.
4. Check the oil on the dipstick (1).
   The level should be between the upper limit (H) and the lower limit (L).
   If it is below the lower limit (L), replenish.

Replenishing

1. Remove the oil filler cap (2).
2. Add oil up to between the upper limit (H) and the lower limit (L) of the dipstick (1). Problems could arise if the oil level is either too low or too high.
3. Tighten the oil filler cap (2).
4. Start the engine, run it at low idle for about 5 minutes, then stop it.
5. After about 10 minutes, inspect the oil level.

INSPECTING THE WATER SEPARATOR

⚠ WARNING

- **Do not smoke or permit open flames while handling fuel or working on the fuel system.**
- **Stop the engine in a well-ventilated place and allow it to cool down before performing maintenance.**
- **Clean up spilled fuel immediately.**

<TL8>

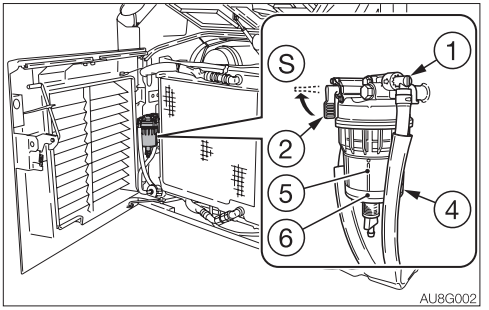

<TL10/TL12>

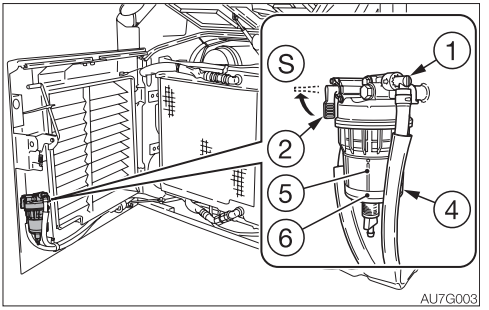

1. Open the rear door.
2. Inspect the water separator (1).
   If the red indicator ring (6) is sunk to the bottom of case (4), no water is mixed in.
   If the red indicator ring (6) is floating, there is water up to the ring. Drain the water and clean.
   Refer to “Cleaning the water separator” on page 5-31.
   Refer to “Bleeding air from the fuel system” on page 6-8.

INSPECTING THE FUEL LEVEL

⚠ WARNING

- **Do not smoke or permit open flames while handling fuel or working on the fuel system.**
- **Never remove the fuel cap or add fuel when the engine is running or still hot. Do not spill fuel on the hot surface of the machine.**
- **Fill the fuel tank in a well ventilated place.**
- **Clean up spilled fuel immediately.**
- **Do not fill the fuel tank to capacity. Allow room for oil expansion.**
- **Securely tighten the fuel filler cap.**
- **Use the correct grade of fuel for the operating season.**

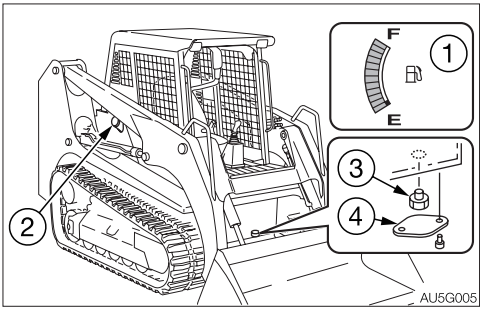

1. Check the fuel level using the fuel gauge (1).
   F: Tank is full.
   E: Tank is empty.
2. If the level is low, add fuel from the fuel port (2) while watching the fuel gauge (1).
   Refer to “Fuel filler port” on page 2-4.

INSPECTING THE HYDRAULIC OIL TANK LEVEL AND REPLENISHING

⚠ WARNING

Oil may spurt out if caps or filters are removed or pipes are disconnected before releasing the pressure in the hydraulic system.

- **When removing plugs or screws, or when disconnecting hoses, stand to the side and loosen them slowly to gradually release the internal pressure before removing.**

Inspection

The oil level changes with the oil temperature. Inspect the oil by maintaining the machine at posture shown in the figure at the next.

- Machine posture for inspecting the hydraulic oil level

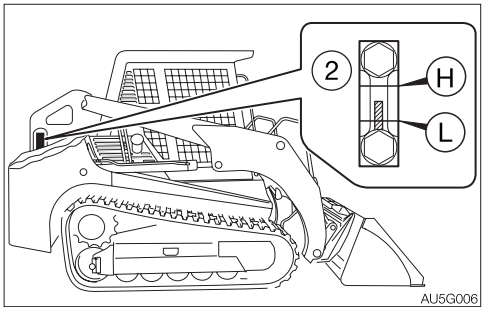

1. Start the engine and run it at low speed.
2. Fully retract the cylinders (lift arms and bucket), and lower the bucket to the ground.
3. Stop the engine.
4. Inspect the oil level using the sight gauge (2).
   - When the oil temperature is about 20°C (68°F):
     The level should be between the upper limit (H) and the lower limit (L). If it is below the lower limit (L), replenish.
   - When the oil temperature is about 50 to 80°C (122 to 176°F) (during operation):
     The level should be slightly below the upper limit (H).

Replenishing

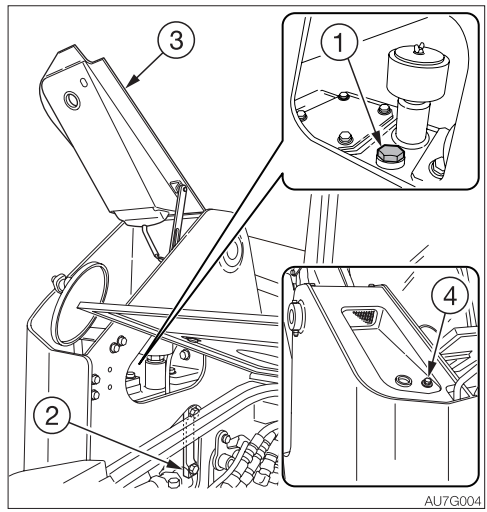

IMPORTANT: .Do not fill up to the level higher than the upper limit (H). It will damage the hydraulic circuits or result in oil spurting. If accidentally done, stop the engine and wait the hydraulic oil to cool, and then let the excessive oil to drain from the drain plug.

1. Raise the safety bar to the lock position.
2. Loosen the bolt (4) and open the cover (3).
3. Remove the plug (1).
4. Add the hydraulic oil up to the middle of the sight gauge (2).
5. Tighten the plug (1).
6. Close the cover (3) and tighten the bolt (4).

LUBRICATING THE WORKING EQUIPMENT

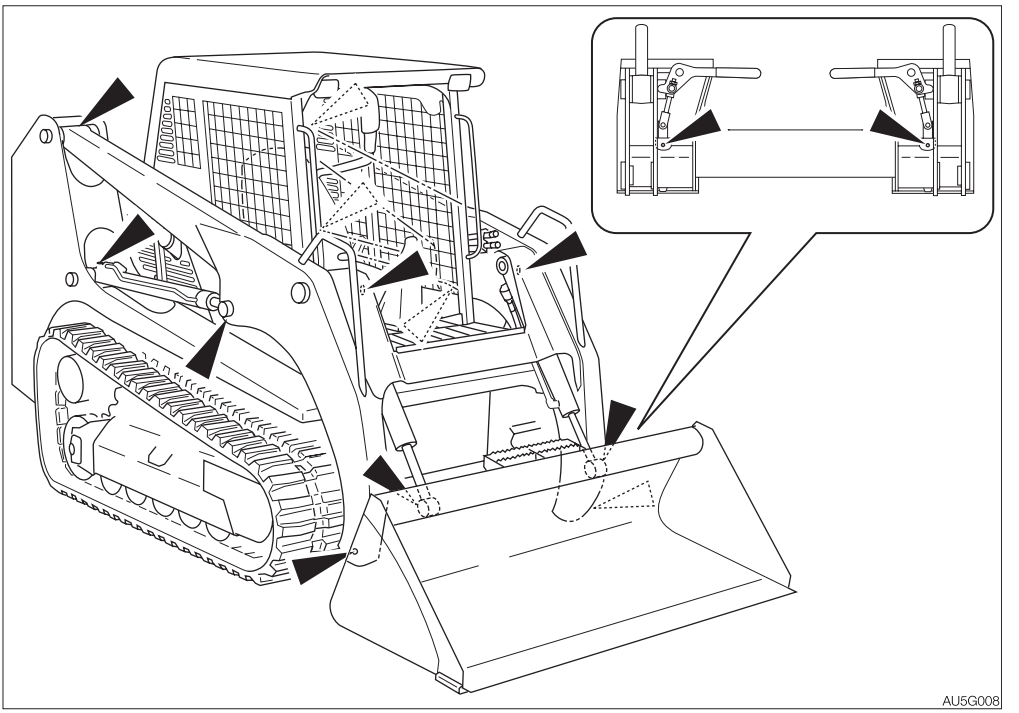

1. Keep the machine configuration as shown in the diagram above, lower the working equipment to the ground, and then stop the engine.
2. Use the grease gun to lubricate the grease fittings.
3. Wipe off the excess grease.

AFTER THE INITIAL 50 HOURS (ONLY FOR NEW MACHINES)

REPLACING THE ENGINE OIL AND THE OIL FILTER

⚠ WARNING

Stop the engine and allow the machine to cool down before performing maintenance.

- **The engine, muffler, radiator, hydraulic lines, sliding parts and many other parts of the machine are hot immediately after the engine is stopped. Touching these parts will cause burns.**
- **The engine oil is also hot.**
  Be careful not to touch the hydraulic oil when loosening the cap or plug.
  Working on the machine under these conditions could result in burns or injuries.

IMPORTANT: Check the waste oil for metal powder. If it contains large amounts of metal powder, consult your sales or service dealer.

<TL8>

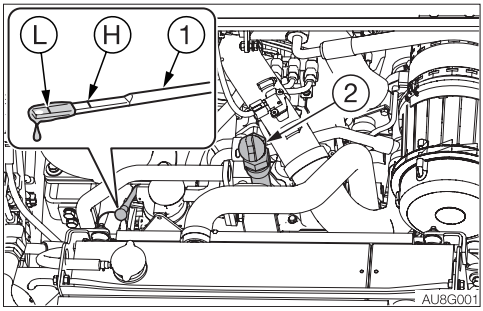

<TL10/TL12>

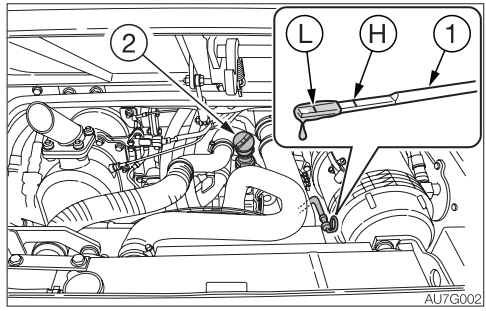

1. Tilt up the canopy.
   Refer to “Tilting up the canopy” on page 5-55.
2. Open the engine hood.
3. Remove the oil filler cap (2).

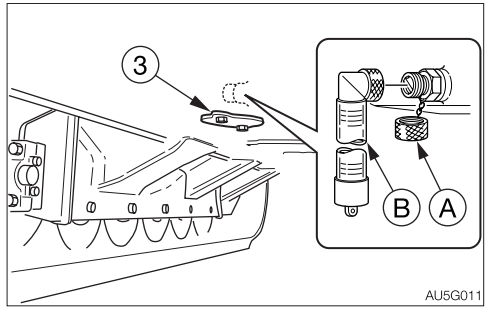

4. Loosen the bolts and remove the under cover (3).
5. Place a pan for catching the waste oil under the drain plug.
6. Remove the cap (A), install connector (B) and drain the oil. (The oil comes out when the screw is tightened.)
7. Remove the connector (B) and install the cap (A).
8. Install the under cover (3).

<TL8>

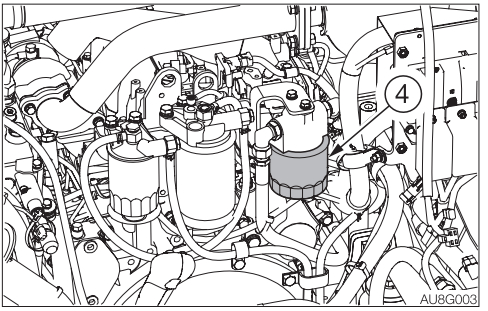

<TL10/TL12>

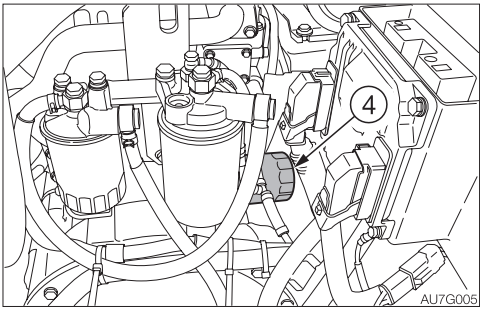

9. Turn the filter (4) counterclockwise with the filter wrench and remove it.
10. Clean the surface of installation of the filter stand.
11. Apply a thin layer of oil on the packing of the new filter.
12. Install the new filter by hand.
13. Securely tighten the filter by hand after its packing comes in contact with the surface of installation.
14. Add oil up to between the upper limit (H) and the lower limit (L) of the dipstick (1). Problems could arise if the oil level is either too low or too high.
15. Tighten the oil filler cap (2).
16. Lower the canopy.
17. Start the engine, run it at low idle for about 5 minutes, then stop it.
18. After about 10 minutes, inspect the oil level.

REPLACING THE HYDRAULIC OIL RETURN FILTER

⚠ WARNING

- **Stop the engine and allow the machine to cool down before performing maintenance.**
  - **The engine and the hydraulic system and many other parts of the machine are hot immediately after the engine is stopped. Touching these parts will cause burns.**
  - **The hydraulic oil is also hot and under high pressure.**
    Be careful not to touch the hydraulic oil when loosening the cap or plug. Working on the machine under these conditions could result in burns or injuries due to the hot oil spurting out.
- **Oil may spurt out if caps or filters are removed or pipes are disconnected before releasing the pressure in the hydraulic system.**
  - **When removing plugs or screws, or when disconnecting hoses, stand to the side and loosen them slowly to gradually release the internal pressure before removing.**

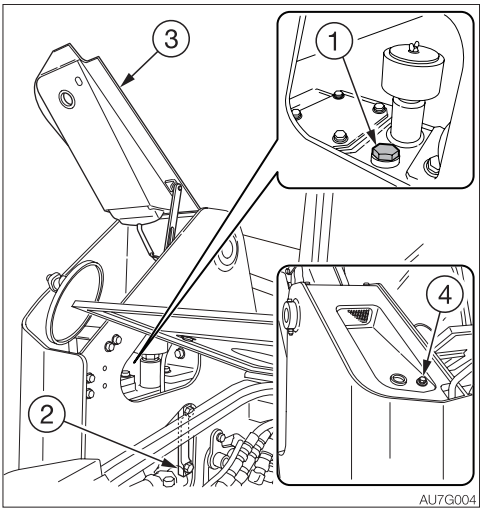

1. Loosen the bolt (4) and open the cover (3).
2. Remove the plug (1).

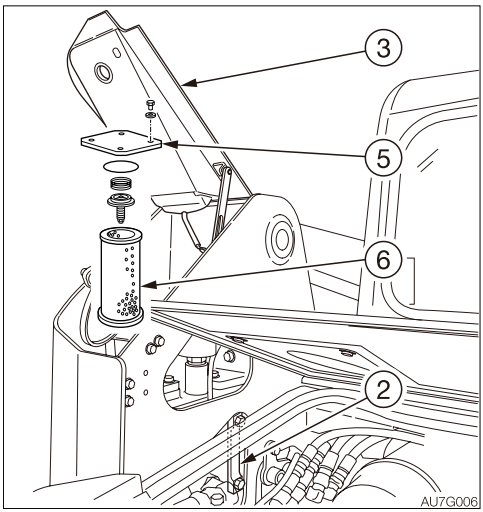

3. Loosen the bolts and remove the flange (5).
4. Remove the return filter (6).
5. Install a new return filter.
6. Reinstall the flange (5).
7. Inspect the level with the sight gauge (2), and replenish if the level is too low.
   Refer to “Inspecting the hydraulic oil tank level and replenishing” on page 5-19.
8. Close the cover (3) and tighten the bolt (4).

REPLACING THE PILOT LINE FILTER

⚠ WARNING

- **Stop the engine and allow the machine to cool down before performing maintenance.**
  - **The engine and the hydraulic system and many other parts of the machine are hot immediately after the engine is stopped. Touching these parts will cause burns.**
  - **The hydraulic oil is also hot and under high pressure.**
    Be careful not to touch the hydraulic oil when loosening the cap or plug. Working on the machine under these conditions could result in burns or injuries due to the hot oil spurting out.
- **Oil may spurt out if caps or filters are removed or pipes are disconnected before releasing the pressure in the hydraulic system.**
  - **When removing plugs or screws, or when disconnecting hoses, stand to the side and loosen them slowly to gradually release the internal pressure before removing.**

1. Tilt up the canopy.
   Refer to “Tilting up the canopy” on page 5-55.

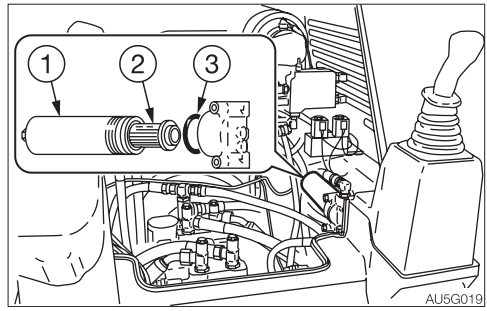

2. Turn the case (1) counterclockwise and remove it.
3. Remove the element (2) and O-ring (3).
4. Clean the inside of the case (1).
5. Coat the O-ring receiving groove on the new filter with a thin layer of oil.
6. Install the new element on the filter stand.
7. Coat the new O-ring (3) with a thin layer of oil.
8. Set the new O-ring (3), and then tighten the case (1) to the filter stand.
9. Inspect the level with the sight gauge and replenish if the level is low.
   Refer to “Inspecting the hydraulic oil tank level and replenishing” on page 5-19.

INSPECTING AND ADJUSTING THE FAN BELT

⚠ WARNING

- **Stop the engine and allow the machine to cool down before performing maintenance.**
  - **The engine, muffler, radiator, hydraulic lines, sliding parts and many other parts of the machine are hot immediately after the engine is stopped. Touching these parts will cause burns.**
- **Be sure to secure the rear door or radiator before working the inside.**

IMPORTANT: The loose belts could result in bad battery charge, overheat of engine or early wear of belt. Too tight belts could damage the water pump or bearing and belt used to drive the alternator.
IMPORTANT: Do not let any oil or grease get on the belt.

Inspection

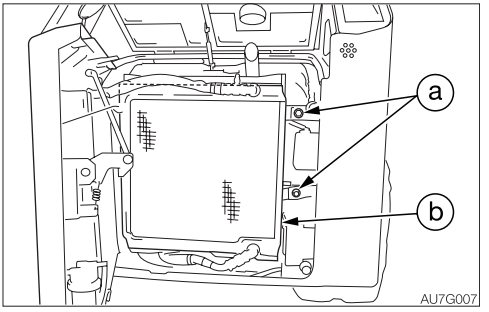

1. Open the rear door.

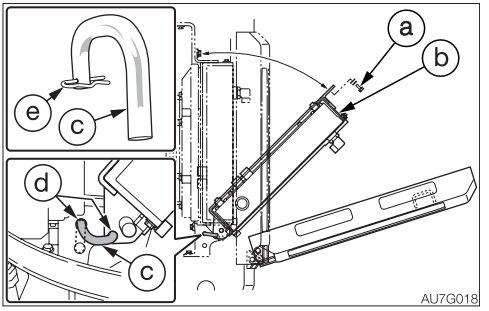

2. Remove the bolts (a) and open the radiator (b).
3. Remove the R-pin (e) from the stay (c).
4. Insert the stay (c) into the hole (d) to secure the radiator (b).

<TL8>

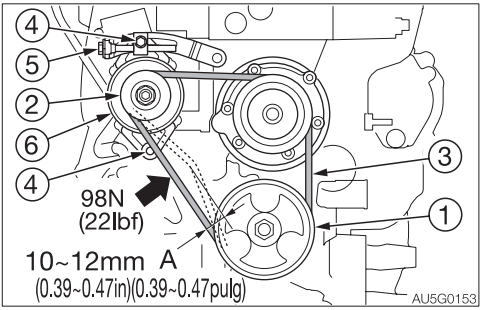

<TL10/TL12>

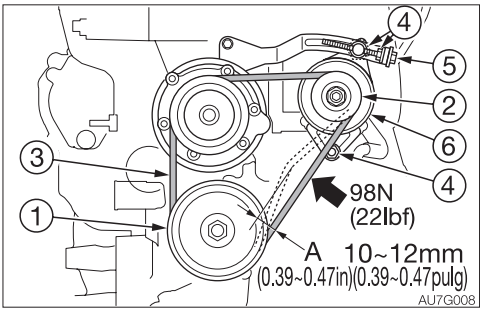

5. Press on the belt at the midpoint between the crank pulley (1) and alternator pulley (2) to check the tension (approx. 98 N or 22 lbf).
   The slack (A) should be 10 to 12 mm (0.39 to 0.47 in).
6. Inspect the fan belt (3) and replace if it is as follows.
   - There are cuts or cracks.
   - The belt is worn and touches the bottom of the V groove in the pulley.
   - The belt stretched too loose to be adjusted.

Adjustment
<TL8>

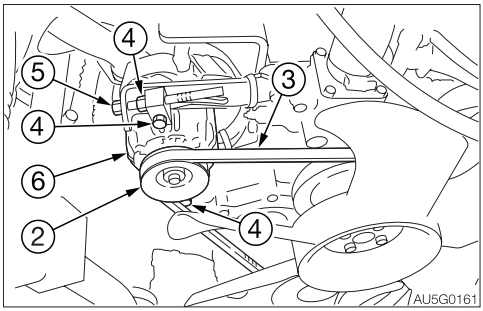

<TL10/TL12>

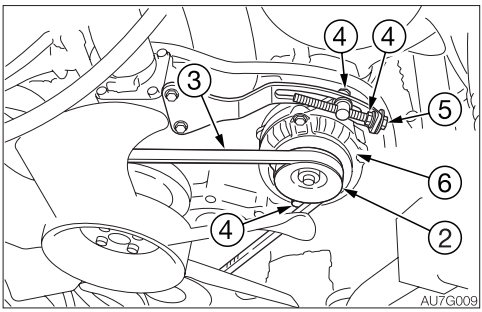

1. Loosen the lock nuts (4).
2. Turn the adjustment bolt (5) to move the alternator (6) and to adjust the tension of the fan belt (3).
   · Tighten: Clockwise
   · Loosen: Counterclockwise
3. Tighten the lock nuts (4).

Note: When replacing with a new belt, run the engine at low idle speed for about 3 to 5 minutes to break in the new belt, before adjusting the tension.

INSPECTING AND ADJUSTING THE COMPRESSOR BELT (AC)

⚠ WARNING

- **Stop the engine and allow the machine to cool down before performing maintenance.**
  - **The engine, muffler, radiator, hydraulic lines, sliding parts and many other parts of the machine are hot immediately after the engine is stopped. Touching these parts will cause burns.**
- **Be sure to secure the rear door or radiator before working the inside.**

IMPORTANT: Do not let any oil or grease get on the belt. It will cause the belt to slip, decrease the cooling capacity or shorten the service life of the air conditioner.

If the belt is too slack, it will slip and vibrate, resulting in decreased cooling capacity. The service life of the air conditioner also will be shortened. Adjust the belt tension to the standard value (approximately 8 mm or 0.3 in).

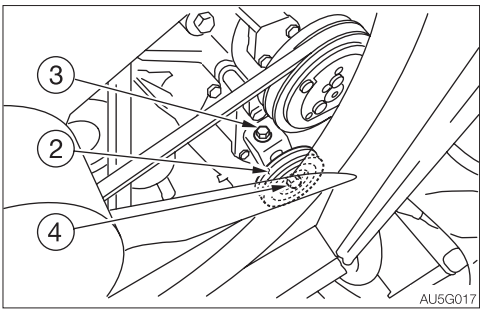

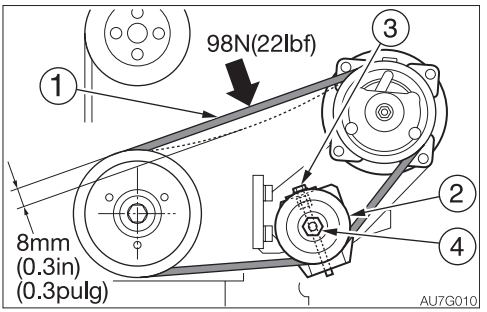

Inspection

1. Open the rear door and radiator.
2. Press on the center of the belt (1) with a finger. The belt's tension is normal if it bends about 8 mm (0.3 in) when pressed with a force of about 98 N (22 lbf).

Adjustment

If the belt's tension is not normal, adjust it with the adjust bolt (3).

1. Loosen the lock nut (4).
   - Tighten: Clockwise
   - Loosen: Counterclockwise
2. Tighten each lock nut (4) after adjustment.
   Fixing nut tightening torque:
   Inner nut, 17 N·m (12.3 ft-lb)
   Outer nut, 83.4 N·m (61.5 ft-lb)

Note: When replacing with a new belt, run the engine at low idle speed for about 3 to 5 minutes to break in the new belt, before adjusting the tension.

Replacing

Replace the belt in the following cases:

- There are cuts or cracks.
- The belt is worn and touches the bottom of the V groove in the pulley.
- The belt stretched too loose to be adjusted.

https://truckmanualshub.com/

EVERY 50 HOURS

INSPECTING AND ADJUSTING THE TRACK TENSION

⚠ WARNING

- **If you must work beneath the raised machine or working equipment, always use wood blocks, jack-stands or other rigid and stable supports. Never get under the machine or working equipment if they are not sufficiently supported. This procedure is especially important when working on hydraulic cylinders.**
- **Be careful with the high-pressure grease In the track adjuster, the grease has been injected under high pressure. If the tension is adjusted without following the prescribed procedure, the grease discharge valve may fly off, resulting in injury.**
  - **Loosen the grease discharge valve slowly. Do not turn it more than one turn.**
  - **Do not put your face, arms, legs or body in front of the grease discharge valve.**
  - **If grease does not come out when the grease discharge valve is loosened, the valve is faulty. Ask a Takeuchi service agent for repair.**

Inspection

<TL8/TL10>

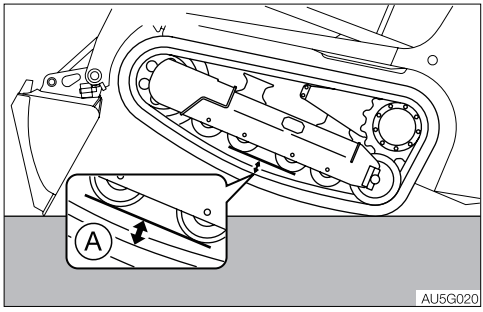

<TL12>

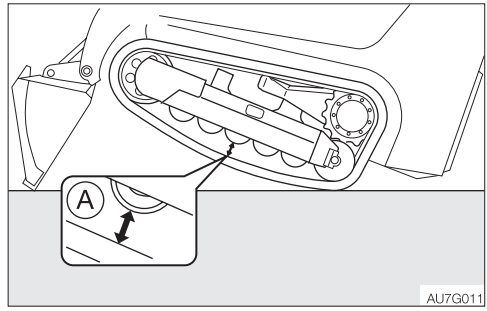

1. Lower the lift arms and tilt the bucket forward to raise the front of the machine off the ground as far as it will go.
2. Measure the clearance between the center track roller tread and the surface of the track where it makes contact with the roller.
   <TL8>
   The clearance (A) should be 25 to 50 mm (1.0 to 2.0 in.).
   <TL10/TL12>
   The clearance (A) should be 15 to 30 mm (0.6 to 1.2 in.).

Adjustment

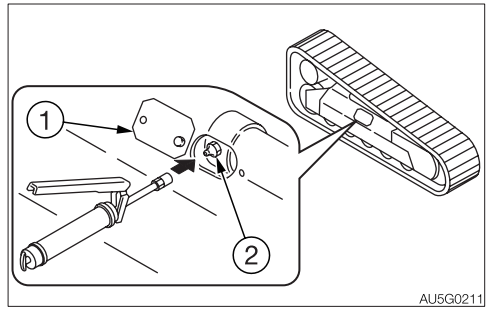

Increasing the tension

1. Remove the cover (1).
2. Inject grease through the grease fitting of the grease discharge valve (2) with a grease gun.
3. Inspect the track tension.

https://truckmanualshub.com/

Decreasing the tension

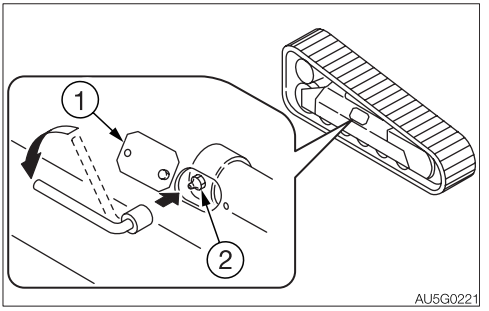

1. Remove the cover (1).
2. Slowly loosen (one turn) the grease discharge valve (2) with a spanner to discharge grease. If grease does not come out well, move the machine back-and-forth.
3. Tighten the grease discharge valve (2).
   · Tightening torque: 59 N·m (43.4 ft-lb.)

DRAINING THE WATER FROM THE FUEL TANK

⚠ WARNING

- **Do not smoke or permit open flames while handling fuel or working on the fuel system.**
- **Never remove the fuel cap or add fuel when the engine is running or still hot. Do not spill fuel on the hot surface of the machine.**
- **Fill the fuel tank in a well ventilated place.**
- **Do not fill the fuel tank to capacity. Allow room for oil expansion.**
- **Clean up spilled fuel immediately.**
- **Securely tighten the fuel filler cap.**
- **Use the correct grade of fuel for the operating season.**

Do the draining operation before starting the machine.

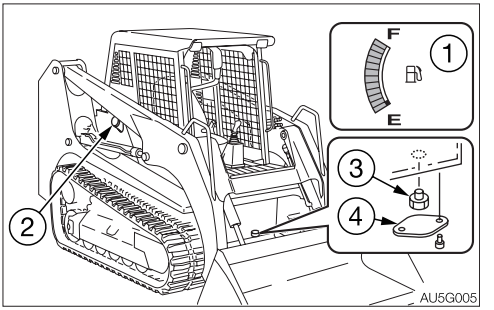

1. Remove the fuel filler cap (2).
2. Remove the cover (4).
3. Place a pan under the drain valve (3).
4. Open the drain valve (3) and drain the water and sediment buildup in the bottom of the tank.
5. Close the drain valve (3) and install the cover (4).
6. Add fuel while watching the fuel gauge (1).
7. Tighten the fuel filler cap (2) and lock it.
8. Bleed air.

Bleeding air from the fuel system

Refer to “Bleeding air from the fuel system” on page 6-8.

Note: Air in the fuel system causes the engine to fail to start or to have problems. Bleed air when the fuel tank is emptied, using the same procedure above.

https://truckmanualshub.com/

INSPECTING THE BATTERY FLUID LEVEL AND REPLENISHING

DANGER

- **Do not use the battery when the fluid level is below the lower level limit. Doing so will hasten the deterioration of the internal portions of the battery and shorten the battery life. It also can cause rupturing (explosion).**
- **Batteries generate flammable hydrogen gas which may explode. Keep away from flame, sparks, fire or lighted cigarettes.**
- **Use a dampened cloth to clean above the fluid level line and check the fluid level. Do not clean with a dry cloth; otherwise it can cause static electricity to build up, resulting in ignition or explosion.**
- **Do not use the cable if it's connecting terminal is loose or corroded. If used, ignition or explosion may occur.**

WARNING

- **Wear protective goggle and clothing when working with batteries.**
- **Do not add the distilled water above the upper level limit. Doing so could cause the fluid to leak. This fluid can cause skin damage if contacted, or can cause the machine components to corrode.**
- **Batteries contain sulfuric acid which will damage eyes or skin if contacted.**
  - **If eye contact occurs, flush immediately with clean water and get prompt medical attention.**
  - **If accidentally swallowed, drink large quantities of water or milk and call a physician immediately.**
  - **If acid contacts skin or clothing, wash off immediately with a lot of water.**
- **Be sure to secure the rear door or radiator before working the inside.**
- **Do not block the exhaust hole of the battery. An explosion could result, if blocked.**

Inspection

Turn the ignition switch to ON, and then switch the TRIP/DATA switch to DATA to display the battery voltage. The battery is normal if the voltage is 12 V or more.
Refer to "Data mode display" on page 2-17.

IMPORTANT: Check the fluid level of all cells following the steps below, even when the fluid level can be checked using the indicator.

Note: Under normal operating conditions, the maintenance-free battery does not require addition of water because of the special plate designed to minimize fluid loss. However, for those machines that are heavily used or operated under severe conditions (for example, in high ambient temperature), the fluid level often becomes low. If that is the case, check the fluid level of the maintenance-free battery and add water as needed.

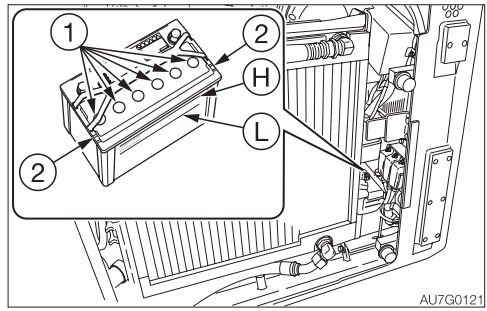

1. Open the rear door.
2. Inspect the fluid level.
   The fluid level must be between the upper level line (H) and lower level line (L). If not, add distilled water up to the line (H).
3. Check the battery terminal for looseness, dirt and corrosion.
4. Check the exhaust holes (2) for dirt.
5. Check the battery voltage. Confirm it is 12 V or more.
   Refer to "Data mode display" on page 2-17.

https://truckmanualshub.com/

Replenishing
When adding distilled water, do so before starting operations in order to prevent freezing.

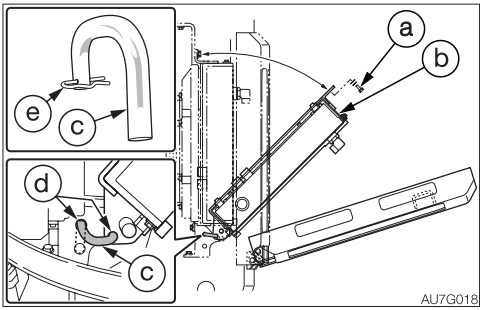

1. Remove the bolts (a) and open the radiator (b).
2. Remove the R-pin (e) from the stay (c).
3. Insert the stay (c) into the hole (d) to secure the radiator (b).
4. Loosen the sealing plugs (1) and add distilled water up to the highest level line (H).
5. Securely tighten the sealing plugs (1).

INSPECTING THE BUCKET STOPPERS (BOLTS/NUTS)

⚠ WARNING

Before performing maintenance or repairs under the machine, lower all movable working equipment to the ground or in the lowermost position.

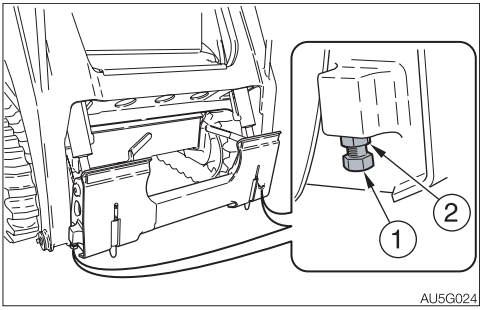

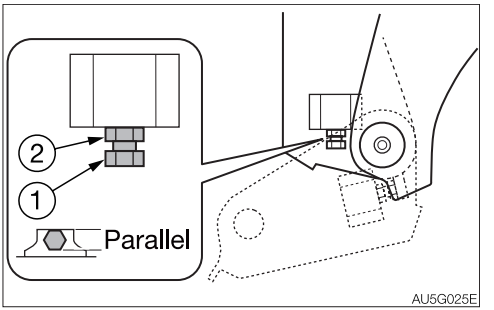

1. Park the machine on a flat and rigid ground, and remove the bucket.
2. Retract the bucket cylinders and lift cylinders to the minimum length.
3. Inspect the adjusting bolts (1) and lock nuts (2) for bending, denting, deformation and looseness.
4. If there are any irregularities with the adjusting bolts (1) and/or lock nuts (2), replace them with new ones. After replacement, they require adjustment. Contact a Takeuchi service agent for advice
   Refer to “Adjusting or replacing the bucket stoppers (bolts/nuts)” on page 5-40.

https://truckmanualshub.com/

EVERY 100 HOURS

CLEANING THE WATER SEPARATOR

⚠ WARNING

- **Do not smoke or permit open flames while handling fuel or working on the fuel system.**
- **Stop the engine in a well-ventilated place and allow it to cool down before performing maintenance.**
- **Clean up spilled fuel immediately.**
- **Be sure to secure the rear door or radiator before working the inside.**

<TL8>

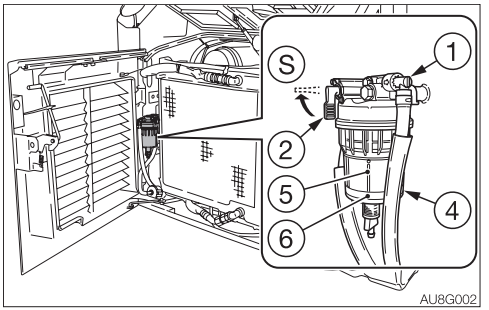

<TL10/TL12>

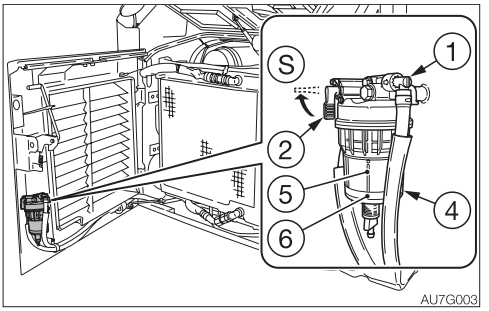

(S) : Closed

1. Open the rear door.
2. Close the valve (2).
3. Loosen the case (4), and then remove and clean the case (4), the element (5) and the indicator ring (6).
4. Inspect the O-ring and the element (5). If there are any scratches or other irregularities, replace them.
5. Install the element (5), the indicator ring (6) and the case (4).
6. Open the valve (2) to bleed air.
   Refer to “Bleeding air from the fuel system” on page 6-8.

AFTER THE INITIAL 250 HOURS (ONLY FOR NEW MACHINES)

REPLACING THE TRAVEL MOTOR GEAR OIL

⚠ WARNING

- **Stop the engine and allow the machine to cool down before performing maintenance.**
  - **The travel motor is hot immediately after the engine is stopped. Touching it will cause burns.**
  - **The gear oil is also hot and under high pressure immediately after the engine is stopped.**
    Be careful when loosening the plugs. Working on the machine under these conditions could result in burns or injuries.
- **The pressure in the reduction gear case of travel motor may cause oil or the plug to fly out. Loosen the plug slowly to release the pressure.**

IMPORTANT: If the percentage of the traveling time within the total operating time is high, replace the gear oil earlier than the specified time.

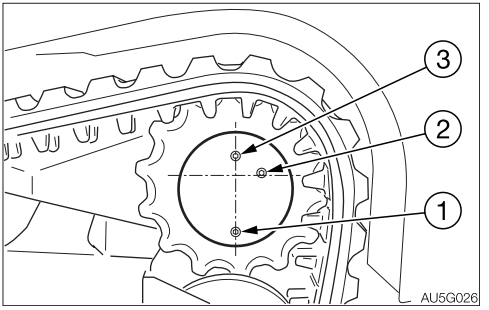

1. Set the travel motor so that plug (1) is at the very bottom.
2. Place a pan under the plug (1).
3. Remove the plugs (1), (2) and (3), and drain the oil.
4. Rewrap the plugs with new sealing tape.
5. Tighten the plug (1).
   - Tightening torque: 22 N·m (15.9 ft-lb.)
6. Add oil through the hole of the plug (3) until oil flows out of the hole of the plug (2).
7. Tighten the plugs (2) and (3).
   - Tightening torque: 22 N·m (15.9 ft-lb.)

https://truckmanualshub.com/

EVERY 250 HOURS

INSPECTING AND ADJUSTING THE FAN BELT

Refer to “Inspecting and adjusting the fan belt” on page 5-24.

INSPECTING AND ADJUSTING THE COMPRESSOR BELT (AC)

Refer to “Inspecting and adjusting the compressor belt” on page 5-26.

https://truckmanualshub.com/

REPLACING THE AIR CLEANER ELEMENT

⚠ WARNING

Stop the engine and allow the machine to cool down before performing maintenance.

- **The engine, muffler, radiator and many other parts of the machine are hot immediately after the engine is stopped. Touching these parts will cause burns.**

IMPORTANT: Do not use an element if its pleats, gaskets or seals are damaged.
IMPORTANT: Be sure to install the element and dust cap securely. If not, dust could be drain into the cylinder, damaging the engine.

1. Open the engine hood.

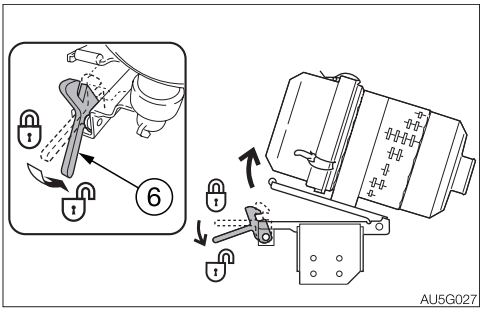

2. Push down the lever (6) to tilt up the air cleaner.

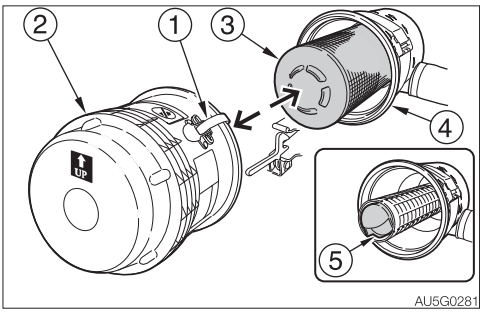

3. Loosen the clamps (1) and remove the dust cup (2).
4. Clean the inside of the dust cup (2).
5. Remove the primary element (3).
   Do not remove the secondary element yet.
6. Clean the inside of the body (4).
7. Remove the secondary element (5).
8. Install the new elements. Press them firmly into the body (4).
9. Install the dust cup (2) with its “UP ⬆” mark facing up, and then fasten it with the clamps (1).

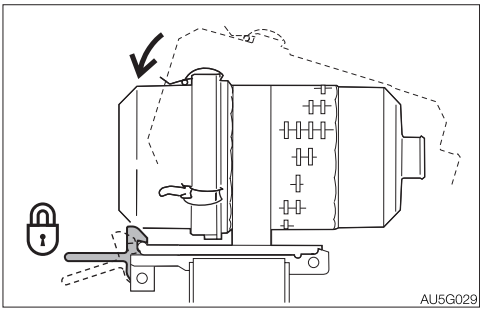

10. Push down the air cleaner and securely lock it.

https://truckmanualshub.com/

CLEANING THE RADIATOR FINS AND OIL COOLER FINS

⚠ WARNING

- Wear required appropriate equipment such as protective goggle and filter mask when using compressed air, as metal fragments or other objects can fly and cause serious injury.
- Be sure to secure the rear door or radiator before working the inside.

IMPORTANT: Be careful not to damage the fins when cleaning.

- When using compressed air or pressurized water, make sure the pressure is no higher than 200 kPa (28 psi) and hold the nozzle sufficiently away from the fins.

IMPORTANT: When using water, cover the electrical system to prevent water from getting in.

IMPORTANT: When operating the machine in very dusty places, perform inspection and maintenance operations every day.

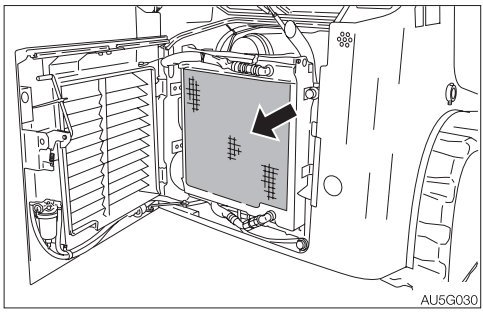

1. Open the rear door.
2. Blow compressed air on the fins to remove mud and dirt stuck on them.

CLEANING THE CONDENSER (AC)

⚠ WARNING

- Wear required appropriate equipment such as protective goggle and filter mask when using compressed air, as metal fragments or other objects can fly and cause serious injury.
- Be sure to secure the rear door or radiator before working the inside.

IMPORTANT: Be careful not to damage the fins when cleaning.

- When using compressed air or pressurized water, make sure the pressure is no higher than 200 kPa (28 psi) and hold the nozzle sufficiently away from the fins.

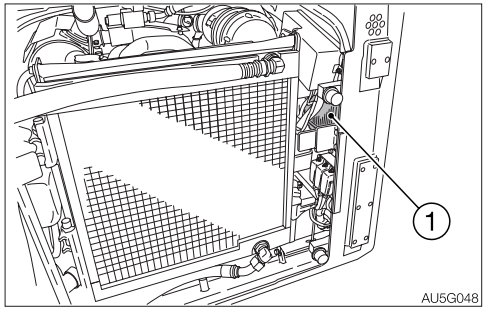

1. Open the rear door.
2. Clean the condenser (1).

Note: If the condenser is dirty, heat will not discharge properly and the air conditioner will not work efficiently.

https://truckmanualshub.com/

CLEANING THE AIR FILTERS (AC)

⚠ WARNING

Wear required appropriate equipment such as protective goggle and filter mask when using compressed air, as metal fragments or other objects can fly and cause serious injury.

Clean the filters immediately after operating in dusty places.
If the filters are clogged, the air flow is reduced and a booming sound is heard from the air conditioner unit.

Removing the filters

Outer filter

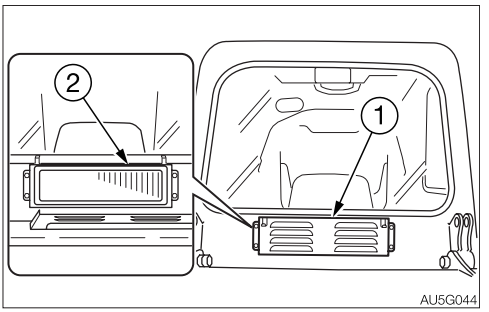

1. Remove the cover (1).
2. Remove the filter (2).

Inner filter

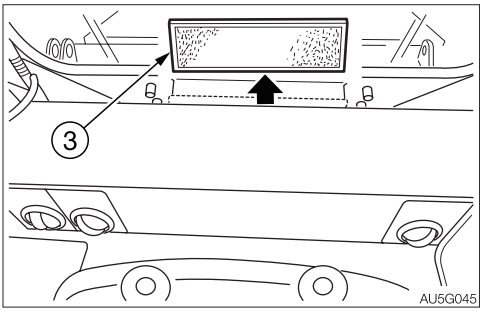

1. Lift the filter (3) and remove it.

Cleaning

1. Blow dry, compressed air (138 kPa or 20 psi or less) directly on the filters from the inside, moving up and down along the pleats.
   Be sure to keep the nozzle at an adequate distance from the filters.
2. Wash the filter with neutral detergent if it is very dirty. Dry the filter completely after washing it.

Replacing

Replace the filter with a new one once a year or if it is still clogged after blow-drying with compressed air and washing.

https://truckmanualshub.com/

INSPECTING THE REFRIGERANT (GAS) LEVEL (AC)

⚠ WARNING

- **Exposure of the eyes or hands to the cooler's refrigerant could result in blindness or frostbite.**
  Never touch the refrigerant or loosen the parts of the cooling circuit.
- **Keep flames away if the refrigerant gas is leaking.**
- **The high-pressure pipes of the air conditioner can be very hot (80 to 120°C or 176 to 248°F). Be careful not to burn yourself.**

The cooling capacity decreases if the amount of refrigerant is insufficient.
Inspect the refrigerant level using the sight glass (2) on the top of the receiver drier (1).

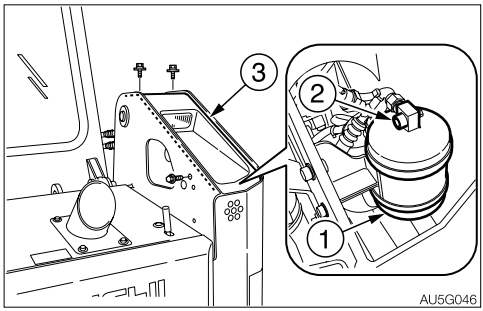

1. Loosen the bolts and remove the cover (3).
2. Inspect the places for the conditions below.

Places for inspection	Conditions
Cab door	Fully open
Temperature control dial	Set fully to the COOL side
Fan speed	High
Engine speed	Maximum speed
Air conditioner switch	ON

3. Inspect the refrigerant by watching the flow of air bubbles through the sight glass (2).
   Refer to "Check list for refrigerant volume" on page 5-38.
4. Tilt up the canopy.
   Refer to "Tilting up the canopy" on page 5-55.

<TL8>

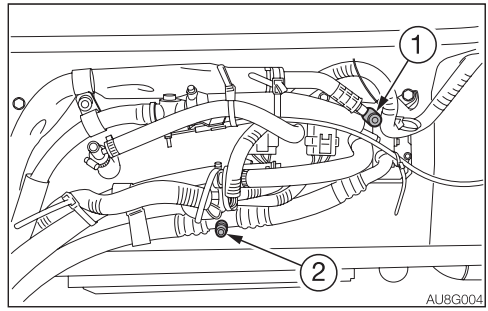

<TL10/TL12>

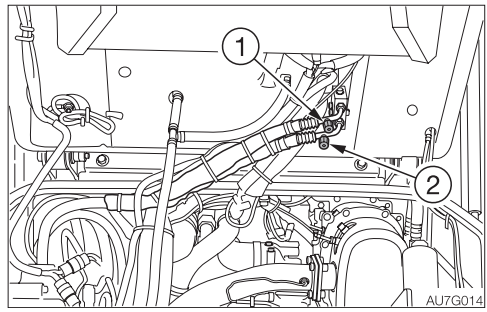

5. Check the temperature of the compressor's high pressure pipe (1) and low pressure pipe (2).
   Refer to "Check list for refrigerant volume" on page 5-38.

https://truckmanualshub.com/

Check list for refrigerant volume

Air conditioner	Normal	Abnormal		
High/low pressure pipe temperature	High pressure pipe is hot (80 to 120°C or 176 to 248°F), low pressure pipe is cold (8 to 15°C or 46 to 59°F). Clear difference in temperature between the pipes.	High pressure pipe is warm, low pressure pipe is slightly cool. No significant difference in temperature between the pipes.	Little difference in temperature between the high-pressure pipe and the low-pressure pipe.	High pressure pipe is hot, low pressure pipe is slightly cool. A significant difference in temperature between the pipes.
Pipe connection	Normal	Some places are dirty with oil.	Some places are extremely dirty with oil.	Normal
Sight glass	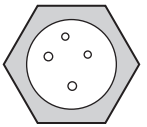 AG7G064	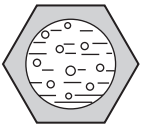 AG7G065	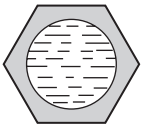 AG7G066	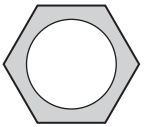 AG7G067
	Almost transparent with some bubbles. Fully transparent when the engine speed is increased or decreased.	Flow of bubbles can be seen constantly. Sometimes transparent or white with bubbles.	Mist-like flow is faintly visible.	No bubbles are visible, even when the fan is set to High and the engine is idling.
Refrigerant level	Proper level	Refrigerant may be leaking.	Refrigerant has leaked; little is left.	Refrigerant level too high

If the air conditioner is not working
If the air conditioner does not work well, set the fan switch to OFF and contact your sales or service dealer for inspection and/or repairs.

IMPORTANT: Continued use of the air conditioner when it is not working properly will damage its various parts.
IMPORTANT: Using the air conditioner when there is no refrigerant will damage the compressor.
IMPORTANT: Always consult your sales or service dealer for replacing the refrigerant. Be sure to use R134a refrigerant (800 g or 1.76 lb).

https://truckmanualshub.com/

EVERY 500 HOURS

REPLACING THE ENGINE OIL AND THE OIL FILTER

Refer to “Replacing the engine oil and the oil filter” on page 5-21.

REPLACING THE HYDRAULIC OIL RETURN FILTER

Refer to “Replacing the hydraulic oil return filter” on page 5-22.

REPLACING THE PILOT LINE FILTER

Refer to “Replacing the pilot line filter” on page 5-23.

REPLACING THE TRAVEL MOTOR GEAR OIL

Refer to “Replacing the travel motor gear oil” on page 5-32.

REPLACING THE FUEL FILTERS

⚠ WARNING

- **Do not smoke or permit open flames while handling fuel or working on the fuel system.**
- **Stop the engine in a well-ventilated place and allow it to cool down before performing maintenance.**
- **Clean up spilled fuel immediately.**

<TL8>

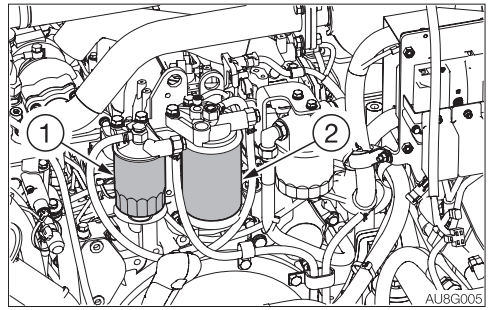

<TL10/TL12>

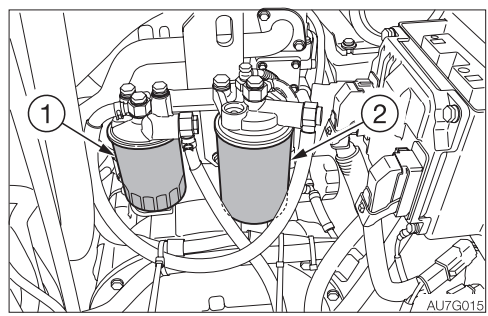

1. Tilt up the canopy.
   Refer to “Tilting up the canopy” on page 5-55.
2. Turn the Pre-fuel filter (1) counterclockwise with the filter wrench and remove it.
3. Clean the surface of installation of the filter stand.
4. Apply a thin layer of oil on the packing of the new filter.
5. Install the new element on the filter stand and tighten the filter firmly by hand.
6. Turn the main filter (2) counterclockwise with the filter wrench and remove it.
7. Clean the filter-fitting surface of the filter stand.
8. Apply a thin layer of oil on the packing of the new filter.
9. Install the new element on the filter stand and tighten the filter firmly by hand.
10. Bleed the air.
    Refer to “Bleeding air from the fuel system” on page 6-8.

https://truckmanualshub.com/

ADJUSTING OR REPLACING THE BUCKET STOPPERS (BOLTS/NUTS)

DANGER

- **If you must work beneath the raised lift arms, use the lift arm stopper to securely support the lift arms. Never get under the lift arms and bucket if they are not sufficiently supported.**
- **Immediately repair or replace with a new one if any damage or missing part is found in the lift arm stopper. Failure to do so may cause the lift arms to fall, resulting in a serious injury or death.**

WARNING

- **Park the machine on a solid flat ground for work.**
- **Work as a 2-person team, and stay in communication with each other.**
  - **One person must sit at the operator's seat and stop the engine whenever necessary, and must take care not to touch the lever or pedal unless necessary. Set the engine speed to low when operating the control lever.**
  - **The one who performs maintenance must make sure to keep his/her body or clothing away from the moving parts of the machine.**

For the adjustment of the bucket stoppers, install the lift arm stopper (2) used for the lift arms adjustment on the lift cylinder while the pin hole (1) of the lift arms should be positioned at the height of approximately 1600 mm (63 in.) above the ground, as shown in the figure on the right. Adjustment work should be done while maintaining the machine at this configuration. To perform the inspection safely, obtain the lift arm stopper (2) and the lock pin (3) in advance. The work should be done by two people. One of them must sit at the operator's seat and start/stop/operate the machine whenever necessary, while the other person installs/removes the lift arm stopper (2) and adjusts the bucket stoppers.

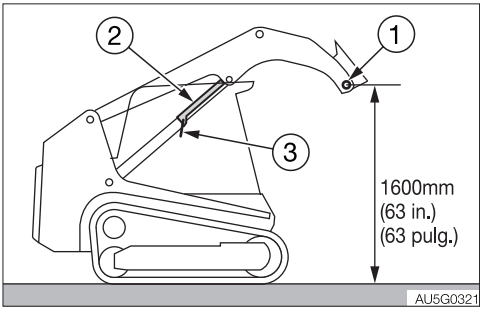

Part name	Part No.	Q'ty
Lift arm stopper (2)	TL8: 06560-06550	1
	TL10: 08809-61910	1
	TL12: 08819-63750	1
Lock pin (3)	06560-00380	1

1. Park the machine on a solid flat ground, and remove the bucket.
2. Lower the lift arms to their lowest position, and stop the engine.

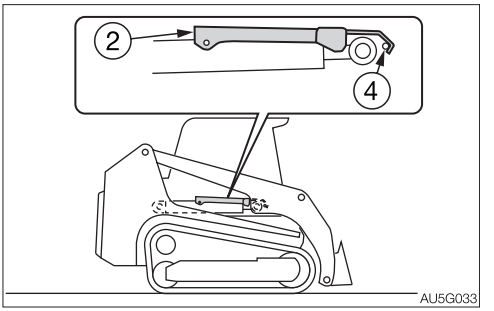

3. Hook the lift arm stopper (2) on the steel bar (4) of the lift arms, and place it on the cylinder.

https://truckmanualshub.com/

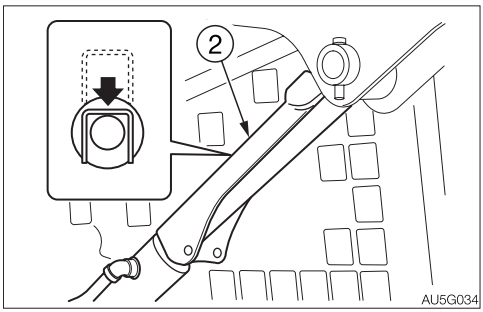

4. Start the engine, and raise the lift arm until the lift arm stopper (2) falls on the cylinder rod.
5. Slowly lower the lift arms until the lift arm stopper (2) hits against the edge of the cylinder tube and becomes fixed, and then stop the engine.

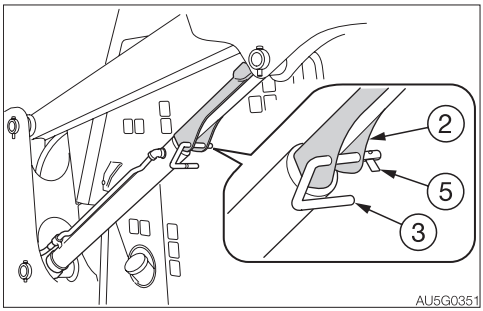

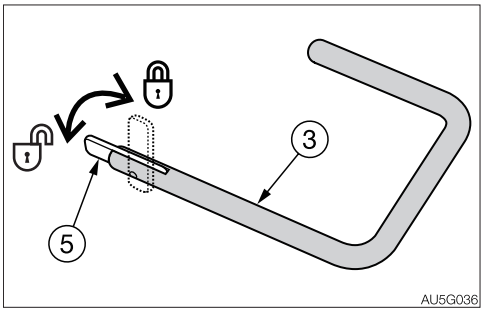

6. Insert the lock pin (3) in the front hole of the lift arm stopper (2) and pass it through under the cylinder rod to the back hole.
7. To prevent the lock pin (3) from falling off, set the hook (5) at a right angle to the lock pin.

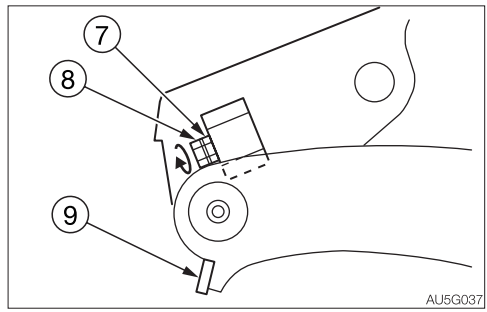

8. Loosen the lock nuts (7) and fully screw in the stopper bolts (8).
9. Start the engine, extend the bucket cylinders to the maximum length, and then stop the engine.
10. Adjust the plates (9) (right and left) and the stopper bolt (8) so that each plate evenly contacts with the stopper bolt.
11. Start the engine, retract the bucket cylinders to the minimum length, and then stop the engine.

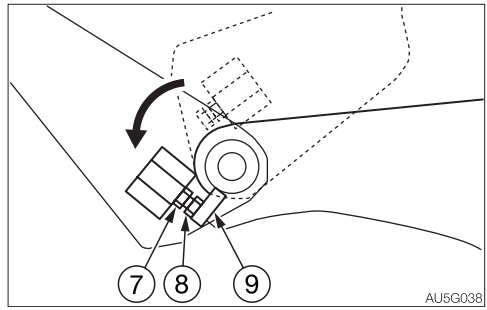

12. Adjust the height of the stopper bolts (8) so that they protrude 1 mm (2/3 turn), and tighten them with the lock nuts (7).
    Stopper bolt, lock nut:
    ..... ThreeBond #1324
    Tightening torque:
    ..... Lock nut 416 N·m (306.7 ft-lb)

https://truckmanualshub.com/

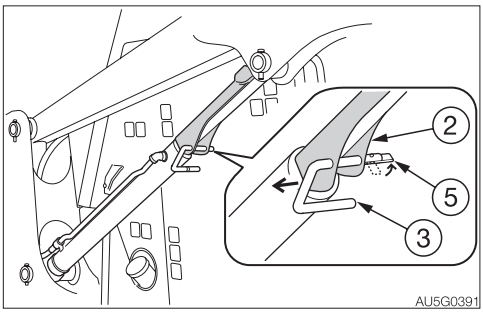

13. Start the engine, lift the lift arms until the lift arm stopper (2) is disconnected, and then stop the engine.
14. Align the orientation of the hook (5) with that of the lock pin (3), and then pull out the lock pin (3) from the lift arm stopper (2).
15. Remove the lift arm stopper (2).
16. Start the engine, lower the lift arms to their lowest position, and then stop the engine.

https://truckmanualshub.com/

EVERY 1000 HOURS

CLEANING THE ENGINE COOLING SYSTEM

⚠ WARNING

- **Stop the engine and allow the machine to cool down before performing maintenance.**
  - **The engine, muffler, radiator and many other parts of the machine are hot immediately after the engine is stopped. Touching these parts will cause burns.**
  - **The engine coolant is also hot and under high pressure immediately after the engine is stopped. Be careful when loosening the caps or plugs. Working on the machine under these conditions could result in burns or injuries due to the hot coolant spurting out.**
- **If maintenance must be performed with the engine running, always work as a two person team communicating each other.**
  - **One person must sit in the operator's seat so that he/she can immediately stop the engine when necessary. He/she must take care not to touch the lever or pedal unless necessary.**
  - **The one who performs maintenance must make sure to keep his/her body or clothing away from the moving part of the machine.**
- **Standing at the back of the machine while the engine is running is extremely dangerous, as the machine could move suddenly. Never stand at the back of the machine while the engine is running.**
- **Do not remove the radiator cap or the drain plug when the cooling water is hot. Stop the engine and wait until the engine and the cooling water cool. Then, slowly loosen the radiator cap and the drain plug to remove them.**
- **Be sure to secure the rear door or radiator before working the inside.**

Note: When cleaning, if the temperature of the coolant is low, the thermostat will be closed and the coolant will not circulate in the radiator. Heat the coolant water to at least 90°C (194°F) before cleaning.

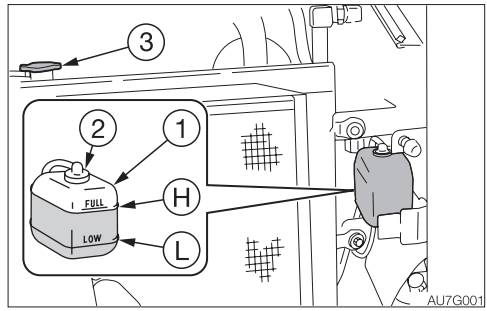

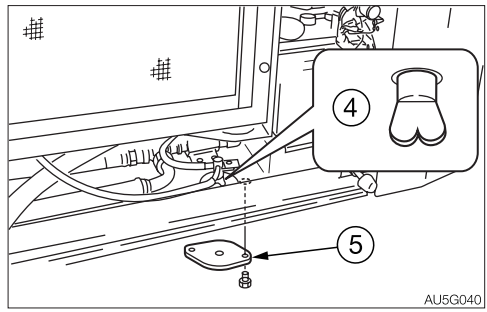

1. Open the rear door and remove the under cover (5).
2. Gradually loosen the radiator cap (3) to release the internal pressure, and then remove the cap.
3. Place a pan for catching the waste coolant under the drain plug (4), and then loosen the drain plug (4) to drain the coolant.
4. Tighten the drain plug (4).
5. Add tap water to the radiator through the coolant fill port up to the top of the port. Take time and slowly add water, so that no air enters the radiator.
6. Close the radiator cap (3).
7. Start the engine and run it at a speed slightly above low idling. Raise the water temperature to at least 90°C (194°F), and then run the engine for about 10 minutes with the thermostat open.

https://truckmanualshub.com/

8. Stop the engine, wait until the cooling water temperature becomes lower, and then remove the drain plug (4) to drain the water.
9. After draining, clean the cooling system using a cleaning agent. When using the cleaning agent, follow the instructions included with the agent.
10. Repeat the steps 3 to 8 to rinse the cooling system.
11. Tighten the drain plug (4).
12. Take time and slowly add the new coolant (mixture of antifreeze and tap water) to the radiator through the fill port until it is full.
13. Close the radiator cap (3).
14. Warm up the engine. Use the meters to check that there are no irregularities in the cooling system at this time.
15. Increase the water temperature to at least 90°C (194°F). Then, run the engine for about 10 minutes with the thermostat open.
16. Stop the engine, wait until the cooling water temperature becomes lower, and then check the level of coolant in the radiator.
    If necessary, add cooling water until the radiator is full.
17. Close the radiator cap (3).
18. Clean the interior of the reserve tank (1), and then add coolant to the upper limit (H).
19. When the coolant has been replaced, inspect the coolant level once again after operating the machine.
    Once the machine is operated, the coolant is distributed throughout the entire system, resulting in the lower coolant level.
    Replenish the cooling water that has been used.

https://truckmanualshub.com/

REPLACING THE HYDRAULIC OIL AND CLEANING THE SUCTION STRAINER

⚠ WARNING

- **Stop the engine and allow the machine to cool down before performing maintenance.**
  - **The engine and the hydraulic system and many other parts of the machine are hot immediately after the engine is stopped. Touching these parts will cause burns.**
  - **The hydraulic oil is also hot and under high pressure immediately after the engine is stopped.**
    Be careful when loosening the caps or plugs. Working on the machine under these conditions could result in burns or injuries due to the hot oil spurting out.
- **Oil may spurt out if caps or filters are removed or pipes are disconnected before releasing the pressure in the hydraulic system.**
  - **When removing plugs or screws, or when disconnecting hoses, stand to the side and loosen them slowly to gradually release the internal pressure before removing.**
- **Be sure to secure the rear door or radiator before working the inside.**

1. Drain the engine coolant.
   Refer to “Cleaning the engine cooling system” on page 5-43.

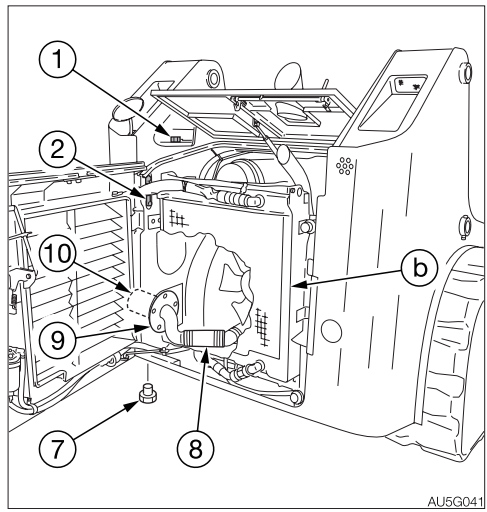

2. Place a pan for catching the waste oil under the drain plug (7).
3. Loosen the drain plug (7) and drain the hydraulic oil.

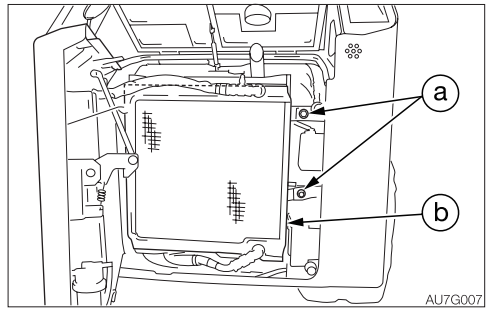

4. Remove the bolts (a) and open the radiator/oil cooler (b).

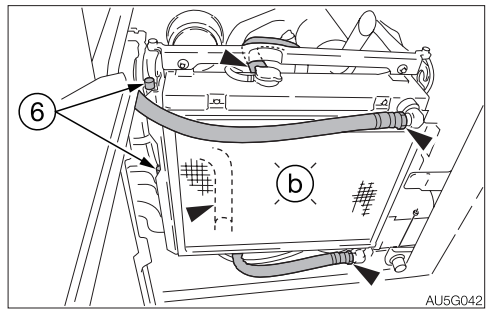

5. Disconnect the hoses that are connected to the radiator/oil cooler (b).

https://truckmanualshub.com/

6. Temporarily suspend the radiator/oil cooler (b).
7. Remove the split pin and pull out the pins (6).
8. Lift the radiator/oil cooler (b) and remove it.

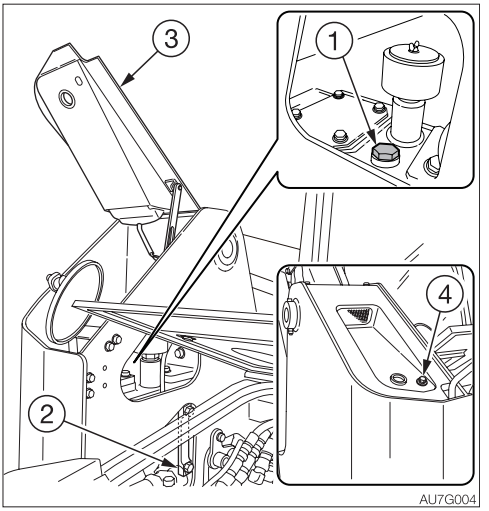

9. Remove the plug (1).

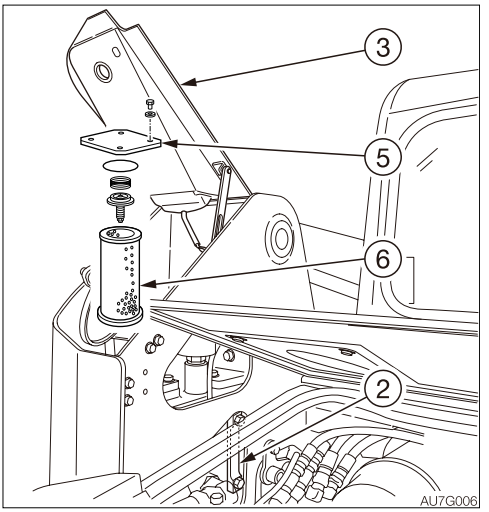

10. Remove the return filter (6).
    Refer to “Replacing the hydraulic oil return filter” on page 5-22.
11. Loosen the hose clip and remove the hose (8).
12. Loosen the bolts and remove the flange (9).
13. Remove the suction strainer (10) and clean it.
14. Clean the inside of the hydraulic tank.
15. Install the suction strainer (10) on the flange (9).
16. Install the flange (9) on the hydraulic oil tank.
17. Connect the hose (8) to the flange (9).
18. Tighten the drain plug (7).
19. Mount a new return filter and install the flange (5).
20. Add hydraulic oil from the hole of plug (1) up to the level between the upper limit (H) and the lower limit (L) in the sight gauge (2).
21. Tighten the plug (1).
22. Bleed the air from the hydraulic oil circuit following “Bleeding the air” below.
23. Set the machine to the hydraulic oil level inspection posture and inspect the oil level when the oil temperature drops.
    Refer to “Inspecting the hydraulic oil tank level and replenishing” on page 5-19.

https://truckmanualshub.com/

Bleeding the air

IMPORTANT: After replacing the hydraulic oil, bleed the air from the hydraulic circuit and hydraulic devices. Failure to do so may damage the hydraulic devices.

• Hydraulic pump
<TL8>

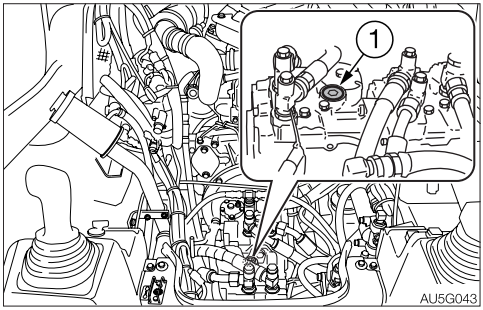

<TL10/TL12>

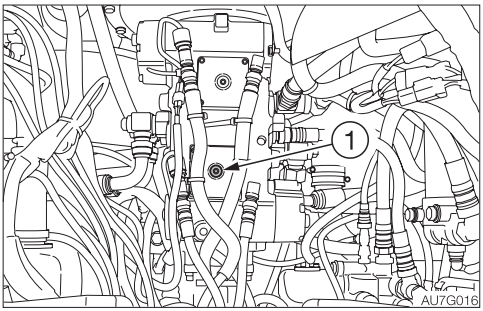

1. Tilt up the canopy.
   Refer to “Tilting up the canopy” on page 5-55.
2. Loosen the vent plug (1) on the hydraulic pump.
3. Once hydraulic oil overflows from the vent plug hole (1), tighten the vent plug (1).

• Cylinders
1. Start the engine, and let it run at a low-idling speed for 10 minutes.
2. Maintain the engine at low idle, then extend and retract each cylinder 4 or 5 times, without let them reach the stroke end.
3. Run the engine at high speed, then extend and retract each cylinder 4 or 5 times, without let them reach the stroke end.
4. Set the engine back to a low idle, then extend and contract all the cylinders 4 or 5 times to the stroke ends.

INSPECTING AND ADJUSTING THE ENGINE VALVE CLEARANCE

This operation requires experience. Ask your sales or service dealer for it.

https://truckmanualshub.com/

EVERY 1500 HOURS

REPLACING THE OIL SEPARATOR ELEMENT

1. Open the rear door and radiator. (TL8)
   Refer to “Inspecting and adjusting the fan belt” on page 5-24.
1. Tilt up the canopy. (TL10/TL12)
   Refer to “Tilting up the canopy” on page 5-55.

<TL8>

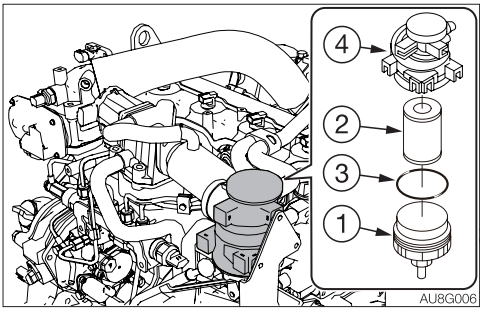

<TL10/TL12>

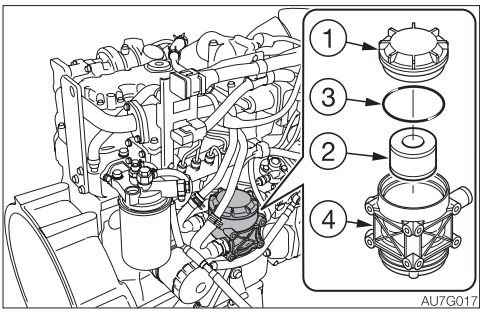

2. Remove the cover (1) and remove it.
3. Remove the element (2) and the gasket (3).
4. Wipe off the oil and grease on the case (4).
5. Set the new element and gasket in the case (4).
6. Tighten the cover (1).

INSPECTING THE INJECTOR TIP

This operation requires experience. Ask your sales or service dealer for it.

INSPECTING THE EGR COOLER

This operation requires experience. Ask your sales or service dealer for it.

INSPECTING THE PCV VALVE (TL10/TL12)

This operation requires experience. Ask your sales or service dealer for it.

https://truckmanualshub.com/

EVERY 3000 HOURS

INSPECTING THE TURBOCHARGER

This operation requires experience. Ask your sales or service dealer for it.

CLEANING THE DPF

This operation requires experience. Ask your sales or service dealer for it.

- Do not modify the DPF without permission. If modified, it may be damaged or malfunction may occur. As a result, an expensive repair work may be required.
- Do not reuse the DPF that has been dropped to the ground. There is catalyst fitted inside the DPF. It can be damaged if strong shocks are applied to it.

INSPECTING THE EGR SYSTEM

This operation requires experience. Ask your sales or service dealer for it.

https://truckmanualshub.com/

WHEN REQUIRED

REPLACING THE BUCKET OR ATTACHMENT

⚠ WARNING

- **Use only the attachments recommended by us. Using the attachments not approved by us may cause safety problems. Also, it may adversely affect the machine's operation or service life.**
- **Before performing maintenance or repairs under the machine, lower all moveable working equipment to the ground or in the lowermost position.**

For the installation and removal of the standard bucket provided by us, follow the procedure below.
For the other attachments, consult Takeuchi or one of our service agents.

Installation

Before installing a bucket, clean the connecting sections of the bucket (1) and the quick-hitch (3) and their surrounding area.

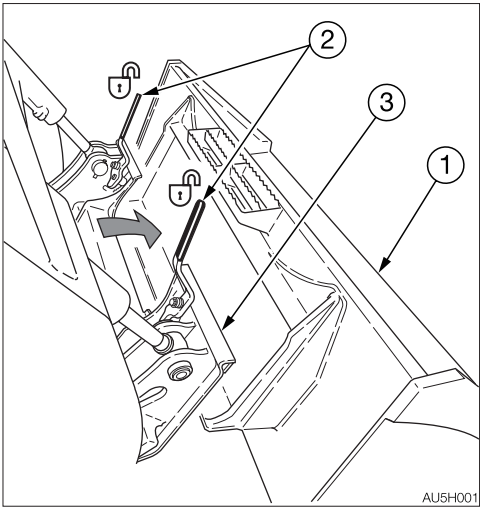

1. Make sure the quick-hitch (3) lock levers (2) are in the unlock position.
2. Sit in the operator's seat, lower the safety bar, and then start the engine.
3. Tilt the quick-hitch (3) forward.

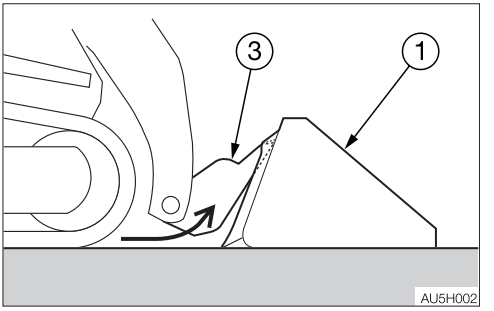

4. Slowly move the machine forward and raise the lift arms. Engage the wedge-shaped top edge of the quick-hitch (3) onto the bucket (1) upper part (quick-hitch mount).

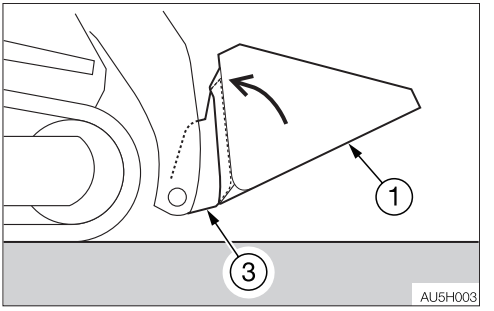

5. Tilt the quick-hitch (3) backward while lifting the bucket (1) off the ground. The quick-hitch (3) will slide into position.
6. Keep the bucket (1) at the height of 20 to 50 mm (0.8 to 2 in.) above the ground.
7. Stop the engine and raise the safety bar.

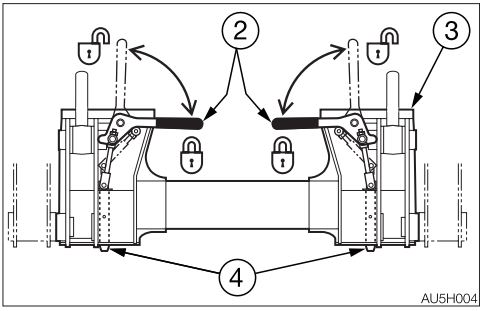

8. Push both lock levers (2) until they are horizontal to engage the latch.

https://truckmanualshub.com/

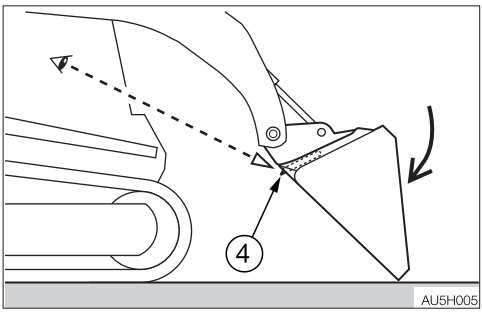

9. Check that the tips of the pins (4) are projecting through the bracket holes on the bucket to indicate that the latch is properly engaged.
10. If the pins (4) do not come down to the lock position, do not continue working; disconnect the quick-hitch and determined the cause instead.

Removal

1. Keep the bucket (1) at the height of 25 to 50 mm (1 to 2 in.) above the ground.
2. Stop the engine, raise the safety bar and release the seat belt.

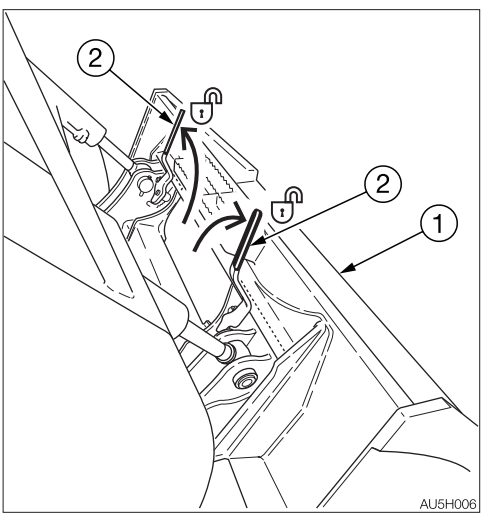

3. Pull both lock levers (2) until they are vertical to release the latch.
4. Sit in the operator's seat, lower the safety bar, fasten the seat belt, and then start the engine.

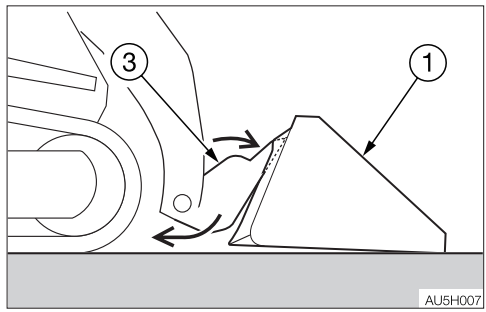

5. Tilt the quick-hitch forward to disconnect its upper edge from the bucket (1) upper part (quick-hitch mount).

https://truckmanualshub.com/

INSPECTING AND REPLENISHING THE WINDSHIELD WASHER FLUID

⚠ WARNING

Choose ethyl alcohol as washer solution. Do not use methyl alcohol as washer solution. It could damage the eyes.

Use a windshield washer fluid designed specifically for motor vehicles. Follow the instructions included with the washer fluid.

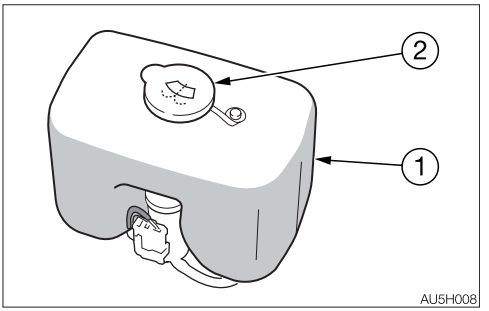

Inspection

1. Open the cab door.
2. Inspect the washer tank (1) and add washer fluid if the level is low.

Replenishing

1. Mix the washer fluid to the prescribed concentration.
2. Remove the cap (2) and add washer fluid. Keep the dust away while replenishing the washer fluid.
3. Install the cap (2).

LUBRICATING THE LEVERS

⚠ WARNING

Set the machine to the parking posture, stop the engine, remove the ignition key and store it. Failure to do so may result in the machine moving abruptly, leading to serious injury or death.

If the levers no longer move smoothly, grease them.

Control levers

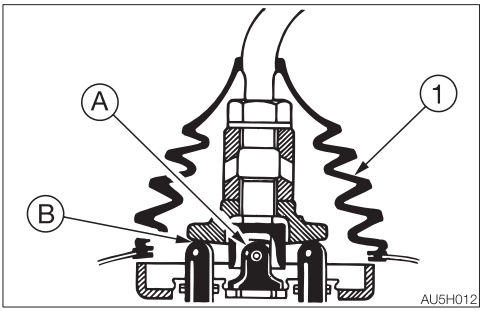

1. Remove the lower mount section of the boot (1) and turn it upward.
2. Wipe off the old grease.
3. Apply grease to points (A) and (B).
4. Set the boot (1) back as it was.

https://truckmanualshub.com/

INSPECTING THE RUBBER TRACKS

Repair or replace the rubber tracks if their condition becomes as described below. Consult your sales or service dealer for repair or replacement.

Rubber track

Replace the track if the entire track is stretched and cannot be adjusted.

(1) Lug

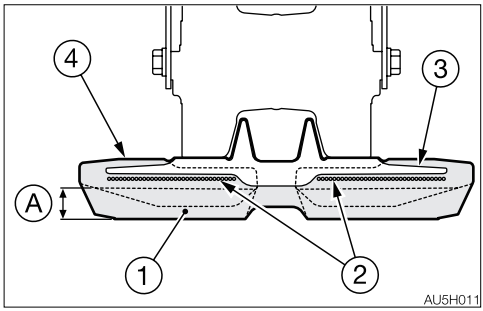

Replace if the height of (A) is 5 mm (0.2 in.) or below.

(2) Steel cord

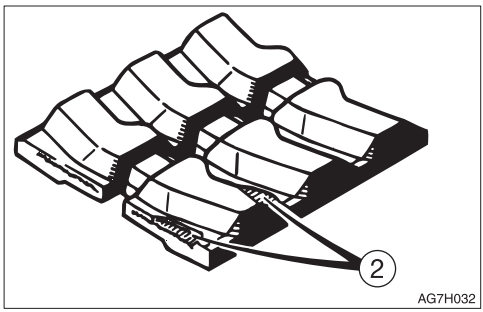

Replace if the steel cord is exposed for two links or more.
Replace if the half or more of the steel cords on one side are cut.

(3) Metal core

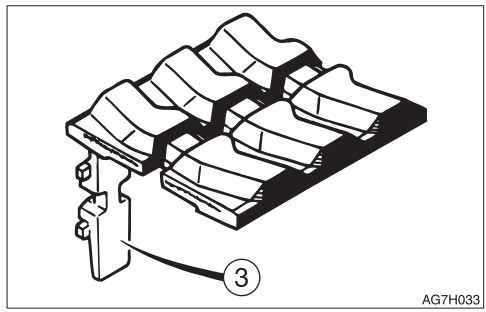

Replace if even one metal core is off.

(4) Rubber

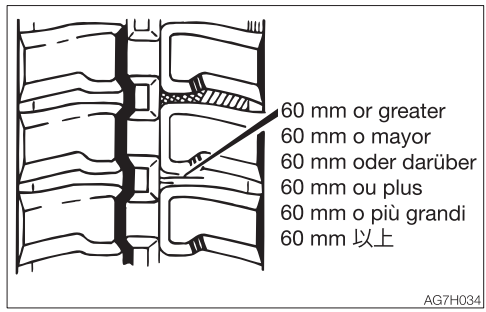

Repair if there are cracks of 60 mm (2.4 in.) or greater in length.
If the steel cord is visible, repair as soon as possible, regardless of the length of the crack.

https://truckmanualshub.com/

EVERY YEAR

REPLACING THE RECEIVER DRIER

This operation requires experience. Ask your sales or service dealer for it.

TILTING UP THE CANOPY (CAB)

For inspection and maintenance, the canopy is designed so that it can be tilted up.

⚠ WARNING

- **Raising or lowering the canopy while the engine is running may cause the machine to move, resulting in serious injury or death. Stop the engine before raising or lowering the canopy.**
- **When the canopy is tilted up, support it firmly with the stopper to prevent it from falling.**

Raising (Tilt up)

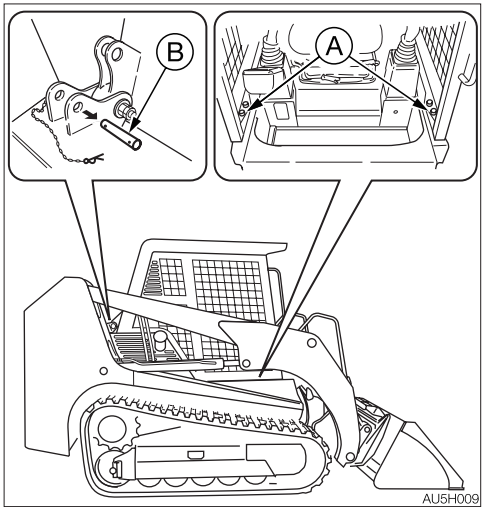

1. Select a firm, level surface, set the machine to the posture shown in the diagram above, ground the working equipment, then stop the engine.
2. Raise the safety bar to the lock position.
3. Remove the lock bolts (A).
4. Take out the R-pin and pull out the stopper pin (B).

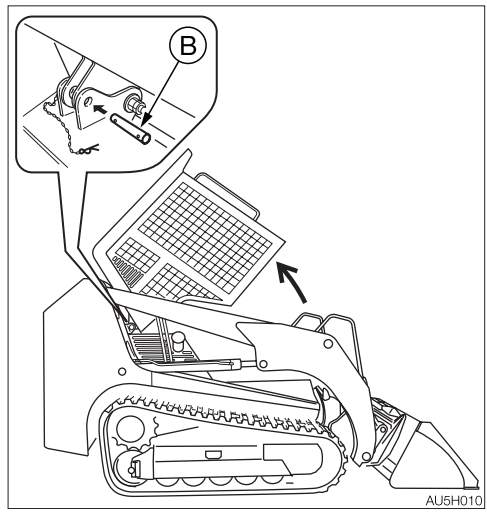

5. Slowly raise the canopy.
6. Insert the stopper pin (B) through the holder hole on the machine body and the canopy, and then insert the R-pin through the hole of the stopper pin (B) to fasten it in place.

If you need to run the engine while the canopy is raised follow the steps below.

7. Make sure that all levers and pedal are in neutral positions.
8. Push the throttle lever to the low idling position.
9. Start the engine.
10. Be sure to stop the engine after inspection and maintenance.

Lowering

1. Take out the R-pin and pull out the stopper pin (B)
2. Slowly lower the canopy.
3. Insert the stopper pin (B) through the holder hole on the machine body, and then insert the R-pin through the hole of the stopper pin (B) to fasten it in place.
4. Tighten the lock bolts (A).

MAINTENANCE DURING EXTENDED STORAGE PERIOD

Storage procedures

If the machine is to be stored for 30 days or more, store it indoors. If it must be stored outdoors, park the machine on a surface laid with lumber on a flat ground, and place a waterproof cover over it so that it stays dry.

1. Clean the machine.
2. Inspect for oil leakage, water leakage, cracks and loose nuts and bolts.
3. Add fuel and replace the hydraulic oil and oil.
4. To prevent rusting and freezing, replace the engine coolant with long-life coolant (LLC).
   Refer to “Cleaning the engine cooling system” on page 5-43.
5. Use the grease gun to lubricate the grease fittings.
6. Fully retract the bucket cylinders and lift cylinders, and then lower the bucket to the ground.
7. Apply rust-inhibiting oil to the hydraulic cylinder rods.
8. Disconnect the negative cable from the battery and cover the battery to prevent freezing.

During storage

⚠ WARNING

- **Do not operate the machine in an enclosed area without adequate ventilation.**
- **If natural ventilation is not possible, install ventilators, fans, exhaust extension pipes or other venting devices.**

1. To prevent rusting, operate the machine once a month so that the oil can be circulated throughout the system.
2. Inspect the battery and recharge it as necessary.
   Ask your sales or service dealer for recharging.

Starting the machine after storage

IMPORTANT: If the above “Storage procedures” have not been followed during the extended storage periods, consult your sales or service dealer before starting the machine again.

1. Wipe off the rust-inhibiting oil that was applied on the piston rods of the hydraulic oil cylinders.
2. Add oil or grease as necessary.

Returning the engine to service

1. Perform the daily checks.
2. The engine should be pre-oiled before startup.
   a. Crank the engine, leaving the fuel system shut off so the engine will not start, for 15 seconds.
   b. Then pause for 30 seconds.
   c. Repeat the procedure until you have cranked the engine for a total of one minute. This will circulate the oil in the engine’s lubrication system.
3. Prime the fuel system.
4. Start the engine. Allow the engine to idle for approximately 15 minutes while you check for:
   - Proper oil pressure
   - Fuel, engine oil or coolant leaks
   - Proper operation of the indicators and/or gauges
5. Avoid prolonged operation at minimum or maximum engine speeds and loads for the remainder of the first hour of operation.

https://truckmanualshub.com/

TROUBLESHOOTING

SYMPTOMS THAT ARE NOT MALFUNCTIONS

The symptoms listed below are not malfunctions.

- The lift arms go up or stop by themselves at the stroke end, when the bucket operation is performed at the same time as the lowering of the lift arms.
- The travel motor produces noise when stopped suddenly from its high speed traveling.
- The control valve produces noise if excessive force is applied to the working equipment or when it moved to the stroke end.
- It becomes less easy to operate the machine when an attachment weighing more than a standard bucket is installed.
- In some cases smoke may be emitted from the tail pipe while the DPF regeneration is being performed. This is not a failure; it is due to burning of the particulate matter (PM).
- In some cases the noise associated with the DPF regeneration operation or cancel operation may change; this is not a failure.

IF THE ENGINE OVERHEATS

⚠ WARNING

- **Do not open the engine hood when steam is coming from it. The steam or hot water may spurt out and cause burns.**
- **Do not try to remove the radiator cap or the drain plug when the cooling water is hot. Stop the engine, wait until the engine and the radiator cool, and then slowly loosen the radiator cap to release the internal pressure.**
- **Before performing maintenance, stop the engine and allow the machine to cool down.**

The symptoms listed below indicate overheating.

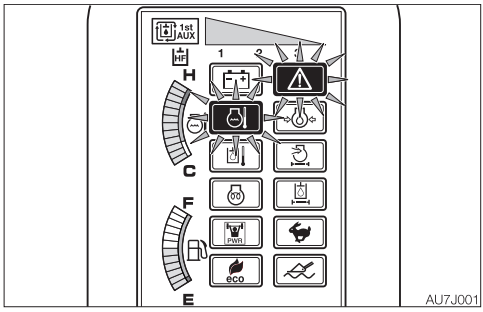

- An alarm is sounded and the vehicle and engine emergency lamp and the coolant temperature warning lamp start flashing.
- The water temperature gauge LED is in the red zone.
- Steam comes from the engine room.

Remedy procedure

1. Park the machine in a safe place.
2. Check if steam is coming out of the closed engine hood.
3. If there is steam, stop the engine immediately and contact your sales or service dealer for repair.
   If steam, is not coming out run the engine at low idle and let the water temperature cool down.
4. When the water temperature gauge LED drops in the green zone, stop the engine.
5. Perform the inspections and the remedies listed below once the engine cools down.
   - Fan belt slack..... Adjust
     Refer to page 5-24.
   - Coolant level ..... Add
     Refer to page 5-16.
   - Water leakage..... Repair
   - Radiator fins..... Clean
     Refer to page 5-35.
   - Sediment in cooling system
     ..... Clean
     Refer to page 5-43.

If the problem persists after the above remedies, contact your sales or service dealer for repair.

IF THE BATTERY GOES DEAD

The symptoms below indicate that the battery is dead.
- The starter motor does not turn or fails to start the engine.
- The horn is too weak.

Remedy procedure

Start the engine using the booster battery on the other vehicle (booster vehicle) and the jumper cables.

⚠ WARNING

- **When starting the engine using the jumper cables, be sure to connect the cables by following the proper steps. Improper use of jumper cables can result in battery explosion or unexpected machine motion.**
  - **Do not allow the booster vehicle and the machine with a dead battery (dead machine) to touch each other.**
  - **Do not allow the positive (+) and the negative (–) clips of the jumper cables to touch each other.**
  - **When connecting, attach the jumper cable to the positive (+) terminals first. When disconnecting, remove the cable from the negative (–) terminal (ground) first.**
  - **Connect the last clip of the jumper cable to a point as far away from the battery as possible.**
- **Always wear the protective goggle when jump starting the engine by using the jumper cables.**
- **Be sure to secure the rear door or radiator before working the inside.**

IMPORTANT: Use the jumper cables and clips of a size suited to the capacity of battery. Do not use damaged or corroded jumper cables and clips.
IMPORTANT: Be sure that the battery of the booster vehicle has the same capacity as the battery of the dead machine.
IMPORTANT: Be sure to connect the clips securely.

Connecting the jumper cables

IMPORTANT: Set the ignition keys of the booster vehicle and the dead machine to the OFF position.

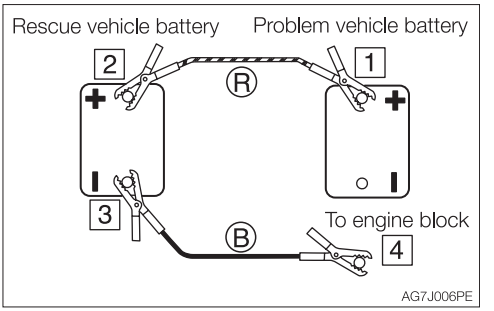

1. Connect the clip of jumper cable (R) to the positive (+) battery terminal of the dead machine.
2. Connect the other clip of jumper cable (R) to the positive (+) battery terminal of the booster vehicle.
3. Connect the clip of jumper cable (B) to the negative (–) battery terminal of the booster vehicle.
4. Connect the other clip of jumper cable (B) to the engine block of the dead machine. Connect the clip to a place as far from the battery as possible.

Starting the engine

1. Check that the clips are securely connected to the terminals.
2. Start the engine of the booster vehicle and run it at high speed.
3. Start the engine of the dead machine.

 https://truckmanualshub.com/

Disconnecting the jumper cables

Once the dead machine is successfully running, remove the jumper cables by following the same steps as for connection in the reverse order.

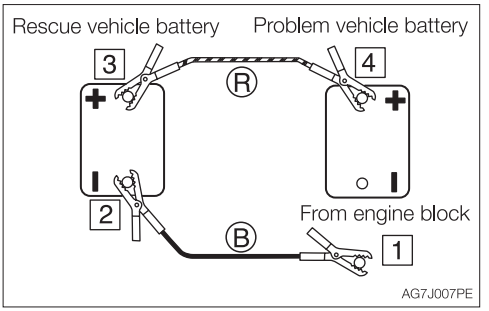

1. Disconnect the clip of jumper cable (B) from the engine block of the dead machine.
2. Disconnect the other clip of jumper cable (B) from the negative (–) battery terminal of the booster vehicle.
3. Disconnect the clip of jumper cable (R) from the positive (+) battery terminal of the booster vehicle.
4. Disconnect the clip of jumper cable (R) from the positive (+) battery terminal of the dead machine.

Recharging

Ask your sales or service dealer for recharging the dead battery.

https://truckmanualshub.com/

IF A FUSE BLOWS

If a light does not come on or the electrical system does not work, a fuse may be blown. Inspect the fuses.

INSPECTING AND REPLACING THE FUSE

⚠ WARNING

If the fuse blows again soon after replacement, then the electric system is likely faulty. It may pose a fire hazard if not properly repaired. Contact your sales or service dealer for advice.

1. Turn the ignition key to the OFF position and stop the engine.

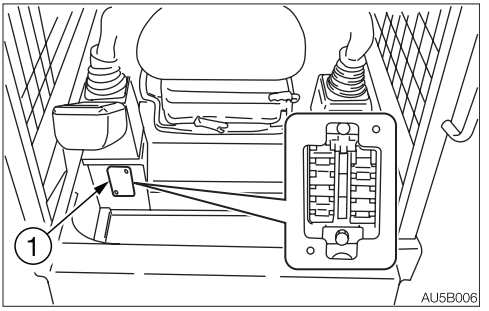

2. Loosen the screw and remove the fuse box cover (1).
3. Check for any blown fuses.

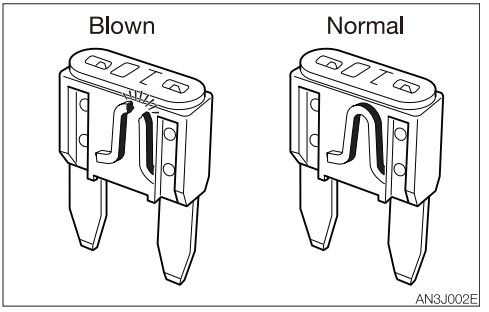

4. If a fuse is blown, replace it with a spare fuse of the same capacity.

Fuse layout and circuits protected (1)

Capacity	Symbol	Protected circuit
20A		Front light
20A		Tail light
10A		Front wiper (Option)
10A		Rear wiper (Option)
30A	CTL1	Controller 1 (ACC)
10A	CTL3	Control Power 3 (ACC)
15A*/5A**	CTL2	Radio*, Control Power 2 (ACC)
10A	ECU	ECU (ACC)
5A		Starter switch (C)
20A*/5A**		A Theft Arrester (ACC)

Capacity	Symbol	Protected circuit
5A		Instrument cluster
15A*/20A**		Radio, Alarm (OPT)
15A	CTL2&3	Controller 2 and 3(BAT)
10A*/5A**		A Theft Arrester
10A		Horn
10A	CAB	Interior light, Radio
5A*/3A**		Switch LAMP
20A		Lever Lock, G-H Switch

* : <TL8>
** : <TL10/TL12>

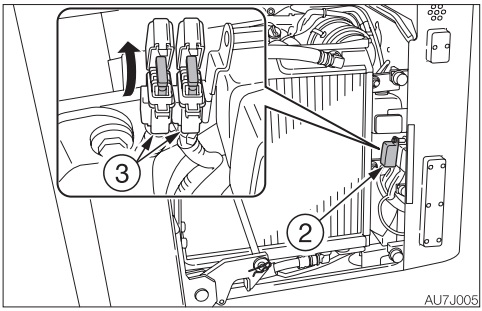

5. Open the rear door.
6. Loosen the bolt and remove the cover (2).
7. Open the fuse box (3).
8. Check for any blown fuses.
9. If a fuse is blown, replace it with a spare fuse of the same capacity.

Fuse layout and circuits protected (2)

Capacity	Protected circuit
40A**	A/C**
15A	ECU

** : <TL10/TL12>

<TL8>

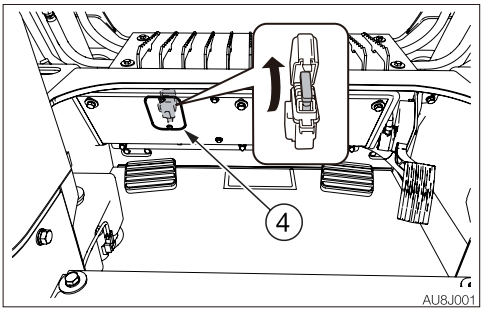

10. Loosen the bolt and remove the cover (4).
11. Open the fuse box.
12. Check for any blown fuses.
13. If a fuse is blown, replace it with a spare fuse of the same capacity.

Fuse layout and circuits protected (3)

Capacity	Protected circuit
25A	Air conditioner unit
25A	Condenser fan
5A	Air conditioner clutch

INSPECTING THE FUSIBLE LINK

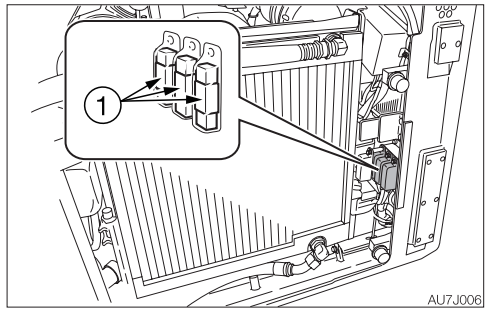

If the machine is not turned on after turning the ignition switch to the ON position, the cartridge type fusible link (1) is likely blown. Open the rear door and inspect. If the fusible link is blown, please contact your sales or service dealer.

Note: Fusible links are large type fuses used in high current applications. Like a regular fuse, they act as fuses by protecting the electric components and wirings from damage caused by excessive current draw.

RESTARTING AFTER ADDING FUEL

BLEEDING AIR FROM THE FUEL SYSTEM

⚠ WARNING

Be sure to secure the rear door or radiator before working the inside.

IMPORTANT: NEVER use the starter motor to crank the engine in order to prime the fuel system. This may cause the starter motor to overheat and damage the coils, pinion gear and/or ring gear.

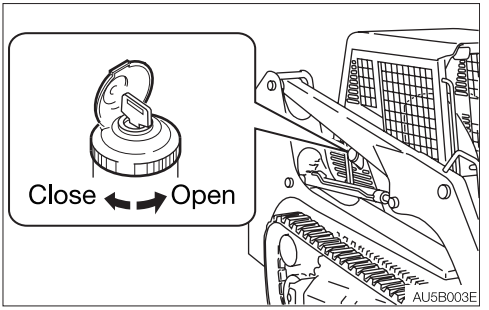

1. Add fuel.

<TL8>

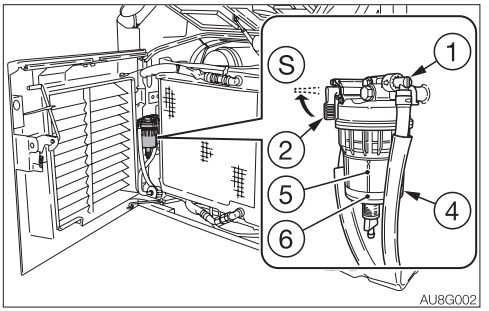

<TL10/TL12>

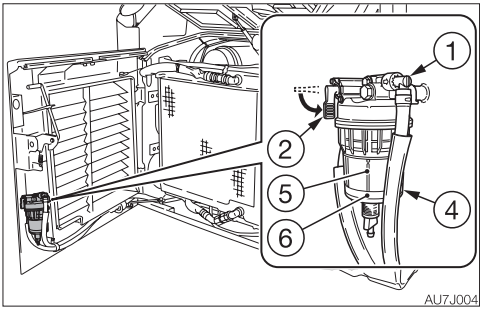

2. Open the rear door.
3. Open the valve (2) of the water separator.

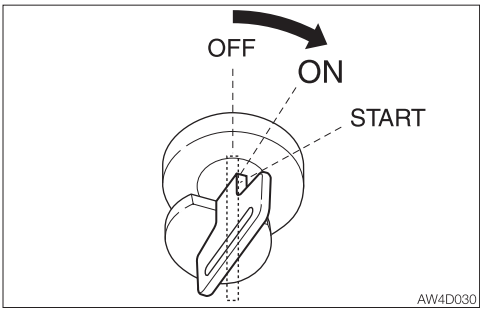

4. Turn the ignition key to the ON position and hold it for about 60 seconds.
   The automatic air bleeder bleeds air from the fuel system.
5. Start the engine and check for fuel leakage.

Note: Air in the fuel system causes the engine to fail to start or to have other problems. Always bleed air when the fuel tank is emptied or when there is air in the fuel system.

https://truckmanualshub.com/

MEMO

IF A WARNING LAMP FLASHES

If an alarm is sounded or a warning lamp starts flashing during operation, park the machine in a safe place and perform the remedy procedures described below.

Warning lamp	Lamp name	Causes and remedies
AW4J007	**Vehicle and engine emergency lamp**	There is a problem in the machine. Refer to the respective warning lamp below. Get the vehicle or engine error code number from the multi-data display and consult your sales or service dealer referring to the number on the “Vehicle error code list” or “Engine error code list”. Refer to “Vehicle error code list” on page 6-12. Refer to “Engine error code list” on page 6-13 to 6-15.
AG7J019	**Battery charge warning lamp**	There is a problem with the fan belt or charger. Check the fan belt for slack or breakage and adjust as necessary. If the lamp continues flashing after maintenance, there is likely a problem with the charger. Consult your sales or service dealer for help. Refer to “Inspecting and adjusting the fan belt” on page 5-24.
AG7J017	**Engine oil pressure warning lamp**	A problem has occurred in the engine lubrication system. Inspect the engine oil level. If the lamp is flashing when the oil is normal or if it continues flashing after replenishment of oil, consult your sales or service dealer. Refer to “Inspecting and replenishing the engine oil” on page 5-17.
AG7J018	**Coolant temperature warning lamp**	The coolant temperature is too high and the engine is overheating. Refer to “If the engine overheats” on page 6-3.
AG7J020	**Air cleaner warning lamp**	The air cleaner filter is clogged. Replace the elements immediately. Refer to “Replacing the air cleaner element” on page 5-34.

 https://truckmanualshub.com/

Warning lamp	Lamp name	Causes and remedies
AU7J002	**Hydraulic oil temp. warning lamp**	The hydraulic oil temperature became too high due to machine overworking. Stop operation, run the engine at low idle and let the hydraulic oil cool down.
AU5J003	**Pilot line filter warning lamp**	The hydraulic oil pilot line filter is clogged. Stop the engine and replace the filter immediately. Continuing to operate the machine while the lamp is flashing could damage the line filter and hydraulic equipment. Refer to “Replacing the pilot line filter” on page 5-23. Cold climate operation: Hydraulic oil is not warmed up. Refer to “Warming up the machine (hydraulic oil)” on page 3-8.

VEHICLE ERROR CODE LIST

When the multi-data display is set to the data mode, the number that is corresponding to the error, if applicable, appears in the error code field. Up to four types of error codes are displayed (the leftmost code is the most recent error). If this occurs, consult your sales or service dealer for help.

Error code	Error details
9	Impossible to sense ACC key
19	Parameter version mismatching
402	CAN communication error
502	CAN 0 communication error (EECU)
602	CAN communication error (cluster gauge)
612	CAN communication error (OX024)
622	CAN communication error (IX012)
1703	Main power supply voltage error (too high)
1704	Main power supply voltage error (too low)
1713	OX024 power supply voltage error (too high)
1714	OX024 power supply voltage error (too low)
1723	IX012 power supply voltage error (too high)
1724	IX012 power supply voltage error (too low)
2503	Sensor voltage error (too high) MMC
2504	Sensor voltage error (too low) MMC
2513	Sensor voltage error (too high) IX012
2514	Sensor voltage error (too low) IX012
3300	Alternator charge faulty
3401	Engine oil pressure error
3500	Overheat
3600	Air cleaner clogged
3810	Line filter clogged
3820	Hydraulic oil temp. error (too high)
3825	Hydraulic oil temp. sensor error (cable break)
5303	Accelerator sensor error (too high)
5304	Accelerator sensor error (too low)
5313	Foot accelerator sensor error (too high pressure)
5314	Foot accelerator sensor error (too low pressure)
5505	Fuel gauge resistance value error (cable break)
6509	AUX1 slide switch neutral error
6519	AUX1 (L) switch error
6529	AUX1 (R) switch error
6503	AUX1 slide switch voltage value error (too high)
6504	AUX1 slide switch voltage value error (too low)
6709	Quick-hitch open switch error, Δ9
6719	Quick-hitch close switch error, Δ9
8015	AUX1 (L) PWM output voltage error (too low)
8025	AUX1 (R) PWM output voltage error (too low)
9990	Model change

ENGINE ERROR CODE LIST

When the engine error code is displayed on the multi-data display, the number that is corresponding to the error, if applicable, appears in the error code field. Up to three types of error codes are displayed, with the latest code at the top. If this occurs, consult your sales or service dealer for help.

Error code		Error details
SPN	FMI	
29	3	Accelerator sensor 2, High
	4	Accelerator sensor 2, Low
91	2	Accelerator sensor parameter error
	3	Accelerator sensor 1, High
	4	Accelerator sensor 1, Low
100	1	Engine hydraulic pressure dropped too low
102	3	Air-intake pressure sensor, High
	4	Air-intake pressure sensor, Low
108	3	Barometric sensor, High
	4	Barometric sensor, Low
110	0	Engine overheat
	3	Water temp. sensor, High
	4	Water temp. sensor, Low
132	1	Insufficient air-intake error (turbo blower IN hose disconnected)
	3	Air mass flow (MAF) sensor, High
	4	Air mass flow (MAF) sensor, Low
	15	Turbo boost rise insufficient error (hose disconnected between blower-out and air-intake flange)
157	0	Rail pressure abnormally high
	3	Rail pressure sensor, High
	4	Rail pressure sensor, Low
168	3	Battery voltage, High
	4	Battery voltage, Low
171	3	Air-intake temp. sensor (MAF sensor integrated), High
	4	Air-intake temp. sensor (MAF sensor integrated), Low
172	0	Air-intake temp. too high error
	3	Air-intake temp. sensor, High
	4	Air-intake temp. sensor, Low
174	0	Fuel temp. too high error
	3	Fuel temp. sensor, High
	4	Fuel temp. sensor, Low
190	0	Engine overrun error
628	2	ECU flash ROM error
633	7	P/L opening valve error
636	2	NE sensor pulse number error
	7	NE, G phase displacement error
	8	NE sensor pulse not input
651	3	Harness break in the engine's 1st cylinder injector (TWV1), coil break
652	3	Harness break in the engine's 2nd cylinder injector (TWV4), coil break

Error code		Error details
SPN	FMI	
653	3	Harness break in the engine's 3rd cylinder injector (TWV2), coil break
654	3	Harness break in the engine's 4th cylinder injector (TWV3), coil break
723	2	G sensor pulse number error
	8	G sensor pulse not input
1077	2	ECU CPU error (main IC is abnormal)
1239	1	Fuel leak (high-pressure fuel line)
1347	3	SCV +B short-circuit
	4	SCV drive system error
	7	SCV sticking diagnosis
1485	2	Main relay error
3242	0	Exhaust temp. rise error, T1
	3	Exhaust temp. sensor 1 (T1: DOC outlet), High
	4	Exhaust temp. sensor 1 (T1: DOC outlet), Low
3246	0	Exhaust temp. rise error, T2
	3	Exhaust temp. sensor 2 (T2: DPF outlet), High
	4	Exhaust temp. sensor 2 (T2: DPF outlet), Low
3251	3	Differential pressure sensor, High
	4	Differential pressure sensor, Low
3252	0	DOC reaction error (exhaust gas error)
3509	3	Sensor voltage 1, High
	4	Sensor voltage 1, Low
3510	3	Sensor voltage 2, High
	4	Sensor voltage 2, Low
3701	0	PM accumulation error level 5
	15	PM accumulation error level 3
	16	PM accumulation error level 4
4765	0	Exhaust temp. rise error, T0
	3	Exhaust temp. sensor 0 (T0: DOC inlet), High
	4	Exhaust temp. sensor 0 (T0: DOC inlet), Low
523523	2	Break in injector drive circuit [common 1 line or TWV 1 and 3 (1st and 4th cylinders) simultaneously]
	3	Battery short-circuit in injector drive circuit ECU side (common 1 line) or INJ side 1st and 4th cylinders simultaneously
	4	GND short-circuit in injector drive circuit ECU side (common 1 line) or INJ side 1st and 4th cylinders simultaneously
523524	2	Break in injector drive circuit [common 2 line or TWV 2 and 4 (3rd and 2nd cylinders) simultaneously]
	3	Battery short-circuit in injector drive circuit ECU side (common 2 line) or INJ side 2nd and 3rd cylinders simultaneously
	4	GND short-circuit in injector drive circuit ECU side (common 2 line) or INJ side 2nd and 3rd cylinders simultaneously
523525	1	ECU injector charge voltage too low
523527	2	ECU CPU error (monitoring IC error)
523535	0	ECU injector charge voltage too large
523536	2	EGR feedback error
523537	2	EGR DC motor' estimated temp. error

Error code		Error details
SPN	FMI	
523538	2	QR data error
	7	QR data writing error
523539	2	Pump seizure 1
523540	2	Pump seizure 2
523541	3	EGR lift sensor error
	4	EGR lift sensor error
523543	2	Main unit side accelerator sensor error
523544	3	Air heater relay drive circuit, battery short-circuit
	4	Air heater relay drive circuit, GND short-circuit
523547	2	CAN 2 BusOff error
523548	2	CAN_KBT original frame cable break error
523572	4	EGR position sensor error
523574	3	EGR motor cable break error
	4	EGR motor short-circuit error
523575	7	EGR valve sticking error (FB error)
523576	2	EGR motor environment temp. error
523577	2	EGR valve's integrated thermistor sensor error
523578	2	EGR control line communication breakdown (cable break)
523580	2	Air-intake throttle feedback (FB) error
523582	3	Air-intake throttle lift sensor error, High
	4	Air-intake throttle lift sensor error, Low
523589	17	Water temp. rise insufficient at manual regeneration
523590	16	Time-up error at manual regeneration
523591	2	CAN_CCVS communication breakdown error
523592	2	CAN_ CM1 communication breakdown error
523593	2	CAN_DDC1 communication breakdown error
523594	2	CAN_ETC2 communication breakdown error
523595	2	CAN_ETC5 communication breakdown error
523596	2	CAN_TSC1 communication breakdown error
523598	2	CAN_EBC1 communication breakdown error
523599	0	All exhaust temp. sensors' cables break simultaneously error
523600	0	Warning about incomplete learning of differences between pumps
523601	0	Continued abnormal exhaust temp. error (starter relay drive inhibit warning)
523602	0	Regeneration frequency too high error
523603	15	High. Temp_AECD actuation warning
523604	2	CAN 1 BusOff error
523700	13	KBT area EEPROM checksum mismatch
523701	13	DST 1 area EEPROM checksum mismatch
523702	13	DST 2 area EEPROM checksum mismatch

https://truckmanualshub.com/

OTHER SYMPTOMS

For symptoms not included in the table below or if the problem persists after the proper remedies have been taken, consult your sales or service dealer.

Symptoms	Major causes	Remedies
Left and right control levers do not move smoothly	• Insufficient grease on the left and right control levers	• Grease the levers. Refer to page 5-52.
Bucket, lift arms, auxiliary hydraulics or traveling operation not possible	• Safety bar is raised (locked)	• Lower (release) the safety bar. Refer to page 2-34.
	• Fuse is blown	• Replace the fuse. Refer to page 6-6.
Working equipment force is insufficient	• Hydraulic oil level too low	• Add to the specified level. Refer to page 5-19.
	• Hydraulic oil is not warm enough	• Perform the warm-up. Refer to page 3-8.
	• Air cleaner is clogged	• Replace the air cleaner elements. Refer to page 5-34.
	• Hydraulic oil is not of suitable type	• Replace the hydraulic oil. Refer to page 5-45.
Traveling is not possible or not smooth	• Stones or foreign objects are stuck	•Remove the foreign object.
Machine veers to the right/left	• Stones or foreign objects are stuck	• Remove the foreign object.
Switches are not functioning	• Safety bar is raised (locked)	• Lower (release) the safety bar. Refer to page 2-34.
	• Fuse is blown	• Replace the fuse. Refer to page 6-6.
Travel speed cannot be changed	• Fuse is blown	• Replace the fuse. Refer to page 6-6.
Hydraulic oil temperature is too high	• Hydraulic oil level too low	• Add up to the specified level. Refer to page 5-19.
Starter motor turns but engine does not start	• Insufficient fuel	• Add fuel. Refer to page 5-18.
	• Air in fuel system	• Bleed air. Refer to page 6-8.
	• Water in fuel system	• Drain water. Refer to page 5-28.

Symptoms	Major causes	Remedies
Starter motor turns but engine does not start	• Fuel is frozen.	• Warm the fuel pipe with hot water or wait until the ambient temperature becomes high.
	• Engine control system is faulty.	• Adjust or repair (ask your sales or service dealer).
	• Fuel line is faulty.	• Adjust or repair (ask your sales or service dealer).
	• Preheating device is faulty.	• Adjust or repair (ask your sales or service dealer).
Tracks come off	• Tracks too loose	• Increase the tension. Refer to page 5-27.
Engine exhaust is white or bluish	• Excessive engine oil	• Adjust to the specified level. Refer to page 5-17.
	• Insufficient machine warm-up.	• Perform the warm-up operation. Refer to page 3-4.
	• Engine control system is faulty.	• Adjust or repair (ask your sales or service dealer).
	• Fuel line is faulty.	• Adjust or repair (ask your sales or service dealer).
	• Prolonged idling (approx. two hours or more)	• Increase the engine RPM and check for smoke.
	• Poor fuel	• Replace the fuel.
Engine exhaust is occasionally black	• Air cleaner is clogged	• Replace the air cleaner elements. Refer to page 5-34.
	• Engine control system is faulty.	• Adjust or repair (ask your sales or service dealer).
	• Fuel line is faulty.	• Adjust or repair (ask your sales or service dealer).
	• Clogging in the exhaust line.	• Adjust or repair (ask your sales or service dealer).
	• DPF is faulty.	• Adjust or repair (ask your sales or service dealer).
Irregular noise is produced from the engine (combustion or mechanical noise)	• Low quality fuel is being used	• Replace the fuel.
	• Engine is overheating	• Refer to “If the engine overheats” on page 6-3.
	• Damage inside the muffler	• Replace the muffler. For replacement, ask your sales or service dealer.

LOWERING THE LIFT ARMS TO THE GROUND

If the lift arms must be lowered to the ground while the engine is stopped, use the following procedure.
This operation is dangerous and requires experience. Ask your sales or service dealer for it.

Procedure

⚠ WARNING

- **Keep away from the working area when the lift arms are lowered. You may be hit by dirt falling out of the bucket or the lift arms as they drop.**
- **Gradually lower the lift arms by slowly turning the set screw on the port relief valve. Do not turn the screw more than the specified amount.**

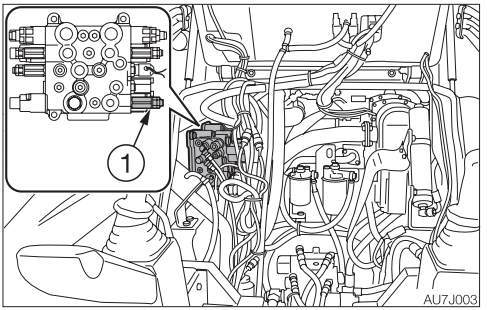

1. Tilt up the canopy.

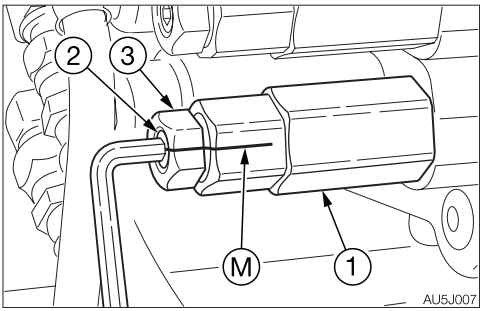

2. Put marks (M) on the port relief valve (1), lock nut (3) and the adjusting screw (2).
3. Loosen the lock nut (3) while holding the adjusting screw (2) in place with a hexagonal wrench.
4. Turn the adjusting screw (2) slowly 1 and 1/2 turns to lower the lift arms.
5. Check for safety and stability of the machine.
6. Return the adjusting screw (2) to the original position.
7. Tighten the lock nut (3) while holding the adjusting screw (2) in place with a hexagonal wrench.
   · Tightening torque: 19.6 N·m (14.5 ft-lb)
8. Lower the canopy.

TOWING

⚠ WARNING

When towing, serious injury or death could result, if performed incorrectly or the wire rope being used is inappropriate or not properly inspected.

- **It becomes dangerous if the wire rope breaks or becomes disengaged. Use a wire rope appropriate for the required tractive force.**
- **Do not use a wire rope that is kinked, twisted or otherwise damaged.**
- **Do not apply heavy loads abruptly to the wire rope.**
- **Wear safety gloves when handling the wire rope.**
- **Make sure there is an operator on the machine being towed as well as on the machine that is towing.**
- **Never tow on slopes.**
- **Do not let anyone come near to the wire rope while towing.**

IMPORTANT: Do not tow a machine if its engine does not start or if the machine does not run. Doing so could damage the machine being towed.
IMPORTANT: Be sure to follow the steps below closely when towing. Failure to heed even one of the steps may cause damage to the hooks (1).

Towing the machine

Use the procedure described below to tow heavy objects or the machine itself if it should get stuck in the mud and not be able to get out on its own.

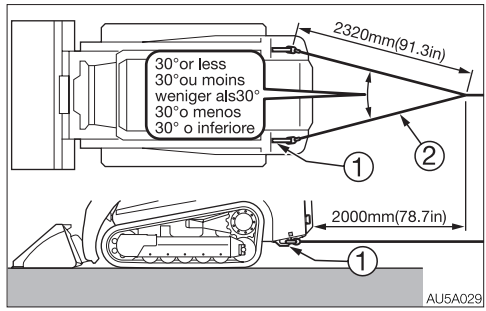

- Permissible forces:
  TL8: 57.6 kN (12948 lbf) or less
  TL10: 70.1 kN (15758 lbf) or less
  TL12: 79.0 kN (17759 lbf) or less

1. Attach the wire rope (2) to the hooks (1) as shown in the figure.
2. Make sure that the wire rope is horizontal and line up straight with the travel frame.
3. Move the machine to tension the wire rope.
4. Operate the machine slowly and tow.

IF THE CAB OR CANOPY IS DAMAGED

⚠ WARNING

Immediately replace the damaged cab or canopy. Serious injury or death may occur if the machine is operated with damaged cab/canopy.
Do not operate the machine until the replacement is complete. Do not try to repair the damaged cab or canopy by welding. Doing so could endanger the safety of the cab/canopy.

- Canopy (TL8) part number: 06684-00012
- Canopy (TL10) part number: 06884-03100
- Canopy (TL12) part number: 06984-03100
- Cab (TL8) part number: 06686-00034
- Cab (TL10) part number: 06886-04100
- Cab (TL10, with the polycarbonate front door) part number: 06886-06100
- Cab (TL12) part number: 06986-08100
- Cab (TL12, with the polycarbonate front door) part number: 06986-10100

https://truckmanualshub.com/

SPECIFICATIONS

https://truckmanualshub.com/

BASIC SPECIFICATIONS

<TL8>

Type				Canopy	Cab
MASS					
Operating mass	kg (lb)	Rubber tracks (400W)		3835 (8455)	3915 (8631)
		Rubber tracks (320W)		3785 (8344)	3865 (8521)
PERFORMANCE					
Bucker capacity (Standard bucket)	m^3 (cu. ft.)	Heaped		0.351 (12.4)	
Travel speed	km/h (mph)	Rubber tracks	1st	7.4 (4.6)	
			2nd	11.0 (6.8)	
Gradeability	(degrees)			30	
Ground pressure	kPa (psi)	Rubber tracks (400W)		30.2 (4.38)	30.8 (4.47)
		Rubber tracks (320W)		37.2 (5.39)	38.0 (5.51)
Noise level	dB (A)	Sound power level (ISO 6395:2008)		L_{WA} 103	
		Sound pressure level (ISO 6396:2008)		L_{pA} 85	
ENGINE					
Manufacturer and model				KUBOTA V3307-CR-TE4B	
Rated output	Gross (SAE J1995)	kW/min^{-1} (hp/rpm)		55.4/2600 (74.3/2600)	
	Net (ISO 14396)	kW/min^{-1} (hp/rpm)		54.6/2600 (73.2/2600)	
	Net (ISO 9249/ SAEJ 1349)	kW/min^{-1} (hp/rpm)		53.2/2600 (71.3/2600)	
Displacement		ml (cu.in.)		3331 (203.3)	
Starter		V-kW		12-3.0	
Alternator		V-kW		12-0.72	
Battery (IEC 60095-1)		V-A·h		12-90	

<TL10>

Type				Canopy	Cab
MASS					
Operating mass	kg (lb)	Rubber tracks		4680 (10320)	4770 (10515)
PERFORMANCE					
Bucker capacity (Standard bucket)	m^3 (cu. ft.)	Heaped		0.458 (16.17)	
Travel speed	km/h (mph)	Rubber tracks	1st	7.4 (4.6)	
			2nd	11.6 (7.21)	
Gradeability	(degrees)			30	
Ground pressure	kPa (psi)	Rubber tracks		30.1 (4.36)	30.7 (4.45)
Noise level	dB (A)	Sound power level (ISO 6395:2008)		L_{WA} 104	
		Sound pressure level (ISO 6396:2008)		L_{pA} 83	
ENGINE					
Manufacturer and model				KUBOTA V3800-CR-TE4B	
Rated output	Gross (SAE J1995)	kW/min^{-1} (hp/rpm)		68.6/2400 (92.0/2400)	
	Net (ISO 14396)	kW/min^{-1} (hp/rpm)		67.6/2400 (90.6/2400)	
	Net (ISO 9249/ SAEJ 1349)	kW/min^{-1} (hp/rpm)		64.4/2400 (86.4/2400)	
Displacement		ml (cu.in.)		3769 (230)	
Starter		V-kW		12-3.0	
Alternator		V-kW		12-0.96	
Battery (IEC 60095-1)		V-A·h		12-90	

<TL12>

Type				Canopy	Cab
MASS					
Operating mass	kg (lb)	Rubber tracks		5270 (11620)	5375 (11850)
PERFORMANCE					
Bucker capacity (Standard bucket)	m^3 (cu. ft.)	Heaped		0.579 (20.45)	
Travel speed	km/h (mph)	Rubber tracks	1st	7.9 (4.91)	
			2nd	11.9 (7.39)	
Gradeability	(degrees)			30	
Ground pressure	kPa (psi)	Rubber tracks		32.0 (4.64)	32.7 (4.74)
Noise level	dB (A)	Sound power level (ISO 6395:2008)		L_{WA} 105	
		Sound pressure level (ISO 6396:2008)		L_{pA} 83	
ENGINE					
Manufacturer and model				KUBOTA V3800-CR-TIE4B	
Rated output	Gross (SAE J1995)	kW/min^{-1} (hp/rpm)		82.0/2400 (109.9/2400)	
	Net (ISO 14396)	kW/min^{-1} (hp/rpm)		80.8/2400 (108.3/2400)	
	Net (ISO 9249/ SAEJ 1349)	kW/min^{-1} (hp/rpm)		77.2/2400 (103.5/2400)	
Displacement		ml (cu.in.)		3769 (230)	
Starter		V-kW		12-3.0	
Alternator		V-kW		12-0.96	
Battery (IEC 60095-1)		V-A·h		12-90	

https://truckmanualshub.com/

MEMO

https://truckmanualshub.com/

MACHINE DIMENSIONS

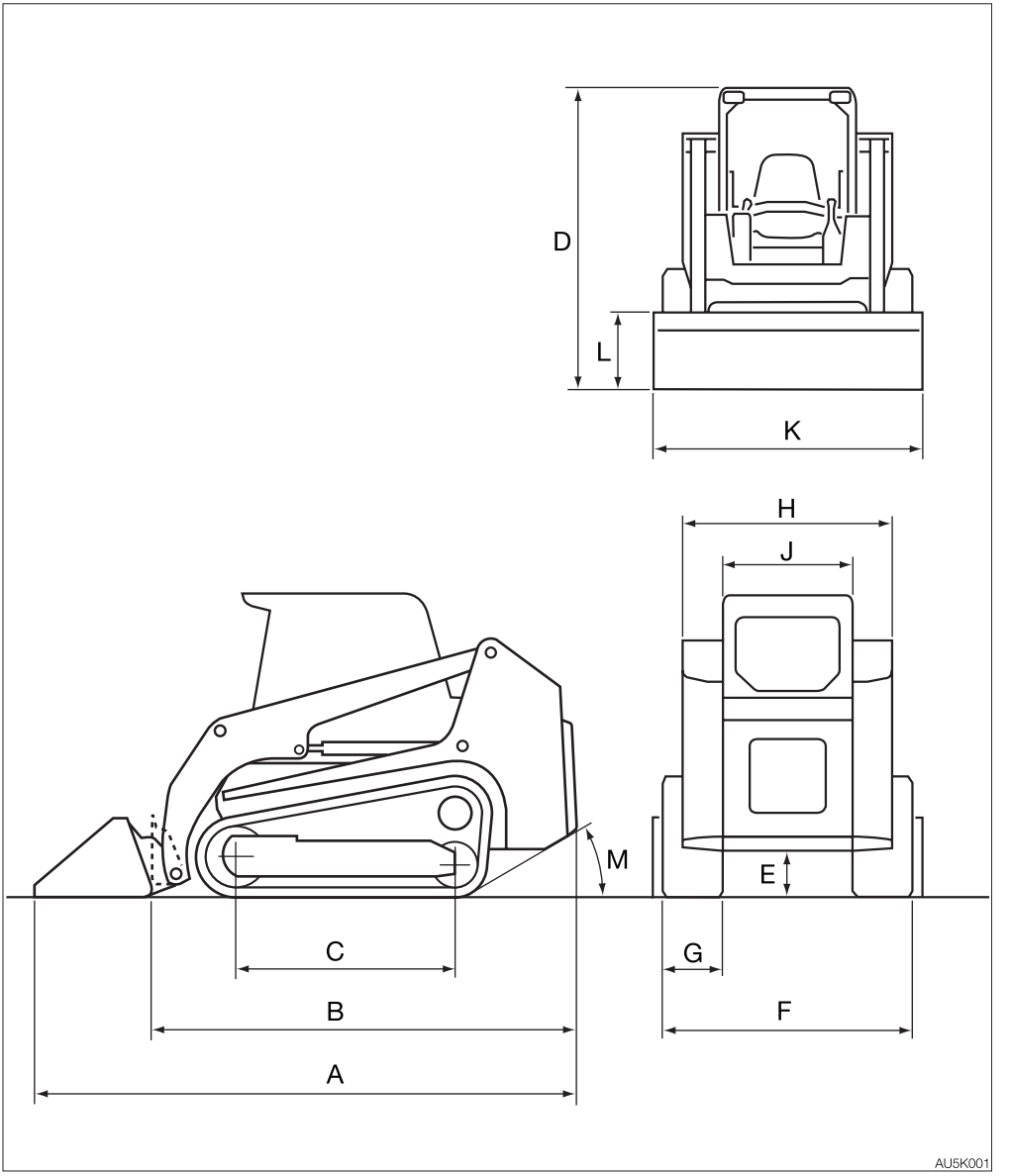

<TL8>

Unit: mm (inch)

	Item		Standard bucket Rubber tracks
A	Overall length		3430 (135.1)
B	Overall length (without bucket)		2740 (107.8)
C	Track base		1390 (54.7)
D	Overall height		2130 (83.9)/2235 (88.0)*
E	Ground clearance of undercarriage		310 (12.1)
F	Overall width (without bucket)	400W	1660 (65.4)
		320W	1580 (62.2)
G	Track shoe width		320 (12.6)
H	Body width		1430 (56.3)
J	Canopy/Cab width		980 (38.6)/985 (38.7) *
K	Bucket width		1675 (66.0)
L	Bucket height		510 (20.0)
M	Departure angle		30°

* : With a cab

<TL10>

Unit: mm (inch)

	Item	Standard bucket Rubber tracks
A	Overall length	3755 (147.8)
B	Overall length (without bucket)	3000 (118.1)
C	Track base	1495 (58.9)
D	Overall height	2270 (89.4)
E	Ground clearance of undercarriage	325 (12.8)
F	Overall width (without bucket)	1770 (69.7)
G	Track shoe width	450 (17.7)
H	Body width	1500 (59.1)
J	Canopy/Cab width	985 (38.8)
K	Bucket width	1880 (74.0)
L	Bucket height	535 (21.1)
M	Departure angle	30°

<TL12>

Unit: mm (inch)

	Item	Standard bucket
		Rubber tracks
A	Overall length	3985 (156.9)
B	Overall length (without bucket)	3135 (123.4)
C	Track base	1595 (62.8)
D	Overall height	2320 (91.3)
E	Ground clearance of undercarriage	345 (13.5)
F	Overall width (without bucket)	1860 (73.2)
G	Track shoe width	450 (17.7)
H	Body width	1570 (61.8)
J	Canopy/Cab width	985 (38.8)
K	Bucket width	1960 (77.2)
L	Bucket height	580 (22.8)
M	Departure angle	30°

https://truckmanualshub.com/

https://truckmanualshub.com/

OPERATING RANGES

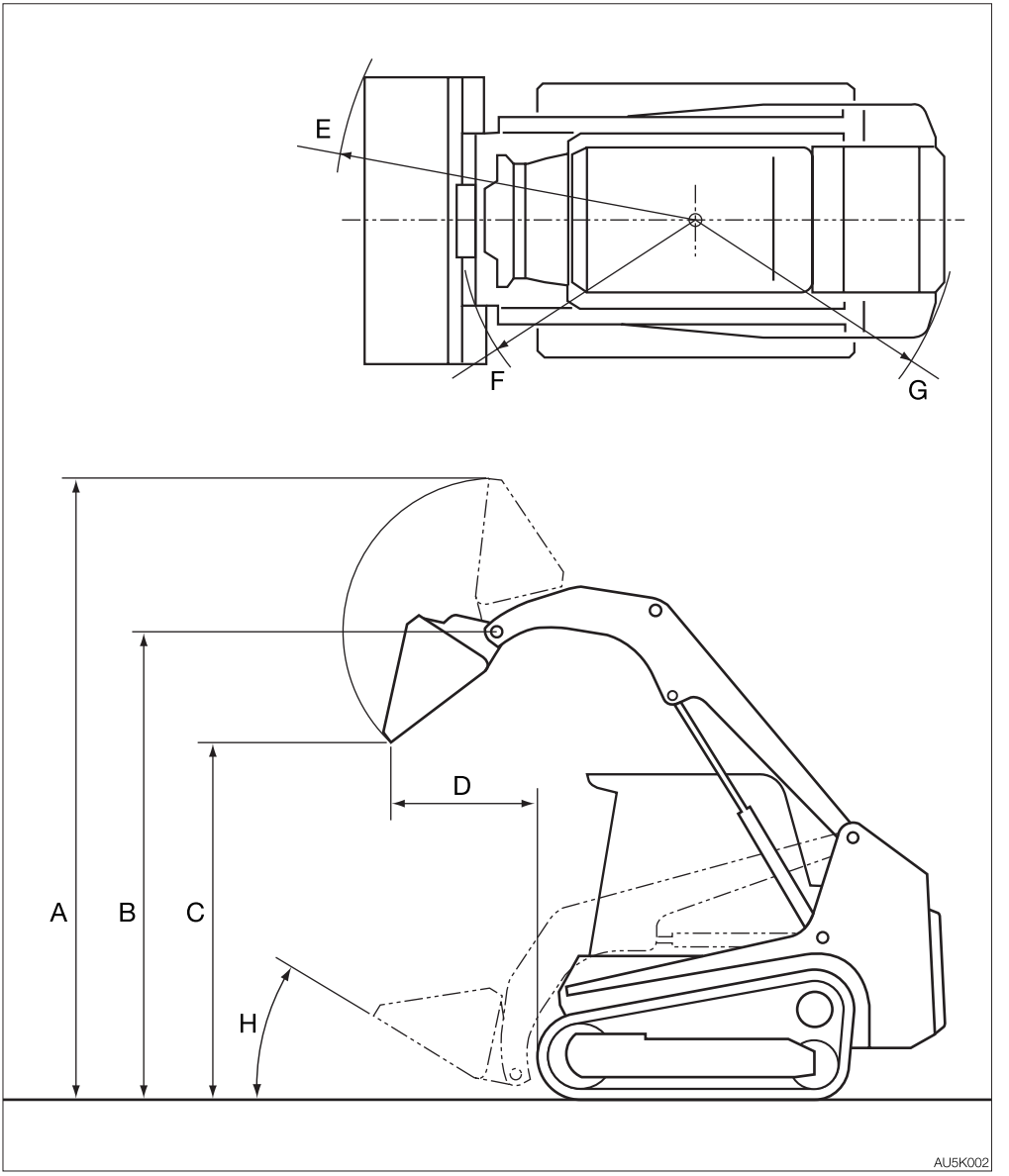

https://truckmanualshub.com/

<TL8>

Unit: mm (inch)

	Item	Standard bucket Rubber tracks
A	Maximum raised height of bucket	3905 (153.8)
B	Bucket hinge pin height	3030 (119.3)
C	Dumping clearance (at 45-degree forward tipping)	2370 (93.4)
D	Dumping reach (at 45-degree forward tipping)	730 (28.8)
E	Minimum turning radius (bucket outside)	2080 (82.0)
F	Minimum turning radius (front side, without bucket)	1375 (54.1)
G	Minimum turning radius (rear side)	1585 (62.4)
H	Bucket roll back angle (on ground)	30°

<TL10>

Unit: mm (inch)

	Item	Standard bucket Rubber tracks
A	Maximum raised height of bucket	4080 (160.6)
B	Bucket hinge pin height	3120 (122.8)
C	Dumping clearance (at 45-degree forward tipping)	2405 (94.7)
D	Dumping reach (at 45-degree forward tipping)	875 (34.4)
E	Minimum turning radius (bucket outside)	2295 (90.4)
F	Minimum turning radius (front side, without bucket)	1500 (59.1)
G	Minimum turning radius (rear side)	1685 (66.3)
H	Bucket roll back angle (on ground)	31°

<TL12>

Unit: mm (inch)

	Item	Standard bucket Rubber tracks
A	Maximum raised height of bucket	4245 (167.1)
B	Bucket hinge pin height	3205 (126.2)
C	Dumping clearance (at 45-degree forward tipping)	2430 (95.7)
D	Dumping reach (at 45-degree forward tipping)	985 (38.8)
E	Minimum turning radius (bucket outside)	2435 (95.9)
F	Minimum turning radius(front side, without bucket)	1560 (61.4)
G	Minimum turning radius (rear side)	1755 (69.1)
H	Bucket roll back angle (on ground)	31°

https://truckmanualshub.com/

https://truckmanualshub.com/

OPTIONS

https://truckmanualshub.com/

GENERAL PRECAUTIONS

SAFETY PRECAUTIONS

⚠ WARNING

When removing or installing an attachment or optional part, take the following precautions.

- **Consult with Takeuchi before installing an optional attachment.**
- **Do not use any attachments not approved by Takeuchi. Doing so may cause safety problems. Or, it may adversely affect the machine's operation or service life.**
- **We will not be held responsible for any injuries, accidents or damage to its products caused by the use by a non-approved attachment.**
- **Select a firm, level work area. Also, be sure to park in a well ventilated place.**
- **Clear obstacles and dangerous objects, and clean up spilled fuel immediately.**
- **When it is necessary to temporally place a heavy object or an attachment on the ground during removal or installation, be sure to place it in a stable position.**
- **Use the proper procedure when mounting an attachment; otherwise serious damage could result. Consult your sales or service dealer for help.**
- **When hoisting, be sure to designate a person to act as a signalman.**
  Follow the instructions of the signalman regarding the procedure and measures.
- **Keep everyone out of the area when hoisting. There is a hazard of objects falling or contacting with people in the area.**
- **Use a crane to move heavy objects (25 kg (55 lb.) or greater).**
- **Before removing a heavy object, be sure to put a support to it. When lifting with a crane, pay attention to the center of gravity of the load to keep the machine in balance.**
- **Do not operate the machine while the load is lifted by a crane stand.**

CAUTIONS WHEN INSTALLING ATTACHMENTS

Be sure to perform a test operation after an optional or other special attachment has been replaced. Inspect the hydraulic oil level and recharge it as necessary. Consult your sales or service dealer for detailed procedures on installing/removing attachments.

https://truckmanualshub.com/

CAUTIONS WHEN OPERATING ATTACHMENTS

⚠ WARNING

Heavy attachments reduce stability of the machine. The machine may tip over if it loses the balance when traveling or slewing on slopes.
Never perform the operations listed below as they are extremely dangerous.

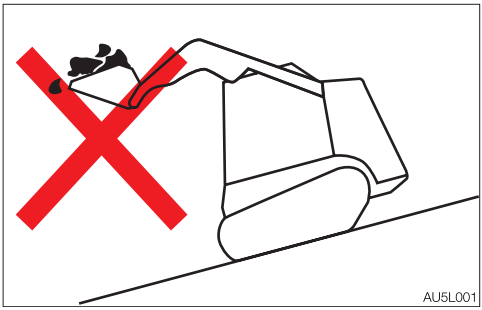

- Traveling down the slopes with the attachment raised

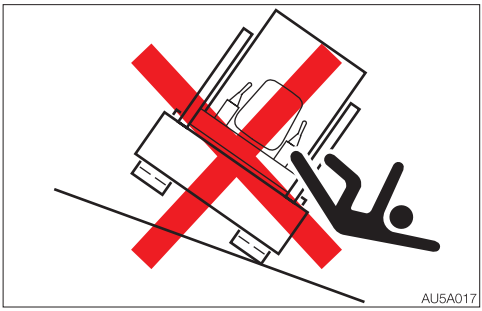

- Traveling across slopes

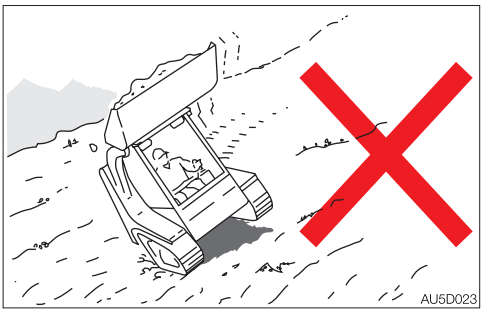

- Turning on slopes
- When a heavy attachment is installed, the braking time (distance a machine will travel from the point where its brakes are fully applied to when it comes to a complete stop) gets longer. This increases the accident risk. Operate the machine allowing for a sufficient space around the attachment. Also, be aware that the spontaneous drop (the gradual dropping of the attachment under its own weight when it is stopped in midair) gets larger as the attachment gets heavier.
- The machine can tip over more easily in the lateral direction than in the longitudinal direction.
  - Do not turn sideways when the attachment is heavily loaded. In particular, do not turn sideways on slopes.

https://truckmanualshub.com/

HYDRAULIC QUICK-HITCH

REPLACING THE BUCKET OR ATTACHMENT

⚠ WARNING

- **Use only the attachments recommended by us. Using the attachments not approved by us may cause safety problems. Also, it may adversely affect the machine's operation or service life.**
- **Before performing maintenance or repairs under the machine, lower all moveable working equipment to the ground or in the lowermost position.**

For the installation and removal of the standard bucket provided by us, follow the procedure below. For the other attachments, consult Takeuchi or one of our service agents.

Installation

Before installing a bucket, clean the connecting sections of the bucket (1) and the quick-hitch (3) and their surrounding area.

1. Sit in the operator's seat, lower the safety bar, and then start the engine.

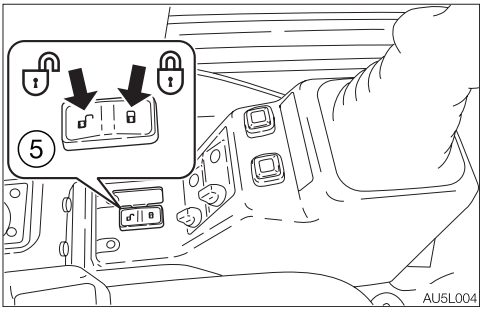

2. Open the cover and press the 🔓 side of the switch (5) to unlock the quick-hitch.

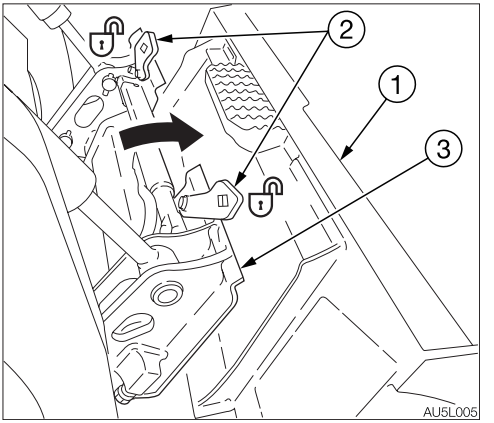

3. Tilt the quick-hitch (3) forward.

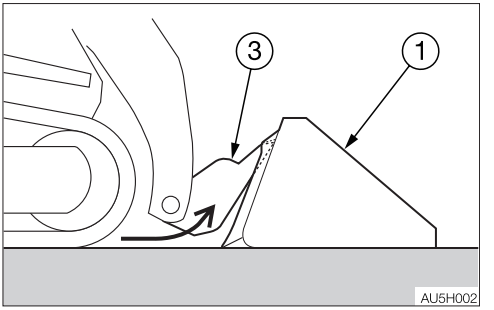

4. Slowly move the machine forward and raise the lift arms. Engage the wedge-shaped top edge of the quick-hitch (3) onto the bucket (1) upper part (quick-hitch mount).

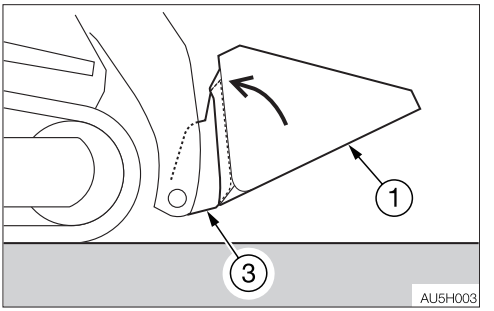

5. Tilt the quick-hitch (3) backward while lifting the bucket (1) off the ground. The quick-hitch (3) will slide into position.

https://truckmanualshub.com/

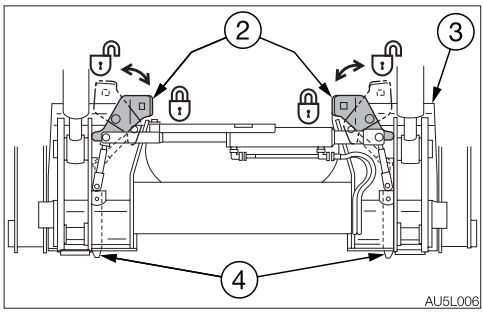

6. Press the 🔒 side of the switch (5) to lock the quick-hitch and the bucket.

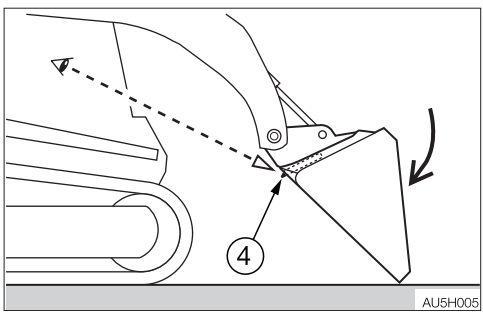

7. Check that the tips of the pins (4) are projecting through the bracket hole on the bucket to indicate that the latch is properly engaged.
8. If the pins (4) do not come down to the lock position, do not continue working; disconnect the quick-hitch and determined the cause instead.

Safety switch

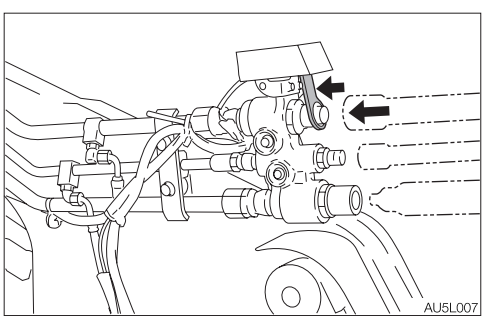

Note: This device works as a safety device to prevent accidental activation of the attachment or hydraulic quick-hitch installed. When the attachment hoses are connected to the quick-coupler, the plate is pushed to turn on the switch, which prevents the hydraulic quick-hitch from being activated even when the lock/unlock switch on the hydraulic quick-hitch is pressed. When the hydraulic quick-hitch needs to be activated, disconnect all hoses from the quick-coupler.

Removal

1. Keep the bucket at the height of 25 to 50 mm (1 to 2 in.) above the ground.
2. Open the cover and press the 🔓 side of the switch (5) to unlock the quick-hitch.

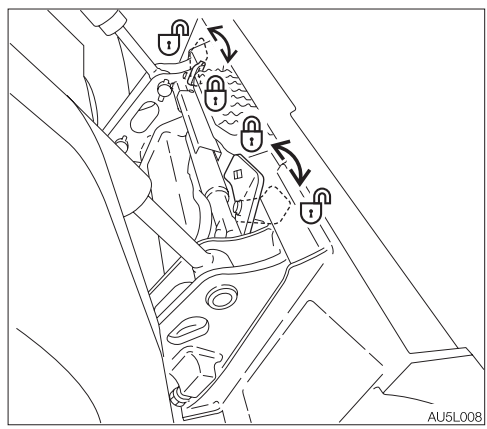

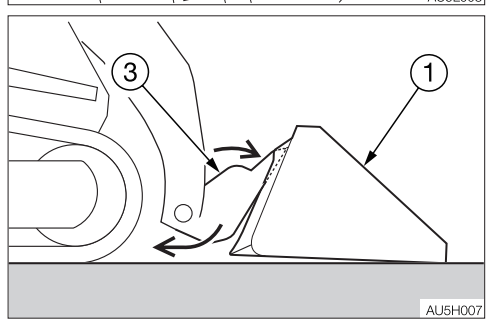

3. Tilt the quick-hitch (3) forward to disconnect its upper edge from the bucket (1) upper part (quick-hitch mount).

https://truckmanualshub.com/

QUICK-COUPLERS

⚠ WARNING

- **Oil may spurt out if the caps or filters are removed or pipes disconnected before releasing the pressure in the hydraulic system.**
  - **When removing plugs or screws, or when disconnecting hoses, stand to the side and loosen them slowly to gradually release the internal pressure before removing.**
- **Do not release pressure:**
  - **When the attachment is not in the rest position.**
  - **During operation of the attachment. (Due to danger of unexpected movement of the attachment)**
- **Do not couple or uncouple when there is a flow or pump pressure in the circuit. Disconnection or connection is allowed only when there is no residual pressure.**
- **Hydraulic fluid, tubes, fittings and quick-couplers can get hot when running machine and attachments. Be careful when connecting and disconnecting quick-couplers.**

IMPORTANT: When the couplings are disconnected, it is suggested to use the protection caps.
IMPORTANT: Before uncoupling, be sure to release the residual pressure.

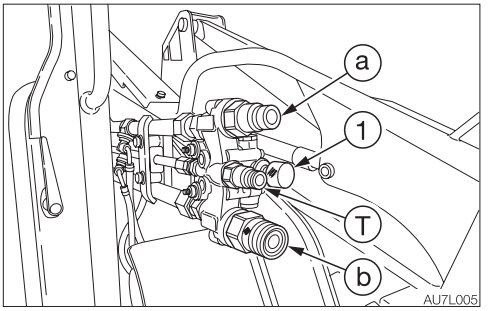

Releasing residual pressure

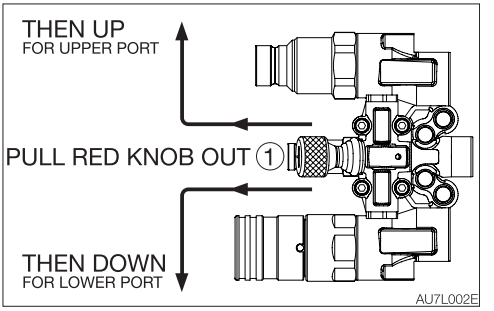

Coupling and uncoupling

1. Before coupling, clean the flat mating surfaces of quick coupling to avoid the inclusion of dirt into the circuit.
2. Release the residual pressure from the upper coupling (a) by pulling the knob (1) outward first and then upward. Release the residual pressure from the lower coupling (b) by pulling the knob (1) outward first and then downward.
3. To couple, push the male half towards the female half or vice versa.
4. To uncouple, pull back in sleeve of the female.

Connecting the hydraulic circuits

To connect the attachment hydraulic lines, use the following procedures:

1. Connect the attachment hydraulic lines to ports (a) and (b).
   When fitted with a hydraulic breaker:
   a. Connect the return circuit to port (b) and the supply circuit to port (a).
   b. Turn on the flow selector switch and select “one-way”.
   Some attachments may have a case drain, which needs to be connected to the small port (T).
2. When connecting is complete, purge air from the hydraulic lines.
   a. Start and run the engine at low idle with no load for 10minutes.
   b. With the engine running at low idle, operate the auxiliary hydraulics switch repeatedly (approx. 10 times) to purge air from the hydraulic lines.
   c. Stop the engine and wait for more than 5 minutes until bubbles escape from the hydraulic oil in the tank.

https://truckmanualshub.com/

4-PORT QUICK-COUPLER (TL10/TL12)

⚠ WARNING

- **Oil may spurt out if the caps or filters are removed or pipes disconnected before releasing the pressure in the hydraulic system.**
  - **When removing plugs or screws, or when disconnecting hoses, stand to the side and loosen them slowly to gradually release the internal pressure before removing.**
- **Do not release pressure:**
  - **When the attachment is not in the rest position.**
  - **During operation of the attachment. (Due to danger of unexpected movement of the attachment)**
- **Do not couple or uncouple when there is a flow or pump pressure in the circuit. Disconnection or connection is allowed only when there is no residual pressure.**
- **Hydraulic fluid, tubes, fittings and quick-couplers can get hot when running machine and attachments. Be careful when connecting and disconnecting quick-couplers.**

IMPORTANT: When the couplings are disconnected, it is suggested to use the protection caps.
IMPORTANT: Before uncoupling, be sure to release the residual pressure.

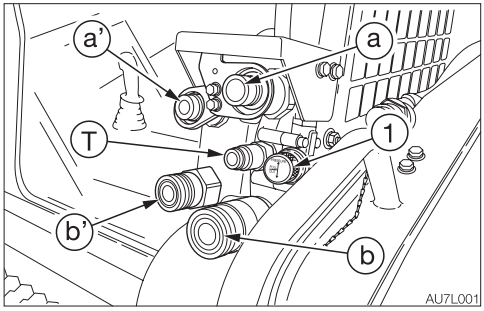

Releasing residual pressure

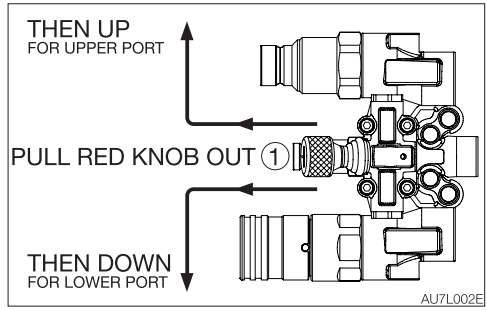

Coupling and uncoupling

1. Before coupling, clean the flat mating surfaces of quick coupling to avoid the inclusion of dirt into the circuit.
2. Release the residual pressure from the upper coupling (a) (a') by pulling the knob (1) outward first and then upward. Release the residual pressure from the lower coupling (b) (b') by pulling the knob (1) outward first and then downward.
3. To couple, push the male half towards the female half or vice versa.
4. To uncouple, pull back in sleeve of the female.

Connecting the hydraulic circuits

To connect the attachment hydraulic lines, use the following procedures:

1. Connect the attachment hydraulic lines to ports (a) or (a') and (b) or (b').

   When fitted with a hydraulic breaker:
   a. Connect the return circuit to port (b) or (b') and the supply circuit to port (a) or (a').
   b. Turn on the flow selector switch and select “one-way”.
   Some attachments may have a case drain, which needs to be connected to the small port (T).

https://truckmanualshub.com/

2. When connecting is complete, purge air from the hydraulic lines.
   a. Start and run the engine at low idle with no load for 10minutes.
   b. With the engine running at low idle, operate the auxiliary hydraulics switch repeatedly (approx. 10 times) to purge air from the hydraulic lines.
   c. Stop the engine and wait for more than 5 minutes until bubbles escape from the hydraulic oil in the tank.

https://truckmanualshub.com/

SELECTING A LEVER PATTERN

The operating pattern of the left and right operating levers can be changed.

⚠ WARNING

Before starting the engine, check the selector to see which operating pattern the left and right operating levers are set.

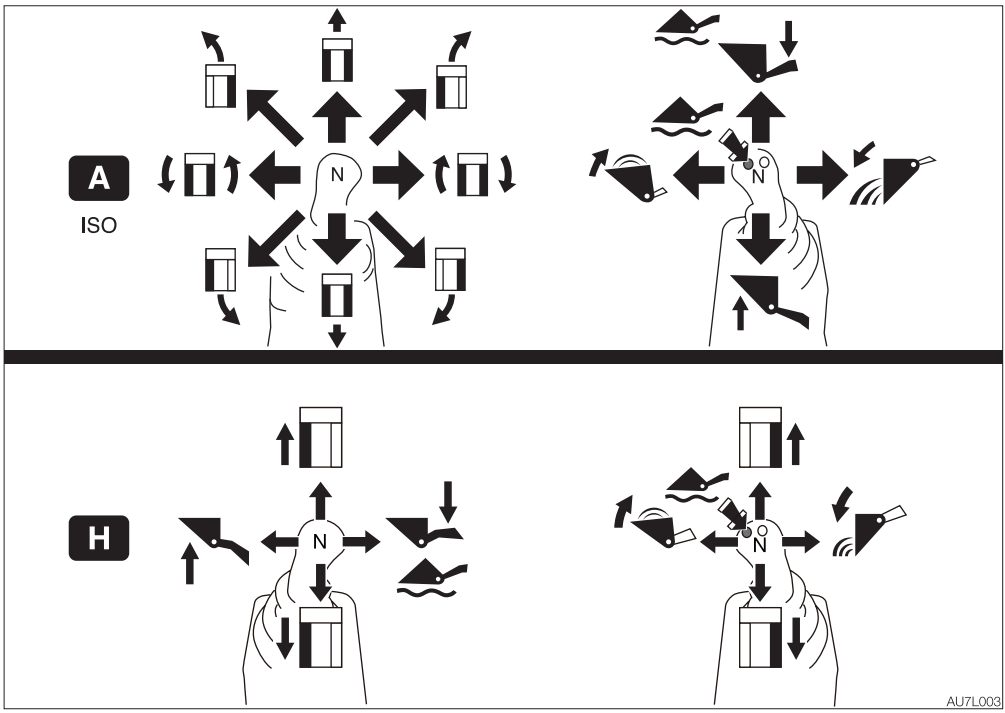

SWITCHING THE LEVER PATTERN

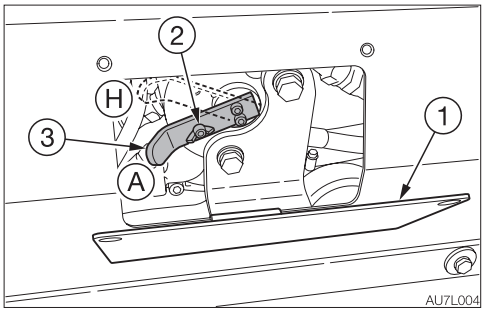

(A) : ISO pattern
(H) : H pattern

1. Park the machine on a flat and rigid ground, and stop the engine.
2. Loosen the screws and open the cover (1).
3. Loosen the wing bolt (2).
4. Turn the selector valve lever (3) to change the pattern.
5. Tighten the wing bolt (2) and fasten the lever (3) in place.
6. Close the cover (1) and tighten the screws.
7. Confirm the lever pattern.

https://truckmanualshub.com/

SEAT (WITH A SWITCH FUNCTION)

⚠ WARNING

Do not lift your body off the seat while the machine is traveling. Doing so is dangerous; the lever lock and parking brake will be activated and the machine will stop abruptly.

This seat is equipped with a switch for operating the lever lock, which functions in the same way as the safety bar.

- The lever lock is released when you sit in the seat and lower the safety bar.
- The ignition switch will not function unless you sit in the seat.
- The lever lock and parking brake are activated if you lift your body off the seat.

https://truckmanualshub.com/

OPTIONAL EQUIPMENT MASS

	TL8	
Standard machine mass (Not including operator)	**Canopy**	**Cab**
	3760 (8289)	3840 (8466)
OPTION		
High-flow hydraulic device	60 (132)	
Rubber crawler (320W)	– 50 (–110)	
Air conditioner	—	40 (88)
Hydraulic quick-hitch	20 (44)	
Lever pattern change ISO ⇔ H	25 (55)	

Units: kg (lb)

	TL10		TL12	
Standard machine mass (Not including operator)	**Canopy**	**Cab**	**Canopy**	**Cab**
	4605 (10150)	4695 (10350)	5195 (11455)	5300 (11685)
OPTION				
High-flow hydraulic device	50 (110)		60 (130)	
Air conditioner	40 (35)			
Hydraulic quick-hitch	20 (45)			
Aux. 2nd (a set option with high-flow)	65 (145)		75 (165)	
Lever pattern change ISO ⇔ H	25 (55)			
Ride control	15 (35)			

Units: kg (lb)

*: Mass of optional equipment is added to the standard machine mass.
*: This table only contains the optional equipment of 10 kg (20 lb) or more in mass.

https://truckmanualshub.com/

First Published May 2012
Sixth Published January 2014

No.42256

OPERATOR'S MANUAL

TL 8
TL10 Track loader
TL12

Edited and issued by TAKEUCHI MFG. CO., LTD.

Printed in Japan by STATION M Co., Ltd.

https://truckmanualshub.com/

CALIFORNIA

PROPOSITION 65 WARNING

Diesel engine exhaust and some of its constituents are known to the State of California to cause cancer, birth defects, and other reproductive harm.
Battery posts, terminals and related accessories contain lead and lead compounds, chemicals known to the State of California to cause cancer and birth defects or other reproductive harm. Wash hands after handling battery.

EC-CONFORMITY CERTIFICATE

We herewith declare that following named machine, based on its conception and design and in the form brought into service is in accordance with the relevant, basic safety and health requirements of the following EC directives. In case of any alteration of the machine not coordinated with us, this certificate loses its validity.

Designation of the machine	Crawler Skid-Steer Loader
Manufacturer	TAKEUCHI MFG. CO., LTD 205 Uwadaira, Sakaki-machi, Hanishina-gun, Nagano 389-0605, Japan

Model	TL8	TL10	TL12
Engine type	V3307-CR-TE4B	V3800-CR-TE4B	V3800-CR-TIE4B
Engine power	54.6kW @ 2600 rpm	67.6kW @ 2400 rpm	80.8kW @ 2400 rpm

The machine is in accordance with the requirements of EC regulations:
1) Machine directive 2006/42/EC and appendix
2) Electromagnetic compatibility-regulation 2004/108/EC and appendix
3) Noise directive 2000/14/EC (Evaluation procedure according to appendix VI), 2005/88/EC and appendices.
4) Regulations on engine emissions: 2004/26/EC and appendices.

Harmonized norms: EN474-1:2006+A1:2009, EN474-3:2006+A2:2012.

Complier of the technical files:
Adam Geiss
Oliver Scharschmidt
Wilhelm Schafer Gmbh
68307 Manheim-Sandhofen GERMANY

Issued in Sakaki, Japan
Akio Takeuchi, President