https://truckmanualshub.com/

# Instructions Manual

## Operating & Maintenance
## 4812268997.pdf

## Rubber wheel roller
## CP275 Tier II

## Diesel ngine
## Cummins 4BTAA3.9

## Serial number
## 10000508x0C002027-

Translation of original instruction

*Reservation for changes*
*Printed in China*

https://truckmanualshub.com/

# Table of contents

**Instruction** ..... **1**

The machine ..... 1

Intended use ..... 1

Warning symbols ..... 1

Safety information ..... 2

General ..... 3

**Safety – General instructions** ..... **5**

**Safety – when operating** ..... **7**

Slopes ..... 7

Driving near edges ..... 8

**Safety (Optional)** ..... **9**

Air conditioning (Optional) ..... 9

**Special instructions** ..... **11**

Special instructions ..... 11

Standard lubricants and other recommended oil and fluids ..... 11

High ambient temperatures, above +40°C (104°F) ..... 11

Lower ambient temperature – Freeze risk ..... 11

Temperatures ..... 11

High pressure cleaning ..... 12

Fire fighting ..... 12

Roll Over Protective Structure (ROPS), ROPS approved cab ..... 12

Jumping starting (24V) ..... 14

**Technical specifications** ..... **15**

Technical specifications ..... 15

Noise level ..... 15

Technical specifications - Dimensions ..... 16

Weights and volumes ..... 17

Working capacity ..... 18

## Contents

General ....18
Tightening torques ....19
**Machine description ....21**
Identification ....21
Product identification number on the frame ....21
Machine plate ....21
Explanation of 17PIN serial number ....22
Engine plate ....22
Safety decals ....24
Locations – Control panel and controls ....27
Locations & control, cab ....28
Function description of instruments and controls in the cab ....29
Using the cab controls ....30
Defroster ....30
Heat ....30
AC ....30
Electrical system ....31
Fuse ....32
Cab, fuse ....32
**Operation ....33**
Before starting ....33
Master switch – Switching on ....33
Before starting ....34
1. Control panel and lights - Check ....34
2. Forward and backward lever - Check ....34
3. Parking brake - Check ....35
View ....35
Operator position ....36
Interlock ....36
Operating the roller ....37

Speed selecting ..... 37
Operating on a slope ..... 38
Checking the treads on the tires ..... 39
Variable tire pressure (air-on-the-run) (Option) ..... 39
Ballast box ..... 40
Driving (Ground Pressure) ..... 41
Ground pressure ..... 41
Low tire pressure – 380kPa (55 psi) ..... 42
Normal tire pressure – 510kPa (70 psi) ..... 43
High tire pressure – 780kPa (110 psi) ..... 43
Interlock/Emergency stop/Parking brake - Check ..... 44
Normal braking ..... 44
Emergency braking ..... 45
Switching off ..... 45
Chocking the wheels ..... 45
Master switch ..... 46
Long-term parking ..... 47
Miscellaneous ..... **49**
Lifting ..... 49
Lifting the roller ..... 49
Lifting the roller with jack ..... 49
Roller prepare for transport ..... 50
Towing the roller ..... 52
Operating instructions - Summary ..... **53**
Preventive maintenance ..... **55**
Maintenance – Lubricants and symbols ..... **57**
Maintenance – Maintenance schedules ..... **59**
Service and maintenance points ..... 59
General ..... 60
Every 10 hours of operation (Daily) ..... 60

## Contents


After the FIRST 50 hours of operation ....61

Every 50 hours of operation (Weekly) ....61

Every 250 hours of operation (Monthly) ....62

Every 500 hours of operation (Every three months) ....62

Every 1000 hours of operation (Every six months) ....63

Every 2000 hours of operation (Yearly) ....64

**Maintenance – 10h ....65**

Diesel engine – Check oil level ....65

Hydraulic reservoir – Check fluid level ....66

Coolant level – Check ....66

Fuel tank – Refueling ....67

Wheel scrapers – Control ....68

Removing the scrapers ....68

Water tank, std – Filling ....69

Brake fluid level – Check ....69

Sprinkler system ....70

Cleaning of sprinkler nozzle ....70

Sprinkler system - Check ....70

Sprinkler system – Freeze risk ....71

Freeze protection ....71

Check the emergency stop system pressure ....71

Tires - Tire pressure ....72

**Maintenance – 50h ....73**

Air cleaner – Checking – Change the main air filter ....73

Air cleaner – Cleaning ....74

Backup filter – Change ....74

Tires – Tire pressure ....75

Fuel filter – Draining ....76

Air conditioning (Optional) – Inspection ....77

Air conditioning (Optional) – Cleaning ....77

**Air conditioner compressor belt – Check** ..... 78

**Upper/Lower Pivot bearing - Lubrication** ..... 79

**Maintenance – 250h** ..... **81**

**Fuel filter – Replacing** ..... 81

**Diesel engine – Oil change** ..... 82

**The engine fuel filter – Changing** ..... 83

**Diesel engine – Replacing oil filter** ..... 83

**Hydraulic oil cooler – Checking – Cleaning** ..... 84

**Air conditioning (Optional) – Inspection** ..... 84

**Battery – Check condition** ..... 85

**Driven chain maintenance** ..... 86

**Driving gear – Check oil level** ..... 87

**Maintenance – 500h** ..... **89**

**Hydraulic reservoir – Check** ..... 89

**Maintenance – 1000h** ..... 91

**Air cleaner – Changing** ..... 91

**Fuel tank - Cleaning** ..... 92

**Watering system – Draining** ..... 92

**Backup filter – Change** ..... 92

**Hydraulic filter – Change** ..... 93

**Cab – Fresh air filter - Replacing** ..... 94

**Wheel gear – Oil change** ..... 94

**Drive gear – Replenishing the oil** ..... 95

**Propulsion pump filter – Replace** ..... 95

**Emergency stop – Adjustment** ..... 96

**Maintenance – 2000h** ..... **97**

**Hydraulic reservoir – Fluid change** ..... 97

**Fuel tank – Cleaning** ..... 98

**Water system – Draining** ..... 98

**Water tank – Cleaning** ..... 99

## Contents

**Air conditioning (Optional) – Overhaul** ..... 99

**Air conditioning (Optional) – Drying filter – Inspection** ..... 100

**Engine – Replacing the coolant** ..... 101

**Gear oil – Replacement** ..... 102

**Hydraulic oil change (2000 hours or 1 year)** ..... 102

**Drive chain – Adjustment** ..... 103

**Additional instruction** ..... **105**

**Oil spray system (Optional)** ..... 105

**Spray volume – Adjustment** ..... 106

**Maintenance – Oil spray system (Optional)** ..... 106

**Temporary cleaning** ..... 106

**Air on the run (Optional)** ..... 107

**Air charge and discharge** ..... 108

**Maintenance – Air on the run (Optional)** ..... 108

**Disposal** ..... **111**

https://truckmanualshub.com/



# Introduction

## The machine

Dynapac CP275 is a heavy rubber wheel roller in the 27 tones class, with a working width of 2370 mm.

It has five guide wheels at the front, and four drive wheels at the back. The hydrostatic drives, flexible ballast solution, and a wide range of optional equipment mean that the machine is available in many different configurations.

## Intended use

CP275 is mainly used together with other asphalt rollers for surface sealing. Thanks to its weight, it is also suitable for soil compaction.

The attachment or installation of additional devices, which are used to intervene in the function of the machine or with which its function are supplement, is only permitted with the written approval of the manufacturer.
If necessary, approval should be sought from local authorities.
Consent from the authorities is however no substitute for approval from the manufacturer.

## Warning symbols

***WARNING ! Marks a danger or a hazardous procedure that can result in life threatening or serious injury if the warning is ignored.***

**CAUTION! Marks a danger or hazardous procedure that can result in damage to the machine or property if the warning is ignored.**

https://truckmanualshub.com/



## Safety information

***It is recommended to at least train operators in handling and daily maintenance of the machine in accordance with the instruction manual.***
***Passengers are not allowed on the machine, and you must sit in the seat when operating the machine.***

***The safety manual supplied with the machine must be read by all roller operators. Always follow the safety instructions. Do not remove the manual from the machine.***

***We recommend that the operator reads the safety instructions in this manual carefully. Always follow the safety instructions. Ensure that this manual is always easily accessible.***

***Read the entire manual before starting the machine and before carrying out any maintenance.***

***Replace immediately the instruction manuals if lost, damaged or unreadable.***

***Ensure good ventilation (extraction of air by fan) where the engine is run indoors.***

***Prevent persons from entering or remaining in the danger area, i.e. a distance of at least 7 m (23 ft) in all directions from operating machines.***
***The operator may allow a person to remain in the danger area, but should then observe caution and operate the machine only when the person is visible or has given clear indications of where he or she is.***

https://truckmanualshub.com/



## General

This manual contains instructions for machine operation and maintenance.

The machine must be correctly maintained for maximal performance.

The machine should be kept clean so that any leakages, loose bolts and loose connections are discovered at as early a point in time as possible.

Inspect the machine every day, before starting.
Inspect the entire machine so that any leakages or other faults are detected.

Check the ground under the machine. Leakages are more easily detected on the ground than on the machine itself.

THINK ENVIROMENT! Do not release oil, fuel and other environmentally hazardous substances into the environment. Always send used filters, drain oil and fuel remnants to environmentally correct disposal.

This manual contains instructions for periodic maintenance normally carried out by the operator.

**Additional instructions for the engine can be found in the manufacture's engine manual.**

https://truckmanualshub.com/

https://truckmanualshub.com/



## Safety - General instructions
**(Also read the safety manual)**

**1. The operator must be familiar with the contents of the OPERATION section before starting the roller.**

**2. Ensure that all instructions in the MAINTENANCE section are followed.**

**3. Only trained and/or experienced operators are to operate the roller. Passengers are not permitted on the roller. Remain seated at all times when operating the roller.**

**4. Never use the roller if it is in need of adjustment or repair.**

**5. Only mount and dismount the roller when it is stationary. Use the intended grips and rails. Always use the three-point grip (both feet and one hand, or one foot and both hands) when mounting or dismounting the machine.**
**Never jump down from the machine.**

**6. The ROPS (Roll Over Protective Structure) should always be used when the machine is operated on unsafe ground.**

**7. Drive slowly in sharp bends.**

**8. Avoid driving across slopes. Drive straight up or straight down the slope.**

**9. Make sure that there are no obstacles in the direction of travel, on the ground, in front of or behind the roller, or overhead**

**10. Drive particularly carefully on uneven ground.**

**11. Use the safety equipment provided. The seat belt must be worn on machines fitted with ROPS.**

**12. Keep the roller clean. Clean any dirt or grease that accumulates on the operator platform immediately. Keep all signs and decals clean and legible.**

**13. Safety measures before refueling:**
**- Shut off the engine**
**- Do not smoke**
**- No naked flame in the vicinity of the machine**
**- Ground the filling device nozzle to the tank to avoid sparks**

**14. Before repairs or service:**
**- Chock the wheels.**
**- Lock the hitch system when necessary.**

**15. Hearing protection is recommended if the noise level exceeds 85 dB(A). The noise level can vary depending on the equipment on the machine and the surface the machine is being used on.**

https://truckmanualshub.com/



**16. Do not make any changes or modifications to the roller that could affect safety. Changes are only to be made after written approval has been given by Dynapac.**

**17. Avoid using the roller before the hydraulic fluid has reached its normal working temperature. Braking distances can be longer than normal when the fluid is cold. Refer to the operating instruction in the STOP section.**

**18. For your own protection always wear:**
**- Helmet**
**- working boots with steel toecaps**
**- ear protectors**
**- reflecting clothing/high visibility jacket**
**- working gloves**

https://truckmanualshub.com/



## Safety – When operating

***Prevent persons from entering or remaining in the danger area, i.e. a distance of at least 7 m (23 ft) in all directions from operating machines.***
***The operator may allow a person to remain in the danger area, but should then observe caution and operate the machine only when the person is visible or has given clear indications of where he or she is.***

### Slopes

This angle has been measured on a hard, flat surface with the machine stationary.

The steering angle is zero, the tires have normal air pressure and all the tanks are full.

Always take into consideration that loose ground, the steering of the machine, different tire pressures, the operating speed and that an increase in the center of gravity can all cause the machine to topple even on slopes with lesser gradients than those specified here.

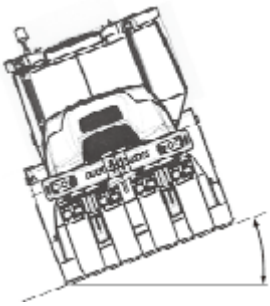

**Max. 15˚ or 27%**

***Fig. Operating on slopes***

***To exit the cab in an emergency, release the hammer on the rear right post and break the right opening side-windows.***

***It is recommended that ROPS (Roll Over Protective Structure) or a ROPS approved cab, is always used when driving on slopes or unsafe ground.***

***Always use the lowest gear when operating on slopes.***

***Where possible, avoid driving across slopes. Drive instead straight up and down sloping ground.***

https://truckmanualshub.com/



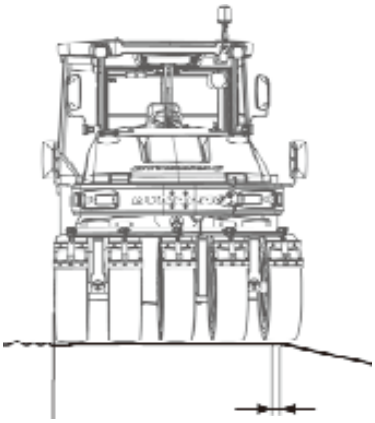


***Fig. Position of wheels when driving near an edge***

## Driving near edges

When driving close to edges or holes, make sure that at least 1/4 of the outer tires are on the previously compacted material.

https://truckmanualshub.com/



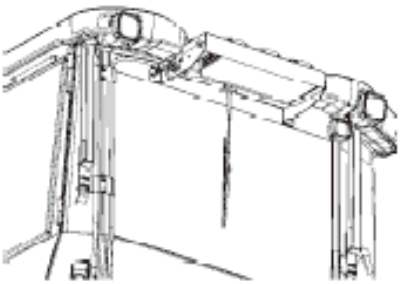

*Fig. Operating on slopes*

## Safety (Optional)

## Air conditioning (Optional)

***The system contains pressurized refrigerant. It is forbidden to release refrigerants into the atmosphere.***

***Work on the refrigerant circuit is only to be carried out by authorized companies.***

***The cooling system is pressurized. Incorrect handling can result in serious personal injury. Do not disconnect or undo the hose couplings.***

**The system must be re-filled with an approved refrigerant by authorized personnel when necessary. See decal on or in the vicinity of the installation.**

https://truckmanualshub.com/

https://truckmanualshub.com/



# Special instructions

**Standard lubricants and other recommended oils and fluids**

Before leaving the factory, the systems and components are filled with the oils and fluids specified in the lubricant specification. These are suitable for ambient temperatures in the range -15°C to +40°C - 105°F).

**Higher ambient temperatures, above +40°C (104°F)**

For operation of the machine at higher ambient temperatures, however maximum +50°C (122°F), the following recommendations apply:

The diesel engine can be run at this temperature using normal oil. However, the following fluids must be used for other components:

Hydraulic system - mineral oil Shell Tellus T100 or similar.

**Lower ambient temperature - Freeze risk**

Make sure that the watering system is empty/drained of water (sprinkler, hoses, tank/s) or that anti-freeze has been added, to prevent the system freezing.

**Temperatures**

The temperature limits apply to standard versions of rollers.

Rollers equipped with additional equipment, such as noise suppression, may need to be more carefully monitored in the higher temperature ranges.

https://truckmanualshub.com/



## High pressure cleaning

Do not spray water directly onto electrical components or the instrument panels.

Place a plastic bag over the fuel filler cap and secure with a rubber band. This is to avoid high pressure water entering the vent hole in the filler cap. This could cause malfunctions, such as the blocking of filters.

## Fire fighting

If the machine catches fire, use an ABC-class powder fire extinguisher.

A BE-class carbon dioxide fire extinguisher can also be used.

## Roll Over Protective Structure (ROPS), ROPS approved cab

***If the machine is fitted with a Roll Over Protective Structure (ROPS, or ROPS approved cab) never carry out any welding or drilling in the structure or cab.***

***Never attempt to repair a damaged ROPS structure or cab. These must be replaced with new ROPS structure or cabs.***

## Battery handling

***When removing batteries, always disconnect the negative cable first.***

https://truckmanualshub.com/



***When fitting batteries, always connect the positive cable first.***

**Dispose of old batteries in an environmentally friendly way. Batteries contain toxic lead.**

**Do not use a quick-charger for charging the battery. This may shorten battery life.**

https://truckmanualshub.com/



## Jump starting (24V)

***Do not connect the negative cable to the negative terminal on the dead battery. A spark can ignite the oxy-hydrogen gas formed around the battery.***

***Check that the battery used for jump starting has the same voltage as the dead battery.***

Turn the ignition and all power consuming equipment off. Switch off the engine on the machine which is providing jump start power.

**Jump leads must have 24V**

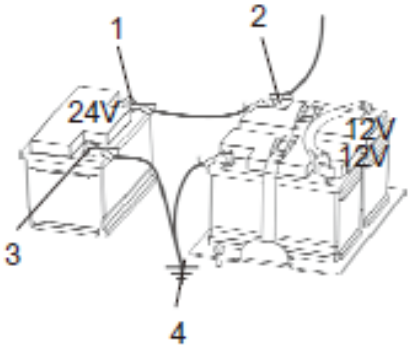


First connect the plus terminal (1) on the auxiliary battery to the plus terminal (2) on the flat battery, then connect the minus terminal (3) to a suitable earth point (4) on the machine.

Start the engine on the power providing machine. Let it run for a while. Now try to start the other machine. Disconnect the cables in the reverse order.

https://truckmanualshub.com/



# Technical specifications

## Noise level

**The noise levels are measured in accordance with the operational cycle described in GB16710 with operator seat in transport position.**

| | |
|---|---|
| Guaranteed sound power level, LwA | 106dB(A) |
| Sound pressure level at the operator's ear (cab), LpA | 80dB(A) |

# Technical specifications – Dimensions

## Dimensions

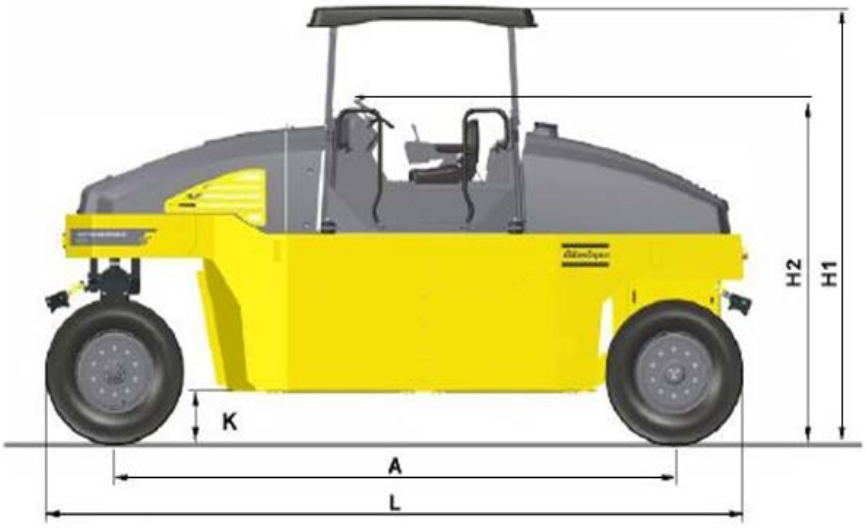


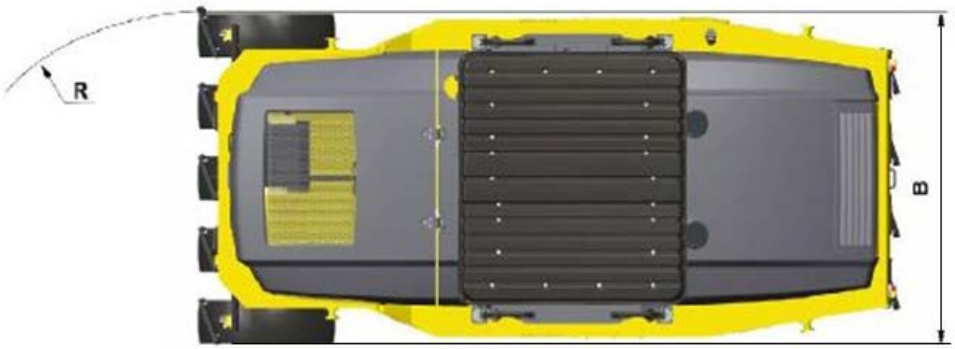


| Dimensions | mm | in |
|---|---|---|
| A | 4250 | 167 |
| B | 2370 | 93 |
| H1 | 3080 | 121 |
| H2 | 2430 | 95.7 |
| K | 350 | 13.8 |
| L | 5310 | 209 |
| R | 9000 | 354 |

## Weights and volumes

| Weights | | |
|---|---|---|
| Weight without ballast | 15100kg | 33290lbs |
| Weight with max ballast | 30000kg | 66139lbs |

| Fluid volumes | | |
|---|---|---|
| Hydraulic reservoir | 80Liters | 70.4Quart |
| Diesel engine oil | 9Liters | 7.9Quart |
| Coolant, diesel engine | 20Liters | 17.6Quart |
| **Fuel tank** | 320Liters | 281.7Quart |
| Rear axle | 20Liters | 17.6Quart |
| **Water tank** | 600Liters | 528.2Quart |

| Air condition system | |
|---|---|
| Coolant designation: | HFC-R134:A |
| Coolant weight when full: | 1350 gram (2.98 lbs) |

| | | |
|---|---|---|
| **Mixed ballast - max** | 11.8tonnes | 14.2tonnes |

The machine can use 4 steel blocks of 4 types of steel blocks as ballast in the lower of the frame. Yellow type blocks are mounted on the front; black type blocks are mounted on the rear.

Use a suitable combination to achieve max ballast.

The roller's service weight consists of the weight of the roller plus the weight of the ballast.

Thicker layers require a heavier roller for compaction, while thinner layers do not need such a heavy roller.

## Working capacity

| Compaction data | | |
|---|---|---|
| Load: | | |
| - Without ballast | 1677kg | 3697lbs |
| - With max ballast | 3333.3kg | 7349lbs |

## General

| Engine | | |
|---|---|---|
| **Manufacturer/Model** | **Cummins 4BTAA3.9-C125** | |
| Rated power (SEA J1995) | 93kW | 125hp |
| **Engine speed** | **2200 rpm** | |

| Electric system | |
|---|---|
| Battery | 24V (2x12V 74Ah) |
| Alternator | 24V 60A |
| Fuses | See the Electrical system section - fuses |

| Bulbs (if mounted) | Watt | Socket |
|---|---|---|
| Drive lights, front | 75/50 | P43t (H4) |
| Direction lights, front | 21 | BA 15s Si |
| Brake-Position lights | 21 | BA 15s |
| Direction lights, rear | 21 | BA |
| Working lights | 70 | PK22s (H3) |
| Cab lights | 5 | C5W |

## Tightening torque

Tightening torque in Nm (lbf.ft) for oiled or dry bolts tightened with a torque wrench.

**Metric coarse screw thread, bright galvanized (fzb):**

**STRENGTH CLASS:**

| M - thread | 8.8, Oiled | 8.8, Dry | 10.9, Oiled | 10.9, Dry | 12.9, Oiled | 12.9, Dry |
|---|---|---|---|---|---|---|
| **M6** | 8,4 | 9,4 | 12 | 13,4 | 14,6 | 16,3 |
| **M8** | 21 | 23 | 28 | 32 | 34 | 38 |
| **M10** | 40 | 45 | 56 | 62 | 68 | 76 |
| **M12** | 70 | 78 | 98 | 110 | 117 | 131 |
| **M14** | 110 | 123 | 156 | 174 | 187 | 208 |
| **M16** | 169 | 190 | 240 | 270 | 290 | 320 |
| **M20** | 30 | 370 | 470 | 520 | 560 | 620 |
| **M22** | 446 | 497 | 626 | 699 | 752 | 839 |
| **M24** | 570 | 640 | 800 | 900 | 960 | 1080 |
| **M30** | 1130 | 1260 | 1580 | 1770 | 1900 | 2100 |

**Metric coarse thread, zinc-treated (Dacromet/GEOMET):**

**STRENGTH CLASS:**

| M - thread | 10.9, Oiled | 10.9, Dry | 12.9, Oiled | 12.9, Dry |
|---|---|---|---|---|
| **M6** | 12,0 | 15,0 | 14,6 | 18,3 |
| **M8** | 28 | 36 | 34 | 43 |
| **M10** | 56 | 70 | 68 | 86 |
| **M12** | 98 | 124 | 117 | 147 |
| **M14** | 156 | 196 | 187 | 234 |
| **M16** | 240 | 304 | 290 | 360 |
| **M20** | 470 | 585 | 560 | 698 |
| **M22** | 626 | 786 | 752 | 944 |
| **M24** | 800 | 1010 | 960 | 1215 |
| **M30** | 1580 | 1990 | 1900 | 2360 |

**ROPS - bolts**

| | |
|---|---|
| Bolt dimensions: | M22 (PN 4812266655) |
| Strength class: | 10.9 |
| Tightening torque: | 786 Nm |

## Hydraulic system

| **Opening pressure** | **Mpa** |
|---|---|
| Drive system | 42,0 |
| Charge system | 2,5 |
| Control system | 16,0 |
| Fan drive | 12,5 |
| Brake release | 2,5 |

https://truckmanualshub.com/



# Machine description

## Identification

### Production identification number on the frame

The machine's PIN (product identification number) is punched on the right edge of the frame. This number is the same number as the machine plate's PIN (serial number).

### Machine plate

The machine plate is fixed on the top step, on the left side of the operator platform.

The plate specifies the manufacturer's name and address, the type of machine, the PIN number (serial number), service weight, engine power and year of manufacture. (On machines supplied outside the EU, there are no CE markings and in some cases no year of manufacture.).

DYNAPAC

Dynapac (China) Compaction & Paving Equipment Co.,Ltd.
38, Quanwang Road, Wuqing High Tech Ind. Park, Tianjin, China 301700

Product Identification Number

| | Type | Rated Power | Max axle load front / rear |
|---|---|---|---|
| | | kW | kg |

| Gross machinery mass | Operating mass | Max ballast | Year of Mfg |
|---|---|---|---|
| kg | kg | kg | |

**Please state the machine's PIN when ordering spares.**

| | | | | | |
|---|---|---|---|---|---|
| 100 | 00123 | V | 0 | A | 123456 |
| A | B | C | D | E | F |

**Explanation of 17PIN serial number**

A= Manufacturer
B= Family/Model
C= Check letter
D= No coding
E= Production unit
F= Serial number

D, E, F would be useful when ordering spare parts or check the machine information.

**Engine plate**

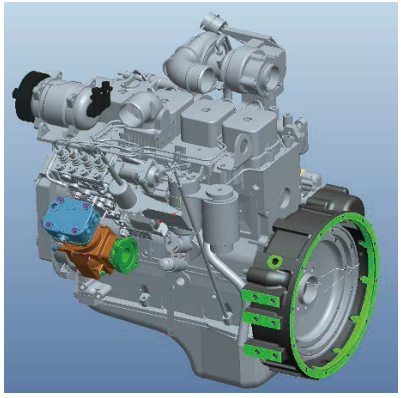

***Fig. Engine***

The engine's type plate is located on the left side of engine under the ejector and is accessible when the hood is opened.

The type plate is also placed under the machine plate on the top step to the operator platform.

The plate specifies the type of engine, its serial number and the engine specification. Please specify the engine serial number when ordering spares. Refer also to the engine manual.

# Machine description

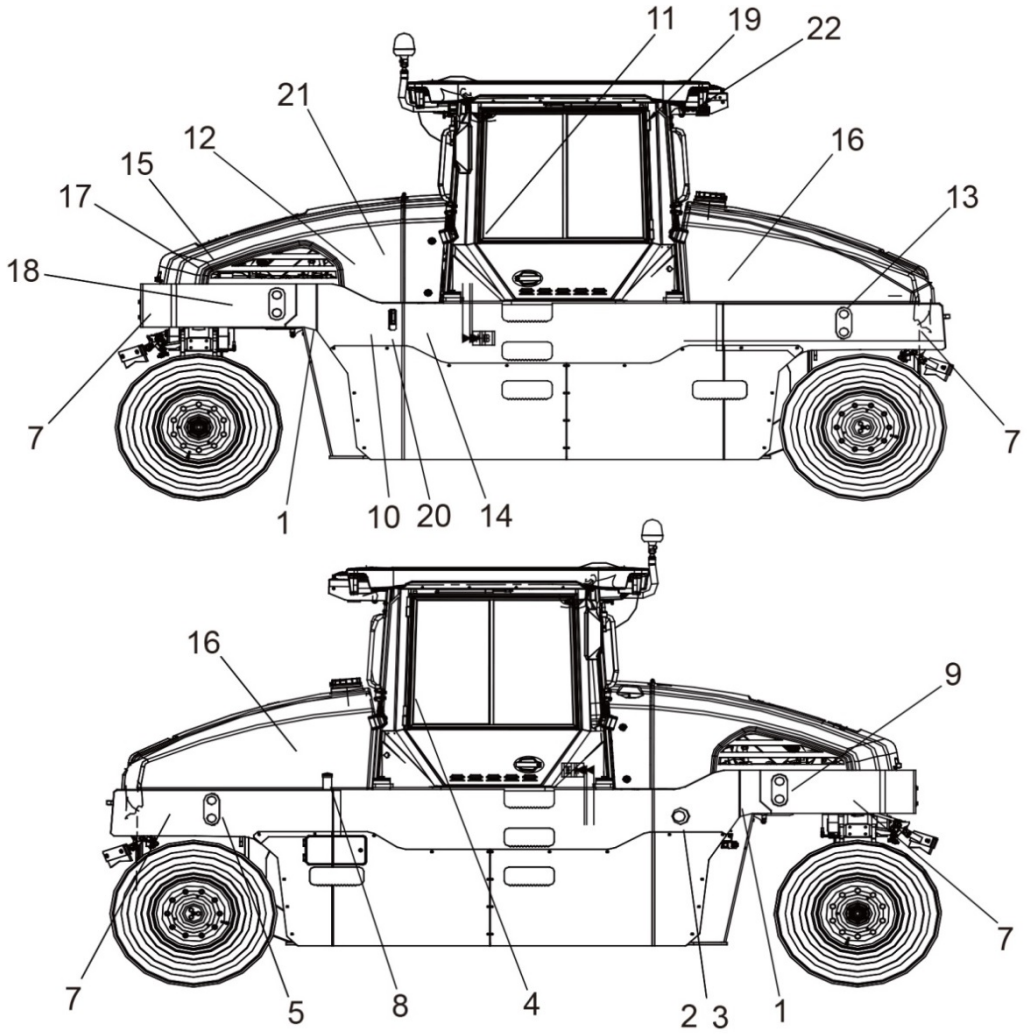


| | | | | | |
|---|---|---|---|---|---|
| 1 | Warning, crush zone | 4700903422 | | | |
| 2 | Warning, rotating engine components | 4700903423 | | | |
| 3 | Warning, burning hot surface | 4700903424 | 14 | Battery voltage | 4700393959 |
| 4 | Warning, instruction manual | 4700903459 | 15 | Water tank | 4700991657 |
| 6 | Hoisting plate | 4700904870 | 16 | Warning, high pressure fluid | 4700397286 |
| 7 | Tire pressure | 4700374765 | 17 | Warning, starting gas | 4700791642 |
| 8 | Diesel fuel | 4700991658 | 18 | Emergency exit (cab only) | 4700903590 |
| 9 | Fixing point | 4700357587 | | | |
| 10 | Hydraulic fluid | 4700272372 | | | |
| 11 | Handbook compartment | 4700903425 | 19 | Coolant | 4700388449 |
| 12 | Battery disconnector | 4700904835 | 20 | Warning, toxic gas | 4700904185 |
| 13 | Fixing point | 4700382751 | | | |

## Safety decals

Always make sure that all safety decals are completely legible, and remove dirt or order new decals if they have become illegible. Use the part number specified on each decal.

**4700903422**
**Warning - Crush zone, wheel.**
**Maintain a safe distance from the crush zone.**

**4700903423**
**Warning - Rotating engine components.**
**Keep your hands at a safe distance from the danger zone.**

**4700903424**
**Warning - Hot surfaces in the engine compartment.**
**Keep your hands at a safe distance from the danger zone.**

**4700904895**
**Warning - Brake disengagement**
**Study the towing chapter before disengaging the brakes.**
**Danger of being crushed.**

**4700903459**
**Warning - Instruction manual**
**The operator must read the safety, operation and maintenance instructions before operating the machine.**

**4700791642**
**Warning - Starting gas**
**Starting gas is not to be used.**

https://truckmanualshub.com/

**4700904165**
**Warning - Toxic gas**

**Read the instruction manual.**

**4700397286**
**Warning - High pressure fluid**
**Make sure to drain the pressure in the accumulators before opening the hydraulic system.**

Diesel fuel

Lifting point

Hoisting plate

Handbook compartment

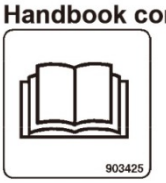


Master switch

Hydraulic fluid

Tire pressure

Securing point

Battery voltage

Emergency exit (cab only)

https://truckmanualshub.com/



## Locations - Control panel and controls

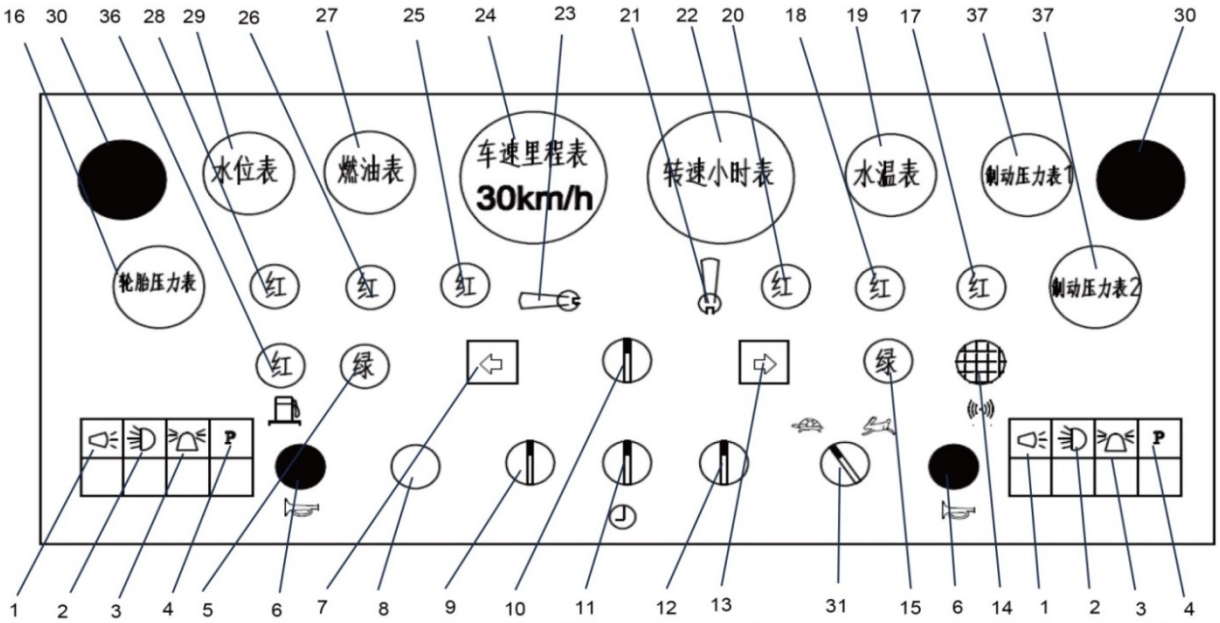

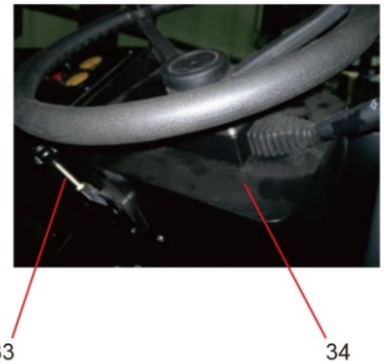

| | | | | | |
|---|---|---|---|---|---|
| 1 | Driving lights switch | 2 | Working lights switch | 3 | Rotation beacon switch |
| 4 | Parking brake | 5 | Control indicator (left) | 6 | Horn |
| 7 | Steering indicator (Left) | 8 | Start switch | 9 | Manual/Automatic water sprinkler |
| 10 | Water/Oil sprinkler selector | 11 | Oil/Water sprinkle time control | 12 | Manual/Automatic oil sprinkler |
| 13 | Direction indicator (Right) | 14 | Hazard warning lights | 15 | Control indicator (Right) |
| 16 | Tire barometer (Optional) | 17 | Oil pressure (low) alarm lamp | 18 | Oil filter blockage alarm indicator |
| 19 | Engine water thermometer | 20 | Parking indicator | 21 | Centralized air filling pressure control button |
| 22 | Speed meter | 23 | Left/Right control panel button | 24 | Speedometer |
| 25 | Neutral position indicator | 26 | Air filter blockage alarm lamp | 27 | Fuel gauge |
| 28 | Charging indicator | 29 | Water level gauge (water tank) | 30 | Emergency stop switch |
| 31 | Speed selector | 32 | Forward/Reverse lever | 33 | Throttle control handle |
| 34 | Direction control switch (Left/Right) | 35 | Brake pedal | 36 | Fuel filter alarm lamp |
| 37 | Brake presage gauge | | | | |

## Location & control, cab

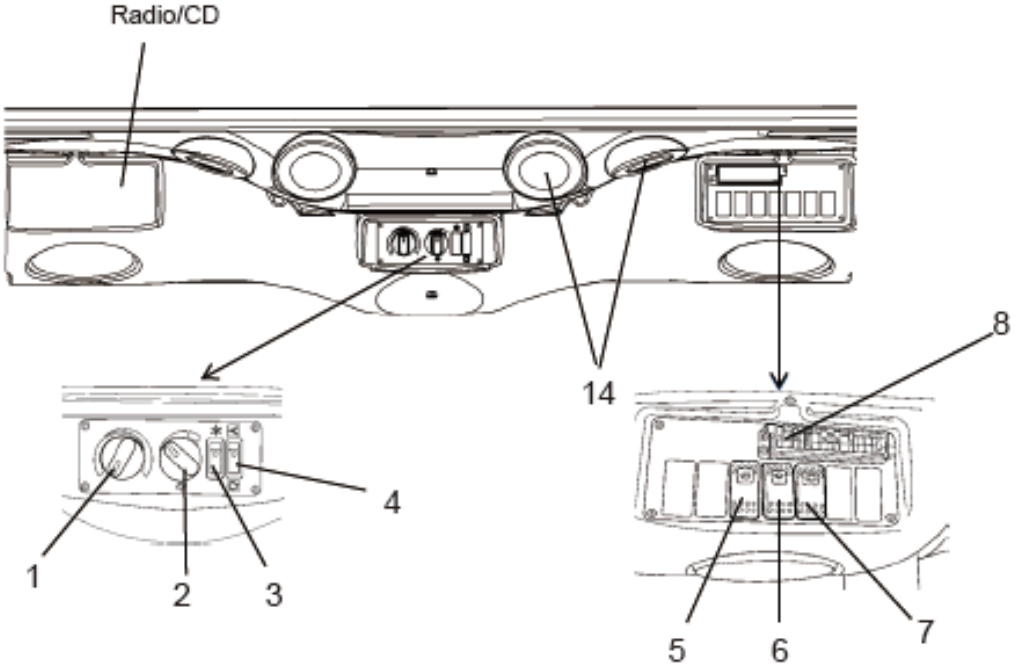


Fig. Cab roof, front

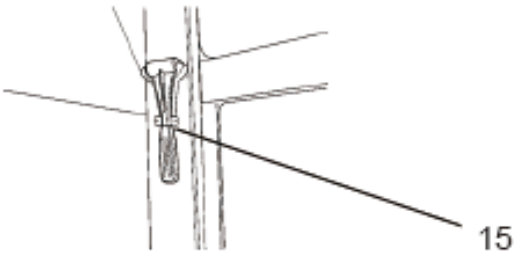


Fig. Rear right cab post

https://truckmanualshub.com/



## Function description of instruments and controls in the cab

| No | Designation | Symbol | Function |
|---|---|---|---|
| 1 | Heater control | | Turn to the right to increase heating.<br>Turn to the left to reduce heating. |
| 2 | Ventilation fan, switch | | In the left position, the fan is off.<br>Turning the knob to the right increases the volume of air entering the cab. |
| 3 | Air conditioning, switch | | Starts and stops the air conditioning. |
| 4 | Cab air recirculation, switch | | Pressing the top opens the air damper so that fresh air comes into the cab.<br>Pressing the bottom closes the damper so that the air recirculates inside the cab. |
| 5 | Front wiper, switch | | Press to operate the front screen wiper. |
| 6 | Front and rear window screen washers, switch | | Press the upper edge to activate the front screen<br>washers.<br>Press the lower edge to activate the rear screen washers. |
| 7 | Rear wiper, switch | | Press to operate the rear screen wiper. |
| 8 | Fuse box | | Contains fuses for the electrical system in the cab. |
| 14 | Defroster nozzle | | Turn the nozzle to direct the flow of air. |
| 15 | Hammer for emergency exit | | To escape from the cab in an emergency, release the hammer and break the opening windows on the right-hand side. |

## Using the cab controls

### Defroster

To quickly remove ice or mist, make sure that only the front and rear air nozzles are open.
Turn the heater and fan dial (1 and 2) to max.
Adjust the nozzle so that it blows on the window to be be-iced, or to remove mist.

### Heat

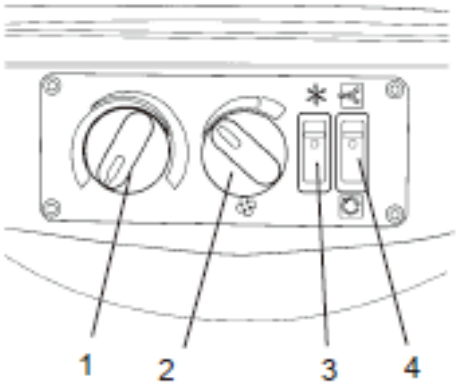


If the cab is cold, open the lower nozzle on the front columns and the middle nozzles just over the controls for the heater and fan.
Turn to max heat and max fan speed.
When the required temperature has been reached, open the other nozzles and if necessary turn down the heat and fan speed.

### AC

**NOTE:** When using AC all the windows must be closed for the system to work efficiently.

To quickly reduce the temperature in the cab, adjust the following settings on the control panel.
Turn on AC (3) and set the fresh air (4) in the lower position to switch off the fresh air valve.
Set the heater control (1) to minimum and turn up the fan speed (2). Keep only the front middle nozzles in the ceiling open.
When the temperature has dropped to a comfortable level, adjust the required temperature on the heater control (1) and reduce the fan speed (2).
Now open the remaining nozzles in the roof to achieve a comfortable temperature in the cab.
Reset the fresh air button (4) to the upper position for fresh air.

https://truckmanualshub.com/



## Electrical system

***Fig1. Main switch box***

1. ***Control unit (ECU)***
2. ***Main relay***
3. ***Fuse***

The machine's main switchbox (fig1.) is located on the rear of the operator platform. There is a plastic cover over the switchbox and fuses.

On the plastic cover there is a 24V socket.

The roller is equipped with 24 V electrical system and an AC alternator.

***Connect the correct polarities (ground) to the battery. The cable between the battery and the alternator must not be disconnected when the engine is running.***

## Fuse

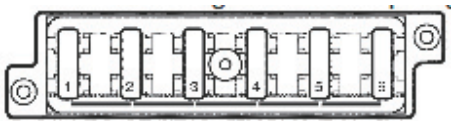


*Fig. Fuse panel*

The figure shows the position of the fuses.
The table in below gives fuse amperage and function.

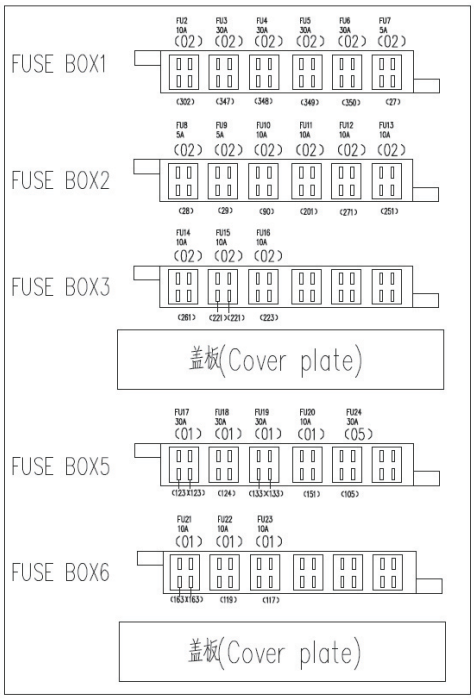


FUSE BOX1
FU2: Power supply ECU
FU3: Power supply ECU
FU4: Power supply ECU
FU5: Power supply ECU
FU6: Power supply ECU
FU7: Pump neutral position

FUSE BOX2
FU8: Sprinkler shift
FU9: Oil/water sprinkler speed
FU10: Seat switch/High speed switch
FU11: Warning lighting
FU12: Backup alarm
FU13: Water pump

FUSE BOX3
FU14: Oil pump
FU15: Instrument
FU16: Emergency stop

FUSE BOX6
FU21: Horn
FU22: Stop lighting
FU23: Radio FM/AM

FUSE BOX5
FU17: Driving lighting
FU18: Cab lighting
FU19: Working lighting
FU20: Turning lighting
FU24: Heat

## Cab fuse

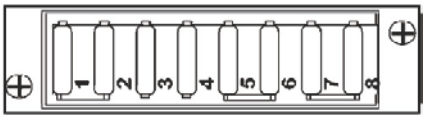


*Fig. Cab roof fuse box*

The figure shows the position of the fuses.
The table in below gives fuses amperage and function. All fuses are flat pin fuses.

| | Fuse box F7 | | | | |
|---|---|---|---|---|---|
| 1 | Interior lighting | 10A | 4 | Heater fan | 15A |
| 2 | CD/Radio | 10A | 5 | Windscreen wiper/washers, front/rear | 10A |

https://truckmanualshub.com/



# Operation

## Before starting

### Master switch – Switching on

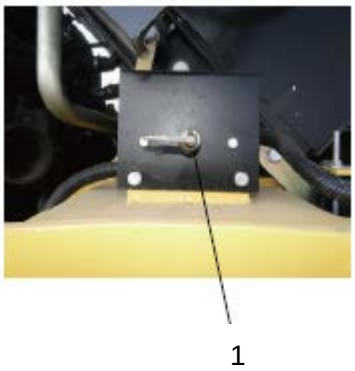


***Fig1. Engine compartment***

***1. Battery disconnector***

Remember to carry out daily maintenance. Refer to the maintenance instructions.

The battery disconnector is located in the engine compartment, on the right side of engine parts. Open the engine hood; turn the key (1) to the ON position. The roller is now supplied with power.

***If the main battery/master switch is covered, the engine hood must be unlocked driving operation, to be able to reach the switch in an emergency.***

***Do not run the starter motor for too long (max. 30 seconds). If the engine will not start, wait two minutes before trying again.***

### Driver seat - Adjustment

***Fig2. Driver seat***

***1. Locking lever – Length adjustment***

***2. Backrest angle***

Adjust the operator's seat so that the position is comfortable and so that the controls are within easy reach.

The seat can be adjusted as follows.

- Length adjustment (1).
- Back support angle (2).

***Always make sure that the seat is secure before beginning operation.***

## Before starting

### 1. Control panel and lights - Check

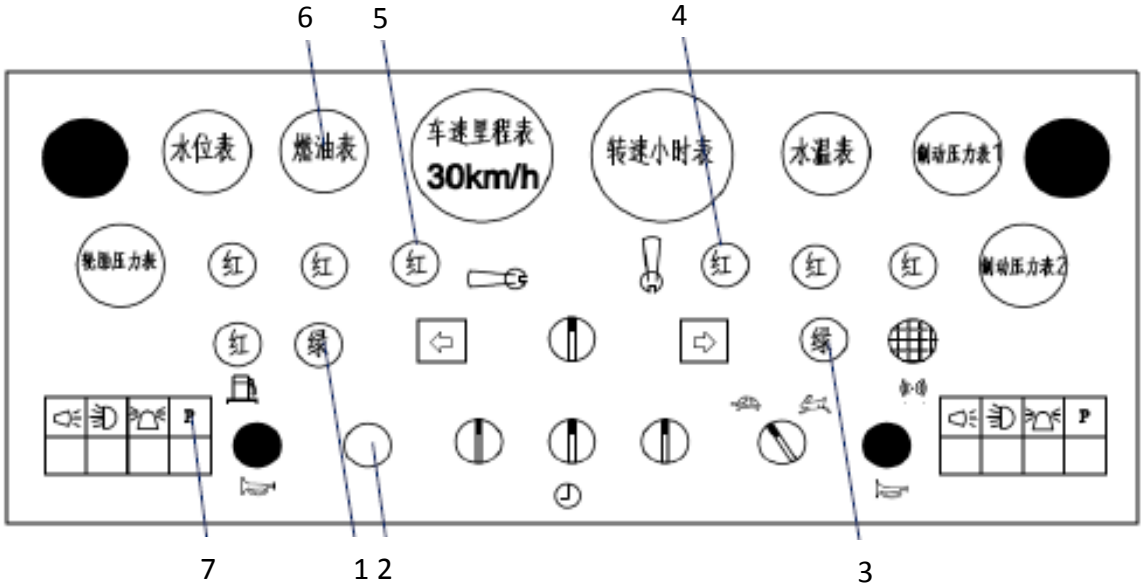


Turn the ignition key (2) to “ON” position, neutral position indicator (5), parking indicator (4) and control indicator (1) or (3) on operator side are all activated.
Make sure the parking brake button (7) is on “pressed” condition.
Make sure the emergency stop button is on “unpressed” condition.
Make sure the fuel gauge, water level gauge have readings, oil pressure alarm is “on”.

### 2. Forward and backward lever - Check

To start the machine the forward/backward lever must be in neutral position, in the middle.

Before starting, make sure the throttle is in idle state.
(the state showed in figure is on the left operation side)

https://truckmanualshub.com/



### 3. Parking brake - Check

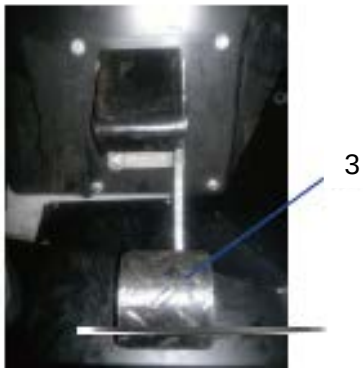


**Parking brake – Check**

Check tire pressure for all tires ensure the pressure accuracy.
Check the “tire pressure gauge” (2) (option) on the control panel, move the manual pressure control valve (1) in the middle, move it upward to increase pressure, downward to decrease pressure.
Or check each tire’s pressure by using tire pressure gauge.

***Test the brake valve function; ensure the normalcy of this function is essential for normal operating the machine.***

Test through pressing the brake pedal (3), the brake pressure indicator will be activated.

***Fig. View***

**View**

Before starting, make sure that the view ahead, to the rear, and to the sides is unobstructed.

All cab windows should be clean and the rear view mirrors should be correctly adjusted.

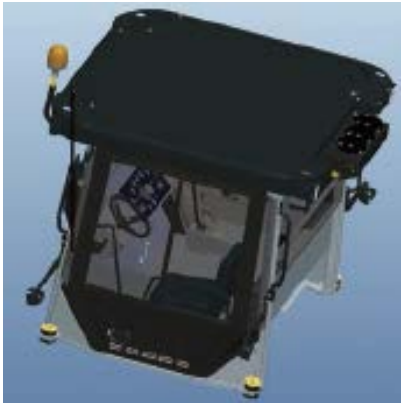

*Fig. Driver seat*

**Operator position**

If a ROPS (Roll Over Protective Structure) or a cab is fitted to the roller, always wear the seat belt provided and wear a protective helmet.

***Replace the seat belt if it shows signs of wear or has been subjected to high levels of force.***

***If the machine is fitted with a cab, make sure that the door is closed when in motion.***

**Interlock**

The roller is equipped with Interlock.

The diesel engine switches off after 7 seconds if the operator rises from the seat when going forwards/backwards.

If the Forward/Reverse lever is in neutral, when the operator stands up a buzzer will be activated until parking switch is activated.

The engine does not stop if the parking brake is activated.

The engine will switch off immediately if for any reason the Forward/Reverse lever is moved out of neutral when the operator is not sitting down in the seat.

***Sit down for all operations!***

https://truckmanualshub.com/



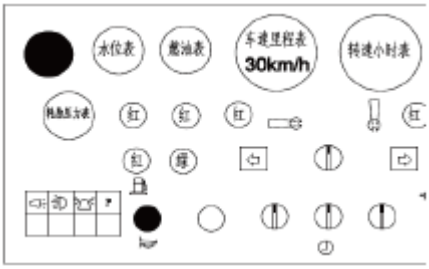


## Operating the roller

***Under no circumstances is the machine to be operated from the ground. The operator must be seated inside the machine during all operation.***

Check that the steering is working correctly by turning the steering wheel once to the right and once to the left while the roller is stationary.

When compacting asphalt, remember to turn on the sprinkler system.

***Make sure that the area in front of and behind the roller is clear.***

In below there are some speed recommendation according to different working conditions:
First gear speed (tortoise):
Used for variety different material session
Used for climbing working condition

Second gear speed (rabbit):
Used for transportation

## Speed selecting

***Fig 1. Speed selector***

While roller is stationary, change the direction or change gears.

When the tire temperature is low, from time to time to check tire surface to ensure whether asphalt mixture stuck to the tire, sprinkle water or oil on the tire could effectively prevent this problem.

https://truckmanualshub.com/



### Operating on a slope

***Under no circumstances is the machine to be operated from the ground. The operator must be seated inside the machine during all operation.***

When transporting on steep ground (downward slope > 5%) make sure not to exceed the maximum speed for the roller.

Selecting low speed increases the efficiency of the engine brake and prolongs the brake life.

Low speed should **always** be selected when working and transporting on steep slopes (>15%).

The driving and braking rear wheels should also **always** be pointing down the slope, i.e. the roller is driven forwards up the slope and reversed down the slope.

***Make sure that the area in front of and behind the roller is clear.***

https://truckmanualshub.com/



### Checking the treads on the tires

Inspect the tire treads from time to time to ensure no asphalt has stuck to the tires. This can occur before the tires are sufficiently warm.
Mixing 2-4% cutting fluid to the tire sprinkler water can prevent this problem.

### Variable tire pressure (air-on-the-run) (Option)

***Fig1. Control panel***

1. ***Tire pressure (+)***
2. ***Tire pressure (-)***

The operator can vary the pressure while work is in progress with the air pressure control on the roller.
The pressure is variably by adjusting the keys (fig1) on the keypad. Pressure adjusting interval is between maximum 780kPa (110psi) and minimum 380kPa (55psi). Push the key to upward position (1) to increase the pressure; push the key downward (2) to reduce the pressure.
The pressure level of the tire is shown on the pressure gauge on the top left corner of the instrument board.

The tire pressure should not be lower than 380 kPa, otherwise it would impair the service life of the tire.

## Ballast box

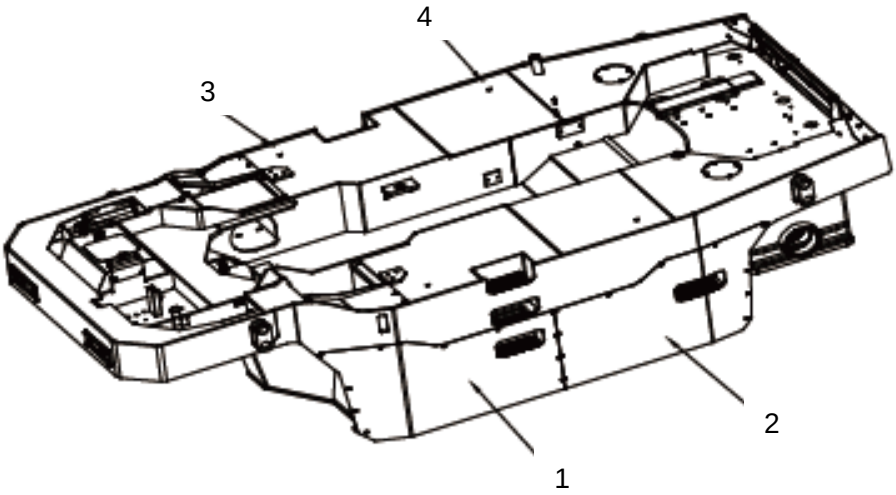


***Fig. Ballast box cover***

1. ***Top left cover***
2. ***Rear left cover***
3. ***Top right cover***
4. ***Rear right cover***

Increase ballast from both side of the frame

Remove the top left cover (1), rear left cover (2), top right cover (3), and the rear right cover (4).

The machine can use 12 steel blocks of 6 types of steel blocks as ballast in the lower of the frame.
Red type blocks are mounted on the front; black type blocks are mounted on the rear.

Use a suitable combination to achieve max ballast.
The roller's service weight consists of the weight of the roller plus the weight of the ballast.

https://truckmanualshub.com/



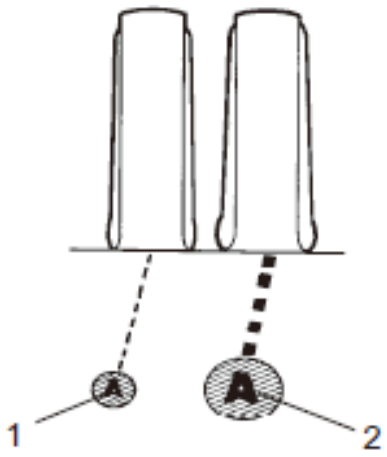


***Fig. Ground contact surface***

1. ***Contact surface at high tire pressure***
2. ***Contact surface at low tire pressure***

**Driving (Ground Pressure)**

**Ground pressure**

The contact surface of the tire can be changed by means of tire pressure.

High tire pressure gives a smaller contact surface (1).

Low tire pressure gives a larger contact surface (2).

The total service weight divided by the number of tires give the pressure per wheel. See Table.

The ground contact surface of the tire is relevant for the compaction result.

| Operating mass | kg/tire | Tire inflation pressure/kPa | | | | | |
|---|---|---|---|---|---|---|---|
| | | 300 | 400 | 500 | 600 | 700 | 800 |
| | | Average contact pressure/kPa | | | | | |
| 14000 | 1550 | 327 | 350 | 373 | 397 | 420 | 445 |
| 18000 | 2020 | 357.5 | 381 | 406 | 430 | 452.5 | 475 |
| 22500 | 2500 | 377.5 | 410 | 437.5 | 462.5 | 487.5 | 510 |
| 27000 | 3000 | 405 | 438 | 468 | 496 | 520 | 544 |
| 30000 | 3300 | 418 | 455 | 487.5 | 515 | 542 | 565 |

*Fig. Low ground pressure, larger area*

**Low tire pressure – 380 kPa (55 psi)**

The lower the tire pressure, the lower the pressure on the contact surface due to larger contact surface.

Is used on lots of loose material.

https://truckmanualshub.com/

*Fig. Normal ground pressure*

**Normal tire pressure – 510 kPa (70 psi)**

Used for degradation session.

*Fig. High ground pressure, smaller area*

**High tire pressure – 780 kPa (110 psi)**

The higher the tire pressure, the greater the pressure on the contact surface due to smaller contact surface.

Used for thick layers and finishing sessions.

## Interlock/Emergency stop/Parking brake – Check

***The interlock, emergency stop and parking brake must be checked daily before operating. A function check of the interlock and emergency stop requires a restart.***

***The interlock function is checked by the operator standing up from the seat when the roller is moving very slowly forwards/backwards. (Check in both directions). Hold the steering wheel firmly and brace yourself for a sudden stop. A buzzer goes on and after 7 seconds the engine switches off and the brakes are activated.***

***Check the function of the emergency stop by pressing the emergency stop button when the roller is moving slowly forwards/backwards. (Check in both directions). Hold the steering wheel firmly and brace yourself for a sudden stop. The engine switches off and the brakes are activated.***

***Check the function of the parking brake by activating the parking brake when the roller is moving very slowly forwards/backwards. (Check in both directions). Hold the steering wheel and brace yourself for a sudden stop when the brakes are activated. The engine does not switch off.***

## Normal braking

Set the Forward/Reverse lever to “N” position.

***Fig. Forward/Reverse lever***

https://truckmanualshub.com/



### Emergency braking

The brake pedal is normally used to emergency brake.

***When Forward/Reverse lever back to Neutral position, apply the brake pedal for emergency brake; When Forward/Reverse lever does not back to Neutral position, then apply the brake pedal would lead Diesel engine stop. If the Diesel engine stops, it must be restarted.***

## Switching off

Allow the engine to low idle for a few minutes to cool down.
Switch off all lights and other electrical functions.
Push in the parking brake switch.
Turn the ignition switch to the left to the shut off position.
Fit the instrument cover on the display and top of the control box (on roller without cab), and lock it.

### Chocking the wheels

***Never leave the roller when the engine is running, unless the parking brake is activated.***

***Make sure that the roller is parked in a safe area, free from traffic. Chock the wheels if the roller is parked on sloping ground.***

Keep in mind that there is a risk of freezing during the winter. Drain the water tanks and water lines.

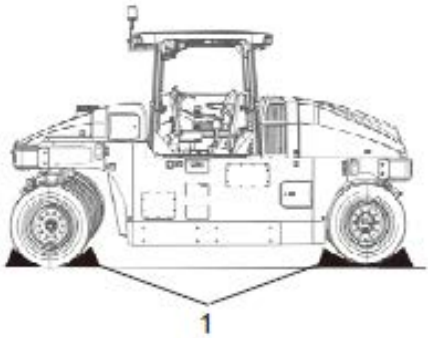


***Fig. Chocking the wheels***

***1. Chocks***

***Fig. Engine compartment***

***1. Battery disconnector***

**Master switch**

Before leaving the roller for the day, switch the master switch (1) to the disconnected position and remove the handle.

This will prevent battery discharging and will also make it difficult for unauthorized persons to start and operate the machine. Lock the service doors/covers.

https://truckmanualshub.com/



## Long-term parking

*Fig. Roller weather protection*

**The following instructions should be followed when long term parking (more than one month).**

These measures apply when parking for a period of up to 6 months.

Before re-commissioning the roller, the points marked with an asterisk * must be returned to the pre-storage state.

Wash the machine and touch up the paint finish to avoid rusting.

Treat exposed parts with anti-rust agent, lubricate the machine thoroughly and apply grease to unpainted surfaces.

**Engine**

* Refer to the manufacturer’s instructions in the engine manual that is supplied with the roller.

**Battery**

* Remove the battery/batteries from the machine, clean the outside and trickle charge once a month.

**Air cleaner, exhaust pipe**

* Cover the air cleaner (see under the heading 'Every 50 hours of operation' or 'Every 1000 hours of operation') or its opening with plastic or tape. Also cover the exhaust pipe opening. This is to avoid moisture entering the engine.

**Watering system**

* Empty the water tank and all hoses of water. Empty the filter housing and the water pump. Undo all sprinkler nozzles.
See maintenance sections for "Watering system – draining".

**Fuel tank**

Fill the fuel tank completely full to prevent condensation.

**Hydraulic reservoir**

Fill the hydraulic reservoir to the uppermost level mark (see under the heading ‘Every 10 hours of operation.’)

**Tires**

Make sure that tire pressures are at least 380 kPa (55 psi).

**Steering cylinder, hinges, etc.**

Grease the steering cylinder piston with conservation grease.

Grease the hinges on the doors to the engine compartment and the cab.

**Hoods, tarpaulin**

* Lower the instrument cover over the instrument panel.

* Cover the entire roller with a tarpaulin. A gap must be left between the tarpaulin and the ground.

* If possible, store the roller indoors and ideally in a building where the temperature is constant.

https://truckmanualshub.com/



# Miscellaneous

## Lifting

### Lifting the roller

Weight: refer to the hoisting plate on the roller

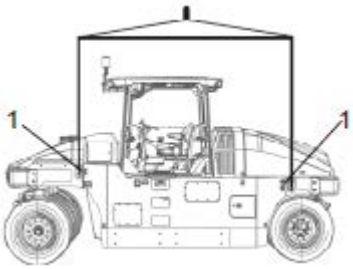


***Fig. Roller prepared for lifting***

***1. Hoisting plate***

Ensure that the front wheels are parallel with the frame before the roller is lifted.

Place the lifting chains in the lifting eyes and make sure that no parts are damaged by the chains when lifting.

***The machine's gross weight is specified on the hoisting plate (1). Refer also to the Technical specifications.***

**Lifting equipment such as chains, steel wires, straps and lifting hooks must be dimensioned in accordance with the relevant safety regulations for the lifting equipment.**

***Stand well clear of the hoisted machine! Make sure that the lifting hooks are properly secured.***

### Lifting the roller with jack:

Weight: refer to the hoisting plate on the roller

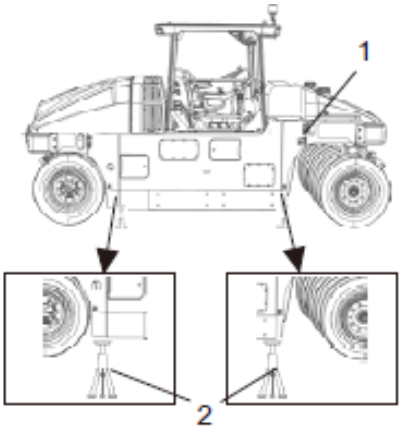


***Fig. Roller lifted with jack***

***1. Lifting plate***

***2. Jack***

***The machine's gross weight is specified on the hoisting plate (1). Refer also to the Technical specifications.***

**The lifting device such as a jack (2), or equivalent, must be dimensioned according to the safety regulations for the lifting devices.**

***The machine's gross weight is specified on the hoisting plate (1). Refer also to the Technical specifications.***

The machine **must only be lifted** with a jack, or the like, positioned as per the markings. The frame is reinforced at these points to withstand the tension.
Lifting at any other place can result in damage to the machine or personal injury.

**Roller prepared for transport**

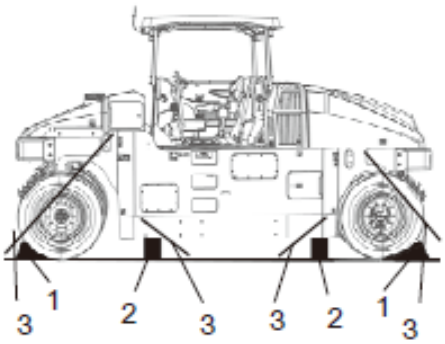


***Fig. Positioning***

1. ***Chocks***
2. ***Blocks***
3. ***Straps***

Activate the parking brake.

Make sure that the machine is in a neutral position, i.e. that the front tires are pointing forwards.

Chock the tiers (1) and secure the chocks to the transport vehicle. The chock should have an angle of 37° and minimum height of 25 cm (9.9 inches). The tiers should be chocked both forwards and backwards.

Block under the frame (2) to ensure tensioned chains if the air goes out of the tires. Block up the machine as shown in figure

Secure the roller with chains in all four corners. The attachment points are shown on the decals. Place the chains in symmetrical pairs crossing each other.

**Make sure that the chains, blocks and attachments in the transport vehicle are approved and have the requisite breaking strain. Check at regular intervals that the chains are not slack.**

https://truckmanualshub.com/



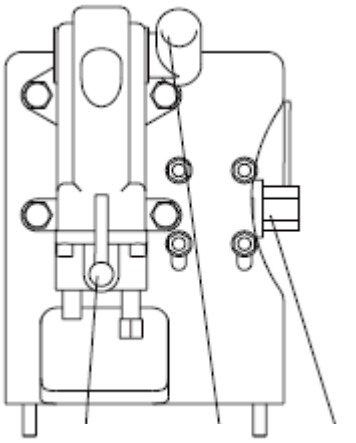


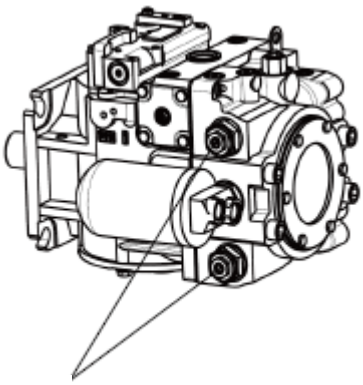


1. ***Ball valve***
2. ***Hand pump handle***
3. ***Multi-function valve***
4. ***Hand pump handle***

When engine or pump damage could not be repaired, roller need to be towed by towing vehicle park to safe place waiting for repairing.

Firstly, rotate the ball valve (1) handle clockwise 90°C, switch the oil-way, then rotate the hand pump handle (2) to hydraulic oil output (the handle rotation direction is the same as hydraulic pipeline connections); enter the cab, open the cover you could see the propulsion multi-function valve (3), turn the bypass nut on up & down multi-function valve (3) counterclockwise to startup the multi-function bypass valve; Fluctuate hand pump's handle (4) until feels heave; after finishing all those actions, machine could be towed.

**The machine must not be moved at a speed higher than 5 km/h, and no more than 300 meters. Otherwise there is a risk of damaging the machine. Make sure to reset the towing valves to brake status after towing.**

**Still cannot release the brake, perform the following steps:**

**Loose the screw of the hand pump;**
**Fill in more hydraulic oil;**
**Operate the handle of hand pump until feels load on hand.**

## Towing the roller

***When towing/recovering, the roller must be braked by the towing vehicle. A towing bar must be used as the roller has no brakes.***

**The roller must be towed slowly, max. 5 km/h (3mph) and only towed a short distance, max. 300 m (1,000ft).**

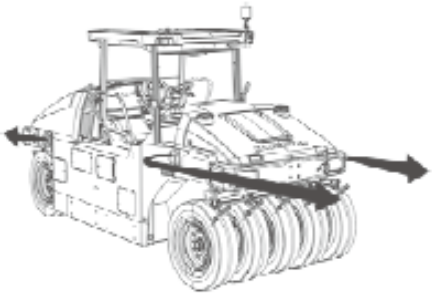

***Fig. Towing***

When towing/retrieving a machine, the towing device must be connected to both lifting holes in the diagram.

Pulling forces should act parallel to the machine's longitudinal axis, as illustrated. See table below for maximum permitted pulling force for machine model.

| Model | kN | lbf |
|---|---|---|
| CP275 | 412 | 92,700 |

**Reverse the towing preparations made to the hydraulic pump and/or the motor.**

https://truckmanualshub.com/



# Operating instructions - Summary

**1. Follow the SAFETY INSTRUCTIONS specified in the Safety Manual.**

**2. Make sure that all instructions in the MAINTENANCE section are followed.**

**3. Turn the master switch to the ON position.**

**4. .Move the forward/reverse lever to NEUTRAL position, stop the machine.**

**5. Set the Emergency stop in the pulled-out position. The machine always starts in Highspeed mode.**

**6. Start the engine and allow it to warm up.**

**7. Move the forward/reverse lever to the NEUTRAL position.**

**8. Operate the roller. The Forward/Reverse lever gives the required direction of travel. Use the accelerator carefully.**

**9. Test the brakes. Remember that the braking distance will be longer if the hydraulic fluid is cold.**

**10. Check that the tires are thoroughly sprinkled when this is necessary.**

**11. IN AN EMERGENCY:**
- **.Activate the brake pedal.**
- **Press the EMERGENCY STOP.**
- **Hold the steering wheel firmly.**
- **Brace yourself for a sudden stop.**

**12. When parking:**
- **Move the forward/reverse lever to position “N”.**
- **Stop the engine and chock the wheels.**

**13. When lifting: - Refer to the relevant section in the Instruction Manual.**

**14. When towing: - Refer to the relevant section in the Instruction Manual.**

**15. When transporting: - Refer to the relevant section in the Instruction Manual.**

**16. When recovering - Refer to the relevant section in the Instruction Manual.**

https://truckmanualshub.com/

https://truckmanualshub.com/



# Preventive maintenance

Complete maintenance is necessary for the machine to function satisfactorily and at the lowest possible cost.

The Maintenance section includes the periodic maintenance that must be carried out on the machine.

The recommended maintenance intervals assume that the machine is used in a normal environment and working conditions.

**Acceptance and delivery inspection**

The machine is tested and adjusted before it leaves the factory.

On arrival, before delivery to the customer, delivery inspection must be conducted as per the check list in the warranty document.

Any transport damage must be immediately reported to the transport company.

**Warranty**

The warranty is only valid if the stipulated delivery inspection and the separate service inspection have been completed as per the warranty document, and when the machine has been registered for starting under the warranty.

The warranty is not valid if damage has been caused by inadequate service, incorrect use of the machine, the use of lubricants and hydraulic fluids other than those specified in the manual, or if any other adjustments have been made without the requisite authorization.

https://truckmanualshub.com/

https://truckmanualshub.com/



## Maintenance – Lubricants and symbols

**Always use high-quality lubricants and the amounts recommended. Too much grease or oil can cause overheating, resulting in rapid wear.**

| | | |
|---|---|---|
| | ENGINE OIL | Air temperature -15°C - + 50°C (5°F - 122°F) |
| | | Atlas Copco Engine 100 or equivalent |
| | HYDRAULIC FLUID | Air temperature -15°C - + 40°C (5°F - 104°F) |
| | | Hydraulic 300 or equivalent |
| | | Air temperature over + 40°C (104°F) |
| | | Shell Tellus T100 or equivalent |
| | GREASE | Shell Retinax LX2, or equivalent |
| | TRANSMISSION OIL | Air temperature 0°C - + 40°C (32°F - 104°F) |
| | | Dynapac Gear Oil 300 or equivalent |
| | FUEL | See engine manual |
| | COOLANT | GlycoShell or equivalent (mixed 50/50 with water) |
| | | Prevents freezing to around -37°C |
| | BRAKE CIRCUIT OIL | Mobil DOT 3 or equivalent |

**Other fuel and lubricants are required when operating in areas with extremely high or extremely low ambient temperatures. See the 'Special instructions' chapters, or consult Dynapac.**

## Maintenance symbols

| | | | |
|---|---|---|---|
| | Engine, oil level | | Air filter |
| | Engine, oil filter | | Battery |
| | Hydraulic fluid tank, level | | Sprinkler |
| | Hydraulic fluid, filter | | Sprinkler water |
| | Lubricating oil | | Recycling |
| | Coolant level | | Fuel filter |
| | Air pressure | | Transmission, oil level |
| | | | Sprinkler |

https://truckmanualshub.com/



# Maintenance - Maintenance schedule

## Service and maintenance points

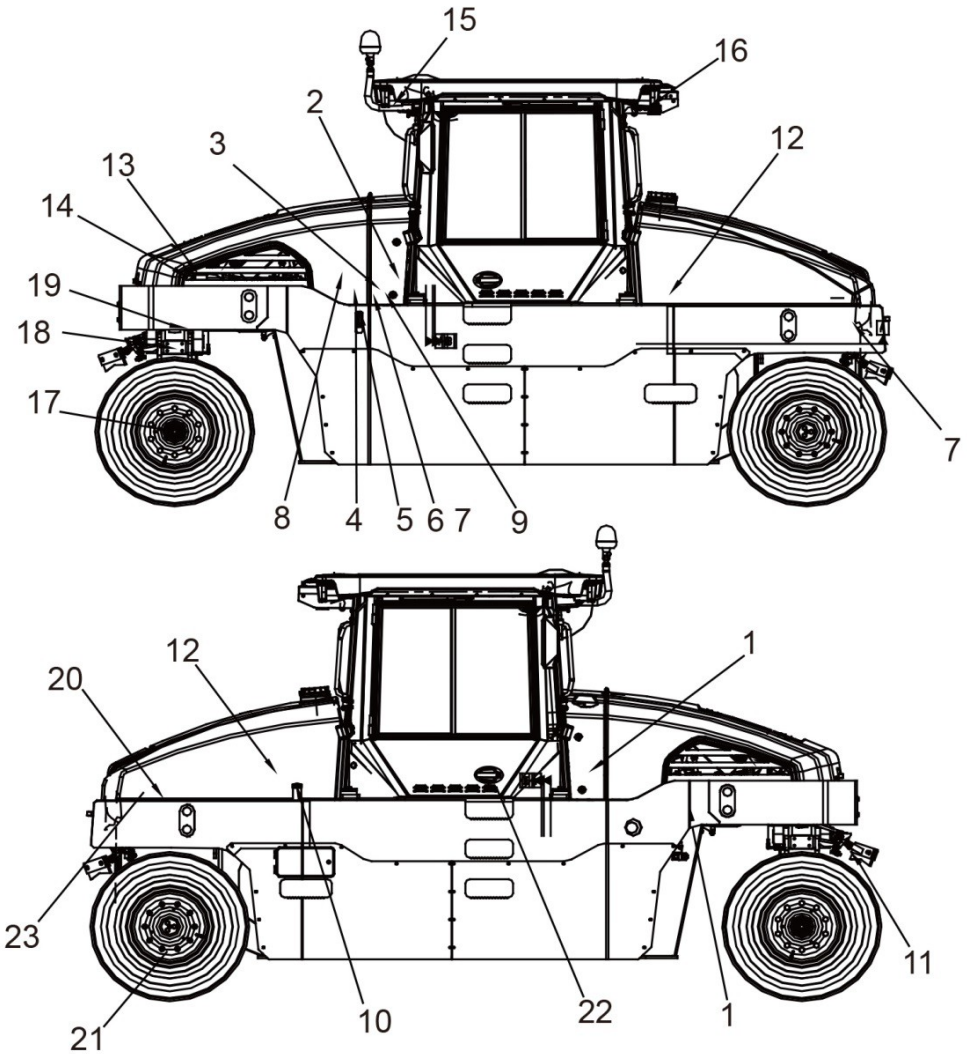


| | | | | | |
|---|---|---|---|---|---|
| 1 | Engine oil | 9 | Air cleaner | 17 | Lower pivot bearing |
| 2 | Oil filter | 10 | Refueling | 18 | Upper pivot bearing |
| 3 | Fuel filter | 11 | Scraper | 19 | Pivot bearing |
| 4 | Hydraulic filter | 12 | Water tank, filling | 20 | Driving axle |
| 5 | Hydraulic fluid level | 13 | Sprinkler system | 21 | Oil pan |
| 6 | Hydraulic fluid, filling | 14 | Battery | 22 | Propulsion pump filter |
| 7 | Hydraulic tank cap | 15 | Cab, air filter | 23 | Drive chain |
| 8 | Coolant | 16 | Cab, AC | | |

## General

Periodic maintenance should be carried out after the number of hours specified. Use the daily, weekly etc. periods where number of hours cannot be used.

***Remove all dirt before filling, when checking oils and fuel and when lubricating using oil or grease.***

***The manufacturer's instructions found in the engine manual also apply.***

### Every 10 hours of operation (Daily)

Refer to the contents to find the page number of the sections referred to!

| Pos. in fig | Action | Comment |
|---|---|---|
| | **Before starting up for the first time to that day** | |
| 1 | Check the engine oil level | Refer to the engine manual |
| 5 | Check the hydraulic reservoir level | |
| 8 | Check the engine coolant level | Refer to the engine manual |
| 10 | Refuel | |
| 11 | Check the scraper setting | |
| 12 | Fill the water tanks | |
| 12 | Check the brake fluid level | |
| 13 | Check the sprinkler system | |
| | Check emergency stop system pressure | |
| | Check the tire pressure | |
| | Test brake | |

https://truckmanualshub.com/



**After the FIRST 50 hours of operation**

Refer to the contents to find the page number of the sections referred to!

| Pos. in fig | Action | Comment |
|---|---|---|
| 1, 2 | Change the engine oil and oil filter | Refer to the engine manual |
| 3 | Change the fuel filter | Refer to the engine manual |
| 4 | Change the hydraulic oil filter | |
| 17 | Lubricate lower pivot bearing | |
| 18 | Lubricate upper pivot bearing | |
| | Drain air tank | |
| | Check emergency brake system pressure | |

**Every 50 hours of operation (Weekly)**

Refer to the contents to find the page number of the sections referred to!

| Pos. in fig | Action | Comment |
|---|---|---|
| | Check the air intake system | |
| | Check the tire pressure | |
| | Retighten wheel nuts | |
| | Inspect / clean the filter element in the air cleaner | Replace as required |
| | Drain the fuel prefilter | Refer to the engine manual |
| 16 | Inspect the air conditioning | Optional |
| | Check the air conditioner compressor belt | Optional |
| 17 | Lubricate lower pivot bearing | |
| 18 | Lubricate upper pivot bearing | |

**Every 250 hours of operation (Monthly)**

Refer to the contents to find the page number of the sections referred to!

| Pos. in fig | Action | Comment |
|---|---|---|
| 1, 2 | Change the engine oil and oil filter | Refer to the engine manual |
| | Drain air tank | |
| | Drain fuel water seperator | |
| 3 | Change the fuel filter | Refer to the engine manual |
| 8 | Clean the hydraulic fluid cooler/water cooler | Or when required |
| 14 | Check the battery condition | |
| 16 | Inspect the air conditioning | Optional |
| | Grease the pilot bearings and link bearings | |
| 17 | Lubricate lower pivot bearing | |
| 18 | Lubricate upper pivot bearing | |
| 23 | Drive chain maintenance | |
| 20 | Check the oil level in the rear axle | |
| | Lubricate the steering chain | |
| | Check the air conditioner compressor belt | Optional; Retighten if necessary |

**Every 500 hours of operation (Every three months)**

Refer to the contents to find the page number of the sections referred to!

| Pos. in fig | Action | Comment |
|---|---|---|
| 1, 2 | Change the engine oil and oil filter | Refer to the engine manual |
| 3 | Change the fuel filter | Refer to the engine manual |
| 3 | Change engine pre-filter | Refer to the engine manual |
| | Check engine belt | Refer to the engine manual |
| | Drain air tank | |
| 7 | Check the hydraulic reservoir cover / breather | |
| | Check bolted joints | |
| 17 | Lubricate lower pivot bearing | |
| 18 | Lubricate upper pivot bearing | |
| 20 | Check the oil level in the rear axle | |
| | Lubricate the steering chain | |
| | Retighten wheel nuts | |
| 23 | Drive chain maintenance | |

https://truckmanualshub.com/



**Every 1000 hours of operation (Every six months)**
Refer to the contents to find the page number of the sections referred to!

| Pos. in fig | Action | Comment |
|---|---|---|
| 1, 2 | Change the engine oil and oil filter | Refer to the engine manual |
| 3 | Change the fuel filter | Refer to the engine manual |
| 3 | Change fuel pre-filter | Refer to the engine manual |
| | Check engine valve clearance | Refer to the engine manual |
| | Check the engine belt drive system | Refer to the engine manual |
| 4 | Change the hydraulic oil filter | |
| 9 | Replace air elements | |
| 15 | Replace the air cleaner filter in the cab | |
| 17 | Lubricate lower pivot bearing | |
| 18 | Lubricate upper pivot bearing | |
| 20 | Change the oil in the rear axle | |
| 22 | Change propulsion pump filter | |
| | Drive chain maintenance | |
| | Check and adjust the emergency brake | |
| | Drain air tank | |
| | Lubricate the steering chain | |
| | Retighten wheel nuts | |

**Every 2000 hours of operation (Yearly)**

Refer to the contents to find the page number of the sections referred to!

| Pos. in fig | Action | Comment |
|---|---|---|
| 3 | Replace engine belt | Refer to the engine manual |
| 4 | Change the hydraulic oil filter | |
| | Change hydraulic oil | |
| 10 | Drain and clean the fuel tank | |
| 12 | Drain and clean the water tank | |
| | Check the condition of the pilot bearing | |
| | Overhaul the air conditioning | |
| | Change the coolant | |
| 17 | Lubricate lower pivot bearing | |
| 18 | Lubricate upper pivot bearing | |
| | Change the oil in the rear axle | |
| 22 | Change propulsion pump filter | |
| 23 | Adjust drive chain | |
| | Check and adjust the emergency brake | |
| | Lubricate the steering chain | |
| | Drain air tank | |
| | Retighten wheel nuts | |
| | Replace air conditioning v-belt | Optional |
| | Change brake oil | |

https://truckmanualshub.com/



# Maintenance – 10h

***Park the roller on a level surface.***
***When checking and making adjustments to the roller, switch the engine off and make sure the Forward/Reverse lever is in the Neutral position.***

***Ensure that there is good ventilation (air extraction) if the engine is run indoors. Risk of carbon monoxide poisoning.***

**Diesel engine – Check oil level**

***The dipstick is located under the engine hood. Take care not to touch any hot parts of the engine or radiator when removing the dipstick. Risk of burns.***

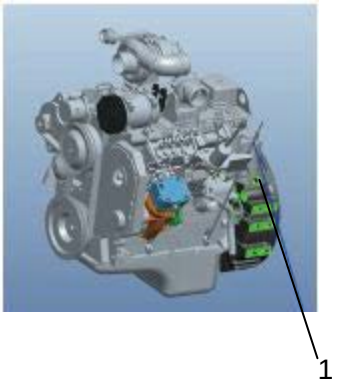


***Fig. Engine compartment***
***1. Dipstick***

The dipstick is located down on the left side of the engine.

- Pull out the dipstick (1);
- Wipe the dipstick (1);
- Put the dipstick (1) in engine compartment;
- Pull the dipstick (1) out again, and then check the oil level through it.

For further details, refer to the engine's instruction manual.

*Fig. Hydraulic reservoir*

## Hydraulic reservoir - Check fluid level

The filler pipe and sight glass are on the left side of the fan cover in the engine compartment.

Place the roller on a level surface and check that the oil level is between the max and min markings. Top up with the type of hydraulic fluid specified in the lubricant specification, if the level is too low.

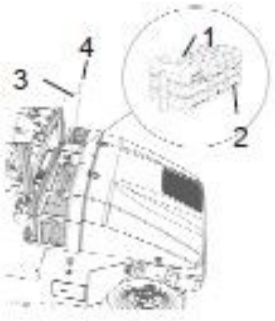


*Fig. Expansion tank*

1. *Filler cap*
2. *Level marking*
3. *Protective plate*
4. *Bolt*

## Coolant level – Check

The expansion tank is placed in the middle, between the operator platform and the engine compartment. Refilling takes place from over the black cover between the operator platform and the hood.

To access the expansion tank you have to remove the protective plate (3) via two bolts (4).

Check that the coolant level is between the max. and min. marks (2).

***Observe great caution if the cap has to be opened while the engine is hot. Wear protective gloves and goggles.***

Fill with a mixture of 50% water and 50% anti freeze. See the lubrication specification in these instructions and the engine manual.

**Flush the system every year and change the coolant. Also check that the air has unobstructed passage through the reservoir.**

For further details, refer to the engine's instruction manual.

https://truckmanualshub.com/



## Fuel tank – Refueling

***Never refuel while the engine is running. Do not smoke and avoid spilling fuel.***

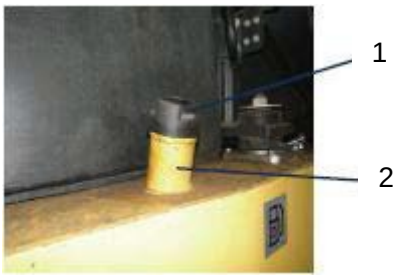


***Fig. Fuel tank***

1. ***Tank cap***
2. ***Filler pipe***

The filler pipe and tank cap are behind the operator platform on the left side of the frame.

Refuel the tank every day before starting work, or fill the tank at end of work. Unscrew the lockable tank cap (1) and fill fuel up to the lower edge of the filler pipe.

The tank holds 300 liters (79.1 gal) of fuel. Refer to the engine manual for information on diesel grade.

## Wheel scrapers
## Control

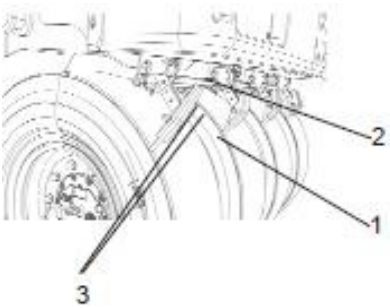


***Fig. Tire scrapers 1-2mm***

1. ***Scraper blades***
2. ***Locking hook***
3. ***Adjusting screw***

Check that the tires and scrapers are worn evenly.

If there is uneven wear on the scraper, release the adjusting screw (3) on the back of the scraper attachment.

Pull down the scraper blade (1) so that it is flush with the tire.
Tighten the screws (3) again after adjusting.

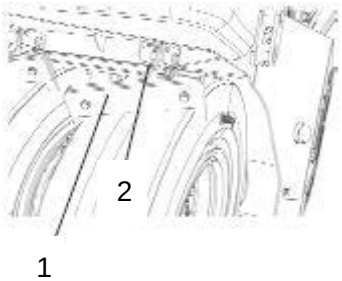


***Fig. Tire scrapers***

1. ***Scraper blades***
2. ***Locking hook***

The scrapers must hang free from the tires during transportation.

Lift up the scraper blades (1) and make sure that they are locked in raised position by the locking hooks (2).

To lower down the scrapers, lift the scraper slightly while pressing in the locking hook.

### Removing the scrapers

The scrapers can easily be removed for cleaning and inspection.

First secure the scraper in the locking hook (3), placed on the scraper attachment (4), to prevent the scraper dropping onto the ground.

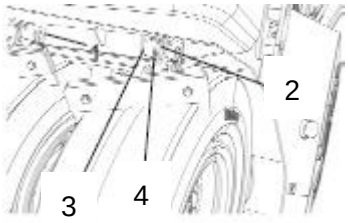


***Fig. Scrapers***

1. ***Pin***
2. ***Hairpin***
3. ***Locking hook***
4. ***Scraper attachment***

Release the pin (1) on the hook-up axle by removing the hairpins (2) on each side of the pin. Grip the up-hook axle and pull it straight out.

When refitting after inspection etc., the scraper must first be hooked in the locking hook before the hook-up axle is put in position.

Refit the pin (1) and make sure that it is well secured by the hairpins (2).

https://truckmanualshub.com/



## Water tank, Std – Filling

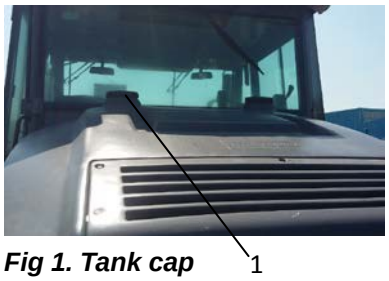


*Fig 1. Tank cap*

There are two filler caps on the top of the tank.

**Unscrew the tank cap (1) and fill with clean water. Do not remover the strainer.**

Fill the water tank; it holds 650 liters (167.6 gal).

**Only additive: A small amount of environment-friendly antifreeze.**

## Brake fluid level – Check

*Fig. Brake fluid container*

Check every day that the fluid level is between the max/min marks.

Open the containers, which positioned on both front and rear of the frame.

Top up with brake fluid to the max mark on the container if the level is below the min mark.

## Sprinkler system

### Cleaning of sprinkler nozzle

*Fig. Nozzle*

1. *Sleeve, nozzle, filter*
2. *Packing*

Dismantle the blocked nozzle by hand.

Blow the nozzle and fine filter (1) clean using compressed air. Alternatively, fit replacement parts and clean the blocked parts later on.

| Nozzle | Color | Ø (mm) | l/min (2.0 bar) | gal/min (40 psi) |
|---|---|---|---|---|
| Standard | yellow | 0.8 | 0.63 | 0.2 |
| Option | blue | 1 | 1 | 0.31 |
| Option | red | 1.2 | 1.25 | 0.39 |
| Option | brown | 1.3 | 1.63 | 0.5 |

After inspecting and carrying out any necessary cleaning, start the system and check that it works.

**Unscrew the tank cap (1) and fill with clean water. Do not remover the strainer.**

Fill the water tank; it holds 650 liters (167.6 gal).

**Wear protective goggles when working with compressed air.**

### Sprinkler system – Check

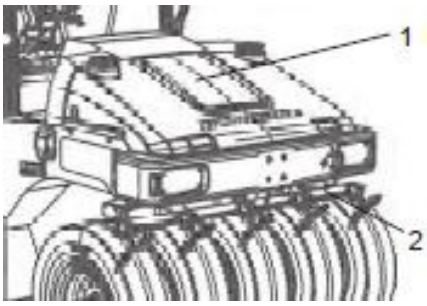


*Fig. Wheel rack*

1. *Water tank*
2. *Sprinkler nozzle*

Fill the tank with emulsion fluid, e.g. water mixed with 2% cutting fluid. Check that the sprinkler nozzles (2) are not blocked, and if necessary clean them and the filter. See under Sprinkler system, Check - Cleaning, for detailed instructions.

**Inspect the tire treads from time to time to ensure that no asphalt has stuck to the tires. This can happen before the tires have warmed up.**

***Fluids that are flammable or detrimental to the environment must not be used in the emulsion tank.***

https://truckmanualshub.com/



## Sprinkler system – Freeze risk

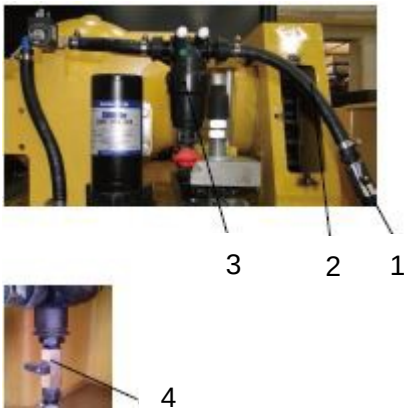


*Fig. Sprinkler pump*

1. *Valve*
2. *Hose*
3. *Coarse filter*
4. *Valve*

Preventive measures when there is a risk of freezing.

**Draining the system**

- Close the valve (1).
- Separate the hose (2).
- Open the coarse filter (3).
- Loosen the intake to the pump by moving the plastic clamp to the left and pulling the white plastic adapter from the pump housing.
- Open the valves in the ends (4) of the sprinkler pipes.
- Allow the fluid to run out and run the sprinkler pump for about 10 seconds.

**Freeze protection**

Freeze protection can also be achieved by connecting a separate container, after dividing the hose, with water mixed with glycol and running approx. 2 liters in the system.

**Check the emergency stop system pressure**

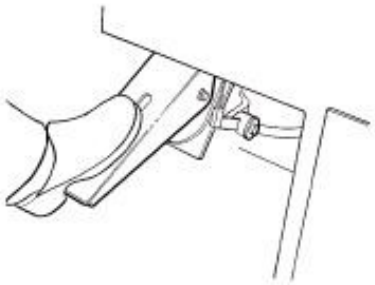

***Place the roller on a level base. The engine must be switched off and the reserve/parking brake knob pushed in for all checking and adjustments on the roller unless otherwise specified.***

***Check by pressing the brake pedal. Air pressure should be 7.85 bar (114 psi). This is the maximum pressure.***

***Do not move the roller before the system pressure has reached its specified operating level.***

https://truckmanualshub.com/



## Tires – Tire pressure

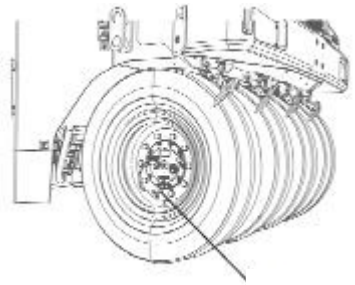


***Fig. Outer wheels***

***1. Air valve***

Check the tire pressure with a pressure gauge.

Make sure that the tires have the same pressure.

Recommended pressure: See Technical Specifications.

The figure shows the position of the air valve on the outer tires.

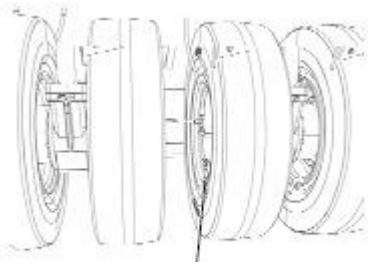


***Fig. Inner wheels***

***1. Air valve***

The figure shows the position of the air valve on the inner tires.

***Check the Safety Manual that accompanies the roller before filling the tires with air.***

https://truckmanualshub.com/



## Maintenance – 50h

***Park the roller on a level surface.***
***When checking and making adjustments to the roller, switch the engine off and make sure the Forward/Reverse lever is in the Neutral position.***

***Ensure that there is good ventilation (air extraction) if the engine is run indoors.***
***Risk of carbon monoxide poisoning.***

**Air cleaner**

**Checking – Change the main air filter**

**Change the air cleaner main filter when the warning lamp on the control panel comes on when the engine is running at maximum speed.**

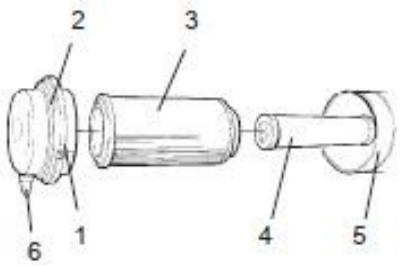


***Fig. Air cleaner***

1. ***Clips***
2. ***Cover***
3. ***Main filter***
4. ***Backup filter***
5. ***Filter housing***
6. ***Dust valve***

Release the clips (1), pull off the cover (2), and pull out the main filter (3).

Do not remove the backup filter (4).

Clean the air cleaner if necessary, see section Air cleaner – Cleaning.

When replacing the main filter (3) insert a new filter and refit the air cleaner in the reverse order.

Check the condition of the dust valve (6); replace if necessary.

When refitting the cover, make sure that the dust valve is positioned downwards.

## Air cleaner - Cleaning

Wipe clean on both sides of the outlet pipe

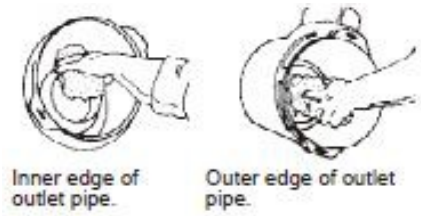


Wipe clean the inside of the cover (2) and the filter housing (5). See the previous illustration.

Wipe also both surfaces for the outlet pipe; see adjacent figure.

**Check that the hose clamps between the filter housing and the suction hose are tight and that the hoses are intact. Inspect the entire hose system, all the way to the engine.**

## Backup filter – Change

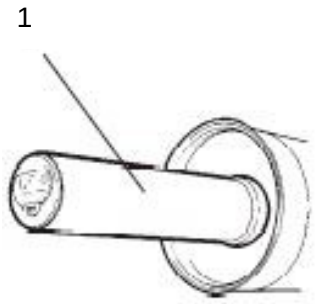


***Fig. Air filter***

***1. Backup filter***

Change the backup filter with a new filter after every third replacement of the main filter.

To change the backup filter (1), pull the old filter out of its holder, insert a new filter and reassemble the air cleaner in the reverse order.

Clean the air cleaner if necessary, see section Air cleaner – Cleaning.

https://truckmanualshub.com/



## Tires – Tire pressure

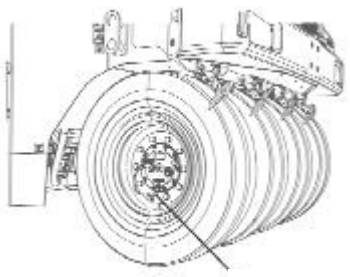


***Fig. Outer wheels***

***1. Air valve***

Check the tire pressure with a pressure gauge.

Make sure that the tires have the same pressure.

Recommended pressure: See Technical Specifications.

The figure shows the position of the air valve on the outer tires.

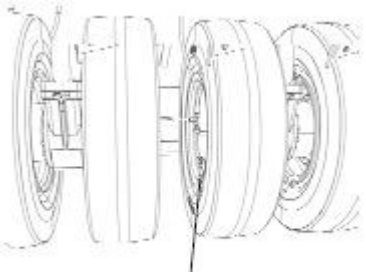


***Fig. Inner wheels***

***1. Air valve***

The figure shows the position of the air valve on the inner tires.

***Check the Safety Manual that accompanies the roller before filling the tires with air.***

## Fuel filter – Draining

Unscrew the drain plug (1) at the bottom of the fuel filter.

With the aid of the secondary hand-operated pump, make certain that all sediment comes out. See Cummins service manual.

Tighten the drain plug as soon as uncontaminated fuel runs out.

**Place in a suitable container and hand in to environment-friendly waste disposal station.**

1

***Fig. Fuel filter***

***1. Drain plug***

The air tank could also contain water due to condensation.
The condensation water removes by the drain valve (1), which resets automatically when loosening drain valve.

**If a lot of water is drained, the system must be inspected and faulty parts should be replaced.**

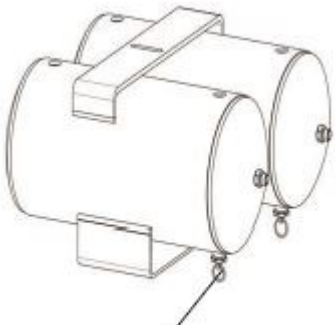

1

***Fig. Drain valve***

https://truckmanualshub.com/



## Air conditioning (Optional) – Inspection

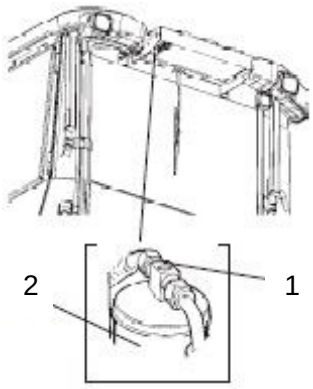


***Fig. Drying filter***

1. ***Sight glass***
2. ***Filter holder***

***Park the roller on a level surface, chock the wheels and the set the Forward/Reverse lever in the Neutral position.***

With the unit in operation, check using the sight glass (1) that bubbles are not visible on the drying filter.

***Make sure the Forward/Reverse lever is always in the Neutral position.***

The filter is located on the top of the rear part of the cab roof. If bubbles are visible through the sight glass, this is a sign that the refrigerant level is too low. Stop the unit to avoid risking damage. Fill up with refrigerant.

## Air conditioning (Optional) – Cleaning

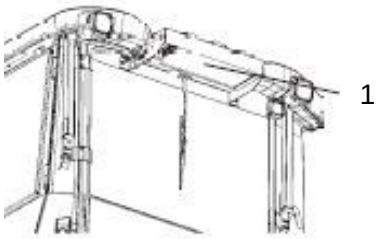


***Fig. Cab***

1. ***Condenser element***

If there is a significant loss of cooling capacity, clean the condenser element (1) on the rear edge of the cab roof.

## Air conditioner compressor belt - Check

***Fig. 1. Compressor***
***2.Belt***

Check the condition of compressor belt.
Retighten if necessary.

https://truckmanualshub.com/



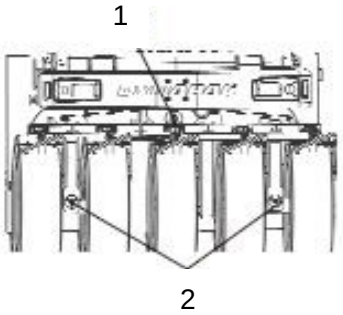


***Fig. Pivot bearing***

1. ***Lubrication nipple x 1***
   ***Upper pivot bearing***
2. ***Lubrication nipple x 2***
   ***Lower pivot bearing***

## Upper/Lower Pivot bearing – Lubrication

Lubricate nipple (1) on upper pivot bearing and nipples (2) on lower pivot bearing with five pump stokes from hand-operated grease gun.

Use grease as specified in the lubricant specification.

https://truckmanualshub.com/

https://truckmanualshub.com/



## Maintenance – 250h

***Park the roller on a level surface.***
***When checking and making adjustments to the roller, switch the engine off and make sure the Forward/Reverse lever is in the Neutral position.***

***Ensure that there is good ventilation (air extraction) if the engine is run indoors.***
***Risk of carbon monoxide poisoning.***

### Fuel filter – Replacing

Replace the fuel filter every 250 hours operation
.

**Place in a suitable container and hand in to environment-friendly waste disposal station.**

***Fig. Fuel filter***

## Diesel engine – Oil change

*Fig. Drain plugs*

The engine's oil drain plug is delivered under the rotatory support on the front of the frame through the rubber tube.
Unscrew the drain plug the engine oil could be changed.

Drain the oil when the engine is warm. Place a receptacle that holds at least 10 liters (11 qts) under the drain plugs.

***Take great care when draining engine oil. Wear protective gloves and goggles.***

Release the oil drain plug, and open the filler cap, allow all the oil to run out into a container.

Retighten the drain plug as soon as the engine oil runs out.

**Deliver the drain oil for environmentally correct handling.**

Fill with fresh engine oil; see Lubricant specification or the engine manual for the correct grade of oil.

Fill with the requisite volume of engine oil. See technical specifications before starting the machine.

https://truckmanualshub.com/



## The engine fuel filter - Changing

***Fig. Filter unit***
***Pre filter + Fuel filter***

The filter unit (prefilter and fuel filter) are located in front of the accumulators on the left side in the engine compartment.

Unscrew the bottom and drain off any water, and then replace the filter unit.

Replace the filter unit, located on the left side in the engine compartment.

Start the engine and check that the filter is well sealed.

## Diesel engine – Replacing oil filter

***Fig. Engine compartment***
***Oil filter***

The oil filter (1) is located on the right side in the engine compartment.

See the engine manual for information about replacing the filter.

## Hydraulic fluid cooler

### Checking - Cleaning

*Fig. Cooler*

The water and hydraulic fluid coolers are accessible when the cooler grill is removed.

Make sure that the air flow through the cooler is unobstructed. Dirty coolers are blown clean with compressed air or washed clean using a high-pressure water jet.

**Take care when using a high-pressure water jet. Do not hold the nozzle too near the cooler.**

***Wear protective goggles when working with compressed air or high-pressure water jets.***

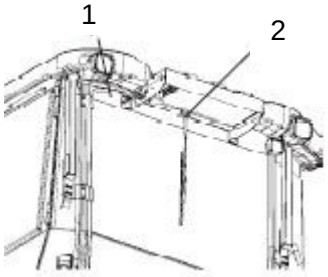


*Fig. Air conditioning*

1. *Refrigerant hoses*
2. *Condenser element*

**Air conditioning (Optional) - Inspection**

Inspect refrigerant hoses and connections and make sure that there are no signs of an oil film that can indicate a refrigerant leakage.

https://truckmanualshub.com/



## Battery – Check condition

*Fig. Batteries*

The batteries are sealed and maintenance-free.

***Make sure there is no open flame in the vicinity when checking the electrolyte level. Explosive gas in formed when the alternator charges the battery.***

***When disconnecting the battery, always disconnect the negative cable first. When connecting the battery, always connect the positive cable first.***

The cable shoes should be clean and tightened. Corroded cable shoes should be cleaned and greased with acid-proof Vaseline.

Wipe the top of the battery.

## Driven chain maintenance

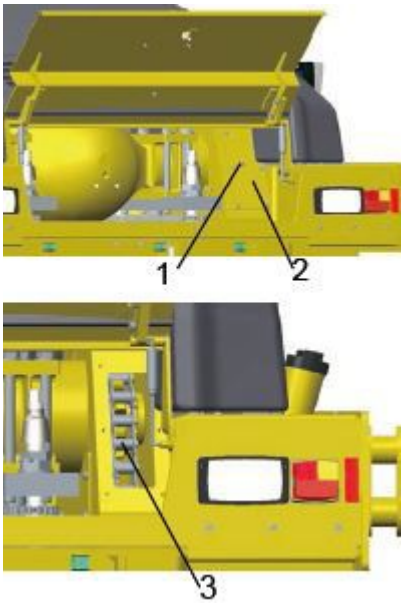


*Fig. 1. Bolts*
*2.Covers*
*3.Dirven chain*

Normally, when the machine has worked over 250 hours, the driven chain needs maintaining.

Loosen the bolts (1) and remove the cover (2), use the oilcan to instill gear oil on the driven chain (3);
When the machine moves forward one third circle of the wheel, stop and instill again.

Repeat above steps until the whole driven chain (3) has been lubricated completely.

Repeat the procedure on the other side.

**Don't keep too much residual oil in the bottom of the chain box.**

*Fig. 4. Drain plug*

Water draining from chain bottom cover:

- Unscrew the plug (4) under each chain to drain water after heavy rain if the machine is kept outdoors and exposed in the opening space.
- Unscrew the plug (4) every month / every 250 working hours to drain the water.
- After draining the water each time, need to brush the correct and proper volume oil to lubricate the drive chain.

Also if there is too much water in the bottom cover, for sake of time saving, you have an option to remove the cover to drain water then reassemble.

https://truckmanualshub.com/



## Driving gear – Check oil level

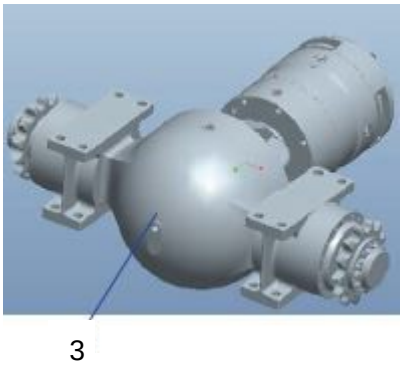


***Fig. Level check – driving gear***
***3. Level plug***

Move the machine so that the level plug (3) is in horizontal position.

Wipe clean the area around the level plug (3) and then undo the plug.

Ensure that the oil level reaches up to the lower edge of the plug hole.

Replenish the oil to the right level if the level is low. Use transmission oil, see lubricant specifications.

Clean and refit the plugs.

https://truckmanualshub.com/

https://truckmanualshub.com/



# Maintenance – 500h

***Park the roller on a level surface.***
***When checking and making adjustments to the roller, switch the engine off and make sure the Forward/Reverse lever is in the Neutral position.***

***Ensure that there is good ventilation (air extraction) if the engine is run indoors.***
***Risk of carbon monoxide poisoning.***

## Hydraulic reservoir – Check

1

***Fig. Left side of frame***
***1.Tank cap***

Unscrew and make sure that the reservoir cap is not clogged. Air must have unobstructed passage through the cap in both directions.

If passage in either direction is blocked, clean the filter with a little diesel oil and blow through with compressed air until the block is removed, or replace the cap with a new one.

.

***Wear protective goggles when working with compressed air or high-pressure water jets.***

https://truckmanualshub.com/

https://truckmanualshub.com/



# Maintenance – 1000h

***Park the roller on a level surface.***
***When checking and making adjustments to the roller, switch the engine off and make sure the Forward/Reverse lever is in the Neutral position.***

***Ensure that there is good ventilation (air extraction) if the engine is run indoors.***
***Risk of carbon monoxide poisoning.***

## Air filter - Changing

Replace the air main filter (1) even if it has not been cleaned five times See under the heading 'Every 50 hours of operation' for information on changing the filter.

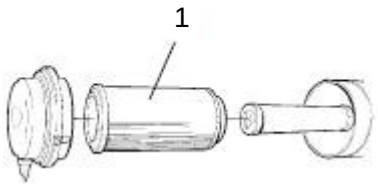


***Fig. Air cleaner***
***1. Main filter***

**If a blocked filter is not replaced, the exhaust fumes will be black and the engine will lose power. There is also a risk of severe damage to the engine.**

## Fuel tank - Cleaning

It is easiest to clean the tank when it is almost empty.

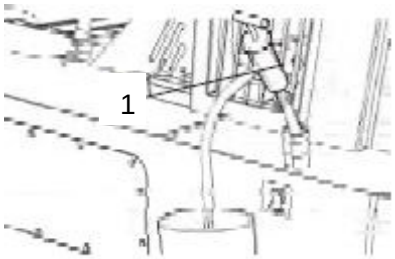


*Fig. Fuel tank*
*1.Oil drain pump*

Pump out any bottom sediment using a suitable pump, such as an oil drain pump.

**Place in a suitable container and hand in to environment-friendly waste disposal station.**

***Keep in mind fire risk when handling fuel.***

## Watering system – Draining

*Fig. Pump system*
*1. Filter housing*
*2. Drain valve*

**Remember that there is a risk of freezing during the winter, pump, filter and lines, or mix antifreeze in the water.**

There is a drain valve (2) in the area for the pump system on the water tank. This can be used to drain both the tank and parts of the pump system.

## Backup filter - Change

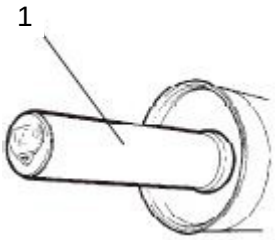


*Fig. Air filter*
*1.Backup filter*

Change the backup filter with a new filter after every fifth replacement or cleaning of the main filter.

The safety filter must not be cleaned.

To change the backup filter (1), pull the old filter out of its holder, insert a new filter and reassemble the air cleaner in the reverse order.

https://truckmanualshub.com/



## Hydraulic filter

### Change

*Fig. Hydraulic fluid filter*

The hydraulic filters are located on the left side in the engine compartment, behind the battery disconnector.

**Remove the filter and hand in to waste disposal station. This is a disposable filter and cannot be cleaned.**

Thoroughly clean the filter holder sealing surface.

Apply a thin coat of fresh hydraulic fluid to the rubber gasket on the new filter.

Screw the filter on by hand, firstly until the filter gasket makes contact with the filter base. Then rotate a further ½ turn.

1

*Fig. Hydraulic reservoir*
*1. Sight glass*

Check the hydraulic fluid level in the sight glass (1) and top off as required. See under the heading 'Every 10 hours of operation' for more information.

Start the engine and check that the filter does not leak.

## Cab

### Fresh air filter - Replacing

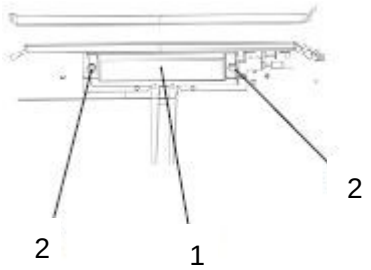


***Fig. Cab, front***

1. ***Fresh air filter (x1)***
2. ***Screw (x2)***

There is one fresh air filter (1), placed on the front of the cab.

Remove the protective cover.

Undo the screws (2) and remove the complete holder. Remove the filter insert and replace with a new filter.

The filter may need to be changed more often if the machine is operated in a dusty environment.

## Wheel gear – Oil change

***Take great care when draining the fluid. Wear protective gloves and goggles.***

***Note: When filling and draining the gear oil and checking the level of gear oil, always park the roller on a level surface.***

***Fig. Wheel gear***

1. ***Drain plug***
2. ***Filler plug***

Place a receptacle that holds at least 20 liters (5.3 gal) under the drain plug.

Unscrew the drain plug (1) and filler plug (2) to evacuate air. Allow all the oil to drain out and refit the plug.

**Deliver the drain oil to environmentally correct handling.**

## Driving gear - Replenishing the oil

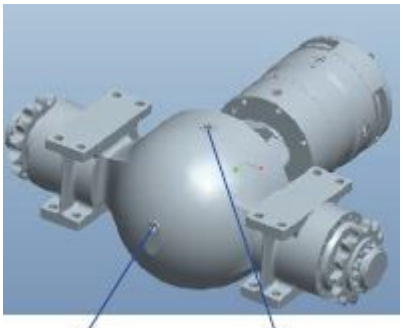


***Fig. Driving gearbox – Replenishing oil***
***2.Filler plug***
***3. Level plug***

Move the machine so that the filler hole is correctly positioned. The hole should be just over the horizontal position to simplify filling.

Unscrew the filler plug (2). Unscrew the level plug (3) as well to evacuate air. Oil is filled from the filler well.

Fill up with approx. 20 l (21 qts) of new oil. Use transmission oil, see lubricant specifications.

Move the machine so that the level plug (3) is in horizontal position.

Ensure that the oil level reaches up to the lower edge of the plug hole.

Clean and refit the plugs.

## Propulsion pump filter – Replace

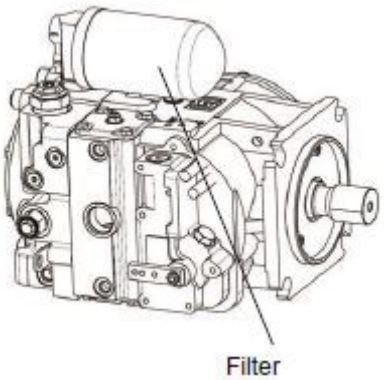


Check the propulsion pump filter, replace of necessary.

## Emergency stop - Adjustment

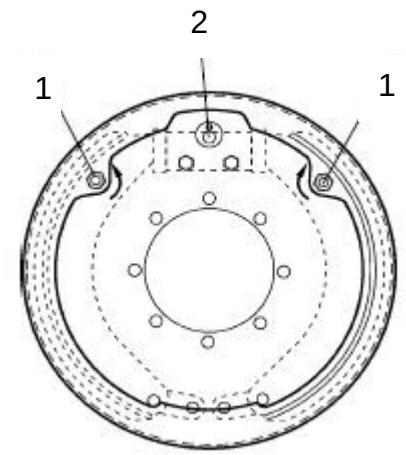


***Fig. 1. Adjust cam***
***2.Valve***

Adjust the emergency stop.

Adjust the cams (1) as illustrated, moving the brake shoes toward the drum.

Lift the wheels from the ground.

Screw the adjusting cams so that the brake shoes move away from the drum. Screw the right adjusting cam until the brake shoe lies against the drum. Screw back a quarter of a turn.

Repeat the procedure with the left adjusting cam.

https://truckmanualshub.com/



# Maintenance – 2000h

***Park the roller on a level surface.***
***When checking and making adjustments to the roller, switch the engine off and make sure the Forward/Reverse lever is in the Neutral position.***

***Ensure that there is good ventilation (air extraction) if the engine is run indoors.***
***Risk of carbon monoxide poisoning.***

## Hydraulic reservoir - Fluid change

***Take great care when draining the hydraulic fluid. Wear protective gloves and goggles.***

***Fig. Hydraulic reservoir drain plug***

Hydraulic reservoir's drain plug is located on the left front side of the frame, under the hydraulic reservoir.
Open the drain plug to run out oil inside the hydraulic reservoir.

Place a receptacle that holds at least 80 liters (21 gal) under the engine compartment.
Remove the plug on the end of the hose.
Allow all the oil to run out. Reset by refitting the drain plug.

**Deliver the drain oil to environmentally correct handling.**
Fill with fresh hydraulic fluid. Refer to the lubricants specification for grade information.

Replace the hydraulic filter. See section "Maintenance – 1000 hours".

Start the engine and operate the hydraulic functions.
Check the level in the reservoir and top off as required.

## Fuel tank - Cleaning

It is easiest to clean the tank when it is almost empty.

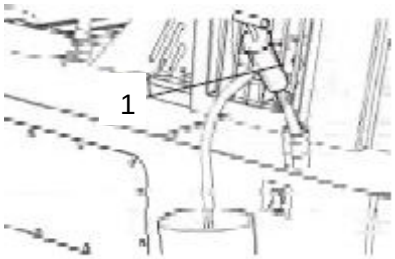


*Fig. Fuel tank*
*1.Oil drain pump*

Pump out any bottom sediment using a suitable pump, such as an oil drain pump.

**Place in a suitable container and hand in to environment-friendly waste disposal station.**

***Keep in mind fire risk when handling fuel.***

## Watering system – Draining

*Fig. Pump system*
*1. Filter housing*
*2. Drain valve*

**Remember that there is a risk of freezing during the winter, pump, filter and lines, or mix antifreeze in the water.**

There is a drain valve (2) in the area for the pump system on the water tank. This can be used to drain both the tank and parts of the pump system.

https://truckmanualshub.com/



## Water tank - Cleaning

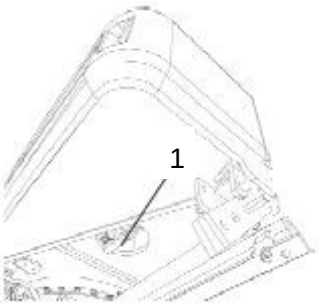


*Fig. Water tank*
*1.Drain cock*

Clean the tank with water and a suitable detergent for plastic surfaces.

Close the drain cock (1), fill with water and check for leaks.

**The water tank is made of plastic (polyethylene) and can be recycled.**

## Air conditioning (Optional) - Overhaul

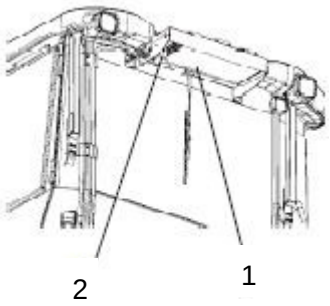


*Fig. Cab*
1. *Condenser element*
2. *Drying filter*

Regular inspection and maintenance is necessary to ensure satisfactory long-term operation.

Clean all dust from the condenser element (1) using compressed air. Blow from above downwards.

**The air jet can damage the element flanges if it is too powerful.**

***Wear protective goggles when working with compressed air.***

Inspect the condenser element attachment.

Check the system hoses for chafing. Make sure that drainage from the cooling unit is unobstructed so that condensation does not accumulate inside the unit.

https://truckmanualshub.com/



## Air conditioning (Optional)
## Drying filter - Inspection

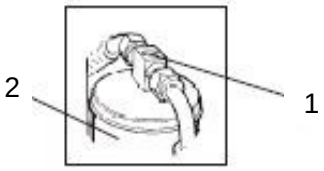


***Fig. Drying filter***

1. ***Sight glass***
2. ***Filter holder***

With the unit in operation, check using the sight glass (1) that bubbles are not visible on the drying filter.

***Park the roller on a level surface, chock the wheels and set the Forward/Reverse lever in the Neutral position.***

The filter is placed at the top of the rear part of the cab roof.
If bubbles are visible through the sight glass, this indicates that the refrigerant level is too low. Stop the unit to avoid risking damage. Fill up with refrigerant.

***The refrigerant circuit is only to be worked on by authorized companies.***

https://truckmanualshub.com/



## Engine

### Replacing the coolant

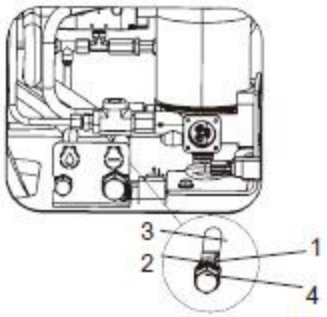


*Fig. Drain plugs*

1. *Hex nut*
2. *Bulkhead elbow*
3. *Hose*
4. *Drain plug*

The drain plug for the coolant is located at the back on the right side of the machine. The drain plug can be accessed by opening the panel in front of the exhaust pipe.

Drain the coolant when the engine is warm. Place a container that holds at least 14 liters (15 qts) under the drain plugs.

***Observe caution when draining the coolant. Wear protective gloves and goggles.***

Release the hex nut (1) as shown (2).

Pull out the hose (3) and release the drain plug (4) for the coolant. Allow all the coolant to run out into a container.

To refit, secure the plug (4) as shown and push in the hose.

Secure as shown and then tighten the hex nut (1).

**Hand in the drained coolant to an environment-friendly waste disposal station.**

Fill up with new coolant, refer to engine manual.

Fill with the requisite volume of coolant. See technical specifications before starting the machine. Allow the engine to idle for a few minutes, and then switch off the engine.

Check the dipstick to ensure that the engine oil level is correct. Refer to the engine manual for details. Top up with oil if necessary to the max mark on the dipstick.

## Gear oil - Replacement

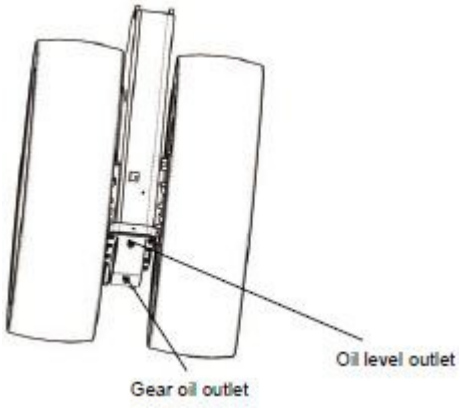


Oil pan is located at the bottom of drive chain box.

If gear oil overruns during the filling time, stop filling immediately. Use the gear oil outlet to drain gear oil when changing the oil, then fill with new gear oil.

## Hydraulic oil change (2000 hours or 1 year)

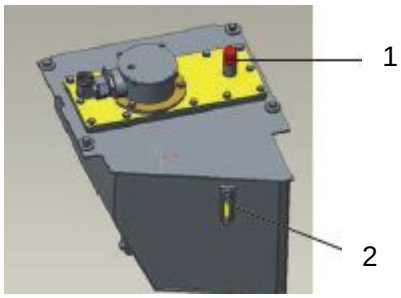


***Fig. 1. Air filter cap***
***2.Level gauge***

1. Open the air filter cap (1), drain the oil.
2. Add hydraulic oil (Hydraulic 300) to about 2/3 place of the level gauge (1).
3. Retighten the air filter cap (1).

https://truckmanualshub.com/



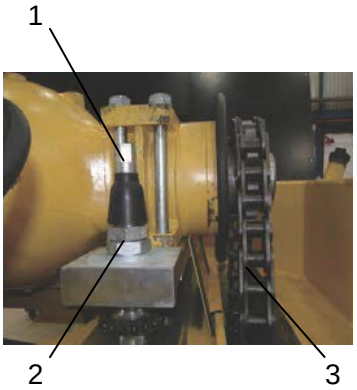


1. ***Adjusting bolt***
2. ***Lock nut***
3. ***Drive chain***

## Drive chain - Adjustment

When the machine working over 2000 hours, it needs to adjust the drive chain so that the rear wheels can rotate freely.

Loosen the lock nuts (2) on the adjusting bolt (1).
Turn the adjusting bolt (1) while rotating the wheel until the increase in tension slows the wheel down.
Check the distance: When pressing drive chain (3) by hand, it has 10 mm movement distance to obtain the right chain tension.

Tighten the lock nuts on the adjusting bolt (1).

Repeat the procedure on the other side.

https://truckmanualshub.com/

https://truckmanualshub.com/



## Oil spray system (Optional)

### Before starting

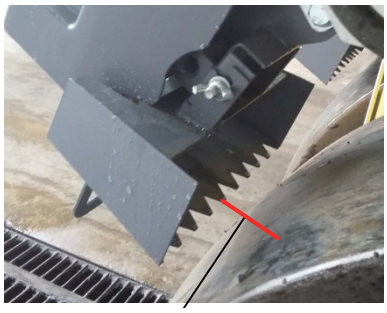

1

Check the oil level of the tank, if the oil level warning LED is on please fill the “plant oil”

Check the distance between the cover and tire’s surface (1) no less than 20 mm.

Check the distance between the oil spray nozzle and tire’s surface is about 150mm;

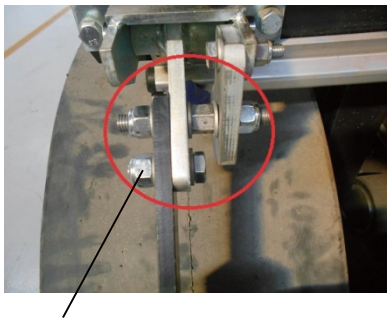

2

The distance can be adjusted easily by through the fixing bolts (2) of the bracket to avoid over spraying beyond tire or missing spray.

**CAUTION:** The system must keep clean, use relatively high solidifying plant oil, such as soybean oil. In cold season, check oil by place the oil outdoor at night; if oil has been frozen, stop using the oil. Make sure only use unfrozen oil.

### Starting

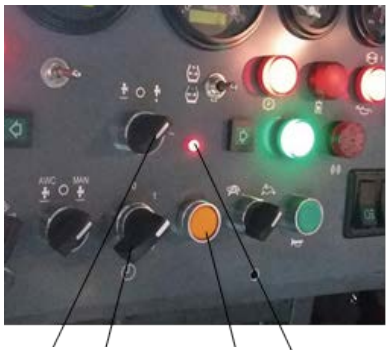

1 4 3 2

Switch on the battery switch;
Ignition switch on, if the oil level is less than the low limit, the LED is on;
Water/oil select switch turns to oil spray;
Oil sprinkle time control. The position switch has 0~3 four positions. It means spray lasting 3s.6s.9s.12s.depends on which position is pre-selected;
Press the oil spray switch.

***Fig. 1.Water/oil select switch***
***2.Oil level warning LED***
***3.Oil spray switch***
***4.Water/oil sprinkle time control***

## Spray volume – Adjustment

*Fig. 1.Valve*

Oil spray volume can be adjusted through the valve (1).

- Tighten to increase the volume;
- Unscrew to decrease the volume.

Since the oil viscosity has a big changing with temperature, If the viscosity change, should adjust the valve to keep the suitable volume.

## Maintenance – Oil spray system (Optional)

| Every 10h | Action |
|---|---|
| Check the nozzles | If nozzle block, clean the nozzle; replace if necessary;<br>If one of nozzles is blocked during working, the oil spray volume is on a normal level, clean the blocked nozzle during work break. |
| **Every 50h** | **Action** |
| Clean the filters | Remove the filters, clean the filters using plant oil cleanser; assemble the filter after the filter drying |

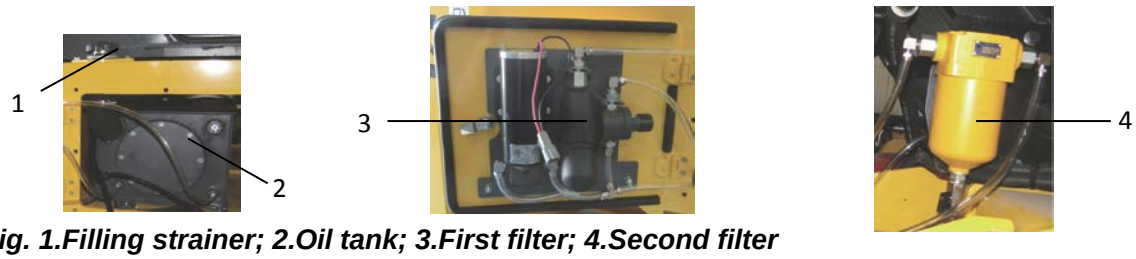


*Fig. 1.Filling strainer; 2.Oil tank; 3.First filter; 4.Second filter*

| Every 250h | Action |
|---|---|
| Clean the oil tank | Remove the cover, clean the tank using plant oil cleanser, then wash the tank using normal plant oil. |
| | Drain the water of the oil tank. |

## Temporary cleaning

Clean the system after a long-term parking.
Clean the system when any place block in working, if necessary, change the filter or pipe.
Check the block place through the transparent pipe.

Long-term parking

- Empty the system before long-term parking

## Air on the run (Optional)

### Before starting

*Fig 1. Instrument panel – Air gauge*

Check the air pressure from the air gauge on instrument panel, it should be in 380kPa – 780kPa. (fig1).

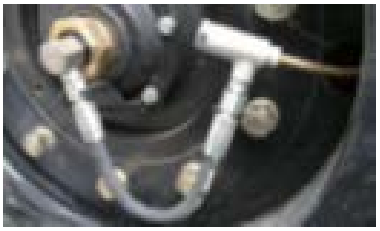

*Fig 2.*

*Fig 3.*

Check the air valve status:

In general, the air valves are closed when the roller is shipped out from factory. So if use the air on the run system, open the gas valve first on each tires.
Fig 2, Fig 3

*Fig 4. 1. Lock nut; 2. Valve element 3.Valve body*

How to open / close the air valve
Open the air valve
- Loosen the lock nut of the air valve using a wrench; Fig 4

*Fig 5.*

- Loosen the lock nut of the air valve using a flat screw driver; Fig 5

*Fig 6*

- Tighten the lock nut. Fig 6.

Close the gas valve.

Loosen the lock nut of the air valve using a wrench, screw out the valve element about 10mm with a screw driver, and tighten the lock nut.

**Air charge and discharge**

*Fig 7*

*Fig 8*

Air charge or discharge is control by the toggle switch on instrument panel; Push up is air charging and push down is air discharging, The neutral position is off.
Fig 7, Fig 8

Before operating the system, make sure the air pressure is normal and all the air valves are opened. Usually keep the nine tire's pressure as the same about 600kPa, it will get the better compaction performance.

**Maintenance - Air on the run (Optional)**

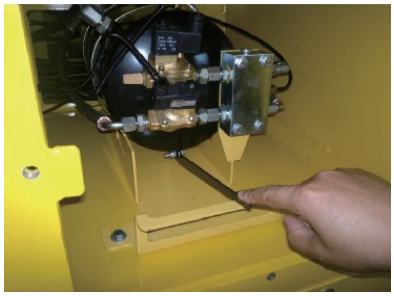

*Fig 9*

**Every day / 10 hours**

Check the air pressure from the air gauge on instrument panel, it should be in 380kPa~780kPa.

**Every week / 50 hours**

Water drain of air tank; Fig 9.

**Caution:** In the case of the temperature is low, the water drain valve may be damaged by the water iced! Please drain the water more often.

https://truckmanualshub.com/



**Every 3 months / 250 hours**

Check the air pipes of the system;
Check the air valve.

**Long-term parking**

When long-term parking (more than one week), please to close the air valve, avoid leaking and damaging the tires!.

https://truckmanualshub.com/

https://truckmanualshub.com/



## Disposal

Correctly sorted disposal must be carried out after replacing wear and spare parts and after the machine has been withdraw from service (scrapped).

The materials must be sorted correctly according to metal, plastic, electronic scrap, various operating substances etc.

Any oil greasy parts (hydraulic hoses, lube pipes etc.) must be treated separated.

Electric devices, accessories and packaging should be recycled in an environment–friendly manner.

Always observe the local regulations.

https://truckmanualshub.com/

**Dynapac (China) Compaction & Paving Equipment Co., Ltd.**

**Atlas Copco Construction Technique Product Company China**
No. 38, QuanWang Road, WuQing High Tech Industrial Park, 301700, Tianjin, China

**www.atlascopco.com**