https://truckmanualshub.com/

YARD MACHINES by MTD®

Operator's Manual

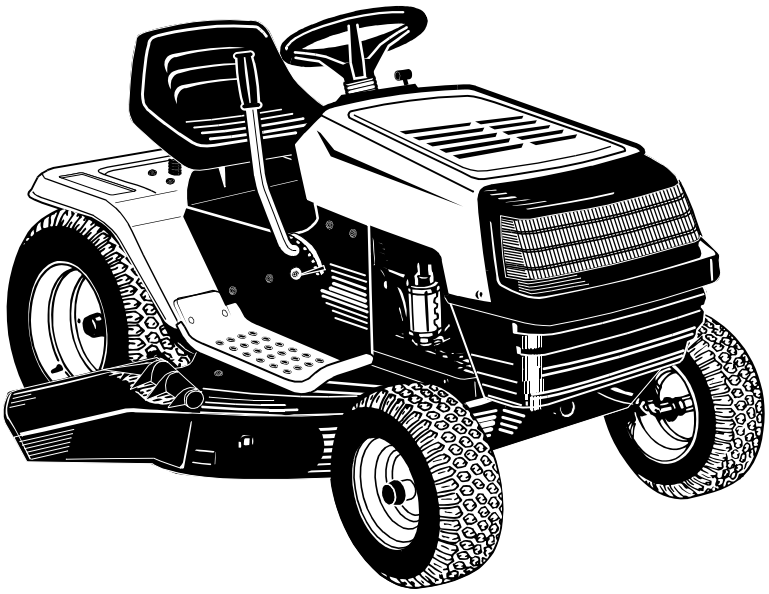

Transmatic Lawn Tractors

Model Series

660 thru 679

IMPORTANT: Read safety rules and instructions carefully before operating equipment.

Warning: This unit is equipped with an internal combustion engine and should not be used on or near any unimproved forest-covered, brush-covered or grass-covered land unless the engine's exhaust system is equipped with a spark arrester meeting applicable local or state laws (if any). If a spark arrester is used, it should be maintained in effective working order by the operator. In the State of California the above is required by law (Section 4442 of the California Public Resources Code). Other states may have similar laws. Federal laws apply on federal lands. A spark arrester for the muffler is available through your nearest engine authorized service dealer or contact the service department, P.O. Box 368022 Cleveland, Ohio 44136-9722.

MTD PRODUCTS INC. P.O. BOX 368022 CLEVELAND, OHIO 44136-9722

PRINTED IN U.S.A.

FORM NO. 770-10115A
(10/99)

https://truckmanualshub.com/

TABLE OF CONTENTS

Content	Page
Slope Gauge	3
Important Safe Operation Practices	4 thru 6
Unpacking	7
Assembling Your Lawn Tractor	7
Know Your Lawn Tractor	12
Operating Your Lawn Tractor	13
Making Adjustments	15
Service	18
Maintaining Your Lawn Tractor	19
Off-Season Storage	23
Troubleshooting	24

FINDING MODEL NUMBER

This Operator's Manual is an important part of your new Lawn Tractor. It will help you assemble, prepare and maintain the unit for best performance. Please read and understand what it says.

STOP

Before you start assembling your new equipment, please locate the model plate on the equipment and copy the information from it in the space provided below. The information on the model plate is very important if you need help from our Customer Support Department or an authorized dealer.

- You can locate the model number by pivoting the seat forward and looking under the seat at the seat pivot bracket. A sample model plate is explained below. For future reference, please copy the model number and the serial number of the equipment in the space below.

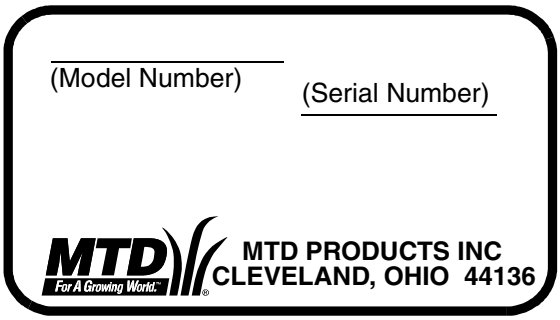

Copy the model number here: _____

Copy the serial number here: _____

CALLING CUSTOMER SUPPORT

If you have difficulty assembling this product or have any questions regarding the controls, operation or maintenance of this unit, please call the Customer Support Department.

Call **1- (330) 220-4MTD** (4683) or **1- (800)-800-7310** to reach a Customer Support representative. Please have your unit's model number and serial number ready when you call. See previous section to locate this information. You will be asked to enter the serial number in order to process your call .

https://truckmanualshub.com/

Slope Gauge

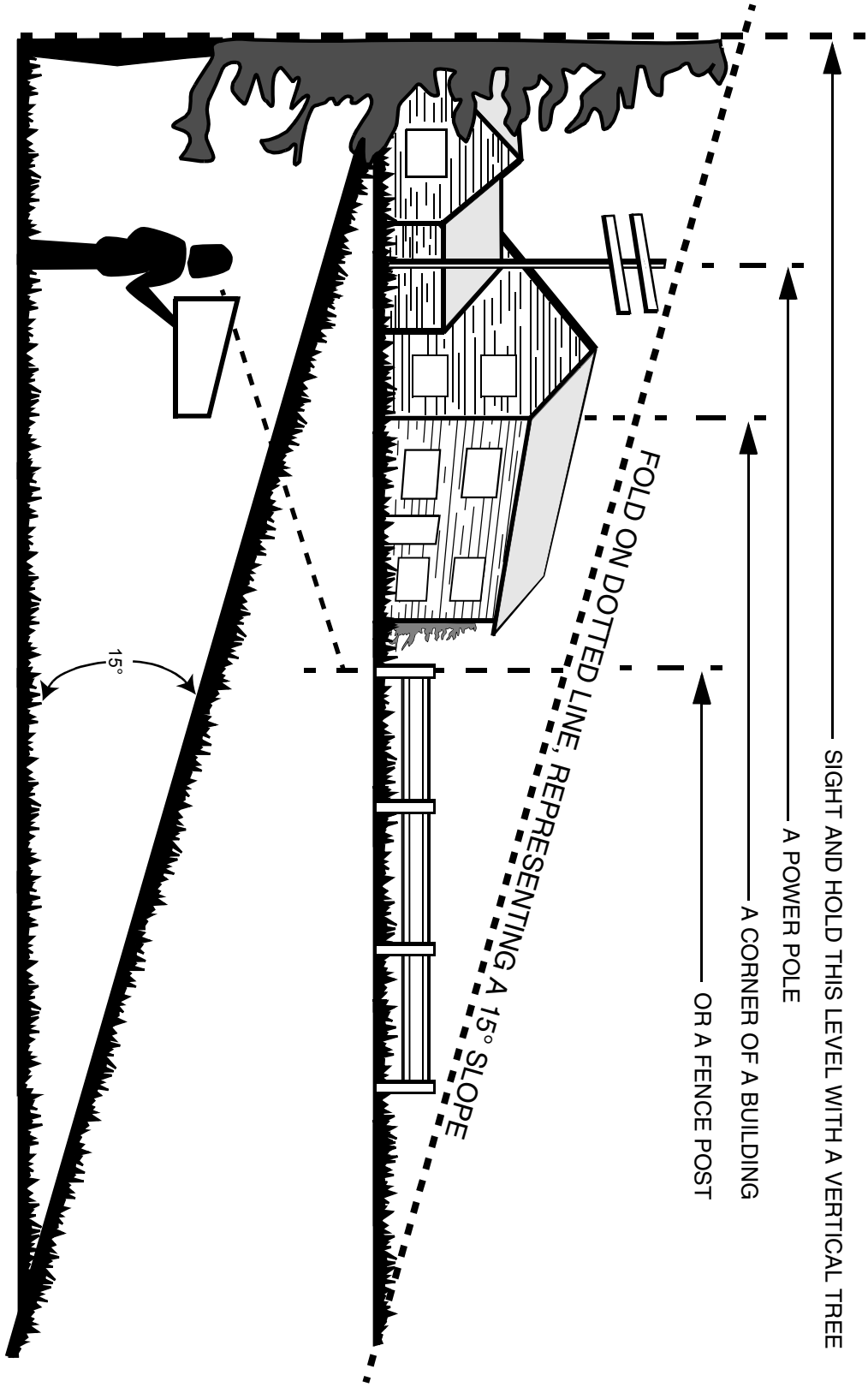

WARNING

Do not mow on inclines with a slope in excess of 15 degrees (a rise of approximately 2-1/2 feet every 10 feet). A riding mower could overturn and cause serious injury. If operating a walk-behind mower on such a slope, it is extremely difficult to maintain your footing and you could slip, resulting in serious injury.
Operate RIDING mowers up and down slopes, never across the face of slopes.

https://truckmanualshub.com/

SECTION 1: IMPORTANT SAFE OPERATION PRACTICES

WARNING: This symbol points out important safety instructions which, if not followed, could endanger the personal safety and/or property of yourself and others. read and follow all instructions in this manual before attempting to operate your lawn mower. failure to comply with these instructions may result in personal injury. When you see this symbol, heed its warning.

WARNING: The Engine Exhaust from this product contains chemicals known to the State of California to cause cancer, birth defects or other reproductive harm.

DANGER: Your lawn mower was built to be operated according to the rules for safe operation in this manual. As with any type of power equipment, carelessness or error on the part of the operator can result in serious injury. This lawn mower is capable of amputating hands and feet and throwing objects. Failure to observe the following safety instructions could result in serious injury or death.

GENERAL OPERATION

- Read, understand, and follow all instructions in the operator's manual and on the machine before starting. Keep this manual in a safe place for future and regular reference and for ordering replacement parts.
- Only allow responsible individuals familiar with the instructions to operate the machine. Know controls and how to stop the machine quickly.
- Do not put hands or feet under cutting deck or near rotating parts.
- Clear the area of objects such as rocks, toys, wire, etc., which could be picked up and thrown by the blade. A small object may have been overlooked and could be accidentally thrown by the mower in any direction and cause injury to you or a bystander. To help avoid a thrown objects injury, keep children, bystanders and helpers at least 75 feet from the mower while it is in operation. Always wear safety glasses or safety goggles during operation or while performing an adjustment or repair, to protect eyes from foreign objects. Stop the blade(s) when crossing gravel drives, walks or roads.
- Be sure the area is clear of other people before mowing. Stop machine if anyone enters the area.
- Never carry passengers.
- Disengage blade(s) before shifting into reverse and backing up. Always look down and behind before and while backing.
- Be aware of the mower and attachment discharge direction and do not point it at anyone. Do not operate the mower without either the entire grass catcher or the chute guard in place.
- Slow down before turning. Operate the machine smoothly. Avoid erratic operation and excessive speed.
- Never leave a running machine unattended. Always turn off blade(s), place transmission in neutral, set park brake, stop engine and remove key before dismounting.
- Turn off blade(s) when not mowing.
- Stop engine and wait until blade(s) comes to a complete stop before (a) removing grass catcher or unclogging chute, or (b) making any repairs, adjusting or removing any grass or debris.
- Mow only in daylight or good artificial light.
- Do not operate the machine while under the influence of alcohol or drugs.
- Watch for traffic when operating near or crossing roadways.
- Use extra care when loading or unloading the machine into a trailer or truck. This unit should not be driven up or down a ramp onto a trailer or truck under power, because the unit could tip over, causing serious personal injury. The unit must be pushed manually on a ramp to load or unload properly.
- Never make a cutting height adjustment while engine is running if operator must dismount to do so.
- Wear sturdy, rough-soled work shoes and close-fitting slacks and shirts. Do not wear loose fitting clothes or jewelry. They can be caught in moving parts. Never operate a unit in bare feet, sandals, or sneakers.
- Check overhead clearance carefully before driving under power lines, wires, bridges or low hanging tree branches, before entering or leaving buildings, or in any other situation where the operator may be struck or pulled from the unit, which could result in serious injury.
- Disengage all attachment clutches, thoroughly depress the brake pedal, and shift into neutral before attempting to start engine.

- Your mower is designed to cut normal residential grass of a height no more than 10". Do not attempt to mow through unusually tall, dry grass (e.g., pasture) or piles of dry leaves. Debris may build up on the mower deck or contact the engine exhaust presenting a potential fire hazard.

SLOPE OPERATION

Slopes are a major factor related to loss of control and tip-over accidents which can result in severe injury or death. All slopes require extra caution. If you cannot back up the slope or if you feel uneasy on it, do not mow it.

For your safety, use the slope gauge included as part of this manual to measure slopes before operating this unit on a sloped or hilly area. If the slope is greater than 15° as shown on the slope gauge, do not operate this unit on that area or serious injury could result.

DO:

- Mow up and down slopes, not across.
- Remove obstacles such as rocks, limbs, etc.
- Watch for holes, ruts or bumps. Uneven terrain could overturn the machine. Tall grass can hide obstacles.
- Use slow speed. Choose a low enough gear so that you will not have to stop or shift while on the slope. Always keep machine in gear when going down slopes to take advantage of engine braking action.
- Follow the manufacturer's recommendations for wheel weights or counterweights to improve stability.
- Use extra care with grass catchers or other attachments. These can change the stability of the machine.
- Keep all movement on the slopes slow and gradual. Do not make sudden changes in speed or direction. Rapid engagement or braking could cause the front of the machine to lift and rapidly flip over backwards which could cause serious injury.
- Avoid starting or stopping on a slope. If tires lose traction, disengage the blade(s) and proceed slowly straight down the slope.

DO NOT:

- Do not turn on slopes unless necessary; then, turn slowly and gradually downhill, if possible.
- Do not mow near drop-offs, ditches or embankments. The mower could suddenly turn over if a wheel is over the edge of a cliff or ditch, or if an edge caves in.
- Do not mow on wet grass. Reduced traction could cause sliding.
- Do not try to stabilize the machine by putting your foot on the ground.
- Do not use grass catcher on steep slopes.

CHILDREN

Tragic accidents can occur if the operator is not alert to the presence of children. Children are often attracted to the machine and the mowing activity. Never assume that children will remain where you last saw them.

- Keep children out of the mowing area and in watchful care of an adult other than the operator.
- Be alert and turn machine off if children enter the area.
- Before and when backing, look behind and down for small children.
- Never carry children, even with the blades off. They may fall off and be seriously injured or interfere with the safe machine operation.
- Never allow children under 14 years old to operate the machine. Children 14 years and over should only operate machine under close parental supervision and proper instruction.
- Use extra care when approaching blind corners, shrubs, trees or other objects that may obscure your vision of a child or other hazard.
- Remove key when machine is unattended to prevent unauthorized operation.

SERVICE

- Use extreme care in handling gasoline and other fuels. They are extremely flammable and the vapors are explosive.
- Use only an approved container.
- Never remove fuel cap or add fuel with the engine running. Allow engine to cool at least two minutes before refueling.
- Replace fuel cap securely and wipe off any spilled fuel before starting the engine as it may cause a fire or explosion.
- Extinguish all cigarettes, cigars, pipes and other sources of ignition.
- Never refuel the machine indoors because fuel vapors will accumulate in the area.
- Never store the fuel container or machine inside where there is an open flame or spark, such as a gas hot water heater, space heater or furnace.
- Never run a machine inside a closed area.
- To reduce fire hazard, keep the machine free of grass, leaves or other debris build-up. Clean up oil or fuel spillage. Allow machine to cool at least 5 minutes before storing.
- Before cleaning, repairing or inspecting, make certain the blade and all moving parts have stopped. Disconnect the spark plug wire, and keep the wire away from the spark plug to prevent accidental starting.
-

https://truckmanualshub.com/

- We do not recommend the use of pressure washers or garden hose to clean your unit. They may cause damage to electric components, spindles, pulleys, bearings or the engine. The use of water will result in shortened life and reduce serviceability.
- Check the blade and engine mounting bolts at frequent intervals for proper tightness. Also, visually inspect blade for damage (e.g., excessive wear, bent, cracked). Replace with blade which meets original equipment specifications.
- Keep all nuts, bolts and screws tight to be sure the equipment is in safe working condition.
- Never tamper with safety devices. Check their proper operation regularly. Use all guards as instructed in this manual.
- After striking a foreign object, stop the engine, remove the wire from the spark plug and thoroughly inspect the mower for any damage. Repair the damage before restarting and operating the mower.
- Grass catcher components are subject to wear, damage and deterioration, which could expose moving parts or allow objects to be thrown. For your safety protection, frequently check components and replace with manufacturer's recommended parts when necessary.
- Mower blades are sharp and can cut. Wrap the blade(s) or wear gloves and use extra caution when servicing blade(s).
- Check brake operation frequently. Adjust and service as required.
- Muffler, engine and belt guards become hot during operation and can cause a burn. Allow to cool down before touching.
- Do not change the engine governor settings or overspeed the engine. Excessive engine speeds are dangerous.
- Observe proper disposal laws and regulations. Improper disposal of fluids and materials can harm the environment and the ecology.
- Prior to disposal, determine the proper method to dispose of waste from your local Environmental Protection Agency. Recycling centers are established to properly dispose of materials in an environmentally safe fashion.
- Use proper containers when draining fluids. Do not use food or beverage containers that may mislead someone into drinking from them. Properly dispose of the containers immediately following the draining of fluids.
- DO NOT pour oil or other fluids into the ground, down a drain or into a stream, pond, lake or other body of water. Observe Environmental Protection Agency regulations when disposing of oil, fuel, coolant, brake fluid, filters, batteries, tires and other harmful waste.

WARNING: YOUR RESPONSIBILITY- Restrict the use of this power machine to persons who read, understand and follow the warnings and instructions in this manual and on the machine.

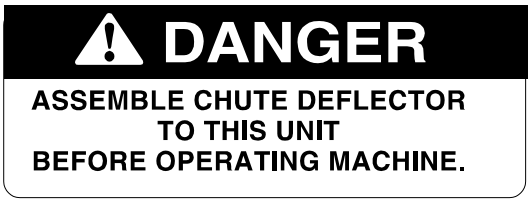

https://truckmanualshub.com/

SECTION 2: UNPACKING

To Remove Unit From Crate

- Remove all screws from the top of the crate using a 1/4" hex head socket or a flat blade screwdriver.
- To remove ends, grasp top board on the end, and pull towards you in a downward motion. (A hammer may be helpful).
- Set panel aside to avoid tire punctures.
- Repeat procedure for each side of the crate.
- Remove and discard plastic bag which covers unit.
- Loose parts (may include the operator's guide, steering wheel, optional oil drain sleeve or hose, battery fluid, chute deflector, optional mulching plug, etc.) are on the seat or in a box wrapped in plastic. Carefully cut and remove the plastic wrap. Remove the loose parts.
- Make certain parking brake is released and deck is raised. Push the unit off the skid.

NOTE: *For detailed instructions on raising the deck and releasing the parking brake, refer to the control section in this manual.*

SECTION 3: ASSEMBLING YOUR LAWN TRACTOR

IMPORTANT: After assembly, service engine with gasoline, and check oil level as instructed in the separate engine manual packed with your unit.

NOTE: *Reference to right or left hand side of the unit is observed from the driver's seat, facing forward.*

Tools Required For Assembly

(1) 1/4" socket wrench or flat blade screwdriver

(1) 1/2" wrench or socket wrench*

(1) 9/16" wrench or socket wrench

(2) 7/16" wrenches or socket wrenches

*If your steering wheel cap is square, you **must** have a socket wrench in order to install the steering wheel.

Battery Information

WARNING

- Battery acid must be handled with great care as contact with it can burn and blister the skin. It is also advisable to wear protective clothing (goggles, rubber gloves and apron) when working with it.
- Should battery acid accidentally splatter into the eyes or onto the face, rinse the affected area immediately with clean cold water. If there is any further discomfort, seek prompt medical attention.
- If acid spills on clothing, first dilute it with clean water, then neutralize with a solution of ammonia/ water or baking soda/water.
- Since battery acid is corrosive, do not pour it into any sink or drain. Before discarding empty electrolyte containers, rinse them with a neutralizing solution.
- NEVER connect or disconnect charger clips to battery while charger is turned on as it can cause sparks.
- Keep all lighted materials (cigarettes, matches, lighters) away from the battery as the hydrogen gas generated during charging can be combustible.
- As a further precaution, only charge the battery in a well-ventilated area.

*Always shield eyes, protect skin and clothing when working near batteries.

DANGER

Battery contains sulfuric acid. Refer to warning at right. Antidote: EXTERNAL—Flush with water. INTERNAL—Drink large quantities of water or milk. Follow with milk of magnesia, beaten eggs or vegetable oil. Call physician immediately. EYES: Flush with cool water for at least 15 minutes, then get prompt medical attention.

Since batteries produce explosive gases, keep all lighted materials (cigarettes, lighters, matches, etc.) away. Be sure to charge battery only in well-ventilated areas. Make certain venting path of battery drain tube (if equipped) is always open.

KEEP BATTERIES
OUT OF THE REACH OF CHILDREN!

https://truckmanualshub.com/

Battery Identification

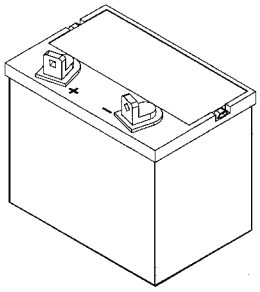

Type "A"

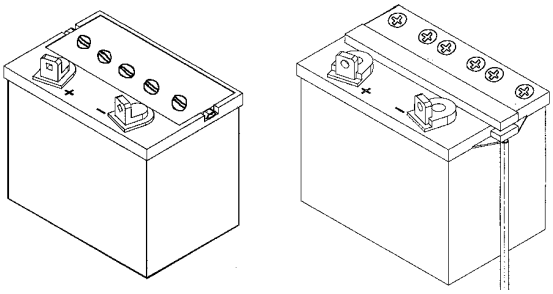

Type "B"

Compare the battery in your lawn tractor (located under the seat) with the illustration above. Type “A” batteries are activated and are ready to use. Type “B” batteries must be filled with battery fluid (acid) and charged before they are put into service. Follow the instructions which apply to the battery in your lawn tractor.

Activating And Charging The Battery

(Type “B” Battery Only)

Do not activate battery (fill with battery acid) until battery is actually placed in service. Be certain to read previous battery warnings before activating the battery.

- Pivot the seat pivot bracket forward. Unhook the strap which secures the battery (hook is on rear frame, under fender). Disconnect the positive cable from the positive terminal. Save the hardware for reassembly.
- Remove the battery from the lawn tractor, paying attention to how the battery is placed in the unit, and how the drain tube (attached to the battery) is routed.
- Activate the battery as instructed in the “Quick Start” brochure included with the battery fluid. **Read instructions carefully.**

NOTE: *You can continue assembling the lawn tractor while battery is standing for 30 minutes (after filling with acid), and later while you are charging the battery.*

IMPORTANT: To obtain the maximum life from your battery, it MUST BE CHARGED prior to initial use.

CHARGE THE BATTERY after the 30 minute standing period. Battery P/N 725-1705D—Charge at 2-3 amps for one hour. Battery P/N 725-1707D, 725-0453G and 725-1750—Charge at 6 amps for one hour.

NOTE: *If you charge the battery at a lower AMP rate, use a hydrometer to make sure the battery is completely charged. The hydrometer should read 1.260 minimum at an electrolyte temperature of 60-110°F. DO NOT CHARGE AT MORE THAN 6 AMPS.*

Attaching The Steering Wheel

- The hardware for attaching the steering wheel has been packed inside the steering wheel. Carefully pry off the steering wheel cap and remove the hardware.
- Remove the steering bellow from the lift lever on the right hand side of lawn tractor. Place steering bellow over the steering shaft extending through the dash. See Figure 1.

NOTE: *If the openings on each end of the steering bellow are two different sizes, the smaller end goes down against the dash of the lawn tractor.*

- **With the wheels of the tractor pointing straight forward,** place the steering wheel over the steering shaft, positioning steering wheel as desired.
- Place the washer with the cupped side down over the steering shaft. Secure with hex lock bolt. See Figure 1.

NOTE: *If your steering wheel cap is square, you **must** use a socket wrench.*

- Place the steering wheel cap over the center of the steering wheel and seat it with your hand.

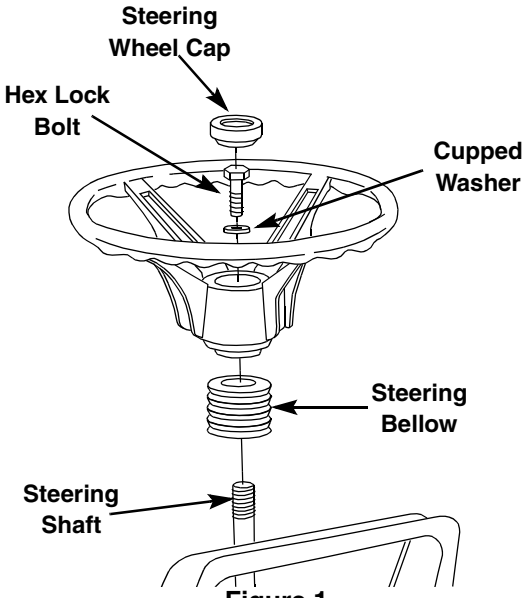

Figure 1

https://truckmanualshub.com/

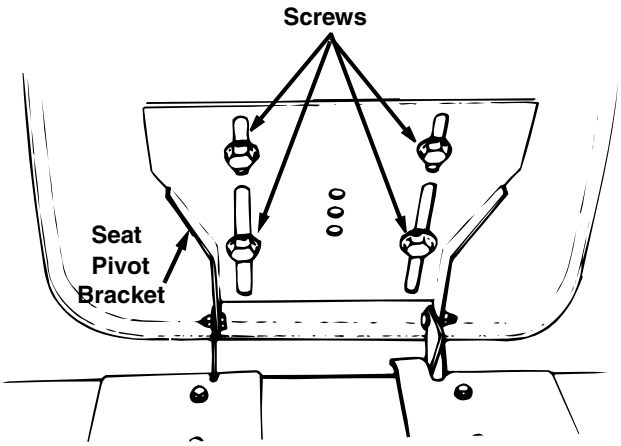

Manual Adjustment Seat

Figure 2

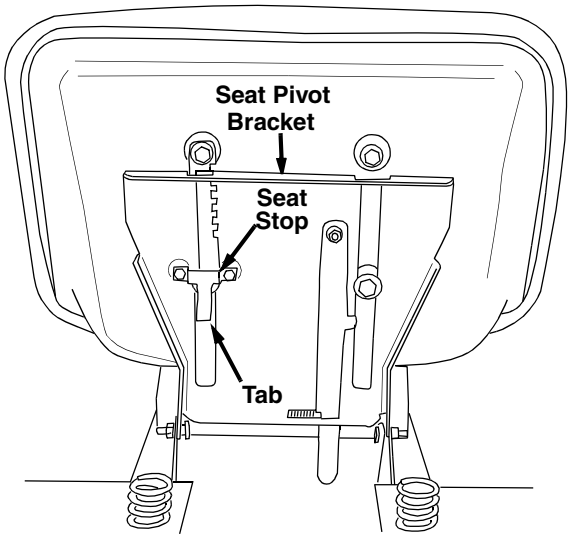

Quick Adjustment Seat

Figure 3

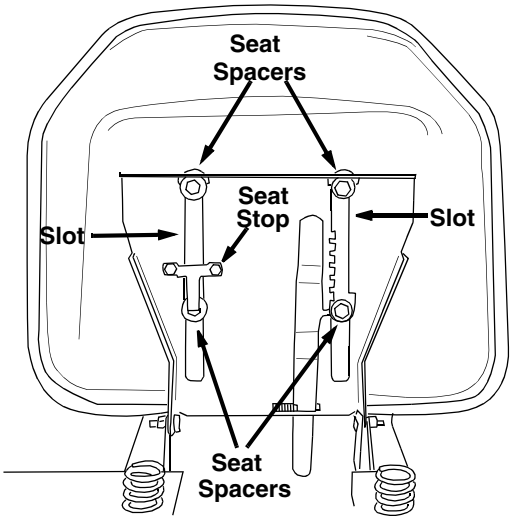

Quick Adjustment Seat

Figure 4

Attaching The Seat

There are two different seat pivot brackets used on this series of lawn tractor, a manual adjustment seat or a quick adjustment seat. See Figure 2 and 3 to identify which seat is on your unit. Follow the instructions which apply to your lawn tractor.

Manual Adjustment Seat

Remove the four screws which secure the seat to the seat pivot bracket. Turn the seat around and place in position against the seat pivot bracket, lining up the slotted holes in the pivot bracket with the holes in the seat. Select desired position for the seat, and secure with the four screws. See Figure 2.

NOTE: *Your seat may have been shipped in a box. Remove the four screws from the bottom of seat and place seat in position against the seat pivot bracket. Follow the directions above to attach the seat.*

Quick Adjustment Seat

Pull out tab on seat stop and hold open while sliding seat out of seat pivot bracket. See Figure 3. Turn the seat around and line up plastic seat spacers with the slots in seat pivot bracket. Slide seat in until front seat spacer engages the seat stop. See Figure 4. To adjust the seat refer to the adjustment section in this manual.

NOTE: *If your seat was shipped in a box, line up plastic seat spacers with the slots in seat pivot bracket and slide seat in until front seat spacer engages seat stop.*

WARNING: Before operating your unit, stand behind quick adjustment seat and pull back on seat, making sure seat is engaged in seat stop.

Attaching The Chute Deflector

The chute deflector must be attached to the right side of the deck so that it covers the chute opening.

WARNING: Do not operate your unit unless the chute deflector has been properly installed.

- Make certain deck is raised to its highest position (lift lever pulled all the way back).

https://truckmanualshub.com/

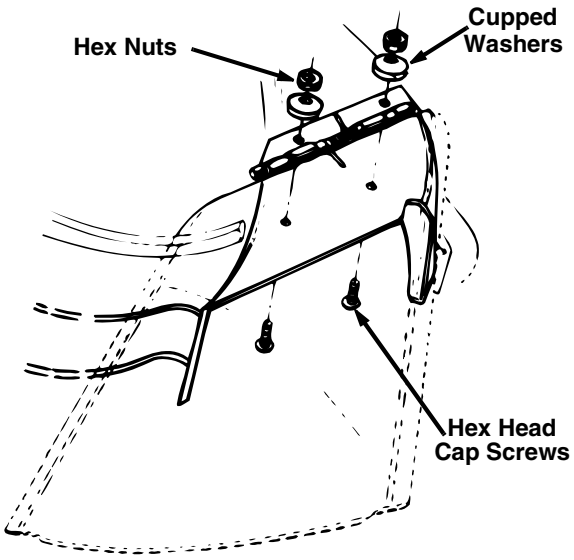

Figure 5

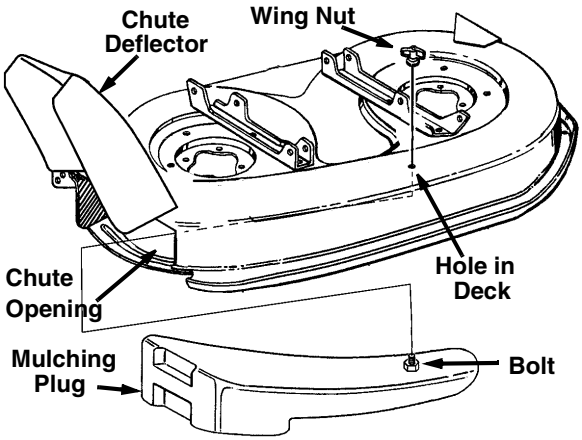

Figure 6

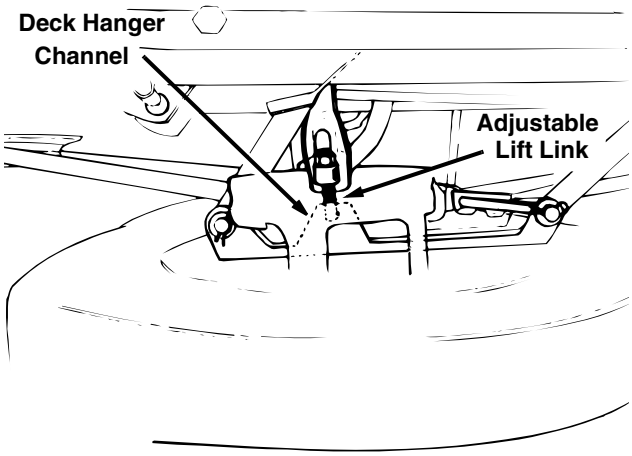

Figure 7

NOTE: *Your mowing deck may be equipped with an optional mulching plug. Remove the mulching plug by removing the wing nut on top of the deck. Grasp the mulching plug and pull out of the deck.*

- Remove the hex head cap screws, cupped washers and hex nuts which are attached to the deck next to the chute opening.
- Place the chute deflector in position as shown in Figure 5. Secure with hardware just removed. Cupped sides of washers go against the chute deflector.

Installing The Mulching Plug (If Equipped)

- Remove the mulching plug from the box packed with your lawn tractor (If not already removed from the deck).
- Remove the wing nut from the bolt on the mulching plug.
- Lift up the chute deflector and insert the mulching plug through chute opening.
  See Figure 6.
- Line up the bolt on the mulching plug with the hole in the top of the deck. Push up on the end of the mulching plug and secure with the wing nut.

Tire Pressure

The tires on your unit may be over-inflated for shipping purposes. Reduce the tire pressure before operating the unit. Recommended operating tire pressure is approximately 10 p.s.i. Check sidewall of tire for maximum p.s.i.

WARNING: Maximum tire pressure under any circumstances is 30 p.s.i. Equal tire pressure should be maintained on all tires.

Leveling The Deck

With unit on hard, level surface, place the blades in a straight line, and measure the distance from the outside edge of the blade tips to the ground.

If adjustment is needed, proceed as follows.

- Remove the hairpin clip and flat washer from the bottom of the adjustable lift link on the left side of the deck. (Hairpin clip and flat washer are on the inside of the lift link.)
- Pull the adjustable lift link out of the deck hanger channel. See Figure 7. Turn the adjustable lift link up or down as necessary to level the deck. Usually only one or two turns are needed.
- Insert the end of the adjustable lift link into the hole in the deck hanger channel. Recheck the adjustment. Readjust if necessary.

https://truckmanualshub.com/

- When deck is level, secure end of adjustable lift link with flat washer and hairpin clip.

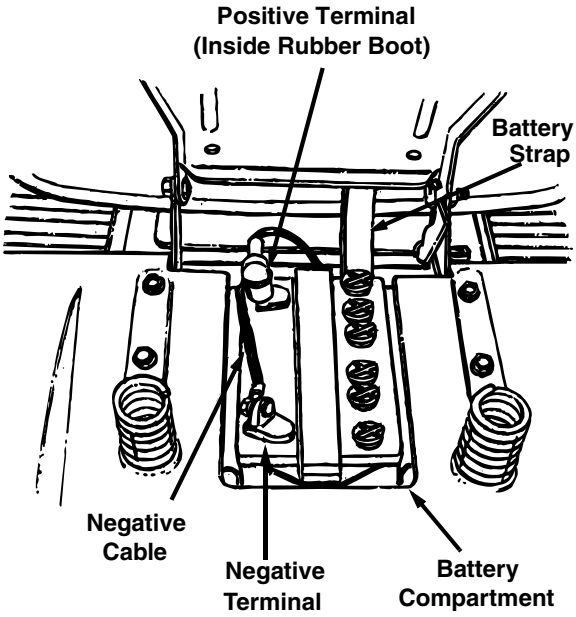

Figure 8

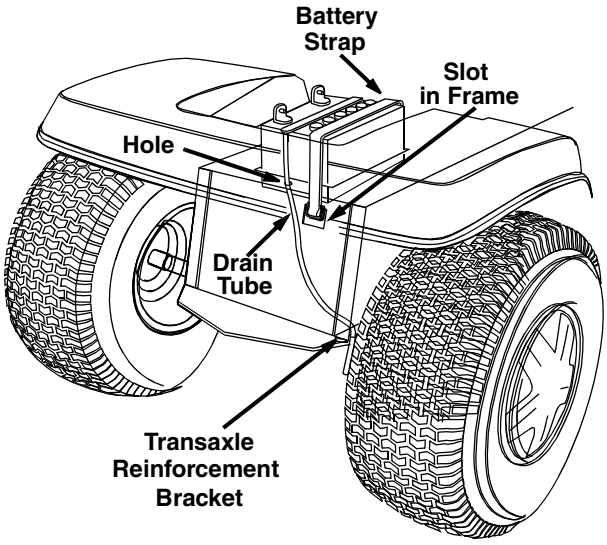

Figure 9

Installing The Battery (Type "A" Battery)

NOTE: *If battery is put into service after date shown on top of battery, charge for minimum of 1 hour at 6-10 amps*

- Lift the seat.
- Remove the plastic cover from the negative terminal.
- Remove the hex bolt and nut from the negative (black) cable. Attach negative cable to the negative terminal with this bolt and nut.

Installing The Battery (Type "B" Battery)

- Lift the seat.
- Make certain both the negative (black) cable and the positive (red) cable are routed up through the battery compartment as shown in Figure 8.
- Replace the battery into the battery compartment in the same position as it was before (positive terminal is toward the front of the unit).
- Attach the positive (red) cable to the positive terminal of the battery. Secure with hex bolt and nut previously removed. Slide rubber boot down over the positive terminal.
- Remove the hex bolt and nut from the negative (black) cable. Attach negative cable to the negative terminal with this bolt and nut.
- Secure battery by hooking battery strap into slot in rear frame, under the fender. See Figure 9.
- Insert the drain tube down through the hole in the battery compartment and the hole in the transaxle reinforcement bracket located on the **right** side of the unit. See Figure 9. Be certain drain tube is routed away from the wheel rim.
- Trim excess end of drain tube if necessary (about 4" should extend past the bracket or cable tie).

https://truckmanualshub.com/

SECTION 4: KNOW YOUR LAWN TRACTOR

Ignition Switch

The ignition switch is located on the dashboard. Turn the key to the START position to start the engine. When the engine is running, leave the key in the ON position. To stop the engine, turn the key to the OFF position. See Figure 10.

WARNING: Remove key from the tractor when tractor is not in use to prevent accidental starting.

Throttle Control

The throttle control is located on the left side of the dashboard and is used to regulate the engine speed. See Figure 10. The engine should be operated at full throttle (FAST) when operating any equipment that uses the tractor engine as a source of power such as the mowing deck or snow thrower attachment.

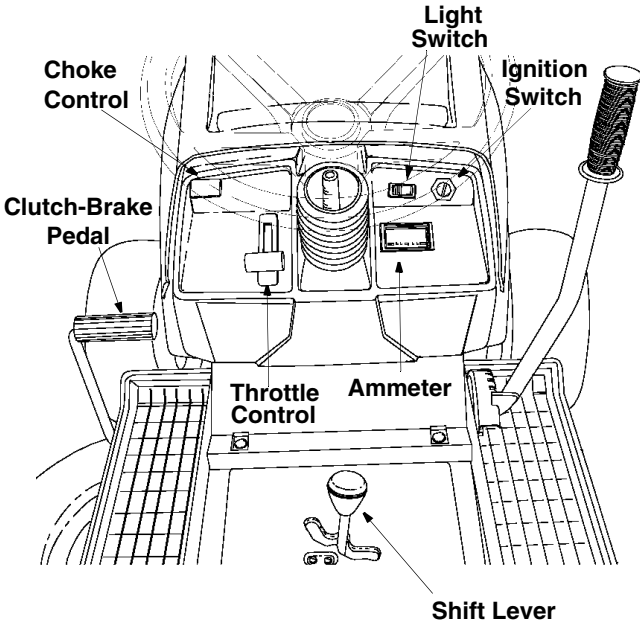

Figure 10

Choke Control

The choke control is located on the left side of the dashboard and is operated manually. Details for the choke operation are covered in the separate engine manual packed with your unit. See Figure 10.

Light Switch (If Equipped)

The head lamps are operated by pushing the light switch located on the dashboard. The head lamps will only operate when the engine is running. See Figure 10.

Ammeter (If Equipped)

The ammeter registers the rate of battery charge or discharge. The ammeter will register on the discharging side with starting the engine. It should register on the opposite side (charging) when the engine is running in the fast position until the battery is completely charged. With a fully charged battery or with the engine idling, the ammeter will not show a charge. See Figure 10.

Shift Lever

The shift lever is located in the center of the console and has three positions, FORWARD, NEUTRAL and REVERSE. See Figure 10. The clutch-brake pedal must be depressed and the lawn tractor must not be moving when shifting gears. Do not force the shift lever. Release the clutch-brake pedal slightly to line up the shifting collar in the transmission. Then try to shift gears.

Speed Control Lever

The speed control lever is located either on the console or on the right fender. See Figure 11. The speed control lever allows you to regulate the ground speed of the lawn tractor. To select the ground speed, depress clutch pedal. Move speed control lever out of the notches and backward to slow lawn tractor, forward to increase speed. When desired speed has been obtained, release lever in that position. Whenever clutch is released, unit will automatically go to the pre-set speed.

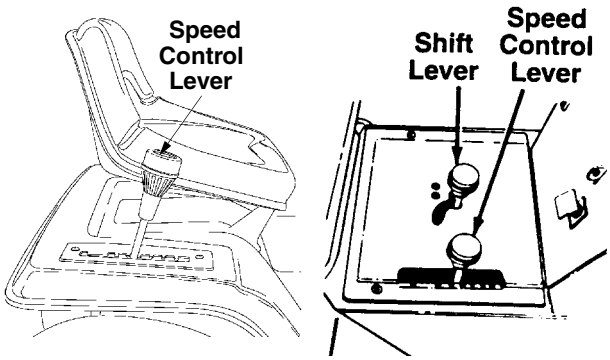

Figure 11

Clutch-brake Pedal

The clutch-brake pedal is located on the left side of the lawn tractor. Depressing the clutch-brake pedal part way disengages the clutch. Pressing the pedal all the way down disengages the clutch and engages the disc brake. See Figure 10.

https://truckmanualshub.com/

NOTE: *The clutch-brake pedal must be depressed to start the engine.*

Parking Brake

The speed control lever is used to set the parking brake. To set the parking brake, depress the clutch-brake pedal. Move the speed control lever out of the notches to the parking brake position. Release the speed control lever and the clutch-brake pedal.

To release the parking brake, depress the clutch-brake pedal and move the speed control lever out of the notches to the desired position. Release the speed control lever and the clutch-brake pedal.

NOTE: *The parking brake must be set if the operator leaves the seat with the engine running*

Interlocks (Not Shown)

Interlock safety switches are located by the clutch-brake pedal, the lift lever, the shift lever and under the seat.

Before the engine will start, the clutch-brake pedal must be depressed all the way and the lift lever must be in the BLADES STOP position.

Before the unit can be shifted into reverse or if the operator leaves the seat, the lift lever must be in the BLADES STOP position.

Indicator Lights (If Equipped)

If your unit is equipped with indicator lights, two or three indicator lights are located in the dash panel. If a light illuminates when attempting to start the unit, proceed as follows.

CLUTCH—Depress the clutch pedal.

PTO—Place lift lever in the BLADES STOP position.

OIL (Vanguard Twin and Intek twin Engines Only)—Check the crankcase oil level, and add oil as required.

Cutting Controls

Lift Lever

The lift lever is used to raise and lower the cutting deck and to engage and disengage the blades. Pulling it all the way back and locking it disengages the blades.

NOTE: *The lift lever **must** be in the BLADES STOP position when starting the engine, when shifting into reverse and if the operator leaves the seat. See Figure 12.*

Deck Lift Indicator (If Equipped)

If so equipped, the deck lift indicator marks the position being used for the lift lever. Select the lift lever position desired, press the indicator lever outward, move it to the position immediately below the lift lever and release the indicator lever. See Figure 12.

Setting The Cutting Height

- Select the position for the lift lever which gives the desired cutting height. Move the deck lift indicator (if so equipped) so that the lift lever can be returned to the same position after it is raised.
- Move the deck wheels to the hole location so the wheels are 1/4 inch above the ground. Place all four wheels in the same relative position.

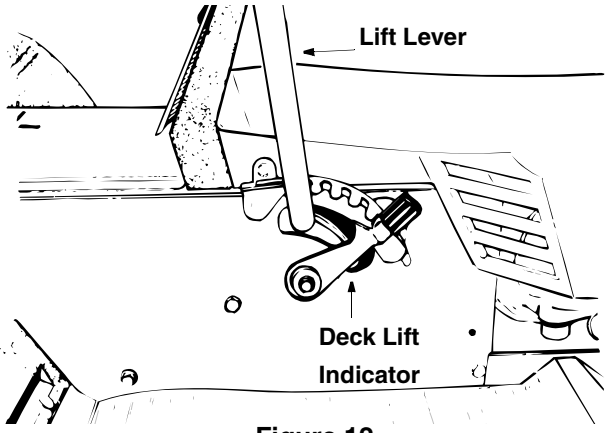

Figure 12

SECTION 5: OPERATING YOUR LAWN TRACTOR

AVOID SERIOUS INJURY OR DEATH

- Go up and down slopes, not across. avoid sudden turns.
- Do not operate the unit where it could slip or tip.
- If machine stops going uphill, stop blade(s) and back downhill slowly.
- Do not mow when children or others are around.
- Never carry children.
- Look down and behind before and while backing.
- Keep safety devices (guards, shields, and switches) in place and working.
- Remove objects that could be thrown by the blade(s).
- Know location and function of all controls.
- Be sure blade(s) and engine are stopped before placing hands or feet near blade(s).
- before leaving operator's position, disengage blade(s), place the shift lever in neutral, engage brake lock, shut engine off and remove key.
- READ OPERATOR'S MANUAL

https://truckmanualshub.com/

Gas And Oil Fill-up

Check the oil level and add if necessary. Service the engine with gasoline as instructed in the separate engine manual packed with your tractor. Read instructions carefully.

IMPORTANT: Your tractor is shipped with oil; however you must check the oil level before operating. Be careful not to overfill.

WARNING: Never fill fuel tank indoors, with engine running or while engine is hot.

Starting The Engine

IMPORTANT: This unit is equipped with a safety interlock system for your protection. The purpose of the safety interlock system is to prevent the engine from cranking or starting unless the clutch-brake pedal is depressed and the lift lever is in the BLADES STOP position. In addition, the lift lever must be in the BLADES STOP position when the unit is put into reverse or the engine will shut off. If the operator leaves the seat with the lift lever engaged and/or without setting the parking brake, the engine will shut off.

WARNING: Do not operate the tractor if the interlock system is malfunctioning because it is a safety device, designed for protection.

- Place the lift lever in the BLADES STOP position.
- Depress the clutch-brake pedal and set the parking brake.
- Set the throttle control in the FAST position.
- Pull out the choke control (a warm engine may not require choking).
- Turn the ignition key to the right to the START position. After the engine starts, release the key. It will return to the ON position.

NOTE: *Protect the starter life by using short starting cycles of several seconds. Cranking more than 15 seconds per minute can damage the starter motor.*

- Push choke knob in gradually. Move the throttle control to desired engine speed.

Stopping The Engine

Turn the ignition key to the left to the OFF position. Remove the key to prevent accidental starting.

IMPORTANT: If you strike a foreign object, stop the engine. Remove wire from spark plug, thoroughly inspect the unit for any damage, and repair the damage before restarting and operating the mower.

NOTE: *If any problems are encountered, refer to the Trouble Shooting Guide.*

Operating The Lawn Tractor

- Move throttle control to full throttle to prevent strain on the engine and to operate the cutting blades.
- Place the shift lever in either the FORWARD or REVERSE position.
- Release the parking brake by depressing the clutch-brake pedal, pressing outward on the speed control lever and moving to desired position. Use first speed position when operating the lawn tractor for the first time.
- Release clutch-brake pedal slowly to put unit into motion.
- The lawn tractor is brought to a stop by depressing the clutch-brake pedal.

NOTE: *When operating the unit initially, there will be little difference between the highest two speeds until after the belts have seated themselves into the pulleys during the break-in period.*

Be sure that the lawn is clear of stones, sticks, wire, or other objects which could damage lawn mower or engine. For best results and to insure more even grass distribution, do not mow when lawn is excessively wet.

WARNING: Before leaving the operator's position for any reason, disengage the blades, place the shift lever in neutral, engage the parking brake, shut engine off and remove the key.

When stopping the unit to empty a grass bag, etc., follow the instructions above. This procedure will also eliminate "browning" the grass, which is caused by hot exhaust gases from a running engine.

If unit stalls with speed control in high speed, or if unit will not operate with speed control lever in a low speed position, proceed as follows.

- Place shift lever in NEUTRAL.
- Restart engine.
- Place speed control lever in high speed position.
- Release clutch-brake pedal fully.
- Depress clutch-brake pedal.
- Place speed control lever in desired position.
- Place shift lever in either FORWARD or REVERSE, and follow normal operating procedures.

Operating The Cutting Blades

The cutting blades may be engaged while the lawn tractor is moving or standing still. DO NOT engage the cutting blades abruptly as the sudden belt tension on the pulley may cause the engine to stall.

https://truckmanualshub.com/

WARNING: Keep feet and hands away from the discharge opening, the blades or any part of the deck. When the unit is used for anything other than mowing operations, the blade drive should be disengaged.

Move the lift lever into the BLADES STOP position to raise the deck and disengage the blades.

Grass Collector Available

Grass Collector Model OEM-190-063 is available as optional equipment for lawn tractors with 38" and 42" decks. Grass Collector Model OEM-190-103 is available for lawn tractors with 46" decks.

WARNING: The mower should not be operated without the entire grass catcher or chute deflector in place.

NOTE: *Under normal usage bag material is subject to wear, and should be checked periodically. Be sure to use only factory authorized replacement bag.*

SECTION 6: MAKING ADJUSTMENTS

WARNING: Disconnect the spark plug wires and ground against the engine before performing any adjustments, repairs or maintenance.

Manual Adjustment Seat

To adjust the position of the seat, loosen the four screws on the bottom of the seat. See Figure 2. Slide the seat forward or backward as desired. Retighten the four screws.

Quick Adjustment Seat

To adjust the position of the seat, move the seat adjustment lever (located under the seat) to the left and slide the seat forward or backwards. See Figure 13. Make sure seat is locked into one of the six adjustment positions before operating the lawn tractor.

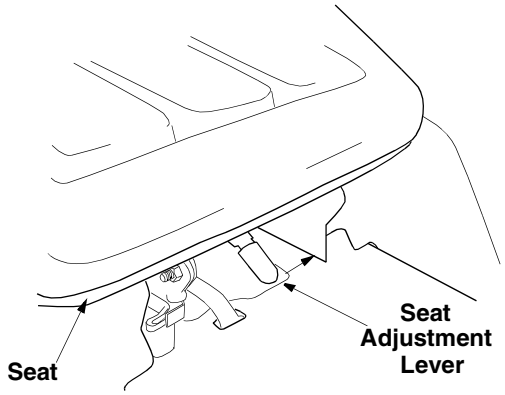

Figure 13

Carburetor Adjustments

WARNING: If any adjustments are made to the engine while the engine is running (e.g. carburetor), disengage all clutches and blades. Keep clear of all moving parts. Be careful of heated surfaces and muffler.

Minor carburetor adjustments may be required to compensate for differences in fuel, temperature, altitude and load. Refer to separate engine manual for carburetor adjustment information.

NOTE: *A dirty air cleaner will cause an engine to run rough. Be certain air cleaner is clean and attached to the carburetor before adjusting carburetor.*

Deck Leveling Adjustment

If an uneven cut is obtained, the deck may be leveled by following instructions in Assembly section.

Deck Engagement Adjustment

The cutting deck engagement may be adjusted to make certain deck is disengaged when lift lever is in the BLADES STOP position. Correct adjustment as follows.

With the engine off, place the lift lever in the highest cutting position (first position). Remove the cotter pin and flat washer which secure the disengagement rod to the stabilizer shaft assembly. See Figure 14. Shorten the rod by threading it in until the ferrule is against the back of the slot in the lift shaft assembly, and the rod lines up with the hole in the stabilizer shaft. For more belt tension the disengagement rod must be lengthened. To decrease belt tension the disengagement rod must be shortened.

https://truckmanualshub.com/

Check the adjustment by placing the lift lever in the BLADES STOP position. The deck should move up and forward, allowing the belt to become loose. Start and test for disengagement. Repeat procedure as necessary.

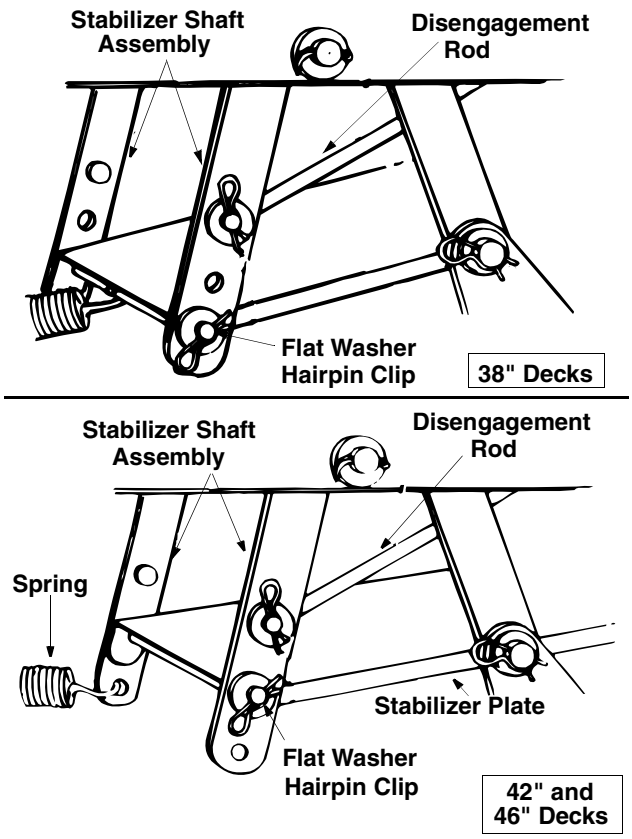

Figure 14

Neutral Adjustment

- Place the transmission in neutral. (The unit will move freely when pushed forward and backward with the parking brake released.)
- Loosen the bolt which secures the shift lever assembly to the shift lever link. See Figure 15.
- Place the shift lever in the neutral slot. See Figure 15.
- Tighten the bolt to 13 foot pounds.

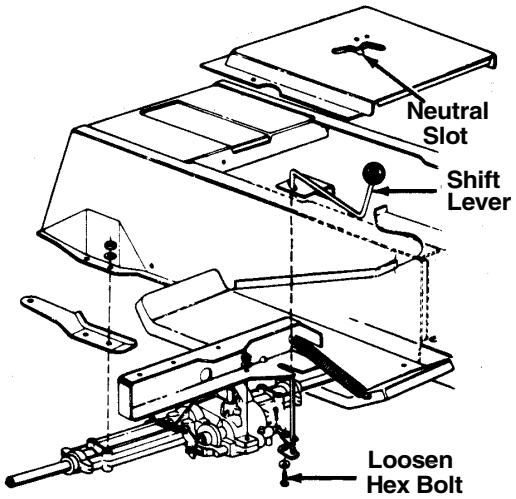

Figure 15

Brake Adjustment

The brake is located by the right rear wheel inside the frame. During normal operation of this machine, the brake is subject to wear and will require periodic examination and adjustment.See Figure 16.

WARNING: Do not have the engine running when you adjust the brake.

To adjust the brake, adjust the nut so the brake starts to engage when the brake lever is 1/4" to 5/16" away from the axle housing.

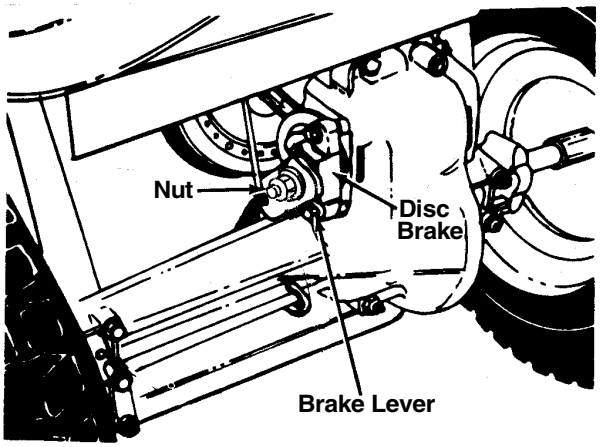

Figure 16

https://truckmanualshub.com/

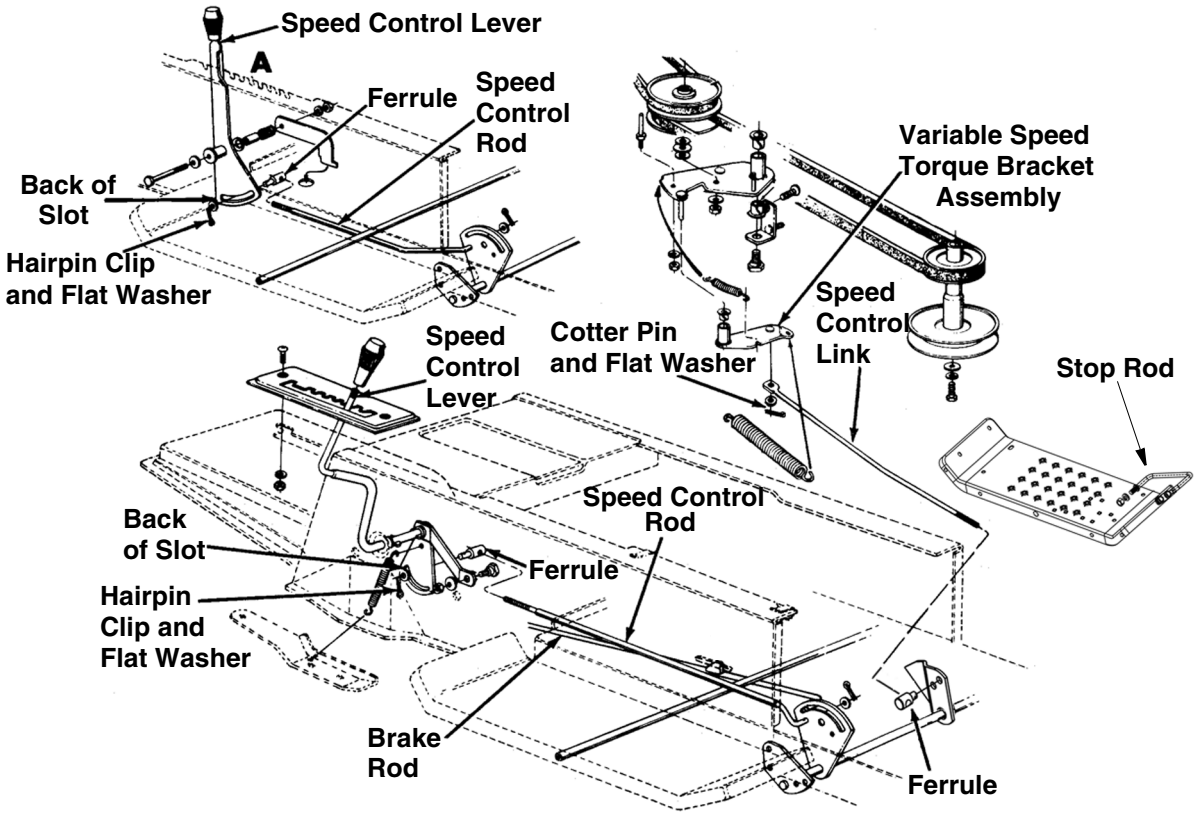

Figure 17

Speed Control Adjustment

NOTE: *When operating the unit initially or after replacing the belts, there will be little difference between the highest two speeds until after the belts have gone through a break-in period and have seated themselves into the pulleys.*

If the full range of speeds cannot be obtained on your unit, adjust the speed control as follows.

- Adjust the speed control lever by pushing the clutch-brake pedal forward until it hits the stop rod on the running board. See Figure 17. Have another person hold the pedal in this position as you make the following adjustment. Place the speed control lever in parking brake position. Remove the hairpin clip and flat washer, and adjust the ferrule on the rod so it is against the back end of the slot. See Figure 17. Then lengthen rod one more turn. Reassemble and secure with the flat washer and hairpin clip.
- Adjust the speed control link as follows to obtain the correct neutral adjustment.
- Start the engine.
- Place the shift lever in Neutral position.
- Place the speed control lever in high speed position.
- Release the clutch-brake pedal completely, then slowly depress the pedal all the way (to park position). Hold the pedal in this position.
- Turn the engine off.
- After engine stops completely, release the clutch-brake pedal.
- Place speed control lever in second position.
- Remove the cotter pin and flat washer which secures the speed control link to the variable speed torque bracket assembly.
- Push the clutch-brake pedal backward by hand as far as it will go using light pressure. Hold it in this position as you thread the speed control link in or out of the ferrule until it lines up with the pin on the variable speed torque bracket assembly.
- Secure speed control link to variable speed torque bracket assembly with flat washer and cotter pin.

Wheel Adjustment (Units With Adjustable Tie Rod)

The caster (forward slant of the king pin) and the camber (tilt of the wheels out at the top) require no adjustment. Automotive steering principles have been used to determine the caster and camber on the tractor. The front wheels should toe-in between 1/16 - 5/16 inch.

https://truckmanualshub.com/

To adjust the toe-in, follow these steps.

- Remove the hex nut and lock washer, and drop the end of the tie rod from the axle bracket. See Figure 18.
- Loosen the hex jam nut on tie rod.
- Adjust the tie rod assembly for correct toe-in.

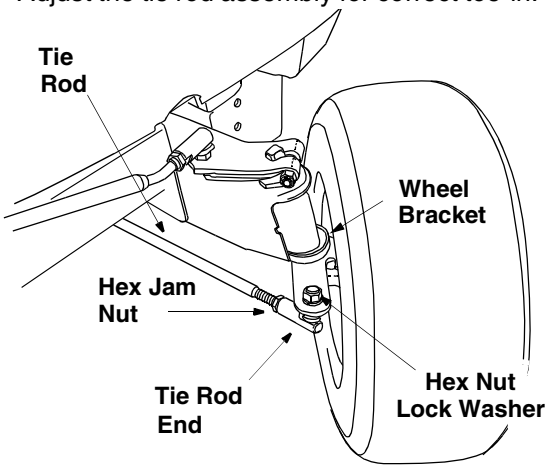

Figure 18

Dimension ‘‘B’’ should be approximately 1/16 - 5/16" less than Dimension ‘‘A.’’ See Figure 19. To increase Dimension ‘‘B," screw tie rod into tie rod end. To decrease Dimension ‘‘B,’’ unscrew tie rod from tie rod end. Reassemble tie rod. Check dimensions. Readjust if necessary.

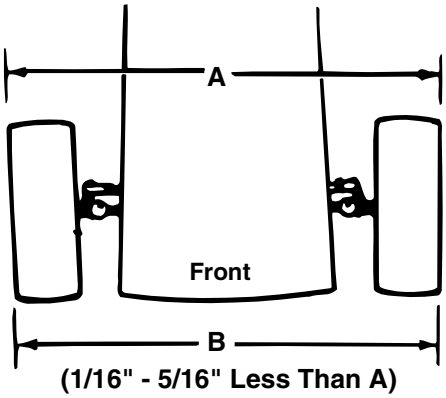

(1/16" - 5/16" Less Than A)

Figure 19

Carburetor Adjustments

WARNING: If any adjustments are made to the engine while the engine is running (e.g. carburetor), disengage all clutches and blades. Keep clear of all moving parts. Be careful of heated surfaces and muffler.

Minor carburetor adjustments may be required to compensate for differences in fuel, temperature, altitude and load. Refer to separate engine manual for carburetor adjustment information.

NOTE: *A dirty air cleaner will cause an engine to run rough. Be certain air cleaner is clean and attached to the carburetor before adjusting carburetor.*

SECTION 7: SERVICE

WARNING: Always stop engine and disconnect spark plug wire before cleaning, lubricating or doing any kind of work on lawn tractor.

Steering Gears

Lubricate teeth of steering gears with automotive multi-purpose grease after every 25 hours of operation or once a season. See Figure 20.

Steering Shaft

Lubricate steering shaft at least once a season with light oil.

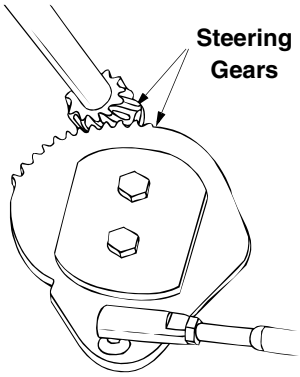

Figure 20

https://truckmanualshub.com/

Linkage

Once a season lubricate all the pivot points on the clutch, brake and lift linkage with SAE 30 engine oil.

Wheels

The front wheels may be provided with optional grease fittings. The rear wheels must be removed from the axle for lubrication. Lubricate at least once a season with automotive multi-purpose grease.

Pivot Points

Lubricate all pivot points with light oil at least once a season.

Ball Joints

The ball joints and drag link ends are permanently lubricated.

SECTION 8: MAINTAINING YOUR LAWN TRACTOR

WARNING: Disconnect the spark plug wire and ground against the engine before performing any adjustments, repairs or maintenance.

Trouble Shooting

Refer to the trouble shooting chart for engine problems.

Engine

Refer to the separate engine manual for engine maintenance instructions.

Service **air cleaner** every 10 hours under normal conditions. Clean every few hours under extremely dusty conditions. To service the air cleaner, refer to the separate engine manual packed with your unit.

The **spark plug(s)** should be cleaned and the gap reset once a season. Spark plug replacement is recommended at the start of each mowing season; check engine manual for correct plug type and gap specifications.

Maintain **engine oil** as instructed in the separate engine manual packed with your unit. Read and follow instructions carefully.

Oil Drain Sleeve (If Equipped)

Your lawn tractor has a plastic oil drain sleeve packed with the loose parts for your convenience in draining oil from the crankcase. To drain the oil, snap small end of oil drain sleeve onto oil sump. See Figure 21. Remove drain plug and drain oil into a suitable container.

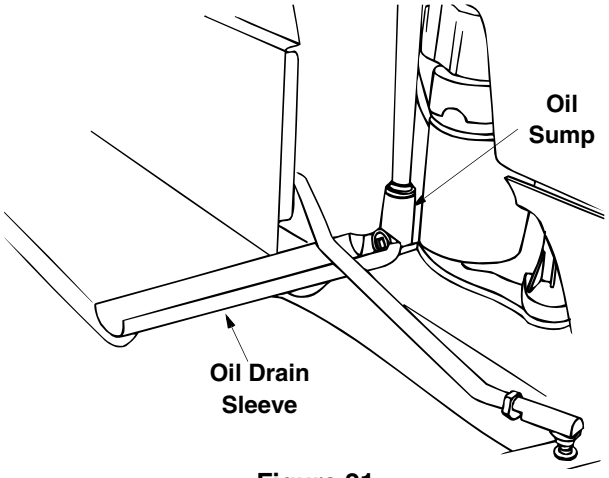

Figure 21

Oil Drain Valve (If Equipped)

Your lawn tractor may have a valve installed on the engine for draining oil from the crankcase. See Figure 22. To drain the oil, insert the 12" hose (shipped loose with your unit) over the end of the valve. Place the other end in a suitable container. Push in black cap, rotate counterclockwise and pull valve open. When oil is completely drained, push top of valve in and rotate clockwise to close.

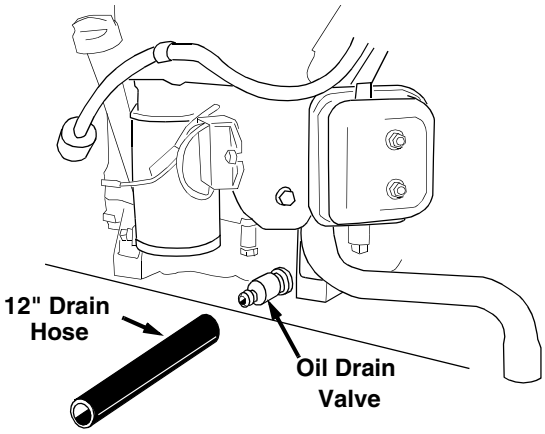

Figure 22

https://truckmanualshub.com/

Fuel Filter

Your unit is equipped with a replaceable in-line fuel filter. Replace filter whenever contamination or discoloration is noticed. Order replacement filter through your authorized engine service dealer.

Cleaning Engine And Deck

Any fuel or oil spilled on the machine should be wiped off promptly. Grass, leaves, and other dirt must not be left to accumulate around the cooling fins of the engine or on any part of the machine.

Clean the underside of the deck after each mowing.

We do not recommend the use of pressure washers or garden hose to clean your unit. They may cause damage to electric components, spindles, pulleys, bearings or the engine. The use of water will result in shortened life and reduce serviceability.

Cutting Blades

REMOVAL FOR REPLACEMENT OR SHARPENING

WARNING: Be sure to disconnect and ground the spark plug wire(s) and remove ignition key before working on the cutting blade to prevent accidental engine starting. Protect hands by using heavy gloves or a rag to grasp the cutting blades.

- Remove the hex flange nut which holds the blade to the blade spindle.
- Remove the blade from the spindle.

Sharpening

Remove the cutting blades by following the directions of the preceding section.

When sharpening the blades, follow the original angle of grind as a guide. It is extremely important that each cutting edge receives an equal amount of grinding to prevent an unbalanced blade. An unbalanced blade will cause excessive vibration when rotating at high speeds, may cause damage to the mower and could break, causing personal injury.

The blade can be tested for balance by balancing it on a round shaft screwdriver. Remove metal from the heavy side until it balances evenly.

Reassembly

When replacing blades, be sure to install the blade with the side of the blade marked ‘‘Bottom’’ (or with part number) facing the ground when the mower is in the operating position. Carefully align “star” on blade with “star” on spindle. Secure with hex flange nut.

Blade Mounting Torque

Hex Flange Nut: 840 in. lb. min., 1080 in. lb. max.

To ensure safe operation of your unit, **all** nuts and bolts must be checked periodically for correct tightness.

Battery Care And Maintenance (Type “A” Battery)

Type “A” batteries are sealed and are maintenance free.

Battery Care And Maintenance (Type “B” Battery)

Check Fluid Level

Check fluid level inside each cell of the battery every two weeks and before and after charging. Always keep level between maximum and minimum fill level.

Add only distilled water. Never add additional acid or any other chemicals to the battery after initial activation.

NOTE: *After operating the lawn tractor for a long period of time, check the fluid level in the battery as it can overheat and lose fluid.*

Charging The Battery (All Batteries)

The engine is equipped with an alternator which charges battery when tractor is operated. Under normal conditions, the battery only needs to be charged before, during and after off-season storage. Follow the instructions under “Off-Season Storage.”

To charge the battery: Battery P/N 725-1705D—Charge at 2-3 amps for one hour. Battery P/N 725-1707D, 725-0453G, and 725-1750—Charge at 6 amps for one hour.

Removing / Installing / Jump Starting

WARNING: When removing or installing the battery, follow these instructions to prevent the screwdriver from shorting against the frame.

Removing the Battery: Disconnect negative cable first, then positive cable.

Installing the Battery: Connect positive cable first, then negative cable.

Jump Starting

- First, connect end of one jumper cable to the positive terminal of the good battery, then the other end to the positive terminal of the dead battery.
- Connect the other jumper cable to the negative terminal of the good battery, then to the FRAME OF THE UNIT WITH THE DEAD BATTERY.

https://truckmanualshub.com/

WARNING: Failure to use this procedure could cause sparking, and the gas in either battery could explode.

Clean The Battery

Clean the battery by removing it from the unit and washing with a baking soda and water solution. If necessary, scrape the battery terminals with a wire brush to remove deposits. Coat terminals and exposed wiring with grease or petroleum jelly to prevent corrosion.

Battery Failures

Some common causes for battery failure are: incorrect initial activation, lack of water, adding chemicals other than water after initial activation, undercharging, overcharging, corroded connections, freezing. **These failures do not constitute warranty.**

Tires

Recommended operating tire pressure is approximately 10 p.s.i. Maximum tire pressure under any circumstances is 30 p.s.i. Equal tire pressure should be maintained on all tires.

When installing a tire to the rim, be certain rim is clean and free of rust. Lubricate both the tire and rim generously. Never inflate to over 30 p.s.i. to seat beads.

WARNING: Excessive pressure (over 30 p.s.i.) when seating beads may cause tire/ rim assembly to burst with force sufficient to cause serious injury.

Belt Removal And Replacement

WARNING: Disconnect the spark plug wire(s) and ground it against the engine. Block the wheels of the unit.

NOTE: *Figures 23, 27 and 28 are shown with the unit tipped up for clarity. It is not necessary to tip the unit to remove the belts.*

However, if tipping the unit is desired, remove the battery from the unit. To prevent gasoline leakage, drain the gasoline, or remove the fuel tank cap, place a thin piece of plastic over the neck of the fuel tank and screw on the cap. Be certain to remove the plastic when finished changing the belts. Block unit securely.

Deck Belt (38" And 42" Decks)

- Place the lift lever in the engaged (all the way forward) position.
- Disconnect the spring which is attached to a bracket on the transaxle, inside the right rear wheel. Use a spring puller or other suitable tool.

NOTE: *When reassembling, make certain belt keeper pins are assembled in the same locations from which they were removed. See Figure 23.*

- Place the lift lever in the BLADES STOP position.
- Remove the belt keeper pins from the lower frame. See Figure 23.
- Unhook the deck belt from the engine pulley.
- Place the lift lever in the engaged (all the way forward) position.
- Disconnect the stabilizer plate from the stabilizer shaft assembly by removing the hairpin clips and flat washers and sliding out the rod. Refer to Figure 14.

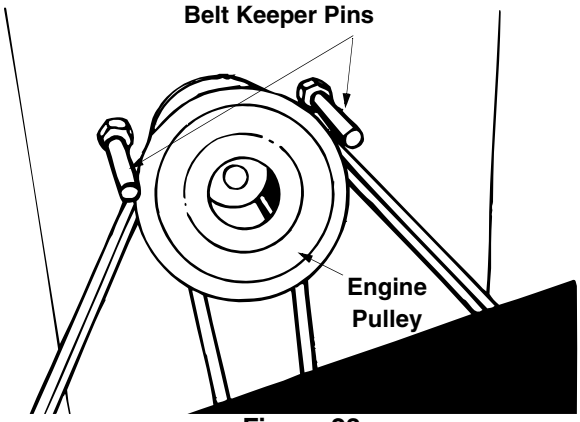

Figure 23

- Disconnect the six deck links by removing the hairpin clips and flat washers.
- Place the lift lever in the BLADES STOP position.
- Slide the deck from beneath the lawn tractor.
- Remove the belt guards at each deck pulley by removing the self-tapping screws. See Figure 24.

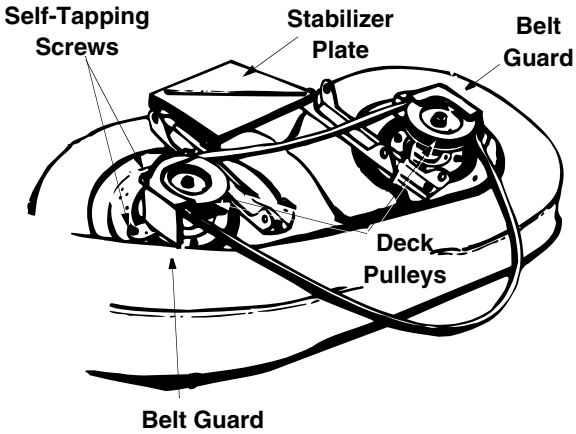

Figure 24

- Remove and replace the belt, reassemble following the instructions in reverse order.

Deck Belts (46" Deck)

- Place the lift lever in the engaged (all the way forward) position.

https://truckmanualshub.com/

- Disconnect the spring which is attached to a bracket on the transaxle, inside the right rear wheel. Use a spring puller or other suitable tool.

NOTE: *When reassembling, make certain belt keeper pins are assembled in the same locations from which they were removed. See Figure 23.*

- Place the lift lever in the BLADES STOP position.
- Remove the belt keeper pins from the lower frame. See Figure 23.
- Unhook the deck belt from the engine pulley.
- Place the lift lever in the engaged (all the way forward) position.
- Disconnect the stabilizer plate from the stabilizer shaft assembly by removing the hairpin clips and flat washers and sliding out the rod. Refer to Figure 14.
- Disconnect the six deck links by removing the hairpin clips and flat washers.
- Place the lift lever in the BLADES STOP position.
- Slide the deck from beneath the lawn tractor.
- Remove the top deck drive belt by lifting up on the stabilizer plate, and slipping belt off the pulley.
- Remove the belt cover at the two outside deck pulleys, by removing the self-tapping screws.
- Release the tension on the spring loaded idler by pushing the idler toward the rear of the deck.
- Remove the belt from around the idler pulleys, and remove from the three deck pulleys.
- Reassemble new belts, following instructions in reverse order.

Rear Drive Belt

- Place shift lever in neutral position. Unscrew the shift knob and the speed control knob (if located on the console). Remove the two truss head screws which secure the transmission cover. See Figure 25.
- Lift the transmission cover. Unplug the safety wire from beneath the transmission cover. See Figure 25. Remove transmission cover.

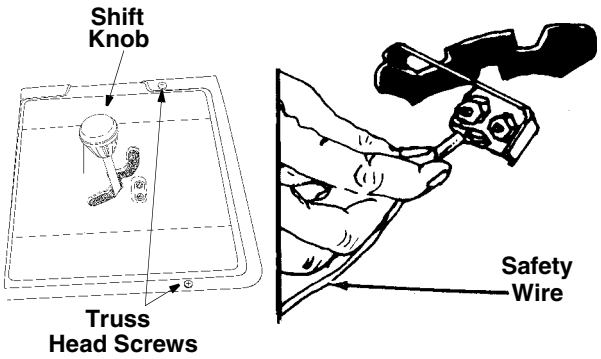

Figure 25

- Push the idler pulley toward the right side of the unit. Lift the belt over the idler pulley. See Figure 26.
- Remove the belt from the variable speed pulley.
- Remove the two bolts which hold the shift lever bracket to the frame on the left side of the unit. Swing the bracket toward the right so the belt can be removed from the transmission pulley. See Figure 26.
- Replace belt, and reassemble in reverse order.
- Adjust the speed control as instructed in adjustment section.

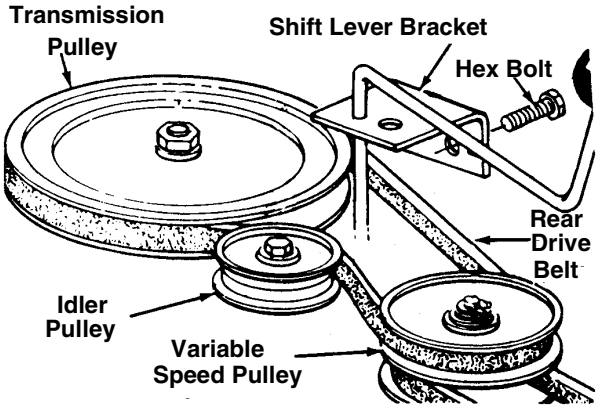

Figure 26

Front Drive Belt

- To remove the front drive belt, first remove the rear drive belt from the idler pulley and variable speed pulley.
- Place the lift lever in the BLADES STOP position.
- Remove the belt keeper pins from the engine pulley belt guard. Refer to Figure 23.

NOTE: *Make certain belt keeper pins are reassembled as shown in Figure 23.*

- Unhook the deck belt from the engine pulley.
- Remove the center bolt, lock washer and flat washer, and let the engine pulley drop down so the belt is past the belt guards.

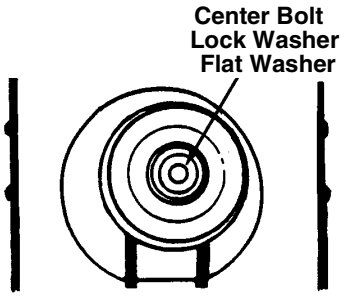

Figure 27

https://truckmanualshub.com/

- Place the clutch-brake pedal in park position.
- Push forward on the variable speed pulley, lift the belt off the engine pulley, and remove the belt from the pulley.
- Release the clutch-brake pedal. Using the pedal to move the variable speed pulley as necessary, lift the belt up and off the variable speed pulley.

NOTE: *When reassembling, make certain belt is inside the belt keeper pins. See Figure 23.*

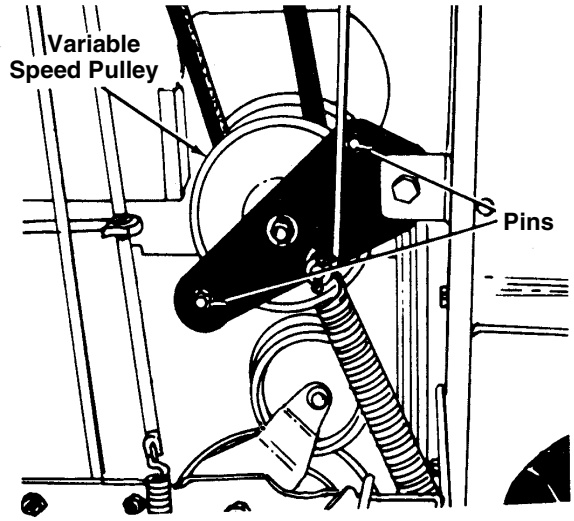

Figure 28

SECTION 9: OFF-SEASON STORAGE

If the machine is to be inoperative for a period longer than 30 days, prepare for storage as follows.

- Clean the engine and the entire unit thoroughly.
- We do not recommend the use of pressure washers or garden hose to clean your unit. They may cause damage to electric components, spindles, pulleys, bearings or the engine. The use of water will result in shortened life and reduce serviceability.
- Lubricate all lubrication points. Wipe the entire machine with an oiled rag to protect the surfaces.
- Refer to the engine manual for correct engine storage instructions. The engine must be completely drained of fuel to prevent gum deposits from forming on essential carburetor parts, fuel lines and fuel tanks.

Charge battery fully. The battery loses some of its charge each day when the unit is not used.
NEVER store battery without a full charge. Recharge battery before returning to service or every two months, whichever occurs first.

- When storing unit for extended periods, disconnect battery cables. Removing battery from unit is recommended.
- Store unit in a clean, dry area. Do not store next to corrosive materials, such as fertilizer.

NOTE: *When storing any type of power equipment in an unventilated or metal storage shed, care should be taken to rustproof the equipment. Using a light oil or silicone, coat the equipment, especially any chains, springs, bearings and cables.*

https://truckmanualshub.com/

SECTION 10: TROUBLE SHOOTING GUIDE

Trouble	Possible Cause(s)	Corrective Action
Engine will not crank	Safety switch button not depressed.	There are two switches in the starting circuit of your unit: the clutch pedal switch and the deck lift lever switch. Make certain the actuator is fully depressing the buttons on each switch.
	Battery installed incorrectly.	The battery must be installed with negative terminal attached to black ground wire. Negative terminal is identified at the post by “NEG”, “N” or “-”. The positive terminal, identified by “POS”, “P” or “+”, must be attached to the big red wire which goes to the solenoid. All batteries are to be fully charged before installing. Refer to “Quick Start” battery guide that came with the operator’s manual.
	Battery is dead or weak.	Check fluid level in battery. If fluid is low, fill to just below split rings with water. Charge with 6 AMP charger until fully charged.
	Blown fuse or circuit breaker.	Refer to operator’s manual for fuse box location. Replace fuse with automotive type fuse. Fuses seldom fail without a reason. The problem must be corrected. Check for loose connections in the fuse holder. Replace fuse holder if necessary. A dead short may be in the cranking or charging circuit where the insulation may have rubbed through and exposed the bare wire. Replace the wire or repair with electrician's tape if the wire strands have not been damaged. Note: Look for a wire pinched between body panels, burned by the exhaust pipe or muffler or rubbed against a moving part.
	Engine ground wire loose.	Engine should have a black ground wire running from engine to frame or mounting bolt.
Engine cranks but will not start	Throttle or choke not in starting position.	Check operator's manual for correct position for throttle control and choke for starting.
	No fuel to the carburetor.	Gasoline tank empty. Fill. Fuel line or in-line fuel filter plugged. Remove and clean fuel line. Replace filter if necessary.
	No spark to spark plug.	Spark plug lead disconnected. Connect lead. Hold spark plug lead away from engine block about 1/8". Crank engine. There should be a spark. If not, have engine repaired at authorized engine service dealer. Faulty spark plug. To test, remove spark plug. Attach spark plug lead to spark plug. Ground the spark plug body against the engine block. Crank the engine. The spark plug should fire at the electrode. Replace if it does not.
	Dirty air cleaner.	If the air cleaner is dirty, the engine may not start. Refer to the engine manual packed with your unit.
Engine smokes	Engine oil has been overfilled.	Check oil level.
	Engine loses crankcase vacuum.	Dipstick not seated or broken. Replace defective part. Engine breather defective. Replace.
Excessive vibration	Bent or damaged blade.	Stop engine immediately. Check all pulleys, blade adapters, keys and bolts for tightness and spindle damage. Tighten or replace any damaged parts.
	Bent blade.	Stop engine immediately. Replace damaged blade. Only use original equipment blades.
Mower will not discharge grass or leaves uncut strips	Engine speed low.	Throttle must be set at full throttle.
	Speed selection.	Use lower ground speed. The slower your ground speed, the better the quality of cut.
	Cutting height set too low.	Raise deck.
	Blades short or dull.	Sharpen or replace blades (uncut strip problem only).

NOTE: *For repairs beyond the minor adjustments above, contact your local authorized service dealer.*

https://truckmanualshub.com/

SECTION 11: OPTIONAL EQUIPMENT

At the time of manufacture of lawn tractor, the following optional equipment is available.

NOTE: *These lawn tractors are not designed for ground-engaging equipment (tillers, plows, etc.).*

NOTE: **Available through your local dealer or from Agri-Fab Inc., 303 W. Raymond Street, Sullivan, Illinois 61951.*

Description	Model No.
40" Two Stage Snow Thrower	OEM-190-621
42" Dozer Blade	190-620-000
Mulching Kit	190-112-000
Twin Bag Grass Collector	OEM-190-063
Front Counterweight	190-745-000
Tire Chains—20 x 8	190-658-000
31 Lb. Wheel Weights	190-215-000
Gang Reel (Set of three)	45-0195*
38" Lawn Sweeper	45-0222*
Heavy Duty Dump Cart	45-0171*
Tine De-Thatcher	45-0186*

https://truckmanualshub.com/

https://truckmanualshub.com/

https://truckmanualshub.com/

MANUFACTURER'S LIMITED WARRANTY FOR:

YARD MACHINES by MTD®

The limited warranty set forth below is given by MTD PRODUCTS INC ("MTD") with respect to new merchandise purchased and used in the United States, its possessions and territories.

MTD warrants this product against defects in material and workmanship for a period of two (2) years commencing on the date of original purchase and will, at its option, repair or replace, free of charge, any part found to be defective in material or workmanship. This limited warranty shall only apply if this product has been operated and maintained in accordance with the Operator's Manual furnished with the product, and has not been subject to misuse, abuse, commercial use, neglect, accident, improper maintenance, alteration, vandalism, theft, fire, water or damage because of other peril or natural disaster. Damage resulting from the installation or use of any accessory or attachment not approved by MTD Products Inc. for use with the product(s) covered by this manual will void your warranty as to any resulting damages.

Normal wear parts or components thereof are subject to separate terms as follows: All normal wear part or component failures will be covered on the product for a period of 90 days regardless of cause. After 90 days, but within the two year period, normal wear part failures will be covered ONLY IF caused by defects in material or workmanship of OTHER component parts. Normal wear parts and components include, but are not limited to, belts, blades, blade adapters, grass bags, rider deck wheels, seats, snow thrower skid shoes, shave plates and tires. Batteries are covered by a 90-day limited replacement warranty.

HOW TO OBTAIN SERVICE: Warranty service is available, WITH PROOF OF PURCHASE THROUGH YOUR LOCAL AUTHORIZED SERVICE DEALER. To locate the dealer in your area, please check for a listing in the Yellow Pages or contact the Customer Service Department of MTD PRODUCTS INC by calling 1-800-800-7310 or writing to P.O. Box 368022, Cleveland, Ohio 44136-9722.

This limited warranty does not provide coverage in the following cases:

a. The engine or component parts thereof. These items carry a separate manufacturer's warranty. Please refer to the applicable manufacturer's warranty on these items.
b. Log splitter pumps, valves and cylinders have a separate one year warranty.
c. Routine maintenance items such as lubricants, filters, blade sharpening and tune-ups, or adjustments such as brake adjustments, clutch adjustments or deck adjustments; and normal deterioration of the exterior finish due to use or exposure.
d. MTD does not extend any warranty for products sold or exported outside of the United States of America, its possessions and territories, except those sold through MTD's authorized channels of export distribution.

No implied warranty, including any implied warranty of merchantability or fitness for a particular purpose, applies after the applicable period of express written warranty above as to the parts as identified. No other express warranty or guaranty, whether written or oral, except as mentioned above, given by any person or entity, including a dealer or retailer, with respect to any product shall bind MTD. During the period of the Warranty, the exclusive remedy is repair or replacement of the product as set forth above. (Some states do not allow limitations on how long an implied warranty lasts, so the above limitation may not apply to you.)

The provisions as set forth in this Warranty provide the sole and exclusive remedy arising from the sales. MTD shall not be liable for incidental or consequential loss or damages including, without limitation, expenses incurred for substitute or replacement lawn care services, for transportation or for related expenses, or for rental expenses to temporarily replace a warranted product. (Some states do not allow the exclusion or limitation of incidental or consequential damages, so the above exclusion or limitation may not apply to you.)

In no event shall recovery of any kind be greater than the amount of the purchase price of the product sold. Alteration of the safety features of the product shall void this Warranty. You assume the risk and liability for loss, damage, or injury to you and your property and/or to others and their property arising out of the use or misuse or inability to use the product.

This limited warranty shall not extend to anyone other than the original purchaser, original lessee or the person for whom it was purchased as a gift.

How State Law Relates to this Warranty: This limited warranty gives you specific legal rights, and you may also have other rights which vary from state to state.