https://truckmanualshub.com/

MANITOU BF
BP 10249
44158 ANCENIS CEDEX - FRANCE
TEL: + 33 (0)2 40 09 10 11

YOUR DEALER

647082 EN (19/05/2011)

MLT 634 Turbo LSU Série F-E3
MLT 634 -120 LSU Série F-E3
MLT 634 -120 LSU POWERSHIFT Série F-E3
MLT 731 Turbo Série F-E3
MLT 735 Turbo LSU Série 6-E3
MLT 735 -120 LSU Série 6-E3
MLT 735 -120 LSU POWERSHIFT Série 6-E3
MLT 741 Turbo LSU Série 6-E3
MLT 741 -120 LSU Série 6-E3
MLT 741 -120 LSU POWERSHIFT Série 6-E3
MLT 1035 L Turbo LSU Série 6-E3

OPERATOR'S MANUAL

(ORIGINAL INSTRUCTIONS)

THIS OPERATOR'S MANUAL MUST BE KEPT IN THE LIFT TRUCK AND MUST BE READ AND UNDERSTOOD BY OPERATORS.

https://truckmanualshub.com/

https://truckmanualshub.com/

1 - OPERATING AND SAFETY INSTRUCTIONS

2 - DESCRIPTION

3 - MAINTENANCE

4 - ADAPTABLE ATTACHMENTS IN OPTION ON THE RANGE

5 - SPECIFIC AUSTRALIA

See also the operator's manual supplement: 647065 AU

27/08/2010	1ST DATE OF ISSUE
18/10/2010	UP DATING (2-54, 2-55, 3-17)
19/05/2011	UP DATING 2-3 – 2-41; 2-58; 2-59; 2-84; 2-87; 2-88 3-12; 3-13; 3-20 – 3-25; 3-46 4-5

THE TEXTS AND ILLUSTRATIONS IN THIS DOCUMENT MUST NOT BE REPRODUCED EITHER WHOLLY OR IN PART.

https://truckmanualshub.com/

https://truckmanualshub.com/

1 - OPERATING AND SAFETY INSTRUCTIONS

https://truckmanualshub.com/

https://truckmanualshub.com/

TABLE OF CONTENTS

INSTRUCTIONS TO THE COMPANY MANAGER 1 - 4

THE SITE **1 - 4**
THE OPERATOR **1 - 4**
THE LIFT TRUCK **1 - 4**
A - THE LIFT TRUCK'S SUITABILITY FOR THE JOB 1 - 4
B - ADAPTATION OF THE LIFT TRUCK TO STANDARD ENVIRONMENTAL CONDITIONS 1 - 4
C - MODIFICATION OF THE LIFT TRUCK 1 - 5
D - FRENCH ROAD TRAFFIC RULES (or see current legislation in other countries) 1 - 5
THE INSTRUCTIONS **1 - 5**
THE MAINTENANCE **1 - 5**

INSTRUCTIONS FOR THE OPERATOR 1 - 6

PREAMBULE **1 - 6**
GENERAL INSTRUCTIONS **1 - 6**
A - OPERATOR'S MANUAL 1 - 6
B - AUTHORIZATION FOR USE IN FRANCE (or see current legislation in other countries) 1 - 6
C - MAINTENANCE 1 - 6
D - MODIFICATION OF THE LIFT TRUCK 1 - 6
E - LIFTING PEOPLE 1 - 7
OPERATING INSTRUCTIONS UNLADEN AND LADEN **1 - 8**
A - BEFORE STARTING THE LIFT TRUCK 1 - 8
B - DRIVER'S OPERATING INSTRUCTIONS 1 - 8
C - ENVIRONMENT 1 - 9
D - VISIBILITY 1 - 9
E - STARTING THE LIFT TRUCK 1 - 10
F - DRIVING THE LIFT TRUCK 1 - 10
G - STOPPING THE LIFT TRUCK 1 - 11
H - DRIVING THE LIFT TRUCK ON THE PUBLIC HIGHWAY (or see current legislation in other countries) 1 - 12
INSTRUCTIONS FOR HANDLING A LOAD **1 - 14**
A - CHOICE OF ATTACHMENTS 1 - 14
B - MASS OF LOAD AND CENTRE OF GRAVITY 1 - 14
C - LONGITUDINAL STABILITY LIMITER AND WARNING DEVICE 1 - 14
D - TRANSVERSE ATTITUDE OF THE LIFT TRUCK 1 - 15
E - TAKING UP A LOAD ON THE GROUND 1 - 15
F - TAKING UP AND LAYING A HIGH LOAD ON TYRES 1 - 16
G - TAKING UP AND LAYING A HIGH LOAD ON STABILIZERS 1 - 18
H - TAKING UP AND LAYING DOWN A SUSPENDED LOAD 1 - 20
I - TRAVELLING WITH A SUSPENDED LOAD 1 - 20
PLATFORM OPERATING INSTRUCTIONS **1 - 21**
A - AUTHORISATION FOR USE 1 - 21
B - SUITABILITY OF THE PLATFORM FOR THE JOB 1 - 21
C - PRECAUTIONS WHEN USING THE PLATFORM 1 - 21
D - USING THE PLATFORM 1 - 21
E - ENVIRONMENT 1 - 21
F - MAINTENANCE 1 - 22
INSTRUCTIONS FOR USING THE RADIO-CONTROL **1 - 23**

MAINTENANCE INSTRUCTIONS OF THE LIFT TRUCK 1 - 24

GENERAL INSTRUCTIONS **1 - 24**
MAINTENANCE **1 - 24**
LUBRICANT AND FUEL LEVELS **1 - 24**
HYDRAULIC **1 - 24**
ELECTRICITY **1 - 24**
WELDING **1 - 25**
WASHING THE LIFT TRUCK **1 - 25**

IF THE LIFT TRUCK IS NOT TO BE USED FOR A LONG TIME 1 - 26

INTRODUCTION **1 - 26**
PREPARING THE LIFT TRUCK **1 - 26**
PROTECTING THE I.C. ENGINE **1 - 26**
PROTECTING THE LIFT TRUCK **1 - 26**
BRINGING THE LIFT TRUCK BACK INTO SERVICE **1 - 27**

https://truckmanualshub.com/

INSTRUCTIONS TO THE COMPANY MANAGER

THE SITE

- Proper management of lift truck's area of travel will reduce the risk of accidents:
  . ground not unnecessarily uneven or obstructed,
  . no excessive slopes,
  . pedestrian traffic controlled, etc.

THE OPERATOR

- Only qualified, authorized personnel can use the lift truck. This authorization is given in writing by the appropriate person in the establishment with respect to the use of lift trucks and must be carried permanently by the operator.

On the basis of experience, there are a number of possible situations in which operating the lift truck is contra-indicated. Such foreseeable abnormal uses, the main ones being listed below, are strictly forbidden.

- The foreseeable abnormal behaviour resulting from ordinary neglect, but does not result from any wish to put the machinery to any improper use.
- The reflex reactions of a person in the event of a malfunction, incident, fault, etc. during operation of the lift truck.
- Behaviour resulting from application of the «principle of least action» when performing a task.
- For certain machines, the foreseeable behaviour of such persons as: apprentices, teenagers, handicapped persons, trainees tempted to drive a lift truck, operator tempted to operate a truck to win a bet, in competition or for their own personal experience.

The person in charge of the equipment must take these criteria into account when assessing whether or not a person will makea suitable driver.

THE LIFT TRUCK

A - THE TRUCK'S SUITABILITY FOR THE JOB

- MANITOU has ensured that this lift truck is suitable for use under the standard operating conditions defined in this operator's manual, with a **STATIC** test coefficient **OF 1.33** and a **DYNAMIC** test coefficient **OF 1**, as specified in harmonized norm **EN 1459** for variable range trucks.
- Before commissioning, the company manager must make sure that the lift truck is appropriate for the work to be done, and perform certain tests (in accordance with current legislation).

B - ADAPTATION OF THE LIFT TRUCK TO STANDARD ENVIRONMENTAL CONDITIONS

- In addition to series equipment mounted on your lift truck, many options are available, such as: road lighting, stop lights, flashing light, reverse lights, reverse buzzer alarm, front light, rear light, light at the jib head, etc… (as model of lift truck).
- The operator must take into account the operating conditions to define the lift truck's signalling and lighting equipment. Contact your dealer.
- Take into account climatic and atmospheric conditions of the site of utilisation.
  . Protection against frost (see: 3 - MAINTENANCE: LUBRICANTS AND FUEL).
  . Adaptation of lubricants (ask your dealer for information).
  . I.C. engine filtration (see: 3 - MAINTENANCE: FILTERS CARTRIDGES AND BELTS).

For operation under average climatic conditions, i.e.: between - 15 °C and + 35 °C, correct levels of lubricants in all the circuits are checked in production. For operation under more severe climatic conditions, before starting up, it is necessary to drain all the circuits, then ensure correct levels of lubricants using lubricants properly suited to the relevant ambient temperatures. It is the same for the cooling liquid.

- A lift truck operating in an area without fire extinguishing equipment must be equipped with an individual extinguisher. There are solutions, consult your dealer.

Your lift truck is designed for outdoor use under normal atmospheric conditions and indoor use in suitably aerated and ventilated premises. It is prohibited to use the lift truck in areas where there is a risk of fire or which are potentially explosive (e.g. Refineries, fuel or gas depots, stores of inflammable products…). For use in these areas, specific equipment is available (ask your dealer for information).

- Our trucks comply with Directive 2004/108/EC concerning electromagnetic compatibility (EMC), and with the corresponding harmonized norm EN 12895. Their proper operation is no longer guaranteed if they are used within areas in which the electromagnetic fields exceed the limit specified by that norm (10 V/m).
- Directive 2002/44/EC requires company managers to not expose their employees to excessive vibration doses. There is no recognized code of measurement for comparing the machines of different manufacturers. The actual doses received can therefore be measured only under actual operating conditions at the user's premises.
- The following are some tips for minimizing these vibration doses:
  - Select the most suitable lift truck and attachment for the intended use.
  - Adapt the seat adjustment to the operator's weight (according to lift truck model) and maintain it in good condition, as well as the cab suspension. Inflate the tires in accordance with recommendations.
  - Ensure that the operators adapt their operating speed to suit the conditions on site.
  - As far as possible, arrange the site in such a way as to provide a flat running surface and remove obstacles and harmful potholes.

https://truckmanualshub.com/

C - MODIFICATION OF THE LIFT TRUCK

- For your safety and that of others, you must not change the structure and settings of the various components used in your lift truck (hydraulic pressure, calibrating limiters, I.C. engine speed, addition of extra equipment, addition of counterweight, unapproved attachments, alarm systems, etc.) yourself. In this event, the manufacturer cannot be held responsible.

D - FRENCH ROAD TRAFFIC RULES

(or see current legislation in other countries)

- Only one certificate of conformity is issued. It must be kept in a safe place.

THE INSTRUCTIONS

- The operator's manual must always be in good condition and kept in the place provided on the lift truck and in the language used by the operator.
- The operator's manual and any plates or stickers which are no longer legible or are damaged, must be replaced immediately.

THE MAINTENANCE

- Maintenance or repairs other than those detailed in part: 3 - MAINTENANCE must be carried out by qualified personnel (consult your dealer) and under the necessary safety conditions to maintain the health of the operator and any third party.

Your lift truck must be inspected periodically to ensure that it remains in compliance. The frequency of this inspection is defined by current legislation in the country in which the lift truck is used.

https://truckmanualshub.com/

INSTRUCTIONS FOR THE OPERATOR

PREAMBLE

WHENEVER YOU SEE THIS SYMBOL IT MEANS:

WARNING ! BE CAREFUL ! YOUR SAFETY OR THE SAFETY OF THE LIFT TRUCK IS AT RISK.

The risk of accident while using, servicing or repairing your lift truck can be restricted if you follow the safety instructions and safety measures detailed in these instruction.

- Only the operations and manœuvres described in these operator's manual must be performed. The manufacturer cannot predict all possible risky situations. Consequently, the safety instructions given in the operator's manual and on the lift truck itself are not exhaustive.
- At any time, as an operator, you must envisage, within reason, the possible risk to yourself, to others or to the lift truck itself when you use it.

Failure to respect the safety and operating instructions, or the instructions for repairing or servicing your lift truck may lead to serious, even fatal accident.

GENERAL INSTRUCTIONS

A - OPERATOR'S MANUAL

- Read the operator's manual carefully.
- The operator's manual must always be in good condition and in the place provided for it on the lift truck.
- You must report any plates and stickers which are no longer legible or which are damaged.

B - AUTHORISATION FOR USE IN FRANCE

(or see current legislation in other countries)

- Only qualified, authorized personnel can use the lift truck. This authorization is given in writing by the appropriate person in the establishment with respect to the use of lift trucks and must be carried permanently by the operator.
- The operator is not competent to authorise the driving of the lift truck by another person.

C - MAINTENANCE

- The operator must immediately advise his superior if his lift truck is not in good working order or does not comply with the safety notice.
- The operator is prohibited from carrying out any repairs or adjustments himself, unless he has been trained for this purpose. He must keep the lift truck properly cleaned if this is among his responsibilities.
- The operator must carry out daily maintenance (see: 3 - MAINTENANCE: A - DAILY OR EVERY 10 HOURS SERVICE).
- The operator must ensure tyres are adapted to the nature of the ground (see area of the contact surface of the tyres in the chapter: 2 - DESCRIPTION: FRONT AND REAR TYRES). There are optional solutions, consult your dealer.
  - . SAND tyres.
  - . LAND tyres.
  - . Snow chains.

Do not use the lift truck if the tyres are incorrectly inflated, damaged or excessively worn, because this could put your own safety or that of others at risk, or cause damage to the lift truck itself. The fitting of foam inflated tyres is prohibited and is not guaranteed by the manufacturer, excepting prior authorisation.

D - MODIFICATION OF THE LIFT TRUCK

- For your safety and that of others, you must not change the structure and settings of the various components used in your lift truck (hydraulic pressure, calibrating limiters, I.C. engine speed, addition of extra equipment, addition of counterweight, unapproved attachments, alarm systems, etc.) yourself. In this event, the manufacturer cannot be held responsible.

https://truckmanualshub.com/

E - LIFTING PEOPLE

- The use of working equipment and load lifting attachments to lift people is:
  - either forbidden
  - or authorized exceptionally and under certain conditions (see current regulations in the country in which the lift truck is used).
- The pictogram posted at the operator station reminds you that:
  - Left-hand column
    - It is forbidden to lift people, with any kind of attachment, using a non PLATFORM-fitted lift truck.
  - Right-hand column
    - With a PLATFORM-fitted lift truck, people can only be lifted using platforms designed by MANITOU for the purpose.
- MANITOU sells equipment specifically designed for lifting people (OPTION PLATFORM lift truck, contact your dealer).

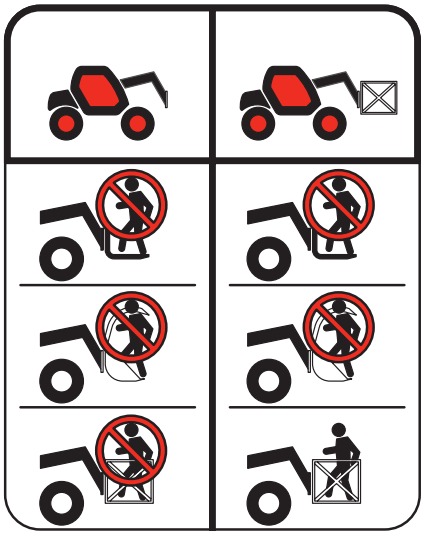

https://truckmanualshub.com/

OPERATING INSTRUCTIONS UNLADEN AND LADEN

A - BEFORE STARTING THE LIFT TRUCK

- Carry out daily maintenance (see: 3 - MAINTENANCE: A - DAILY OR EVERY 10 HOURS SERVICE).
- Make sure the lights, indicators and windscreen wipers are working properly.
- Make sure the rear view mirrors are in good condition, clean and properly adjusted.
- Make sure the horn works.

B - DRIVER'S OPERATING INSTRUCTIONS

- Whatever his experience, the operator is advised to familiarize himself with the position and operation of all the controls and instruments before operating the lift truck.
- Wear clothes suited for driving the lift truck, avoid loose clothes.
- Make sure you have the appropriate protective equipment for the job to be done.
- Prolonged exposure to high noise levels may cause hearing problems. It is recommended to wear ear muffs to protect against excessive noise.
- Always face the lift truck when getting into and leaving the driving seat and use the handle(s) provided for this purpose. Do not jump out of the seat to get down.
- Always pay attention when using the lift truck. Do not listen to the radio or music using headphones or earphones.
- Never operate the lift truck when hands or feet are wet or soiled with greasy substances.
- For increased comfort, adjust the seat to your requirements and adopt the correct position in the driver's cab.

Under no circumstances must the seat be adjusted while the lift truck is moving.

- The operator must always be in his normal position in the driver's cab. It is prohibited to have arms or legs, or generally any part of the body, protruding from the driver's cab of the lift truck.
- The safety belt must be worn and adjusted to the operator's size.
- The control units must never in any event be used for any other than their intended purposes (e.g. climbing onto or down from the lift truck, portmanteau, etc.).
- If the control components are fitted with a forced operation (lever lock) device, it is forbidden to leave the cab without first putting these controls in neutral.
- It is prohibited to carry passengers either on the lift truck or in the cab.

https://truckmanualshub.com/

C - ENVIRONMENT

- Comply with site safety regulations.
- If you have to use the lift truck in a dark area or at night, make sure it is equipped with working lights.
- During handling operations, make sure that no one is in the way of the lift truck and its load.
- Do not allow anybody to come near the working area of the lift truck or pass beneath an elevated load.
- When using the lift truck on a transverse slope, before lifting the jib, follow the instructions given in the paragraph: INSTRUCTIONS FOR HANDLING A LOAD: D - TRANSVERSE ATTITUDE OF THE LIFT TRUCK.
- Travelling on a longitudinal slope:
  - Drive and brake gently.
  - Moving without load: Forks or attachment facing downhill. 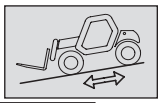
  - Moving with load: Forks or attachment facing uphill. 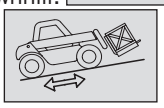
- Take into account the lift truck's dimensions and its load before trying to negotiate a narrow or low passageway.
- Never move onto a loading platform without having first checked:
  - That it is suitably positioned and made fast.
  - That the unit to which it is connected (wagon, lorry, etc.) will not shift.
  - That this platform is prescribed for the total weight of the lift truck to be loaded.
  - That this platform is prescribed for the size of the lift truck.
- Never move onto a foot bridge, floor or freight lift, without being certain that they are prescribed for the weight and size of the lift truck to be loaded and without having checked that they are in sound working order.
- Be careful in the area of loading bays, trenches, scaffolding, soft land and manholes.
- Make sure the ground is stable and firm under the wheels and/or stabilizers before lifting or removing the load. If necessary, add sufficient wedging under the stabilizers.
- Make sure that the scaffolding, loading platform, pilings or ground is capable of bearing the load.
- Never stack loads on uneven ground, they may tip over.

If the load or the attachment must remain above a structure for a long time, there is the risk that it will rest on the structure because of the jib descending owing to the oil in the cylinders cooling down.
To eliminate this risk:
- Regularly check the distance between the load or the attachment and the structure and readjust this if necessary.
- If possible use the lift truck at an oil temperature as close as possible to ambient temperature.

- In the case of work near aerial lines, ensure that the safety distance is sufficient between the working area of the lift truck and the aerial line.

You must consult your local electrical agency. You could be electrocuted or seriously injured if you operate or park the lift truck too close to power cables.

In the event of high winds, do not carry out handling work that jeopardizes the stability of the lift truck and its load, particularly if the load catches the wind badly.

D - VISIBILITY

- The safety of people within the lift truck's working area, as well as that of the lift truck itself and the operator are depend on good operator visibility of the lift truck's immediate vicinity in all situations and at all times.
- This lift truck has been designed to allow good operator visibility (direct or indirect by means of rear-view mirrors) of the immediate vicinity of the lift truck while traveling with no load and with the jib in the transport position.
- Special precautions must be taken if the size of the load restricts visibility towards the front:
  - moving in reverse,
  - site layout,
  - assisted by a person directing the maneuver (while standing outside the truck's area of travel), making sure to keep this person clearly in view at all times.
  - in any case, avoid reversing over long distances.
- Certain special accessories may require the truck to travel with the jib in the raised position. In such cases, visibility on the right hand side is restricted, and special precautions must be taken:
  - site layout,
  - assisted by a person directing the maneuver (while standing outside the truck's area of travel).
- If visibility of your road is inadequate, ask someone to assist by directing the maneuver (while standing outside the truck's area of travel), making sure to keep this person clearly in view at all times.
- Keep all components affecting visibility in a clean, properly adjusted state and in good working order (e.g. windscreens, windows, windscreen wipers, windscreen washers, driving and work lights, rear-view mirrors).

https://truckmanualshub.com/

E - STARTING THE LIFT TRUCK

SAFETY INSTRUCTIONS

The lift truck must only be started up or maneuvered when the operator is sitting in the driver's cab, with his seat belt adjusted and fastened.

- Never try to start the lift truck by pushing or towing it. Such operation may cause severe damage to the transmission. If necessary, to tow the lift truck in an emergency, the transmission must be placed in the neutral position (see: 3 - MAINTENANCE: G - OCCASIONAL MAINTENANCE).
- If using an emergency battery for start-up, use a battery with the same characteristics and respect battery polarity when connecting it. Connect at first the positive terminals before the negative terminals.

Failure to respect polarity between batteries can cause serious damage to the electrical circuit. The electrolyte in the battery may produce an explosive gas. Avoid flames and generation of sparks close to the batteries. Never disconnect a battery while it is charging.

INSTRUCTIONS

- Check the closing and locking of the hood(s).
- Check that the cab door is closed.
- Check that the forward/reverse selector is in neutral.
- Turn the ignition key to the position I to activate the electrical system and the preheat.
- Whenever you switch on the lift truck, perform the automatic check on the longitudinal stability limiter and warning device system (see: 2 - DESCRIPTION: INSTRUMENTS AND CONTROLS). Do not use the lift truck if it does not conform to the regulations.
- Check the fuel level on the indicator.
- Turn the ignition key fully: the I.C. engine should then start. Release the ignition key and let the I.C. engine run at idle.
- Do not engage the starter motor for more than 15 seconds and carry out the preheating between unsuccessful attempts.
- Make sure all the signal lights on the control instrument panel are off.
- Check all control instruments when the I.C. engine is warm and at regular intervals during use, so as to quickly detect any faults and to be able to correct them without any delay.
- If an instrument does not show the correct display, stop the I.C. engine and immediately carry out the necessary operations.

F - DRIVING THE LIFT TRUCK

SAFETY INSTRUCTIONS

Operators' attention is drawn to the risks involved in using the lift truck, in particular:
- Risk of losing control.
- Risk of losing lateral and frontal stability of the lift truck.
The operator must remain in control of the lift truck.
In the event of the lift truck overturning, do not try to leave the cabin during the incident. YOUR BEST PROTECTION IS TO STAY FASTENED IN THE CABIN.

- Observe the company's traffic regulations or, by default, the public highway code.
- Do not carry out operations which exceed the capacities of your lift truck or attachments.
- Always drive the lift truck with the forks or attachment to the transport position, i.e. at 300 mm from the ground, the jib retracted and the carriage sloping backwards.
- Only carry loads which are balanced and properly anchored to avoid any risk of a load falling off.
- Ensure that palettes, cases, etc, are in good order and suitable for the load to be lifted.
- Familiarise yourself with the lift truck on the terrain where it will be used.
- Ensure that the service brakes are working properly.
- The loaded lift truck must not travel at speeds in excess of 12 km/h.
- Drive smoothly at an appropriate speed for the operating conditions (land configuration, load on the lift truck).
- Do not use the hydraulic jib controls when the lift truck is moving.
- Never change the steering mode whilst driving.
- Do not manoeuvre the lift truck with the jib in the raised position unless under exceptional circumstances and then with extreme caution, at very low speed and using gentle braking. Ensure that visibility is adequate.
- Take bends slowly.
- In all circumstances make sure you are in control of your speed.
- On damp, slippery or uneven terrain, drive slowly.
- Brake gently, never abruptly.
- Only use the lift truck's forward/reverse selector from a stationary position and never do so abruptly.
- Do not drive with your foot on the brake pedal.
- Always remember that hydrostatic type steering is extremely sensitive to movement of the steering wheel, so turn it gently and not jerkily.
- Never leave the I.C. engine on when the lift truck is unattended.
- Do not leave the cab when the lift truck has a raised load.
- Look where you are going and always make sure you have good visibility along the route.

https://truckmanualshub.com/

- Use the rear-view mirrors frequently.
- Drive round obstacles.
- Never drive on the edge of a ditch or steep slope.
- It is dangerous to use two lift trucks simultaneously to handle heavy or voluminous loads, since this operation requires particular precautions to be taken. It must only be used exceptionally and after risk analysis.
- The ignition switch has an emergency stop mechanism in case of an operating anomaly occurring in the case of lift trucks not fitted with a punch-operated cut-out.

INSTRUCTIONS
- Always drive the lift truck with the forks or attachment to the transport position, i.e. at 300 mm from the ground, the jib retracted and the carriage sloping backwards.
- For lift trucks with gearboxes, use the recommended gear (see: 2 - DESCRIPTION: INSTRUMENTS AND CONTROLS).
- Select the steering mode appropriate for its use and/or working conditions (see: 2 - DESCRIPTION: INSTRUMENTS AND CONTROLS) (as model of lift truck).
- Release the parking brake.
- Shift the forward/reverse selector to the selected direction of travel and accelerate gradually until the lift truck moves off.

G - STOPPING THE LIFT TRUCK

SAFETY INSTRUCTIONS
- Never leave the ignition key in the lift truck during the operator's absence.
- When the lift truck is stationary, or if the operator has to leave his cab (even for a moment), place the forks or attachment on the ground, apply the parking brake and place the forward/reverse selector in neutral.
- Make sure that the lift truck is not stopped in any position that will interfere with the traffic flow and at less than one meter from the track of a railway.
- In the event of prolonged parking on a site, protect the lift truck from bad weather, particularly from frost (check the level of antifreeze), close and lock all the lift truck accesses (doors, windows, cowls…).

INSTRUCTIONS
- Park the lift truck on flat ground or on an incline lower than 15 %.
- Set the forward/reverse selector to neutral.
- Apply the parking brake.
- For lift trucks with gearboxes, place the gear lever in neutral.
- Retract entirely the jib.
- Lower the forks or attachment to rest on the ground.
- When using an attachment with a grab or jaws, or a bucket with hydraulic opening, close the attachment fully.
- Before stopping the lift truck after a long working period, leave the I.C. engine idling for a few moments, to allow the coolant liquid and oil to lower the temperature of the I.C. engine and transmission. Do not forget this precaution, in the event of frequent stops or warm stalling of the I.C. engine, or else the temperature of certain parts will rise significantly due to the stopping of the cooling system, with the risk of badly damaging such parts.
- Stop the I.C. engine with the ignition switch.
- Remove the ignition key.
- Lock all the accesses to the lift truck (doors, windows, cowls…).

https://truckmanualshub.com/

H - DRIVING THE LIFT TRUCK ON THE PUBLIC HIGHWAY

(or see current legislation in other countries)

SAFETY INSTRUCTIONS
- Operators driving on the public highway must comply with current highway code legislation.
- The lift truck must comply with current road legislation. If necessary, there are optional solutions. Contact your dealer.

INSTRUCTIONS
- Make sure the revolving light is in place, switch it on and verify its operation.
- Make sure the lights, indicators and windscreen wipers are working properly.
- Switch off the working headlights if the lift truck is fitted with them.
- Select the steering mode “HIGHWAY TRAFFIC” (as model of lift truck) (see: 2 - DESCRIPTION: INSTRUMENTS AND CONTROLS).
- Retract entirely the jib and put the attachment at 300 mm from the ground.
- Place the slope correctors in the central position, i.e. the transverse shaft of the axles parallel to the chassis (as model of lift truck).
- Lift up the stabilizers to the maximum and turn the blocks inwards (as model of lift truck).

Never move in neutral (forward/reverse selector or gear lever in neutral or transmission cut-off button pressed) to preserve the lift truck engine brake. Failure to respect this instruction on a slope will lead to excessive speed which may make the lift truck uncontrollable (steering, brakes) and cause serious mechanical damage.

https://truckmanualshub.com/

DRIVING THE LIFT TRUCK WITH A FRONT-MOUNTED ATTACHMENT

- You must comply with current regulations in your country, covering the possibility of driving on the public highway with a front-mounted attachment on your lift truck.
- If road legislation in your country authorizes circulation with a front-mounted attachment, you must at least:
    - Protect and report any sharp and/or dangerous edges on the attachment (see: 4 - ADAPTABLE ATTACHMENTS IN OPTION ON THE RANGE: ATTACHMENT SHIELDS).
    - The attachment must not be loaded.
    - Make sure that the attachment does not mask the lighting range of the forward lights.
    - Make sure that current legislation in your country does not require other obligations.

OPERATING THE LIFT TRUCK WITH A TRAILER

- For using a trailer, observe the regulations in force in your country (maximum travel speed, braking, maximum weight of trailer, etc.).
- Do not forget to connect the trailer's electrical equipment to that of the lift truck.
- The trailer's braking system must comply with current legislation.
- If pulling a trailer with assisted braking, the tractor lift truck must be equipped with a trailer braking mechanism. In this case, do not forget to connect the trailer braking equipment to the lift truck.
- The vertical force on the towing hook must not exceed the maximum authorised by the manufacturer (consult the manufacturer's plate on your lift truck).
- The authorised gross vehicle weight must not exceed the maximum weight authorised by the manufacturer (see: 2 - DESCRIPTION: CHARACTERISTICS).

IF NECESSARY, CONSULT YOUR DEALER.

https://truckmanualshub.com/

INSTRUCTIONS FOR HANDLING A LOAD

A - CHOICE OF ATTACHMENTS

- Only attachments approved by MANITOU can be used on its lift trucks.
- Make sure the attachment is appropriate for the work to be done (see: 4 - ADAPTABLE ATTACHMENTS IN OPTION ON THE RANGE).
- If the lift truck is equipped with the Single side-shift carriage OPTION (TSDL), use only the authorised attachments (see: 4 - ADAPTABLE ATTACHMENTS IN OPTION ON THE RANGE).
- Make sure the attachment is correctly installed and locked onto the lift truck carriage.
- Make sure that your lift truck attachments work properly.
- Comply with the load chart limits for the lift truck for the attachment used.
- Do not exceed the rated capacity of the attachment.
- Never lift a load in a sling without the attachment provided for the purpose, as the sling risks to slip (see: INSTRUCTIONS FOR HANDLING A LOAD: H - TAKING UP AND LAYING DOWN A SUSPENDED LOAD).

B - MASS OF LOAD AND CENTRE OF GRAVITY

- Before taking up a load, you must know its mass and its centre of gravity.
- The load chart for your lift truck is valid for a load in which the longitudinal position of the centre of gravity is 500 mm from the base of the forks (fig. B1). For a higher centre of gravity, contact your dealer.
- For irregular loads, determine the transverse centre of gravity before any movement (fig. B2) and set it in the longitudinal axis of the lift truck.

It is forbidden to move a load heavier than the effective capacity defined on the lift truck load chart.

For loads with a moving centre of gravity (e.g. liquids), take account of the variations in the centre of gravity in order to determine the load to be handled and be vigilant and take extra care to limit these variations as far as possible.

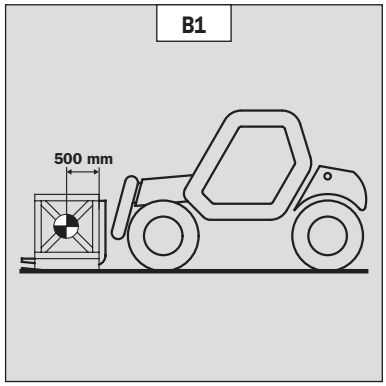

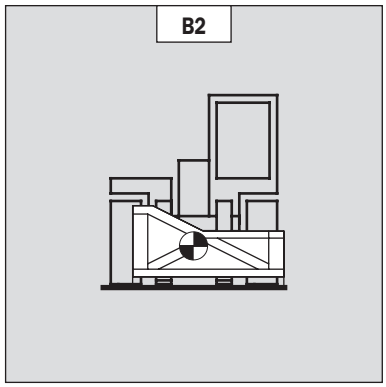

C - LONGITUDINAL STABILITY LIMITER AND WARNING DEVICE

This device gives an indication of the longitudinal stability of the lift truck, and limits hydraulic movements in order to ensure this stability, at least under the following operating conditions:

- when the lift truck is at a standstill,
- when the lift truck is on firm, stable and consolidated ground,
- when the lift truck is performing handling and placing operations.

- Move the jib very carefully when approaching the authorized load limit (see: 2 - DESCRIPTION: INSTRUMENTS AND CONTROLS).
- Always watch this device during handling operations.
- In the event that "AGGRAVATING" hydraulic movements are cut-off, only perform de-aggravating hydraulic movements in the following order (fig. C): if necessary, raise the jib (1), retract the jib as far as possible (2) and lower the jib (3) to set down the load.

The instrument reading may be erroneous when the steering is at its maximum limit or the rear axle oscillated to its limit. Before lifting a load, make sure that the lift truck is not in either of these situations.

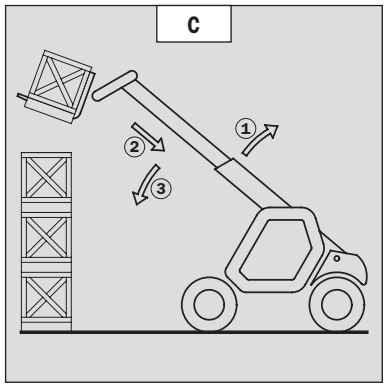

https://truckmanualshub.com/

D - TRANSVERSE ATTITUDE OF THE LIFT TRUCK

Depending on the model of lift truck

The transverse attitude is the transverse slope of the chassis with respect to the horizontal.
Raising the jib reduces the lift truck's lateral stability. The transverse attitude must be set with the jib in down position as follows:

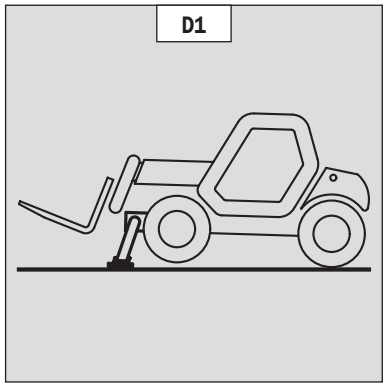

1 - LIFT TRUCK WITHOUT SLOPE CORRECTOR USED ON TYRES
- Position the lift truck so that the bubble in the level is between the two lines (see: 2 - DESCRIPTION: INSTRUMENTS AND CONTROLS).

2 - LIFT TRUCK WITH SLOPE CORRECTOR USED ON TYRES
- Correct the slope using the hydraulic control and verify the horizontality via the level. The bubble in the level must be between the two lines (see: 2 - DESCRIPTION: INSTRUMENTS AND CONTROLS).

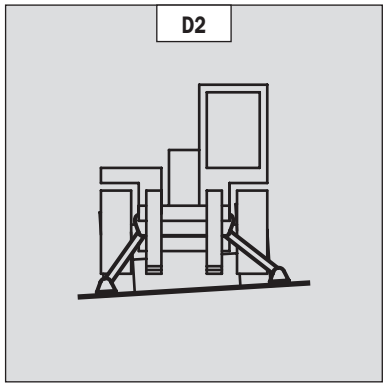

3 - LIFT TRUCK USED ON STABILIZERS
- Set the two stabilizers on the ground and raise the two front wheels of the lift truck (fig. D1).
- Correct the slope using the stabilizers (fig. D2) and make sure the truck is horizontal by checking the level. The bubble of the level must be between the two lines (see: 2 - DESCRIPTION: INSTRUMENTS AND CONTROLS). In this position, the two front wheels must be off the ground.

E - TAKING UP A LOAD ON THE GROUND

- Approach the lift truck perpendicular to the load, with the jib retracted and the forks in a horizontal position (fig. E1).
- Adjust the fork spread and centering in connection with the load (fig. E2) (optional solutions exist, consult your dealer).
- Never lift a load with a single fork.

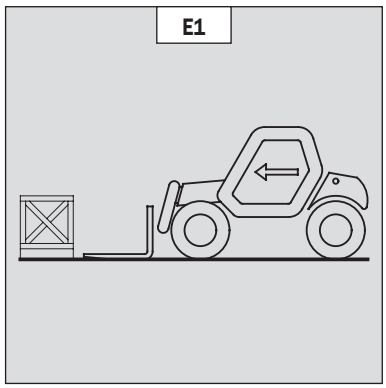

Beware of the risks of trapping or squashing limbs when manually adjusting the forks.

- Move the lift truck forward slowly (1) and bring the forks to stop in front of the load (fig. E3), if necessary, slightly lift the jib (2) while taking up the load.
- Bring the load into the transport position.
- Tilt the load far enough backwards to ensure stability (loss of load on braking or going downhill).

FOR A NON-PALLETIZED LOAD
- Tilt the carriage (1) forwards and move the lift truck slowly forwards (2), to insert the fork under the load (fig. E4) (block the load if necessary).
- Continue to move the lift truck forwards (2) tilting the carriage (3) (fig. E4) backwards to position the load on the forks and check the load's longitudinal and lateral stability.

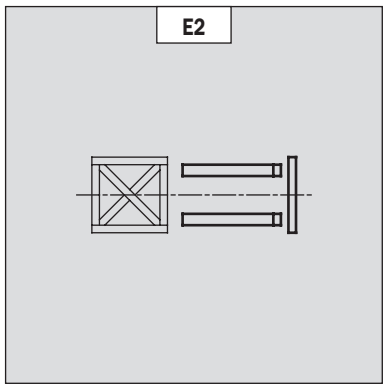

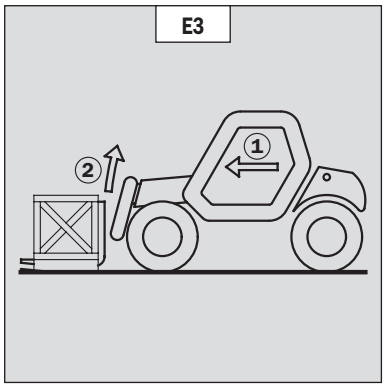

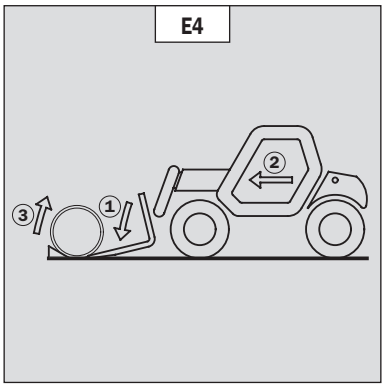

https://truckmanualshub.com/

F - TAKING UP AND LAYING A HIGH LOAD ON TYRES

You must not raise the jib if you have not checked the transverse attitude of the lift truck (see: INSTRUCTIONS FOR HANDLING A LOAD: D - TRANSVERSE ATTITUDE OF THE LIFT TRUCK).

REMINDER: Make sure that the following operations can be performed with good visibility (see: OPERATIONS INSTRUCTIONS UNLADEN AND LADEN: D - VISIBILITY).

TAKING UP A HIGH LOAD ON TYRES

- Ensure that the forks will easily pass under the load.
- Lift and extend the jib (1) (2) until the forks are level with the load, moving the lift truck (3) forward if necessary (fig. F1), moving very slowly and carefully.
- Always think about keeping the distance necessary to fit the forks under the load, between the pile and the lift truck (fig. F1) and use the shortest possible length of jib.
- Stop the forks in front of the load by alternately extending and retracting the jib (1) or, if necessary, moving the lift truck forward (2) (fig. F2). Put the handbrake on and set the forward/reverse selector to neutral.
- Slightly lift the load (1) and incline the carriage (2) backwards to stabilize the load (fig. F3).
- Tilt the load sufficiently backwards to ensure its stability.
- Watch the longitudinal stability limiter and warning device (see: INSTRUCTIONS FOR HANDLING A LOAD: C - LONGITUDINAL STABILITY LIMITER AND WARNING DEVICE). If it is overloaded, replace the load in the place from which it was taken.
- If possible lower the load without shifting the lift truck. Lift the jib (1) to release the load, retract (2) and lower the jib (3) to bring the load into the transport position (fig. F4).
- If this is not possible, back up the lift truck (1), manoeuvring very gently and carefully to release the load. Retract (2) and lower the jib (3) to bring the load into the transport position (fig. F5).

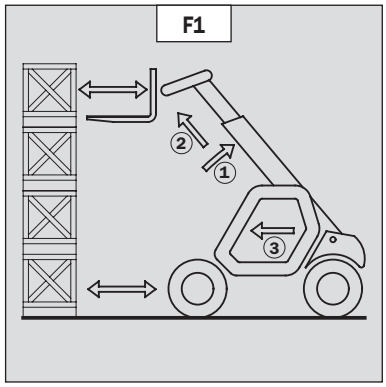

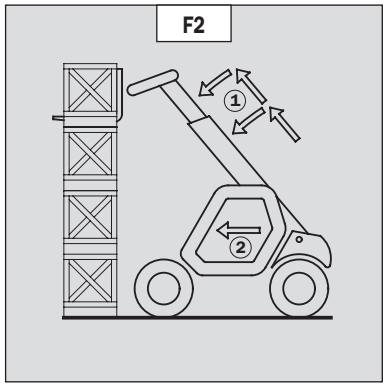

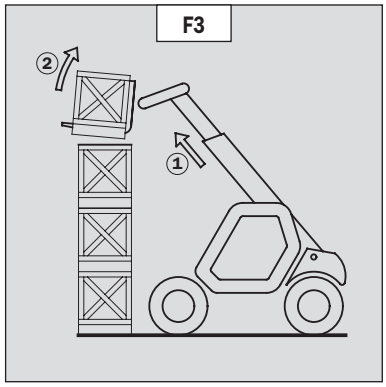

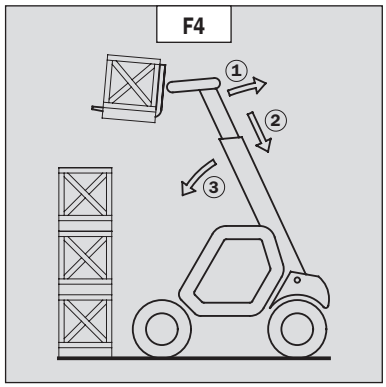

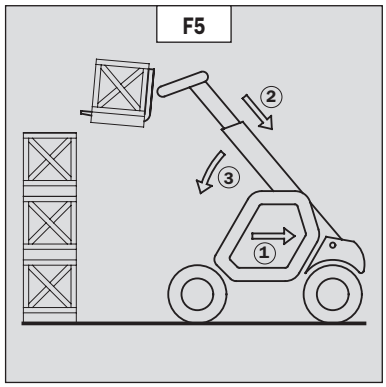

https://truckmanualshub.com/

LAYING A HIGH LOAD ON TYRES

- Approach the load in the transport position in front of the pile (fig. F6).
- Put the handbrake on and set the forward/reverse selector to neutral.
- Lift and extend the jib (1) (2) until the load is above the pile, while keeping an eye on the longitudinal stability limiter and warning device (see: INSTRUCTIONS FOR HANDLING A LOAD: C - LONGITUDINAL STABILITY LIMITER AND WARNING DEVICE). If necessary, move the lift truck (3) forward (fig. F7), driving very slowly and carefully.
- Place the load in a horizontal position and lay it down on the pile by lowering and retracting the jib (1) (2) in order to position the load correctly (fig. F8).
- If possible, release the fork by alternately retracting and raising the jib (1) (fig. F9). Then set the forks into transport position.
- If this is not possible, reverse the lift truck (1) very slowly and carefully to release the forks (fig. F10). Then set them into transport position.

F6

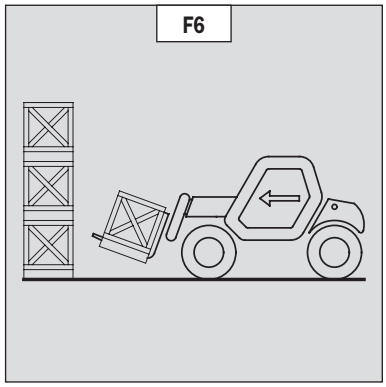

F7

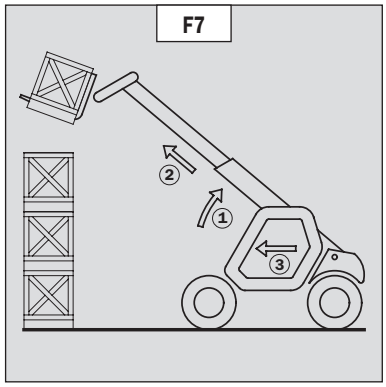

F8

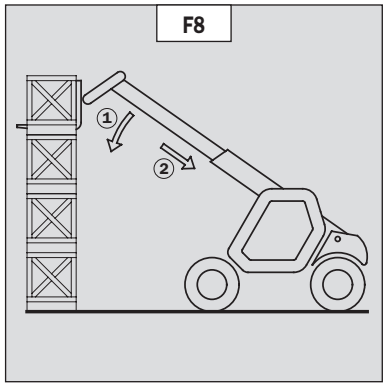

F9

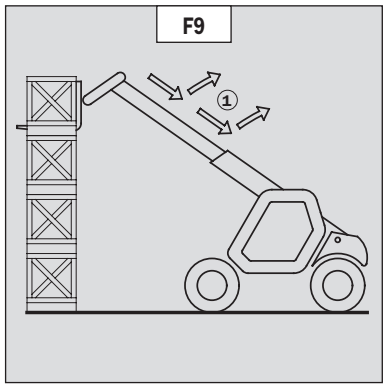

F10

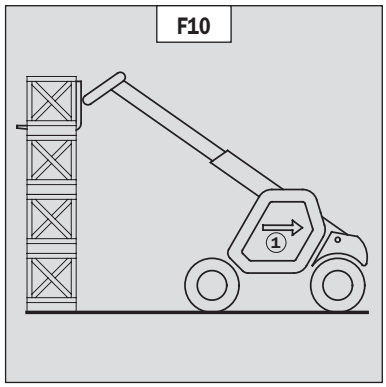

https://truckmanualshub.com/

G - TAKING UP AND LAYING A HIGH LOAD ON STABILIZERS

Depending on the model of lift truck

You must not raise the jib if you have not checked the transverse attitude of the lift truck (see: INSTRUCTIONS FOR HANDLING A LOAD: D - TRANSVERSE ATTITUDE OF THE LIFT TRUCK).

REMINDER: Make sure that the following operations can be performed with good visibility (see: OPERATIONS INSTRUCTIONS UNLADEN AND LADEN: D - VISIBILITY).

USING THE STABILIZERS

The stabilizers are used to optimise the lift truck's lifting performances (see: 2 - DESCRIPTION: INSTRUMENTS AND CONTROLS).

POSITION THE STABILIZERS WITH THE FORKS IN TRANSPORT POSITION (UNLADEN AND LADEN)

- Set the forks in transport position in front of the elevation.
- Stay far enough away to have room for the jib to be raised.
- Put the handbrake on and put the gearshift lever into neutral.
- Set the two stabilizers on the ground and lift the two front wheels of the lift truck (fig. G1), while maintaining its transverse stability.

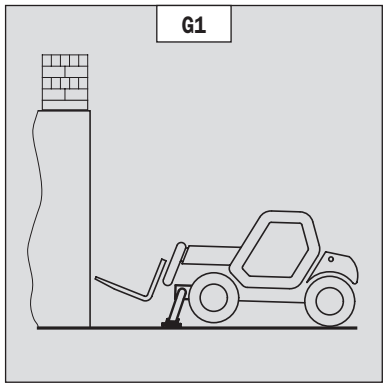

RAISE THE STABILIZERS WITH THE FORKS IN TRANSPORT POSITION (UNLADEN AND LADEN)

- Raise both stabilizers fully and at the same time.

SETTING THE STABILIZERS WITH THE JIB UP (UNLADEN AND LADEN)

This operation must be exceptional and performed with great care.

- Raise the jib and retract the telescopes completely.
- Set the lift truck in position in front of the elevation (fig. G2) moving very slowly and carefully.
- Put the handbrake on and put the gearshift lever into neutral.
- Move the stabilizers very slowly and gradually as soon as they are close to the ground or in contact with it.
- Lower the two stabilizers and lift the two front wheels of the lift truck (fig. G3). During this operation, transverse attitude must be permanently maintained: the bubble in the level must be kept between the two lines.

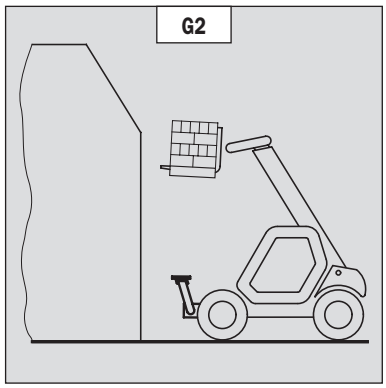

SETTING THE STABILIZERS WITH THE JIB UP (UNLADEN AND LADEN)

This operation must be exceptional and performed with great care.

- Keep the jib up and retract the telescopes completely (fig. G3).
- Move the stabilizers very slowly and gradually as soon as they are in contact with the ground and when they leave the ground. During this operation, the transverse attitude must be permanently maintained: the bubble in the level must be kept between the two lines.
- Raise both stabilizers completely.
- Release the parking brake and reverse the lift truck (1) very slowly and carefully, to release it and lower the forks (2) into transport position (fig. G4).

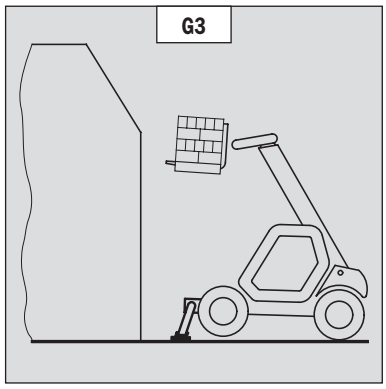

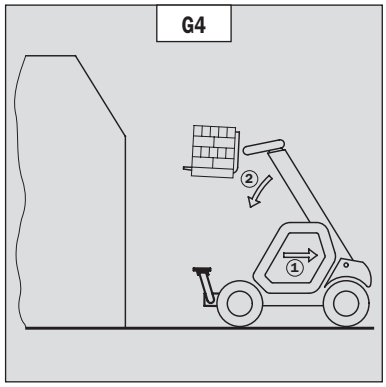

https://truckmanualshub.com/

TAKING UP A HIGH LOAD ON STABILIZERS

- Make sure the forks will fit easily under the load.
- Check the position of the lift truck with respect to the load and make a test run, if necessary, without taking the load.
- Raise and extend the jib (1) (2) until the forks are at the level of the load (fig. G5).
- Block the forks in front of the load by alternately using the controls to extend and lower the jib (1) (fig. G6).
- Lift the load slightly (1) and tilt the carriage (2) backwards to stabilise the load (fig. G7).
- Monitor the longitudinal stability limiter and warning device (see: INSTRUCTIONS FOR HANDLING A LOAD: C - LONGITUDINAL STABILITY LIMITER AND WARNING DEVICE). If it is overloaded, set the load down in the place from where it was taken.
- If possible lower the load without moving the lift truck. Raise the jib (1) to release the load, retract (2) and lower the jib (3) to set the load into transport position (fig. G8).

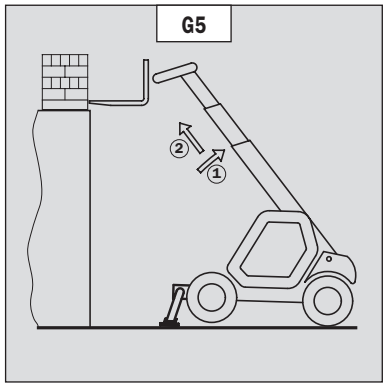

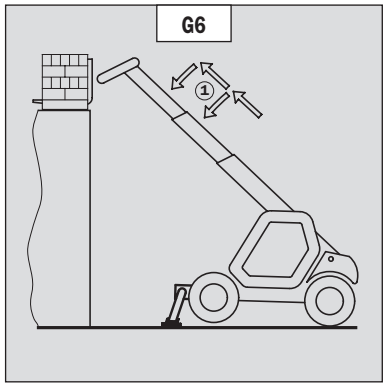

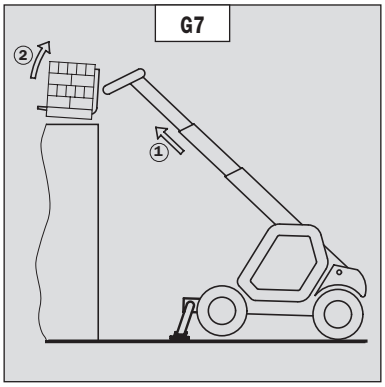

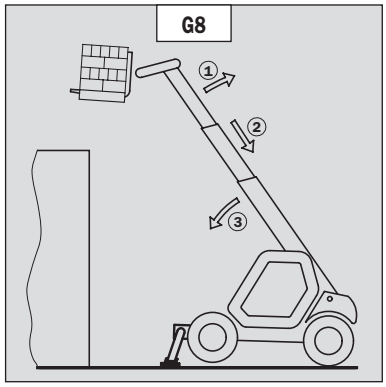

LAYING A HIGH LOAD ON STABILIZERS

- Raise and extend the jib (1) (2) until the load is above the elevation (fig. G9), while monitoring the longitudinal stability limiter and warning device (see: INSTRUCTIONS FOR HANDLING A LOAD: C - LONGITUDINAL STABILITY LIMITER AND WARNING DEVICE).
- Position the load horizontally and release it by lowering and retracting the jib (1) (2) to position the load correctly (fig. G10).
- Release the forks by alternating retracting and raising the jib (3) (fig. G11).
- If possible, set the jib in transport position without moving the lift truck.

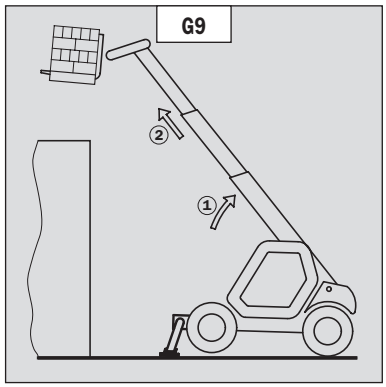

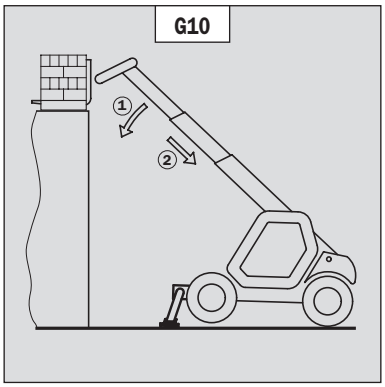

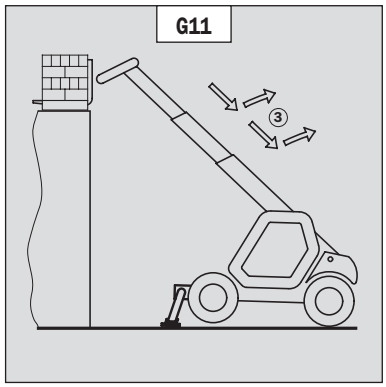

https://truckmanualshub.com/

H - TAKING UP AND LAYING DOWN A SUSPENDED LOAD

WARNING: Failure to follow the above instructions may lead the lift truck to loose stability and overturn.

MUST be used with a lift truck equipped with an operational hydraulic movement cut-out device.

CONDITIONS OF USE
- The length of the sling or the chain shall be as short as possible to limit swinging of the load.
- Lift the load vertically along its axis, never by pulling sideways or lengthways.

HANDLING WITHOUT MOVING THE LIFT TRUCK
- Whether on stabilisers or on tyres, the lateral attitude must not exceed 1 % and the longitudinal attitude must not exceed 5%, the bubble of the level must be held at “0”.
- Ensure that the wind speed is not higher than 10 m/s.
- Ensure that there is no one between the load and the lift truck.

I - TRAVELLING WITH A SUSPENDED LOAD
- Before moving, inspect the terrain in order to avoid excessive slopes and cross-falls, bumps and potholes, or soft ground.
- Ensure that the wind speed is not higher than 10 m/s.
- The lift truck must not travel at more than 0.4 m/s (1.5 km/h, i.e., one quarter walking speed).
- Drive and stop the lift truck gently and smoothly to minimise swinging of the load.
- Carry the load a few centimetres above the ground (max. 30 cm) the shortest possible jib length. Do not exceed the offset indicated on the load chart. If the load begins to swing excessively, do not hesitate to stop and lower the jib to set down the load.
- Before moving the lift truck, check the longitudinal stability limiter and warning device (see: 2 - DESCRIPTION: INSTRUMENTS AND CONTROLS), only the green LEDs and possibly the yellow LEDs should be lit.
- During transport, the lift truck operator must be assisted by a person on the ground (standing a minimum of 3 m from the load), who will limit swinging of the load using a bar or a rope. Ensure that this person is always clearly in view.
- The lateral attitude must not exceed 5%, the bubble in the level must be kept between the two “MAX.” marks
- The longitudinal attitude must not exceed 15%, with the load facing uphill, and 10%, with the load facing downhill.
- The jib angle must not exceed 45°.
- If the first red LED of the longitudinal stability limiter and warning device (see: 2 - DESCRIPTION: INSTRUMENTS AND CONTROLS) comes on while travelling, gently bring the lift truck to a stop and stabilise the load. Retract the telescope to reduce the offset of the load.

https://truckmanualshub.com/

Installation of the platform on the lift truck is only possible if the shields "operating the platform" of the lift truck and the platform are identical (see: 2 - DESCRIPTION: OPERATING THE PLATFORM).

A - AUTHORISATION FOR USE

- Operation of the platform requires further authorisation in addition to that of the lift truck.

B - SUITABILITY OF THE TRUCK FOR USE

- MANITOU has ensured that this lift truck is suitable for use under the standard operating conditions defined in this operator's manual, with a **STATIC test coefficient of 1.25** and a **DYNAMIC test coefficient of 1.1**, as specified in harmonised standard **EN 280** for "mobile elevating work platforms".
- Before commissioning, the company manager must make sure that the platform is appropriate for the work to be done, and perform certain tests (in accordance with current legislation).

C - PRECAUTIONS WHEN USING THE PLATFORM

- Wear clothes suited for operating the platform, avoid loose clothes.
- Never operate the platform when hands or feet are wet or soiled with greasy substances.
- Always pay attention when using the platform. Do not listen to the radio or music using headphones or earphones.
- For increased comfort, adopt the correct position at the platform's operator station.
- The platform's guard rail exempts the operator from wearing a safety harness under normal operating conditions. As a result, you are responsible deciding whether to wear a safety harness.
- The controls must not be used for any other than their intended purpose (e.g. getting in and out of the lift truck, coat hanger etc.).
- Safety helmets must be worn.
- The operator must always be in the normal operator's position. It is prohibited to have arms or legs, or generally any part of the body, protruding from the basket.
- Ensure that any materials loaded onto the platform (pipes, cables, containers, etc.) cannot fall out. Do not pile these materials to the point where it is necessary to step over them.

D - USING THE PLATFORM

- However experienced they may be, operators must acquaint themselves with the emplacement and operation of all control instruments prior to operating the platform.
- Check before operating that the platform has been correctly assembled and locked onto the lift truck.
- Check before operating the platform that the access gate has been properly locked.
- The platform should be operated in an area free of any obstructions or danger when it is lowered to the ground.
- The operator using the platform must be aided on the ground by a person with adequate training.
- You should stay within the limits set out in the platform load chart.
- The lateral stresses are limited pressure (see: 2 - DESCRIPTION: CHARACTERISTICS).
- It is strictly forbidden to hand a load from the platform or the lift truck jib without a specially designed attachment (see: INSTRUCTIONS FOR HANDLING A LOAD: H - TAKING UP AND LAYING DOWN A SUSPENDED LOAD).
- The platform cannot be used as a crane or a lift for permanently transporting people or materials, nor as jacks or supports.
- The lift truck must not be moved with one (or more) person(s) in the platform.
- It is forbidden to transport people on the platform using the hydraulic controls in the lift truck's driver's cab (except in case of rescue).
- The operator must not get in or out of the platform when it is not on ground level (jib retracted and in the down position).
- The platform must not be fitted with attachments that increase the unit's wind load.
- Do not use ladders or improvised structures in the platform to gain extra height.
- Do not climb onto the sides of the platform to gain extra height.

E - ENVIRONMENT

Operating the platform close to electricity cables is forbidden. Maintain the specified safe distances.

NOMINAL VOLTAGE	DISTANCE ABOVE THE GROUND OR THE FLOOR IN METRES
50 < U < 1000	2,30 M
1000 < U < 30000	2,50 M
30000 < U < 45000	2,60 M
45000 < U < 63000	2,80 M
63000 < U < 90000	3,00 M
90000 < U < 150000	3,40 M
150000 < U < 225000	4,00 M
225000 < U < 400000	5,30 M
400000 < U < 750000	7,90 M

https://truckmanualshub.com/

Operation of the platform is strictly forbidden in the event of wind speeds of over 45 km/h.

- The following scale is given for an empiric evaluation of the wind speed:

BEAUFORT scale (wind speed at a height of 10 m from flat ground)						
Force	**Type of wind**	**Speed (knots)**	**Speed (kph)**	**Speed (m/s)**	**Effects on Land**	**Sea condition**
0	Calm	**0 - 1**	**0 - 1**	**< 0,3**	Smoke rises vertically.	Sea like a mirror.
1	Light air	**1 - 3**	**1 - 5**	**0,3 - 1,5**	The wind bends the smoke.	Ripples but without foam crests.
2	Light breeze	**4 - 6**	**6 - 11**	**1,6 - 3,3**	The wind can be felt on the face, shakes the leaves.	Small but evident wavelets.
3	Gentle breeze	**7 - 10**	**12 - 19**	**3,4 - 5,4**	The wind continuously shakes the leaves and twigs.	Large wavelets Perhaps scattered white horses.
4	Moderate breeze	**11 - 16**	**20 - 28**	**5,5 - 7,9**	The wind raises dust and scraps of paper, shakes the twigs.	Small waves. Fairly frequent white horses.
5	Fresh breeze	**17 - 21**	**29 - 38**	**8 - 10,7**	Leafy shrubs sway.	Small waves form on inland waters. Moderate waves, many white horses.
6	Strong breeze	**22 - 27**	**39 - 49**	**10,8 - 13,8**	Shakes thick branches, metal wires hum, it becomes difficult to keep an umbrella open.	Large waves begin to form, white foam crests, probably spray.
7	Near gale	**28 - 33**	**50 - 61**	**13,9 - 17,1**	Whole trees sway, it is difficult to walk against the wind.	Sea heaps up and white foam blown in streaks along the direction of the wind.
8	Gale	**34 - 40**	**62 - 74**	**17,2 - 20,7**	Breaks the branches of trees, it is almost impossible to walk against the wind.	Moderately high waves, crests begin to break into spindrift.
9	Strong gale	**41 - 47**	**75 - 88**	**20,8 - 24,4**	Causes slight damage to buildings (stacks, tiles, etc..).	High waves. Dense foam along the direction of the wind. Crests of waves begin to roll over. Spray may affect visibility.
10	Storm	**48 - 55**	**89 - 102**	**24,5 - 28,4**	Rare inland, uproots trees, causes considerable damage to buildings.	Very high waves with long overhanging crests. Visibility affected.
11	Violent storm	**56 - 63**	**103 - 117**	**28,5 - 32,6**	Very rare, causes extensive devastation.	Exceptionally high waves that may hide medium sized ships. Visibility affected.
12	Hurricane	**64 +**	**118 +**	**32,7 +**	Causes very serious catastrophes.	The air is filled with foam and spray. Sea completely white with driving spray. Visibility very seriously affected.

F - MAINTENANCE

Your platform must be periodically inspected to ensure its continued compliance. The inspection frequency is defined by the current legislation in the country in which the platform is used.

https://truckmanualshub.com/

HOW TO USE THE RADIO-CONTROL

SAFETY INSTRUCTIONS

- This radio-control consists of electronic and mechanical safety elements. It cannot receive commands from another transmitter because the internal encoding is unique to each radio-control.

If it is used improperly or incorrectly, there is a risk of danger to:
- The physical and mental health of the user or others.
- The lift truck and other neighbouring items.

Everyone working with this radio-control:
- Must be qualified in line with current regulations and therefore appropriately trained.
- Must follow this instruction manual as closely as possible.

- The system is used to control the lift truck remotely via radio waves. Commands are also transmitted if the lift truck is out of sight (behind an obstacle or a building for example), this is why:
  - After stopping the truck and removing the key button (only possible when it is stationary), always place the transmitter in a safe, dry place.
  - Before performing any installation, servicing or repair work, always switch off power sources (in particular, electric welding devices and electric head units on hydraulic distributors must be disconnected at each section).
  - Never remove or alter the safety devices (such as the hand-guard frame, key, emergency stop button, etc.).

Never drive the lift truck if it is not continuously and perfectly within view of the operator!

- Before leaving the transmitter, the operator must make sure that it cannot be used by an unauthorized third person: either by removing the key button from the transmitter or locking it in an inaccessible place.
- The user must ensure that the instruction manual is accessible at all times and that operators have read and understood it.

INSTRUCTIONS

- Take up position in a stable place with no risk of slipping.
- Before using the transmitter, make sure there is nobody within the working area.
- Only use the transmitter with its carrying device or installed correctly on the platform.

When you remove the transmitter, remove the accumulator and key button so that it cannot be used accidentally or deliberately by anyone else.

PROTECTIVE DEVICES

- The lift truck will be immobilised within 450 milliseconds (approx. 0.5 second) at most:
  - If the transmitter emergency stop button (50 milliseconds), or the one on the lift is pressed.
  - If the transmission distance of the radio waves is exceeded.
  - If the transmitter is faulty.
  - If an interfering radio signal is received from elsewhere.
  - If the accumulator is removed from its housing in the transmitter.
  - If the accumulator reaches the end of its autonomy.
  - If the transmitter is switched off by turning the key button to stop.
- These protective devices are provided for the safety of personnel and property and must never be altered, removed or bypassed in any way whatsoever!
- The hand-guard frame prevents external action on a manipulator (if the transmitter falls, for example, or if the operator leans on a guard-rail).
- An electronic safety device prevents radio transmission from being initiated if the manipulators are not mechanically and electrically at rest and if the internal combustion engine speed selector is not set to idle.

In an emergency, press the transmitter emergency stop button immediately ; then follow the manual's instructions (see: 2 - DESCRIPTION: INSTRUMENTS AND CONTROLS).

https://truckmanualshub.com/

MAINTENANCE INSTRUCTIONS OF THE LIFT TRUCK

GENERAL INSTRUCTIONS

- Ensure the area is sufficiently ventilated before starting the lift truck.
- Wear clothes suitable for the maintenance of the lift truck, avoid wearing jewellery and loose clothes. Tie and protect your hair, if necessary.
- Stop the I.C. engine and remove the ignition key, when an intervention is necessary.
- Read the operator's manual carefully.
- Carry out all repairs immediately, even if the repairs concerned are minor.
- Repair all leaks immediately, even if the leak concerned is minor.
- Make sure that the disposal of process materials and of spare parts is carried out in total safety and in a ecological way.
- Be careful of the risk of burning and splashing (exhaust, radiator, I.C. engine, etc.).

MAINTENANCE

- Perform the periodic service (see: 3 - MAINTENANCE) to keep your lift truck in good working conditions. Failure to perform the periodic service may cancel the contractual guarantee.

MAINTENANCE LOGBOOK
- The maintenance operations carried out in accordance with the recommendations given in part: 3 - MAINTENANCE and the other inspection, servicing or repair operations or modifications performed on the lift truck or its attachments shall be recorded in a maintenance logbook. The entry for each operation shall include details of the date of the works, the names of the individuals or companies having performed them, the type of operation and its frequency, if applicable. The part numbers of any lift truck items replaced shall also be indicated.

LUBRICANT AND FUEL LEVELS

- Use the recommended lubricants (never use contaminated lubricants).
- Do not fill the fuel tank when the I.C. engine is running.
- Only fill up the fuel tank in areas specified for this purpose.
- Do not fill the fuel tank to the maximum level.
- Do not smoke or approach the lift truck with a flame, when the fuel tank is open or is being filled.

HYDRAULIC

- Any work on the load handling hydraulic circuit is forbidden except for the operations described in part: 3 - MAINTENANCE.
- Do not attempt to loosen unions, hoses or any hydraulic component with the circuit under pressure.

BALANCING VALVE: It is dangerous to change the setting and remove the balancing valves or safety valves which may be fitted to your lift truck cylinders. These operations must only be performed by approved personnel (consult your dealer).

The HYDRAULIC ACCUMULATORS that may be fitted on your lift truck are pressurized units. Removing these accumulators and their pipework is a dangerous operation and must only be performed by approved personnel (consult your dealer).

ELECTRICITY

- Do not short-circuit the starter relay to start the IC engine. If the forward/reverse selector is not in neutral and the parking brake is not engaged, the lift truck may suddenly start to move.
- Do not drop metallic items on the battery.
- Disconnect the battery before working on the electrical circuit.

https://truckmanualshub.com/

WELDING

- Disconnect the battery before any welding operations on the lift truck.
- When carrying out electric welding work on the lift truck, connect the negative cable from the equipment directly to the part being welded, so as to avoid high tension current passing through the alternator.
- Never carry out welding or work which gives off heat on an assembled tyre. The heat would increase the pressure which could cause the tyre to explode.
- If the lift truck is equipped with an electronic control unit, disconnect this before starting to weld, to avoid the risk of causing irreparable damage to electronic components.

WASHING THE LIFT TRUCK

- Clean the lift truck or at least the area concerned before any intervention.
- Remember to close and lock all accesses to the lift truck (doors, windows, cowls…).
- During washing, avoid the articulations and electrical components and connections.
- If necessary, protect against penetration of water, steam or cleaning agents, components susceptible of being damaged, particularly electrical components and connections and the injection pump.
- Clean the lift truck of any fuel, oil or grease trace.

FOR ANY INTERVENTION OTHER THAN REGULAR MAINTENANCE, CONSULT YOUR DEALER.

https://truckmanualshub.com/

IF THE LIFT TRUCK IS NOT TO BE USED FOR A LONG TIME

INTRODUCTION

The following recommendations are intended to prevent the lift truck from being damaged when it is withdrawn from service for an extended period.
For these operations, we recommend the use of a MANITOU protective product, reference 603726.
Instructions for using the product are given on the packaging.

Procedures to follow if the lift truck is not to be used for a long time and for starting it up again afterwards must be performed by your dealership.

PREPARING THE LIFT TRUCK

- Clean the lift truck thoroughly.
- Check and repair any leakage of fuel, oil, water or air.
- Replace or repair any worn or damaged parts.
- Wash the painted surfaces of the lift truck in clear and cold water and wipe them.
- Touch up the paintwork if necessary.
- Shut down the lift truck (see: OPERATING INSTRUCTIONS UNLADEN AND LADEN).
- Make sure the jib cylinder rods are all in retracted position.
- Release the pressure in the hydraulic circuits.

PROTECTING THE I.C. ENGINE

- Fill the tank with fuel (see: 3 - MAINTENANCE: A - DAILY OR EVERY 10 HOURS SERVICE).
- Empty and replace the cooling liquid (see: 3 - MAINTENANCE: F - EVERY 2000 HOURS SERVICE).
- Leave the I.C. engine running at idling speed for a few minutes, then switch off.
- Replace the I.C. engine oil and oil filter (see: 3 - MAINTENANCE: D - EVERY 500 HOURS SERVICE).
- Add the protective product to the engine oil.
- Run the I.C. engine for a short time so that the oil and cooling liquid circulate inside.
- Disconnect the battery and store it in a safe place away from the cold, after charging it to a maximum.
- Remove the injectors and spray the protective product into each cylinder for two seconds with the piston in low neutral position.
- Turn the crankshaft once slowly and refit the injectors (see I.C. engine REPAIR MANUAL).
- Remove the intake hose from the manifold or turbocharger and spray the protective product into the manifold or turbocharger.
- Cap the intake manifold or turbocharger hole with waterproof adhesive tape.
- Remove the exhaust pipe and spray the protective product into the exhaust manifold or turbocharger.
- Refit the exhaust pipe and block the outlet with waterproof adhesive tape.

NOTE: The spray time is noted on the product packaging and must be increased by 50 % for turbo engines.

- Open the filler plug, spray the protective product around the rocker arm shaft and refit the filler plug.
- Cap the fuel tank using waterproof adhesive tape.
- Remove the drive belts and store them in a safe place.
- Disconnect the engine cut-off solenoid on the injection pump and carefully insulate the connection.

PROTECTING THE LIFT TRUCK

- Set the lift truck on axle stands so that the tyres are not in contact with the ground and release the handbrake.
- Protect cylinder rods which will not be retracted, from corrosion.
- Wrap the tyres.

NOTE: If the lift truck is to be stored outdoors, cover it with a waterproof tarpaulin.

https://truckmanualshub.com/

BRINGING THE LIFT TRUCK BACK INTO SERVICE

- Remove the waterproof adhesive tape from all the holes.
- Refit the intake hose.
- Refit and reconnect the battery.
- Remove the protection from the cylinder rods.
- Perform the daily service (see: 3 - MAINTENANCE: A - DAILY OR EVERY 10 HOURS SERVICE).
- Put the handbrake on and remove the axle stands.
- Empty and replace the fuel and replace the fuel filter (see: 3 - MAINTENANCE: D - EVERY 500 HOURS SERVICE).
- Refit and set the tension in the drive belts (see: 3 - MAINTENANCE: C - EVERY 250 HOURS SERVICE).
- Turn the I.C. engine using the starter, to allow the oil pressure to rise.
- Reconnect the engine cut-off solenoid.
- Lubricate the lift truck completely (see: 3 - MAINTENANCE: SERVICING SCHEDULE).

Make sure the area is adequately ventilated before starting up the lift truck.

- Start up the lift truck, following the safety instructions and regulations (see: OPERATING INSTRUCTIONS UNLADEN AND LADEN).
- Run all the jib's hydraulic movements, concentrating on the ends of travel for each cylinder.

https://truckmanualshub.com/

https://truckmanualshub.com/

2 - DESCRIPTION

https://truckmanualshub.com/

https://truckmanualshub.com/

TABLE OF CONTENTS

« EC» DECLARATION OF CONFORMITY		2-4
SAFETY PLATES AND STICKERS		2-6
IDENTIFICATION OF THE LIFT TRUCK		2-10
CHARACTERISTICS	MLT 634 Turbo LSU Série F-E3	2-12
CHARACTERISTICS	MLT 634 -120 LSU Série F-E3	2-14
CHARACTERISTICS	MLT 634 -120 LSU POWERSHIFT Série F-E3	2-16
CHARACTERISTICS	MLT 731 Turbo Série F-E3	2-18
CHARACTERISTICS	MLT 735 Turbo LSU Série 6-E3	2-20
CHARACTERISTICS	MLT 735 -120 LSU Série 6-E3	2-22
CHARACTERISTICS	MLT 735 -120 LSU POWERSHIFT Série 6-E3	2-24
CHARACTERISTICS	MLT 741 Turbo LSU Série 6-E3	2-26
CHARACTERISTICS	MLT 741 -120 LSU Série 6-E3	2-28
CHARACTERISTICS	MLT 741 -120 LSU POWERSHIFT Série 6-E3	2-30
CHARACTERISTICS	MLT 1035 L Turbo LSU Série 6-E3	2-32
FRONT AND REAR TIRES		2-34
DIMENSIONS AND LOAD CHART	MLT 634 Turbo LSU Série F-E3 MLT 634 -120 LSU Série F-E3 MLT 634 -120 LSU POWERSHIFT Série F-E3	2-40
DIMENSIONS AND LOAD CHART	MLT 731 Turbo Série F-E3	2-42
DIMENSIONS AND LOAD CHART	MLT 735 Turbo LSU Série 6-E3 MLT 735 -120 LSU Série 6-E3 MLT 735 -120 LSU POWERSHIFT Série 6-E3	2-44
DIMENSIONS AND LOAD CHART	MLT 741 Turbo LSU Série 6-E3 MLT 741 -120 LSU Série 6-E3 MLT 741 -120 LSU POWERSHIFT Série 6-E3	2-46
DIMENSIONS AND LOAD CHART	MLT 1035 L Turbo LSU Série 6-E3	2-48
INSTRUMENTS AND CONTROLS		2-50
TOWING PIN AND HOOK		2-76
DESCRIPTION AND USE OF THE OPTIONS		2-80

https://truckmanualshub.com/

1) DÉCLARATION «CE» DE CONFORMITÉ (originale)

« EC» DECLARATION OF CONFORMITY (original)

2) La société, The company : **MANITOU B.F.**

3) Adresse, Address : **430, rue de l'Aubinière - B.P. 10249 - 44158 - ANCENIS CEDEX - FRANCE**

4) Dossier technique,Technical file : **MANITOU B.F. - 430, rue de l'Aubinière - B.P. 10249 - 44158 - ANCENIS CEDEX - FRANCE**

5) Constructeur de la machine décrite ci-après, Manufacturer of the machine described below :

MLT 634 Turbo LSU Série F-E3 / MLT 634 -120 LSU Série F-E3 / MLT 634 -120 LSU POWERSHIFT Série F-E3
MLT 731 Turbo Série F-E3
MLT 735 Turbo LSU Série 6-E3 / MLT 735 -120 LSU Série 6-E3 / MLT 735 -120 LSU POWERSHIFT Série 6-E3
MLT 741 Turbo LSU Série 6-E3 / MLT 741 -120 LSU Série 6-E3 / MLT 741 -120 LSU POWERSHIFT Série 6-E3
MLT 1035 L Turbo LSU Série 6-E3

6) Déclare que cette machine, Declares that this machine :

7) Est conforme aux directives suivantes et à leurs transpositions en droit national, Complies with the following directives and their transpositions into national law :

2006/42/CE

8) Pour les machines annexe IV, For annex IV machines :

9) Numéro d'attestation, Certificate number :

10) Organisme notifié, Notified body :

15) Normes harmonisées utilisées, Harmonised standards used :

16) Normes ou dispositions techniques utilisées, Standards or technical provisions used :

17) Fait à, Done at : **Ancenis**

18) Date, Date : **01/06/2010**

19) Nom du signataire, Name of signatory : **Christian CALECA**

20) Fonction, Function : **Directeur Général Adjoint**

21) Signature, Signature :

bg : 1) удостоверение за « CE » съответствие (оригинална), 2) Фирмата, 3) Адрес, 4) Техническо досие, 5) Фабрикант на описаната по-долу машина, 6) Обявява, че тази машина, 7) Отговаря на следните директиви и на тяхното съответствие национално право, 8) За машините към допълнение IV, 9)Номер на удостоверението, 10) Наименувана фирма, 15) хармонизирани стандарти използвани, 16) стандарти или технически правила, използвани, 17) Изработено в, 18) Дата, 19) Име на разписалия се, 20) Функция, 21) Функция.

cs : 1) ES prohlášení o shodě (původní), 2) Název společnosti, 3) Adresa, 4) Technická dokumentace, 5) Výrobce níže uvedeného stroje, 6) Prohlašuje, že tento stroj, 7) Je v souladu s následujícími směrnicemi a směrnicemi transponovanými do vnitrostátního práva, 8) Pro stroje v příloze IV, 9) Číslo certifikátu, 10) Notifikační orgán, 15) harmonizované normy použity, 16) Norem a technických pravidel používaných, 17) Místo vydání, 18) Datum vydání, 19) Jméno podepsaného, 20) Funkce, 21) Podpis.

da : 1) EF Overensstemmelseserklæring (original), 2) Firmaet, 3) Adresse, 4) tekniske dossier, 5) Konstruktør af nedenfor beskrevne maskine, 6) Erklærer, at denne maskine, 7) Overholder nedennævnte direktiver og disses gennemførelse til national ret, 8) For maskiner under bilag IV, 9) Certifikat nummer, 10) Bemyndigede organ, 15) harmoniserede standarder, der anvendes, 16) standarder eller tekniske regler, 17) Udfærdiget i, 18) Dato, 19) Underskrivers navn, 20) Funktion, 21) Underskrift.

de : 1) EG-Konformitätserklärung (original), 2) Die Firma, 3) Adresse, 4) Technischen Unterlagen, 5) Hersteller der nachfolgend beschriebenen Maschine, 6) Erklärt, dass diese Maschine, 7) den folgenden Richtlinien und deren Umsetzung in die nationale Gesetzgebung entspricht, 8) Für die Maschinen laut Anhang IV, 9) Bescheinigungsnummer, 10) Benannte Stelle, 15) angewandten harmonisierten Normen, 16) angewandten sonstigen technischen Normen und Spezifikationen, 17) Ausgestellt in, 18) Datum, 19) Name des Unterzeichners, 20) Funktion, 21) Unterschrift.

el : 1) Δήλωση συμμόρφωσης CE (πρωτότυπο), 2) Η εταιρεία, 3) Διεύθυνση, 4) τεχνικό φάκελο, 5) Κατασκευάστρια του εξής περιγραφόμενου μηχανήματος, 6) Δηλώνει ότι αυτό το μηχάνημα, 7) Είναι σύμφωνο με τις εξής οδηγίες και τις προσαρμογές τους στο εθνικό δίκαιο, 8) Για τα μηχανήματα παραρτήματος IV, 9) Αριθμός δήλωσης, 10) Κοινοποιημένος φορέας, 15) εναρμονισμένα πρότυπα που χρησιμοποιούνται, 16) Πρότυπα ή τεχνικούς κανόνες που χρησιμοποιούνται, 16) Είναι σύμφωνο με τα εξής πρότυπα και τεχνικές διατάξεις, 17) Εν, 18) Ημερομηνία, 19) Όνομα του υπογράφοντος, 20) Θέση, 21) Υπογραφή.

es : 1)Declaración DE de conformidad (original), 2) La sociedad, 3) Dirección, 4) expediente técnico, 5) Constructor de la máquina descrita a continuación, 6) Declara que esta máquina, 7) Está conforme a las siguientes directivas y a sus transposiciones en derecho nacional, 8) Para las máquinas anexo IV, 9) Número de certificación, 10) Organismo notificado, 15) normas armonizadas utilizadas, 16) Otras normas o especificaciones técnicas utilizadas, 17) Hecho en, 18) Fecha, 19) Nombre del signatario, 20) Función, 21) Firma.

et : 1) EÜ vastavusdeklaratsioon (algupärane), 2) Äriühing, 3) Aadress, 4) Tehniline dokumentatsioon, 5) Seadme tootja, 6) Kinnitab, et see toode, 7) On vastavuses järgmiste direktiivide ja nende riigisisesesse õigusesse ülevõtmiseks vastuvõetud õigusaktidega, 8) IV lisas loetletud seadmete puhul, 9) Tunnistuse number, 10) Sertifitseerimisasutus, 15) kasutatud ühtlustatud standarditele, 16) Muud standardites või spetsifikatsioonides kasutatakse, 17) Väljaandmise koht, 18) Väljaandmise aeg, 19) Allkirjastaja nimi, 20) Amet, 21) Allkiri.

fi : 1) EY-vaatimustenmukaisuusvakuutus (alkuperäiset), 2) Yritys, 3) Osoite, 4) teknisen eritelmän, 5) Jäljessä kuvatun koneen valmistaja, 6) Vakuuttaa, että tämä kone, 7) Täyttää seuraavien direktiivien sekä niitä vastaavien kansallisten säännösten vaatimukset, 8) Liitteen IV koneiden osalta, 9) Todistuksen numero, 10) Ilmoitettu laitos, 15) yhdenmukaistettuja standardeja käytetään, 16) muita standardeja tai, 17) Paikka, 18) Aika, 19) Allekirjoittajan nimi, 20) Toimi, 21) Allekirjoitus.

ga : 1) « EC »dearbhú comhréireachta (bunaidh), 2) An comhlacht, 3) Seoladh, 4) comhad teicniúil, 5) Déantóir an innill a thuairiscítear thíos, 6) Dearbhaíonn sé go bhfuil an t-inneall, 7) Go gcloíonn sé le na treoracha seo a leanas agus a trasuímh isteach i ndlí náisiúnta, 8) Le haghaidh innill an aguisín IV, 9) Uimhir teastais, 10) Comhlacht a chuireadh i bhfios, 15) caighdeáin comhchuibhithe a úsáidtear, 16) caighdeáin eile nó sonraíochtaí teicniúla a úsáidtear, 17) Déanta ag, 18) Dáta, 19) Ainm an tsínitheora, 20) Feidhm, 21) Síniú.

hu : 1) CE megfelelőségi nyilatkozat (eredeti), 2) A vállalat, 3) Cím, 4) műszaki dokumentáció, 5) Az alábbi gép gyártója, 6) Kijelenti, hogy a gép, 7) Megfelel az alábbi irányelveknek valamint azok honosított előírásainak, 8) A IV. melléklet gépeihez, 9) Bizonylati szám, 10) Értesített szervezet, 15) felhasznált harmonizált szabványok, 16) egyéb felhasznált műszaki szabványok és előírások hivatkozásai, 17) Kelt (hely), 18) Dátum, 19) Aláíró neve, 20) Funkció, 21) Aláírás.

is : 1) (Samræmisvottorð ESB (upprunalega), 2) Fyrirtækið, 3) Aðsetur, 4) Tæknilegar skrá, 5) Smiður tækisins sem lýst er hér á eftir, 6) Staðfestir að tækið, 7) Samræmist eftirfarandi stöðlum og staðfærslu þeirra með hliðsjón af þjóðarrétti, 8) Fyrir tækin í aukakafla IV, 9) Staðfestingarnúmer, 10) Tilkynnt til, 15) samhæfða staðla sem notaðir, 16) önnur staðlar eða forskriftir notað, 17) Staður, 18) Dagsetning, 19) Nafn undirritaðs, 20) Staða, 21) Undirskrift.

it : 1) Dichiarazione CE di conformità (originale), 2) La società, 3) Indirizzo, 4) fascicolo tecnico, 5) Costruttore della macchina descritta di seguito, 6) Dichiara che questa macchina, 7) È conforme alle direttive seguenti e alle relative trasposizioni nel diritto nazionale, 8) Per le macchine Allegato IV, 9) Numero di Attestazione, 10) Organismo notificato, 15) norme armonizzate applicate, 16) altre norme e specifiche tecniche applicate, 17) Stabilita a, 18) Data, 19) Nome del firmatario, 20) Funzione, 21) Firma.

lt : 1) CE atitikties deklaracija (originalas), 2) Bendrovė, 3) Adresas, 4) Techninė byla, 5) Žemiau nurodytas įrenginio gamintojas, 6) Pareiškia, kad šis įrenginys, 7) Atitinka toliau nurodytas direktyvas ir į nacionalinius teisės aktus perkeltas jų nuostatas, 8) IV priedas dėl mašinų, 9) Sertifikato Nr, 10) Paskelbtoji įstaiga, 15) suderintus standartus naudojamus, 16) Kiti standartai ir technines specifikacijas, 17) Pasirašyta, 18) Data, 19) Pasirašiusio asmens vardas ir pavardė, 20) Pareigos, 21) Parašas.

lv : 1) EK atbilstības deklarācija (oriģināls), 2) Uzņēmums, 3) Adrese, 4) tehniskās lietas, 5) Tālāk aprakstītās iekārtas ražotājs, 6) Apliecina, ka šī iekārta, 7) Ir atbilstoša tālāk norādītajām direktīvām un to transpozīcijai nacionālajā likumdošanā, 8) Iekārtām IV pielikumā, 9) Apliecības numurs, 10) Reģistrētā organizācija, 15) lietotajiem saskaņotajiem standartiem, 16) lietotajiem tehniskajiem standartiem un specifikācijām, 17) Sastādīts, 18) Datums, 19) Parakstītāja vārds, 20) Amats, 21) Paraksts.

mt : 1) Dikjarazzjoni ta' Konformità KE (oriġinali), 2) Il-kumpanija, 3) Indirizz, 4) fajl tekniku, 5) Manifattriċi tal-magna deskritta hawn isfel, 6) Tiddikjara li din il-magna, 7) Hija konformi hija konformi mad-Direttivi segwenti u l-liġijiet li jimplimentawhom fil-liġi nazzjonali, 8) Għall-magni fl-Anness IV, 9) Numru taċ-ċertifikat, 10) Entità nnotifikata, 15) l-istandards armonizzati użati, 16) standards tekniċi u speċifikazzjonijiet oħra użati, 17) Magħmul f', 18) Data, 19) Isem il-firmatarju, 20) Kariga, 21) Firma.

nl : 1) EG-verklaring van overeenstemming (oorspronkelijke), 2) Het bedrijf, 3) Adres, 4) technisch dossier, 5) Constructeur van de hierna genoemde machine, 6) Verklaart dat deze machine, 7) In overeenstemming is met de volgende richtlijnen en hun omzettingen in het nationale recht, 8) Voor machines van bijlage IV, 9) Goedkeuringsnummer, 10) Aangezegde instelling, 15) gehanteerde geharmoniseerde normen, 16) andere gehanteerde technische normen en specificaties, 17) Opgemaakt te, 18) Datum, 19) Naam van ondergetekende, 20) Functie, 21) Handtekening.

no : 1) CE-samsvarserklæring (original), 2) Selskapet, 3) Adresse, 4) tekniske arkiv, 5) Fabrikant av følgende maskin, 6) Erklærer at denne maskinen, 7) Oppfyller kravene i følgende direktiver, med nasjonale gjennomføringsbestemmelser, 8) For maskinene i tillegg IV, 9) Attestnummer, 10) Notifisert organ, 15) harmoniserte standarder som brukes, 16) Andre standarder og spesifikasjoner brukt, 17) Utstedt i, 18) Dato, 19) Underskriverens navn, 20) Stilling, 21) Underskrift.

pl : 1) Deklaracja zgodności CE (oryginalne), 2) Spółka, 3) Adres, 4) dokumentacji technicznej, 5) Wykonawca maszyny opisanej poniżej, 6) Oświadcza, że ta maszyna, 7) Jest zgodna z następującymi dyrektywami i odpowiadającymi przepisami prawa krajowego, 8) Dla maszyn załącznik IV, 9) Numer certyfikatu, 10) Jednostka certyfikująca, 15) zastosowanych norm zharmonizowanych, 16) innych zastosowanych norm technicznych i specyfikacji, 17) Sporządzono w, 18) Data, 19) Nazwisko podpisującego, 20) Stanowisko, 21) Podpis.

pt : 1) Declaração de conformidade CE (original), 2) A empresa, 3) Morada, 4) processo técnico, 5) Fabricante da máquina descrita abaixo, 6) Declara que esta máquina, 7) Está em conformidade às directivas seguintes e às suas transposições para o direito nacional, 8) Para as máquinas no anexo IV, 9) Número de certificado, 10) Entidade notificada, 15) normas harmonizadas utilizadas, 16) outras normas e especificações técnicas utilizadas, 17) Elaborado em, 18) Data, 19) Nome do signatário, 20) Cargo, 21) Assinatura.

ro : 1) Declaraţie de conformitate CE (originală), 2) Societatea, 3) Adresa, 4) cărtii tehnice, 5) Constructor al maşinii descrise mai jos, 6) Declară că prezenta maşină, 7) Este conformă cu directivele următoare şi cu transpunerea lor în dreptul naţional, 8) Pentru maşinile din anexa IV, 9) Număr de atestare, 10) Organism notificat, 15) standardele armonizate utilizate, 16) alte standarde si specificatii tehnice utilizate, 17) Întocmit la, 18) Data, 19) Numele persoanei care semnează, 20) Funcţia, 21) Semnătura.

sk : 1) ES vyhlásenie o zhode (pôvodný), 2) Názov spoločnosti, 3) Adresa, 4) technickej dokumentácie, 5) Výrobca nižšie opísaného stroja, 6) Vyhlasuje, že tento stroj, 7) Je v súlade s nasledujúcimi smernicami a smernicami transponovanými do vnútroštátneho práva, 8) Pre stroje v prílohe IV, 9) Číslo certifikátu, 10) Notifikačný orgán, 15) použité harmonizované normy, 16) použité iné technické normy a predpisy, 17) Miesto vydania, 18) Dátum vydania, 19) Meno podpisujúceho, 20) Funkcia, 21) Podpis.

sl : 1) ES Izjava o ustreznosti (izvirna), 2) Družba. 3) Naslov. 4) tehnične dokumentacije, 5) Proizvajalac tukaj opisanega stroja, 6) Izjavlja, da je ta stroj, 7) Ustreza naslednjim direktivam in njihovi transpoziciji v državno pravo, 8) Za stroje priloga IV, 9) Številka potrdila, 10) Obvestilo organu, 15) uporabljene harmonizirane standarde, 16) druge uporabljene tehnične standarde in zahteve, 17) V, 18) Datum, 19) Ime podpisnika, 20) Funkcija, 21) Podpis.

sv : 1) CE-försäkran om överensstämmelse (original), 2) Företaget, 3) Adress, 4) tekniska dokumentationen, 5) Konstruktör av nedan beskrivna maskin, 6) Försäkrar att denna maskin, 7) Överensstämmer med nedanstående direktiv och införlivandet av dem i nationell rätt, 8) För maskinerna i bilaga IV, 9) Nummer för godkännande, 10) Organism som underrättats, 15) Harmoniserade standarder som använts, 16) andra tekniska standarder och specifikationer som använts, 17) Upprättat i, 18) Datum, 19) Namn på den som undertecknat, 20) Befattning, 21) Namntecknin.

https://truckmanualshub.com/

SAFETY PLATES AND STICKERS

You must replace illegible or damaged plates. Contact your dealer.

1 - EXTERNAL PLATES AND STICKERS

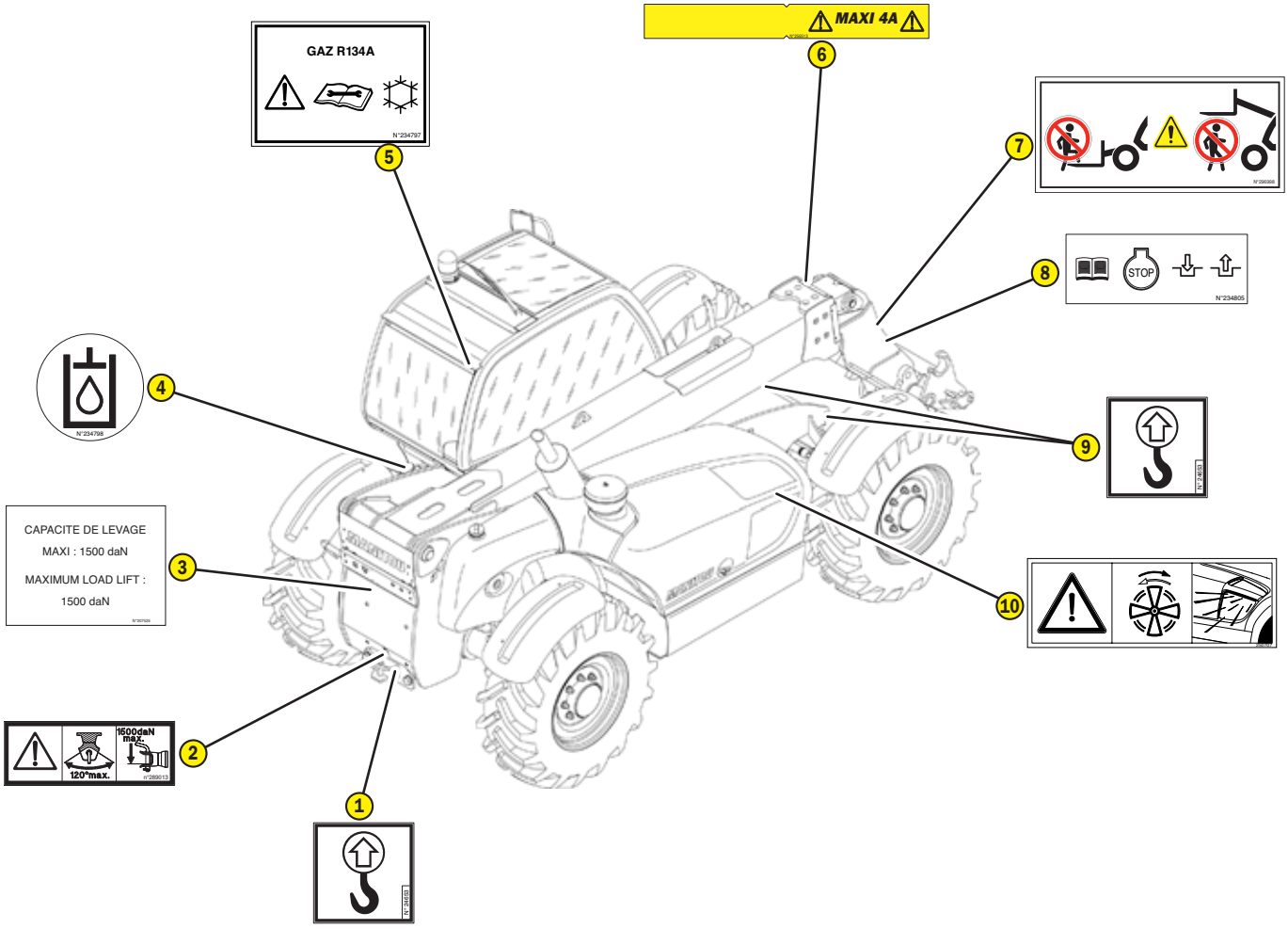

REF	PART NUMBER	DESCRIPTION
1 9	24653	Securing and slinging point
2	289013	Towing instruction
3	207525	Hydraulic trailer hook (option)
4	234798	Hydraulic oil
5	234797	Air conditioning (option)
6	256513	Electrical jib provision (option)
7	296998	Maniscopic safety instruction
8	234805	Hydraulic coupling instruction
10	250707	Cleanfix self-cleaning fan (option)

https://truckmanualshub.com/

2 - STICKERS AND PLATES UNDER THE ENGINE HOOD

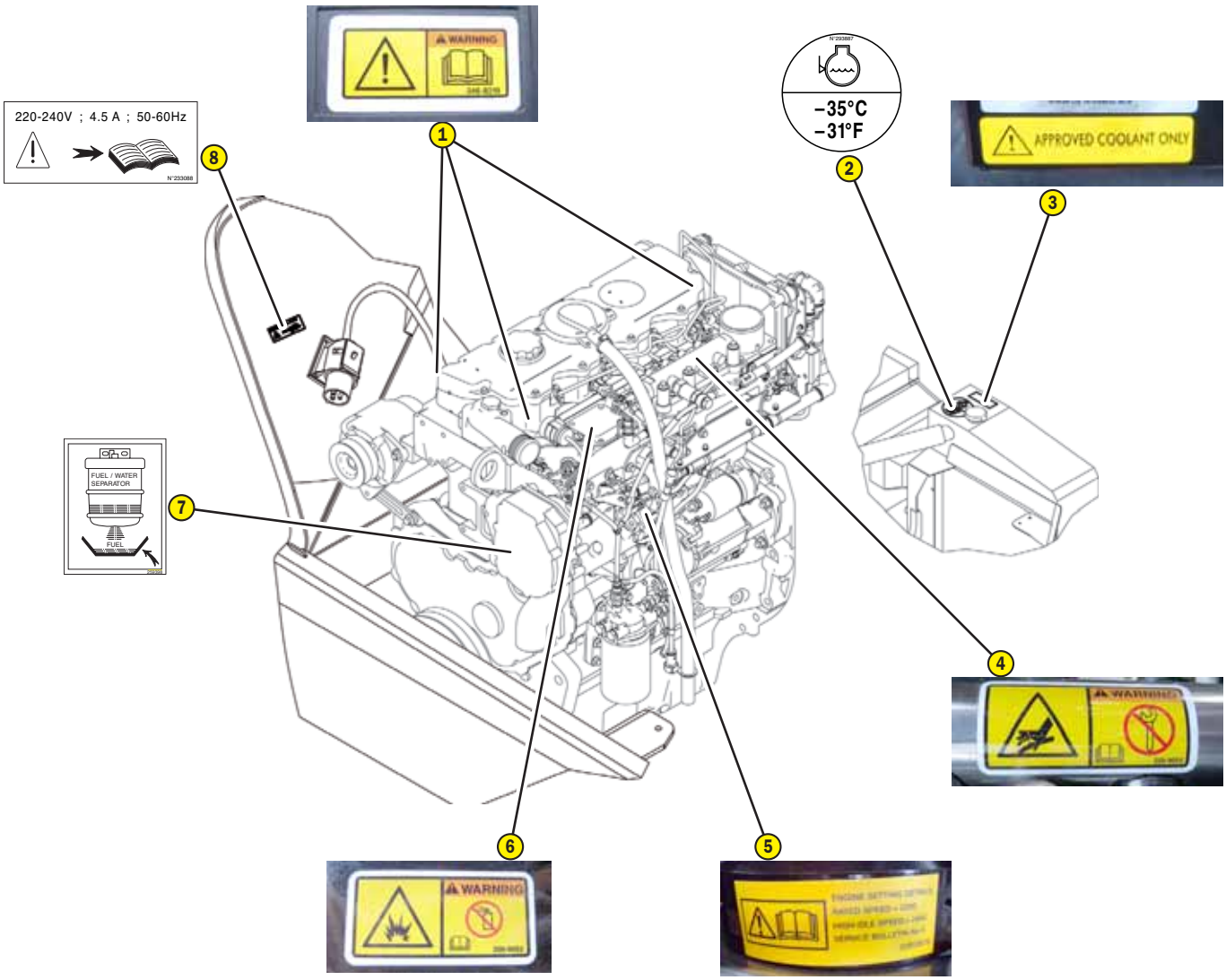

REF	PART NUMBER	DESCRIPTION
1	Consult your dealer	Engine safety instruction (according to model)
2	293887	Anti-freeze
3	Consult your dealer	Cooling fluid
4	Consult your dealer	High pressure system instruction (for ... -120 ... only)
5	Consult your dealer	Engine adjustment instruction (for ... Turbo ... only)
6	Consult your dealer	Explosion risk instruction
7	259398	Water/diesel separator
8	233088	Preheating element (option)

https://truckmanualshub.com/

3 - STICKERS AND PLATES IN THE CAB

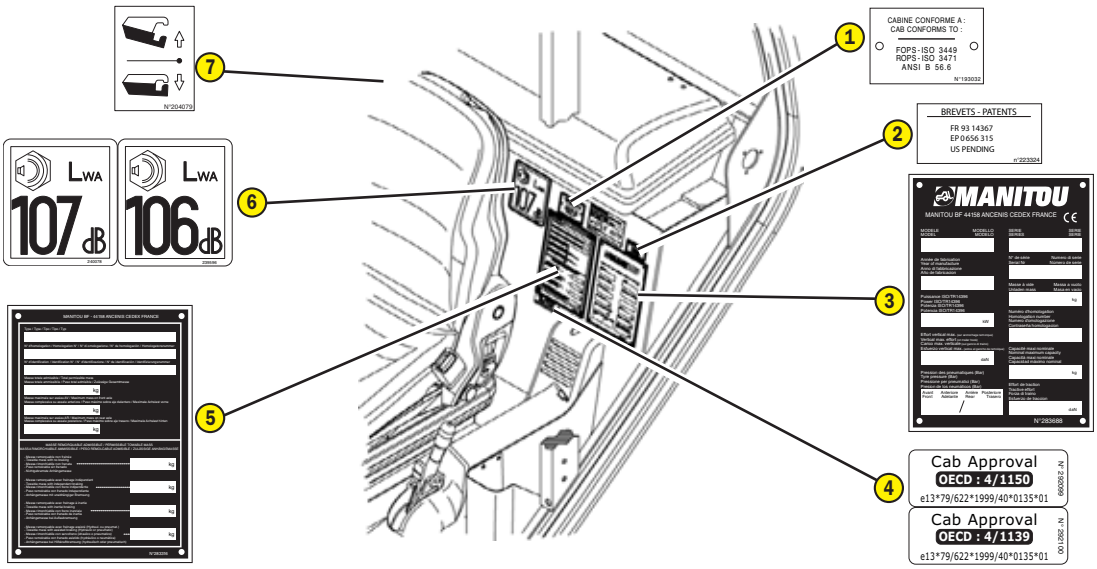

REF	PART NUMBER	DESCRIPTION
1	193032	Cab compliance
2	223324	Patents
3	Consult your dealer	Manufacturer's plate
4	292099	Cab homologation (according to model)
	292100	Cab homologation (according to model)
5	Consult your dealer	Lift truck certification plate
6	239596	Acoustic power (for ... Turbo ... only)
	240078	Acoustic power (for ... -120 ... only)
7	204079	Hydraulic trailer hook (option)
8	268491	Break fluid instruction
9	33460	Gear lever control (except for MLT ... POWERSHIFT ...)
10	265284	Lifting ring on carriage (option)
11	184276	Forward/reverse lever control
12	290183	Bucket instruction on telescope
13	297733	Operating mode management instruction
14	291213	Fuses
15	240805	Reach chart sheet
16	Consult your dealer	Load chart
17	255968	Manipulator function sheet (except for MLT ... POWERSHIFT ... and MLT 1035 L)
	266412	Manipulator function sheet (for MLT ... POWERSHIFT ... only)
	272035	Manipulator function sheet (for MLT 1035 L only)
18	272040	Transmission cut-off switch function sheet
19	241621	Safety instruction sheet
20	294831	Reset procedure sheet
21	276765	Carriage lifting ring sheet (MLT 731 Turbo option)
	289429	Carriage lifting ring sheet (option MLT 735 ... LSU ...)
	287539	Carriage lifting ring sheet (MLT 1035 L Turbo LSU option)

https://truckmanualshub.com/

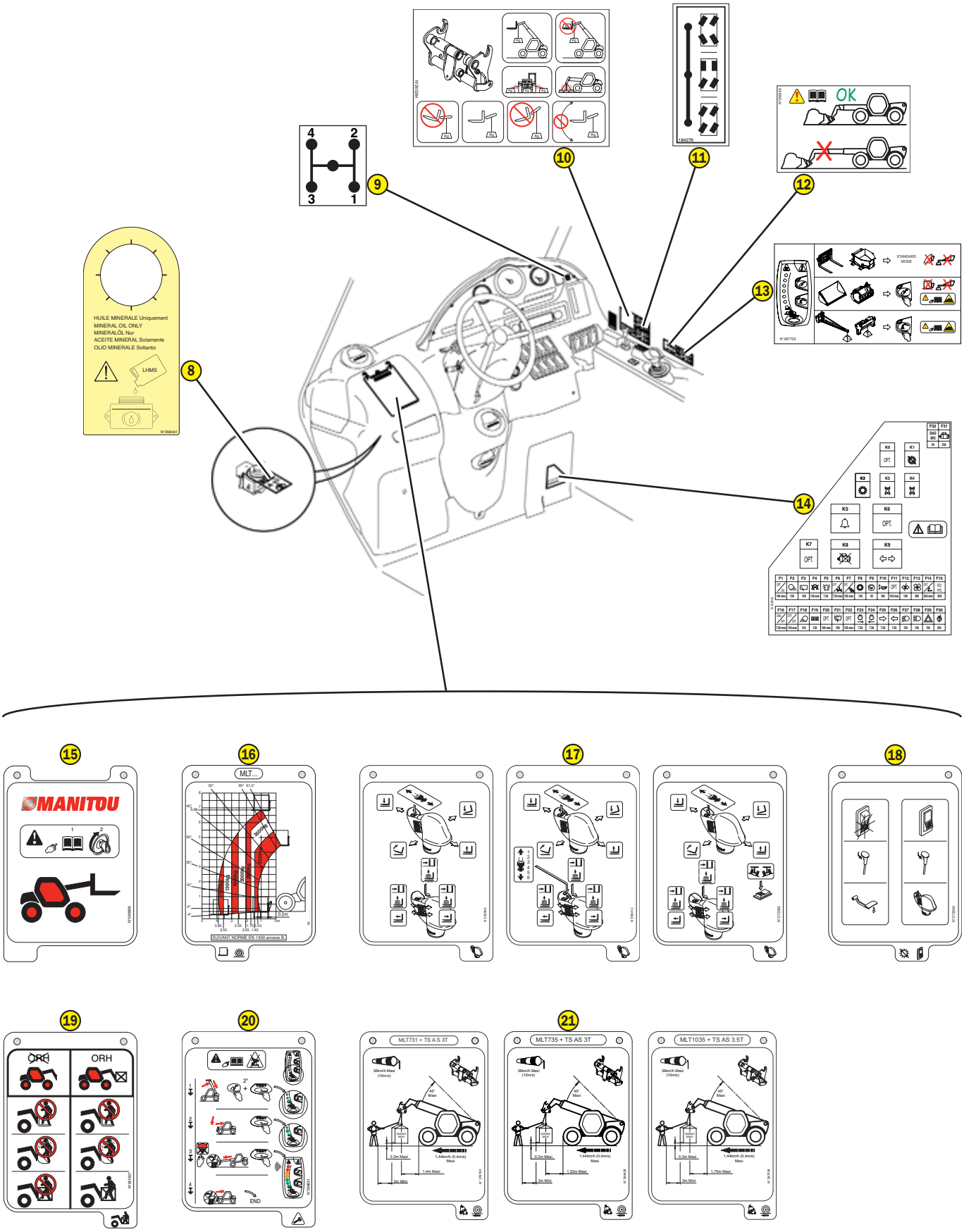

https://truckmanualshub.com/

IDENTIFICATION OF THE LIFT TRUCK

As our policy is to promote a constant improvement of our products, our range of telescopic lift trucks may undergo certain modifications, without obligation for us to advise our customers.

When you order parts, or when you require any technical information, always specify:

NOTE: For the owner's convenience, it is recommended that a note of these numbers is made in the spaces provided, at the time of the delivery of the lift truck.

LIFT TRUCK MANUFACTURER'S PLATE (FIG. A)

- Model .....
- Series .....
- Serial Nr .....
- Year of manufacture .....

For any further technical information regarding your lift truck refer to chapter: 2 - DESCRIPTION: CHARACTERISTICS.

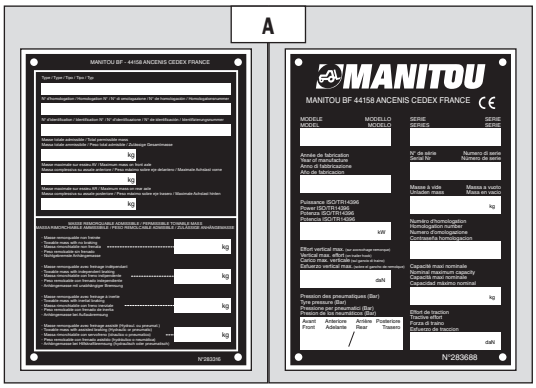

I.C. ENGINE (FIG. B)

- I.C. engine Nr .....

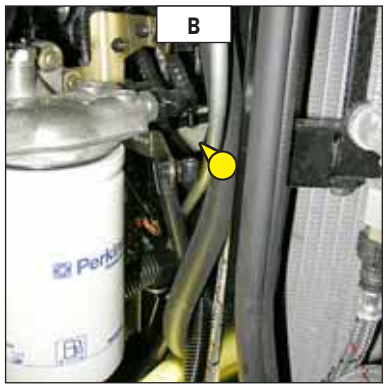

GEAR BOX (FIG. C)

- Type .....
- MANITOU reference .....
- Serial Nr .....

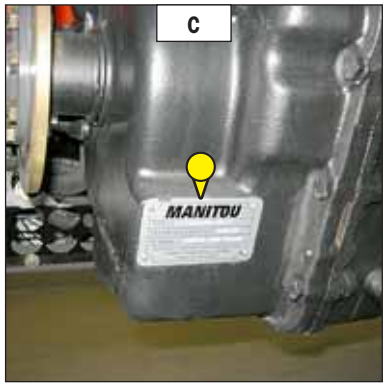

ANGLE GEARBOX (FIG. D)

- Type .....
- MANITOU reference .....
- Serial Nr .....

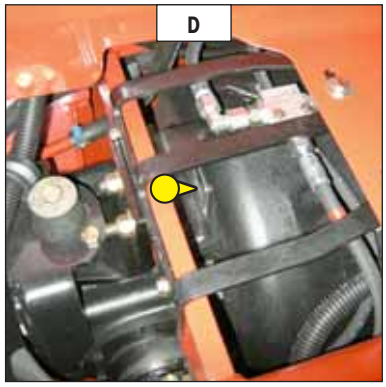

https://truckmanualshub.com/

FRONT AXLE (FIG. E)

- Type .....
- Serial Nr .....
- MANITOU reference .....

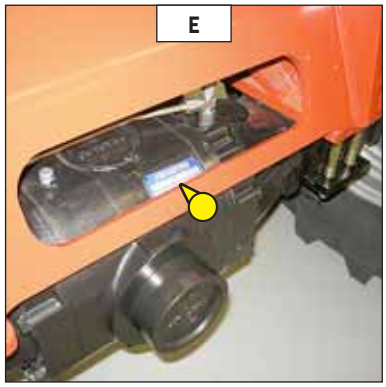

REAR AXLE (FIG. F)

- Type .....
- Serial Nr .....
- MANITOU reference .....

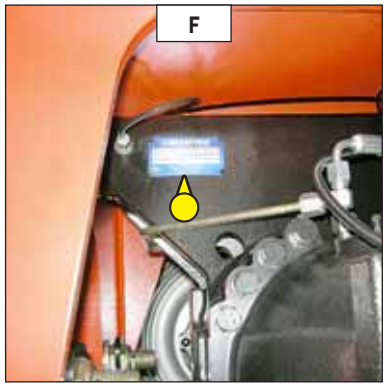

CAB (FIG. G)

- Type .....
- Serial Nr .....

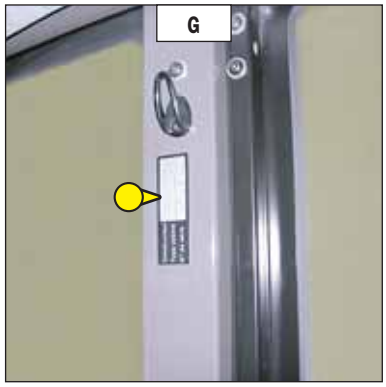

BOOM (FIG. H)

- MANITOU reference .....
- Date of manufacture .....

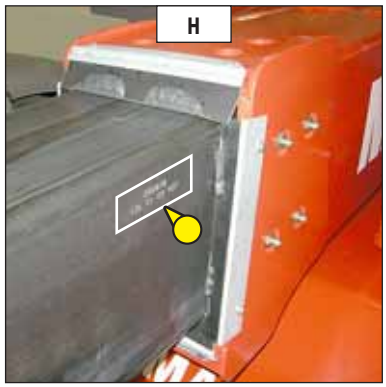

PLATE MANUFACTURER OF THE ATTACHMENT (FIG. I)

- Model .....
- Serial Nr .....
- Year of manufacture .....

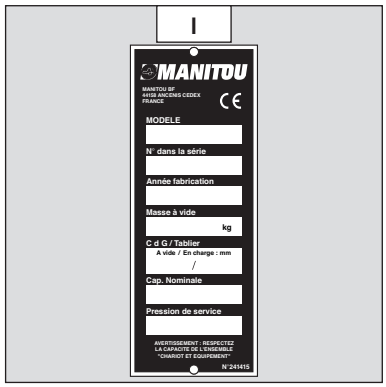

https://truckmanualshub.com/

CHARACTERISTICS

MLT 634 Turbo LSU Série F-E3

I.C. ENGINE		
Type		PERKINS 1104D-44TA NM38858
Fuel		Diesel
Number of cylinders		4 in line
Suction		Supercharged
Injection system		Direct
Ignition sequence		1,3,4,2
Capacity	cm3	4400
Bore and stroke	mm	105 x 127
Compression ratio		18,2:1
Nominal rating loaded	rpm	2200
Rating slow unladen	rpm	930
Max. rating unladen	rpm	2400
Power ISO/TR 14396	cv- kW	101 - 74,5
Power SAE J 1995	cv- kW	101 - 74,5
Maximum torque ISO/TR 14396	Nm	410 to 1400 rpm
Air cleaner	µm	3
Type of cooling		By water
Fan		Puller

TRANSMISSION		
Gear box		TURNER
Type		Mechanical
Forward/reverse selector		Electro-hydraulic
Torque converter		SACHS
Number of forward speeds		4
Number of reverse speeds		4
Angle gear box		TURNER
Front axle		DANA
Differential		Limited slip
Rear axle		DANA
Differential		Without locking
Drive wheels		4RM Permanent
Switch for 2/4 drive wheels		No
Front tyres		MICHELIN
Size		460-70 R24 159A8 XMCL
Pressure	bar	3,4
Rear tyres		MICHELIN
Size		460-70 R24 159A8 XMCL
Pressure	bar	3,4

ELECTRIC CIRCUIT		
Battery	Standard	12 V - 110 Ah - 750 A EN
	Option	12 V - 145 Ah - 1000 A EN
Alternator		12 V - 85 A
Type		Denso Ai115
Starter		12 V - 3,2 kW
Type		AZE

BRAKE CIRCUIT		
Service brake		Hydraulic power brake
Type of brake		Multidisk brake immersed in oil
Type of control		Foot-operated for the front and rear axles
Parking brake		Mechanical
Type of brake		Disk on gear-box output
Type of control		Manual

SOUND AND VIBRATION		
Level of sound pressure in the driver's cab LpA (according to standard NF EN 12053)	dB	76
Level of sound power ensured in the LwA environment (according to directive 2000/14/EC modified by directive 2005/88/EC)	dB	104 (measured) 105 (ensured)
Average weighted acceleration on driver's body (according to standard NF EN 13059)	m/s2	
The average weighted acceleration transmitted to the driver's hand/arm system (according to standard ISO 5349-2)	m/s2	< 2,5

https://truckmanualshub.com/

HYDRAULIC CIRCUIT		
Hydraulic pump		
Type		Variable volume pistons
		1st casing
Capacity	cm3	45
Max. rating capacity unladen	l/mn	108
Flow rate at 1600 rpm	l/mn	72
Filtration		
Return	µm	15
Suction	µm	125
Maximum service pressure	bar	270
Telescoping circuit	bar	200 / 270
Lifting circuit	bar	270 / 270
Tilt circuit	bar	190 / 270
Attachment circuit	bar	270
Steering circuit	bar	140

HYDRAULIC MOVEMENTS		
Longitudinal stability limiter and warning device		Electronic
Lifting motions (boom retracted)		
Unladen lifting	s - m/mn	6,7 - 37,8
Laden lifting	s - m/mn	7,9 - 32,1
Unladen lowering	s - m/mn	5,1 - 49,7
Laden lowering	s - m/mn	4,9 - 51,7
Telescoping motions (boom raised)		
Unladen extending	s - m/mn	6,7 - 17,3
Laden extending	s - m/mn	7,3 - 18,8
Unladen retracting	s - m/mn	6,0 - 21,0
Laden retracting	s - m/mn	5,9 - 21,4
Tilting movements		
Unladen digging	s - °/s	3,5 - 41,7
Forward tilting unladen	s - °/s	3,0 - 48,7

SPECIFICATIONS AND WEIGHTS			
Speed of movement for lift truck in standard configuration on flat ground (except particular conditions)			
Front unladen	1	km/h	5,3
	2	km/h	8,6
	3	km/h	18,2
	4	km/h	32,5
Rear unladen	1	km/h	5,3
	2	km/h	8,6
	3	km/h	18,2
	4	km/h	32,5
Standard attachment			PFB
Weight of attachment (without fork)		kg	95
Weight of forks (each one)		kg	72,5
Rated capacity with standard attachment		kg	3400
Tipping load at maximum reach on tyres		kg	2030
Distance from the centre of gravity from the load to the lug of the forks		mm	500
Standard lifting height		mm	6050
Lift truck weight without attachment		kg	6945
Lift truck weight with standard attachment			
Unladen		kg	7185
At rated load		kg	10585
Weight per axle with standard attachment (transport position)			
Front unladen		kg	3120
Rear unladen		kg	4065
Front rated load		kg	8925
Rear rated load		kg	1660
Weight per axle with standard attachment (boom extended)			
Front rated load		kg	7765
Rear rated load		kg	920
Authorised gross vehicle weight		daN	28000
Contact pressure on the ground for the whole surface of each stabilizer at maximum load when tilting		kg/cm2	-
Drag strain on the coupling hook			
Unladen (sliding)		daN	5820
At rated load (transmission setting)		daN	9110
Pull strain with open carrier (according to standard ISO 8313)		daN	5200

https://truckmanualshub.com/

CHARACTERISTICS

MLT 634 -120 LSU Série F-E3

I.C. ENGINE		
Type		PERKINS 1104D-E44TA NJ38698
Fuel		Diesel
Number of cylinders		4 in line
Suction		Supercharged
Injection system		Direct
Ignition sequence		1,3,4,2
Capacity	cm3	4400
Bore and stroke	mm	105 x 127
Compression ratio		16,2:1
Nominal rating loaded	rpm	2200
Rating slow unladen	rpm	930
Max. rating unladen	rpm	2360
Power ISO/TR 14396	cv- kW	124 - 91
Power SAE J 1995	cv- kW	124 - 91
Maximum torque ISO/TR 14396	Nm	490 to 1400 rpm
Air cleaner	µm	3
Type of cooling		By water
Fan		Puller

TRANSMISSION		
Gear box		TURNER
Type		Mechanical
Forward/reverse selector		Electro-hydraulic
Torque converter		SACHS
Number of forward speeds		4
Number of reverse speeds		4
Angle gear box		TURNER
Front axle		DANA
Differential		Limited slip
Rear axle		DANA
Differential		Without locking
Drive wheels		4RM Permanent
Switch for 2/4 drive wheels		No
Front tyres		MICHELIN
Size		460-70 R24 159A8 TL
Pressure	bar	3,4
Rear tyres		MICHELIN
Size		460-70 R24 159A8 TL
Pressure	bar	3,4

ELECTRIC CIRCUIT		
Battery	Standard Option	12 V - 2 x 74 Ah - 2 x 680 A EN
Alternator		12 V - 85 A
Type		Denso Ai115
Starter		12 V - 4,2 kW
Type		AZF

BRAKE CIRCUIT		
Service brake		Hydraulic power brake
Type of brake		Multidisk brake immersed in oil
Type of control		Foot-operated for the front and rear axles
Parking brake		Mechanical
Type of brake		Discon gear-box output
Type of control		Manual

SOUND AND VIBRATION		
Level of sound pressure in the driver's cab LpA (according to standard NF EN 12053)	dB	79
Level of sound power ensured in the LwA environment (according to directive 2000/14/EC modified by directive 2005/88/EC)	dB	106 (measured) 107 (ensured)
Average weighted acceleration on driver's body (according to standard NF EN 13059)	m/s2	
The average weighted acceleration transmitted to the driver's hand/arm system (according to standard ISO 5349-2)	m/s2	< 2,5

https://truckmanualshub.com/

HYDRAULIC CIRCUIT		
Hydraulic pump		
Type		Variable volume pistons
		1st casing
Capacity	cm3	63
Max. rating capacity unladen	l/mn	149
Flow rate at 1600 rpm	l/mn	101
Filtration		
Return	µm	15
Suction	µm	125
Maximum service pressure	bar	270
Telescoping circuit	bar	200 / 270
Lifting circuit	bar	270 / 270
Tilt circuit	bar	190 / 270
Attachment circuit	bar	270
Steering circuit	bar	140

HYDRAULIC MOVEMENTS		
Longitudinal stability limiter and warning device		Electronic
Lifting motions (boom retracted)		
Unladen lifting	s - m/mn	6,4 - 39,6
Laden lifting	s - m/mn	7,6 - 33,3
Unladen lowering	s - m/mn	4,6 - 55,1
Laden lowering	s - m/mn	4,4 - 57,6
Telescoping motions (boom raised)		
Unladen extending	s - m/mn	6,0 - 19,1
Laden extending	s - m/mn	6,6 - 21,0
Unladen retracting	s - m/mn	5,2 - 22,9
Laden retracting	s - m/mn	5,4 - 23,3
Tilting movements		
Unladen digging	s - °/s	3,2 - 45,6
Forward tilting unladen	s - °/s	2,7 - 54,1

SPECIFICATIONS AND WEIGHTS			
Speed of movement for lift truck in standard configuration on flat ground (except particular conditions)			
Front unladen	1	km/h	5,3
	2	km/h	8,6
	3	km/h	18,2
	4	km/h	32,5
Rear unladen	1	km/h	5,3
	2	km/h	8,6
	3	km/h	18,2
	4	km/h	32,5
Standard attachment			PFB
Weight of attachment (without fork)		kg	95
Weight of forks (each one)		kg	72,5
Rated capacity with standard attachment		kg	3400
Tipping load at maximum reach on tyres		kg	2030
Distance from the centre of gravity from the load to the lug of the forks		mm	500
Standard lifting height		mm	6050
Lift truck weight without attachment		kg	6260
Lift truck weight with standard attachment			
Unladen		kg	7200
At rated load		kg	10600
Weight per axle with standard attachment (transport position)			
Front unladen		kg	3125
Rear unladen		kg	4075
Front rated load		kg	8935
Rear rated load		kg	1665
Weight per axle with standard attachment (boom extended)			
Front rated load		kg	7775
Rear rated load		kg	925
Authorised gross vehicle weight		daN	28000
Contact pressure on the ground for the whole surface of each stabilizer at maximum load when tilting		kg/cm2	-
Drag strain on the coupling hook			
Unladen (sliding)		daN	5600
At rated load (transmission setting)		daN	7880
Pull strain with open carrier (according to standard ISO 8313)		daN	5200

https://truckmanualshub.com/

CHARACTERISTICS

MLT 634 -120 LSU POWERSHIFT Série F-E3

I.C. ENGINE		
Type		PERKINS 1104D-E44TA NJ38698
Fuel		Diesel
Number of cylinders		4 in line
Suction		Supercharged
Injection system		Direct
Ignition sequence		1,3,4,2
Capacity	cm3	4400
Bore and stroke	mm	105 x 127
Compression ratio		16,2:1
Nominal rating loaded	rpm	2200
Rating slow unladen	rpm	930
Max. rating unladen	rpm	2360
Power ISO/TR 14396	cv- kW	124 - 91
Power SAE J 1995	cv- kW	124 - 91
Maximum torque ISO/TR 14396	Nm	490 to 1400 rpm
Air cleaner	µm	3
Type of cooling		By water
Fan		Puller

TRANSMISSION		
Gear box		TURNER
Type		Mechanical
Forward/reverse selector		Electro-hydraulic
Torque converter		SACHS
Number of forward speeds		6
Number of reverse speeds		3
Angle gear box		TURNER
Front axle		DANA
Differential		Limited slip
Rear axle		DANA
Differential		Without locking
Drive wheels		4RM Permanent
Switch for 2/4 drive wheels		No
Front tyres		MICHELIN
Size		460-70 R24 159A8 TL
Pressure	bar	3,4
Rear tyres		MICHELIN
Size		460-70 R24 159A8 TL
Pressure	bar	3,4

ELECTRIC CIRCUIT		
Battery	Standard Option	12 V - 2 x 74 Ah - 2 x 680 A EN
Alternator		12 V - 85 A
Type		Denso Ai115
Starter		12 V - 4,2 kW
Type		AZF

BRAKE CIRCUIT	
Service brake	Hydraulic power brake
Type of brake	Multidisk brake immersed in oil
Type of control	Foot-operated for the front and rear axles
Parking brake	Mechanical
Type of brake	Disk on gear-box output
Type of control	Manual

SOUND AND VIBRATION		
Level of sound pressure in the driver's cab LpA (according to standard NF EN 12053)	dB	79
Level of sound power ensured in the LwA environment (according to directive 2000/14/EC modified by directive 2005/88/EC)	dB	106 (measured) 107 (ensured)
Average weighted acceleration on driver's body (according to standard NF EN 13059)	m/s2	
The average weighted acceleration transmitted to the driver's hand/arm system (according to standard ISO 5349-2)	m/s2	< 2,5

https://truckmanualshub.com/

HYDRAULIC CIRCUIT		
Hydraulic pump		
Type		Variable volume pistons
		1st casing
Capacity	cm3	63
Max. rating capacity unladen	l/mn	149
Flow rate at 1600 rpm	l/mn	101
Filtration		
Return	µm	15
Suction	µm	125
Maximum service pressure	bar	270
Telescoping circuit	bar	200 / 270
Lifting circuit	bar	270 / 270
Tilt circuit	bar	190 / 270
Attachment circuit	bar	270
Steering circuit	bar	140

HYDRAULIC MOVEMENTS		
Longitudinal stability limiter and warning device		Electronic
Lifting motions (boom retracted)		
Unladen lifting	s - m/mn	6,4 - 39,6
Laden lifting	s - m/mn	7,6 - 33,3
Unladen lowering	s - m/mn	4,6 - 55,1
Laden lowering	s - m/mn	4,4 - 57,6
Telescoping motions (boom raised)		
Unladen extending	s - m/mn	6,0 - 19,1
Laden extending	s - m/mn	6,6 - 21,0
Unladen retracting	s - m/mn	5,2 - 22,9
Laden retracting	s - m/mn	5,4 - 23,3
Tilting movements		
Unladen digging	s - °/s	3,2 - 45,6
Forward tilting unladen	s - °/s	2,7 - 54,1

SPECIFICATIONS AND WEIGHTS			
Speed of movement for lift truck in standard configuration on flat ground (except particular conditions)			
Front unladen	1	km/h	5,3
	2	km/h	8,6
	3	km/h	11,3
	4	km/h	18,2
	5	km/h	22,7
	6	km/h	36,6
Rear unladen	1	km/h	5,3
	2	km/h	11,3
	3	km/h	22,7
Standard attachment			PFB
Weight of attachment (without fork)		kg	95
Weight of forks (each one)		kg	72,5
Rated capacity with standard attachment		kg	3400
Tipping load at maximum reach on tyres		kg	2030
Distance from the centre of gravity from the load to the lug of the forks		mm	500
Standard lifting height		mm	6050
Lift truck weight without attachment		kg	7150
Lift truck weight with standard attachment			
Unladen		kg	7390
At rated load		kg	10790
Weight per axle with standard attachment (transport position)			
Front unladen		kg	3205
Rear unladen		kg	4185
Front rated load		kg	9095
Rear rated load		kg	1695
Weight per axle with standard attachment (boom extended)			
Front rated load		kg	7945
Rear rated load		kg	945
Authorised gross vehicle weight		daN	28000
Contact pressure on the ground for the whole surface of each stabilizer at maximum load when tilting		kg/cm2	-
Drag strain on the coupling hook			
Unladen (sliding)		daN	5400
At rated load (transmission setting)		daN	8760
Pull strain with open carrier (according to standard ISO 8313)		daN	5200

https://truckmanualshub.com/

CHARACTERISTICS

MLT 731 Turbo Série F-E3

I.C. ENGINE		
Type		PERKINS 1104D-44TA NM38858
Fuel		Diesel
Number of cylinders		4 in line
Suction		Supercharged
Injection system		Direct
Ignition sequence		1,3,4,2
Capacity	cm3	4400
Bore and stroke	mm	105 x 127
Compression ratio		18,2:1
Nominal rating loaded	rpm	2200
Rating slow unladen	rpm	930
Max. rating unladen	rpm	2400
Power ISO/TR 14396	cv- kW	101 - 74,5
Power SAE J 1995	cv- kW	101 - 74,5
Maximum torque ISO/TR 14396	Nm	410 to 1400 rpm
Air cleaner	µm	3
Type of cooling		By water
Fan		Puller

TRANSMISSION		
Gear box		TURNER
Type		Mechanical
Forward/reverse selector		Electro-hydraulic
Torque converter		SACHS
Number of forward speeds		4
Number of reverse speeds		4
Angle gear box		TURNER
Front axle		DANA
Differential		Limited slip
Rear axle		DANA
Differential		Without locking
Drive wheels		4RM Permanent
Switch for 2/4 drive wheels		No
Front tyres		MICHELIN
Size		460-70 R24 159A8 XMCL
Pressure	bar	3,4
Rear tyres		MICHELIN
Size		460-70 R24 159A8 XMCL
Pressure	bar	3,4

ELECTRIC CIRCUIT		
Battery	Standard	12 V - 110 Ah - 750 A EN
	Option	12 V - 145 Ah - 1000 A EN
Alternator		12 V - 85 A
Type		Denso Ai115
Starter		12 V - 3,2 kW
Type		AZE

BRAKE CIRCUIT	
Service brake	Hydraulic power brake
Type of brake	Multidisk brake immersed in oil
Type of control	Foot-operated for the front and rear axles
Parking brake	Mechanical
Type of brake	Disk on gear-box output
Type of control	Manual

SOUND AND VIBRATION		
Level of sound pressure in the driver's cab LpA (according to standard NF EN 12053)	dB	76
Level of sound power ensured in the LwA environment (according to directive 2000/14/EC modified by directive 2005/88/EC)	dB	104 (measured) 105 (ensured)
Average weighted acceleration on driver's body (according to standard NF EN 13059)	m/s2	
The average weighted acceleration transmitted to the driver's hand/arm system (according to standard ISO 5349-2)	m/s2	< 2,5

HYDRAULIC CIRCUIT			
Hydraulic pump			
Type		Gear pump with flow divider	
		1st casing	2nd casing
Capacity	cm3	22	22
Max. rating capacity unladen	l/mn	53	53
Flow rate at 1600 rpm	l/mn	35	35
Filtration			
Return	µm	15	15
Suction	µm	125	125
Maximum service pressure	bar	260	
Telescoping circuit	bar	190 / 260	
Lifting circuit	bar	260 / 260	
Tilt circuit	bar	190 / 260	
Attachment circuit	bar	260	
Steering circuit	bar	140	

HYDRAULIC MOVEMENTS		
Longitudinal stability limiter and warning device		Electronic
Lifting motions (boom retracted)		
Unladen lifting	s - m/mn	6,7 - 40,2
Laden lifting	s - m/mn	8,7 - 31,0
Unladen lowering	s - m/mn	5,7 - 47,2
Laden lowering	s - m/mn	5,6 - 48,1
Telescoping motions (boom raised)		
Unladen extending	s - m/mn	6,4 - 24,2
Laden extending	s - m/mn	6,7 - 25,3
Unladen retracting	s - m/mn	7,1 - 22,8
Laden retracting	s - m/mn	7,3 - 22,2
Tilting movements		
Unladen digging	s - °/s	3,0 - 48,8
Forward tilting unladen	s - °/s	2,6 - 56,3

SPECIFICATIONS AND WEIGHTS			
Speed of movement for lift truck in standard configuration on flat ground (except particular conditions)			
Front unladen	1	km/h	5,3
	2	km/h	8,6
	3	km/h	18,2
	4	km/h	32,5
Rear unladen	1	km/h	5,3
	2	km/h	8,6
	3	km/h	18,2
	4	km/h	32,5
Standard attachment			PFB
Weight of attachment (without fork)		kg	95
Weight of forks (each one)		kg	72,5
Rated capacity with standard attachment		kg	3100
Tipping load at maximum reach on tyres		kg	1420
Distance from the centre of gravity from the load to the lug of the forks		mm	500
Standard lifting height		mm	6900
Lift truck weight without attachment		kg	7070
Lift truck weight with standard attachment			
Unladen		kg	7310
At rated load		kg	10410
Weight per axle with standard attachment (transport position)			
Front unladen		kg	3465
Rear unladen		kg	3845
Front rated load		kg	9190
Rear rated load		kg	1220
Weight per axle with standard attachment (boom extended)			
Front rated load		kg	7580
Rear rated load		kg	730
Authorised gross vehicle weight		daN	28000
Contact pressure on the ground for the whole surface of each stabilizer at maximum load when tilting		kg/cm2	-
Drag strain on the coupling hook			
Unladen (sliding)		daN	6100
At rated load (transmission setting)		daN	8360
Pull strain with open carrier (according to standard ISO 8313)		daN	5650

https://truckmanualshub.com/

CHARACTERISTICS

MLT 735 Turbo LSU Série 6-E3

I.C. ENGINE		
Type		PERKINS 1104D-44TA NM38858
Fuel		Diesel
Number of cylinders		4 in line
Suction		Supercharged
Injection system		Direct
Ignition sequence		1,3,4,2
Capacity	cm3	4400
Bore and stroke	mm	105 x 127
Compression ratio		18,2:1
Nominal rating loaded	rpm	2200
Rating slow unladen	rpm	930
Max. rating unladen	rpm	2400
Power ISO/TR 14396	cv- kW	101 - 74,5
Power SAE J 1995	cv- kW	101 - 74,5
Maximum torque ISO/TR 14396	Nm	410 to 1400 rpm
Air cleaner	µm	3
Type of cooling		By water
Fan		Puller

TRANSMISSION		
Gear box		TURNER
Type		Mechanical
Forward/reverse selector		Electro-hydraulic
Torque converter		SACHS
Number of forward speeds		4
Number of reverse speeds		4
Angle gear box		TURNER
Front axle		DANA
Differential		Limited slip
Rear axle		DANA
Differential		Without locking
Drive wheels		4RM Permanent
Switch for 2/4 drive wheels		No
Front tyres		MICHELIN
Size		460-70 R24 159A8 XMCL
Pressure	bar	3,4
Rear tyres		MICHELIN
Size		460-70 R24 159A8 XMCL
Pressure	bar	3,4

ELECTRIC CIRCUIT		
Battery	Standard	12 V - 110 Ah - 750 A EN
	Option	12 V - 145 Ah - 1000 A EN
Alternator		12 V - 85 A
Type		Denso Ai115
Starter		12 V - 3,2 kW
Type		AZE

BRAKE CIRCUIT	
Service brake	Hydraulic power brake
Type of brake	Multidisk brake immersed in oil
Type of control	Foot-operated for the front and rear axles
Parking brake	Mechanical
Type of brake	Disk on gear-box output
Type of control	Manual

SOUND AND VIBRATION		
Level of sound pressure in the driver's cab LpA (according to standard NF EN 12053)	dB	76
Level of sound power ensured in the LwA environment (according to directive 2000/14/EC modified by directive 2005/88/EC)	dB	104 (measured) 105 (ensured)
Average weighted acceleration on driver's body (according to standard NF EN 13059)	m/s2	
The average weighted acceleration transmitted to the driver's hand/arm system (according to standard ISO 5349-2)	m/s2	< 2,5

https://truckmanualshub.com/

HYDRAULIC CIRCUIT		
Hydraulic pump		
Type		Variable volume pistons
		1st casing
Capacity	cm3	45
Max. rating capacity unladen	l/mn	108
Flow rate at 1600 rpm	l/mn	72
Filtration		
Return	µm	15
Suction	µm	125
Maximum service pressure	bar	270
Telescoping circuit	bar	200 / 270
Lifting circuit	bar	270 / 270
Tilt circuit	bar	190 / 270
Attachment circuit	bar	270
Steering circuit	bar	140

HYDRAULIC MOVEMENTS		
Longitudinal stability limiter and warning device		Electronic
Lifting motions (boom retracted)		
Unladen lifting	s - m/mn	7,3 - 36,9
Laden lifting	s - m/mn	7,5 - 35,9
Unladen lowering	s - m/mn	5,6 - 48,1
Laden lowering	s - m/mn	5,6 - 48,1
Telescoping motions (boom raised)		
Unladen extending	s - m/mn	8,2 - 19,5
Laden extending	s - m/mn	8,3 - 19,8
Unladen retracting	s - m/mn	6,6 - 24,5
Laden retracting	s - m/mn	6,8 - 23,8
Tilting movements		
Unladen digging	s - °/s	3,2 - 45,7
Forward tilting unladen	s - °/s	2,7 - 54,2

SPECIFICATIONS AND WEIGHTS			
Speed of movement for lift truck in standard configuration on flat ground (except particular conditions)			
Front unladen	1	km/h	5,3
	2	km/h	8,6
	3	km/h	18,2
	4	km/h	32,5
Rear unladen	1	km/h	5,3
	2	km/h	8,6
	3	km/h	18,2
	4	km/h	32,5
Standard attachment			PFB
Weight of attachment (without fork)		kg	95
Weight of forks (each one)		kg	72,5
Rated capacity with standard attachment		kg	3500
Tipping load at maximum reach on tyres		kg	1490
Distance from the centre of gravity from the load to the lug of the forks		mm	500
Standard lifting height		mm	6860
Lift truck weight without attachment		kg	6835
Lift truck weight with standard attachment			
Unladen		kg	7075
At rated load		kg	10575
Weight per axle with standard attachment (transport position)			
Front unladen		kg	3335
Rear unladen		kg	3740
Front rated load		kg	9265
Rear rated load		kg	1310
Weight per axle with standard attachment (boom extended)			
Front rated load		kg	7505
Rear rated load		kg	720
Authorised gross vehicle weight		daN	28000
Contact pressure on the ground for the whole surface of each stabilizer at maximum load when tilting		kg/cm2	-
Drag strain on the coupling hook			
Unladen (sliding)		daN	5065
At rated load (transmission setting)		daN	7920
Pull strain with open carrier (according to standard ISO 8313)		daN	3600

https://truckmanualshub.com/

CHARACTERISTICS

MLT 735 -120 LSU Série 6-E3

I.C. ENGINE		
Type		PERKINS 1104D-E44TA NJ38698
Fuel		Diesel
Number of cylinders		4 in line
Suction		Supercharged
Injection system		Direct
Ignition sequence		1,3,4,2
Capacity	cm3	4400
Bore and stroke	mm	105 x 127
Compression ratio		16,2:1
Nominal rating loaded	rpm	2200
Rating slow unladen	rpm	930
Max. rating unladen	rpm	2360
Power ISO/TR 14396	cv- kW	124 - 91
Power SAE J 1995	cv- kW	124 - 91
Maximum torque ISO/TR 14396	Nm	490 to 1400 rpm
Air cleaner	µm	3
Type of cooling		By water
Fan		Puller

TRANSMISSION		
Gear box		TURNER
Type		Mechanical
Forward/reverse selector		Electro-hydraulic
Torque converter		SACHS
Number of forward speeds		4
Number of reverse speeds		4
Angle gear box		TURNER
Front axle		DANA
Differential		Limited slip
Rear axle		DANA
Differential		Without locking
Drive wheels		4RM Permanent
Switch for 2/4 drive wheels		No
Front tyres		MICHELIN
Size		460-70 R24 159A8 TL
Pressure	bar	3,4
Rear tyres		MICHELIN
Size		460-70 R24 159A8 TL
Pressure	bar	3,4

ELECTRIC CIRCUIT		
Battery	Standard Option	12 V - 2 x 74 Ah - 2 x 680 A EN
Alternator		12 V - 85 A
Type		Denso Ai115
Starter		12 V - 4,2 kW
Type		AZF

BRAKE CIRCUIT		
Service brake		Hydraulic power brake
Type of brake		Multidisk brake immersed in oil
Type of control		Foot-operated for the front and rear axles
Parking brake		Mechanical
Type of brake		Discon gear-box output
Type of control		Manual

SOUND AND VIBRATION		
Level of sound pressure in the driver's cab LpA (according to standard NF EN 12053)	dB	79
Level of sound power ensured in the LwA environment (according to directive 2000/14/EC modified by directive 2005/88/EC)	dB	106 (measured) 107 (ensured)
Average weighted acceleration on driver's body (according to standard NF EN 13059)	m/s2	
The average weighted acceleration transmitted to the driver's hand/arm system (according to standard ISO 5349-2)	m/s2	< 2,5

https://truckmanualshub.com/

HYDRAULIC CIRCUIT		
Hydraulic pump		
Type		Variable volume pistons
		1st casing
Capacity	cm3	63
Max. rating capacity unladen	l/mn	149
Flow rate at 1600 rpm	l/mn	101
Filtration		
Return	µm	15
Suction	µm	125
Maximum service pressure	bar	270
Telescoping circuit	bar	200 / 270
Lifting circuit	bar	270 / 270
Tilt circuit	bar	190 / 270
Attachment circuit	bar	270
Steering circuit	bar	140

HYDRAULIC MOVEMENTS		
Longitudinal stability limiter and warning device		Electronic
Lifting motions (boom retracted)		
Unladen lifting	s - m/mn	6,7 - 40,2
Laden lifting	s - m/mn	7,3 - 36,9
Unladen lowering	s - m/mn	4,8 - 56,1
Laden lowering	s - m/mn	4,6 - 58,5
Telescoping motions (boom raised)		
Unladen extending	s - m/mn	7,1 - 22,2
Laden extending	s - m/mn	7,3 - 22,8
Unladen retracting	s - m/mn	5,7 - 28,4
Laden retracting	s - m/mn	5,5 - 29,5
Tilting movements		
Unladen digging	s - °/s	3,0 - 48,8
Forward tilting unladen	s - °/s	2,35 - 62,3

SPECIFICATIONS AND WEIGHTS			
Speed of movement for lift truck in standard configuration on flat ground (except particular conditions)			
Front unladen	1	km/h	5,3
	2	km/h	8,6
	3	km/h	18,2
	4	km/h	32,5
Rear unladen	1	km/h	5,3
	2	km/h	8,6
	3	km/h	18,2
	4	km/h	32,5
Standard attachment			PFB
Weight of attachment (without fork)		kg	95
Weight of forks (each one)		kg	72,5
Rated capacity with standard attachment		kg	3500
Tipping load at maximum reach on tyres		kg	1490
Distance from the centre of gravity from the load to the lug of the forks		mm	500
Standard lifting height		mm	6860
Lift truck weight without attachment		kg	6860
Lift truck weight with standard attachment			
Unladen		kg	7100
At rated load		kg	10600
Weight per axle with standard attachment (transport position)			
Front unladen		kg	3445
Rear unladen		kg	3655
Front rated load		kg	9370
Rear rated load		kg	1230
Weight per axle with standard attachment (boom extended)			
Front rated load		kg	7630
Rear rated load		kg	620
Authorised gross vehicle weight		daN	28000
Contact pressure on the ground for the whole surface of each stabilizer at maximum load when tilting		kg/cm2	-
Drag strain on the coupling hook			
Unladen (sliding)		daN	5465
At rated load (transmission setting)		daN	7820
Pull strain with open carrier (according to standard ISO 8313)		daN	3700

https://truckmanualshub.com/

CHARACTERISTICS

MLT 735 -120 LSU POWERSHIFT Série 6-E3

I.C. ENGINE		
Type		PERKINS 1104D-E44TA NJ38698
Fuel		Diesel
Number of cylinders		4 in line
Suction		Supercharged
Injection system		Direct
Ignition sequence		1,3,4,2
Capacity	cm3	4400
Bore and stroke	mm	105 x 127
Compression ratio		16,2:1
Nominal rating loaded	rpm	2200
Rating slow unladen	rpm	930
Max. rating unladen	rpm	2360
Power ISO/TR 14396	cv- kW	124 - 91
Power SAE J 1995	cv- kW	124 - 91
Maximum torque ISO/TR 14396	Nm	490 to 1400 rpm
Air cleaner	µm	3
Type of cooling		By water
Fan		Puller

TRANSMISSION		
Gear box		TURNER
Type		Mechanical
Forward/reverse selector		Electro-hydraulic
Torque converter		SACHS
Number of forward speeds		6
Number of reverse speeds		3
Angle gear box		TURNER
Front axle		DANA
Differential		Limited slip
Rear axle		DANA
Differential		Without locking
Drive wheels		4RM Permanent
Switch for 2/4 drive wheels		No
Front tyres		MICHELIN
Size		460-70 R24 159A8 TL
Pressure	bar	3,4
Rear tyres		MICHELIN
Size		460-70 R24 159A8 TL
Pressure	bar	3,4

ELECTRIC CIRCUIT		
Battery	Standard Option	12 V - 2 x 74 Ah - 2 x 680 A EN
Alternator		12 V - 85 A
Type		Denso Ai115
Starter		12 V - 4,2 kW
Type		AZF

BRAKE CIRCUIT	
Service brake	Hydraulic power brake
Type of brake	Multidisk brake immersed in oil
Type of control	Foot-operated for the front and rear axles
Parking brake	Mechanical
Type of brake	Disk on gear-box output
Type of control	Manual

SOUND AND VIBRATION		
Level of sound pressure in the driver's cab LpA (according to standard NF EN 12053)	dB	79
Level of sound power ensured in the LwA environment (according to directive 2000/14/EC modified by directive 2005/88/EC)	dB	106 (measured) 107 (ensured)
Average weighted acceleration on driver's body (according to standard NF EN 13059)	m/s2	
The average weighted acceleration transmitted to the driver's hand/arm system (according to standard ISO 5349-2)	m/s2	< 2,5

https://truckmanualshub.com/

HYDRAULIC CIRCUIT		
Hydraulic pump		
Type		Variable volume pistons
		1st casing
Capacity	cm3	63
Max. rating capacity unladen	l/mn	149
Flow rate at 1600 rpm	l/mn	101
Filtration		
Return	µm	15
Suction	µm	125
Maximum service pressure	bar	270
Telescoping circuit	bar	200 / 270
Lifting circuit	bar	270 / 270
Tilt circuit	bar	190 / 270
Attachment circuit	bar	270
Steering circuit	bar	140

HYDRAULIC MOVEMENTS		
Longitudinal stability limiter and warning device		Electronic
Lifting motions (boom retracted)		
Unladen lifting	s - m/mn	6,7 - 40,2
Laden lifting	s - m/mn	7,3 - 36,9
Unladen lowering	s - m/mn	4,8 - 56,1
Laden lowering	s - m/mn	4,6 - 58,5
Telescoping motions (boom raised)		
Unladen extending	s - m/mn	7,1 - 22,2
Laden extending	s - m/mn	7,3 - 22,8
Unladen retracting	s - m/mn	5,7 - 28,4
Laden retracting	s - m/mn	5,5 - 29,5
Tilting movements		
Unladen digging	s - °/s	3,0 - 48,8
Forward tilting unladen	s - °/s	2,35 - 62,3

SPECIFICATIONS AND WEIGHTS			
Speed of movement for lift truck in standard configuration on flat ground (except particular conditions)			
Front unladen	1	km/h	5,3
	2	km/h	8,6
	3	km/h	11,3
	4	km/h	18,2
	5	km/h	22,7
	6	km/h	36,6
Rear unladen	1	km/h	5,3
	2	km/h	11,3
	3	km/h	22,7
Standard attachment			PFB
Weight of attachment (without fork)		kg	95
Weight of forks (each one)		kg	72,5
Rated capacity with standard attachment		kg	3500
Tipping load at maximum reach on tyres		kg	1490
Distance from the centre of gravity from the load to the lug of the forks		mm	500
Standard lifting height		mm	6860
Lift truck weight without attachment		kg	7010
Lift truck weight with standard attachment			
Unladen		kg	7250
At rated load		kg	10750
Weight per axle with standard attachment (transport position)			
Front unladen		kg	3515
Rear unladen		kg	3735
Front rated load		kg	9505
Rear rated load		kg	1245
Weight per axle with standard attachment (boom extended)			
Front rated load		kg	7770
Rear rated load		kg	630
Authorised gross vehicle weight		daN	28000
Contact pressure on the ground for the whole surface of each stabilizer at maximum load when tilting		kg/cm2	-
Drag strain on the coupling hook			
Unladen (sliding)		daN	4975
At rated load (transmission setting)		daN	8770
Pull strain with open carrier (according to standard ISO 8313)		daN	4200

https://truckmanualshub.com/

CHARACTERISTICS

MLT 741 Turbo LSU Série 6-E3

I.C. ENGINE		
Type		PERKINS 1104D-44TA NM38858
Fuel		Diesel
Number of cylinders		4 in line
Suction		Supercharged
Injection system		Direct
Ignition sequence		1,3,4,2
Capacity	cm3	4400
Bore and stroke	mm	105 x 127
Compression ratio		18,2:1
Nominal rating loaded	rpm	2200
Rating slow unladen	rpm	930
Max. rating unladen	rpm	2400
Power ISO/TR 14396	cv- kW	101 - 74,5
Power SAE J 1995	cv- kW	101 - 74,5
Maximum torque ISO/TR 14396	Nm	410 to 1400 rpm
Air cleaner	µm	3
Type of cooling		By water
Fan		Puller

TRANSMISSION		
Gear box		TURNER
Type		Mechanical
Forward/reverse selector		Electro-hydraulic
Torque converter		SACHS
Number of forward speeds		4
Number of reverse speeds		4
Angle gear box		TURNER
Front axle		DANA
Differential		Limited slip
Rear axle		DANA
Differential		Without locking
Drive wheels		4RM Permanent
Switch for 2/4 drive wheels		No
Front tyres		MICHELIN
Size		460-70 R24 159A8 XMCL
Pressure	bar	3,4
Rear tyres		MICHELIN
Size		460-70 R24 159A8 XMCL
Pressure	bar	3,4

ELECTRIC CIRCUIT		
Battery	Standard	12 V - 110 Ah - 750 A EN
	Option	12 V - 145 Ah - 1000 A EN
Alternator		12 V - 85 A
Type		Denso Ai115
Starter		12 V - 3,2 kW
Type		AZE

BRAKE CIRCUIT	
Service brake	Hydraulic power brake
Type of brake	Multidisk brake immersed in oil
Type of control	Foot-operated for the front and rear axles
Parking brake	Mechanical
Type of brake	Disk on gear-box output
Type of control	Manual

SOUND AND VIBRATION		
Level of sound pressure in the driver's cab LpA (according to standard NF EN 12053)	dB	76
Level of sound power ensured in the LwA environment (according to directive 2000/14/EC modified by directive 2005/88/EC)	dB	104 (measured) 105 (ensured)
Average weighted acceleration on driver's body (according to standard NF EN 13059)	m/s2	
The average weighted acceleration transmitted to the driver's hand/arm system (according to standard ISO 5349-2)	m/s2	< 2,5

https://truckmanualshub.com/

HYDRAULIC CIRCUIT		
Hydraulic pump		
Type		Variable volume pistons
		1st casing
Capacity	cm3	45
Max. rating capacity unladen	l/mn	108
Flow rate at 1600 rpm	l/mn	72
Filtration		
Return	µm	15
Suction	µm	125
Maximum service pressure	bar	270
Telescoping circuit	bar	200 / 270
Lifting circuit	bar	270 / 270
Tilt circuit	bar	190 / 270
Attachment circuit	bar	270
Steering circuit	bar	140

HYDRAULIC MOVEMENTS		
Longitudinal stability limiter and warning device		Electronic
Lifting motions (boom retracted)		
Unladen lifting	s - m/mn	8,2 - 32,9
Laden lifting	s - m/mn	8,3 - 32,5
Unladen lowering	s - m/mn	8,7 - 31,0
Laden lowering	s - m/mn	6,5 - 41,5
Telescoping motions (boom raised)		
Unladen extending	s - m/mn	9,0 - 17,8
Laden extending	s - m/mn	9,1 - 18,0
Unladen retracting	s - m/mn	8,6 - 18,8
Laden retracting	s - m/mn	6,9 - 23,5
Tilting movements		
Unladen digging	s - °/s	3,8 - 38,4
Forward tilting unladen	s - °/s	3,1 - 47,0

SPECIFICATIONS AND WEIGHTS			
Speed of movement for lift truck in standard configuration on flat ground (except particular conditions)			
Front unladen	1	km/h	5,3
	2	km/h	8,6
	3	km/h	18,2
	4	km/h	32,5
Rear unladen	1	km/h	5,3
	2	km/h	8,6
	3	km/h	18,2
	4	km/h	32,5
Standard attachment			PFB
Weight of attachment (without fork)		kg	200
Weight of forks (each one)		kg	77,5
Rated capacity with standard attachment		kg	4100
Tipping load at maximum reach on tyres		kg	1750
Distance from the centre of gravity from the load to the lug of the forks		mm	500
Standard lifting height		mm	6840
Lift truck weight without attachment		kg	7120
Lift truck weight with standard attachment			
Unladen		kg	7475
At rated load		kg	11575
Weight per axle with standard attachment (transport position)			
Front unladen		kg	3325
Rear unladen		kg	4150
Front rated load		kg	10220
Rear rated load		kg	1355
Weight per axle with standard attachment (boom extended)			
Front rated load		kg	7940
Rear rated load		kg	835
Authorised gross vehicle weight		daN	28000
Contact pressure on the ground for the whole surface of each stabilizer at maximum load when tilting		kg/cm2	
Drag strain on the coupling hook			
Unladen (sliding)		daN	5000
At rated load (transmission setting)		daN	7030
Pull strain with open carrier (according to standard ISO 8313)		daN	5550

https://truckmanualshub.com/

CHARACTERISTICS

MLT 741 -120 LSU Série 6-E3

I.C. ENGINE		
Type		PERKINS 1104D-E44TA NJ38698
Fuel		Diesel
Number of cylinders		4 in line
Suction		Supercharged
Injection system		Direct
Ignition sequence		1,3,4,2
Capacity	cm3	4400
Bore and stroke	mm	105 x 127
Compression ratio		16,2:1
Nominal rating loaded	rpm	2200
Rating slow unladen	rpm	930
Max. rating unladen	rpm	2360
Power ISO/TR 14396	cv- kW	124 - 91
Power SAE J 1995	cv- kW	124 - 91
Maximum torque ISO/TR 14396	Nm	490 to 1400 rpm
Air cleaner	µm	3
Type of cooling		By water
Fan		Puller

TRANSMISSION		
Gear box		TURNER
Type		Mechanical
Forward/reverse selector		Electro-hydraulic
Torque converter		SACHS
Number of forward speeds		4
Number of reverse speeds		4
Angle gear box		TURNER
Front axle		DANA
Differential		Limited slip
Rear axle		DANA
Differential		Without locking
Drive wheels		4RM Permanent
Switch for 2/4 drive wheels		No
Front tyres		MICHELIN
Size		460-70 R24 159A8 TL
Pressure	bar	3,4
Rear tyres		MICHELIN
Size		460-70 R24 159A8 TL
Pressure	bar	3,4

ELECTRIC CIRCUIT		
Battery	Standard Option	12 V - 2 x 74 Ah - 2 x 680 A EN
Alternator		12 V - 85 A
Type		Denso Ai115
Starter		12 V - 4,2 kW
Type		AZF

BRAKE CIRCUIT	
Service brake	Hydraulic power brake
Type of brake	Multidisk brake immersed in oil
Type of control	Foot-operated for the front and rear axles
Parking brake	Mechanical
Type of brake	Discon gear-box output
Type of control	Manual

SOUND AND VIBRATION		
Level of sound pressure in the driver's cab LpA (according to standard NF EN 12053)	dB	79
Level of sound power ensured in the LwA environment (according to directive 2000/14/EC modified by directive 2005/88/EC)	dB	106 (measured) 107 (ensured)
Average weighted acceleration on driver's body (according to standard NF EN 13059)	m/s2	
The average weighted acceleration transmitted to the driver's hand/arm system (according to standard ISO 5349-2)	m/s2	< 2,5

https://truckmanualshub.com/

HYDRAULIC CIRCUIT		
Hydraulic pump		
Type		Variable volume pistons
		1st casing
Capacity	cm3	63
Max. rating capacity unladen	l/mn	149
Flow rate at 1600 rpm	l/mn	101
Filtration		
Return	µm	15
Suction	µm	125
Maximum service pressure	bar	270
Telescoping circuit	bar	200 / 270
Lifting circuit	bar	270 / 270
Tilt circuit	bar	190 / 270
Attachment circuit	bar	270
Steering circuit	bar	140

HYDRAULIC MOVEMENTS		
Longitudinal stability limiter and warning device		Electronic
Lifting motions (boom retracted)		
Unladen lifting	s - m/mn	7,0 - 38,5
Laden lifting	s - m/mn	7,5 - 35,9
Unladen lowering	s - m/mn	5,3 - 50,8
Laden lowering	s - m/mn	5,2 - 51,8
Telescoping motions (boom raised)		
Unladen extending	s - m/mn	8,2 - 18,0
Laden extending	s - m/mn	9,0 - 19,8
Unladen retracting	s - m/mn	6,2 - 26,1
Laden retracting	s - m/mn	6,0 - 27,0
Tilting movements		
Unladen digging	s - °/s	3,5 - 41,7
Forward tilting unladen	s - °/s	3,0 - 48,6

SPECIFICATIONS AND WEIGHTS			
Speed of movement for lift truck in standard configuration on flat ground (except particular conditions)			
Front unladen	1	km/h	5,3
	2	km/h	8,6
	3	km/h	18,2
	4	km/h	32,5
Rear unladen	1	km/h	5,3
	2	km/h	8,6
	3	km/h	18,2
	4	km/h	32,5
Standard attachment			PFB
Weight of attachment (without fork)		kg	200
Weight of forks (each one)		kg	77,5
Rated capacity with standard attachment		kg	4100
Tipping load at maximum reach on tyres		kg	1750
Distance from the centre of gravity from the load to the lug of the forks		mm	500
Standard lifting height		mm	6840
Lift truck weight without attachment		kg	7140
Lift truck weight with standard attachment			
Unladen		kg	7495
At rated load		kg	11595
Weight per axle with standard attachment (transport position)			
Front unladen		kg	3450
Rear unladen		kg	4045
Front rated load		kg	10250
Rear rated load		kg	1345
Weight per axle with standard attachment (boom extended)			
Front rated load		kg	8005
Rear rated load		kg	790
Authorised gross vehicle weight		daN	28000
Contact pressure on the ground for the whole surface of each stabilizer at maximum load when tilting		kg/cm2	-
Drag strain on the coupling hook			
Unladen (sliding)		daN	6550
At rated load (transmission setting)		daN	8060
Pull strain with open carrier (according to standard ISO 8313)		daN	5550

https://truckmanualshub.com/

CHARACTERISTICS

MLT 741 -120 LSU POWERSHIFT Série 6-E3

I.C. ENGINE		
Type		PERKINS 1104D-E44TA NJ38698
Fuel		Diesel
Number of cylinders		4 in line
Suction		Supercharged
Injection system		Direct
Ignition sequence		1,3,4,2
Capacity	cm3	4400
Bore and stroke	mm	105 x 127
Compression ratio		16,2:1
Nominal rating loaded	rpm	2200
Rating slow unladen	rpm	930
Max. rating unladen	rpm	2360
Power ISO/TR 14396	cv- kW	124 - 91
Power SAE J 1995	cv- kW	124 - 91
Maximum torque ISO/TR 14396	Nm	490 to 1400 rpm
Air cleaner	µm	3
Type of cooling		By water
Fan		Puller

TRANSMISSION		
Gear box		TURNER
Type		Mechanical
Forward/reverse selector		Electro-hydraulic
Torque converter		SACHS
Number of forward speeds		6
Number of reverse speeds		3
Angle gear box		TURNER
Front axle		DANA
Differential		Limited slip
Rear axle		DANA
Differential		Without locking
Drive wheels		4RM Permanent
Switch for 2/4 drive wheels		No
Front tyres		MICHELIN
Size		460-70 R24 159A8 TL
Pressure	bar	3,4
Rear tyres		MICHELIN
Size		460-70 R24 159A8 TL
Pressure	bar	3,4

ELECTRIC CIRCUIT		
Battery	Standard Option	12 V - 2 x 74 Ah - 2 x 680 A EN
Alternator		12 V - 85 A
Type		Denso Ai115
Starter		12 V - 4,2 kW
Type		AZF

BRAKE CIRCUIT	
Service brake	Hydraulic power brake
Type of brake	Multidisk brake immersed in oil
Type of control	Foot-operated for the front and rear axles
Parking brake	Mechanical
Type of brake	Disk on gear-box output
Type of control	Manual

SOUND AND VIBRATION		
Level of sound pressure in the driver's cab LpA (according to standard NF EN 12053)	dB	79
Level of sound power ensured in the LwA environment (according to directive 2000/14/EC modified by directive 2005/88/EC)	dB	106 (measured) 107 (ensured)
Average weighted acceleration on driver's body (according to standard NF EN 13059)	m/s2	
The average weighted acceleration transmitted to the driver's hand/arm system (according to standard ISO 5349-2)	m/s2	< 2,5

https://truckmanualshub.com/

HYDRAULIC CIRCUIT		
Hydraulic pump		
Type		Variable volume pistons
		1st casing
Capacity	cm3	63
Max. rating capacity unladen	l/mn	149
Flow rate at 1600 rpm	l/mn	101
Filtration		
Return	µm	15
Suction	µm	125
Maximum service pressure	bar	270
Telescoping circuit	bar	200 / 270
Lifting circuit	bar	270 / 270
Tilt circuit	bar	190 / 270
Attachment circuit	bar	270
Steering circuit	bar	140

HYDRAULIC MOVEMENTS		
Longitudinal stability limiter and warning device		Electronic
Lifting motions (boom retracted)		
Unladen lifting	s - m/mn	7,0 - 38,5
Laden lifting	s - m/mn	7,5 - 35,9
Unladen lowering	s - m/mn	5,3 - 50,8
Laden lowering	s - m/mn	5,2 - 51,8
Telescoping motions (boom raised)		
Unladen extending	s - m/mn	8,2 - 18,0
Laden extending	s - m/mn	9,0 - 19,8
Unladen retracting	s - m/mn	6,2 - 26,1
Laden retracting	s - m/mn	6,0 - 27,0
Tilting movements		
Unladen digging	s - °/s	3,5 - 41,7
Forward tilting unladen	s - °/s	3,0 - 48,6

SPECIFICATIONS AND WEIGHTS			
Speed of movement for lift truck in standard configuration on flat ground (except particular conditions)			
Front unladen	1	km/h	5,3
	2	km/h	8,6
	3	km/h	11,3
	4	km/h	18,2
	5	km/h	22,7
	6	km/h	36,6
Rear unladen	1	km/h	5,3
	2	km/h	11,3
	3	km/h	22,7
Standard attachment			PFB
Weight of attachment (without fork)		kg	200
Weight of forks (each one)		kg	77,5
Rated capacity with standard attachment		kg	4100
Tipping load at maximum reach on tyres		kg	1750
Distance from the centre of gravity from the load to the lug of the forks		mm	500
Standard lifting height		mm	6840
Lift truck weight without attachment		kg	7295
Lift truck weight with standard attachment			
Unladen		kg	7650
At rated load		kg	11750
Weight per axle with standard attachment (transport position)			
Front unladen		kg	3465
Rear unladen		kg	4185
Front rated load		kg	10260
Rear rated load		kg	1490
Weight per axle with standard attachment (boom extended)			
Front rated load		kg	8045
Rear rated load		kg	905
Authorised gross vehicle weight		daN	28000
Contact pressure on the ground for the whole surface of each stabilizer at maximum load when tilting		kg/cm2	-
Drag strain on the coupling hook			
Unladen (sliding)		daN	6200
At rated load (transmission setting)		daN	9045
Pull strain with open carrier (according to standard ISO 8313)		daN	5550

https://truckmanualshub.com/

CHARACTERISTICS

MLT 1035 L Turbo LSU Série 6-E3

I.C. ENGINE		
Type		PERKINS 1104D-44TA NM38858
Fuel		Diesel
Number of cylinders		4 in line
Suction		Supercharged
Injection system		Direct
Ignition sequence		1,3,4,2
Capacity	cm3	4400
Bore and stroke	mm	105 x 127
Compression ratio		18,2:1
Nominal rating loaded	rpm	2200
Rating slow unladen	rpm	930
Max. rating unladen	rpm	2400
Power ISO/TR 14396	cv- kW	101 - 74,5
Power SAE J 1995	cv- kW	101 - 74,5
Maximum torque ISO/TR 14396	Nm	410 to 1400 rpm
Air cleaner	µm	3
Type of cooling		By water
Fan		Puller

TRANSMISSION		
Gear box		TURNER
Type		Mechanical
Forward/reverse selector		Electro-hydraulic
Torque converter		SACHS
Number of forward speeds		4
Number of reverse speeds		4
Angle gear box		TURNER
Front axle		DANA
Differential		Limited slip
Rear axle		DANA
Differential		Without locking
Drive wheels		4RM Permanent
Switch for 2/4 drive wheels		No
Front tyres		MICHELIN
Size		460-70 R24 159A8 XMCL
Pressure	bar	3
Rear tyres		MICHELIN
Size		460-70 R24 159A8 XMCL
Pressure	bar	3

ELECTRIC CIRCUIT		
Battery	Standard	12 V - 110 Ah - 750 A EN
	Option	12 V - 145 Ah - 1000 A EN
Alternator		12 V - 85 A
Type		Denso Ai115
Starter		12 V - 3,2 kW
Type		AZE

BRAKE CIRCUIT		
Service brake		Hydraulic power brake
Type of brake		Multidisk brake immersed in oil
Type of control		Foot-operated for the front and rear axles
Parking brake		Mechanical
Type of brake		Disk on gear-box output
Type of control		Manual

SOUND AND VIBRATION		
Level of sound pressure in the driver's cab LpA (according to standard NF EN 12053)	dB	78
Level of sound power ensured in the LwA environment (according to directive 2000/14/EC modified by directive 2005/88/EC)	dB	104 (measured) 105 (ensured)
Average weighted acceleration on driver's body (according to standard NF EN 13059)	m/s2	
The average weighted acceleration transmitted to the driver's hand/arm system (according to standard ISO 5349-2)	m/s2	< 2,5

https://truckmanualshub.com/

HYDRAULIC CIRCUIT		
Hydraulic pump		
Type		Variable volume pistons
		1st casing
Capacity	cm3	45
Max. rating capacity unladen	l/mn	108
Flow rate at 1600 rpm	l/mn	72
Filtration		
Return	µm	15
Suction	µm	125
Maximum service pressure	bar	270
Telescoping circuit	bar	200 / 270
Lifting circuit	bar	270 / 270
Tilt circuit	bar	190 / 270
Tilting corrector circuit	bar	270
Attachment circuit	bar	270
Steering circuit	bar	140

HYDRAULIC MOVEMENTS		
Longitudinal stability limiter and warning device		Electronic
Lifting motions (boom retracted)		
Unladen lifting	s - m/mn	7,0 - 40,1
Laden lifting	s - m/mn	7,3 - 38,5
Unladen lowering	s - m/mn	5,2 - 54,0
Laden lowering	s - m/mn	5,3 - 53,0
Telescoping motions (boom raised)		
Unladen extending	s - m/mn	15,7 - 21,6
Laden extending	s - m/mn	15,8 - 21,8
Unladen retracting	s - m/mn	10,6 - 32,3
Laden retracting	s - m/mn	11,5 - 29,7
Tilting movements		
Unladen digging	s - °/s	3,0 - 41,9
Forward tilting unladen	s - °/s	2,7 - 46,5

SPECIFICATIONS AND WEIGHTS			
Speed of movement for lift truck in standard configuration on flat ground (except particular conditions)			
Front unladen	1	km/h	5,3
	2	km/h	8,6
	3	km/h	18,2
	4	km/h	32,5
Rear unladen	1	km/h	5,3
	2	km/h	8,6
	3	km/h	18,2
	4	km/h	32,5
Standard attachment			PFB
Weight of attachment (without fork)		kg	95
Weight of forks (each one)		kg	72,5
Rated capacity with standard attachment		kg	3500
Tipping load at maximum reach on tyres		kg	780
Distance from the centre of gravity from the load to the lug of the forks		mm	500
Standard lifting height		mm	9600
Lift truck weight without attachment		kg	8135
Lift truck weight with standard attachment			
Unladen		kg	8375
At rated load		kg	11875
Weight per axle with standard attachment (transport position)			
Front unladen		kg	3580
Rear unladen		kg	4795
Front rated load		kg	9735
Rear rated load		kg	2140
Weight per axle with standard attachment (boom extended)			
Front rated load		kg	8070
Rear rated load		kg	855
Authorised gross vehicle weight		daN	28000
Contact pressure on the ground for the whole surface of each stabilizer at maximum load when tilting		kg/cm2	-
Drag strain on the coupling hook			
Unladen (sliding)		daN	6060
At rated load (transmission setting)		daN	9380
Pull strain with open carrier (according to standard ISO 8313)		daN	6000

https://truckmanualshub.com/

FRONT AND REAR TIRES

		PRESSURE (bar) TYRE LOAD (kg)	MLT 634 Turbo LSU Série F-E3	MLT 634 -120 LSU Série F-E3	MLT 634 -120 LSU POWERSHIFT Série F-E3	MLT 731 Turbo Série F-E3	MLT 735 Turbo LSU Série 6-E3	MLT 735 -120 LSU Série 6-E3	MLT 735 -120 LSU POWERSHIFT Série 6-E3	MLT 741 Turbo LSU Série 6-E3	MLT 741 -120 LSU Série 6-E3	MLT 741 -120 LSU POWERSHIFT Série 6-E3	MLT 1035 L Turbo LSU Série 6-E3
MICHELIN	460/70R24 XMCL 159A8 TUBELESS	PRESSURE	3,4	3,4	3,4	3,4	3,4	3,4	3,4	3,4	3,4	3,4	3
		Front unladen	1550	1550	1600	1750	1700	1750	1750	1700	1750	1750	1800
		Front laden	4450	4450	4550	4600	4650	4700	4750	5100	5150	5150	4900
		Rear unladen	2050	2050	2100	1950	1900	1850	1900	2100	2050	2100	2400
		Rear laden	850	850	850	600	650	600	600	700	700	750	1100
	400/80-24 162A8 IND POWER CL TUBELESS	PRESSURE	*	*	*	*	3,8	3,8	3,8	3,8	3,8	3,8	3,8
		Front unladen	1550	1550	1600	1750	1700	1750	1750	1700	1750	1750	1800
		Front laden	4450	4450	4550	4600	4650	4700	4750	5100	5150	5150	4900
		Rear unladen	2050	2050	2100	1950	1900	1850	1900	2100	2050	2100	2400
		Rear laden	850	850	850	600	650	600	600	700	700	750	1100
	500/70R24 XMCL 164A8 TUBELESS	PRESSURE					2,6	2,6	2,6	2,6	2,6	2,6	2,6
		Front unladen					1700	1750	1750	1700	1750	1750	1800
		Front laden					4650	4700	4750	5100	5150	5150	4900
		Rear unladen					1900	1850	1900	2100	2050	2100	2400
		Rear laden					650	600	600	700	700	750	1100
	15,5R25 XHA TUBELESS	PRESSURE	2,75	2,75	2,75	2,75	2,75	2,75	2,75	3,5	3,5	3,5	3,5
		Front unladen	1550	1550	1600	1750	1700	1750	1750	1700	1750	1750	1800
		Front laden	4450	4450	4550	4600	4650	4700	4750	5100	5150	5150	4900
		Rear unladen	2050	2050	2100	1950	1900	1850	1900	2100	2050	2100	2400
		Rear laden	850	850	850	600	650	600	600	700	700	750	1100
	1200R20 X MINE D2	PRESSURE	5,5	5,5	5,5	5,5							
		Front unladen	1550	1550	1600	1750							
		Front laden	4450	4450	4550	4600							
		Rear unladen	2050	2050	2100	1950							
		Rear laden	850	850	850	600							
DUNLOP	14,9X24 T35 STABILARGE 18PR	PRESSURE	3,4	3,4	3,4	3,4	3,6	3,6	3,6	3,6	3,6	3,6	3,4
		Front unladen	1550	1550	1600	1750	1700	1750	1750	1700	1750	1750	1800
		Front laden	4450	4450	4550	4600	4650	4700	4750	5100	5150	5150	4900
		Rear unladen	2050	2050	2100	1950	1900	1850	1900	2100	2050	2100	2400
		Rear laden	850	850	850	600	650	600	600	700	700	750	1100
	400/70-20 T37 150B 14PR TUBELESS	PRESSURE	3,25	3,25	3,25	3,25	3,8	3,8	3,8	3,8	3,8	3,8	3,3
		Front unladen	1550	1550	1600	1750	1700	1750	1750	1700	1750	1750	1800
		Front laden	4450	4450	4550	4600	4650	4700	4750	5100	5150	5150	4900
		Rear unladen	2050	2050	2100	1950	1900	1850	1900	2100	2050	2100	2400
		Rear laden	850	850	850	600	650	600	600	700	700	750	1100
	405/70-24 EM SPT9 158A2 TUBELESS	PRESSURE	5	5	5								
		Front unladen	1550	1550	1600								
		Front laden	4450	4450	4550								
		Rear unladen	2050	2050	2100								
		Rear laden	850	850	850								

https://truckmanualshub.com/

		PRESSURE (bar) TYRE LOAD (kg)	MLT 634 Turbo LSU Série F-E3	MLT 634 -120 LSU Série F-E3	MLT 634 -120 LSU POWERSHIFT Série F-E3	MLT 731 Turbo Série F-E3	MLT 735 Turbo LSU Série 6-E3	MLT 735 -120 LSU Série 6-E3	MLT 735 -120 LSU POWERSHIFT Série 6-E3	MLT 741 Turbo LSU Série 6-E3	MLT 741 -120 LSU Série 6-E3	MLT 741 -120 LSU POWERSHIFT Série 6-E3	MLT 1035 L Turbo LSU Série 6-E3
GOODYEAR	15,5/80-24 SGI 12PR TUBELESS	PRESSURE	4	4	4	4	4	4	4	4	4	4	4
		Front unladen	1550	1550	1600	1750	1700	1750	1750	1700	1750	1750	1800
		Front laden	4450	4450	4550	4600	4650	4700	4750	5100	5150	5150	4900
		Rear unladen	2050	2050	2100	1950	1900	1850	1900	2100	2050	2100	2400
		Rear laden	850	850	850	600	650	600	600	700	700	750	1100
	460/70R24 IT520 150A8 TUBELESS	PRESSURE	3,3	3,3	3,3	3,3	3,3	3,3	3,3	3,3	3,3	3,3	3,3
		Front unladen	1550	1550	1600	1750	1700	1750	1750	1700	1750	1750	1800
		Front laden	4450	4450	4550	4600	4650	4700	4750	5100	5150	5150	4900
		Rear unladen	2050	2050	2100	1950	1900	1850	1900	2100	2050	2100	2400
		Rear laden	850	850	850	600	650	600	600	700	700	750	1100
	445/70R24 MPT IT510 151G TUBELESS	PRESSURE	4,1	4,1	4,1	4,1	4,1	4,1	4,1	4,1	4,1	4,1	4,1
		Front unladen	1550	1550	1600	1750	1700	1750	1750	1700	1750	1750	1800
		Front laden	4450	4450	4550	4600	4650	4700	4750	5100	5150	5150	4900
		Rear unladen	2050	2050	2100	1950	1900	1850	1900	2100	2050	2100	2400
		Rear laden	850	850	850	600	650	600	600	700	700	750	1100
NOKIAN	460/65R24 SF TRI STEEL TUBELESS	PRESSURE	3,8	3,8	3,8	3,8	3,8	3,8	3,8	3,8	3,8	3,8	3,8
		Front unladen	1550	1550	1600	1750	1700	1750	1750	1700	1750	1750	1800
		Front laden	4450	4450	4550	4600	4650	4700	4750	5100	5150	5150	4900
		Rear unladen	2050	2050	2100	1950	1900	1850	1900	2100	2050	2100	2400
		Rear laden	850	850	850	600	650	600	600	700	700	750	1100
ALLIANCE	17,5 LR 24 150 A8 A570 TUBELESS	PRESSURE	3,2	3,2	3,2	3,2	3,2	3,2	3,2	3,2	3,2	3,2	3,2
		Front unladen	1550	1550	1600	1750	1700	1750	1750	1700	1750	1750	1800
		Front laden	4450	4450	4550	4600	4650	4700	4750	5100	5150	5150	4900
		Rear unladen	2050	2050	2100	1950	1900	1850	1900	2100	2050	2100	2400
		Rear laden	850	850	850	600	650	600	600	700	700	750	1100
TRELLEBORG	500-60/22,5 TWIN 404 12PR	PRESSURE	2,5	2,5	2,5	2,5							
		Front unladen	1550	1550	1600	1750							
		Front laden	4450	4450	4550	4600							
		Rear unladen	2050	2050	2100	1950							
		Rear laden	850	850	850	600							

https://truckmanualshub.com/

		PRESSURE (bar)	LOAD (kg)	PRESSURE ON THE CONTACT SURFACE (kg/cm2)		AREA OF THE CONTACT SURFACE (cm2)	
				HARD SOIL	LOOSE SOIL	HARD SOIL	LOOSE SOIL
GOODYEAR	15,5/80-24 SGI 12PR TUBELESS	4	600	7,50	2,07	80	290
			650	7,27	1,99	90	330
			700	7,05	1,91	100	370
			750	6,82	1,83	110	410
			850	7,08	1,85	120	460
			1100	7,25	1,92	150	567
			1550	7,56	2,04	205	760
			1600	7,62	2,08	210	770
			1700	7,94	2,16	214	786
			1750	8,02	2,18	218	802
			1800	8,10	2,20	222	818
			1850	8,18	2,22	226	834
			1900	8,26	2,24	230	850
			1950	8,48	2,25	230	865
			2050	8,63	2,29	238	895
			2100	8,57	2,31	245	910
			2400	9,00	2,42	262	973
			4450	11,83	3,26	376	1367
			4550	12,04	3,40	378	1340
			4600	12,14	3,41	379	1348
			4650	12,23	3,43	380	1355
			4700	12,33	3,45	381	1363
			4750	12,43	3,47	382	1370
			4900	12,73	3,52	385	1393
			5100	13,12	3,59	389	1423
			5150	13,22	3,61	390	1430
	460/70R24 IT520 150A8 TUBELESS	3,3	600	7,89	2,07	76	290
			650	8,07	2,13	81	305
			700	8,24	2,19	85	320
			750	8,33	2,21	90	340
			850	8,50	2,24	100	380
			1100	8,55	2,22	128	495
			1550	8,61	2,25	180	690
			1600	8,65	2,25	185	710
			1700	8,41	2,28	202	744
			1750	8,57	2,31	204	758
			1800	8,73	2,33	206	772
			1850	8,89	2,35	208	786
			1900	9,05	2,38	210	800
			1950	9,05	2,36	216	825
			2050	9,15	2,39	224	858
			2100	9,25	2,42	227	866
			2400	9,71	2,54	245	935
			4450	11,93	3,10	373	1437
			4550	11,94	3,10	381	1470
			4600	11,93	3,09	386	1488
			4650	11,92	3,09	390	1506
			4700	11,92	3,09	395	1525
			4750	11,91	3,08	399	1542
			4900	11,88	3,07	413	1595
			5100	11,84	3,06	431	1667
			5150	11,83	3,06	435	1685
	445/70R24 MPT IT510 151G TUBELESS	4,1	600	6,41	2,18	93	275
			650	6,70	2,24	97	290
			700	7,00	2,30	100	305
			750	7,08	2,32	105	320
			850	7,24	2,38	115	349
			1100	7,63	2,52	140	423
			1550	8,34	2,78	185	555
			1600	8,42	2,81	190	570
			1700	8,49	2,82	200	601
			1750	8,53	2,83	205	617
			1800	8,56	2,84	210	633
			1850	8,60	2,85	215	649
			1900	8,54	2,84	223	670
			1950	8,67	2,87	225	680
			2050	8,91	2,93	230	700
			2100	8,88	2,92	237	718
			2400	9,06	3,01	265	798
			4450	9,86	3,27	447	1349
			4550	9,90	3,28	456	1376
			4600	9,92	3,29	460	1389
			4650	9,94	3,29	465	1403
			4700	9,96	3,30	469	1416
			4750	9,98	3,31	474	1430
			4900	10,04	3,33	487	1470
			5100	10,12	3,35	504	1523
			5150	10,14	3,36	509	1537

https://truckmanualshub.com/

		PRESSURE (bar)	LOAD (kg)	PRESSURE ON THE CONTACT SURFACE (kg/cm2)		AREA OF THE CONTACT SURFACE (cm2)	
				HARD SOIL	LOOSE SOIL	HARD SOIL	LOOSE SOIL
DUNLOP	400/70-20 T37 150B 14PR TUBELESS	3,25	600	5,61	1,79	107	335
			850	6,20	2,00	137	425
			1550	7,21	2,35	215	660
			1600	7,27	2,32	220	690
			1750	7,44	2,39	235	732
			1950	7,65	2,45	255	795
			2050	7,74	2,48	265	825
			2100	7,78	2,50	270	840
			4450	10,51	3,30	423	1350
			4550	10,58	3,32	430	1370
			4600	10,62	3,33	433	1380
		3,3	1100	6,56	2,12	165	509
			1800	7,49	2,40	240	748
			2400	8,10	2,60	293	913
			4900	10,83	3,41	453	1440
		3,8	600	7,65	1,99	74	316
			650	8,13	1,90	80	342
			700	7,58	1,96	94	356
			750	7,04	2,03	109	369
			1700	8,24	2,53	206	671
			1750	8,27	2,57	212	681
			1850	8,31	2,62	222	706
			1900	8,33	2,63	228	721
			2050	8,39	2,68	244	764
			2100	8,41	2,70	250	779
			4650	11,68	3,61	394	1276
			4700	11,75	3,63	397	1285
			4750	11,81	3,65	400	1295
			5100	12,15	3,67	420	1388
			5150	12,18	3,67	423	1404
	14,9X24 T35 STABILARGE 18PR	3,4	600	4,35	1,50	138	400
			850	4,72	1,63	180	520
			1100	5,05	1,74	214	620
			1550	5,64	1,94	275	800
			1600	5,71	1,98	280	810
			1750	5,79	2,02	302	866
			1800	5,84	2,03	308	884
			1950	6,05	2,09	323	935
			2050	6,21	2,14	330	960
			2100	6,27	2,16	335	970
			2400	6,73	2,30	352	1030
			4450	9,30	3,09	478	1440
			4550	9,38	3,12	485	1460
			4600	9,42	3,13	488	1470
			4900	9,66	3,21	508	1530
		3,6	600	4,41	1,48	130	443
			650	4,61	1,35	141	480
			700	4,65	1,46	150	480
			750	4,69	1,56	160	480
			1700	5,51	1,92	308	884
			1750	5,61	1,94	312	901
			1850	5,80	1,98	319	934
			1900	5,90	2,00	322	950
			2050	6,27	2,14	327	959
			2100	6,39	2,18	328	962
			4650	9,68	3,17	475	1451
			4700	9,75	3,19	478	1461
			4750	9,81	3,21	481	1471
			5100	9,44	3,29	538	1552
			5150	9,30	3,29	550	1565
	405/70-24 EM SPT9 158A2 TUBELESS	5	850	7,73	3,40	110	250
			1550	7,21	3,16	215	490
			1600	7,16	3,14	224	510
			2050	6,95	3,06	295	670
			2100	7,12	3,13	295	670
			4450	8,09	3,56	550	1250
			4550	8,27	3,64	550	1250
TRELLEBORG	500-60/22,5 TWIN 404 12PR	2,5	600	2,70	1,40	222	429
			850	2,70	1,40	315	607
			1550	2,70	1,40	574	1107
			1600	2,70	1,40	593	1143
			1750	2,70	1,40	648	1250
			1950	2,70	1,40	723	1393
			2050	2,70	1,40	760	1465
			2100	2,70	1,40	778	1500
			4450	2,70	1,40	1648	3178
			4550	2,70	1,40	1686	3250
			4600	2,70	1,40	1705	3286

https://truckmanualshub.com/

		PRESSURE (bar)	LOAD (kg)	PRESSURE ON THE CONTACT SURFACE (kg/cm2)		AREA OF THE CONTACT SURFACE (cm2)	
				HARD SOIL	LOOSE SOIL	HARD SOIL	LOOSE SOIL
MICHELIN	460/70R24 XMCL 159A8 TUBELESS	3	1800				
			4900				
			2400				
			1100				
		3,4	600	1,43	0,43	459	1494
			650	1,46	0,45	476	1512
			700	1,48	0,48	494	1531
			750	1,51	0,50	511	1550
			850	1,56	0,54	546	1587
			1550	1,94	0,83	792	1847
			1600	1,96	0,85	809	1866
			1700	2,01	0,89	843	1903
			1750	2,03	0,91	858	1922
			1850	2,08	0,94	888	1959
			1900	2,10	0,96	903	1977
			1950	2,12	0,97	917	1996
			2050	2,16	1,00	947	2033
			2100	2,18	1,02	962	2051
			4450	2,87	1,51	1543	2925
			4550	2,90	1,53	1568	2962
			4600	2,91	1,54	1580	2981
			4650	2,93	1,55	1592	3000
			4700	2,94	1,56	1604	3018
			4750	2,95	1,57	1617	3037
			5100	3,06	1,64	1702	3167
			5150	3,07	1,66	1715	3186
	500/70R24 XMCL 164A8 TUBELESS	2,6	600				
			650				
			700				
			750				
			1100				
			1700				
			1750				
			1800				
			1850				
			1900				
			2050				
			2100				
			2400				
			4650				
			4700				
			4750				
			4900				
			5100				
			5150				
	15,5R25 XHA TUBELESS	2,75	600	1,43	0,66	420	905
			650	1,51	0,70	429	923
			850	1,83	0,85	465	996
			1550	2,04	0,95	760	1630
			1600	2,11	0,98	760	1630
			1700	2,13	0,99	796	1709
			1750	2,14	1,00	814	1749
			1850	2,17	1,01	851	1828
			1900	2,18	1,02	869	1868
			1950	2,20	1,02	887	1907
			2050	2,22	1,03	922	1986
			2100	2,23	1,03	939	2024
			4450	2,39	1,12	1860	3956
			4550	2,35	1,12	1925	4061
			4600	2,33	1,12	1958	4114
			4650	2,32	1,11	1990	4167
			4700	2,30	1,11	2023	4220
			4750	2,28	1,11	2055	4273
		3,5	700	3,76	2,47	167	302
			750	3,88	2,43	179	323
			1100	4,38	2,39	247	456
			1750	4,86	2,55	360	685
			1800	4,88	2,56	368	702
			2050	4,98	2,60	411	789
			2100	5,00	2,60	419	806
			2400	5,09	2,64	468	902
			4900	5,73	2,96	860	1665
			5100	5,79	2,99	891	1726
			5150	5,80	2,99	899	1741

https://truckmanualshub.com/

		PRESSURE (bar)	LOAD (kg)	PRESSURE ON THE CONTACT SURFACE (kg/cm2)		AREA OF THE CONTACT SURFACE (cm2)	
				HARD SOIL	LOOSE SOIL	HARD SOIL	LOOSE SOIL
MICHELIN	400/80-24 162A8 IND POWER CL TUBELESS	3,8	600				
			650				
			700				
			750				
			1100				
			1700				
			1750				
			1800				
			1850				
			1900				
			2050				
			2100				
			2400				
			4650				
			4700				
			4750				
			4900				
			5100				
			5150				
	1200R20 X MINE D2	5,5	600				
			850				
			1550				
			1600				
			1750				
			1950				
			2050				
			2100				
			4450				
			4550				
			4600				
ALLIANCE	17,5 LR 24 150 A8 A570 TUBELESS	3,2	600				
			650				
			700				
			750				
			850				
			1100				
			1550				
			1600				
			1700				
			1750				
			1800				
			1850				
			1900				
			1950				
			2050				
			2100				
			2400				
			4450				
			4550				
			4600				
			4650				
			4700				
			4750				
			4900				
			5100				
			5150				
NOKIAN	460/65R24 SF TRI STEEL TUBELESS	3,8	600				
			650				
			700				
			750				
			850				
			1100				
			1550				
			1600				
			1700				
			1750				
			1800				
			1850				
			1900				
			1950				
			2050				
			2100				
			2400				
			4450				
			4550				
			4600				
			4650				
			4700				
			4750				
			4900				
			5100				
			5150				

https://truckmanualshub.com/

DIMENSIONS AND LOAD CHART

MLT 634 Turbo LSU Série F-E3
MLT 634 -120 LSU Série F-E3
MLT 634 -120 LSU POWERSHIFT Série F-E3

A	(mm)	1200
B	(mm)	2560
C	(mm)	1142
C1	(mm)	1245
D	(mm)	4579
D1	(mm)	4682
D2	(mm)	4003
E	(mm)	5779
F	(mm)	1935
F1	(mm)	1935
G	(mm)	450
G1	(mm)	435
G2	(mm)	435
I	(mm)	877
J	(mm)	980
K	(mm)	1260
L	(mm)	45
N	(mm)	1715
O	(mm)	125
P2	(°)	47,5
P3	(°)	53
R	(mm)	3535
S	(mm)	7391
T	(mm)	3450
U1	(mm)	2295
U2	(mm)	2545
V	(mm)	4650
V1	(mm)	1200
V2	(mm)	3769
W	(mm)	2402
Y	(°)	12
Z	(°)	133,9

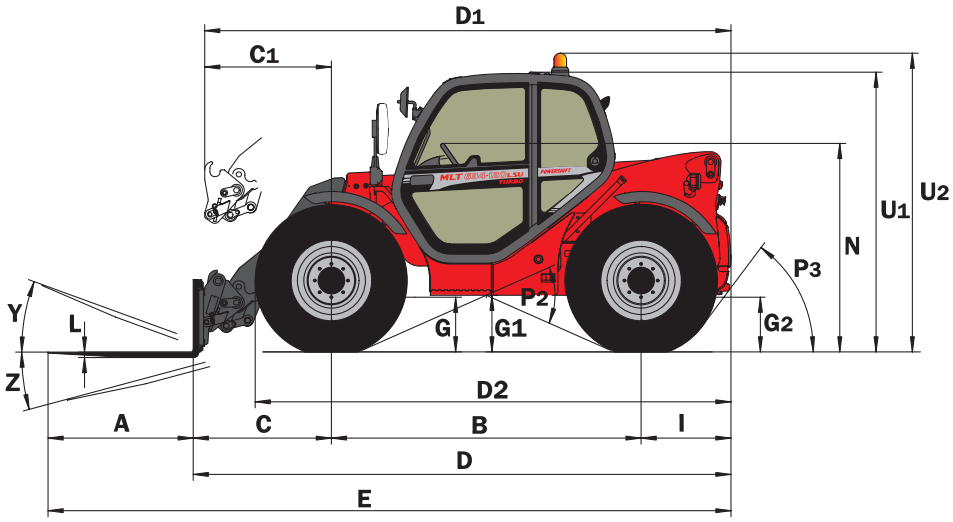

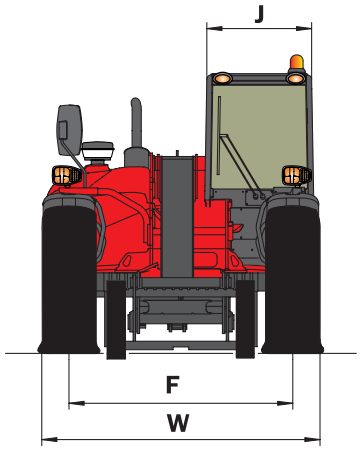

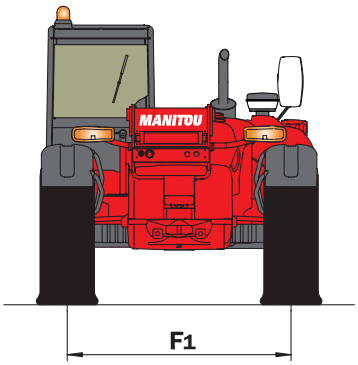

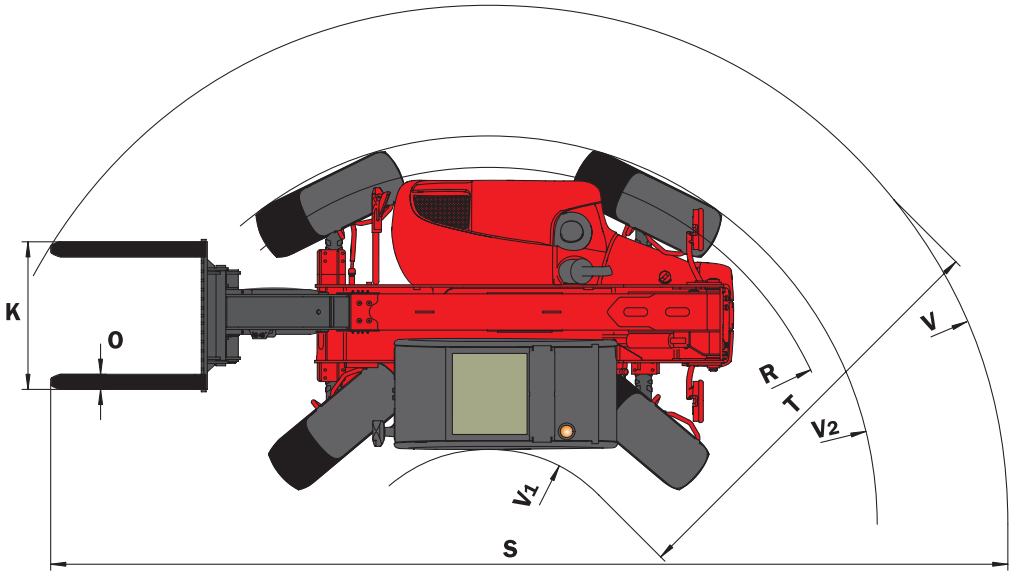

https://truckmanualshub.com/

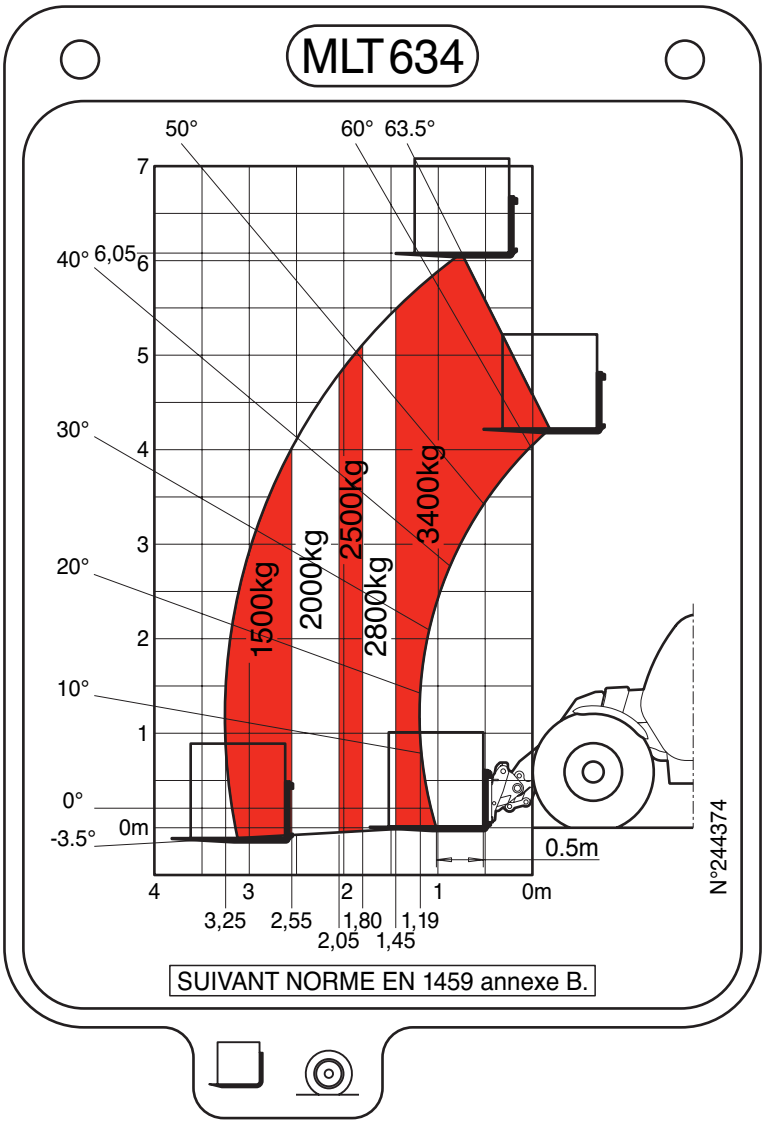

https://truckmanualshub.com/

DIMENSIONS AND LOAD CHART

MLT 731 Turbo Série F-E3

A	(mm)	1200
B	(mm)	2560
C	(mm)	1142
C1	(mm)	1537
D	(mm)	4879
D1	(mm)	4974
D2	(mm)	4003
E	(mm)	6079
F	(mm)	1935
F1	(mm)	1935
G	(mm)	450
G1	(mm)	435
G2	(mm)	435
I	(mm)	877
J	(mm)	980
K	(mm)	1260
L	(mm)	45
N	(mm)	1715
O	(mm)	125
P2	(°)	47,5
P3	(°)	53
R	(mm)	3535
S	(mm)	7690
T	(mm)	3705
U1	(mm)	2295
U2	(mm)	2545
V	(mm)	4905
V1	(mm)	1200
V2	(mm)	3769
W	(mm)	2402
Y	(°)	12
Z	(°)	133,7

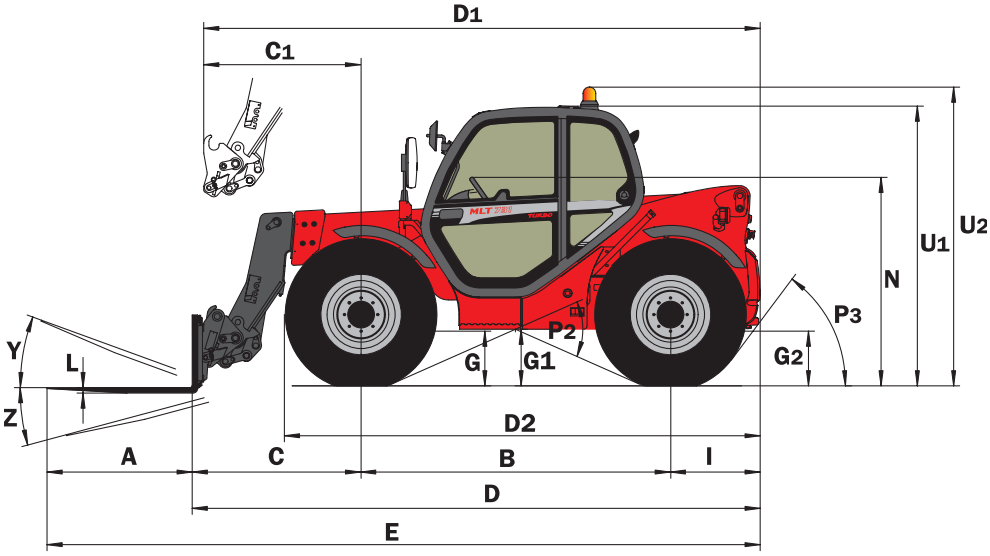

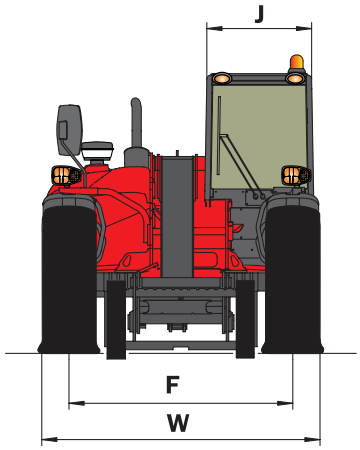

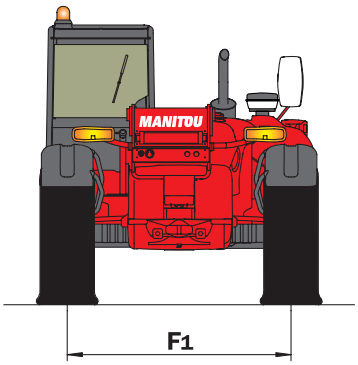

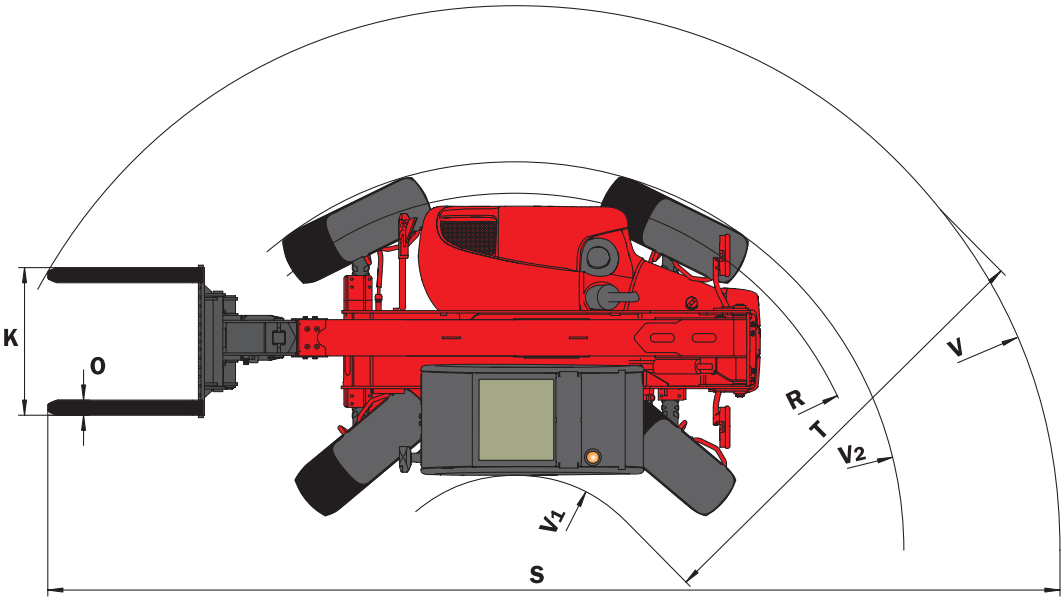

https://truckmanualshub.com/

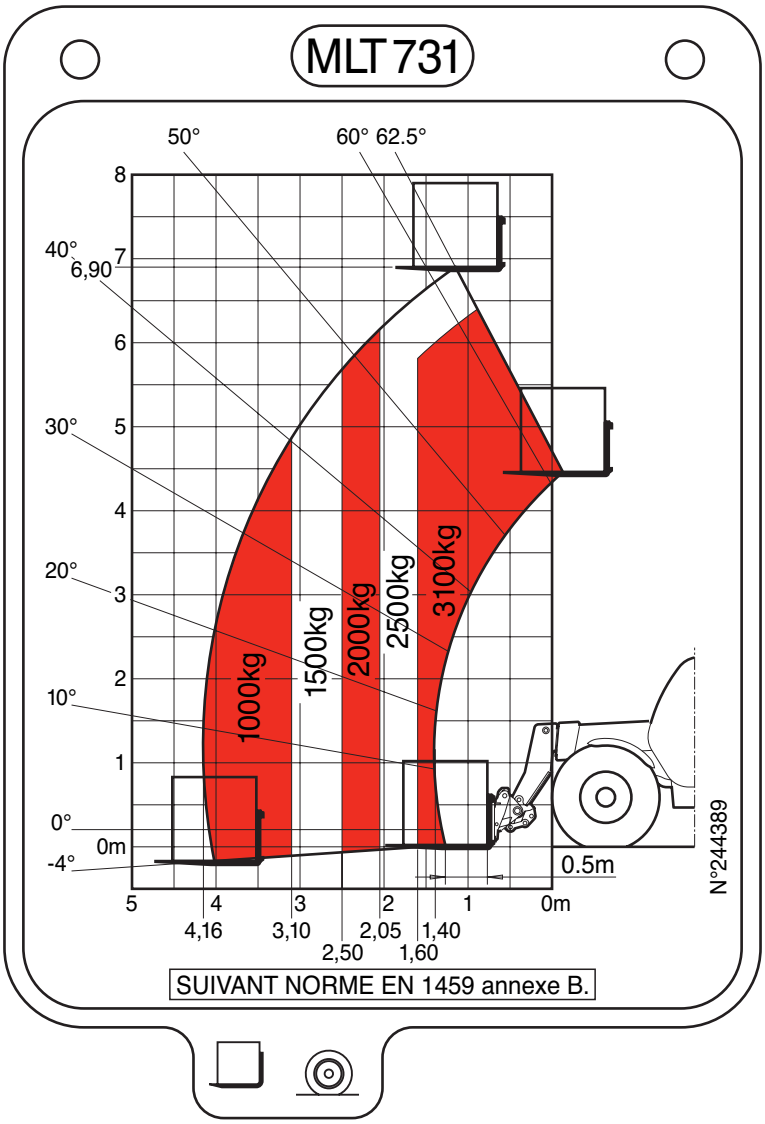

NOTE: For Australia (see: 5 - SPECIFIC AUSTRALIA)

https://truckmanualshub.com/

DIMENSIONS AND LOAD CHART

MLT 735 Turbo LSU Série 6-E3
MLT 735 -120 LSU Série 6-E3
MLT 735 -120 LSU POWERSHIFT Série 6-E3

A	(mm)	1200
B	(mm)	2810
C	(mm)	1192
C1	(mm)	1287
D	(mm)	4791
D1	(mm)	4886
D2	(mm)	4165
E	(mm)	5991
F	(mm)	1935
F1	(mm)	1935
G	(mm)	450
G1	(mm)	435
G2	(mm)	435
I	(mm)	789
J	(mm)	980
K	(mm)	1260
L	(mm)	45
N	(mm)	1715
O	(mm)	125
P2	(°)	38
P3	(°)	53
R	(mm)	3685
S	(mm)	7712
T	(mm)	3575
U1	(mm)	2295
U2	(mm)	2545
V	(mm)	4885
V1	(mm)	1310
V2	(mm)	3919
W	(mm)	2402
Y	(°)	12
Z	(°)	133,7

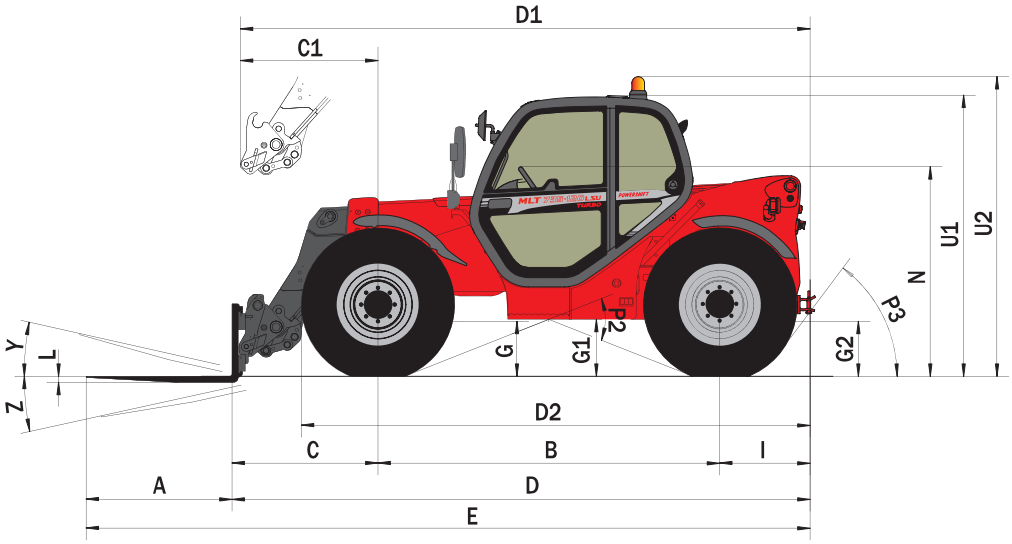

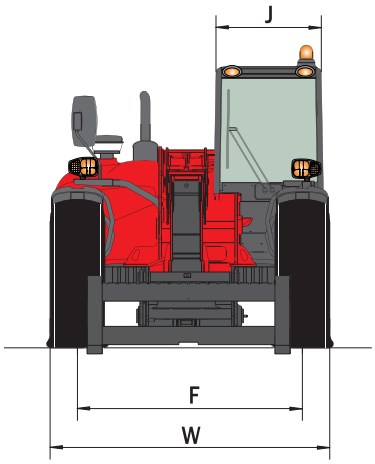

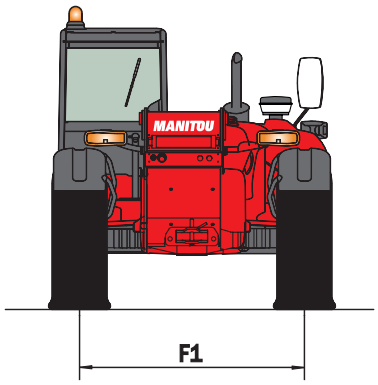

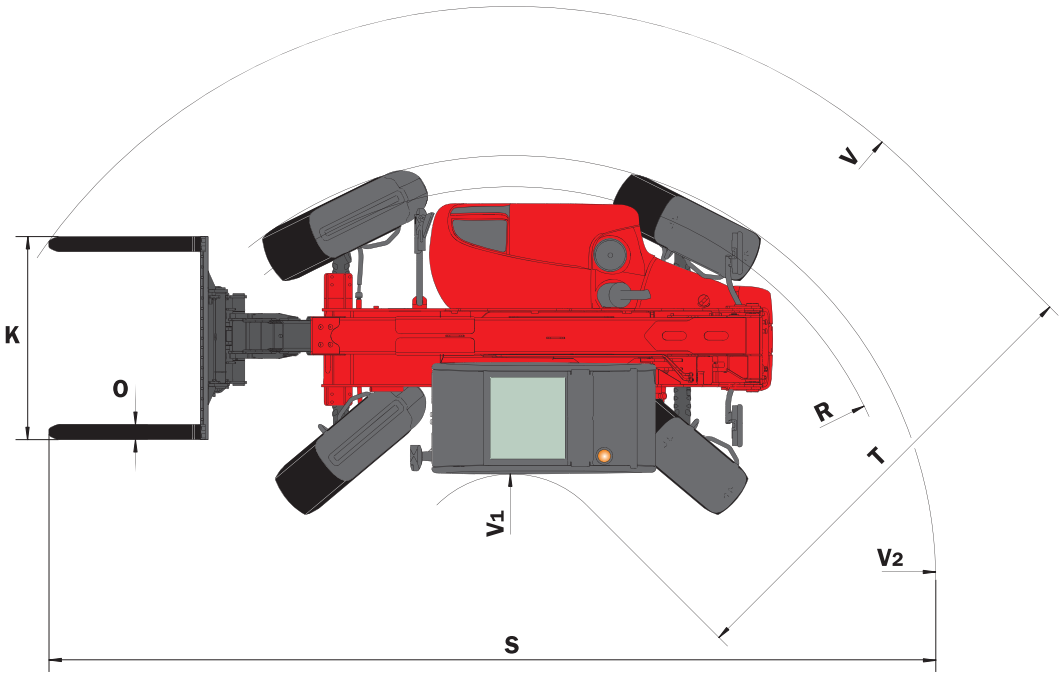

https://truckmanualshub.com/

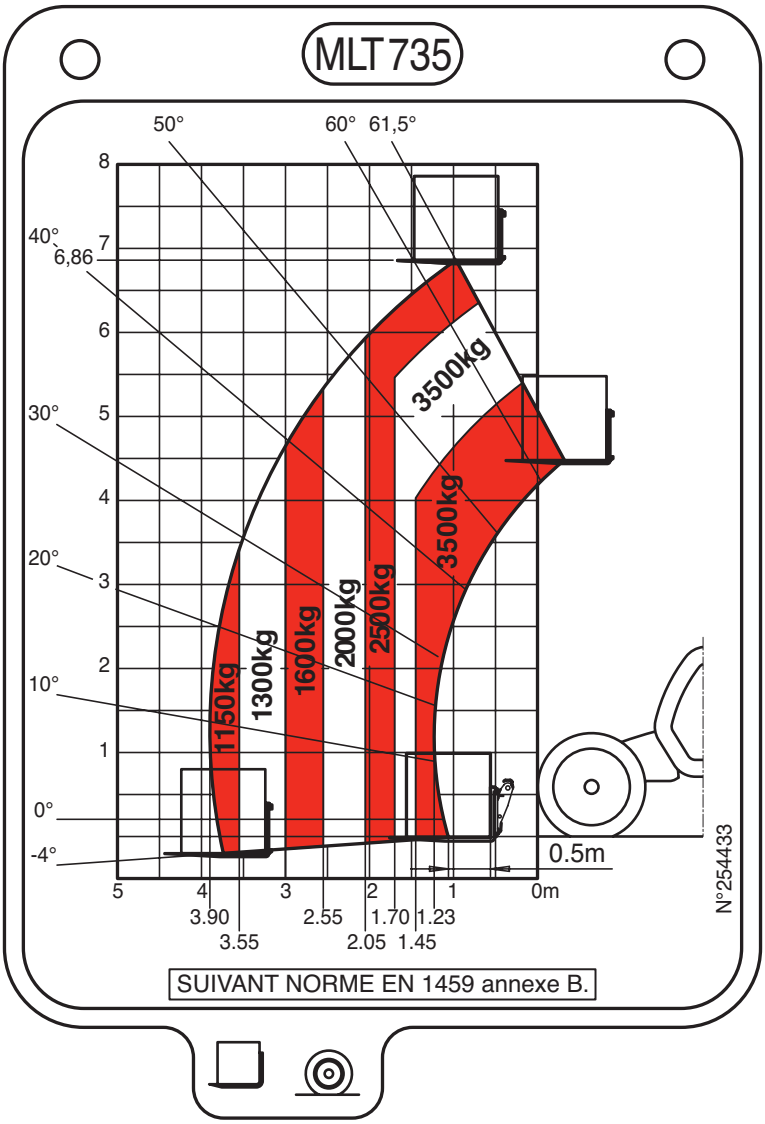

NOTE: For Australia (see: 5 - SPECIFIC AUSTRALIA)

https://truckmanualshub.com/

DIMENSIONS AND LOAD CHART

MLT 741 Turbo LSU Série 6-E3
MLT 741 -120 LSU Série 6-E3
MLT 741 -120 LSU POWERSHIFT Série 6-E3

A	(mm)	1200
B	(mm)	2810
C	(mm)	1232
C1	(mm)	1288
D	(mm)	4919
D1	(mm)	4975
D2	(mm)	4253
E	(mm)	6119
F	(mm)	1935
F1	(mm)	1935
G	(mm)	450
G1	(mm)	435
G2	(mm)	435
I	(mm)	877
J	(mm)	980
K	(mm)	1260
L	(mm)	50
N	(mm)	1715
O	(mm)	125
P2	(°)	38
P3	(°)	53
R	(mm)	3685
S	(mm)	7755
T	(mm)	3575
U1	(mm)	2295
U2	(mm)	2545
V	(mm)	4885
V1	(mm)	1310
V2	(mm)	3919
W	(mm)	2402
Y	(°)	12,3
Z	(°)	133,5

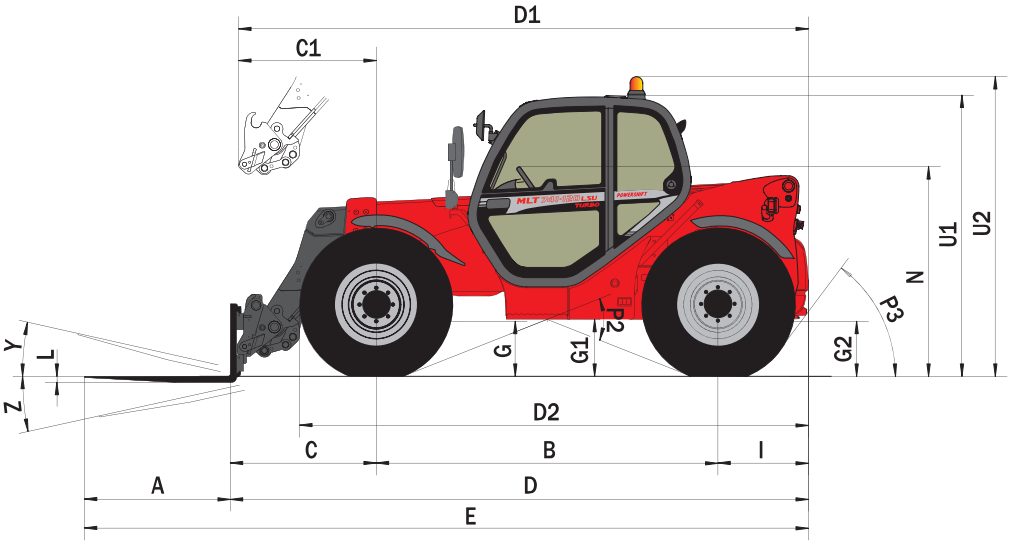

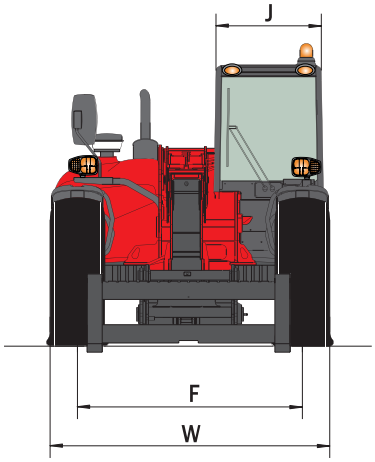

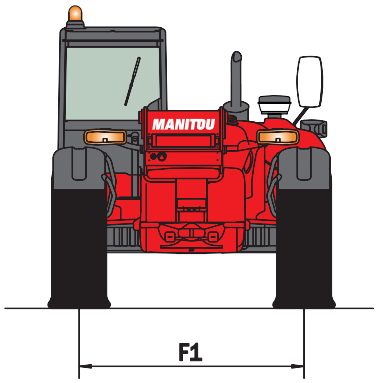

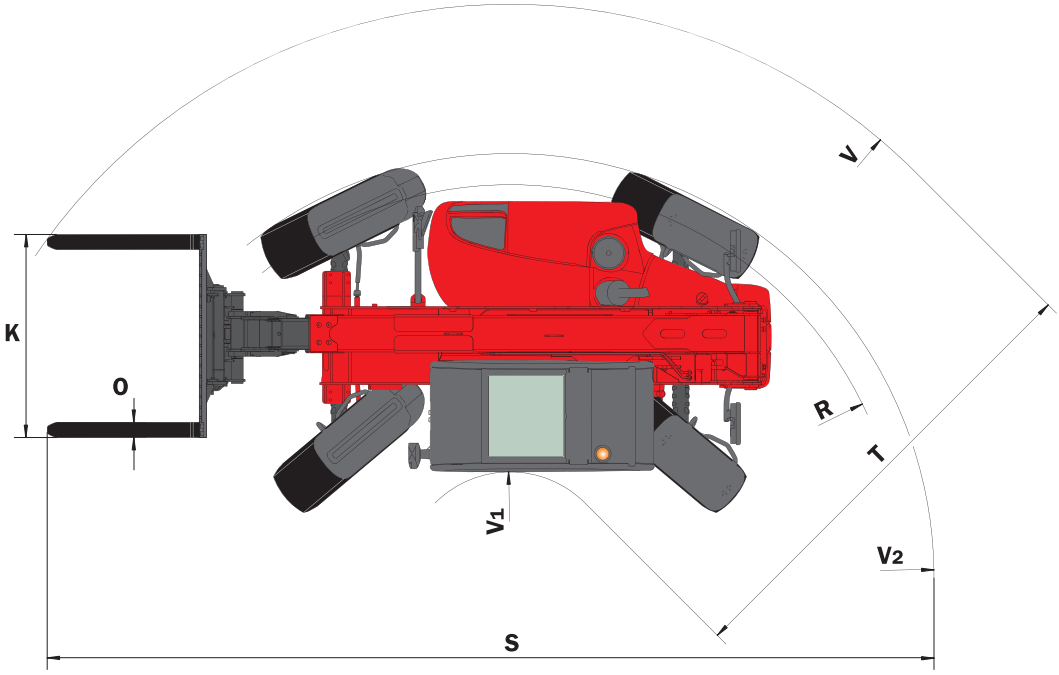

https://truckmanualshub.com/

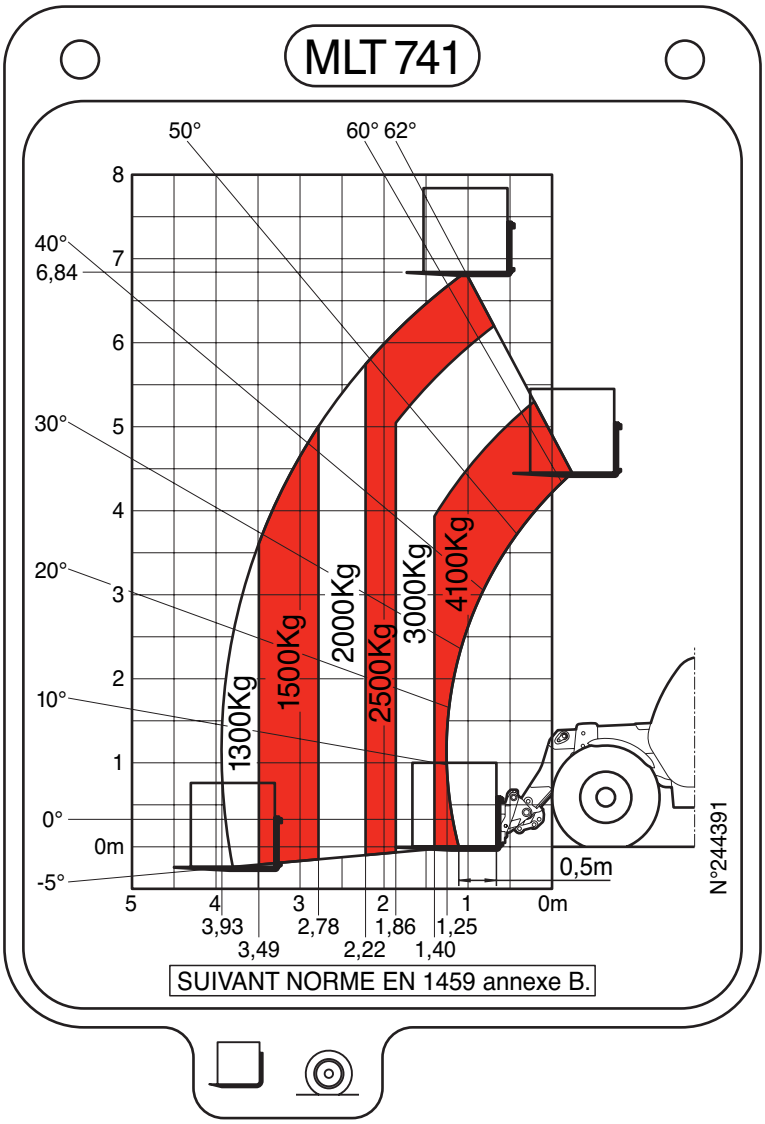

NOTE: For Australia (see: 5 - SPECIFIC AUSTRALIA)

Only for MLT 741 -120 LSU POWERSHIFT Série 4-E3

https://truckmanualshub.com/

DIMENSIONS AND LOAD CHART

MLT 1035 L Turbo LSU Série 6-E3

A	(mm)	1200
B	(mm)	2810
C	(mm)	1393
C1	(mm)	1325
D	(mm)	5093
D1	(mm)	5025
D2	(mm)	4267
E	(mm)	6293
F	(mm)	1935
F1	(mm)	1935
G	(mm)	450
G1	(mm)	435
G2	(mm)	435
H	(°)	
H1	(°)	
I	(mm)	890
J	(mm)	980
K	(mm)	1260
L	(mm)	45
N	(mm)	1715
O	(mm)	125
P2	(°)	38
P3	(°)	45
R	(mm)	3570
S	(mm)	7802
T	(mm)	3720
U1	(mm)	2295
U2	(mm)	2545
V	(mm)	4990
V1	(mm)	1270
V2	(mm)	3804
W	(mm)	2402
Y	(°)	8
Z	(°)	119

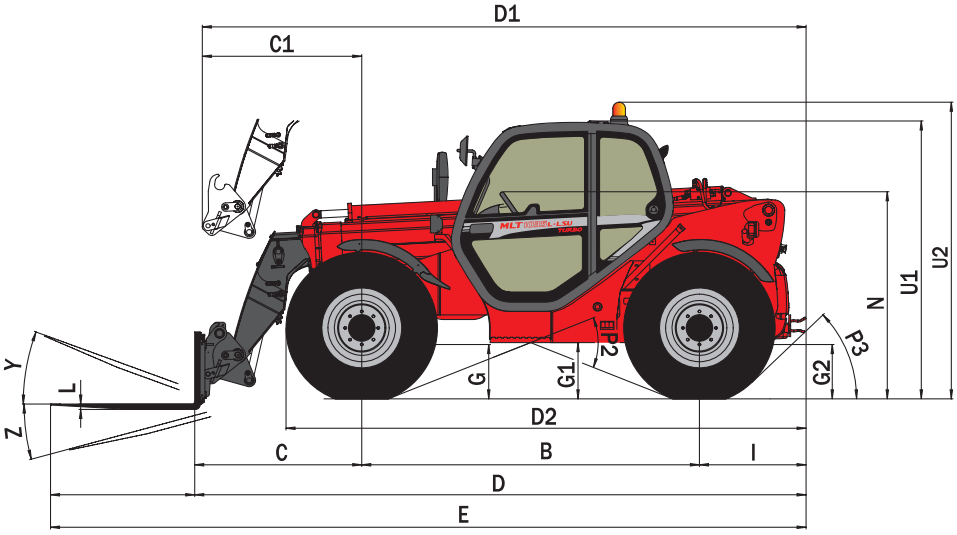

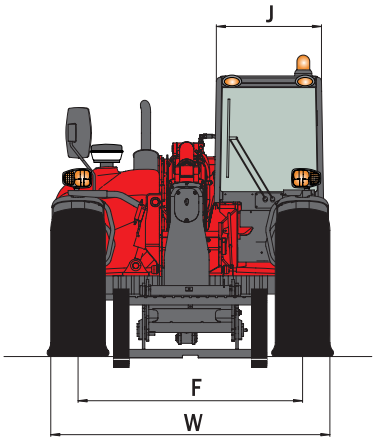

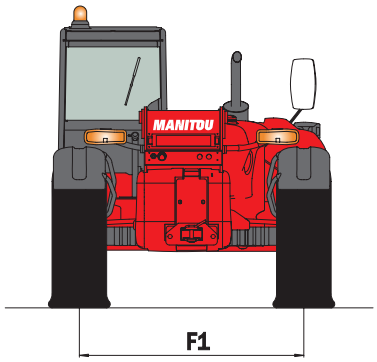

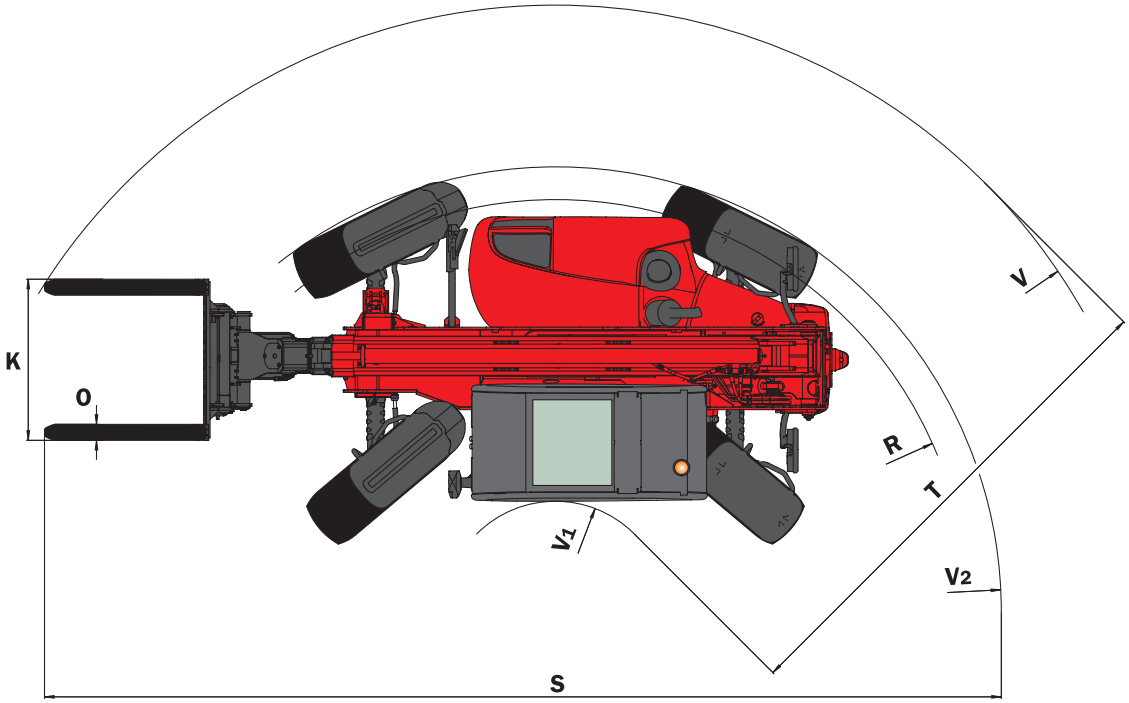

https://truckmanualshub.com/

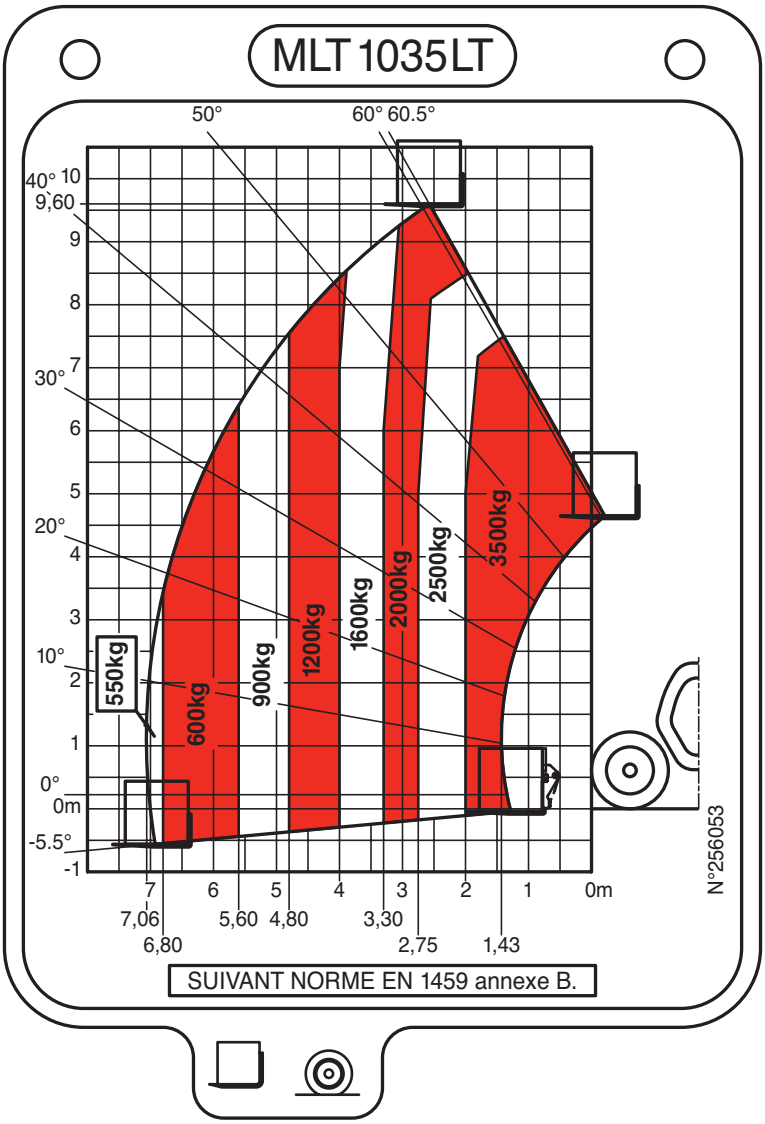

NOTE: For Australia (see: 5 - SPECIFIC AUSTRALIA)

https://truckmanualshub.com/

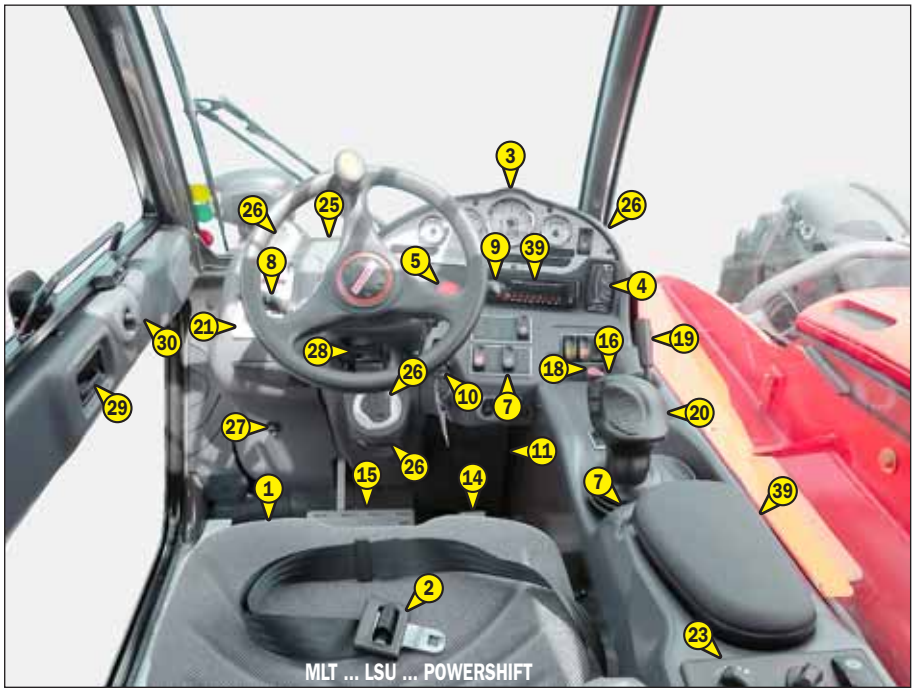

MLT ... LSU ... POWERSHIFT

MLT ... LSU ...

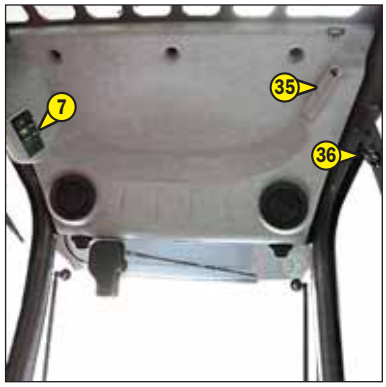

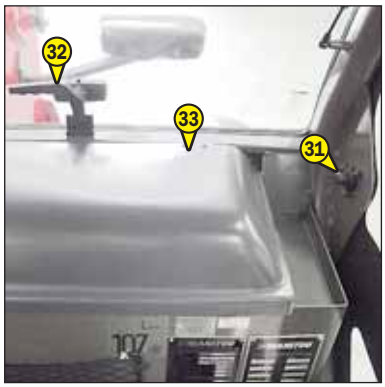

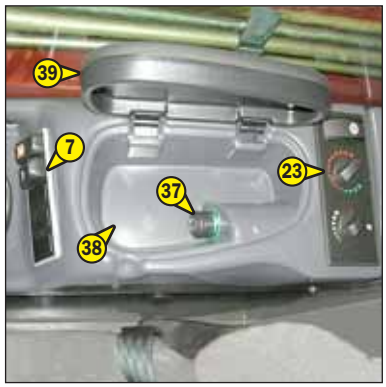

MLT ... 120 ...

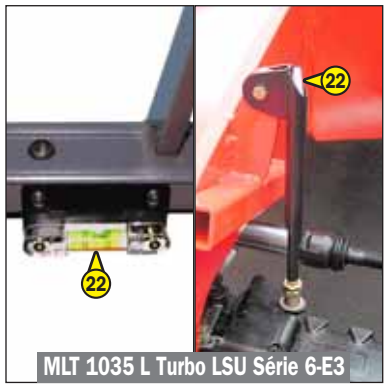

MLT 1035 L Turbo LSU Série 6-E3

https://truckmanualshub.com/

DESCRIPTION

1 - DRIVER'S SEAT
2 - SAFETY BELT
3 - CONTROL AND SIGNAL LIGHTS PANEL
4 - LONGITUDINAL STABILITY LIMITER AND WARNING DEVICE
5 - EMERGENCY STOP BUTTON
6 - EMERGENCY EXIT
7 - SWITCHES
8 - LIGHT SWITCH, HORN AND INDICATOR SWITCH
9 - FRONT AND REAR WINDSCREEN WIPER SWITCH
10 - IGNITION SWITCH
11 - FUSES AND RELAYS IN THE CAB
12 - FUSES AND RELAYS UNDER THE ENGINE HOOD (NOT ILLUSTRATED)
13 - DIAGNOSTIC SOCKET only for MLT ... -120 ...
14 - ACCELERATOR PEDAL
15 - SERVICE BRAKE PEDAL AND TRANSMISSION CUT-OFF
16 - GEAR LEVER AND TRANSMISSION CUT-OFF except for MLT ... POWERSHIFT
16 - GEAR LEVER only for MLT ... POWERSHIFT ...
17 - PARKING BRAKE LEVER
18 - FORWARD/NEUTRAL/REVERSE GEAR SELECTION
19 - STEERING SELECTION
20 - HYDRAULIC CONTROLS AND TRANSMISSION CUT-OFF
21 - FUNCTION FILES
22 - LEVEL INDICATORS except for MLT 1035 L Turbo LSU Série 6-E3
22 - LEVEL INDICATORS only for MLT 1035 L Turbo LSU Série 6-E3
23 - HEATER CONTROL
23 - AIR CONDITIONING CONTROLS (OPTION AIR CONDITIONING)
24 - CAB FILTER VENTILATORS
25 - WINDSCREEN DEMISTER VENTS
26 - HEATING VENTS
27 - BRAKE FLUID RESERVOIR AND WINDSCREEN WASHER ACCESS PANEL
28 - STEERING WHEEL REGULATING HANDLE
29 - DOOR LOCK
30 - LOCKING HANDLE FOR UPPER HALF-DOOR
31 - UNLOCKING BUTTON FOR UPPER HALF DOOR
32 - HANDLE FOR REAR WINDOW OPENING
33 - DOCUMENT HOLDER
34 - SUN VISOR
35 - OVERHEAD LIGHT
36 - HOOK
37 - CIGAR LIGHTER
38 - ARMREST AND STORAGE
39 - CAR RADIO (OPTION)
40 - INSIDE REAR-VIEW MIRROR (OPTION) (NOT ILLUSTRATED)
41 - TOOL BOX (NOT ILLUSTRATED) except for MLT 1035 L Turbo LSU Série 6-E3
42 - NUMBER PLATE (NOT ILLUSTRATED)
43 - NUMBER PLATE LIGHTING (NOT ILLUSTRATED)
44 - REAR REFLECTORS (NOT ILLUSTRATED)
45 - FRONT LIGHTS (NOT ILLUSTRATED)
46 - REAR LIGHTS (NOT ILLUSTRATED)
47 - FLASHING LIGHT (NOT ILLUSTRATED)

NOTE: All the terms such as: RIGHT, LEFT, FRONT, REAR are meant for an observer seated on driver's seat and looking in front of him.

https://truckmanualshub.com/

1 - DRIVER'S SEAT

DESIGNED FOR MAXIMUM COMFORT, THIS SEAT CAN BE ADJUSTED AS FOLLOWS.

WEIGHT ADJUSTMENT (FIG. A)
It is advised that the weight be adjusted when the driver is not sitting in the cab.
- Refer to graduation 1 of the seat.
- Turn handle 2 depending on the driver's weight.

NOTE: To avoid any health problems, it is recommended that the weight should be checked and adjusted before starting up the lift truck.

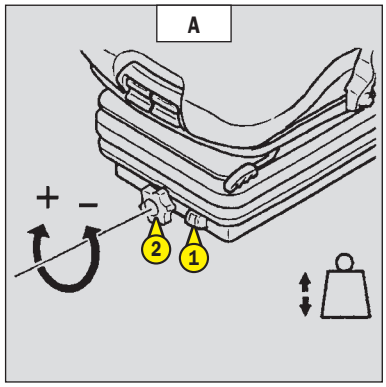

SEAT HEIGHT ADJUSTMENT (FIG. B)
- Raise the seat to the desired position, until you hear the ratchet click. If you raise the seat above the last notch (stop), the seat drops down to the lowest position.

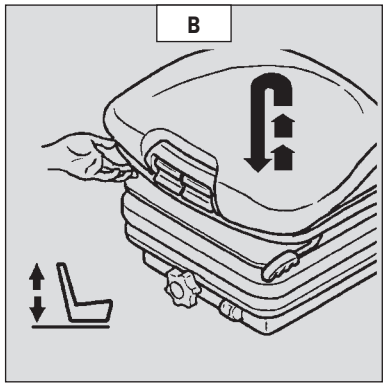

SEAT BACK-REST ANGLE ADJUSTMENT (FIG. C)
The back-rest angle of the seat may be adjusted to suit the individual.
- Press the left-hand button while pushing on the seat or relaxing pressure on the seat to find a comfortable position.

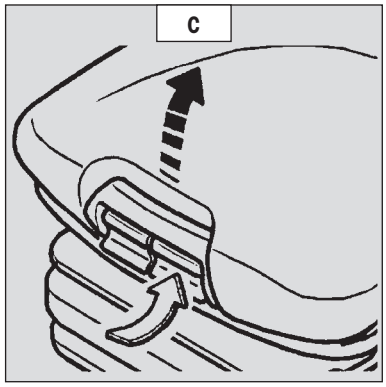

SEAT DEPTH ADJUSTMENT (FIG. D)
The depth of the seat may be adjusted to suit the individual.
- Press the right-hand button while raising or lowering the seat to find the desired position.

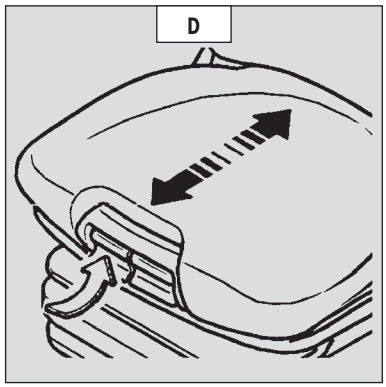

EXTENDING THE HEAD-REST (FIG. E)
- The height of the back-rest can be adjusted by pulling it upwards (the notches will click) up to the stop.
- The head-rest can be removed by applying sufficient pressure to pull it off the stop.

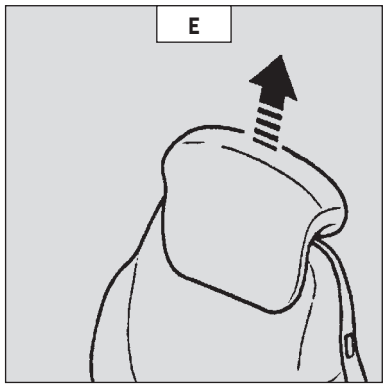

https://truckmanualshub.com/

LUMBAR ADJUSTMENT (FIG. F)

This increases the comfort of the seat and the driver's freedom of movement.

- Turn the handle either left or right to adjust the height or depth of the lumbar support.

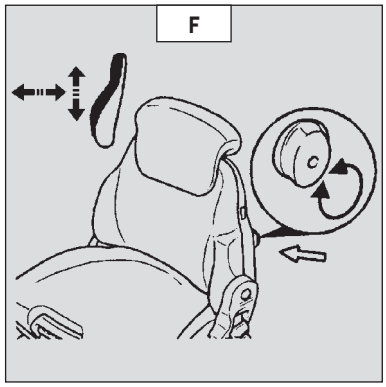

ADJUSTMENT OF THE ANGLE OF THE BACK-REST (FIG. G)

- Support the back-rest, pull the lever and position the back-rest to find the desired position.

If you do not support the back-rest when making adjustments, it swings completely forwards.

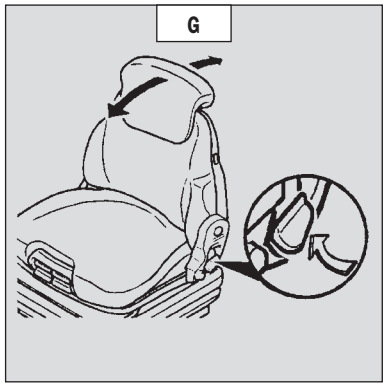

LONGITUDINAL ADJUSTMENT (FIG. H)

- Adjust the locking lever until you reach the position required. This then locks and the seat will not shift into another position.

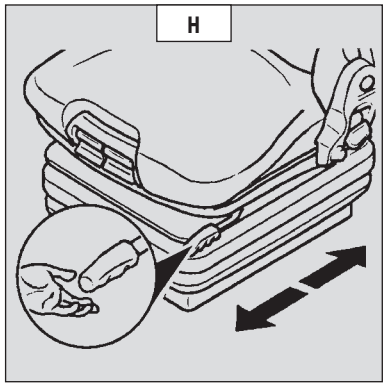

MAINTENANCE (FIG. I)

Dirt may adversely affect the correct functioning of the seat. For this reason, make sure your seat is always clean.

- To clean or change the cushions, simply remove them from the seat frame.

A rocking head-rest increases the risk of an accident !

Avoid wetting the cushion fabric when cleaning. Check the resistance of the fabric on a small hidden area before using any fabric or plastic cleaner.

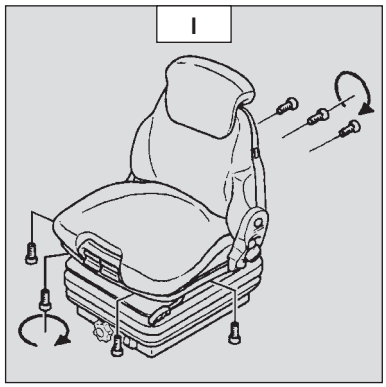

https://truckmanualshub.com/

1 - BASIC PNEUMATIC DRIVER'S SEAT (OPTION)

DESIGNED FOR MAXIMUM COMFORT, THIS SEAT CAN BE ADJUSTED AS FOLLOWS.

WEIGHT ADJUSTMENT (FIG. A)

It is advised that you adjust the seat according to your weight when sitting.

- Switch on lift truck ignition.
- Push or pull lever 1 until green appears in display 2 indicating correct adjustment according to your weight.

NOTE: To avoid any health problems, it is recommended that the weight should be checked and adjusted before starting up the lift truck.

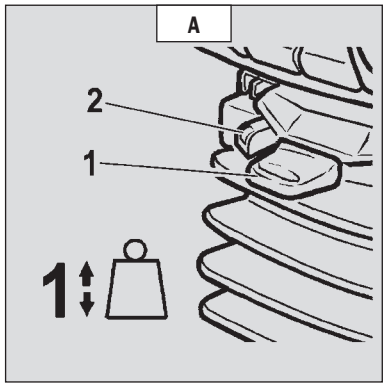

SEAT HEIGHT ADJUSTMENT (FIG. B)

When weight adjustment has been carried out, you can then modify seat height.

- Keep the ignition on in the lift truck.
- Push or pull lever 1 until green appears and adjust the height of the seat while checking that the green in display 2 remains visible.

To avoid causing any damage, do not activate the compressor for over 1 minute.

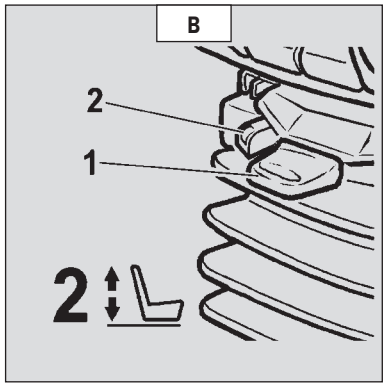

SEAT BACK-REST ANGLE ADJUSTMENT (FIG. C)

The back-rest angle of the seat may be adjusted to suit the individual.

- Press the left-hand button while pushing on the seat or relaxing pressure on the seat to find a comfortable position.

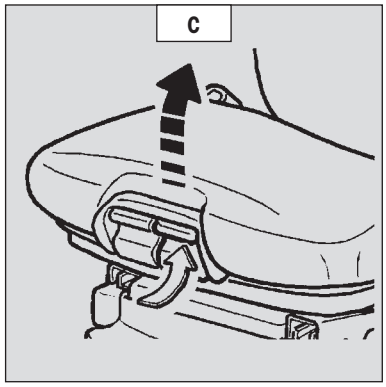

SEAT DEPTH ADJUSTMENT (FIG. D)

The depth of the seat may be adjusted to suit the individual.

- Press the right-hand button while raising or lowering the seat to find the desired position.

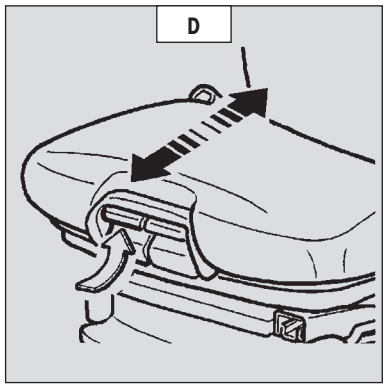

EXTENDING THE HEAD-REST (FIG. E)

- The height of the back-rest can be adjusted by pulling it upwards (the notches will click) up to the stop.
- The head-rest can be removed by applying sufficient pressure to pull it off the stop.

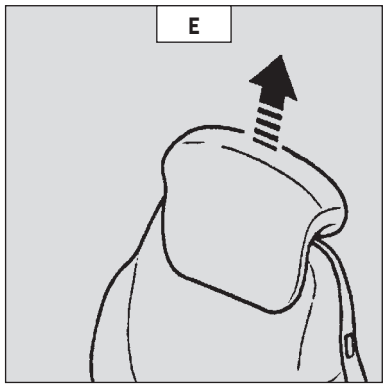

https://truckmanualshub.com/

LUMBAR ADJUSTMENT (FIG. F)
This increases the comfort of the seat and the driver's freedom of movement.
- Turn the handle either left or right to adjust the height or depth of the lumbar support.

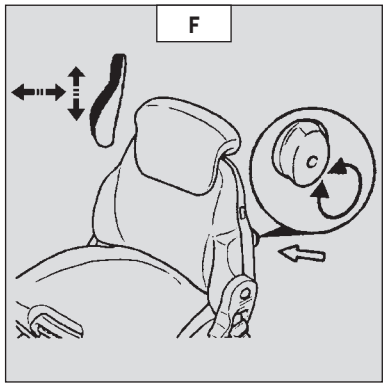

ADJUSTMENT OF THE ANGLE OF THE BACK-REST (FIG. G)
- Support the back-rest, pull the lever and position the back-rest to find the desired position.

If you do not support the back-rest when making adjustments, it swings completely forwards.

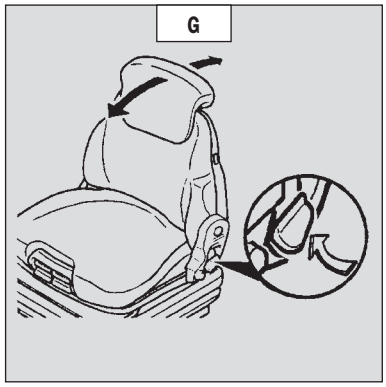

HORIZONTAL SHOCK ABSORBER (FIG. H)
In certain conditions (e.g. driving with a trailer) it is advised that a horizontal shock absorber be used. The driver's seat is thus better able to absorb jerks in the direction of travel.
- Position 1: Horizontal shock absorber fitted.
- Position 2: Horizontal shock absorber removed.

LONGITUDINAL ADJUSTMENT (FIG. I)
- Adjust the locking lever until you reach the position required. This then locks and the seat will not shift into another position.

SERVICING (FIG. J)
Dirt may adversely affect the correct functioning of the seat. For this reason, make sure your seat is always clean.
- To clean or change the cushions, simply remove them from the seat frame.

A rocking head-rest increases the risk of an accident !

Avoid wetting the cushion fabric when cleaning. Check the resistance of the fabric on a small hidden area before using any fabric or plastic cleaner.

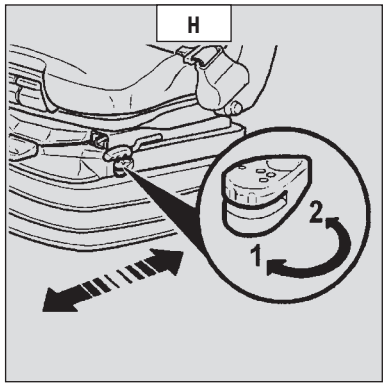

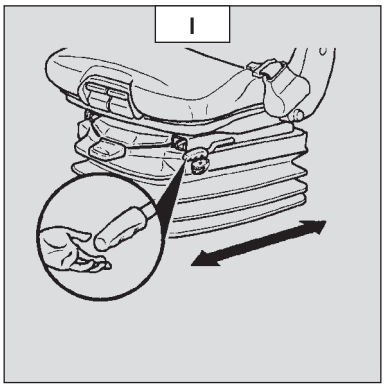

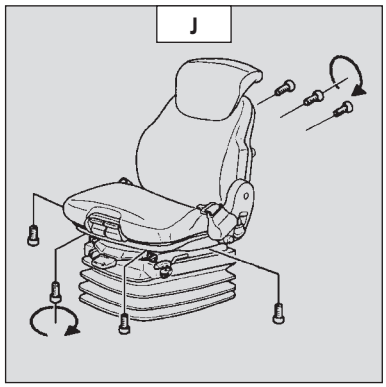

2 - SAFETY BELT

- Sit correctly on the seat.
- Check that seat belt is not twisted.
- Place the seat belt at hip level.
- Attach the seat belt and check that it locks.
- Adjust the seat belt to your body shape without squeezing your hip and without over-slack.

In no event should the lift truck be used if the seat belt is defective (fixing, locking, cuts, tears, etc.). Repair or replace the seat belt immediately.

https://truckmanualshub.com/

3 - CONTROL AND SIGNAL LIGHTS PANEL

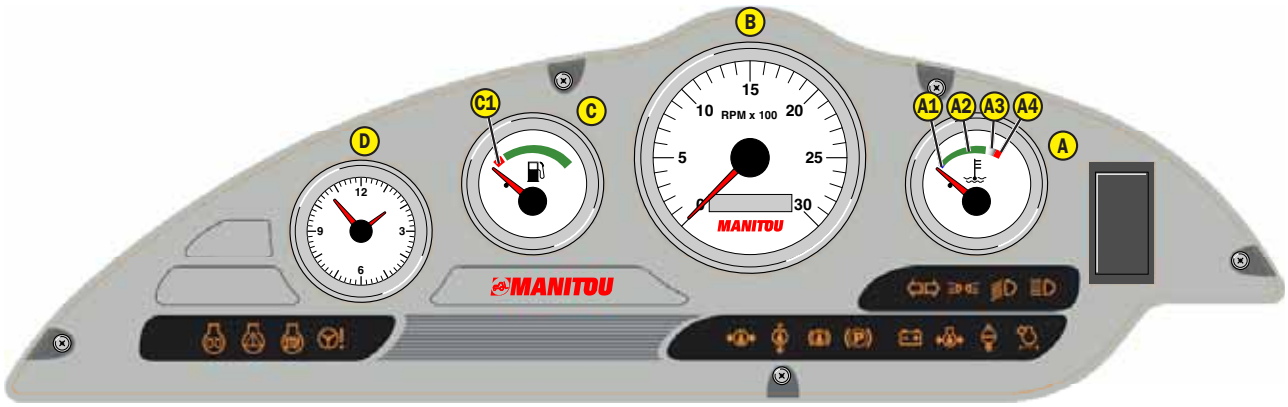

CONTROL INSTRUMENTS

A - I.C. ENGINE WATER TEMPERATURE

Temperature zone:

A1 - Blue zone (0° - 50°) Use the lift truck with moderation, wait for temperature to increase before normal operation.
A2 - Green zone (50° - 100°) Use lift truck normally
A3 - White/red zone (100° - 105°) Use lift truck with moderation, monitor the temperature.
A4 - Red zone (105° - 120°) Stop the lift truck, look for the cause of overheating.

NOTE: Red indicator light comes on between zone A3 and A4.

B - HOUR METER AND REV COUNTER

C - FUEL LEVEL

Red zone C1 indicates that you are using the reserve supply and that time of use is limited.

D - CLOCK

SIGNAL LIGHTS

A permanently lit or flashing warning lamp, with the engine running, is the sign of an operating fault. The lighting of some lamps may be accompanied by an audible signal. Do not ignore this warning, consult your dealer without delay.
If one of the warning lamps comes on while the lift truck is in motion, stop the lift truck under the safest possible conditions.

When activating the electrical system of the lift truck, all the red and orange lamps and the panel's buzzer must light to indicate their good working order. If one of the red lamps or the buzzer does not function, carry out the necessary repairs.

NOTE: only for: MLT ... -120 ...

ORANGE I.C. ENGINE PREHEATING INDICATOR LIGHT
Preheating is necessary. When the lift truck is switched on, the lamp comes on for 2 seconds and off as soon as preheating is ended. Start the lift truck's I.C. engine.

ORANGE I.C. ENGINE WARNING INDICATOR LIGHT
If the lamp comes on or flashes while the lift truck is in operation, a diagnostic fault has been detected. The lift truck will operate in reduced mode. Consult your dealer without delay.

RED I.C. ENGINE STOPPED INDICATOR LIGHT
If the lamp comes on or flashes, when the lift truck is running, stop the I.C. engine immediately and consult your dealer.

RED STEERING SYSTEM OIL PRESSURE WARNING INDICATOR LIGHT
If the lamp comes on when the lift truck is running, stop the I.C. engine immediately and look for the cause (possible leak, etc.).

NOTE: The indicator lights go off after engine preheating.

https://truckmanualshub.com/

RED GEAR BOX OIL PRESSURE WARNING INDICATOR LIGHT

MLT 634 Turbo LSU Série F-E3
MLT 634 -120 LSU Série F-E3
MLT 731 Turbo Série F-E3
MLT 735 Turbo LSU Série 6-E3
MLT 735 -120 LSU Série 6-E3
MLT 741 Turbo LSU Série 6-E3
MLT 741 -120 LSU Série 6-E3
MLT 1035 L Turbo LSU Série 6-E3

The lamp and buzzer come on when there is an abnormal drop in gear box pressure, in forward gear. Stop the I.C engine and look for the cause (gear box oil level, possible leak, radiator, etc.).

NOTE: The signal light operates in forward travel conditions only, the signal should not be taken into account when the I.C. engine is running at idle or is stopped.

RED CLUTCH PRESSURE WARNING INDICATOR LIGHT

MLT 634 -120 LSU POWERSHIFT Série F-E3
MLT 735 -120 LSU POWERSHIFT Série 6-E3
MLT 741 -120 LSU POWERSHIFT Série 6-E3

The lamp and buzzer come on when there is an abnormal drop in pressure in the gear box. Stop the I.C engine and look for the cause (gear box oil level, possible leak, radiator, etc.).

NOTE: Since this light only operates while driving, do not take the information into consideration when the lift truck has stopped or is idling.

RED TRANSMISSION OIL TEMPERATURE FAULT NDICATOR LIGHT

The lamp and buzzer come on when the gearbox oil temperature is abnormally high. Stop the I.C engine and look for the cause (gear box oil level, possible leak, radiator, etc.).

RED BRAKING OIL LEVEL WARNING INDICATOR LIGHT

If the lamp and the buzzer come on, when the lift truck is running, stop the I.C. engine immediately and look for the cause (braking oil level, possible leak, etc.). In the event of an abnormal dropping of the level, consult your dealer.

RED PARKING BRAKE LAMP

This lamp comes on when the parking brake is applied.

BATTERY CHARGE WARNING INDICATOR LIGHT

If the lamp and the buzzer come on when the lift truck is running, stop the I.C. engine immediately and look for the cause (electric circuit, alternator belt, alternator, etc.).

RED I.C. ENGINE OIL PRESSURE WARNING INDICATOR LIGHT

If the lamp and the buzzer come on when the lift truck is running, stop the I.C. engine immediately and look for the cause (engine oil level, possible leak, etc.).

RED I.C. ENGINE WATER TEMPERATURE WARNING INDICATOR LIGHT

If the lamp and the buzzer come on when the lift truck is running, stop the I.C. engine immediately and look for the cause (coolant level, possible leak, radiator, etc.).

RED AIR FILTER OR HYDRAULIC RETURN FILTER CLOGGED INDICATOR LIGHT

The lamp and buzzer come on when the air filter cartridge or the hydraulic return oil filter cartridge is clogged up. Stop the I.C. engine and carry out the necessary repairs (see cleaning and replacement requirements in chapter: 3 - MAINTENANCE: FILTERS CARTRIDGES AND BELTS).

GREEN DIRECTION INDICATOR LAMP

GREEN SIDELIGHTS LAMP

GREEN LOW BEAM LAMP

BLUE MAIN BEAM LAMP

https://truckmanualshub.com/

4 - LONGITUDINAL STABILITY LIMITER AND WARNING DEVICE

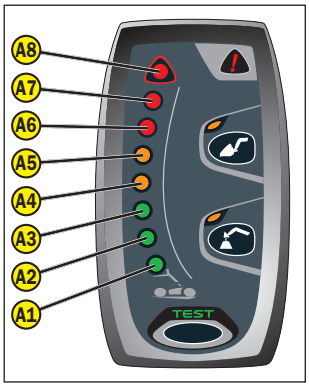

This device warns the operator of the lift truck's longitudinal stability limits. However, lateral stability can reduce the load chart in the upper part, and this reduction is not detected by the device.
According to the type of work required, the longitudinal stability limiter and warning device allows the operator to operate the lift truck in complete safety.

The operator must respect the lift truck's load chart, and the operating mode according to the attachment.

A - "HANDLING" MODE

Use on forks (TFF, PFB, TDL), and adjustable accessories on forks (BB, GL).

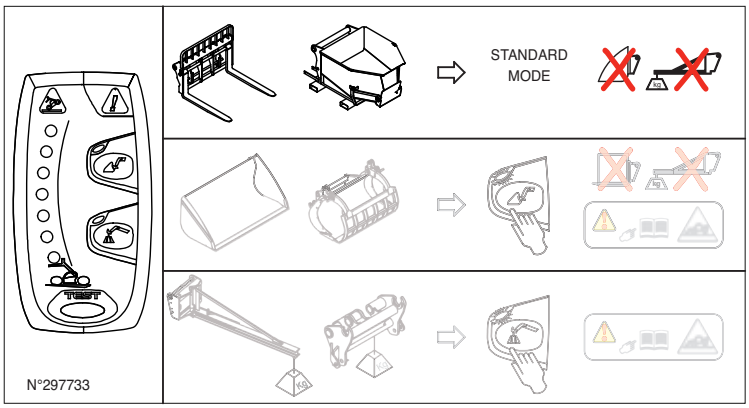

- By default, the device is in "HANDLING" MODE when the lift truck is started-up, except if the "SUSPENDED LOAD" MODE has been selected before shutting-down the engine.
  - A1 - A2 - A3: There is a significant reserve of longitudinal stability.
  - A4 - A5: The lift truck is nearing the limit of longitudinal stability. The alarm sounds simultaneously with a very slow intermittent sound. Move with care.
  - A6: The lift truck is near at the limit of longitudinal stability. The alarm sounds with a slow intermittent sound. Move with care.
  - A7: The lift truck is very near at the limit of longitudinal stability. The alarm sounds with a fast intermittent sound. Move with extreme care.
  - A8: The lift truck is at the authorized limit of longitudinal stability. The alarm sounds with a very fast intermittent sound. All "AGGRAVATING" hydraulic movements are cut-off. The hydraulic movement may automatically slow before cut-off. Only make de-aggravating hydraulic movements in the following order: retract and raise the jib.

NOTE: When the jib is retracted, the function for cutting-off "AGGRAVATING" hydraulic movements is disconnected.

B - "BUCKET" MODE

Use with a bucket (CB, CBA, CBC, CBG, CBR, CBM, FFGR).

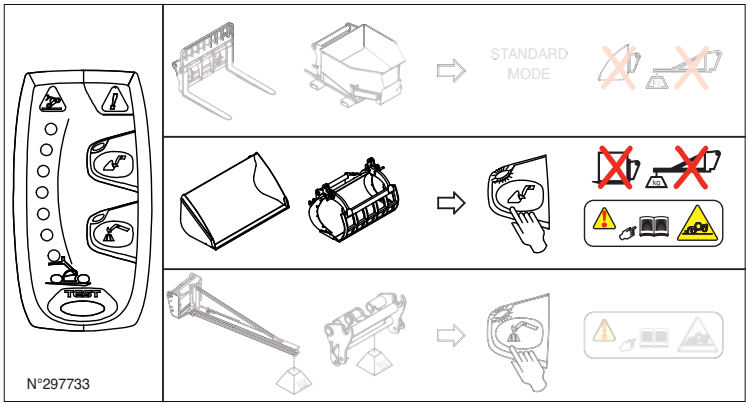

- Place the lift truck in the transport position.
- Press the button for 2 seconds, "BUCKET" MODE is confirmed by an audible beep and the lighting of the lamp.
- Return to "HANDLING" MODE by pressing the button , or loss of driver presence for a few seconds, or shutting down the engine.
  - A1 - A2 - A3: There is a significant reserve of longitudinal stability.
  - A4 - A5: The lift truck is approaching the limit of longitudinal stability, move with care.
  - A6: The lift truck is approaching the limit of longitudinal stability. An audible beep is sounded. Move with care.
  - A7: The lift truck is very close to the limit of longitudinal stability. Move with extreme care.
  - A8: The lift truck is at the authorised limit of longitudinal stability.

All hydraulic movements remain available, ONLY PERFORM DE-AGGRAVATING HYDRAULIC MOVEMENTS IN THE FOLLOWING ORDER: RETRACT AND RAISE THE JIB.

NOTE: According to the version, the jib lowering and extension movements may be cut-off and preceded by an automatic slowing of hydraulic movements. In this case, when the jib is retracted, the function for cutting-off "AGGRAVATING" hydraulic movements is disconnected.

https://truckmanualshub.com/

C - “SUSPENDED LOAD” MODE

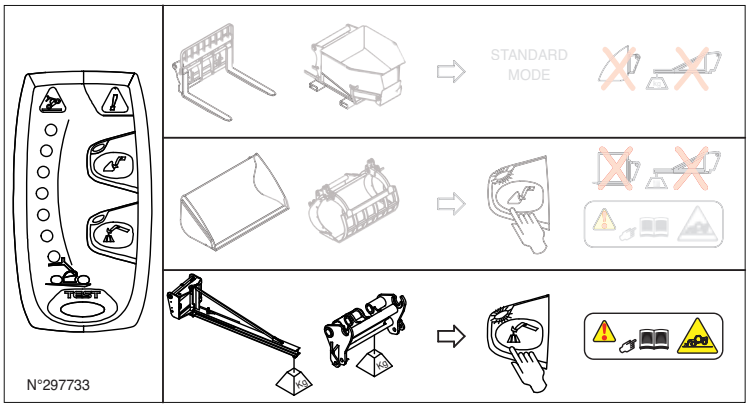

Providing a higher margin of safety, use with short jib or hoisting eye.

- Place the lift truck in the transport position.
- Press the button for 2 seconds, “SUSPENDED LOAD” MODE is validated by an audible beep and the lighting of the lamp.
- Return to “HANDLING” MODE by pressing the button .

A1 - A2 - A3: There is a significant reserve of longitudinal stability.

A4 - A5: The lift truck is nearing the limit of longitudinal stability. The alarm sounds simultaneously with a very slow intermittent sound. Move with care.

A6: The lift truck is near at the limit of longitudinal stability. The alarm sounds with a slow intermittent sound. Move with care.

A7: The lift truck is very near at the limit of longitudinal stability. The alarm sounds with a fast intermittent sound. Move with extreme care.

A8: The lift truck is at the authorized limit of longitudinal stability. The alarm sounds with a very fast intermittent sound. All “AGGRAVATING” hydraulic movements are cut-off. The hydraulic movement may automatically slow before cut-off. Only make de-aggravating hydraulic movements in the following order: retract and raise the jib.

NOTE: When the jib is retracted, the function for cutting-off “AGGRAVATING” hydraulic movements is disconnected.

D - DISABLING “AGGRAVATING” HYDRAULIC MOVEMENT CUT-OFF

In certain cases, in order to get out of a difficult situation, the operator can bypass this safety system. Button D temporarily disables the cutting-off of “AGGRAVATING” hydraulic movements.

- Hold down button D, lamp D1 will light, and simultaneously perform the necessary ”AGGRAVATING” hydraulic movement with extreme care. The combined use of these two actions is limited to 60 seconds.

Remain very vigilant during this operation. The only information available to the operator is the lift truck’s dynamic stability.

E - TESTING OF THE LONGITUDINAL STABILITY LIMITER AND WARNING DEVICE

- Short press the button TEST to verify at any time that the longitudinal stability alarm is working.
  - Correct operation: All the LEDs light for two seconds and an audible beep is sounded.

NOTE: This test does not check the proper adjustment of the longitudinal stability limiter that must be inspected daily or after every 10 hours of service (see: 3 - MAINTENANCE: A - DAILY OR EVERY 10 HOURS SERVICE).

F - FAULT INDICATOR LAMP

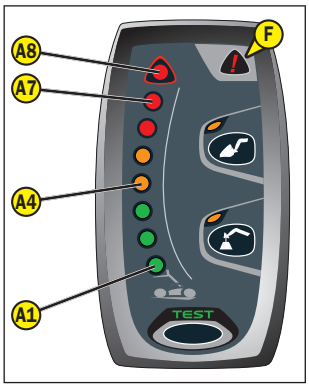

A permanently lit fault indicator lamp F, together with a combination of illuminated leds, indicates a major fault liable to affect the safety of the lift truck. Refer to your agent or dealer.

- The fault indicator lamp plus leds A1 and A7 lighting alternately with A4 and A8 indicates a defective link in the operation of the longitudinal stability limiter and warning device.
- The fault indicator lamp plus continuously lit leds A7 and A8 indicate a faulty box.

G - STRAIN GAUGE

Disassembly or calibration of the strain gauge is prohibited, this must only be done by specially trained personnel, consult your dealer.

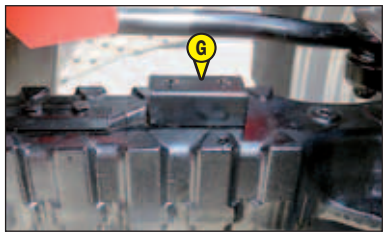

https://truckmanualshub.com/

5 - EMERGENCY STOP BUTTON

- In the event of danger, it lets you stop the I.C. Engine and thereby cut out all hydraulic movements.
- Pull the button to disable it before restarting the lift truck.

Be ready for hydraulic movements suddenly stopping when you press this button.

6 - EMERGENCY EXIT

EMERGENCY HAMMER
Use the emergency hammer to break one of the windows in the event that it is impossible to exit the cab by the door or by opening the rear window.

7 - SWITCHES

NOTE: The location of the switches may vary depending on the options.

A - OPTION ELECTRICAL JIB PROVISION ELECTROVALVE AT JIB HEAD
See: 2 - DESCRIPTION: DESCRIPTION AND USE OF THE OPTIONS.

B - OPTIONAL BLUE FRONT AND REAR WORKING LIGHTS

C - WHEEL ALIGNMENT LAMPS

D - WARNING LIGHTS

E - REAR FOG LIGHTS

F - SELF-CLEANING FAN OPTION
See: 2 - DESCRIPTION: DESCRIPTION AND USE OF THE OPTIONS.

G - STEERING SELECTION

H - TRANSMISSION CUT-OFF
The switch selects transmission cut-off to the service brake pedal or the hydraulic controls lever.

NOTE: In all cases transmission cut-off can be activated using the GEAR lever. **(except for MLT... POWERSHIFT ...)**
- Position 1: With the indicator light on, transmission cut-off is by means of the service brake pedal and the forward/neutral/reverse gear lever.
- Position 2: Indicator light off, transmission is cut-off from forward/neutral/reverse gear selector.

USE OF TRANSMISSION CUT-OFF
Transmission cut-off to brake pedal (position 1).
- When loading.

Transmission cut-off to hydraulic controls lever (position 2).
- When driving.
- For inching and continuous stopping and starting (delicate handling). In order to optimise hydraulic movements, cut off transmission to the hydraulic controls lever.
- Starting on a slope.

https://truckmanualshub.com/

I - REVOLVING LIGHT

J - FRONT AND REAR WORKING LIGHTS

K - JIB HEAD LIGHT OPTION

L - OPTION

M - SIDE WINDSCREEN WIPER + ROOF WINDSCREEN WIPER OPTION

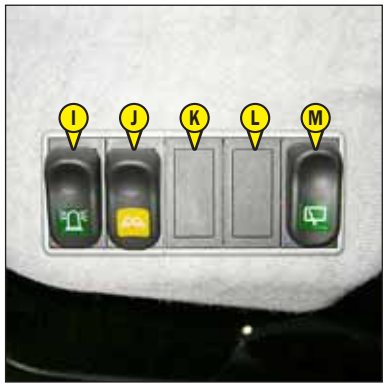

N/O - OPTION HYDRAULIC TOWING HOOK WITH SINGLE OR DUAL EFFECT REAR HYDRAULIC PREDISPOSITION
See: 2 - DESCRIPTION: DESCRIPTION AND USE OF THE OPTIONS.

P - ATTACHMENT HYDRAULIC LOCKING DEVICE OPTION
See: 2 - DESCRIPTION: DESCRIPTION AND USE OF THE OPTIONS.

Q - OPTION JIB SUSPENSION
See: 2 - DESCRIPTION: DESCRIPTION AND USE OF THE OPTIONS.

R - NEUTRALIZATION OF HYDRAULIC MOVEMENTS
When driving on the road, it is highly recommended (mandatory in Germany) that you cut-off all the hydraulic movements. The lamp shows when it is in use.

S - TILTING CORRECTOR
MLT 1035 L Turbo LSU Série 6-E3
See: 2 - DESCRIPTION: 20 - HYDRAULIC CONTROLS AND TRANSMISSION CUT-OFF.

T - DISABLING 6TH GEAR
MLT 634 -120 LSU POWERSHIFT Série F-E3
MLT 735 -120 LSU POWERSHIFT Série 6-E3
MLT 741 -120 LSU POWERSHIFT Série 6-E3
See: 2 - DESCRIPTION: 16 - GEAR SELECTOR.

U - GEAR INDICATOR
MLT 634 -120 LSU POWERSHIFT Série F-E3
MLT 735 -120 LSU POWERSHIFT Série 6-E3
MLT 741 -120 LSU POWERSHIFT Série 6-E3
See: 2 - DESCRIPTION: 16 - GEAR SELECTOR.

V - ATTACHMENT EASY HYDRAULIC CONNECTION OPTION
See: 2 - DESCRIPTION: DESCRIPTION AND USE OF THE OPTIONS.

W - OPTION

https://truckmanualshub.com/

8 - LIGHT SWITCH, HORN AND INDICATOR SWITCH

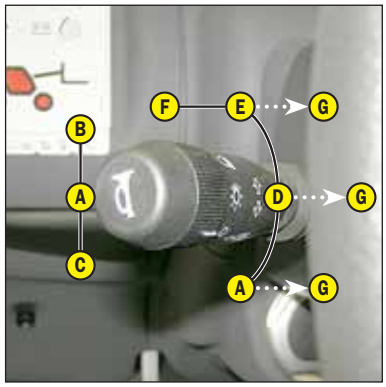

The switch controls the visual and sound alarms.

A - All lights are off, the direction indicators do not flash.
B - The right hand direction indicators flash.
C - The left hand direction indicators flash.
D - The sidelights and the rear lights are on.
E - The dipped headlights and the rear lights are on.
F - The main beam headlights and the rear lights are on.
G - Headlight signal.

Pressing the switch sounds the horn.
NOTE: The positions D - E - F - G can be carried out without the ignition being on.

9 - FRONT AND REAR WINDSCREEN WIPER SWITCH

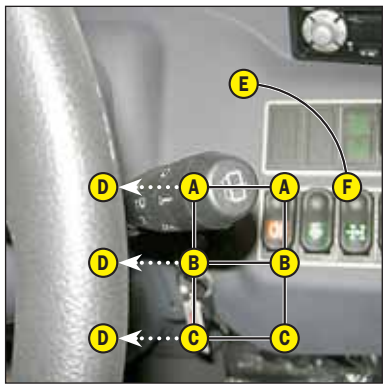

FRONT WINDSCREEN WIPER

A - Front windscreen wiper off.
B - Front windscreen wiper low speed setting.
C - Front windscreen wiper high speed setting.
D - Front windscreen wiper intermittent setting.

REAR WINDSCREEN WIPER

E - Rear windscreen wiper off.
F - Rear windscreen wiper on.

NOTE: These functions will only work when the ignition is switched on.

10 - IGNITION SWITCH

MLT ... -120 ...

The key switch has five positions:

P - Ignition off, parking position.
O - Ignition switched off and I.C. engine stopped.
I - Ignition and pre-heating.
II - Not used.
III - The I.C. engine starts, return to position I as soon as the key is released.

MLT ... Turbo ...

The key switch has five positions:

P - Ignition off, parking position.
O - Ignition switched off and I.C. engine stopped.
I - Ignition on.
II - Heating.
III - The I.C. engine starts, return to position I as soon as the key is released.

https://truckmanualshub.com/

11 - FUSES AND RELAYS IN THE CAB

- Lift up the fuse and relay access panel 1.

NOTE: A sticker on the inside of the access panel gives a clear display of the use of the components described below.

Always replace a faulty fuse with another of equivalent rating. Never use a fuse that has been repaired.

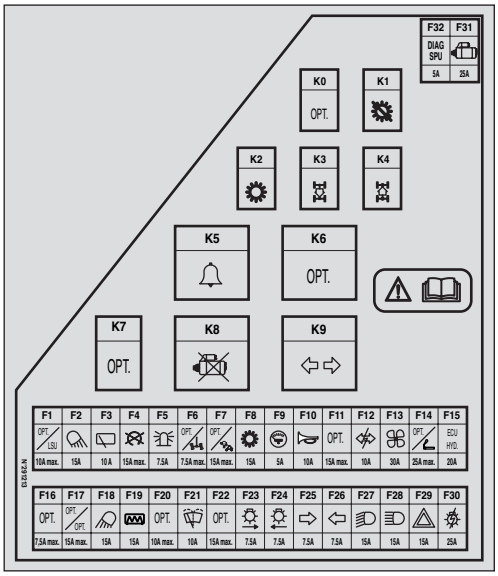

F1 - Hydraulic control unit (7,5A). MLT ... LSU
- OPTION.
F2 - Working tail light (15A).
F3 - Rear windscreen wiper (10A).
- Roof windscreen wiper (10A).
- Side windscreen wiper (10A).
F4 - Engine stop electrovalve (10A). MLT ... Turbo LSU
- Engine stop electrovalve (15A). MLT 731 Turbo
- Engine control unit (10A). MLT ... -120 LSU
F5 - Revolving light (7,5A).
F6 - Wheel alignment (5A).
- OPTION.
F7 - Longitudinal stability limiter and warning device (7,5A).
- “Aggravating” hydraulic movement cut-off deactivation (7,5A).
- OPTIONAL Blue front and rear working lights (15A).
F8 - Forward/neutral/reverse selector (15A).
- Transmission cut-off (15A).
- Reversing lights (15A).
- OPTION Reverse buzzer alarm (15A).
F9 - Control panel (5A).
F10 - Sound alarm (10A).
- Stop switch (10A).
F11 - OPTION Working lights on jib head (15A).
F12 - Flashing unit (10A).
F13 - Ventilation/heating (30A).
F14 - Cigar lighter (10A).
- OPTION.
F15 - Hydraulic movement control unit (20A).
F16 - Diagnostic socket (5A).
- OPTION.
F17 - OPTION CLEANFIX self-cleaning fan (10A).
- OPTION FINTRONIC anti-start system (10A).
- OPTION MODCOD / MODCLÉ Anti-theft system (10A).
- OPTION Rear hydraulic predisposition (10A).
- OPTION Two rear hydraulic predispositions (15A).
F18 - Front working lights (15A).
F19 - OPTION.
F20 - OPTION Pneumatic seat (10A).
- OPTION.
F21 - Front windscreen wiper and front windscreen washer (10A).
F22 - OPTION Jib suspension (10A).
- OPTION Electrical jib provision (5A).
- OPTION Head jib electrovalve (7,5A)
F23 - Right sidelight (7,5A).
- Dashboard lighting (7,5A).
F24 - Left sidelights (7,5A)
- Number plate lighting (7,5A).
F25 - Right indicators (7,5A).
F26 - Left indicators (7,5A).
F27 - Low beam (15A).
- Low beam indicator light (15A).
- Rear fog light (15A).
F28 - Main beam (15A).
- Main beam headlamp (15A).
F29 - Warning lights (15A).
- Roof light (15A).
- Anti-theft device provision (15A).
- Clock (15A).
- Rev counter (15A).
F30 - Lights, horn and indicator switch (25A).

https://truckmanualshub.com/

F31 - Starter (25A).
F32 - Diagnostic socket (5A).
- Hydraulic movement control unit (5A).

K0 - OPTION.
K1 - Transmission cut-off relay.
K2 - Transmission cut-off relay. except MLT ... POWERSHIFT ...
K3 - Reverse gear relay.
K4 - Forward gear relay. except MLT ... POWERSHIFT ...
K5 - Buzzer.
K6 - OPTION.
K7 - OPTION.
K8 - Safety system starting switch relay.
K9 - Flashing unit.
K17 - Indicator module relay.
K18 - Neutral security system switch relay.

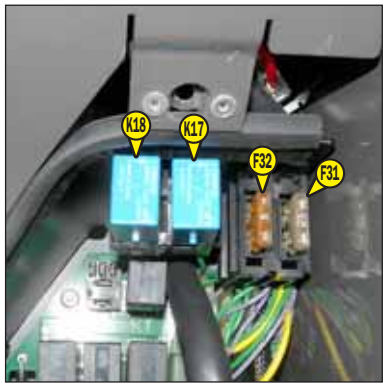

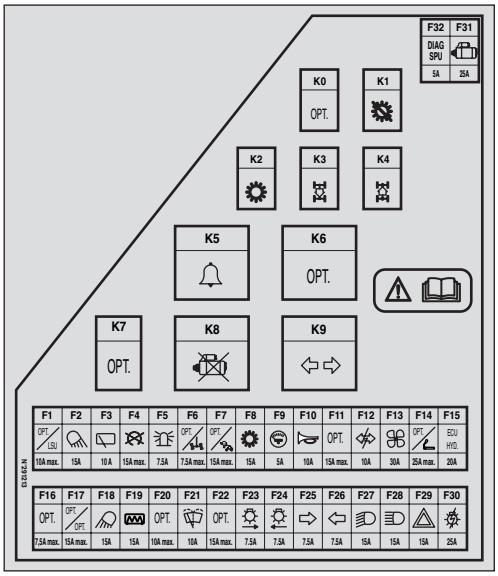

- Lift the lid 2 of the tool box for access to fuse.
F33 - Hydraulic control unit (1A). MLT ... LSU

- Remove the les casings 3 and 4 of the hydraulic control for access to relays.
K10 - OPTION Jib suspension cut-off.
K11 - OPTION Jib suspension supply.

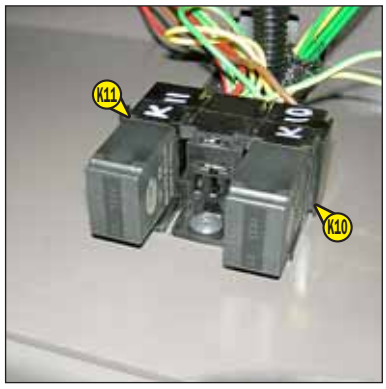

https://truckmanualshub.com/

12 - FUSES AND RELAYS UNDER THE ENGINE HOOD

Remove casing 1 and cover 2 for access to fuses and relays.

Always replace a faulty fuse with another of equivalent rating. Never use a fuse that has been repaired.

F40 - Key switch (40A). MLT ... Turbo
- Key switch (80A). MLT ... -120

F41 - Key switch (40A). MLT ... Turbo
- Engine control unit (30A). MLT ... -120

F42 - Preheating I.C. engine (80A).

F43 - Alternator (80A). MLT ... Turbo
- Alternator (100A). MLT ... -120

F47 - OPTION Fuel decongealant (15A). MLT ... Turbo

K15 - OPTION Diesel decongealant. MLT ... Turbo

K16 - Engine preheating relay.

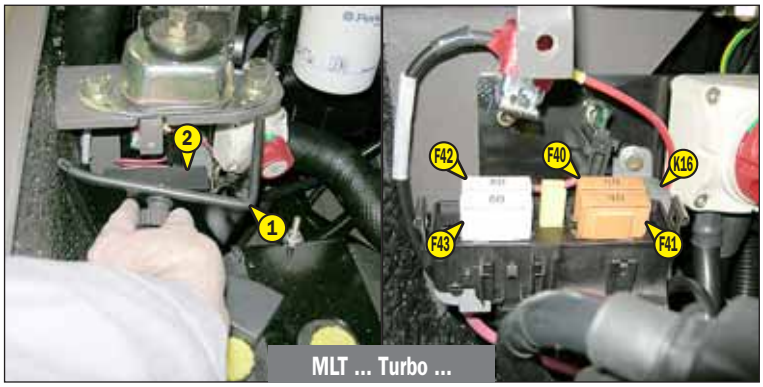

MLT ... Turbo ...

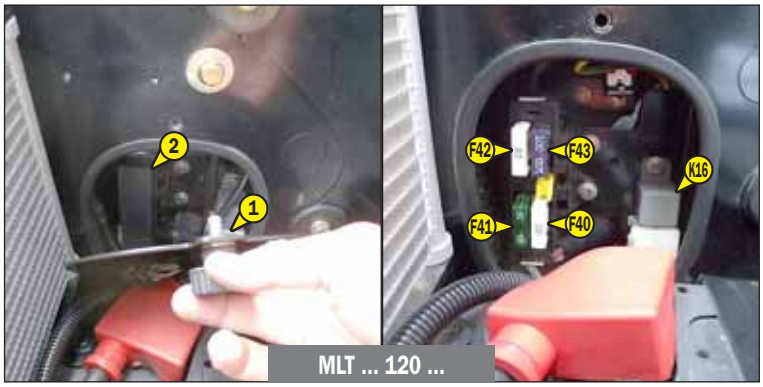

MLT ... 120 ...

13 - DIAGNOSTIC CONNECTOR

MLT 634 -120 LSU Série F-E3
MLT 634 -120 LSU POWERSHIFT Série F-E3
MLT 735 -120 LSU Série 6-E3
MLT 735 -120 LSU POWERSHIFT Série 6-E3
MLT 741 -120 LSU Série 6-E3
MLT 741 -120 LSU POWERSHIFT Série 6-E3

https://truckmanualshub.com/

14 - ACCELERATOR PEDAL

15 - SERVICE BRAKE PEDAL AND TRANSMISSION CUT-OFF

The pedal applies on the front and rear wheels by an hydraulic brake system, and allows the lift truck to be slowed down and stopped. Depending on the position of the transmission cut-off switch, it enables the free travel to cut off transmission (see: 2 - DESCRIPTION: 5 - SWITCHES).

16 - GEAR LEVER AND TRANSMISSION CUT-OFF

MLT 634 Turbo LSU Série F-E3
MLT 634 -120 LSU Série F-E3
MLT 731 Turbo Série F-E3
MLT 735 Turbo LSU Série 6-E3
MLT 735 -120 LSU Série 6-E3
MLT 741 Turbo LSU Série 6-E3
MLT 741 -120 LSU Série 6-E3
MLT 1035 L Turbo LSU Série 6-E3

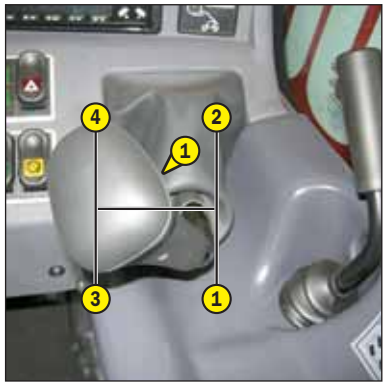

In order to change speeds, it is necessary to cut the transmission by pressing the button 1 on the lever.

1st gear: to the right, backwards.
2nd gear: to the right, forwards.
3rd gear: to the left, backwards.
4th gear: to the left, forwards.

USING THE GEARS ON THE GEAR BOX

- On these lift trucks with a torque converter, it is not necessary to automatically start up in 1st speed and progress up the gears.

The choice of transmission gear ratio should be made carefully according to the nature of the work being carried out. A poor choice may result in the extremely rapid rise of the transmission oil temperature through excessive slipping of the converter, which could lead to serious damage to the transmission (it is essential to stop and change the working conditions if the transmission oil temperature indicator light comes on). This poor choice may also result in a reduction in the lift truck's performance in forward gear. When the forward force increases, the forward speed in the r gear (for example, in 3rd gear) may be lower than the forward speed that could be obtained with the r-1 gear (in 2nd instead of 3rd).

In general, we would advise you to use the following gears according to the nature of the work being carried out.

- ON THE ROAD:
  Set off in 3rd gear and go up to 4th if the conditions and state of the road permit it.
  In hilly areas, set off in 2nd gear and go up to 3rd if the conditions and state of the road permit it.
- WITH A TRAILER ON THE ROAD:
  Set off in 2nd gear and go up to 3rd if the conditions and state of the road permit it.
- HANDLING:
  3rd gear.
  2nd gear in restricted spaces.
- LOADING (reclaiming with bucket, manure fork, etc.):
  2nd gear.
- EARTH MOVING:
  1st gear.

https://truckmanualshub.com/

16 - GEAR SELECTOR

MLT 634 -120 LSU POWERSHIFT Série F-E3
MLT 735 -120 LSU POWERSHIFT Série 6-E3
MLT 741 -120 LSU POWERSHIFT Série 6-E3

The gear is selected by means of buttons 1 and 2. The selected gear is indicated on the dial 3.
There are 6 forward and 3 reverse gears available.

NOTE: When reversing, the selected gear remains the same, except for the 4th, 5th and 6th gears in forward motion which become 3rd gear in reverse motion.

USING THE GEARS ON THE GEAR BOX

- On these lift trucks with a torque converter, it is not necessary to automatically start up in 1st speed and progress up the gears.

The choice of transmission gear ratio should be made carefully according to the nature of the work being carried out. A poor choice may result in the extremely rapid rise of the transmission oil temperature through excessive slipping of the converter, which could lead to serious damage to the transmission (it is essential to stop and change the working conditions if the transmission oil temperature indicator light comes on). This poor choice may also result in a reduction in the lift truck's performance in forward gear. When the forward force increases, the forward speed in the r gear (for example, in 3rd gear) may be lower than the forward speed that could be obtained with the r-1 gear (in 2nd instead of 3rd).

In general, we would advise you to use the following gears according to the nature of the work being carried out.

- ON THE ROAD:
  Set off in 4th gear and go up to 5th and 6th if the conditions and state of the road permit it.
  In hilly areas, set off in 3rd gear and go up to 4th and 5th (the use of 6th gear is prohibited) if the conditions and state of the road permit it.
- WITH A TRAILER ON THE ROAD:
  Set off in 2nd gear and go up through the gears to 5th if the conditions and state of the road permit it.
- HANDLING:
  3rd, 4th or 5th gear (the use of the 6th gear is prohibited).
  2nd gear in restricted spaces.
- LOADING (reclaiming with bucket, manure fork, etc.):
  2nd gear.
- EARTH MOVING:
  1st gear.

SWITCH FOR DISABLING 6TH GEAR

Switch 4 serves to enable or disable 6th gear and must be used when required for the task to be performed. When the lamp is lit, 6th gear is disabled.

This device must be used during handling, when towing a trailer and in hilly areas, to reduce the risk of the gear box overheating. Disabling 6th gear also guarantees that the speed limit will not be exceeded when towing a trailer.

17 - PARKING BRAKE LEVER

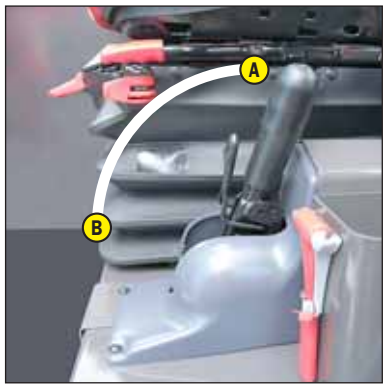

To prevent accidental loosening or release, the lever is fitted with safety locking.

- To apply the parking brake, pull the lever backwards (position A).
- To loosen the parking brake, release and push the lever forwards (position B).

https://truckmanualshub.com/

18 - FORWARD/NEUTRAL/REVERSE GEAR SELECTION

FORWARD: Push the knob forward (position A).
REVERSE: Pull the knob backwards (position B).
NEUTRAL: The knob must be in the intermediate position to start the lift truck (position C).

When operating this control, the lift truck should be travelling at slow speed and not accelerating.

NOTE: The reverse lights indicate that the lift truck is running in reverse motion. An OPTIONAL audible reversing alarm can also be fitted.

SAFETY FOR MOVING THE LIFT TRUCK
Authorisation to move the lift truck is controlled by an electronic unit. The operator must observe the following sequence to move the truck forwards or backwards:

1 - sit down correctly in the driver's seat,
2 - release the parking brake,
3 - engage forward or reverse movement.

To stop the lift truck, he must observe the following sequence:

1 - Set the forward/reverse selector to neutral,
2 - engage the parking brake,
3 - get out of the lift truck.

NOTE: If the operator leaves the driving cab with forward or reverse engaged, a continuous alarm will sound. While this alarm sounds, the operator can simply sit back in the seat and continue advancing or reversing.
If the alarm becomes discontinuous, the operator must sit back in the seat, put the forward/reverse selector back in neutral and select forward or reverse if he wishes to continue moving.

19 - STEERING SELECTION

A - GREEN WHEEL ALIGNMENT LAMPS
These lamps come on to indicate the alignment of the wheels in relation to the lift truck. Lamp A1 for the front wheels and lamp A2 for the rear wheels.

Before selecting one of the three possible steering positions, bring all 4 wheels into alignment with regards to the lift truck axle. Never change the steering mode whilst driving.

B - STEERING SELECTION LEVER

B1 - Front drive wheels (highway traffic).

B2 - Front and rear drive wheels in opposite direction (short steering lock).

B3 - Front and rear drive wheels in the same direction (crab steering).

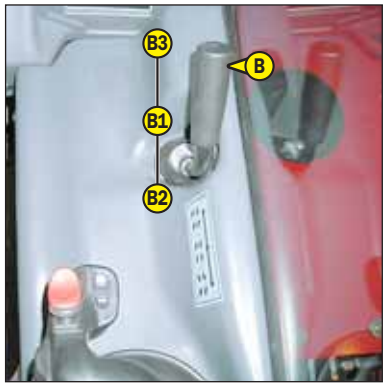

C - SWITCH FOR ALIGNMENT OF THE WHEELS
This switch enables the use or not of the device for alignment of the wheels. The indicator light indicates its use.

CONTROL FOR ALIGNMENT OF THE WHEELS
- Connect the switch (signal light ON).
- Shift the steering selection lever B into position B2 (short steering lock).
- Turn the steering wheel and bring the rear wheels into alignment until lamp A2 lights up.
- Shift the steering selection lever B into position B1 (highway traffic).
- Turn the steering wheel and bring the front wheels into alignment until lamp A1 lights up.

Before driving on roads, it is necessary to check the alignment of the rear wheels and to drive in front wheel steer. The control of the alignment of the rear wheels must be regularly done with the help of the green lamps, while driving the lift truck. In case of anomalies, consult your dealer.

https://truckmanualshub.com/

20 - HYDRAULIC CONTROLS AND TRANSMISSION CUT-OFF

Do not attempt to alter the hydraulic system pressure by interfering with the pressure regulating valve. In the event of suspected malfunction, contact your dealer. ANY ALTERATION MAY RENDER THE WARRANTY NULL AND VOID.

Use the hydraulic controls carefully without jerking, to avoid accidents caused byshaking the lift truck.

NOTE: When driving on the road, it is highly recommended (mandatory in Germany) that you cut-off all the hydraulic movements (see: 2 - DESCRIPTION 7 - SWITCHES).

MLT 634 Turbo LSU Série F-E3
MLT 634 -120 LSU Série F-E3
MLT 634 -120 LSU POWERSHIFT Série F-E3
MLT 731 Turbo Série F-E3
MLT 735 Turbo LSU Série 6-E3
MLT 735 -120 LSU Série 6-E3
MLT 735 -120 LSU POWERSHIFT Série 6-E3
MLT 741 Turbo LSU Série 6-E3
MLT 741 -120 LSU Série 6-E3
MLT 741 -120 LSU POWERSHIFT Série 6-E3

NOTE: If necessary use the steering to reset the hydraulic control steering accumulator.

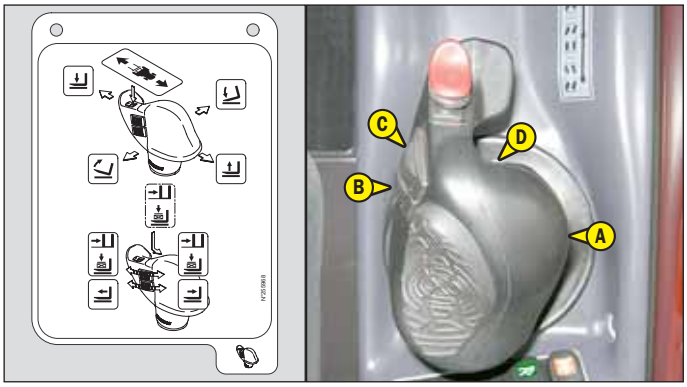

MLT 634 Turbo LSU Série F-E3 / MLT 634 -120 LSU Série F-E3
MLT 731 Turbo Série F-E3
MLT 735 Turbo LSU Série 6-E3 / MLT 735 -120 LSU Série 6-E3
MLT 741 Turbo LSU Série 6-E3 / MLT 741 -120 LSU Série 6-E3

A - Lifting and tilting control lever.
B - Telescoping control button.
C - Attachment control button.
D - Jib head electrovalve option control button.

LIFTING THE LOAD
- The lever A backwards when lifting.
- The lever A forwards when lowering.

TILT OF CARRIAGE
- The lever A to the left for reverse tilt.
- The lever A to the right for forward tilt.

TELESCOPING
- Button B forwards for extending.
- Button B backwards for retracting.

ATTACHMENT
- The button C forwards or backwards.

OPTION ELECTRIC PREDISPOSITION ON ELECTROVALVE JIB AT HEAD JIB
- Button D (see: 2 - DESCRIPTION: DESCRIPTION AND USE OF ELECTRICAL AND HYDRAULIC OPTIONS).

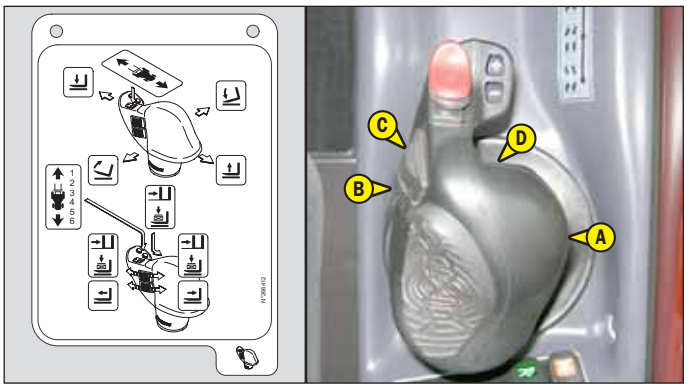

MLT 634 -120 LSU POWERSHIFT Série F-E3
MLT 735 -120 LSU POWERSHIFT Série 6-E3
MLT 741 -120 LSU POWERSHIFT Série 6-E3

MLT 1035 L Turbo LSU Série 6-E3

NOTE: If necessary use the steering to reset the hydraulic control steering accumulator.

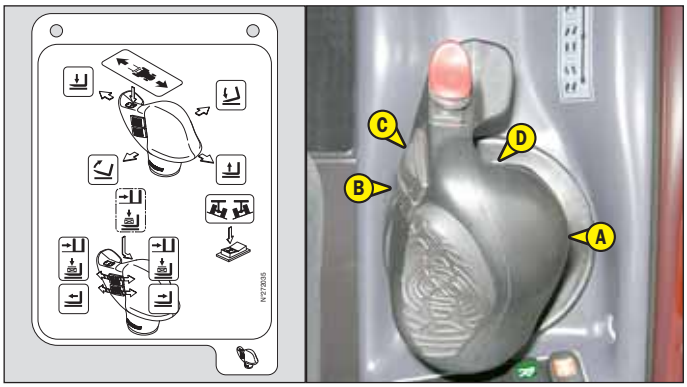

A - Lifting and tilting control lever.
B - Telescoping control button.
C - Attachment control button.
D - Jib head electrovalve option control button.
E - Tilting corrector control button.

LIFTING THE LOAD
- The lever A backwards when lifting.
- The lever A forwards when lowering.

TILT OF CARRIAGE
- The lever A to the left for reverse tilt.
- The lever A to the right for forward tilt.

TELESCOPING
- Button B forwards for extending.
- Button B backwards for retracting.

ATTACHMENT
- The button C forwards or backwards.

OPTION ELECTRIC PREDISPOSITION ON ELECTROVALVE JIB AT HEAD JIB
- Button D (see: 2 - DESCRIPTION: DESCRIPTION AND USE OF ELECTRICAL AND HYDRAULIC OPTIONS).

TILTING CORRECTOR
- Button E to the left to tilt the lift truck to the left.
- Button E to the right to tilt the lift truck to the right.

NOTE: Tilt can be corrected up to a carriage articulation axle height of 3m50 above the ground, with the jib retracted.

https://truckmanualshub.com/

21 - FUNCTION FILES

These files contain the description of the hydraulic controls and the load charts for the attachments used on the lift truck.

22 - LEVEL INDICATOR

Except for MLT 1035 L Turbo LSU Série 6-E3

Enables the operator to check that the lift truck is in the horizontal position.

22 - LEVEL INDICATORS

Only for MLT 1035 L Turbo LSU Série 6-E3

A - TILT INDICATOR
When the two marks are aligned, the chassis is parallel with the front axle.

B - SPIRIT LEVEL
Enables the operator to check that the lift truck is in the horizontal position.

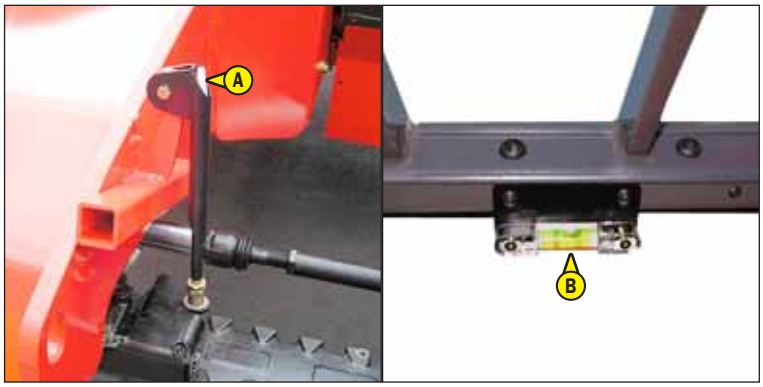

23 - HEATER CONTROL

A - HEATING FAN CONTROL
This 3-speed control regulates warm or cold air through the heating ventilators.

B - HEATING TEMPERATURE CONTROL
Allows the temperature inside the cab to be adjusted.

B1 - With the valve closed, the fan delivers fresh air.

B2 - With the valve opened completely, the fan delivers warm air.

The intermediate positions allow the temperature to be adjusted.

https://truckmanualshub.com/

23 - AIR CONDITIONING CONTROLS (OPTION AIR CONDITIONING)

The air conditioning only comes on when the forklift truck has been started up. When using your air conditioning, you must work with the doors and windows closed.

In winter: So as to ensure correct operation and complete efficiency of the air conditioning unit, start up the compressor once a week, if only for a short spell, so as to lubricate the internal seals.

In cold weather: Warm the I.C. engine before switching on the compressor, so as to allow the coolant that has collected in the liquid state at the lowest point of the compressor circuit to turn into gas under the effect of the heat given off by the I.C. engine, as the compressor is liable to be damaged by coolant in the liquid state.

If your air conditioning does not seem to be working properly, have it examined by your dealer (see: 3 - MAINTENANCE: F - EVERY 2000 HOURS OF SERVICE). Never try to repair any possible problems by yourself.

DESCRIPTION OF THE AIR CONDITIONING CONTROLS

A - Air conditioning system ON/OFF control switch with indicator lamp. Only works when control switch “C” set to 1, 2 or 3.
B - Air temperature control.
C - Air flow and fan speed control. When this control is set to “0” the air conditioning system will not work.

NOTE: Possible losses of water under the lift truck are due to condensate discharges caused by the drying effect of the installation, especially with high outside temperatures and high relative humidity.
For the air conditioning to perform properly, the air intakes must not be blocked by frost, snow or leaves.
When the facility is running, at least one of the cab air grilles must be open so as to avoid any risk of freezing to the evaporator.

HEATING MODE

The controls must be adjusted in the following way:
A - Control with signal light off.
B - At the required temperature.
C - To the desired position 1, 2 or 3.

CONDITIONED AIR MODE

The controls must be adjusted in the following way:
A - Control with signal light on.
B - At the required temperature.
C - To the desired position 1, 2 or 3.

DEMISTING MODE

The controls must be adjusted in the following way:
A - Control with signal light on.
B - At the required temperature.
C - To the desired position 1, 2 or 3.
NOTE: Direct the ventilators onto the cab’s windows for increased efficiency.

24 - CAB FILTER VENTILATORS

See: 3 - MAINTENANCE: D - EVERY 500 HOURS SERVICE.

25 - WINDSCREEN DEMISTER VENTS

For optimum effectiveness, close the heating ventilators.

26 - HEATING VENTS

These heating vents enable the air to be directed to the interior of the cabin and onto the side windows.

https://truckmanualshub.com/

27 - BRAKING OIL AND WINDSCREEN WASHER TANK ACCESS PANEL

- Loosen screw 1 and lift up the braking oil and windscreen washer tank access panel (see: 3 - MAINTENANCE: B - EVERY 50 HOURS OF SERVICE).

28 - STEERING WHEEL REGULATING HANDLE

This handle enables the angle and height of the steering wheel to be adjusted.

- Pull handle 1 to adjust the steering wheel.
- Push in handle 1 to lock the steering wheel in the desired position.

29 - DOOR LOCK

Two keys are provided with the lift truck to enable the cabin to be locked.

30 - LOCKING HANDLE FOR UPPER HALF-DOOR

31 - UNLOCKING BUTTON FOR UPPER HALF DOOR

32 - HANDLE FOR REAR WINDOW OPENING

EMERGENCY EXIT
Use the rear window as an emergency exit, in the event that it is impossible to leave the cab by the door or by opening the windscreen.

NOTE: There is an OPTIONAL rear window stay.

https://truckmanualshub.com/

33 - DOCUMENT HOLDER

Ensure that the operator's manual is in its place in the document holder.

34 - SUN VISOR

35 - OVERHEAD LIGHT

36 - HOOK

37 - CIGAR LIGHTER

For 12 V appliance and max. amperage 10A.

https://truckmanualshub.com/

38 - ARMREST AND STORAGE

- Lift the armrest 1 to access the storage.

39 - CAR RADIO (OPTION)

40 - INSIDE REAR-VIEW MIRROR (OPTION)

41 - TOOL BOX

Except for MLT 1035 L Turbo LSU Série 6-E3

42 - NUMBER PLATE

43 - NUMBER PLATE LIGHTING

44 - REAR REFLECTORS

https://truckmanualshub.com/

45 - FRONT HEADLIGHTS

A - Left front indicator.
B - Left front dipped headlight.
C - Left front main beam.
D - Left front sidelight.
E - Right front indicator.
F - Right front dipped headlight.
G - Right front main beam.
H - Right front sidelight.

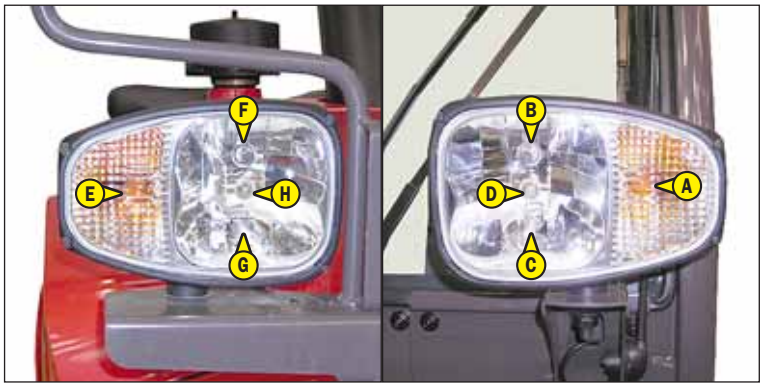

46 - REAR LIGHTS

A - Left rear indicator.
B - Left rear stoplight.
C - Left tail light.
D - Left rear reverse light.
E - Left rear fog light.
F - Right rear fog light.
G - Right rear reverse light.
H - Right tail light.
I - Right rear stoplight.
J - Right rear indicator.

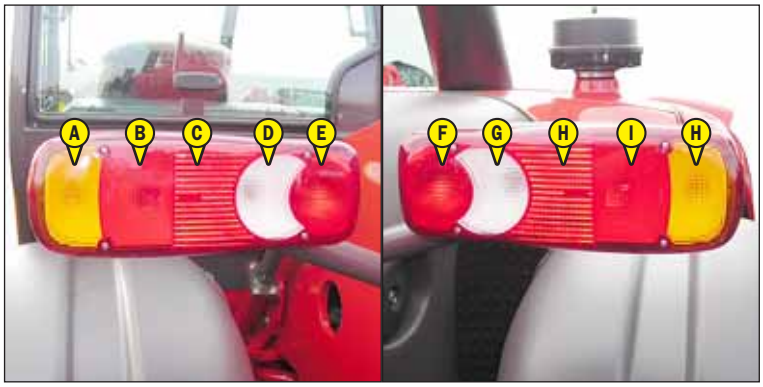

47 - REVOLVING LIGHT

STANDARD

The revolving light pivots for space-saving on the lift truck and can be detached to prevent theft.
- Loosen nut 1 and remove the revolving light.
- Protect mounting 2 with cap 3.

OPTIONAL AIR CONDITIONING

The magnetic revolving light must be clearly visible on the roof of the cab and plugged-in to socket 1.

https://truckmanualshub.com/

TOWING PIN AND HOOK

Located at the rear of the lift truck, this device is used to attach a trailer. Its capacity is limited for each lift truck by the Authorized Gross Vehicle Weight, tractive force and maximum vertical force on the coupling point.

- To use a trailer, see current regulations in your country (maximum running speed, braking, maximum weight of trailer, etc.).
- Verify the trailer's condition before using it (tyre condition and pressures, electrical connection, hydraulic hose, brake system…).

Do not tow a trailer or attachment which is not in perfect working order. Using a trailer in poor condition may affect the lift truck's steering and braking, and hence safety.

If a third party helps in coupling or uncoupling the trailer, this person must be permanently visible to the driver and wait until the lift truck has stopped, the handbrake is on and the I.C. engine is switched off before performing the operation.

NOTE: A rear-view mirror allows the lift truck to approach more closely to the trailer ring.

A - COUPLING FITTING

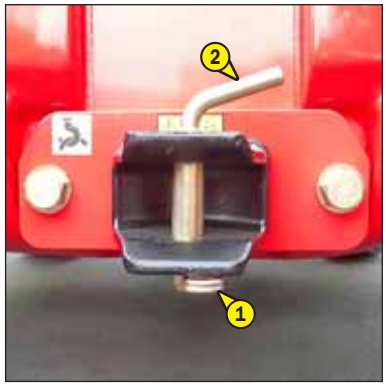

COUPLING AND UNCOUPLING THE TRAILER

- To couple the trailer, position the lift truck as close as possible to the trailer ring.
- Put the handbrake on and switch off the I.C. engine.
- Remove the clip 1, lift the trailer pin 2 and place or remove the trailer ring.

Be careful not to get your fingers caught or crushed during this operation.
Do not forget to put clip 1 back in place.
When uncoupling, make sure that the trailer is supported independently.

B - REAR ELECTRIC SOCKET

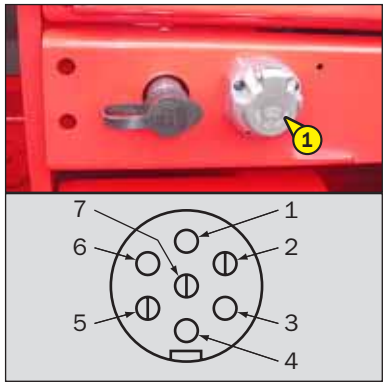

- Connect the male plug to the female socket 1 on the lift truck and make sure the lights of he trailer or the light bar are working properly.
  1 - Rear left-hand indicator light.
  2 - Rear fog lights.
  3 - Earth.
  4 - Rear right-hand indicator light.
  5 - Right rear light.
  6 - Rear stop lights.
  7 - Left rear light and number plate.

https://truckmanualshub.com/

C - TRAILER BRAKE SYSTEM.

- Connect the brake hose to the provided brake unit 1 on the lift truck.
- Make sure the trailer brakes are working properly and test the effects of braking before taking the trailer onto the public highway.

D - CHASSIS-MOUNTED FRONT TOWING HOOK

COUPLING AND UNCOUPLING THE TRAILER

- To couple the trailer, position the lift truck as close as possible to the trailer ring.
- Put the handbrake on and switch off the I.C. engine.
- Remove the clip 1, lift the trailer pin 2 and place or remove the trailer ring.

Be careful not to get your fingers caught or crushed during this operation.
Do not forget to put clip 1 back in place.
When uncoupling, make sure that the trailer is supported independently.

E - COUPLING LADDER (OPTIONAL)

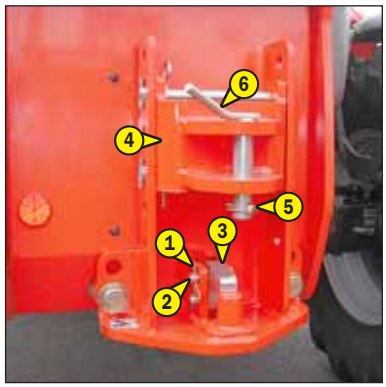

COUPLING AND UNCOUPLING THE TRAILER

- To couple the trailer, position the lift truck as close as possible to the trailer ring.
- Put the handbrake on and switch off the I.C. engine.

ON THE FIXED PIN

- Remove pin 1, remove rod 2 and raise latch 3.
- Insert or remove the trailer ring, lower latch 3 and refit rod 2.

Be careful not to get your fingers caught or crushed during this operation.
Do not forget to put clip 1 back in place.
When uncoupling, make sure that the trailer is supported independently.

ON THE COUPLING LADDER

- Set the coupling fitting 4 according to the height of the trailer ring.

Do not forget to put rods and clip back in place.

- Remove the clip 5, lift the trailer pin 6 and place or remove the trailer ring.

Be careful not to get your fingers caught or crushed during this operation.
Do not forget to put clip 5 back in place.
When uncoupling, make sure that the trailer is supported independently.

https://truckmanualshub.com/

F - HYDRAULIC TOWING HOOK (OPTION)

Never use the tow hook to raise the rear of the lift truck (when changing the rear wheel for example).

- Raise the hydraulic tow hook to release the hook lock 1 by pressing the upper part of switch 2.
- Pull the knob 3, retain this position and press the lower part of switch 2 to lower the tow hook.
- Release knob 3.
- Couple or uncouple the trailer.

When uncoupling, make sure that the trailer is supported independently.

- Raise the trailer hook by pressing the upper part of switch 2 and then lower the hook to verify that the lock pin is in proper contact with hook 1 lock.

G - AUTOMATIC TRAILER HOOK (OPTION)

COUPLING THE TRAILER

- Remove the automatic towing pin using lever 1.
- Move the lift truck backwards so that the trailer ring slots into the automatic hook.

NOTE: The pin closes automatically when the trailer ring touches the end of the fitting.
The pin can be lowered by hand using lever 1.

UNCOUPLING THE TRAILER

When uncoupling, make sure that the trailer is supported independently.

- Remove the pin using lever 1 to uncouple the trailer.

https://truckmanualshub.com/

https://truckmanualshub.com/

DESCRIPTION AND USE OF THE OPTIONS

1 - BATTERY CUT-OFF
2 - REVERSE BUZZER ALARM
3 - PREHEATING ELEMENT
4 - CLEANFIX SELF-CLEANING FAN
5 - MODCOD ANTI-THEFT SYSTEM
6 - FINTRONIC ANTI-START SYSTEM
7 - MODCLÉ ANTI-START SYSTEM
8 - ATTACHMENT HYDRAULIC CONTROL FORCED OPERATION
9 - JIB SUSPENSION
10 - ATTACHMENT EASY HYDRAULIC CONNECTION
11 - PROVISION FOR ELECTRICAL JIB
12 - JIB HEAD ELECTROVALVE
13 - HYDRAULIC ATTACHMENT LOCKING
14 - JIB HEAD ELECTROVALVE + HYDRAULIC ATTACHMENT LOCKING
15 - MACH2 QUICK-RELEASE COUPLER ON ACCESSORY CIRCUIT
16 - QUICK-RELEASE COUPLER MACH2 ON ATTACHMENT CIRCUIT + HYDRAULIC ATTACHMENT LOCKING
17 - EXTERIOR DRAIN BACK
18 - LIFTING RING ON SINGLE CARRIAGE
19 - ANGULAR SECTOR ON JIB
20 - SINGLE OR DUAL EFFECT REAR HYDRAULIC CONTROL PREDISPOSITION
21 - DUAL EFFECT REAR HYDRAULIC CONTROL PREDISPOSITION + SINGLE OR DUAL EFFECT REAR HYDRAULIC CONTROL PREDISPOSITION
22 - HYDRAULIC TOWING HOOK + SINGLE OR DUAL EFFECT REAR HYDRAULIC CONTROL PREDISPOSITION

https://truckmanualshub.com/

1 - BATTERY CUT-OFF

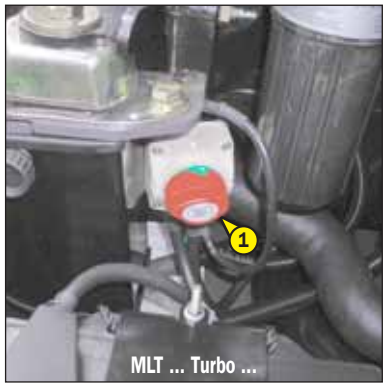

2 - REVERSE BUZZER ALARM

3 - PREHEATING ELEMENT

Enables the engine to be kept warm during prolonged periods of stoppage and thus improves engine starting.

SUPPLY CHARACTERISTICS OF PREHEATING SYSTEM:

- Rated range of power: 220-240V; 50-60Hz
- Current consumed: 4,5A
- Equipment in class 1
- Equipment connectable only on feeder circuit TT or TN
- Category of insulation 2

ENVIRONMENTAL CONDITIONS FOR USE:

- Maximum ambient temperature for using preheating: +25°C
- Pollution level 2

CONDITIONS FOR CONNECTION AND USE OF PREHEATING:

- The preheating system should not be used for an external ambient temperature higher than + 25°C.
- It is essential that the power supply to the preheating system is:
  - Effected with a cable that conforms to the installation standards in force and contains a protective earth conductor.
  - Contains an appropriate sectioning system.
  - Incorporate an appropriate safety system against short circuits (fuses or circuit breaker) and a differential circuit breaker with 30 mA sensitivity.
- Only connect to and disconnect from the power supply while the unit is off and the I.C. engine is stopped.

4 - CLEANFIX SELF-CLEANING FAN

This system, operated by switch 1, cleans the radiator core and the grille of the engine cover by reversing the air flow.

When in use, beware of the risk of projection into the eyes.

Position A: The indicator light is on, the fan operates in self-cleaning mode for a few seconds once every 3 minutes.

Position B: The indicator light is off, the fan is in normal operating mode.

https://truckmanualshub.com/

5 - MODCOD ANTI-THEFT SYSTEM

OPERATION

- Switch on the lift truck: the red indicator 1 will flash.
- Enter your user code followed by “V” to validate: the green indicator 2 will come on.
- Start the lift truck within the next 60 seconds; otherwise the anti-theft system will be reactivated and the red indicator 1 will flash.

NOTE: If you make a mistake when entering the code, press key “A” to cancel and re-enter the code in full.
If you wait more than 5 seconds between key presses or do not complete entering the code, the anti-theft system will be reactivated and the red indicator will flash.

6 - FINTRONIC ANTI-START SYSTEM

OPERATION

- Switch on the lift truck and set the black key A next to the antenna B (maximum 80 mm).
- Wait a few seconds for red led C to go out before starting the lift truck.

NOTE: You can restart the lift truck within 20 seconds of stopping it: after this time, the anti-start system reacts and led C flashes red.

7 - MODCLÉ ANTI-START SYSTEM

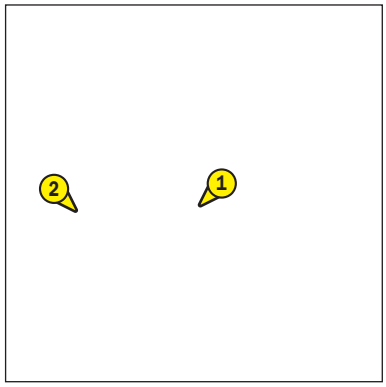

OPERATION

- Switch on lift truck ignition, red led 1 will flash.
- Apply key 2 to its base 3, and withdraw the moment the system emits a continuous beep, and led 1 turns green.
- Start the lift truck within the next 20 seconds; otherwise the anti-theft system will be reactivated and red led 1 will flash.

NOTE: You can restart the lift truck within 20 seconds of stopping it; after this time, the anti-start system reacts and red led 1 flashes.

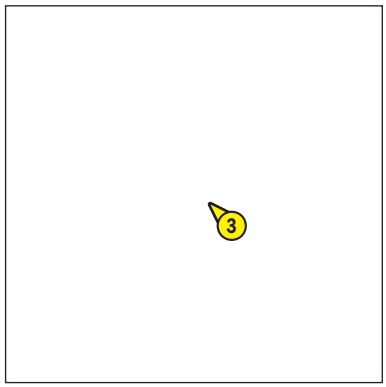

https://truckmanualshub.com/

8 - ATTACHMENT HYDRAULIC CONTROL FORCED OPERATION

This OPTION must only be used with an attachment requiring continuous hydraulic movement of type: brush, supply bucket, mixer, spray... It is strictly forbidden in handling operations and at all other events (winch, crane boom, crane boom with winch, hook, etc.).

CONTINUOUS HYDRAULIC MOVEMENT OF THE ATTACHMENT

- Make sure the potentiometer C is set to 0%.
- Switch button A to the front or the back (depending on the type of attachment), press button B and release button A. The red indicator 1, flashes to indicate that it is in operation.
- Set the required flowrate using potentiometer C.
- To stop continuous hydraulic movement of the attachment, move switch A forwards or backwards or press button B. Indicator 1 goes out.
- Set potentiometer C to 0%.

Never leave the driver's cab without resetting the potentiometer C to 0%. Before starting the lift truck, make sure the potentiometer is set to 0%.

NOTE: If the operator leaves the driver's cab, the continuous hydraulic movement will automatically stop and must be restarted.

9 - BOOM SUSPENSION

The boom is suspended to reduce shaking of the lift truck on rough ground (e.g. moving straw in a field).

OPERATION

- Set the forks or attachment on the ground and relieve the front wheels a few centimetres only.
- Press switch 1 set to position A, the visual indicator comes on indicating that boom suspension is activated.
- Press switch 1 set to position B, the visual indicator goes out indicating that boom suspension is deactivated.

Boom suspension is active to a lifting height of 3m00 from the axis of articulation of the carriage with respect to the ground with the boom retracted. When you move beyond this height or make another hydraulic movement (tilting, telescoping, attachment), boom suspension is momentarily deactivated and the visual indicator of switch 1 goes out.

- When the I.C. engine is off, boom suspension is automatically deactivated.

https://truckmanualshub.com/

10 - ATTACHMENT EASY HYDRAULIC CONNECTION

For easily connecting and disconnecting the attachment.

OPERATION
- Switch on lift truck ignition.
- Press for two seconds on push-button 1 to release the attachment circuit hydraulic pressure.
- Connect or disconnect the rapid connectors of the hydraulic attachment (see: 4 - OPTIONAL ATTACHMENTS FOR USE WITH THE RANGE: PICKING UP THE ATTACHMENTS).

11 - PROVISION FOR ELECTRICAL JIB

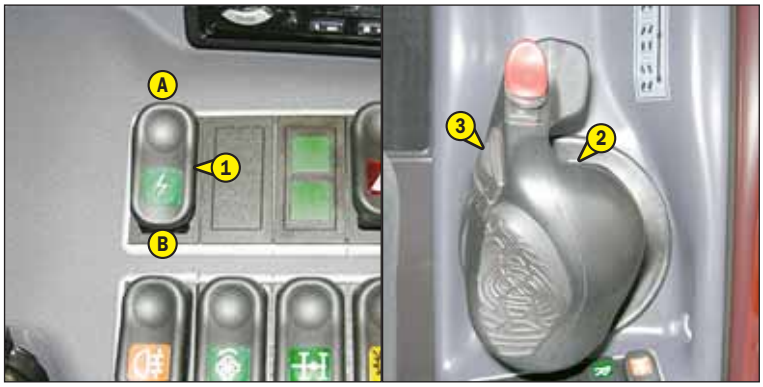

Enables an electrical function to be used at the head of the jib foot.

ELECTRIC JIB FUNCTION CONTROL
- Set switch 1 to position B (indicator light on).
- Hold button 2 down and button 3 forwards or backwards.

NOTE: Set switch 1 to position A (indicator light off) controls the hydraulic attachment line (see: 2 - DESCRIPTION: 20 - HYDRAULIC AND TRANSMISSION CUT-OFF CONTROLS).

12 - JIB HEAD ELECTROVALVE

Enables use of two hydraulic functions on the attachment circuit.

To make connection of the rapid connectors easier, decompress the hydraulic circuit by pressing button 1 on the electrovalve.

ATTACHMENT LINE L1 CONTROL
- Set switch 2 to position A (indicator light off).
- Push button 3 forward or backward.

ATTACHMENT LINE L2 CONTROL
- Set switch 2 to position B (indicator light on).
- Hold button 4 down and push button 3 forwards or backwards.

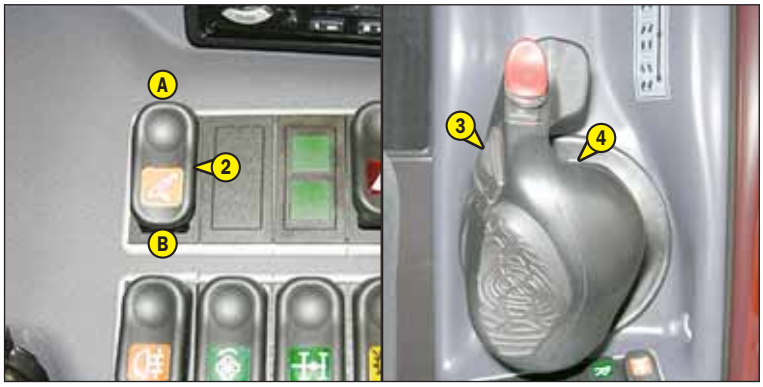

https://truckmanualshub.com/

13 - HYDRAULIC ATTACHMENT LOCKING

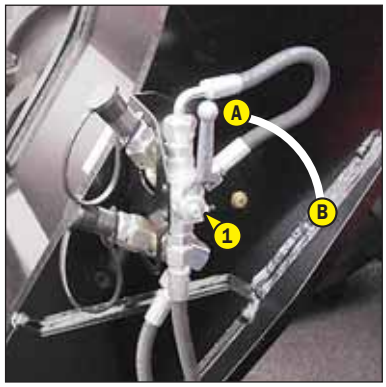

Enables the attachment to be locked onto the carriage and a hydraulic attachment to be used by the same hydraulic circuit.

ATTACHMENT LOCKING CONTROL

- Set valve 1 to position A and place switch 2 in position B (indicator light on).
- Push button 3 forward to lock the attachment and backward to release it.

After locking the attachment, return switch 2 to position A (indicator light off) to prevent accidental release of the attachment.

HYDRAULIC ATTACHMENT CONTROL

- Set valve 1 to position B and press switch 2 in position B (indicator light on).
- Push button 3 forward or backward.

14 - JIB HEAD ELECTROVALVE + HYDRAULIC ATTACHMENT LOCKING

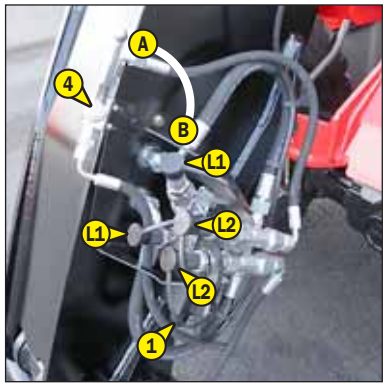

The addition of these two options on the attachment line allows two hydraulic functions to be used and locks the attachment onto the carriage.

To make connection of the rapid connectors easier, decompress the hydraulic circuit by pressing button 1 on the electrovalve.

ATTACHMENT LINE L1 CONTROL

- Set switch 2 to position A (indicator light off).
- Push button 3 forward or backward.

ATTACHMENT LINE L2 CONTROL + HYDRAULIC ATTACHMENT LOCKING

LOCKING AN ATTACHMENT

- Set valve 4 to position A.
- Set switch 2 to position B (indicator light on).
- Hold button 5 down and push button 3 forward to lock the attachment and backward to release it.

Once the attachment is locked, return valve 4 to position B to prevent accidental release of the attachment.

HYDRAULIC ATTACHMENT

- Set switch 2 to position B (indicator light on).
- Hold button 5 down and push button 3 forwards or backwards.

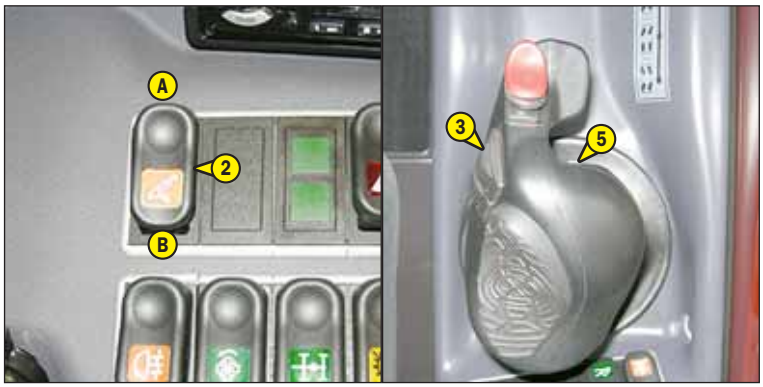

https://truckmanualshub.com/

15 - MACH2 QUICK-RELEASE COUPLERS ON ACCESSORY CIRCUIT

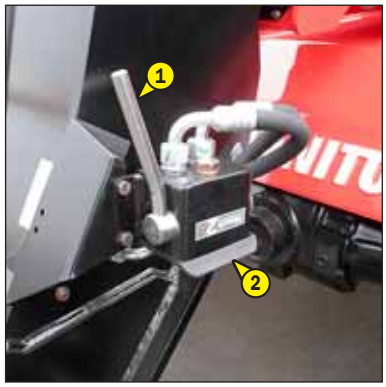

Enables the use of a hydraulic attachment fitted with MACH2 quick-release couplers.

CONNECTING A HYDRAULIC ATTACHMENT

- Lower lever 1 and valve 2 and connect the MACH2 quick-release couplers on the attachment.
- Lift up lever 1 to lock the connection.

NOTE: A foolproofing device prevents the connection inversion.

DISCONNECTING A HYDRAULIC ATTACHMENT

- Lower lever 1 and disconnect the MACH2 quick-release couplers from the attachment.
- Lift up lever 1.

16 - MACH2 QUICK-RELEASE COUPLER MACH2 ON ATTACHMENT CIRCUIT + HYDRAULIC ATTACHMENT LOCKING

Enables the locking of the attachment on the carriage to be controlled and a hydraulic attachment with MACH2 quick-release couplers to be used (see: 2 - DESCRIPTION: 14 - HYDRAULIC ATTACHMENT LOCKING and 15 - MACH2 QUICK-RELEASE COUPLERS ON ATTACHMENT CIRCUIT).

17 - EXTERIOR DRAIN BACK

Enables connection of a hydraulic attachment for which drain-back is required.

https://truckmanualshub.com/

18 - LIFTING RING ON SINGLE CARRIAGE

CONDITIONS OF USE

Follow the instructions given in the instruction manual (see: 1 - OPERATING AND SAFETY INSTRUCTIONS: INSTRUCTIONS FOR HANDLING LOADS).

- The lifting ring must be used WITHOUT FORKS AND ATTACHMENTS, but the angle of inclination of the carriage must be same as when the forks are used in the horizontal position.
- Check the maximum permitted angle, which is 45°.
- Do not change the angle of the carriage while using the lifting ring.
- The lifting hook, the chains and slings shall have a minimum capacity of 3000 kg with a factor of safety against breakage of 4.

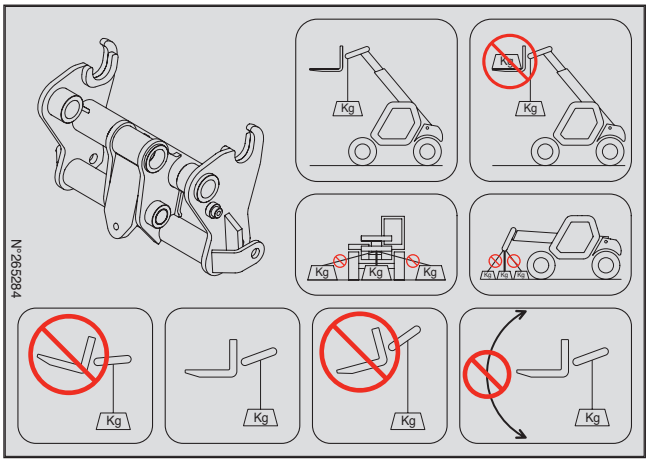

LOAD CHARTS AND FUNCTION SHEETS

MLT 731 ...

The load charts are given for use without forks and without attachments.

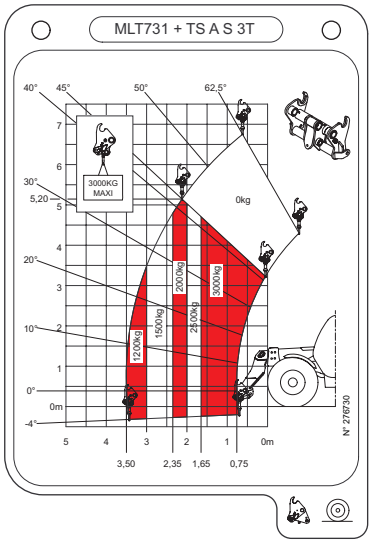

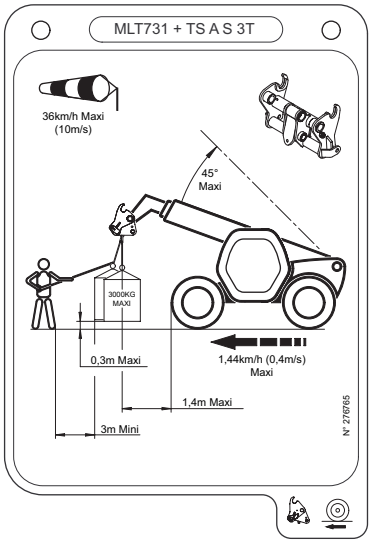

LOAD CHARTS AND FUNCTION SHEETS

MLT 735 ...

The load charts are given for use without forks and without attachments.

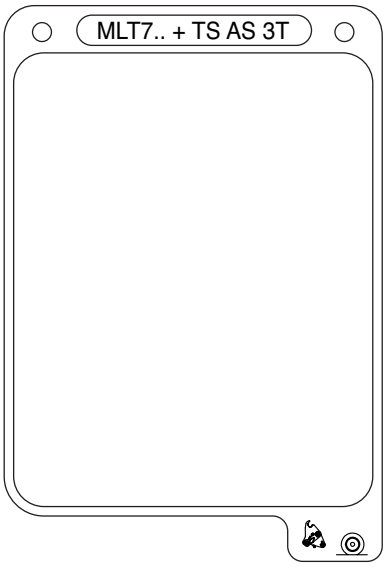

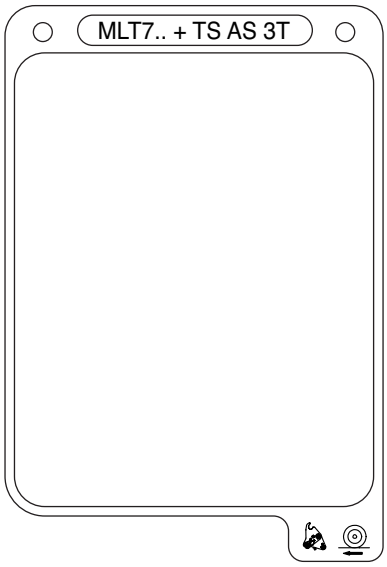

https://truckmanualshub.com/

LOAD CHARTS AND FUNCTION SHEETS

MLT 741 ...

The load charts are given for use without forks and without attachments.

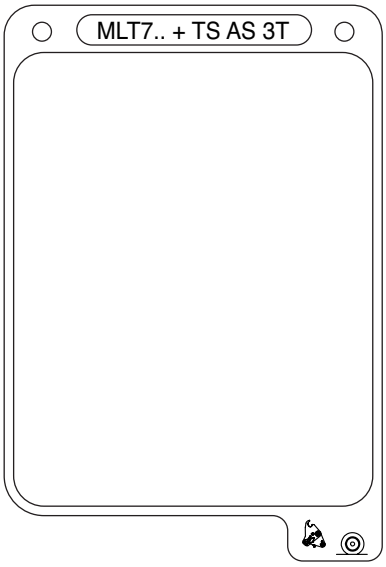

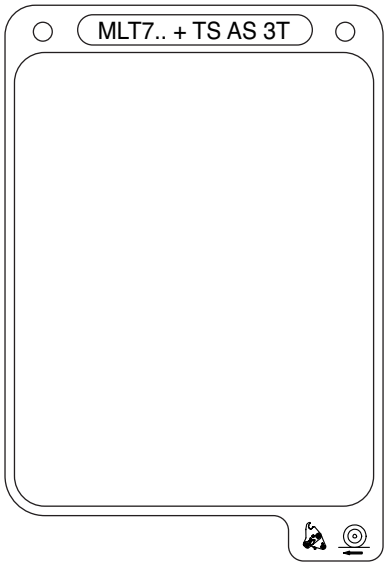

LOAD CHARTS AND FUNCTION SHEETS

MLT 1035 ...

The load charts are given for use without forks and without attachments.

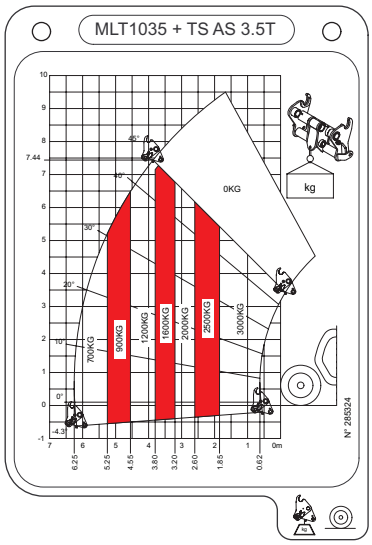

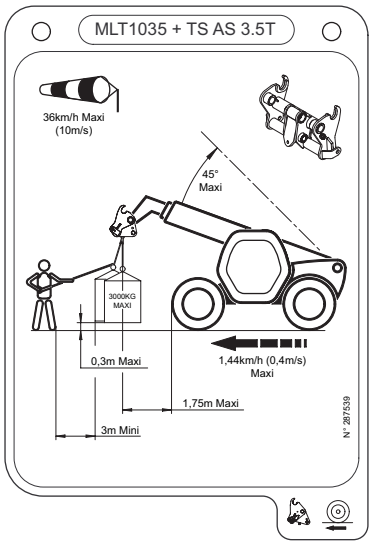

https://truckmanualshub.com/

19 - ANGULAR SECTOR ON JIB

The angular sector displays the jib angle, and thus improves the reading of the load charts.

20 - SINGLE OR DUAL EFFECT REAR HYDRAULIC CONTROL PREDISPOSITION

Enables the use of a hydraulic attachment at the rear of the lift truck (e.g. a trailer with hydraulic tipping).

SINGLE EFFECT HYDRAULIC CONTROL L1
- Press switch 1 downwards to supply the rear hydraulic attachment.

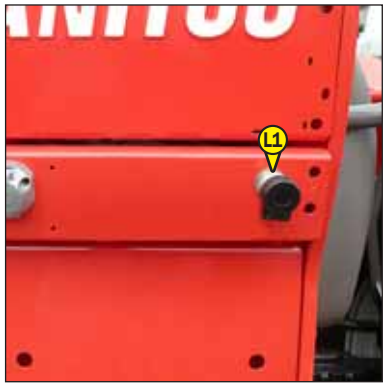

DUAL EFFECT HYDRAULIC CONTROL L1
- Press switch 1 upwards or downwards to supply the rear hydraulic attachment.

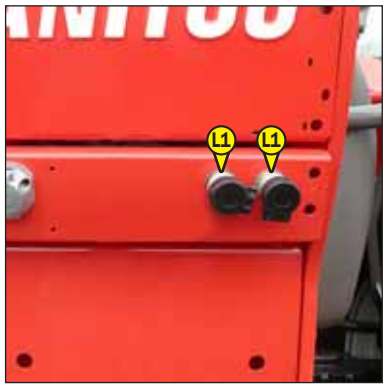

https://truckmanualshub.com/

21 - DUAL EFFECT REAR HYDRAULIC CONTROL PREDISPOSITION + SINGLE OR DUAL EFFECT REAR HYDRAULIC CONTROL PREDISPOSITION

Enables the use of a hydraulic attachment at the rear of the lift truck or another hydraulic attachment at the rear of the lift truck.

DUAL EFFECT L1 AND SINGLE EFFECT L2 REAR HYDRAULIC CONTROL

DUAL EFFECT ATTACHMENT L1

- Set switch 1 to position A (indicator light off).
- Press switch 2 upwards or downwards to supply the rear hydraulic attachment.

SINGLE EFFECT ATTACHMENT L2

- Set switch 1 to position B (indicator light on).
- Press switch 2 downwards to supply the rear hydraulic attachment.

DUAL EFFECT L1 AND DUAL EFFECT L2 REAR HYDRAULIC CONTROL

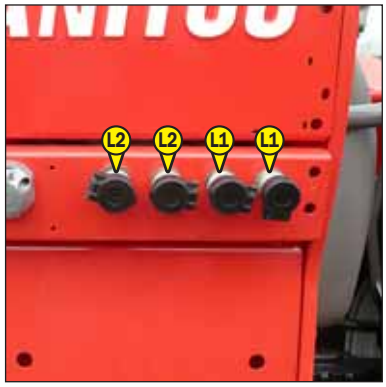

DUAL EFFECT ATTACHMENT L1

- Set switch 1 to position A (indicator light off).
- Press switch 2 upwards or downwards to supply the rear hydraulic attachment.

DUAL EFFECT ATTACHMENT L2

- Set switch 1 to position B (indicator light on).
- Press switch 2 upwards or downwards to supply the rear hydraulic attachment.

https://truckmanualshub.com/

22 - HYDRAULIC TOWING HOOK + SINGLE OR DUAL EFFECT REAR HYDRAULIC CONTROL PREDISPOSITION

Enables the use of the trailer eye (see: 2 - DESCRIPTION: TRAILER PIN AND HOOK) or a hydraulic attachment at the rear of the lift truck.

HYDRAULIC TRAILER HOOK + SINGLE EFFECT REAR HYDRAULIC CONTROL L1

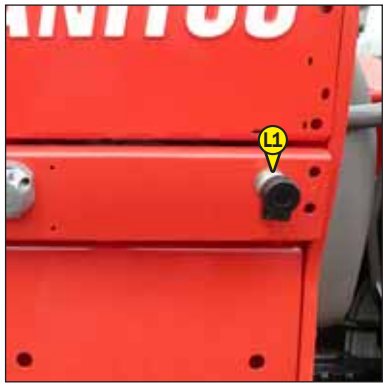

HYDRAULIC TRAILER HOOK

- Set switch 1 to position A (indicator light off).
- Press switch 2 upwards or downwards to use the hydraulic trailer hook (see: 2 - DESCRIPTION: TRAILER PIN AND HOOK: F - HYDRAULIC TRAILER HOOK).

SINGLE EFFECT ATTACHMENT L2

- Set switch 1 to position B (indicator light on).
- Press switch 2 downwards to supply the rear hydraulic attachment.

HYDRAULIC TRAILER HOOK + DUAL EFFECT REAR HYDRAULIC CONTROL L1

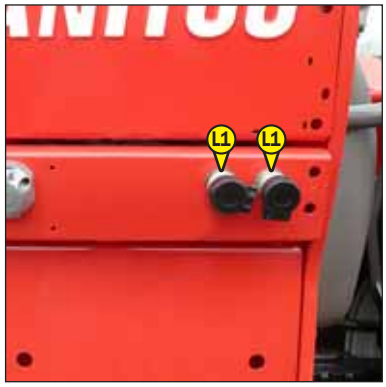

HYDRAULIC TRAILER HOOK

- Set switch 1 to position A (indicator light off).
- Press switch 2 upwards or downwards to use the hydraulic trailer hook (see: 2 - DESCRIPTION: TRAILER PIN AND HOOK: F - HYDRAULIC TRAILER HOOK).

DUAL EFFECT ATTACHMENT L2

- Set switch 1 to position B (indicator light on).
- Press switch 2 upwards or downwards to supply the rear hydraulic attachment.

https://truckmanualshub.com/

https://truckmanualshub.com/

3 - MAINTENANCE

https://truckmanualshub.com/

https://truckmanualshub.com/

TABLE OF CONTENTS

MANITOU ORIGINAL SPARE PARTS AND EQUIPMENT 3-4

START-UP CHECKLIST 3-5

FILTERS CARTRIDGES AND BELTS MLT 731 Turbo Série F-E3 3-6

FILTERS CARTRIDGES AND BELTS MLT 634 Turbo LSU Série F-E3
MLT 735 Turbo LSU Série 6-E3
MLT 741 Turbo LSU Série 6-E3
MLT 1035 L Turbo LSU Série 6-E3 3-7

FILTERS CARTRIDGES AND BELTS MLT 634 -120 LSU Série F-E3
MLT 634 -120 LSU POWERSHIFT Série F-E3
MLT 735 -120 LSU Série 6-E3
MLT 735 -120 LSU POWERSHIFT Série 6-E3
MLT 741 -120 LSU Série 6-E3
MLT 741 -120 LSU POWERSHIFT Série 6-E3 3-8

LUBRICANTS AND FUEL 3-10

SERVICING SCHEDULE 3-12

A - DAILY OR EVERY 10 HOURS SERVICE 3-14

B - EVERY 50 HOURS SERVICE 3-20

C - EVERY 250 HOURS SERVICE 3-26

D - EVERY 500 HOURS SERVICE 3-30

E - EVERY 1000 HOURS SERVICE 3-36

F - EVERY 2000 HOURS OF SERVICE 3-42

G - OCCASIONAL MAINTENANCE 3-44

https://truckmanualshub.com/

MANITOU ORIGINAL SPARE PARTS AND EQUIPMENT

OUR LIFT TRUCKS MUST BE SERVICED USING ORIGINAL MANITOU PARTS.

IF YOU USE PARTS WHICH ARE NOT ORIGINAL MANITOU PARTS,

YOU RISK

- Legally - to be held responsible in the event of an accident.

- Technically - to generate operating failure or shorten the life of the lift truck.

THE USE OF COUNTERFEIT PARTS OR COMPONENTS NOT APPROVED BY THE MANUFACTURER, MEANS YOU LOSE THE BENEFIT OF THE CONTRACTUAL GUARANTEE.

BY USING ORIGINAL MANITOU PARTS FOR MAINTENANCE OPERATIONS,

YOU BENEFIT EXPERTISE

Through its network, MANITOU provides the user with

- Know-how and competence.

- The guarantee of high-quality work.

- Original replacement components.

- Help with preventive maintenance.

- Efficient help with diagnosis.

- Improvements due to experience feedback.

- Operator training.

- Only the MANITOU network has detailed knowledge of the design of the lift truck and therefore the best technical ability to provide maintenance.

ORIGINAL REPLACEMENT PARTS ARE DISTRIBUTED EXCLUSIVELY BY MANITOU AND ITS DEALER NETWORK.
the dealer network list is available on manitou web site www.manitou.com

https://truckmanualshub.com/

START-UP CHECKLIST

0 = OK 1 = Missing 2 = Incorrect

100	ENGINE	
01	Air filter	
02	Fuel tank	
03	Fuel lines - Filter	
04	Injection or carburetion system	
05	Radiator and cooling system	
06	Belts	
07	Hoses	
101	**TRANSMISSION**	
01	Direction reversal system	
02	Gear shift	
03	Cut-off pedal	
04	Clutch	
102	**AXLES/TRANSFER GEAR BOX**	
01	operation and seal	
02	Stop settings	
103	**HYDRAULIC/HYDROSTATIC CIRCUIT**	
01	Tank	
02	Pumps and couplings	
03	Tightening of connections	
04	Lift cylinder(s)	
05	Tilt cylinder(s)	
06	Attachment cylinder(s)	
07	Telescope cylinder(s)	
08	Compensation cylinder(s)	
09	Steering cylinder(s)	
10	Control Valve	
11	Balancing valve	
104	**BRAKE SYSTEM**	
01	Service brake and parking brake operation	
02	Brake fluid level	
105	**LUBRICATION AND GREASING**	
106	**JIB/MANISCOPIC/MANIACCESS ASSEMBLY**	
01	Beam and telescope(s)	
02	Skid	
03	Hinges	
04	Carriage	
05	Forks	
107	**MAST ASSEMBLY**	
01	Fixed and mobile uprights	
02	Carriage	
03	Chains	
04	Rollers	
05	Forks	

108	ATTACHMENTS	
01	Fitting on machine	
02	Hydraulic couplings	
109	**CABIN/PROTECTOR/ELECTRIC CIRCUIT**	
01	Seat	
02	Dashboard and radio	
03	Sound and visual alarm/safety system	
04	Heating/Air conditioning	
05	Windscreen wiper/windscreen washer	
06	Road horn	
07	Reversing horn	
08	Road lights	
09	Additional lights	
10	Rotating beacon light	
11	Battery	
110	**WHEEL**	
01	Rims	
02	Tyre/Pressure	
111	**SCREWS**	
112	**FRAME AND BODYWORK**	
113	**PAINTING**	
114	**GENERAL OPERATION**	
115	**OPERATOR'S MANUAL**	
116	**CUSTOMER INSTRUCTIONS**	

https://truckmanualshub.com/

FILTERS CARTRIDGES AND BELTS

MLT 731 Turbo Série F-E3

I.C. ENGINE

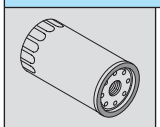	I.C. ENGINE OIL FILTER Part number: 476954 Change: 500 H	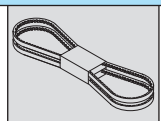	ALTERNATOR BELT Part number: 702974
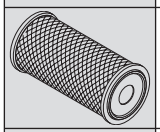	DRY AIR FILTER CARTRIDGE Part number: 563416 Clean: 50 H* Change: 500 H*	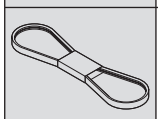	FAN BELT Part number: 257524
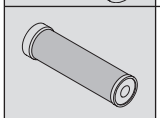	SAFETY DRY AIR FILTER CARTRIDGE Part number: 563415 Change: 1000 H*	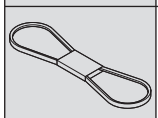	COMPRESSOR BELT (OPTION AIR CONDITIONING) Part number: 244237
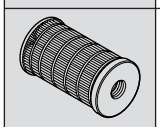	FUEL FILTER CARTRIDGE Part number: 605013 Change: 500 H	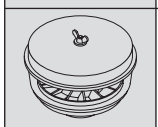	CYCLONIC PRE-FILTER Part number: 224713 Clean: 10 H
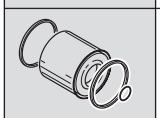	FUEL PRE-FILTER Part number: 706497 Change: 500 H	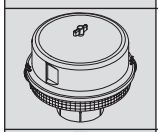	AUTOMATIC VACUUM-CLEANING PRE-FILTER (OPTION) Part number: 226611
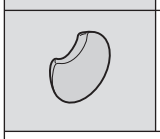	CLEANFIX COMPRESSOR FILTER (OPTION) Part number: 781443 Change: 500 H	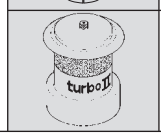	AUTOMATIC VACUUM-CLEANING PRE-FILTER (OPTION) Part number: 223510

*: This periodicity is given for information only (see: 3 - MAINTENANCE: SERVICING SCHEDULE) for cleaning and changing.

TRANSMISSION

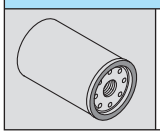	GEAR BOX OIL FILTER Part number: 561749 Change: 500 H

HYDRAULIC

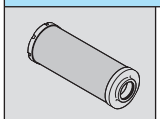	HYDRAULIC RETURN OIL FILTER CARTRIDGE Part number: 236095 Change: 500 H	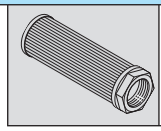	SUCTION STRAINER FOR HYDRAULIC OIL TANK Part number: 224726 Clean: 1000 H
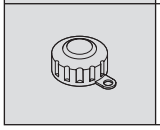	FILTER CAP FOR HYDRAULIC OIL TANK Part number: 62415 Change: 1000 H		

CAB

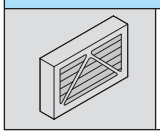	CAB VENTILATION FILTER (WITHOUT AIR CONDITIONING) Part number: 282619 Clean: 500 H	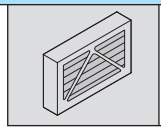	CAB VENTILATION FILTER (WITH AIR CONDITIONING) Part number: 282619 Clean: 50 H Change: 250 H

https://truckmanualshub.com/

FILTERS CARTRIDGES AND BELTS

MLT 634 Turbo LSU Série F-E3
MLT 735 Turbo LSU Série 6-E3
MLT 741 Turbo LSU Série 6-E3
MLT 1035 L Turbo LSU Série 6-E3

I.C. ENGINE

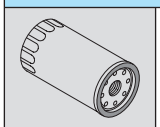	I.C. ENGINE OIL FILTER Part number: 476954 Change: 500 H	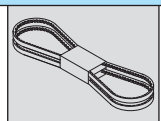	ALTERNATOR BELT Part number: 702974 (MLT 634 T... / MLT 735 T...) Part number: 291467 (MLT 1035 L T...)
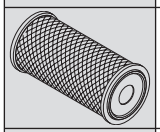	DRY AIR FILTER CARTRIDGE Part number: 563416 Clean: 50 H* Change: 500 H*	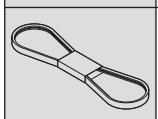	FAN BELT Part number: 257524
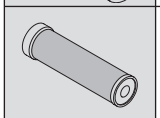	SAFETY DRY AIR FILTER CARTRIDGE Part number: 563415 Change: 1000 H*	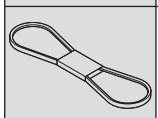	COMPRESSOR BELT (OPTION AIR CONDITIONING) Part number: 244237
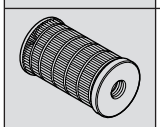	FUEL FILTER CARTRIDGE Part number: 605013 Change: 500 H	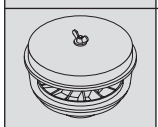	CYCLONIC PRE-FILTER Part number: 224713 Clean: 10 H
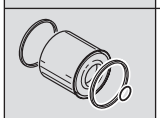	FUEL PRE-FILTER Part number: 706497 Change: 500 H	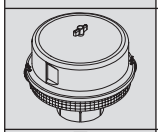	AUTOMATIC VACUUM-CLEANING PRE-FILTER (OPTION) Part number: 226611
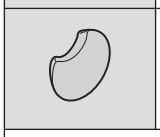	CLEANFIX COMPRESSOR FILTER (OPTION) Part number: 781443 Change: 500 H	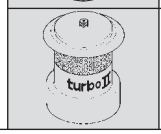	AUTOMATIC VACUUM-CLEANING PRE-FILTER (OPTION) Part number: 223510

*: This periodicity is given for information only (see: 3 - MAINTENANCE: SERVICING SCHEDULE) for cleaning and changing.

TRANSMISSION

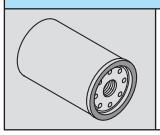	GEAR BOX OIL FILTER Part number: 561749 Change: 500 H

HYDRAULIC

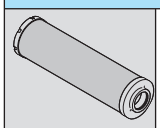	HYDRAULIC RETURN OIL FILTER CARTRIDGE Part number: 236094 Change: 500 H	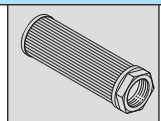	SUCTION STRAINER FOR HYDRAULIC OIL TANK Part number: 224726 Clean: 1000 H
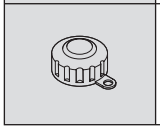	FILTER CAP FOR HYDRAULIC OIL TANK Part number: 62415 Change: 1000 H	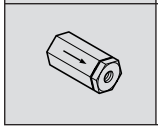	DISTRIBUTOR CONTROL HEAD FILTER Part number: 254780 Change: 1000 H

CAB

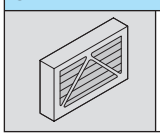	CAB VENTILATION FILTER (WITHOUT AIR CONDITIONING) Part number: 282619 Clean: 500 H	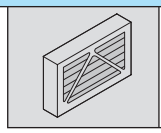	CAB VENTILATION FILTER (WITH AIR CONDITIONING) Part number: 282619 Clean: 50 H Change: 250 H

https://truckmanualshub.com/

FILTERS CARTRIDGES AND BELTS

MLT 634 -120 LSU Série F-E3
MLT 634 -120 LSU POWERSHIFT Série F-E3
MLT 735 -120 LSU Série 6-E3
MLT 735 -120 LSU POWERSHIFT Série 6-E3
MLT 741 -120 LSU Série 6-E3
MLT 741 -120 LSU POWERSHIFT Série 6-E3

I.C. ENGINE

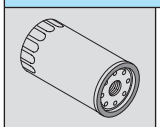	I.C. ENGINE OIL FILTER Part number: 476954 Change: 500 H	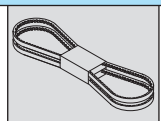	ALTERNATOR BELT Part number: 291467
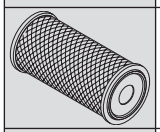	DRY AIR FILTER CARTRIDGE Part number: 563416 Clean: 50 H* Change: 500 H*	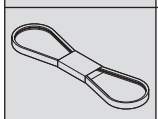	FAN BELT Part number: 257524
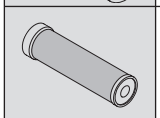	SAFETY DRY AIR FILTER CARTRIDGE Part number: 563415 Change: 1000 H*	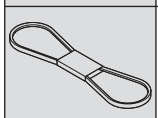	COMPRESSOR BELT (OPTION AIR CONDITIONING) Part number: 244237
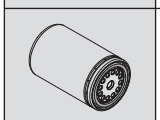	FUEL FILTER Part number: 747351 Change: 500 H	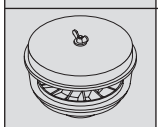	CYCLONIC PRE-FILTER Part number: 224713 Clean: 10 H
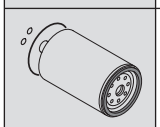	FUEL PRE-FILTER Part number: 747462 Change: 500 H	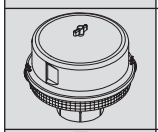	AUTOMATIC VACUUM-CLEANING PRE-FILTER (OPTION) Part number: 226611
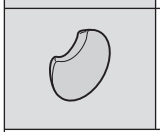	CLEANFIX COMPRESSOR FILTER (OPTION) Part number: 781443 Change: 500 H	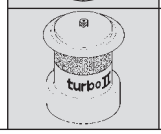	AUTOMATIC VACUUM-CLEANING PRE-FILTER (OPTION) Part number: 223510

*: This periodicity is given for information only (see: 3 - MAINTENANCE: SERVICING SCHEDULE) for cleaning and changing.

TRANSMISSION

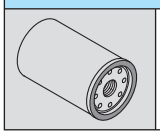	GEAR BOX OIL FILTER Part number: 561749 Change: 500 H

HYDRAULIC

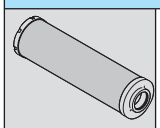	HYDRAULIC RETURN OIL FILTER CARTRIDGE Part number: 236094 Change: 500 H	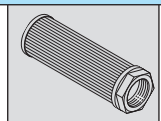	SUCTION STRAINER FOR HYDRAULIC OIL TANK Part number: 224726 Clean: 1000 H
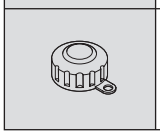	FILTER CAP FOR HYDRAULIC OIL TANK Part number: 62415 Change: 1000 H	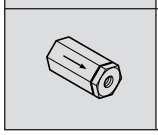	DISTRIBUTOR CONTROL HEAD FILTER Part number: 254780 Change: 1000 H

CAB

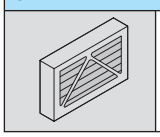	CAB VENTILATION FILTER (WITHOUT AIR CONDITIONING) Part number: 282619 Clean: 500 H	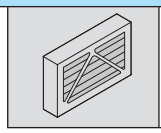	CAB VENTILATION FILTER (WITH AIR CONDITIONING) Part number: 282619 Clean: 50 H Change: 250 H

https://truckmanualshub.com/

https://truckmanualshub.com/

LUBRICANTS AND FUEL

USE THE RECOMMENDED LUBRICANTS AND FUEL:
- For topping up, oils may not be miscible.
- For oil changes, MANITOU oils are perfectly appropriate.

DIAGNOSTIC ANALYSIS OF OILS
If a service or maintenance contract has been organized with the dealer, a diagnostic analysis of engine, gear box and axle oils may be requested depending on the rate of use.

(*) RECOMMENDED FUEL SPECIFICATION
Use a high-quality fuel to obtain optimal performance of the I.C. engine.

- N590 diesel fuel type - Auto/C0/C1/C2/C3/C4
- BS2869 Class A2
- ASTM D975-91 Class 2-2DA, US DF1, US DF2, US DFA
- JIS K2204 (1992) Grades 1, 2, 3 and Special Grade 3.

I.C. ENGINE				
ORGANS TO BE LUBRICATED	CAPACITY	RECOMMENDATION	PACKAGING	PART NUMBER
I.C. ENGINE	11 Litres	MANITOU Oil API CH4	5 l 20 l 55 l 209 l 1000 l	661706 582357 582358 582359 490205
COOLING CIRCUIT	18,5 Litres	Cooling liquid (protection - 25°)	2 l 5 l 20 l 210 l	788245 788246 788247 788248
		Cooling liquid (protection - 35°)	20 l 210 l 1000 l	788249 788250 788251
FUEL TANK	120 Litres	Diesel fuel (*)		

TRANSMISSION				
ORGANS TO BE LUBRICATED	CAPACITY	RECOMMENDATION	PACKAGING	PART NUMBER
GEAR BOX	16,6 Litres	MANITOU Oil Automatic transmission	1 l 20 l 55 l 209 l 1000 l	62148 546332 546217 546195 720148
ANGLE GEAR BOX	2,2 Litres	MANITOU Oil SAE80W90 Mechanical transmission	2 l 5 l 20 l 55 l 209 l	499237 720184 546330 546221 546220
TRANSMISSION UNIVERSAL JOINT		MANITOU Grease BLUE multi-purpose	400 g 1 kg 5 kg 20 kg 50 kg	161589 720683 554974 499233 489670

BOOM			
ORGANS TO BE LUBRICATED	RECOMMENDATION	PACKAGING	PART NUMBER
BOOM PADS	MANITOU Grease BLACK multi-purpose	400 g 1 kg 5 kg	545996 161590 499235
GREASING OF THE BOOM	MANITOU Grease BLUE multi-purpose	400 g 1 kg 5 kg 20 kg 50 kg	161589 720683 554974 499233 489670

https://truckmanualshub.com/

HYDRAULIC				
ORGANS TO BE LUBRICATED	CAPACITY	RECOMMENDATION	PACKAGING	PART NUMBER
HYDRAULIC OIL TANK	135 Litres	MANITOU Oil Hydraulic ISO VG 46	5 l 20 l 55 l 209 l	545500 582297 546108 546109

BRAKE			
ORGANS TO BE LUBRICATED	RECOMMENDATION	PACKAGING	PART NUMBER
BRAKE CIRCUIT	MANITOU Oil Mineral brake fluid	1 l	490408

CAB			
ORGANS TO BE LUBRICATED	RECOMMENDATION	PACKAGING	PART NUMBER
CAB DOOR	MANITOU Grease BLUE multi-purpose	400 g 1 kg 5 kg 20 kg 50 kg	161589 720683 554974 499233 489670
WINDSCREEN WASHER TANK	Windscreen washer fluid	1 l 5 l	490402 486424

FRONT AXLE				
ORGANS TO BE LUBRICATED	CAPACITY	RECOMMENDATION	PACKAGING	PART NUMBER
FRONT AXLE DIFFERENTIAL	8,1 Litres	MANITOU Oil Special immersed brakes	5 l 20 l 209 l 1000 l	545976 582391 546222 720149
FRONT WHEELS REDUCERS	0,8 Litre	MANITOU Oil SAE80W90 Mechanical transmission	2 l 5 l 20 l 55 l 209 l	499237 720184 546330 546221 546220
FRONT WHEELS REDUCERS PIVOTS FRONT AXLE OSCILLATION		MANITOU Grease BLACK multi-purpose	400 g 1 kg 5 kg	545996 161590 499235

REAR AXLE				
ORGANS TO BE LUBRICATED	CAPACITY	RECOMMENDATION	PACKAGING	PART NUMBER
REAR AXLE DIFFERENTIAL	8,1 Litres	MANITOU Oil Special immersed brakes	5 l 20 l 209 l 1000 l	545976 582391 546222 720149
REAR WHEELS REDUCERS	0,8 Litre	MANITOU Oil SAE80W90 Mechanical transmission	2 l 5 l 20 l 55 l 209 l	499237 720184 546330 546221 546220
REAR WHEELS REDUCERS PIVOTS REAR AXLE OSCILLATION		MANITOU Grease BLACK multi-purpose	400 g 1 kg 5 kg	545996 161590 499235

CHASSIS			
ORGANS TO BE LUBRICATED	RECOMMENDATION	PACKAGING	PART NUMBER
TILTING CORRECTOR	MANITOU Grease BLUE multi-purpose	400 g 1 kg 5 kg 20 kg 50 kg	161589 720683 554974 499233 489670

https://truckmanualshub.com/

SERVICING SCHEDULE

(1): MANDATORY 500 HOUR OR 6 MONTH SERVICE

This service must be carried out after approximately the first 500 hours of operation or within the 6 months following the start-up of the machine (whichever occurs first).

A = ADJUST, C = CHECK, G = GREASE, N = CLEAN, P = BLEED, R = REPLACE, V = DRAIN	PAGE	(1)	DAILY OR EVERY 10 HOURS SERVICE	EVERY 50 HOURS SERVICE	EVERY 250 HOURS SERVICE	EVERY 500 HOURS SERVICE OR 6 MONTHS	EVERY 1000 HOURS SERVICE OR 1 YEAR	EVERY 2000 HOURS SERVICE OR 2 YEARS	EVERY 4000 HOURS SERVICE	OCCASIONALLY
I.C. ENGINE										
I.C. engine oil level	3-14	C	C	<<<	<<<	<<<	<<<	<<<	<<<	
Cooling liquid level	3-14	C	C	<<<	<<<	<<<	<<<	<<<	<<<	
Fuel level	3-15	C	C	<<<	<<<	<<<	<<<	<<<	<<<	
Fuel pre-filter	3-15	C	C	<<<	<<<	<<<	<<<	<<<	<<<	
Cyclonic pre-filter	3-15	N	N	<<<	<<<	<<<	<<<	<<<	<<<	
Dry air filter cartridge	3-20/31	R		C/N	<<<	R	<<<	<<<	<<<	
Radiator cores	3-20	N		N	<<<	<<<	<<<	<<<	<<<	
Condenser core (OPTION Air conditioning)	3-20	C/N		C/N	<<<	<<<	<<<	<<<	<<<	
Fan belt tension	3-26	C/A			C/A	<<<	<<<	<<<	<<<	
Alternator/crankshaft belt tension	3-26	C/A			C/A	<<<	<<<	<<<	<<<	
Compressor belt tension (OPTION Air conditioning)	3-27	C/A			C/A	<<<	<<<	<<<	<<<	
I.C. engine oil	3-30	V				V	<<<	<<<	<<<	
I.C. engine oil filter	3-30	R				R	<<<	<<<	<<<	
Fuel pre-filter	3-31	R				R	<<<	<<<	<<<	
Fuel filter	3-32	R				R	<<<	<<<	<<<	
CLEANFIX compressor filter (OPTION)	3-33	R				R	<<<	<<<	<<<	
Fuel tank	3-36						N	<<<	<<<	
Safety dry air filter cartridge	3-36						R	<<<	<<<	
I.C. engine silent blocks							C**	<<<	<<<	
I.C. engine rates							C**	<<<	<<<	
Valves clearances		C**					C**	<<<	<<<	
Cooling liquid	3-42							V	<<<	
Radiator								C**	<<<	
Water pump and the thermostat								C**	<<<	
Alternator and the starter motor								C**	<<<	
Turbocompressor								C**	<<<	
Fuel system	3-44									P
TRANSMISSION										
Gear box oil level	3-16	C	C	<<<	<<<	<<<	<<<	<<<	<<<	
Angle gear box oil level	3-28	C			C	<<<	<<<	<<<	<<<	
Gear box oil filter	3-33	R				R	<<<	<<<	<<<	
Gear box oil	3-37	V					V	<<<	<<<	
Gear box sump strainer	3-37	N					N	<<<	<<<	
Angle gear box oil	3-39	V					V	<<<	<<<	
Silentblocks in the gear box							C**	<<<	<<<	
Gear box controls							C**	<<<	<<<	
Gear box pressures								C**	<<<	
Converter pressure								C**	<<<	
TYRES										
Tyres pressure	3-16	C	C	<<<	<<<	<<<	<<<	<<<	<<<	
Wheel nuts torque	3-16	C	C	<<<	<<<	<<<	<<<	<<<	<<<	
Condition of wheels and tyres							C**	<<<	<<<	
Wheel	3-45									R
Boom										
Boom pads	3-16		G*	<<<	<<<	<<<	<<<	<<<	<<<	
Boom	3-21	G		G	<<<	<<<	<<<	<<<	<<<	
Boom pads wear							C**	<<<	<<<	
Condition of boom unit								C**	<<<	
Bearings and articulation rings								C**	<<<	
HYDRAULIC										
Hydraulic oil level	3-22	C		C	<<<	<<<	<<<	<<<	<<<	
Hydraulic return oil filter cartridge	3-34	R				R	<<<	<<<	<<<	
Hydraulic oil	3-39						V	<<<	<<<	
Suction strainer for hydraulic oil tank	3-39						N	<<<	<<<	
Filter cap for hydraulic oil tank	3-39						R	<<<	<<<	
Distributor control head filter	3-39						R	<<<	<<<	
Speeds of hydraulic movements							C**	<<<	<<<	
Hydraulic pump pipe filter (except ... LSU ...)							N**	<<<	<<<	
Condition of hoses and flexible pipes							C**	<<<	<<<	
Condition of cylinders (leakage, shafts)							C**	<<<	<<<	
Hydraulic circuit pressures								C**	<<<	
Hydraulic circuit outputs								C**	<<<	
Hydraulic oil tank								N**	<<<	

https://truckmanualshub.com/

A = ADJUST, C = CHECK, G = GREASE, N = CLEAN, P = BLEED, R = REPLACE, V = DRAIN	PAGE	(1)	DAILY OR EVERY 10 HOURS SERVICE	EVERY 50 HOURS SERVICE	EVERY 250 HOURS SERVICE	EVERY 500 HOURS SERVICE OR 6 MONTHS	EVERY 1000 HOURS SERVICE OR 1 YEAR	EVERY 2000 HOURS SERVICE OR 2 YEARS	EVERY 4000 HOURS SERVICE	OCCASIONALLY
BRAKE										
Brake oil level	3-22	C		C	<<<	<<<	<<<	<<<	<<<	
Parking brake	3-28	C/A			C/A	<<<	<<<	<<<	<<<	
Parking brake lever mechanism	3-34	G				G	<<<	<<<	<<<	
Parking brake mechanism on the transmission		G**				G**	<<<	<<<	<<<	
Brake oil							V**	<<<	<<<	
Brake system							P**	<<<	<<<	
Brake system pressure							C**	<<<	<<<	
Brake							A**	<<<	<<<	
STEERING										
Steering								C**	<<<	
Steering swivel joints									C**	
CAB										
Windscreen washer liquid level	3-23	C		C	<<<	<<<	<<<	<<<	<<<	
Cab door	3-23	G		G	<<<	<<<	<<<	<<<	<<<	
Cab ventilation filter (OPTION Air conditioning)	3-23/28	R		N	R	<<<	<<<	<<<	<<<	
Heating block non-return valve	3-28	N			N	<<<	<<<	<<<	<<<	
Cab ventilation filters	3-34	N				N	<<<	<<<	<<<	
Seat belt	3-41						C	<<<	<<<	
Condition of the rear view mirrors							C**	<<<	<<<	
Structure							C**	<<<	<<<	
Air conditioning (OPTION)	3-43							C	<<<	
ELECTRICITY										
Longitudinal stability limiter and warning device	3-17/47	C	C	<<<	<<<	<<<	<<<	<<<	<<<	XXX
Condition of wiring harness and cables							C**	<<<	<<<	
Lights and signals							C**	<<<	<<<	
Warning indicators							C**	<<<	<<<	
Front headlights	3-45									A
FRONT AXLE										
Front wheels reducers pivots	3-24	G		G	<<<	<<<	<<<	<<<	G/C**	
Front axle oscillation	3-24	G		G	<<<	<<<	<<<	G/C**	<<<	
Front axle differential oil level	3-29	C			C	<<<	<<<	<<<	<<<	
Front wheels reducers oil level	3-29	C			C	<<<	<<<	<<<	<<<	
Front axle differential oil	3-35	V				V	<<<	<<<	<<<	
Front wheels reducers oil	3-41	V					V	<<<	<<<	
Wear of front axle brake discs									C**	
Front wheels reducers universal joint									C**	
Front wheels reducers clearance									C**	
REAR AXLE										
Rear wheels reducers pivots	3-24	G		G	<<<	<<<	<<<	<<<	G/C**	
Rear axle oscillation	3-24	G		G	<<<	<<<	<<<	G/C**	<<<	
Rear axle differential oil level	3-29	C			C	<<<	<<<	<<<	<<<	
Rear wheels reducers oil level	3-29	C			C	<<<	<<<	<<<	<<<	
Rear axle differential oil	3-35	V				V	<<<	<<<	<<<	
Rear wheels reducers oil	3-41	V					V	<<<	<<<	
Wearing of rear axle brake discs									C**	
Rear wheels reducers universal joint									C**	
Rear wheels reducers clearance									C**	
CHASSIS										
Tilting corrector	3-24	G		G	<<<	<<<	<<<	<<<	<<<	
Structure							C**	<<<	<<<	
Bearings and articulation rings								C**	<<<	
ATTACHMENTS										
Forks wear		C**				C**	<<<	<<<	<<<	
Attachment carriage							C**	<<<	<<<	
Condition of attachments							C**	<<<	<<<	
LIFT TRUCK										
Tow the lift truck	3-45									XXX
Sling the lift truck	3-46									XXX
Transport the lift truck on a platform	3-46									XXX

(*): Every 10 hours during the first 50 hours, then once at 250 hours.
(**): Consult your dealer.

https://truckmanualshub.com/

A - DAILY OR EVERY 10 HOURS SERVICE

A1 - I.C. ENGINE OIL LEVEL

CHECK

Place the lift truck on level ground with the I.C. engine stopped, and let the oil drain into the sump.

- Open the I.C. engine bonnet.
- Remove the dipstick 1 (fig. A1).
- Clean the dipstick and check the correct level between the two notches.
- If necessary, add oil (see: 3 - MAINTENANCE: LUBRICANTS AND FUEL) by the filler port 2 (fig. A1).
- Check visually that there is no leakage or seepage of oil in the I.C. engine.

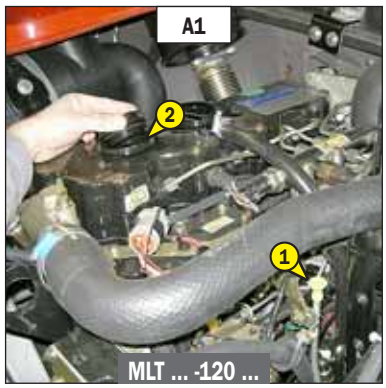

A2 - COOLING LIQUID LEVEL

CHECK

Place the lift truck on level ground with the I.C. engine stopped, and allow the I.C. engine to cool.

- Open the I.C. engine bonnet.
- Check the correct level in the middle of gauge 1 (fig. A2).
- If necessary, add cooling liquid (see: 3 - MAINTENANCE: LUBRICANTS AND FUEL).
- Slowly turn the cap of the radiator 2 (fig. A2) up to the safety stop.
- Allow the pressure and the steam to escape.
- Press down and turn the cap so as to release it.
- Add cooling liquid via filler port 3 (fig. A2) up to the middle of gauge 1 (fig. A2).
- Lubricate slightly the filler neck in order to facilitate the setting and the removal of the radiator cap.
- Check visually that there is no leakage in the radiator and pipes.

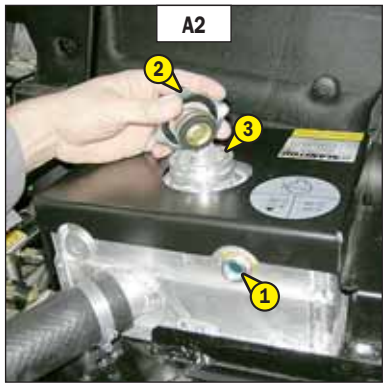

To avoid any risk of spraying or burning, wait until the I.C. engine has cooled down before removing the cooling circuit filler plug. If the cooling liquid is very hot, add only hot cooling liquid (80°C). In an emergency, you can use water as a cooling liquid, then change the cooling circuit liquid as soon as possible (see: 3 - MAINTENANCE: F1 - COOLING LIQUID).

https://truckmanualshub.com/

A3 - FUEL LEVEL

CHECK

Keep the fuel tank full, to reduce as much as possible any condensation due to the atmospheric conditions.

- Remove cap 1 (fig. A3).
- Fill the fuel tank with clean fuel (see: 3 - MAINTENANCE: LUBRICANTS AND FUEL), filtered through a strainer or a clean, lint free cloth, through filler port 2 (fig. A3).
- Put the cap back 1 (fig. A3).
- Check visually that there is no leakage in the tank and pipes.

Never smoke or approach with a flame during filling operations or when the tank is open. Never refill while I.C. engine is running.

The fuel tank is degassed via the filler plug. When changing it, always use an original part, with degassing hole.

NOTE: A locking tank cap is available as an OPTION.

A4 - FUEL PRE-FILTER

CHECK

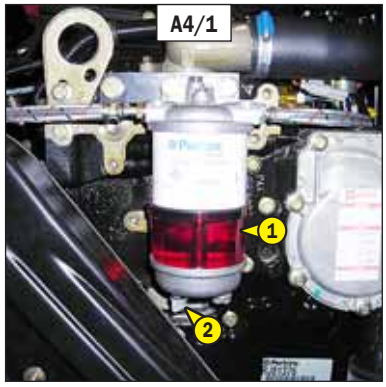

MLT 634 Turbo LSU Série F-E3
MLT 731 Turbo Série F-E3
MLT 735 Turbo LSU Série 6-E3
MLT 741 Turbo LSU Série 6-E3
MLT 1035 L Turbo LSU Série 6-E3

- Open the I.C. engine bonnet.
- Check for the presence of water in the pre-filter bowl 1 (fig. A4/1) and empty it out if necessary.
- Place a receptacle under the drain plug 2 (fig. A4/1) and loosen it in two to three thread turns.
- Allow the diesel fuel to flow out until it is free from impurities and water.
- Retighten the drain plug while the diesel fuel is flowing out.

A4 - FUEL PRE-FILTER

CHECK

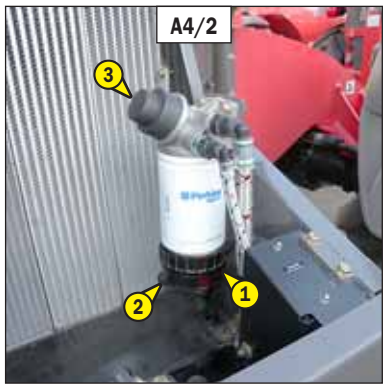

MLT 634 -120 LSU Série F-E3
MLT 634 -120 LSU POWERSHIFT Série F-E3
MLT 735 -120 LSU Série 6-E3
MLT 735 -120 LSU POWERSHIFT Série 6-E3
MLT 741 -120 LSU Série 6-E3
MLT 741 -120 LSU POWERSHIFT Série 6-E3

- Open the I.C. engine bonnet.
- Check for the presence of water in the pre-filter bowl 1 (fig. A4/2) and empty it out if necessary.
- Place a receptacle under the drain plug 2 (fig. A4/2) and loosen it in two to three thread turns.
- Allow the diesel fuel to flow out until it is free from impurities and water.
- Tighten the drain plug.
- Pressurise the circuit with the hand pump 3 (fig. A4/2).

A5 - CYCLONIC PREFILTER

CLEAN

The cleaning interval is given as a guide, however the pre-filter must be emptied as soon as impurities reach the MAX. level on the tank.

- Loosen nut 1 (fig. A5), remove cover 2 (fig. A5) and empty the tank.
- Clean the pre-filter unit with a clean dry cloth and reassemble the unit.

When cleaning, take care not to let impurities into the dry air filter.

https://truckmanualshub.com/

A6 - GEAR BOX OIL LEVEL

CHECK

MLT 634 Turbo LSU Série F-E3
MLT 634 -120 LSU Série F-E3
MLT 731 Turbo Série F-E3
MLT 735 Turbo LSU Série 6-E3
MLT 735 -120 LSU Série 6-E3
MLT 741 Turbo LSU Série 6-E3
MLT 741 -120 LSU Série 6-E3
MLT 1035 L Turbo LSU Série 6-E3

Park the lift truck on level ground with the boom raised, the I.C. engine cold and stopped. Carry out the control within 5 minutes of the I.C. engine being stopped.

- Remove the plastic cap 1 (fig. A6).
- Remove the dipstick 2 (fig. A6).
- Wipe the dipstick and check the correct level between the two MIN and MAX marks.
- If necessary, add oil (see: 3 - MAINTENANCE: E3 - GEAR BOX OIL).
- Check visually that there is no leakage or seepage of oil in the transmission.

A6 - GEAR BOX OIL LEVEL

CHECK

MLT 634 -120 LSU POWERSHIFT Série F-E3
MLT 735 -120 LSU POWERSHIFT Série 6-E3
MLT 741 -120 LSU POWERSHIFT Série 6-E3

Park the lift truck on level ground with the boom raised, the I.C. engine cold and stopped. Carry out the control within 5 minutes of the I.C. engine being stopped.

- Remove the plastic cap 1 (fig. A6).
- Remove the dipstick 2 (fig. A6).
- Wipe the dipstick and check the correct level between the two MIN and MAX. marks.
- If necessary, add oil (see: 3 - MAINTENANCE: E3 - GEAR BOX OIL).
- Check visually that there is no leakage or seepage of oil in the transmission.

A7 - TYRES PRESSURE AND WHEEL NUTS TORQUE

CHECK

- Check the condition of the tyres, to detect cuts, protuberances, wear, etc.
- Check the torque load of the wheel nuts. Non compliance with this instruction can cause damage and rupture to the wheel bolts and distortion to the wheels.

  Wheel nuts tightening torque
  - Front tyres: 630 N.m ± 15%
  - Rear tyres: 630 N.m ± 15%
- Check and adjust the tyre pressures if necessary (see: 2 - DESCRIPTION: FRONT AND REAR TYRES).

Check that the air hose is correctly connected to the tyre valve before inflating and keep all persons at a distance during inflation. Respect the recommended tyre pressures given.

NOTE: There is an OPTIONAL wheel toolkit and anti-puncture kit.

A8 - BOOM PADS

CLEAN - GREASE

To be carried out every 10 hours during the first 50 hours service, then once at 250 hours.

- Extend the boom completely.
- With a brush, apply a coat of grease (see: 3 - MAINTENANCE: LUBRICANTS AND FUEL) on the 4 sides of the telescope(s) (fig. A8).
- Telescope the boom several times in order to spread the coat of grease evenly.
- Remove the surplus of grease.

If the lift truck is used in an abrasive environment (dust, sand, coal...) Use lubricating varnish (MANITOU reference: 483536). In this respect, consult your dealer.

https://truckmanualshub.com/

A9 - LONGITUDINAL STABILITY LIMITER AND WARNING DEVICE

CHECK

- These tests are essential for checking the correct operation and adjustment of the different components of the device.
- Place the lift truck on flat, level ground with the wheels straight.

Use the test button only when requested to do so, performing short presses (less than 1 second) and long presses (5 seconds) as instructed.

If in doubt during the test procedure, exit cleanly by short pressing the "BUCKET" MODE or "SUSPENDED LOAD" MODE button .

Long press on the test button.

STAGE 1	 - An audible beep. - First green led flashing. - Test button lit.	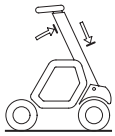 - Place the lift truck without any attachment, with the jib fully retracted and raised.	**Short press the test button.**	**TEST OK** - One audible beep and progresses to stage 2. **TEST NOT OK** - Two audible beeps and lighting of the fault warning light . - Exit test mode. - Go to stage 4.
STAGE 2	 - First green led continuously lit. - Second green led flashing. - Test button lit.	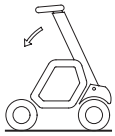 - Lower the jib with the engine running at full revs and the hydraulic control at the maximum setting. Lowering slows until movement is cut-off.	**Short press the test button.**	**TEST OK** - One audible beep and progresses to stage 3. **TEST NOT OK** - Two audible beeps and lighting of the fault warning light . - Exit test mode. - Go to stage 4.
STAGE 3	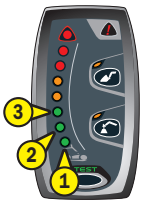 - First and second green leds continuously lit. - Third green led flashing. - Test button lit.	- Lower the jib until the movement is cut-off. - Request the following, in order:a reverse tilt, a forward tilt (dumping) and a telescope extension. None of these 3 movements should be possible.	**Short press the test button.**	**TEST OK** - Conformity of aggravating movement cut-off. - Exit test mode. All the LEDs will light for 2 seconds and an audible beep will be sounded. **TEST NOT OK** - Fault warning light comes on . - Exit test mode. - Go to stage 4.
STAGE 4	 - The fault warning light remains permanently on until the error is repaired.	- The fault indicator and a beep indicate a fault. - Press the button briefly to view the error code. - If there are several error codes, press the button briefly several times to loop through the error codes. NOTE: A defective fuse can generate several error codes. If this is the case, check the fuses (see: 2 - DESCRIPTION: 11 - FUSES AND RELAYS IN THE CAB) 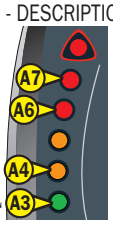 - If error code" is displayed", the problem may be resolved by resetting the longitudinal stability limiter and warning device (see: 3 - MAINTENANCE: G - OCCASIONAL MAINTENANCE). - Contact your dealer, stating the error code or error codes (see following table). NOTE: For the stage 3 test, specify the non-conforming aggravating hydraulic movements, if necessary.		

https://truckmanualshub.com/

The error codes are indicated by leds A3 to A7 on the warning device and longitudinal stability limiter.

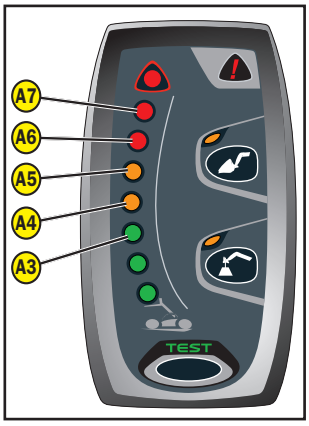

ERROR CODES					
DESIGNATIONS	LEDS				
	A7	A6	A5	A4	A3
Regulating fault (fault detected during the test).	●	●	●	●	●
Lowering regulating valve fault.	●	●	●	●	○
Safety valve cut-off fault (fault detected during the test).	●	●	●	○	●
Safety valve fault.	●	●	●	○	○
Gauge calibration fault (fault detected during the test). **the problem may be resolved by resetting the longitudinal stability limiter and warning device (see: 3 - MAINTENANCE: G - OCCASIONAL MAINTENANCE).**	●	●	○	●	●
Angle calibration fault (fault detected during the test).	●	●	○	●	○
Inclination cut-off valve fault.	●	●	○	○	●
Strain gauge fault.	●	○	●	●	●
Jib angle sensor fault.	●	○	●	●	○
Telescope or attachment control fault.	●	○	●	○	●
Telescope retracted senor fault.	●	○	●	○	○
Computer earth output fault.	●	○	○	●	●
Aggravating hydraulic movement cut-off disable fault.	●	○	○	●	○
Stability indicator fault.	○	●	●	●	○
Electronic handling controller fault.	○	●	●	○	●
Hydraulic control lever control setting fault.	○	●	●	○	○
Transmission cut-off output fault.	○	●	○	●	●
Electronic handling controller supply fault.	○	●	○	○	●
Telescope retracted sensor fault (fault detected during the test).	○	●	○	○	○
Forward tilt cut-off valve fault. (according to model)	○	○	●	●	●
Jib head electrovalve fault. (OPTION)	○	○	●	●	○
Attachment easy hydraulic connection fault button. (OPTION)	○	○	●	○	●
Electrovalve attachment hydraulic control and electrical jib provision fault button. (OPTION)	○	○	●	○	○
Attachment forced operation indicator fault. (OPTION)	○	○	○	●	●
Electric handling controller 10V output fault.	○	○	○	●	○
Forced operation button fault. (OPTION)	○	○	○	○	●

https://truckmanualshub.com/

https://truckmanualshub.com/

B - EVERY 50 HOURS SERVICE

Carry out the operations described previously as well as the following operations.

B1 - DRY AIR FILTER CARTRIDGE

CHECK - CLEAN

In case of use in a heavily dust laden atmosphere, there are pre-filtration cartridges (see: 3 - MAINTENANCE: FILTERS CARTRIDGES AND BELTS). Also, the checking and cleaning periodicity of the cartridge must be reduced.

If the clogging indicator light comes on, this operation must be carried out as quickly as possible (1 hour maximum). The cartridge must not be cleaned more than seven times, after which the cartridge must be changed. Never use the lift truck without an air filter or with a damaged air filter.

- For the disassembly and reassembly of the cartridge, see: 3 - MAINTENANCE: D3 - DRY AIR FILTER CARTRIDGE.
- Clean the filter cartridge using a compressed air jet (max. pressure 3 bar) directed from the top to the bottom and from the inside towards the outside at a minimum distance of 30 mm from the cartridge wall.
- Cleaning is completed when there is no more dust on the cartridge.

Respect the safety distance of 30 mm between the air jet and the cartridge to avoid tearing or making a hole in the cartridge. The cartridge must not be blown anywhere near the air filter box. Never clean the cartridge by tapping it against a hard surface. Your eyes must be protected during this intervention.

- Clean the cartridge seal surfaces with a damp, clean lint-free cloth and grease with a silicone lubricant (MANITOU reference: 479292).
- Check visually the outer condition of the air filter and its mounts. Verify the condition of the hoses and their mounts also.

Never clean the dry air filter cartridge by washing it in liquid. Do not clean by any means the safety cartridge located inside the filter cartridge, change it for a new one if it is clogged or damaged.

B2 - RADIATOR CORES

CLEAN

In a polluting atmosphere, clean the radiator cores every day. Do not use a water jet or high-pressure steam as this could damage the radiator fins.

- Open the I.C. engine bonnet.
- If necessary, clean the suction grid on the engine hood (fig. B2/1).
- Using a soft cloth, clean the radiator cores in order to remove as much dirt as possible.
- Clean the radiator cores using a compressed air jet aimed in the same direction as the cooling air flow (fig. B2/2).
- Clean with the fan running for best results.

NOTE: There is an OPTIONAL self-cleaning fan.

B3 - CONDENSER CORE (OPTION AIR CONDITIONING)

CHECK - CLEAN

In a polluting atmosphere, clean the radiator core every day. Do not use a water jet or high-pressure steam as this could damage the condenser fins.

- Remove the protective grid 1 (fig. B3) and clean it if necessary.
- Visually check whether the condenser 2 (fig. B3) is clean and clean it if necessary.
- Clean the condenser using a compressed air jet aimed in the same direction as the air flow (fig. B3).

NOTE: So as to enhance the cleaning, carry out this operation with the fans running.

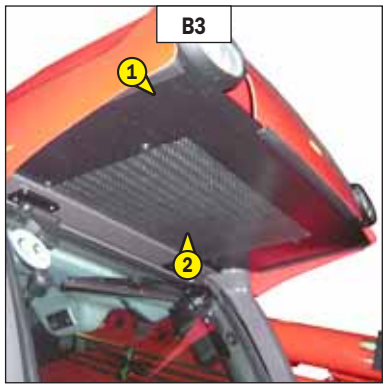

https://truckmanualshub.com/

To be carried out weekly, if the lift truck has been operated for less than 50 hours during the week.

In the event of prolonged use in an extremely dusty or oxidising atmosphere, reduce this interval to 10 working hours or every day.

- Clean and lubricate the following points with grease (see: 3 - MAINTENANCE: LUBRICANTS AND FUEL) and remove the surplus of grease.

1 - Lubricators of the boom axle (2 lubricators) (fig. B4/1).
2 - Lubricators of the carriage axle (2 lubricators) (fig. B4/2).
3 - Lubricator of the tilt cylinder foot axle (1 lubricator) (fig. B4/3).
4 - Lubricator of the tilt cylinder head axle (1 lubricator) (fig. B4/4).
5 - Lubricators of the carriage connecting rod axle (3 lubricators) (fig. B4/5).
6 - Lubricator of the lifting cylinder foot axle (1 lubricator) (fig. B4/6).
7 - Lubricator of the lifting cylinder head axle (1 lubricator) (fig. B4/7).
8 - Lubricator of the compensation cylinder foot axle (1 lubricator) (fig. B4/6).
9 - Lubricator of the compensation cylinder head axle (1 lubricator) (fig. B4/8).

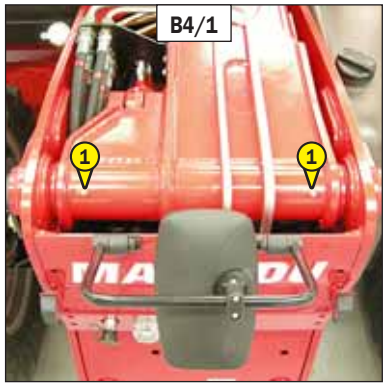

B4/1

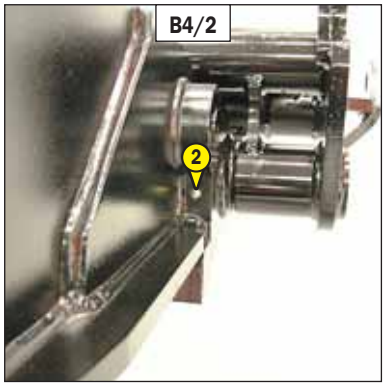

B4/2

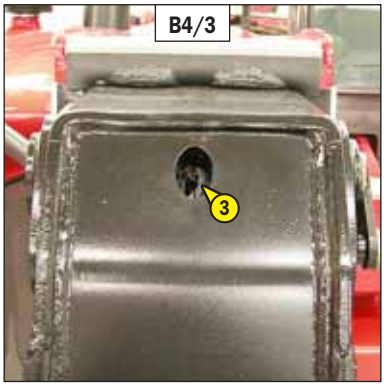

B4/3

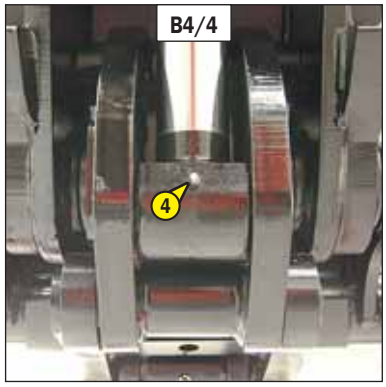

B4/4

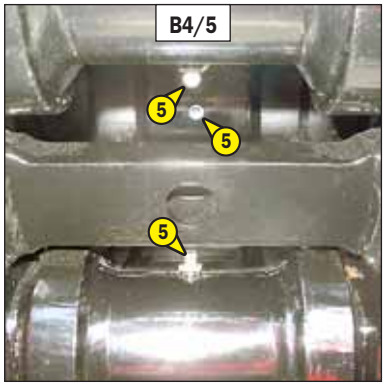

B4/5

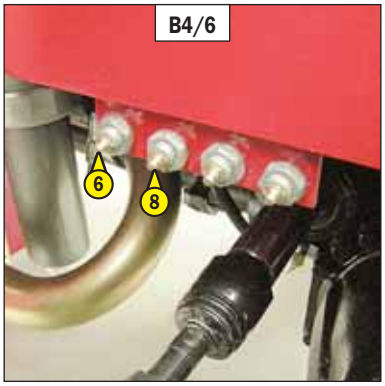

B4/6

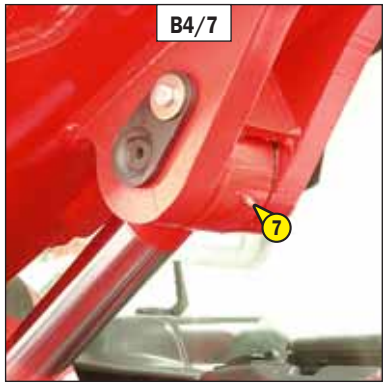

B4/7

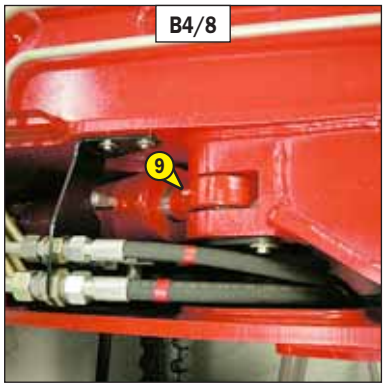

B4/8

https://truckmanualshub.com/

B5 - HYDRAULIC OIL LEVEL

CHECK

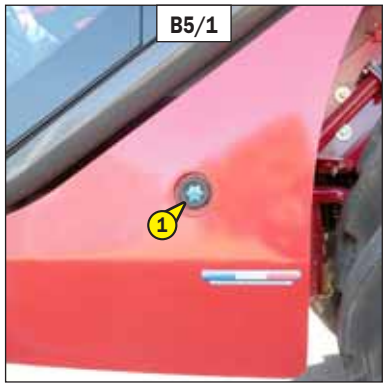

B5/1

Place the lift truck on level ground with the I.C. engine stopped, and the boom retracted and lowered as far as possible.

- Refer to gauge 1 (fig. B5/1).
- The oil level is correct when it is at the level of the red point.
- If necessary, add oil (see: 3 - MAINTENANCE: LUBRICANTS AND FUEL).
- Remove cap 2 (fig. B5/2).
- Add oil by filler port 3 (fig. B5/2).

Use a clean funnel and clean the underside of the oil drum before filling.

- Put the cap back.
- Check visually that there is no leakage in the tank and pipes.

B5/2

Always maintain the oil level at maximum as cooling depends on the oil flowing through the tank.

B6 - BRAKE OIL LEVEL

CHECK

B6/1

Place the lift truck on level ground.

- Loosen screw 1 (fig. B6/1) and remove the access panel for braking oil tank and windscreen washer tank 2 (fig. B6/1).
- The level is correct when it is at the MAX. level in tank 3 (fig. B6/2)
- If necessary, add oil (see: 3 - MAINTENANCE: LUBRICANTS AND FUEL) by the filler port.
- Pivot the tank 3 (fig. B6/2) to access the filler cap 4 (fig. B6/2).
- Check visually that there is no leakage in the tank and pipes.

If the braking oil level is abnormally low, consult your dealer.

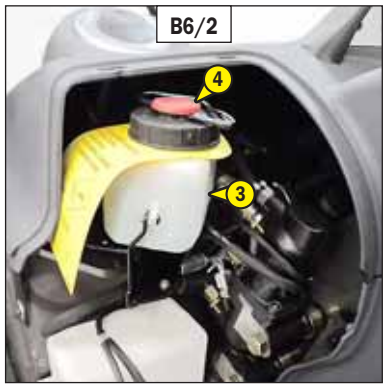

B6/2

https://truckmanualshub.com/

B7 - WINDSCREEN WASHER LIQUID LEVEL

CHECK

- Loosen screw 1 (fig. B7/1) and remove the access panel for braking oil tank and windscreen washer tank 2 (fig. B7/1).
- Visually check the level.
- If necessary add windscreen washer liquid (see: 3 - MAINTENANCE: LUBRICANTS AND FUEL) by filler port 3 (fig. B7/2).

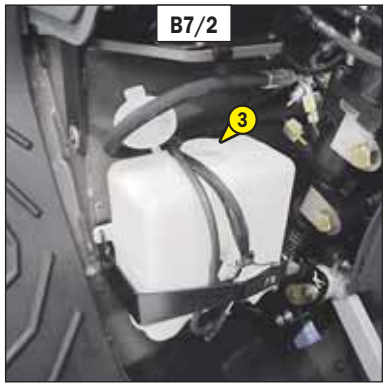

B8 - CAB DOOR

GREASE

- Clean and lubricate the points 1 (4 lubricators) (fig. B8) with grease (see: 3 - MAINTENANCE: LUBRICANTS AND FUEL) and remove the surplus of grease.

B9 - CAB VENTILATION FILTER (OPTION AIR CONDITIONING)

CLEAN

- Unscrew the thumbscrew 1 (fig. B9/1) and remove protective guard back 2 (fig. B9/1).
- Lift out cabin ventilation filter 3 (fig. B9/2).
- Clean the filter using a compressed air jet.
- Check its condition and change if necessary (see: 3 - MAINTENANCE: FILTERS CARTRIDGES AND BELTS).
- Refit the filter and protective casing.

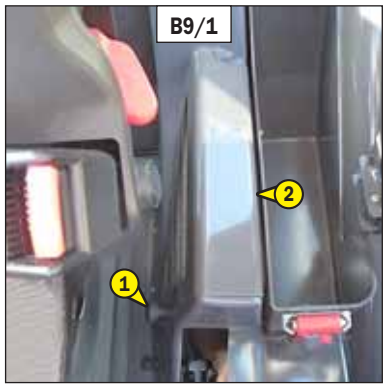

https://truckmanualshub.com/

B10 - FRONT AND REAR WHEEL REDUCER PIVOTS

GREASE

- Clean and lubricate the points 1 (8 lubricators) (fig. B10) with grease (see: 3 - MAINTENANCE: LUBRICANTS AND FUEL) and remove the surplus of grease.

B11 - FRONT AXLE OSCILLATION

GREASE

MLT 1035 L Turbo LSU Série 6-E3

- Clean and lubricate the points 1 (2 lubricators) (fig. B11) with grease (see: 3 - MAINTENANCE: LUBRICANTS AND FUEL) and remove the surplus of grease.

B12 - REAR AXLE OSCILLATION

GREASE

- Clean and lubricate the points 1 (2 lubricators) (fig. B12) with grease (see: 3 - MAINTENANCE: LUBRICANTS AND FUEL) and remove the surplus of grease.

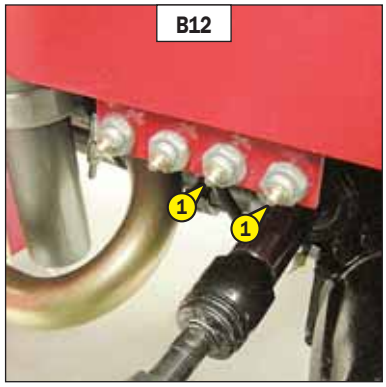

B13 - TILTING CORRECTOR

GREASE

MLT 1035 L Turbo LSU Série 6-E3

- Clean and lubricate the following points with grease (see: 3 - MAINTENANCE: LUBRICANTS AND FUEL) and remove the surplus of grease.

  1 - Lubricator of the tilting corrector cylinder foot axle (1 lubricator) (fig. B13/1).
  2 - Lubricator of the tilting corrector cylinder head axle (1 lubricator) (fig. B13/1).

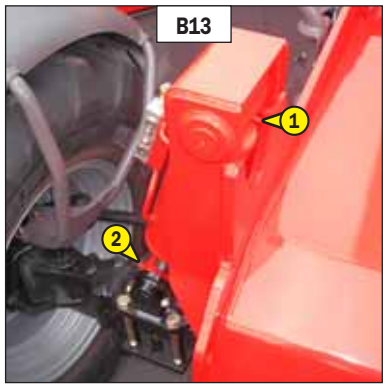

https://truckmanualshub.com/

https://truckmanualshub.com/

C - EVERY 250 HOURS SERVICE

Carry out the operations described previously as well as the following operations.

C1 - FAN BELT TENSION

CHECK - ADJUST

- Open the I.C. engine bonnet.
- Check the belt for signs of wear and cracks and change if necessary (see: 3 - MAINTENANCE: FILTERS CARTRIDGES AND BELTS).
- Loosen screw 1 (fig. C1/1) on the tension pulley.
- Loosen lock nut 2 (fig. C1/1 and C1/2) and screw 3 (fig. C1/1 and C1/2).
- Tighten the screw 2 (fig. C1/1 and C1/2) until the belt is as close as possible to the groove of the pulley 4 (fig. C1/1).
- Make a mark on the head of screw 3 (fig. C1/1 and C1/2) and tighten, turning it 5 times.
- Tighten the lock nut 2 (fig. C1/1 and C1/2).
- Retighten screw 1 (fig. C1/1) on the tension pulley.

When changing the fanbelt, tighten screw 3 (fig. C1/1 and C1/2) by one and a half turns, having allowed the I.C. engine to idle for 30 minutes.

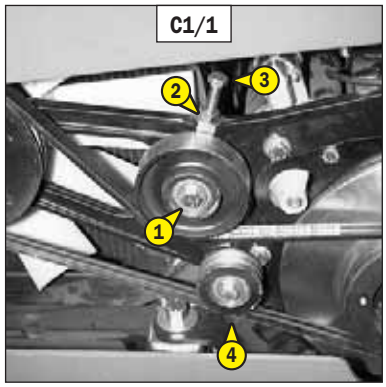

C1/1

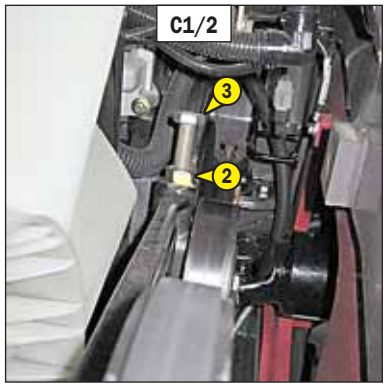

C1/2

C2 - ALTERNATOR/CRANKSHAFT BELT TENSION

CHECK - ADJUST

MLT 634 Turbo LSU Série F-E3
MLT 731 Turbo Série F-E3
MLT 735 Turbo LSU Série 6-E3
MLT 741 Turbo LSU Série 6-E3

- Open the I.C. engine bonnet.
- Unscrew the fastening screws 1 (fig. C2/1).
- Lay down the protective guard 2 (fig. C2/1).
- Check the belt for signs of wear and cracks and change if necessary (see: 3 - MAINTENANCE: FILTERS CARTRIDGES AND BELTS).
- Check the belt tension between the pulleys of the crankshaft and of the alternator.
- Under a normal pressure exerted with the thumb (45 N), the belt should move approximately 10 mm.
- Carry out adjustments if necessary.
- Untighten screws 3 (fig. C2/2) by two to three thread turns.
- Swivel the alternator assembly so as to obtain the belt tension required.
- Retighten screws 3 (fig. C2/2) (tightening torque 22 N.m).
- Put the protective guard back 2 (fig. C2/1).

If the alternator belt has to be changed, check the tension again after the first 20 hours of operation.

C2/1

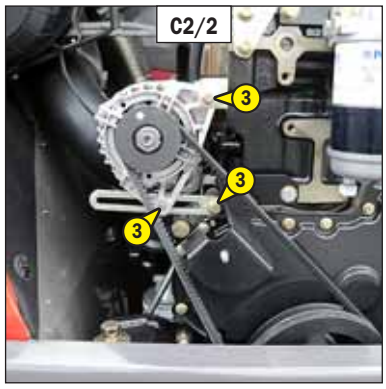

C2/2

https://truckmanualshub.com/

C2 - ALTERNATOR/CRANKSHAFT BELT TENSION

CHECK - ADJUST

MLT 634 -120 LSU Série F-E3
MLT 634 -120 LSU POWERSHIFT Série F-E3
MLT 735 -120 LSU Série 6-E3
MLT 735 -120 LSU POWERSHIFT Série 6-E3
MLT 741 -120 LSU Série 6-E3
MLT 741 -120 LSU POWERSHIFT Série 6-E3
MLT 1035 L Turbo LSU Série 6-E3

For this operation, we advise you to use the MANITOU tension meter (fig. C2/1) reference 167418.

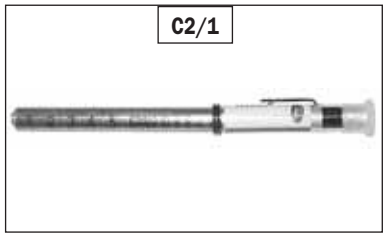
C2/1

- Open the I.C. engine bonnet.
- Unscrew the fastening screws 1 (fig. C2/2).
- Lay down the protective guard 2 (fig. C2/2).
- Check the belt for signs of wear and cracks and change if necessary (see: 3 - MAINTENANCE: FILTERS CARTRIDGES AND BELTS).
- Check the belt tension between the pulleys of the crankshaft and of the alternator.

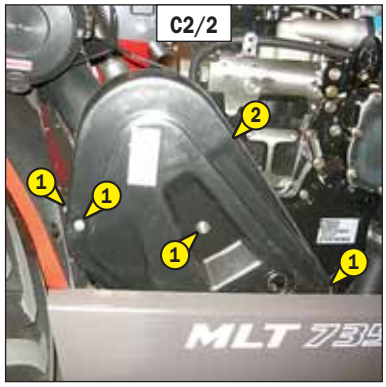

C2/2

NEW BELT:
- At a pressure of 15 N ± 0.4 on strap 3 (fig. C2/3), the displacement must be about 3,7 mm.

BELT AFTER 20 HOURS OF OPERATION:
- At a pressure of 13 N ± 0.4 on strap 3 (fig. C2/3), the displacement must be about 3,7 mm.

- Carry out adjustments if necessary.
- Untighten screws 4 (fig. C2/3) by two to three thread turns.
- Swivel the alternator assembly so as to obtain the belt tension required.
- Retighten screws 4 (fig. C2/3) (tightening torque 22 N.m).
- Put the protective guard back 2 (fig. C2/2).

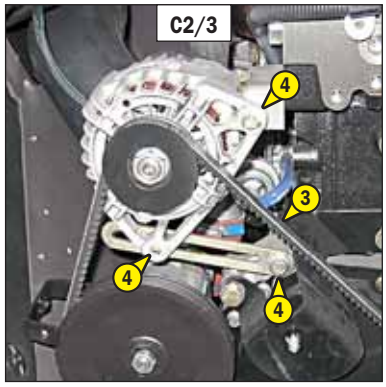

C2/3

If the alternator belt has to be changed, check the tension again after the first 20 hours of operation.

C3 - COMPRESSOR BELT TENSION (OPTION AIR CONDITIONING)

CHECK - ADJUST

- Open the I.C. engine bonnet.
- Unscrew the fastening screws 1 (fig. C3/1).
- Lay down the protective guard 2 (fig. C3/1).
- Check the belt for signs of wear and cracks and change if necessary (see: 3 - MAINTENANCE: FILTERS CARTRIDGES AND BELTS).
- Check the belt tension between the pulleys of the crankshaft and of the compressor.
- Under a normal pressure exerted with the thumb (45 N), the belt should move approximately 10 mm.
- Carry out adjustments if necessary.
- Untighten screws 3 (fig. C3/2) with two to three thread turns.
- Swivel the compressor assembly so as to obtain the belt tension required.
- Retighten screws 3 (fig. C3/2).
- Put the protective guard back 2 (fig. C3/1).

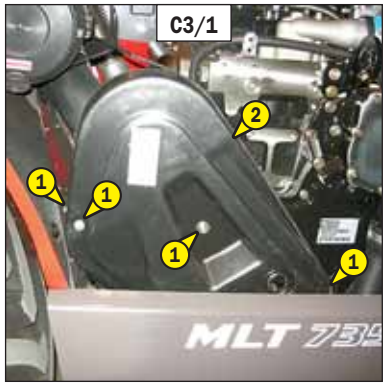

C3/1

If the compressor belt has to be changed, check the tension again after the first 20 hours of operation.

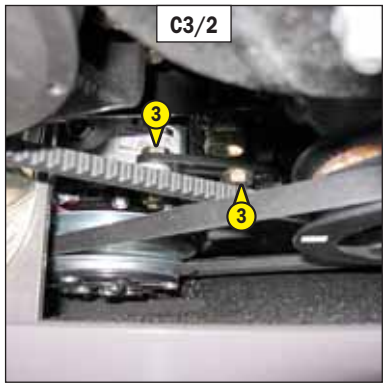

C3/2

https://truckmanualshub.com/

C4 - ANGLE GEAR BOX LEVEL

CHECK

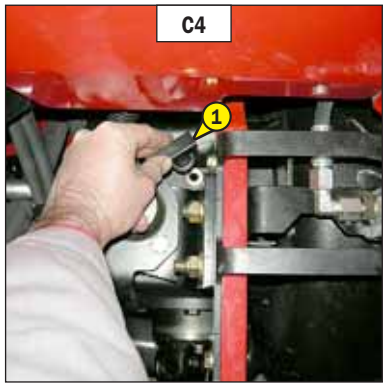

Park the lift truck on level ground with the jib raised and the I.C. engine stopped.

- Remove level plug 1 (fig. C4).
- Wipe the dipstick and check the correct level between the MIN and MAX marks.
- If necessary, add oil (see: 3 - MAINTENANCE: E5 - ANGLE GEAR BOX OIL).

C5 - PARKING BRAKE

CHECK - ADJUST

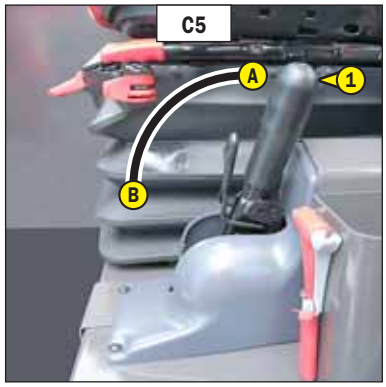

Place the lift truck on level ground with the rated load in the transport position.
- Check braking by locking the parking brake in position A (fig. C5).
- Pull on the lift truck rear towing pin with a minimum force of 3500 daN. The wheels of the lift truck must not rotate.
- Carry out adjustments if necessary.
- Progressively tighten the end piece of the lever 1 (fig. C5) and recheck the braking.
- Repeat the operation until the correct braking adjustment is obtained.

C6 - CAB VENTILATION FILTER (OPTION AIR CONDITIONING)

CHANGE

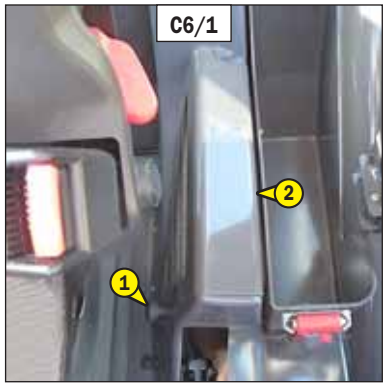

- Unscrew thumbscrew 1 (fig. C6/1) and remove protective guard back 2 (fig. C6/1).
- Lift out cabin ventilation filter 3 (fig. C6/2) and replace it with a new one (see: 3 - MAINTENANCE: FILTERS AND BELTS).
- Refit the protective casing.

C7 - HEATING BLOCK NON-RETURN VALVE

CLEAN

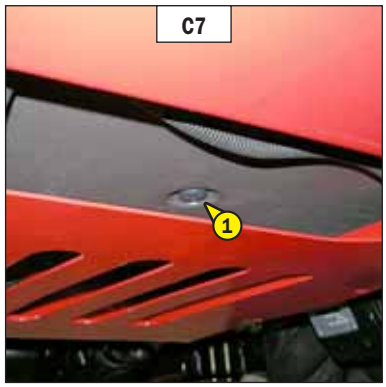

- Since non-return valve 1 (fig. C7) is located under the cab, it is possible for it to become obstructed with spattered mud for example. Clean if necessary.

https://truckmanualshub.com/

C8 - FRONT AND REAR DIFFERENTIAL OIL LEVEL

CHECK

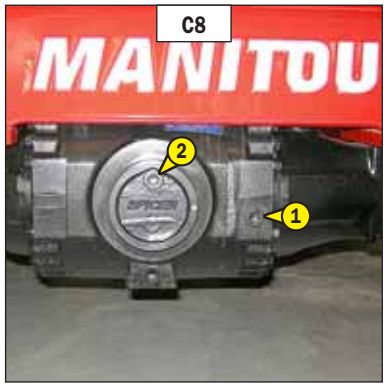

Place the lift truck on level ground with the I.C. engine stopped.

- Remove level plug 1 (fig. C8). The oil should be flush with the edge of the hole.
- If necessary, add oil (see: 3 - MAINTENANCE: LUBRICANTS AND FUEL) by the filler port 2 (fig. C8).
- Replace and tighten the level plug 1 (fig. C8) (tightening torque 34 to 49 N.m).
- Repeat this operation for the rear axle differential.

C9 - FRONT AND REAR WHEELS REDUCERS OIL LEVEL

CHECK

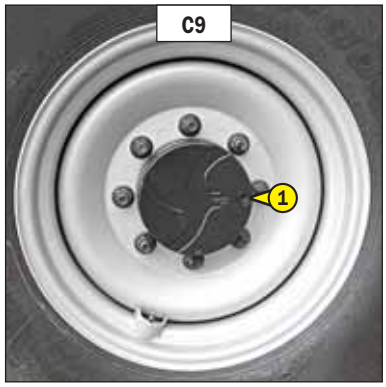

Place the lift truck on level ground with the I.C. engine stopped.

- Check the level on each front wheel reducer.
- Place level plug 1 (fig. C9) in the horizontal position.
- Remove the level plug, the oil should be flush with the edge of the hole.
- If necessary, add oil (see: 3 - MAINTENANCE: LUBRICANTS AND FUEL) by the same hole.
- Replace and tighten the level plug 1 (fig. C9) (tightening torque 34 to 49 N.m).
- Repeat this operation on each rear wheel reducer.

https://truckmanualshub.com/

D - EVERY 500 HOURS SERVICE

Carry out the operations described previously as well as the following operations.

D1 - I.C. ENGINE OIL

DRAIN

D2 - I.C. ENGINE OIL FILTER

CHANGE

Place the lift truck on level ground, let the I.C. engine run at idle for a few minutes, then stop the I.C. engine.

DRAINING THE OIL

- Open the I.C. engine bonnet.
- Remove access panel 1 (fig. D1/1).
- Place a container under drain plug 2 (fig. D1/1) and unscrew the plug 3 (fig. D1/2).
- Take drain hose 4 (fig. D1/3).
- Place the end of the drain hose in the container 2 (fig. D1/1) and screw fully the union on draining port 5 (fig. D1/4).
- Remove filler cap 6 (fig. D1/5) in order to ensure that the oil is drained properly.

Dispose of the drain oil in an ecological manner.

REPLACEMENT OF THE FILTER

- Remove I.C. engine oil filter 7 (fig. D1/2); discard the filter and the filter seal.
- Clean the filter bracket with a clean, lint-free cloth.
- Lightly grease the new oil filter seal and refit the oil filter (see: 3 - MAINTENANCE: FILTERS CARTRIDGES AND BELTS) on the filter bracket.

Tighten the oil filter by hand pressure only and lock the filter in place by a quarter turn.

FILLING UP THE OIL

- Loosen, clean and put back in place the drain hose 4 (fig. D1/3).
- Refit and tighten drain plug 3 (fig. D1/2).
- Refit access panel 1 (fig. D1/1).
- Fill up with oil (see: 3 - MAINTENANCE: LUBRICANTS AND FUEL) through filler port 8 (fig. D1/5).
- Wait a few minutes to allow the oil to flow into the sump.
- Start the I.C. engine and let it run for a few minutes.
- Check for possible leaks at the drain plug and the oil filter.
- Stop the I.C. engine, wait a few minutes and check the level between the two notches on dipstick 9 (fig. D1/5).
- Top up the level if necessary.

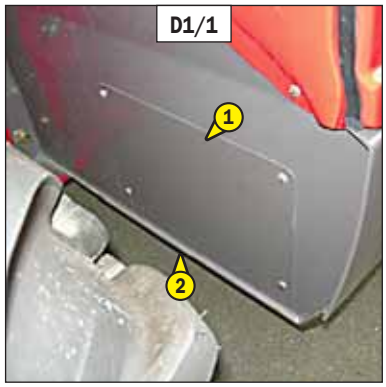

D1/1

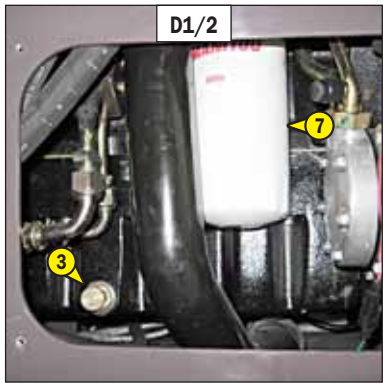

D1/2

D1/3

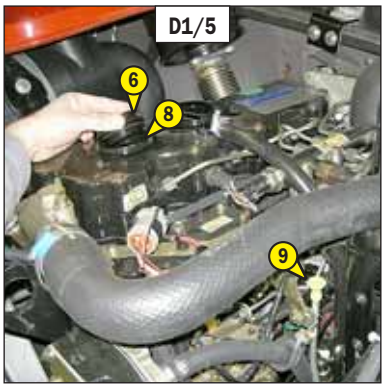

D1/5

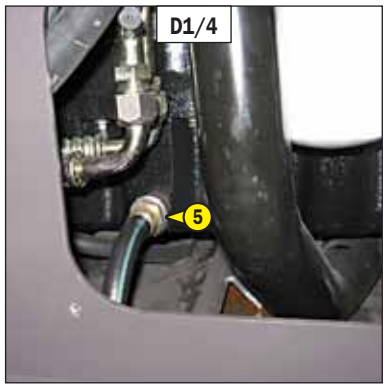

D1/4

https://truckmanualshub.com/

D3 - DRY AIR FILTER CARTRIDGE

CHANGE

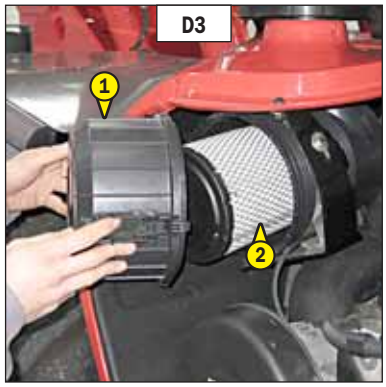

In case of use in a heavily dust laden atmosphere, there are pre-filtration cartridges, see: 3 - MAINTENANCE: FILTERS CARTRIDGES AND BELTS. Also, the checking and cleaning periodicity of the cartridge must be reduced (up to 250 hours in a heavily laden dust atmosphere and with pre-filtration).

Change the cartridge in a clean location, with the I.C. engine stopped. Never operate the lift truck with the air filter removed or damaged.

- Open the I.C. engine bonnet.
- Loosen the bolts and remove cover 1 (fig. D3).
- Gently remove the cartridge 2 (fig. D3), taking care to avoid spilling the dust.
- Leave the safety cartridge in place.
- The following parts must be cleaned with a damp, clean lint-free cloth.
    - The inside of the filter and cover.
    - The inside of the filter inlet hose.
    - The gasket surfaces in the filter and in the cover.
- Check pipes and connections between the air filter and the I.C. engine and the connection and state of the clogging indicator on the filter.
- Before mounting check the state of the new cartridge (see: 3 - MAINTENANCE: FILTERS CARTRIDGES AND BELTS).
- Introduce the cartridge into the filter axis and push it in, pressing the edges and not the middle.
- Reassemble the cover, guiding the valve downwards.

D4 - FUEL PRE-FILTER

CHANGE

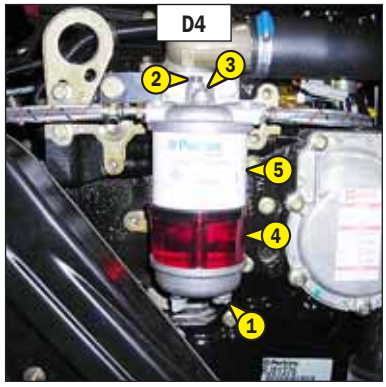

MLT 634 Turbo LSU Série F-E3
MLT 731 Turbo Série F-E3
MLT 735 Turbo LSU Série 6-E3
MLT 741 Turbo LSU Série 6-E3
MLT 1035 L Turbo LSU Série 6-E3

Make sure the electrical contact on the lift truck is cut, otherwise fuel will be released if the lift pump is on.

- Open the I.C. engine bonnet.
- Carefully clean the outside of the filter and its holder, to prevent dust from getting into the system.
- Place a container under the pre-filter and drain it using drain plug 1 (fig. D4).
- Remove bleeder screw 2 (fig. D4) in order to ensure that the oil is drained properly.
- Unscrew locking screw 3 (fig. D4).
- Remove housing 4 (fig. D4) and discard cartridge 5 (fig. D4) as well as the seals of the cartridge.
- Clean the inside of the pre-filter head and the housing, using a brush immersed in clean diesel oil.
- Refit the assembly with a new pre-filter and new seals (see: 3 - MAINTENANCE: FILTERS CARTRIDGES AND BELTS).
- If necessary, bleed the fuel circuit (see: 3 - MAINTENANCE: G1 - FUEL SYSTEM).

D4 - FUEL PRE-FILTER

CHANGE

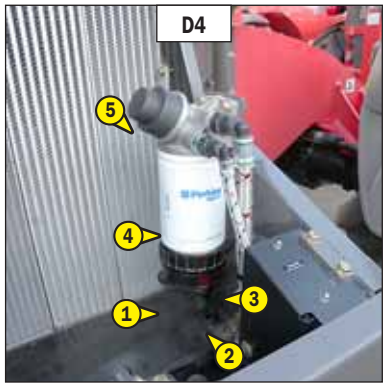

MLT 634 -120 LSU Série F-E3
MLT 634 -120 LSU POWERSHIFT Série F-E3
MLT 735 -120 LSU Série 6-E3
MLT 735 -120 LSU POWERSHIFT Série 6-E3
MLT 741 -120 LSU Série 6-E3
MLT 741 -120 LSU POWERSHIFT Série 6-E3

- Open the I.C. engine bonnet.
- Carefully clean the outside of the filter and its holder, to prevent dust from getting into the system.
- Place a container under the pre-filter and drain it using drain plug 1 (fig. D4).
- Disconnect the harness 2 (fig. D4).
- Unscrew locking screw 3 (fig. D4).
- Remove housing 4 (fig. D4) and discard cartridge 5 (fig. D4) as well as the seals of the cartridge.
- Clean the inside of the pre-filter head and the housing, using a brush immersed in clean diesel oil.
- Refit the assembly with a new pre-filter and new seals (see: 3 - MAINTENANCE: FILTERS CARTRIDGES AND BELTS).
- Connect the harness
- Pressurise the circuit by means of the hand pump 6 (fig. D4).
- If necessary, bleed the fuel circuit (see: 3 - MAINTENANCE: G1 - FUEL SYSTEM).

https://truckmanualshub.com/

D5 - FUEL FILTER

CHANGE

MLT 634 Turbo LSU Série F-E3
MLT 731 Turbo Série F-E3
MLT 735 Turbo LSU Série 6-E3
MLT 741 Turbo LSU Série 6-E3
MLT 1035 L Turbo LSU Série 6-E3

Make sure the electrical contact on the lift truck is cut, otherwise fuel will be released if the lift pump is on.

- Open the I.C. engine bonnet.
- Unscrew the fastening screws 1 (fig. D5/1).
- Remove the protective housing 2 (fig. D5/1).
- Carefully clean the outside of the filter and its holder, to prevent dust from getting into the system.
- Place a container under the filter and drain it through drain plug 3 (fig. D5/2).
- Loosen the body of filter 4 (fig. D5/2).
- Remove the filter cartridge by pressing cartridge 5 (fig. D5/3) down against the pressure of the spring and turn it to the left to extract it.
- Insert a new cartridge (see: 3 - MAINTENANCE: FILTERS AND BELTS), by pressing cartridge 5 (fig. D5/3) down against the pressure of the spring and turn it to the right to lock it into the body of the filter.
- Place the new seal 6 (fig. D5/3) onto the body of the filter and lightly lubricate the contact surface of the seal using clean motor oil.
- Refit the body of the filter onto its holder, hand-tighten it only and lock it with a quarter-turn.
- Close drain plug 3 (fig. D5/2) and remove the container.
- Before starting the I.C. engine, leave the ignition on for three minutes on the lift truck, to give the lift pump time to release air from the filter.
- Start up the I.C. engine and make sure there is no leakage.
- If necessary, bleed the fuel circuit (see: 3 - MAINTENANCE: G1 - FUEL SYSTEM).

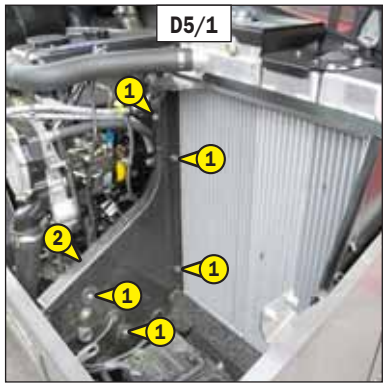

D5/1

D5/2

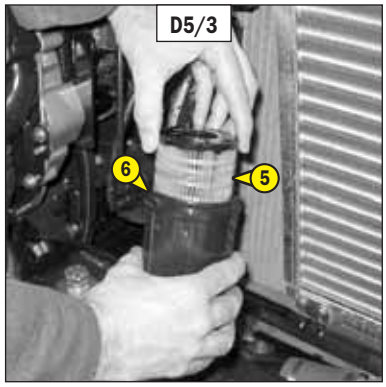

D5/3

D5 - FUEL FILTER

CHANGE

MLT 634 -120 LSU Série F-E3
MLT 634 -120 LSU POWERSHIFT Série F-E3
MLT 735 -120 LSU Série 6-E3
MLT 735 -120 LSU POWERSHIFT Série 6-E3
MLT 741 -120 LSU Série 6-E3
MLT 741 -120 LSU POWERSHIFT Série 6-E3

- Open the I.C. engine bonnet.
- Unscrew the fastening screws 1 (fig. D5/1).
- Remove the protective housing 2 (fig. D5/1).
- Carefully clean the outside of the filter and its holder, to prevent dust from getting into the system.
- Place a container under the fuel filter 3 (fig. D5/2).
- Unscrew the filter and discard it
- Refit a new fuel filter (see: 3 - MAINTENANCE: FILTERS AND BELTS) on its bracket.

Tighten the fuel filter by hand pressure only and lock the filter in place by a quarter turn.

- Bleed the fuel system: work the hand pump 4 (fig. D5/4) 100 times to remove air from the system.
- Remove the container from under the filter.
- Start up the I.C. engine and make sure there is no leakage.
- If necessary, bleed the fuel circuit (see: 3 - MAINTENANCE: G1 - FUEL SYSTEM).

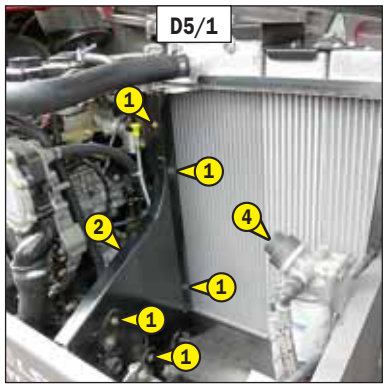

D5/1

D5/2

https://truckmanualshub.com/

D6 - CLEANFIX COMPRESSOR FILTER (OPTION)

CHANGE

- Open the I.C. engine bonnet.
- Remove compressor securing nut 1 (fig. D6/1).
- Remove clip 2 (fig. D6/2).
- Replace filter 3 (fig. D6/2) with a new one (see: 3 - MAINTENANCE: FILTERS CARTRIDGES AND BELTS) and correctly refit clip 2 (fig. D6/2).
- Refit the compressor securing nut.

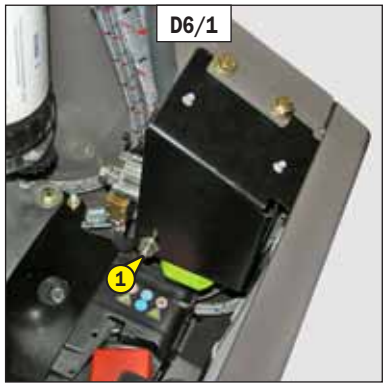

D6/1

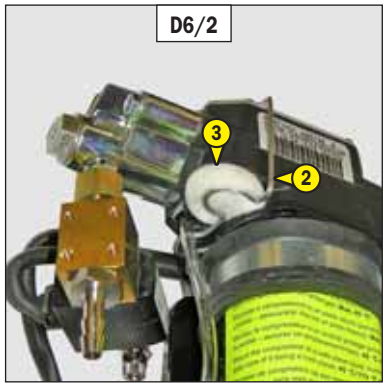

D6/2

D7 - GEAR BOX OIL FILTER

CHANGE

- Remove the cover plate 1 (fig. D7/1).
- Unscrew and discard gear box oil filter 2 (fig. D7/2).
- Carefully clean the filter head with a clean, lint-free cloth.
- Slightly lubricate the new seal and fit the seal on the filter.
- Fill up the new gear box oil filter (see: 3 - MAINTENANCE: FILTERS CARTRIDGES AND BELTS) with oil (see: 3 - MAINTENANCE: LUBRICANTS AND FUEL).
- Refit the filter, making sure that the seal is correctly positioned and tightened.

Tighten the gear box oil filter by hand pressure only and lock the filter in place by a quarter turn.

- Put back the cover plate 1 (fig. D7/1).

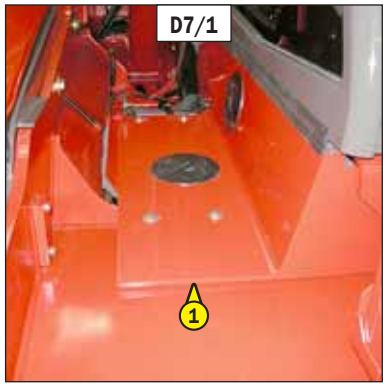

D7/1

D7/2

https://truckmanualshub.com/

D8 - HYDRAULIC RETURN OIL FILTER CARTRIDGE

CHANGE

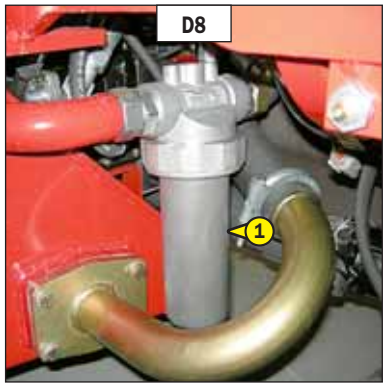

Stop the I.C. engine and remove the pressure from the circuits by acting on the hydraulic controls.

Thoroughly clean the outside of the filter and its surroundings before any intervention in order to prevent any risk of polluting the hydraulic circuit.

- Place a container under hydraulic drain filter 1 (fig. D8).
- Unscrew the body of the filter.
- Remove the hydraulic return oil filter cartridge and fit new replacement cartridge (see: 3 - MAINTENANCE: FILTERS CARTRIDGES AND BELTS).
- Make sure that the cartridge is correctly positioned and refit the body of the filter.

Tighten the body of the filter by hand pressure only and lock the body of the filter in place by a quarter turn.

D9 - PARKING BRAKE LEVER MECHANISM

GREASE

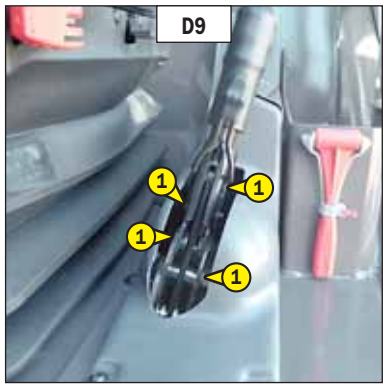

- Clean and grease articulation axles 1 (fig. D9) with grease (see: 3 - MAINTENANCE: LUBRICANTS AND FUEL).

D10 - CAB VENTILATION FILTER

CLEAN

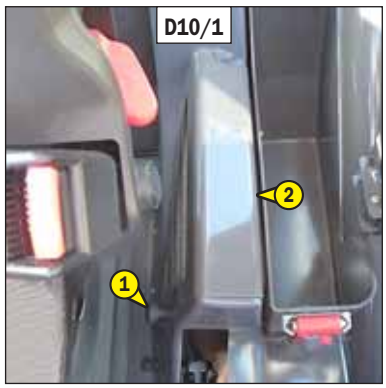

- Unscrew thumbscrew 1 (fig. D10/1) remove protective guard back 2 (fig. D10/1).
- Lift out cabin ventilation filter 3 (fig. D10/2).
- Clean the filter using a compressed air jet.
- Check its condition and change if necessary (see: 3 - MAINTENANCE: FILTERS CARTRIDGES AND BELTS).
- Refit the filter and protective casing.

https://truckmanualshub.com/

D11 - FRONT AND REAR AXLE DIFFERENTIAL OIL

DRAIN

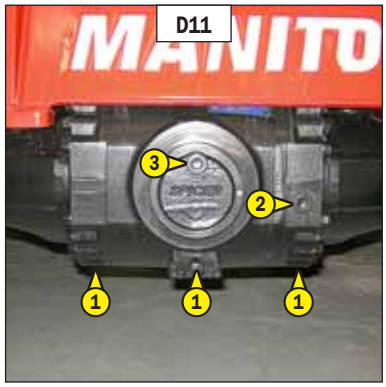

Place the lift truck on level ground with the I.C. engine stopped and the differential oil still warm.

Dispose of the drain oil in an ecological manner.

- Place a container under drain plugs 1 (fig. D11) and unscrew the plugs.
- Remove level plug 2 (fig. D11) and filler plug 3 (fig. D11) in order to ensure proper emptying.
- Refit and tighten drain plugs 1 (fig. D11) (tightening torque 34 to 49 N.m).
- Fill up with oil (see: 3 - MAINTENANCE: LUBRICANTS AND FUEL) through filler port 3 (fig. D11).
- The level is correct when the oil level is flush with the edge of port 2 (fig. D11).
- Check for any possible leaks at the drain plugs.
- Refit and tighten level cap 2 (fig. D11) (tightening torque 34 to 49 N.m) and filler port 3 (fig. D11) (tightening torque 34 to 49 N.m).
- Repeat this operation for the rear axle differential.

https://truckmanualshub.com/

E - EVERY 1000 HOURS SERVICE

Carry out the operations described previously as well as the following operations.

E1 - FUEL TANK

CLEAN

While carrying out these operations, do not smoke or work near a flame.

Place the lift truck on level ground with the I.C. engine stopped.

- Inspect the parts susceptible to leaks in the fuel circuit and in the tank.
- In the event of a leak, contact your dealer.

Never try to carry out a weld or any other operation by yourself, this could provoke an explosion or a fire.

- Place a container under drain plug 1 (fig. E1/1) and unscrew the plug.
- Remove filling plug 2 (fig. E1/2) in order to ensure that the oil is drained properly.
- Rinse out with ten litres of clean diesel through filler port 3 (fig. E1/2).
- Refit and tighten the drain plug (tightening torque 29 to 39 N.m).
- Fill the fuel tank with clean diesel filtered through the filler port.
- Refit the filling cap.
- If necessary, bleed the fuel circuit (see: 3 - MAINTENANCE: G1 - FUEL SYSTEM).

E2 - SAFETY DRY AIR FILTER CARTRIDGE

CHANGE

- For the disassembly and reassembly of the dry air filter cartridge, see: 3 - MAINTENANCE: D3 - AIR FILTER CARTRIDGE.
- Gently remove the dry air filter safety cartridge 1 (fig. E2), taking care to avoid spilling the dust.
- Clean the gasket surface on the filter with a damp, clean lint-free cloth.
- Before mounting, check the state of the new safety cartridge (see: 3 - MAINTENANCE: FILTERS AND BELTS).
- Introduce the cartridge into the filter axis and push it in, pressing the edges and not the middle.

NOTE: The periodicity for changing the safety cartridge is given for information only. It must be changed for every two changes of the dry air filter cartridge.

https://truckmanualshub.com/

E3 - GEAR BOX OIL

DRAIN

E4 - GEAR BOX SUMP STRAINER

CLEAN

MLT 634 Turbo LSU Série F-E3
MLT 634 -120 LSU Série F-E3
MLT 731 Turbo Série F-E3
MLT 735 Turbo LSU Série 6-E3
MLT 735 -120 LSU Série 6-E3
MLT 741 Turbo LSU Série 6-E3
MLT 741 -120 LSU Série 6-E3
MLT 1035 L Turbo LSU Série 6-E3

Place the lift truck on level ground with the I.C. engine stopped, the gear box oil still warm.

DRAINING THE OIL

- Place a container under drain plug 1 (fig. E3/1) and under cover 2 (fig. E3/2) and unscrew the drain plug.
- Remove cover plate 3 (fig. E3/3).
- Remove dipstick 4 (fig. E3/4) and unscrew filling plug 5 (fig. E3/4) in order to ensure that the oil is drained properly.

Dispose of the drain oil in an ecological manner.

CLEANING THE STRAINER

- Remove cover 2 (fig. E3/2) and set aside the O-ring joint and sealing washer.
- Allow the rest of the oil to drain away.
- Remove and clean the strainer using a compressed air jet.
- Clean the magnetic section on the plate.
- Refit the assembly and tighten up plate 2 (fig. E3/2) (tightening torque 18 to 31 N.m).

FILLING UP THE OIL

- Refit and tighten drain plug 1 (fig. E3/1) (tightening torque 34 to 54 N.m).
- Fill up with oil (see: 3 - MAINTENANCE: LUBRICANTS AND FUEL) by filler port 5 (fig. E3/4) and refit the filler cap.
- Start the I.C. engine and let it run for a few minutes.
- Check any possible leaks from the drain plug or cover.
- Stop the I.C. engine, and within 5 minutes of the I.C. engine being stopped, check on the dipstick 4 (fig. E3/4) the correct level between the two MIN and MAX. marks.
- Top up the level if necessary.
- Put back the cover plate 3 (fig. E3/3).

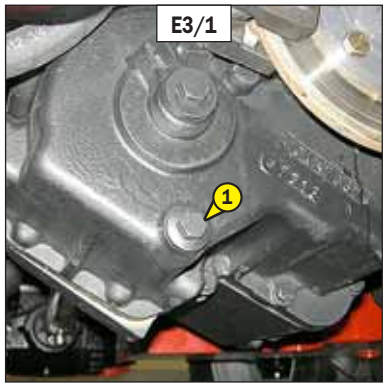

E3/1

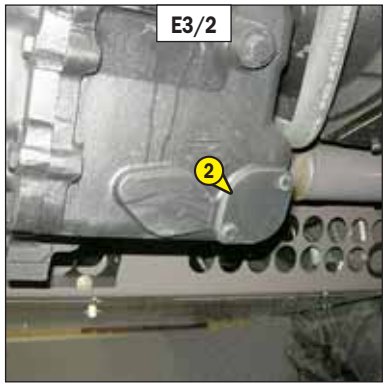

E3/2

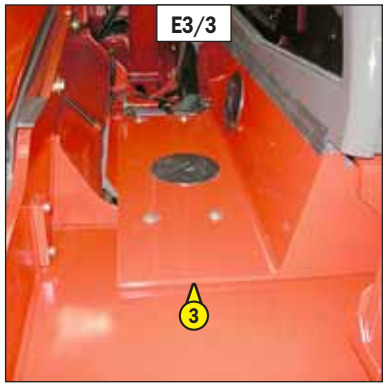

E3/3

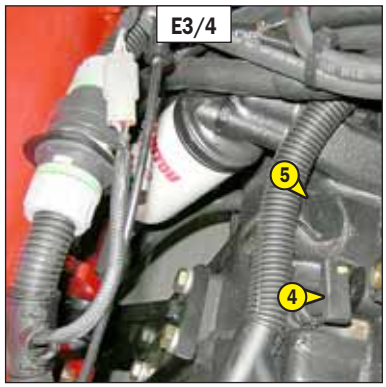

E3/4

https://truckmanualshub.com/

E3 - GEAR BOX OIL

DRAIN

E4 - GEAR BOX SUMP STRAINER

CLEAN

MLT 634 -120 LSU POWERSHIFT Série F-E3
MLT 735 -120 LSU POWERSHIFT Série 6-E3
MLT 741 -120 LSU POWERSHIFT Série 6-E3

Place the lift truck on level ground with the I.C. engine stopped, the gear box oil still warm.

DRAINING THE OIL

- Place a container under drain plug 1 (fig. E3/1) and under cover 2 (fig. E3/2) and unscrew the drain plug.
- Remove cover plate 3 (fig. E3/3).
- Remove dipstick 4 (fig. E3/4) and unscrew filling plug 5 (fig. E3/4) in order to ensure that the oil is drained properly.

Dispose of the drain oil in an ecological manner.

CLEANING THE STRAINER

- Remove cover 2 (fig. E3/2) and set aside the O-ring joint and sealing washer.
- Allow the rest of the oil to drain away.
- Remove and clean the strainer using a compressed air jet.
- Clean the magnetic section on the plate.
- Refit the assembly and tighten up plate 2 (fig. E3/2) (tightening torque 18 to 31 N.m).

FILLING UP THE OIL

- Refit and tighten drain plug 1 (fig. E3/1) (tightening torque 34 to 54 N.m).
- Fill up with oil (see: 3 - MAINTENANCE: LUBRICANTS AND FUEL) by filler port 5 (fig. E3/4) and refit the filler cap.
- Start the I.C. engine and let it run for a few minutes.
- Check any possible leaks from the drain plug or cover.
- Stop the I.C. engine, and within 5 minutes of the I.C. engine being stopped, check on the dipstick 4 (fig. E3/4) the correct level between the two MIN and MAX. marks.
- Top up the level if necessary.
- Put back the cover plate 3 (fig. E3/3).

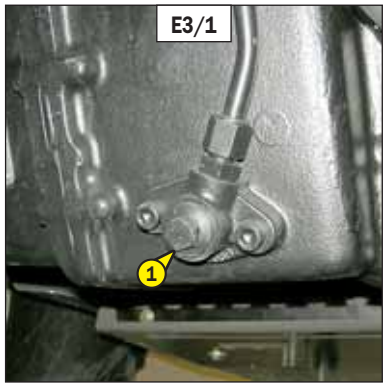

E3/1

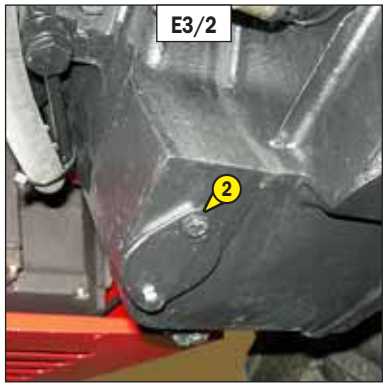

E3/2

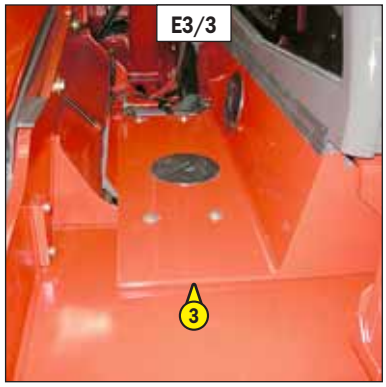

E3/3

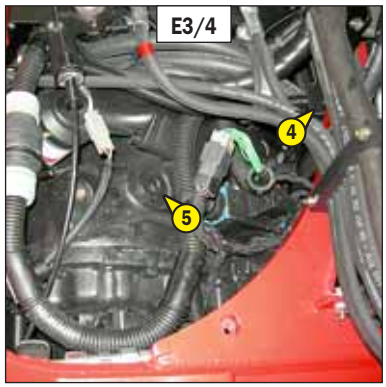

E3/4

https://truckmanualshub.com/

E5 - ANGLE GEAR BOX OIL

DRAIN

Place the lift truck on level ground with the I.C. engine stopped, the angle gear box oil still warm.

- Place a container under drain plug 1 (fig. E5/1) and unscrew the plug.
- Remove dipstick 2 (fig. E5/2) and unscrew filler cap 3 (fig. E5/2) in order to ensure that the oil is drained properly.

Dispose of the drain oil in an ecological manner.

- Refit and tighten drain plug 1 (fig. E5/1) (tightening torque 20 to 29 N.m).
- Fill up with oil (see: 3 - MAINTENANCE: LUBRICANTS AND FUEL) by filler port 3 (fig. E5/2) and refit the filler cap.
- Check the correct level between the MINI and MAX. marks on dipstick 2 (fig. E5/2).
- Check for any possible leaks at the drain plug.

E5/1

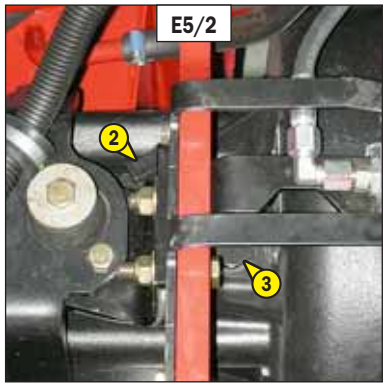

E5/2

E6 - HYDRAULIC OIL

DRAIN

E7 - SUCTION OIL STRAINER FOR HYDRAULIC OIL TANK

CLEAN

E8 - FILTER CAP FOR HYDRAULIC OIL TANK

CHANGE

E9 - DISTRIBUTOR CONTROL HEAD FILTER

CHANGE

Place the lift truck on level ground with the I.C. engine stopped and telescope boom retracted and lowered as far as possible.

Before any intervention, thoroughly clean the area surrounding the drain plugs and the suction cover on the hydraulic tank.

DRAINING THE OIL

- Place a container under drain plug 1 (fig. E6/1) and unscrew the plug.
- Remove filler cap 2 (fig. E6/2) in order to ensure that the oil is drained properly.

Dispose of the drain oil in an ecological manner.

CLEANING THE STRAINER

- Remove suction cover 3 (fig. E6/3).
- Remove and clean the strainer using a compressed air jet, check its condition and replace if necessary (see: 3 - MAINTENANCE: FILTERS CARTRIDGES AND BELTS).
- Refit the strainer and tighten the suction cover 3 (fig. E6/3) (tightening torque 81 N.m) making sure the seal is in the correct position.

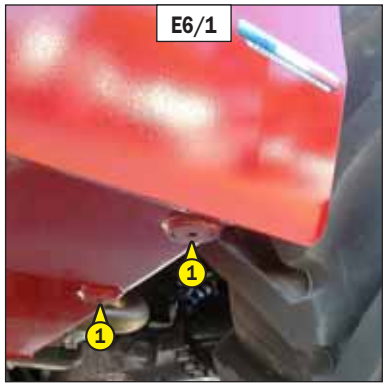

E6/1

E6/2

E6/3

https://truckmanualshub.com/

REPLACING THE DISTRIBUTOR CONTROL HEAD FILTER

MLT 634 Turbo LSU Série F-E3
MLT 634 -120 LSU Série F-E3
MLT 634 -120 LSU POWERSHIFT Série F-E3
MLT 735 Turbo LSU Série 6-E3
MLT 735 -120 LSU Série 6-E3
MLT 735 -120 LSU POWERSHIFT Série 6-E3
MLT 741 Turbo LSU Série 6-E3
MLT 741 -120 LSU Série 6-E3
MLT 741 -120 LSU POWERSHIFT Série 6-E3
MLT 1035 L Turbo LSU Série 6-E3

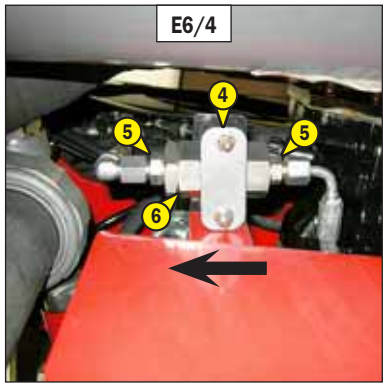

- Remove the half clamp 4 (fig. E6/4).
- Undo the two couplings 5 (fig.E6/4) and replace the filter 6 (fig. E6/4).

Be careful to mount the filter 6 (fig. D6/4) in the same direction as the arrow.

- Refit the half clamp 4 (fig. E6/4).

FILLING UP THE OIL

- Clean and refit drain plugs 1 (fig. E6/1) (tightening torque 29 to 39 N.m).
- Fill up with oil (see: 3 - MAINTENANCE: LUBRICANTS AND FUEL) by filler port 7 (fig. E6/2).

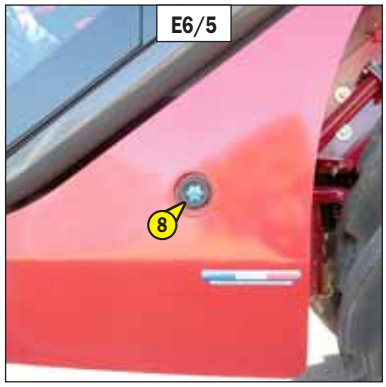

Use a clean container and funnel and clean the underside of the oil drum before filling.

- Observe the oil level on dipstick 8 (fig. E6/5), the oil level should be at the level of the red point.
- Check for any possible leaks at the drain plugs.
- Replace filler plug 2 (fig. E6/2) with a new filler plug (see: 3 - MAINTENANCE: FILTERS CARTRIDGES AND BELTS).

HYDRAULIC CIRCUIT DECONTAMINATION

MLT 731 Turbo Série F-E3

- Let the I.C. engine run (accelerator pedal at halfway travel) for 5 minutes without using anything on the lift truck, then for 5 more minutes while using completely the hydraulic movements (except the steering system and the service brakes).
- Accelerate the I.C. engine at full speed for 1 minute, then activate the steering system and the service brakes.
- This operation makes a pollution abatement of the circuit possible through the hydraulic return oil filter.

MLT 634 Turbo LSU Série F-E3
MLT 634 -120 LSU Série F-E3
MLT 634 -120 LSU POWERSHIFT Série F-E3
MLT 735 Turbo LSU Série 6-E3
MLT 735 -120 LSU Série 6-E3
MLT 735 -120 LSU POWERSHIFT Série 6-E3
MLT 741 Turbo LSU Série 6-E3
MLT 741 -120 LSU Série 6-E3
MLT 741 -120 LSU POWERSHIFT Série 6-E3
MLT 1035 L Turbo LSU Série 6-E3

This should be carried out by your dealer after each oil change.
The hydraulic oil used in the circuit must be at least equal in quality to class 8 (according to NAS 1638). Your dealer will be able to clean the hydraulic circuit using an external unit and check the quality of the oil in order to ensure the long life of hydraulic components and particularly of the main pump.

https://truckmanualshub.com/

E10 - SEAT BELT

CHECK

SEAT BELT WITH TWO ANCHORING POINTS
- Check the following points:
  - Fixing of the anchoring points on the seat.
  - Cleanness of the strap and the locking mechanism.
  - Triggering of the locking mechanism.
  - Condition of the strap (cuts, curled edges).

REELED BELT WITH TWO ANCHORING POINTS
- Check the points listed above together with the following points:
  - The correct winding of the belt.
  - Condition of the reel guards.
  - Roller locking mechanism when the strap is given a sharp tug.

NOTE: After an accident, replace the seat belt.

In no event should the lift truck be used if the seat belt is defective (fixing, locking, cuts, tears, etc.). Repair or replace the seat belt immediately.

E11 - FRONT AND REAR WHEELS REDUCERS OIL

DRAIN

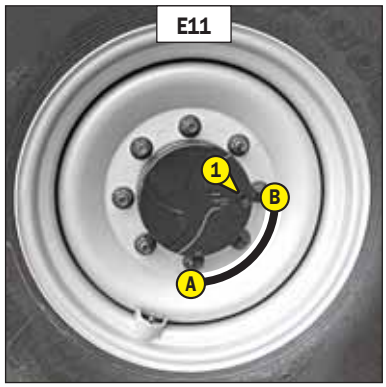

Place the lift truck on level ground with the I.C. engine stopped and the reducers oil still warm.

Dispose of the drain oil in an ecological manner.

- Drain and change each front wheel reducer.
- Place drain plug 1 (fig. E11) in position A.
- Place a container under the drain plug and unscrew the plug.
- Let the oil drain fully.
- Place the drain port in position B, i.e. in a level port.
- Fill up with oil (see: 3 - MAINTENANCE: LUBRICANTS AND FUEL) by level port 1 (fig. E11).
- The level is correct when the oil level is flush with the edge of the hole.
- Refit and tighten the drain plug 1 (fig. E11) (tightening torque 34 to 49 N.m).
- Repeat this operation on each rear wheel reducer.

https://truckmanualshub.com/

F - EVERY 2000 HOURS OF SERVICE

Carry out the operations described previously as well as the following operations.

F1 - COOLING LIQUID

DRAIN

These operations are to be carried out if necessary or every two years at the beginning of winter. Place the lift truck on level ground with the I.C. engine stopped and cold.

DRAINING THE LIQUID

- Open engine hood and lift the battery cover.
- Place a container under hose 1 (fig. F1/1) on the radiator and drain plug 2 (fig. F1/2) of the engine block. Remove the hose and loosen the drain plug.
- Remove filling plug 3 (fig. F1/3) of the radiator.
- Let the cooling circuit drain entirely while ensuring that the ports do not get clogged.
- Check the condition of the hoses as well as the fastening devices and change the hoses if necessary.
- Rinse the circuit with clean water and use a cleaning agent if necessary.

FILLING THE LIQUID

- Refit and tighten the hose 1 (fig. F1/1) and drain plug 2 (fig. F1/2) (tightening torque 40 N.m).
- Slowly fill up the circuit with cooling liquid (see: 3 - MAINTENANCE: LUBRICANTS AND FUEL) to the middle of gauge 4 (fig. F1/3) through filler port 5 (fig. F1/3).
- Put back filling plug 3 (fig. F1/3).
- Run the I.C. engine at idle for a few minutes.
- Check for any possible leaks.
- Check the level and refill if necessary.

The I.C. engine does not contain any corrosion resistor and must be filled during the whole year with a mixture containing 25% of ethylene glycol-based antifreeze.

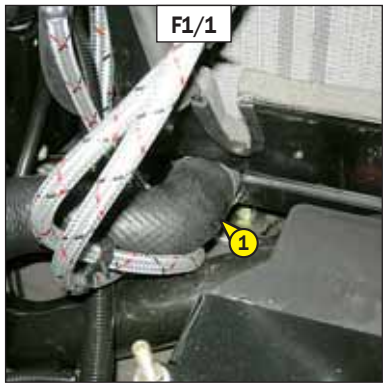

F1/1

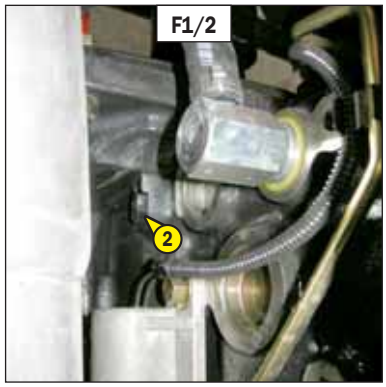

F1/2

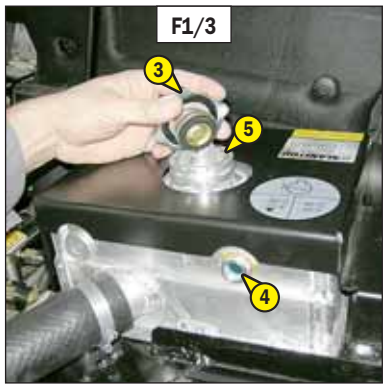

F1/3

https://truckmanualshub.com/

CLEANING CONDENSER AND EVAPORATOR COILS (*)
CLEANING CONDENSATE TRAY AND RELIEF VALVE (*)
COLLECTING COOLANT TO REPLACE FILTER-DRIER (*)
REFILLING WITH COOLANT AND CHECKING THE THERMOSTATIC CONTROL AND PRESSURE SWITCHES (*)

NOTE: When opening the evaporator unit, remember to replace the cover seal.

(*): (CONSULT YOUR DEALER).

CAUTION: DO NOT ATTEMPT TO REPAIR ANY PROBLEMS YOURSELF. ALWAYS REFER TO YOUR DEALER WHEN REFILLING CIRCUITS, AS THEY HOLD THE CORRECT SPARE PARTS, AS WELL AS HAVING THE NECESSARY TECHNICAL KNOWLEDGE AND TOOLS.

- Do not open the circuit under any circumstances as this would cause the coolant to be lost.
- The cooling circuit contains a gas which can be dangerous under certain conditions. This gas, coolant R 134a, is colourless, odourless and heavier than air.

• If this gas is inhaled, take the victim into fresh air, give oxygen or artificial respiration if necessary and call a doctor.
• If the gas is in contact with the skin, wash it immediately under running water and remove any contaminated garments.
• If the gas is in contact with the eyes, rinse them in clear water for 15 minutes and call a doctor.

- The compressor has an oil level gauge (fig. F2). Never unscrew this gauge because it would depressurizes the installation. The oil level is only checked when changing the oil in the circuit.

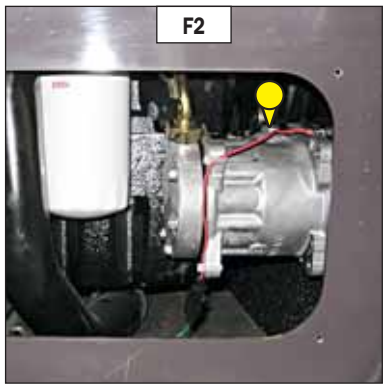

https://truckmanualshub.com/

G1 - FUEL SYSTEM

BLEED

MLT 634 Turbo LSU Série F-E3
MLT 731 Turbo Série F-E3
MLT 735 Turbo LSU Série 6-E3
MLT 741 Turbo LSU Série 6-E3
MLT 1035 L Turbo LSU Série 6-E3

These operations are to be carried out only in the following cases:

- A component of the fuel system replaced.
- A drained tank.
- Running out of fuel.

Ensure that the level of fuel in the tank is sufficient and bleed in the following order:
- Open the I.C. engine bonnet.
- Put the ignition on for three minutes on the lift truck, to give the lift pump time to release air from the filter.
- Switch off the ignition with the ignition key.
- Remove the injectors cover 1 (fig. G1/1).
- Loosen high pressure connectors 2 (fig. G1/2) of all the injectors.
- Activate the starter until the diesel fuel flows out free of air at high pressure connectors 2 (fig. G1/2).

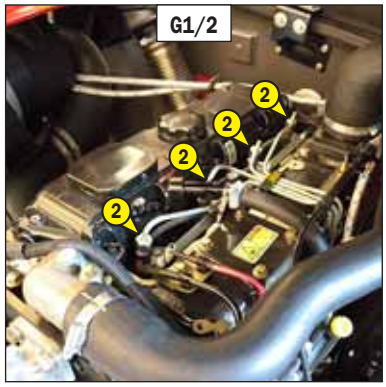

Do not engage the starter motor on a continual basis for more than 30 seconds and let it cool between unsuccessful attempts.

- Tighten the connections while the diesel fuel is flowing out (tightening torque 30 N.m).

- So the I.C. engine is ready to be started up.
- Turn the I.C. engine over slowly for 5 minutes immediately after bleeding the fuel feed circuit, in order to ensure that the injection pump has been bled thoroughly.

NOTE: If the I.C. engine functions correctly for a short time then stops or functions irregularly, check for possible leaks in the low pressure circuit. If in doubt, contact your dealer.

G1 - FUEL SYSTEM

BLEED

MLT 634 -120 LSU Série F-E3
MLT 634 -120 LSU POWERSHIFT Série F-E3
MLT 735 -120 LSU Série 6-E3
MLT 735 -120 LSU POWERSHIFT Série 6-E3
MLT 741 -120 LSU Série 6-E3
MLT 741 -120 LSU POWERSHIFT Série 6-E3

These operations are to be carried out only in the following cases:

- A component of the fuel system replaced.
- A drained tank.
- Running out of fuel.

Any contact with highly pressurized fuel risks presents a risk of percutaneous penetration or burns.
Spraying fuel under high pressure can cause a fire.
Failure to follow the inspection and maintenance instructions may result in serious injury.

Never work on the high pressure system. Failure to follow this instruction may result in serious damage to the engine.
The high pressure furl system must be adjusted and repaired only by approved and suitably trained technicians.

Ensure that the level of fuel in the tank is sufficient and bleed in the following order:
- Open the I.C. engine bonnet.
- Check the condition of the fuel system
- Operate the hand pump 1 (fig. G1) 50 times to remove air from the low pressure system.

- So the I.C. engine is ready to be started up.
- Turn the I.C. engine over slowly for 5 minutes immediately after bleeding the fuel feed circuit, in order to ensure that the injection pump has been bled thoroughly.

NOTE: If the I.C. engine functions correctly for a short time then stops or functions irregularly, check for possible leaks in the low pressure circuit. If in doubt, contact your dealer.

https://truckmanualshub.com/

G2 - WHEEL

CHANGE

In the event of a wheel being changed on the public highway, make sure of the following points:

For this operation, we advise you to use the hydraulic jack MANITOU reference 505507 and the safety support MANITOU reference 554772.

- Stop the lift truck, if possible on even and hard ground.
- To pass on stop of lift truck (see: 1 - OPERATING AND SAFETY INSTRUCTIONS: DRIVING INSTRUCTIONS UNLADEN AND LADEN).
- Put the warning lights on.
- Immobilise the lift truck in both directions on the axle opposite to the wheel to be changed.
- Unlock the nuts of the wheel to be changed.
- Place the jack under the flared axle tube, as near as possible to the wheel and adjust the jack (fig. G2/1).
- Lift the wheel until it comes off the ground and put in place the safety support under the axle (fig. G2/2).
- Completely unscrew the wheel nuts and remove them.
- Free the wheel by reciprocating movements and roll it to the side.
- Slip the new wheel on the wheel hub.
- Refit the nuts by hand, if necessary grease them.
- Remove the safety support and lower the lift truck with the jack.
- Tighten the wheel nuts with a torque wrench (see: 3 - MAINTENANCE: A - DAILY OR EVERY 10 HOURS SERVICE for tightening torque).

NOTE: There is an OPTIONAL wheel toolkit and anti-puncture kit.

G3 - FRONT HEADLAMPS

ADJUST

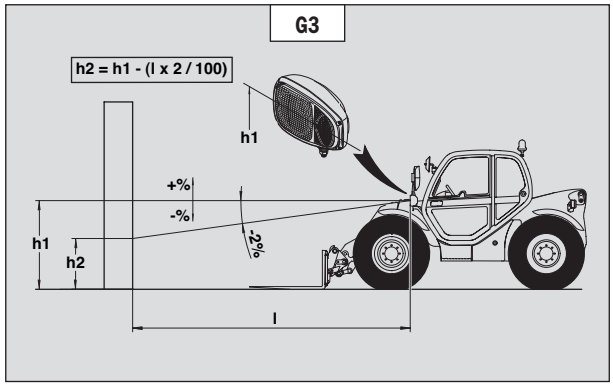

RECOMMENDED SETTING

(as per standard ECE-76/756 76/761 ECE20)

Set to - 2% of the dipped beam in relation to the horizontal line of the headlamp.

ADJUSTING PROCEDURE

- Place the lift truck unloaded and in the transport position and perpendicular to a white wall on flat, level ground (fig. G3).
- Check the tyre pressures (see: 2 - DESCRIPTION: CHARACTERISTICS).
- Place the forward/reverse selector in neutral and release the parking brake.

CALCULATING THE HEIGHT OF THE DIPPED BEAM (H2)

- h1 = Height of the dipped beam in relation to the ground.
- h2 = Height of the adjusted beam.
- l = Distance between the dipped beam and the white wall.

G4 - LIFT TRUCK

TOW

Do not tow the lift truck at more than 25 km/h.

- Place the forward/reverse selector in neutral and the gear shift in neutral (according to model of lift truck).
- Release the parking brake.
- Put the warning lights on.
- If the I.C. engine is not running there will be no steering or braking assistance. Operate the steering and pedal slowly avoiding sudden jerky movements.

https://truckmanualshub.com/

G5 - LIFT TRUCK

SLING

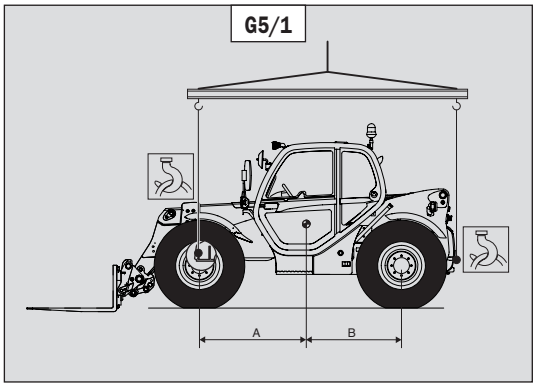

G5/1

- Take into account the position of the lift truck centre of gravity for lifting (fig. G5/1).

A = 1450 mm	B = 1110 mm	MLT 634 . . .
A = 1345 mm	B = 1215 mm	MLT 731 T
A = 1485 mm	B = 1325 mm	MLT 735 T LSU
A = 1445 mm	B = 1365 mm	MLT 735 -120 LSU
A = 1450 mm	B = 1360 mm	MLT 735 -120 LSU PS
A = 1560 mm	B = 1250 mm	MLT 741 T LSU
A = 1525 mm	B = 1295 mm	MLT 741 -120 LSU
A = 1535 mm	B = 1275 mm	MLT 741 -120 LSU PS
A = 1610 mm	B = 1200 mm	MLT 1035 LT LSU

- Place the hooks in the fastening points provided (fig. G5/2 and G5/3).

G5/2

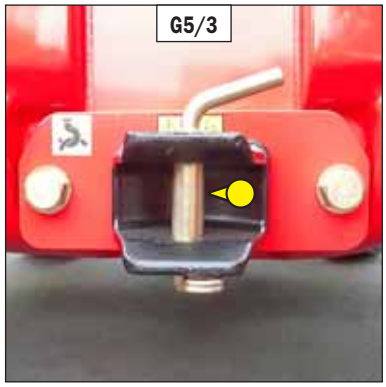
G5/3

G6 - LIFT TRUCK ON A PLATFORM

TRANSPORT

Ensure that the safety instructions connected to the platform are respected before the loading of the lift truck and that the driver of the means of transport is informed about the dimensions and the weight of the lift truck (see: 2 - DESCRIPTION: CHARACTERISTICS).

Ensure that the platform has got dimensions and a load capacity sufficient for transporting the lift truck. Check also the pressure on the contact surface allowable for the platform in connection with the lift truck.

For lift trucks equipped with a turbo-charged I.C. engine, block off the exhaust outlet to avoid rotation of the turbo shaft without lubrication when transporting the vehicle.

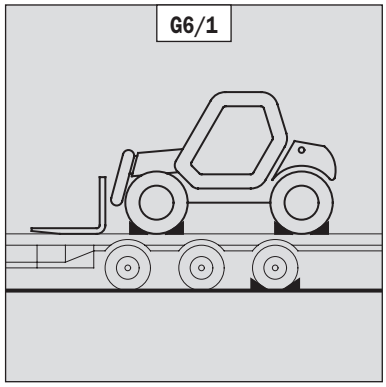
G6/1

LOAD THE LIFT TRUCK

- Block the wheels of the platform.
- Fix the loading ramps so that you obtain an angle as little as possible to lift the lift truck.
- Load the lift truck parallel to the platform.
- Stop the lift truck (see: 1 - OPERATING AND SAFETY INSTRUCTIONS: DRIVING INSTRUCTIONS UNLADEN AND LADEN).

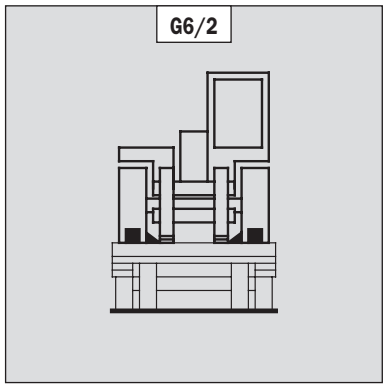
G6/2

STOW THE LIFT TRUCK

- Fix the chocks to the platform at the front and at the back of each tyre (fig. G6/1).
- Fix also the chocks to the platform in the inside of each tyre (fig. G6/2).
- Secure the lift truck to the platform with sufficiently strong ropes. At the front of the lift truck, attach the ropes to the fastening points 1 (fig. G6/3) and at the rear to the towing pin 2 (fig. G6/4).
- Tighten the ropes (fig. G6/5).

G6/3

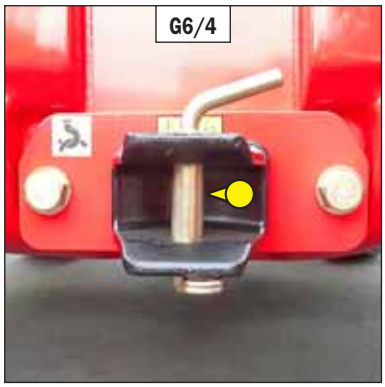
G6/4

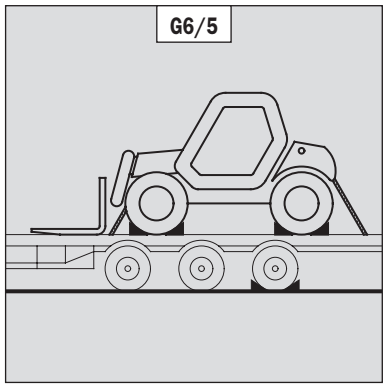
G6/5

https://truckmanualshub.com/

G7 - LONGITUDINAL STABILITY LIMITER AND WARNING DEVICE

RESET

According to the use of the lift truck, the device may require to be periodically reset.
This operation can be easily performed by means of the following procedure.
- Provide a fork carrier or a bucket and a load corresponding to at least half the lift truck's rated capacity.
- Preferably perform the reset when the lift truck is still cold (before it is used) or ensure that the temperature of the rear axle is not more than 50°C.
- Place the lift truck on flat, level ground with the wheels straight.

Scrupulously follow the jib positioning instructions. Should you fail to follow these instructions, two audible beeps will be sounded and the fault indicator lamp will come on. If in doubt, consult your dealer.

STAGE 1 START	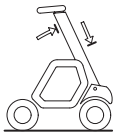 - Without attachments. - Jib fully retracted and raised.	**Simultaneously press and hold down the "BUCKET" MODE and TEST buttons.** - Two audible beeps will be sounded and all the leds will flash twice to confirm the start of the procedure.	
STAGE 2	 - An audible beep. - First green led flashing. - Flashing test button.	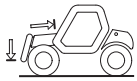 - Without attachments. - Carriage tilted fully backward. - Jib fully retracted and in the down position a few centimetres off the ground.	**Short press the test button.**
STAGE 3	 - First green led continuously lit. - Second green led flashing. - - Flashing test button.	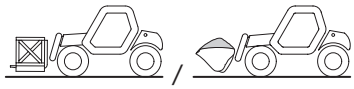 - With the fork carrier or the bucket and a load (keep jib retracted to allow all other hydraulic movements). - Jib fully retracted and in the down position a few centimetres off the ground. 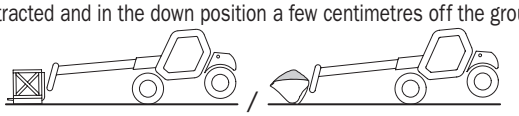 ***Keep the load as close to the ground as possible throughout this operation.*** - Hold down the disable the "aggravating" hydraulic movement cut-off button (indicator lamp lit), and telescope the jib until the rear wheels are off the ground. NOTA: This stage consists in unloading the rear axle. It can be done using a jack but without bearing on the rear axle.	**Short press the test button.** **- Two audible beeps will be sounded and all the leds will flash twice to confirm the end of the procedure.**
STAGE 4 FINISH	 - All leds lit. - A continuous audible beep.	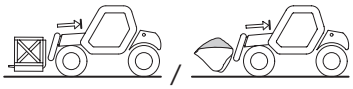 - After completing the resetting procedure, the lift truck is in an overloaded condition. Retract the telescope to restore the situation.	

When the reset is completed, check the operation of the longitudinal stability limiter and warning device (see: 3 - MAINTENANCE: A - DAILY OF EVERY 10 HOURS SERVICE).

https://truckmanualshub.com/

https://truckmanualshub.com/

4 - OPTIONAL ATTACHMENTS FOR USE WITH THE RANGE

https://truckmanualshub.com/

https://truckmanualshub.com/

TABLE OF CONTENTS

INTRODUCTION 4-5

PICKING UP THE ATTACHMENTS 4-6

TECHNICAL SPECIFICATIONS OF ATTACHMENTS 4-8

ATTACHMENT SHIELDS 4-18

https://truckmanualshub.com/

https://truckmanualshub.com/

INTRODUCTION

- Your lift truck must be used with interchangeable equipment. These items are called: ATTACHMENTS.

- A wide range of attachments, specially designed and perfectly suitable for your lift truck is available and guaranteed by MANITOU.

- The attachments are delivered with a load chart concerning your lift truck. The operator's manual and the load chart should be kept in the places provided in the lift truck. For standard attachments, their use is governed by the instructions contained on this notice.

- Some particular uses require the adaptation of the attachment which is not provided in the price-listed options. Optional solutions exist, consult your dealer.

Suspended loads MUST be handled with a lift truck designed for that purpose (see: 1 - OPERATING AND SAFETY INSTRUCTIONS: LOAD HANDLING INSTRUCTIONS: H - TAKING-UP AND SETTING-DOWN A SUSPENDED LOAD).

Only attachments approved by MANITOU are to be used on our lift trucks (see: 4 - ADAPTABLE ATTACHMENTS IN OPTION ON THE RANGE: TECHNICAL SPECIFICATIONS OF ATTACHMENTS). The manufacturer's liability will be denied in case of modification or of attachment adaptation carried out without his knowing it.

Depending on their size, certain attachments may, when the boom is lowered and retracted, come into contact with the front tyres and cause damage to them, if reverse tilt is activated in the forward tilt direction. TO REMOVE THIS RISK, EXTEND THE TELESCOPE TO A SUFFICIENT EXTENT FOR THE PARTICULAR LIFT TRUCK AND ATTACHMENT SO THAT THIS CONTACT IS NOT POSSIBLE.

Maximum loads are defined by the capacity of a lift truck taking account of the attachment's mass and centre of gravity. In the event of the attachment having less capacity than the lift truck, never exceed this limit.

https://truckmanualshub.com/

PICKING UP THE ATTACHMENTS

A - ATTACHMENT WITHOUT HYDRAULICS AND HAND LOCKING DEVICE

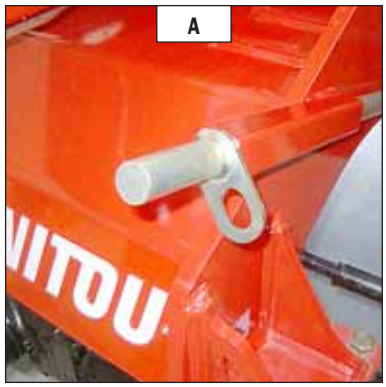

TAKING UP AN ATTACHMENT

- Ensure that the attachment is in a position facilitating the locking to the carriage. If it is not correctly oriented, take the necessary precautions in order to move it safely.
- Check that the locking pin and the clip are in position in the bracket (fig. A).
- Place the lift truck with the boom fully lowered in front of and parallel to the attachment, tilt the carriage forwards (fig. B).
- Bring the carriage under the locking tube of the attachment, slightly lift the boom, incline the carriage backwards in order to position the attachment (fig. C).
- Lift the attachment off the ground to facilitate locking.

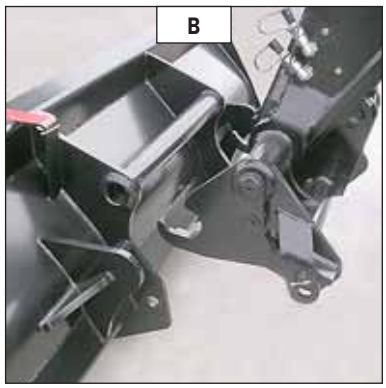

HAND LOCKING

- Take the locking pin and the clip on the bracket (fig. A) and lock the attachment (fig. D). Do not forget to refit the clip.

HAND RELEASING

- Proceed in the reverse order of paragraph HAND LOCKING while making sure you put back the locking pin and the clip in the bracket (fig. A).

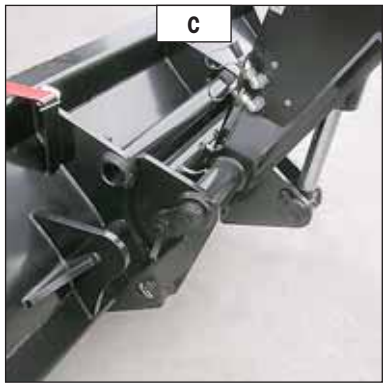

LAYING AN ATTACHMENT

- Proceed in the reverse order of paragraph TAKING UP AN ATTACHMENT while making sure you place the attachment flat on the ground and in closed position.

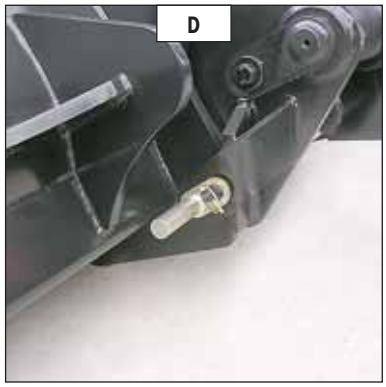

https://truckmanualshub.com/

B - HYDRAULIC ATTACHMENT AND HAND LOCKING DEVICE

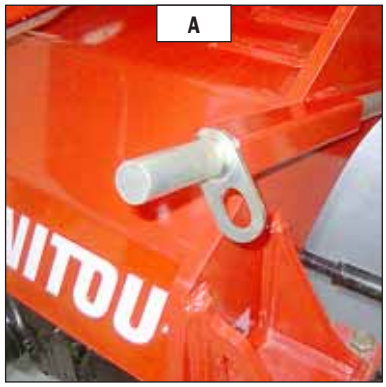

TAKING UP AN ATTACHMENT

- Ensure that the attachment is in a position facilitating the locking to the carriage. If it is not correctly oriented, take the necessary precautions in order to move it safely.
- Check that the locking pin and the clip are in position in the bracket (fig. A).
- Place the lift truck with the boom fully lowered in front of and parallel to the attachment, tilt the carriage forwards (fig. B).
- Bring the carriage under the locking tube of the attachment, slightly lift the boom, incline the carriage backwards in order to position the attachment (fig. C).
- Lift the attachment off the ground to facilitate locking.

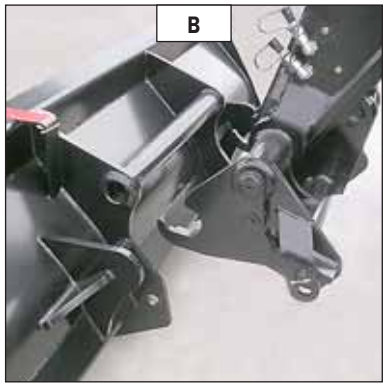

MANUAL LOCKING AND CONNECTION OF THE ATTACHMENT

- Take the locking pin and the clip on the bracket (fig. A) and lock the attachment (fig. D). Do not forget to refit the clip.
- Stop the I.C. engine and keep the ignition on the lift truck.
- Remove the pressure of the hydraulic circuit by operating switch 1 (fig. E) on the distributor lever backwards and forwards 4 or 5 times.
- Connect the rapid connectors according to the logic of the attachment's hydraulic movements.

Make sure that the rapid connectors are clean and protect the holes which are not used, with the caps provided.

HAND RELEASING AND DISCONNECTING THE ATTACHMENT

- Proceed in the opposite order to that described in MANUAL LOCKING AND CONNECTION OF THE ATTACHMENT while making sure you put the locking pin back into the bracket (fig. A).

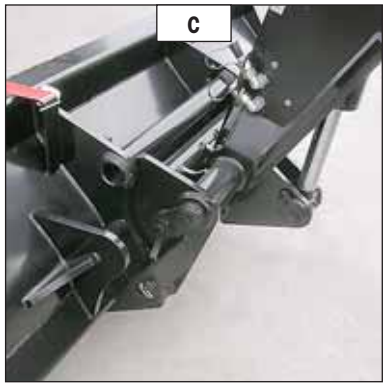

LAYING AN ATTACHMENT

- Proceed in the reverse order of paragraph TAKING UP AN ATTACHMENT while making sure you place the attachment flat on the ground and in closed position.

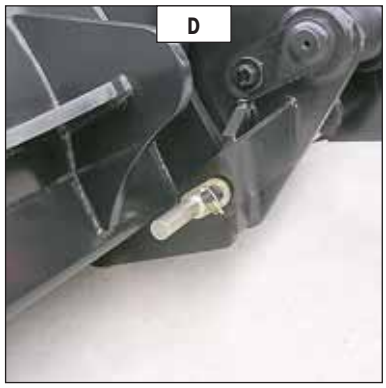

https://truckmanualshub.com/

TECHNICAL SPECIFICATIONS OF ATTACHMENTS

FLOATING FORK CARRIAGE

MLT 634 Turbo LSU Série F-E3
MLT 634 -120 LSU Série F-E3
MLT 634 -120 LSU POWERSHIFT Série F-E3
MLT 731 Turbo Série F-E3
MLT 735 Turbo LSU Série 6-E3
MLT 735 -120 LSU Série 6-E3
MLT 735 -120 LSU POWERSHIFT Série 6-E3
MLT 1035 L Turbo LSU Série 6-E3

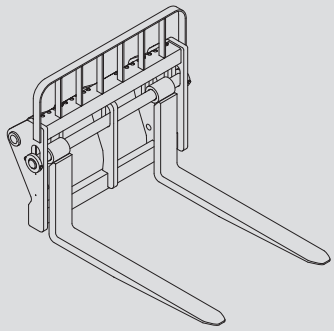

	TFF 35 MT-1040	TFF 35 MT-1300	
PART NUMBER	**654093**	**654094**	
Rated capacity	3500 kg	3500 kg	
Width	1040 mm	1300 mm	
Weight	300 kg	340 kg	

FLOATING FORK CARRIAGE

MLT 741 Turbo LSU Série 6-E3
MLT 741 -120 LSU Série 6-E3
MLT 741 -120 LSU POWERSHIFT Série 6-E3

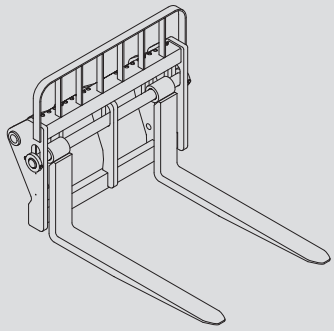

	TFF 45 MT-1040	TFF 45 MT-1300	
PART NUMBER	**653344**	**653345**	
Rated capacity	4500 kg	4500 kg	
Width	1040 mm	1300 mm	
Weight	370 kg	400 kg	

FLOATING FORK SIDE-SHIFT CARRIAGE

MLT 634 Turbo LSU Série F-E3
MLT 634 -120 LSU Série F-E3
MLT 634 -120 LSU POWERSHIFT Série F-E3
MLT 731 Turbo Série F-E3
MLT 735 Turbo LSU Série 6-E3
MLT 735 -120 LSU Série 6-E3
MLT 735 -120 LSU POWERSHIFT Série 6-E3
MLT 1035 L Turbo LSU Série 6-E3

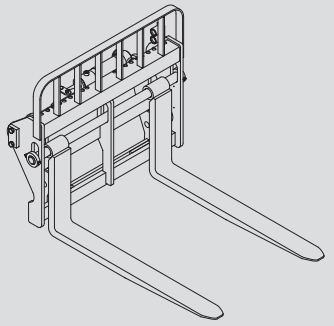

	TFF 35 MT-1040 DL	TFF 35 MT-1300 DL	
PART NUMBER	**751543**	**751544**	
Rated capacity	3500 kg	3500 kg	
Side-shift	2x100 mm	2x100 mm	
Width	1040 mm	1300 mm	
Weight	345 kg	375 kg	

FLOATING FORK SIDE-SHIFT CARRIAGE

MLT 741 Turbo LSU Série 6-E3
MLT 741 -120 LSU Série 6-E3
MLT 741 -120 LSU POWERSHIFT Série 6-E3

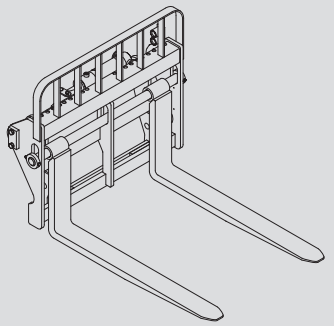

	TFF 45 MT-1040 DL	TFF 45 MT-1300 DL	
PART NUMBER	**751545**	**751546**	
Rated capacity	4500 kg	4500 kg	
Side-shift	2x100 mm	2x100 mm	
Width	1040 mm	1300 mm	
Weight	410 kg	450 kg	

https://truckmanualshub.com/

FLOATING FORK

MLT 634 Turbo LSU Série F-E3
MLT 634 -120 LSU Série F-E3
MLT 634 -120 LSU POWERSHIFT Série F-E3
MLT 731 Turbo Série F-E3
MLT 735 Turbo LSU Série 6-E3
MLT 735 -120 LSU Série 6-E3
MLT 735 -120 LSU POWERSHIFT Série 6-E3
MLT 1035 L Turbo LSU Série 6-E3

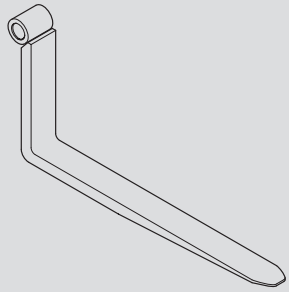

PART NUMBER	415801		
Section	125x45x1200 mm		
Weight	68 kg		

FLOATING FORK

MLT 741 Turbo LSU Série 6-E3
MLT 741 -120 LSU Série 6-E3
MLT 741 -120 LSU POWERSHIFT Série 6-E3

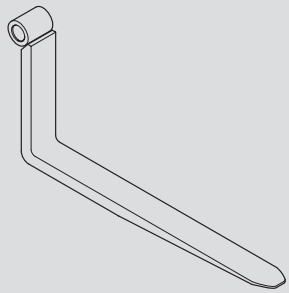

PART NUMBER	211922		
Section	125x50x1200 mm		
Weight	71 kg		

https://truckmanualshub.com/

STANDARDISED TILTING FORK CARRIAGE

MLT 634 Turbo LSU Série F-E3
MLT 634 -120 LSU Série F-E3
MLT 634 -120 LSU POWERSHIFT Série F-E3
MLT 731 Turbo Série F-E3
MLT 735 Turbo LSU Série 6-E3
MLT 735 -120 LSU Série 6-E3
MLT 735 -120 LSU POWERSHIFT Série 6-E3
MLT 1035 L Turbo LSU Série 6-E3

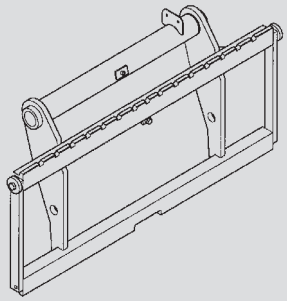

	PFB 35 N MT-1260 S2	PFB 35 N MT-1470 S2	PFB 35 N MT-1580 S2
PART NUMBER	**653744**	**653745**	**653746**
Rated capacity	3500 kg	3500 kg	3500 kg
Width	1260 mm	1470 mm	1580 mm
Weight	103 kg	126 kg	131 kg

STANDARDISED TILTING FORK CARRIAGE

MLT 741 Turbo LSU Série 6-E3
MLT 741 -120 LSU Série 6-E3
MLT 741 -120 LSU POWERSHIFT Série 6-E3

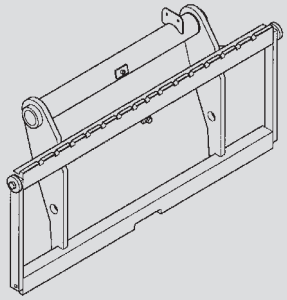

	PFB 45 N MT-1260 S2	PFB 45 N MT-1670 S2	PFB 45 N MT-2000 S2
PART NUMBER	**654407**	**653747**	**653748**
Rated capacity	4500 kg	4500 kg	4500 kg
Width	1260 mm	1670 mm	2000 mm
Weight	200 kg	255 kg	300

STANDARDISED SIDE-SHIFT CARRIAGE

MLT 634 Turbo LSU Série F-E3
MLT 634 -120 LSU Série F-E3
MLT 634 -120 LSU POWERSHIFT Série F-E3
MLT 731 Turbo Série F-E3
MLT 735 Turbo LSU Série 6-E3
MLT 735 -120 LSU Série 6-E3
MLT 735 -120 LSU POWERSHIFT Série 6-E3
MLT 1035 L Turbo LSU Série 6-E3

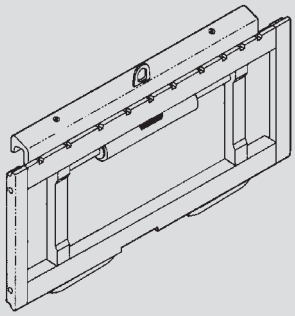

	TDL 3T5 L1260 FEM3	TDL 5T L1470 FEM3	TDL 5T L1580 FEM3
PART NUMBER	**751375**	**751376**	**751377**
Rated capacity	3000 kg	5000 kg	5000 kg
Side-shift	2x100 mm	2x100 mm	2x100 mm
Width	1260 mm	1470 mm	1580 mm
Weight	79 kg	192 kg	200 kg

STANDARDISED SIDE-SHIFT CARRIAGE

MLT 741 Turbo LSU Série 6-E3
MLT 741 -120 LSU Série 6-E3
MLT 741 -120 LSU POWERSHIFT Série 6-E3

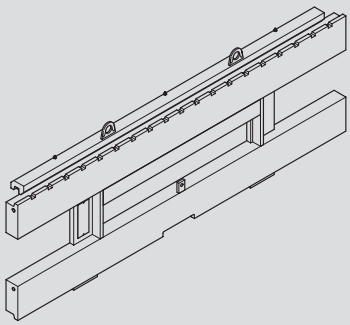

	TDLA 40 N MT-1670	TDLA 40 N MT-2000	
PART NUMBER	**751542**	**751369**	
Rated capacity	4300 kg	4300 kg	
Side-shift	2x100 mm	2x100 mm	
Width	1670 mm	2000 mm	
Weight	265 kg	305 kg	

https://truckmanualshub.com/

STANDARDISED FORK

MLT 634 Turbo LSU Série F-E3
MLT 634 -120 LSU Série F-E3
MLT 634 -120 LSU POWERSHIFT Série F-E3
MLT 731 Turbo Série F-E3
MLT 735 Turbo LSU Série 6-E3
MLT 735 -120 LSU Série 6-E3
MLT 735 -120 LSU POWERSHIFT Série 6-E3
MLT 1035 L Turbo LSU Série 6-E3

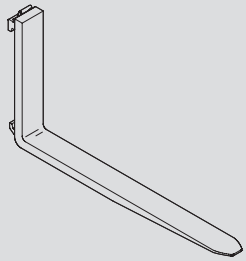

PART NUMBER	415618		
Section	125x45x1200 mm		
Weight	72 kg		

STANDARDISED FORK

MLT 741 Turbo LSU Série 6-E3
MLT 741 -120 LSU Série 6-E3
MLT 741 -120 LSU POWERSHIFT Série 6-E3

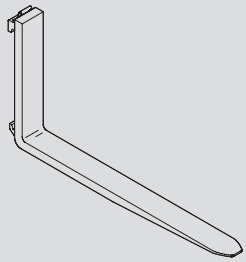

PART NUMBER	415652		
Section	125x50x1200 mm		
Weight	78 kg		

LOAD BACK REST

MLT 634 Turbo LSU Série F-E3
MLT 634 -120 LSU Série F-E3
MLT 634 -120 LSU POWERSHIFT Série F-E3
MLT 731 Turbo Série F-E3
MLT 735 Turbo LSU Série 6-E3
MLT 735 -120 LSU Série 6-E3
MLT 735 -120 LSU POWERSHIFT Série 6-E3
MLT 1035 L Turbo LSU Série 6-E3

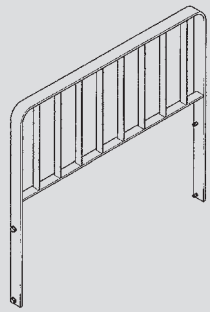

PART NUMBER	556008	555325	556010
Width	1260 mm	1470 mm	1580 mm
Weight	36 kg	39 kg	41 kg

LOAD BACK REST

MLT 741 Turbo LSU Série 6-E3
MLT 741 -120 LSU Série 6-E3
MLT 741 -120 LSU POWERSHIFT Série 6-E3

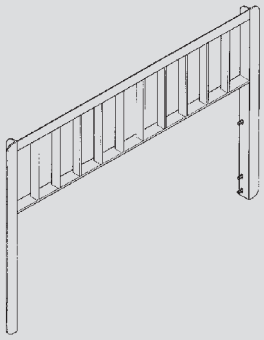

PART NUMBER	727035	572788	572790
Width	1260 mm	1670 mm	2000 mm
Weight	46 kg	56 kg	62 kg

https://truckmanualshub.com/

BUILDING BUCKET			
	CBC 700 L1950 S2	CBC 800 L2250 S3	CBC 900 L2450 S3
PART NUMBER	**654472**	**654471**	**654470**
Rated capacity	697 l	814 l	893 l
Width	1950 mm	2250 mm	2450 mm
Weight	330 kg	385 kg	410 kg

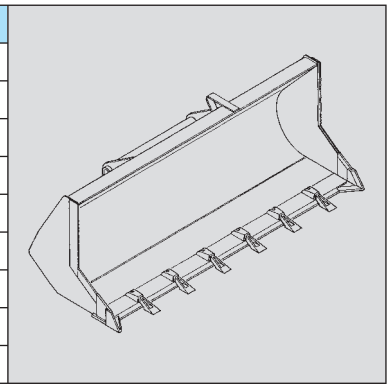

LOADING BUCKET			
	CBR 780 L1950 S2	CBR 900 L2250 S2	CBR 1000 L2450 S2
PART NUMBER	**570613**	**653749**	**654716**
Rated capacity	778 l	904 l	990 l
Width	1950 mm	2250 mm	2450 mm
Weight	340 kg	390 kg	410 kg

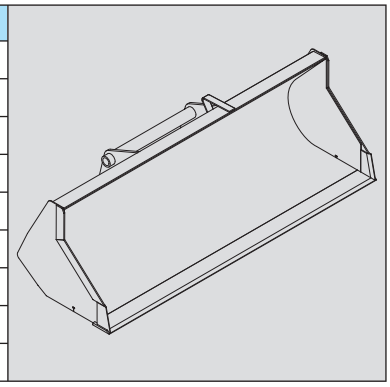

GRAIN BUCKET			
	CBA 1500 L2450 S3	CBA 1800 L2250 S3	
PART NUMBER	**570547**	**570550**	
Rated capacity	1502 l	1820 l	
Width	2450 mm	2250 mm	
Weight	514 kg	571 kg	

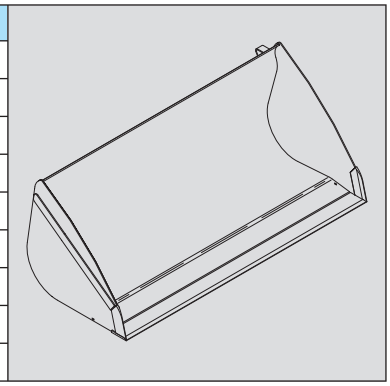

GRAIN BUCKET			
	CBA 2000 L2450 S3	CBA 2500 L2450 S3	
PART NUMBER	**570551**	**570553**	
Rated capacity	1998 l	2508 l	
Width	2450 mm	2450 mm	
Weight	607 kg	701 kg	

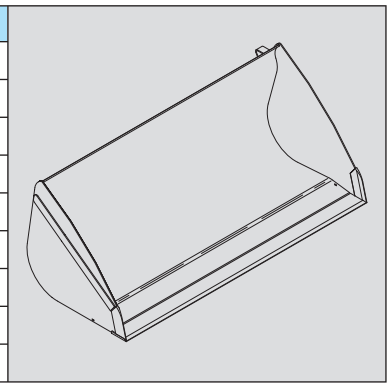

GRAIN BUCKET (REVERSING AND DISMOUNTABLE CUTTING EDGE)			
Except for MLT 1035 L Turbo LSU Série 6-E3			
	CBA 1500 L2450 LDR S3	CBA 2000 L2450 LDR S3	CBA 2500 L2450 LDR S3
PART NUMBER	**570548**	**570552**	**570554**
Rated capacity	1502 l	1998 l	2508 l
Width	2450 mm	2450 mm	2450 mm
Weight	585 kg	678 kg	772 kg

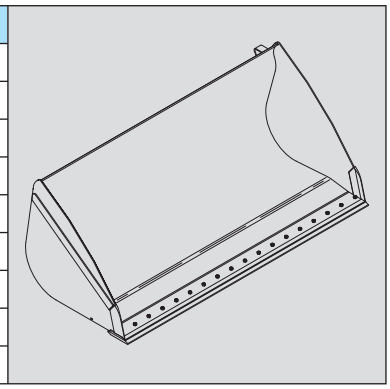

https://truckmanualshub.com/

BUCKET 4X1			
	CB4x1-700 L1950	**CB4x1-850 L2300**	**CB4x1-900 L2450**
PART NUMBER	**751402**	**751401**	**751465**
Rated capacity	700 l	850 l	900 l
Width	1950 mm	2300 mm	2450 mm
Weight	640 kg	735 kg	765 kg

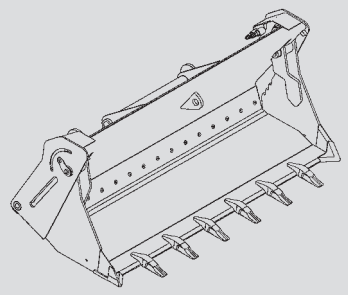

MULTIPURPOSE BUCKET (REVERSING AND DISMOUNTABLE CUTTING EDGE)			
	CBM 2450 LDR S5		
PART NUMBER	**752195**		
Rated capacity	1,03 m3		
Width	2450 mm		
Grab	11		
Weight	790 kg		

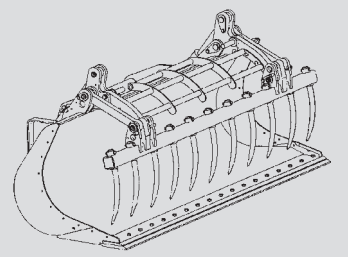

https://truckmanualshub.com/

GRAB BUCKET			
	CBG 1950 S4	CBG 2300 S4	CBG 2450 S4
PART NUMBER	**751407**	**751414**	**751418**
Rated capacity	1 m3	1,2 m3	1,26 m3
Width	1950 mm	2300 mm	2450 mm
Grab	7	8	8
Weight	555 kg	615 kg	635 kg

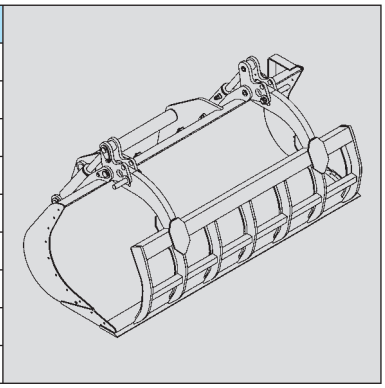

GRAB BUCKET (NON-HAZARDOUS INDUSTRIAL WASTE)			
	CBG 1950 DIB S4	CBG 2300 DIB S4	CBG 2450 DIB S4
PART NUMBER	**653016**	**653018**	**653020**
Rated capacity	1 m3	1,2 m3	1,26 m3
Width	1950 mm	2300 mm	2450 mm
Grab	7	8	8
Weight	678 kg	740 kg	767 kg

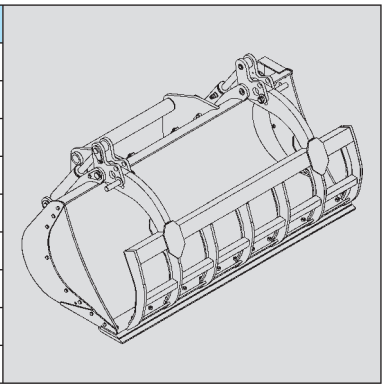

GRAB BUCKET (GRAB CLOSED)			
	CBG 2300 GF S4		
PART NUMBER	**653008**		
Rated capacity	1,2 m3		
Width	2300 mm		
Grab	8		
Weight	637 kg		

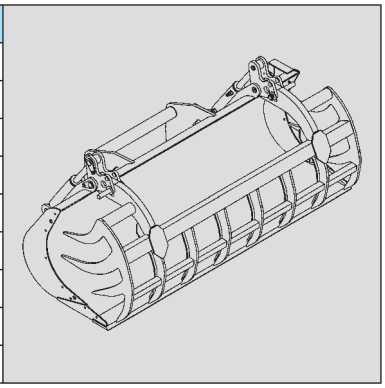

GRAB BUCKET (CLOSED JAWS AND REVERSIBLE REMOVABLE BLADE)			
	CBG 1950 JFD-LDR S4	CBG 2300 JFD-LDR S4	CBG 2450 JFD-LDR S4
PART NUMBER	**653003**	**653006**	**653009**
Rated capacity	1 m3	1,2 m3	1,26 m3
Width	1950 mm	2300 mm	2450 mm
Grab	7	8	8
Weight	655 kg	715 kg	742 kg

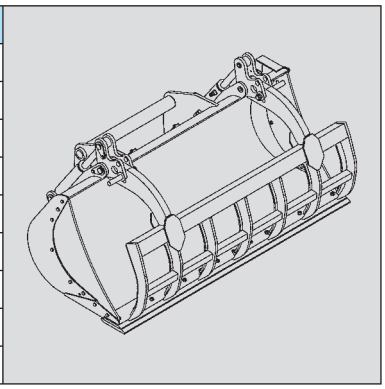

https://truckmanualshub.com/

CONCRETE BUCKET (ADAPTABLE ON FORKS)			
	BB 500 S4	**BBH 500 S4**	
PART NUMBER	**654409**	**751462**	
Rated capacity	500 l/1300 kg	500 l/1300 kg	
Width	1100 mm	1100 mm	
Weight	205 kg	220 kg	

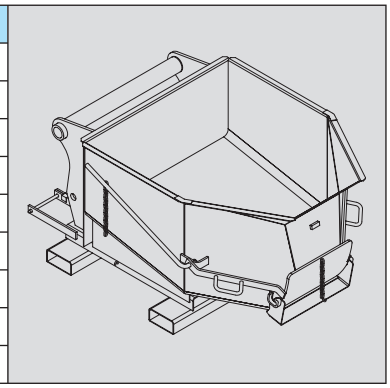

CONCRETE BUCKET WITH SPOUT(ADAPTABLE ON FORKS)			
	BBG 500 S4	**BBHG 500 S4**	
PART NUMBER	**654411**	**751464**	
Rated capacity	500 l/1300 kg	500 l/1300 kg	
Width	1100 mm	1100 mm	
Weight	220 kg	235 kg	

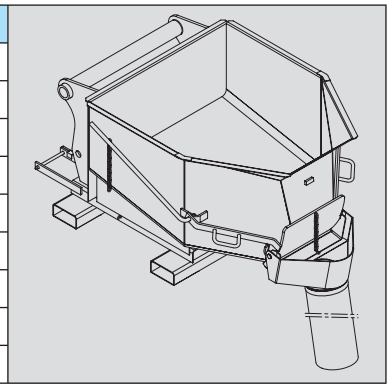

SPOUT BUCKET (ADAPTABLE ON FORKS)			
	GL 300 S2	**GL 400 S2**	
PART NUMBER	**174371**	**174372**	
Rated capacity	300 l/725 kg	400 l/969 kg	
Weight	150 kg	166 kg	
HYDRAULIC KIT TO OPEN THE SPOUT			
PART NUMBER	**653750**		

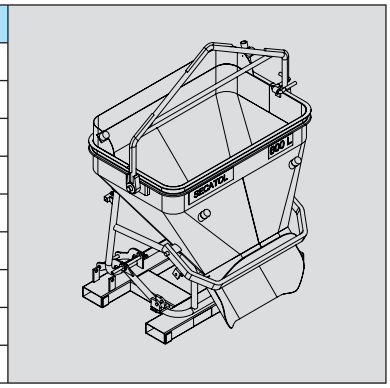

SPOUT BUCKET (ADAPTABLE ON FORKS)			
	GL 600 S2	**GL 800 S2**	
PART NUMBER	**174373**	**174374**	
Rated capacity	600 l/1440 kg	800 l/1920 kg	
Weight	290 kg	325 kg	
HYDRAULIC KIT TO OPEN THE SPOUT			
PART NUMBER	**653750**		

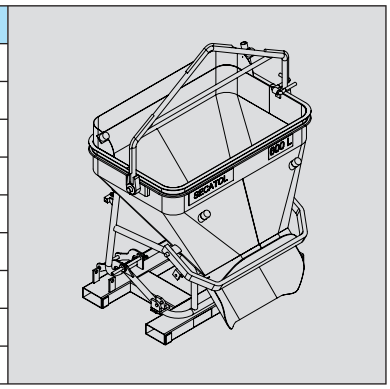

SPOUT BUCKET (ADAPTABLE ON FORKS)			
	GL 1000 S2	**GL 1500 S2**	
PART NUMBER	**174375**	**174376**	
Rated capacity	1000 l/2440 kg	1500 l/3591 kg	
Weight	360 kg	409 kg	
HYDRAULIC KIT TO OPEN THE SPOUT			
PART NUMBER	**653750**		

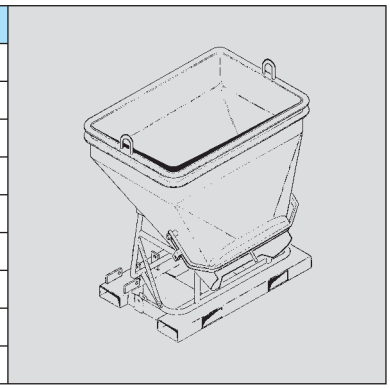

https://truckmanualshub.com/

MANURE FORK WITH GRAB			
	FFGR 30 MT 2100 S5	**FFGR 30 MT 2400 S5**	**FFGR 30 MT 2100 DR**
PART NUMBER	**556843**	**570594**	**570728**
Rated capacity	1700 Kg	1700 Kg	1700 Kg
Width	2100 mm	2400 mm	2100 mm
Finger	10	12	10 (round finger)
Grab	7	8	7
Weight	567 kg	606 kg	567 kg

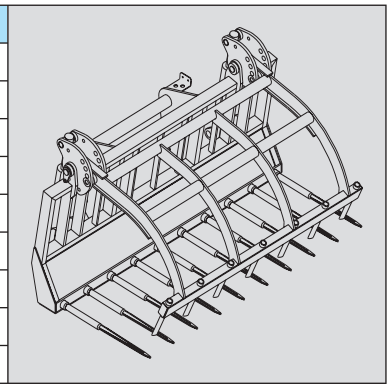

https://truckmanualshub.com/

CRANE JIB			
	P 600 MT S3		
PART NUMBER	**653228**		
Rated capacity	600 kg		
Weight	170 kg		

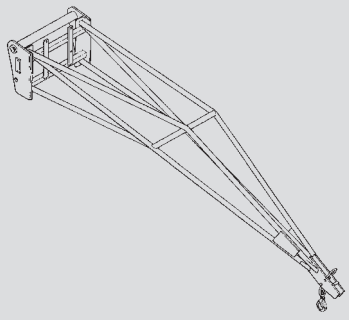

CRANE JIB			
	P 4000 MT S2		
PART NUMBER	**653226**		
Rated capacity	4000 kg/1200 kg		
Weight	210 kg		

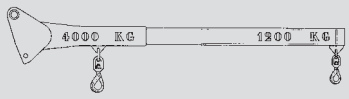

CRANE JIB WITH WINCH			
	PT 600 MT S6		
PART NUMBER	**708538**		
Rated capacity	600 kg		
Weight	288 kg		

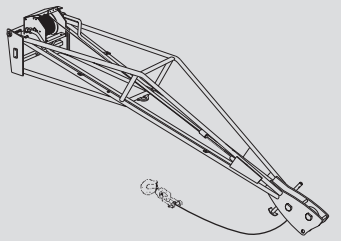

15°/15° MULTI-DIRECTIONAL CRANE JIB			
	PO 600 L2500 S2	PO 1000 L1500 S2	PO 2000 L1000 S2
PART NUMBER	**751547**	**751548**	**751549**
Rated capacity	600 kg	1000 kg	2000 kg
Weight	320 kg	275 kg	255 kg

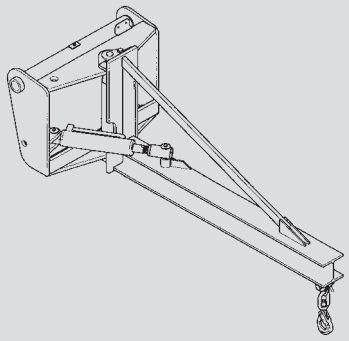

CRANE JIB			
	PC 50		
PART NUMBER	**708544**		
Rated capacity	5000 kg		
Weight	120 kg		

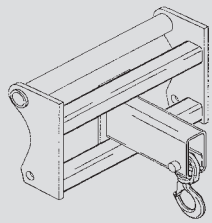

https://truckmanualshub.com/

ATTACHMENT SHIELDS

FORK PROTECTOR			
PART NUMBER	**227801**		

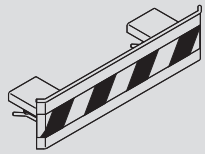

FORK BLOCK FOR FLOATING FORK CARRIAGE			
PART NUMBER	**261210**		

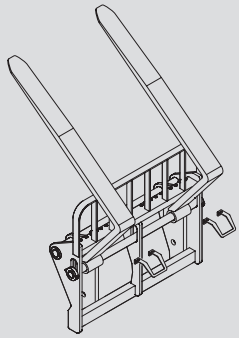

BUCKET PROTECTOR			
NOTE: Always ensure that the width of the protector you choose is less than or equal to the width of the bucket.			
PART NUMBER	**206734**	**206732**	**206730**
Width	1375 mm	1500 mm	1650 mm
PART NUMBER	**235854**	**206728**	**206726**
Width	1850 mm	1950 mm	2000 mm
PART NUMBER	**223771**	**223773**	**206724**
Width	2050 mm	2100 mm	2150 mm
PART NUMBER	**206099**	**206722**	**223775**
Width	2250 mm	2450 mm	2500 mm

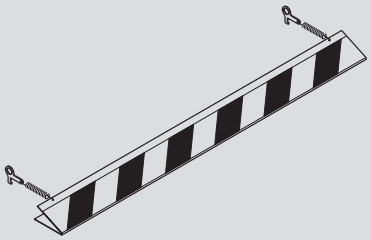

MANURE FORK PROTECTOR			
PART NUMBER	**230689**		

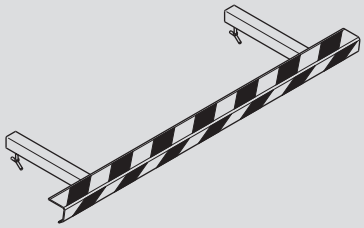

https://truckmanualshub.com/

5 - SPECIFIC AUSTRALIA

See also the operator's manual supplement: 647065 AU

https://truckmanualshub.com/

LOAD CHART

MLT 731 Turbo Série F-E3

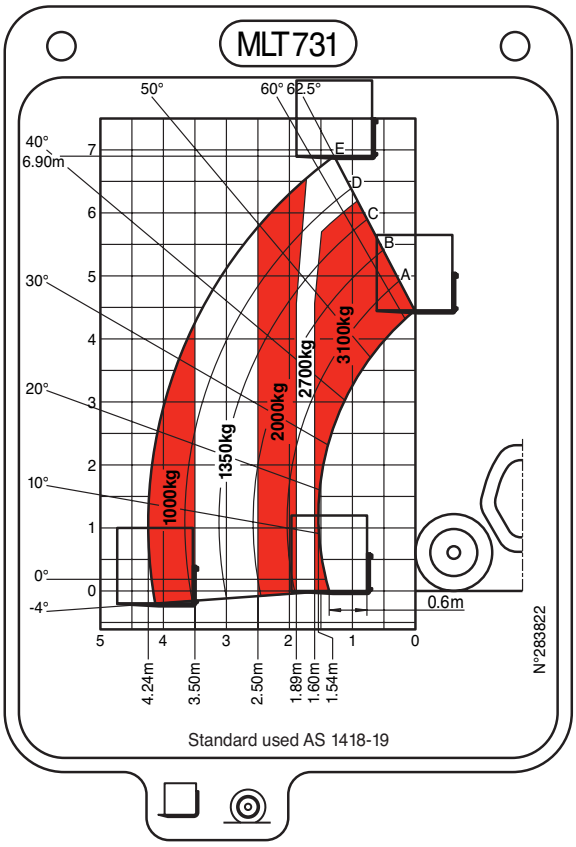

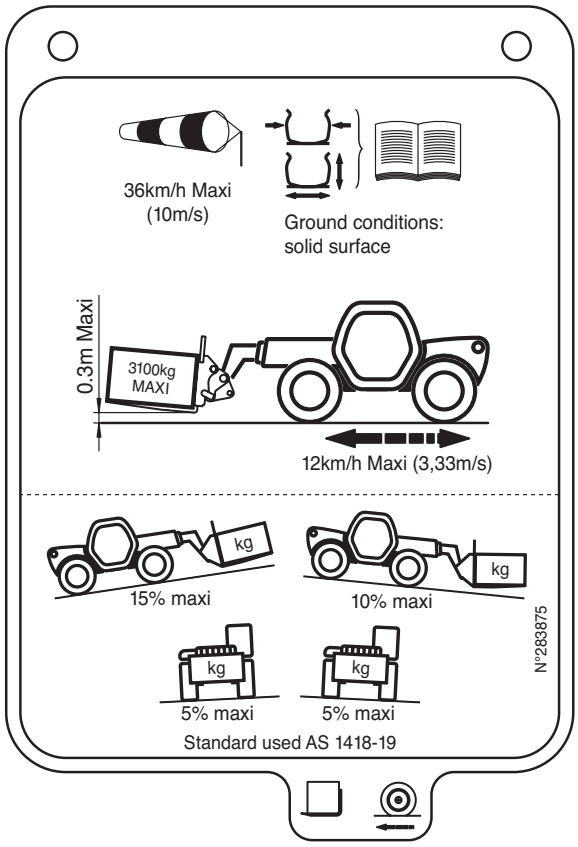

MLT 735 Turbo LSU Série 6-E3
MLT 735 -120 LSU Série 6-E3
MLT 735 -120 LSU POWERSHIFT Série 6-E3

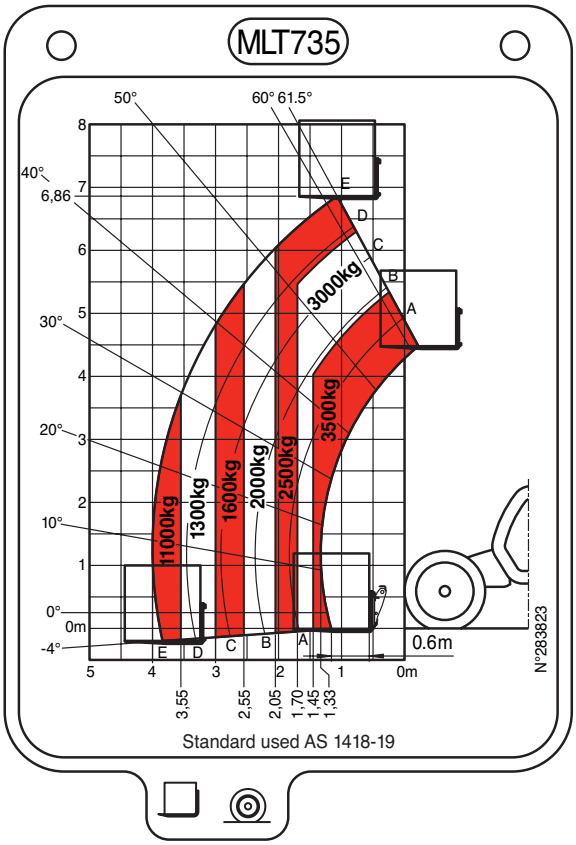

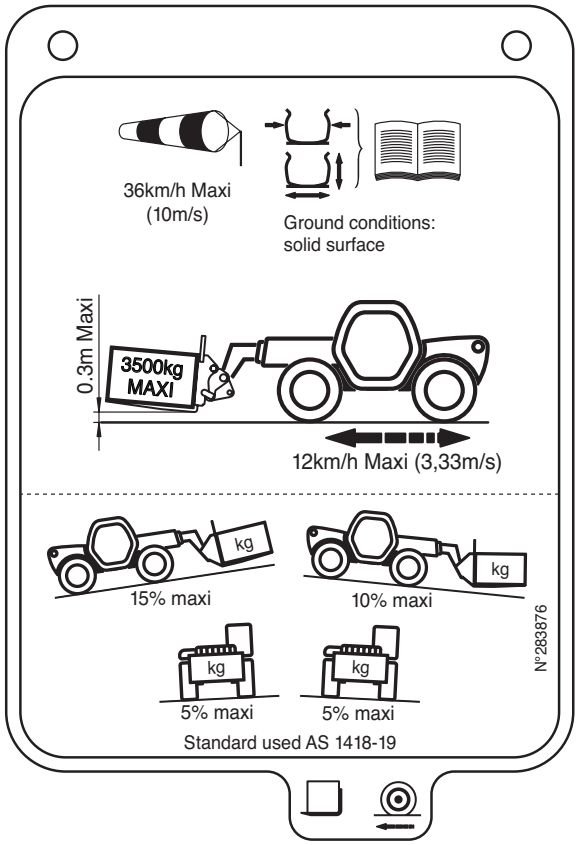

https://truckmanualshub.com/

LOAD CHART

MLT 741 Turbo LSU Série 6-E3
MLT 741 -120 LSU POWERSHIFT Série 6-E3

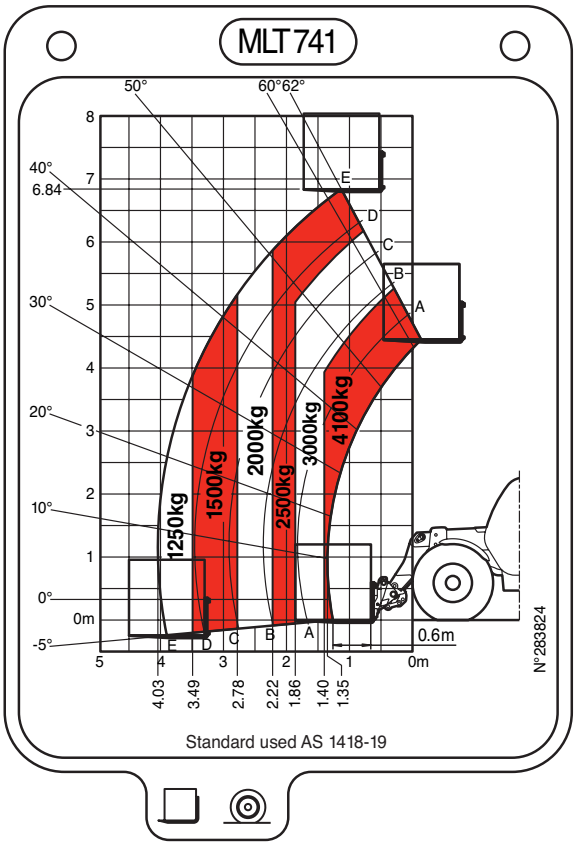

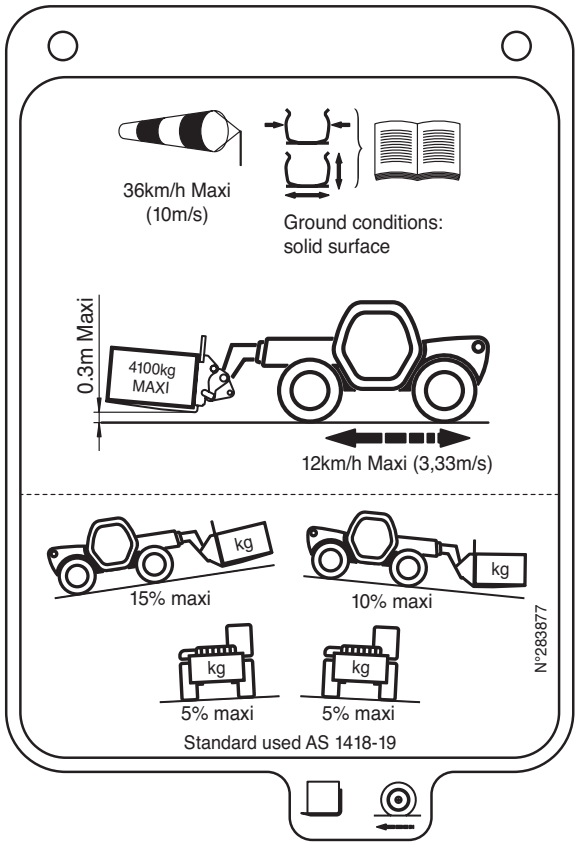
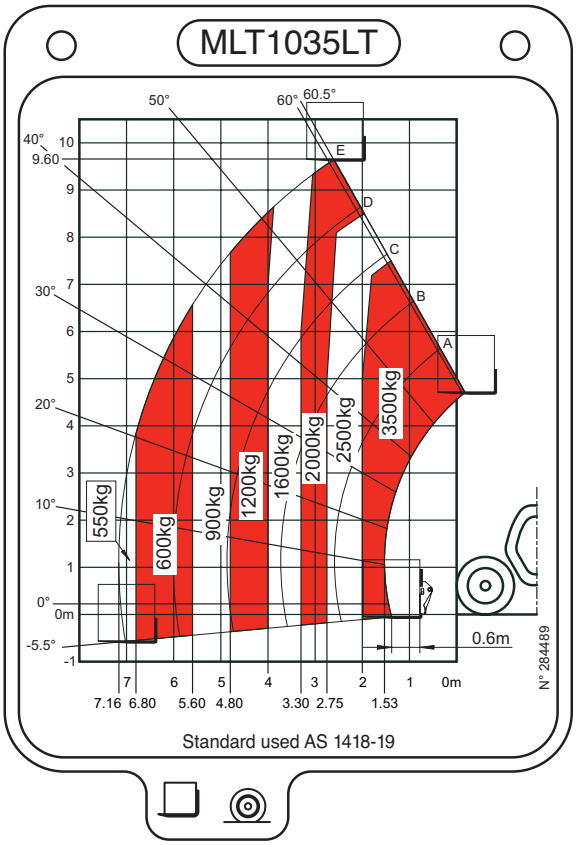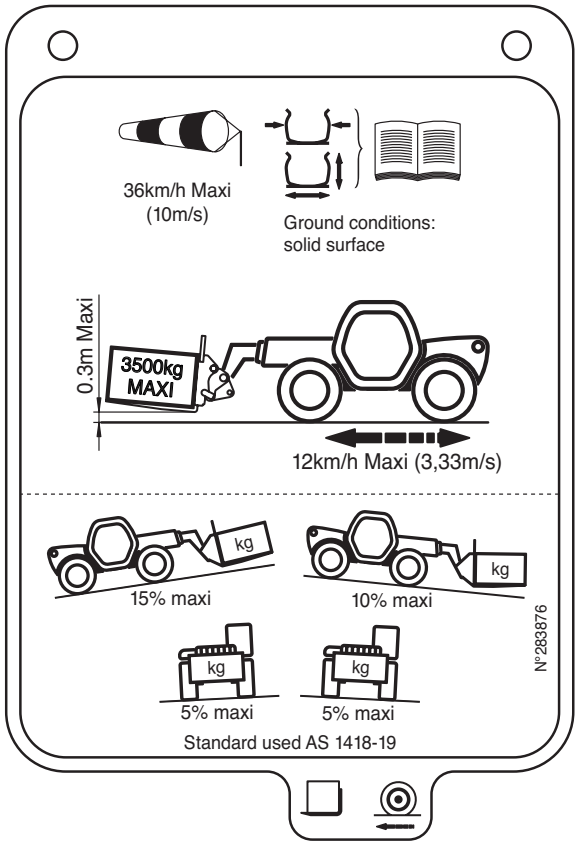
MLT 1035 L Turbo LSU Série 6-E3