https://truckmanualshub.com/

542E-OM1803-00

OPERATION MANUAL

CRAWLER CRANE

CC423S-1

Serial No. 21001 and up

⚠ WARNING

Unsafe use of this machine may cause serious injury or death. Operators must read this manual before operating this machine. This manual should be kept near the machine for reference and periodically reviewed by all personnel who will come into contact with it.

NOTICE

MAEDA has Operation Manual written in some other languages. If a foreign language manual is necessary, contact your local distributor for availability.

MAEDA

https://truckmanualshub.com/

Masuda Seisakusho Co., Ltd

https://truckmanualshub.com/

CONTENTS

Item	Page
INTRODUCTION	1
1. INTRODUCTION	2
2. FOR SAFE USE OF THE MACHINE	3
3. MACHINE OVERVIEW	4
3.1 SPECIFIED OPERATIONS	4
3.2 MACHINE STRUCTURE	4
3.3 MACHINE FUNCTIONS	5
4. QUALIFICATIONS FOR OPERATION	6
4.1 QUALIFICATIONS FOR CRANE OPERATION	6
5. TERMINOLOGY	7
5.1 TERMS AND DEFINITIONS	7
5.2 DIAGRAM OF WORKING RADIUS AND LIFTING HEIGHT	8
5.3 RATED TOTAL LOAD CHART	9
6. NECESSARY INFORMATION FOR SERVICING	12
SAFETY	15
1. BASIC PRECAUTIONS	16
1.1 PRECAUTIONS BEFORE STARTING WORK	16
1.2 PREPARING FOR SAFE OPERATION	17
1.3 PRECAUTIONS FOR FIRE PREVENTION	19
1.4 CAUTIONS IN GETTING ON AND OFF THE MACHINE	20
1.5 OTHER PRECAUTIONS	21
2. OPERATION RELATED PRECAUTIONS	22
2.1 PRECAUTIONS ON WORK SITE	22
2.2 CAUTIONS WHEN STARTING ENGINE	25
2.3 PRECAUTIONS FOR STARTING CARRIER AND OPERATING CRANE	27
2.4 CAUTIONS DURING CRANE OPERATION	30
3. TRANSPORT PRECAUTIONS	38
4. TOWING PRECAUTIONS	39
5. MAINTENANCE PRECAUTIONS	40
5.1 PRECAUTIONS BEFORE MAINTENANCE	40
5.2 PRECAUTIONS DURING MAINTENANCE	43
6. SAFETY LABEL LOCATIONS	47

https://truckmanualshub.com/

Item	Page
OPERATION	55
1. NAME OF EACH SECTION	56
1.1 MACHINE UNITS	56
1.2 CRANE OPERATION UNITS	57
2. EXPLANATION OF EACH EQUIPMENT	58
2.1 MACHINE MONITOR	58
2.1.1 MONITOR BASIC ACTION AND DISPLAY	60
2.1.2 WARNING DISPLAY	66
2.2 SWITCHES	67
2.3 MOMENT LIMITER (OVERLOAD DETECTOR)	71
2.3.1 CONFIGURATION OF MOMENT LIMITER	71
2.3.2 FUNCTIONS OF MOMENT LIMITER	72
2.3.3 MOMENT LIMITER OPERATION AND CANCELLING (RECOVERY)	74
2.3.4 MOMENT LIMITER FUNCTIONS	77
2.3.5 MAINTENANCE SWITCH	85
2.4 OVER-HOISTING PREVENTION DEVICE	86
2.5 OPERATION LEVERS AND PEDALS	87
2.6 LOCKING COVER	90
2.7 ENGINE BONNET	91
2.8 FUSE	93
2.9 FUSIBLE LINK	94
2.10 HOLDER FOR OPERATION MANUAL	94
2.11 GREASE GUN HOLDER	94
3. OPERATION	95
3.1 INSPECTING AND ADJUSTING BEFORE STARTING ENGINE	95
3.1.1 VISIBLE CHECKS	95
3.1.2 PRE-OPERATION INSPECTION	98
3.1.3 OPERATIONS AND CHECKS BEFORE STARTING ENGINE	108
3.1.4 INSPECTION AFTER STARTING ENGINE	109
3.2 STARTING ENGINE	112
3.2.1 NORMAL STARTING OF ENGINE	112
3.2.2 STARTING ENGINE IN COLD ENVIRONMENT	113
3.3 OPERATIONS AND CHECKS AFTER STARTING ENGINE	114
3.3.1 WARM-UP	114
3.4 STOPPING ENGINE	116
3.5 BREAK-IN OPERATION	117
3.6 MACHINE TRAVELLING POSTURE	118
3.7 STARTING (FORWARD AND BACKWARD)/STOPPING THE MACHINE	119
3.8 CHANGING DIRECTION OF THE MACHINE	123
3.9 SLEWING THE MACHINE	125
3.10 CAUTIONS BEFORE CRANE OPERATION	126
3.11 OPERATION BEFORE CRANE WORK	128
3.12 CRANE OPERATION POSTURE	130

https://truckmanualshub.com/

Item	Page
3.13 HOISTING AND LOWERING	131
3.13.1 NORMAL HOISTING AND LOWERING	131
3.13.2 HOISTING OPERATION WITH HOOK STOWAGE SWITCH	132
3.14 BOOM DERRICKING OPERATION	133
3.15 BOOM TELESCOPING OPERATION	134
3.16 SLEWING OPERATION	135
3.17 CRANE STOWAGE OPERATION	136
3.17.1 CRANE STOWAGE OPERATION AT THE TIME OF SIMPLE STOWAGE OF HOOK BLOCK	136
3.17.2 CRANE STOWAGE OPERATION AT THE TIME OF NORMAL STOWAGE OF HOOK BLOCK	139
3.18 PROHIBITED OPERATIONS DURING CRANE WORK	141
3.19 PERFORM TRAVELLING WITH HOISTED LOAD	143
3.19.1 PRECAUTIONS FOR TRAVELLING WITH HOISTED LOAD	143
3.19.2 OPERATION POSTURE DURING TRAVELLING HOIST	144
3.19.3 OPERATION OF TRAVELLING HOIST WORK	145
3.19.4 CANCEL OPERATION OF TRAVELLING HOIST OPERATION POSTURE	145
3.20 BLADE OPERATION	146
3.20.1 PRECAUTIONS WHEN USING THE BLADE	146
3.20.2 BLADE OPERATION	147
3.20.3 WORK THAT CAN BE DONE WITH THE BLADE	147
3.21 PARKING THE MACHINE	148
3.22 INSPECTION AND CHECK AFTER COMPLETING WORK	149
3.22.1 AFTER STOPPING ENGINE	149
3.22.2 LOCKING	149
3.23 CAUTIONS IN DRIVING	150
4. HANDLING WIRE ROPE	153
4.1 CRITERIA FOR WIRE ROPE REPLACEMENT	153
4.2 WINCH WIRE ROPE REEVING SYSTEM AND GROSS RATED LOAD	155
4.3 CORRECTIVE ACTIONS AGAINST TWISTED WIRE ROPE	156
5. TRANSPORTATION	159
5.1 LOADING/UNLOADING	160
5.1.1 LOADING	161
5.1.2 FIXING THE MACHINE	163
5.1.3 UNLOADING	164
5.2 HOISTING MACHINE	165
5.2.1 HOISTING MACHINE WITH BOOM LOWERED	165
5.2.2 HOISTING MACHINE WITH BOOM RAISED	167
6. HANDLING MACHINE IN COLD ENVIRONMENT	169
6.1 PREPARING FOR LOW TEMPERATURE	169
7. LONG-TERM STORAGE	172
7.1 BEFORE STORING MACHINE	172
7.2 DURING STORAGE	172
7.3 AFTER STORAGE	172

https://truckmanualshub.com/

Item	Page
8. TROUBLESHOOTING	173
8.1 WHEN FUEL RUNS OUT	173
8.2 PHENOMENON WHICH IS NOT A FAULT	173
8.3 WHEN BATTERY HAS DISCHARGED	174
8.3.1 BATTERY HANDLING PRECAUTIONS	174
8.3.2 REMOVING/INSTALLING BATTERY	175
8.3.3 CAUTIONS IN CHARGING BATTERY	176
8.3.4 STARTING ENGINE WITH BOOSTER CABLE	177
8.3.5 STARTING ENGINE	178
8.4 WHEN THESE PHENOMENA HAPPEN	179
8.4.1 ELECTRICAL COMPONENTS	179
8.4.2 MACHINE BODY	179
8.4.3 ENGINE	180
8.4.4 MOMENT LIMITER COMPONENTS	182
8.4.5 OVER-HOISTING PREVENTION DEVICE	182
8.5 LIST OF ERROR CODES	184
INSPECTION AND MAINTENANCE	187
1. PRECAUTIONS FOR MAINTENANCE	188
2. BASIC MAINTENANCE	191
3. LEGAL INSPECTION	194
4. PERIODIC REPLACEMENT OF IMPORTANT COMPONENTS	195
5. CONSUMABLES	196
6. OTHER REPLACEMENT PARTS	197
7. USE OF FUEL AND LUBRICATING OIL	198
7.1 USE OF FUEL AND LUBRICATING OIL ACCORDING TO TEMPERATURES	198
8. STANDARD TIGHTENING TORQUE	200
8.1 STANDARD TIGHTENING TORQUE LIST	200
9. INSPECTION AND MAINTENANCE LIST	201
10. MAINTENANCE PROCEDURE	203
10.1 FIRST MAINTENANCE OF NEW MACHINE	203
10.1.1 INITIAL 50 HOURS MAINTENANCE	203
10.1.2 INITIAL 500 HOURS MAINTENANCE	203
10.2 PRE-OPERATION INSPECTION	203
10.3 IRREGULAR MAINTENANCE	204
10.4 MAINTENANCE EVERY 50 HOURS	223
10.5 MAINTENANCE EVERY 100 HOURS	225
10.6 MAINTENANCE EVERY 250 HOURS	226
10.7 MAINTENANCE EVERY 500 HOURS	230
10.8 MAINTENANCE EVERY 1000 HOURS	233
10.9 MAINTENANCE EVERY 1500 HOURS	235
10.10 MAINTENANCE EVERY 2000 HOURS	236
10.11 MAINTENANCE EVERY 3000 HOURS	239

https://truckmanualshub.com/

Item	Page
SPECIFICATIONS	241
1. PRINCIPAL SPECIFICATIONS LIST	242
2. SPECIFICATION DIMENSIONAL DRAWING	243
3. RATED TOTAL LOAD CHART	244
4. WORKING RADIUS/LIFTING HEIGHT	247
SEARCHER HOOK (OPTION)	249
1. SAFETY PRECAUTIONS	250
1.1 MOMENT LIMITER SETTINGS	250
1.2 SAFETY LABEL LOCATIONS	251
2. NAMES OF SEARCHER HOOK PARTS	253
3. MONITOR INDICATION	254
4. MOMENT LIMITER OPERATION AND CANCELLING (RECOVERY)	256
5. OPERATION	258
6. INSPECTION AND MAINTENANCE	261
6.1 CONSUMABLES	261
6.2 INSPECTION AND MAINTENANCE LIST	262
6.3 PRE-OPERATION INSPECTION	263
6.3.1 CHECKING BEFORE STARTING ENGINE	263
6.3.2 INSPECTION AFTER STARTING ENGINE	264
7. WORKING RADIUS AND RATED TOTAL LOAD	265
7.1 WORKING RADIUS AND LIFTING HEIGHT CHART FOR SEARCHER HOOK	265
7.2 RATED TOTAL LOAD CHART FOR SEARCHER HOOK	266

https://truckmanualshub.com/

This Page Intentionally Left Blank.

https://truckmanualshub.com/

INTRODUCTION

1. INTRODUCTION	2
2. FOR SAFE USE OF THE MACHINE	3
3. MACHINE OVERVIEW	4
4. QUALIFICATIONS FOR OPERATION	6
5. TERMINOLOGY	7
6. NECESSARY INFORMATION FOR SERVICING	12

https://truckmanualshub.com/

1. INTRODUCTION

Thank you for purchasing Maeda Crawler Crane CC423S-1.
This manual is a guidebook for safe and effective use of this machine.
This manual describes the procedures and precautions to follow for proper operation and maintenance of the machine.
Many accidents are caused due to failure to observe safety precautions for operation, inspection, and maintenance.
Be sure to read this manual and understand the procedures for machine operation, inspection, and maintenance thoroughly before using this machine.
Failure to observe the basic precautions described in this manual may lead to serious accidents.

⚠ WARNING

Improper operation of this machine can lead to serious injuries or death.
Operators and maintenance personnel must always read this manual prior to operation or maintenance of this machine.
Keep this manual in a designated place so that all personnel that work on this machine will read it for reference periodically.

- **Avoid operating this machine before understanding this manual thoroughly.**
- **Keep this manual at hand so that you can read it when necessary.**
- **If you lose or damage this manual, contact Maeda or our sales service agency immediately to order a new one.**
- **This manual should always accompany this machine upon transfer of the machine to the next owner.**
  If the machine is resold to a third party without informing us in advance, no warranty whatsoever shall be applicable.
- **This manual is based on the data that was available at the time of the creation of the manual.**
  The information of this manual, including maintenance specifications, tightening torque, pressure, measuring method, adjustment value, and illustrations, are subject to change without prior notice due to continuous machine improvement. These changes may affect the machine maintenance procedure. Always obtain the latest information from Maeda or our sales service agency before performing maintenance of this machine.

For safety instructions, refer to “2. For Safe Use of the Machine” on page 3 and “Safety” on page 15 and later.

Storage place of the operation manual
Pocket behind the operator seat

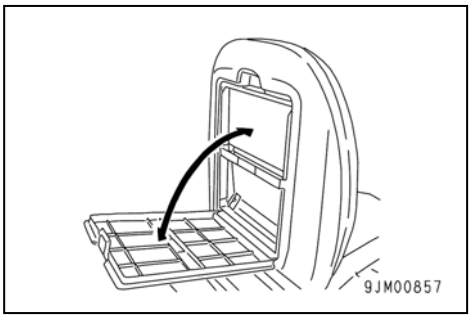

https://truckmanualshub.com/

2. FOR SAFE USE OF THE MACHINE

This manual classifies the risks into the following three categories for easy understanding of the safety information.

⚠ DANGER

This denotes that there is an imminent hazard which will cause serious injury or death.
It also provides information on how to avoid such hazard.

⚠ WARNING

This denotes that there is a hazard which can cause serious injury or death.
It also provides information on how to avoid such hazard.

⚠ CAUTION

This denotes that there is a potential hazard which may cause minor or moderate injury or serious damage to the machine.
It also provides information on how to avoid such hazard.

This manual also uses the following indications to provide other precautions for handling the machine and helpful information.

CAUTION

This denotes that failure to properly handle the machine may damage it or shorten its life.

NOTES

This denotes helpful information.

The operations, inspections, maintenance and safety precautions for this machine that are outlined in this manual are relevant to specified tasks.
It is impossible to anticipate all situations where the machine is used.
Thus, the precautions given in this manual and on this machine do not necessarily cover every safety issue.
When performing the machine operation, inspection or maintenance in a situation that is not covered by this manual, be sure to take necessary measures and actions for safety on your own.
Even in the above case, never attempt work or operations that this manual prohibits you to do.

https://truckmanualshub.com/

3. MACHINE OVERVIEW

3.1 SPECIFIED OPERATIONS

This machine is to be used for the following operation(s):

• Crane operation

• Travelling hoist operation

This machine is a mobile crane consisting of the upper swiveling body equipped with a boom type crane and the lower crawler type carrier.

This self-propelled crane is capable of moving (travelling) in the work site and craning an object weighing up to the rated total load.

3.2 MACHINE STRUCTURE

EXTERNAL VIEW

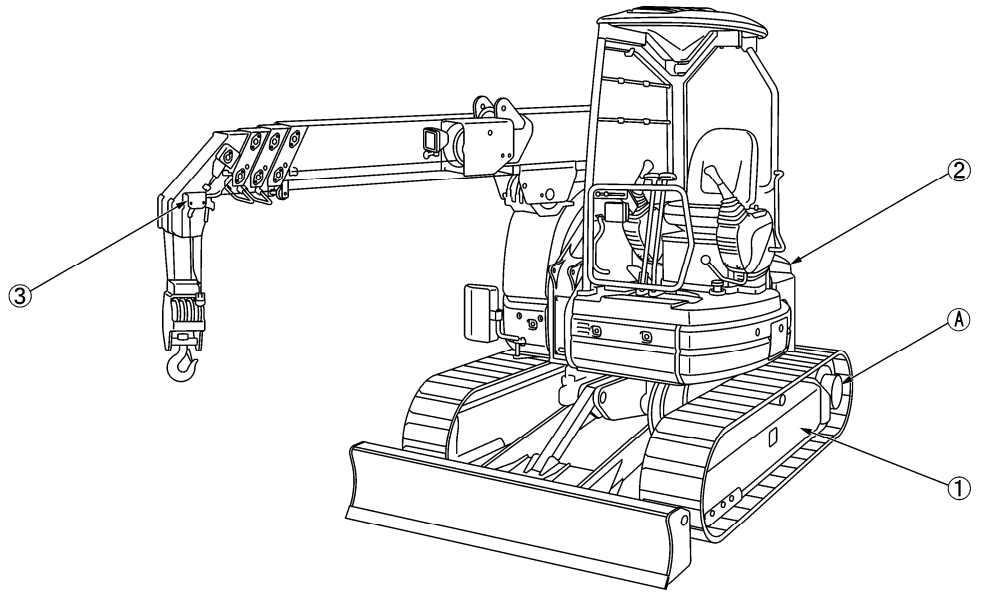

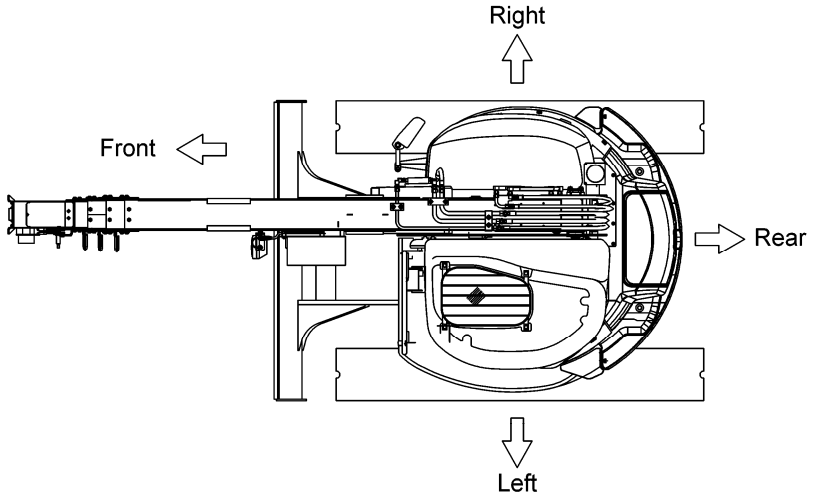

H5421006E

(1) Carrier

(2) Upper slewing body

(3) Safety device

In this manual, the front, rear, left and right directions are defined with the basic reference direction that the operator sits on the operator's seat with the carrier's sprocket (A) in the rear and viewing the machine's travelling direction (forward). For the slewing of boom (upper slewing body), the boom slewing directions (clockwise for right and counterclockwise for left) are determined as viewed from above the machine.

This machine is composed of the following units and systems:

CARRIER

Consists of the travelling system.

UPPER SLEWING BODY (CRANE)

Consists of the engine, travelling operation unit, crane operation unit, boom telescoping unit, boom derricking unit, slewing unit, hook block and winch system.

SAFETY DEVICE

Comprises the over-hoisting prevention device, over-lowering prevention device, overload preventive device, slinging rope detachment protector, hydraulic safety valve, telescoping cylinder hydraulic automatic locking device, derricking cylinder hydraulic automatic locking device, alarm buzzer, machine body inclination alarm, levelling instrument (monitor display), tri-colour revolving working status lamp, travelling crane stop, travelling automatic stop, working radius limiter function, irregular winding prevention roller, crane operation recording function.

3.3 MACHINE FUNCTIONS

CARRIER

- The carrier is of a crawler type, which facilitates running in rough terrain and soft ground.
- Operating the two travelling levers enables not only travelling direction changes (forward, backward, right and left) but also pivot turns and spin turns.

UPPER SLEWING BODY

- The upper slewing body is allowed to perform a 360 degrees slewing by slewing operation.
- Through the combined use of the telescopic boom, derrick and slewing systems besides the winch system, the crane can raise and lower the hook block to move the lifted object to the desired position within the rated total load and the specified working envelope.

https://truckmanualshub.com/

4. QUALIFICATION FOR OPERATION

⚠ WARNING

- **A high incidence of occupational accidents in crane operation has been reported. Be aware that experienced engineers are also no exception.**
- **Warnings and precautions defined in this manual shall be observed for safety assurance during operation of the machine.**

4.1 QUALIFICATION FOR CRANE OPERATION

Only personnel that have obtained the required license or training stipulated by laws and regulations applicable to the place of use are qualified to operate this machine.
Contact the relevant government office or our sales service agency for further information.

https://truckmanualshub.com/

5. TERMINOLOGY

5.1 TERMS AND DEFINITIONS

RATED TOTAL LOAD

The maximum load that can be applied according to the boom length and angle. The load includes the mass (weight) of hoisting accessories (hooks) and slinging ropes.

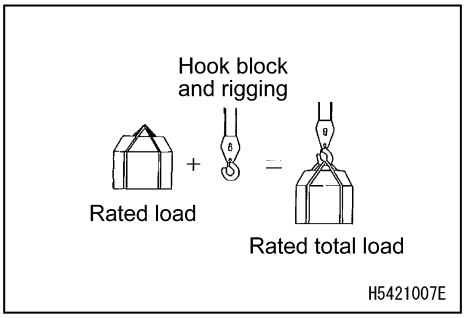

RATED LOAD

A load derived by subtracting the mass (weight) of hoisting accessories (hooks) and slinging ropes from the rated total load, and can be hoisted.

WORKING RADIUS

A horizontal distance between the axis of slewing and the hook centre.

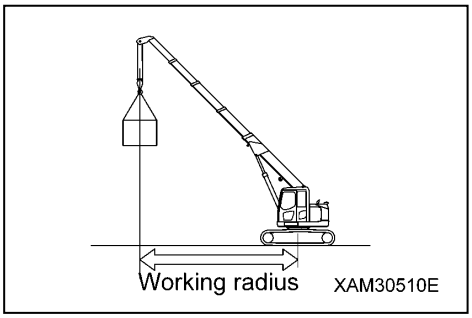

BOOM LENGTH

A distance between the boom primary pin and the sheave pin at the tip of the boom.

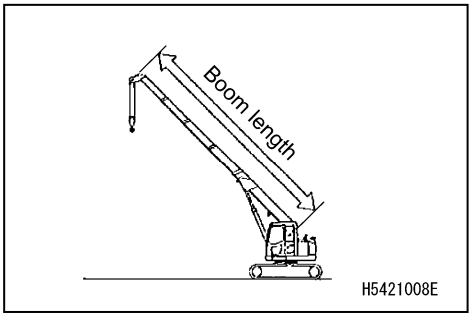

DERRICKING ANGLE

An angle which the boom forms with the horizon.

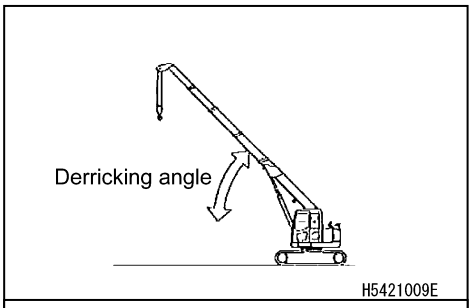

LIFTING HEIGHT ABOVE GROUND

A vertical distance between the hook bottom end and the ground with the hook raised to the upper limit.

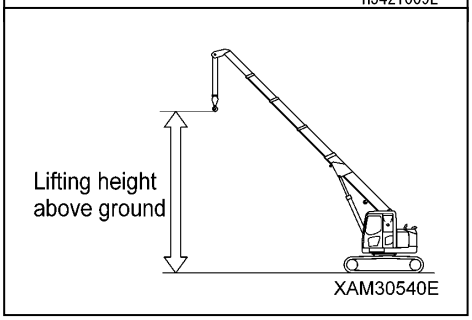

https://truckmanualshub.com/

5.2 DIAGRAM OF WORKING RADIUS AND LIFTING HEIGHT

⚠ WARNING

- **The working radius/lifting height shows relationship between working radius, boom angle and lifting height above ground of this machine with no load hoisted, and deflection of the boom is not included.**
- **Stage "3" in the diagram of working radius and lifting height indicates that one half portion of the " ◥ mark" is extruding from the 2nd stage boom.**

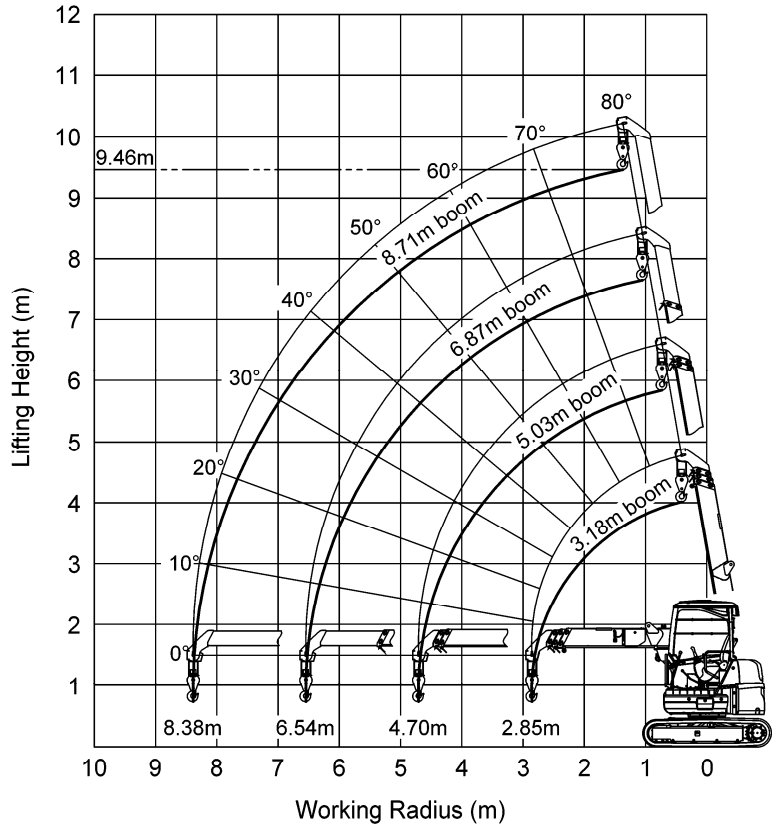

1. In the figure on the right, point A denotes a boom angle and point B denotes a lifting height above ground.
   The same working radius applies to point A and point B.

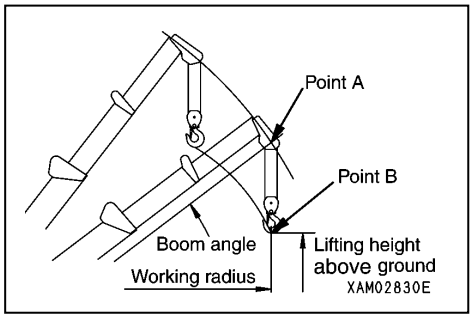

2. The "diagram of working radius and lifting height" shows the relationships between the working radius, boom angle and lifting height at no load, allowing for no deflection in the boom.
   A deflection occurs in the boom when an object is hoisted, which causes the working radius to widen slightly.
   The rated total load decreases with increase in the working radius. Actual crane operation requires the planning of work, allowing for sufficient clearance more than that provided in the diagram.

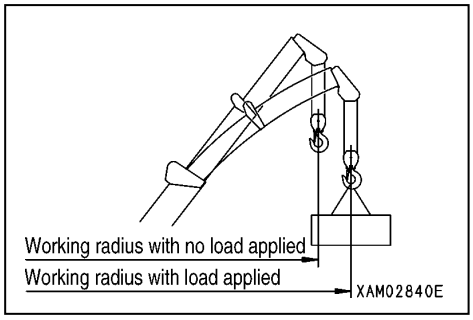

https://truckmanualshub.com/

5.3 RATED TOTAL LOAD CHART

⚠ CAUTION

- **Rated total load chart is based on level, hard ground.**
- **The rated total load in the chart is based on actual working radius with deflection which occurs in the boom under load.**
- **When boom (2) is extended even for a minimal extent, perform the work within the capacity indicated in the column of "boom (2)".**
- **When boom (3) is extended even for a minimal extent, perform the work within the capacity indicated in the column of "boom (3)".**
- **When more than one-half of the " ◣ mark" of boom (3) is exposed from boom (2), perform the work within the capacity indicated in the column of "boom (4)".**
- **If working radius exceeds the value of Working Radius column in the chart by any extent, work should be performed within the rated total load in the next column of Working Radius.**
- **The rated total load chart indicates the load including the mass of hoisting accessories (hook mass: 30 kg).**

CC423S-1 RATED TOTAL LOAD CHART

Working radius (m)	(1) 3.18 m boom		(2) 5.03 m boom		(3) 6.87 m boom	(4) 8.71 m boom
	Stationary hoist	Travelling hoist	Stationary hoist	Travelling hoist	Stationary hoist	Stationary hoist
1.50	2930	1465	2930	1465	1870	1190
2.00	1730	865	1710	855	1710	1190
2.50	1200	600	1190	595	1190	1190
2.85	980	490	980	490	980	980
3.00			900	450	900	900
3.50			720	360	720	720
4.00			600	300	600	600
4.50			500	250	500	500
4.70			460	230	460	460
5.00					430	430
5.50					370	370
6.00					330	330
6.54					290	290
7.00						260
7.50						235
8.00						215
8.38						200
Boom angle range (degrees)	0 – 42.9		0 – 64.2		0 – 72.3	0 – 76.5

https://truckmanualshub.com/

The rated total load chart provides the maximum loads that the crane is capable of hoisting depending on boom length, for each working radius.

Boom length

The headings in the rated total load chart, “3.18 m boom (1)”, “5.03 m boom (2)”, “6.87 m boom (3)” and “8.71 m boom (4)” denote the states displayed in the following figures:

1. “3.18 m boom (1)”: All the booms are retracted.

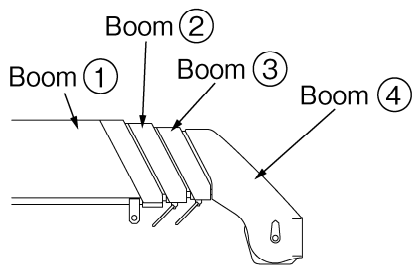

SAM01040E

2. “5.03 m boom (2)”: Booms (3) and (4) are retracted, with boom (2) fully extended.
   If boom (2) is extended even to a small extent, work should be performed in accordance with the values of this column.

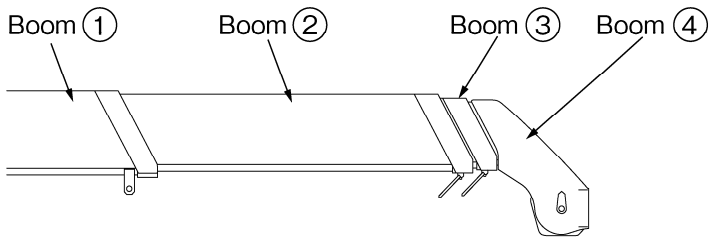

SAM01050E

3. “6.87 m boom (3)”: With boom (2) fully extended, booms (3) and (4) are in a state of intermediate extension, where half of the “ ◣ mark” is exposed from boom (2).
   If booms (3) and (4) are extended even to a small extent, work should be performed in accordance with the values of this column.

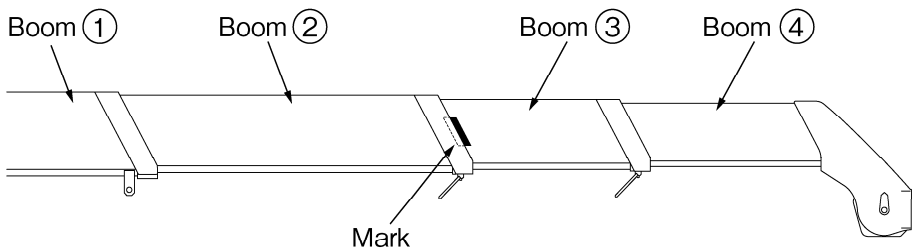

SAM01060E

https://truckmanualshub.com/

4. “8.71 m boom (4)”: All the booms are fully extended.
   If more than half of the “ ◣ mark” of boom (3) is exposed from boom (2), work should be performed in accordance with the values of this column.

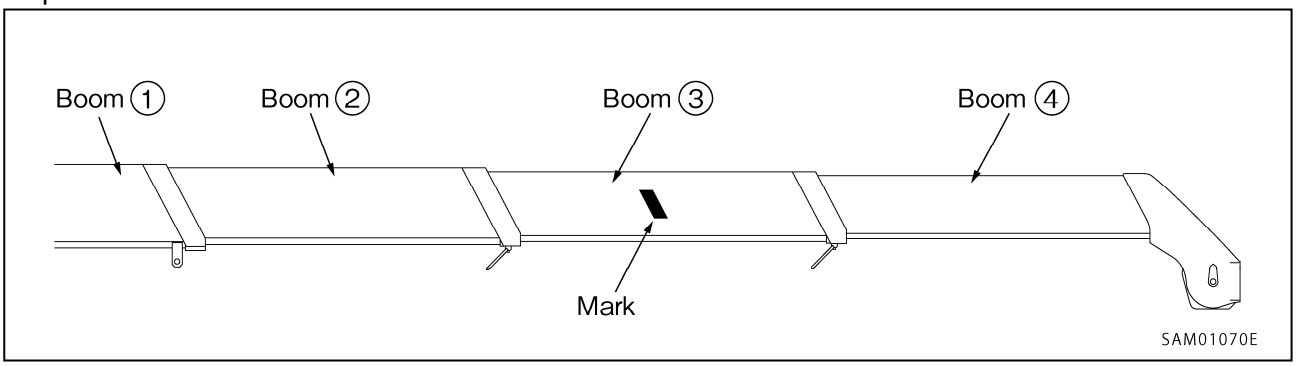

https://truckmanualshub.com/

6. NECESSARY INFORMATION FOR SERVICING

When arranging servicing of the machine, or when ordering parts, please contact the Company or our sales service agency with the following information.

Machine ID plate

This is located on the lower right part of the canopy.

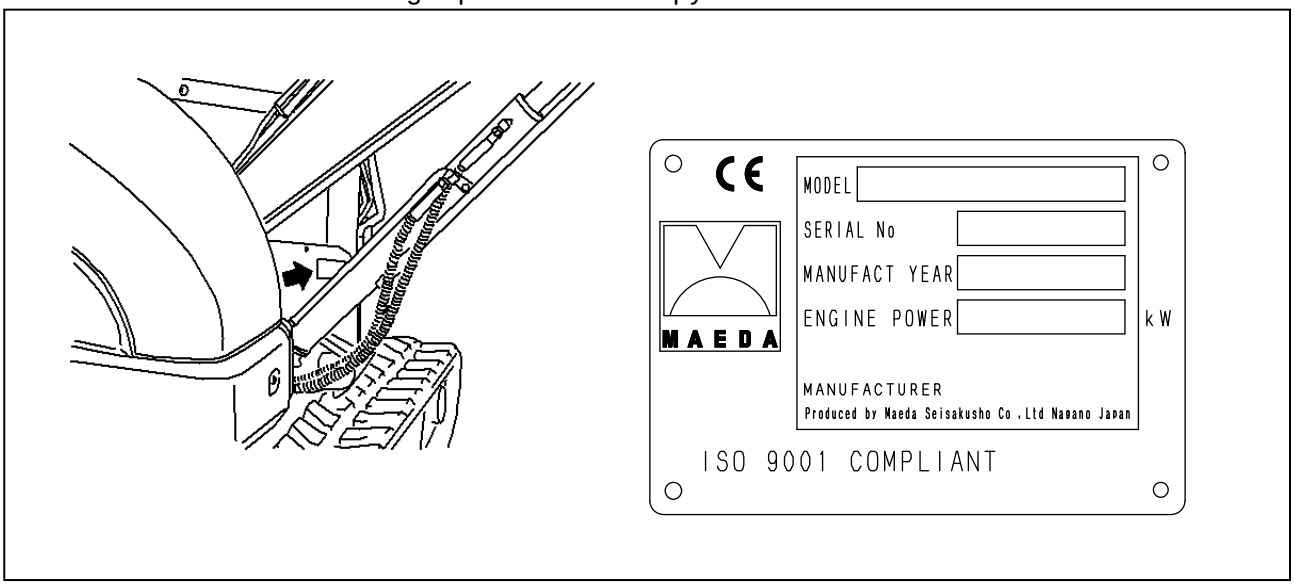

Engine No. ID plate location

This is located on the upper surface of the engine.

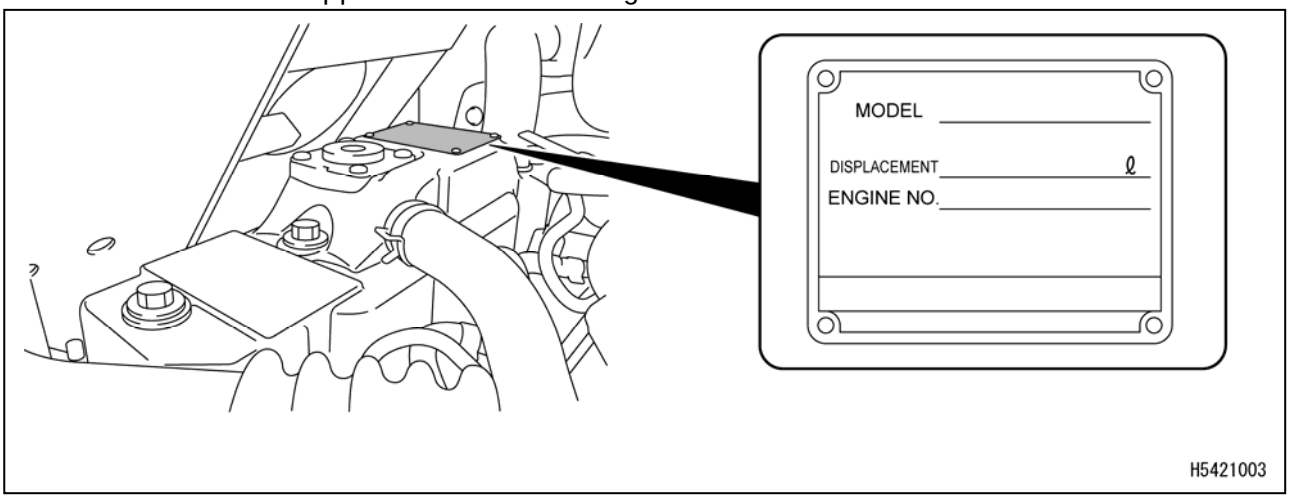

https://truckmanualshub.com/

EPA ID plate and location

This is located on the upper surface of the engine.

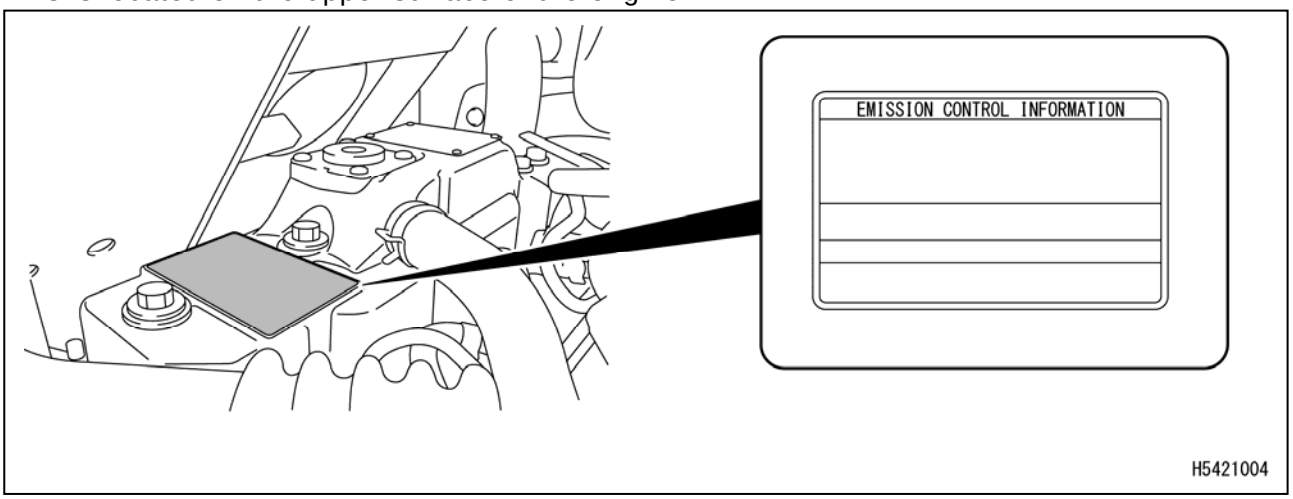

EPA: Environmental Protection Agency
(US Environmental Protection Agency)

Hour meter location

This is displayed on the machine monitor.

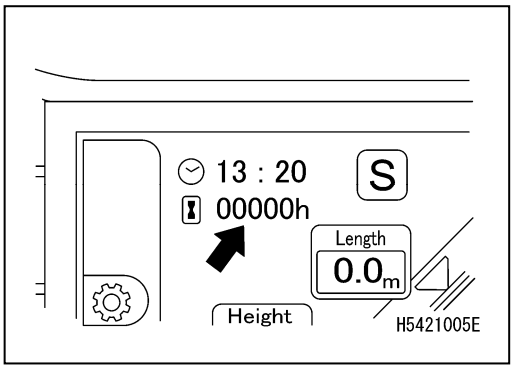

https://truckmanualshub.com/

This Page Intentionally Left Blank.

https://truckmanualshub.com/

SAFETY

1. BASIC PRECAUTIONS	16
2. OPERATION RELATED PRECAUTIONS	22
3. TRANSPORT PRECAUTIONS	38
4. TOWING PRECAUTIONS	39
5. MAINTENANCE PRECAUTIONS	40
6. SAFETY LABEL LOCATIONS	47

⚠ WARNING

All the safety precautions defined in this manual should always be read and observed.
Failure to follow the safety precautions can cause serious personal injury or death.

https://truckmanualshub.com/

1. BASIC PRECAUTIONS

Incorrect operation and servicing may result in serious bodily accidents. Before starting operation and servicing, read this manual and safety labels to observe their warnings and precautions.

1.1 PRECAUTIONS BEFORE STARTING WORK

OBSERVE THE MANUAL AND SAFETY LABELS

- Read well and understand this manual as well as the safety labels attached to various parts of this machine. Attempt to drive/operate without understanding fully may result in wrong operation that may cause personal or equipment accidents.
- Fully understand the proper use and inspection/maintenance procedures, and perform the work safely.
- Make sure this manual and the safety labels attached to various parts of this machine are legible all the time.
  Whenever illegibility or loss occurs, order us or our sales service agency and put the safety label back to the original location.

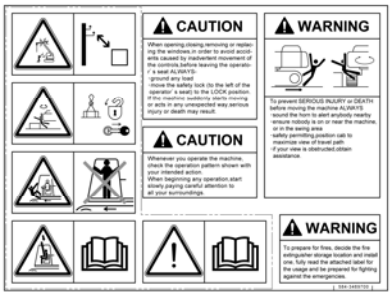

QUALIFICATION FOR OPERATION

- The operators of this machine are required to have adequate qualification.
  Be sure to acquire the qualification before engage in the operation.
  ★ See “Introduction 4. Qualifications for Operation” for details of the operational qualification.
- When performing operations using this machine, be sure to carry the “mobile crane operator’s license” or the “completion certificate of skill training course for the operation of light duty mobile cranes all the time. Also, when performing a slinging operation, always carry the “completion certificate of skill training course for slinging operation”.
- The operators are requested to receive education and training of the handling methods and other subjects at the office, and obtain sufficient operation skills before work.

COMMIT TO SAFE OPERATION

- Follow the instructions and signs given by the manager and work supervisor, and observe safety first during work.
- Follow the crane work basics during work.
- Always make sure to carry out inspections before using this machine.
- Do not work under bad weather for instance strong wind, thunder or mist.
- Do not drive under any condition when you are overtired, under the influence of alcohol or after taking soporific drugs.
- Follow all of the workplace rules, safety regulations and operation method sequences during operations and inspection/maintenance.
- Pay attention to surrounding conditions and pedestrians all the time during operation.
  Whenever pedestrian approaches unwarily, abort the operation once, and take a measure such as issuing a warning.
- When operating, be mentally prepared for unexpected situation so that you can take measures immediately.
- Never attempt any use out of the capabilities and purposes described in this manual under any circumstances.
- Observe the designated rated total load and work range when operating.
- Never attempt inattentive driving, harsh driving or awkward operation under any circumstances.
- Pull out the key when leaving the operator’s seat.

https://truckmanualshub.com/

1.2 PREPARING FOR SAFE OPERATION

PROVIDE SAFETY DEVICES FOR SURE

- Check that all guards, covers and mirrors are attached properly. Repair immediately if damaged.
- Understand how to use the safety devices well and use properly.
- Do not detach the safety devices under any circumstances. Keep control to achieve proper function all the time.
- Improper use of the safety devices may lead to serious accidents.
- Do not rely too much on the safety devices whilst operating.

PREPARE FOR ABNORMALITY

- Make sure to carry out inspections and maintenances, and make an effort to prevent accidents before happening.
- Whenever you feel an abnormality in the machine, abort the operation immediately, ensure safety and report to the manager.
- Assign in advance who takes which solution to prevent secondary accident.
- Never operate the machine when fuel or hydraulic oil is leaking from the machine. Report the manager about the abnormality, and repair the leaking point of the fuel/hydraulic oil completely before use.
  The fuel for this machine is diesel fuel. Be especially careful for the presence of fuel leak.
- Before leaving the machine, lower the hoisted load to the ground, stop the engine and pull out the starter switch key.

A0055020

TEMPORARY STORAGE WHEN ABNORMALITY IS FOUND WITHIN MACHINE

In case the machine is found with an abnormality and is therefore stored temporarily waiting for service, apply following measures to notify all persons in the office that “the use is prohibited due to failure.”

- Put on warning tags on the operation lever and other applicable parts.
  Write clearly the information such as abnormality contents, name and contact of the storage manager, and the term of storage.
- Keep it immovable when parking by, for instance, putting the blocks on the rubber tracks as pawls.
- Pull out the engine key and keep it with you.

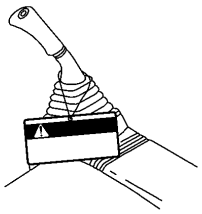

AE305910

WEAR PROTECTIVE EQUIPMENT AND CLOTHES SUITABLE FOR WORK

- Always put on a helmet and safety shoes. Be sure to wear protective equipment appropriate to the work such as goggles, masks, gloves, ear protection and safety harnesses.
- Long hair that protrudes from the helmet is in danger of getting caught in the machine, so take precautions so that it will not become entangled.
- Do not wear loose garments or accessories as these may get caught on operation levers, the start switch, the emergency stop switch or other protruding parts, leading to unexpected movement of the machine.
- Check the functioning of all protective equipment before use.

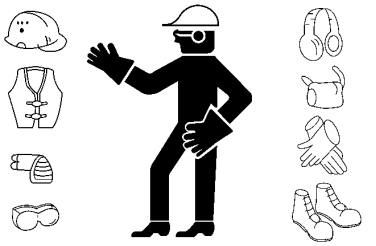

A0055010

https://truckmanualshub.com/

USE OF MACHINE THAT WAS RENTED OR PREVIOUSLY USED BY SOMEONE ELSE

Check the following subjects in writing before using any machine that was rented or previously used by someone else.
In addition, check the inspection record table for the maintenance conditions such as the periodic inspections.
(1) Crane capacity
(2) Crane maintenance conditions
(3) Behaviors and disadvantages unique to the crane
(4) Other subjects that require attention while operating
  (a) Operating condition of brakes, clutch and others
  (b) Presence/absence and lighting condition check-up of lighting and rotating lamps
  (c) Operating condition of hook, winch, boom and others

ALWAYS KEEP THE MACHINE CLEAN

- If the machine remains contaminated with soil, sand, oil and grease, it may cause slipping, tripping or tumbling when getting on the machine or maintenance servicing. Thus, wipe off the soil, sand, oil and grease sticking to the machine to keep it clean all the time.
- When washing the machine with water or cleaning it with steam, prevent its electrical devices from being directly splashed with water. Water entering the electrical system is dangerous and will cause electrical devices to malfunction resulting in faulty or improper operations. If the machine malfunctions, it may behave unexpectedly, resulting in serious injury.

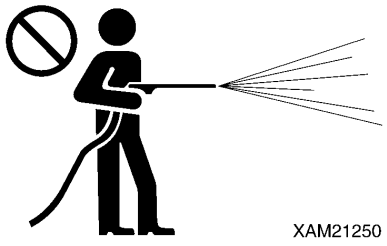

CLEAN AND TIDY UP THE OPERATOR'S CABIN.

- Before getting in the cabin, wipe off shoe soles to remove dirt, oil and grease. Stepping on the pedals with shoes that are contaminated with dirt, oil and grease may cause slipping, resulting in an accident.
- Do not leave parts or tools in the operator's cabin. The parts and tools left in the cabin may cause unexpected actions, resulting in serious injury.
- Do not attach suction cups to the window glass. It may work as a lens to cause fire.
- Do not bring any dangerous substances (such as combustibles and explosives) in the cabin.
- Do not use a mobile phone during running or operating. It may disturb operations, resulting in serious injury.

PROVISION OF FIRE EXTINGUISHER AND FIRST AID BOX

Always observe the following to prepare for injuries and fires.
- To prepare in case of fire, decide on a location and install a fire extinguisher, and make sure to read the label for terms of usage.
- Decide the location to store the first aid box. In addition, inspect the first aid box periodically and replenish the contents as necessary.
- Decide the measures to take upon an injury or fire accident.
- Decide how to contact the emergency address (for instance the emergency physician, ambulance or fire department), and put up the contact address at designated position so that anyone can make the contact.

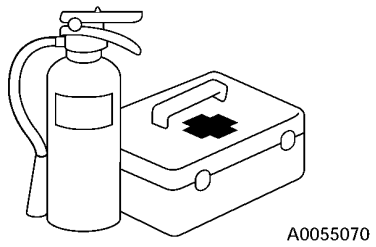

https://truckmanualshub.com/

1.3 PRECAUTIONS FOR FIRE PREVENTION

WHAT TO DO IF A FIRE OCCURS

- Turn the starter switch OFF to stop the engine.
- Get out of the machine by using a handrail and steps.
- Do not jump off the machine. You may fall and get hurt.

PREVENTING FIRE

- **Fire caused by fuel, oil, anti-freezing fluid, or wind-washer liquid**
  Attempt to let a fire approach the fuel, oil, anti-freezing fluid, or wind-washer liquid may result in catching fire. Strictly observe the following.
  - Do not smoke or use fire near the machine.
  - Before refueling, be sure to stop the engine.
  - Do not leave the site when replenishing the fuel or oil.
  - Close and securely tighten the cap of fuel tank and hydraulic oil tank.
  - Do not spill fuel on an overheated surface and parts of electric system.
  - After refueling, cleanly wipe off spilt fuel and oil.
  - Put rags and other combustibles smeared with oil in a safe container and store it in a safe place.
  - Use incombustible cleaning oil for the objects such as the components, and do not use diesel fuel, petrol or anything else that may catch fire.
  - Do not weld or gas flame-cut piping and tubing containing flammable solutions.
  - Store the fuel and oil in a specified well-ventilated location and prohibit public access.
  - Before performing grinding or welding of the machine, move inflammables to a safe place.
- **Fire due to deposition or adherence of combustibles.**
  - If any of such combustibles as dead leaves, chips, paper litters, and charcoal dust is deposited on or sticking to the peripheral area of engine exhaust manifold, muffler, battery or under-cover, remove it.
  - To prevent fire caused by bonfire sparks or other types of fire that can be caught, remove such combustibles as dead leaves, chips, paper litters, and charcoal dust that may be deposited on or sticking to the peripheral area of cooling units (radiator and oil cooler).
- **Fire originating from electric wiring**
  Fire may be incurred by a short-circuit of electric system. Strictly observe the following.
  - Keep every connection of electric wiring clean and fix it securely.
  - Check for any loosening or damage of electric wiring on a daily basis, and if any loosened connector or wiring clamp is found, re-tighten it and repair or replace any damaged electric wiring.
- **Fire originating from piping**
  Check the clamps and cushions of each hose and tubing to ensure that they are securely fixed. Any loosening may give rise to vibration during operation, rubbing with other parts to damage hose, or spouting of high pressure oil, resulting in fire or physical injury.
- **Explosion triggered by lighting fixture**
  - When inspecting fuel, oil, battery electrolyte and coolant water, use a lighting apparatus of explosion-proof specifications.
  - When disconnecting power source from the machine, follow the instructions described in this manual.

A0055020

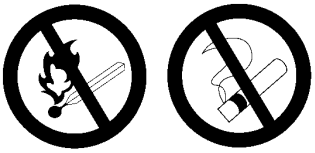

A0055040

A0055160

https://truckmanualshub.com/

1.4 CAUTIONS IN GETTING ON AND OFF THE MACHINE

USE A HANDRAIL AND STEPS WHEN GETTING ON AN OFF THE MACHINE

When getting on and off the machine, be sure to observe the following precautions in order to prevent physical accidents such as slipping and falling or tumbling.

- Use the arrow-marked handrails and steps shown in the figure at the right when getting on and off the machine.
- When getting on and off the machine, always face the machine, allow the three parts of limbs (both feet and a hand, or a foot and both hands) to come into contact with the hand rails and steps to hold your body.
- Before getting on and off the machine, check the handrails and steps for any damage or loosening, and for any oil or dirt sticking to the machine surface. When oil or dirt is deposited, do not fail to thoroughly clean it so that the surface is not slippery. Repair any damage and re-tighten any loosened bolts.
- Do not grasp operating levers and locking levers when getting on and off the machine.
- Never step on the engine bonnet and cover that are not treated with anti-skidding coating.
- Do not get on or off the machine while holding a tool in hand.
- Do not jump on or off the machine. Also, do not get on or off the moving machine.
- Even if the machine unexpectedly begins to move unmanned, never jump on it to stop it.

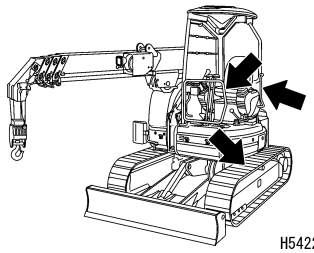

CAUTIONS IN STANDING UP FROM THE OPERATOR'S SEAT OR LEAVING THE MACHINE

- Before standing up from the operator's seat, such as to make adjustments to the operator's seat, be sure to retract the crane, set the lock lever (1) to "LOCK" position (L) and to stop the engine. Inadvertently touching operating levers may cause the machine to suddenly move and invite serious injury.
- When leaving the machine, be sure to retract the crane, set the lock lever (1) to "LOCK" position (L), and stop the engine. Also apply every lock, be sure to bring the key back, and store it in a specified place.

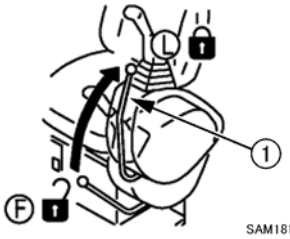

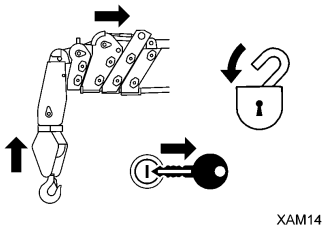

https://truckmanualshub.com/

1.5 OTHER PRECAUTIONS

CAUTION AGAINST BEING CAUGHT

In the periphery of the upper slewing body and crane unit, the clearance varies with the motion of derricking cylinder and winch. If being caught in it, serious injury may occur.
Keep persons away from all rotating and telescoping sections.
Never allow your body or part of it to get in the following gaps:
- Between the boom and the upper slewing body.
- Between the boom and the derricking cylinder.
- Between winch drum and wire rope.
- Between each sheave and wire rope.

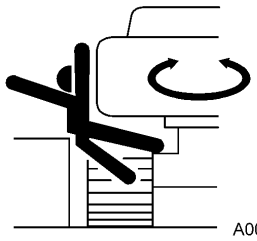
A0067200

REMODELING THE MACHINE IS PROHIBITED

Do not modify the machine without our written consent under any circumstances. Particularly, partial welding of the machine may damage the safety device.
The modification raises a safety issue, so consult us or our sales service agency beforehand.
We cannot be held responsible for any personal injury or failure caused by remodeling of the machine that was performed without consulting us.

CAUTIONS ON ATTACHMENTS AND OPTIONAL UNITS

- We cannot be held responsible for any personal injury, failures or property damage of attachments and optional units that are not recognized by us.
- Installing an attachment or optional units may give rise to safety and legal issues, and thus the customer is kindly requested to consult with us or our sales service agency beforehand.
- Depending on the combination of attachments and optional units they may cause interference with operating cabin and machine parts. Interference with the machine during operation may cause serious injury. Check to ensure that the attachments and optional units to be used would interfere with the machine, and use them within the interference-free range.
- Never fail to read the descriptions on the attachments and optional units given in the instruction manual of the installed attachment as well as this manual.

CAUTIONS ON THE CANOPY WINDOW

Due to their resin construction, when the ceiling window or right side window is scarred, visibility is impaired and the probability of breakage rises. Replace the scarred ceiling window glass at an early stage. Leaving the scars increases the risk of breakage by any object falling onto the ceiling window, resulting in injury.

CAUTIONS ON RUNNING THE ENGINE INDOORS

To prevent the risk of petrol poisoning from starting the engine/handling fuel and cleaning oil/painting indoors or at a location with bad ventilation, open the windows and exit doors.
If the ventilation is insufficient even after opening the windows and exit doors, set up a ventilation fan.

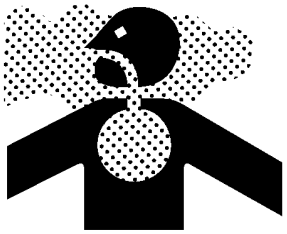
A0055060

https://truckmanualshub.com/

2. OPERATION RELATED PRECAUTIONS

2.1 PRECAUTIONS ON WORK SITE

SURVEY AND SAFETY ASSURANCE OF WORK SITE

A number of risks that may cause serious injury are imbedded in a work site. Before starting work, check the following matters beforehand to ensure that no danger is present at the work site:

- When working near straw-thatched roofs, dead leaves or dead grass, beware of those fire-catching object.
- Investigate the ground and road surface condition of the work site and decide the best working method. Do not operate the machine at a site where risk of landslide or rock fall exists.
- Flatten the inclination of the work site before starting work.
- When working over the roadway, enforce “keep out” by, for instance, assigning guides or surrounding the site by barriers, and ensure the safety of the traffic vehicles and pedestrians.
- Enforce “keep out” to prevent people from entering the work site and apply measures to prevent people from approaching. Attempt to approach the moving machine may result in pinching or hard collision by contact, and may result in serious accidents and deaths.
- When running on a shallow bottom stream or weak ground, examine the water depth, water flow velocity as well as ground condition and land features in advance in order to avoid hazardous place for travelling and operation.
- The ground of a zone adjacent to a cliff, road shoulder, and deep ditch is likely to be loosened, and thus it should be avoided for running and performing operation. The ground in such a zone may be collapsed by the mass and/or vibration of the machine, which may trip or fall. Be especially careful after rain, use of dynamite, or earthquakes, as the ground will be unstable.
- The ground of an area near an earth fill or in the vicinity of a dug gutter may be collapsed by the mass and/or vibration of the machine, resulting in the trip or fall of the machine. Before starting operation, take necessary measures to make the ground intact and safe.

SECURING VISION

Running and operating in places with poor visibility prevent the operator from detecting hazards around the machine and recognizing work site status, and thus may cause serious injury.
When running and operating the machine in place with poor visibility, strictly observe the following:

- If adequate view cannot be secured, deploy personnel as a marshaller as required. In that case, limit the number of signaling marshaller to one person.
- In a dark place, turn on the working light and head lamps equipped with the machine, and use additional lighting devices as required to light up the work site.
- When visibility is spoiled by fog, snow, rain or sand dust, stop the operation.
- If the mirrors mounted on the machine are contaminated, clean them and adjust the field of view to secure visibility.

RECOGNISING THE SIGNAL OF MARSHALLERS AND STREET SIGNS

- To ensure the identification of weak road shoulder and ground, install sign boards. Further, for a place with poor visibility, appoint marshaller as required. In that case, limit the number of signaling marshaller to one person.
  The operator should pay attention to sign boards and follow the marshaller’s instructions.
- All the personnel involved should understand the meaning of every signal, sign and sign board.

BEWARE OF ELECTRICAL CABLE ABOVE

- Do not let the machine touch the electrical cables above.
  High voltage cables may also inflict electrical shock by close proximity.
- Slinging operators are likely to suffer electrical shocks.
  Always observe the following to prevent accidents.
  - If the boom or the wire ropes may contact an electrical cable in the workplace, consult the electricity company and make sure that the measures (for instance placement of a guard personnel or application of wrap tubes and warning tags to the electrical cable) stipulated by the related regulations are taken before starting work.
  - Put on rubber soled shoes and rubber gloves, and be careful that the body parts unprotected by rubber or other insulation do not contact the wire rope or the machine frame.
  - Place a guide and let them watch so that the boom, wire rope or machine frame does not go near the electrical cable too much. Before doing so, decide the emergency signs and other necessities.
  - Ask the electricity company for the voltage in the electrical cables at the work site.
  - Keep a safe distance shown in the following table between the boom/machine frame and electrical cables.

	Voltage of Electrical Cable	Minimum Safe Distance
Low voltage (Distribution cable)	100/200 V	2 m
	6,600 V	2 m
Special voltage (Power cable)	22,000 V	3 m
	66,000 V	4 m
	154,000 V	5 m
	187,000 V	6 m
	275,000 V	7 m
	500,000 V	11 m

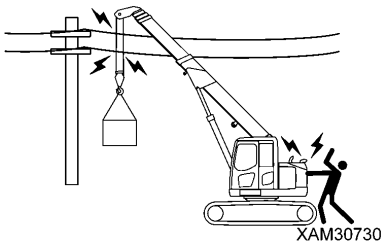

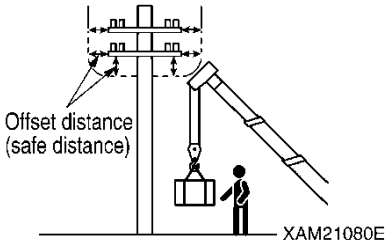

MEASURES WHEN ELECTRIC CHARGE ACCIDENT OCCURS

If an electric charge accident occurs, react calmly and take measures in the following procedure.

1. Report

Immediately report to the electricity company or related management company, and receive instructions for the power transmission stop, emergency procedures and related matters.

2. Evacuation of related personnel from vicinity of machine

Evacuate all personnel, including workers, from the vicinity of the machine to prevent secondary disasters.

Personnel who suffered electrical shock by holding a sling rope, guide rope or other conductor when the machine was charged should evacuate by their own effort.

Do not try to help personnel affected by electric shock. Otherwise, secondary electrical shock accident will occur.

3. Emergency procedure

In the case of personnel receiving an electric shock due to the machine being electrically charged, do the following:

(1) If the machine is operational, immediately move it to a safe location away from the cause of the electrical charge. Take care not to break or disrupt the distribution power cable.

(2) Move the machine to a safe location, and after making sure the machine is not electrically charged, take the affected personnel to the hospital.

4. Measure after accident

After the accident, do not reuse as is. Such attempt may cause unexpected accidents and enhances failures.

Ask us or our sales service agency for repair.

https://truckmanualshub.com/

CAUTIONS WHEN OPERATING CRANE IN LOCATION WITH HIGH OUTPUT MICROWAVE EMISSION

Operating the crane near high output microwave emission equipment such as a radar or TV/radio broadcast antenna causes the crane construction to be exposed to the microwave and generates induced current, therefore is very dangerous. In addition, the mechatronics may become haywire.
Establish grounding between the machine frame and the ground when working in such location. In addition, slinging operators are requested to wear rubber boots and rubber gloves since risk of electrical shock by contacting parts such as the hook or wire exists.

BEWARE OF ASBESTOS DUST

Inhalation of asbestos dust may result in lung cancer. This machine does not contain asbestos, but asbestos may be found in the wall, ceiling or other construction locations within the work site of this machine. In addition, be careful of the following when working with a material that may contain asbestos.

- Put on designated dust free mask and/or other protection equipment where necessary.
- Do not use compressed air for cleaning.
- Spray water when cleaning to prevent airborne asbestos dust.
- Always work at windward location when operating the machine at a site that may contain asbestos dust.
- Do not allow unauthorized personnel to approach the work site.
- Strictly observe the assigned rules related to the work site and environmental standards.

A0055060

https://truckmanualshub.com/

2.2 CAUTIONS WHEN STARTING ENGINE

PAY ATTENTION TO WARNING SIGNS

When warning sign “DANGER. Do NOT operate” is put up, the machine is being inspected and under maintenance. Do not start the engine and refrain from touching operating levers. Disregarding the warning sign to operate the machine may give rise to the danger of involving the maintenance personnel into the rotating parts or movable parts of the machine, resulting in serious injury.

INSPECTING AND ADJUSTING BEFORE STARTING ENGINE

Prior to starting the engine at the beginning of the day, perform items under “Operation 3.1 Inspections and Adjustments Before Starting the Engine” and conduct the following inspections. Omitting these inspections may cause serious bodily accidents.

- Never fail to execute the inspection before starting work.
- Remove the contamination on the window glass surface to secure good view.
- Clean the lens surface of head lamps and working lights and ensure that they are properly lit.
- Check the coolant water level, fuel level, engine oil pan level, air cleaner for any clogging and electric wiring for any damage.
- Adjust the operator’s seat to the operator’s posture for easy work. Also, check seat belts and their mounting fixtures for any damage or abrasion.
  ★ Refer to the descriptions under “Operation 3.1.2 Pre-operation Inspection (Adjusting the Operator’s Seat)”.
- Adjust the mirrors to the best position for commanding a good view of rear scene from the operator’s seat.
  ★ Refer to the descriptions under “Operation 3.1.2 Pre-operation Inspection (Adjustment of Mirrors)”.
- Check pedals for any dirt or foreign matter deposited on their movable parts and ensure that they can function satisfactorily.
- Check instruments to ensure that they function properly and each of the operating levers is in its neutral position.

Always repair if any result of the above is faulty.

CAUTIONS BEFORE STARTING ENGINE

- Make sure nobody is on or under the machine and in its vicinity and nobody or no hazard is found within the boom slewing range.
- Do not allow anyone other than the operator to get on the machine.
- Start the engine only when the operator is sitting on the operator’s seat.
- Check to ensure that each of the operating levers is in its neutral position.
- Check to ensure that lock lever (1) is in the “LOCK” position (L).
- Honk the horn for warning before starting the engine.
- Do not start the engine by short-circuiting the starter circuit. This may cause a fire.

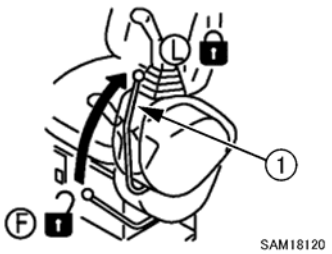

CAUTIONS UNDER COLD WEATHER

- Defrost and remove snow from the slewing gear, boom and winch. Check their movements before starting work.
- Operating the machine without sufficient engine warm-up causes slow response of the machine to the operation of levers and pedals, and thus unexpected motion may occur against the operator's will. Do not fail to execute the engine warm-up. The engine requires an adequate warm-up time especially in cold climates.
- When the battery electrolyte is frozen, do not recharge the battery or start the engine with another power source. Such act may cause the battery to catch fire or explode. De-freeze the battery electrolyte and check for fluid leak before re-charging or starting the engine by using another power supply.
- After end of the work, wipe off and put on a cover if substances such as condensation, snow or mud are stuck to the wire harness, connector (1), switches, sensors or similar part. If the infiltrated condensation and/or similar substance freeze, the machine may operate improperly upon the next use and cause unexpected accidents.

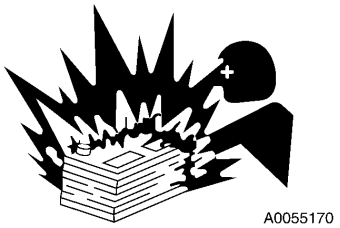

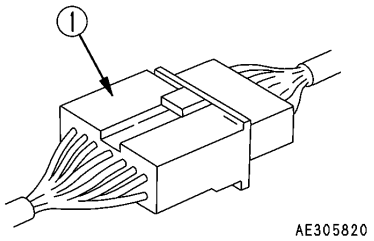

CAUTIONS WHEN STARTING UP USING BOOSTER CABLE

Wrong booster cable connection method may result in fire, so always observe the following.

- When using a booster cable for engine start, perform the 2-person operation by one person on the operator's seat and another on the battery side.
- When starting the engine using other machine, be careful to prevent contact between the normal machine and broken machine.
- Keep the starter switch key of both the normal machine and the broken machine in "OFF" position when the booster cable is connected.
- Do not connect to wrong side [connecting (+) to (−), (−) to (+)] when connecting the booster cable.
- Start connecting from (+) terminal first, but start disconnecting from (−) terminal (ground) first.
- For the final earth connection, connect to the negative (−) terminal of the battery of the failed machine.
  - ★Refer to the description under "Operation 8.3.4 Starting Engine with Booster Cable".
- Avoid contact between clips of the booster cable, and contact between a clip and the machine when disconnecting the booster cable.

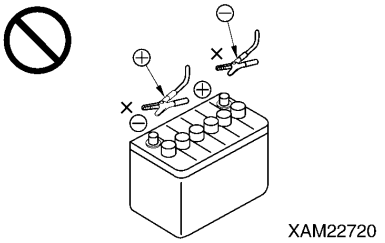

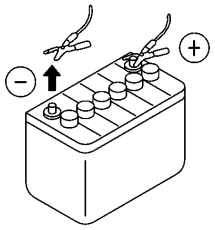

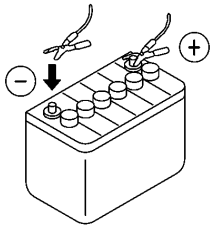

https://truckmanualshub.com/

2.3 PRECAUTIONS FOR STARTING CARRIER AND OPERATING CRANE

INSPECTION BEFORE STARTING OPERATION

Omitting the inspections after starting the engine results in delay to discover the machine abnormalities, and may result in accidents and machine damages.
Inspection should be carried out in a clear area. No unauthorized persons should be able to approach the machine.

- Ensure that movements of the machine correspond to the symbols on the controller.
- Check the operation status of devices, running status of the machine, winch wind up/down, boom derricking, and crane operating status such as telescoping and slewing.
- Inspect the sound, vibration, heat and odour of the machine, and check for instrument errors, air leaks, oil leaks, fuel leaks, water leaks and other bad factors. Be especially careful for the fuel leak.
- Always repair broken parts whenever an abnormality is found.
  Attempt to use without servicing may result in unexpected accidents and/or machine failures.

CAUTIONS ON MACHINE FORWARDING/REVERSING AND SLEWING

Always observe the following to prevent serious injuries and accidental death when moving the machine.

- Set the machine to the travelling posture in the right figure.
  Before travelling, be sure to stow the hook block completely.
  - Before travelling, move the sprocket to the rear of the machine. Leaving the sprocket in front of the machine causes the direction of actual running to be in reverse of the running lever, and thus the machine may move toward undesired direction, resulting in serious bodily accidents.
  - Make sure the boom is fully lowered and retracted.
  - When moving the machine for a short distance, fix the hook block in the retracting position at the tip of the boom. When moving it for a long distance, fix the hook block to the hook holder at the front end of the upper slewing body.

  ★Refer to the descriptions under “Operation 3.6 Machine Travelling Posture”.
- If any person is staying around the machine, they may come into contact of the machine or may be caught by it, resulting in a serious bodily accident.
  Before starting to move, strictly observe the following:
  - Operate the machine only when the operator is sitting on the operator’s seat.
  - Do not fail to wear the seat belt. Otherwise, the operator may be forced to jump out of the cabin because of an emergency braking, resulting in injury.
  - Make sure to check around again so that no one or no object is in the vicinity before starting to move.
  - Before starting to move, be sure to honk the horn to warn people around the machine.
  - When running, check to ensure that the travelling alarm sounds normally.
  - When there is a view-obstructing range in the rear of the machine, appoint a marshaller to ensure that no contact accident will occur and slew the machine by paying adequate attention.
    Even if the machine is equipped with mirrors and the rear observation camera, be sure to appoint a marshaller.

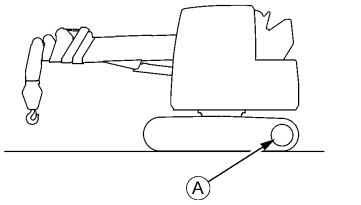

XAM14561

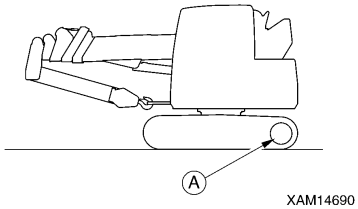

XAM14690

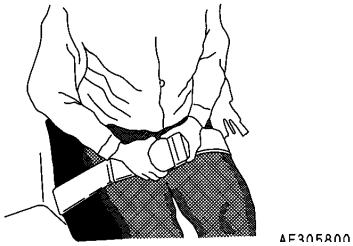
AE305800

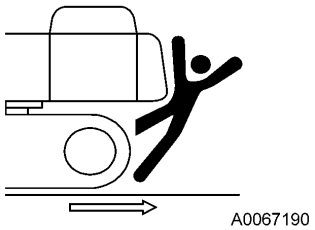
A0067190

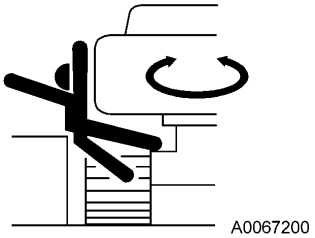
A0067200

https://truckmanualshub.com/

CAUTIONS WHEN TRAVELLING

Always observe the following to prevent serious injuries and accidental death when moving the machine.

- Set the machine to the travelling posture in the right figure.
  ★ Refer to the preceding subsection “CAUTIONS ON MACHINE FORWARDING/REVERSING AND SLEWING”.
- Do not attempt looking sideways or other dangerous act when driving.
- Do not over speed, start moving/stopping/slewing suddenly, or meander since such acts are dangerous.
- During travelling, keep an adequate distance from persons, structures and other machines to prevent any contact accident.
- Avoid moving over any obstacle. Travel as slowly as possible when moving over an obstacle for unavoidable reason. Since the machine tends to tumble more easily in the lateral direction rather than in the longitudinal direction, never attempt to move over an obstacle that will cause the machine to inclined to leftward or rightward.
- When travelling on a rough terrain, keep the vehicle speed at low level to avoid tumbling and also avoid any abrupt change of travelling direction. Such may cause the machine to lose balance or damage the machine or nearby object.
- When running on a bridge or crossing over a structure, check the withstand strength of the bridge or viaduct against the machine mass beforehand. Further, when running on a public road, check with the competent authorities and follow their instructions.
- When operating the machine in a place where machine height is restricted such as in a tunnel, in a building, under an overpass or cables, pay close attention to prevent the machine and crane from coming into contact of those objects and operate the machine slowly.

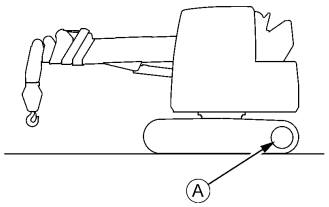

XAM14561

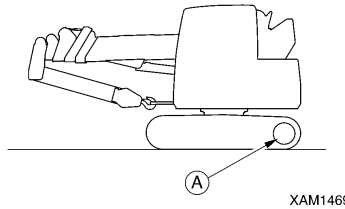

XAM14690

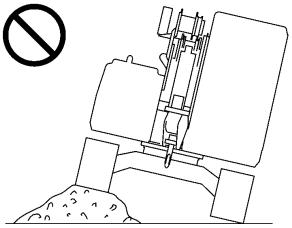
XAM14581

BE CAREFUL WHEN TRAVELLING OVER SLOPE

ALWAYS observe the following to prevent serious injuries and death accidents when travelling over a slope for unavoidable reason.

- When running on a slope, be sure to store the hook block in the hook holder at the front end of the upper slewing body to form a running posture. Any simplified fixation of the hook at the tip of boom gives rise to the risk of loosening during running.
  Refer to the descriptions under “Operation 3.6 Machine Travelling Posture” for the travelling posture of the machine.
- When running on a slope having an inclination of 10 degrees or more, climb the slope in the reverse direction and run downhill in the forward direction. Thus, always allow the machine front to face the valley when running on a slope. Climbing the slope in the forward direction and going downhill in the reverse direction cause the machine to be unstable, giving rise to the risk of tumbling or lateral skidding.
- When travelling on a slope, face the machine perpendicular to the slant face and never change the direction or travel transversely.
  Practice safe travelling by for instance lowering to the plain land and divert.
- Always keep such condition during running that the machine can stop any time when it slips or becomes unstable.
- When running downhill, lower the engine revolution and set the running lever close to the neutral position and run in a low speed.
- When running on a ground covered with grass and leaves or on a wet steel plate, keep the speed to minimal. If the ground in such condition is inclined only slightly, it is extremely slippery.
- If the engine comes to a sudden stop, immediately return each operating lever to its neutral position, and then restart it.

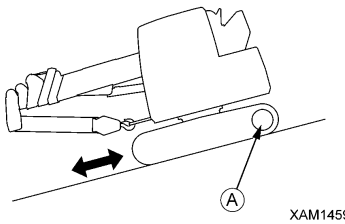

XAM14591

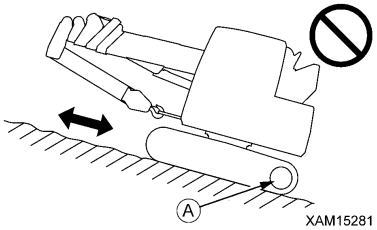

XAM15281

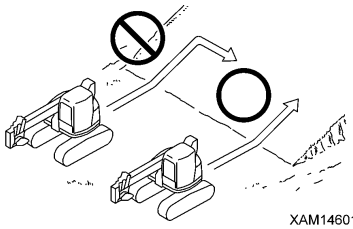
XAM14601

https://truckmanualshub.com/

BE CAREFUL OF TRIPPING ON UNSTABLE GROUND

Always observe the following to prevent serious injuries and death accidents when travelling over an unstable ground for unavoidable reasons.

- Do not enter soft ground area. The machine may get stuck.
- The ground near cliff, roadside and deep gully is unstable, so avoid going near such ground as much as possible.
  The machine may trip or fall when the ground loosens due to mass and/or vibration of the machine. Be especially careful after rain, use of dynamite, or earthquakes, as the ground will be unstable.
- Avoid going near the earth fills or vicinity of dug gutter that are instable.
  Crumbles caused by mass and/or vibration of the machine may cause the machine to tilt.

CAUTIONS WHEN TRAVELLING SNOW COVERED OR FROZEN GROUND

ALWAYS observe the following to prevent serious injuries and death accidents when travelling over snow covered ground or frozen road for unavoidable reason.

- The snow covered grounds and frozen roads cause slips even when the inclination is small, so decrease the speed when travelling and avoid sudden starting/stopping/slewing. Uphill and downhill are especially likely to cause slips and thus dangerous.
- Frozen ground tends to be weak with the increase of atmospheric temperature, and may cause the machine to tumble or obstruct the operator to get off. Be very careful.
- Moving into an area covered with deep snow may cause the machine to tumble or dive into the snow. Be cautious of erroneously deviating outward from the road shoulder or driving into a snow drift.
- Running on a snowbound site may encounter the risk of tumbling or collision because of an invisible road shoulder or snow-covered installations. Be very careful.
- Refrain from directly touching metal surface with your hands or fingers in cold and harsh weather conditions.
  Touching metal surface may result in skin freezing to the metal surface.
- Remove snow and/or ice laid on the machine that causes the safety nameplates to be hard to read. Be especially careful to securely remove those that are on the boom and thus may fall.

CAUTIONS WHEN PARKING

- For parking, select an area with flat and solid ground.
- For parking, select an area without the risk of landslide, rock fall and water submersion.
- When parking, set the machine to the “travelling posture” as shown in the figure at the right.
  - Make sure the boom is fully lowered and retracted.
  - When parking the machine for a short period of time, fix the hook block in the retracting position at the tip of the boom. When parking for a long time, fix the hook block in the hook holder at the front end of the upper slewing body.
- When inevitably stopping the machine on an inclined area, strictly observe the following:
  - Make sure the boom is fully lowered and retracted.
  - When parking the machine for a short period of time, fix the hook block in the retracting position at the tip of the boom. When parking for a long time, fix the hook block in the hook holder at the front end of the upper slewing body.
  - Direct the boom toward the valley.
  - To keep the machine immobile, apply a block as a chock.
- When leaving the machine, strictly observe the following:
  - Set the lock lever (1) to “LOCK” position (L), and stop the engine.
  - Apply all locks. Do not fail to remove the starter key to prevent the machine from operated by other personnel without approval, and keep it in a specified place.

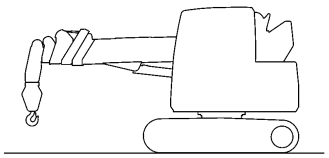

XAM14570

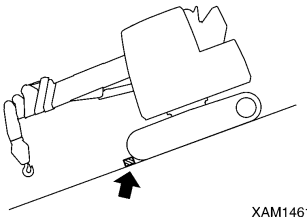

XAM14610

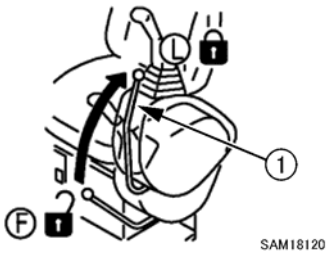

SAM18120

https://truckmanualshub.com/

2.4 CAUTIONS DURING CRANE OPERATION

INSPECTION BEFORE STARTING WORK

Check that the safety devices and crane operate properly.

- Operate each of the operation levers, pedals and switches under no load, and check that operations take place without any abnormality.
  Repair immediately if any abnormality exists.
- Check such safety devices as the moment limiter (overload prevention device), over-hoisting prevention device and over-lowering prevention device to ensure that they function normally.

CAUTIONS WHEN HANDLING THE MACHINE MONITOR

- Use / store the machine monitor under the following ranges of ambient temperature.
  ★ Operating temperature: -30 to 60 °C Storage temperature: -30 to 80 °C
- Avoid direct sunlight so that the ambient temperature in the region of the machine monitor does not exceed the above range.
- Avoid locations with strong acid or alkaline atmosphere as much as possible. Otherwise, unexpected failures may occur.
- Do not allow external objects etc. to impact the machine monitor body.
  Such attempt may damage the case and may result in failures and improper operations.
- Do not press the screen of the machine monitor with excessive force or press with sharp objects such as the tip of a screwdriver. This may damage the screen and result in failure or incorrect operation.
- Do not disassemble the machine monitor. Such attempt may result in failures and improper operations.

CAUTIONS WHEN SETTING MOMENT LIMITER

- In the moment limiter, the moment is calculated on the assumption that the machine is placed horizontally.
  If crane work is performed without the machine being placed horizontally, no forecast or warning is issued even when the rated total load is approached.
  Never fail to check the inclination of the machine by using the level.
- When using the moment limiter, check to ensure that the indicators of boom angle, boom length and actual load are interlocked with the crane motion to give correct values. If the crane is used with no correct indication given, correct measurement results cannot be obtained, causing serious physical injury due to tumbling or damage of the machine.
- When using the moment limiter, be sure to check that the setting of wire falls of the moment limiter matches the wire falls of the crane. If the number of falls of wire does not match, be sure to change either the setting of number of falls of wire of the moment limiter or the number of falls of wire of the crane, to make both match with each other. If used without matching the number of wire falls, correct measurement results cannot be acquired, possibly leading to breakage of the wire rope and serious bodily injury.
- Do not change the setting carelessly during measurement with the moment limiter. Otherwise, correct measurement results cannot be obtained, causing serious physical injury due to tumbling or damage of the machine.

CAUTIONS FOR SELECTING A PLACE TO INSTALL

Always place the machine on a level, stable and solid ground.
It is dangerous to install on any of the following places:

- Simple asphalt pavement
- Thin concrete pavement
- Flagstone pavement
- Areas where under the pavement surface is hollow due to water erosion and the top soil appears to be hard but soft in the ground
- Soft ground near a road shoulder or dug hole
- Slope

https://truckmanualshub.com/

CAUTIONS WHEN WORKING ON A SLOPE

When inevitably perform operation on a slope, provide an earth fill (B) to create a horizontal, solid and strong footing for installing the machine in order to prevent it from tumbling.
Attempting a diagonal hoisting without ensuring the horizontal installation of the machine not only disturbs the normal functioning of the moment limiter (overload prevention device), but also affect the machine with an unexpected force, resulting in tumbling or damage of the machine.

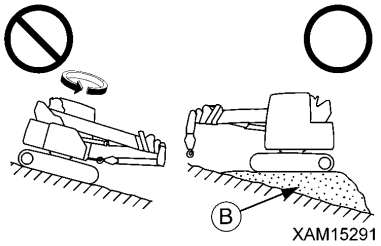

FOLLOW INSTRUCTIONS AND SIGNS WHEN WORKING

- When operating the crane, appoint a work supervisor and mutual signs beforehand, and follow the work supervisor and signs during operation.
- When operating at a operator's blind spot, especially follow the instructions and signs of the work supervisor and operate with caution.
- When operating the crane, there is a danger of colliding with slewing boom and upper slewing body and of the gaps between movable parts of the derrick cylinder that may catch body parts such as your arm or finger.
  The operator is requested to make sure no one is within the working radius of the crane before operating.

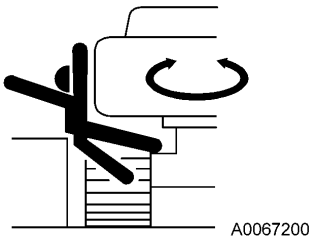

CAUTIONS UNDER COLD WEATHER

- Defrost and remove snow from the slewing gear, boom and winch. Check their movements before starting work.
- Check the winch brake to ensure that it works properly.
- Operating the machine without sufficient engine warm-up causes slow response of the machine to the operation of levers and pedals, and thus unexpected motion may occur against the operator's will. Do not fail to execute the engine warm-up. The engine requires an adequate warm-up time especially in cold climates.
  ★ For details concerning warm-up, refer to "Operation 3.3.1 Warm-up".
- Avoid revving up the engine immediately after starting it.
- Deposited snow within the crane operation range may cause tumbling of unloaded objects or catching feet of operators around the machine. First remove snow before starting a crane operation.
- In cold weather conditions, check that the load before being hoisted is not frozen to the ground or other substance. Attempt to hoist without knowing the load is frozen and stuck to the ground or other substance is dangerous.
- At the end of the work, if substances such as condensation, snow or mud are stuck to the wire harnesses, connectors, switches, sensors or similar parts, wipe them off and put covers on them. If the infiltrated condensation and/or similar substance freeze, the machine may operate improperly upon the next use and cause unexpected accidents.

https://truckmanualshub.com/

PAY ATTENTION TO WEATHER INFORMATION

- A risk of lightning exists in case of a thunderstorm, so abort operating the crane, immediately lower the load and retract the boom.
- Wind can cause the hoisted load to move back and forth, which could cause the machine to become unstable. If the hoisted load is affected, immediately lower the load and retract the boom.
- If the maximum instantaneous wind speed is 10 m/s or greater, abort operating the crane, immediately lower the load and retract the boom.
- Even when the maximum instantaneous wind speed is below 10 m/s, the bigger the hoist load, the higher the hoist load position, or the longer the boom can increase the effect from the wind. Be very careful during the work.
- When operating the extended boom, the winch wire rope and electric signal cables are prone to be blown up by winds, and thus be cautious of the operation. Similarly, the peripheral area of a high-rise building, winds blow its sides and may gather their velocity much higher, which deserve attention.
- When a load such as a steel plate that has a large area exposed to wind is being hoisted, the wind arriving from front/rear/side of the boom may cause the machine to trip or damage the boom. Be very careful during the work.
- The higher the boom is derricked, the higher the probability of tumbling backward is raised by wind blowing from ahead. Thus, adequate attention is required in the operation.
- When an earthquake occurs, abort the operation and wait until it is over.

★ The following table indicates approximate relation between the wind speed and wind effect. The wind speed mentioned in the weathercast is mean wind velocity (m/s) during 10 minutes at 10 m above the ground.

Force	Wind Speed (m/s)	Effect On Land
0	Less than 0.3	Smoke rises vertically.
1	0.3 or more and less than 1.6	Wind motion visible in smoke.
2	1.6 or more and less than 3.4	Wind felt on exposed skin.
3	3.4 or more and less than 5.5	Leaves and small twigs move in constant motion.
4	5.5 or more and less than 8.0	Dust and loose paper blow up. Small branches begin to move.
5	8.0 or more and less than 10.8	Bushes with leaves start to sway. Waves form on the face of pond/swamp.
6	10.8 or more and less than 13.9	Large branches begin to move. Whistling heard in electrical wires. Use of umbrella becomes difficult.
7	13.9 or more and less than 17.2	Whole trees start to shake. Effort needed to walk against the wind.
8	17.2 or more and less than 20.8	Twigs broke from trees. Progress impeded.
9	20.8 or more and less than 24.5	Light structure damage. Slates blown off.
10	24.5 or more and less than 28.5	Trees uprooted. Considerable structural damage.
11	28.5 or more and less than 32.7	Widespread structural damage.

https://truckmanualshub.com/

CAUTIONS WHEN SLINGING

- Check the following before hoisting a load.
  Attempt to hoist the load without checking may result in serious accidents by dropping the load or tripping.
  - Observe the values in the rated total load chart.
  - Hoist from the centre of gravity of the load.
  - Check that the wire rope of the hook block is vertical.
  - When the load leaves the ground, stop winding up the load once and check whether the load is stable.
- Before hoisting a slung load, always check whether the sling wire rope “retainer device” of the hook block is hung correctly. If the “retainer device” is not hung, the wire rope may leave the hook block and cause the load to fall resulting in a serious accident.
- Larger wire rope angle when hoisting the load increases force that applies to the wire rope even when the load weight is unchanged, thus may cause the wire rope to snip. Give due consideration to slinging operation so that excessive force is not applied to the wire rope.
- Hoist only 1 load at a time.
  Attempts to hoist more than one load may cause the hoist bracket to hit and damage the other hoisted load, or the loads move and lose balance, causing serious accidents such as tripping.
  Do not hoist more than 1 load at a time even if the total combined weight is within the rated total load.
- Hoisting of lengthy load causes the load to lose balance and is dangerous.
  In the case of such load, hoist vertically by using a cramp, or achieve balance of the hoisted load by applying a rope to both ends of the load.

CAUTIONS WHEN HANDLING WIRE ROPE

- Wire ropes can wear out from constant use or old age, so be sure to inspect every time before work, and replace immediately if at or beyond the replacement standard.
  At the same time, inspect the sheave at the tip of the boom and the sheave of the hook block. Damaged sheaves accelerate the damage of the wire ropes.
- Use wire ropes specified by us.
- The operator may be injured by breaking wire strands.
- Always wear leather gloves when handling the wire rope.
- Do not use a wire rope of which any of the following applies:
  - 10% or more of strands (except a filler wire) in 1 twist of a wire rope are snipped.
  - The wire rope diameter abrasion is beyond 7% of the nominal diameter.
  - Kinked wire rope.
  - Excessively deformed or corroded wire rope.
  - Affected by heat or sparks.

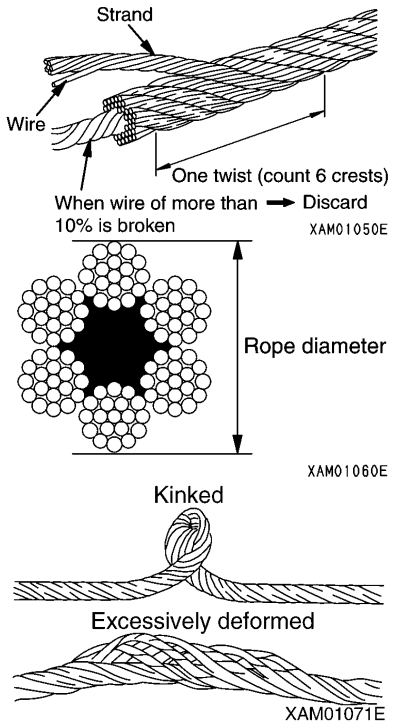

https://truckmanualshub.com/

CAUTIONS WHEN OPERATING CRANE

- Stability of a crane is decisively critical in the transverse direction of the carrier. In the diagonal direction, although stability is increased, exceeding the rated load may result in damage of the boom or machine body. Do not turn the moment limiter (overload prevention device) off, even if operating in the diagonal direction.
- Be sure to check that the override switch is at the “OFF” (auto) position before operating the crane. Do not attempt to operate the crane with the override switch kept set to the “ON” (cancel) position. The override switch should be at the “ON” (cancel) position only when the moment limiter is faulty or during inspection or maintenance works.
- Perform work while paying attention to the display and warning of the monitor of moment limiter (overload prevention device).
- Attempt to work beyond the capacity of the machine may cause serious accidents and failures caused by for instance tripping or fluctuation. Observe the rated total load chart when operating the crane.
- Perform the crane operation slowly. Sudden use of lever or accelerator may cause risks such as shaking, dropping of the load or collision with the surroundings. Be especially careful to be slow during the slewing operations.
- When operating the crane, appoint a work supervisor and perform the work under the supervisor’s instructions. Follow the supervisor’s instructions on the method and procedure for the work. Determine the method for details of mutual signs and follow the signs.
- Hoisting of lengthy load causes the load to lose balance and is dangerous. In the case of such load, apply a rope to both ends of to stabilize the hoisted load.
- Do not allow unauthorized personnel to approach the working radius or under the load because of risks of falling load and contact with load. This could cause a serious bodily accident. Also consider that the working radius increases when the load is hoisted and the boom is deflected.
- Operations requiring more than the machine performance can cause accidents or failure. Crane operations must always be carried out according to the rated total load chart.
- Be careful to prevent the wire rope and/or hoisted load from contacting an obstacle such as a tree or steel when hoisting a load. If caught by an obstacle, do not forcibly wind up the hoist load, but untangle the caught part before winding up.
- Do not pull laterally, pull toward you or hoist diagonally. Such attempt may cause the crane to trip or get damaged.
- It is dangerous to operate the crane under bad weather or at places where the view is not clear. Work lamps or other lighting devices should be used in dark places. When the view is bad because of bad weather (rain, fog, snow, etc.), stop the operation and wait until the weather recovers.
- Do not use for purpose, for instance raising a person using a crane, other than the true purpose.
- If the alarm buzzer of the over-hoist detector sounds, immediately take your hand off the winch lever. Winding-up of the hook block stops. Then, operate the winch lever “downward” (push it forward) to wind down the hook block. The hook block also rises when you attempt to extend the boom. Provide sufficient clearance between the boom and hook block when performing crane operation.
- When the boom is extended, the hook block is wound up. Operate the winch lever “downward” and extend the boom while lowering the hook block.
- If an overload is caused during work, operate the winch lever “downward” and wind down the winch to unload. Do not raise or lower the boom suddenly. Such attempt may cause serious accidents by tumbling.
- The volume of the hydraulic oil in each of the cylinders changes depending on the temperature. By leaving idle with a load being hoisted, as the time passes by the oil temperature drops and the hydraulic oil volume decreases, and changes such as the boom derrick angle decrease and boom length decrease may occur. In that case, execute boom derricking operations and boom extension operations appropriately to correct.
- Do not leave the operator’s seat when a load is hoisted. When leaving the operating position, first unload and set the lock lever to “LOCK” position.
- When the hook block is not used, wind up the winch. The hook block of an empty load may hit operators near the load.
- Operation while hoisting a vibro etc. or other vibration generating attachment is in principle prohibited. The winch or other unit may be damaged by the vibration of the attachment.

https://truckmanualshub.com/

CAUTIONS ABOUT HIGH TEMPERATURE OIL WHEN OPERATING CRANE

When hydraulic oil temperature exceeds 80 °C, high pressure hoses and seals can be damaged by heat, and it may cause burning to skin from oil spray.
If temperature of hydraulic oil exceeds 80 °C, stop the operation and wait until the oil cools down.
Hook raising/lowering operation at high lift or continuous crane operation with the accelerator pedal depressed will increase the hydraulic oil temperature. Take special care during such operation.

CAUTIONS WHEN OPERATING WINCH

- Select a suitable number of wire rope falls to the hook and boom length to the mass of hoisted load.
  ★ Refer to “Operation 4. Handling Wire Rope” for details.
- Do not allow persons to enter the area below the hoisted load.
- When hoisting a load, always stop once at the “takeoff” position where the hoisted load leaves the ground. Check subjects such as load stability and load force, then hoist up the load.
- Do not pull laterally, pull toward you or hoist diagonally. Such attempt may cause the crane to trip or get damaged.
- Over-hoisting of the hook block may result in collision with the boom, snipping the wire ropes and causing the hook block and load to fall and may lead to serious accidents. Take care not to over-hoist the hook block.
- Be careful to prevent the wire rope and/or hoisted load from contacting an obstacle such as a tree or steel when hoisting a load.
  If caught by an obstacle, do not forcibly wind up the hoist load, but untangle the caught part before winding up.
- Do not use the winch drum wire that is wound up irregularly. If wound up irregularly, not only does the wire rope get damaged and have its lifetime shortened, but it may break causing serious accidents.
  Observe the following precautions to avoid wire rope from winding up irregularly.
  - Do not let the hook block tumble on the ground.
  - When lowering the hook block long distances for underground work, be sure to leave 3 turns or more of wire rope on the winch drum.
- When decelerating from high-speed hoisting, ease off the accelerator pedal to lower the engine revolution, and then slowly return the right-hand side machine operation lever. A sharp returning of the right machine operation lever while leaving the revolution at a high level causes the hook to jump up due to the rapid deceleration shock, resulting in an irregular winding.
- If the wire rope is twisted and causes the hook block to turn, fully eliminate the twist before work.
  ★ Refer to “Operation 4.3 Corrective Actions Against Twisted Wire Rope”.

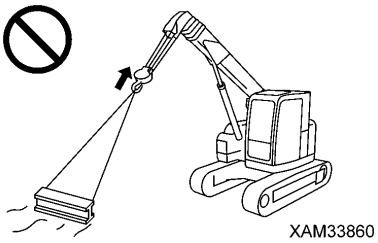
XAM33860

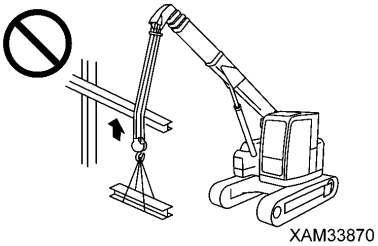
XAM33870

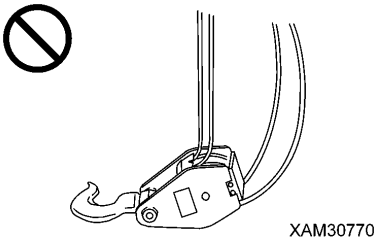
XAM30770

https://truckmanualshub.com/

CAUTIONS WHEN OPERATING BOOM

- Perform boom operation lever operation as slowly as possible. Especially avoid sudden lever operations when the load is hoisted, which may cause the load to waggle and give large impact to the machine, and thus may damage the crane or trip the machine.
- When the boom is lowered, the working radius increases, and the rated total load that can be hoisted decreases. When working while raising/lowering the boom, pay extra attention so that the mass of the load at the time the boom is most lowered does not cause overloading.
- Pulling of the load laterally by raising/lowering, and/or extracting/retracting the boom is prohibited. Do not attempt to do the above under any circumstances.
- When extending/retracting the boom, check raising of the winch and take sufficient care.
- When the boom is extended, the working radius increases, and the rated total load that can be hoisted decreases. When working while extending/retracting the boom, pay extra attention so that the mass of the load at the time the boom is most lowered does not cause overloading.

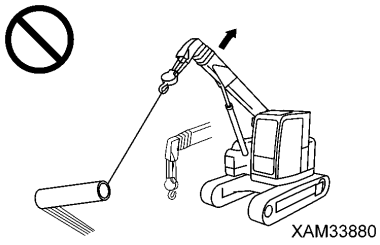

CAUTIONS DURING SLEWING OPERATION

- Check the safety in the vicinity and honk the horn before slewing.
- Perform the slewing lever operation as slowly as possible. Make sure to start smoothly, slew at low speed, and stop quietly. Especially avoid sudden lever operations when the load is hoisted, which may cause the load to waggle and cause the machine to lose balance, and thus may damage the crane or trip the machine.
- Attempts to pull the load towards the machine or let the load stand up by slewing operation are strictly prohibited. Do not attempt to do the above under any circumstances.
- Be careful to prevent the wire rope and/or hoisted load from contacting an obstacle such as a tree or steel when hoisting a load or slewing. If caught by an obstacle, do not forcibly wind up the hoist load, but untangle the caught part before winding up.

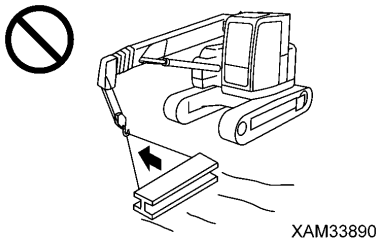

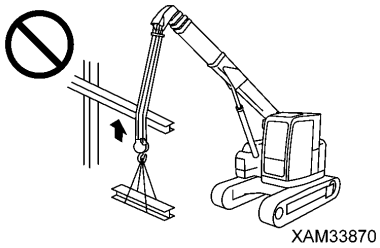

COOPERATIVE HOISTING IS PROHIBITED AS A GENERAL RULE

Cooperative hoisting, where two or more cranes are used to hoist a single load, is prohibited as a general rule.
Cooperative hoisting is a highly dangerous operation that may invite tumbling of the machine due to deviated centre of gravity, fall of hoisted load and damage of the boom.
If cooperation hoisting is required for unavoidable reasons, discuss and establish a work scheme under the responsibility of the user, let the worker fully acknowledge the work method and procedures, and only proceed under the direct leadership of the work supervisor.
Also, observe the following cautions:

- Use the cranes of same model.
- Choose the machine model that can handle sufficiently larger load than the load to be hoisted.
- Make sure only 1 person gives signals.
- Limit the crane operations to single operations as a rule, and do not attempt any slewing operation.
- Appoint 1 responsible sling operator who is most experienced.

https://truckmanualshub.com/

CAUTIONS FOR WORK AT WORKPLACE WHERE LIFT BELOW GROUND LEVEL IS PERFORMED

- When lowering a wire rope for work underground, leave at least 3 turns of wire rope on the winch drum.
- Make sure to give signals.
- Perform crane operation with extra care.

CAUTIONS ON TRAVELING WITH HOISTED LOAD

Hoisted load travelling operation is in principle forbidden, because it is extremely unstable and dangerous.
When inevitably performing a travelling with a hoisted load, observe the following. Negligence of the precautions may cause serious bodily accident.

- Strictly observe the precautions described in the instruction manual.
  ★ Refer to the descriptions under “Operation 3.19.1 Precautions for Traveling with Hoisted Load”.
- Carefully observe the precautions on the operation details for the working posture prescribed in the instruction manual.
  ★ Refer to the descriptions under “Operation 3.19.2 Operation Posture During Travelling Hoist”.
- As to the hoisted load, limit its weight within an allowance and assure its clearance above ground.
- For a travelling operation, appoint marshallers.
- Remove any obstacle on the operation path and allow no operator to trespass the path.
- Operating for a distance exceeding the specified boom length is prohibited.
- Since the rated total load refers to the maximum value, suppress the load to a safe level in accordance with operating situation.
- To perform travelling operations with a hoisted load, keep the engine revolution to low idling (low speed) and operate gently at a low travelling speed so that the load will not swing. Refrain from actions which may cause the load to swing such as suddenly starting, stopping, or operating the speed-up pedal while in motion.
- When travelling with a hoisted load, swivel operations and crane operations are not possible.

https://truckmanualshub.com/

3. TRANSPORT PRECAUTIONS

CAUTIONS DURING TRANSPORT

When transporting the machine, there is a risk of inviting a serious bodily accident incurred by an accident during transportation.

- Strictly observe the following when transporting the machine.
- Depending on the type of crane installed, the mass, height and total length of the machine are varied, and thus check these details.
- When travelling on a bridge or passing over a structure, check in advance the bridge and viaduct to ensure that they can withstand the mass of the trailer and the machine, and firm up the transportation route.
- When travelling on a public road, notify the competent authority to receive permission for the transportation.
- The machine may require disassembled transportation in accordance with related regulations (such as the enforcement ordinance of the Road Traffic Act). Contact us or our sales service agency when conducting the transportation.

CAUTIONS WHEN LOADING OR UNLOADING

Pay particular attention to the loading or unloading operation of the machine, which may invite such an accident as tumbling or falling of it. When conducting a loading or unloading of the machine, strictly observe the following precautions:

- Select an area with horizontal and solid ground for setting the machine. In addition, keep enough distance from the roadside.
- Use the ramps under 15° or smaller angle. In addition, decide the clearance between ramps to meet the centre of the crawler.
- Use the ramps that have fully strong width, length and thickness, and that enable safe loading/unloading.
  Reinforce with blocks or other substances if the ramps deflect much.
- Remove the mud and other substances from the footing to prevent the machine from skidding over the ramps. Remove the substances stuck on the ramps such as grease, oil or ice, and keep clean.
  Be especially careful on the rainy days when slips may easily occur.
- When loading or unloading the machine, be sure to set the machine to a travelling posture and fix the hook block to the machine body by using wire ropes.
  ★ Refer to the descriptions under “Operation 3.6 Machine Travelling Posture”.
- When loading or unloading, set the engine rotation to low idling (low speed rotation) and operate slowly by low speed travels.
- Be sure to load the machine on to the truck by driving in reverse. Loading by driving forward may cause the machine to overturn.
- Do not operate any other lever than travelling levers (forward/reverse travelling) on the ramp boards.
- Never change direction on the ramp. Temporarily leave the ramp before correcting the direction.
- Across the border of ramp and loading deck, the centre of gravity of the machine rapidly moves and thus the machine becomes unstable. Accordingly, pass the border particularly slowly.
- When unloading the machine and placing the load onto an earth fill or platform, secure sufficient width, strength and inclination of the ground or the platform.
- Set the machine to a travelling posture and be slow when operating to change the direction on the trailer platform where the footing is unstable.
- After loading the machine, apply the wood blocks so that the machine does not move, and securely fix with wire ropes or other means.

★ Refer to “Operation 5. Transportation”.
★ Refer to “Operation 5.1 Loading/Unloading”.

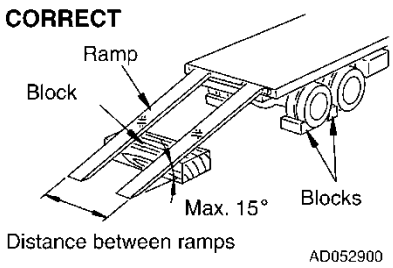

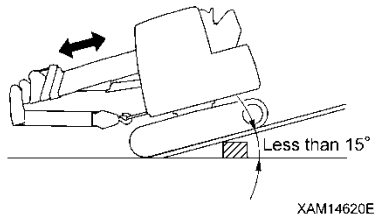

https://truckmanualshub.com/

4. TOWING PRECAUTIONS

TOWING PRECAUTIONS	
When towing, errors in the choice of wire rope, inspection methods, towing methods etc. may result in serious injury or death. • Be sure to check that the wire rope for towing and the towing rod have sufficient strength for the weight of the machine being towed. • Wear leather gloves when handling the wire rope. • Never enter between the towing machine and the object being towed during the towing process. • Do not, under any circumstances, attempt towing on slopes. • Wire ropes with broken strands (A), kinks (B) or sections with reduced diameter (C) are at risk of breaking and should not be used under any circumstances.	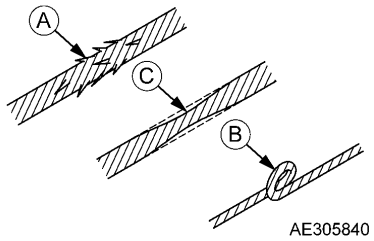

https://truckmanualshub.com/

5. MAINTENANCE PRECAUTIONS

5.1 PRECAUTIONS BEFORE MAINTENANCE

PUT UP A WARING SIGNBOARD DURING INSPECTION/MAINTENANCE

- When the warning sign, “DANGER. Do NOT operate”, is in place, the machine is being inspected or under maintenance. Do not start the engine and refrain from touching operating levers. Disregarding the warning sign to operate the machine may give rise to the danger of involving the maintenance personnel into the rotating parts or movable parts of the machine, resulting in serious injury.
- Put up additional warning signs around the machine as required.
  Part number of warning signboard: 585-4714400
  When this warning signboard is not used, store it in a tool box. If no tool box is available, keep it in a holder for the instruction manual.

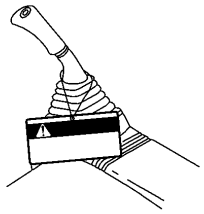

AE305910

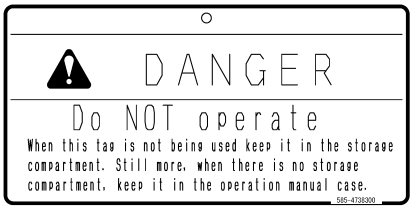

TIDY UP WORKPLACE

- Clean and maintain by tidying away tools, hammers and other things that obstruct the working area and by wiping away slippery substances such as grease and oil to assure safe operations.
  An untidy workplace may cause safety hazards and result in injuries to personnel.
- Organic glass (polycarbonate) is used for roof windows. When cleaning the roof windows, please use water and not organic solvents. If organic solvents such as benzene, toluene, methanol etc. are used, chemical reactions such as dissolution or decomposition will occur, degrading the polycarbonate.

SELECTING A WORKPLACE

- For inspection and maintenance, select an area with flat and solid ground.
- Select such a place where no risk of landslide, rock fall or flooding is feared.

KEEP AWAY UNAUTHORIZED PERSONNEL

During maintenance servicing of the machine, never allow any personnel except the required persons. Appoint monitoring personnel as required.

FOLLOW SUPERVISOR’S INSTRUCTION DURING TEAMWORK

Appoint a person who supervises the work and follow his/her instructions in case of machine repair or installing/uninstalling a work device.
Unexpected accidents due to misunderstood communication between workers may occur during teamwork.

https://truckmanualshub.com/

KEEP ENGINE STANDING STILL DURING INSPECTION AND MAINTENANCE

- Before starting inspection and maintenance servicing, be sure to retract the crane and stop the engine.

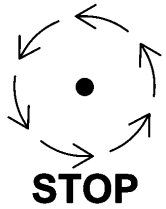

9JM01085

- Turn the starter switch to the “OFF” position and set the lock lever (1) to the “Lock” position (L).
- Operate the left and right travelling levers full strokes forward and backward 2 to 3 times to relieve the pressure remaining in the hydraulic circuits.
  - ★ After turning the starter switch OFF, wait for approximately 1 minute and push the horn switch to check that the horn does not sound.

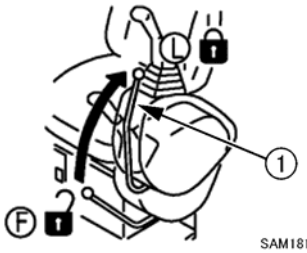

SAM18120

- Apply pawls to prevent crawler from moving.

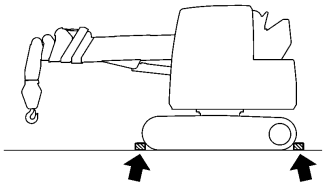

XAM14630

WORK BY AT LEAST TWO PERSONS DURING MAINTENANCE WITH ENGINE RUNNING

To prevent accidents, do not attempt maintenance when the engine is running.
Always observe the following in case of maintaining with the engine running for unavoidable reason.

- One person should sit at the operator’s seat. Keep checking each other while ensuring that the engine can be stopped at any time.
- When working near such rotating parts as fan, belt, and winch drum, keep the operator’s body and any object that can be readily caught away from these parts.
- Never allow any object or tool to fall on or insert into the rotating parts of fan, belt and winch drum. Such an object may hit the rotating part or spring back from it, and thus it is dangerous.
- Do not touch operation levers. If it is unavoidable to use the operation levers, always give a sign to the other person and let him/her evacuate to a safe place.
- Relieve the pressure remaining in the hydraulic circuits and set the lock lever (1) to the “Lock” position (L).
  - ★ Refer to “Inspection and Maintenance 2. Basic Maintenance (Hydraulic Equipment Handling)” for details.
- Do not touch operation levers and pedals. If it is unavoidable to use the operation levers and pedals, always give a sign to the other person and let him/her evacuate to a safe place.

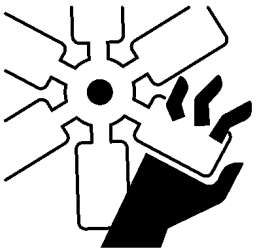

A0055210

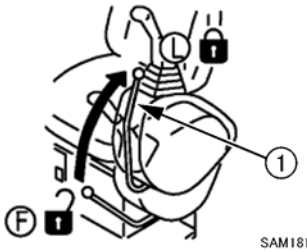

SAM18120

https://truckmanualshub.com/

USE APPROPRIATE TOOLS

Use proper tools and handle them in correct manners. Using a damaged or deformed tool and using it for any purpose other than its intended application may giving rise to a serious bodily accident.

A0055120

PRECAUTIONS FOR WORKING AT HIGH ELEVATION

Secure scaffolding by using a workbench with the stairs when working at high elevation.

CAUTIONS WHEN WORKING UNDER THE MACHINE AND CRANE

- For lifting up the machine, use a hoist or hydraulic jack in good condition and having enough strength to withstand the weight of components. Note that the hydraulic jack should not be used for lifting any part that is damaged, bent or twisted. Further, the wire rope to be used for hoisting shall not include broken wires, be reduced in diameter or kinked. Do not use a hook that is bent or damaged.
- When unavoidably going under the lifted machine to perform inspection and maintenance servicing, securely support the machine by using blocks and stays that are sturdy enough to withstand the machine weight. Failure to support the machine securely may cause falling of the machine, resulting in a serious bodily accident.
- Do not use concrete blocks for supporting the machine. A concrete block may readily be broken even under a light load.

A0055140

CLEAN BEFORE INSPECTION OR MAINTENANCE

- Before starting an inspection or maintenance, clean the machine and prevent rubbish from entering the machine and make sure the safety will be ensured during maintenance.
- Attempt to inspect or maintain the machine still dirty not only lessens chance of locating faulty part, but may cause rubbish or mud entering your eye, or slipping and tripping that result in injury.
- Always observe the following when washing the vehicle.
  - Use anti-slip shoes to prevent slips and trips caused by wet foothold.
  - Put on protective equipment when using a high pressure steam car washer. Avoid an accident from high pressure water which causes skin laceration or mud or other substance to fly to eyes.
  - Do not directly spray water onto the electrical system (sensors, connectors (1), controllers, machine monitor). Water entering the electrical system is dangerous and will cause faulty or improper operations.
  - Do not spray water directly in the area of operator’s seat or its underside.

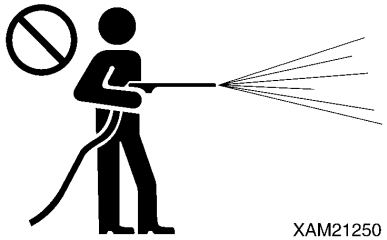

XAM21250

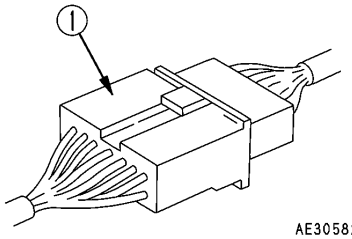

AE305820

https://truckmanualshub.com/

5.2 PRECAUTIONS DURING MAINTENANCE

CAUTIONS DURING WELDING REPAIR

Conduct welding operation in a location with good facility, and, only authorized personnel are permitted to be engaged in the welding work.
Unauthorized personnel are strictly prohibited since risks such as gas generation, fire and electrical shock are present when welding.

CAUTIONS WHEN HANDLING BATTERY

For inspecting and handling the battery, turn the starter switch to the “OFF” position and disconnect the power supply circuit to prevent unexpected startup during servicing.
Because the battery produces hydrogen gas, sparks around the battery can cause an explosion.
Moreover, the battery solution contains diluted sulfuric acid. Wrong handling of it may cause a bodily accident, explosion and fire, and therefore always observe the following precautions:

- **AVOIDING THE RISK OF BATTERY EXPLOSION**
  - If the battery fluid level decreases to the LOWER LEVEL or further below, do not use the battery or recharge it. Otherwise, an explosion may occur.
    Never fail to conduct the regular inspection of battery fluid level and refill purified water (such as battery replenisher available on the market) to the UPPER LEVEL.
  - Do not smoke or use fire near the battery.
  - During recharging the battery, it generates hydrogen gas that is flammable.
    Before recharging it, dismount if from the machine and conduct the recharging in a well ventilated place. During the recharging process, remove the battery cap.
  - Securely tighten the battery cap afterwards.
- **WARNINGS CONCERNING DISCONNECTION OF THE BATTERY CABLE DURING ENGINE OPERATION**
  Never remove the battery cable while the engine is running. Surge voltages may be generated and destroy electronic circuitry.
- **AVOIDING THE RISK OF DILUTED SULFURIC ACID**
  - Always wear protective glasses and rubber gloves before handling the battery.
  - If the battery fluid enters your eyes, wash immediately with water and see a doctor as soon as possible.
  - If the battery fluid contacted clothing or skin, immediately wash away by huge quantity of water.
- **DISCONNECT BATTERY TERMINAL**
  Before starting the repair work of electric system and performing a welding operation, first turn the starter switch OFF, wait for about one minute, and then disconnect the battery terminals to interrupt the flow of electric current.
- **DANGER OF SPARKING**
  To prevent sparking, strictly observe the following precautions:
  - Never allow such a metallic object as a tool to come in contact with battery terminals. Do not leave tools or other object around the battery.
  - When removing the battery, be sure to disconnect the grounding (−) end terminal first. Conversely for mounting it again, first connect the positive (+) end terminal and fix the grounding end (−) terminal finally.
  - Fix the battery terminal securely.
  - Fix the battery body to the specified position securely.

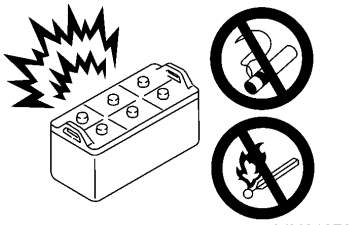
9JM01078

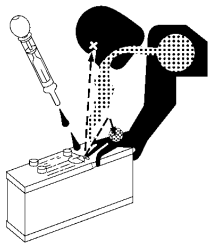
A0055090

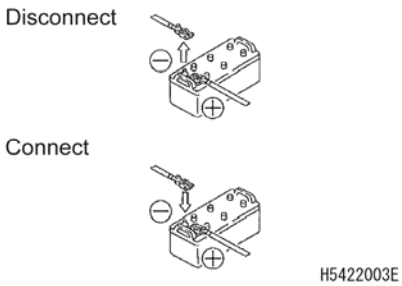

H5422003E

https://truckmanualshub.com/

BEWARE OF CHIPS WHEN WORKING WITH HAMMER

Working with a hammer may cause a serious bodily accident because of springing off of a pin or littering of metallic chips. Strictly observe the following.

- Hitting a pin or the like may give rise to shattering of broken chips to hurt people nearby. Before starting such a work, make it sure that no one is staying around you.
- Knocking a pin off with a strong force may cause the pin flying out to hurt a person nearby. Do not allow anyone to stay around.
- When knocking such a hard metallic part as pin or bearing, there is a risk of causing a serious bodily accident by flying objects. Be sure to wear protective equipment such as goggles, gloves and helmet.

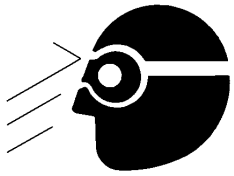

AE305880

BE CAUTIOUS OF HEATED COOLANT

When checking or discharging the coolant, ensure that the radiator cap has been cooled down so that it can be touched by bare hand in order to prevent a burn injury because of the spewing hot water or steam.
When removing the cap, first loosen it slowly to relieve radiator internal pressure, and then take it off.

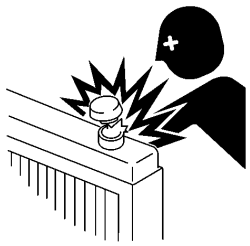

A0067380

BEWARE OF OIL AT ELEVATED TEMPERATURES

When checking or discharging oil, ensure that the radiator cap and plug have been cooled down so that they can be touched by bare hand in order to prevent a burn injury because of the spewing hot oil or coming in contact with parts heated at high temperatures.
When removing cap and plug, first loosen it slowly to relieve radiator internal pressure, and then take it off.

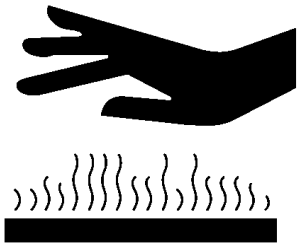

A0055050

BEWARE OF OIL UNDER HIGH INTERNAL PRESSURE

The hydraulic system is constantly subjected to an internal pressure. Thus, when checking or replacing the piping and hoses, failure to ensuring that the internal pressure of the circuit has been relieved gives rise to a serious bodily accident.
Strictly observe the following.

- Never replace piping or hoses while the hydraulic circuit is subjected to an internal pressure. Be sure to relieve the pressure of the hydraulic circuit.
  ★ Refer to “Inspection and Maintenance 2. Basic Maintenance (Hydraulic Equipment Handling)” for details.
- If an oil leakage is taking place, the piping, hoses and their periphery are wet. Check to ensure that the piping is free from fissures and the hoses have no cracking or swelling.
  Be sure to wear protective equipment such as goggles and gloves during the inspection work.
- High pressure oil leaking through a small hole may puncture the skin or destroy eyesight upon direct contact. If this happens, wash away with flowing clean water and see the doctor as soon as possible.

XAM18270

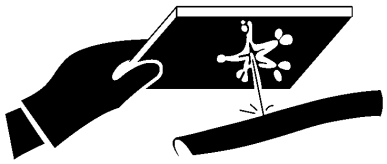

XAM18280

https://truckmanualshub.com/

BEWARE OF FUEL UNDER HIGH INTERNAL PRESSURE

In the engine fuel piping, an internal pressure is generated during engine operation. Before starting the inspection and maintenance servicing of fuel piping, wait until its internal pressure is relieved. After stopping the engine, wait for 30 seconds or more before starting the work.

HANDLING HIGH PRESSURE HOSE AND PIPING

If fuel leaks from a hose or piping, there occurs a risk of fire and malfunction leading to a serious bodily accident.
When leakage of oil or fuel is detected at a loosened joint or mounted spot of hoses or piping, immediately stop the work and re-tighten them with a specified tightening torque.
Also, when recognizing a damage or deformation of hoses and piping, consult with us or our sales service agency.
If any of the following conditions is found, replace the faulty parts:

- Damage of a hose or deformation of sleeve
- Scratch or truncation of the covering layer, or exposure of wire reinforcement layer
- Covering layer is partially swollen
- Indication of twist or collapse on a movable part of hose
- Foreign object buried in coating

A0055020

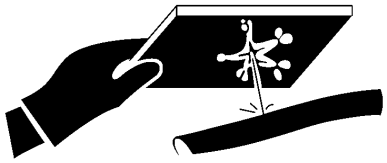

XAM18280

BEWARE OF HIGH VOLTAGE

During or at immediately after stopping an engine operation, the inside of engine controller and around the engine fuel injector are under a high voltage, and thus an electric shock may occur.
Never touch the inside of engine controller and engine fuel injectors. If there is a need for touching these parts, consult with us or our sales service agency.

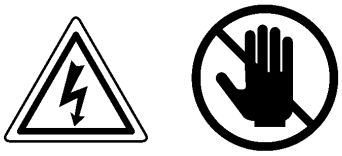

XAU00050

BEWARE OF NOISE

Use ear protection or ear plugs during long-term noise exposure, such as engine maintenance servicing. Large noise in the surroundings may cause hearing difficulty or deafness.

WHEN ADJUSTING CRAWLER TENSION, BEWARE OF HIGH PRESSURE GREASE

- The grease inside the crawler adjusting unit is under high pressure.
  Conducting the adjustment in an unauthorized procedure may cause the grease discharging plug (1) to jump out, resulting in a serious bodily accident.
- When loosening the grease discharging plug (1) to loosen the tension of crawler, do not rotate it more than 1 turn. Also, loosen the grease discharging plug (1) slowly.
- Do not allow your face, limbs and body to come closer to the grease discharging plug (1).

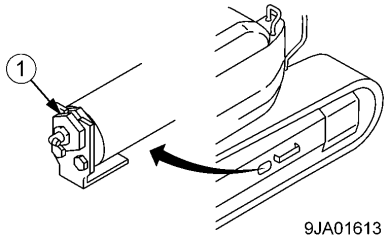

9JA01613

9JM01088

https://truckmanualshub.com/

NEVER DISASSEMBLE THE RECOIL SPRING

Under no circumstances, refrain from disassembling the recoil spring assembly.
In the recoil spring assembly that is intended for buffering the idler, a strong spring is installed.
An inadvertent disassembling it causes the spring to jump out, inviting a serious bodily accident. Contact us or our sales service agency if its disassembling is required.

BE CAUTIOUS OF COMPRESSED AIR

When using the compressed air for cleaning, there is a risk of serious bodily accident because of scattering waste objects.
Be sure to wear goggles, dust mask and gloves.

CAUTIONS WHEN TREATING WASTE

In respect of the environment protection, pay sufficient attention to the treatment of waste matters.

- Be sure to use drums and tanks to hold the discharged waste liquid. Never allow waste liquid to flow on the ground, into river, drainage, sea or lake.
- Observe the applicable legal regulations and rules when disposing of this machine as well as harmful substances such as oil, fuel, solvent, filter or battery.

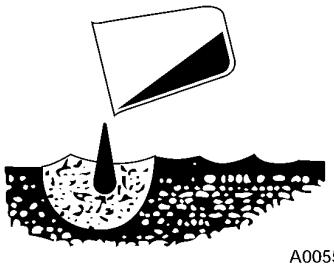

A0055220

PERIODIC REPLACEMENT OF IMPORTANT COMPONENTS

- To assure the prolonged and safe use of the machine, be sure to conduct the periodic replacement of parts that are particularly related to safety such parts as hoses and seat belts. Materials of these parts tend to change their properties with elapse of service time and will degrade, abrade and show fatigue with repeated services, and thus may cause a serious bodily accident. Also, it should be noted that their service life can hardly be determined by inspecting their appearance.
  ★ Refer to the descriptions under “Inspection and Maintenance 4. Periodic Replacement of Important Components”.
- If any abnormality is observed in a critical part by appearance, replace it even if it has not reached the time for regular replacement.

https://truckmanualshub.com/

6. SAFETY LABEL LOCATIONS

Keep safety labels clean and visible at all times.

If lost, replace immediately or apply for a new one.

There are other labels than safety labels shown below and treat them in the same manner.

SAFETY LABEL LOCATIONS (1/2)

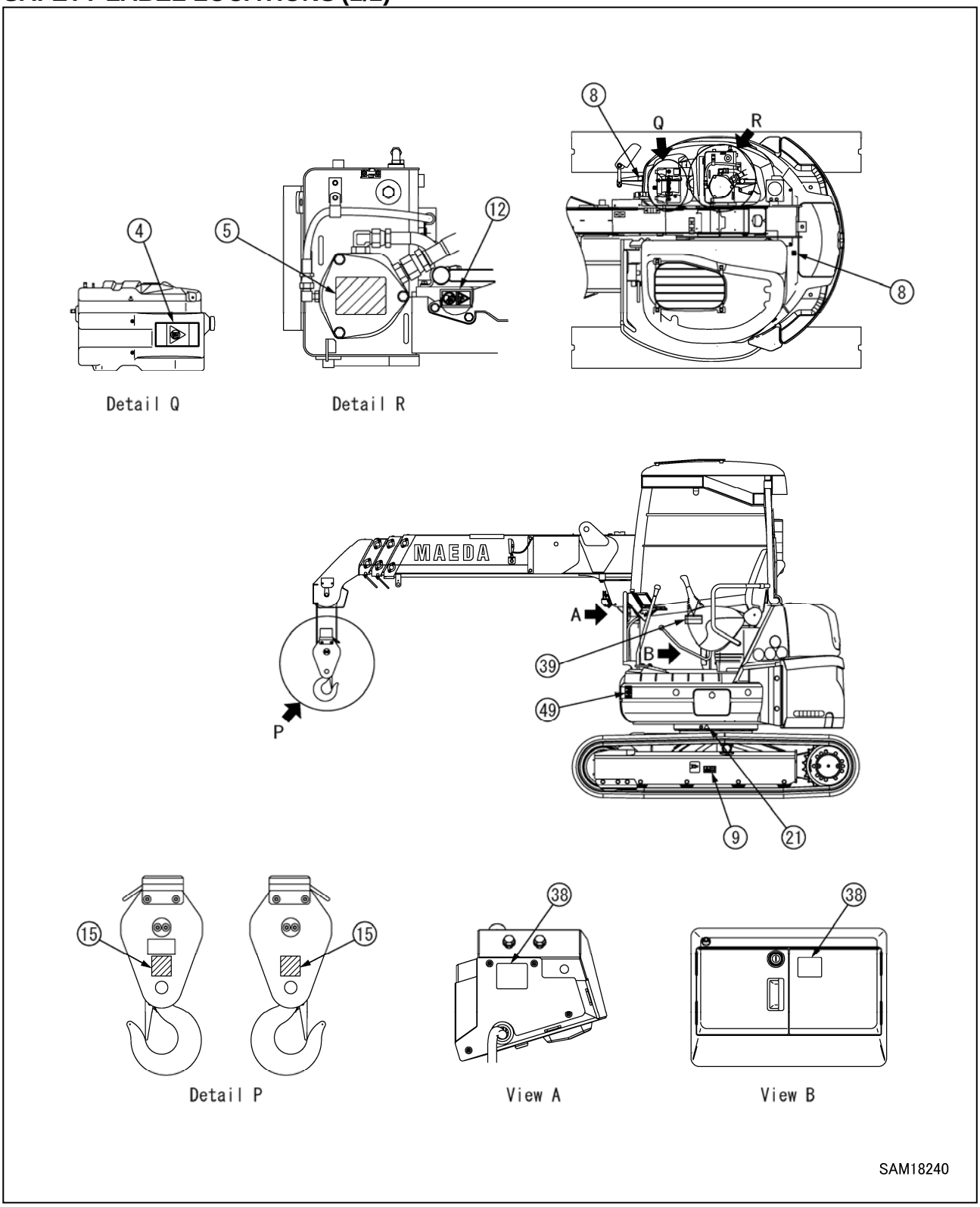

https://truckmanualshub.com/

SAFETY LABEL LOCATIONS (2/2)

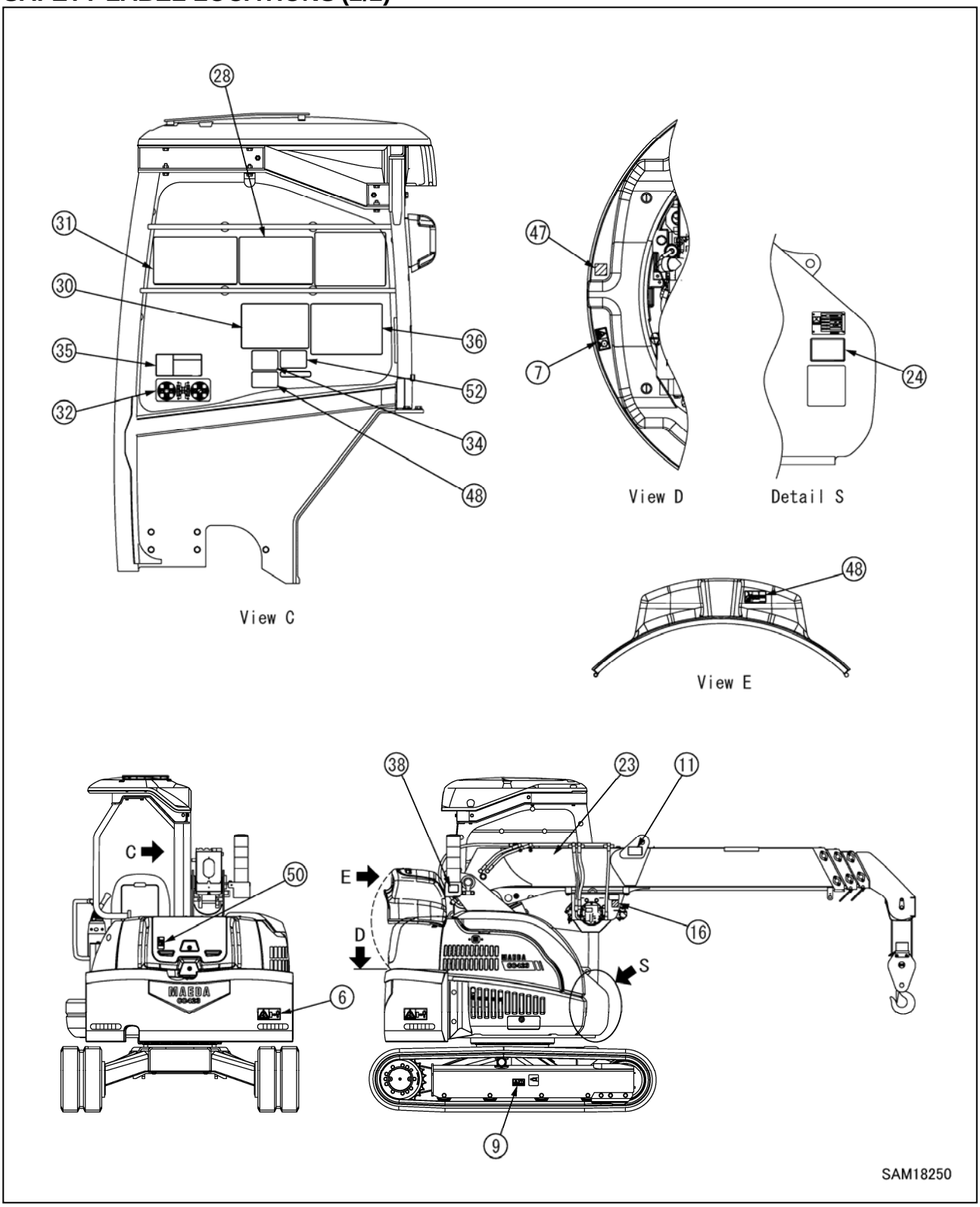

(4) Fuel Caution (CL000280200)

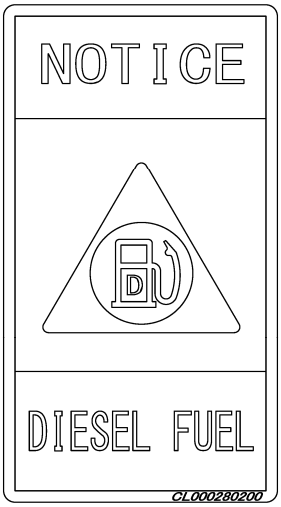

(5) Hydraulic Oil Injection Port Warning (542-4782600)

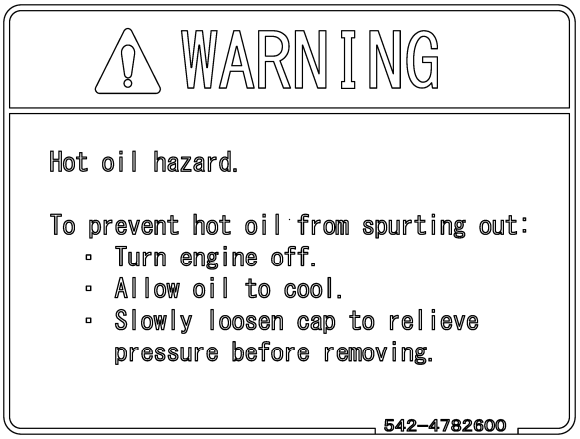

(6) Trapping Risk / No Entry When Slewing (CL000180012)

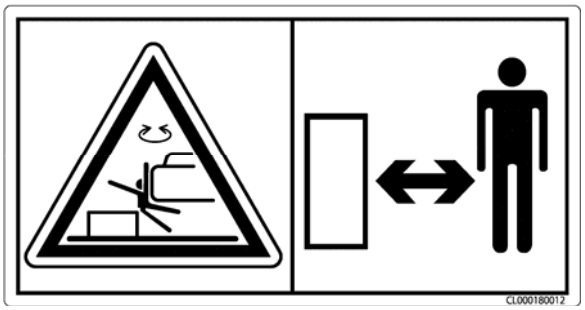

(7) Belt Entanglement Caution (CL000080010)

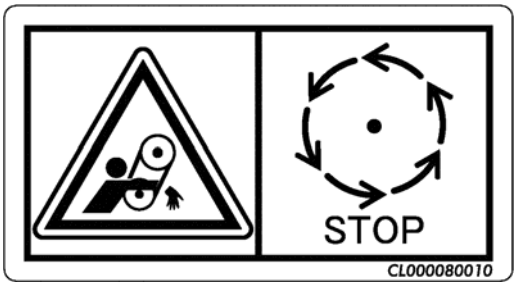

(8) Do Not Step On (584-4581700) (2 places)

(9) Plug Ejection Caution (CL000190010) (2 places)

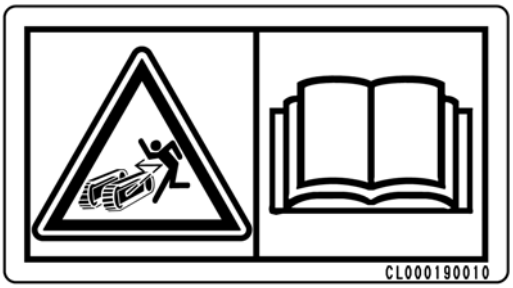

(11) Hoisting Position Warning (584-3437800)

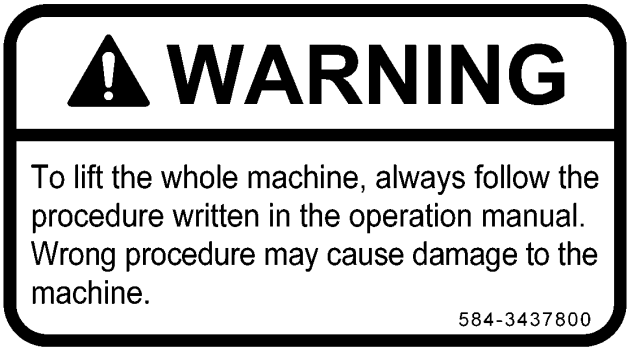

(12) Burn Injury Caution (CL000170005)

(15) Hook Block Winding Caution (553-4267400) (2 places)

(16) Winch Winding Caution (553-4267500)

(21) Warning (541-4614900)

(23) Caution for lifting machine (541-3472400)

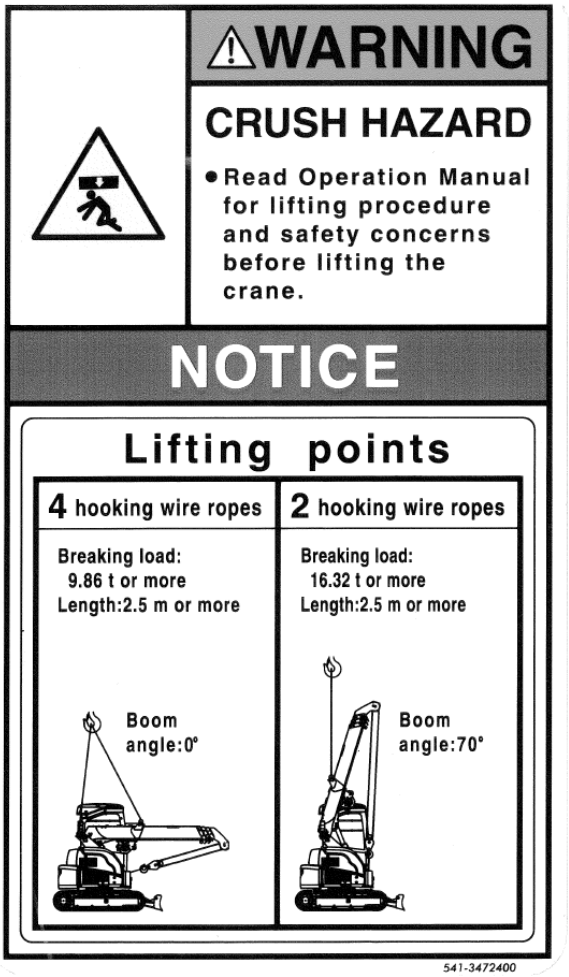

(24) Machine Mass (542-4773100)

CC423S-1 MACHINE WEIGHT	
Model	Weight
CC423S-1	4400kg

542-4773100

(28) Working Radius / Rated Total Load Chart (542-3582200)

Working Range

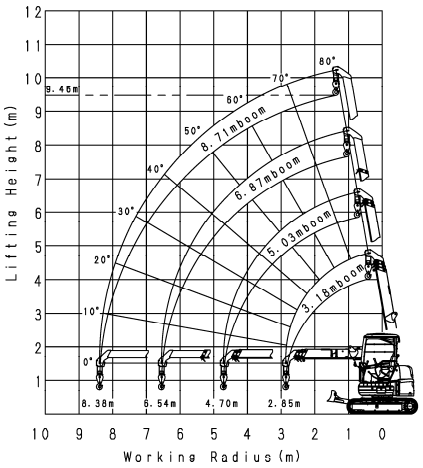

CC423S-1 Rated Total Load Chart

(Unit:kg)

Boom Length / Working Radius (m)	① 3.18mboom		② 5.03mboom		③ 6.87mboom		④ 8.71mboom	
	Stationary	Pick&Carry	Stationary	Pick&Carry	Stationary	Pick&Carry	Stationary	Pick&Carry
1.50	2930	1465	2930	1465	1870		1190	
2.00	1730	865	1710	855	1710		1190	
2.50	1200	600	1190	595	1190		1190	
2.85	980	490	980	490	980		980	
3.00			900	450	900		900	
3.50			720	360	720		720	
4.00			600	300	600		600	
4.50			500	250	500		500	
4.70			460	230	460		460	
5.00					430		430	
5.50					370		370	
6.00					330		330	
6.54					290		290	
7.00							260	
7.50							235	
8.00							215	
8.38							200	
Boom Angle( )	0~42.9		0~64.2		0~72.3		0~76.5	

GENERAL RULE TO OBSERVE

1 The working radius shown is based on the actual value including boom deflection. Always work in accordance with these values.

2 The Working Radius/Lifting Height Diagram is based on operations without a load and does not allow for boom deflection.

3 The rated load is the value not greater than 78% of the tipping load when the machine is placed on level, hard ground and forward stability is 1.15 or above.

4 Because it can be extremely unstable and dangerous, traveling with a load should be avoided wherever possible. Where it is unavoidable, always operate in accordance with Total Rated Capacity for Travel Suspension.

5 The Rated Total Capacity for traveling with a suspended load is calculated for travel on level hard ground only. Always lift the load statically and while traveling with a load, do not allow it to swing. Carry the load as close as possible to the ground and avoid jerky stopping, starting and turning.

6 Traveling with a load suspended using boom configurations (3) and (4) is prohibited in all circumstances.

7 When the boom length in use exceeds the boom lengths shown in the lifting charts, always operate in accordance with the capacities shown for the next higher boom length.

8 Values shown in the Rated Total Load Chart include the hook and any other lifting equipment. To determine the actual safe load deduct the weight of the hook block(30kg) and all other lifting equipment.

9 The load is limited by the number of falls of rope between the boom and the hook:-
1 fall - 750kg maximum
2 falls- 1480kg maximum
4 falls- 2930kg maximum

10 Allowable maximum wind condition for lifting work:-
Wind speed 10m/s maximum
Load sail area 1m/t

11 Never use the blade as an outrigger.

542-3582200

https://truckmanualshub.com/

(30) Safe Operation (557-3494500)

⚠ FOR YOUR SAFE OPERATION

Be sure to operate your crane after reading Instruction Manual.

1. Be sure to observe local laws and ordinances for crane operation.
2. Before and after work, be sure to conduct daily inspection, lubrication and other required services.
3. Crane should be operated on level, hard ground.
4. Do not lift any load in excess of rated total load.
5. Make sure that there is no person or obstacle around the machine during work.
6. Do not allow any person enter underneath the lifted load.
7. Whenever leaving your operator seat, be sure to ground the load and shut down the engine.
8. Never pull or drag any load horizontally.
9. Never operate your crane with safety system function disabled.

CAUTION (Operation)

1. Definitely avoid composite operation of 3 or more actions. It is too dangerous.
2. Carry out swing operation smoothly, avoiding load to sway.
3. Hoisting loads that produce vibrations is in principle prohibited. Attachments that produce vibrations can cause damage to the winch or other components of the machinery.
4. Do not carry out crane operation on slope.

CAUTION (Travelling on slope)

1. When travelling on slope, travel backward on up-hill and forward on down-hill.
2. When travelling in reverse or in lateral position inevitably, be sure inclination is not in excess of 10 degrees.
3. Never perform swinging travel on slope as it may cause crane to tip over.

CAUTION (Pick & carry operation)

1. Pick & carry operation is in principle prohibited as it is extremely unstable and hazardous. If inevitable, perform your work in accordance with rated total load for pick & carry operation.
2. Pick & carry operation is dangerous because load is likely to sway. Travel speed should be set at LO with engine running at low speed.
3. Avoid jerky start, stop and spin turn.
4. While in pick & carry operation, do not perform any crane function other than travel.
5. Never perform pick & carry operation on slope, it may cause the crane to tip over.

CAUTION (Hook stowage prior to travelling)

1 Always level the boom and stow the hook prior to travel. When stowing the hook, never use the emergency switch. Never attempt to travel with the hook stowed and the boom raised.

CAUTION (Loading to and unloading from truck)

1. Travel backward for loading and forward for unloading.
2. Be sure to engage parking brake of truck and apply wheel blocks.
3. Ramp board angle should be less than 15 degrees. Engage the board securely to truck bed and eliminate any difference of height between each board.
4. Never perform any crane operation other than travelling on truck bed or ramp board as it may cause the crane to tip over.

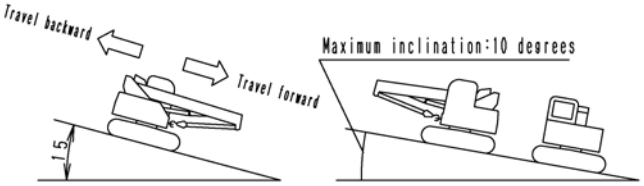

557-3494500

(31) Operating the Moment Limiter (542-2250000)

MOMENT LIMITER OPERATION

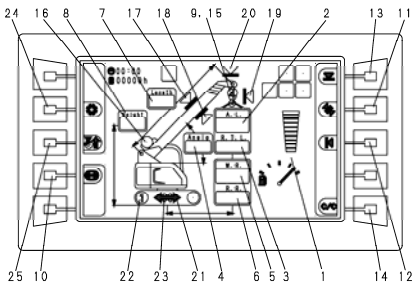

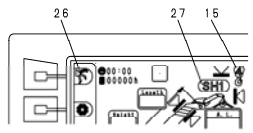

In Searcher Hook Mode

1 Load capacity display
Current load factor is displayed.

2 Actual load display
Current lifting load is displayed.

3 Rated load display
Current maximum lifting capacity calculated by number of falls, boom condition, and working radius is displayed.

4 Boom angle display
Current boom angle is displayed.

5 Working radius display
Current working radius is displayed.

6 Rated radius display
Current maximum working radius calculated by number of falls, boom condition and actual load is displayed.

7 Boom length display
Current boom length is displayed.

8 Lifting height display
Current lifting height is displayed.

9 Fall mode select button
Current number of falls is displayed

10 Pick & Carry / Stationary mode select button
Pick & Carry mode and Stationary mode can be selected.

11 Boom angle upper and lower limit setting button
Boom angle upper limit and lower limit can be set / cancel.

12 Working radius upper limit setting button
Working radius upper limit can be set / cancel.

13 Lifting height upper limit button
Lifting height upper limit can be set / cancel.

14 Set up check / set up cancel button
Set values can be checked / cancelled.

15 Overwind detect display
Overwind detect is displayed. (Normal: Green / Overwind : Red blink)

16 Over un-winding detect display
Over un-winding detect is displayed.
(Normal: Green / Over un-wind : Red blink)

17 Boom angle upper limit LED
Lights on when boom angle upper limit is set, and blinks in orange when upper limit is reached.

18 Boom angle lower limit LED
Lights on when boom angle lower limit is set, and blinks in orange when lower limit is reached.

19 Working radius upper limit LED
Lights on when working radius upper limit is set, and blinks in orange when upper limit is reached.

20 Lifting height upper limit LED
Lights on when lifting height upper limit is set, and blinks in orange when upper limit is reached.

21 Travel mode select LED
Red arrow is displayed when travel mode is selected. Arrow goes off when stationary mode is selected.

22 Travel speed low / high display
Current travel speed is displayed. (1: Low / 2: High)

23 Travel prohibited mark
This mark appears when travel is prohibited.

24 User mode button
Use for various setting.

25 Hook stow button
Use with hook hoisting lever for quick stowage.

26 Searcher hook position button
Searcher hook position can be set.
This is only available when searcher hook mode is selected in ML setting.

27 Searcher hook position display
SH1:Upper, SH2:Middle, SH3:Lower, None:stowage

Configuration and how to use its function

Moment limiter is a safety system installed for preventing accident such as damaging or tipping over of crane due to over-loading. For safer operation of your crane, be sure to fully utilize this system.

1) This system shows lifting load and ratio of rated total load, and also it gives pre-warning (intermittent sound) at 90% of rated total load, and warning (continuous sound) at 100% causing actions of boom lowering, boom extending and hook hoisting to automatically stop, while actions on safe side such as boom raising, boom retracting and hook lowering remain to function. In searcher hook mode, boom raising is stopped also.
2) Lifting load is detected by pressure sensor. Rated total load is read out by boom angle and length signal. Then lifting load and rated total load are compared and generates pre-warning, warning, and auto-stop.

⚠ CAUTION

1 Slewing mechanism does not stop automatically even when over-loaded. Be careful.
2 Before starting to operate your crane, be sure to conduct a start up check.
3 Set the moment limiter so that each LEDs show proper working conditions.
4 Pay attention to display of moment limiter to avoid over-loading the crane at any time.
5 If any action on non-safe side (boom extend, boom lower or hook hoisting) automatically comes to stop, reset the operation at safe side (boom retract, boom raise or hook lowering).
In searcher hook mode, if any action on non-safe side (boom extending, boom raising, and boom lowering) automatically comes to stop, retract boom to the safe radius and then ground the load by lowering boom.
6 For lifting a load off the ground, first hoist the hook until the load leaves ground and stop it momentarily to check for safety. Never lift your load off ground by raising boom.
In searcher hook mode, lift off a load from ground by boom raising or boom extending operation, and check for safety.
7 While in pick & carry mode, if boom is extended to 4 or 5 stages, functions of travel and crane work will stop, but this does not mean to be abnormal. In pick & carry mode, use of 4 or 5 stage boom is prohibited. Be sure to work with 3 or fewer stages.
8 In searcher hook mode, pick and carry is prohibited. If you wish to travel with searcher hook mounted, stow the searcher hook and set ML to stowed condition, or retract boom to 1st stage without a load.
9 When using searcher hook, always set ML to the actual searcher hook position using searcher hook shift button, and confirm displayed rated total load is for searcher hook.

542-2250000

(32) Lever Operating Patterns (556-3368100)

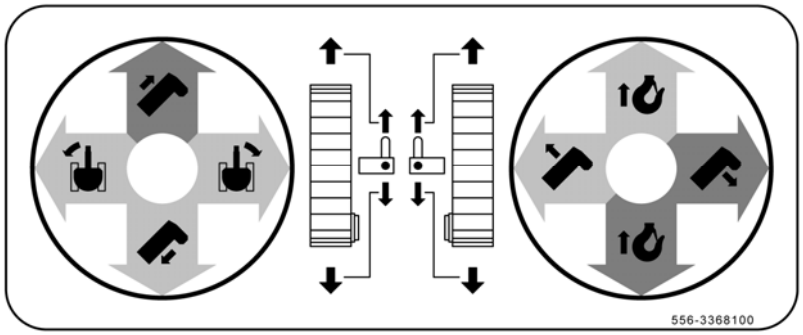

(34) Cautions on override switch (585-4739200)

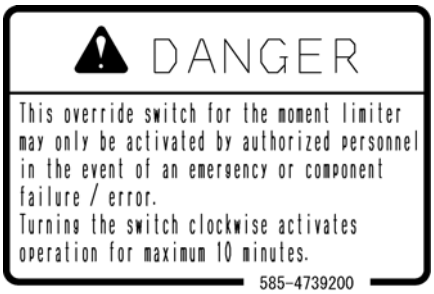

(35) Number of Falls Switching Warning (585-3555500)

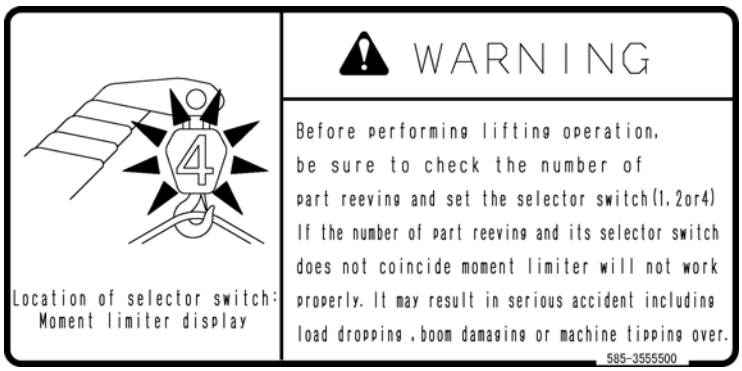

(36) Warnings on Operation, Inspection and Maintenance (584-3469700)

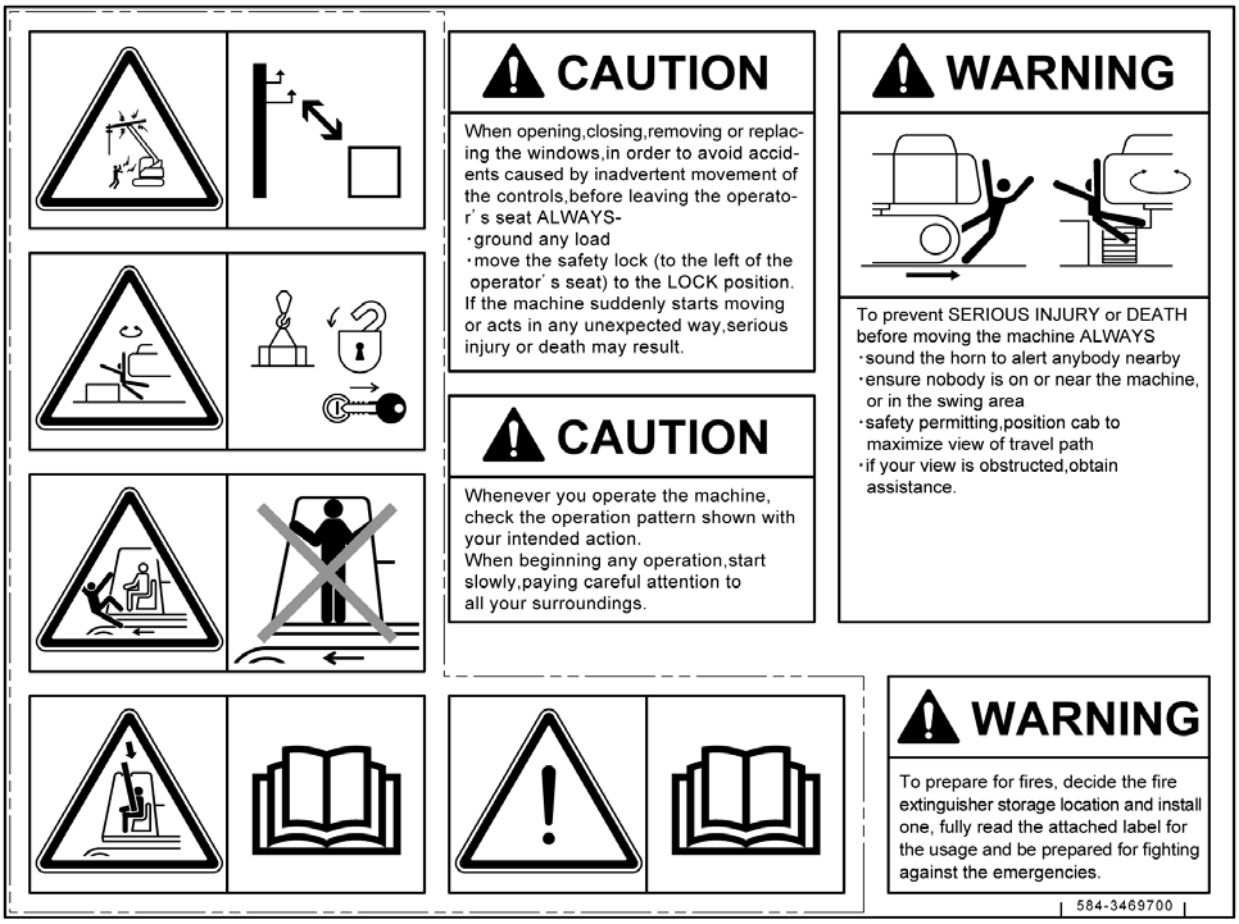

https://truckmanualshub.com/

(38) Washing Caution (300-4213900) (3 places)

(39) Driving Prohibited Tag (585-4738300)

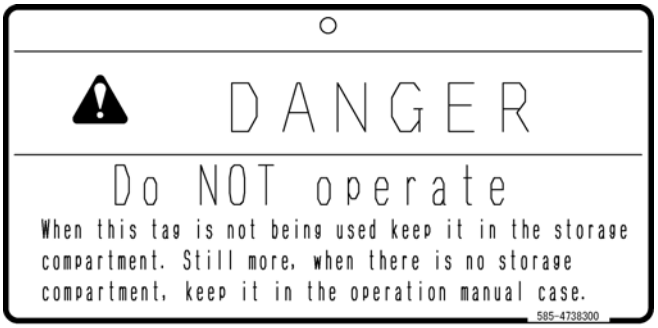

(47) Trapping Risk (553-4267600)

(48) Boom Operation Caution (542-4774400) (2 places)

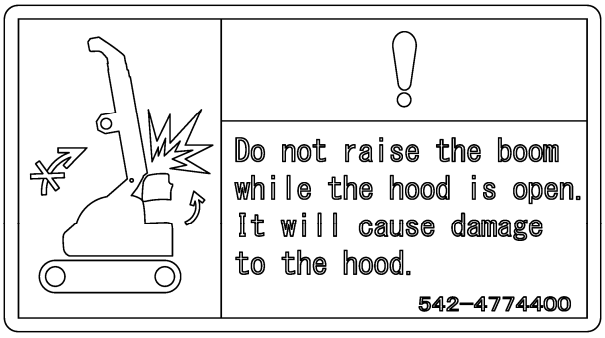

(49) High-Pressure Washing Around Operator's Seat Prohibited (542-4774900)

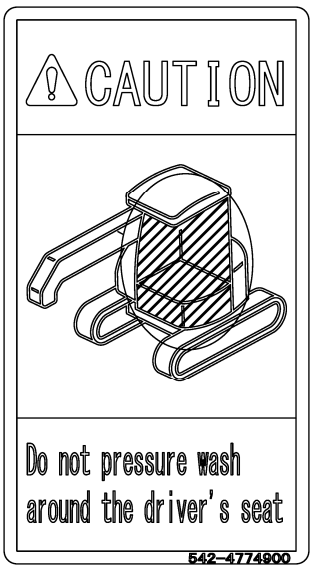

(50) High-Pressure Washing Within Cover Prohibited (CL000240110)

(52) Warning for blade operation (556-4575300)

https://truckmanualshub.com/

OPERATION

1. NAME OF EACH SECTION	56
2. EXPLANATION OF EACH EQUIPMENT	58
3. OPERATION	95
4. HANDLING WIRE ROPE	153
5. TRANSPORTATION	159
6. HANDLING MACHINE IN COLD ENVIRONMENT	169
7. LONG-TERM STORAGE	172
8. TROUBLESHOOTING	173

https://truckmanualshub.com/

1. NAME OF EACH SECTION

1.1 MACHINE UNITS

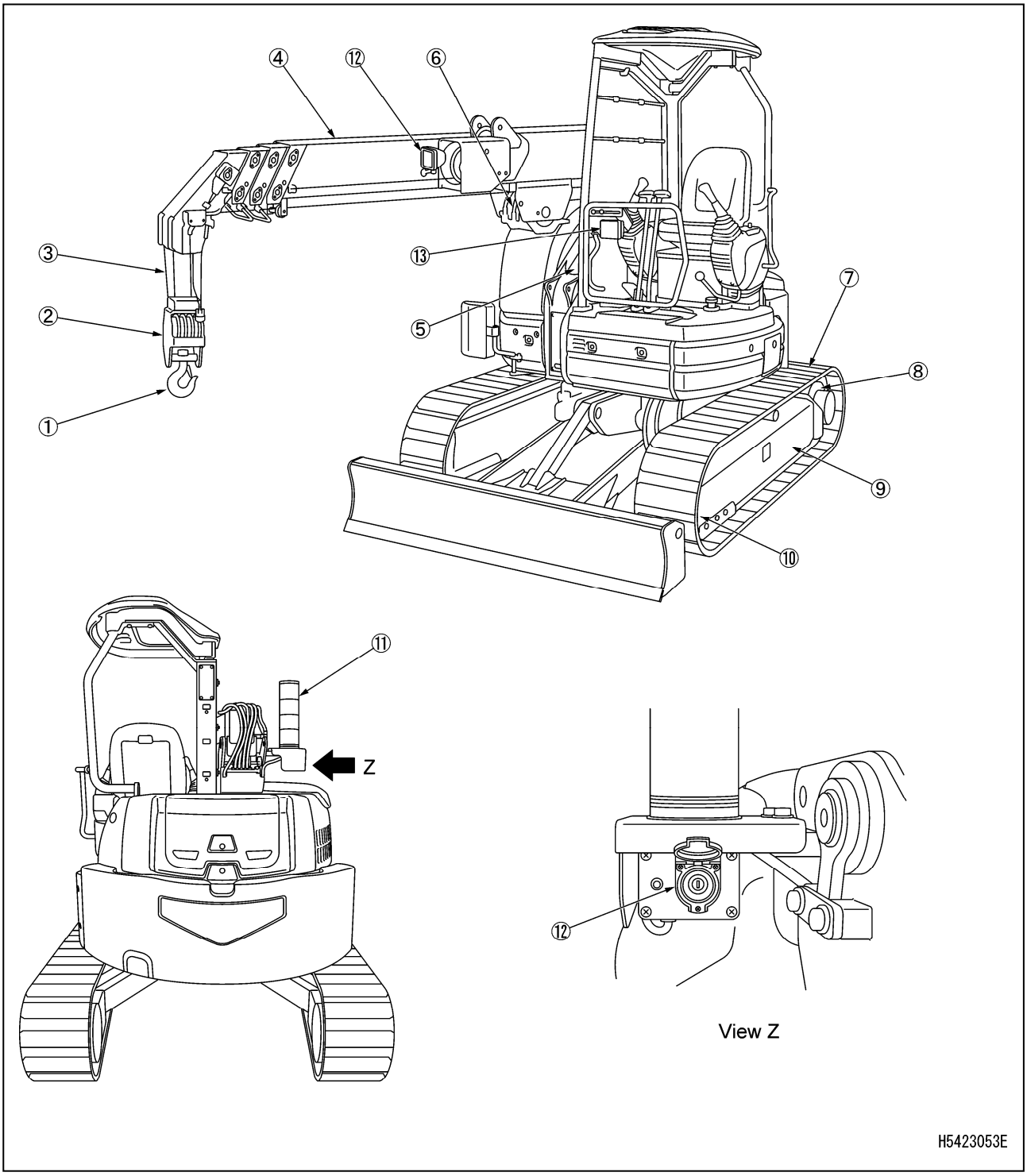

(1) Hook
(2) Hook block
(3) Wire rope
(4) Boom
(5) Derricking cylinder
(6) Winch
(7) Crawler
(8) Sprocket
(9) Track frame
(10) Idler
(11) Tri-colour revolving working status lamp
(12) Override switch
(13) Working lamp
(14) Headlight

https://truckmanualshub.com/

1.2 CRANE OPERATION UNITS

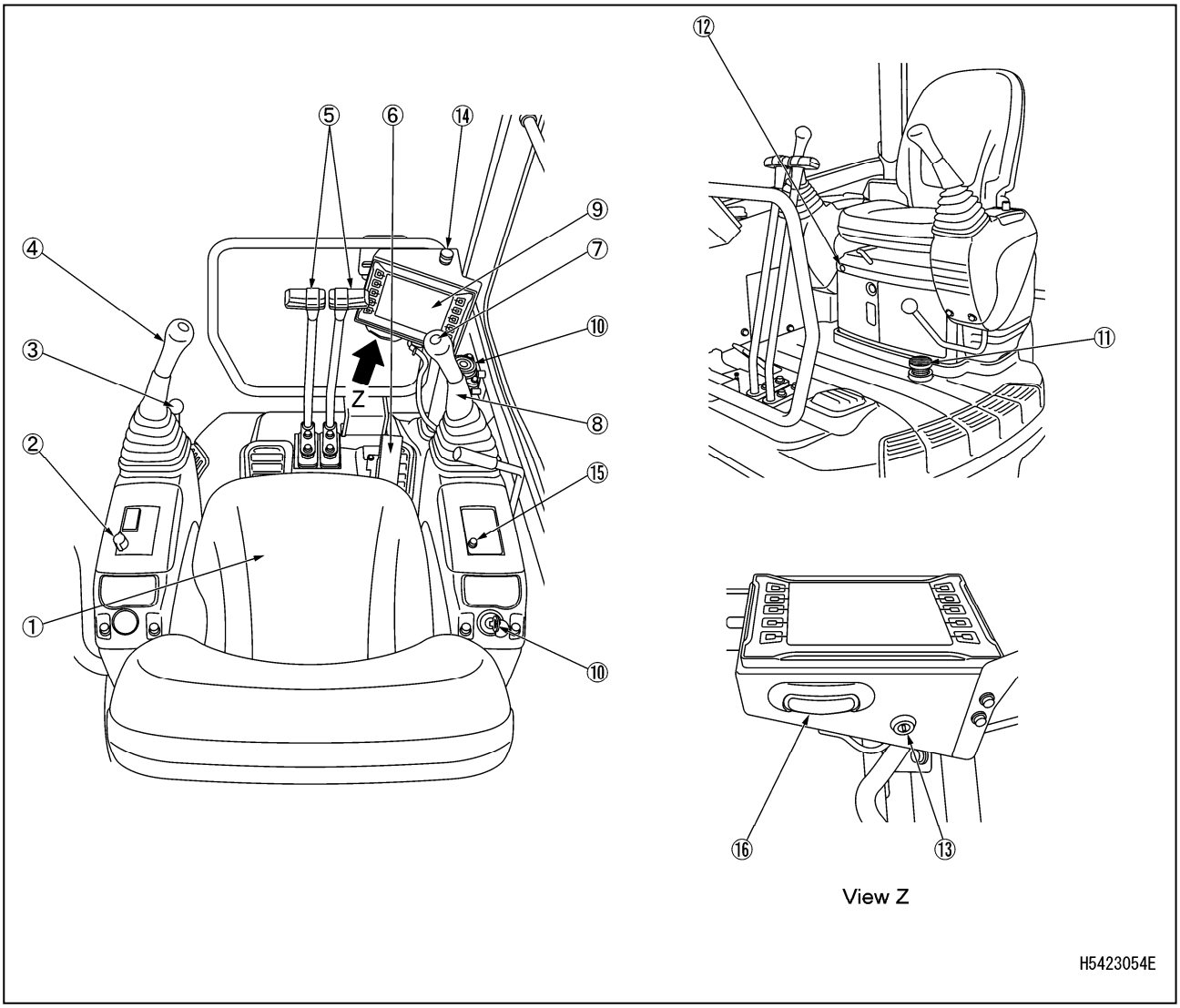

(1) Operator's seat
(2) Light switch
(3) Lock lever
(4) Left work equipment operation lever
(5) Travel lever
(6) Accelerator pedal
(7) Horn switch
(8) Right work equipment operation lever
(9) Machine monitor
(10) Levelling instrument
(11) Starter switch
(12) Speed-up pedal
(13) Buzzer canceling switch
(14) Maintenance switch
(15) Emergency stop switch
(16) Glow lamp
(17) Foot light

https://truckmanualshub.com/

2. EXPLANATION OF EACH EQUIPMENT

2.1 MACHINE MONITOR

[1] STARTING SCREEN

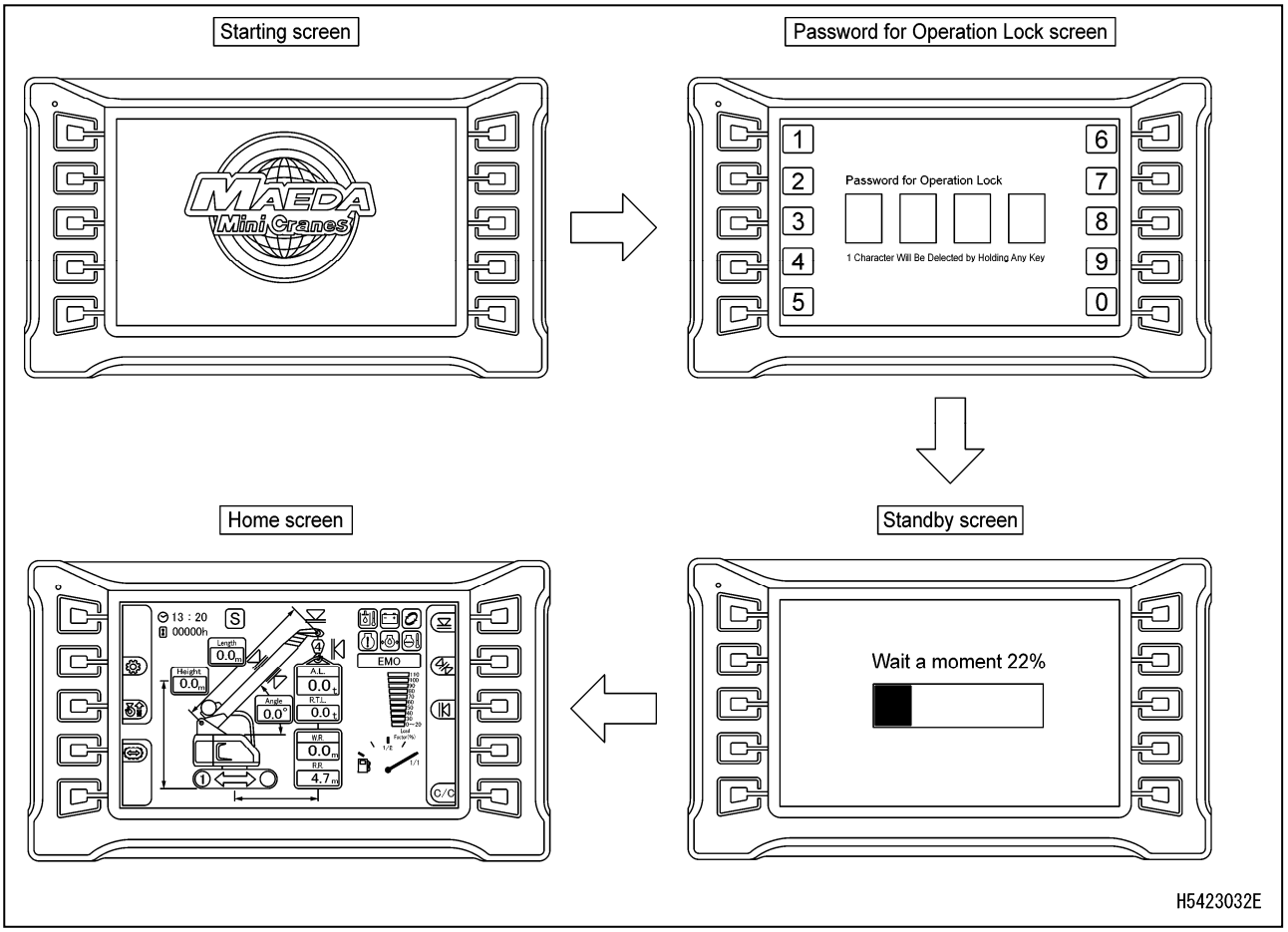

- When the starter switch is turned “ON”, the starting screen is displayed.
- If operation lock password entry is activated then after the startup screen is displayed, the operation lock password screen will display.
- Next, a standby screen appears before switching to the home screen.

NOTES
When the engine is started, the battery voltage can suddenly decrease depending on the temperature and battery condition. In such a case, the machine monitor display can temporarily disappear, but this is normal.

https://truckmanualshub.com/

[2] HOME SCREEN

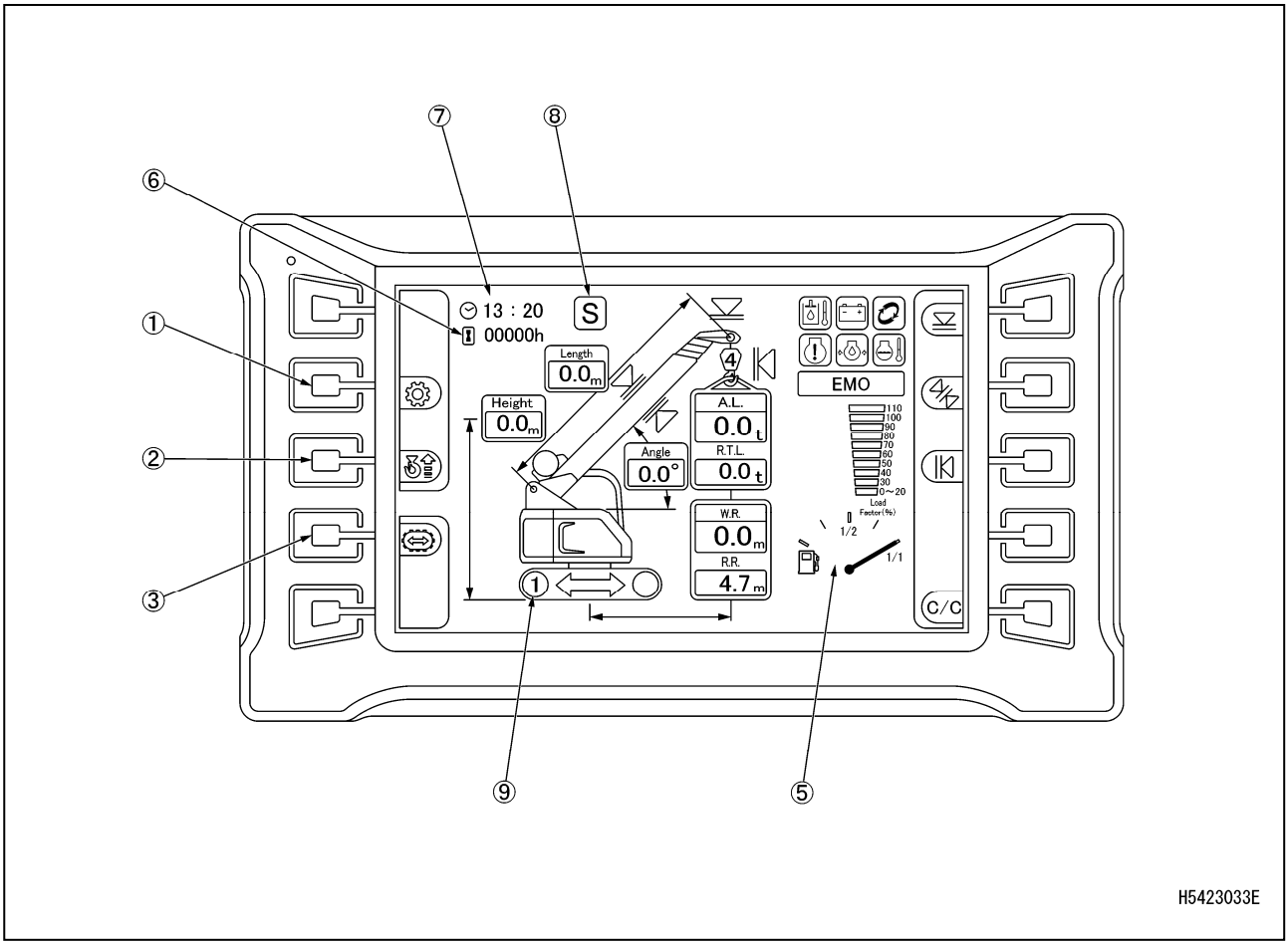

(1) User mode switch
(2) Hook stowage switch
(3) Travel mode selector switch
(4) Fuel gauge
(5) Hour meter display
(6) Time display
(7) Working mode display
(8) Travel 1st speed/2nd speed display

Refer to “Operation 2.3.4 Moment Limiter Functions” for the name of the moment limiter parts.

https://truckmanualshub.com/

2.1.1 MONITOR BASIC ACTION AND DISPLAY

[1] USER MODE SWITCH

When the user mode switch (1) is pressed on the home screen, the user mode is displayed.

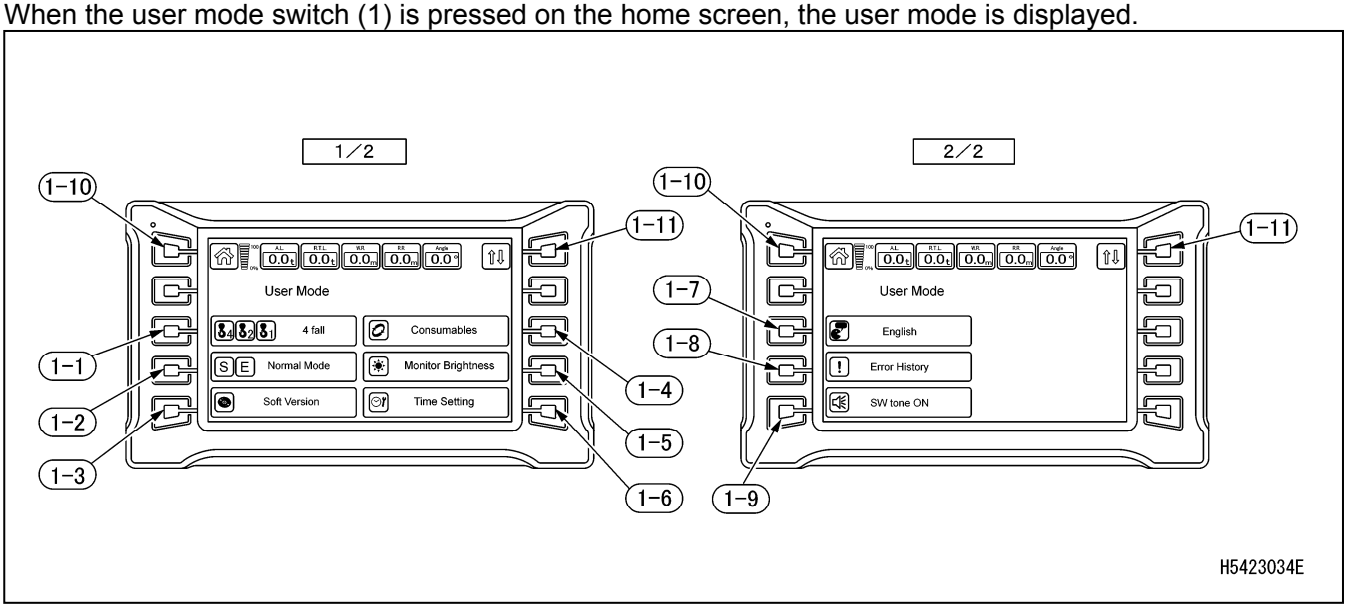

(1-1) Hook sling number change
(1-2) Working mode change
(1-3) Software version check
(1-4) Consumables display
(1-5) Monitor brightness adjustment
(1-6) Time setting
(1-7) Language setting
(1-8) Error history display
(1-9) Switch operation sound ON/OFF change
(1-10) Home switch
(1-11) Display page change

[1-1] HOOK SLING NUMBER CHANGE

When the switch (1-1) is pressed and held, the hook sling number can be changed.

- 4 falls
- 2 falls
- Single fall

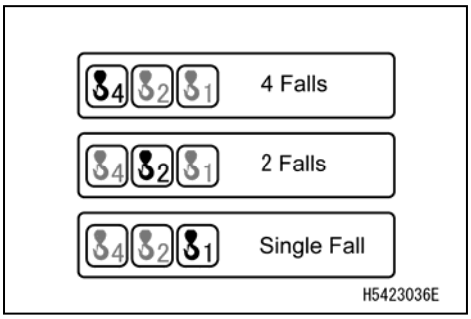

When the sling number is changed, the number on the hook part of the moment limiter part changes and rated total load changes.

Be sure to match the displayed number with the actual hook sling number.

https://truckmanualshub.com/

[1-2] WORKING MODE CHANGE

When switch (1-2) is pressed, the working mode can be changed.

- S: Standard mode
- E: Eco mode (low revolution mode)

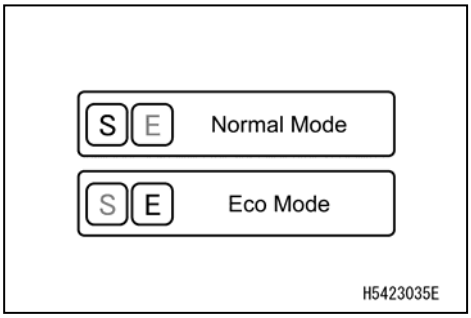

When the working mode is changed, the working mode display (8) on the home screen changes.

In the eco mode, the upper limit of the engine revolution is restricted and high output power operation is prevented.

[1-3] SOFTWARE VERSION CHECK

The controller software version can be checked.

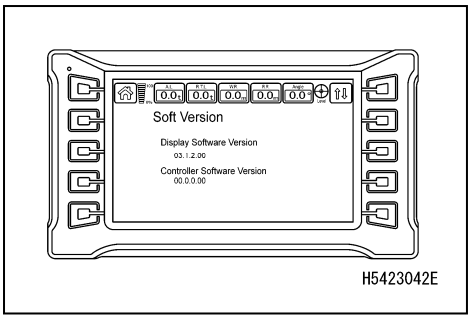

[1-4] CONSUMABLES DISPLAY

When switches (1-4) are pressed, the list of consumables can be viewed.

When exchanging consumable items, select the consumable items replaced with ▲ or ▼ of adjustment switch (1-4A). After selecting a consumable item, press and hold the replacement switch (1-4B) to update the replacement time. When updating, the number of exchanges is incremented once and the remaining time is reset.

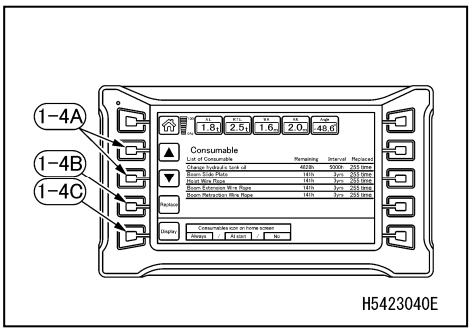

NOTES
• When replacing engine oil or the engine oil filter, “Did you perform engine exchange?” is displayed, so select “Yes / No”. • When replacing oil in winch reduction gear case, “Did you perform winch reduction gear exchange?” is displayed, so select “Yes / No”.

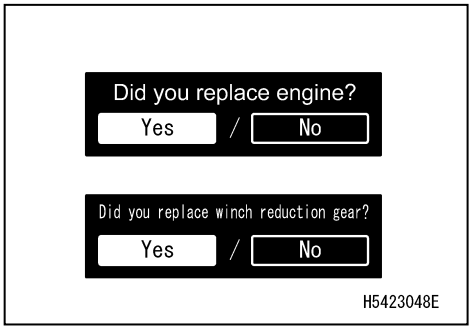

When “always display” or “display at startup time” is selected for the consumables icon display selection (1-4C), remaining times of 30 hours or 3 days is displayed in yellow characters with an outlined icon on the home screen; and remaining times of 0 hours or 0 days display in red characters with a solid-red icon on the home screen.

Promptly replace such parts because danger is involved or the machine body is adversely affected if they are used as they are.

https://truckmanualshub.com/

NOTES	
The setting “always display” is recommended for the consumables icon display selection (1-4C).	
Always display:	When the replacement time approaches or passes, the consumables icon is always displayed on the home screen.
Display at startup:	When the replacement time approaches or passes, the consumables icon is displayed on the home screen for only 30 seconds after startup.
None:	When the replacement time approaches or passes, the consumables icon is not displayed on the home screen.

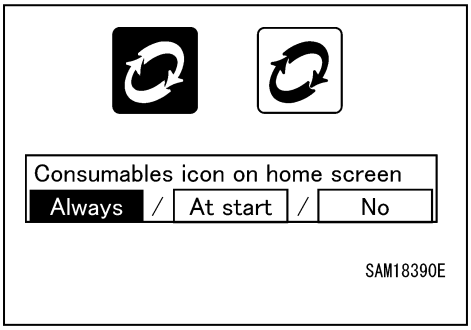

[1-5] MONITOR BRIGHTNESS ADJUSTMENT

When switch (1-5) is pressed, the monitor brightness can be adjusted.

Make adjustments with ◄ or ► of adjustment switch (1-5B).

The screen returns to the previous user mode screen with the home switch (1-5A).

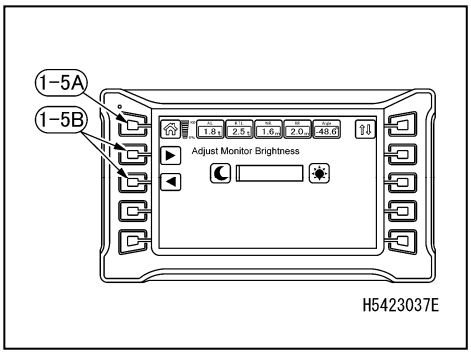

[1-6] TIME SETTING

When switch (1-6) is pressed, time setting, 24/12 hour display and summer time ON/OFF can be changed.

- Time setting
- 24/12 hour display change
- Summer time ON/OFF

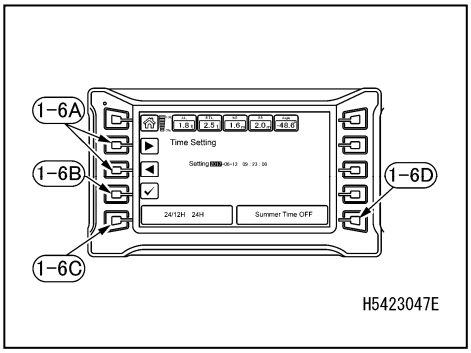

[1-6-1] TIME SETTING

Select the date and time desired to be changed with ◄ or ► of the adjustment switch (1-6A) and press the check mark (1-6B). (The part whose background is white is selected.)

When the word colour turns red, editing becomes possible.

Make adjustments with ◄ or ► of the adjustment switch (1-6A) in this condition.

When the check mark (1-6B) is finally pressed, editing is completed.

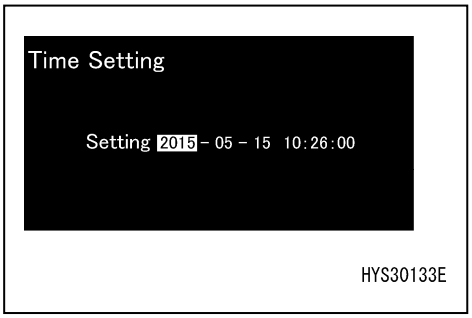

[1-6-2] 24/12 HOUR DISPLAY CHANGE

When the switch (1-6C) is pressed, time display can be changed to either 24 hour display or 12 hour display.

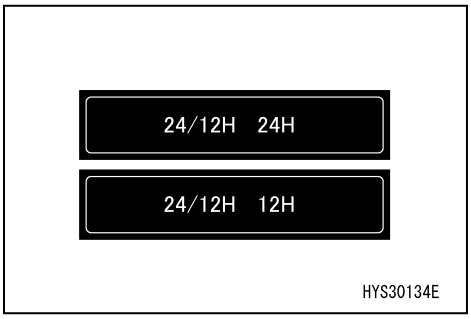

https://truckmanualshub.com/

[1-6-3] SUMMER TIME ON/OFF

When the switch (1-6D) is pressed, ON or OFF of summer time can be selected.

- ON: Time display is moved up by one hour.
- OFF: Originally set time is displayed.

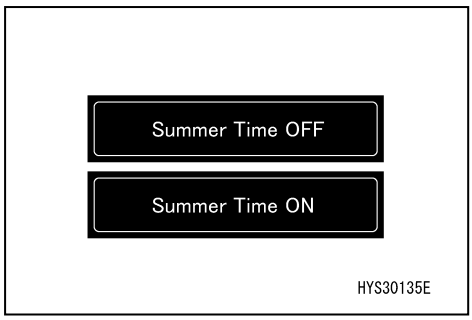

[1-7] LANGUAGE SETTING

When the switch (1-7) is pressed, the display language can be changed.

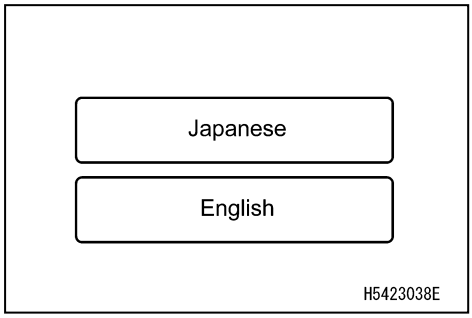

[1-8] ERROR HISTORY DISPLAY

When switch (1-8) is pressed, the error history can be viewed. Faults occurring at the present time are displayed in red characters.

For details about the contents of the display, refer to “Operation 2.1.2 Warning Display”.

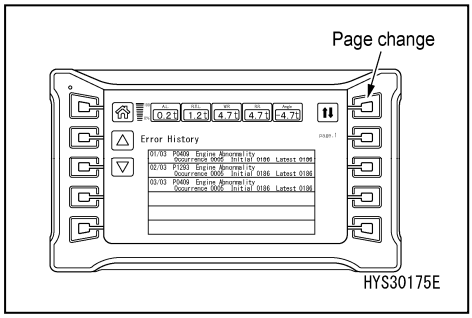

[1-9] Switch operation sound ON/OFF change

When switch (1-9) is pressed, switch operation sound ON/OFF can be changed.

- OFF: No operation sounds are heard when switches are operated.
- ON: Operation sounds are heard when switches are operated.

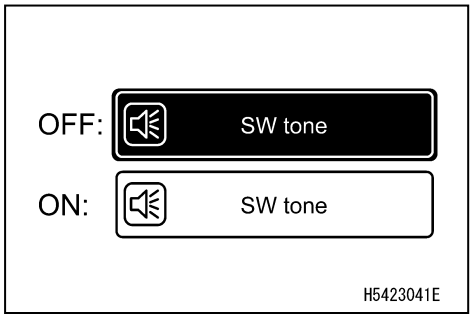

[1-10] HOME SWITCH

- Short press: Returns one page.
- Long press: Returns to home page.

[1-11] DISPLAY PAGE CHANGE

Each time the switch is pressed, the page changes: “page 1/2 to page 2/2 to page 1/2”.

https://truckmanualshub.com/

[2] HOOK STORAGE SWITCH

⚠ WARNING

- **The hook stowage switch is used to cancel the automatic stop function of the over-hoisting prevention device.**
  When storing the hook block, carefully operate the right work equipment operation lever and pay due attention not to allow the hook block to crash against the boom.
- **Use the hook storage switch only when performing simple storage of the hook block into the boom tip.**

While continuing to press switch (2), operate the right work equipment operation lever toward the “Hoisting” side. The hook block is hoisted and is stored in the storage section of the boom tip.

When the switch is released, the automatic stop function of the over-hoisting prevention device turns into an operating state.

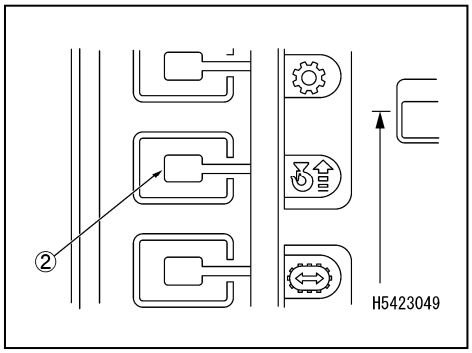

NOTES

- While this switch is pressed, the red lamp of the tri-colour revolving working status lamp illuminates.
- When the winch is hoisted while this switch is pressed, the hoisting speed becomes slow, which is not a fault.

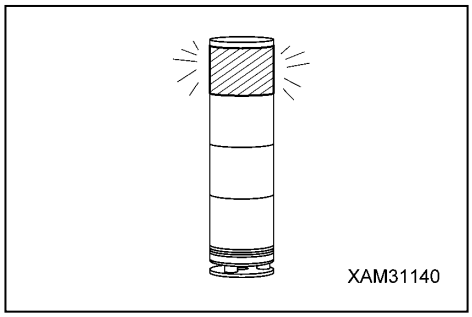

[3] TRAVEL MODE SELECTOR SWITCH

⚠ DANGER

Travel with a lifted load is in principle prohibited because it is very unstable and involves danger.
When there is no alternative but to perform travelling with hoisted load, refer to “Operation 3.19 Travelling With Hoisted Load” and strictly observe the rated total loads, operation methods and travel postures for travelling with hoisted load.
Unless these precautions in travelling with a lifted load are observed, serious physical injury may be caused.

When switch (3) is pressed, the mode can be changed from stationary mode to travel mode enabling travel with a lifted load. The machine body illustration display on the home screen changes.

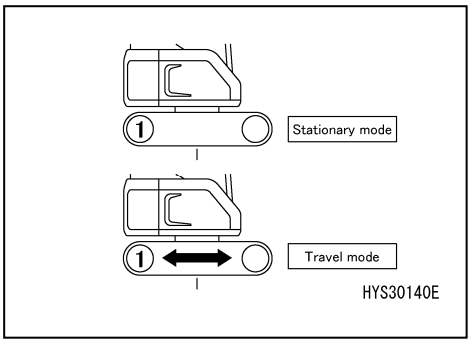

https://truckmanualshub.com/

[4] FUEL GAUGE

The fuel gauge (4) indicates the quantity of fuel in the fuel tank. When the indicator comes near the red colour of the meter, check the fuel quantity in the fuel tank and replenish fuel.

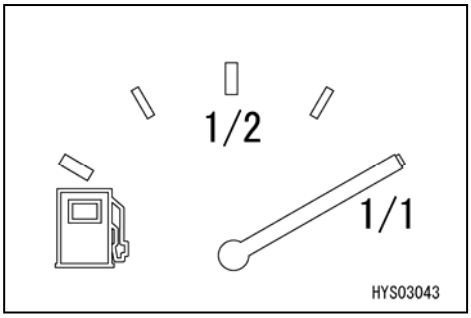

NOTES
Although the indicator may not point to the correct position for a while after the starter switch is turned “ON”, this is normal.

[5] HOUR METER DISPLAY

Displays the hour meter.

[6] TIME DISPLAY

Displays the set time.

[7] WORKING MODE DISPLAY

Displays the working mode currently set.

[8] TRAVEL 1ST SPEED/2ND SPEED DISPLAY

The display will be “1” under normal conditions.

The display changes to “2” only when pressing the speed-up pedal.

2.1.2 WARNING DISPLAY

[1] WARNING DISPLAY AND ERROR CODE DISPLAY

⚠ CAUTION

If the warning monitor illuminates in red, immediately stop work and stop the engine, or set it to low idle. Then, immediately inspect the applicable part and take action for it.

Emergency stop items are those to which you have to pay attention during engine running and when an abnormality occurs, items for which immediate action must be taken are displayed. When an abnormality occurs, the monitor of the abnormal part illuminates in red and the buzzer sounds.

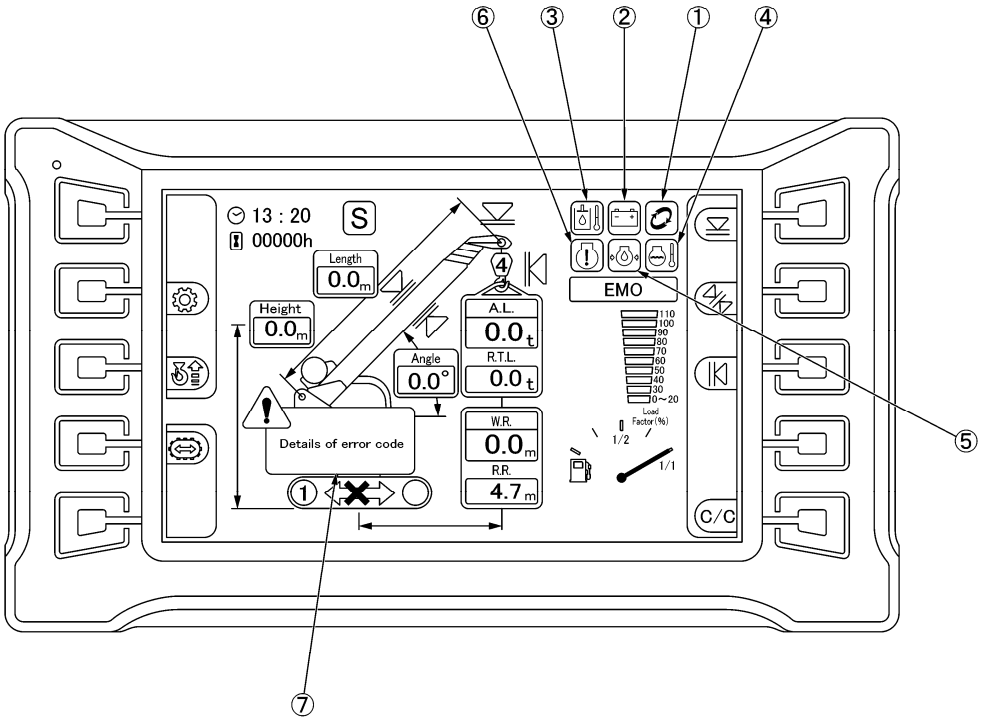

(1) Consumables display
(2) Charge capacity abnormality
(3) Hydraulic oil temperature abnormality
(4) Engine coolant temperature abnormality
(5) Engine oil pressure abnormality
(6) Engine system abnormality
(7) Error code display

If warning and/or error code is displayed, check the warning content and error content.
If an error code is displayed, please contact us or our sales and service agency.

https://truckmanualshub.com/

2.2 SWITCHES

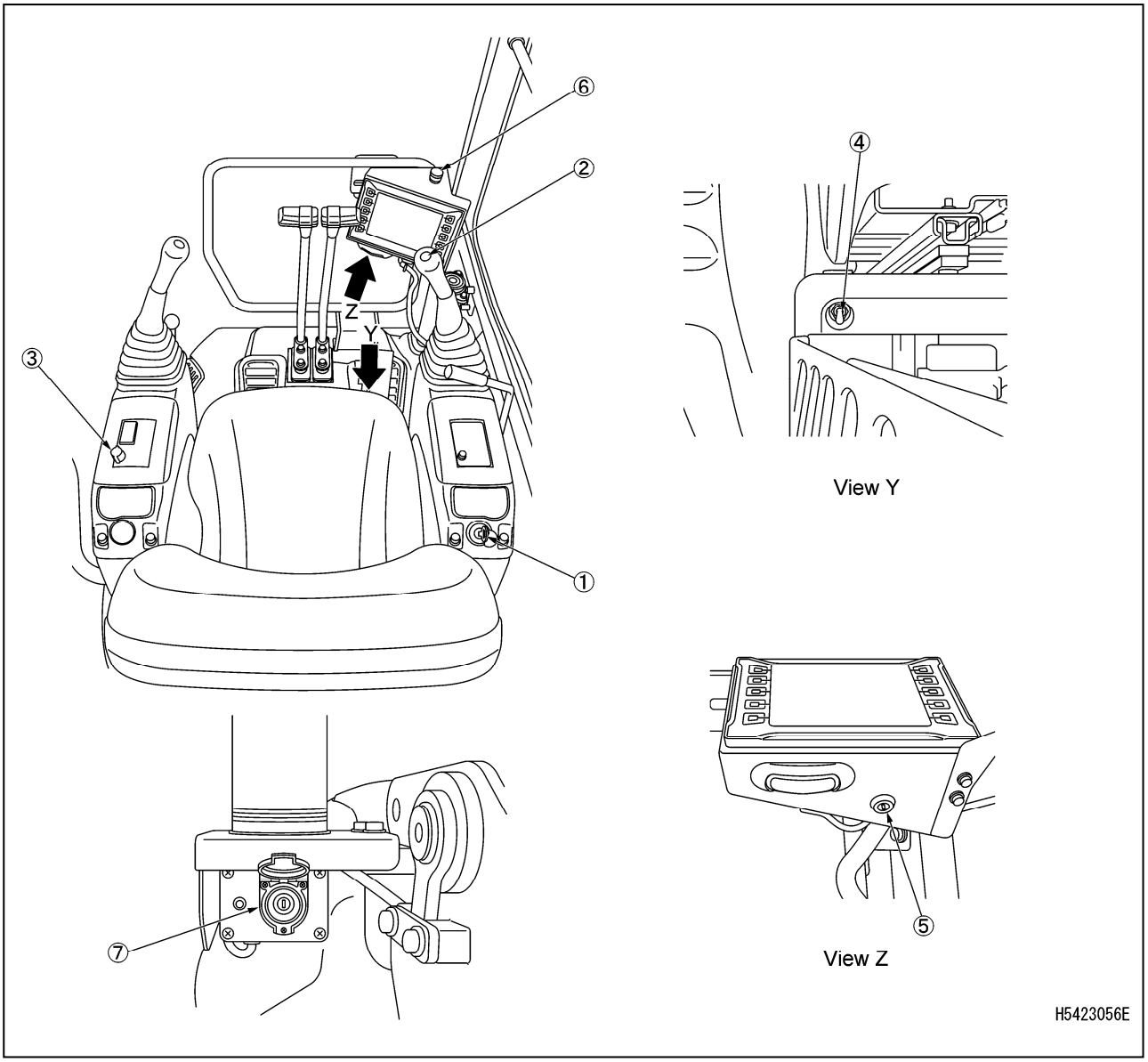

(1) Starter switch
(2) Horn switch
(3) Light switch
(4) Buzzer canceling switch
(5) Maintenance switch
(6) Emergency stop switch
(7) Override switch

https://truckmanualshub.com/

[1] STARTER SWITCH

⚠ CAUTION

Always turn the starter switch to the "OFF" position at the end of work.

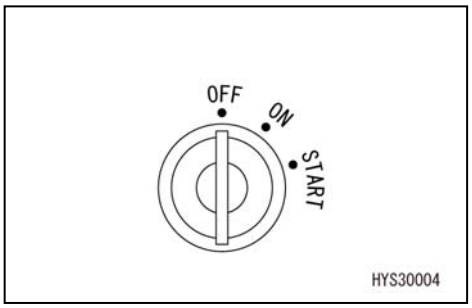

Use this switch to start and stop the engine.

- OFF
  The key can be inserted and removed, the electrical system current is turned off except to the lights and the engine is stopped.
- ON
  Electricity flows through the charging circuit and lights circuit. Keep the switch at this position while the engine is running.
- START
  A position where the engine starts. Keep the key at this position during cranking and when the engine has started, immediately release your hand from the key. The key automatically returns to the "ON" position.

The engine of this machine has the automatic remaining heat function. If the engine does not crank when it is cold, AUTO GLOW lamp illuminates. When the lamp illuminates, wait until the lamp goes out and then, turn the switch to the START position to start the engine.

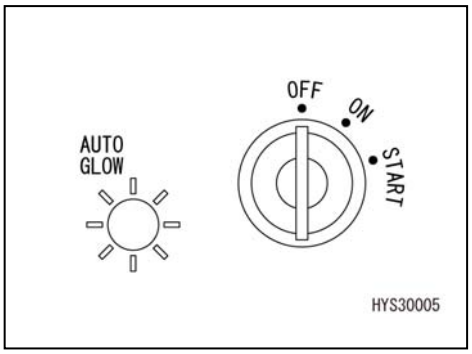

NOTES

The engine does not start unless the lock lever is at the lock (L) position. Check that the lock lever is at the lock (L) position before operating the starter switch.

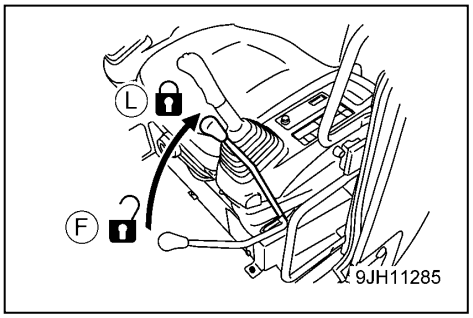

[2] HORN SWITCH

When the switch on the centre of the knob of the right work equipment operation lever is pressed, the horn sounds.

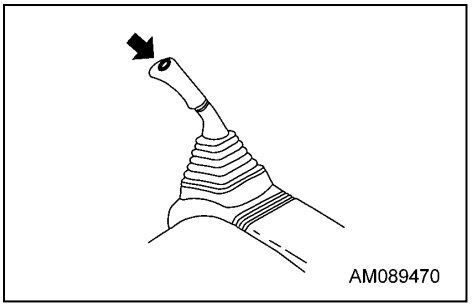

https://truckmanualshub.com/

[3] LIGHT SWITCH

This switch lights the work lights, the headlight and the foot light.

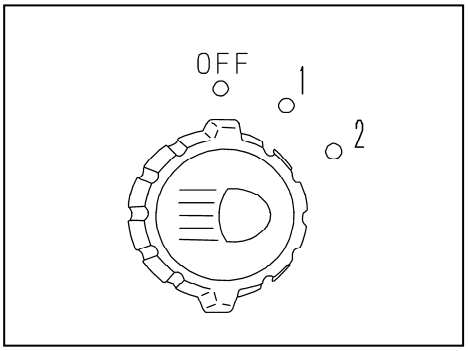

Position 1: The foot light lights up

Position 2: The foot light, work light and headlights light up

OFF position: Lights are OFF

[4] BUZZER CANCELING SWITCH

For your safety, set the switch to the normal position for work.

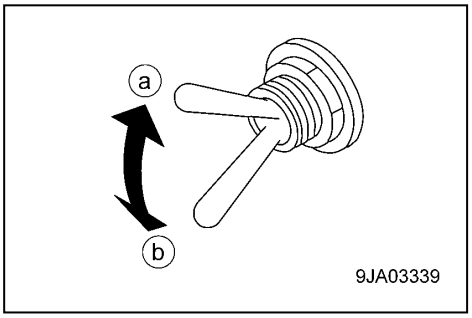

- (a) Cancel position:
  The warning buzzer sound is stopped.
- (b) Normal position:
  The warning buzzer tone sounds.

NOTES
The buzzer tone which can be cancelled is limited to the buzzer tone when a fault code is displayed. Other warning sounds are not cancelled.

[5] MAINTENANCE SWITCH

This switch is not used for crane operations.

It is a maintenance switch for servicing.

[6] EMERGENCY STOP SWITCH

This switch is used to stop the machine immediately in case of an error in the machine.

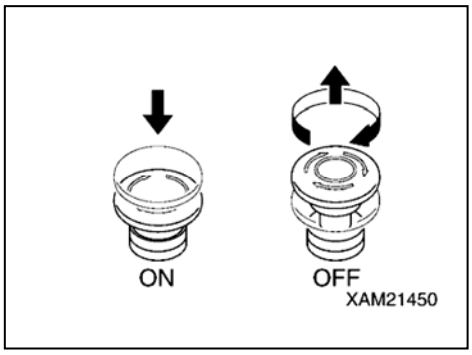

- ON: Press the switch. The engine stops and “EMERGENCY STOP” is displayed at the upper right of the home screen.
- OFF: Turn the switch clockwise (in the arrow direction on the right illustration).
  The switch returns to the original position.

NOTES
When restarting the engine after an emergency stop, be sure to turn the engine emergency stop switch to the “OFF” position before starting the engine.

https://truckmanualshub.com/

[7] OVERRIDE SWITCH

⚠ DANGER

The maintenance switch has the function of disabling the moment limiter function.
While this switch is at the "ON" (cancel) position, the crane does not automatically stop by the moment limiter, falling into very dangerous conditions. Any crane operation in such conditions will result in dropping of hoisted load, breakage of crane boom, and/or machine tipping, and may cause a serious accident resulting in death or serious injury.
Use this switch only when the moment limiter, which detects the crane conditions, failures or when a load test of the crane is conducted. Key for the switch must be detached during normal operations.
In particular, never use in the following ways.

- **When lifting a load, do not hoist the hook while turning this switch to the "ON" (cancel) position.**
  Even if a load of hoisted load exceeds the rated total load, the moment limiter cannot detect it, resulting in dropping of hoisted load, boom breakage and machine tipping due to cutting of the winch wire rope.
- **After the moment limiter detects that the rated total load is exceeded during crane operation and automatically stops the operation, do not perform hoisting operation, boom lowering operation and boom extension operation while turning this switch to the "ON" (cancel) position. Such operations cause boom breakage and machine tipping.**
- **Use the hook storage switch when storing the hook. If the override switch is used when performing hook hoisting operation, automatic stop is not made even in an over-wind condition.**

Use this switch only when the moment limiter fails or a load test of the crane is conducted.

- ON (Cancel): Insert the key into the switch. Turn the key clockwise and retain the key at that position. The activation stop function is canceled while the key is maintained at the ON position.
  The key automatically returns to the "OFF" (Automatic) position when you release your hand.
- OFF (Automatic): The operation stop function is enabled at this position and the key can be inserted and removed.

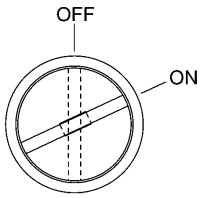

XAM15110

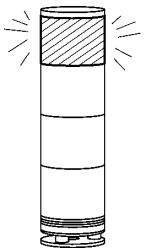
XAM31140

NOTES

If this switch is placed in the "ON" (Cancel) position, the red lamp of the tri-colour revolving working status lamp turns on.

https://truckmanualshub.com/

2.3 MOMENT LIMITER (OVERLOAD DETECTOR)

2.3.1 CONFIGURATION OF MOMENT LIMITER

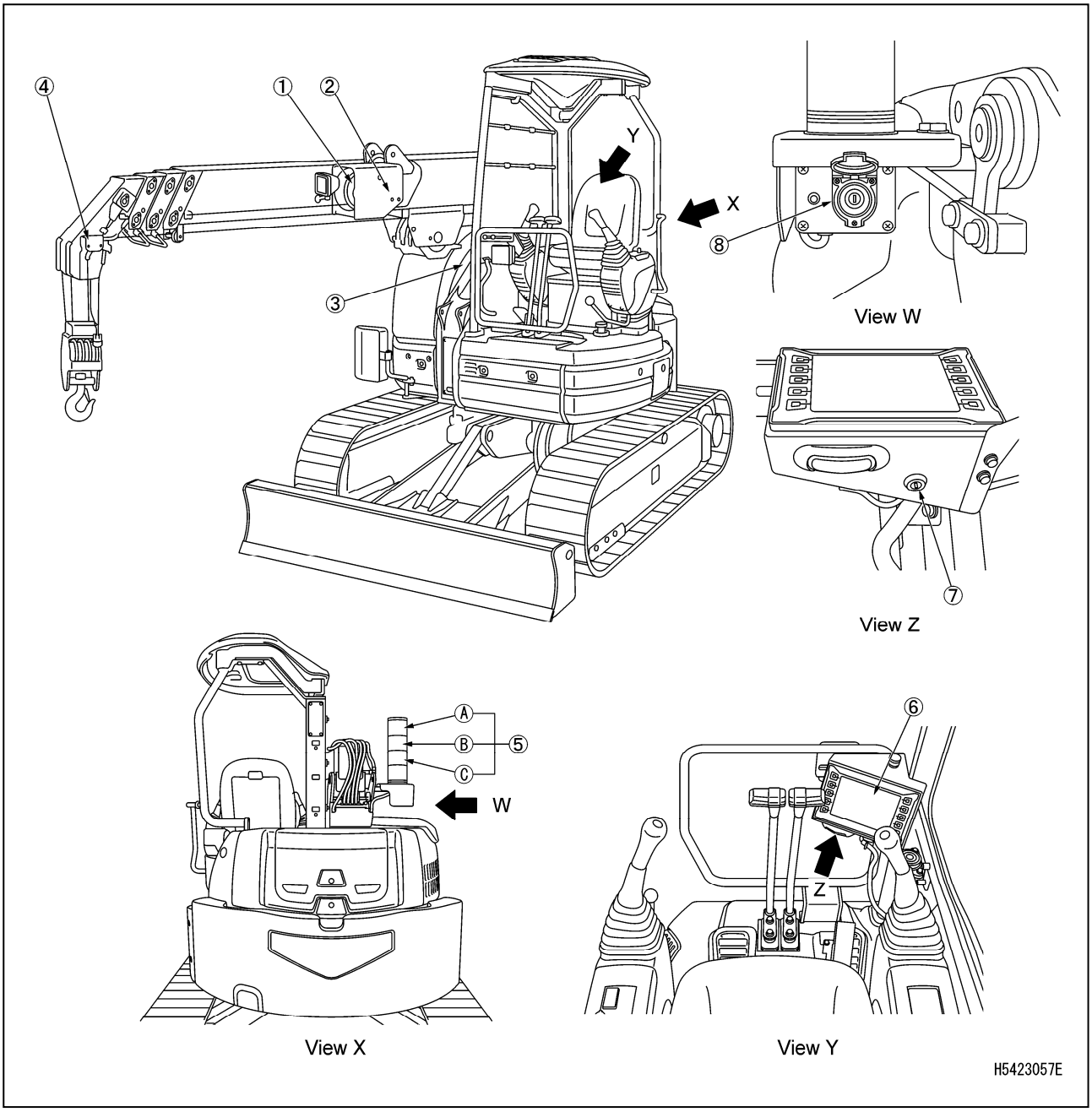

(1) Boom length meter (left side of boom)

(2) Boom angle meter (left side of boom)

(3) Pressure sensor (derricking cylinder section) (2 pieces)

(4) Over hoist detector (side of boom tip)

(5) Tri-colour revolving working status lamp

(A) Red revolving working status lamp (warning lamp when load factor is 100% or more)

(B) Yellow revolving working status lamp (alarm lamp for a load capacity ratio between 90 and less than 100%)

(C) Green revolving working status lamp (operation lamp when load factor is less than 90%)

(6) Moment limiter display (machine monitor)

(7) Maintenance switch

(8) Override switch

https://truckmanualshub.com/

2.3.2 FUNCTIONS OF MOMENT LIMITER

⚠ DANGER

- **Do not remove, disassemble, or repair the detector. In addition, do not reposition the detector from the original location to another.**
- **When an object hits the detector or damage is found on it, be sure to check the operating condition of the automatic stop. If an abnormality occurs during automatic stop operation due to a failed detector, be sure to repair it.**
- **The slewing operation does not stop automatically when the crane is overloaded. When overloaded, do not perform slewing operation.**
- **When the boom is approaching the stop position while in operation, be sure to lower the operation speed of the boom.**
  Operating the boom at high speeds may result in a serious accident, such as death or serious injury. The boom may fail to stop at the predetermined position, causing the machine to overturn.
- **The override switch has the function of disabling the moment limiter function. While this switch is at the "ON" (cancel) position, the crane does not automatically stop by the moment limiter, falling into very dangerous conditions. Any crane operation in such conditions will result in dropping of hoisted load, breakage of crane boom, and/or machine tipping, and may cause a serious accident resulting in death or serious injury. Use this switch only when the moment limiter fails or a load test of the crane is conducted. Key for the switch must be detached during normal operations.**

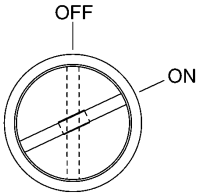

The moment limiter is a safety device for preventing accidents arising from overload, such as dropping hoisted loads, damaging the boom or overturning the machine.

Before starting crane operations, be sure to inspect operation of the moment limiter to make sure that there is no abnormality.

MECHANISM OF MOMENT LIMITER

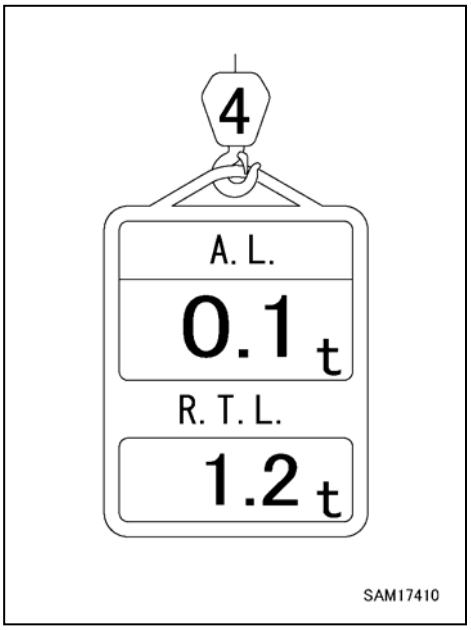

The moment limiter knows the current posture by the boom angle meter and boom length meter and calculates “Rated total load” in the current condition by further knowing the number of wire falls (input by an operator).

When the load is actually hoisted at this time, the moment limiter calculates the “actual load” (hoisted load) according to the pressure value from the pressure sensor of the derricking cylinder section. The moment limiter makes comparison and calculation on “Rated total load” and “Actual load” (hoisted load) that were calculated in the current figure. Then, it issues an alarm if the result is as follows: “Rated total load / Actual load = 90 – 100%”.

If the calculation result is “Rated total load / Actual load = 100% or more”, the moment limiter issues an alarm and at the same time automatically stops the boom operation.

The overload stop accuracy satisfies the stop accuracy of the following formula by slowly lowering the boom.

$$\text{Stop accuracy} = \frac{A - B}{B} \times 100 < +10\%$$

Where, A: Total weight of suspended load + hook + hoisting attachment

B: Rated total load of working radius (actually measured radius) where the boom stopped due to overload

MOMENT LIMITER ERROR MESSAGE DISPLAY

The moment limiter displays an error code on the machine monitor to notify the operator if an abnormality occurs in the boom angle meter, boom length meter or pressure sensor, if wiring is cut, if connectors come off etc.

If any error code is displayed, immediately stop using crane.

For error codes, causes of abnormalities and remedial action refer to “8.5 List of Error Codes”.

https://truckmanualshub.com/

2.3.3 MOMENT LIMITER OPERATION AND CANCELLING (RECOVERY)

The moment limiter is a device that is provided for measures available for an emergency case. In actuality, any operations relying on the device will incur danger.

Pay sufficient attention during operations so that the crane will not stop automatically.

[1] PROHIBITED OPERATIONS AFTER AUTOMATIC STOP

⚠ DANGER

If the crane has stopped automatically due to overload, the following crane operations are prohibited.
Disobeying this rule may cause critical danger due to tipping of the machine or breakage of the boom, for example.

- **Boom lowering operation • Boom hoisting operation • Boom extending operation**
- **Hook hoisting operation**

[2] RECOVERY OPERATION FROM AUTOMATIC STOP

⚠ DANGER

When an automatic stop occurs, recovery cannot be performed unless you lower the load capacity ratio to the safe region of less than 90% (tri-colour revolving working status lamp: green).
If the moment limiter displays the load factor of 90% or more, be sure to perform crane operations carefully by turning the engine speed to low speed.
Performing crane operations at a high engine speed could cause critical danger; in this case, the hoisted load will waggle resulting in overload, which could lead to tipping of the machine or breakage of the crane, for example.

When load factor is “less than 90%”

When the hoisted load is less than 90% of the rated total load, the green colour of the rotating warning lamp which shows a normal use condition turns on.

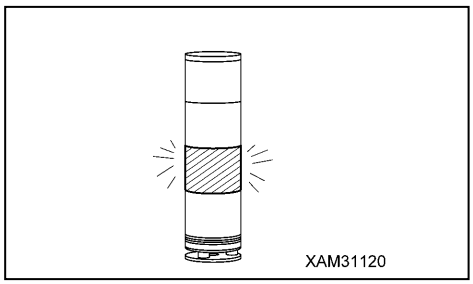

For a load capacity ratio: 90% or more and less than 100%

In the case of lifting loads being 90% (warning alarm) of the Rated Total Load, the illuminated green revolving working status lamp turn yellow, and an alarm goes off intermittently to notify operators or people around that the lifting load is approaching the Rated Total Load.

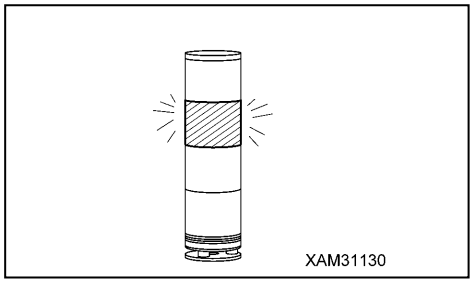

For a load capacity ratio: “Greater than 100%”

If the hoisted load exceeds 90% (prediction alarm) of the rated total load and the hoisted load becomes 100% or more of the rated total load by further continuing crane operations, the tri-colour revolving working status lamp changes from the yellow colour to the red colour, the alarm sounds continuously and subsequent crane action stops automatically.

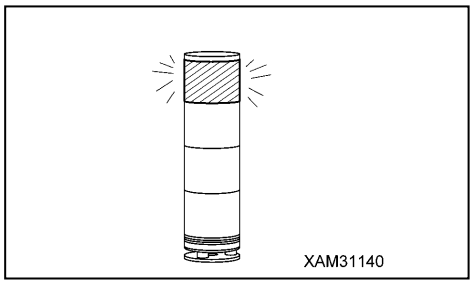

• Hook hoisting • Boom extension • Boom lowering • Boom hoisting

RECOVERY OPERATION FROM AUTOMATIC STOP

To recover from the overload condition, perform one of the following so as to operate the crane in reverse order when it is automatically stopped.

(1) Unwind the wire rope to lower the hook, and place the suspended load on the ground.

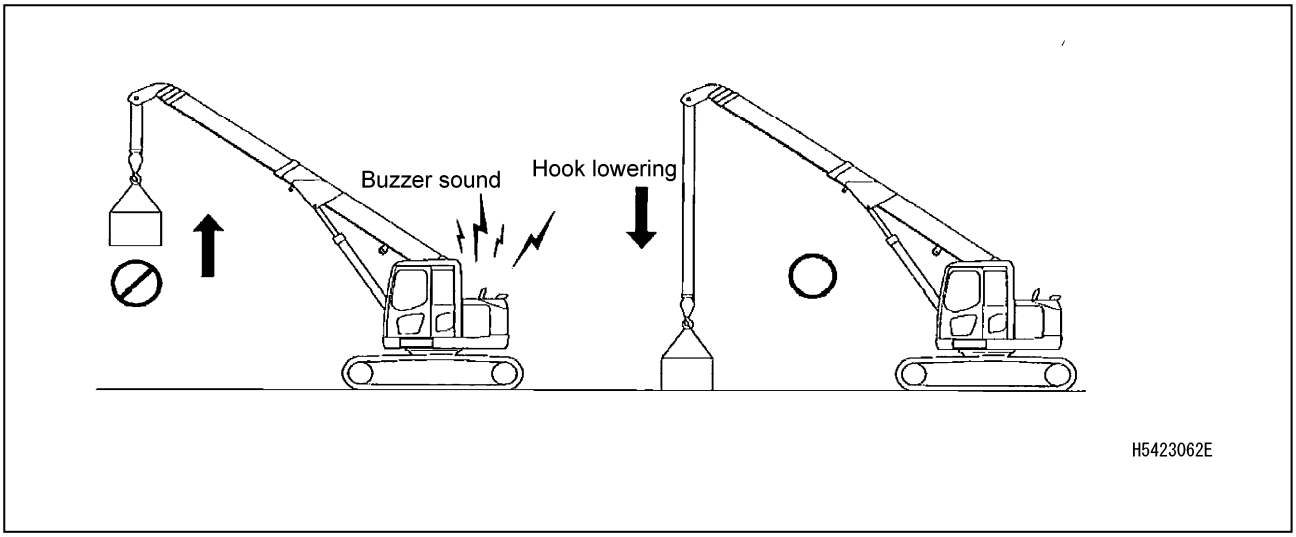

(2) Retract the boom.

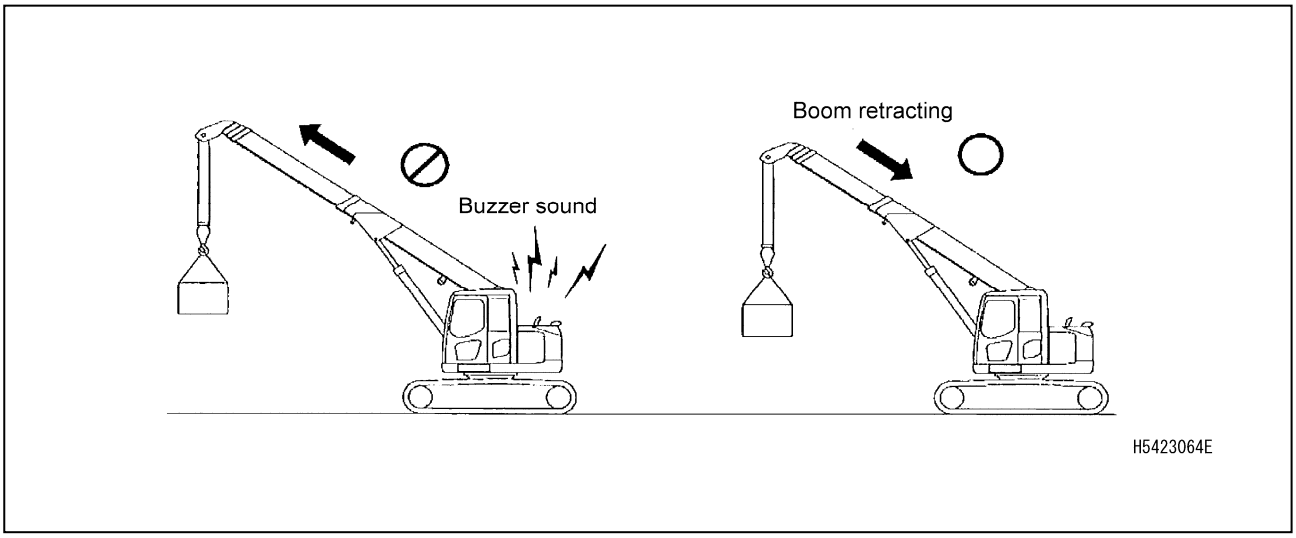

https://truckmanualshub.com/

[When recovering by boom hoisting operation]

In the case of an automatic stop, when hoisting of the boom is unavoidable, the boom hoist operation is possible only while keeping the maintenance switch in the “ON” position. To return to the “OFF” position, also return the boom hoisting lever.

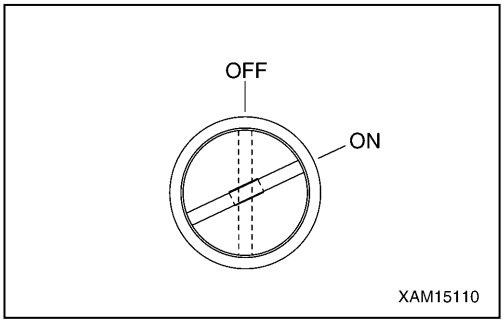

⚠ DANGER

Only use this switch when an automatic stop has occurred through entry into the overload region while lowering or extending the boom.
Do not use under normal conditions or when lifting clear from the ground.
If you use this switch when lifting from the ground, there is a risk of serious accidents such as the machine being damaged or overturning.

NOTES

While the maintenance switch is “ON”, the machine operates as follows.
- The engine speed decreases.
- The continuous buzzer tone sounds.
- The tri-colour revolving working status lamp illuminates in red.

https://truckmanualshub.com/

2.3.4 MOMENT LIMITER FUNCTIONS

[1] MONITOR DISPLAY OF MOMENT LIMITER

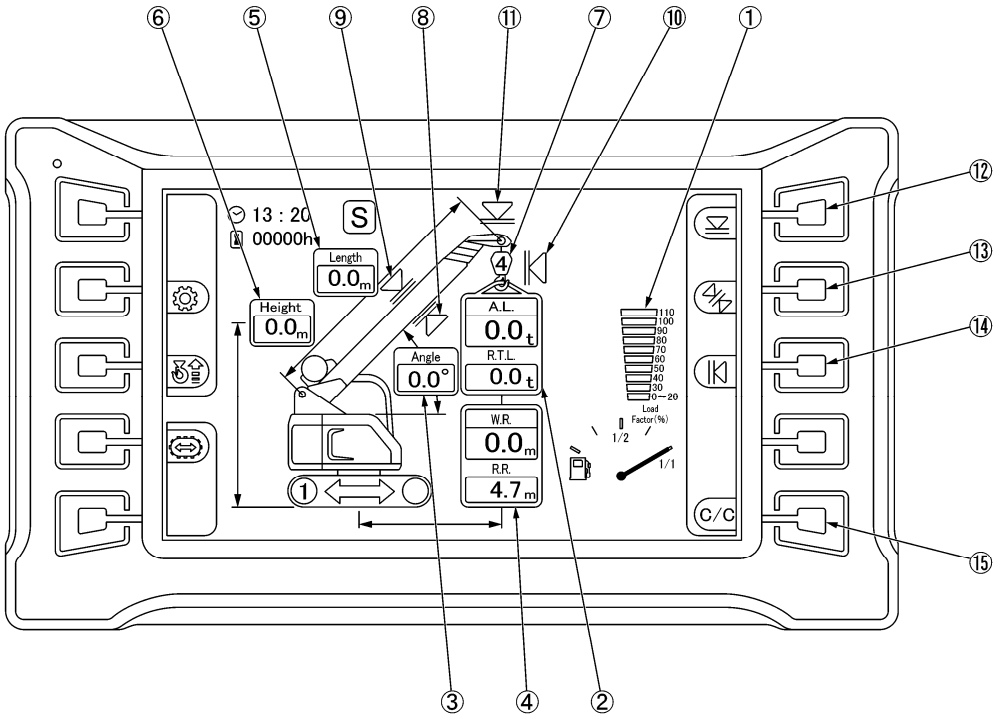

(1) Load capacity ratio display
(2) Actual load/rated total load display
(3) Boom angle display
(4) Working radius/rated working radius display
(5) Boom length display
(6) Lifting height display
(7) Number of wire falls display
(8) Boom angle lower limit display
(9) Boom angle upper limit display
(10) Working radius upper limit display
(11) Lifting height upper limit display
(12) Lifting height upper limit switch
(13) Boom angle upper limit/lower limit switch
(14) Working radius upper limit switch
(15) Setting check/canceling switch

https://truckmanualshub.com/

[2] EXPLANATION OF MOMENT LIMITER DISPLAY

1. Actual load display

Continually displays the actual load of the hoisted load during crane operations.

The actual load equals the total weight of the hook, hoisting attachment, and hoisted load. When no load is applied, the normal indication becomes “0.0” to “0.1”. If the indication does not fall within the above range, contact us or our sales service agent.

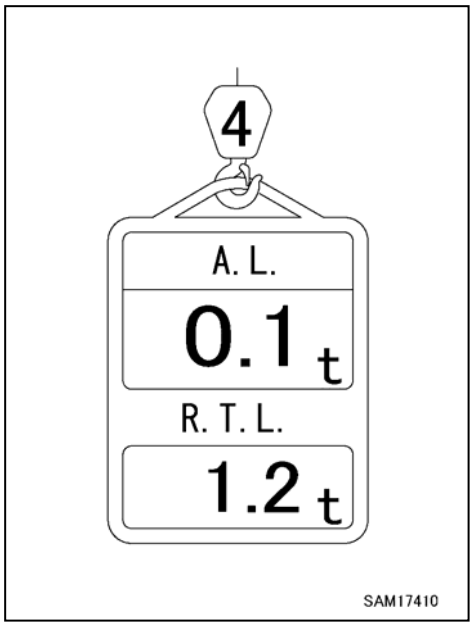

NOTES
• Due to the structure of load detection, a numerical value of actual load display changes when the boom is raised and lowered. Although the numerical value of the actual load changes on a higher side when boom raising operation is performed, this is not a fault. • When the crane stops, the numerical value of actual load display changes if there is swing of load.

2. Rated total load display

The rated total load (i.e. total weight of hook, hoisting attachment, and hoisted load) which the crane can currently hoist is displayed. It is calculated according to the conditions including the number of wire falls of the hook and the working radius.

3. Actual working radius display

The current actual working radius is continually displayed during crane operations.

The actual working radius refers to the horizontal distance from the centre of slewing of the crane to the centre of the hook. The deflection amount of the boom due to load is not included.

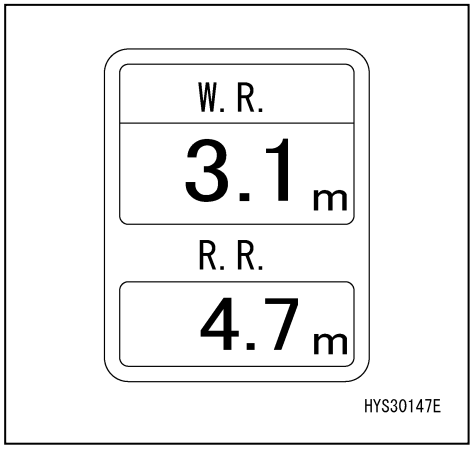

4. Rated working radius display

The current rated working radius is continually displayed during crane operations.

The rated working radius refers to the maximum working radius calculated from the boom length and actual load.

5. Boom length display

Continually displays the current boom length during crane operations.

The boom length refers to the straight-line distance from the boom foot pin to the sheave pin at the front end of the boom.

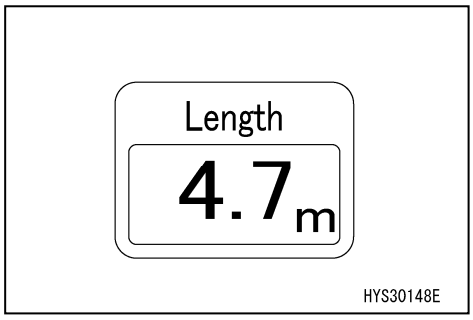

6. Lifting height display

Continually displays the maximum lifting height of the current boom state during crane operations.

Lifting height refers to the vertical distance from the ground to the bottom of the hook.

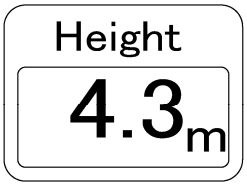

HYS30149H

7. Boom angle display

Continually displays the current boom angle during crane operations.

The boom angle refers to the angle between the boom and horizontal line.

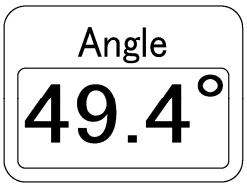

HYS30150E

8. Over-hoisting display

If the hook falls into an over-hoisting state during crane operations, the mark flashes in red to give over-hoisting warning and automatically stops hook hoisting and boom extension actions.

During hook storage operation, the mark flashes in red in a hook stored state. However, this is not an abnormality.

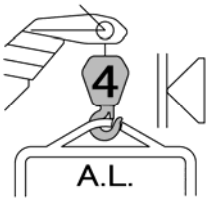

H5423045E

9. Over-lowering display

If the hook falls into an over-lowering state during crane operations, the mark flashes in red to give over-lowering warning and automatically stops the hook lowering action.

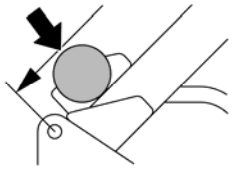

H5423046

10. Load capacity ratio display

The load factor state of the moment limiter load is illuminated on the bar according to the load factor change.

- Load capacity ratio display 100 – 110 (load capacity ratio “greater than or equal to 100%”): red
- Load capacity ratio display 90 (load capacity ratio “90% or more and less than 100%”): yellow
- Load capacity ratio display 0 – 80 (load capacity ratio “less than 90%”): green

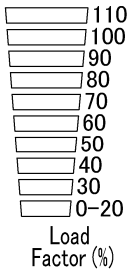

HYS30151E

https://truckmanualshub.com/

[3] OVERLOAD ALARM

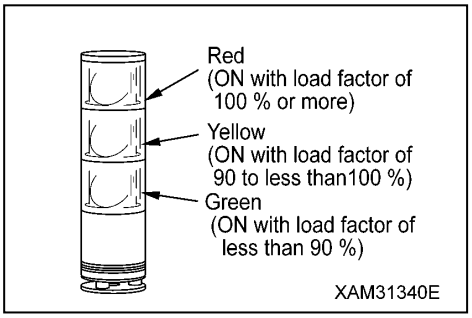

A. Safety area ("Actual Load" is less than 90% of "Rated Total Load")

- The tri-colour revolving working status lamp illuminates in green.

B. Prediction alarm ("Actual Load" is 90 – less than 100% of "Rated Total Load")

- The tri-colour revolving working status lamp illuminates in yellow.
- The alarm generates intermittent sound "peep".

C. Limit alarm (the Actual Load is greater than or equal to 100% of the Rated Total Load)

- The tri-colour revolving working status illuminates in red.
- The alarm generates continuous sound "peep".
- Operation of the boom's danger side stops automatically.
- When the load factor is 110% or more, "Load factor 110%" LED (red) turns on.

D. Resetting Limit Alarm Automatic Stop

When an automatic stop occurs, immediately recover from the overload.

For recovery operations, refer to "Operations 2.3.3 [2] Recovery Operation from Automatic Stop".

[4] WORKING RANGE LIMIT DEVICE

When the boom is approaching the predetermined working range limit, the alarm goes off to alert the operator and people around the machine.

The set values for the working range limit will remain memorized even after the starter switch is set to the "OFF" position.

When the working range limit is specified, the machine operation is as follows:

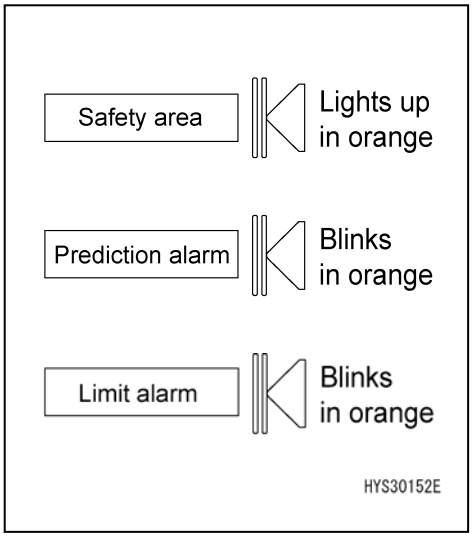

A. Safety area

- The applicable working range limit display illuminates in orange.
- The tri-colour revolving working status lamp illuminates in green.

B. Warning alarm

- The applicable working range limit display flashes in orange.
- The announcement is given and the alarm generates intermittent sound "peep".
  The alarm buzzer is activated only when the operation lever is turned on.
- The tri-colour revolving working status lamp illuminates in green.

https://truckmanualshub.com/

C. Limit alarm

- The applicable working range limit display flashes in orange.
- The tri-colour revolving working status lamp illuminates in yellow.
- The announcement is given and the alarm generates continuous sound “peep”.
  The alarm buzzer is activated only when the operation lever is turned on.
- Operation of the boom’s danger side stops automatically.

1. Lifting height upper limit switch

Use this switch to set or reset the upper limit value for the lifting height.

While the lifting height limit is imposed by detecting the boom tip height, the display panel displays the lifting height when the hook is hoisted up to the over-hoisting detected state.

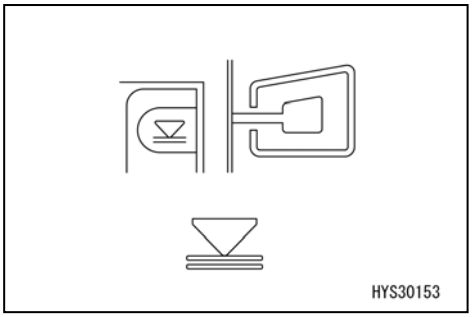

[Setting]

Set the boom to the desired lifting height in a condition in which no upper limit value is set, and press and hold the switch.

The monitor display changes to the orange color and the lifting height is set as the upper limit value.

NOTES
• Before performing a practical operation, be sure to check if the boom automatically stops when it reaches the specified lifting height limit. If the boom does not stop, set the upper limit for the lifting height again by repeating the above procedure. • When the boom is in the warning alarm zone or upper limit stop state, an alarm sounds intermittently only if raising operation or extension operation is performed. • The set value is memorized when the starter switch is turned to the “OFF” position.

When the boom is in the prediction zone or upper limit stop state in a condition in which the lifting height is set, the monitor display illuminates in orange.

[Resetting]

Press and hold the switch in a condition in which the upper limit value is set. The monitor display changes to the black colour and the upper limit value setting is cancelled.

2. Boom angle upper limit/lower limit switch

Use this switch to set or cancel the boom angle upper limit value and lower limit value.

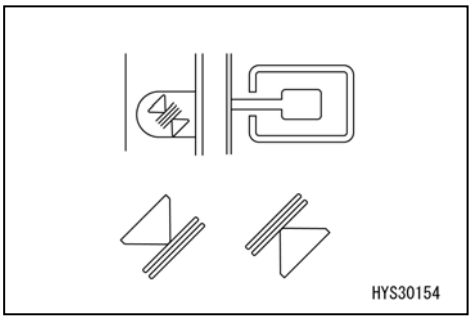

[Setting]

Set the boom to the desired angle in a condition in which no upper limit value and lower limit value are set, and press the switch. The green display appears and the upper limit and lower limit can be selected. Each time the switch is pressed, the upper limit and lower limit change. After selecting the one you wish to set, press and hold the switch.

The upper limit value on the monitor display changes to the orange colour and the boom angle is set as the upper limit value or lower limit value.

NOTES
• Before performing a practical operation, be sure to check if the boom automatically stops at the specified angle. If the boom does not stop, set the boom angle again by repeating the procedure mentioned above. • An alarm sounds intermittently when the boom, which is in the upper limit, is in the prediction zone or upper limit stop state and only if the raising operation is performed, and when the boom, which is in the lower limit, is in the prediction zone or lower limit stop state and only if the lowering operation is performed. • The set value is memorized when the starter switch is turned to the “OFF” position.

When the boom is in the prediction zone or upper limit stop state in a condition in which the boom angle upper limit or lower limit is set, the monitor display illuminates in orange.

[Resetting]

Press the switch in a condition in which the upper limit value or lower limit value is set. The orange display section can be selected in white frame. Each time the switch is pressed, the selection changes. After selection, press and hold the switch. The monitor display changes to the black colour and the upper limit value or lower limit value setting is canceled.

3. Working radius upper limit switch

Use this switch to set or reset the upper limit for the working radius.

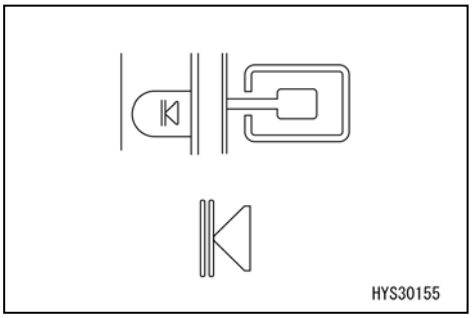

[Setting]

Set the boom to the desired working radius in a condition in which no upper limit value is set, and press and hold the switch.

The upper limit value on the monitor display changes to the orange colour and the working radius is set as the upper limit value.

NOTES
• Before performing a practical operation, be sure to check if the boom automatically stops at the specified working radius. If the boom does not stop, set the working radius again by repeating the above procedure. • When the boom is in the prediction alarm zone or upper limit stop state, an alarm sounds intermittently only if lowering operation or extension operation is performed. • The set value is memorized when the starter switch is turned to the “OFF” position.

When the boom is in the prediction zone or upper limit stop state in a condition in which the working radius upper limit is set, the monitor display illuminates in orange.

[Resetting]

Press and hold the switch in a condition in which the upper limit value is set. The monitor display changes to the black colour and the upper limit value or lower limit value setting is canceled.

4. Setting check/cancelling switch

(1) Setting check

Use this switch to check all the set values set in the above steps 1 - 3.

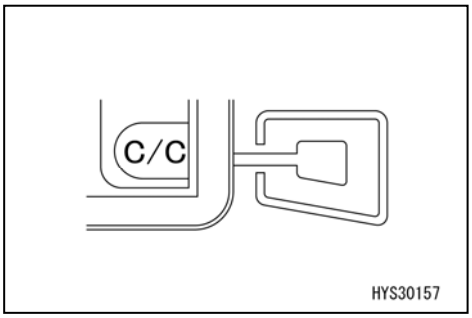

- Press this switch.
  All the set values set in the above steps 1 - 3 are displayed for about 5 seconds.
  The boom angle upper limit is displayed in the boom length.

(2) Setting cancel

Use this switch to cancel all the set values set in the above steps 1 - 3.

- Press and hold this switch.
  All the set values set in the above steps 1 - 3 are cancelled.

https://truckmanualshub.com/

[5] OVER-HOISTING PREVENTION DEVICE

CAUTION

When raising the hook, be careful of clearance between the hook and boom.
When the boom is extended, the hook is also wound up.
Perform boom extension operation while always checking the hook height.

If the hook height becomes excessively high while it is hoisted or the boom is extended, the following occur:

- The hook displayed on the monitor flashes in red.
- When hook hoisting or boom extension operation is performed, the alarm issues an intermittent sound “peep”.
- Hook hoisting and boom extension actions stop automatically.

When an automatic stop occurs, immediately recover from the stop.
For recovery operation, perform hook lowering operation and boom contraction operation.

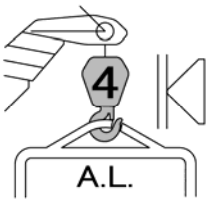

H5423045E

[6] EXCESSIVE UNWIND DETECTOR

When the hook is lowered and length of wire rope in the winch drum becomes short:

- The winch displayed on the monitor flashes in red.
- When hook lowering operation is performed, the alarm issues an intermittent sound “peep”.
- The hook lowering action is automatically stopped.

When an automatic stop occurs, immediately recover from the stop.
For recovery operation, perform hook hoisting operation.

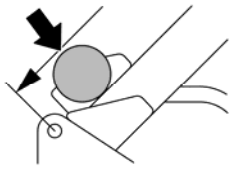
H5423046

[7] NUMBER OF WIRES FALLS CHANGE DISPLAY

⚠ WARNING

- **Before changing the number of wire falls with the switch for changing the number of wire falls, be sure to stop the ongoing crane operation.**
  Doing this during crane operation may result in unexpected accidents.
- **Before starting a crane operation, make sure that the number of wire falls set for the moment limiter agrees with the actual number. Mistaking the number of wire falls may cause serious accidents to occur.**

A safety load per one wire rope is specified.
The number of wire falls must be determined according to the maximum load to be lifted.
Always make sure that the number of wire falls indicated on the monitor agrees with the actual number.
This machine is equipped with a hook that can be used for both two and four wire ropes hung as the standard specifications.
The set value for the number of wire falls will remain memorized even after the starter switch is set to the “OFF” position.
For changing the number of wire falls, refer to “Operation 2.1.1 [1-1] Hook Sling Number Change”.

HYS30158

https://truckmanualshub.com/

[8] BOOM LOWER LIMIT DETECTION

When the boom length is “3.3 m” or longer, the boom lowering action stops automatically so that the boom does not fall below the horizontal line.

[9] STATIONARY AND TRAVEL MODE CHANGE DISPLAY

⚠ DANGER

Travel with a lifted load is in principle prohibited because it is very unstable and involves danger.
When there is no alternative but to perform travelling with hoisted load, refer to “Operation 3.19 Perform Travelling With Hoisted Load” and strictly observe the rated total loads, operation methods and travel postures for travelling with hoisted load.
Unless these precautions in travelling with a lifted load are observed, serious physical injury may be caused.

When travelling with a lifted load, use this to change from the stationary mode to the travel mode.

- Press and hold the switch. The rated load setting changes to “Travel mode” and the monitor display changes.
- Press and hold this switch again. The rated load setting changes to “Stationary mode” and the monitor display changes.

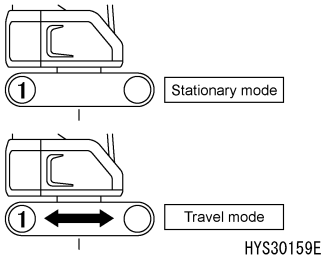

NOTES

When the boom length is “5.1 m” or longer, travel is prohibited and travel mode cannot be set.
When setting the mode to the travel mode, set the boom length to “5.0 m” (two stage boom) or less.

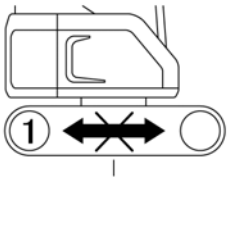

2.3.5 MAINTENANCE SWITCH

For details concerning the switch, refer to “Operation 2.2 [5] Maintenance Switch”

https://truckmanualshub.com/

2.4 OVER-HOISTING PREVENTION DEVICE

CAUTION

When raising the hook block, be careful of clearance between the hook block and boom.
Also, the hook block can be raised when the boom is extended.
Perform boom extension operation while always checking the hook block height.

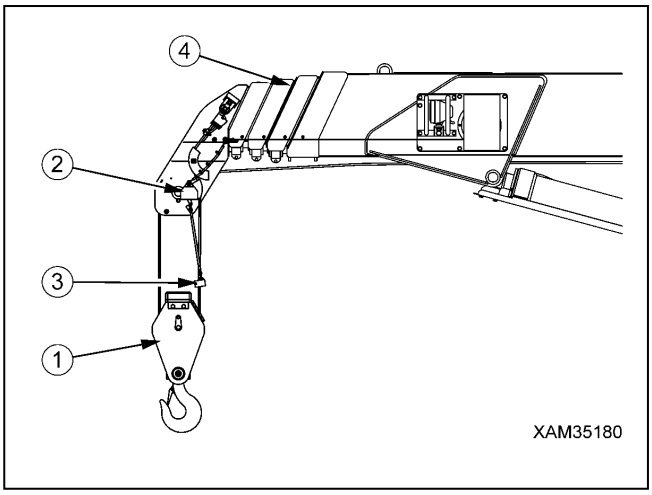

(1) Hook block
(2) Over-hoisting detector
(3) Weight
(4) Boom

The over-hoisting prevention device, when hoisting the hook block (1) or extending the boom (4), automatically stops hook block (1) hoisting and boom (4) extension actions and prevents any further action, if the hook block (1) nears the boom (4) tip and pushes up the weight (3). At the same time, only when the hook hoisting and boom extending operations are performed, the over-hoisting prevention device sounds the buzzer intermittently to warn over-hoisting.

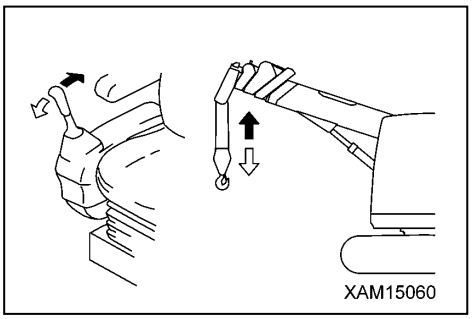

When the warning buzzer sounds, immediately operate the right work equipment operation lever to the “Lowering” side (pushing forward) or the left work equipment operation lever to the “Contraction” side (pulling toward you) to lower the hook block (1).

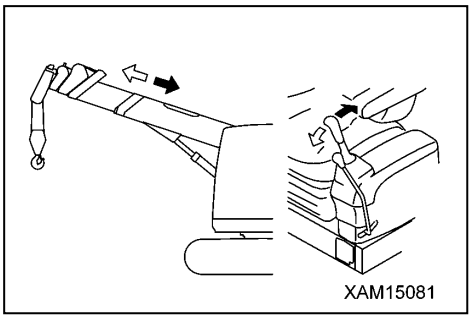

https://truckmanualshub.com/

2.5 OPERATION LEVERS AND PEDALS

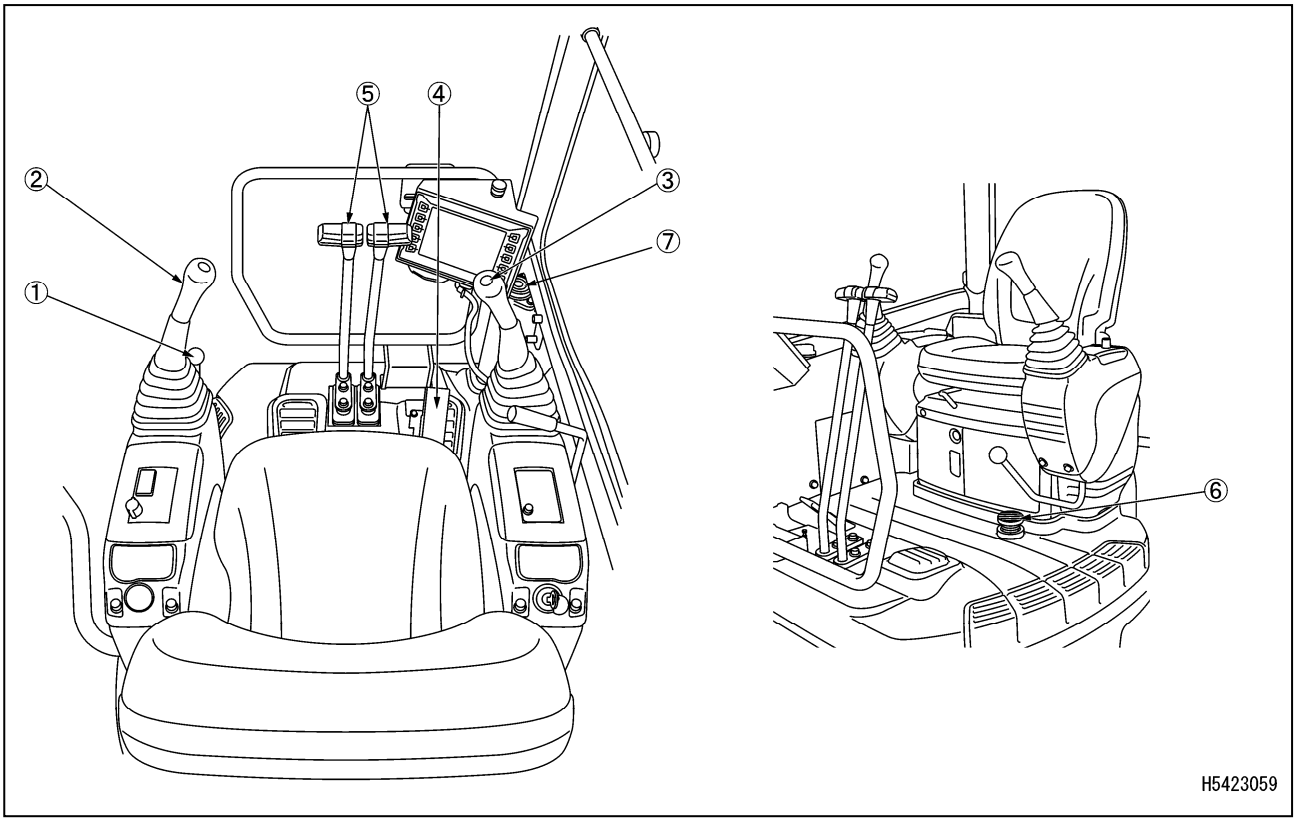

(1) Lock lever
(2) Left work equipment operation lever
(3) Right work equipment operation lever
(4) Accelerator pedal
(5) Travel lever
(6) Speed-up pedal
(7) Levelling instrument

[1] LOCK LEVER

⚠ WARNING

- **When standing up from the operator's seat, place the lock lever securely in the lock position. If the lock lever is not in the lock position, and inadvertent contact is made with the operation levers and operation pedals, serious physical injury may result.**
- **When pulling up or pushing down the lock lever, be careful not to contact the operation lever of the work equipment.**

This lever (1) locks crane operation and travelling.
When the lever is pulled up, the lever stand springs up and enters the lock position (L).
Since this lock lever is of hydraulic lock type, the work equipment operation levers will move even when set to the lock position (L), but the crane and travelling motor will not move.

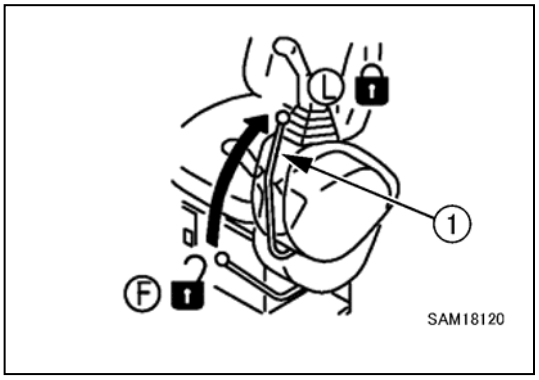

NOTES

The engine cannot be started when the lock lever is in the free position (F). Set the lock lever to the lock position (L) and then operate the starter switch.

https://truckmanualshub.com/

[2] LEFT WORK EQUIPMENT OPERATION LEVER
[3] RIGHT WORK EQUIPMENT OPERATION LEVER

⚠ WARNING

- **The operation pattern is set according to the standard operation method. If you desire to change the operation pattern, please request us or our sales service agency.**
- **When the operation pattern is changed, the operation nameplate needs to be replaced with the one which matches the machine movement.**

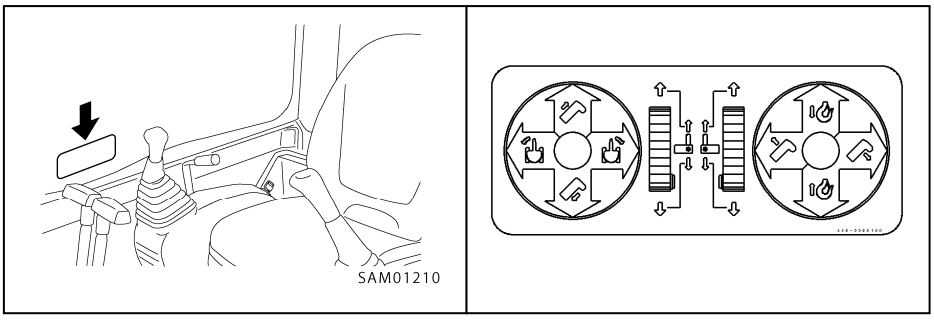

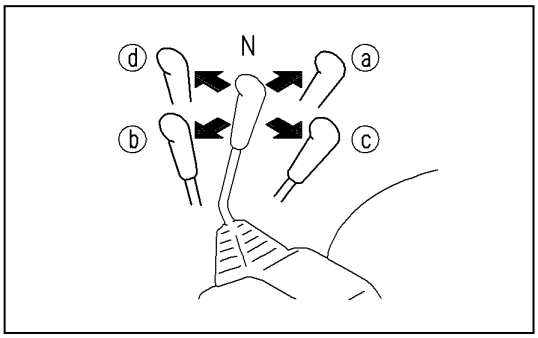

Operate the revolving upper structure and the boom extension/contraction with the left work equipment operation lever.

Slewing operation

- (a) Right slewing: Pull the lever in the right direction.
- (b) Left slewing: Push the lever in the left direction.

Expansion and contraction operation of boom

- (c) Contraction of boom: Pull the lever rearward.
- (d) Expansion of boom: Push the lever forward.
- (N) Neutral: Release your hand from the lever.
  The revolving upper structure and boom length retain their positions as they stop.

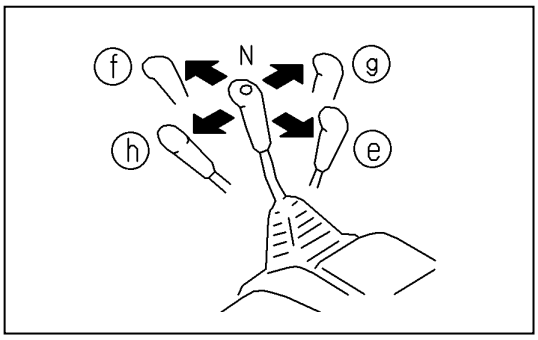

Use the right work equipment operation lever to perform winch operation and boom derricking operation.

Winch operation

- (e) Hoisting: Pull the lever rearward.
- (f) Lowering: Push the lever forward.

Boom derricking operation

- (g) Lowering of boom: Push the lever in the right direction.
- (h) Raising of boom: Pull the lever in the left direction.
- (N) Neutral: Release your hand from the lever.
  The hook block and boom angle retain their positions as they stop.

https://truckmanualshub.com/

[4] ACCELERATOR PEDAL

⚠ WARNING

Be aware of swinging loads etc. when using the accelerator pedal.
Do not use when travelling with a hoisted load as there is a risk of overturning.
Excessively raising the output power for operation may lead to operational errors, causing serious physical injury.

Use this lever to adjust the engine speed or output during .crane operation.

- (a) Low idling: Release your foot from the pedal.
- (b) Full rotation: Depress the pedal fully.

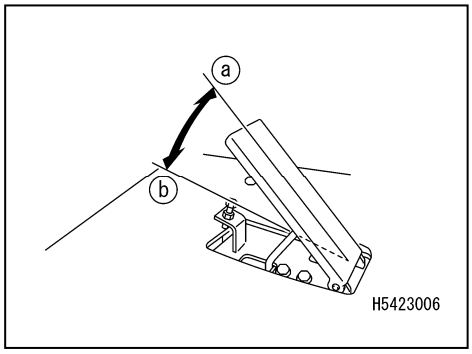

CAUTION

When E mode is selected, full rotation does not occur even if the pedal is depressed to position (b).

[5] TRAVEL LEVER

⚠ WARNING

When the track frame is facing backwards, the forward and backward driving operations will be reversed.
When operating the travel lever, check whether the track frame is facing forwards or backwards.
(When the sprocket (a) side is at the rear, the track frame faces forward.)

This lever is used to drive the machine.

- (a) Forward motion: lever pushed forward
- (b) Rearward motion: lever pulled towards the operator
- (N) Neutral: the machine is stopped.

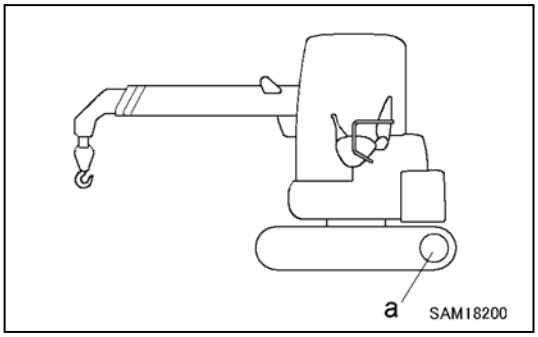

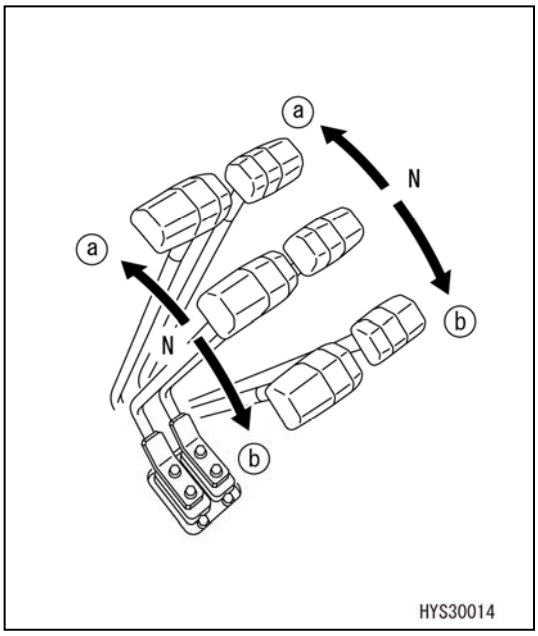

https://truckmanualshub.com/

[6] SPEED-UP PEDAL

The vehicle speed will increase when this pedal is depressed.

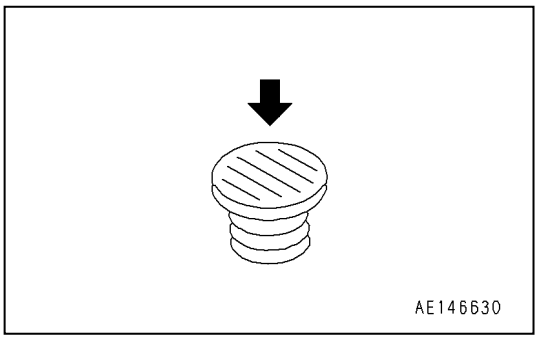

[7] LEVELLING INSTRUMENT

⚠ WARNING

If crane operation is performed with the machine tilted, tripping may be caused.
Search a place, while looking at the levelling instrument, where the machine body is in a level state before starting crane operation.
If work is unavoidably performed on a slope, place planking or lay earth on the ground to make the ground level.

This equipment (9) displays the inclination status of the machine.
The inclination and direction of the machine can be determined from the position of the air bubbles.
Use this to check whether the machine body stopped on the work site is in a level condition.

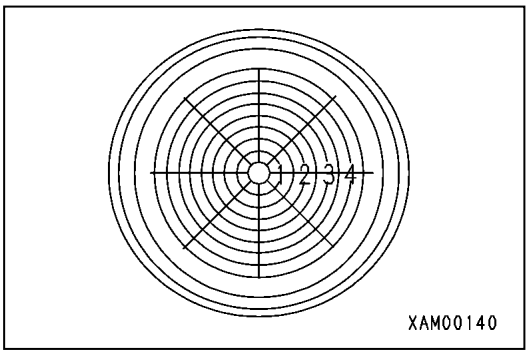

2.6 LOCKING COVER

Use the starter switch key to open and close the locking cover.

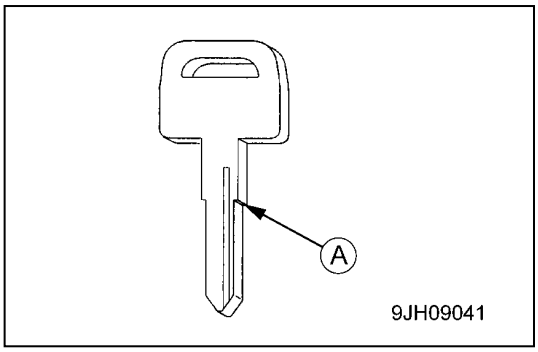

Method of opening and closing the locking cover

Securely insert the key to its root (A) before turning.
If the key is turned when not fully inserted, it may be broken.

When opening

1. Insert the key.
2. Turn the key and the cover can be opened.

When locking

1. Close the cover.
2. Turn the key and pull it out.

https://truckmanualshub.com/

2.7 ENGINE BONNET

⚠ CAUTION

- **When inspecting and servicing the inside of the engine bonnet, open the bonnet to its upper extent and be sure to fix the bonnet with the stopper.**
- **If the boom is raised while the engine bonnet (A) is open, there is a risk of damaging the engine bonnet. When it is necessary to raise the boom, open engine bonnet (B) only.**
- **When closing the engine bonnet (A), take care not to trap your hands with the counterweight.**

CAUTION

Be sure to keep the bonnet locked except when opening it. The locking state can be confirmed by the direction of the key groove on the opening knob.

1. Turn the key in the engine bonnet release knob (1) or knob (2) to (O) and push it to release the lock.
   Use according to the inspection and maintenance circumstances.

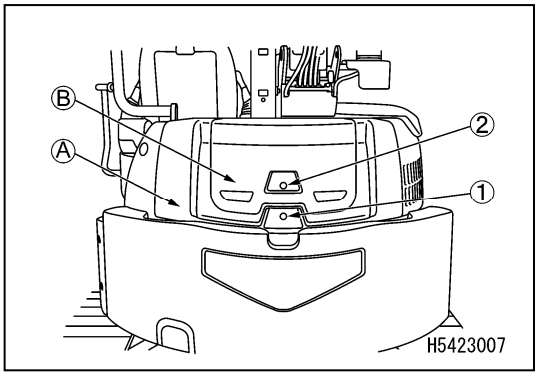

- (O): Open
- (L): Lock

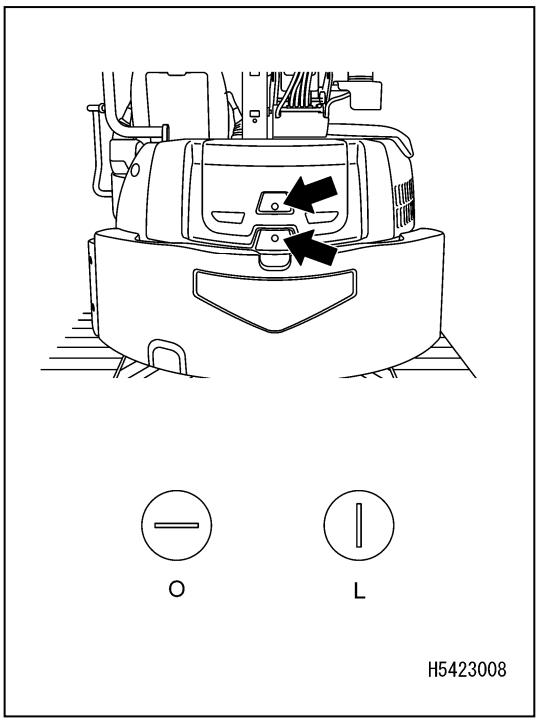

https://truckmanualshub.com/

2. Push up the bonnet (3) completely. The stopper (4) functions and the bonnet (3) is fixed.
3. To close the bonnet (3), pull the bonnet support stopper (4) to the free position (F), gently lower the bonnet and push the bonnet to the lock position (L).

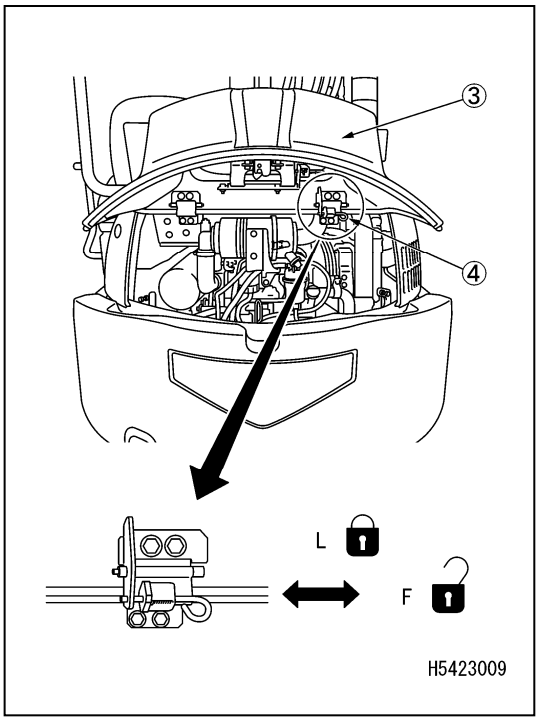

https://truckmanualshub.com/

2.8 FUSE

⚠ CAUTION

Be sure to turn off the power (set the starter switch to the “OFF” position) before replacing a fuse.

CAUTION

Protects electrical components and wires from being burnt out.
Be sure to replace the fuse if it is corroded, shows white powder, or sits loosely within its holder.
When replacing a fuse, use a replacement which has the same capacity.

The fuse box is installed under the operator’s seat.

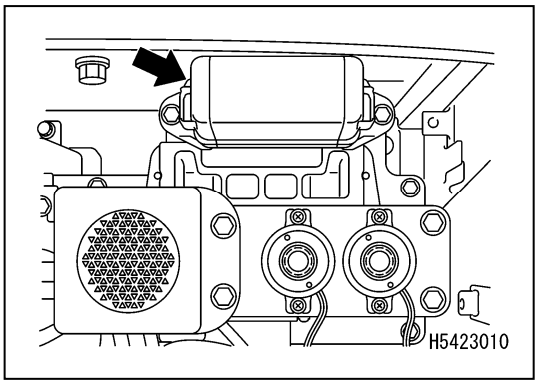

Fuse capacity and circuit name

No.	Fuse capacity	Connection table
(1)	10A	Emergency operation power supply
(2)	5A	Operation switch
(3)	20A	Controller I/O power supply
(4)	5A	Controller K15, Monitor power supply
(5)	10A	Headlamps, Boom working lamp
(6)	—	—
(7)	10A	Horn
(8)	—	—
(9)	—	—
(10)	—	—
(11)	5A	PPC lock
(12)	—	—
(13)	—	—
(14)	5A	Layered rotating lamp, Audible warning equipment
(15)	5A	Controller control power supply, Monitor control power supply
(16)	10A	ECU output power supply
(17)	5A	IOT unit power supply
(18)	10A	Starter SW B
(19)	5A	Starter SW ACC secondary side
(20)	5A	Starter SW C secondary side

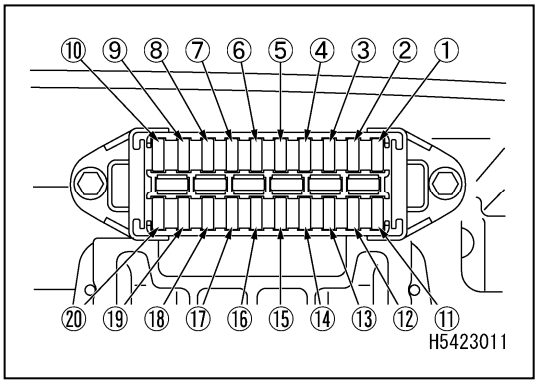

https://truckmanualshub.com/

2.9 FUSIBLE LINK

If the starter does not operate when the starter switch is turned to the “START” position, the fusible link (1) is likely to be broken, so open the cover on the right side of the machine to inspect or replace it.

NOTES
A fusible link refers to large fuse wiring installed in the circuit through which a large capacity current flows. As with a normal fuse, this protects electrical equipment and wiring from burning due to abnormal current.

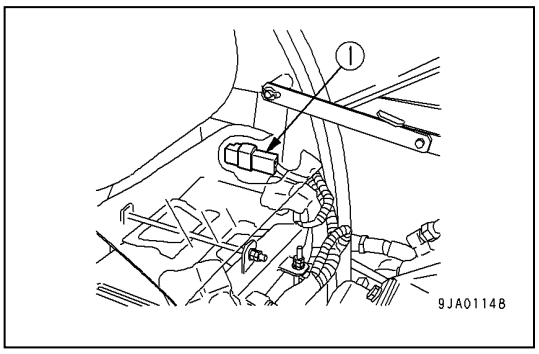

2.10 HOLDER FOR OPERATION MANUAL

There is a box for storing the instruction manual on the back of the operator’s seat.

Store the instruction manual in this box so that it can be viewed whenever it is necessary.

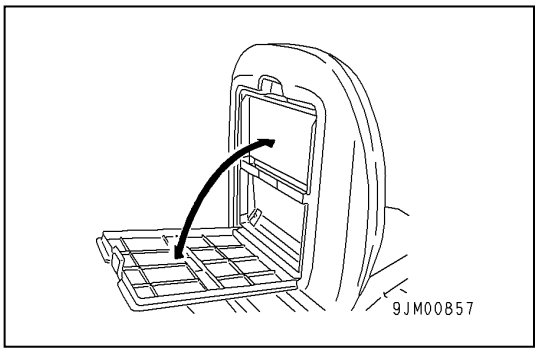

2.11 GREASE GUN HOLDER

Located at the side of the battery. When not using the grease gun, hang it on this holder.

Close the handle of the grease gun and store with the handle facing towards the front of the machine.

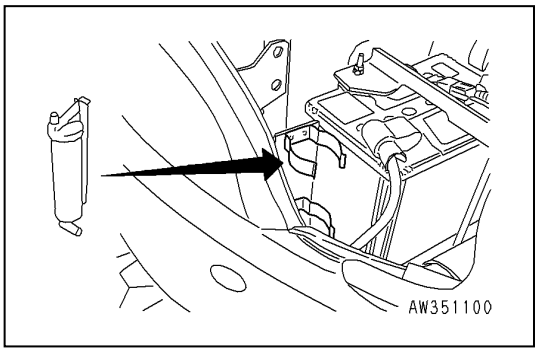

https://truckmanualshub.com/

3. OPERATION

3.1 INSPECTING AND ADJUSTING BEFORE STARTING ENGINE

3.1.1 VISIBLE CHECKS

Before starting the engine, inspect external areas and the bottom of the machine for any loose nuts and bolts, oil, fuel or coolant leakage, in addition to checking the operational equipment and hydraulic systems.

Check for looseness or play in electric wiring and any deposits of trash in places where it is exposed to high temperatures.

⚠ WARNING

- **When inspecting and servicing the inside of the engine bonnet, open the bonnet to its upper extent and be sure to fix the bonnet with the stopper.**
- **Immediately remove deposits of inflammable materials from around the engine's high temperature parts such as engine mufflers and from around the battery. Fuel / oil leakage may cause machine fires. Carefully check around these areas. If there is any abnormality, be sure to fix it or contact us or our sales service agency.**

At the time of inspection, if the machine is found to be tilted, level it before proceeding with the inspection. The inspections and cleaning described below should be conducted before the first engine start-up of the day.

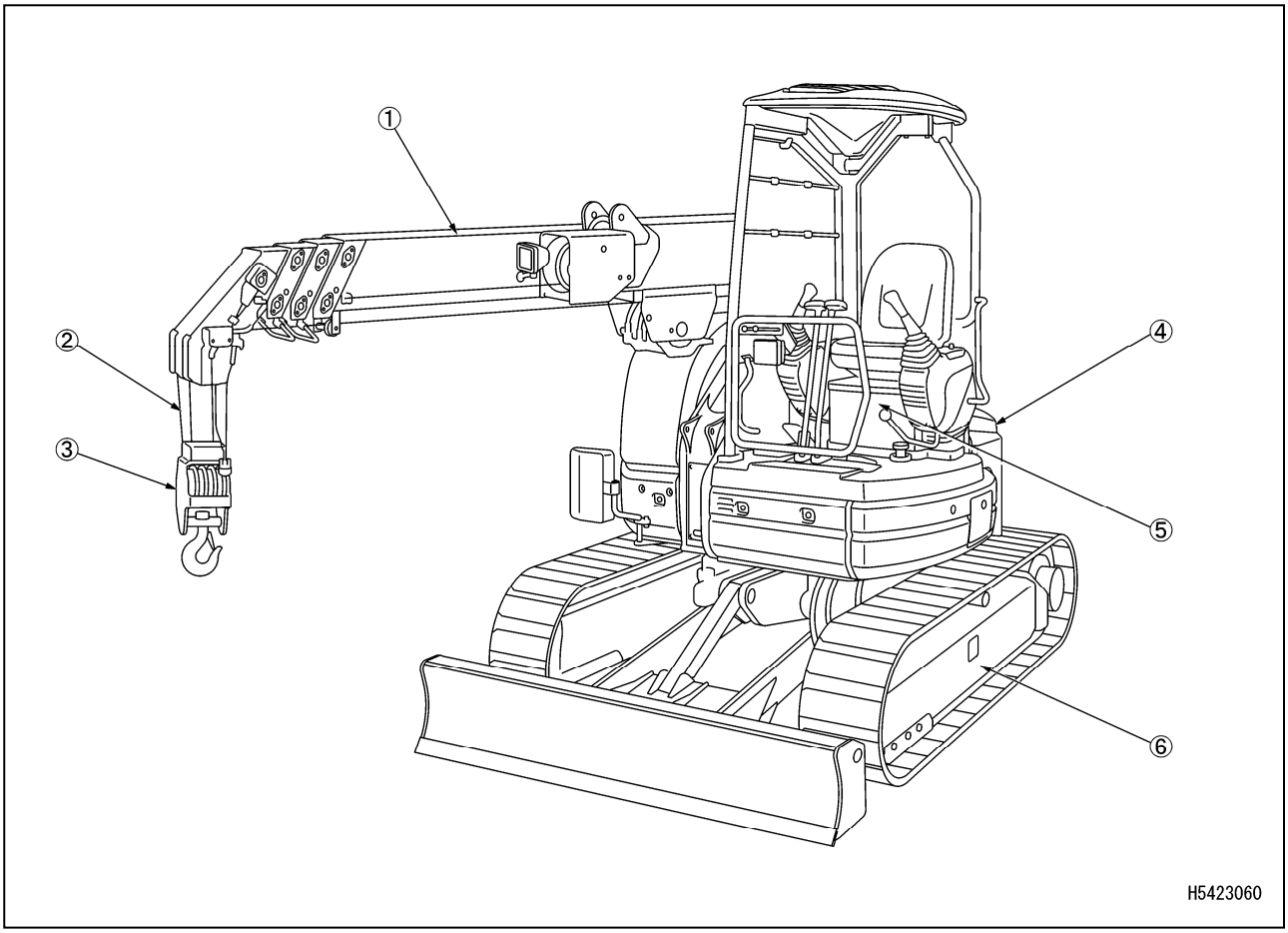

(1) Crane
(2) Wire rope
(3) Hook block
(4) Upper slewing body
(5) Operator's seat
(6) Carrier

https://truckmanualshub.com/

[1] INSPECTION AROUND CRANE

- Look out the surroundings and lower parts of the boom and boom mounts to check for oil leaks. In particular, thoroughly inspect the derricking cylinder and the lower part of the winch motor around the mounts. Repair if any abnormality is found.
- Check parts of the mount for cracks, remarkable deformation and contamination. Check for loose, lost or damaged bolts, nuts, pins or pipe connectors. Repair if any abnormality is found.
- Check for any cracks, significant deformation or dirt in each boom. Check for loose, lost or damaged bolts, nuts, pins or pipe connectors. Especially, check the boom support pin or derricking cylinder support pin for any significant wears or damages. Repair if any abnormality is found.
- Check the wire rope for the over-hoist detection weight of the over-hoist detector at the boom tip for remarkable damage and deformation.
  Repair if any abnormality is found.
- Check the working lamp for breakage, remarkable deformation and contamination. Repair if any abnormality is found. Clean as necessary.
- Check for slack wiring, lose connections and any trace of burning. Repair if any abnormality is found.

[2] INSPECTION OF WIRE ROPE

- Refer to “Operation 4. Handling Wire Rope” for details.
- Check wire ropes for damage, deformation, wear, twist, kinks and corrosion. Replace if any abnormality is found.
- Check the connection of wire rope ends. • Replace if any loose wire rope ends are found.
- Check for any irregular winding of wire rope (winch drum part). If you find irregular winding, rewind it.

[3] INSPECTION OF HOOK BLOCK

- Check that the wire rope latch (1) is working properly. Repair if any abnormality is found.
- Rotate the hook and check that it rotates smoothly and there is no noise coming from the trunnion.
  Repair if any abnormality is found.
- Check the hook for any cracks or significant deformation.
  Repair if any abnormality is found.
- Replace the hook if the dimension, a, between punch marks engraved on the hook is 105 mm or more and the dimension, b, of the lower part of the hook is 49.5 mm or less.

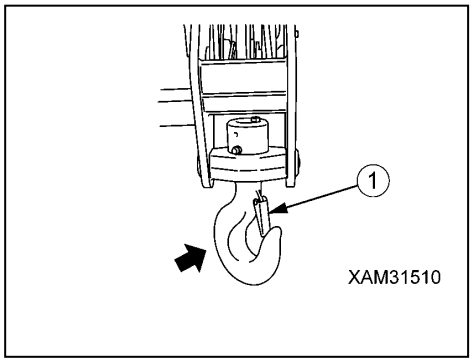

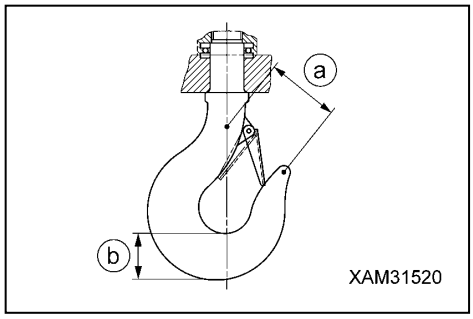

[4] INSPECTION AROUND UPPER SLEWING BODY

- Check for fuel, oil or water leakage from the engine and check tubes and hoses for damage, repairing parts as necessary.
- Check for any accumulation or deposits of inflammable items including fallen leaves, wastepaper, dust, oil or grease in high temperature areas such as engine muffler and around batteries. If any accumulation or deposits are found, remove them.
- Check for slack wiring, loose connections or any trace of burning around the starter, alternator or battery. Repair if any abnormality is found.
- Inspect if there are oil leaks from hydraulic equipment, hydraulic oil tank, hydraulic hose and joints. Repair if any abnormality is found.
- Check handrails and steps for cracks, remarkable deformation and contamination. Repair if any abnormality is found. Check also bolts, nuts for looseness, falling off and damage. Repair if any abnormality is found.
- Check the tri-colour revolving working status lamp for breakage, significant deformation and dirt. Repair if any abnormality is found. Clean as necessary.

[5] INSPECTION AROUND OPERATOR'S SEAT

- Inspect if windows come off or broken and if window glasses are cracked or broken. Repair if any abnormality is found. If the window comes off or breaks during work, stop the work immediately and repair the window.
- Check the seat belt and mounting brackets for abnormalities and replace with new parts if there is damage.
- Inspect if each operation lever, travel lever, lock lever and accelerator pedal operate smoothly.
  Repair if any abnormality is found.
- Check the machine monitor for any damage or dirt. Repair or replace if any abnormality is found. Clean as necessary.
- Check for slack wiring, lose connections and any trace of burning. Repair if any abnormality is found.
- Check the headlamp for breakage, remarkable deformation and contamination. Repair if any abnormality is found.

[6] INSPECTION OF BASE CARRIER

- Check parts of undercarriage (frame, crawler, each roller, idler and sprocket) for cracks, remarkable deformation and contamination. Also, check for the loosened, missing or damaged bolts, nuts, and pins. Repair if any abnormality is found.
- Look out the undercarriage and its lower part and check bolts, nuts, pins and piping connections for looseness, falling off, damage and oil leaks. Repair if any abnormality is found.

https://truckmanualshub.com/

3.1.2 PRE-OPERATION INSPECTION

Inspections described in this section should be conducted just once before the first engine start-up of the day.

[1] INSPECTION/REFILLING OF ENGINE COOLANT

⚠ WARNING

- **Do not open the radiator cap in a normal case. Inspect the coolant in the sub-tank when the engine is cool.**
- **Coolant temperature is high immediately after stopping the engine and pressure is accumulated in the radiator. Opening the cap in this state may cause burns. Turn the cap slowly to release pressure after the temperature lowers and carefully remove it.**

1. Open the sand cover and check that the cooling water is within the sub-tank (1) (right figure) FULL - LOW range. If there is not enough, supply water to the FULL level from the water supply port of the sub-tank (1).

2. Fully tighten the cap after replenishing the water.

3. If the sub-tank is empty, check that the coolant is not leaking and inspect the coolant level in the radiator. If coolant runs short, supply coolant to the radiator and then to the sub-tank.

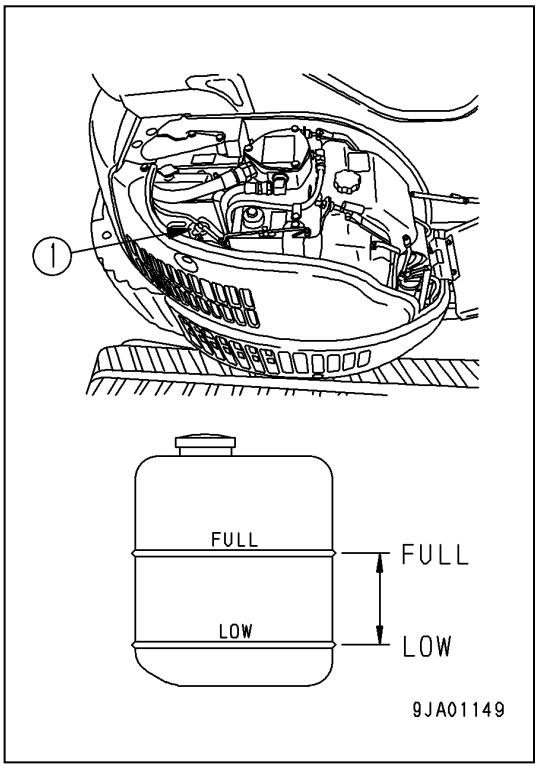

https://truckmanualshub.com/

[2] INSPECTION OF OIL LEVEL AND REFILLING OIL IN ENGINE OIL PAN

⚠ WARNING

As parts and oil are hot immediately after the engine is stopped, there is a risk of burns. Begin work after the temperature has dropped.

CAUTION

- **At the time of inspection, if the machine is found to be tilted, level it before proceeding with the inspection.**
- **Check the oil level before the engine is started, or 15 minutes or more after stopping the engine.**
- **Be careful not to let any foreign substance go into the filler opening when refilling the oil.**
- **Keep the engine oil at an appropriate level.**
  The oil level being too high will result in too much oil consumption and this tends to increase the oil temperature, deteriorating the oil faster. The oil level being too low may burn out the engine.
- **Be careful not to let any foreign substance go into the filler opening when refilling the oil.**

1. Open the engine bonnet.
2. Remove the oil level gauge (G) and wipe off the oil with a disposable cloth.
3. Insert the oil level gauge (G) again into the gauge guide as far as it goes and pull it out.

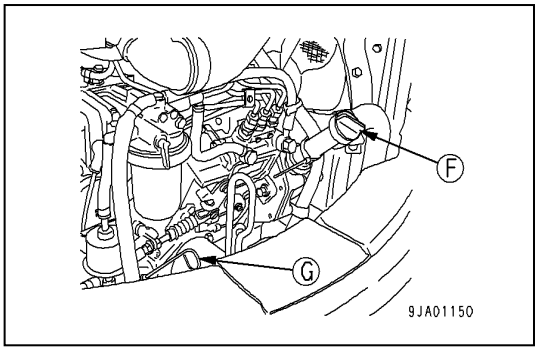

4. If the oil level is between the “H” mark and “L” mark on the oil level gauge (G), the oil level is acceptable.
   If the oil level is lower than the “L” mark, refill the engine oil from the filler port (F).

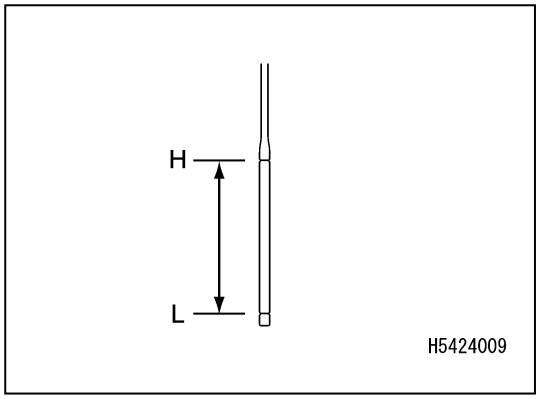

5. If the oil level is above the “H” mark, drain excess engine oil via the drain plug (P) and check the oil level again.
6. If the oil level is acceptable, fully tighten the oil cap and close the engine bonnet.

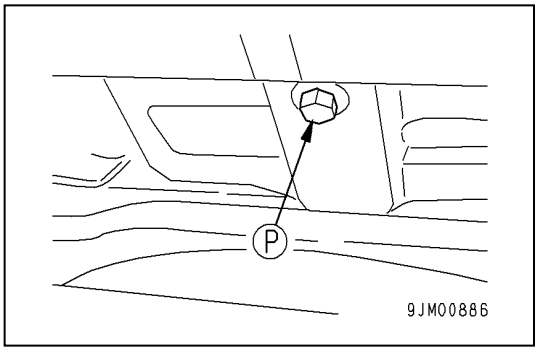

https://truckmanualshub.com/

[3] INSPECTION OF FUEL LEVEL

⚠ WARNING

- **Be extremely careful with fire such as cigarettes.**
- **Always stop the engine before refilling fuel. Refilling the fuel when engine is running may cause leaked fuel to draw fire from hot silencer or other substance.**
- **Be careful not to overfill and spill when supplying fuel. There is a risk of fire.**
- **Wipe away any spilled fuel completely. Remove any sand covered by the spill.**
- **Fuel is highly flammable and dangerous. Keep away from fire.**

1. Insert the key into the starter switch (1) and turn the key to the “ON” position to light the machine monitor.
2. Confirm the remaining fuel amount with the fuel gauge of the machine monitor, and if it is insufficient, open the cover on the right side and refuel from the fuel port (F) while looking at the level gauge (G).
   Fuel tank capacity: 42 litres
3. Tighten the cap securely after supplying fuel.

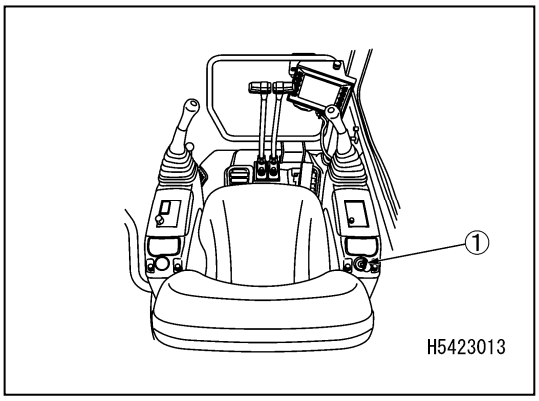

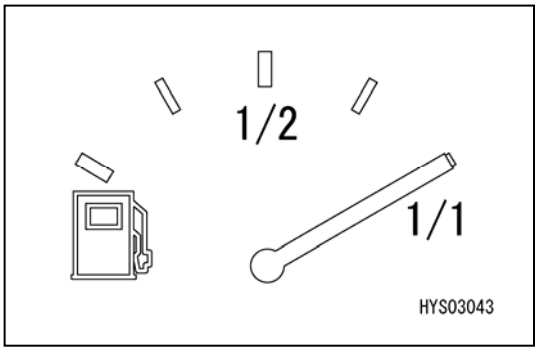

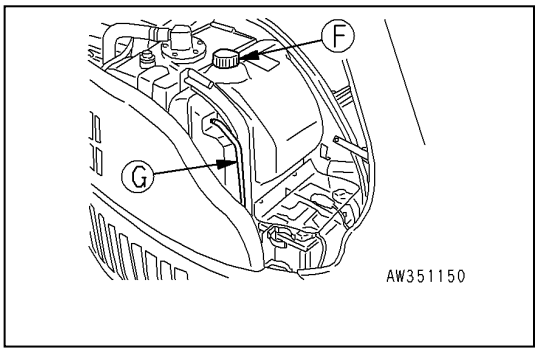

CAUTION

If the breather hole (3) of the cap becomes clogged, the internal pressure of the tank drops and the fuel may not flow, so clean it occasionally and check that there is no clogging in the breather hole (3).

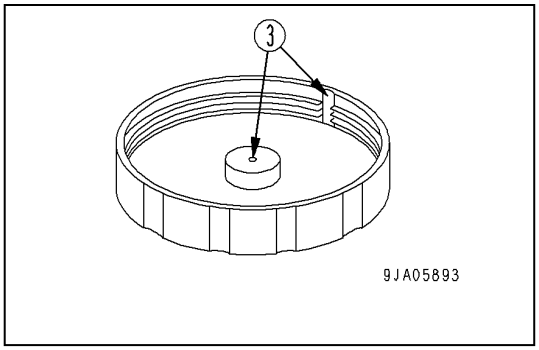

https://truckmanualshub.com/

[4] INSPECTION OF OIL LEVEL AND REFILLING OIL IN WINCH REDUCTION GEAR CASE

⚠ WARNING

Oil is at elevated temperatures immediately after engine operation.
Do not remove the port plug immediately. Wait until the oil cools down.

CAUTION

- **For information on the oil to be used, refer to "Inspection and Maintenance 7.1 Use of Fuel and Lubricating Oil According to Temperatures".**
- **Use seal tape at the thread of each plug to prevent oil leaks and securely tighten the plug after changing the oil.**

- Oil drain pan: Prepare a container for at least 1 litre.
- Allen key to remove a plug: 8 mm
- Oil replacement quantity in slewing reduction gear case: 0.75 litres

1. Place the machine on a level surface.
2. Fully retract and lower the boom as shown on the right, setting it horizontal.

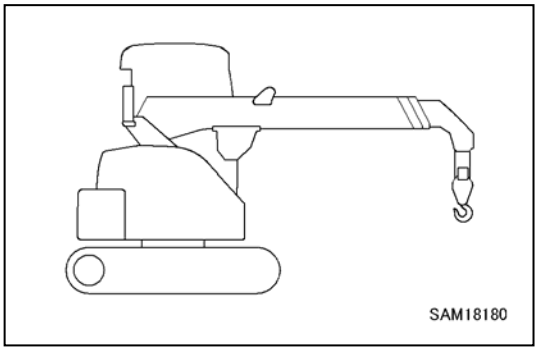

3. Turn the winch slowly to a position where plug (P) can be seen through the opening hole.
4. Place a container to collect the drained oil underneath the plug (P).
5. Remove the plug (P) using an Allen key. Oil should be filled up to just below the plug (P) hole.
6. If more is needed, replenish until the gear oil spills from the plug (P) hole.
7. Fit and securely tighten the plug (P) after replenishing oil.

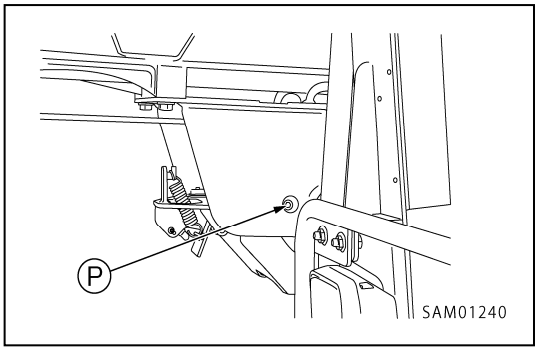

NOTES

Wipe away cleanly whenever the oil spills.

https://truckmanualshub.com/

[5] INSPECTION OF OIL LEVEL AND REFILLING OIL IN HYDRAULIC OIL TANK

⚠ WARNING

When removing the oil inlet cap, there is a risk oil may spurt out, so take care to turn it slowly before removing it to relieve internal pressure.

1. If it is not in the state shown on the right, start the engine, and with the engine at low speed, fully retract the boom, lowering it to horizontal before stopping the engine.

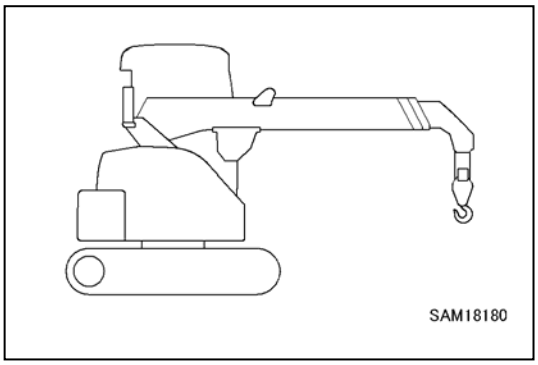

2. Inspect the level gauge (G). The oil should be between the H and L lines.

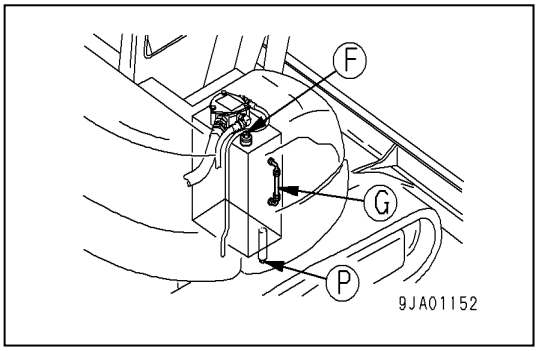

CAUTION

Do not add oil above the H line. The hydraulic circuit may be damaged or the oil may spout out.
If oil is filled inadvertently above the H level, rotate the upper swivel body so that the drain plug (P) at the bottom of the tank comes between the left and right crawler belts, stop the engine, and after the hydraulic oil has cooled, drain excess oil from the drain plug (P).

3. If oil is below the L level, remove the cover on the top of the hydraulic fluid tank and refill it from the filler port (F).

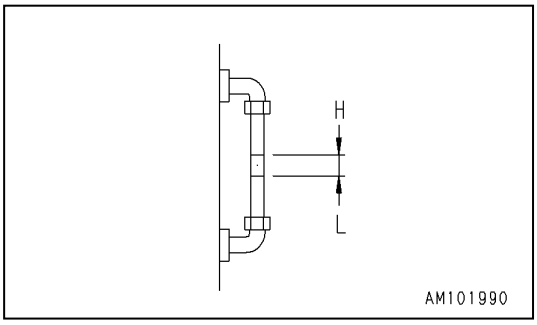

NOTES

The oil level changes with temperature so consider the following as guides when checking.
- Before operation, near the L level (oil temperature: 10 to 30 °C)
- In normal operation, near the H level (oil temperature: 50 to 80 °C)

4. Set the boom in the completely retracted and fully raised state, mount the oil feed cap and pressurize the tank.

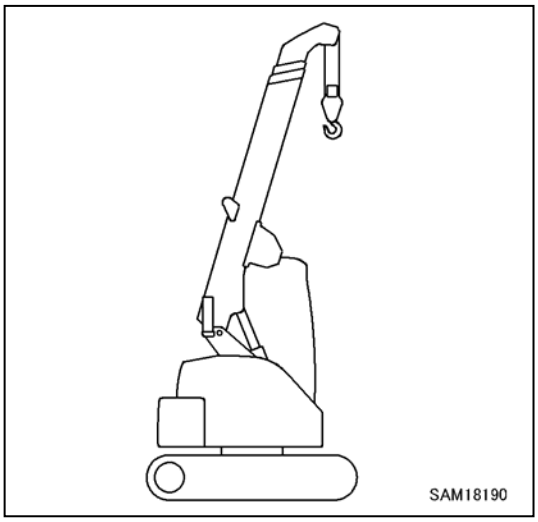

CAUTION

Omitting pressurization of the hydraulic tank causes the pump to suck air, resulting in adverse effect on the units.

https://truckmanualshub.com/

[6] INSPECTION OF DUST INDICATOR

1. Open the engine bonnet and check if the red piston comes out from transparent part of the dust indicator (1).
2. Immediately clean or replace the element if the red piston comes out.
   Refer to “Inspection and Maintenance 10.3 Irregular Maintenance [1] Inspection, Cleaning and Replacement of Air Cleaner” for details.

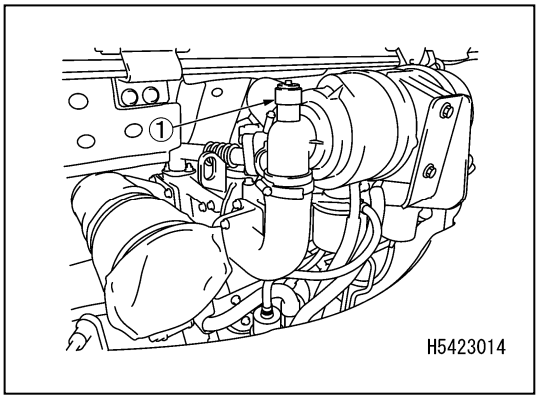

3. After inspection, cleaning and replacement, push the knob of the dust indicator (1) to return the red piston to the original position.

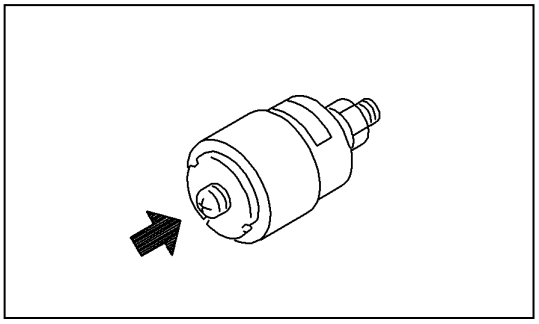

[7] INSPECTION OF WATER SEPARATOR

If the red ring (1) of the water separator is sunk to the bottom of the case (2), no water has entered.
When the red ring (1) is floating, water is present up to the bottom of the ring, so discharge water using the following procedure.

1. Open the engine bonnet.
2. Move the handle (3) to the closed position (A).
3. Loosen the drain plug (4), drain the accumulated water until the red ring (1) reaches the bottom, and close the plug (4).
4. Move the handle (3) to the open position (B).
5. Discharge water/sediment from the fuel tank in accordance with “Inspection and Maintenance 10.3 Irregular Maintenance [5] Draining of Contaminant Water/Deposits in Fuel Tank”.

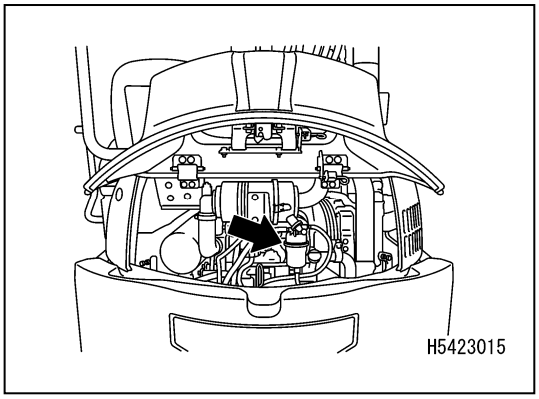

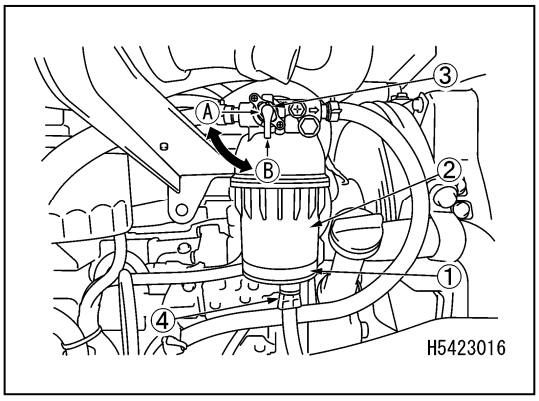

https://truckmanualshub.com/

[8] INSPECTION OF ELECTRIC WIRING

⚠ CAUTION

- **When a fuse blows frequently or there are traces of short circuits in the electric wiring, immediately find the cause, make repairs or contact the Company or our sales service agency.**
- **Keep the top face of the battery clean and inspect the vent hole of the battery cap. If it is clogged with mud etc., wash the battery cap with water and remove clogging.**

Check if fuses are damaged, if fuses of the specified capacity are used, if there are traces of breaks or short circuits in the electric wiring, or if terminals are loose. If they are loose, re-tighten them.

In particular, inspect the wiring of the battery, starter and alternator.

Be sure to inspect if any combustibles have accumulated around the battery and remove them.

Contact us or our sales service agency for fault finding or repairs.

[9] INSPECTION OF HORN FOR OPERATION

1. Turn the starter switch to the “ON” position (B).

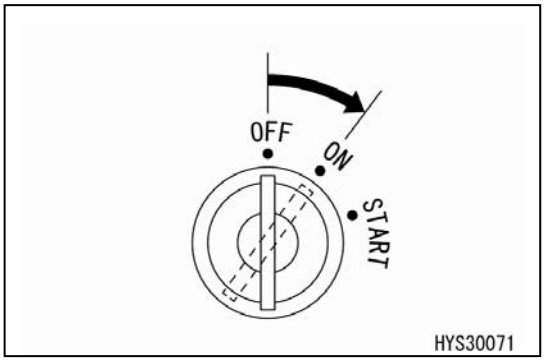

2. Press the horn switch to verify that it instantly sounds.
   If the horn does not sound, contact us or our sales service agency for repair.

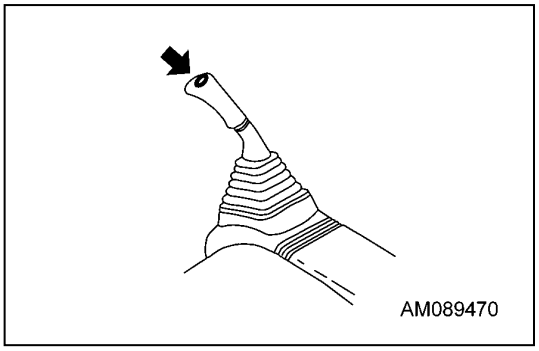

https://truckmanualshub.com/

[10] ADJUSTING THE OPERATOR'S SEAT

⚠ WARNING

When adjusting the position of the operator's seat, be sure to set the lock lever to the locked position to prevent inadvertent operation due to contact with the operating levers.

The seat moves backwards and forwards.

Move the lever (1) upward and release it when the operator's seat is set in the desired position.

Adjust the seat position in accordance with the work to be performed.

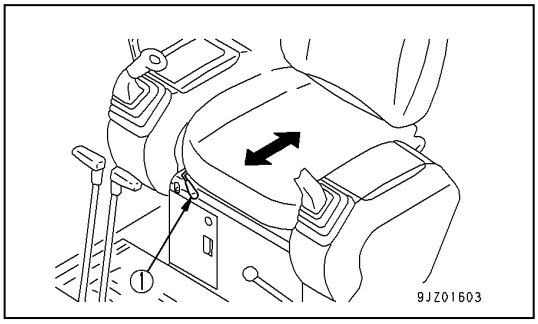

SEAT BELT HANDLING

⚠ WARNING

- **Before wearing the seat belt, check the seat belt and fixing brackets for damage or defects. A seat belt that is damaged or worn out must be replaced with new one.**
- **The seat belt must be replaced once every three years even if its appearance does not show abnormalities. To check the date of manufacture, see the back side of the seat belt.**
- **Always wear the seat belt when you drive or operate the machine.**
- **Do not wear the seat belt in a twisted state.**

Check the bolts of the mounting bracket attached to the machine for looseness and tighten further if necessary.

Tightening torque: 24.5 ± 4.9 N·m (2.5 ± 0.5 kg·m)

If there are visible faults, worn out fluff, or damaged or deformed metal fittings on the belt, replace the seat belt.

https://truckmanualshub.com/

FASTENING/UNFASTENING SEAT BELT

1. Sit on the seat and adjust it so that your back comes into close contact with the back of the seat in a comfortable working position.
2. After adjusting the seat position, sit in the seat and hold the buckle (1) and the insertion bracket (2) in the left and right hands, insert the insertion bracket (2) into the buckle (1), and confirm it is properly secured by pulling on the belt.
3. When removing the belt, raise the lever tip of the buckle (1) and the belt will come off.
   Draw the belt across the body without twisting it and adjust the length from the insertion bracket side.

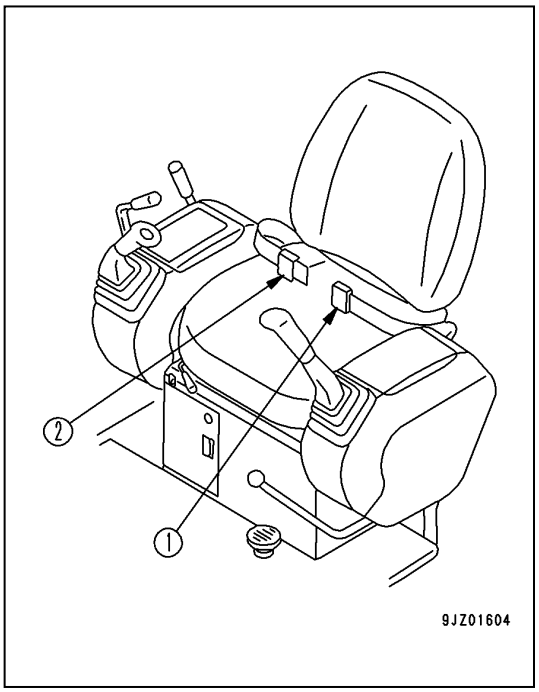

ADJUSTING THE LENGTH OF THE SEAT BELT

To shorten

Pull on the free end on the side of the insertion bracket.

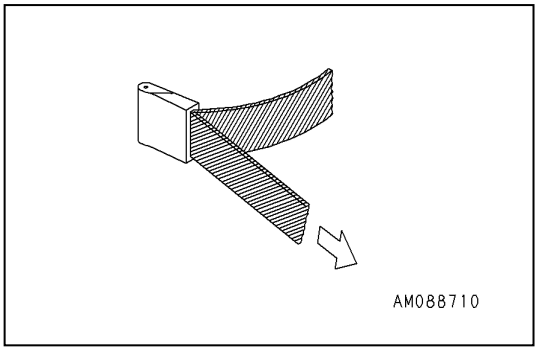

To lengthen

Pull the fixed side belt of the insertion bracket at right angle to the buckle or metal fittings.

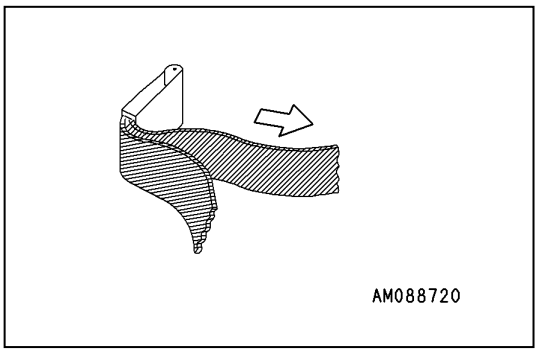

https://truckmanualshub.com/

[11] ADJUSTMENT OF MIRRORS

⚠ WARNING

Be sure to adjust the mirrors before operation. If the mirrors are poorly adjusted, the visibility cannot be secured, resulting in disorder or serious physical injury.

Adjust the mirror mounting so that a person on the right side of the machine has a good view.

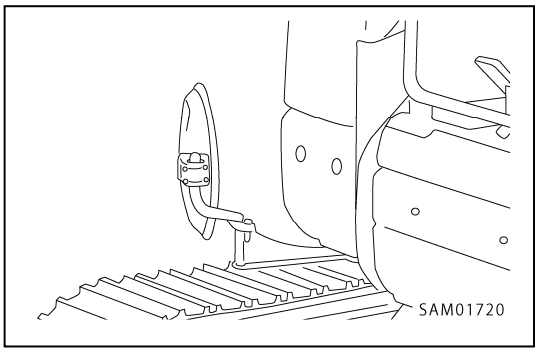

https://truckmanualshub.com/

3.1.3 OPERATIONS AND CHECKS BEFORE STARTING ENGINE

⚠ WARNING

When starting the engine, check that the lock lever is securely in the lock position.
If you carelessly touch the machine operation levers and operation pedals at the same time as engine start, the machine may make unexpected movements, causing serious physical injury.

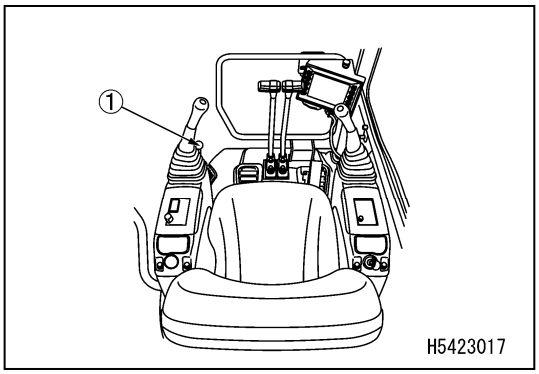

1. Check that the lock lever (1) is in the lock position (L).
2. Check the positions of all levers.

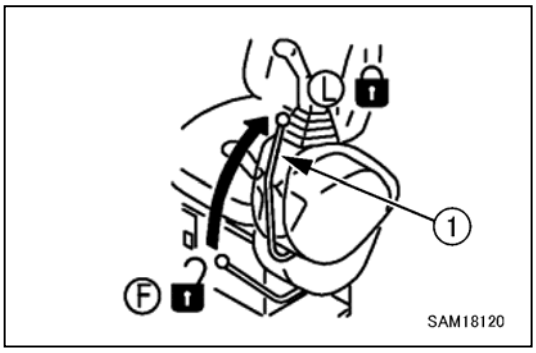

3. Insert the key into the starter switch, turn to the ON position and check the following.

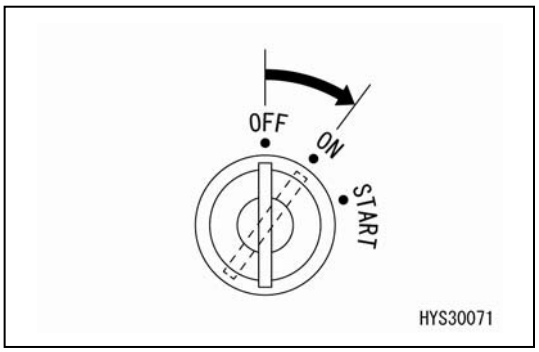

   1) Turn the light switch to check if the working lamp turns on. If it does not, a blown bulb or wiring failure is likely. Contact us or our sales service agency for repair.

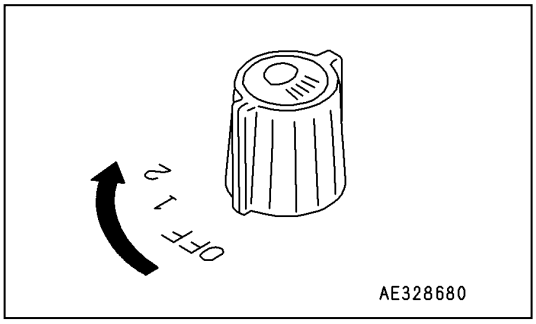

https://truckmanualshub.com/

3.1.4 INSPECTION AFTER STARTING ENGINE

Check the following in this section after starting the engine and before starting the work every day.

CAUTION

The checkups described in this section should be carried out after starting the machine. Refer to "Operation 3.1.3 Operations and Checks Before Starting Engine" before executing engine start-up, travelling operations and crane operations.

[1] INSPECTION OF EASE OF ENGINE CRANKING AND ABNORMAL NOISE

Check, before starting the engine, if there is any abnormal noise and if the engine can be easily cranked. Besides, check if there is any abnormal noise in an idle state and a state in which the engine speed is slightly increased.

- When there is abnormal noise at the time of engine start, the engine may be damaged if the engine is operated as it is.
  Contact us or our sales service agency to request inspection in good time.

[2] INSPECTION OF LOW SPEED AND ACCELERATION STATE OF ENGINE

Check if variations in engine rotation occur or the engine suddenly stops when the machine stops in normal travelling.

After warm-up operation, check whether acceleration is smooth as the accelerator pedal is operated from low idling to full rotation (MAX).

- Pay due attention to the surroundings and check in a safe place.
- When the low speed and acceleration state is substantially poor, an unexpected accident may be caused such as by the damaged engine, confused operation feel and worsened brake effectiveness, if the state is continued.
  Contact us or our sales service agency to request inspection in good time.

[3] INSPECTION OF ENGINE EXHAUST GAS COLOUR, ABNORMAL NOISE AND VIBRATION

Set the engine at idle and continue the operation under no load for approximately five minutes.

Verify that the engine exhaust gas colour is either transparent or slightly blue. Also, check for abnormal noises and vibrations. Repair if any abnormality is found.

https://truckmanualshub.com/

[4] INSPECTION OF CRANE OPERATIONS

⚠ WARNING

When checking crane operation, refer to "Operation 3.10 Cautions Before Crane Operation" up to "Operation 3.17 Crane Stowage Operation" and observe the procedures and cautions strictly.

1. Verify that the boom rises smoothly when the right work equipment operation lever is operated to "RAISE" side (pulled inside). In addition, verify that the boom lowers smoothly when the right work equipment operation lever is operated to "LOWER" side (pushed outside). At this time, check if abnormal noise is generated from the parts of the boom or boom derricking cylinder.
   Repair if any abnormality is found.

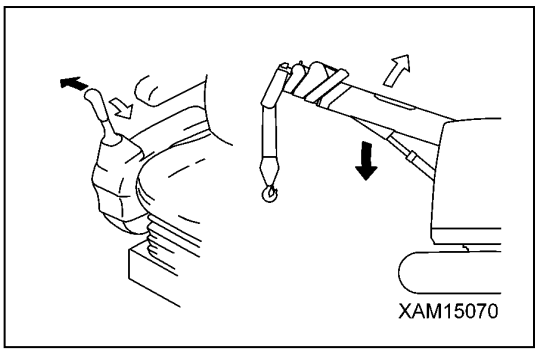

2. Verify that the boom extends smoothly when the left work equipment operation lever is operated to "EXTEND" side (pushed forward). Verify that the boom retracts smoothly when the left work equipment operation lever is operated to "RETRACT" side (pulled backward). At this time, check if abnormal noise is generated from the parts of the boom or boom telescoping cylinder. Repair if any abnormality is found.

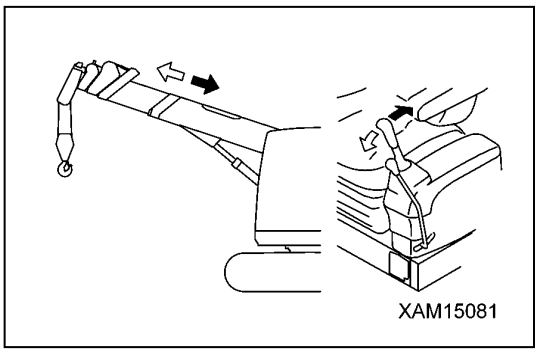

3. Verify that the hook is wound down smoothly when the right work equipment operation lever is operated to "DOWN" (pushed forward). In addition, verify that the hook is wound up smoothly when the right work equipment operation lever is operated to "UP" (pulled backward). At this time, check if abnormal noise is generated from various parts of the boom and winch motor. Repair if any abnormality is found.

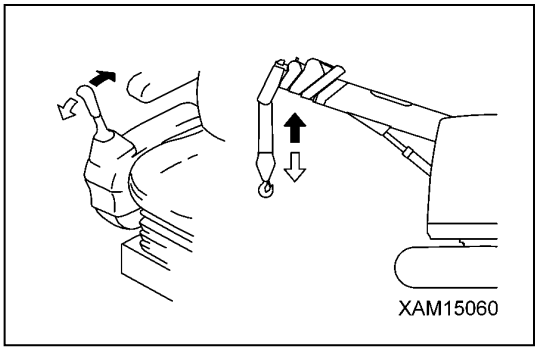

4. Verify that the revolving super structure (boom) slews counterclockwise smoothly when the left work equipment operation lever is operated to "LEFT SLEWING" side (pushed outside). In addition, verify that the crane slews clockwise smoothly when the left work equipment operation lever is operated to "RIGHT SLEWING" side (pulled inside). At this time, check if abnormal noise is generated from the slewing equipment. Repair if any abnormality is found.

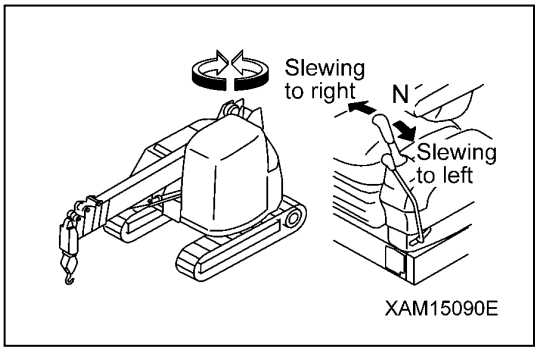

[5] INSPECTION OF OVER-HOISTING PREVENTION DEVICE

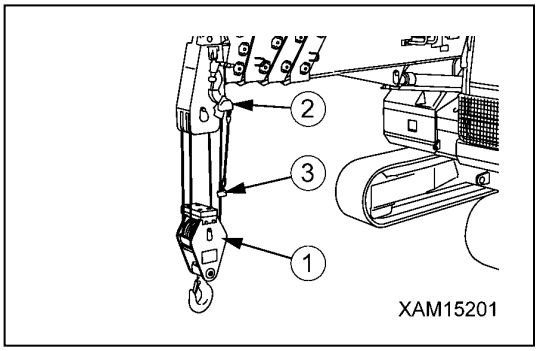

When performing the winch winding up operation and boom extending operation with the hook block (1) in a over-hoisted state (a state in which the hook block (1) pushes up the weight (3)), check that the buzzer sounds intermittently and that the winch winding up operation and boom extending operation fall into a stopped state.

If these events do not happen, the over-hoist detector (2) may be faulty.

If the alarm does not stop sounding, the over-hoist detector (2) may be faulty or the circuit may be open.

Ask us or our sales service agency for repair.

[6] INSPECTION OF MOMENT LIMITER

⚠ WARNING

When an abnormality occurs in the moment limiter, immediately contact us or our sales service agent.

1. Turn “ON” the starter switch.

2. Check the tri-colour revolving working status lamp. The red revolving lights illuminate, then all colours of the revolving lights illuminate, then the green revolving lights illuminate.

3. Start the engine and operate the crane as follows. Then, check if the monitor display of the moment limiter is correct.

Crane operation and display item	Monitor display value of moment limiter
Displayed value of “boom length” when the boom length is minimum	3.2 m
Displayed value of “boom length” when the boom length is maximum	8.7 m
“Working radius” display value for boom length “3.2 m”, (1 boom stage), boom angle “50.0 degrees”	1.9 ± 0.2 m

4. Check that the display value of “Actual load” when a weight whose mass is known is hoisted is same as the total mass of the weight + hoisting attachment. However, some error may be generated depending on the boom condition.

5. Operate the crane and actually measure “Boom angle” and “Working radius” for when the moment limiter values display boom length “3.2 m” (3.2 m boom) and boom angle “50 degrees”. If there is any difference between the actual measurement and display value of the moment limiter, contact us or our sales service agency.

https://truckmanualshub.com/

3.2 STARTING ENGINE

3.2.1 NORMAL STARTING OF ENGINE

⚠ DANGER

Never refuel (diesel fuel) while the engine is in operation.
Always stop the engine before refilling fuel.

⚠ WARNING

- **Start the engine only when the operator is sitting on the operator's seat.**
- **Do not start the engine by short-circuiting the starter circuit. Doing so may cause serious physical injury or fire.**
- **Before starting the engine, make sure no personnel or impediments are close to the machine and honk the horn.**
- **Exhaust gas is toxic. When starting the engine in a narrow, enclosed place, pay due attention to ventilation.**

CAUTION

- **If it is difficult to start the engine because the temperature is low, perform the cold climate engine starting operation.**
- **Do not start the engine by turning the fuel adjustment dial to near the full rotation position (MAX). Engine parts may be damaged.**
- **Do not keep the starter turned for more than 20 seconds. Doing so will accelerate battery discharge.**
  If the engine fails to start, wait for 2 minute before retrying.

1. Turn the starter switch key to the START position. The engine starts.

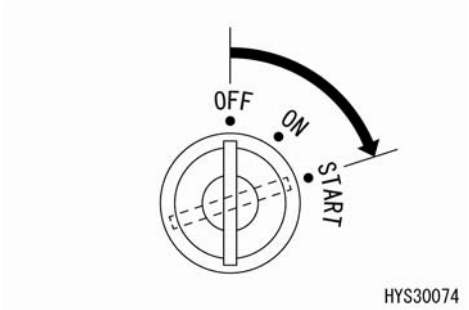

2. Release your fingers from the starter switch key after starting. The key automatically returns to the ON position.

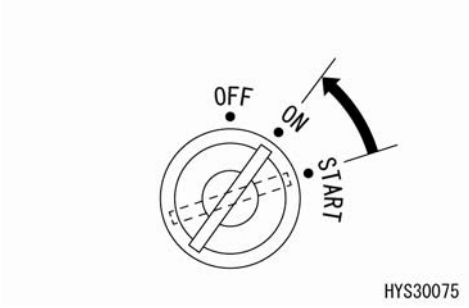

https://truckmanualshub.com/

3.2.2 STARTING ENGINE IN COLD ENVIRONMENT

Start the engine as follows when the weather is cold.

1. Depress the accelerator pedal (4) fully.

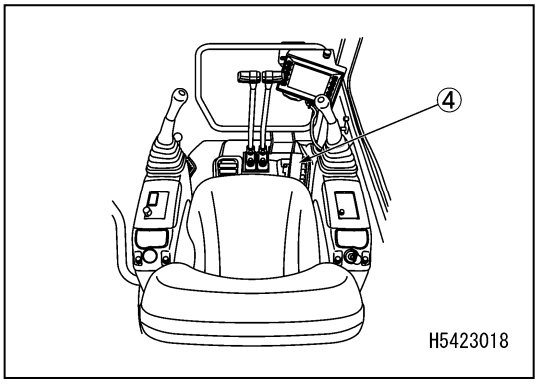

2. Turn the starter switch key to the ON position to pre-warm.
   Check that the glow lamp is illuminated.
   When preheating is completed, the glow lamp goes out.

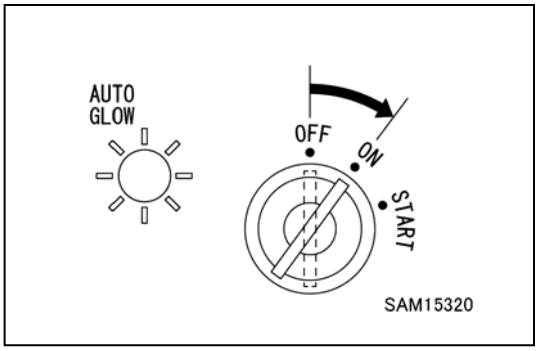

3. When the glow lamp goes out, turn the starter switch key to the START position to start.

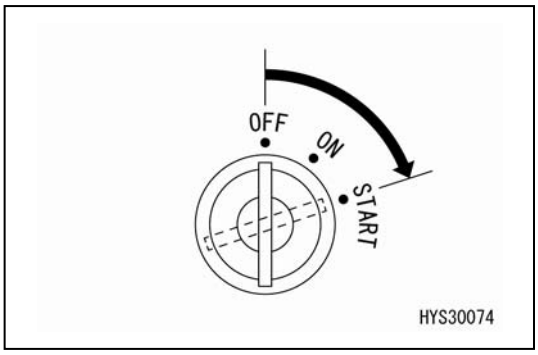

4. Release your fingers from the starter switch key after starting.
   The key automatically returns to the ON position.

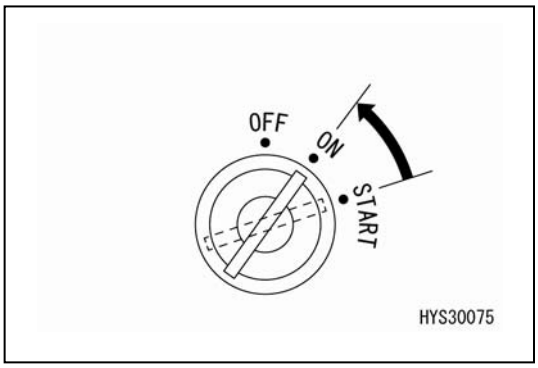

NOTES
Perform warm-up operation by idling after the engine has started.

https://truckmanualshub.com/

3.3 OPERATIONS AND CHECKS AFTER STARTING ENGINE

⚠ WARNING

- **When problems such as emergency stops or abnormal running occur, turn the starter switch key to the OFF position.**
- **If you move the machine without sufficient warm-up, the response of the machine to the operating levers may be slow, which may result in movements unintended by the operator, so warm-up should always be performed. Make sure there is adequate warm-up time, especially in cold conditions.**

3.3.1 WARM-UP

CAUTION

- **Do not perform work or make sudden lever operations while the hydraulic oil temperature is still low. Do not fail to execute the engine warm-up. It also extends the life of the machine.**
- **Do not accelerate the engine suddenly until the warm-up operations are done.**
  Do not perform low idling or high idling under no load for more than 20 minutes. If the engine requires (oil down) idling, occasionally apply a load to the engine, or run the engine at a mid-speed idle.

After starting the engine, do not begin operation of the machine immediately, but perform the following operations and checks.

1. Depress the accelerator pedal (4) to the intermediate position between the low idling position and the full rotation position, rotate the engine at medium speed, and operate with no load for about 5 minutes.

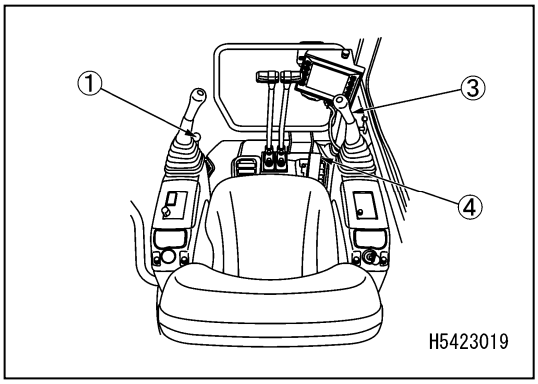

NOTES

If the temperature is below 0 ºC, hold the accelerator pedal at about 1/4 to warm up.

2. Place the lock lever (1) at the Free position (F).

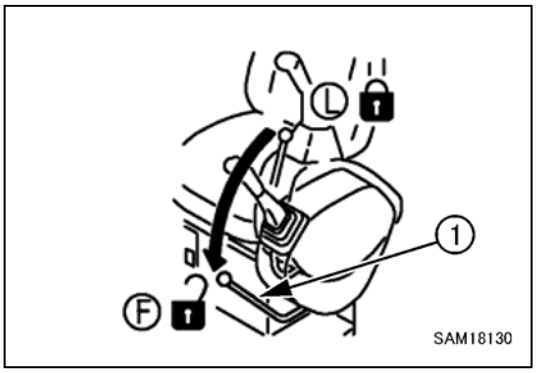

3. Slowly operate the right working machine control lever (3) to move the boom to its lowered stop position and hold it for 5 minutes.
   At this time, be careful to operate the right work equipment operation lever (3) to the “Wind up” side (pull backwards) as necessary, so that the hook does not contact the ground.

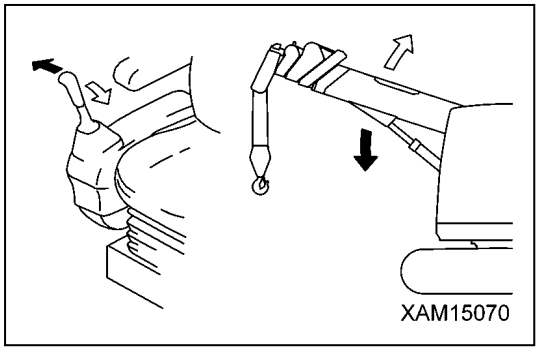

   Push outwards: lower boom
   Pull inwards: raise boom

4. Check if there are any abnormalities with the exhaust gas colour, noise, or vibration. If there are abnormalities, contact us or our sales service agency.

5. After warm-up operation, check each instrument and the machine monitor for abnormalities. Perform repair or service for abnormalities if found.

6. Move the lock lever (1) to the lock position (L) and make sure that machine operation and the slewing operation cannot be performed with the left and right working machine control levers.

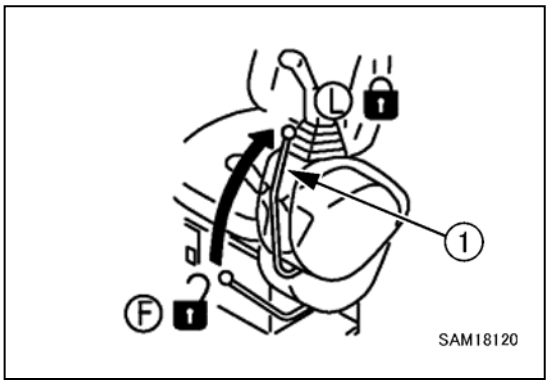

https://truckmanualshub.com/

3.4 STOPPING ENGINE

CAUTION

If the engine is stopped suddenly, the lifespan of each part of the engine may be shortened, so sudden stops should not be performed except in emergency.
When the engine overheats, do not immediately stop it, but rotate it at intermediate speed to gradually cool down before stopping it.

1. Perform around 5 minutes of low idling to gradually cool the engine.

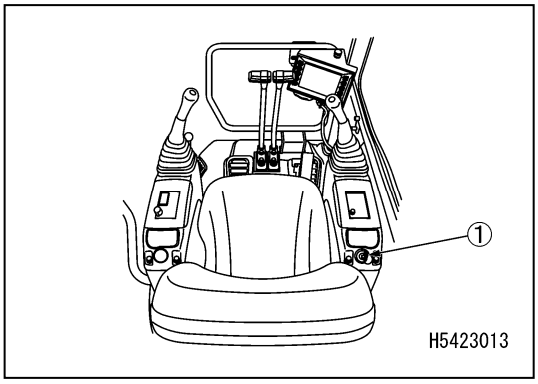

2. Turn the key of the starter switch (1) to the OFF position to stop the engine.

3. Remove the key of the starter switch (1).

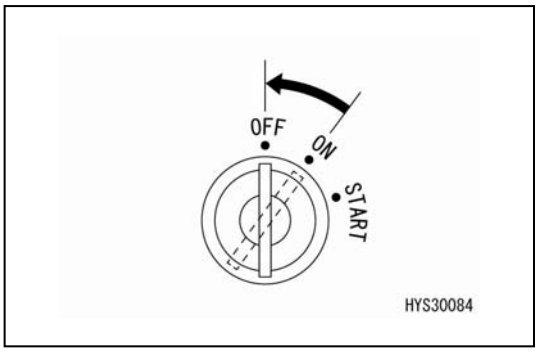

https://truckmanualshub.com/

3.5 BREAK-IN OPERATION

⚠ CAUTION

Perform break-in for the period of the first approximately “100 hours” (hours displayed on the service meter).
The performance and life of the machine are adversely affected if overloaded operation or task is performed before the various sections of the machine are used to the operation.

While this machine is shipped after thorough adjustment and inspection, immediate difficult tasks will quickly degrade the functions and shorten the life of the engine and crane.

Perform break-in for a period of the first approximately “100 hours” (time displayed on the service meter).

Pay attention particularly to the following during the break-in period.

- After the engine has started, be sure to perform the warm-up operations for the engine and hydraulic equipment as described in “Operation 3.3 Operations and Checks after Starting Engine”.
- Perform the warm-up operation for 5 minutes after the engine has started.
- Avoid overloaded operation or tasks with high-speed operation.
- Avoid sudden starting, sudden acceleration, unnecessary sudden stop or sudden steering.

https://truckmanualshub.com/

3.6 MACHINE TRAVELLING POSTURE

⚠ WARNING

- **When moving this machine self-propelled, take the "travelling posture" with which the boom and hook block are stowed.**
- **Never travel with the boom extended or with a lifted load. This will overturn the machine, possibly causing serious injury or accident.**
- **Driving this machine on a public road is prohibited by the Road Traffic Law.**

Take the following travelling posture when moving the machine.

MOVING BEFORE AND AFTER WORK AND DURING TRANSPORTATION

Take the travelling posture shown on the figure on the right when moving to the work site or going to and from the transportation place.

- Make sure the boom is fully retracted.
- Make sure the boom is fully lowered.
- Stow the hook block in the designated stowage position (normal stowage position).
- Place the sprocket (A) in the rear.

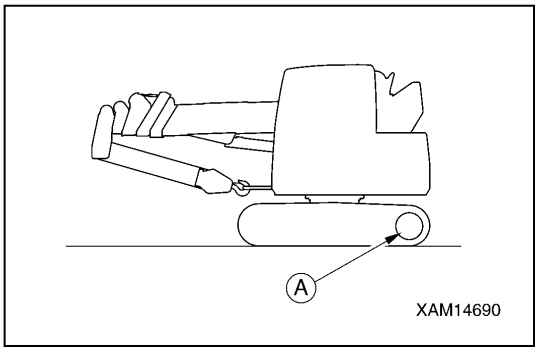

MOVING DURING WORK

Take the travelling posture shown on the figure on the right when moving inside the work site during crane operation.

- Make sure the boom is fully retracted.
- Make sure the boom is fully lowered.
- Stow the hook block in the simple stowage position at the boom tip.
- Place the sprocket (A) in the rear.

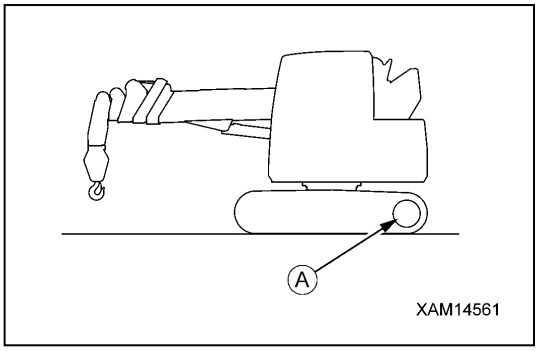

NOTES

For details of stowage operation for the hook block, refer to "Operation 3.17 Crane Stowage Operation".

https://truckmanualshub.com/

3.7 STARTING (FORWARD AND BACKWARD)/STOPPING THE MACHINE

⚠ WARNING

- **Check the direction of the track frame before operating the travelling lever.**
  When the sprocket is in the front, the direction of the travelling lever operation is reversed.
- **For safety, check the vicinity of the machine and honk the horn before starting to move.**
- **Do not allow anyone around the machine.**
- **Clear away all the obstacles on the travelling path.**
- **When travelling, all crane operations are prohibited. Stop the machine before performing crane operations.**

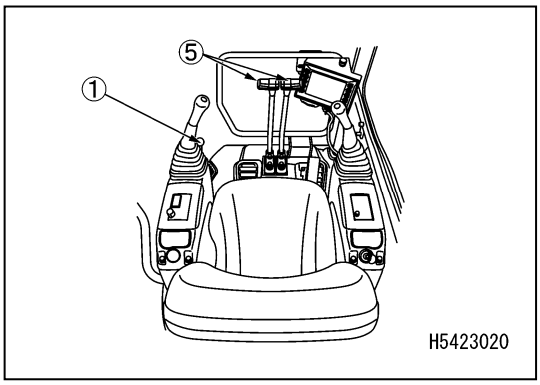

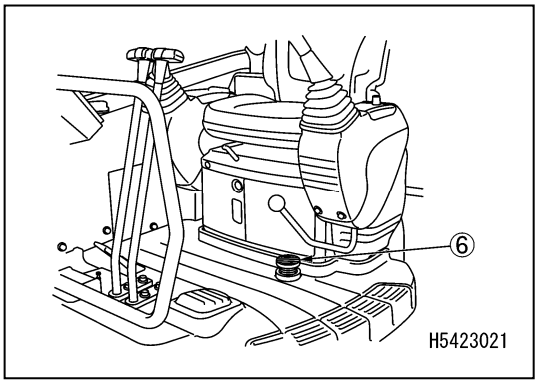

https://truckmanualshub.com/

FORWARD TRAVELLING

1. Place the lock lever (1) at the Free position (F) and adopt travelling posture.

NOTES
For details concerning travelling posture, refer to “Operation 3.6 Machine Travelling Posture”.

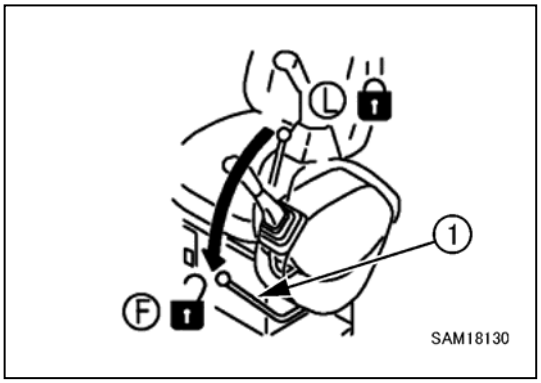

2. Operate the right and left travelling levers (5) as follows.
   - When the sprocket is rearward of the machine body
     Push the left and right travelling levers (5) slowly forward to start moving.

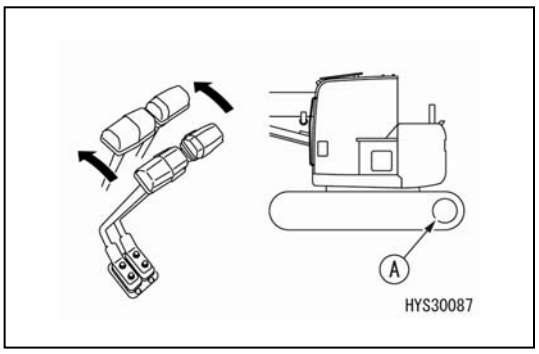

   - When the sprocket is forward of the machine body
     Pull the left and right travelling levers (5) slowly towards you to start moving.

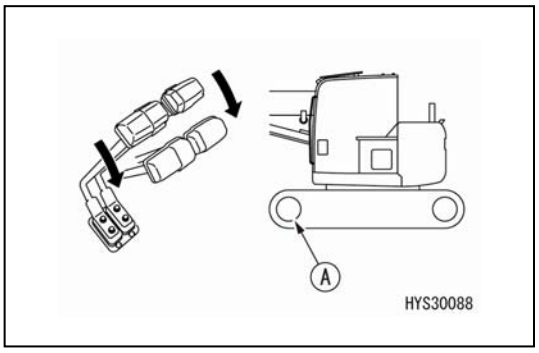

3. If you depress the speed-up pedal (6), the speed will increase.

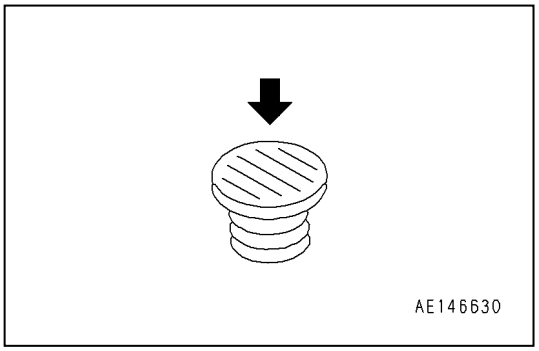

https://truckmanualshub.com/

BACKWARD TRAVELLING

1. Place the lock lever (1) at the Free position (F) and adopt travelling posture.

NOTES
For details concerning travelling posture, refer to “Operation 3.6 Machine Travelling Posture”.

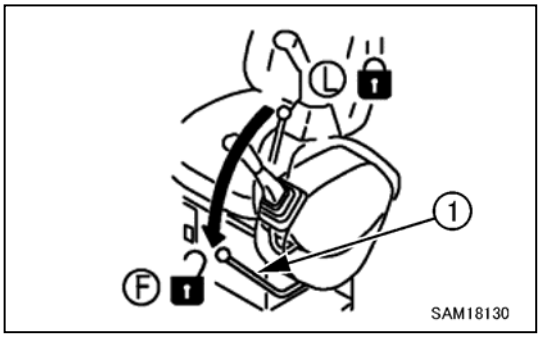

2. Operate the right and left travelling levers (3) as follows.
   - When the sprocket is rearward of the machine body
     Pull the left and right travelling levers (3) slowly towards you to start moving.

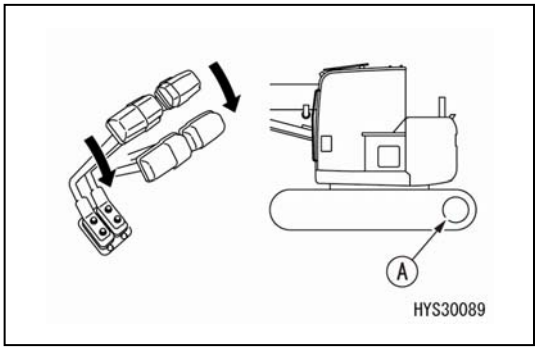

   - When the sprocket is forward of the machine body
     Push the left and right travelling levers (5) slowly forward to start moving.

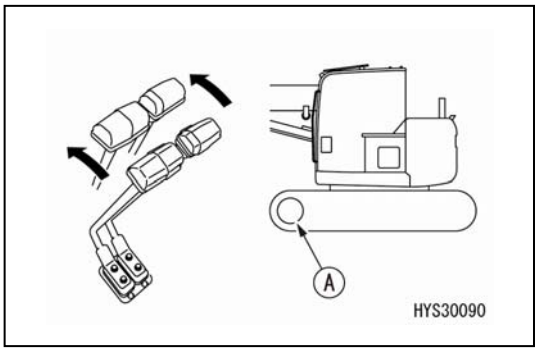

3. The speed will increase while the speed-up pedal (6) is depressed.

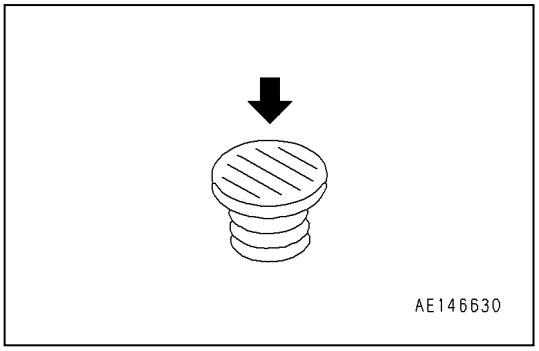

https://truckmanualshub.com/

STOP

⚠ WARNING

Avoid sudden stops and try to stop with a safety margin whenever possible.

1. Place the right and left travelling levers (5) at the neutral position (N).
   The brakes function and the machine stops.

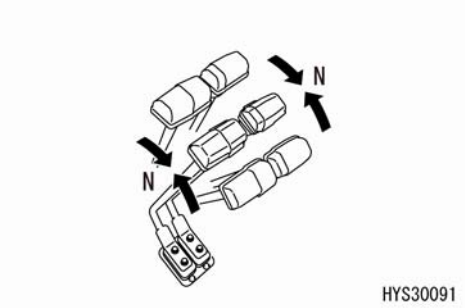

https://truckmanualshub.com/

3.8 CHANGING DIRECTION OF THE MACHINE

⚠ WARNING

Check the position of the sprocket before operating the travelling lever.
When the sprocket is in the front, the direction of the travelling lever operation is reversed.

Operate the travelling lever to change the direction.

Avoid sudden direction changes as far as possible. In particular, stop the machine once before making a pivot turn (spin turn).

Operate the right and left travelling levers (5) as follows.

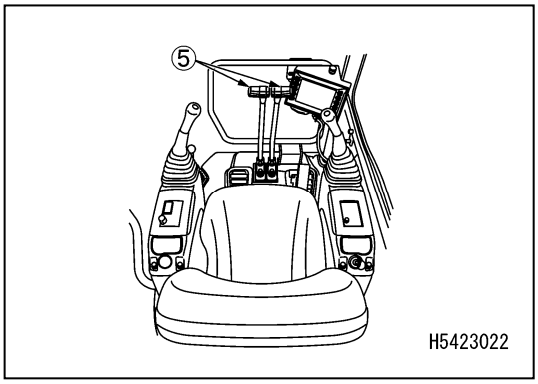

CHANGING MACHINE DIRECTION WHEN STOPPED

When turning to the left, push the right travelling lever forward to turn in forward motion and pull it towards you to turn in backward motion.

(A): Left turn in forward movement

(B): Left turn in backward movement

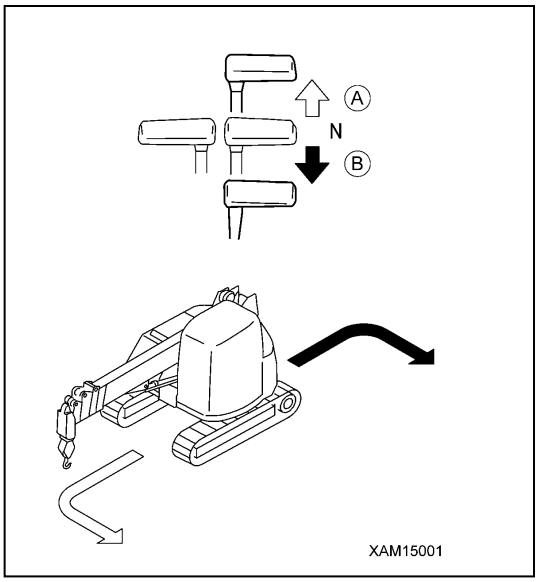

NOTES

When turning to the right, operate the left travelling lever in the same way.

https://truckmanualshub.com/

WHEN OPERATING DURING TRAVELLING (WITH THE LEFT AND RIGHT TRAVELLING LEVERS TILTED IN THE SAME DIRECTION)

To turn to the left, return the left travelling lever to the neutral position.

(A): Left turn in forward movement
(B): Left turn in backward movement

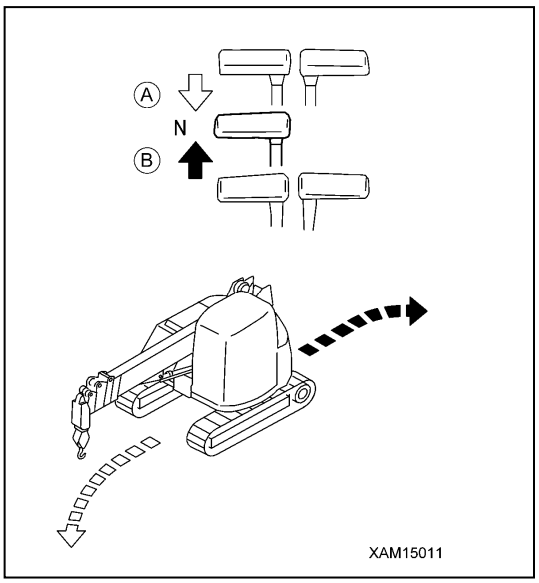

NOTES
When turning to the right, operate the right travelling lever in the same way.

MAKING PIVOT TURN (SPIN TURN) ON THE SPOT

To make a pivot turn to the left, pull the left travelling lever toward you and push the right travelling lever forward.

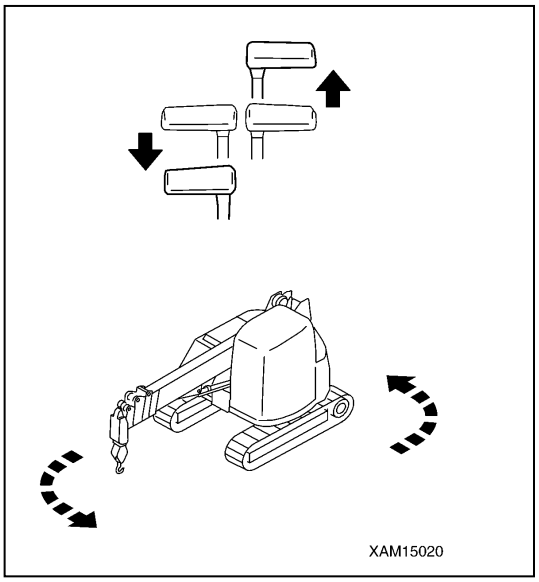

NOTES
To make a pivot turn to the right, pull the right travelling lever toward you and push the left travelling lever forward.

https://truckmanualshub.com/

3.9 SLEWING THE MACHINE

⚠ WARNING

- **The rear end of the machine protrudes from the crawler width. Check safety in the vicinity with the mirrors and visual inspection before slewing.**
- **Check the safety in the vicinity of the machine and honk the horn before starting to slew the machine.**

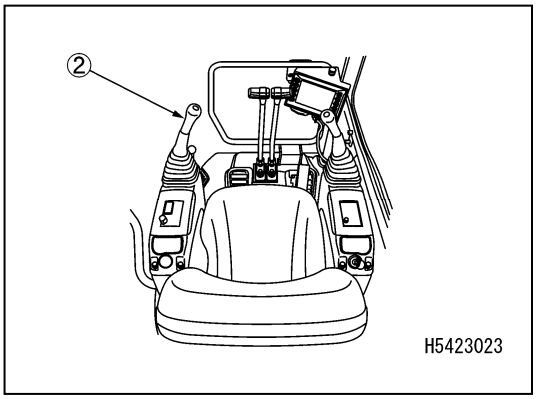

1. Operate the left work equipment operation lever (2) to slew.
   (A): Left slewing
   (B): Right slewing

   When not slewing, set the left work equipment operation lever (1) to the N (neutral) position.
   The slewing brake operates.

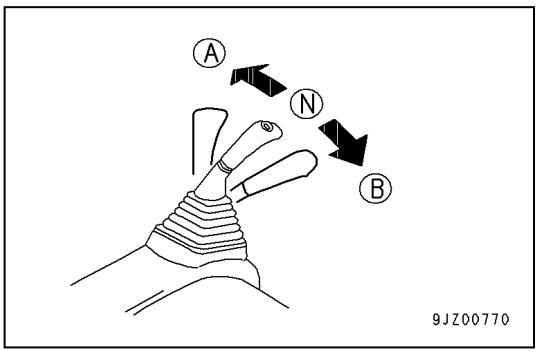

https://truckmanualshub.com/

3.10 CAUTIONS BEFORE CRANE OPERATION

⚠ WARNING

Unless these precautions before work are observed, serious physical injury may be caused.

- Be sure to select a level place and stop the machine there before performing work.
  After stopping the machine, check a level with a levelling instrument.
  In the moment limiter, the moment is calculated on the assumption that the machine is placed horizontally. If work is performed without the machine being placed horizontally, no forecast or warning is issued even when the dangerous range is approached.

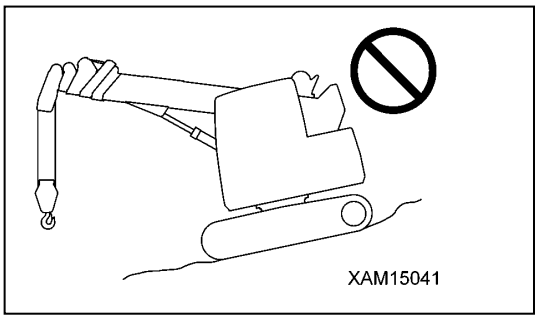

- Precisely set the moment limiter in line with the crane work. The moment limiter calculates the moment based on the set switch. If setting different from actual work is made, the wire rope may be cut or the boom may be damaged, leading to serious physical injury.

  Example of erroneous settings:
  - Number of wire rope falls in actual work: Two falls
  - Number of wire rope falls in set switch: Four falls

  If the setting is made as shown above, the moment limiter calculated a load as a state of “wire rope four falls”. Therefore, even if overload is approached, the moment limiter issues no forecast or warning.
  As a result, the wire rope is in danger of being cut when the actual gross total load exceeds the range of “two falls”.

- When the hook block is over-hoisted, the over-hoisting prevention device is activated, the warning buzzer sounds and the operation stops.
  When the warning buzzer sounds, release your hand immediately from the right work equipment operation lever and place it at the neutral position to stop raising the hook. After that, operate the right work equipment operation lever to the “Lower” side (push forward) and lower the hook block.

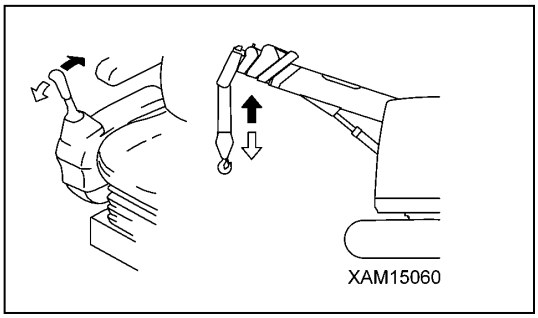

https://truckmanualshub.com/

- When boom is excessively extended, the hook block is hoisted, the over-hoisting prevention device is activated, the warning buzzer sounds and the operation stops.
  When the warning buzzer sounds, release your hand immediately from the left work equipment operation lever and place it at the neutral position to stop the boom extension operation.
  After that, operate the left work equipment operation lever to the “Retract” side (pull toward you) to retract the boom.

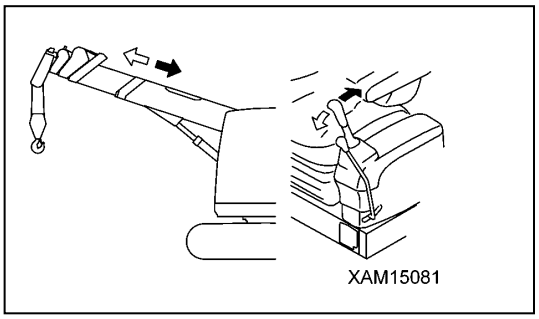

- Use the horn switch to honk the horn to notify the people around of the danger during the crane operation.

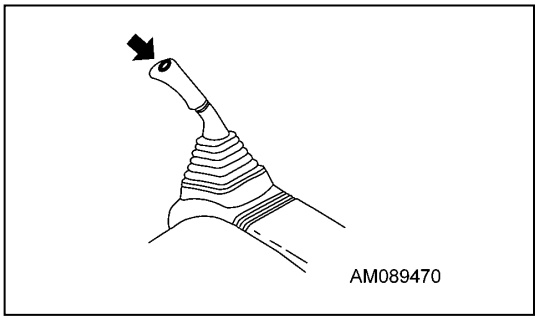

https://truckmanualshub.com/

3.11 OPERATION BEFORE CRANE WORK

⚠ CAUTION

If the boom extending and raising operations are performed with the hook block hung on the wire rope for stowage, the wire rope for stowage is broken and the vicinity of the normal stowage device in the front of the revolving super structure is damaged. Be sure to perform the hook lowering operation so that the wire rope for stowage is not tightened.

CAUTION

- **Be careful not to lower the hook block excessively so that the hook block does not fall sideways on the ground. Doing so results in irregular winding of the winch drum.**
- **When the hook block is loosened from the normal stowage position, the hook block may sway, interfering with and damaging the peripheral equipment. Pay thorough attention around the hook block.**

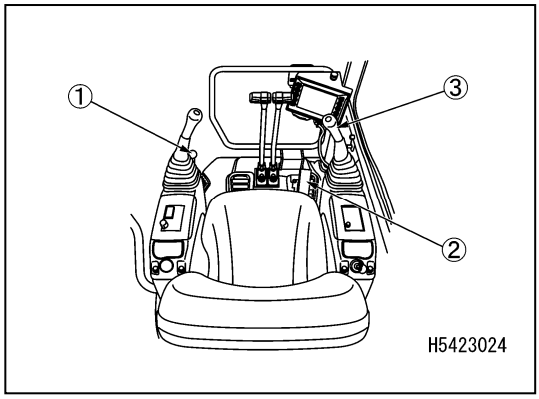

Perform the following operations before crane work.

1. Place the lock lever (1) at the Free position (F).
2. The accelerator pedal (2) should remain at low idling.

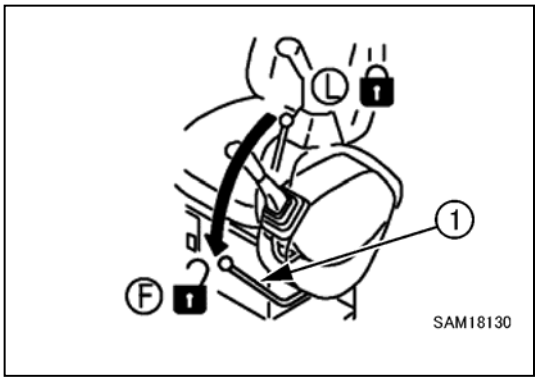

3. Operate the right work equipment operation lever (3) to the “LOWER” side (push forward) to lower the hook block (4) and loosen the rope for stowage (5) (normal stowage position).

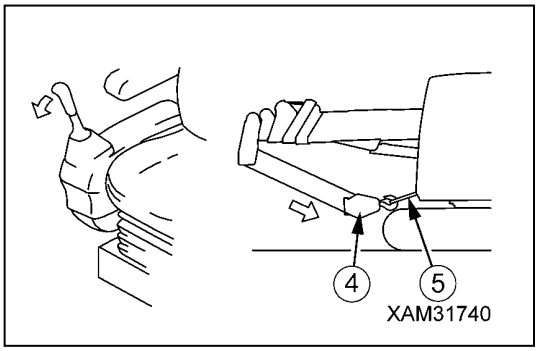

NOTES

At this time, do not lower the hook block (4) excessively.
If it is excessively lowered, the loosened hook block (4) may damage the peripheral equipment.

https://truckmanualshub.com/

4. Operate the right work equipment operation lever (3) to "RAISE" side (pull toward you) to raise the boom.

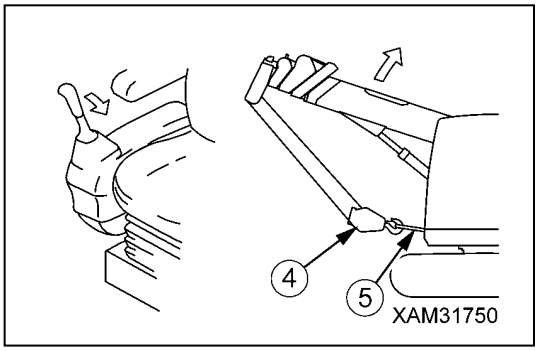

NOTES

At this time, be careful not to allow the hook block (4) and rope for stowage (5) to be overtightened. If the rope for stowage (5) is overtightened, lower the hook block (4).

5. Repeat the operation in steps 3 and 4 and slowly raise the boom until the hook block (4) is placed at the position where it is perpendicular to the stowage section in the front of the revolving super structure.

⚠ WARNING

If the hook block (4) is detached from the stowage rope (5) without the boom being raised near the stowage position, the hook block (4) sways considerably, which may not only damage the peripheral equipment but also cause serious physical injury.

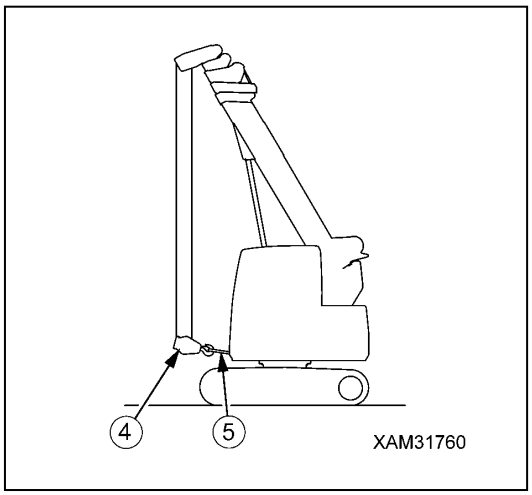

6. Remove the hook block (4) from the rope for stowage (5).

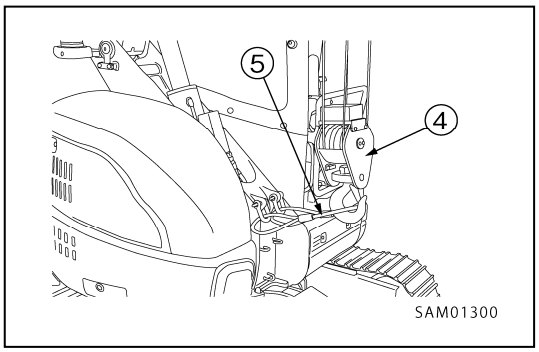

7. Securely hitch the rope for stowage (5) on the rope hook (6).

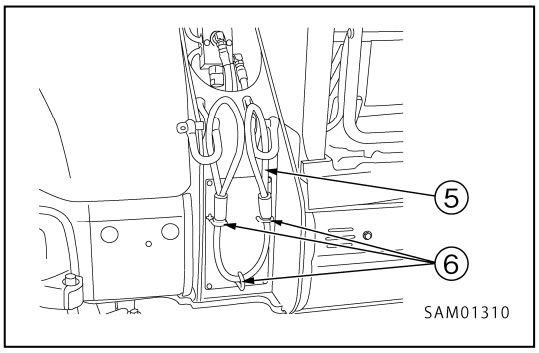

https://truckmanualshub.com/

3.12 CRANE OPERATION POSTURE

To proceed to crane operation from the state described in “Operation 3.11 Operation Before Crane Work”, move the crane into a working posture as follows.

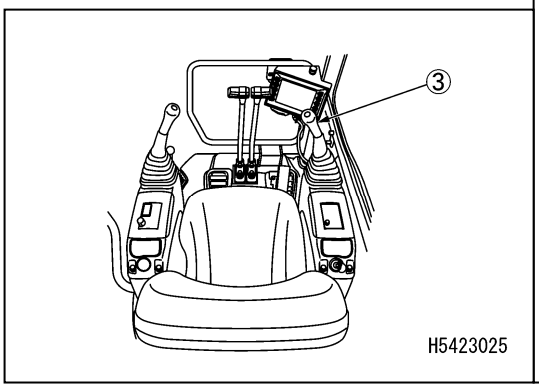

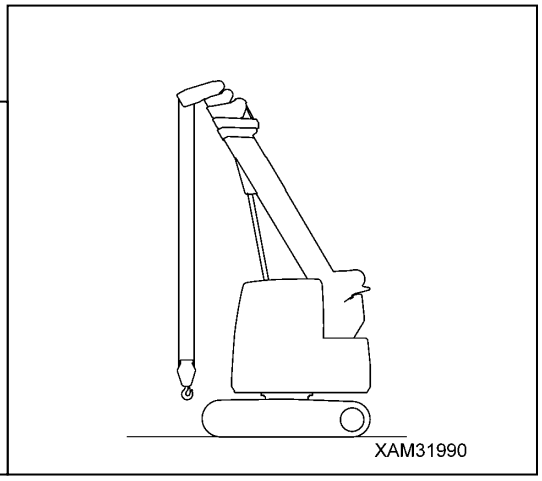

1. Operate the right work equipment operation lever (3) to the “HOIST” side (pull toward you) to hoist the hook block.
   At this time, do not over-hoist the hook block.
   If over-hoisted, the hook block is in a state of being over-hoisted.

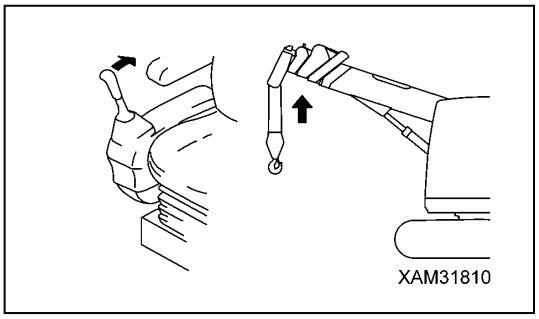

2. Operate the right work equipment operation lever (3) to “LOWER” side (push to the right side) to lower the boom.
   At this time, be careful not to allow the hook block to fall sideways on the ground.

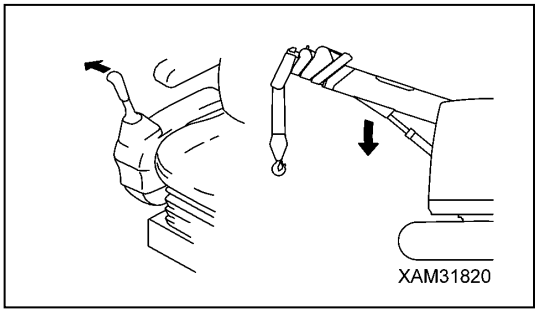

3. Repeat the operation in steps 1 and 2 and put the machine into the work posture shown in the right figure.

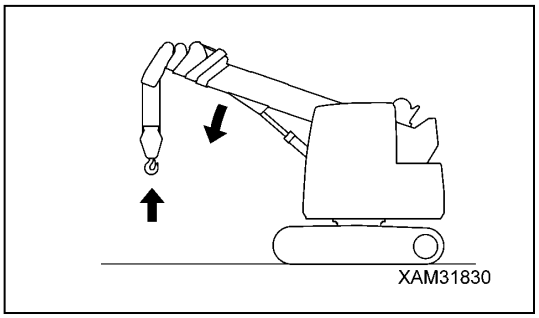

https://truckmanualshub.com/

3.13 HOISTING AND LOWERING

⚠ WARNING

- **With the boom deflection, the hoisted load slightly shifts forward. Notify the workers around such as slinging operators.**
- **If the hook block is over-hoisted, the over-hoisting prevention device detects over-hoisting and the warning buzzer sounds intermittently. When the buzzer sounds, immediately operate the right work equipment operation lever to the neutral position to stop the hoisting operation.**
- **When it is necessary to unwind a significant length of the wire rope to lower the hook in works such as underground works, at least 3 turns of the wire rope must be left on the winch drum.**

CAUTION

- **Be careful not to lower the hook block excessively so that the hook block does not fall sideways on the ground. Doing so results in irregular winding of the winch drum.**
- **When stopping the winch operation, do not suddenly return the lever to the neutral position. Doing so may loosen the wire rope, resulting in irregular winding of the winch drum.**

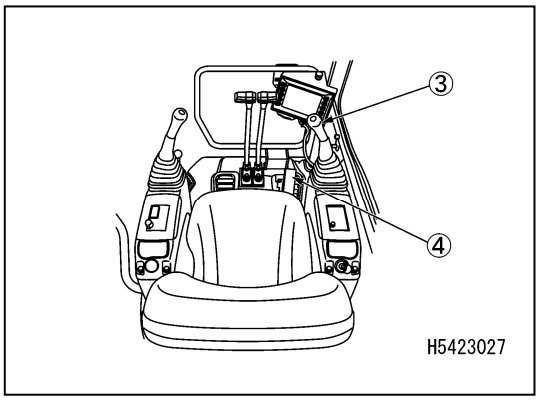

3.13.1 NORMAL HOISTING AND LOWERING

Operate the right work equipment operation lever (3) as follows.

- Lowering: Push the lever forward.
- Neutral: Release your hand from the lever.
  The lever will return to the neutral position and the raising/lowering of the hook block stops.
- Hoisting: Pull the lever toward you.

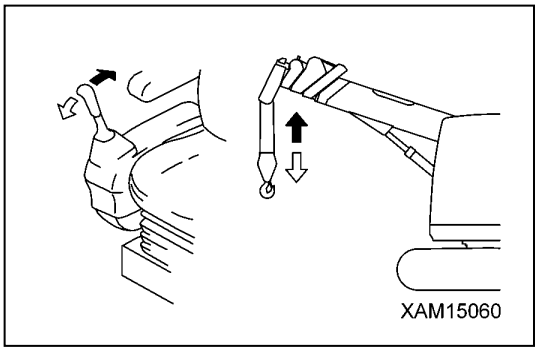

NOTES

Adjust the winch raising and lowering speed by the stroke of the right work equipment operation lever (3) and the depression amount of the accelerator pedal (4).

https://truckmanualshub.com/

3.13.2 HOISTING OPERATION WITH HOOK STOWAGE SWITCH

⚠ WARNING

- **The hook stowage switch is used to cancel the automatic stop function of the over-hoisting prevention device.**
  When storing the hook block, carefully operate the right work equipment operation lever and pay due attention not to allow the hook block to crash against the boom.
- **Use the hook storage switch only when performing simple storage of the hook block in the boom tip.**

While performing the normal hoisting operation, operate the hook stowage switch of the monitor as follows.

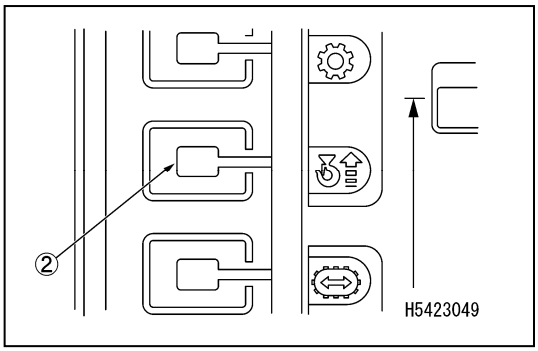

- Cancel: While continuing to press the switch, operate the right work equipment operation lever to the “Hoisting” side (pull toward you). The hook block is hoisted and is stored in the storage section of the boom tip.
  At this time, the lamp of the switch part turns on.
- Automatic: Release your finger from the switch. The switch returns to the original position, and the automatic stop function of the over-hoisting prevention device turns into an operating state.

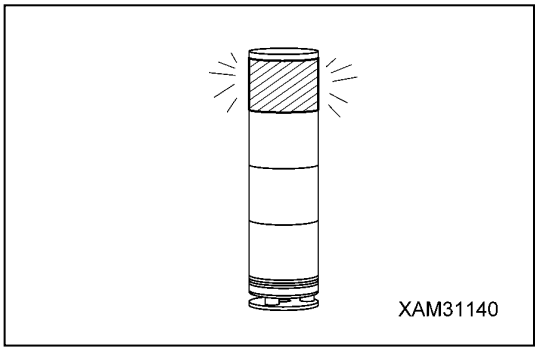

NOTES

- When this hook stowage witch is placed at the “Cancel” position, the red lamp of the tri-colour revolving working status lamp turns on.
- When the winch is hoisted while the hook stowage switch is pressed, the hoisting speed becomes slow, which is not a fault.

https://truckmanualshub.com/

3.14 BOOM DERRICKING OPERATION

⚠ WARNING

- **Perform the right work equipment operation lever operation as slowly as possible. Especially avoid sudden lever operations when the load is hoisted, which may cause the load to waggle and give large impact to the Machine, and thus may damage the crane or trip the Machine.**
- **Pulling-in and raising work of a load by derricking the boom is prohibited. Be sure to perform the hook hoisting operation to lift a load.**
- **When the boom is lowered, the working radius increases, and the rated total load that can be hoisted decreases. When operating the machine by derricking the boom, exercise caution so that the mass (weight) of the suspended load is not overloaded when the boom reaches the lowest position.**

Operate the right work equipment operation lever (3) as follows.

- Lowering: Push the lever outside (right side).
- Neutral: Release your hand from the lever.
  The lever returns to the neutral position and the boom derricking stops.
- Raising: Pull the lever inside (left side).

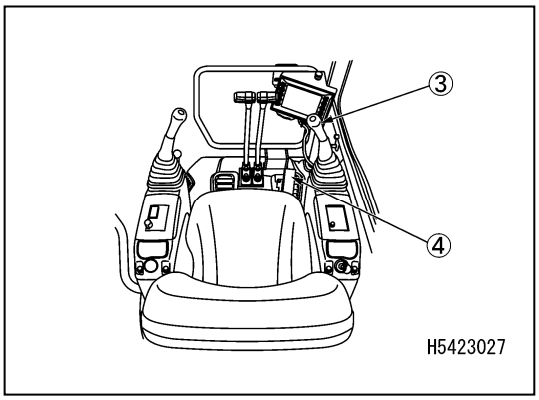

NOTES

- Adjust the boom derricking speed by the stroke of the right work equipment operation lever (3) and depression amount of the accelerator pedal (4).
- When the boom length displayed on the moment limiter display is “3.3 m” or longer, the boom lowering action stops automatically so that the boom angle does not fall below a horizontal line.

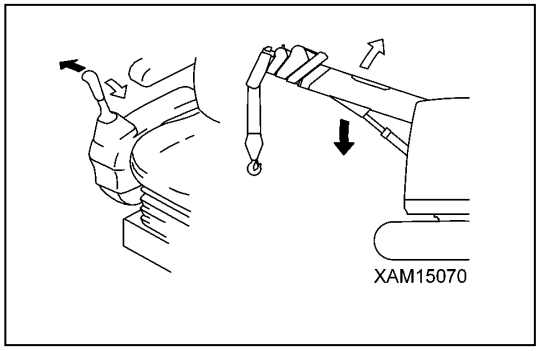

https://truckmanualshub.com/

3.15 BOOM TELESCOPING OPERATION

⚠ WARNING

- **Perform the left work equipment operation lever operation as slowly as possible.**
  Especially avoid sudden lever operations when the load is hoisted, which may cause the load to waggle and give large impact to the Machine, and thus may damage the crane or trip the Machine.
- **Pulling of the load laterally by extending/retracting the boom is prohibited. Be sure to perform the hook hoisting operation to lift a load.**
- **When the boom is extended, the working radius increases, and the rated total load that can be hoisted decreases. When working while extending/retracting the boom, pay extra attention so that the mass (weight) of the load at the time the boom is most lowered does not cause overloading.**
- **When the boom is extended, the hook block is raised.**
  If the warning buzzer of the over-hoisting prevention device sounds during the boom extending operation, return the boom telescoping lever immediately to the neutral position and stop the boom extending operation.

CAUTION

- **When the boom is extended/retracted, the hook block is in a raised or lowered state. Always perform the winch operation simultaneously to adjust the hook block height.**
- **When the boom is extended for a long time, the boom slightly retracts due to the temperature change in the hydraulic oil. In this case, extend the boom as needed.**

Operate the left work equipment operation lever (2) as follows.

- Extend: Push the lever forward.
- Neutral: Release your hand from the lever.
  The lever returns to the neutral position and the boom extension/retraction stops.
- Retract: Pull the lever toward you.

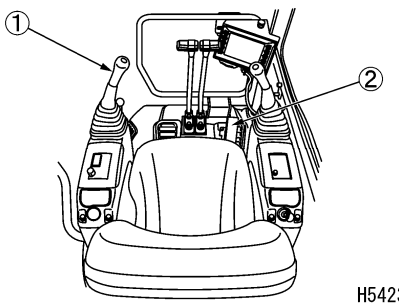

NOTES

- Adjust the boom extending/retracting speed by the stroke of the left work equipment operation lever (2) and depression amount of the accelerator pedal (4).
- When the boom extends, the second stage extends first, then the third and fourth stages extend simultaneously.
  When the boom retracts, it retracts in the reverse order of extension.

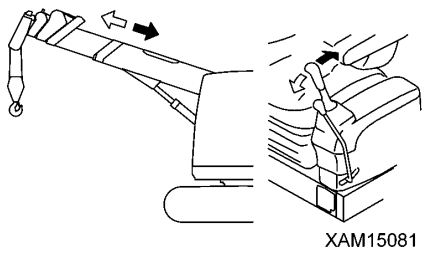

CAUTION

When the boom extends and the hook block (3) pushes up the weight (5) of the over-hoist detector (6), the boom extension stops. In this state, the boom does not extend when the boom extending operation is performed.
In such a case, lower the hook block by performing the retracting operation or the lowering operation of the boom.

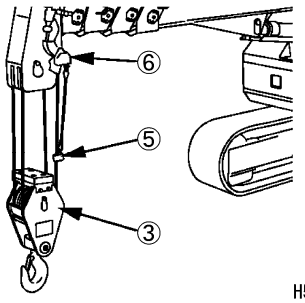

https://truckmanualshub.com/

3.16 SLEWING OPERATION

⚠ WARNING

- **Check the safety in the vicinity and honk the horn before slewing.**
- **Perform the slewing operation as slowly as possible. Make sure to start smoothly, slew at low speed, and stop quietly. Especially avoid sudden lever operations when the load is hoisted, which may cause the load to waggle and cause the Machine to lose balance, and thus may damage the crane or trip the Machine.**
- **Pulling-in and raising work of a load by performing the slewing operation is prohibited. Be sure to perform the hook hoisting operation to lift a load.**

Operate the left work equipment operation lever (2) as follows.

- Left slewing: Push the lever outside (left side).
- Neutral: Release your hand from the lever.
  The lever returns to the neutral position and the slewing stops.
- Right slewing: Pull the lever inside (right side).

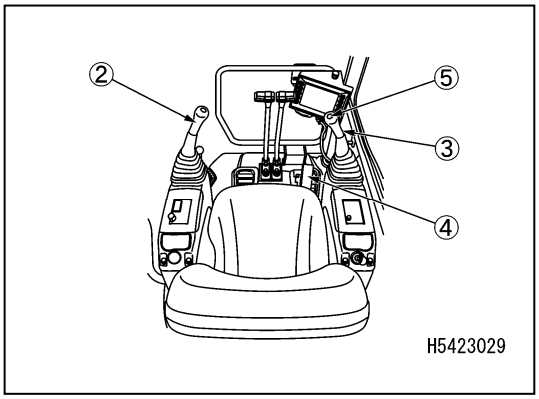

NOTES

- Adjust the crane slewing speed by the stroke of the left work equipment operation lever (2) and depression amount of the accelerator pedal (4).
- There is a horn switch (5) in the centre of the knob of the right work equipment operation lever (3). Use the switch to give a signal when performing the slewing operation.

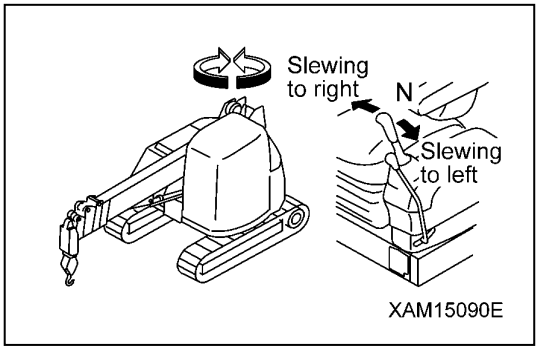

CAUTION

The gross rated load is the same in all directions regardless of the slewing stop position.

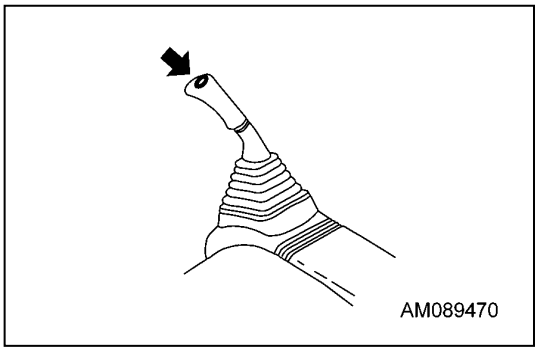

https://truckmanualshub.com/

3.17 CRANE STOWAGE OPERATION

3.17.1 CRANE STOWAGE OPERATION AT THE TIME OF SIMPLE STOWAGE OF HOOK BLOCK

⚠ WARNING

- **The hook stowage switch is used to cancel the automatic stop function of the over-hoisting prevention device and reduces hook winding force.**
  When storing the hook block, carefully (slow speed without full stroke) operate the right work equipment operation lever and take care not to allow the hook block to crash against the stowage position at the boom tip.
- **Move by storing the hook block in the simple stowage position only when moving inside the work site halfway the crane operation. When moving a long distance such as when moving to the work site or going to and from the transportation place, store the hook block in the normal stowage position in the front of the revolving super structure.**
- **When stowing the hook, be sure to set the boom angle to 5 degrees or below, or to 70 degrees or above, before performing the stowage operation. Stowing the hook at angles outside these ranges risks damaging the upper part of the hook block.**
- **Do not perform hook stowage operation with the maintenance switch in the "ON" position. Unless hook stowage mode is set, the upper part of the hook block, the boom and wire rope etc. may be damaged.**

CAUTION

- **When performing simple stowing of the hook block, stop the hook block from swaying.**
- **Be careful not to lower the hook block excessively so that the hook block does not fall sideways on the ground. Doing so results in irregular winding of the winch drum.**
- **The boom "Retracting" operation will lower the hook block. The "Lowering" operation of the boom also causes the hook block to move downward. Perform the hoisting operation simultaneously so that the hook block does not fall sideways on the ground.**

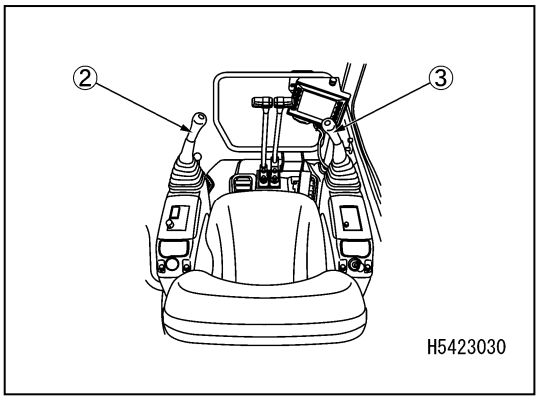

1. Operate the left work equipment operation lever (2) to the "Retract" side (pull toward you) to retract the boom fully.

NOTES

The hook block lowers with the boom retracting operation. Perform the hoisting operation as appropriate and hoist the hook block.

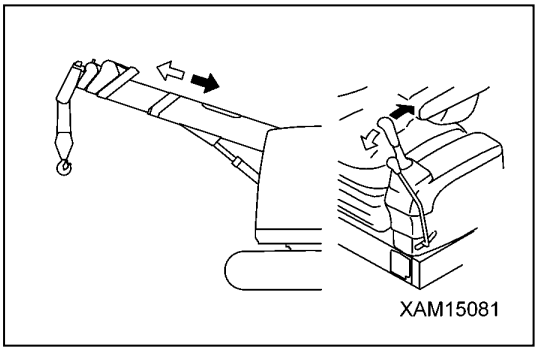

2. Operate the right work equipment operation lever (3) to "Lower" side (push it outside) to lower the boom until it stops.

NOTES

The hook block lowers with the boom lowering operation. Perform the hoisting operation as appropriate and hoist the hook block.

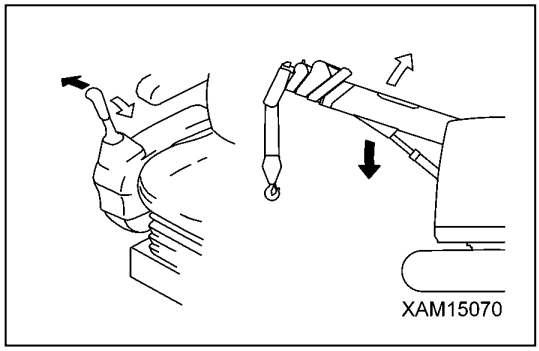

https://truckmanualshub.com/

3. Each time the hook block lowers and approaches the ground with the operation in steps 1 and 2, move the right work equipment operation lever (3) to the “Hoisting” side (pull towards you), and hoist the hook block to an extent that it is not over-hoisted.

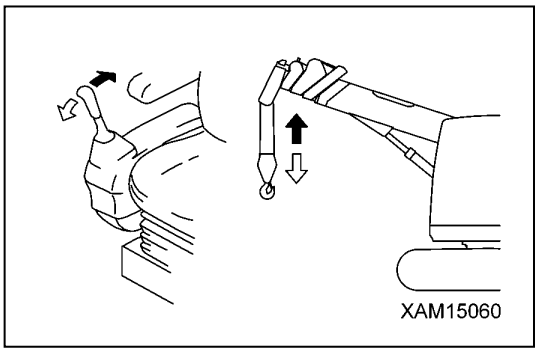

NOTES
If the hook block is excessively hoisted, the over-hoist detector is activated, generating an alarm buzzer. This allows the ongoing winding operation to automatically stop.

4. Operate the left work equipment operation lever (2) to the “Left slewing” side (push outside) or to the “Right slewing” side (pull inside) and slew so that the boom is positioned in the centre of the machine body.

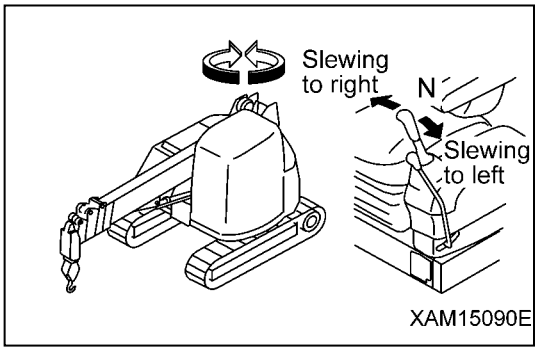

NOTES
The boom stowage is completed with the operation of steps 1 to 4. Store the hook block (4) in the simple stowage position with the operation described in the following steps.

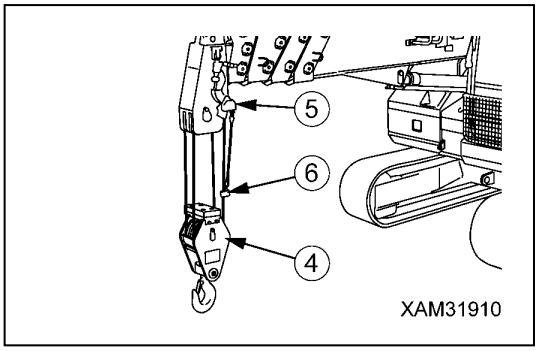

5. Operate the right work equipment operation lever (3) to the “Hoisting” side (pull toward you) and hoist the hook block (4) until it pushes up the weight (6) and stops automatically (a state of over-hoisting).

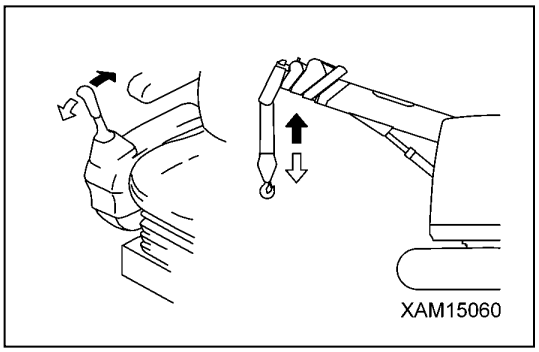

NOTES
When the hook block (4) is over-hoisted, the warning buzzer sounds and the hoisting operation stops automatically.

https://truckmanualshub.com/

6. While pressing the hook stowage switch on the machine monitor, once more slowly operate the right work equipment operation lever (3) to the “Hoisting” side (pull toward you) and slowly and carefully hoist the hook block (4) to store it in the lower part of the boom tip.

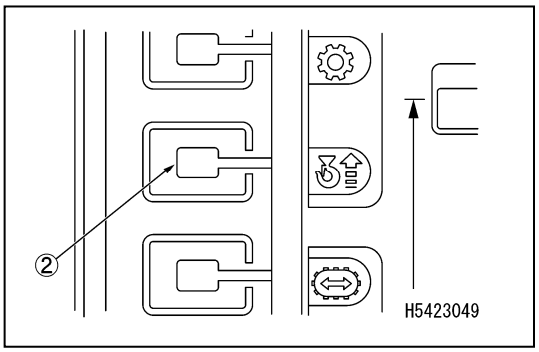

NOTES
When the hook stowage switch is pressed, the red lamp on the tri-colour revolving working status lamp turns on.

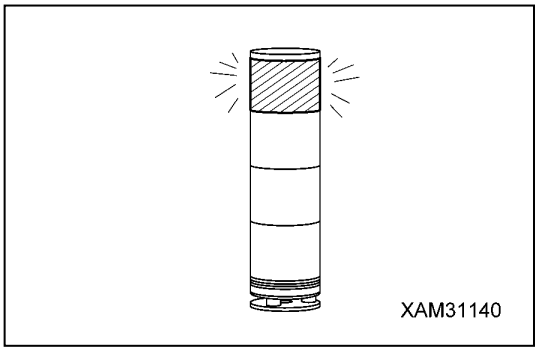

NOTES
The right figure shows a state in which the hook block (4) is stored in the lower part of the boom tip.

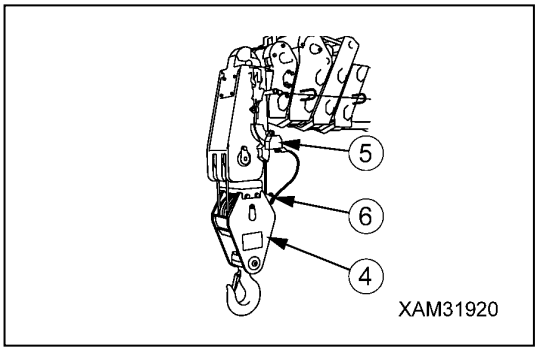

NOTES
• The right figure shows the state in which the hook block (4) is stored in the lower part of the boom tip when the boom angle is 70 degrees or more. • To stow the hook block with a boom angle of 70 degrees or more, fully retract the boom as in step 1 and refer to “Operation 3.14 Boom Derricking Operation” to set the boom angle to 70 degrees or more. Next, continue operations from step 4.

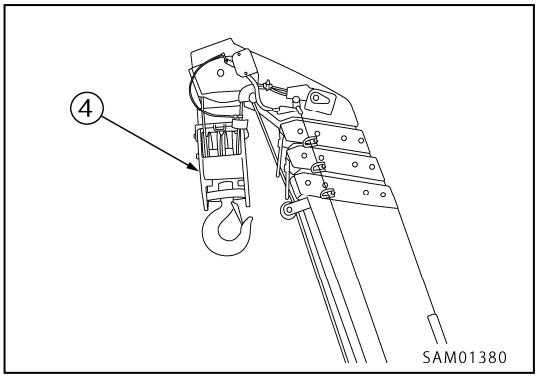

https://truckmanualshub.com/

3.17.2 CRANE STOWAGE OPERATION AT THE TIME OF NORMAL STOWAGE OF HOOK BLOCK

⚠ WARNING

- **When stowing the hook block, carefully (at low speed without full stroke) operate the right and left work equipment operation levers. Otherwise, the hook block may sway considerably, not only damaging the peripheral equipment but also causing serious physical injury.**
- **Raise the boom to near the hook block stowage position. If the hook block is away from the stowage position, the hook block may come off, not only damaging the peripheral equipment but also causing serious physical injury, when the hook block is going to be hung on the rope for stowage.**

CAUTION

- **Prior to normal hook block stowage, stop the hook block from swaying.**
- **Be careful not to lower the hook block excessively so that the hook block does not fall sideways on the ground. Doing so results in irregular winding of the winch drum.**
- **The boom "Retracting" operation will lower the hook block. The "Lowering" operation of the boom also causes the hook block to move downward. Perform the hoisting operation simultaneously so that the hook block does not fall sideways on the ground.**

1. Operate the left work equipment operation lever (2) to the "Retract" side (pull toward you) to retract the boom fully.

NOTES
The hook block lowers with the boom retracting operation. Perform the hoisting operation as appropriate and hoist the hook block.

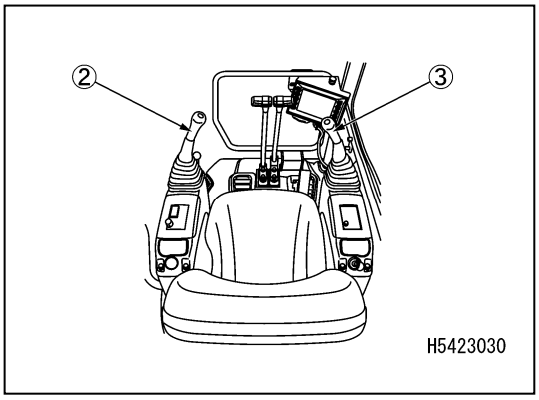

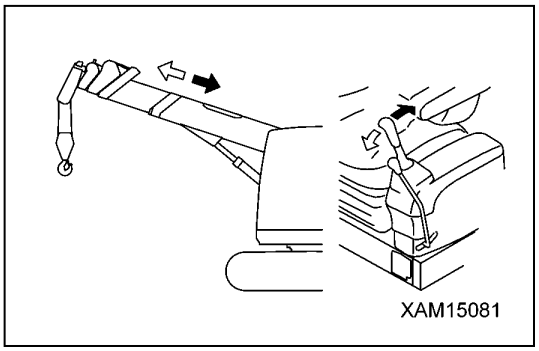

2. Operate the right work equipment operation lever (3) to the "Raise" side (pull inside) and raise the boom up to the position where the hook block nears the normal stowage position.

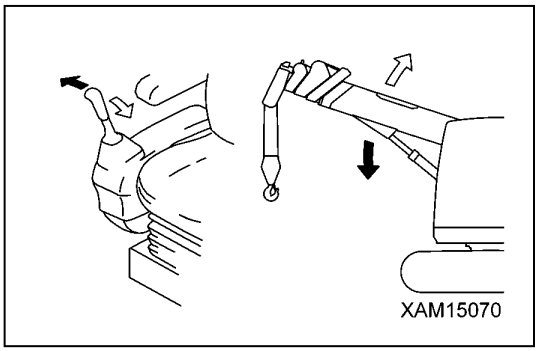

https://truckmanualshub.com/

3. Operate the right work equipment operation lever (3) to the “Lower” side (push forward) and lower the hook block to near the normal stowage position.

NOTES
At this time, do not lower the hook block (4) excessively. If it is excessively lowered, the loosened hook block (4) may damage the peripheral equipment.

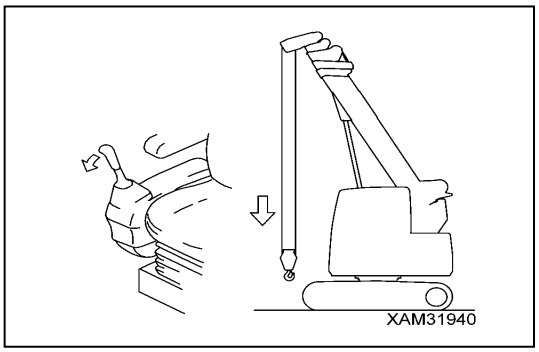

4. Remove the rope for stowage (5) from the rope hook (6).

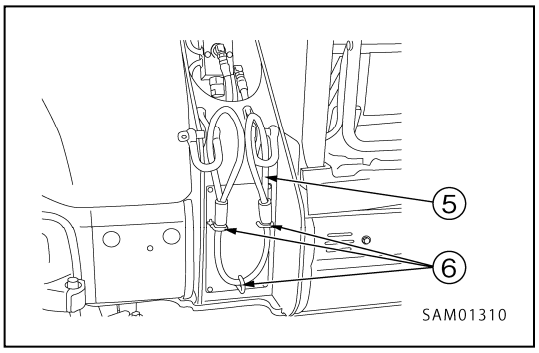

5. Hang the rope for stowage (5) on the hook block (4).

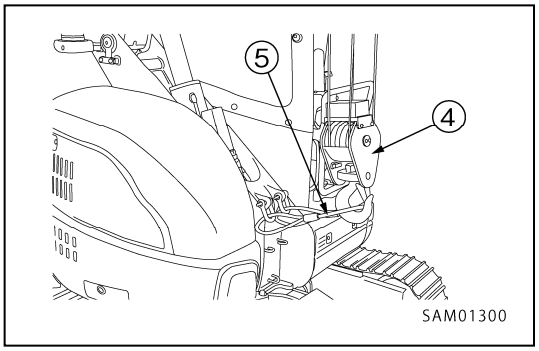

6. Operate the right work equipment operation lever (3) to “Lower” side (push outside) to lower the boom to the end.

NOTES
At this time, hoist the hook block (4) occasionally to reduce slack in the wire rope. At this time, be careful not to allow the hook block (4) and rope for stowage (5) to be overtightened.

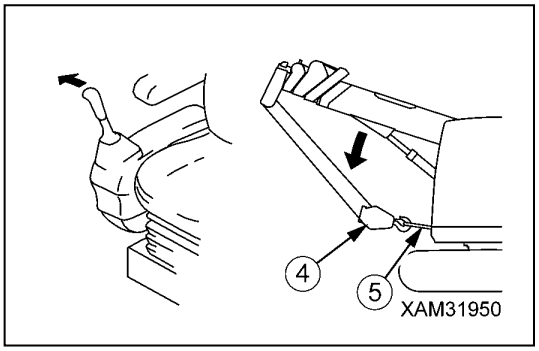

7. While pressing the hook stowage switch on the machine monitor, operate the right work equipment operation lever (3) to the “Hoist” side (pull towards you) to hoist the hook block (4) slowly and tighten the stowage rope (5).

NOTES
At this time, do not over-hoist the hook block (4). If it is over-hoisted, the rope for stowage (5) may damage the vicinity of the normal stowage position in the front of the revolving super structure.

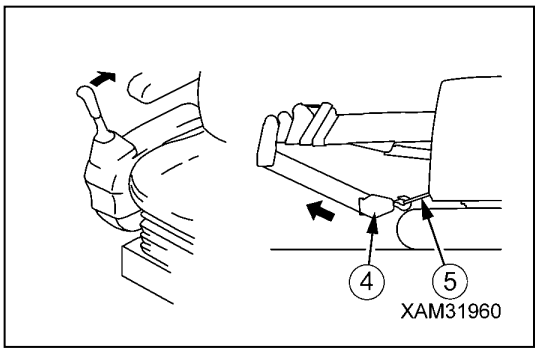

https://truckmanualshub.com/

3.18 PROHIBITED OPERATIONS DURING CRANE WORK

⚠ WARNING

- **Always set the machine on level, solid ground when performing the crane operations. Check the level state using a levelling instrument.**
- **Even when the crane must be unavoidably operated during travelling, be sure to stop the machine once before operating it. Even if the right and left work equipment operation levers are operated during travelling, this machine performs no operation other than the slewing operation and boom retracting operation.**
- **Refer to the cautions given in "Safety" in addition to the prohibitions in this section.**

DON'T OPERATE WITH SLEWING FORCE

Drawing in or lifting the load with slewing operation is prohibited.

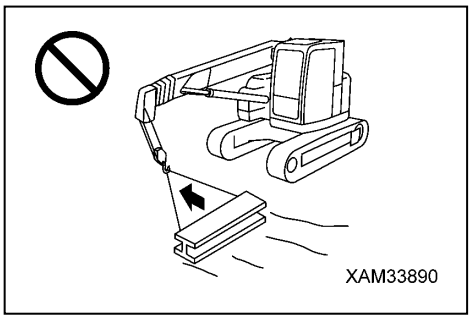

DON'T OPERATE WITH DERRICKING FORCE

Drawing in or lifting the load with boom derricking operation is prohibited.

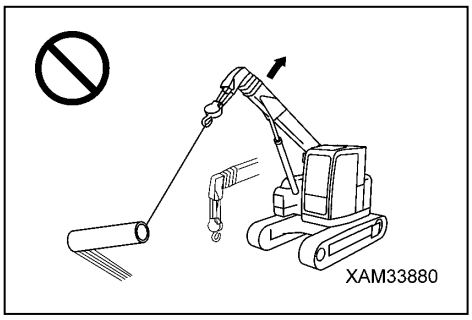

DON'T PULL SIDEWARD, DRAW IN OR HOIST DIAGONALLY

Pulling the load sidewards, drawing it in, or hoisting diagonally applies unreasonable force on the machine. It not only damages the machine body, but also is dangerous. Never operate in this way.

The hook must lift right above the centre of gravity of the load hoisted.

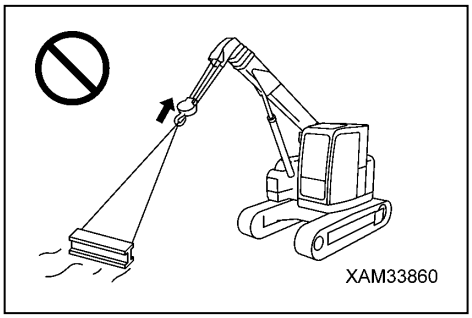

DON'T OPERATE VIOLENTLY DURING WORK

Do not operate the lever suddenly.

Especially, "slewing", "boom lowering", and "hook lowering" must be operated at low speeds.

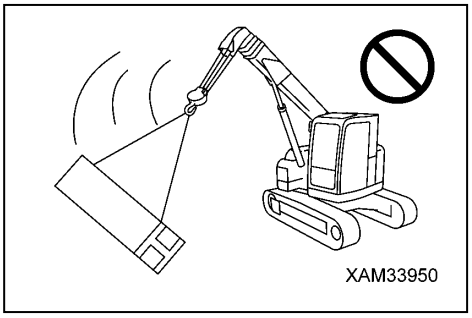

https://truckmanualshub.com/

DON’T ACCESS INTO WORKING RADIUS

Do not allow personnel to approach the working radius such as letting operators enter under a hoisted load.

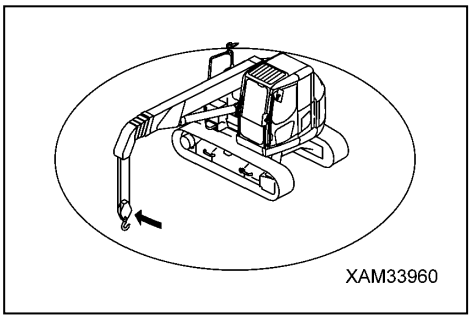

DON’T USE FOR OTHER THAN MAIN APPLICATIONS

Do not move people up/down with the crane.

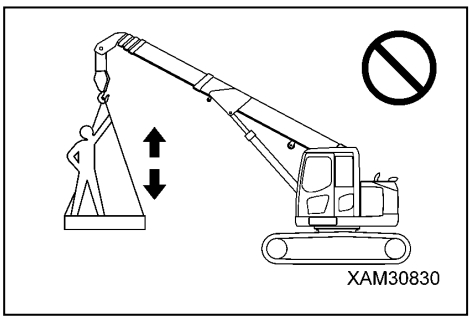

DON’T PERFORM UNREASONABLE OPERATIONS

Operations requiring more than the machine performance can cause accidents.

Crane operations must always be carried out according to the rated total load chart.

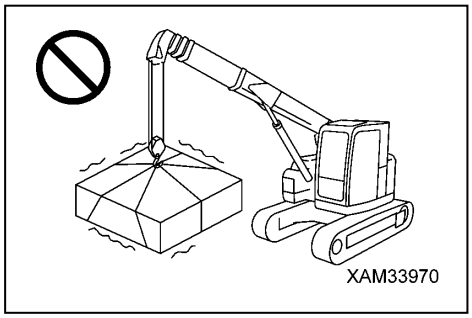

DON’T WIND WIRE BY FORCE

Be careful not to hook the wire rope over a tree or steel beam while working.

If it gets stuck with something, do not force to wind the wire. Untangle and then wind the wire.

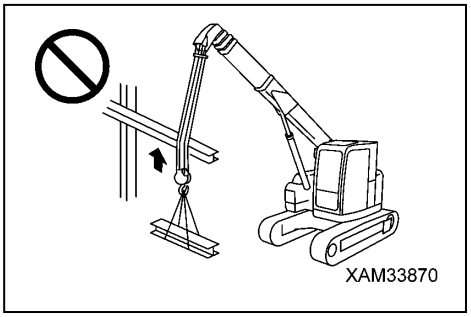

DON’T OPERATE DURING TRAVELLING HOIST

The operation during travelling hoist may result in the swing of load and tipping over. This is in principle prohibited. When there is no alternative but to perform travelling with a hoisted load, refer to “Operation 3.19 Perform Travelling with Hoisted Load” and observe its contents and instructions.

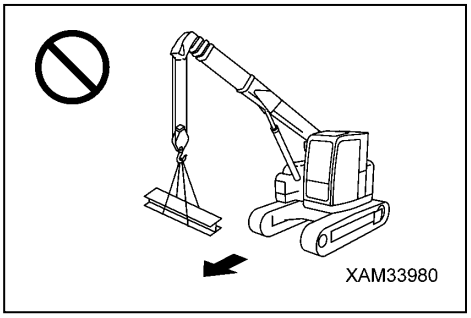

DON’T OPERATE CRANE WORK ON SLOPE

The crane work on a slope may cause the machine to tip over. This is in principle prohibited.

If work is unavoidably performed on a slope, lay earth (B) on the slope and establish a level, solid foothold to prevent a tipping-over accident before setting the machine.

Be sure to check the level of the machine with the spirit level on the left side of the operator’s seat.

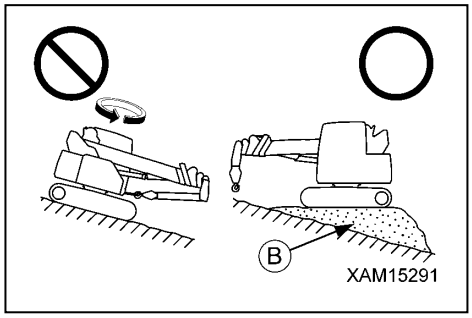

3.19 PERFORM TRAVELLING WITH HOISTED LOAD

3.19.1 PRECAUTIONS FOR TRAVELLING WITH HOISTED LOAD

⚠ DANGER

- **Travel with a lifted load is in principle prohibited because it is very unstable and involves danger.**
  When there is no alternative but to perform travelling with a hoisted load, strictly observe the ranges described in "List of gross rated loads for travelling hoist" and the postures for travelling with a hoisted load.
- **"List of gross rated loads for travelling hoist" shows the values of load that the machine can move when travelling on level, solid ground, after having performed static hoisting. Travelling with a hoisted load should not be attempted on slopes or soft ground.**
- **Do not operate the crane when travelling with a hoisted load.**
- **Check the condition of the ground, the surroundings and the working situation before travelling.**
- **Do not increase the speed or use the accelerator pedal when travelling.**
- **Slow the engine speed, hold the load near the ground and travel slowly so that the load does not sway.**
- **Swaying loads are dangerous so do not start, stop, or change course suddenly.**
- **Unless these precautions in travelling hoist are observed, serious physical injury may be caused.**

GROSS RATED LOAD FOR TRAVELLING HOIST AND PRECAUTIONS IN WORKING RANGE

When performing travelling hoist, be sure to observe strictly the gross rated load shown in the table below.

Item	Remarks
Boom length	5.0 m (two stage boom) or less
Rated total load	See the list of gross rated load for travelling hoist.

PRECAUTIONS IN WORK PLACE

As there is danger of the machine tipping over on the following grounds and places, do not approach them or perform travelling hoist.

Check the condition of the road surface and ground. Arrange a traffic guide in a dangerous place or a place of poor visibility.

- Soft ground such as a slope and marsh, ground with many obstacles, bumpy ground such as a riverbed, ground with difference in level
- Near deep grooves and road shoulder
- In water and shallows, snowy area, frozen road surface

PRECAUTIONS IN OPERATION

Never perform the following travelling operation because doing so may cause the machine to tip over.

When operating, be sure to sit on the operator's seat and carefully perform the operation during travelling hoist.

- Do no hold the load at a high position. Hold it near the ground so that the load does not sway.
- Do not start and stop suddenly, and do not make a sudden direction change. Doing so is dangerous because the load sways.
  Do not use the speed-up pedal or accelerator pedal, and keep the engine rotation at low speed, advancing slowly.
- Do not get over an obstacle. The machine is likely to tip over. Be sure to travel on a course clear of obstacles.

https://truckmanualshub.com/

3.19.2 OPERATION POSTURE DURING TRAVELLING HOIST

⚠ DANGER

Retract the boom to “5.0 m” (two-stage boom) or less, work within the “travelling hoist rated total load” range, and operate with the travelling hoist operating posture. Changing the operating posture when travelling may cause the machine to tip over, causing serious physical injury.

When having this machine travel with a hoisted load, take the travelling hoist posture shown in the right figure.

1. Refer to “Operation 3.15 Boom Telescoping Operation”, and retract the boom to “5.0 m” (two stage boom) or less.

2. Refer to “Operation 3.13 Hoisting and Lowering” and lower the hoisted load to as close to the ground as possible.

3. Press and hold the travelling mode selector switch on the monitor.
   The mode is set to the travelling mode and the travelling mark is displayed on the monitor.

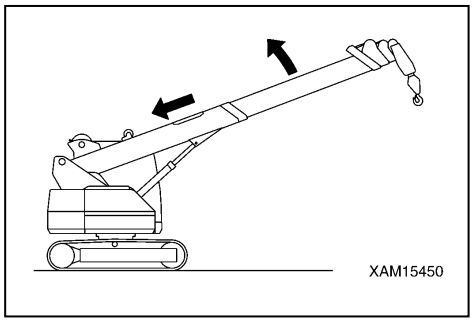

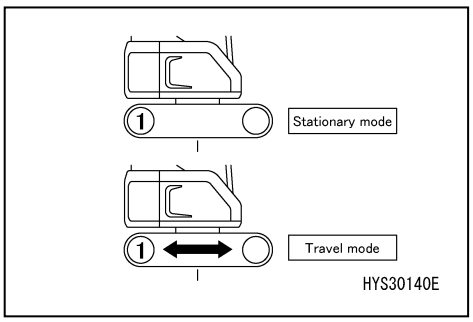

NOTES

- When the boom length is “5.1 m” or longer, travel is prohibited and travel mode cannot be set.
  When setting travelling mode, set the boom length to “5.0 m” (two-stage boom) or less.
- The travelling operation cannot be performed for safety while prohibition of travelling is displayed.
- When the travelling lever is operated forward or backward, the mode is automatically changed to the travelling mode. However, a priority is given to the setting of the rest/travelling mode selector switch.

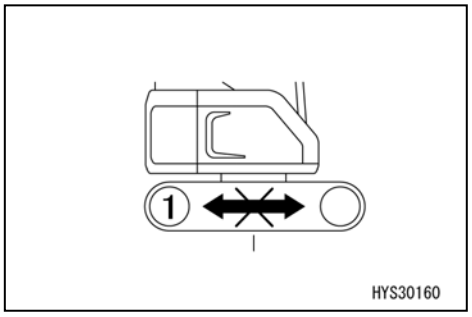

https://truckmanualshub.com/

3.19.3 OPERATION OF TRAVELLING HOIST WORK

⚠ DANGER

- **When performing travelling hoist work, read "Operation 3.19.1 Precautions for Travelling With Hoisted Load" thoroughly and take care to perform work safely.**
- **When performing travelling hoist work, be sure to sit on the operator's seat and carefully perform the travelling hoist operation.**
- **Check the safety in the vicinity of the machine and honk the horn before starting to move the machine.**
- **When changing the forward/backward movement of the machine or the direction, check the safety in the vicinity of the machine and honk the horn before making a change.**
- **Keep the engine speed low during travelling and slowly and carefully travel.**
  Keep an extra distance so that the hoisted load or machine does not crash against other machine or structure.

1. Refer to "Operation 3.7 Starting (Forward and Backward)/Stopping the Machine" and "Operation 3.8 Changing Direction of the Machine" before travelling with the machine.

2. Refer to "Operation 3.13 Hoisting and Lowering" and "Operation 3.14 Boom Derricking Operation" before performing crane operations. At this time, keep the hoisted load height near the ground so that the load does not sway.

NOTES

When the overload stop function of the moment limiter is activated, refer to "Operation 2.3.3 Moment Limiter Operation and Cancelling (Recovery)".

3.19.4 CANCEL OPERATION OF TRAVELLING HOIST OPERATION POSTURE

1. Refer to "Operation 3.7 Starting (Forward and Backward)/Stopping the Machine" and "Operation 3.21 Parking the Machine" before parking the machine.

2. Press and hold the travelling mode selector switch on the monitor.
   The mode is set to the rest mode and the monitor display changes.

3. Refer to "Operation 3.6 Machine Travelling Posture" to put the machine in the travelling posture.

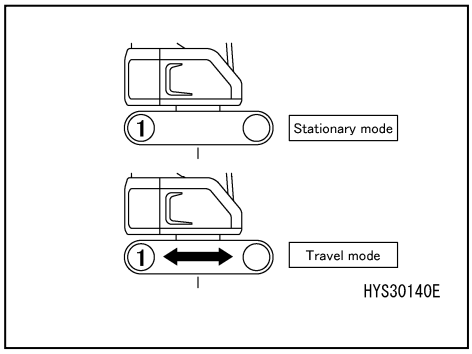

https://truckmanualshub.com/

3.20 BLADE OPERATION

3.20.1 PRECAUTIONS WHEN USING THE BLADE

⚠ WARNING

[BASIC POSTURE WHEN WORKING WITH THE BLADE]

- **When hoisting load, be sure to conduct with the blade raised off the ground. There is a risk of a serious accident occurring, such as damage to or overturning of the machine.**
- **Do not remove extraneous material with the blade while hoisting a load. There is a risk of a serious accident occurring, such as damage or overturning of the machine.**
- **When removing extraneous material, put the machine into the following basic posture.**
  - **Place the sprocket (A) in the rear, and face the operator's seat towards the front.**
  - **Fully retract the boom, and stow the hook.**
  - **Adjust the boom angle to within the range of "fully lowered to 35 degrees".**

  Raising the boom too much can cause the machine to overturn and cause serious accidents.
- **Removing extraneous material with the machine in a posture different from the basic posture can cause the machine to overturn, or the wires to be damaged, and cause serious accidents.**

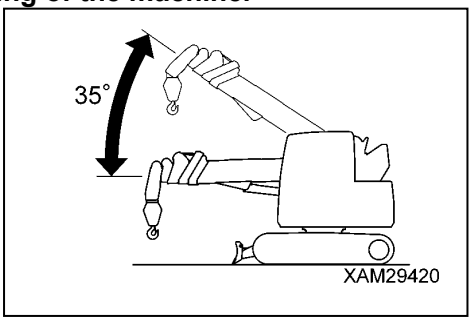

[CAUTIONS WHEN REMOVING EXTRANEOUS MATERIAL]

- **The tip of the crane when the boom is in "fully lowered state", is "1540 mm" longer than the tip of the blade. Confirm that there are no obstacles in front before starting the work. Failure to check may result in collisions with obstacles and cause serious accidents.**
- **When work is finished or when transporting the machine, be sure to rest the blade on the ground. When the blade cylinder drops naturally, or the hydraulic mechanism is broken, the blade may fall and cause serious accidents.**
- **Do not put the machine in reverse while the blade is resting on the ground.**
  The hydraulic hose may become damaged, making the blade unusable.
- **Do not let the blade collide with fixed objects such as rocks.**
  The blade or cylinder will become damaged quickly.

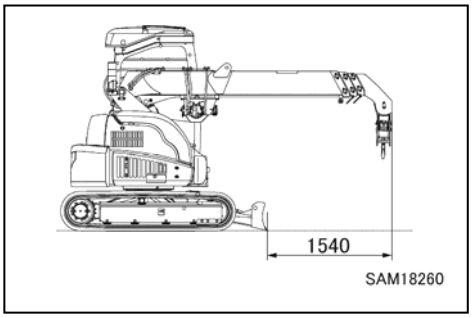

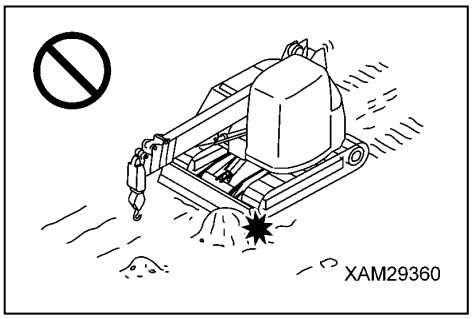

https://truckmanualshub.com/

3.20.2 BLADE OPERATION

⚠ WARNING

- **When hoisting load, be sure to conduct with the blade raised off the ground. There is a risk of a serious accident occurring, such as damage to or overturning of the machine.**
- **Do not remove extraneous material with the blade while hoisting a load. There is a risk of a serious accident occurring, such as damage to or overturning of the machine.**

The blade can be operated by moving the blade control lever on the right side of the operator's seat back and forth.

CAUTION

Raise the blade off the ground when operating the machine for work other than removing extraneous material. Otherwise, the road surface may become damaged.

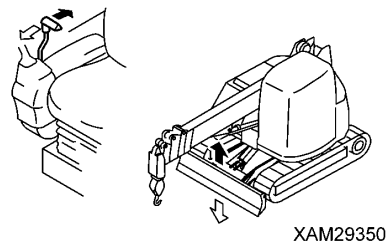

3.20.3 WORK THAT CAN BE DONE WITH THE BLADE

EXTRANEOUS MATERIAL REMOVAL WORK

⚠ WARNING

Check the safety of the surroundings before working. Serious accidents may occur due to physical injury to other people, turnover of the machine due to wheels falling off, or collision of the crane tip.

The blade can be used to remove extraneous material to secure space to set up the crane.

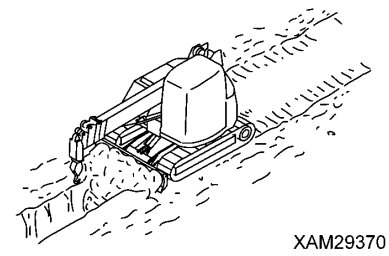

https://truckmanualshub.com/

3.21 PARKING THE MACHINE

⚠ WARNING

- **Choose a level and solid location for parking the machine. If it is necessary to park on a slope, provide some blocks so that the machine will not move.**
- **Careless contact with the travelling lever(s) may result in sudden movement of the machine, leading to serious physical injury.**
  Be sure to place the lock lever securely at the lock position before leaving the operator's seat.

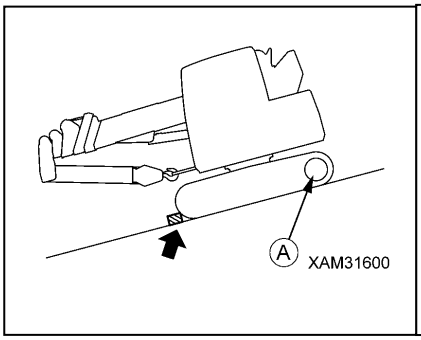

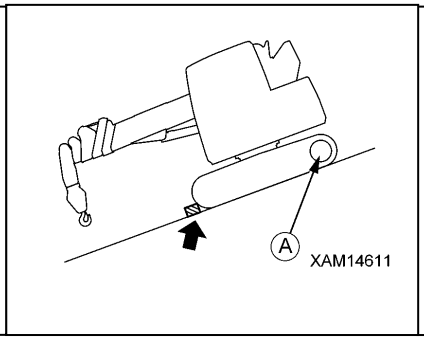

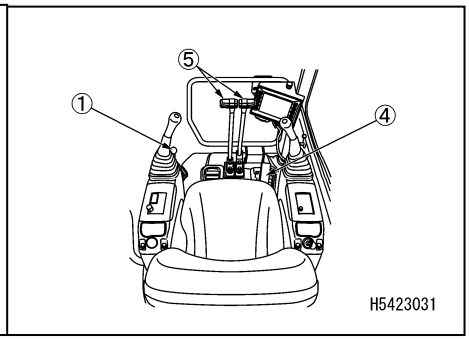

1. Place the right and left travelling levers at the neutral position (N). The machine stops.

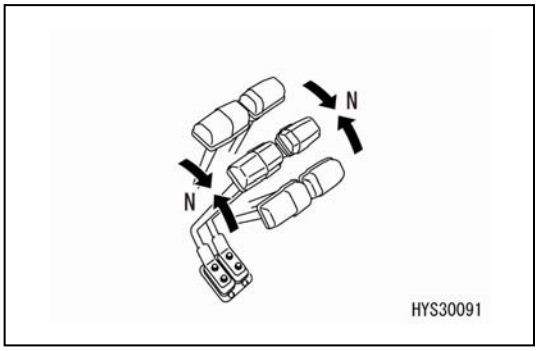

2. Set the lock lever (1) to the Lock (L) position.

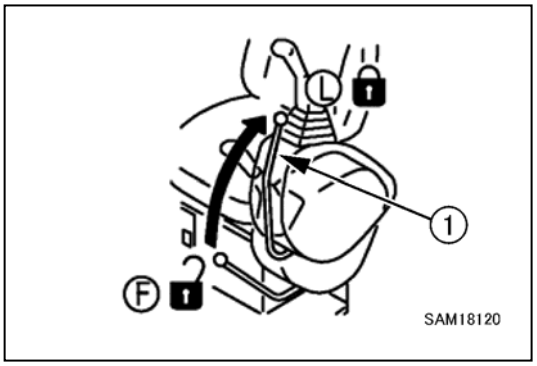

https://truckmanualshub.com/

3.22 INSPECTION AND CHECK AFTER COMPLETING WORK

3.22.1 AFTER STOPPING ENGINE

1. Check for oil and water leaks and conduct a walk-around check of the crane, exterior and undercarriage.
   If you find any leakage or abnormality, fix the problem.
2. Fill up the fuel tank to full.
3. Remove paper and dead leaves in the engine compartment and around the battery because they cause a fire.
4. Remove mud adhered to the undercarriage.

3.22.2 LOCKING

Be sure to lock the caps and covers with lock.

For details about locking, refer to “Operation 2.6 Locking Cover”.

https://truckmanualshub.com/

3.23 CAUTIONS IN DRIVING

⚠ WARNING

Unless these driving precautions are observed, serious physical injury may be caused.

CAUTIONS IN DRIVING

Travelling over the boulder stones or a stump gives a big impact to the machine (especially undercarriage), causing breakage.

Avoid or remove the obstacles not to travel over it whenever possible.

If you have to travel over the obstacles by necessity, be sure to take the “travelling posture” to lower the centre of gravity, and reduce the travelling speed as much as possible so that the machine will go over the obstacles at the centre of the crawlers.

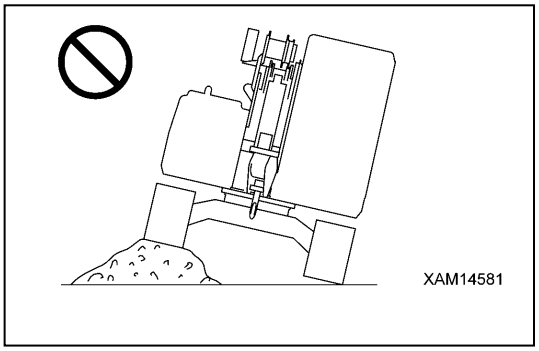

NOTES
Refer to the descriptions under “Operation 3.6 Machine Travelling Posture” for the travelling posture of the Machine.

PRECAUTIONS IN TRAVELLING AT HIGH SPEED

When travelling on a bumpy roadbed, or a bumpy road with many boulders and stones, set the travelling speed to low. When travelling at high speed, be sure to face the idler in the travelling direction.

ALLOWABLE WATER DEPTH

⚠ CAUTION

If the climbing posture of sharp angle of “15 degrees” or more is taken, when the machine comes out of water, the revolving super structure may be submerged in water and the engine fan may stir up water, resulting in breakage of the fan. Pay due attention when letting the machine come out of water.

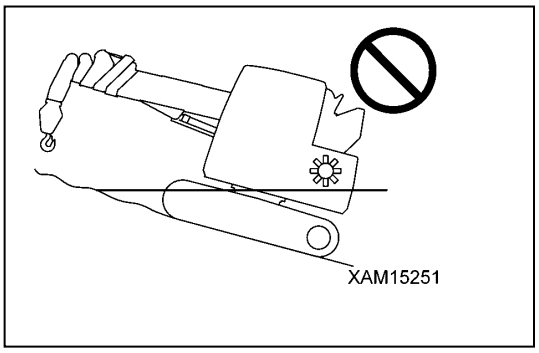

Use this machine in the water of the depth of under the centre of the upper carrier roller (1).

Lubrication points which are submerged in water for a long time should be thoroughly re-greased, until any old grease is squeezed out, after the work is completed.

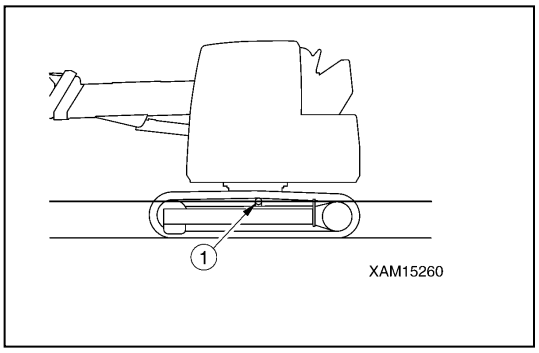

https://truckmanualshub.com/

PRECAUTIONS IN TRAVELLING ON SLOPE

⚠ WARNING

- **Be careful of tripping and skids when travelling over slope.**
- **When the machine is inclined at 15 degrees or more by slope, the inclination alarm operates and the buzzer sounds. When the buzzer sounds, do not travel any further and stop. Then, move to a safe place and change the direction.**
- **When travelling on a hill, be sure to take the travelling posture in which the hook block is stowed in the normal stowage position in the front of the revolving super structure. The hook block which is stowed in the simple stowage position at the boom tip may be loosened during travelling. Refer to the descriptions under "Operation 3.6 Machine Travelling Posture" for the travelling posture of the Machine.**
- **On a hill the inclination of which is 10 degrees or more, travel uphill in backward movement and travel downhill in forward movement. Always travel so that the front of the machine faces the valley side. Climbing the slope in the forward direction and going downhill in the reverse direction cause the Machine to be unstable, giving rise to the risk of tumbling or lateral skidding.**
- **When travelling on a slope, face the machine perpendicular to the slant face and never change the direction or travel transversely. Practice safe travelling by for instance lowering to the plain land and divert.**
- **Always keep such condition during running that the Machine can stop any time when it slips or becomes unstable.**

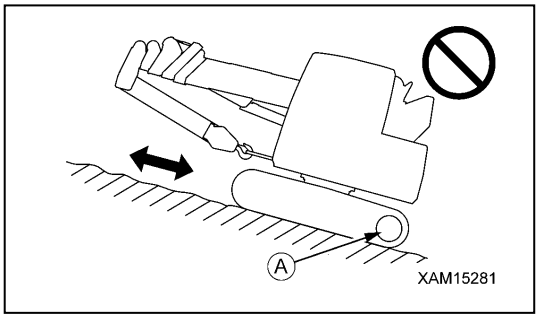

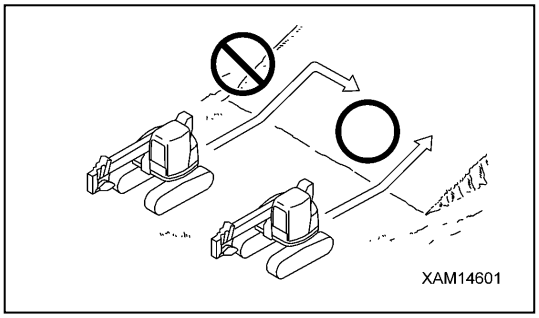

- When descending steep slopes, keep the speed low using the travelling lever and accelerator pedal.

  When travelling downhill the inclination of which is 10 degrees or more, place the sprocket (A) at the downhill side and travel by decreasing the engine speed in the posture as shown in the right figure.

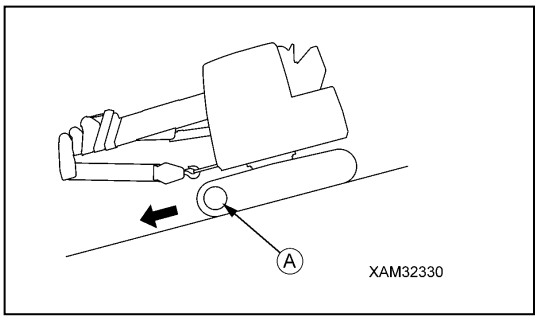

NOTES

Travel downhill with the sprocket (A) placed on the downhill side. If the machine travels downhill with the sprocket (A) placed on the uphill side, the crawler belt tends to be loosened, causing pitch jump.

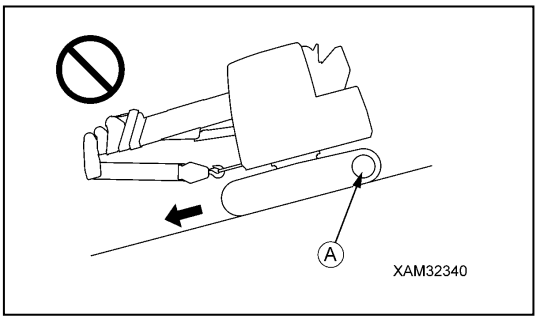

BRAKING DURING DOWNHILL TRAVELLING

When the travelling lever is placed at the neutral position, the brake becomes effective automatically.

WHEN ENGINE STOPS

When the engine stops during uphill travelling, place the travelling lever at the neutral position and stop the machine. Then, start the engine.

PRECAUTIONS ON SLOPE

On a slope, when the slewing operation is performed with the left work equipment operation lever, slewing may be performed by self-weight even if the engine stops. Never perform slewing operation.

https://truckmanualshub.com/

4. HANDLING WIRE ROPE

4.1 CRITERIA FOR WIRE ROPE REPLACEMENT

CAUTION

- **The criteria for replacing wire ropes is common to all the wire ropes for winching, telescoping the boom, and slinging.**
- **The diameter of the wire rope is measured at points where the wire repeatedly runs through the sheave. A mean value needs to be determined through 3 way measurement.**
- **Do not use old wire rope regardless of the frequency of use.**
- **For details about methods for replacing wire ropes, refer to "Inspection and Maintenance 10.3 Irregular Maintenance [8] Wire Rope Replacement".**
- **Contact us or our sales service agency for replacing or repairing the wire ropes.**

WIRE ROPE NOMINAL DIMENSION

- Wire rope for winch: IWRC 6 × Ws (26) 0/0 ϕ8 × 73 m
- No. 4 Wire rope for pulling out boom: IWRC 6 × Fi (29) 0/0 ϕ9
- No. 4 Wire rope for pulling in boom: IWRC 6 × Fi (29) 0/0 ϕ6

CRITERIA FOR WIRE ROPE REPLACEMENT

A wire rope undergoes wear and tear over time.

Prompt replacement is required if any of the following appears in the wire rope.

1. Against the total number of wires in the outermost strand (excluding the filler wires), when the ratio of the number of broken wires exceeds the following:
   (1) 10% or more of a single twist of rope. Nevertheless, when breakage occurs in a single strand only, the ratio should be 5% or more.
   (2) 20% or more of 5 twists of rope.

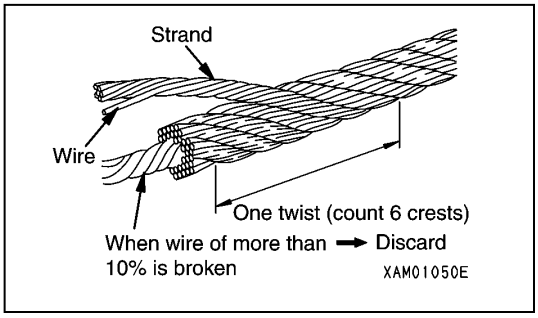

2. A rope of which reduction in diameter due to abrasion exceeds 7% of nominal diameter of the nominal diameter.

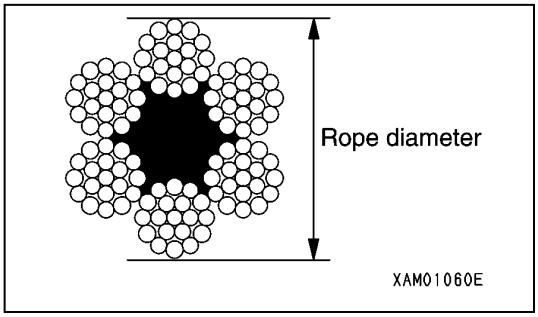

NOTES

- Change the 9-mm diameter wire rope when reduced to 8.4 mm.
- Change the 8-mm diameter wire rope when reduced to 7.5 mm.
- Change the 6-mm diameter wire rope when reduced to 5.6 mm.

3. When either of the following is observed due to corrosion:
   (1) Pitching occurred on the wire surface, that has turned pockmarked.
   (2) Wires that have lost tension due to internal corrosion.

4. As a result of form collapsing, the following are observed:
   (1) A strand that is kinked.
   (2) When the width of an undulation exceeds 4/3 d, within a section that is 25 times of nominal diameter d.
   (3) When a wire rope is flattened by local crushing and the minimum diameter is 2/3 of the maximum diameter or less.
   (4) A rope of which core wires or rope core is exposed.
   (5) A rope extremely bent.
   (6) A rope appearing like a cage.
   (7) A strand that has been intruded.
   (8) One or more strand is loosened.
   (9) Wires that are remarkably sticking out.
5. A faulty end socket is used.

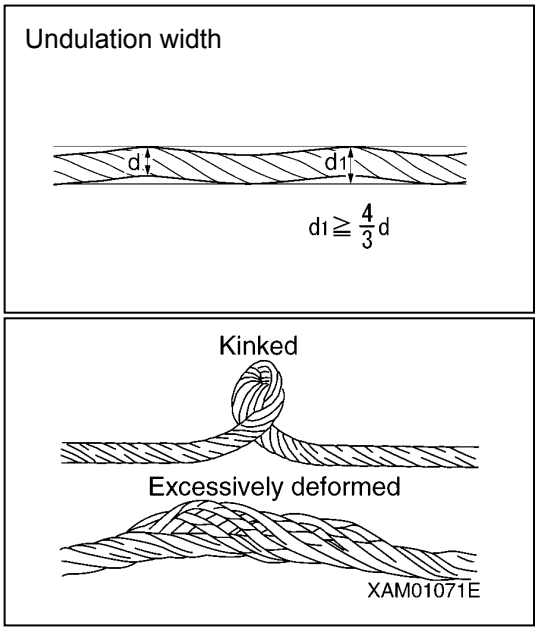

https://truckmanualshub.com/

4.2 WINCH WIRE ROPE REEVING SYSTEM AND GROSS RATED LOAD

Use a wire rope so that a load per wire rope is “750 kg” or less.

The table below shows the type of a hook block, number of falls of a wire rope and the maximum gross rated load at that time.

Hook type	Hook used for both 2 falls and 4 falls	Hook used for both 2 falls and 4 falls	Hook exclusive for single fall
Number of falls	4 falls	2 falls	Single fall
Reeving system	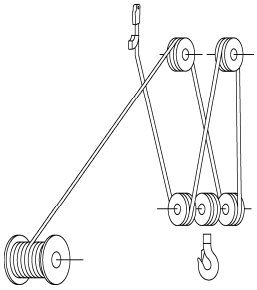	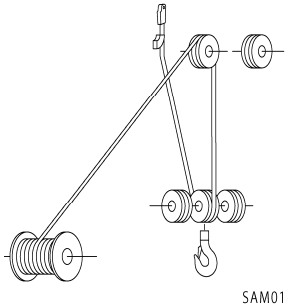	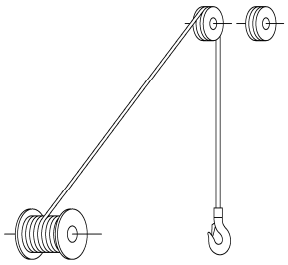
Maximum gross rated load	2930 kg	1480 kg	750 kg
Mass of hook	30 kg	30 kg	20 kg

https://truckmanualshub.com/

4.3 CORRECTIVE ACTIONS AGAINST TWISTED WIRE ROPE

⚠ WARNING

Be sure to wear thick leather work gloves when handling wire ropes.

CAUTION

On occasion, reverse the ends of the wire rope. Turn the rope end at the hook block side for the end at the winch drum side.
This practice helps to extend wire rope service life.

If the wire rope is twisted, eliminate the twist in the following steps:

1. Check the twisting direction and how many times the wire rope has been twisted.

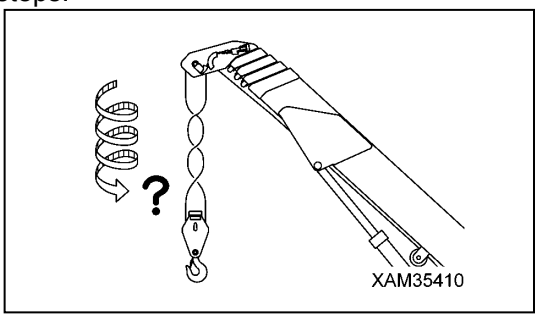

2. Operate the left work equipment operation lever to the “Retract” side (pull toward you) to retract the boom fully.

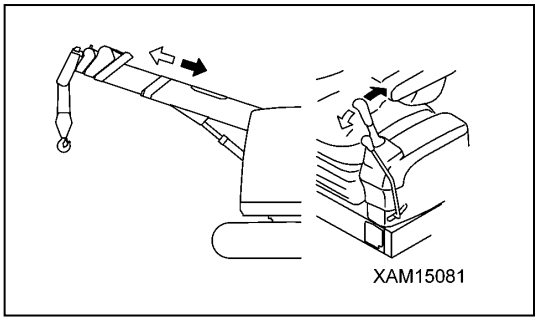

3. Operate the right work equipment operation lever to the “Lower” side (push outside) to lower the boom angle to approximately 20 degrees.

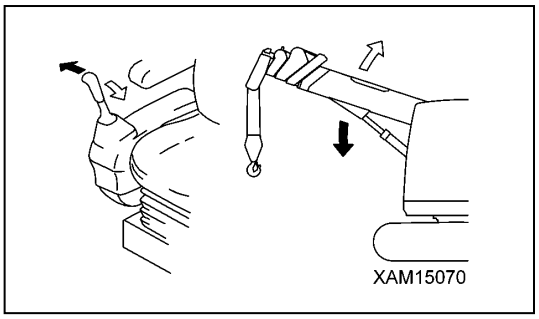

4. Operate the right work equipment operation lever to the “Lower” (push forward) side and lower the hook block to the verge of touching the ground. Then, operate the right work equipment operation lever to the “Lower” (push outside) side and lower the hook block to the ground and lower the boom to the maximum.

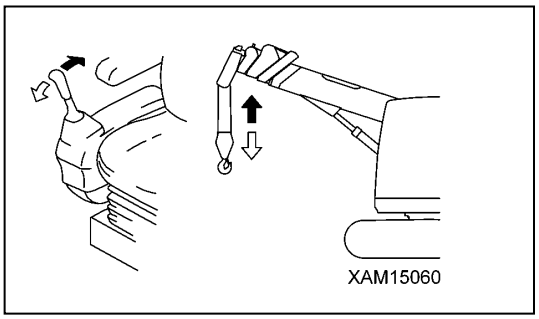

5. Operate the starter switch to the “OFF” position to stop the engine. After that, place the lock lever (1) at the lock position (L).

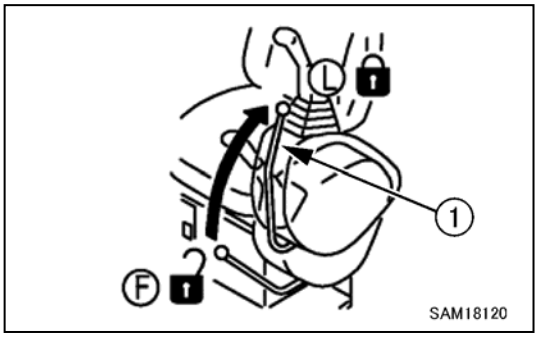

6. Remove the fixing bolt (1) to pull out the wedge socket pin (2), and remove the wedge socket (3).

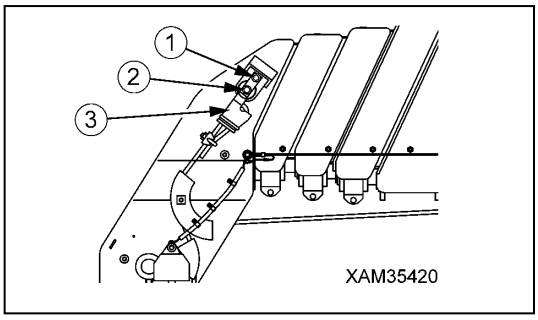

7. Forcibly twist the end of the wire rope in the direction opposite to the twisting direction identified in step 1 (the opposite direction to which it will return naturally when the hand is released from the wedge socket), a total number of times equal to the hook block twist number multiplied by “n” (the number of wire rope falls) and fix in place.

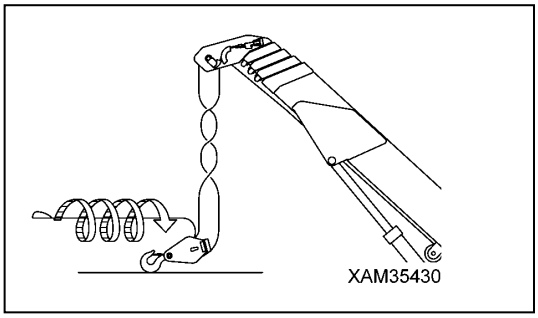

8. Start the engine, shift the right work equipment operation lever into the “Raise” position (pull inwards), and raise the boom until the maximum boom derricking angle is reached.

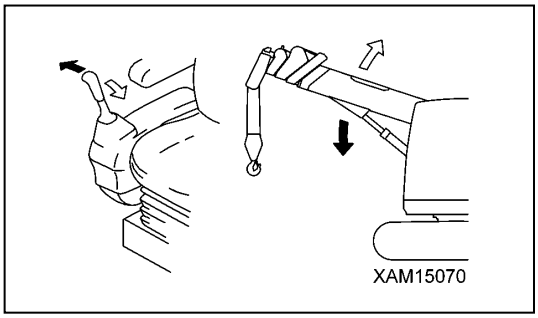

9. Move the left work equipment operation lever to the “Extend” position (push forward) to set the boom length to maximum.

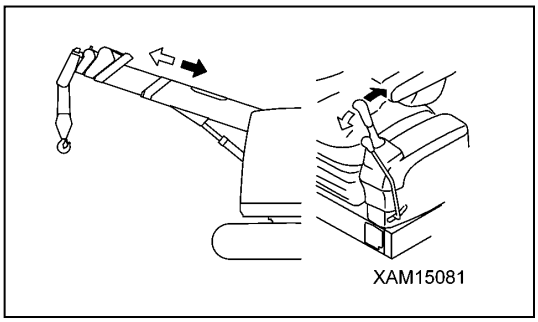

https://truckmanualshub.com/

10. Operate the right work equipment operation lever to the “Raise” or “Lower” side and repeat the raising and lowering of the hook block several times.
11. Spool the wire rope tight and close together on the winch drum with tensioned wraps.
12. Repeat the above steps to minimize the twists in the wire rope.

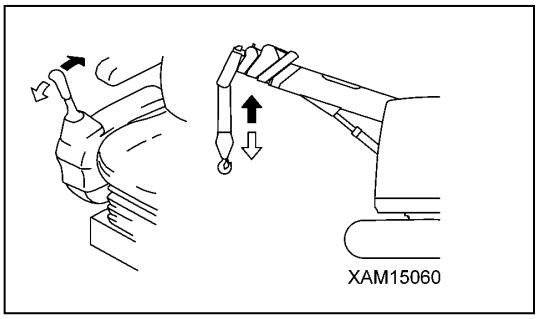

If the above steps do not solve the problem, replace the twisted wire rope with new one.

https://truckmanualshub.com/

5. TRANSPORTATION

When transporting the machine, observe all related laws and regulations, and be careful to ensure safety.

OBSERVATION OF ROAD TRANSPORTATION ACTS

If there are applicable local laws and regulations, observe these laws and regulations for safe transportation.
If not, contact us or our sales service agency.

TRANSPORTATION MEASURE

⚠ WARNING

Take road width, height, and weight into consideration in determining the transportation route.

To determine the transportation measure, see the weights and dimensions shown in “Specifications 1. Principal Specifications List”.

https://truckmanualshub.com/

5.1 LOADING/UNLOADING

⚠ WARNING

- **For the dimensions and mass of this machine, refer to "Specifications 1. Principal Specifications List".**
- **Ramps to be used must satisfy the following conditions:**
  - **Length must be such that the setting angle onto a trailer is 15 degrees or less.**
  - **The width must be such that the crawler does not protrude from the ramp boards.**
  - **Must have a thickness to provide sufficient strength to withstand the weight of the machine.**
- **Set the ramp boards at right angles to the trailer bed. Align the centre of the right and left crawlers with the centre of the respective ramp boards. If the ramp boards are bent or the centre of the crawler is off, the machine may fall from the ramp boards, causing serious physical injury.**
- **Always put the machine in the "travelling posture" when loading/unloading the machine. For details about the machine travelling posture, refer to the descriptions under "Operation 3.6 Machine Travelling Posture".**

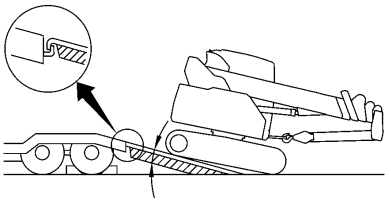

- **For the travelling speed settings, use low engine speed for loading and unloading the machine.**
- **Be sure to load the machine on to the truck by driving in reverse. Loading by driving forward may cause the machine to overturn.**
- **Be sure to unload the machine from the truck by driving the machine forward. Unloading by driving in reverse may cause the machine to overturn.**
- **Be especially careful when loading or unloading the Machine because the risks intervene.**
- **Select a location that is level and has firm road surface when loading or unloading the Machine.**
  In addition, keep enough distance from the roadside.
- **Remove the mud and other substances from the footing to prevent the Machine from skidding over the ramps.**
  Remove the substances stuck on the ramp boards such as grease, oil, snow or ice, and keep clean.
- **Never change direction over the ramp boards. Temporarily leave the ramp before correcting the direction.**
- **As the centre of gravity position of the machine suddenly shifts at a boundary between the ramp and trailer, balance is lost, causing danger. Pass the ramp slowly.**

Put the machine in the "travelling posture" and always use ramp boards or forwarding blocks when loading/unloading the machine. Follow the procedure below.

https://truckmanualshub.com/

5.1.1 LOADING

1. Select a level and firm road surface for loading the machine. In addition, keep enough distance from the roadside.
2. Brake the trailer securely. Place wheel blocks next to the wheels of the trailer to secure the trailer.
3. Ramp boards must be suitably aligned so that the machine rests in the centre of the trailer.

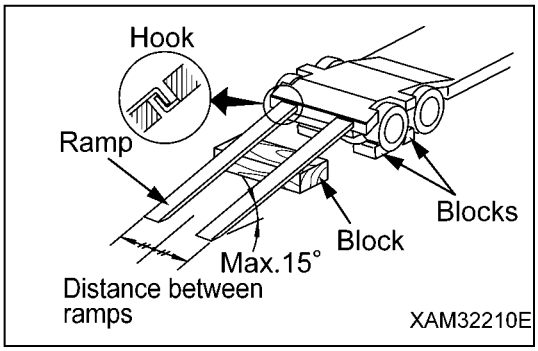

NOTES
• Set the right and left ramp boards in parallel at the same distance for the right and left with respect to the centre of the trailer. • The installation angle of the ramp boards must be 15 degrees or less. • Securely hang the hooks of the ramp boards on the hooks of the trailer. • If the ramp boards are bent by the machine weight, place a block such as lumber under the ramp boards to prevent bending.

4. Start the engine.
   Warm up the engine enough in cold climate.
5. Place the lock lever (1) at the Free position (F).

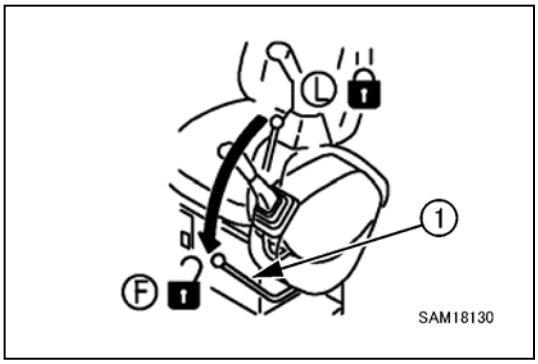

6. Maintain low idling, keeping the engine at low speed.
7. Do not operate the speed-up pedal.

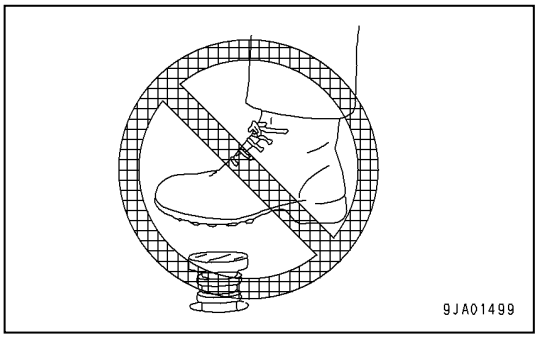

8. Before mounting the ramp boards, check that the machine is positioned directly facing them and that the centre line of the machine is aligned with the centre line of the trailer.
   Fix the direction toward the ramp boards and proceed slowly.
   Do not operate any other lever than travelling levers on the ramp boards.

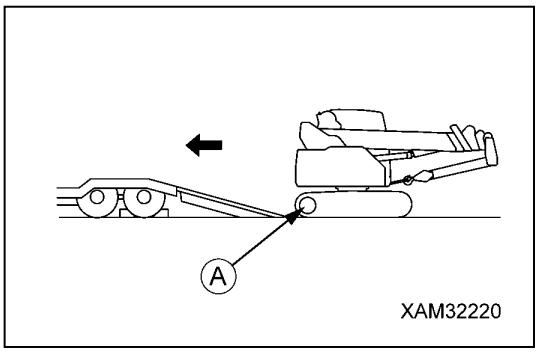

https://truckmanualshub.com/

9. Fix the direction toward the ramp boards and slowly travel for loading.
10. The machine becomes unstable when it gets over rear wheels of the trailer. Therefore, travel slowly and carefully. The direction change is strictly prohibited.
11. The machine inclines backward when it has got over the rear wheels. Move backward to the specified position with care and stop.

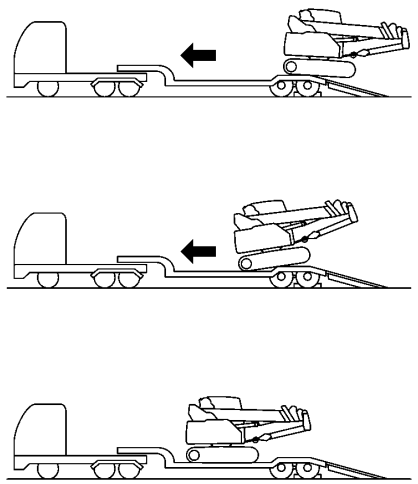

XAM32230

https://truckmanualshub.com/

5.1.2 FIXING THE MACHINE

Load the machine to the specified position and secure the machine with the following procedure.

1. Stop the engine and remove the starter switch key.
2. Place the lock lever (1) securely in the lock position (L).

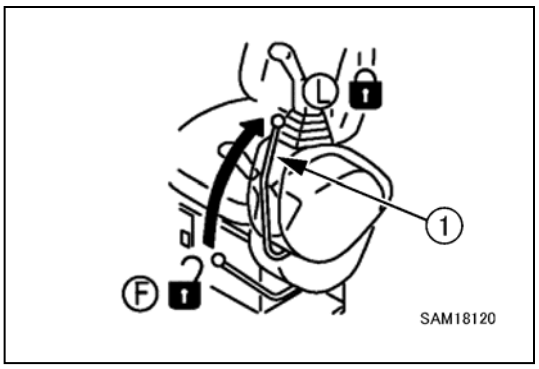

3. Close all the doors, windows and covers.
   Lock the door, covers and caps with lock.

CAUTION

Do not use the fixing hole behind the track frame for towing and hoisting the machine.

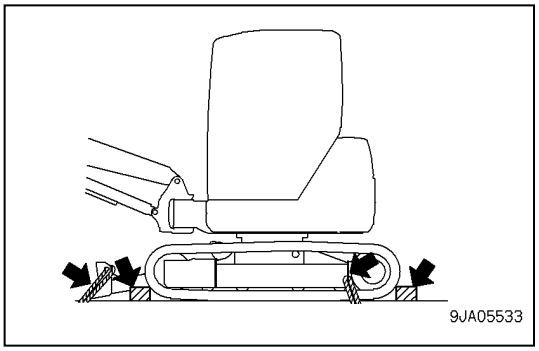

4. Insert square timbers in the front and the back of each crawler belt to prevent accidental movement during transportation, and secure the machine tightly with chains or wire ropes of appropriate strength.
   Especially, properly fix it to not let it move from side to side.

NOTES

At this time, put nailing strips between the wire rope and machine so that the wire rope and machine are not damaged.

https://truckmanualshub.com/

5.1.3 UNLOADING

1. Select a level and firm road surface for unloading the machine. In addition, keep enough distance from the roadside.
2. Brake the trailer securely. Place wheel blocks next to the wheels of the trailer to secure the trailer.
3. Ramp boards must be suitably aligned so that the machine rests in the centre of the trailer.

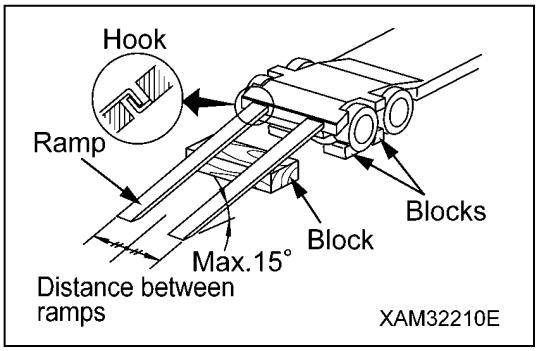

NOTES
• Set the right and left ramp boards in parallel at the same distance for the right and left with respect to the centre of the trailer. • The installation angle of the ramp boards must be 15 degrees or less. • Securely hang the hooks of the ramp boards on the hooks of the trailer. • If the ramp boards are bent by the machine weight, place a block such as lumber under the ramp boards to prevent bending.

4. Remove the chain or wire rope which fixes the machine.
5. Start the engine.
   Warm up the engine enough in cold climate.
6. Place the lock lever (1) at the Free position (F).

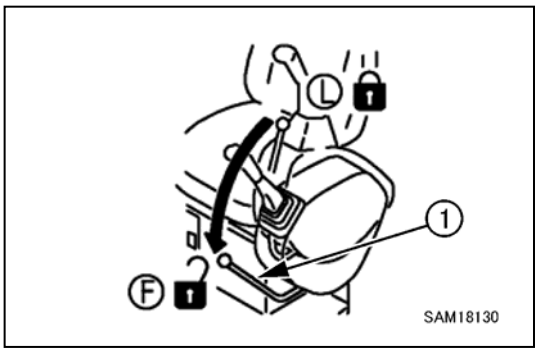

7. Maintain low idling, keeping the engine at low speed.
8. Do not operate the speed-up pedal.

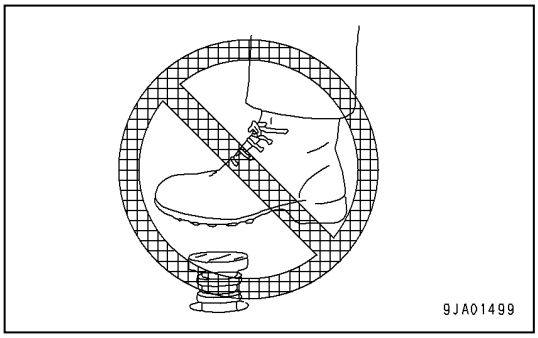

9. Before mounting the ramp boards, check that the machine is positioned directly facing them and that the centre line of the machine is aligned with the centre line of the trailer.
   Fix the direction toward the ramp boards and proceed slowly.
   Do not operate any other lever than travelling levers on the ramp boards.

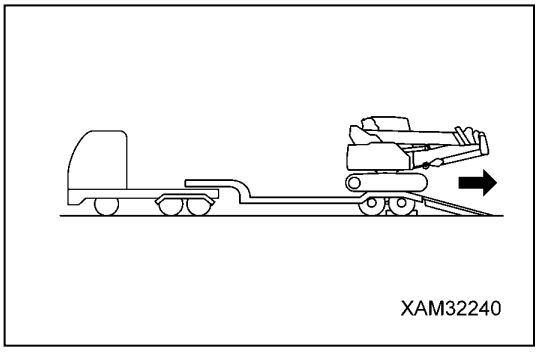

https://truckmanualshub.com/

5.2 HOISTING MACHINE

5.2.1 HOISTING MACHINE WITH BOOM LOWERED

⚠ DANGER

- **For the dimensions and mass of this machine, refer to "Specifications 1. Principal Specifications List".**
- **A person who uses the crane to perform hoisting operation must have the crane operation qualifications.**
- **Do not perform hoisting operation with a worker placed on the machine.**
- **Only use a sling (e.g. wire rope and shackles) which is approved and capable of lifting the mass of the machine.**
- **Put the machine into a level state when lifting.**
- **When performing lifting work, place the lock lever at the lock position to prevent the machine from moving unexpectedly.**
- **Never get under or around the lifted machine.**
- **Do not lift the machine in a posture other than that shown in the procedure below, or by using a sling.**
  Otherwise, there is a danger that the machine will be out of balance (equilibrium).

CAUTION

- **When lifting the machine, use four wire ropes for slinging of the same standard and four shackles. When lifting the machine, be careful not to allow the wire ropes for slinging to contact the main body of the machine.**
  - **Wire rope: breaking load 96.7 KN or more (6 × 37 – ϕ14 × 2.5 m)**
  - **Shackle: working load 2.0 t or more Nominal 18 (except format SD)**
- **When lifting the machine with the boom lowered, be sure to store the hook block in the normal stowage position. For details, refer to "Operation 3.17.2 Crane Stowage Operation at the Time of Normal Stowage of Hook Block".**

When lifting the machine, perform the following on a firm, level ground.

1. Attach the hook to the hooking wire rope, set the boom to the position on the right figure, and fix the hook and boom to the vehicle body.

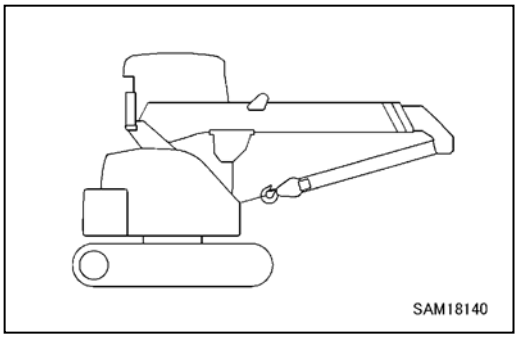

CAUTION

If hoisting is performed with the hook stored at the tip of the boom, the boom will be raised due to the weight of the vehicle preventing hoisting.
When hoisting with the boom in a lowered state, be sure to fix the hook and boom to the vehicle body with the hooking wire rope.

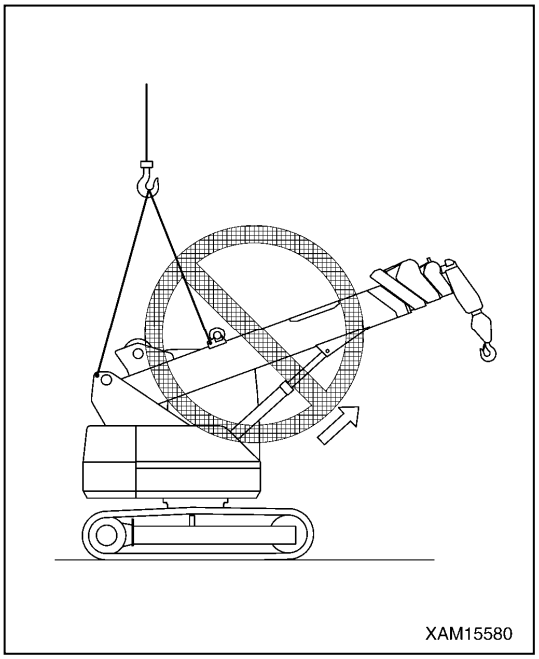

2. Place the lock lever (1) securely in the lock position (L).
3. Stop the engine and remove the starter switch key. Check that there is nothing around the operator's seat and get off the machine.
4. Lock the locking cover and caps.

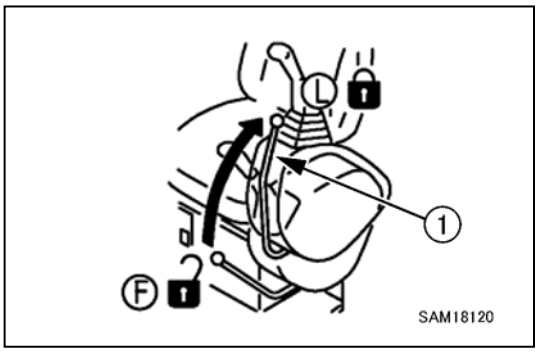

5. Attach a shackle to the two locations of the right and left of the boom and hang a wire rope for slinging.

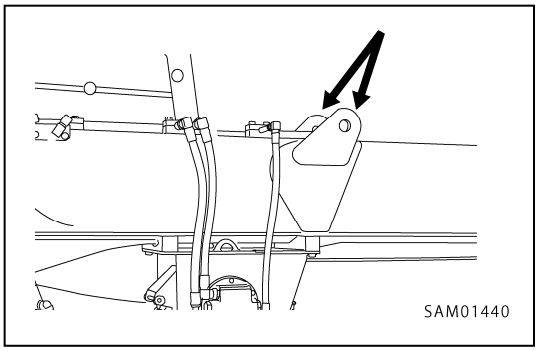

6. Attach a shackle to the two locations of the right and left of the crane frame and hang a wire rope for slinging.

NOTES
Place padding at points where the wire slinging ropes and machine body make contact before hoisting.

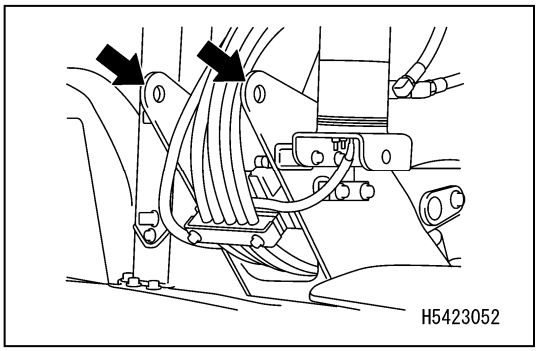

7. Set the slinging angle of the wire rope for slinging to 30 – 40 degrees and slowly lift the machine.

NOTES
• Immediately after lifting (dynamic lift off), stop once to check the sling state and sling posture. • Check if the posture changes due to leaks of the hydraulic circuit on the derricking cylinder head side. • When the machine body is lifted, it inclines forward by approximately 4 degrees and towards the operator's seat by approximately 4 degrees. The inclination angle changes slightly depending on the boom angle and remaining quantity of fuel.

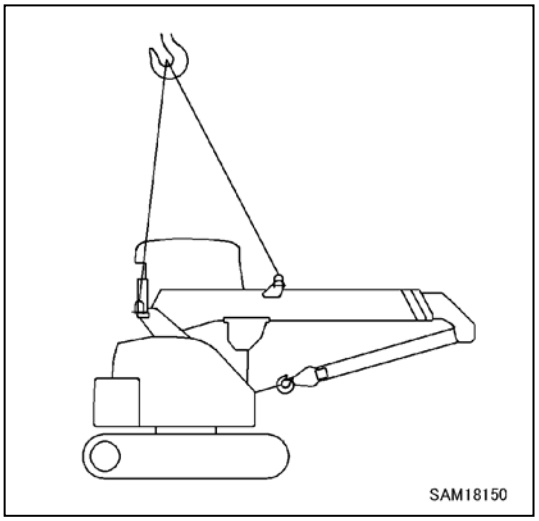

https://truckmanualshub.com/

5.2.2 HOISTING MACHINE WITH BOOM RAISED

⚠ DANGER

- **For the dimensions and mass of this machine, refer to "Specifications 1. Principal Specifications List".**
- **A person who uses the crane to perform hoisting operation must have the crane operation qualifications.**
- **Do not perform hoisting operation with a worker placed on the machine.**
- **Only use a sling (e.g. wire rope and shackles) which is approved and capable of lifting the mass of the machine.**
- **Put the machine into a level state when lifting.**
- **When performing lifting work, place the lock lever at the lock position to prevent the machine from moving unexpectedly.**
- **Never get under or around the lifted machine.**
- **Be sure to lift the machine only in the following procedure and at the sling installation position (right and left bracket hole position of the boom at two locations). If lifting the machine in a manner other than mentioned above cannot be avoided, consult us or our sales service agency.**

CAUTION

- **When lifting the machine, use two wire ropes for slinging of the same standard and two shackles.**
  - **Wire rope: breaking load 160 KN or more (6 × 37 – ϕ18 × 2.5 m)**
  - **Shackle: working load 2.5 t or more Nominal 20 (except format SD)**
- **When lifting the machine with the boom raised, be sure to store the hook block in the normal stowage position.**
  For details, refer to "Operation 3.17.2 Crane Stowage Operation at the Time of Normal Stowage of Hook Block".

When lifting the machine, perform the following on a firm, level ground.

1. Fully retract the boom and raise to 70 degrees.

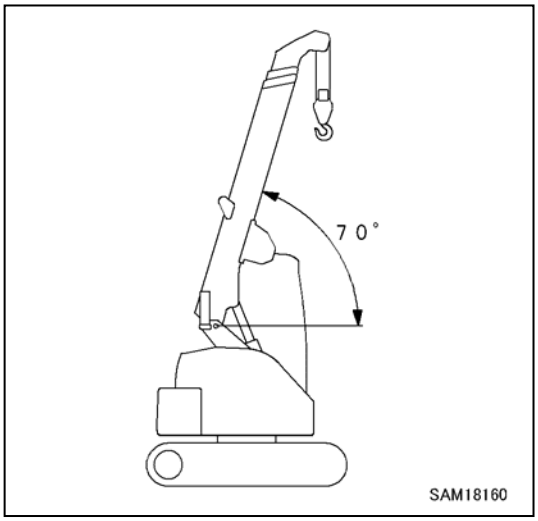

2. Refer to "Operation 3.17.2 Crane Stowage Operation at the Time of Normal Stowage of Hook Block" to hang the hook block to the stowage rope.

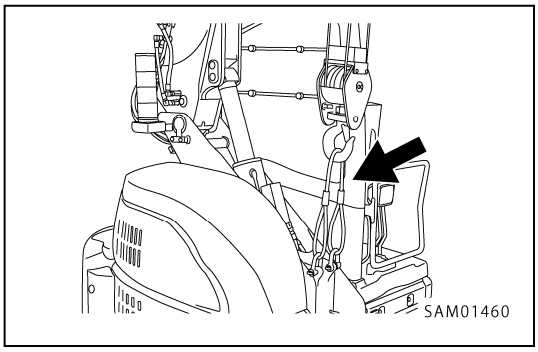

https://truckmanualshub.com/

3. Stop the engine and remove the starter switch key. Check that there is nothing around the operator's seat and get off the machine.
4. Place the lock lever (1) securely in the lock position (L).
5. Lock the locking cover and caps.

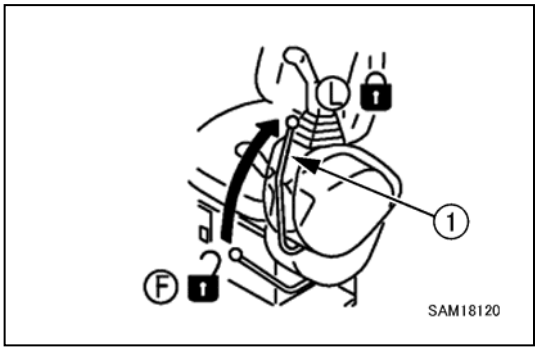

6. Attach a shackle to two locations of the right and left of the boom and hang a wire rope for slinging.

NOTES
Place padding at points where the wire slinging ropes and machine body make contact before hoisting.

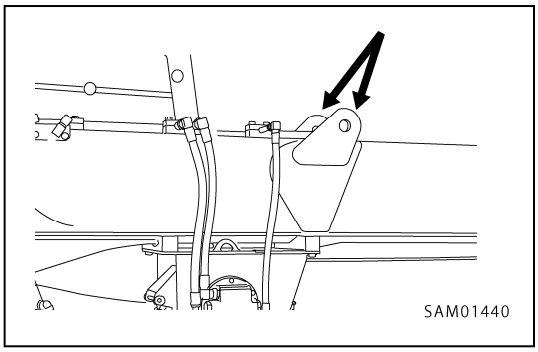

7. Lift the machine slowly.

NOTES
• Immediately after lifting (dynamic lift off), stop once to check the sling state and sling posture. • Check if the posture changes due to leaks of the hydraulic circuit on the derricking cylinder head side. • When the machine body is lifted, there is a 0 degree backwards inclination and an inclination toward the operator's seat of approximately 4.0 degrees. The inclination angle changes slightly depending on the boom angle and remaining quantity of fuel.

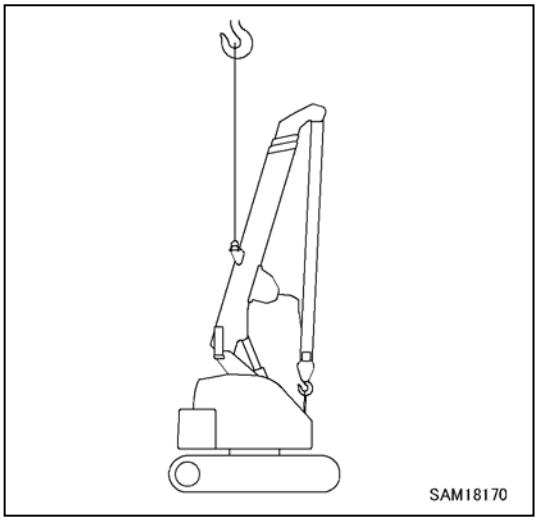

https://truckmanualshub.com/

6. HANDLING MACHINE IN COLD ENVIRONMENT

6.1 PREPARING FOR LOW TEMPERATURE

In cold conditions, the machine may have difficulty in starting, or the coolant may freeze, so take the following actions.

FUEL/LUBRICANT

Change the fuel/oil for each piece of equipment to a type with low viscosity.

For the specified viscosities, refer to “Inspection and Maintenance 7.1 Use of Fuel and Lubricating Oil According to Temperature”.

COOLANT

⚠ WARNING

- **Antifreeze is toxic. Take care to keep it away from your eyes and skin. Should it come into contact with eyes or skin, wash the affected area with plenty of water and consult a physician immediately.**
- **The disposal of cooling water which has had antifreeze added, and which is discharged when replacing the cooling water and repairing the radiator, should be consigned to a specialized subcontractor. If necessary, contact us or our sales service agency. As antifreeze is toxic, do not drain it into a ditch or spray it on the ground.**
- **Antifreeze is flammable so keep it away from flames. Do not smoke when handling it.**

CAUTION

Never use anti freezing fluid with ethanol and propanol.

Refer to “Inspection and Maintenance 10.3 Irregular Maintenance [2] Cleaning Inside Engine Cooling System” for the coolant replacement periods and mixing amounts for antifreeze.

https://truckmanualshub.com/

BATTERY

⚠ WARNING

- **The battery produces combustible gas and can be explosive. Do not put fire close to the battery.**
- **The battery fluid is a hazardous substance. Keep it away from your eyes and skin. Should it come into the contact with eyes or skin, wash the affected area with plenty of water and consult a physician immediately.**
- **If the battery fluid is frozen, do not charge battery or start the engine using other power source. Doing so may cause explosion.**
- **As battery fluid is toxic, do not drain it into a ditch or spray it on the ground.**
- **Battery fluid dissolves paints. If it contacts the machine, rinse immediately with water.**

The battery capacity drops when the temperature decreases.

The battery fluid can freeze at low battery charge ratio, so keep the charge ratio near 100% as far as possible, and keep the battery warm in order to start the engine the next morning.

NOTES

Measure the specific gravity of the battery fluid and convert it into the charging rate using the chart below.

		Fluid temperature (°C)			
		20	0	-10	-20
Charging rate (%)	100	1.28	1.29	1.30	1.31
	90	1.26	1.27	1.28	1.29
	80	1.24	1.25	1.26	1.27
	75	1.23	1.24	1.25	1.26

https://truckmanualshub.com/

CAUTIONS AFTER COMPLETING THE OPERATION

Observe the following to prevent the machine from not being able to function the next morning because of deposits such as dirt and water and materials around the undercarriage being frozen.

- Remove dirt and water on the machine.
  Keep the hydraulic cylinder rod surface especially clean to prevent seal from being damaged with dirt coming into the seal together with the water drops.
- Park the machine on solid and dry ground.
  If there is no such location to park, place a board on the ground to park the machine on the board. This prevents the ground and around the undercarriage of the machine from freezing and allows the machine to start moving quickly next morning.
- Open the drain valve of the fuel tank to drain the water in the fuel system to prevent the water from freezing.
- Fill up the fuel tank to full. Doing so prevents water drops from being formed in space inside the tank due to a change in temperature.
- The battery ability remarkably drops at low temperature.
  Cover the battery or remove the battery from the machine and keep it in a warm place to be installed next morning.
- If the electrolyte level is low, refill with distilled water next morning before starting the operation.
  Do not refill after the operation in order to prevent the water from freezing during the night.

AFTER COLD WEATHER HAS PASSED

When the season changes and starts to get warm, take the following action.

- For each system's fuel / lubricant, refer to "Inspection and Maintenance 7.1 Use of Fuel and Lubricating Oil According to Temperature" and change to one with the specified viscosity for the system.

https://truckmanualshub.com/

7. LONG-TERM STORAGE

7.1 BEFORE STORING MACHINE

CAUTION

Keep the machine in the "Travelling posture" shown in the figure on the right during long-term storage to protect the cylinder rod. For details about the machine travelling posture, refer to the descriptions under "Operation 3.6 Machine Travelling Posture". (To prevent rust on the cylinder rod)

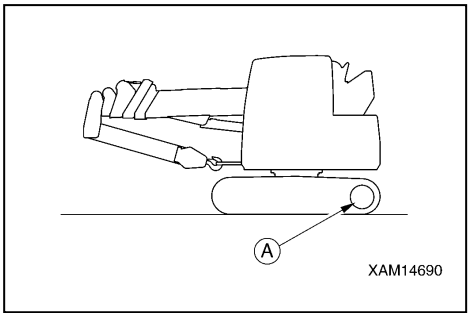

Store the machine as described below when storing it for one month or longer.:

- Wash and clean each section of the machine and store indoor.
  If you have to leave it outdoors, select a flat location where the machine is not likely to be exposed to flood or other disasters and cover the machine.
- Fill up the fuel tank to full. Doing so prevents the accumulation of water.
- Refuel, grease, and change the oil without fail.
- Apply grease to the exposed section of the piston rod of the hydraulic cylinder.
- Disconnect the negative terminal of the battery and put on a cover, or dismount the battery from the machine for storage.
- If the temperature drops to 0 ºC or below, add anti freezing solution. Contact us or our sales service agency for the mixing amount of antifreeze solution.

7.2 DURING STORAGE

⚠ WARNING

If you have to perform anti-rust operation indoors, open the window and entrance for better ventilation to prevent gas poisoning.

- Be sure to operate the machine once a month during the storage to maintain the oil film at lubricating section. Charge the battery at the same time.
- Before operating the crane, wipe off grease applied to the exposed section of the piston rod of the hydraulic cylinder.

7.3 AFTER STORAGE

CAUTION

If you did not perform anti-rust operation monthly during the long-term storage, contact us or our sales service agency before using the machine.

Perform the following before using the machine after the long-term storage.

- Remove the drain plug of the fuel tank, hydraulic oil tank, and engine oil pan to drain the water mixed in.
- Refuel, grease, and change the oil without fail.
- Wipe off grease applied to the exposed section of the piston rod of the hydraulic cylinder.
- Remove the cover over the battery (install the battery to the machine if dismounted for storage). Check the electrolyte level and specific gravity, and then connect the negative side of the battery cable.
- Carefully perform the check before starting operation and perform warm-up operation. Carefully check the various parts of the machine.

https://truckmanualshub.com/

8. TROUBLESHOOTING

8.1 WHEN FUEL RUNS OUT

When starting the engine after fuel runs out, refill fuel and bleed air from the fuel system before starting the engine.

PROCEDURE FOR AIR BLEEDING

1. Fill up the fuel tank with fuel until full.
2. Move the handle (1) of the water separator to the open position (B).
3. Loosen the air bleed bolt (2) of the water separator 2 to 3 turns.
4. Re-tighten the air bleed bolt (2) once air bubble-free fuel begins to escape from the air bleed bolt (2).

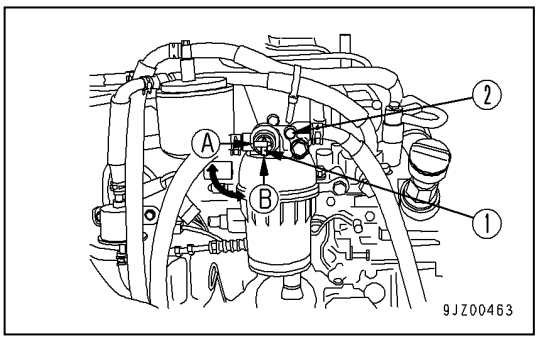

5. Turn the key of the starter switch to the ON position and return to the OFF position after 10 to 15 seconds.

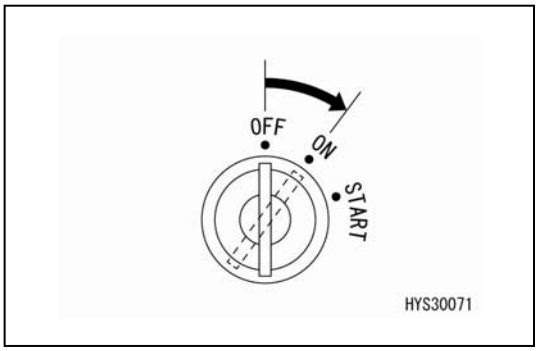

8.2 PHENOMENON WHICH IS NOT A FAULT

The following phenomena are not a fault.

- A sound is generated from the brake valve at the beginning and end of slewing.
- A sound is generated from the travelling motor when the machine travels on a steep downhill at low speed.
- A sound is generated from around the valve when the boom is retracted to the end and the telescopic cylinder is relieved on the retraction side.
- When the boom derricking cylinder is relieved on the lowered side, sounds are generated near the valve.

https://truckmanualshub.com/

8.3 WHEN BATTERY HAS DISCHARGED

8.3.1 BATTERY HANDLING PRECAUTIONS

⚠ WARNING

- **Charging with the battery mounted on the vehicle is dangerous. Be sure to remove it before charging.**
- **Before inspecting or handling the battery, be sure to stop the engine, and turn the starter switch key to the OFF position.**
- **The battery produces hydrogen gas, which may cause an explosion hazard. Do not let sources of fire such as cigarettes near the battery or do anything which may cause sparks.**
- **The battery fluid is diluted sulfuric acid, which corrodes clothes and skin.**
  Should the battery fluid come into contact with your clothes or skin, wash the affected area immediately with plenty of water.
  Should it get into your eye, wash your eye immediately with clean water and consult a physician.
- **Wear goggles and rubber gloves when handling the battery.**
- **When removing, disconnect the cable at the ground side (normally (−) terminal) first. To reinstall, connect the (+) terminal first.**
  Take care, as objects such as tools coming between (+) terminal and the machine body will cause sparks, presenting danger.
- **Slackened battery terminals can cause sparks due to poor contacts, presenting an explosion hazard.**
  Fix securely when connecting the terminals.
- **Be sure not to confuse between the (+) terminal and the (−) terminal when removing or installing the battery cables.**

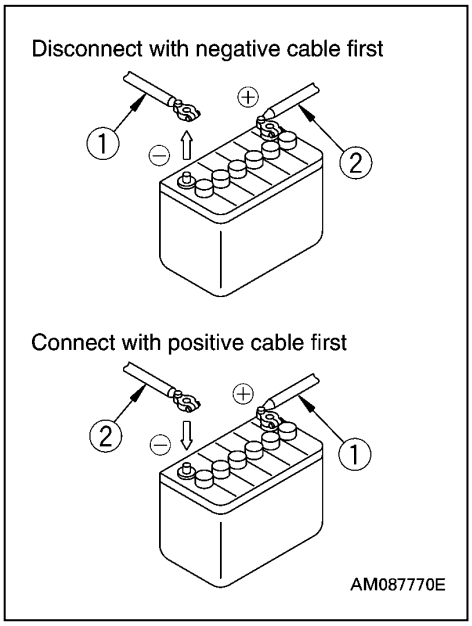

https://truckmanualshub.com/

8.3.2 REMOVING/INSTALLING BATTERY

CAUTION

Verify that the battery does not move after securing it.
If it moves, secure it properly.

- Disconnect the ground side (normally (−) terminal) first when removing the battery.
  Objects such as tools coming between (+) terminal and the machine body will cause sparks.
- Connect the earth last when installing.
- Fix the battery body to the specified position securely. In this step, take care that the mounting bracket does not contact the terminals.
- When replacing the battery, fix the battery body securely with the battery mounting bracket (1).
  Tightening torque for mounting nut (2)
  3.92 – 5.88 N·m (0.5 – 0.6 kg·m)
- Make sure the cover on the upper side of the battery covers the battery (3) so that it does not roll up.
  If the cover is damaged, replace it immediately.
- If chlorides have accumulated on the top of the battery and around the terminal, wash with hot water at about 40 °C and dry it thoroughly before connecting the wires.

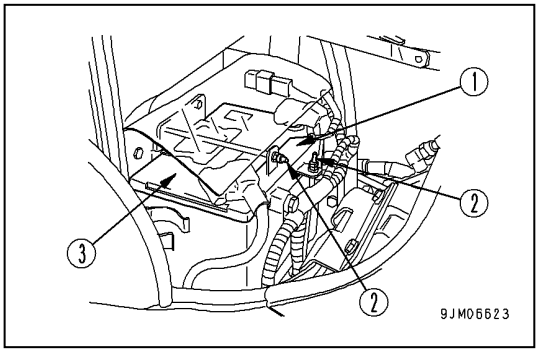

https://truckmanualshub.com/

8.3.3 CAUTIONS IN CHARGING BATTERY

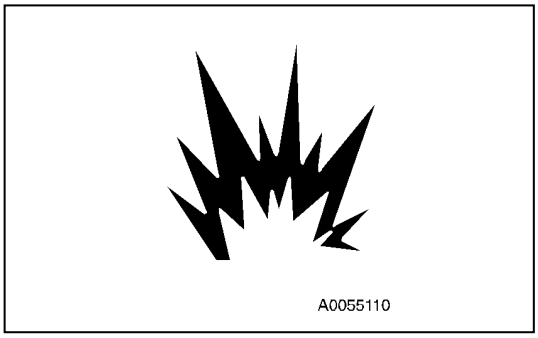

There is a risk that the battery may explode if handled incorrectly during charging, so follow “Operation 8.3.1 Battery Handling Precautions”, and the instruction manual attached to the charger, while strictly observing the items below.

- Flammable hydrogen gas is generated when charging the battery, so remove it from the machine and remove the battery cap in a well ventilated area before charging.
- Securely tighten the battery cap afterwards. If the battery cap is damaged, replace it immediately.
- Adjust the charger voltage to suit the voltage of the battery to charge. Mistakes in setting the voltage may cause the charger to overheat and ignite, resulting in an explosion.
- Securely fix the (+) charge clip of the charger to the (+) terminal of the battery, then securely fix the (−) charge clip to (−) terminal of the battery.
- Set the charge current to no more than 1/10 of the rated capacity of the battery, or, in case of quick charger, set to the rated capacity value of the battery or smaller.
  Excessive charge current may cause fire and explosions due to fluid leaks or fluid deficiency.
- If the battery fluid is frozen, do not charge the battery or start the engine using other power source. This may cause the battery to catch fire and explode.
- If the battery fluid level decreases to the LOWER LEVEL or below, do not use the battery or recharge it. An explosion may occur. Never fail to conduct the regular inspection of battery fluid level and refill purified water (such as commercially available battery replenisher) to the UPPER LEVEL.

https://truckmanualshub.com/

8.3.4 STARTING ENGINE WITH BOOSTER CABLE

Start the engine with booster cable as described below.

CAUTIONS IN CONNECTING/DISCONNECTING BOOSTER CABLE

⚠ WARNING

- **Never connect the (+) terminal and (−) terminal to each other when connecting the cables.**
- **Wear goggles and rubber gloves when starting the engine with the booster cable.**
- **Do not let the normal machine and machine in failure come into contact with each other.**
  As the battery produces hydrogen gas, sparks around the battery can cause an explosion.
  Do not make mistakes in connecting the booster cable. Also, sparks will occur at the last connection (connection to the upper swivel frame), so connect it as far as possible from the battery. (However, avoid work equipment as it does not conduct well).
- **When removing the booster cable, make sure that clips of the booster cable do not touch each other, or come into contact with the machine.**

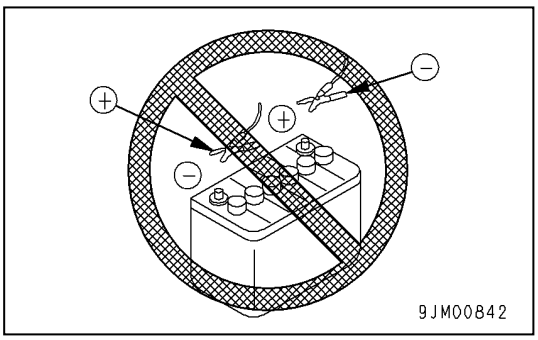

CAUTION

- **Use a booster cable and clips of appropriate size for the battery size.**
- **The battery in the working machine and the failed machine should be of the same capacity.**
- **Check that the cable and clips have no breakage or corrosion.**
- **Connect the clips securely.**
- **Check to ensure that lock levers are in the LOCK position for both machines.**
- **Verify that each lever is at the neutral position.**

CONNECTING BOOSTER CABLE

Place the starter switch in the OFF position for both the working machine and the failed machine and connect the booster cables in the order shown in the figure below.

1. Connect a clip of the booster cable (A) to the (+) terminal of the failed machine's battery (C).
2. Connect the other clip of the booster cable (A) to the (+) terminal of the working machine's battery (D).
3. Connect a clip of the booster cable (B) to the (−) terminal of the working machine's battery (D).
4. Connect the other clip of the booster cable (B) to the revolving super structure frame (E) of the failed machine.

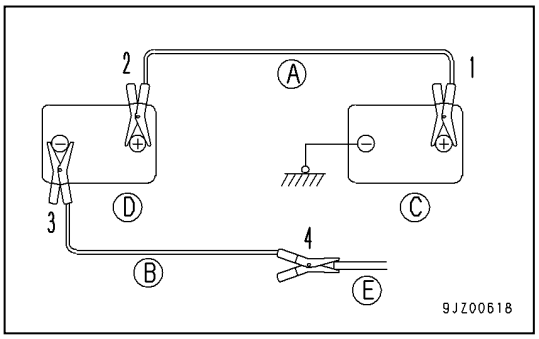

https://truckmanualshub.com/

8.3.5 STARTING ENGINE

⚠ CAUTION

Make sure that the lock lever is in the LOCK position for both working machine and failed machine. Also, make sure each of the operation levers are at neutral position.

1. Verify that the clips are securely connected to the battery terminals.
2. Start the engine of the working machine and set the engine to full speed (high speed).
3. Turn the starter switch of the failed machine to the START position to start the engine.
   If the engine does not start, wait for 2 minutes or more before re-starting.

DISCONNECTING BOOSTER CABLE

After the engine has started, disconnect the booster cables in reverse order relative to the connecting procedure.

1. Disconnect the clip of the booster cable (B) connected to the revolving super structure frame (E) of the failed machine.
2. Disconnect the clip of the booster cable (B) to the (−) terminal of the battery (D) of the working machine.
3. Disconnect the clip of the booster cable (A) from the (+) terminal of the battery (D) of the working machine.
4. Disconnect the clip of the booster cable (A) connected to the (+) terminal of the battery (C) of the failed machine.

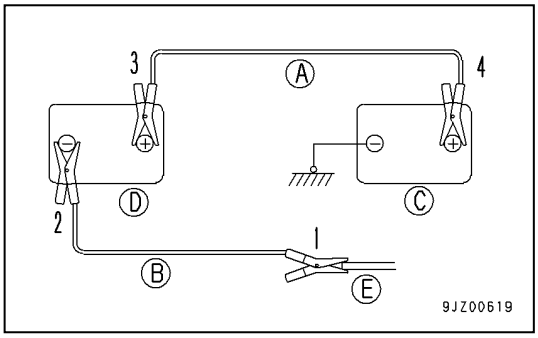

8.4 WHEN THESE PHENOMENA HAPPEN

8.4.1 ELECTRICAL COMPONENTS

- Make sure that you contact us or our sales service agency about the actions marked with ( ) in the table.
- Ask us or our sales service agency for repair if you suspect any abnormalities or causes other than those given below.

Abnormal phenomenon	Major cause(s)	Remedy
Dark work lights even at the highest engine speed	• Defective wiring, deterioration of battery • Poorly adjusted tension of fan belt • Fuse failure	(• Check and repair slackened terminals and open circuits) • Adjust fan belt tension referring to the regular 250 hours maintenance • Replacement
Lights flicker during engine operation		
Battery status indicator does not go out even when the engine is running	• Defective alternator • Defective wiring	(• Replacement) (• Inspection and repair)
Abnormal noise from alternator	• Defective alternator	(• Replacement)
Starter not rotating even after the starter switch is operated	• Defective wiring • Insufficient battery charge • Fuse failure	(• Inspection and repair) • Charge the battery • Replacement
Starter pinion going in and out repeatedly (struggling)	• Insufficient battery charge	• Charge the battery
Starter key turning slow	• Insufficient battery charge • Starter fault	• Charge the battery (• Replacement)
Starter disengaged before the engine starts	• Defective wiring • Insufficient battery charge	(• Inspection and repair) • Charge the battery
Glow lamp does not light.	• Defective wiring • Lamp fault	(• Inspection and repair) (• Replacement)

8.4.2 MACHINE BODY

- Make sure that you contact us or our sales service agency about the actions marked with ( ) in the table.
- Ask us or our sales service agency for repair if you suspect any abnormalities or causes other than those given below.

Abnormal phenomenon	Major cause(s)	Remedy
Drive, slewing or boom speeds are slow	• Insufficient hydraulic oil	• Refer to the pre-operation inspection and fill up to the specified amount
Abnormal noise from pump	• Clogging in the hydraulic oil tank strainer element	• Refer to regular 2000-hour maintenance and clean.
Hydraulic oil temperature too high	• Insufficient hydraulic oil • Looseness of fan belt	• Refer to the pre-operation inspection and fill up to the specified amount • Adjust fan belt tension referring to the regular 250-hour maintenance
Tracks coming off	• Tracks too loose	• Refer to “Irregular maintenance” and adjust the tension
Abnormal wear on the sprockets		

https://truckmanualshub.com/

8.4.3 ENGINE

- Make sure that you contact us or our sales service agency about the actions marked with ( ) in the table.
- Ask us or our sales service agency for repair if you suspect any abnormalities or causes other than those given below.

Abnormal phenomenon	Major cause(s)	Remedy
Engine oil pressure abnormality displayed	• Insufficient oil in oil pan (air suction) • Oil filter cartridge clogged • Poor fastening of oil pipe and pipe joints, oil leaks due to breakage • Defective engine oil pressure sensor • Defective machine monitor	• Refer to the pre-operation inspection and fill up to the specified amount • Refer to the regular 500-hour maintenance and replace cartridge (• Inspection and repair) (• Replace sensor) (• Replacement)
Steam spouts out from the upper part (pressure valve) of radiator.	• Lack of coolant, water leakage • Looseness of fan belt	• Refer to the pre-operation inspections and inspect and replenish/repair cooling water supply. • Adjust fan belt tension referring to the regular 250-hour maintenance
Engine coolant temperature error is displayed	• Accumulation of dirt and water residues in cooling system • Radiator fin clogged, or defective fins • Defective thermostat • Looseness of radiator cap (during work at high elevation) • Defective machine monitor	• Refer to “Irregular Maintenance” to clean inside the cooling system • Change coolant referring to the regular 2000-hour maintenance • Clean and repair referring to the regular 250-hour maintenance (• Replacement of thermostat) • Tighten cap or replace packing (• Replacement)
Engine does not start even after the starter key is turned	• Insufficient fuel • Mixing of air in fuel system • Mixing of water in fuel system • Defective fuel injection pump or nozzle • Engine slow on starting • Glow lamp does not light. • Defective compression • Poor valve clearance • The emergency stop switch is pressed.	• Refer to the pre-operation inspection and refuel • Repair air-contaminated area referring to the regular 500-hour maintenance • Discard mixed water referring to irregular maintenance and pre-operation inspections (• Replacement of pump or nozzle) • Refer to “Electrical Components” • Refer to “Electrical Components” (• Adjustment of valve clearance) • Cancel the emergency stop switch.
Exhaust gas colour turns into white or bluish	• Excessive oil in oil pan • Defective fuel	• Refer to the pre-operation inspection and fill up to the specified amount • Change to specified fuel

Abnormal phenomenon	Major cause(s)	Remedy
Exhaust gas colour sometimes turns black	• Air cleaner element clogged • Defective nozzle • Defective compression	• Refer to “Irregular Maintenance” for cleaning or replacement of the parts (• Replacement of nozzle) (• Refer to the “Defective compression” section above)
Combustion sound sometimes breathes	• Defective nozzle	(• Replacement of nozzle)
Abnormal noise is generated (combustion or mechanical)	• Use of low-grade fuel • Overheat • Damaged internal muffler parts • Valve clearance excessive	• Change to specified fuel • Refer to the above section “Red range of the engine water temperature sensor lights up” (• Replacement of muffler) (• Adjustment of valve clearance)
The engine stops during operation	• Clogging of fuel pre-filter and main filter • Defective engine and fuel circuit	• Replace filter (• Inspection and repair)

https://truckmanualshub.com/

8.4.4 MOMENT LIMITER COMPONENTS

- Make sure that you contact us or our sales service agent for the actions marked with ★ in the table.
- Ask us or our sales service agency for repair if you suspect any other abnormalities or causes than those given below.

NOTES
When an error code is displayed on the machine monitor, refer to “Operation 8.5 List of Error Codes”.

★ When the machine monitor display is normal

Abnormal phenomenon	Major cause(s)	Remedy
The crane operation does not stop even in an overload state.	Controller fault	★Replace controller or rewrite software
	Defective cancel switch	★Inspection and replacement of cancel switch
	Defective solenoid valve spool	★Disassembly repair or replacement of solenoid valve
	Short circuit of emergency power supply circuit	★Inspection and replacement of solenoid valve
Extension, hoisting and lowering do not operate when not in an overload state	Defective wiring between controller and solenoid valve	★Inspection, repair or replacement of wiring between controller and solenoid valve
	Defective solenoid valve coil or spool	★Disassembly repair or replacement of solenoid valve

8.4.5 OVER-HOISTING PREVENTION DEVICE

- Make sure that you contact us or our sales service agent for the actions marked with ★ in the table.
- Ask us or our sales service agency for repair if you suspect any other abnormalities or causes than those given below.

★ When no operation stops in an over-hoisting state

Abnormal phenomenon	Major cause(s)	Remedy
When extending or hoisting operation is performed, the operation does not stop even in an over-hoisting state although the buzzer sounds.	Short circuit of emergency power supply circuit	★Inspection and replacement of solenoid valve
	Defective hook storage switch	★Inspect/replace hook storage switch
	Defective ground	★Replacement of ground
When extending or hoisting operation is performed, the buzzer does not sound and the operation does not stop either even in an over-hoisting state.	Defective over-hoist detector	★Inspection and replacement of over-hoist detector
	Cord reel short	★Inspect/replace cord reel

https://truckmanualshub.com/

★ When extension or hoisting does not operate even when not in an over-hoisting state

Abnormal phenomenon	Major cause(s)	Remedy
When extending or hoisting operation is performed, the buzzer sounds and the operation is not performed even when not in an over-hoisting state.	Defective over-hoist detector	★Inspection and replacement of over-hoist detector
	Damage or entanglement of over-hoist detecting wire	★Inspection, repair and replacement of over-hoist detecting wire
	Damage of over-hoist detector weight	★Inspection and replacement of over-hoist detecting weight
	Defective wiring between controller and over-hoist detector	★Inspection, repair or replacement of wiring between controller and over-hoist detector
	Contact failure of slip ring inside cord reel	★Repair/replace cord reel
When extending or hoisting operation is performed, the operation is not performed even when not in an over-hoisting state. However, the buzzer does not sound.	Defective solenoid valve coil or spool	★Disassembly repair or replacement of solenoid valve
	Defective wiring between controller and solenoid valve	★Inspection, repair or replacement of wiring between controller and solenoid valve

8.5 LIST OF ERROR CODES

CC423S-1 List of Error Codes (1/2)

Code classification	Error codes	Details of errors	Display icon	Alarm buzzer	Remedies
P	P1202/4	Engine abnormality	A	●	★
	P1203/3	Engine abnormality	A	●	
	P0122/4	Engine abnormality			☆
	P0123/3	Engine abnormality			
	P0124/2	Engine abnormality			
	P0668/4	Engine abnormality			
	P0669/3	Engine abnormality			
	P1664/2	Engine abnormality			
	P0634/0	Engine abnormality			
	P0117/4	Engine abnormality			
	P0118/3	Engine abnormality			
	P0119/2	Engine abnormality			
	P0217/0	Engine abnormality (overheat)	C	●	Stop work, wait with the engine in the idling state, and lower the engine coolant temperature until the error disappears.
	P0642/4	Engine abnormality			☆
	P0643/3	Engine abnormality			
	P1644/2	Engine abnormality			
	P0562/1	Engine abnormality			
	P0563/0	Engine abnormality			
	P0340/4	Engine abnormality	A	●	★
	P0219/0	Engine abnormality	A	●	
	P1222/4	Engine abnormality	A	●	
	P1223/3	Engine abnormality	A	●	
	P1224/2	Engine abnormality			☆
	P1232/4	Engine abnormality			
	P1233/3	Engine abnormality			
	P1234/2	Engine abnormality			
	P1242/4	Engine abnormality			
	P1243/3	Engine abnormality			
	P1244/2	Engine abnormality			
	P1402/4	Engine abnormality	A	●	★
	P1403/3	Engine abnormality	A	●	
	P1412/4	Engine abnormality	A	●	
	P1413/3	Engine abnormality	A	●	
	P1422/4	Engine abnormality	A	●	
	P1423/3	Engine abnormality	A	●	
	P1432/4	Engine abnormality	A	●	
	P1433/3	Engine abnormality	A	●	
	P1198/1	Engine abnormality (Engine oil pressure drop)	B	●	Check the engine oil level.
	P1212/4	Engine abnormality	A	●	★
	P1213/3	Engine abnormality	A	●	
	P1211/7	Engine abnormality	A	●	
	P1214/2	Engine abnormality	A	●	
	P0605/12	Engine abnormality			☆
	P1605/2	Engine abnormality			
	P1606/2	Engine abnormality			
	P1620/12	Engine abnormality			
	P1601/2	Engine abnormality			
	P0601/12	Engine abnormality			
	P1610/12	Engine abnormality			
	P1611/12	Engine abnormality			
	P1612/12	Engine abnormality			
	P0686/4	Engine abnormality			
	U0001/12	Controller abnormality			

- Contact us or our sales service agency if you have implemented the remedies but not resolved the issues.
- In the case of ★ remedies, stop the machine immediately and contact us or our sales service agency.
- In the case of ☆ remedies, some functions may be restricted, but work is possible.
  After completing the work, be sure to carry out inspection and maintenance.
  Contact us or our sales service agency as necessary.

Display icon		Content
A		Engine abnormality
B		Engine oil pressure low
C		Coolant temperature rise warning (overheat)

CC423S-1 List of Error Codes (2/2)

Code classification	Error codes	Details of errors	Display icon	Alarm buzzer	Remedies
EO	EO02L	Lowering SOL open circuit, supply fault		●	★
	EO02H	Lowering SOL over-current		●	
	EO03L	Raising SOL open circuit, supply fault		●	
	EO03H	Raising SOL over-current		●	
	EO04L	Extension SOL open circuit, supply fault		●	
	EO04H	Extending SOL over-current		●	
	EO05L	Output power abnormality			☆
	EO05H	Output power abnormality			
	EO06L	Output power abnormality			
	EO06H	Output power abnormality			
	EO09L	Output power abnormality			
	EO09H	Output power abnormality			
	EO10L	Output power abnormality			
	EO10H	Output power abnormality			
	EO12L	Output power abnormality			
	EO12H	Output power abnormality			
	EO15L	Output power abnormality		●	★
	EO15H	Output power abnormality		●	
ES	ES02L	Derrick pressure sensor 1 voltage fault (low voltage fault)		●	
	ES02H	Derrick pressure sensor 1 voltage fault (high voltage fault)		●	
	ES03L	Derrick pressure sensor 2 voltage fault (low voltage fault)		●	
	ES03H	Derrick pressure sensor 2 voltage fault (high voltage fault)		●	
	ES04L	Length meter sensor voltage fault (low voltage fault)		●	
	ES04H	Length meter sensor voltage fault (high voltage fault)		●	
	ES05L	Angle meter sensor voltage fault (low voltage fault)		●	
	ES05H	Angle meter sensor voltage fault (high voltage fault)		●	
	ES06L	Sensor fault			☆
	ES06H	Sensor fault			
	ES07L	Sensor fault			
	ES07H	Sensor fault			
	ES08L	Sensor fault			
	ES08H	Sensor fault			
	ES09L	Sensor fault			
	ES09H	Sensor fault			
	ES10L	Sensor fault			
	ES10H	Sensor fault			
	ES11L	Incline sensor voltage fault (low voltage fault)		●	★
	ES11H	Incline sensor voltage fault (high voltage fault)		●	
	ES12L	Sensor fault			☆
	ES12H	Sensor fault			
	ES13H	Sensor fault			
TTC	TTC36	Controller abnormality		●	★
	ECU	ECU communications fault		●	
EV	EV001	Battery voltage fault	D	●	Check the voltage and specific gravity of the battery.
	EV007	Charge abnormality	D	●	Check the alternator and the tension of the fan belt.
	EV008	Voltage fault		●	★
	EV009	Voltage fault			☆
EH	EH01	Hydraulic oil temperature fault	E	●	Stop the work, remain in the idling state or stop the engine, and lower the hydraulic fluid temperature until the error disappears.

- Contact us or our sales service agency if you have implemented the remedies but not resolved the issues.
- In the case of ★ remedies, stop the machine immediately and contact us or our sales service agency.
- In the case of ☆ remedies, some functions may be restricted, but work is possible.
  After completing the work, be sure to carry out inspection and maintenance.
  Contact us or our sales service agency as necessary.

Display icon		Content
D		Battery voltage fault Charge abnormality
E		Hydraulic oil temperature high

https://truckmanualshub.com/

This Page Intentionally Left Blank.

https://truckmanualshub.com/

INSPECTION AND MAINTENANCE

1. PRECAUTIONS FOR MAINTENANCE	188
2. BASIC MAINTENANCE	191
3. LEGAL INSPECTION	194
4. PERIODIC REPLACEMENT OF IMPORTANT COMPONENTS	195
5. CONSUMABLES	196
6. OTHER REPLACEMENT PARTS	197
7. USE OF FUEL AND LUBRICATING OIL	198
8. STANDARD TIGHTENING TORQUE	200
9. INSPECTION AND MAINTENANCE LIST	201
10. MAINTENANCE PROCEDURES	203

https://truckmanualshub.com/

1. PRECAUTIONS FOR MAINTENANCE

Thorough understanding of the inspection and maintenance items is required to perform efficient inspection and maintenance that contributes to safe use of this machine.

⚠ WARNING

- **Do not perform any inspection or maintenance that is not described in this manual.**
  Potential serious accident or machine failure may occur if it is performed at the discretion of the individual.
  If the severity of a failure or malfunction cannot be determined, contact us or our sales service agent to request repair.
- **In the event that a failure or malfunction is encountered while the machine is in operation or found during an inspection, report it to your employer or supervisor immediately. Contact us or our sales service agency to request repair accordingly.**
- **Inspection and maintenance should be performed with the machine placed on a level and strong footing.**

CHECK THE SERVICE METERS

Read the service meters daily to check for any maintenance item that reached the obligatory maintenance period.

USE GENUINE PARTS FOR REPLACEMENT

Always use Maeda genuine parts as specified in the parts catalog for part replacement.

USE GENUINE GREASE

Always use genuine Maeda grease. The viscosity of grease must conform to specifications according to ambient temperature.

USE CLEAN OIL AND GREASE

Always use clean oil or grease, and keep in a secure container to reduce contact with impurities.

USE CLEAN WINDOW WASHER LIQUID

Use the window washer liquid for automobiles and keep it free from any contamination such as dirt and dust.

KEEP THE MACHINE CLEAN

Wash the machine clean to facilitate the detection of a malfunction. Especially keep the grease nipple, breather, and oil level gauge (oil access door) clean to prevent impurities from entering the machine.

HANDLE WATER AND OIL AT ADEQUATE TEMPERATURE

Drainage, drain oil, and exhaust filter will be at elevated temperatures immediately after the machine is stopped. Replace drainage, drain oil, and filter only after they drop in temperature for safety.

On the contrary, if the oil is cold, raise the temperature of the oil to approx. 20 to 40 °C.

CHECK DRAIN OIL AND OIL FILTER

For replacement of oil and filter, check the drain oil and exhaust filter to make sure no considerable amount of metal powder or foreign objects are present.

PRECAUTIONS FOR LUBRICATION

Do not remove the strainer to lubricate if it is attached to the lubrication opening.

PROTECT OIL FROM IMPURITIES

Avoid dust when inspecting and replacing the oil to keep impurities out of the oil.

ATTACH A WARNING TAG

When draining coolant and oil, always pull off the starter switch key to prevent accidental engine ignition. Also, attach a warning tag to the work machine operating lever.

FOLLOW SAFETY PRECAUTIONS

Safety precautions provided on the machine should always be followed when using the machine.

PRECAUTIONS DURING WELDING REPAIR

- Make sure the machine is turned off. (Turn the starter switch to the “OFF” position.)
- Do not continuously apply 200 V or greater.
- Ground the machine within 1 meter from the welding point.
- Pull out the connectors for the moment limiter display and moment limiter converter.
- Remove the negative (−) terminal of the battery.
- Make sure no sealing or bearing is present between the welding point and the grounding point.
  Potential damage to sealing may occur due to sparks if disregarded.
- Do not ground around the boom pin or the hydraulic cylinder.
  Potential damage to a plated section may occur due to sparks if disregarded.

KEEP AWAY FROM FIRE

Always clean the parts with non-combustible cleaning agent or diesel fuel.

Keep the machine away from flame when using diesel fuel.

KEEP ATTACHMENT SURFACE CLEAN

Be sure to clean the attachment surface after removing a part to which the O-ring and gasket sealing are attached.

Replace the part with a new one with the O-ring and gasket re-attached.

EMPTY YOUR POCKETS

Always empty your pockets before performing inspection and maintenance of the machine in a downward direction with the cover opened.

INSPECT THE UNDERCARRIAGE

When performing crane operation in a rocky location, make sure of no damage to the undercarriage and no looseness, cracks or abrasion of bolts and nuts. Loosen the tension of the crawler tread more than usual.

PRECAUTIONS FOR MACHINE WASH

- Do not direct a jet of steam to the electrical parts and connector.
- Keep the operation panel dry. Especially be careful not to spray under the driving seat and around the battery.
- Wash the machine with a clean cloth, rinsing off dirt and dust.

PRE- AND POST-WORK INSPECTION

Before performing crane operation in muddy water, rain, snow or on the coast, always check for loose fitting plugs and valves. Post-operation inspection requires checks to all units for cracks and damage; looseness and falling of bolts and nuts, after the machine has been washed.

Carry out early greasing. Grease the operating pin that enters the muddy water on a daily basis.

https://truckmanualshub.com/

CAUTIONS FOR WORKING ON A DUSTY SITE

The following precautions should be observed when working on a dusty site.

- When inspecting and replacing the oil, move the machine to a clean place to avoid dust and keep impurities out of the oil.
- Frequently check the air cleaner for clogging.
- Clean the radiator core at an early stage to prevent it from being clogged.
- Clean and replace the fuel filter in a timely manner.
- Be sure to clean the electrical parts, especially the starter and alternator, to protect them from dust.

DO NOT MIX OIL

Never mix oil of different brands and different types under any circumstance.

Replace the oil entirely when replenishing a different type of oil.

Always use Maeda genuine parts for part replacement.

2. BASIC MAINTENANCE

OIL HANDLING

- Oil is used under extremely harsh conditions (high temperature, high pressure) in the engine and working device, which causes the oil to undergo deterioration with operating time.
  Always use oil that meets requirements such as grade and operating temperature defined in the operation manual.
  Be sure to perform periodic replacement of oil irrespective of contamination in the oil.
- Oil is equivalent to human blood. Exercise due caution to handle oil, keeping impurities (such as water, metal powder or dust) out of oil. Most of mechanical failures are attributed to intrusion of impurities.
  Extra caution is required to prevent impurities entering during machine storage and lubrication.
- Do not mix oil with other oil of different grade or brand.
- Oil lubrication must conform to the designated quantity of oil.
  Failure to lubricate at adequate quantity can lead to a machine failure.
- In the event that oil used in the working device turns cloudy, potential intrusion of moisture or air into the oil may be considered.
  Contact us or our sales service agent.
- When replacing oil, always replace the relevant filter as well.
- Do not use any other hydraulic oil that is not recommended by us. Failure to follow the instruction may cause the filters to become clogged. A small amount of oil remaining in piping and cylinders does not cause problems even when mixed with other oil.

FUEL HANDLING

CAUTION
Always use diesel fuel of the following conditions for the fuel. **• The cetane number of the fuel must be 45 or higher.** **• The sulfur content must be less than 1,000 ppm of the total volume (recommended 500 ppm).** **For the engine of this machine, a high pressure injection unit is adopted to obtain good fuel consumption and exhaust gas characteristics. Since this unit is required to have high part precision and lubricating performance, the use of a low viscosity fuel having a low lubricating characteristic may markedly spoil the durability.** **Up to B7 can be used for biofuels.**

- The fuel pump is precision equipment that becomes inoperative if fuel containing moisture or impurities is used.
  Extra caution is required to prevent impurities from entering during machine storage and lubrication.
- Do not remove the strainer when replenishing fuel.
- Always use oil that meets requirements such as grade and operating temperature defined in the operation manual.
- Ensure that the fuel tank is filled up after finishing daily work to prevent condensation of the humid air inside the fuel tank that will result in intrusion of moisture.
- Drain deposits and water out of the fuel tank before starting the engine or approximately 10 minutes after fuel replenishment.

- The air should be released from the circuit when the machine runs out of fuel or when the fuel filter is replaced.
- Clean the tank and fuel system if any foreign substances enter the fuel tank.

STOCKING AND STORAGE OF OIL AND FUEL

- Store oil and fuel indoors to keep impurities such as moisture or dust out of them.
- When storing oil and fuel in drums for a long time, line the drums horizontally aligning the drum bungs below the liquid level (to store them away from moisture). Be sure to cover the drums with a waterproof sheet if unavoidably storing them outside.
- To prevent deterioration of oil and fuel resulted from long-term storage; employ the first-in first-out for using oil and fuel.

GREASE HANDLING

- Grease is designed to prevent the joints from rattling and making noise.
- A nipple that is not described in the Periodic Maintenance chapter is used for overhauls, which requires no grease replenishment.
  Grease the nipple if a long-term use hinders its smoothness.
- Thoroughly wipe off old grease squeezed out after greasing.
  Extra care is required to wipe a part that the adhesion of sands and dust accelerates the wearing away of the rotating part.

FILTER HANDLING

- A filter is an extremely important part that keeps major equipment free from impurities in oil, fuel, and the air circuit, which prevents an associated failure. Periodic replacement of the filter is required in accordance with the Operation Manual.
  The replacement period should be shortened in commensurate with harsh operating environments or the amount of oil and fuel (containing sulfur) used.
- Do not reuse any washed filters (cartridge-typed ones) under any circumstances.
- After replacing an oil filter, check the used filter for any metal powder.
  If metal powder is found on the used filter, contact us or our sales service agent.
- Always unpack the replacement filter prior to its use.
- Always use Maeda genuine filters.

COOLANT HANDLING

- The river water contains a large amount of calcium and impurities. Use of the river water results in accumulation of water stain in the engine and radiator, which causes heat exchange error leading to overheat.
  Do not use non-potable water.
- Always use antifreeze following precautions stated in the Operation Manual.
- Keep antifreeze from flame. Antifreeze is a flammable solution.

- The mixing proportion of antifreeze varies with outside air temperature.
  For the mixing proportion, refer to the descriptions under “Inspection and Maintenance 10.3 Irregular Maintenance [2] Cleaning Inside Engine Cooling System”.
- In the event of overheating, replenish coolant with the engine cold.
- The machine low in coolant may cause overheating as well as corrosion in the coolant circuits attributed to aeration.

ELECTRICAL PARTS HANDLING

- An electric leakage occurs if electrical parts become wet or have damaged coating, which causes the machine to go out of order and malfunction.
- Inspection and maintenance include the checking of belt tension, belt damage, and battery electrolyte level.
- Never remove and disassemble equipment (electrical parts) from the machine.
- Only optional electrical parts that accompany the machine can be installed.
- Keep the electrical parts away from water when the machine is washed and used in the rain.
- When using the machine on coastal areas, keep the electrical parts free of water and impurities to prevent corrosion.

HYDRAULIC EQUIPMENT HANDLING

- Hydraulic equipment will be at elevated temperatures during and immediately after operation. Hydraulic equipment operates under high pressure.
  The following precautions should be observed when performing inspection and maintenance of hydraulic equipment.
  - Place the machine in travel position on a level surface to inhibit the application of pressure to the cylinder circuit.
  - Be sure to stop the engine.
  - Hydraulic oil and lubricating oil will be at elevated temperatures and high pressure immediately after equipment comes to a stop. Perform inspection and maintenance only after the oil drop in temperature for safety. An internal pressure may be exerted despite temperature drop. When removing the plugs, screws and hose joints, stand to the side and loosen gradually to decompress the interior.
  - Be sure to release the pressure by removing the air from the hydraulic oil tank before performing inspection and maintenance of the hydraulic circuit.
- Inspection and maintenance include hydraulic oil level check and replacement of the filters and hydraulic oil.
- Check the O-ring for scratches when removing the high-pressure hose. If scratches are found, replace it.
- Bleeding the air from the hydraulic circuit is required after the following tasks are performed: replacement and cleaning of the hydraulic oil filter element and strainer, repair and replacement of hydraulic equipment, and hydraulic piping removal.

https://truckmanualshub.com/

3. LEGAL INSPECTION

If periodic inspection for machine safety assurance is stipulated by laws and regulations of your country, perform inspection complying with the inspection items listed below.

1. Make sure no abnormal event is present in the safety devices.
2. Check the hoisting accessories including a hook block for any abnormalities.
3. Check the winch wire rope end and wire clip for damage.
4. Replace the wire rope promptly if it is damaged.
5. Check the hydraulic hose for oil leaks and friction flaws on the surface. Replace the hose if a surface flaw is detected.
6. Check the structural part including the boom for cracks and deformations.
7. Check the mounting bolts and joints for looseness and falling off.
8. Check if the crane perform proper operation and stop during extending, retracting, raising, lowering, and slewing.

If check finds a malfunction, contact us or our sales service agency.

https://truckmanualshub.com/

4. PERIODIC REPLACEMENT OF IMPORTANT COMPONENTS

To use your machine safely for a long period of time, replace the parts listed as important parts relating specially to safety and fire periodically.

These parts are susceptible to change in the quality, wear and deteriorate over time. Since it is difficult to determine their degrees in a regular maintenance, they should be replaced with the new ones after a certain period of time even if no abnormalities are detected to guarantee perfect and consistent functionality.

These parts need repair or replacement when any abnormality is detected, even before the exchange time comes.

For the hose part, if any distortions, cracks or deteriorations are found in the hose clamp, please replace it.

The hydraulic hose is not considered to be replaced periodically, but should be checked regularly according to the table below and re-tighten or replace if any abnormality is found.

• When replacing the hose, replace the O-ring and the gasket at the same time.

• Contact us or our sales service agent to replace important components.

LIST OF IMPORTANT COMPONENTS

No.	Periodically replaced parts	Q'ty	Replacement cycle
1	Fuel hose (fuel tank to water separator)	1	Every 2 years or every 2000 hours, whichever falls first
2	Fuel hose (water separator to feed pump)	1	
3	Fuel hose (feed pump to fuel filter)	1	
4	Fuel hose (fuel filter to injection pump)	1	
5	Fuel hose (fuel filter to fuel cooler)	1	
6	Fuel hose (fuel cooler to fuel tank)	1	
7	Spill hose (fuel filter to injection pump)	1	
8	Spill hose (between nozzles)	2	
9	Spill hose (nozzle to injection pump)	1	
10	Spill cap	1	
11	Hydraulic hose (main pump suction)	2	Every 2 years or every 4000 hours, whichever falls first
12	Hydraulic pressure hose (main pump delivery)	4	
13	Hydraulic hose (boom telescoping cylinder)	2	
14	Hydraulic hose (boom derricking cylinder)	2	
15	Hydraulic hose (winch motor)	6	
16	Hydraulic hose (slewing motor)	2	
17	Seat belt	1	Replace every 3 years

https://truckmanualshub.com/

5. CONSUMABLES

Replace consumables such as a filter element and wire rope upon periodic maintenance or prior to the wear limit.

Proper replacement of consumables delivers increased economy in machine use.

Always use Maeda genuine parts for part replacement.

See the parts catalogue for part numbers when ordering parts.

LIST OF CONSUMABLES

Item	Replacement cycle
Hydraulic oil filter	Every 250 hours
Engine oil filter	Every 500 hours (1st time at 50 hours)
Main fuel filter	Every 500 hours
Cylinder packing	★ Every 3 years
Boom slide plate	Every 3 years
Wire rope for hoisting	As required or every 3 years
Wire rope for extending boom	As required or every 3 years
Wire rope for retracting boom	As required or every 3 years

★ The cycles marked with a “★” in Replacement cycle include a halt period.

★ Contact us or our sales service agent for part replacement.

https://truckmanualshub.com/

6. OTHER REPLACEMENT PARTS

Check with us or our sales agency for the part number by referring to the machine number.

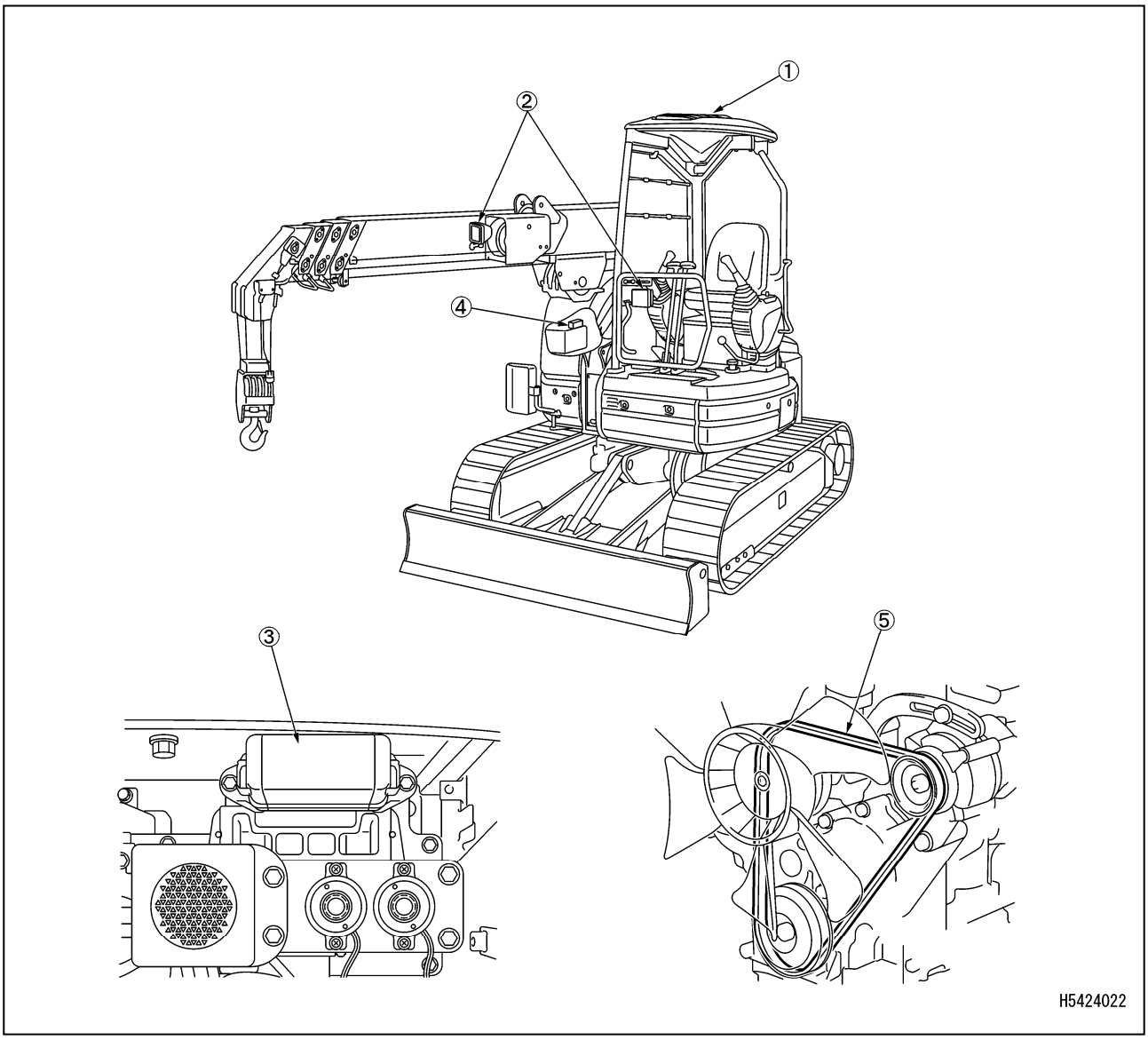

No.	Part name
1	Clear plate
2	Working lights assembly (LED)
3	Fuse

No.	Part name
4	Fusible link (45 A)
5	Fan belt

7. USE OF FUEL AND LUBRICATING OIL

- To keep the Machine in the best possible condition for a long period of time, we recommend the use of our specified oil, grease and coolant as given in this instruction manual.
- Using other product than the specified may give rise to the loss of service life or excessive abrasion of the engine, power train and cooling system.
- Some of the oil additives on the market may deteriorate the oil performance. We do not recommend any of oil additives available on the market.
- Depending on the air temperature, select the best suited grades of oil to the respective temperatures as indicated in the following table.
- A specified oil quantity is defined as a total quantity of oil including that for unit piping, and a replacement oil quantity is defined as a quantity of oil to be replaced at inspection and maintenance.
- When starting the engine at temperatures 0 °C or lower, always use the recommended multi-grade oil, even if daytime temperature goes higher.

7.1 USE OF FUEL AND LUBRICATING OIL ACCORDING TO TEMPERATURES

Depending on the air temperature, select the best suited grades of oil to the respective temperatures as follows.

Oiling spot	Oil type	Temperature-dependent mode of use (°C)		Recommended authentic oil
		Minimum	Maximum	
Engine oil pan	Engine oil	-20	10	SAE 10WCF
		-20	40	SAE 10W30CF
		-15	40	SAE 15W40CF
		0	40	SAE 30WCF
Traveling motor reducer casing	Power line oil (Note 1)	-20	40	SAE 30
Hydraulic oil system	Power line oil	-20	40	SAE 10WCD
Winch motor reducer casing	Gear oil	-20	40	ISO VG320
Cooling system	Super coolant Diluting water (Note 2)	-30	40	AF-NAC
Fuel tank	Diesel fuel	-30	20	ASTM** Grade No.1-D S15 ASTM Grade No.1-D S500
		-10	40	ASTM Grade No.2-D S15 ASTM Grade No.2-D S500

Oiling spot	Specified oil quantity (L)	Replacement oil quantity (L)
Engine oil pan	6.7	6.2
Traveling motor reducer casing (1 each for left and right)	0.6	0.6
Hydraulic oil system	54	28.5
Winch reducer casing	0.75	0.75
Cooling system	5.5	---
Fuel tank	42	---

Note 1: Power line oil and engine oil are different. Use the corresponding recommended oils.

Note 2: Super coolant

(1) The super coolant is required to perform such significant functions as an anticorrosion agent as well as antifreezing agent for a cooling system.
Thus, use this super coolant continuously even in areas where anti-freezing characteristic is not required.
Use of any other coolants than our genuine super coolant (AF-NAC) is not recommended in principle. Otherwise a serious failure may occur in the cooling system including the engine.

(2) For the mixing proportion of super coolant and diluting water, refer to the descriptions under “Inspection and Maintenance 10.3 Irregular Maintenance [2] Cleaning Inside Engine Cooling System”.
Since our genuine coolant (AF-NAC) is added at a proportion of 30% or more upon factory shipment, there is no need of particularly altering the concentration down to a temperature of -10 ºC.
If the temperature goes below -10 ºC, adjust the super coolant concentration in accordance with the proportion table given under “Inspection and Maintenance 10.3 Irregular Maintenance [2] Cleaning Inside Engine Cooling System”.

(3) To maintain the anti-corrosion performance of the coolant, always keep the concentration at 30% or higher.

https://truckmanualshub.com/

8. STANDARD TIGHTENING TORQUE

8.1 STANDARD TIGHTENING TORQUE LIST

⚠ CAUTION

Tightening at a torque beyond the specified range will cause the damage of tightened parts or loosening, resulting in failure of malfunction of the Machine. Pay adequate attention to the tightening operation.

Torque the metric bolts and nuts with no specific indication to the values shown in this table.

Adequate tightening torque is determined with respect to a width across flat (b) of a bolt or nut.

Nominal size a (mm)	Width across flat b (mm)	Tightening torque {N·m (kgf·m)}	
		Target value	Tolerance
6	10	13.2 (1.35)	11.8 – 14.7 (1.2 – 1.5)
8	13	31.0 (3.20)	27.0 – 34.0 (2.8 – 3.5)
10	17	66.0 (6.70)	59.0 – 74.0 (6.0 – 7.5)
12	19	113 (11.5)	98.0 – 123 (10.0 – 12.5)
14	22	172 (17.5)	153 – 190 (15.5 – 19.5)
16	24	260 (26.5)	235 – 285 (23.5 – 29.5)
18	27	360 (37.0)	320 – 400 (33.0 – 41.0)
20	30	510 (52.3)	455 – 565 (46.5 – 58.0)
22	32	688 (70.3)	610 – 765 (62.5 – 78.0)
24	36	883 (90.0)	785 – 980 (80.0 – 100)
27	41	1295 (132.5)	1150 – 1440 (118 – 147)
30	46	1720 (175.0)	1520 – 1910 (155 – 195)
33	50	2210 (225.0)	1960 – 2450 (200 – 250)
36	55	2750 (280.0)	2450 – 3040 (250 – 310)
39	60	3280 (335.0)	2890 – 3630 (295 – 370)

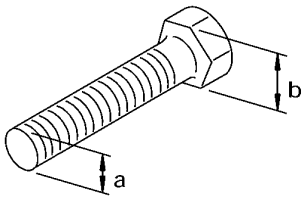

Tighten hoses with the respective values of torque specified in the table below:

Nominal size No.	Width across flat a (mm)	Tightening torque {N·m (kgf·m)}	
		Target value	Tolerance
02	19	44 (4.5)	35 – 54 (3.5 – 5.5)
03	22	74 (7.5)	54 – 93 (5.5 – 9.5)
	24	78 (8.0)	59 – 98 (6.0 – 10.0)
04	27	103 (10.5)	84 – 132 (8.5 – 13.5)
05	32	157 (16.0)	128 – 186 (13.0 – 19.0)
06	36	216 (22.0)	177 – 245 (18.0 – 25.0)

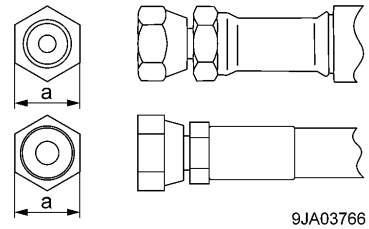

https://truckmanualshub.com/

9. INSPECTION AND MAINTENANCE LIST

Inspection and maintenance items	Page
10.1 FIRST MAINTENANCE OF NEW MACHINE	203
10.1.1 INITIAL 50 HOURS MAINTENANCE	203
[1] REPLACEMENT OF ENGINE OIL AND ENGINE OIL FILTER	203
[2] INSPECTION/ADJUSTMENT OF FAN BELT TENSION	203
10.1.2 INITIAL 500 HOURS MAINTENANCE	203
[1] OIL REPLACEMENT IN WINCH REDUCTION GEAR CASE	203
10.2 PRE-OPERATION INSPECTION	203
10.2.1 INSPECTING AND ADJUSTING BEFORE STARTING ENGINE (VISIBLE CHECKS) (Refer to Operation section 3.1.1)	95
[1] INSPECTION AROUND CRANE	96
[2] INSPECTION OF WIRE ROPE	96
[3] INSPECTION OF HOOK BLOCK	96
[4] INSPECTION AROUND UPPER SLEWING BODY	97
[5] INSPECTION AROUND OPERATOR'S SEAT	97
[6] INSPECTION OF BASE CARRIER	97
10.2.2 PRE-OPERATION INSPECTION (Refer to Operation section 3.1.2)	98
[1] INSPECTION/REFILLING OF ENGINE COOLANT	98
[2] INSPECTION OF OIL LEVEL AND REFILLING OIL IN ENGINE OIL PAN	99
[3] INSPECTION OF FUEL LEVEL	100
[4] INSPECTION OF OIL LEVEL AND REFILLING OIL IN WINCH REDUCTION GEAR CASE	101
[5] INSPECTION OF OIL LEVEL AND REFILLING OIL IN HYDRAULIC OIL TANK	102
[6] INSPECTION OF DUST INDICATOR	103
[7] INSPECTION OF WATER SEPARATOR	103
[8] INSPECTION OF ELECTRIC WIRING	104
[9] INSPECTION OF HORN FOR OPERATION	104
[10] ADJUSTMENT OF OPERATOR'S SEAT	105
[11] ADJUSTMENT OF MIRRORS	107
10.2.3 OPERATIONS AND CHECKS BEFORE STARTING ENGINE (Refer to Operations section 3.1.3)	108
10.2.4 INSPECTION AFTER STARTING ENGINE (Refer to Operation section 3.1.4)	109
[1] INSPECTION OF EASE OF ENGINE CRANKING AND ABNORMAL NOISE	109
[2] INSPECTION OF LOW SPEED AND ACCELERATION STATE OF ENGINE	109
[3] INSPECTION OF ENGINE EXHAUST GAS COLOUR, ABNORMAL NOISE AND VIBRATION	109
[4] INSPECTION OF CRANE OPERATIONS	110
[5] INSPECTION OF OVER HOISTING PREVENTION DEVICE	111
[6] INSPECTION OF MOMENT LIMITER	111

https://truckmanualshub.com/

Inspection and maintenance items	Page
10.3 IRREGULAR MAINTENANCE	204
[1] INSPECTION, CLEANING AND REPLACEMENT OF AIR CLEANER	204
[2] CLEANING INSIDE ENGINE COOLING SYSTEM	206
[3] INSPECTION OF BATTERY ELECTROLYTE LEVEL	209
[4] CLEANING ELEMENT OF WATER SEPARATOR	211
[5] DRAINING OF CONTAMINANT WATER/DEPOSITS IN FUEL TANK	212
[6] INSPECTION/ADJUSTMENT OF CRAWLER BELT TENSION	213
[7] VENTING AIR IN HYDRAULIC CIRCUITS	215
[8] WIRE ROPE REPLACEMENT	216
10.4 MAINTENANCE EVERY 50 HOURS	223
[1] GREASING MACHINE UNITS	223
10.5 MAINTENANCE EVERY 100 HOURS	225
[1] GREASING MACHINE UNITS	225
10.6 MAINTENANCE EVERY 250 HOURS	226
[1] REPLACEMENT OF HYDRAULIC OIL RETURN FILTER CARTRIDGE	226
[2] OIL LEVEL CHECK AND REFILLING IN WINCH REDUCTION GEAR CASE	227
[3] INSPECTION/ADJUSTMENT OF FAN BELT TENSION	228
[4] INSPECTION/CLEANING OF RADIATOR FINS	229
[5] INSPECTION/CLEANING OF AIR CLEANER	229
10.7 MAINTENANCE EVERY 500 HOURS	230
[1] REPLACEMENT OF ENGINE OIL AND ENGINE OIL FILTER	230
[2] REPLACEMENT OF MAIN FUEL FILTER	231
[3] INSPECTING/REFILLING OIL IN TRAVELLING MOTOR REDUCTION GEAR CASE	232
[4] REPLACEMENT OF AIR CLEANER	232
10.8 MAINTENANCE EVERY 1000 HOURS	233
[1] OIL REPLACEMENT IN TRAVELLING MOTOR REDUCTION GEAR CASE	233
[2] INSPECTION/ADJUSTMENT OF ENGINE VALVE CLEARANCE	233
[3] OIL REPLACEMENT IN WINCH REDUCTION GEAR CASE	234
[4] INSPECTION OF INTAKE VALVE / EXHAUST VALVE	234
10.9 MAINTENANCE EVERY 1500 HOURS	235
[1] INSPECTION/CLEANING OF FUEL INJECTION UNIT	235
[2] INSPECTION OF CRANKCASE BREATHER	235
10.10 MAINTENANCE EVERY 2000 HOURS	236
[1] REPLACING OIL IN ENGINE OIL TANK AND CLEANING STRAINERS	236
[2] REPLACING COOLANT	238
10.11 MAINTENANCE EVERY 3000 HOURS	239
[1] INSPECTION/CLEANING OF EGR VALVE	239

https://truckmanualshub.com/

10. MAINTENANCE PROCEDURE

10.1 FIRST MAINTENANCE OF NEW MACHINE

10.1.1 INITIAL 50 HOURS MAINTENANCE

The following maintenance should be performed after 50 hours of operation, limited to the first maintenance of a new machine.

[1] REPLACEMENT OF ENGINE OIL AND ENGINE OIL FILTER

Refer to Regular 500-Hour Maintenance for details on the method of maintenance.

[2] INSPECTION/ADJUSTMENT OF FAN BELT TENSION

Refer to Regular 250-Hour Maintenance for details on the method of maintenance.

10.1.2 INITIAL 500 HOURS MAINTENANCE

The following maintenance should be performed after 500 hours of operation, limited to the first maintenance of a new machine.

[1] OIL REPLACEMENT IN WINCH REDUCTION GEAR CASE

Refer to Regular 1000-Hour Maintenance for details on the method of maintenance.

10.2 PRE-OPERATION INSPECTION

Inspections described in this section should be conducted before the first engine start-up of the day.

Refer to “9. Inspection and Maintenance List” for the items of pre-operation inspection.

Refer to “Operation 3.1 Inspecting and Adjusting Before Starting Engine” for maintenance places and procedure of pre-operation inspection.

https://truckmanualshub.com/

10.3 IRREGULAR MAINTENANCE

[1] INSPECTION, CLEANING AND REPLACEMENT OF AIR CLEANER

⚠ WARNING

- **Conducting inspection/cleaning maintenance while the engine is running may allow the entry of rubbish into the engine and damage the engine. Conduct after stopping the engine.**
- **When using compressed air, rubbish can fly in all directions and may cause personal injuries. Wear goggles, dust mask and other protective equipment.**

INSPECTION

If the transparent window of dust indicator (1) shows a red piston, clean the air cleaner element.

CAUTION

Until the transparent window of dust indicator (1) shows a red piston, do not clean the air cleaner element.
If the element is frequently cleaned before the red piston appears, the air cleaner fails to show its true performance and cleaning efficiency becomes worse.

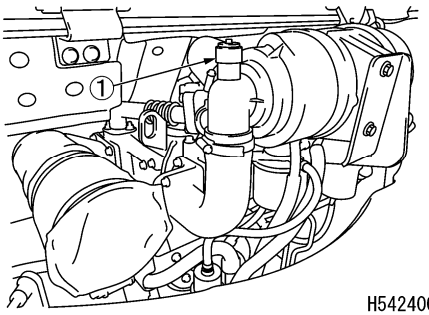

CLEANING/REPLACING THE ELEMENT

1. Open the engine bonnet on the rear side of the vehicle, remove the clip (2), and remove the dust cup (3).
2. Dispose of the rubbish in the dust cup (3) and clean the interior.

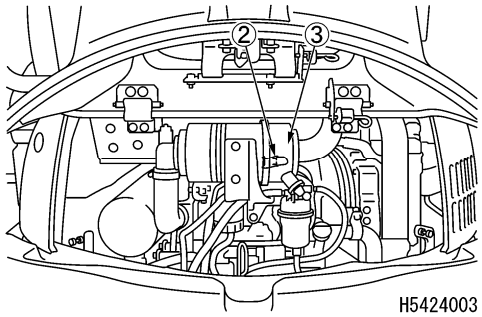

3. Remove the element (4) on the outside of the double element.
4. Clean the inside of the air cleaner body.

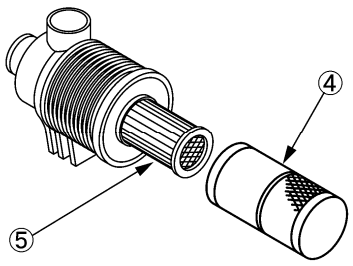

5. Apply dry compressed air (0.29 to 0.49 MPa) from the inner side of the element along the fold. Blow compressed air on the outside of the element along the grooves, and re-blow the air on the inside.

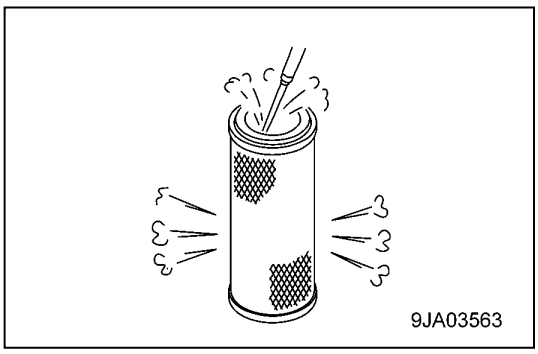

6. Check the inside of the element by illuminating with a light bulb and if any pores or thinned parts are found, replace the element.

CAUTION

Do not tap or bump the element while cleaning it. Avoid the use of an element if the groove, gasket, or sealing is damaged.
Pack the unused elements and store them in a dry place.

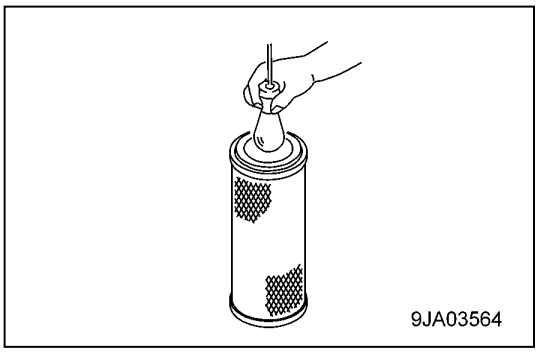

7. Set the cleaned outside element (4).

CAUTION

If the filter still clogs quickly despite having cleaned or replaced outside element (4), replace the inside element (5).

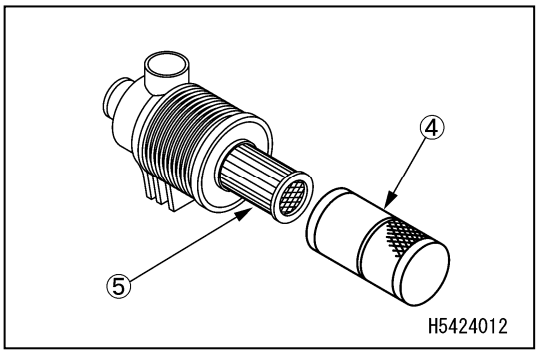

8. Match the match mark on dust cup (3) and the match mark on the air cleaner body and fix with clip (2).

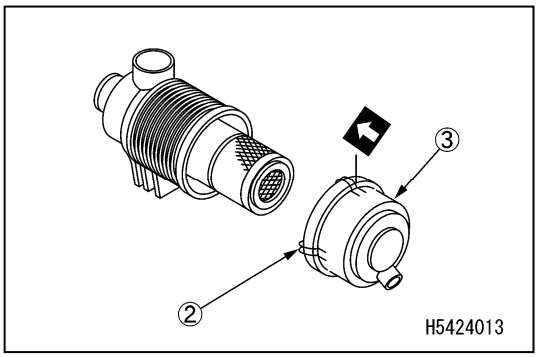

9. Press the button on the dust indicator (1) to return the red piston.

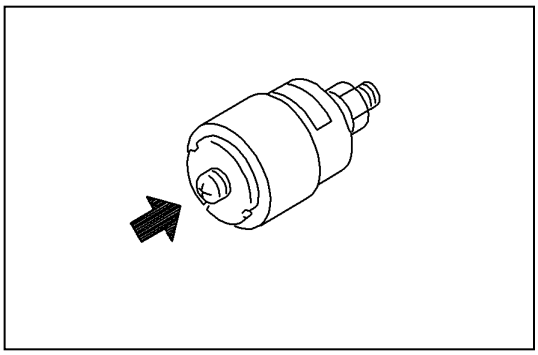

[2] CLEANING INSIDE ENGINE COOLING SYSTEM

⚠ WARNING

- **Coolant temperature is high immediately after stopping the engine and pressure is accumulated in the radiator. Removing the cap in this state for discharging water may cause burns. Allow it to cool down, and then slowly turn the cap to relieve the pressure.**
- **Start and clean the engine. Before standing up from the operator's seat or leaving it, set the lock lever to LOCK.**
- **For starting the engine, refer to sections "Operation 3.1 Inspecting and Adjusting Before Starting Engine" and "Operation 3.2 Starting Engine".**
- **While cleaning, the engine is kept running, and thus it is dangerous to stay in the rear of the engine. While running the engine never enter the rear section of the machine.**

Stop the machine on a level place and perform cooling system cleaning or coolant replacement.

Cooling system cleaning and coolant replacement should conform to the cycles specified in the following table.

Coolant type	Cooling system cleaning and replacement
Super coolant AF-NAC	Every 2 years (in fall) or every 2000 hours, whichever falls first

While the mixing proportion of coolant varies with temperature, a volumetric proportion of 30% at a minimum is required.

Even in areas where anti-freezing is not needed, use the super coolant at a minimum proportion of 30% to prevent corrosion of cooling system.

The mixing proportion of water and coolant is determined with respect to past minimum temperatures, in accordance with "Mixing proportion of water and coolant" shown below. For actual mixing, set temperature approx. 10°C lower than minimum temperature.

Freezing temperature of 100% undiluted super coolant is -15°C. Be careful not to store the undiluted super coolant below -15°C.

TABLE OF MIXING PROPORTION OF WATER AND SUPER COOLANT

Min. temperature (°C) / Mixed quantity (L)	-10 or more	-15	-20	-25	-30
Super coolant quantity	1.7	2.0	2.3	2.5	2.8
Water amount	3.8	3.5	3.2	3.0	2.7

⚠ WARNING

- **Since the undiluted super coolant is flammable, be cautious of fire.**
- **The super coolant is toxic. When removing the drain plug, be careful not to get exposed to splashes of the super coolant solution. If it gets in the eyes, wash immediately and thoroughly with water and seek medical attention.**
- **The disposal of cooling water added with the super coolant discharged when replacing the cooling water and repairing the radiator should be consigned to a specialized subcontractor, or contact us or our sales service agency. Since the super coolant is toxic, never drain it into drainage or sprinkle it on the ground.**

https://truckmanualshub.com/

CAUTION

For the coolant, use genuine Maeda super coolant (AF-NAC). Use of any other coolants than genuine Maeda super coolant (AF-NAC) is not recommended in principle.

Always use tap water when diluting. Contact us or our sales service agency if river water, well water, or water through the small water-supply system is necessarily substituted for tap water.

The mixing proportion of super coolant is recommended to be controlled by using the super coolant concentration meter.

Provide a container with a capacity of 5.5 litres or more for the coolant.

1. Open the gravel cover on the right side of the vehicle.
2. Ensure that the surface temperature of the radiator cap (1) is as low as can be touched with a bare hand, and slowly turn it until it comes into contact with the stopper to relieve the internal pressure.
3. Further, remove the radiator cap (1) while turning it until it comes into contact with the stopper.
4. Open the cover (2) on the lower right side of the vehicle.
5. Place a container underneath the drain valve (3) and the engine cylinder block drain plug (4) to collect the coolant.
6. Open the drain valve (3) and drain the coolant. Remove the drain plug (4) and drain the coolant.
7. After draining, close the drain valve (3) and the drain plug (4), and inject tap water; when the radiator is filled with water, start the engine, put it in low idling state, raise the water temperature to 90 ºC, and run it for approximately 10 minutes.
8. Stop the engine, open the drain valve (3), remove the drain plug (4), and drain the coolant.
9. After draining, clean it using cleaning agent. Clean according to instructions provided on the cleaning agent used.
10. Close the drain valve (3) and wrap a sealing tape around the drain plug (4) to close it.
11. Inject super coolant and tap water from the water inlet up to the mouth. For the mixing proportion of water and the super coolant, refer to the “Table of mixing proportion of water and super coolant”.

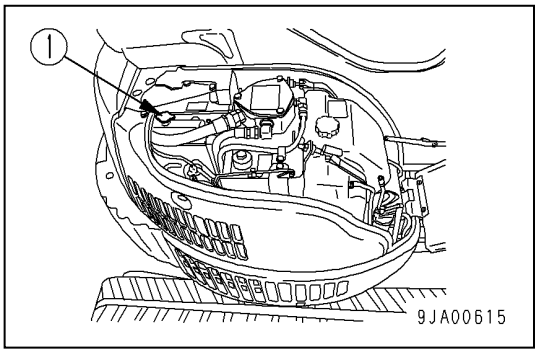

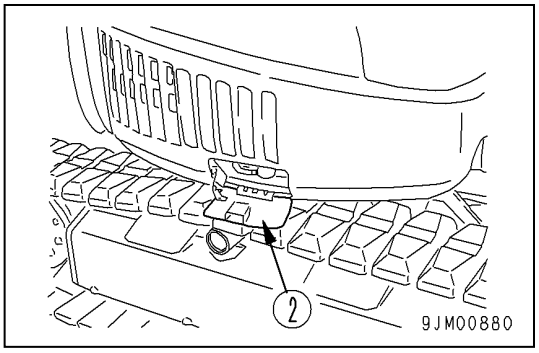

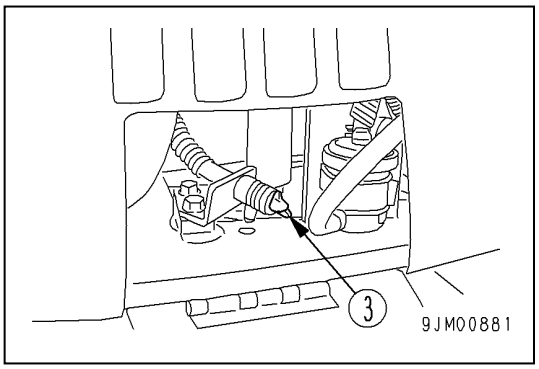

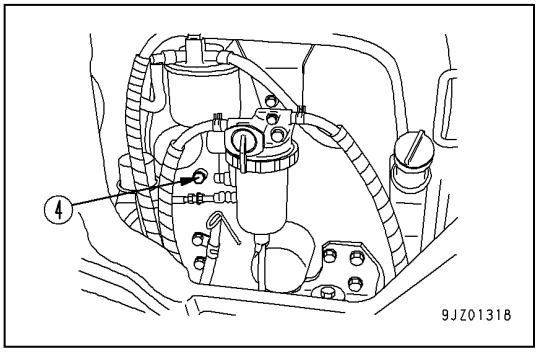

https://truckmanualshub.com/

12. To remove air mixed into the coolant, operate at low idling for 5 minutes, and a further 5 minutes at high idling. (Keep the coolant cap off at this time.)
13. Drain the coolant from the sub-tank (5), clean the interior of the sub-tank, and fill with coolant up to the middle point of FULL-LOW.
14. Stop the engine, wait approximately 3 minutes, fill with tap water up to near the water inlet, and tighten the cap.

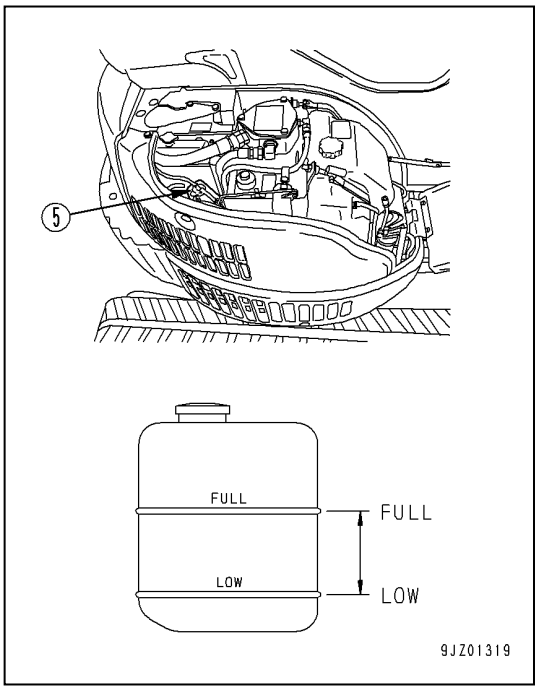

https://truckmanualshub.com/

[3] INSPECTION OF BATTERY ELECTROLYTE LEVEL

Carry out before starting the machine.

⚠ WARNING

- **Do not use the battery with its electrolyte level kept below LOWER LEVEL (minimum electrolyte level line). The deterioration inside the battery is promoted, and not only the battery life is shortened, but also cause the battery to burst (explode).**
- **The battery produces combustible gas and can be explosive. Do not put fire close to the battery.**
- **The battery fluid is a hazardous substance. Keep it away from your eyes and skin. Should it come into the contact with eyes or skin, wash the affected area with plenty of water and consult a physician immediately.**
- **Do not refill the electrolyte above the upper limit "UPPER LEVEL" (maximum electrolyte level line). Otherwise, the electrolyte may spill, damaging the paintwork or corroding parts.**

CAUTION

Purified water (e.g. commercial battery replenisher) should be refilled before starting the work next day to avoid freezing.

Be sure to perform a battery electrolyte level check at least once a month according to the following standard.

WHEN INSPECTING ELECTROLYTE LEVEL FROM BATTERY SIDE

Check in the following method if the electrolyte level can be checked from the side of the battery.

1. Open the gravel cover on the right side of the vehicle.
2. Clean the periphery of the electrolyte level line with a cloth soaked in water and check that the electrolyte level is between "UPPER LEVEL" (highest electrolyte level line: U.L.) and "LOWER LEVEL" (lowest electrolyte level line: L.L.).
   If a dry cloth is used for cleaning, the battery may ignite and explode due to static electricity.

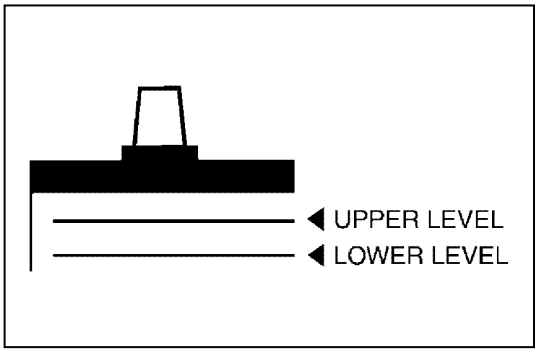

3. When the electrolyte level drops below halfway between U.L. and L.L., immediately remove the cap (1) and pour purified water (e.g. commercial battery replenisher) up to U.L.
4. Securely tighten the cap (1) after refilling.

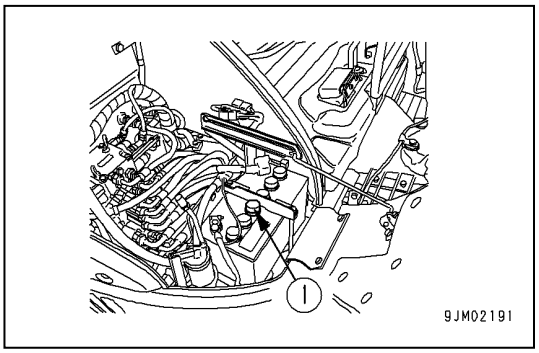

NOTES

If purified water should be refilled up to above the U.L., use a syringe or similar to siphon off to U.L. For the extracted liquid, after neutralizing it with baking soda or similar, wash it away with plenty of water.
Or consult us or our sales service agency, or battery manufacturer.

https://truckmanualshub.com/

WHEN ELECTROLYTE LEVEL CANNOT BE CHECKED FROM SIDE OF BATTERY

Check in the following method if the electrolyte level cannot be checked from the battery side or there is no indication of “UPPER LEVEL” on the side.

1. Open the gravel cover on the right side of the vehicle.
2. Remove the cap (1) on the top face of the battery and look into the liquid filling opening (2) to check. If the electrolyte level does not reach the sleeve (3), be sure to refill purified water (e.g. commercial battery replenisher) up to the bottom of the sleeve (maximum electrolyte level: UPPER LEVEL).
   (A) Proper amount:
   As the electrolyte level reaches the bottom of the sleeve, it swells due to surface tension and the plate looks contorted.
   (B) Small amount:
   As the electrolyte level does not reach the bottom of the sleeve, the plate does not look contorted and looks plate-like in shape.

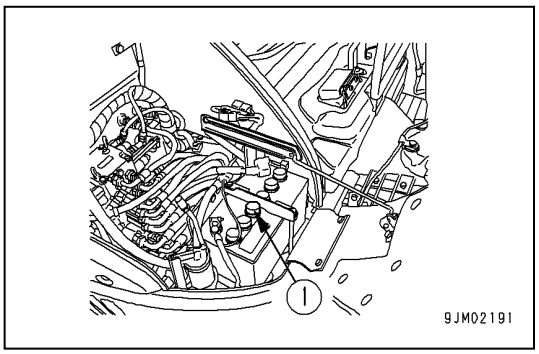

3. Securely tighten the cap (1) after refilling.

NOTES
In the unlikely event that purified water is replenished to above the bottom of the sleeve, use a syringe or similar to remove until the electrolyte level reaches up to the bottom of the sleeve. For the extracted liquid, after neutralizing it with baking soda or similar, wash it away with plenty of water. Or consult us or our sales service agency, or battery manufacturer.

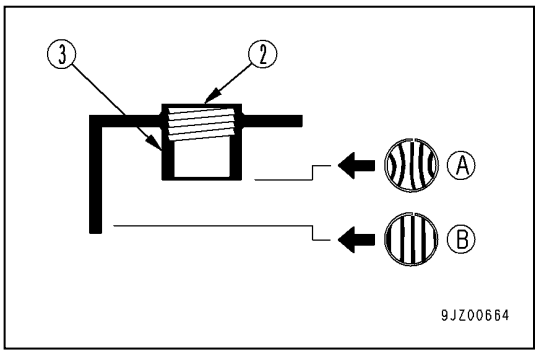

WHEN ELECTROLYTE LEVEL CAN BE CHECKED BY INDICATOR

If the electrolyte level can be checked by the indicator, etc., follow the instruction.

https://truckmanualshub.com/

[4] CLEANING ELEMENT OF WATER SEPARATOR

⚠ WARNING

Keep away from flame.

- Have a filter wrench available.
- Prepare a container to receive the drained fuel.

1. Open the engine bonnet.

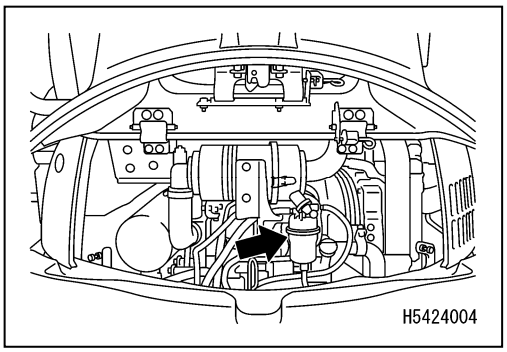

2. Turn the handle (1) of the water separator to the closed position (A).
3. Loosen the drain plug (2), drain the accumulated moisture to the container until the red ring (3) hits the bottom, and then close the plug (2).
4. Loosen the ring (4) using a filter wrench, remove the element cup (5), and then remove the element (6). Take care not to lose the red ring (3) inside the cup.
5. Clean the interior of the cup (5) and the element (6) with diesel fuel or cleaning oil.
6. Install the element (6) after cleaning.
7. Put the red ring (3) into the element cup (5), fill it with fuel, attach it to the filter base, and tighten the ring (4). Tightening torque: 14.7 to 19.6 N·m (1.5 to 2.0 kg·m)
8. Turn the handle (1) of the water separator to the open position (B).
9. Remove the air after cleaning the water separator. For air removal procedure, refer to “Inspection and Maintenance 10.7 Maintenance Every 500 Hours [2] Replacement of Main Fuel Filter”.

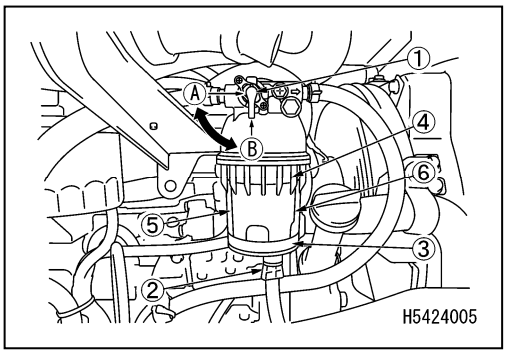

https://truckmanualshub.com/

[5] DRAINING OF CONTAMINANT WATER/DEPOSITS IN FUEL TANK

CAUTION

Do not use trichloroethylene when cleaning inside the tank.

1. Carry out before starting the machine.
2. Prepare a container to receive the drained fuel.
3. Open the cover (1) on the right side of the vehicle.

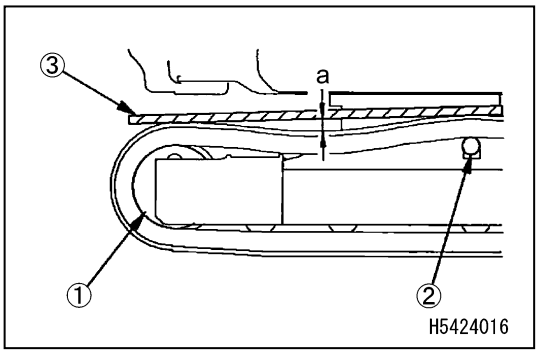

4. Open the drain valve (2) on the lower part of the tank to drain deposits and water accumulated at the bottom together with the fuel.
   At this time, be careful not to be covered with fuel.
5. Close the drain valve (2) when only clean fuel flows out.
6. Close the cover (1).

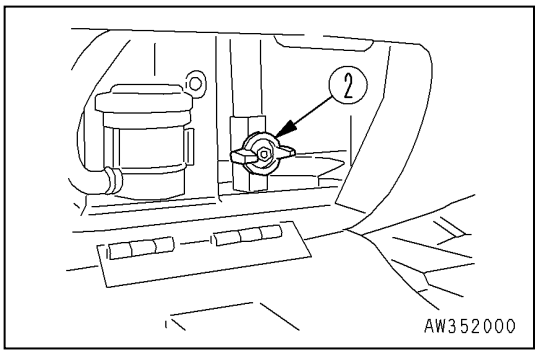

https://truckmanualshub.com/

[6] INSPECTION/ADJUSTMENT OF CRAWLER BELT TENSION

Since the abrasion state of the pins and bushes on the undercarriage changes depending on working conditions and soil quality, check the tension of the crawler belt at all times, and keep the standard tension.

Conduct inspection/adjustment on hard level ground.

INSPECTION

1. Set the engine to the low idling and move the machine forward by the contact length and stop slowly.
2. Put a square timber (3) reaching from the idler (1) to the upper track roller (2) on the crawler belt.
3. Measure the maximum slack between the upper side of the rubber track and the lower side of the lumber.
   - Reference value for amount of slack
     Slack amount a is normal if it is between 5 and 15 mm.

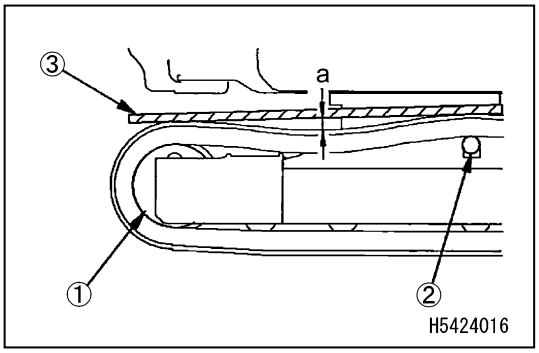

If the tension is not within the standard, make adjustments as below.

ADJUSTMENT

⚠ WARNING

Do not loosen the plug (1) for more than one rotation. If it is loosened more than one rotation, the plug (1) can pop out due to the high-pressured grease inside. Do not loosen any other parts than the plug (1). Also, make sure you are not facing the mounting direction of the plug (1).
If the crawler belt is not loosened after performing the procedures above, ask us or our sales service agency for repair.

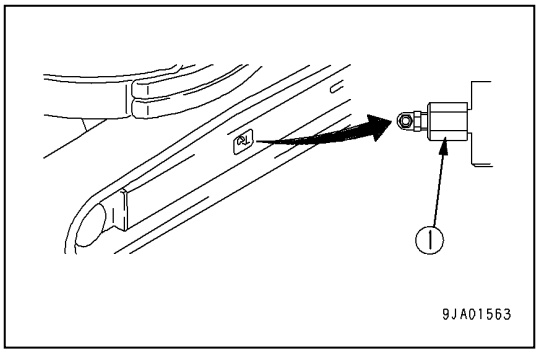

https://truckmanualshub.com/

TO INCREASE TENSION

Have a grease gun available.

1. From the grease fitting (2), pressure fit grease using the grease gun.
2. Set the engine speed to low idling, move the machine forward (by one crawler belt ground contact length) slowly, and then stop it to check that the tension is appropriate.
3. Inspect the crawler belt again, and if the tension is not appropriate, make another adjustment.

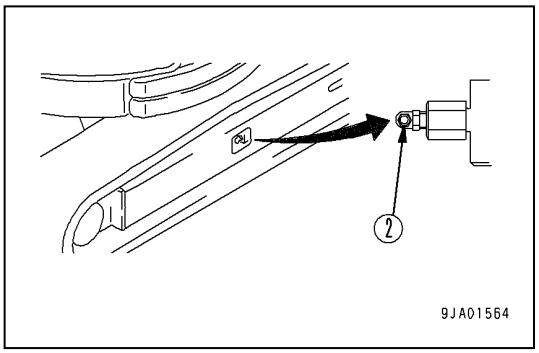

4. Grease may be pressure fitted until S becomes 0 mm. However, if it is still loose, the pins/bushes have become worn, and the pins/bushes need to be inverted or replaced.
   Ask us or our sales service agency for repair.

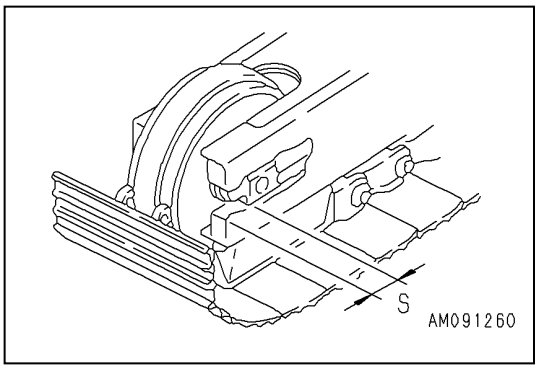

LOOSENING TENSION

⚠ WARNING

It is highly dangerous if you discharge the grease not following the procedure below.
If the crawler belt does not loosen, ask us or our sales service agency for repair.

1. Loosen the plug (1) little by little to discharge the grease.
2. When loosening the plug (1), loosen it for a maximum of one turn.
3. If the grease is not discharged smoothly, move the machine back and forth a little.
4. Tighten the plug (1).
5. Set the engine speed to low idling, move the machine forward (by one crawler belt ground contact length) slowly, and then stop it to check that the tension is appropriate.
6. Inspect the crawler belt again, and if the tension is not appropriate, make another adjustment.

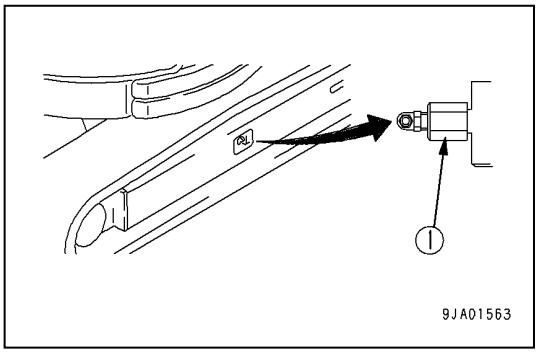

https://truckmanualshub.com/

[7] VENTING AIR IN HYDRAULIC CIRCUITS

CAUTION

Running the pump without filling the pump case with hydraulic oil cause an early damage of pump after giving off abnormal noise. Be sure to exercise the air venting.

1. Venting air in piston pump
   1) Remove the oil filler cap of the hydraulic oil tank.
   2) Loosen the venting bleeder (1) of the pump to ensure that oil is oozing out of the bleeder (indicating the completion of venting.)
   3) After venting is completed, tighten the venting bleeder.
      Tightening torque: 7.9 ± 0.9 N·m (0.8 ± 0.1 kg·m)
   4) Tighten the oil filler cap of the hydraulic oil tank.

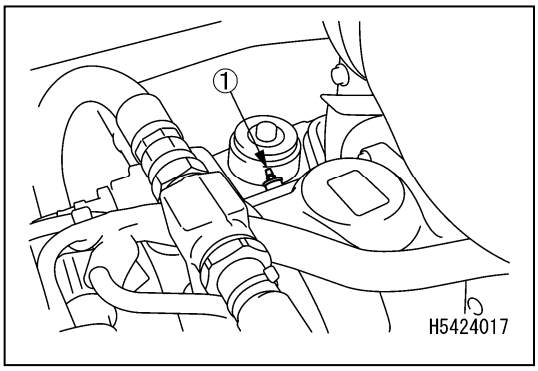

CAUTION

Omitting pressurisation of the hydraulic tank causes the pump to suck air, resulting in adverse effect on the units.

   5) Set the boom in the completely retracted and fully raised state, mount the oil filler cap and pressurise the tank.
   6) After venting, refer to “Operation 3.1.2 Pre-operation Inspection [5] Inspection of Oil Level and Refilling Oil in Hydraulic Oil Tank” to check the oil level in the hydraulic oil tank.

CAUTION

Revving the engine at the outset and allowing the cylinder to move the stroke end may damage piston packing or other parts because of air inclusion in the cylinder.

2. Start the engine by referring to “Operation 3.2 Starting Engine”, and then keep at low idling for 10 minutes before starting work.
3. Venting the cylinder
   1) While keeping the engine at low idling and refraining the cylinder from reaching the stroke end (by stopping it approximately 100 mm before the stroke end), repeat telescoping for 4 to 5 times.
   2) Next, allow each cylinder to reciprocate to the stroke ends for 3 to 4 times.
   3) Further allow each cylinder to reciprocate to the stroke ends for 4 to 5 times to vent the air thoroughly.

CAUTION

- **If there are venting instructions specified by the manufacturer in the attachment itself, vent the air as specified.**
- **After completion of air venting, stop the engine once to allow it to be standing still for 5 minutes, and then start the engine again. This releases the bubbles within the oil tank.**
- **Check for oil leakage, and wipe clean spilt oil.**

https://truckmanualshub.com/

[8] WIRE ROPE REPLACEMENT

⚠ WARNING

Always put on thick leather work gloves when replacing the wire rope.

CAUTION

- **The diameter of the wire rope is measured at points where the wire repeatedly runs through the sheave. A mean value needs to be determined through 3 way measurement. (A measurement should be performed not only at one point but at several points, spacing between the points.)**
- **Do not use old wire rope regardless of the frequency of use.**

NOTES

Refer to "Operation 4.1 Criteria for Wire Rope Replacement" on the replacement criteria for the wire rope.

REMOVAL OF WINCH WIRE ROPE

Use the following procedure to remove the wire rope.

1. Place the machine on a level and firm surface.
2. Shift the right work equipment operation lever (3) into "Raise" (pull to the left) to raise the boom slightly.
3. Shift the right control lever into "Down" (push it forward) to lower the hook block near to the ground.
4. Shift the right control lever into "Lower" (push to the right) to rest the hook block on the ground.
5. Remove the wedge socket fixing bolt (2), then remove the wedge socket (3) by pulling out the wedge socket pin (1).
6. Remove the wire clip (4).

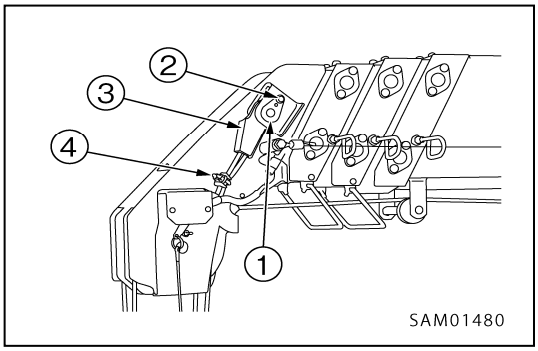

7. Pull the wire rope (5) out of the wedge socket (3), following the procedure provided below.
   (1) Bring a 4 to 6 mm round bar (6) into contact with the rope wedge (7).
   (2) Remove the rope wedge (7) by lightly tapping the round bar (6) with a hammer in the direction indicated by the arrow (a).
8. Shift the right machine operation lever into "Down" (push it forward) to wind up the wire rope (5) from the winch drum.

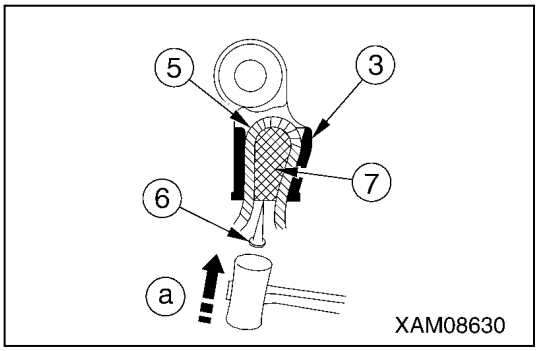

https://truckmanualshub.com/

9. After winding up the wire rope from the winch drum, detach the end of the wire rope (5) fixed to the winch drum (8) by following the procedure provided below.
   1) Bring a 4 to 6 mm round bar (6) into contact with the rope wedge (9).
   2) Remove the rope wedge (9) by lightly tapping the round bar (6) with a hammer in the direction indicated by the arrow (b).

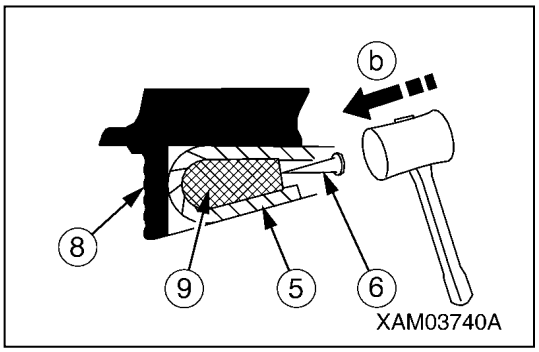

10. Wind up the remaining wire rope (5) completely.

Removal of the winch wire rope is completed.

https://truckmanualshub.com/

INSTALLATION OF WINCH WIRE ROPE

⚠ WARNING

Be sure to attach the rope wedge properly to secure the wire rope. Serious accidents may occur if the wire rope is detached during crane operations.

CAUTION

- **Avoid irregular winding of the wire rope on the winch drum.**
- **Always hoist an object (2.9 to 4.9 KN [300 to 500 kg]) with the boom and jib extended and raised fully immediately after attaching a new rope. Repeat raising and lowering the hook several times until the new rope conforms.**
- **The wire rope is coiled. Exercise caution not to form a kink in the rope when winding it up. Be sure to unravel by rotating the rope to pull it out of the winch drum.**

Use the following procedure to attach the wire rope.

1. Hold the end of wire rope and draw the wire rope (5) through the load sheave at the tip of boom (10), wire guide (11) of boom No. 2 and 3, and snap sheave (12).

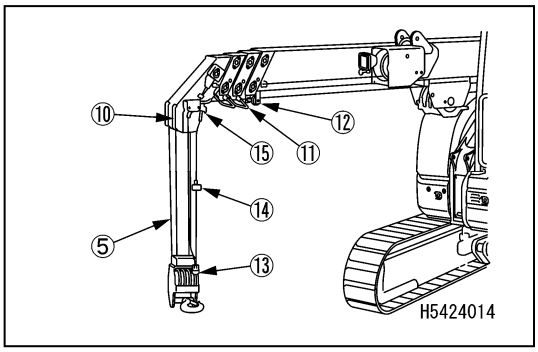

2. Draw the wire rope (5) through the rope attachment hole of the winch drum (8). Secure the wire rope (5) to the winch drum (8), following the procedure provided below.
   (1) Draw the slackened wire rope (5) through the winch drum (8).
   (2) The rope wedge (9) should be in position (a). Pass the wire rope (5) around the rope wedge and yank at the rope in the direction indicated by the arrow.
   Adjust the length of the wire rope (5) to keep the end of the wire rope from protruding from the narrow hole in the winch drum (8).

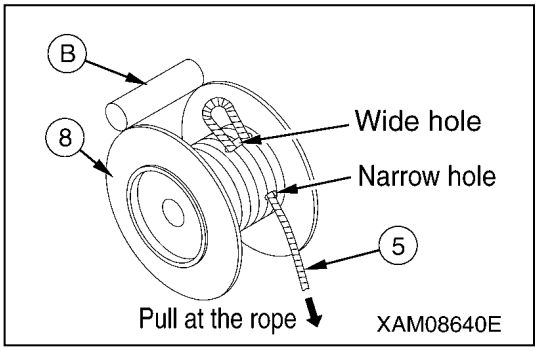

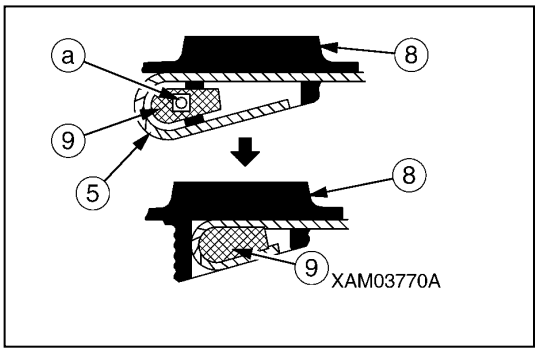

3. Slowly shift the right machine operation lever into “Up” (pull toward you) to wind up the wire rope (5) on the winch drum (8).
   At this time, the wire rope should be wound up in between the irregular winding prevention roller (B) and the winch drum, leaving about 10 m of wire rope from the end of the boom.

4. In accordance with the number of falls of the wire rope, the wire rope is passed through the load sheave (10) at the tip of the boom, then the hook block sheave (13), the weight of the over-hoisting prevention device (14), and the guide sheave (15), as shown below.

4 falls	2 falls	Single fall
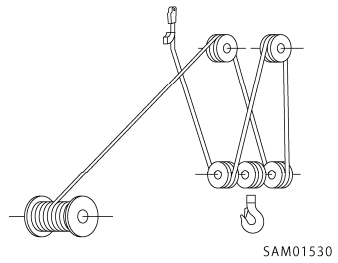 SAM01530	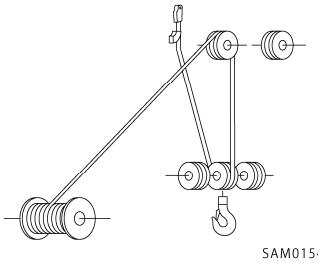 SAM01540	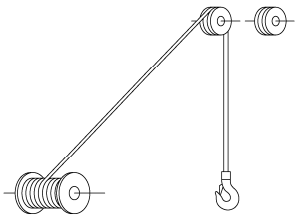 SAM01550

5. Secure the end of the wire rope (5) to the wedge socket (3), following the procedure provided below.
   1) Draw the wire rope (5) through the wedge socket (3) as shown in the diagram to the right.
   2) The rope wedge (7) should be in position (a), and yank at the wire rope (5) in the direction indicated by the arrow.

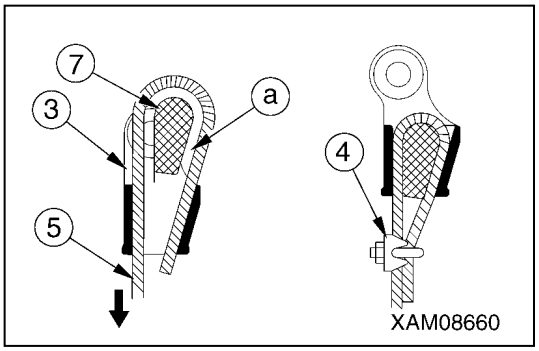

6. Attach the rope clip (4) to the wire rope (5).
7. Secure the wedge socket (3) to the boom with the wedge socket pin (1), and tighten the wedge socket pin fixing bolt (2).

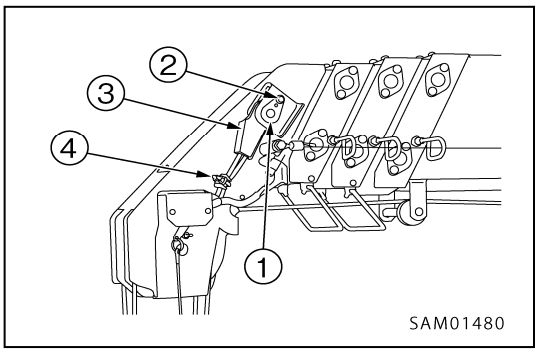

8. Shift the right machine operation lever into “Raise” (pull to the left), or operate the left machine operation lever to “Extend” (push forward) to raise the hook block.

NOTES
Winch operation is allowed only after the hook block is raised, as the winch drum may be wound irregularly.

9. With the boom extended and raised fully, shift the right machine operating lever into “Down” (push it forward) to adjust the wire rope (5) until 3 to 4 turns of wire are left on the winch drum (8).
10. With the wire rope (5) held under tension, shift the right machine operating lever into “Raise” (pull it toward you) to wind up the wire rope (5) onto the winch drum (8).

https://truckmanualshub.com/

INSPECTION/ADJUSTMENT OF THE BOOM TELESCOPING WIRE ROPE

When the boom extending wire rope shows a condition as shown in the figure below, adjust as follows:

1. Make sure the boom is fully retracted.
2. Remove the mounting bolts (1) (3 bolts) on the boom tip and then remove the cover (2).

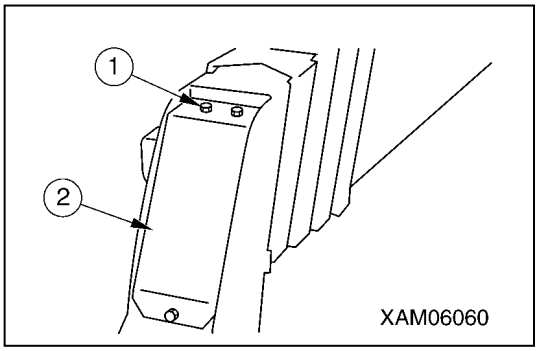

3. Remove the lock bolt (6) on the tip of extension cylinder inside the boom and turn the boom extending wire adjusting bolt (9) clockwise.
   The tension of the boom extending wire (8) is normal, if the No. 4 boom is extended when the adjusting bolt (9) is turned.
   If the No. 4 boom is not extended, refer to the section, “Inspection and Maintenance 10.3 Irregular Maintenance (Adjustment of Boom Telescoping Wire Rope)” and adjust it.

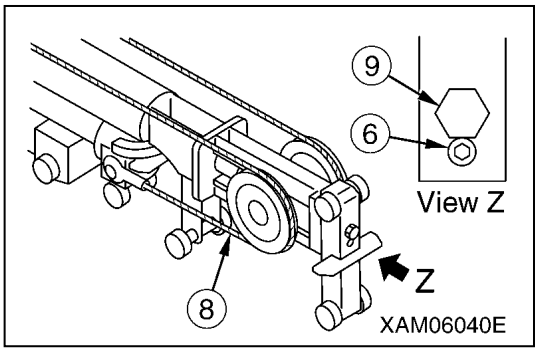

4. Check for a 5 mm or more clearance between booms No. 3 and No. 4 (clearance (a) on the diagram on the right) when the booms are fully retracted in a horizontal position.
   If there is a clearance of 5 mm or more, refer to section “Inspection and Maintenance 10.3 Irregular Maintenance (Adjustment of Boom Telescoping Wire Rope)”, and adjust it.

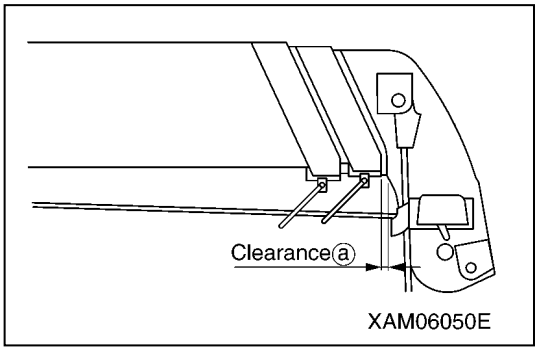

https://truckmanualshub.com/

ADJUSTMENT OF BOOM TELESCOPING WIRE ROPE

CAUTION

When adjusting each wire rope, be careful of overtension of the wire ropes.

One boom extending wire rope and one retracting wire rope are used in this machine.

Adjustment of these two wire ropes must conform to the specified procedure. Be sure to follow the following adjustment procedure.

1. With the booms fully retracted in a horizontal position, extend the telescoping booms for approx. 2 m.

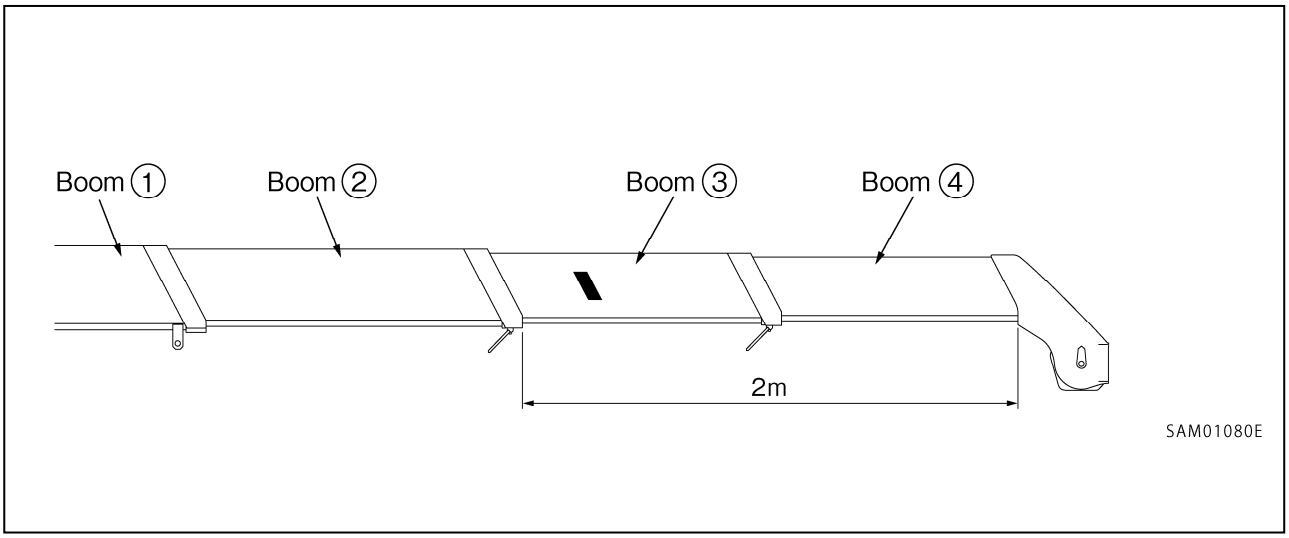

2. Retract the booms slowly and completely.
   Measure clearance (a) in this condition to check the following for proper adjustment.
   - If the clearance (a) is 5 mm or more, adjust the No. 4 boom retracting wire rope (5).
   - If the clearance (a) is “0 (zero)”, adjust according to “Adjustment of No. 4 boom extending wire rope (8)” of step 5.

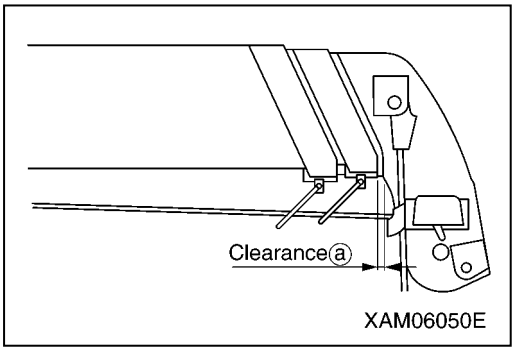

3. Remove the mounting bolts (1) (3 bolts) on the boom tip and then remove the cover (2).

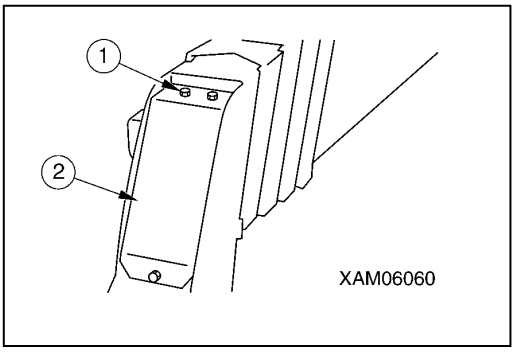

https://truckmanualshub.com/

4. Adjustment of No. 4 boom retracting wire rope (5)
   1) With the lock nut (3) loose, tighten the right and left adjusting nuts (4) evenly in a direction where the retracting wire rope (5) becomes tight (clockwise) until the clearance (a) is closed.
   2) If the clearance (a) is 5 mm or more, or the retracting wire rope is slacked after performing operation and measurement in steps 1 and 2, readjustment is required.

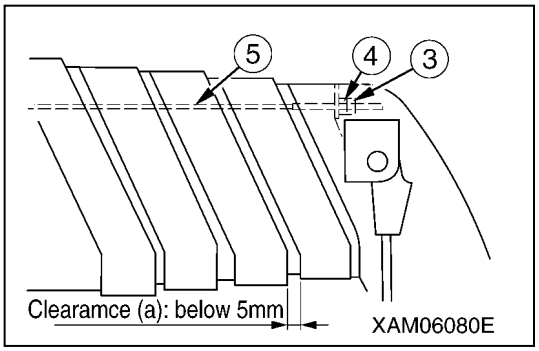

5. Adjustment of No. 4 boom extending wire rope (8)
   (1) With the lock nut (6) loose, tighten the right and left adjusting nuts (9) evenly in a direction where the No. 4 boom extending wire rope (8) becomes tight (clockwise) until just before the No. 4 boom begins to extend.
   (2) Re-tighten both the right and left adjusting nuts (4) of the No. 4 boom retracting wire rope (5).
   (3) Fix the adjustment nuts (4) of the No. 4 boom retracting wire rope (5) with the lock nut (3).
   (4) Fix the adjustment bolts (9) of the No. 4 boom extending wire rope (8) with the lock bolt (6).

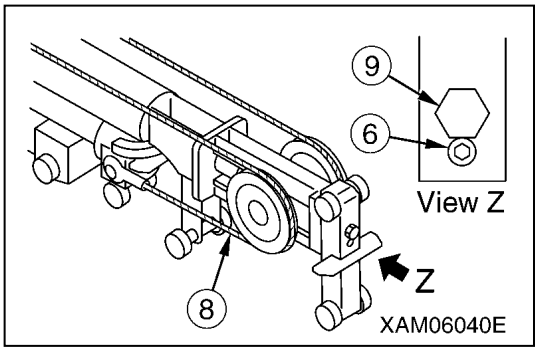

6. Install the cover (2) on the boom tip with the mounting bolts (1) (3 bolts) after adjustment.

https://truckmanualshub.com/

10.4 MAINTENANCE EVERY 50 HOURS

[1] GREASING MACHINE UNITS

CAUTION

- **Grease type varies with greasing points. Failure to grease properly may shorten the machine life.**
- **Greasing a new machine is required once every 10 hours until the machine attains the first 100 hours of operation that initial fit emerges.**

• Use proper grease specified below according to the greasing points.

No.	Greasing point		Grease type
1	Greasing of the derricking cylinder bottom mounting pin	1 place	Lithium grease
2	Greasing of the derricking cylinder rod mounting pin	1 place	
3	Greasing of the boom mounting pin	1 place	
4	Greasing the guide sheave	1 place	
5	Greasing the wire retaining roller pin	2 places	
6	Greasing hook block	1 places	
7	Greasing of the boom slide plate	6 places	Neo grease (grease for boom)
8	Greasing of both sides and underside of the boom	Each boom	
9	Greasing of the winch wire rope	1 piece	Rope oil

1. Using the grease gun, inject grease through corresponding grease plugs indicated with the arrow (refer to next page) of the above table “No. 1–7”.
2. Wipe off old grease squeezed out after greasing.
3. Shift the left work equipment operation lever into “Extend” (push it forward) to extend the boom for greasing both sides and underside of the boom and wire rope.
4. Apply red rope grease to prevent wire rope abrasion and rust formation.
   With the rope surface cleaned, grease the rope with a brush.

https://truckmanualshub.com/

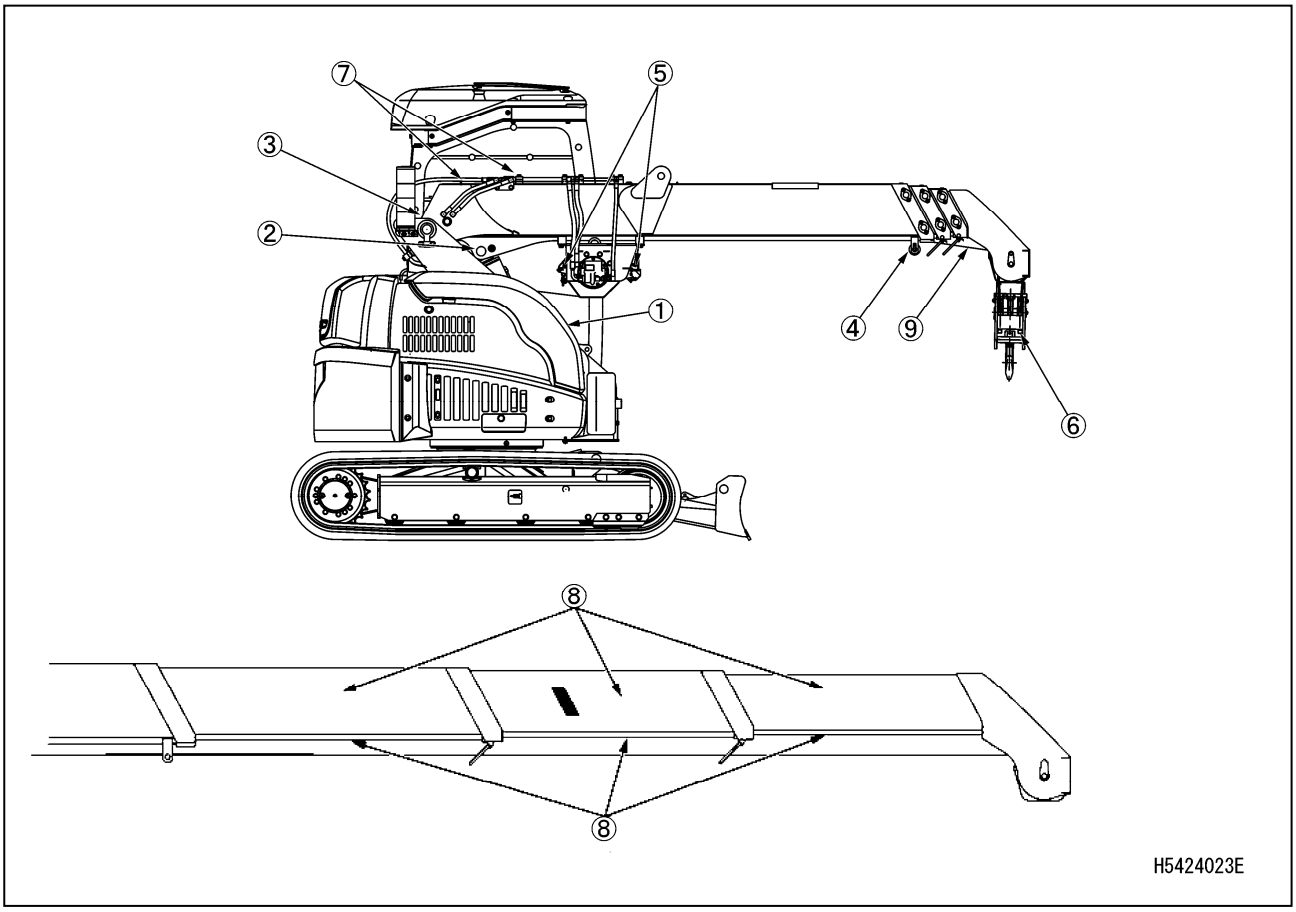

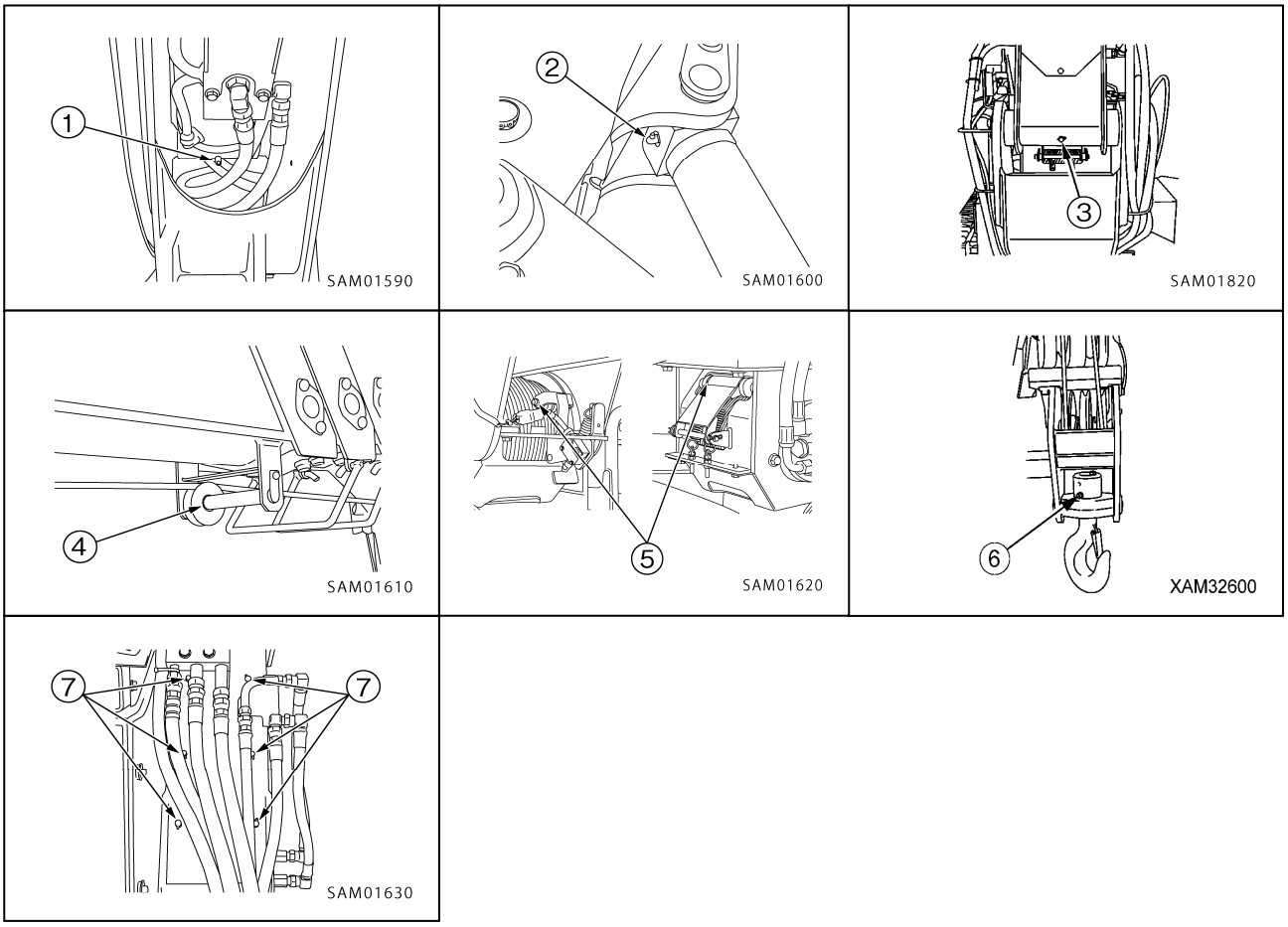

https://truckmanualshub.com/

10.5 MAINTENANCE EVERY 100 HOURS

[1] GREASING MACHINE UNITS

Perform this maintenance along with maintenance every 50 hours.

⚠ WARNING

Do not slew while greasing the swing circle and the swing pinion.

CAUTION

- **Greasing a new machine is required once every 10 hours until the machine attains the first 100 hours of operation that initial fit emerges.**
- **If you hear any noise at the greasing point, grease immediately regardless of the inspection and maintenance time.**

(1) Swing circle (1 position)

(2) Swing pinion (1 position)

Grease the swing pinion while rotating the vehicle 90º at a time to change the position to 4 directions.

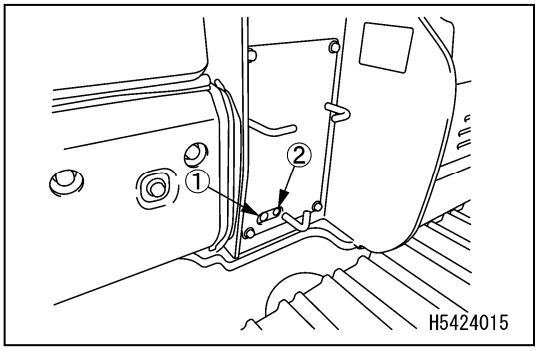

https://truckmanualshub.com/

10.6 MAINTENANCE EVERY 250 HOURS

Perform this maintenance in tandem with maintenance every 50 and 100 hours.

[1] REPLACEMENT OF HYDRAULIC OIL RETURN FILTER CARTRIDGE

⚠ WARNING

- **As parts and oil become hot immediately after the engine stop, you may suffer burns. Begin work after the temperature has dropped.**
- **When removing the cap of oil inlet, there is a risk of oil spurting out. Take care to turn it slowly while removing internal pressure.**

1. Open the gravel cover (1) on the right side of the vehicle.

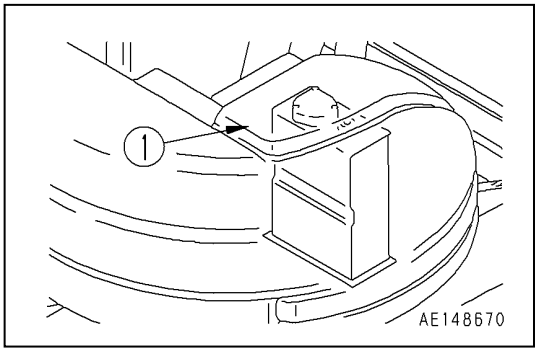

2. Remove the cap of oil inlet (F) to relieve the internal pressure.
3. Loosen the 3 bolts and remove the cover (2). At this time, the cover may jump off because of spring (3); keep pressing the cover down while removing the bolts.
4. Take out the element (5) after removing the spring (3) and valve (4).
5. Clean the removed parts with diesel fuel.
6. Install the new element where the old element (5) was installed.
   Inspect the O-ring to be set between the hydraulic oil tank and cover (2), and replace it if it is scratched.
7. Set the valve (4) and spring (3) on top of the element.
8. Set the cover (2), and while pushing it with hands, mount it with the cover mounting bolts.
9. Set the boom in the completely retracted and fully raised state, mount the oil feed cap and pressurize the tank.
10. Close the gravel cover (1) on the right side of the vehicle.

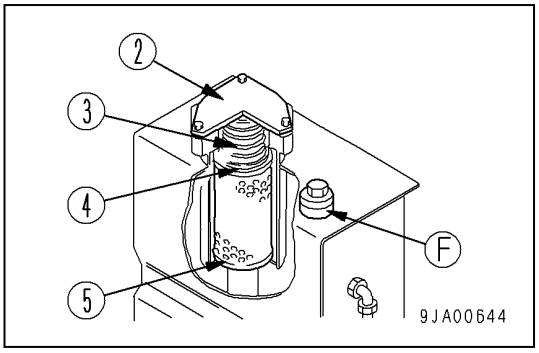

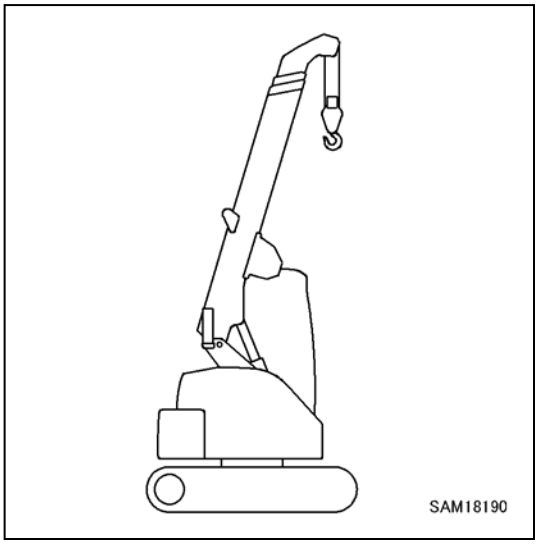

https://truckmanualshub.com/

[2] OIL LEVEL CHECK AND REFILLING IN WINCH REDUCTION GEAR CASE

⚠ WARNING

Oil is at elevated temperatures immediately after engine operation.
Do not remove the port plug immediately. Wait until the oil cools down.

CAUTION

- **Refer to "Inspection and Maintenance 7.1 Use of Fuel and Lubricating Oil According to Temperatures" for the oil to be used.**
- **Use seal tape at the thread of each plug to prevent oil leaks and securely tighten the plug after changing the oil.**

- Oil drain pan: Prepare a container for at least 1 litre.
- Allen key to remove a plug: 8 mm
- Oil replacement quantity in slewing reduction gear case: 0.75 litres

1. Place the machine on a level surface.
2. As shown on the right, fully retract and lower the boom, and make the boom level.

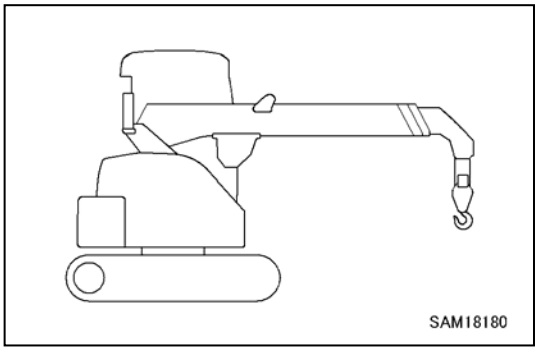

3. Slowly rotate the winch so that the plug (P) is level with the boom.
4. Place a container to collect the drained oil underneath the plug (P).
5. Remove the plug (P) using an Allen key. Oil should be filled up to just below the plug (P) hole.
6. If more is needed, replenish until the gear oil spills from the plug (P) hole.
7. Fit and securely tighten the plug (P) after replenishing oil.

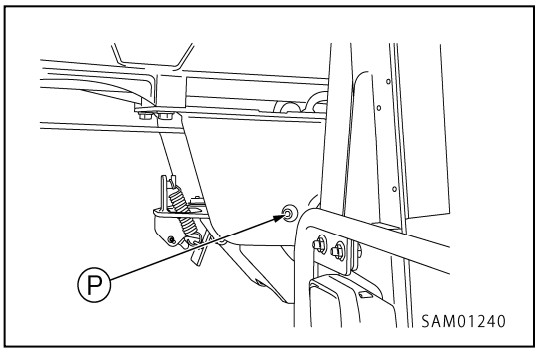

NOTES
Wipe away cleanly whenever the oil spills.

https://truckmanualshub.com/

[3] INSPECTION/ADJUSTMENT OF FAN BELT TENSION

⚠ WARNING

Remember to stop the engine when working.

INSPECTION

1. Check whether the deflection (tension) is in the standard range by pushing the middle of the belt and pulley with a finger (about 98 N [10 kgf]).

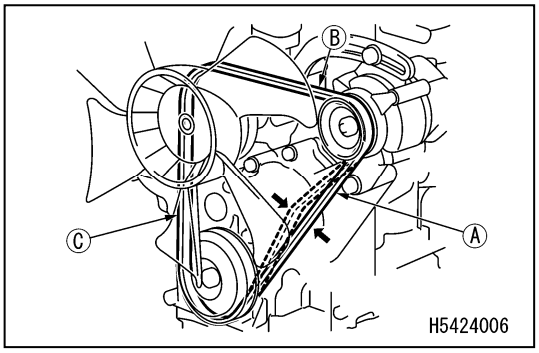

NOTES

- There are three locations to check (A, B and C), but you can check in one location where you can check easily.
- When checking the belt tension, also check for damage to pulleys, wearing of V-groove and belt. Especially check if the belt is touching the bottom of the V-groove, and if it is, replace the belt.

Standard slack of belt in use (mm)		
(A)	(B)	(C)
10 – 14	7 – 10	9 – 13

NOTES

"Belt in use" refers to the belt attached to the engine and operated for more than five minutes.

2. If the belt slack is not within the range of standard slack, adjust the slack (tension) of the belt by referring to the "Tension adjustment" section.

ADJUSTMENT

1. Loosen the alternator fixing bolt (1) and related bolts and nuts.
2. Move the alternator with a wooden bar or the like and adjust the tension.

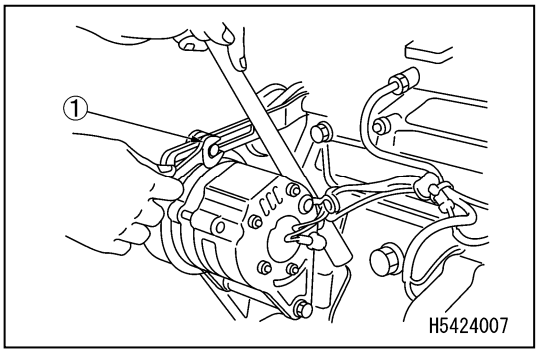

Standard slack of new belt (mm)		
(A)	(B)	(C)
8 – 12	5 – 8	7 – 11

Standard slack of belt in use (mm)		
(A)	(B)	(C)
10 – 14	7 – 10	9 – 13

https://truckmanualshub.com/

3. After adjustment, tighten the relevant bolts and nuts, and finally tighten the fixing bolt (1).

NOTES
If the belt has elongated to the extent that the adjusting allowance is lost or if it has a scar or crack on it, replace it with a new one.

[4] INSPECTION/CLEANING OF RADIATOR FINS

⚠ WARNING

Dust may blow in all directions when compressed air is used. Always wear goggles and mask.

CAUTION

- **To prevent damage on the fins during the use of the compressed air, keep the pressure of the compressed air to 0.19 MPa (1.9 kg/cm²) and apply it away from the fins.**
  Damage on the fins will cause water leakage or overheating.
- **At a dusty worksite, check the fins every day and clean as needed.**

1. Blow compressed air (0.19 MPa [1.9 kg/cm^2] or less) onto the radiator (1), and remove the clogged mud and dirt on the fins.
2. If a large amount of dust adheres to the fins, clean with tap water using neutral detergent.

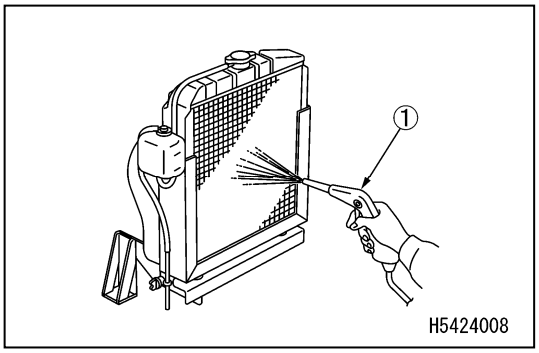

[5] INSPECTION/CLEANING OF AIR CLEANER

Refer to section “Inspection and Maintenance 10.3 [1] Inspection, Cleaning and Replacement of Air Cleaner” for the work procedure.

https://truckmanualshub.com/

10.7 MAINTENANCE EVERY 500 HOURS

Perform this maintenance in tandem with maintenance every 50, 100 and 250 hours.

[1] REPLACEMENT OF ENGINE OIL AND ENGINE OIL FILTER

⚠ WARNING

As parts and oil are hot immediately after the engine is stopped, there is a risk of burns. Begin work after the temperature has dropped.

• Volume of replaced oil in the oil pan: 6.2 litres

• Have a filter wrench available.

Even the operation time is less than 500 hours after 6 months of operation, replace the oil and filter cartridge in 6 months.

Also, replace it when the operation time becomes 500 hours with less than 6 months of operation.

1. Place a drain pan directly underneath the drain plug (P) to receive drained oil.
2. Turn the drain plug (P) slowly to avoid splashing oil on yourself, and drain oil.
3. Check the drained oil and if it contains an unacceptable amount of metal particles or foreign matter, contact us or our sales service agency.
4. Install the drain plug (P).

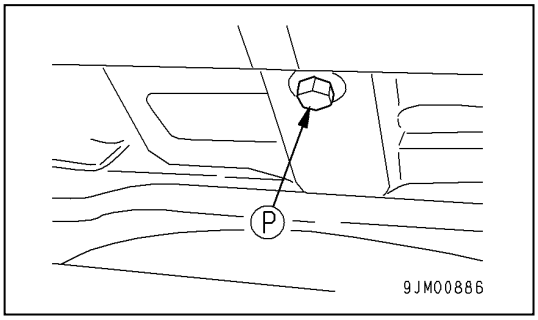

5. Using a filter wrench, turn the filter cartridge (1) to the left to remove it.
6. Clean the filter base and reinstall a new filter cartridge after coating its packing and threaded portion with clean engine oil (or lightly with grease).

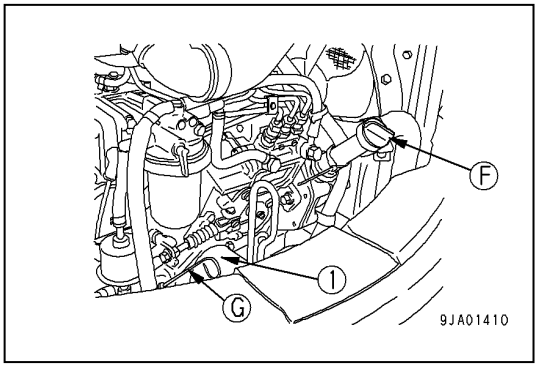

NOTES
Make sure that old packing is not attached to the filter base. If the old packing remains attached, it can cause oil leakage.

7. When reinstalling the filter cartridge, tighten it for 1/2 to 3/4 turns after the packing face comes in contact with the sealing face of the filter base.
8. After replacing the filter cartridge, fill the oil through the oil inlet (F) to the level within the range H-L marked on the level gauge (G).
9. Start and run the engine at idle for approx. 5 minutes and stop the engine. Refer to “Operation 3.1.2 Pre-operation Inspection [2] Inspection of Oil Level and Refilling Oil in Engine Oil Pan” to check that the oil level is between H and L on the level gauge.

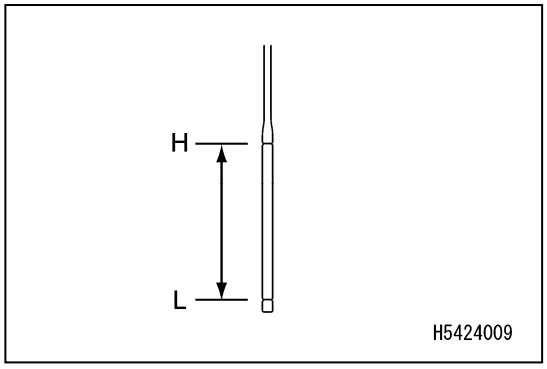

https://truckmanualshub.com/

[2] REPLACEMENT OF MAIN FUEL FILTER

⚠ WARNING

- **Various parts are at elevated temperatures immediately after stopping the engine operation. Always drain the coolant after the engine has cooled down.**
- **Keep away from flame.**

- Have a filter wrench available.
- Have a waste cloth prepared.

1. Open the engine bonnet.
2. Place the waste cloth below the filter cartridge.
3. Turn the handle (1) of the water separator to the closed position (A).
4. Using a filter wrench, turn the filter cartridge (2) to the left to remove it. If fuel is spilt, wipe cleanly with the waste cloth.
5. Clean the filter, fill the new filter cartridge with clean fuel, lightly apply fuel on the packing, and mount the cartridge on the filter base.
6. When installing, tighten about one rotation with a filter wrench after turning it to the right and the packing surface touches the sealing surface of the filter base. Tightening torque: 19.6 – 23.5 N·m (2.0 – 2.4 kg·m)
7. Turn the handle (1) of the water separator to the open position (B).
8. After replacing the filter cartridge, vent the air. Refer to the “Procedure for Air Bleeding” section and vent the air.

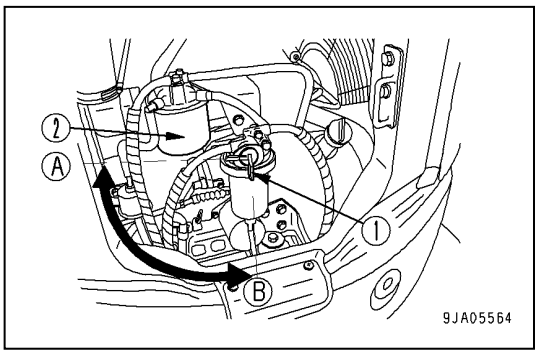

PROCEDURE FOR AIR BLEEDING

1. Fill up the fuel tank with fuel until full.
2. Turn the handle (1) of the water separator to the open position (B).
3. Loosen the air venting bolts (2) of the water separator by turning 2 to 3 times.
4. Tighten the air bleed bolt (2) when bubble-free fuel comes out from the air bleed bolt (2).

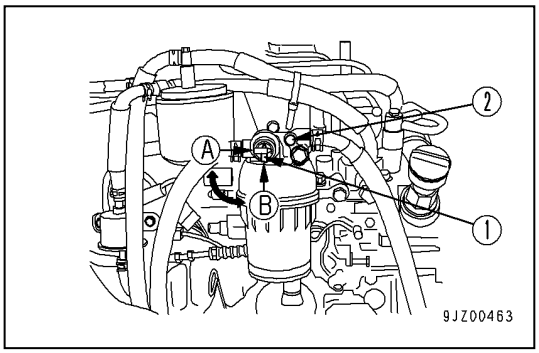

5. Turn the key of the starter switch to the ON position (B) and return it to the OFF position (A) after 10 to 15 seconds.
   Air automatically escapes by automatic air venting device.

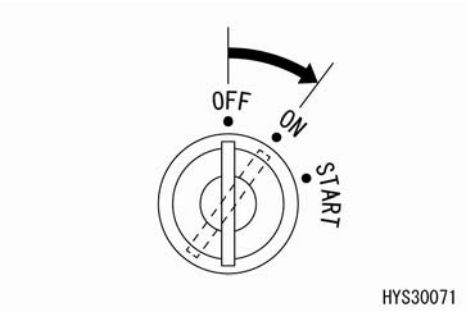

NOTES
The air can be vented in the same way when the fuel runs out.

[3] INSPECTING/REFILLING OIL IN TRAVELLING MOTOR REDUCTION GEAR CASE

⚠ WARNING

- **As parts and oil become hot immediately after the engine stop, you may suffer burns. Begin work after the temperature has dropped.**
- **Oil plug may pop out due to the internal pressure inside the case. Release the pressure by loosening the plug slowly.**

- Container to receive the drained oil
- Have an Allen key ready.

1. Make sure the plug (F) is facing up and that the plug (F) and the plug (P) are positioned perpendicular to the ground.
2. Place a container to collect the drained oil underneath the plug (P).
3. Remove the plug (G) using an Allen key. It is normal if the oil is filled up to right below the plug hole.
4. If the oil is insufficient, use an Allen key to remove the plug (F) and replenish oil from the plug (F) hole. Replenish from the plug (G) hole until power line oil spills.
5. After inspection, install the plug (F) and the plug (G).

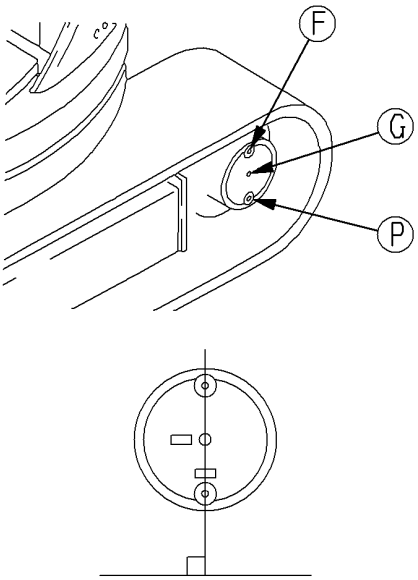

NOTES
Wipe away cleanly whenever the oil spills.

[4] REPLACEMENT OF AIR CLEANER

Refer to section “Inspection and Maintenance 10.3 [1] Inspection, Cleaning and Replacement of Air Cleaner” for the work procedure.

https://truckmanualshub.com/

10.8 MAINTENANCE EVERY 1000 HOURS

Perform this maintenance in tandem with maintenance every 50, 100, 250 and 500 hours.

[1] OIL REPLACEMENT IN TRAVELLING MOTOR REDUCTION GEAR CASE

⚠ WARNING

- **As parts and oil become hot immediately after the engine stop, you may suffer burns. Begin work after the temperature has dropped.**
- **Oil and the plug may pop out due to the internal pressure inside the case. Release the pressure by loosening the plug slowly.**

- Oil replacement quantity: 0.6 litres each for left and right
- Have an Allen key ready.

1. Make sure the plug (F) is facing up and that the plug (F) and the plug (P) are positioned perpendicular to the ground.
2. Place a container to collect the drained oil underneath the plug (P).
3. Remove the plugs (P), (G) and (F) using an Allen key and drain the oil.
4. Tighten the plug (P).
5. Refill the power line oil from the plug (F) hole.
6. When oil comes out of the plug (G) hole, install the plugs (G) and (F).

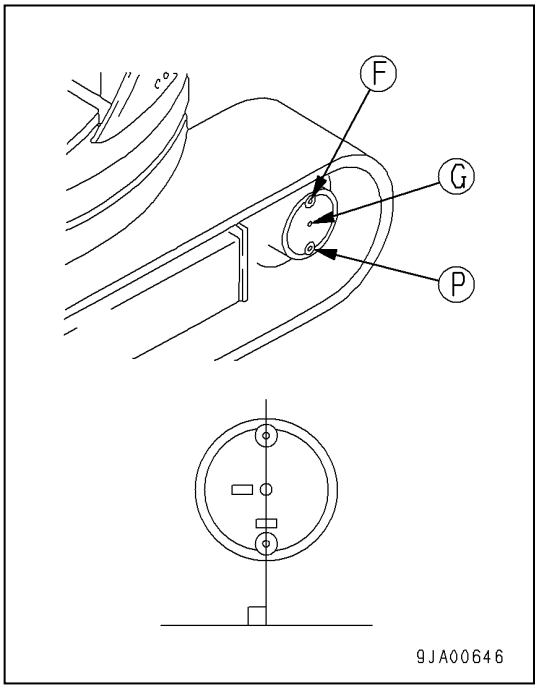

[2] INSPECTION/ADJUSTMENT OF ENGINE VALVE CLEARANCE

Special tools are required for inspection and adjustment. Contact us or our sales service agent.

[3] OIL REPLACEMENT IN WINCH REDUCTION GEAR CASE

⚠ WARNING

- **Oil is at elevated temperatures immediately after engine operation. Do not remove the port plug immediately. Wait until the oil cools down.**
- **Oil and the plug may pop out due to the internal pressure inside the winch case. Release the pressure by loosening the plug slowly.**

CAUTION

- **Refer to "Inspection and Maintenance 7.1 Use of Fuel and Lubricating Oil According to Temperatures" for the oil to be used.**
- **Use seal tape at the thread of each plug to prevent oil leaks and securely tighten the plug after changing the oil.**

- Oil drain pan: Prepare a container for at least 1 litre.
- Allen key to remove a plug: 8 mm
- Oil replacement quantity in slewing reduction gear case: 0.75 litres

1. Place the machine on a level surface.
2. Fully retract and lower the boom as shown on the right, setting it horizontal.
3. Slowly rotate the winch so that the plug (P) is pointed directly towards the ground.
4. Place a container to collect the drained oil underneath the plug (P).
5. Loosen the plug (P) slowly using an Allen key and remove it while releasing the internal pressure. Gear oil in the reduction gear case is drained.
6. When the gear oil in the reducer case is completely discharged, slowly rotate the winch so that the plug (P) can be seen from the opening hole.
7. Feed the gear oil through the oil level check plug (P) hole using an oil pump.
8. Fit and securely tighten the plug (P) after replenishing oil.

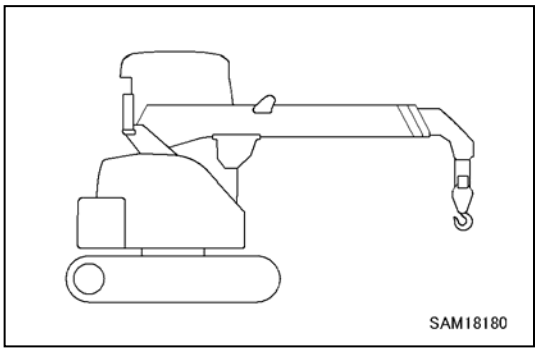

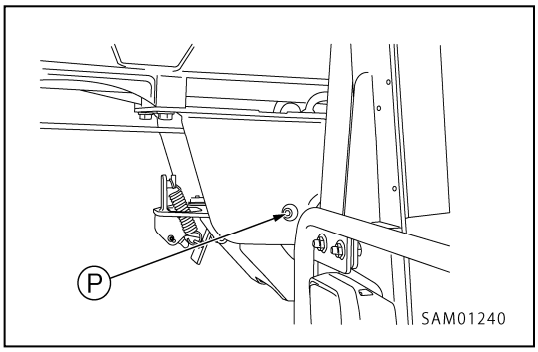

NOTES

- Wipe away cleanly whenever the oil spills.
- If it is difficult to drain the oil, attach the plug (P), fully extend and raise the boom, and then repeatedly wind up and unwind the winch until the surface of the winch (around plug (P)) feels warm to the touch. Then proceed from step 2.
- If the surface of the winch becomes too hot that you cannot touch, wait until the temperature drops and then proceed work.

[4] INSPECTION OF INTAKE VALVE / EXHAUST VALVE

For inspection, special tools and expertise are required. Contact us or our sales service agent.

10.9 MAINTENANCE EVERY 1500 HOURS

Perform this maintenance along with maintenance every 50/100/250/500 hours.

[1] INSPECTION/CLEANING OF FUEL INJECTION UNIT

In order to fully demonstrate engine performance, the fuel injection valve must operate normally. Check and clean the fuel injection valve and fuel injection pump. Special tools are required for inspection and maintenance. Contact us or our sales service agent.

[2] INSPECTION OF CRANKCASE BREATHER

Crankcase breather must be operating properly for combustion engine to meet emission regulations over the service period. Inspect for diaphragm and spring damage. Special tools are required for inspection and maintenance. Contact us or our sales service agent.

https://truckmanualshub.com/

10.10 MAINTENANCE EVERY 2000 HOURS

Perform this maintenance along with maintenance every 50/100/250/500/1000 hours.

[1] REPLACING OIL IN ENGINE OIL TANK AND CLEANING STRAINERS

⚠ WARNING

- **As parts and oil become hot immediately after the engine stop, you may suffer burns. Begin work after the temperature has dropped.**
- **When removing the cap of oil inlet, there is a risk of oil spurting out. Take care to turn it slowly while removing internal pressure.**

- Replaced oil: 28.5 litres
- Prepare a handle (for socket wrench).

1. Turn the drain plug under the hydraulic oil tank so that it comes in the centre of the left and right crawler belts.

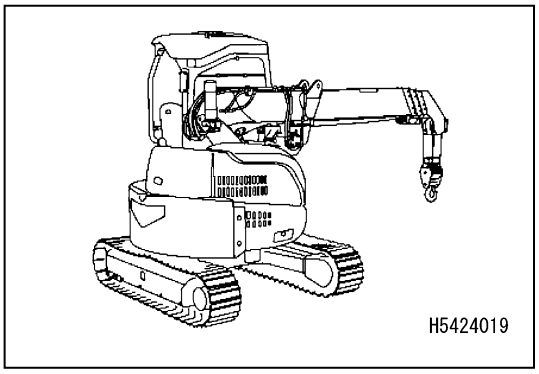

2. Fully retract and lower the boom.

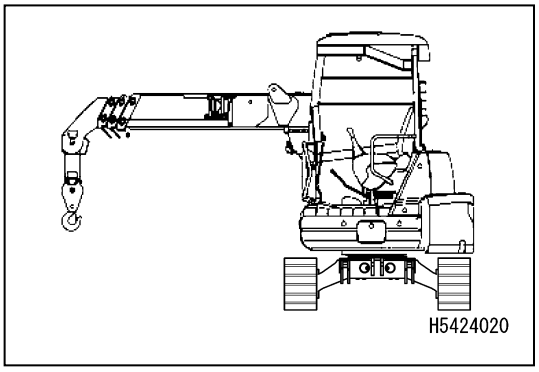

3. Set the lock lever (1) to LOCK position (L), and stop the engine.

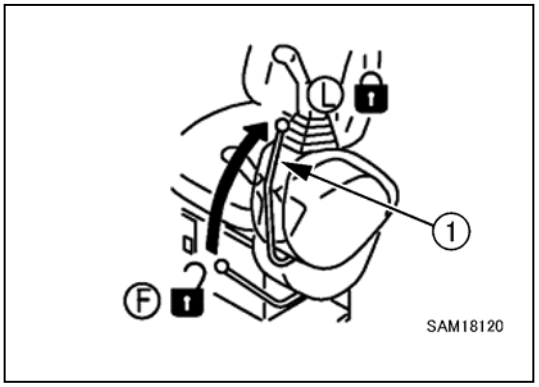

https://truckmanualshub.com/

4. Open the gravel cover (1) on the right side of the body, remove the cap of the filler opening (F) and let the internal pressure escape.

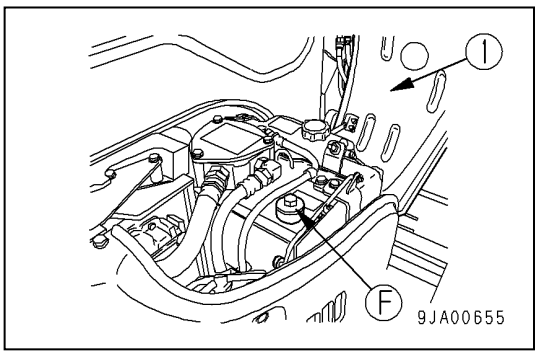

5. Open the inspection cover (2) on the right side of the body and set the oil receiving container at the bottom of the drain plug (P). Remove the drain plug (P) using the handle and drain it. Inspect the O-ring installed on the drain plug (P), and replace the O-ring when there is a scratch. Tighten the drain plug (P) after draining.
   Tightening torque of the drain plug is 44.1 to 53.9 N·m (4.5 to 5.5 kg·m).

   - When opening the drain valve (P), be careful not to get exposed to splashes of oil.

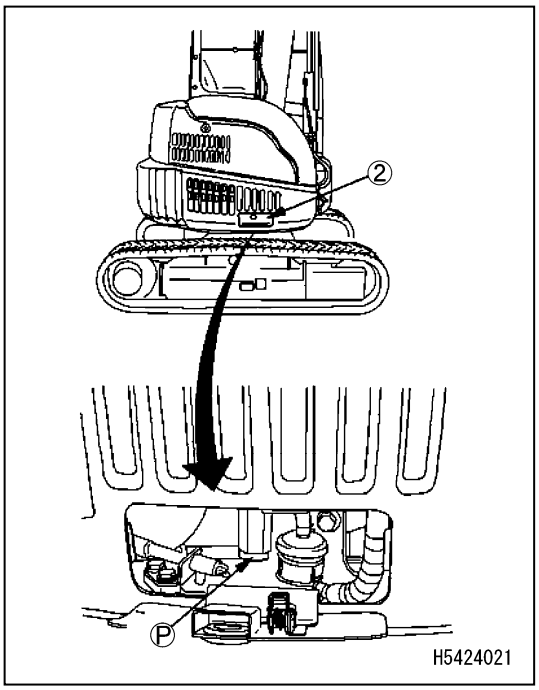

6. Loosen the hose clamp (3) and remove the hose (4), then loosen the bolt (5) and take out the strainer (6).
7. Remove dust stuck to strainer (6) and wash it with clean diesel fuel or washing oil. If any damage is found in the strainer (6), replace it with a new one.
8. Fix the strainer (6) with the bolt (5), attach the hose (4), and fix with the hose clamp (3).
9. Pour a specified amount of oil through oil inlet (F). Check to ensure that the level is within the range H-L on the sight gauge.

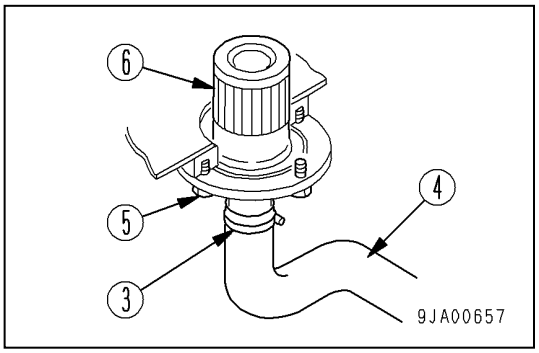

https://truckmanualshub.com/

10. Set the boom in the completely retracted and fully raised state, mount the oil feed cap and pressurize the tank.
11. After replacing the oil, shift each control lever to neutral and let the engine idle for about 2 to 3 minutes before starting work.

CAUTION

Omitting pressurization of the hydraulic tank causes the pump to suck air, resulting in adverse effect on the units.

[2] REPLACING COOLANT

⚠ WARNING

Replace the coolant when the engine is cold. If you remove the radiator cap with the engine at high temperatures, there is a danger of being burnt by the heated coolant blowing out.

1. Place the machine on a level surface.
2. Turn the radiator cap (1) slowly until it comes into contact with the stopper to relieve internal pressure from the radiator.
3. With no pressure in the radiator, give further turning of the radiator cap (1) until it reaches the stopper while holding it down. Remove the radiator cap (1).
4. Place a drain pan under the drain valve (2) below the radiator to receive the coolant (antifreeze-mixed water).
5. Open the drain valve (2) to drain the coolant. Close the drain valve (2) upon completion of draining.
6. Place a drain pan under the drain valve (3) of the engine block below the radiator to receive coolant (antifreeze-mixed water).
7. Remove drain valve (3) to drain coolant. Close the drain valve (2) upon completion of draining.
8. Supply coolant mixed of antifreeze and tap water (soft water) to the radiator through the radiator supply port. The radiator needs to be filled up to the supply port.

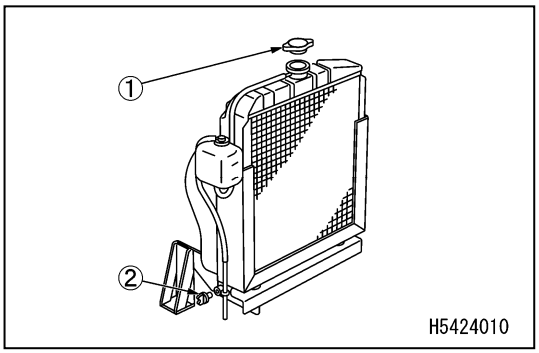

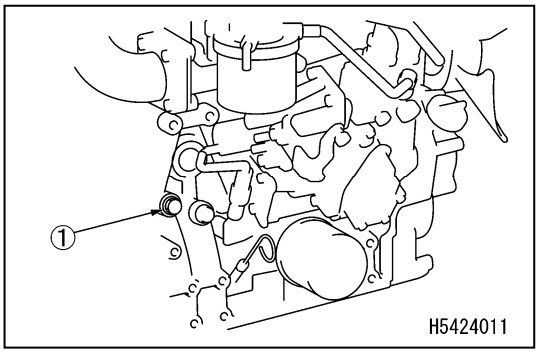

NOTES

For the mixing ratio of antifreeze and tap water (soft water), refer to “Cleaning Inside Engine Cooling System” above.

9. Start the engine with the radiator cap (1) removed, and ensure that the engine runs at low idle for 5 minutes. Release air from the cooling system with the engine at high idle for another 5 minutes.
10. Wait for approx. 3 minutes after stopping the engine. Supply tap water (soft water) to the radiator through the radiator supply port, up to the supply port, and close the radiator cap (1).
11. Drain the cooling water in the sub-tank and then wash the inside.
12. Supply tap water (soft water) to the “FULL” level from the water supply port of the sub-tank.

10.11 MAINTENANCE EVERY 3000 HOURS

[1] INSPECTION/CLEANING OF EGR VALVE

For inspection and cleaning, special tools and expertise are required. Contact us or our sales service agency.

https://truckmanualshub.com/

This Page Intentionally Left Blank.

https://truckmanualshub.com/

SPECIFICATIONS

1. PRINCIPAL SPECIFICATIONS LIST	242
2. SPECIFICATION DIMENSIONAL DRAWING	243
3. RATED TOTAL LOAD CHART	244
4. WORKING RADIUS/LIFTING HEIGHT	247

1. PRINCIPAL SPECIFICATIONS LIST

Equipment / Item			CC423S-1
Weight and dimensions	Machine mass		4,400 kg
	Overall length × width × height		4,020 mm × 1,740 mm × 2,495 mm
	Distance between centre idler and sprocket		1,650 mm
	Track gauge		1,440 mm
	Width of crawler		300 mm
	Slewing radius at rear end of the machine		980 mm
Performance	Maximum rated total load × working radius		2.93 t × 1.5 m
	Maximum working radius		8.38 m
	Maximum lifting height above ground		9.46 m
Winch system	Type		Swash plate axial piston motor, differential gear reduction, friction disc type brake and grooved drum
	Number of falls of wire		4-fall/2-fall hooking wire, single fall (optional)
	Hook hoist speed		19 m/min (drum 4 layers, hook 4 fall)
	Hoist wire rope		IWRC 6 × Ws (26) 0/0 bare type B ϕ8 × 73 m
Telescoping system	Type		2 × Sequentially telescoping, double-acting hydraulic cylinder + 1 × Wire rope telescoping system
	Type of boom		Pentagonal cross-section, hydraulically automatic telescoping, 4 stages (Stage 2: Telescoping; Stages 3 and 4: Simultaneous telescoping)
	Boom length		3.18 m – 5.03 m – 6.87 m – 8.71 m
	Telescoping stroke / Extending time		5.53 m/14 sec
Boom hoist system	Type		Double-acting hydraulic cylinder direct thrusting system
	Derricking angle / Time		0 to 80 deg./12 sec
Slewing system	Type		Fixed capacity piston type, brake valve, with pivot axis brakes
	Slewing angle / Speed		360° (continuous)/2.4 min^{-1}
Travelling system	Type		Variable capacity piston type
	Travel speed	Low speed	Forward/backward travelling: 0 to 2.9 km/h
		High speed	Forward/backward travelling: 0 to 4.6 km/h
	Grade ability		20°
	Ground pressure [Shoe width]		42.2 kPa (0.43 kgf/cm^2) [300 mm]
Hydraulic system	Hydraulic pump		Variable capacity piston pump + gear pump + trochoid pump
	Hydraulic oil tank capacity		28.5 litres
Engine	Model		Water-cooled diesel 3TNV88F-EPMBA (Yanmar)
	Type		4-stroke cycle, water-cooled, series, direct injection
	Displacement		1,642 cc
	Rated output		17.5 kW/2,400 min^{-1} (23.8 PS/2,400 min^{-1})
	High idle speed		2,430 ± 10 min^{-1}
	Fuel used / Fuel tank capacity		Diesel fuel / 42 litres
Safety device	Over-hoisting prevention device, over-unwinding prevention device, overload prevention device, slinging wire rope detachment protector, hydraulic safety valve, telescoping cylinder hydraulic automatic locking device, derricking cylinder hydraulic automatic locking device, alarm buzzer, machine body inclination alarm, tri-colour revolving working status lamp, levelling instrument, operation locking lever and emergency stop switch.		

https://truckmanualshub.com/

2. SPECIFICATION DIMENSIONAL DRAWING

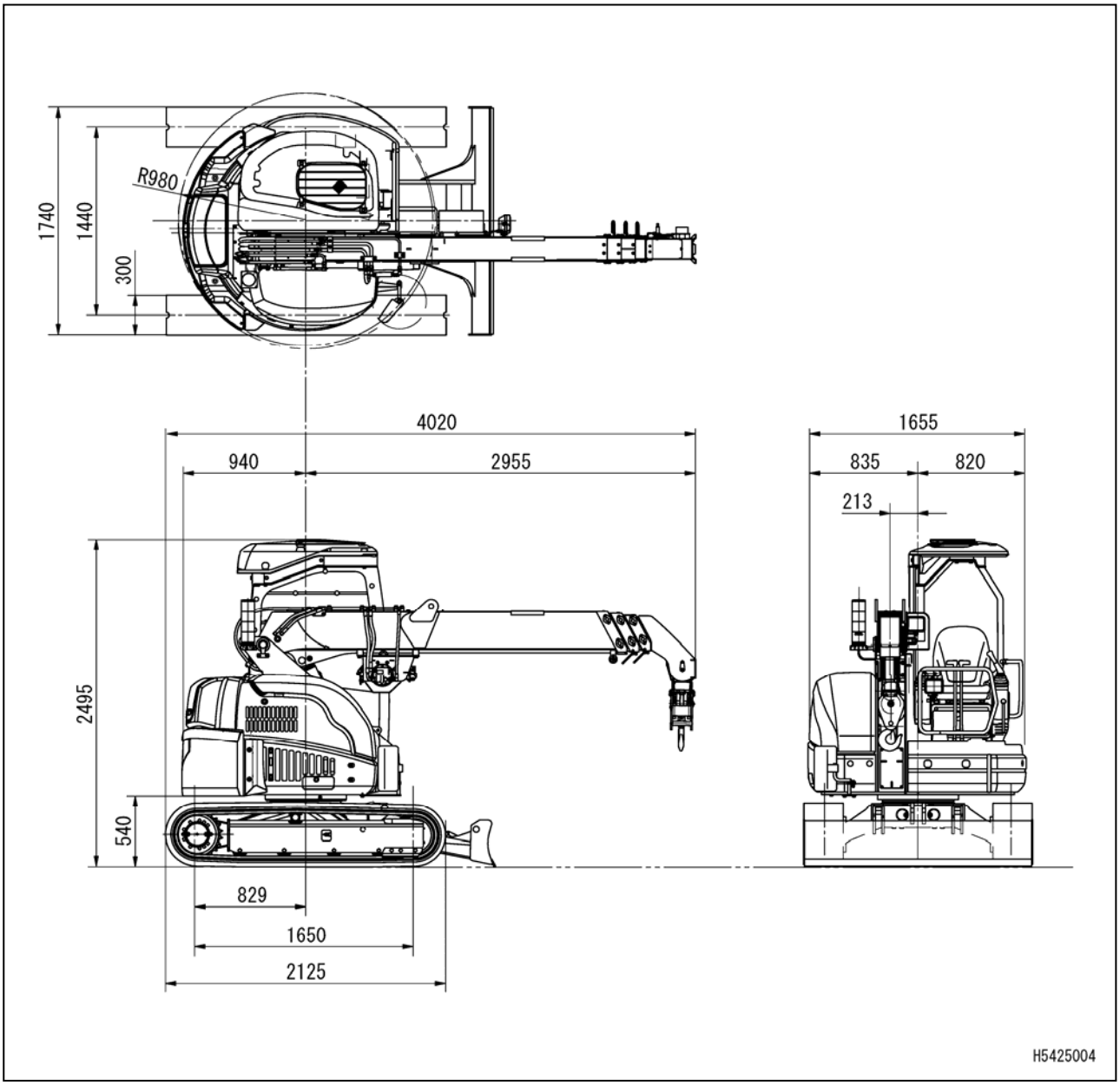

https://truckmanualshub.com/

3. RATED TOTAL LOAD CHART

Rated Total Load Chart for 4-Fall Wire Rope

Unit: kg

Working radius (m)	3.18 m boom		5.03 m boom		6.87 m boom	8.71 m boom
	Stationary hoist	Travelling hoist	Stationary hoist	Travelling hoist	Stationary hoist	Stationary hoist
1.50	2930	1465	2930	1465	1870	1190
2.00	1730	865	1710	855	1710	1190
2.50	1200	600	1190	595	1190	1190
2.85	980	490	980	490	980	980
3.00			900	450	900	900
3.50			720	360	720	720
4.00			600	300	600	600
4.50			500	250	500	500
4.70			460	230	460	460
5.00					430	430
5.50					370	370
6.00					330	330
6.54					290	290
7.00						260
7.50						235
8.00						215
8.38						200

★Boom length

3.18 m boom → Boom being fully retracted

5.03 m boom → Boom length: 3.19 m to 5.03 m

6.87 m boom → Boom length: 5.04 m to 6.87 m

8.71 m boom → Boom length: 6.88 m or more

★The rated total load chart is based on the actual working radius including the deflection under load.

★The rated total load chart indicates the load including the mass of hoisting accessories (hook mass: 30 kg).

Rated Total Load Chart for 2-Fall Wire Rope

Unit: kg

Working radius (m)	3.18 m boom		5.03 m boom		6.87 m boom	8.71 m boom
	Stationary hoist	Travelling hoist	Stationary hoist	Travelling hoist	Stationary hoist	Stationary hoist
1.50	1480	740	1480	740	1480	1190
2.00	1480	740	1480	740	1480	1190
2.50	1200	600	1190	595	1190	1190
2.85	980	490	980	490	980	980
3.00			900	450	900	900
3.50			720	360	720	720
4.00			600	300	600	600
4.50			500	250	500	500
4.70			460	230	460	460
5.00					430	430
5.50					370	370
6.00					330	330
6.54					290	290
7.00						260
7.50						235
8.00						215
8.38						200

★Boom length

3.18 m boom → Boom being fully retracted

5.03 m boom → Boom length: 3.19 m to 5.03 m

6.87 m boom → Boom length: 5.04 m to 6.87 m

8.71 m boom → Boom length: 6.88 m or more

★The rated total load chart is based on the actual working radius including the deflection under load.

★The rated total load chart indicates the load including the mass of hoisting accessories (hook mass: 30 kg).

Rated Total Load Chart for Single Fall Wire Rope

Unit: kg

Working radius (m)	3.18 m boom		5.03 m boom		6.87 m boom	8.71 m boom
	Stationary hoist	Travelling hoist	Stationary hoist	Travelling hoist	Stationary hoist	Stationary hoist
1.50	750	375	750	375	750	750
2.00	750	375	750	375	750	750
2.50	750	375	750	375	750	750
2.85	750	375	750	375	750	750
3.00			750	375	750	750
3.50			720	360	720	720
4.00			600	300	600	600
4.50			500	250	500	500
4.70			460	230	460	460
5.00					430	430
5.50					370	370
6.00					330	330
6.54					290	290
7.00						260
7.50						235
8.00						215
8.38						200

★Boom length

3.18 m boom → Boom being fully retracted

5.03 m boom → Boom length: 3.19 m to 5.03 m

6.87 m boom → Boom length: 5.04 m to 6.87 m

8.71 m boom → Boom length: 6.88 m or more

★The rated total load chart is based on the actual working radius including the deflection under load.

★The rated total load chart indicates the load including the mass of hoisting accessories (hook mass: 20 kg).

https://truckmanualshub.com/

4. WORKING RADIUS/LIFTING HEIGHT

4-Fall Wire Rope

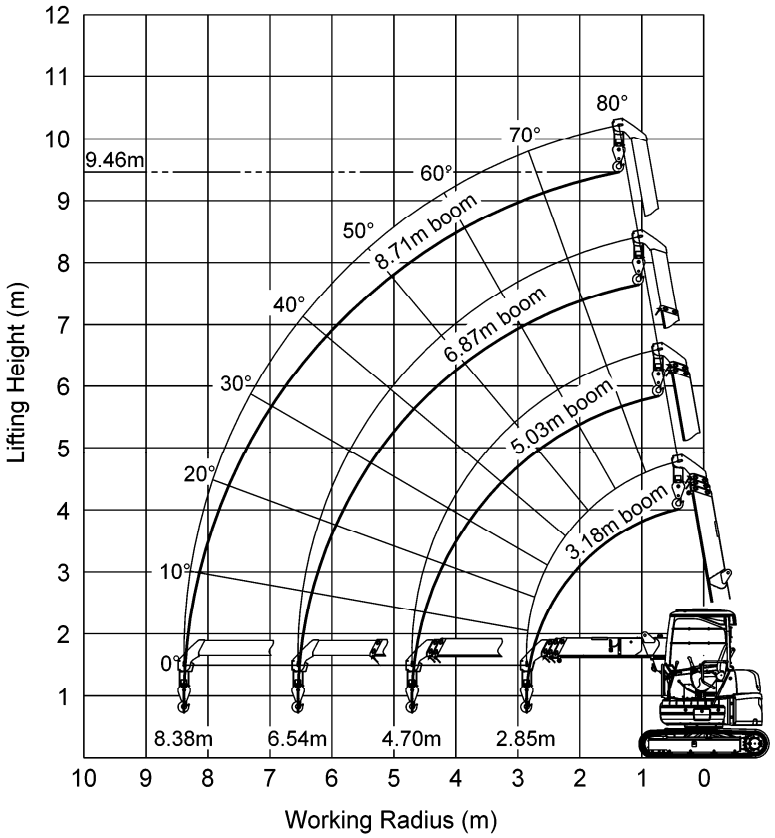

H5425002E

https://truckmanualshub.com/

This Page Intentionally Left Blank.

https://truckmanualshub.com/

SEARCHER HOOK

(Option)

1. SAFETY PRECAUTIONS	250
2. NAMES OF SEARCHER HOOK PARTS	253
3. MONITOR INDICATION	254
4. MOMENT LIMITER OPERATION AND CANCELLING (RECOVERY)	256
5. OPERATION	258
6. INSPECTION AND MAINTENANCE	261
7. WORKING RADIUS AND RATED TOTAL LOAD CHART	265

1. SAFETY PRECAUTIONS

1.1 MOMENT LIMITER SETTINGS

⚠ DANGER

- **When using the searcher hook, be sure to correctly set the “searcher hook position for the actual machine” and the “searcher hook position on the monitor”. If work is performed without making the correct settings, the numerical value of the moment limiter will not be displayed correctly, and there is a risk of serious injury through the machine becoming damaged or overturning.**
- **There may be no display for the searcher hook selector switch due to retrofit etc. of the searcher hook. In this case, as work will be necessary to set up the moment limiter to display the searcher hook selector switch on the monitor, please contact us or our sales service agent.**
  If used with no display for the position selection, there is a risk of serious injury through the machine becoming damaged or overturning.

[Searcher hook position settings]

	Actual machine position	Selector switch	Position display
Stowing	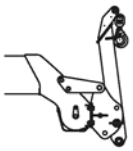 SAM19780	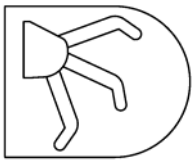 SAM19700	SAM19740
SH1	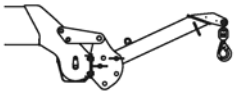 SAM19790	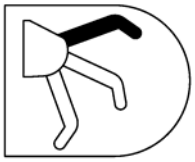 SAM19710	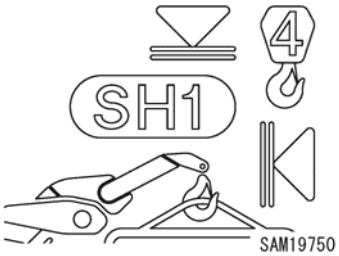 SAM19750
SH2	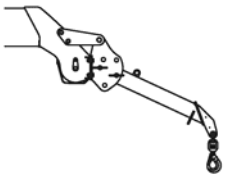 SAM19800	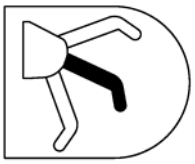 SAM19720	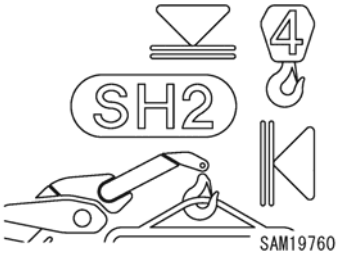 SAM19760
SH3	SAM19810	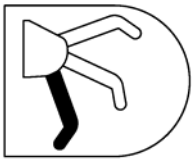 SAM19730	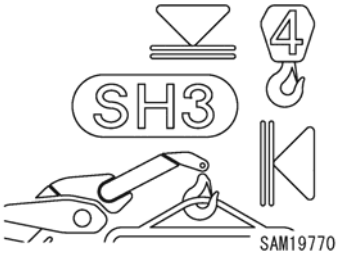 SAM19770

https://truckmanualshub.com/

1.2 SAFETY LABEL LOCATIONS

In this section, only safety labels specifically relating to the searcher hook are described.

For other safety labels on the main machine, see “Safety 6. Safety Label Locations”.

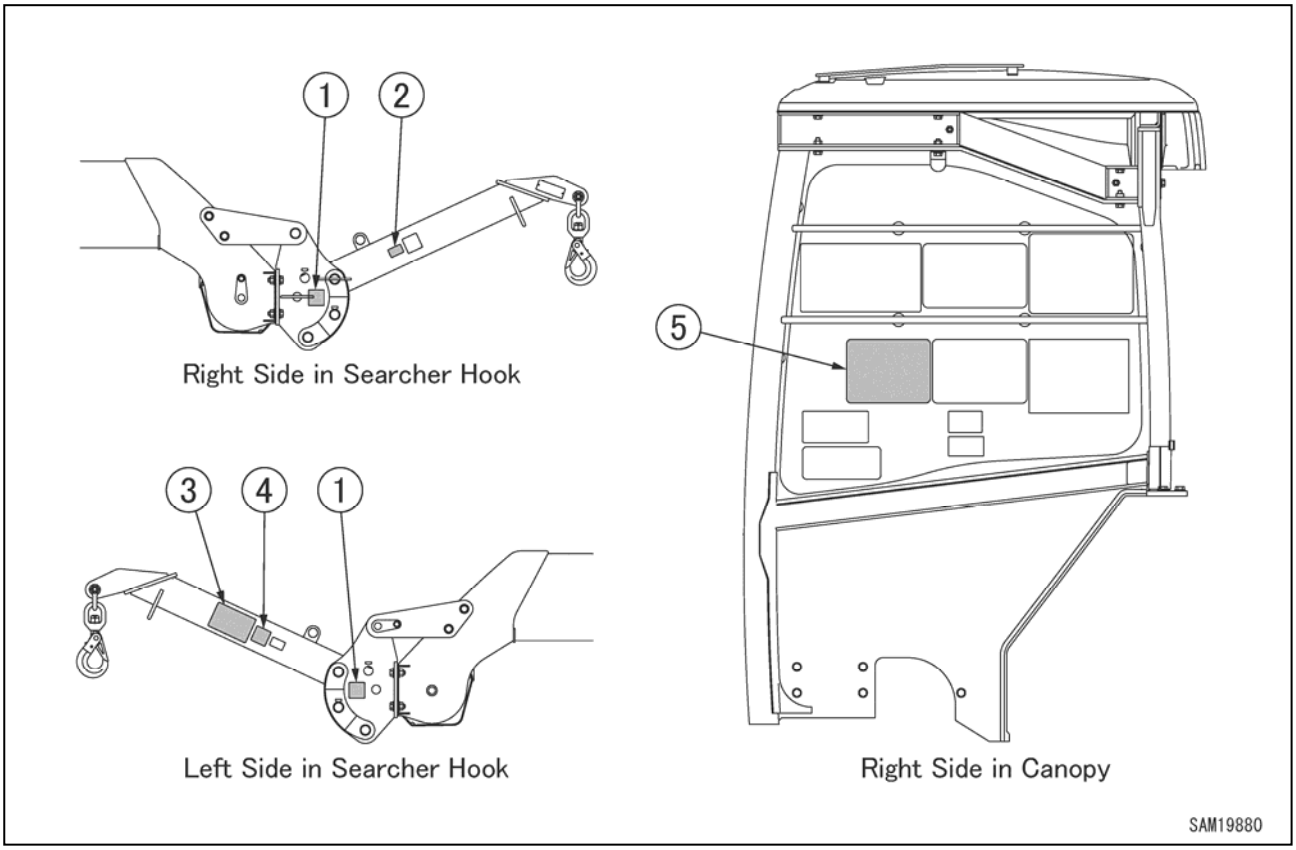

https://truckmanualshub.com/

(1) Pin Hole Warning (102-4608500) (2 places)

(2) Searcher Hook Maximum Gross Rated Total Load (102-4621200)

(3) Searcher Hook Danger (103-4635500)

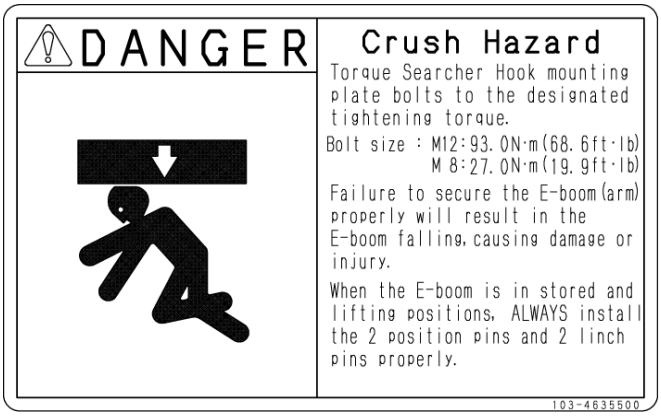

(4) Stowage Warning (103-4635800)

(5) Searcher Hook Performance (542-3586900)

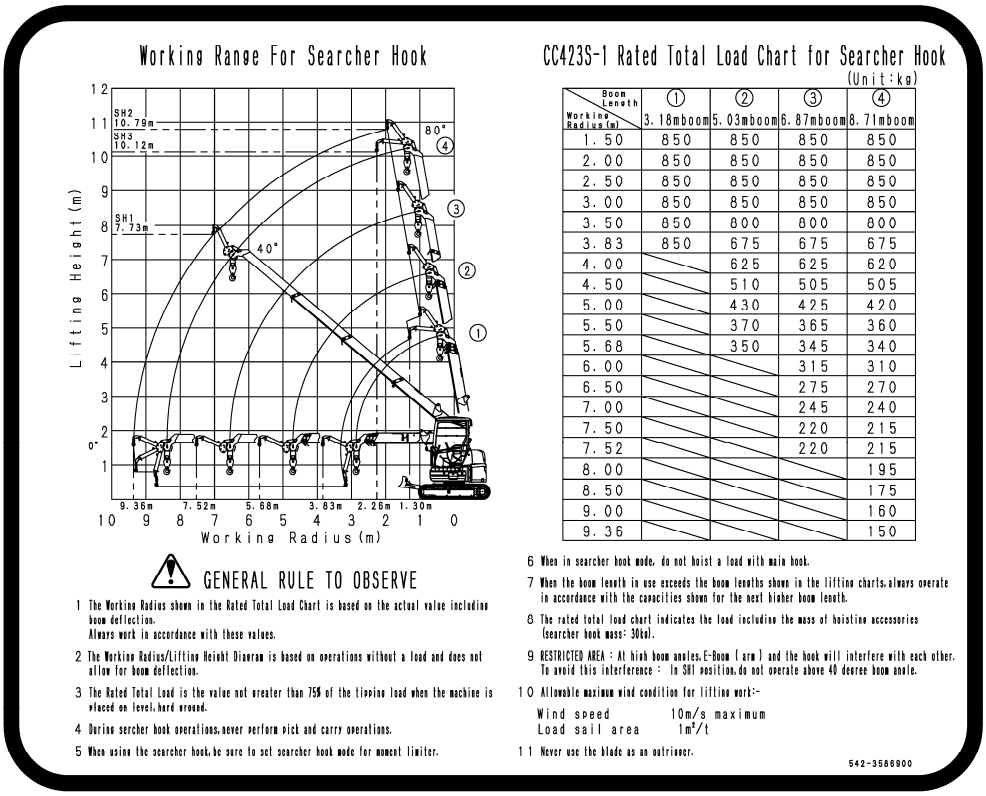

Working Range For Searcher Hook

CC423S-1 Rated Total Load Chart for Searcher Hook

(Unit:kg)

Working Radius(m) \ Boom Length	① 3.18mboom	② 5.03mboom	③ 6.87mboom	④ 8.71mboom
1.50	850	850	850	850
2.00	850	850	850	850
2.50	850	850	850	850
3.00	850	850	850	850
3.50	850	800	800	800
3.83	850	675	675	675
4.00		625	625	620
4.50		510	505	505
5.00		430	425	420
5.50		370	365	360
5.68		350	345	340
6.00			315	310
6.50			275	270
7.00			245	240
7.50			220	215
7.52			220	215
8.00				195
8.50				175
9.00				160
9.36				150

GENERAL RULE TO OBSERVE

1 The Working Radius shown in the Rated Total Load Chart is based on the actual value including boom deflection.
Always work in accordance with these values.

2 The Working Radius/Lifting Height Diagram is based on operations without a load and does not allow for boom deflection.

3 The Rated Total Load is the value not greater than 75% of the tipping load when the machine is placed on level, hard ground.

4 During searcher hook operations, never perform pick and carry operations.

5 When using the searcher hook, be sure to set searcher hook mode for moment limiter.

6 When in searcher hook mode, do not hoist a load with main hook.

7 When the boom length in use exceeds the boom lengths shown in the lifting charts, always operate in accordance with the capacities shown for the next higher boom length.

8 The rated total load chart indicates the load including the mass of hoisting accessories (searcher hook mass: 30kg).

9 RESTRICTED AREA : At high boom angles, E-Boom (arm) and the hook will interfere with each other. To avoid this interference : In SH1 position, do not operate above 40 degree boom angle.

10 Allowable maximum wind condition for lifting work:-
Wind speed 10m/s maximum
Load sail area 1m²/t

11 Never use the blade as an outrigger.

542-3586900

2. NAMES OF SEARCHER HOOK PARTS

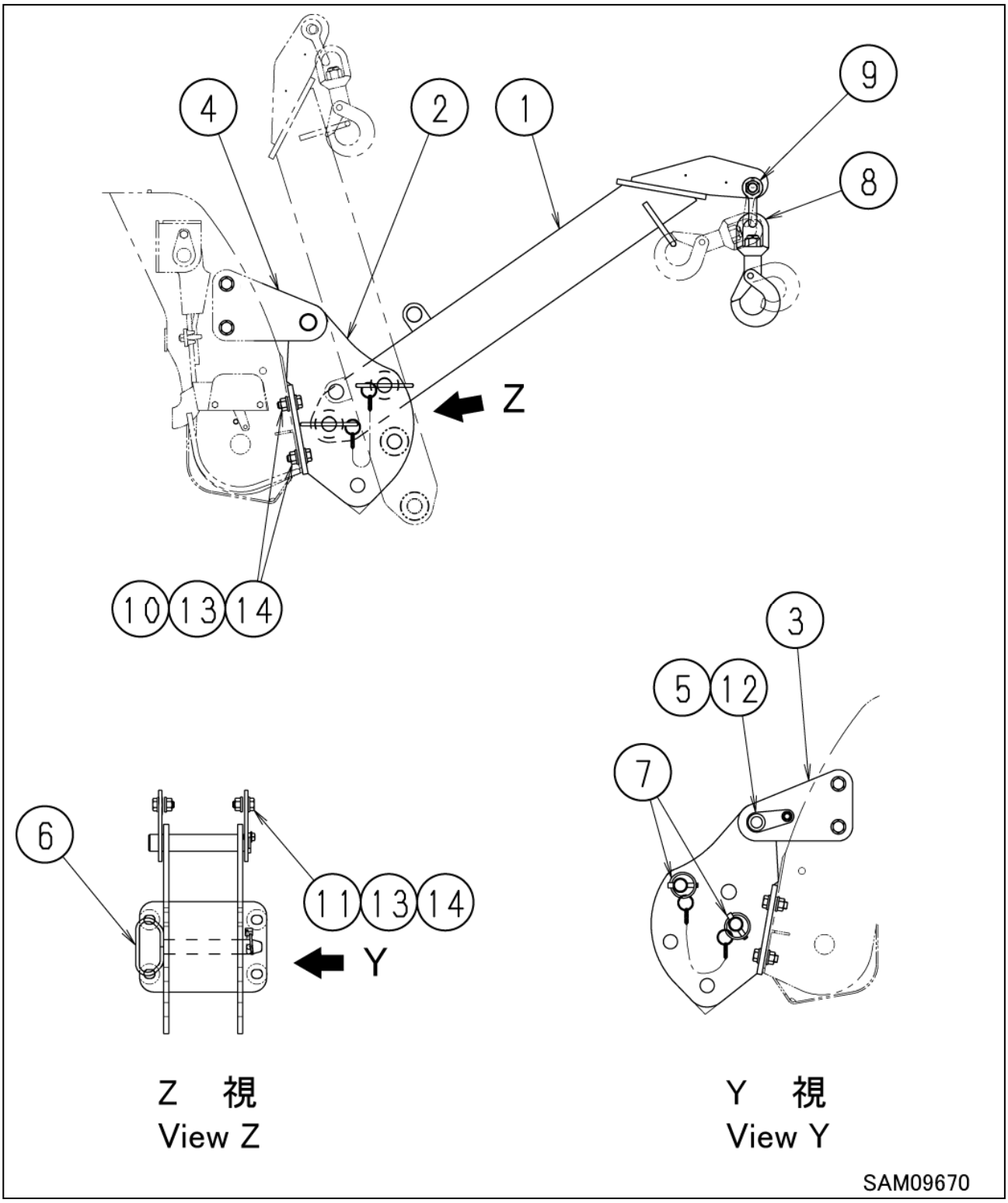

(1) E-boom
(2) Bracket
(3) Plate L
(4) Plate R
(5) Pin
(6) Positioning pin
(7) Linchpin
(8) Hook
(9) Shackle
(10) Bolt A
(11) Bolt B
(12) Bolt C
(13) Nut
(14) High tension washer

https://truckmanualshub.com/

3. MONITOR INDICATION

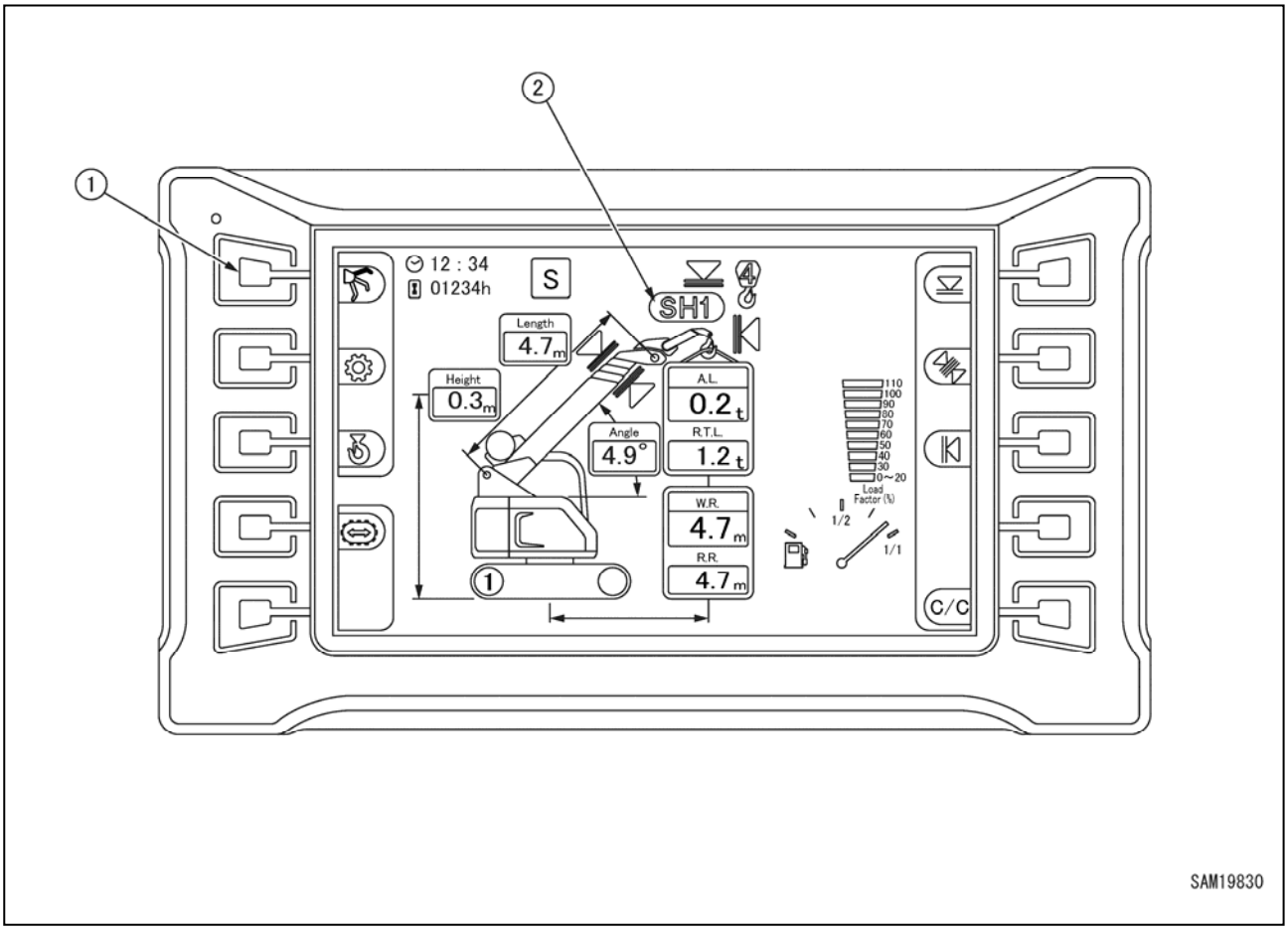

(1) Searcher hook selector switch

(2) Searcher hook position display

https://truckmanualshub.com/

[1] SEARCHER HOOK SELECTOR SWITCH

⚠ DANGER

When performing searcher hook operation, be sure to select the position that matches the position for the actual machine.
If you do not perform position settings correctly, the moment limiter will not operate properly, and there is a risk of serious injury through overturning.
For details concerning the position, see “Searcher Hook 1.1 Moment Limiter Settings”.

When the searcher hook selector switch is pressed and held, the position of the searcher hook changes, and the moment limiter display switches to match the position.

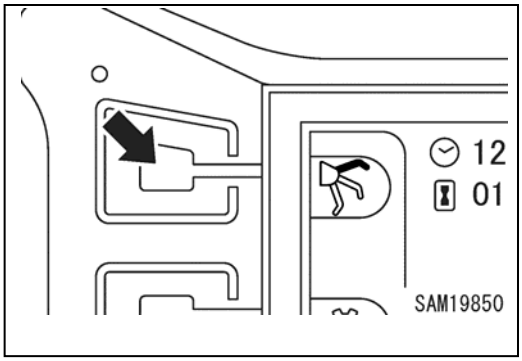

NOTES

For continuous switching, press and hold to change in the order “SH1 → SH2 → SH3 → No display → SH1 · · ·”.

[2] SEARCHER HOOK POSITION DISPLAY

The position currently set is displayed.

- SH1
- SH2
- SH3
- No display (stowage = normal crane)

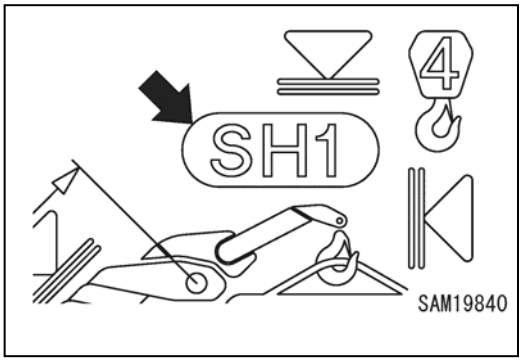

NOTES

For details concerning switches and display contents not described in this section, see “Operation 2.1 Machine Monitor”.

https://truckmanualshub.com/

4. MOMENT LIMITER OPERATION AND CANCELLING (RECOVERY)

For moment limiter operation and cancelling (recovery), carefully check the contents of “Operation 2.3.3 Moment Limiter Operation And Cancelling (Recovery)”.

[1] PROHIBITED OPERATIONS AFTER AUTOMATIC STOP

⚠ DANGER

After an automatic stop occurs due to overload during searcher hook operation, the following crane operations are prohibited.
Do not attempt to force operation, as this is extremely dangerous and may overturn the machine or break the boom.
• Boom lowering operation • Boom hoisting operation • Boom extending operation

[2] RECOVERY OPERATION FROM AUTOMATIC STOP

⚠ DANGER

When an automatic stop occurs, recovery cannot be performed unless you lower the load capacity ratio to the safe region of less than 90% (tri-colour revolving working status lamp: green).
However, in the specific case that the boom is fully retracted, recovery is possible with a load capacity ratio less than 95%. This is a recovery condition only when the searcher hook is being used.
For searcher hook operation with a load capacity ratio of 90% or more, be sure to slow down the engine speed, and perform operation carefully.

In the case of an automatic stop, retract the boom to within the region of safety, then lower the load with the boom.

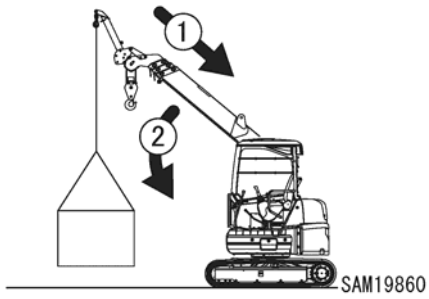

In the case of an automatic stop, when hoisting of the boom is unavoidable, the boom hoist operation is possible only while keeping the maintenance switch in the “ON” position. To return to the “OFF” position, also return the boom hoisting lever.

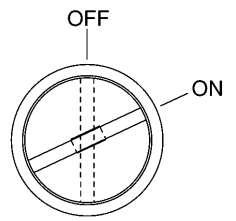

⚠ DANGER

Only use this switch when an automatic stop has occurred through entry into the overload region while lowering or extending the boom.
Do not use under normal conditions or when lifting clear from the ground.
If you use this switch when lifting from the ground, there is a risk of serious accidents such as the machine being damaged or overturning.

NOTES

While the maintenance switch is “ON”, the machine operates as follows.
- The engine speed decreases.
- The continuous buzzer tone sounds.
- The tri-colour revolving working status lamp illuminates in red.

https://truckmanualshub.com/

[Points to note when using the “SH1” position]

For searcher hook position “SH1”, do not use with the boom angle raised to 40 degrees or more as the E-boom and hook will interfere with each other.

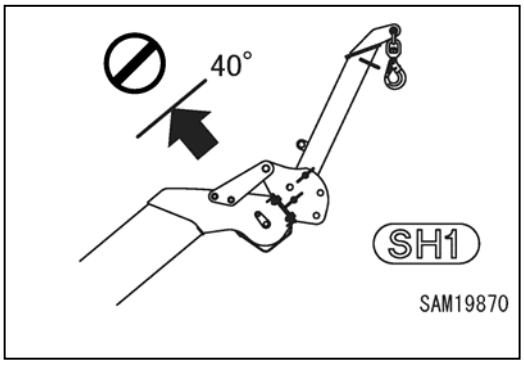

NOTES
• When the boom angle reaches 40 degrees, the boom hoisting operation stops automatically. • When the boom angle is 40 degrees or more, the “SH1” and “Boom Angle Upper Limit” indicators on the monitor flash. • When working at a boom angle of 40degrees or more, work with the position set to “SH2” or “SH3”.

https://truckmanualshub.com/

5. OPERATION

⚠ DANGER

- **Be sure to switch searcher hook according to the position of the actual machine. If you do not perform position settings correctly, the moment limiter will not operate properly, and there is a risk of serious injury through overturning.**
- **Do not use the searcher hook and the hook block of the crane main body at the same time. While using the searcher hook, do not hang loads with the hook block of the crane main body. And do not use with the hook block removed.**
- **When using the searcher hook, travelling operation cannot be performed. However, under the specific conditions of no load, and when the boom is fully retracted, travelling operation does become possible.**
  Normally, put the searcher hook in the stowage state for travelling operation, and switch the searcher hook position of the moment limiter to "no display (stowage)".
- **For operational methods for the crane, see "Operation 3 Machine Operation and Control".**

1. As shown on the right, fully retract and lower the boom to make it level and stop the engine.

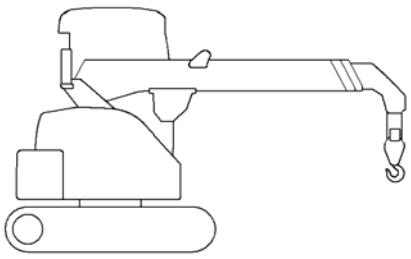

SAM18180

2. Set the lock lever (1) to the Lock (L) position.

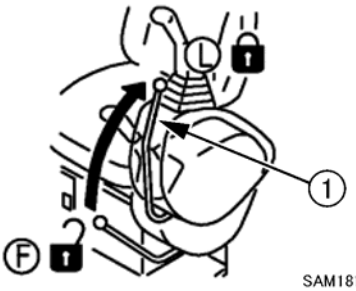

SAM18120

3. Fix bracket (1), plate L (2), plate R (3) to the tip of the main boom using bolts, nuts and washers.
   ★Tightening torque: 93 N·m ± 14 N·m

Then pass pin (4) through the holes of bracket (1), plate L (2), plate R (3) as shown in the right figure, and tighten with bolts to fix.

   ★Tightening torque: 27 N·m ± 8 N·m

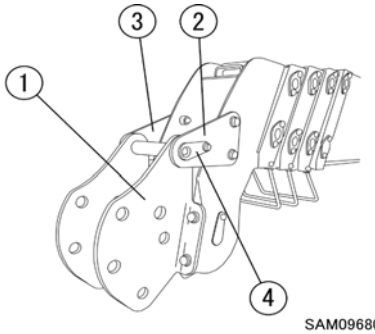

SAM09680

⚠ DANGER

To prevent the searcher hook from falling, be sure to tighten the searcher hook mounting bolts with the specified torque.
When installing the searcher hook, be sure to use Maeda genuine products and new bolts, nuts and washers.

NOTES

Even when a bracket or plate is already attached, check the tightening torque.

4. Remove the linchpin (6) from the tip of the position pin (5) and remove the position pin (5).

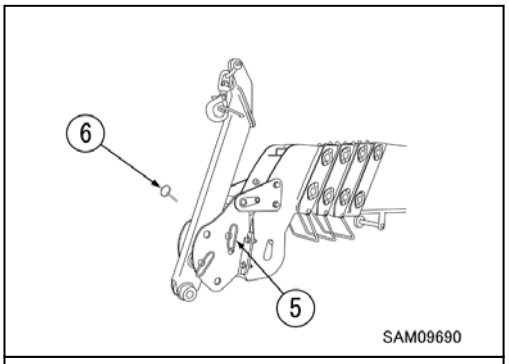

5. Align hole (8) of the E-boom (7) with hole (9) of the bracket.

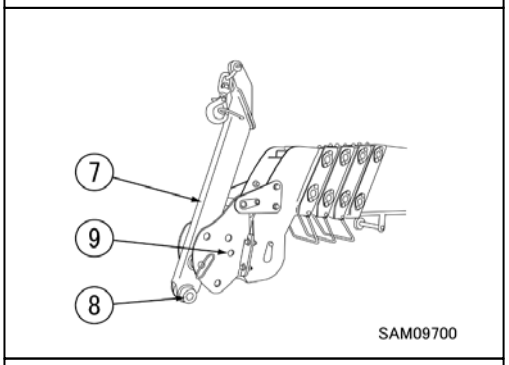

6. Pass the position pin (5) removed in Step 4 through the hole (9) of the bracket and fix the linchpin (6) to the tip of the position pin (5).

⚠ DANGER

Be sure to fix the position pin (5) with linchpin (6). If the position pin (5) detaches during operation, there is a risk of serious accident.

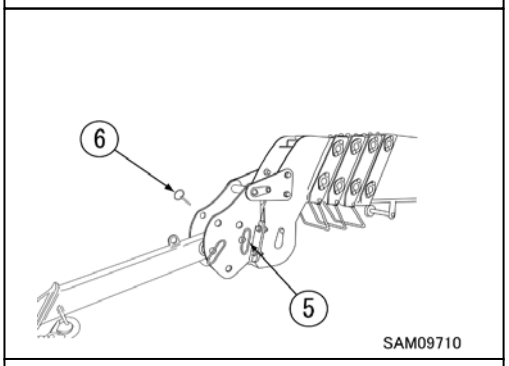

7. Remove the linchpin (11) from the tip of the position pin (10) and remove the position pin (10).

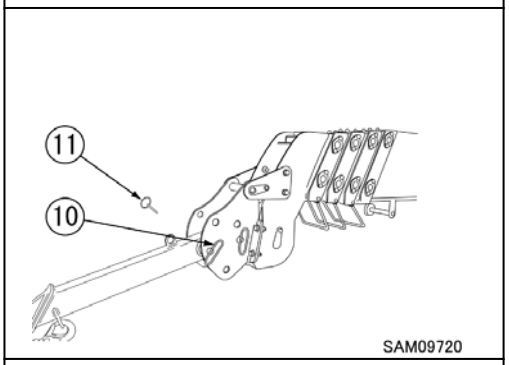

8. Move the E-boom (7) to an angle appropriate for the work and align the holes of the E-boom (7) and the bracket (1).

⚠ DANGER

Depending on the boom angle, the E-boom and hook may interfere with each other, potentially leading to serious accidents. Be sure to adjust to an angle appropriate for the work.

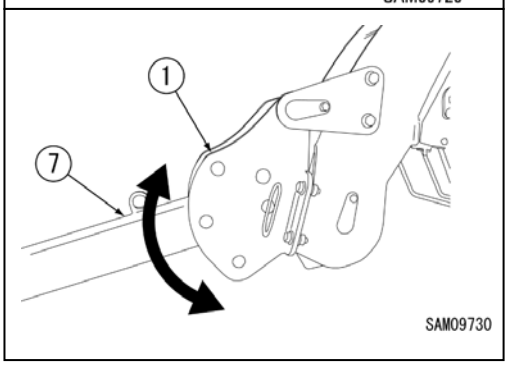

https://truckmanualshub.com/

9. Pass the position pin (10) through the bracket hole and fix the linchpin (11) to the tip of the position pin (10).

⚠ DANGER

Be sure to fix the position pin (10) with linchpin (11). If the position pin detaches during work, there is a risk of serious accident.

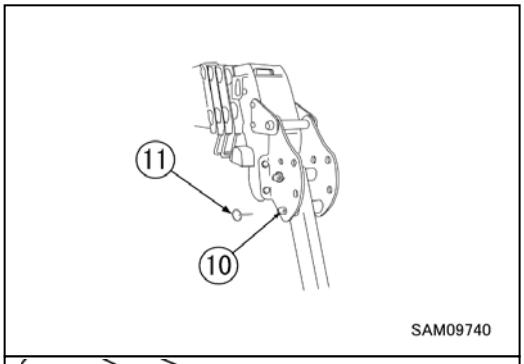

10. Press and hold the monitor searcher hook selector switch to change the position of the searcher hook to match the actual machine position.
    For details concerning positions, see “Searcher Hook 1.1 Moment Limiter Settings”.

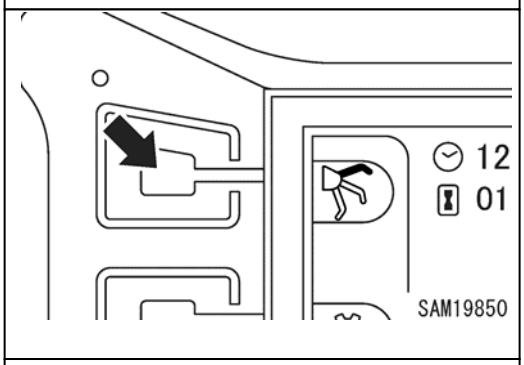

11. Firmly secure the load to hook (12) and begin work.

⚠ DANGER

When lifting a load with a searcher hook, lift it (clear from the ground) using the boom hoisting operation and stop once to confirm that it is a safe load.

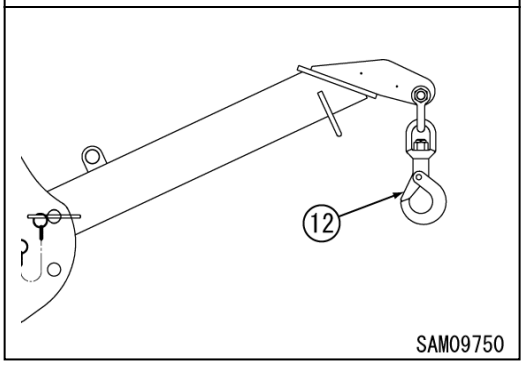

NOTES

Moment limiter display characteristics
- Depending on work conditions, the moment limiter load indicator may display a larger load.
- When the operating amount for the hoisting / lowering lever is large, errors in the load become large. Operate the boom slowly when operating the derricking lever.

https://truckmanualshub.com/

6. INSPECTION AND MAINTENANCE

6.1 CONSUMABLES

Searcher hook attachment parts are consumables. Replace during periodic maintenance or prior to reaching their wear limits. Proper replacement of consumables delivers increased economy in machine use. Always use Maeda genuine parts for part replacement. See the parts catalogue for part numbers when ordering parts.

[LIST OF CONSUMABLES]

Item	Number	Replacement cycle
Hexagonal bolt with washer M12 × 35L, strength 10.9	4 pieces	Every 6 months or when damage, cracks, or deformation is found
Hexagonal bolt with washer M12 × 30L, strength 10.9	4 pieces	Every 6 months or when damage, cracks, or deformation is found
Hexagonal bolt with washer M8 × 16L, strength 10.9	1 piece	Every 6 months or when damage, cracks, or deformation is found
Hexagonal nut M12 × 1 type, strength 10.9	8 pieces	Every 6 months or when damage, cracks, or deformation is found
High tension washer, strength 10.9	8 pieces	Every 6 months or when damage, cracks, or deformation is found

★ The replacement period includes time when not in use.

★ Contact us or our sales service agency for parts replacement.

https://truckmanualshub.com/

6.2 INSPECTION AND MAINTENANCE LIST

This section describes only the searcher hook. For the crane main body, see “Inspection and Maintenance” and follow the precautions.

Inspection and Maintenance Item	Page
6.3 PRE-OPERATION INSPECTION	263
6.3.1 INSPECTION BEFORE STARTING ENGINE	263
[1] Inspection of boom and bracket	263
[2] Inspection of searcher hook mounting bolts	263
[3] Inspection of hook	263
[4] Application of grease	263
6.3.2 INSPECTION AFTER STARTING ENGINE	264
[1] Inspection of boom operations	264
[2] Inspection of moment limiter (on searcher hook selection)	264

https://truckmanualshub.com/

6.3 PRE-OPERATION INSPECTION

6.3.1 INSPECTION BEFORE STARTING ENGINE

Check the following in this section without starting the engine and before work every day.

[1] Inspection of boom and bracket

Check for any cracks, significant deformation or dirt in the boom and bracket. Also, check for loosened, missing or damaged bolts, nuts, and pins. Repair if any abnormality is found.

[2] Inspection of searcher hook mounting bolts

⚠ DANGER

If any damage to searcher hook mounting bolts is found, replace them immediately with new ones.
Bolts may break and the searcher hook may fall.

Check bolts for cracks, damage, or deformation. If there is an abnormality, replace the bolt with a new one, even if it is before its normal replacement time.

[3] Inspection of hook

- Check that the wire rope latch is working properly. Replace or repair if any abnormality is found.
- Rotate the hook and check that it rotates smoothly with no abnormal sounds. Replace or repair if any abnormality is found.
- Check the hook for any cracks or significant deformation. Replace or repair if any abnormality is found.
- Replace the hook when its dimensions reach the replacement standards below.

	Standard dimensions	Replacement standards
a	37 mm	38.9 mm or more
b	25 mm	23.7 mm or less

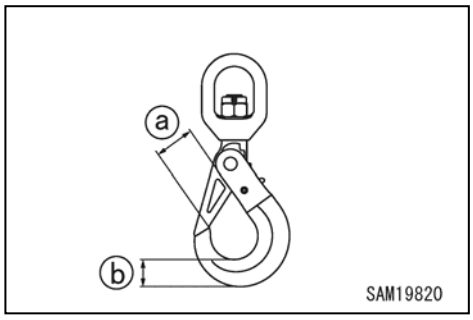

[4] Application of grease

Wipe clean remaining old grease from the contact surface (3) between the shackle (2) and E boom hole, and the contact surface (4) between the hook (1) and shackle (2) and apply new grease.

CAUTION

Applying grease reduces wear on the contact surfaces, making it possible to extend the life of parts.

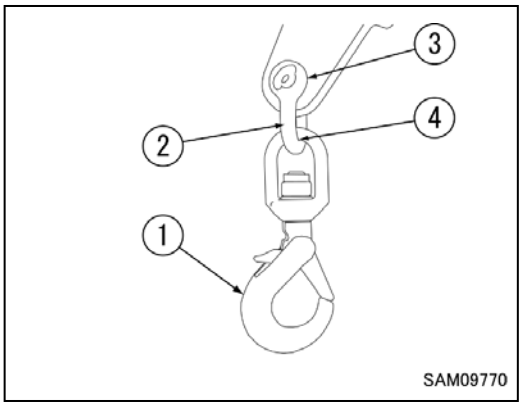

https://truckmanualshub.com/

6.3.2 INSPECTION AFTER STARTING ENGINE

Check the following in this section after starting the engine and before starting the work every day.

[1] Inspection of boom operations

⚠ WARNING

When checking the operation of the boom, make safety checks to ensure that the hook and the boom do not come in contact with people or objects.

- Check the boom and searcher hook make no abnormal sounds when operating the crane.
- Operate the crane with no load and check that all the bolts are securely tightened and have not fallen out.

[2] Inspection of moment limiter (on searcher hook selection)

⚠ WARNING

When an abnormality occurs in the moment limiter, immediately contact us or our sales service agent.

1. Turn “ON” the starter switch.
2. Check the tri-colour revolving working status lamp. After the rotating warning lamp of all colors illuminates for approximately 3 seconds, the green rotating warning lamp illuminates.
3. Check the monitor display. Check that no error codes are displayed.
4. Start the engine and operate the crane as follows. Then, check if the monitor display of the moment limiter is correct.

Crane operation and display item	Moment limiter display values
Displayed value of “boom length” when the boom length is minimum	3.2 m
Displayed value of “boom length” when the boom length is maximum	8.7 m
Displayed value of “working radius” with boom length set to “3.2 m” (boom stage 1), boom angle set to “50.0 degrees”, searcher hook position set to “SH2”	2.8 ± 0.1m

5. Check that the display value of “Actual load”, when a weight whose mass is known is hoisted, is the same as the total mass of the weight + searcher hook + hoisting attachments. However, some error may be generated depending on the boom condition.
6. Raise the weight and check whether it stops automatically due to overload on boom extending / lowering / hoisting operation. If it does not stop automatically when overloaded, immediately contact us or our sales service agency and do not use the machine.
   When performing the checks, if there is no automatic stop as it is slowly overloaded, immediately stop the operation and exit the overload condition through operation on the safe side.
7. Operate the crane and, with the moment limiter displaying boom length “3.2 m” and the boom angle “50 degrees”, make actual measurements of the “Boom angle” and the “Working radius”. If there is any difference between the actual measurement and display value of the moment limiter, contact us or our sales service agency.

NOTES

To measure the actual working radius, measure it from the hook position by suspending a cord vertically from the hook at the tip of the searcher hook.

7. WORKING RADIUS AND RATED TOTAL LOAD CHART

⚠ DANGER

- **The working radius/lifting height chart shows relationship between working radius, boom angle and lifting height above ground of this machine with no load hoisted, and deflection of the boom is not included.**
- **When using the searcher hook, be sure to correctly set the “searcher hook position for the actual machine” and the “searcher hook position on the monitor”.**
- **Do not use the searcher hook and the hook block of the crane main body at the same time. While using the searcher hook, do not use the hook block of the crane main body.**
- **When using the searcher hook, do not perform travelling with a hoisted load.**
- **For searcher hook position “SH1”, do not use a boom angle of 40 degrees or more.**

7.1 WORKING RADIUS AND LIFTING HEIGHT CHART FOR SEARCHER HOOK

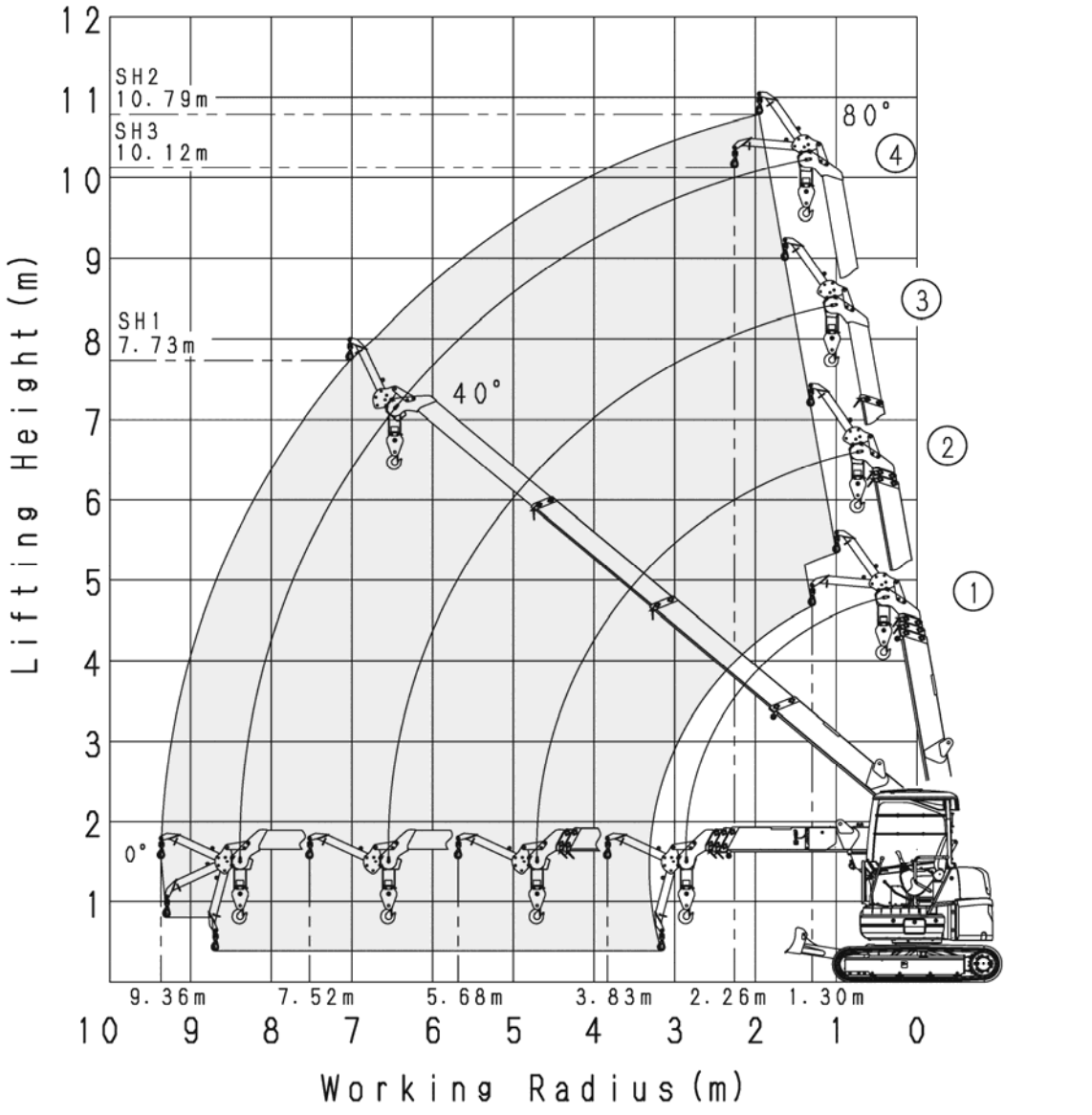

https://truckmanualshub.com/

7.2 RATED TOTAL LOAD CHART FOR SEARCHER HOOK

Unit: kg

Boom length / (m) Working radius	(1) 3.18 m boom	(2) 5.03 m boom	(3) 6.87 m boom	(4) 8.71 m boom
1.50	850	850	850	850
2.00	850	850	850	850
2.50	850	850	850	850
3.00	850	850	850	850
3.50	850	800	800	800
3.83	850	675	675	675
4.00		625	625	620
4.50		510	505	505
5.00		430	425	420
5.50		370	365	360
5.68		350	345	340
6.00			315	310
6.50			275	270
7.00			245	240
7.50			220	215
7.52			220	215
8.00				195
8.50				175
9.00				160
9.36				150

★ Boom length

3.18 m boom → Boom fully retracted

5.03 m boom → Boom length: 3.19 m to 5.03 m

6.87 m boom → Boom length: 5.04 m to 6.87 m

8.71 m boom → Boom length: 6.88 m or more

★ The rated total load chart is based on the actual working radius including the deflection under load.

★ The rated total load chart values include the weight of the searcher hook (30 kg) and hoisting attachments.

[It does not include the hook block of the main body (30 kg)]

★ The searcher hook is for static hoist only and cannot be used for travelling hoist work.

https://truckmanualshub.com/

OPERATION MANUAL for MAEDA CRAWLER CRANE CC423S-1

Document Number: 542E-OM1803-00
First Edition: March 1st, 2018

Issued by MAEDA SEISAKUSHO CO., LTD.
1095, Onbegawa, Shinonoi, Nagano City,
Nagano Prefecture, 388-8522 Japan

Any reproduction or reprinting without permission is prohibited.

https://truckmanualshub.com/

Maeda Seisakusho Co.,Ltd.

https://truckmanualshub.com/

Masuda Seisakusho Co., Ltd

https://truckmanualshub.com/

MAEDA