https://truckmanualshub.com/

PARTS CATALOGUE OF LUZHONG SERIES 40 WHEELED TRACTORS

1

https://truckmanualshub.com/

11　空气滤清系总成

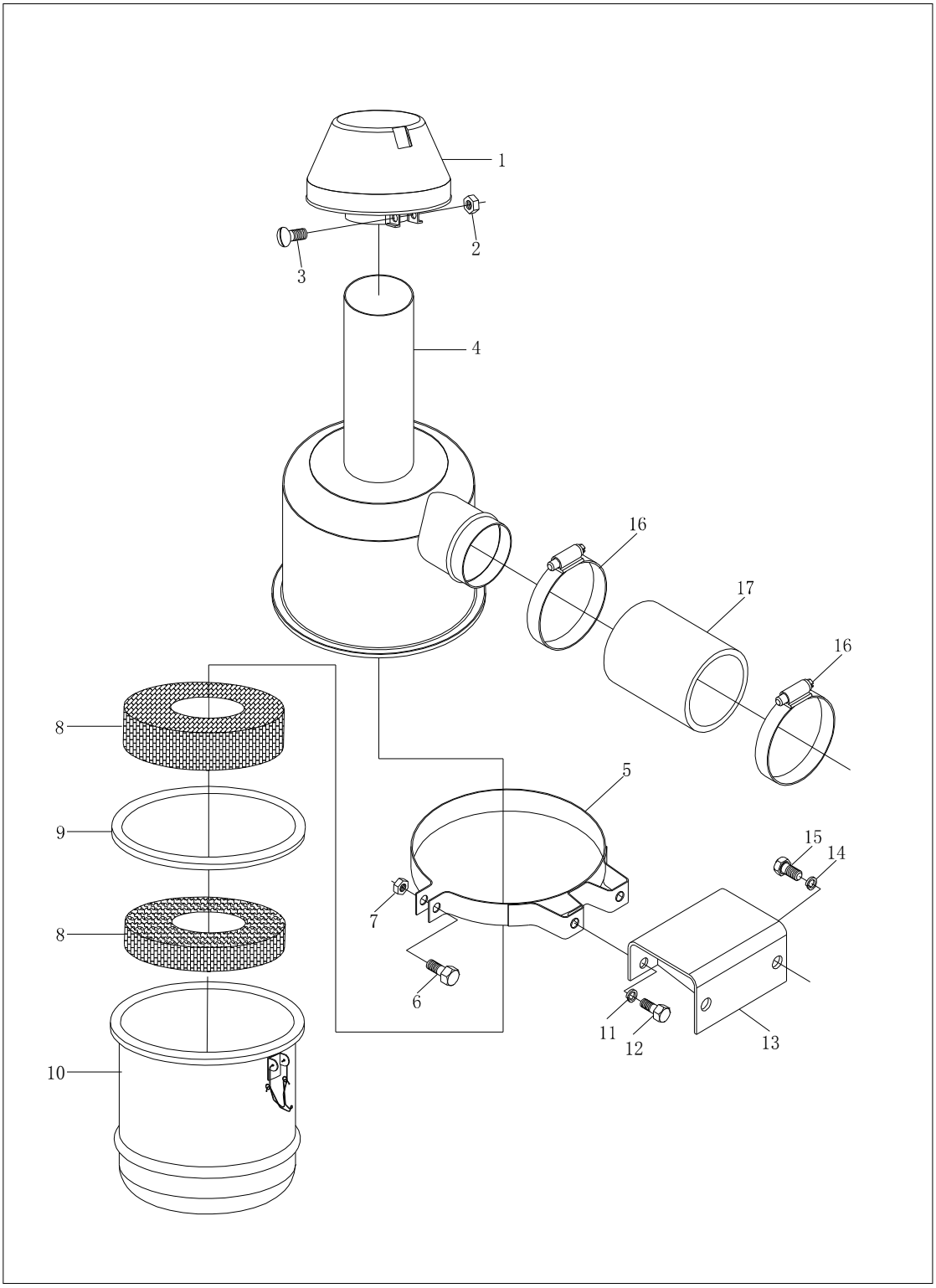

2

11 空气滤清系总成
Air Cleaner Assembly①

标号No.	零部件代号 Drawing No.	Part Name and Standards	零部件名称及规格	适用机型和用量（件） Applied Tractor Models and Qty.(Piece)					
				LZT 300	LZT 304	LZT 350	LZT 354	LZT400 /450/480 /500/520 /550	LZT404 /454/484 /504/524 /554
	LZT 300.11.010	Air cleaner ssembly	空气滤清器总成	1	1	1	1	1	1
1	**LZT 300.11.010-01**	Preliminary filter	粗滤器部件	1	1	1	1	1	1
2	**GB/T 39**	Square nut M8-Product grade C	方螺母M8-C级	1	1	1	1	1	1
3	**GB/T 5781**	Hexagon head bolt-Full thread-Product grade C M6×30-Zn.D	全螺纹螺母M6X 30-ZN	1	1		1	1	1
4	**LZT 300.11.010-02**	Fine filter	清滤器部件	1	1	1	1	1	1
5	**LZT 300.11.010-03**	Setup belt	安装带部件	1	1	1	1	1	1
6	**GB/T 5783**	Hexagon head bolt-Full thread M8×35-Zn.D	全螺纹螺母M8X 35-ZN	1	1	1	1	1	1
7	**GB/T 6170**	Hexagon nut,style 1 M8	I型 螺母M8	1	1	1	1	1	1
8	**LZT300.11.010-04**	Fine filter	细滤器部件	2	2	2	2	2	2
9	**LZT 300.11.010-05**	Sealing ring,fine filter	细滤器密封圈	1	1	1	1	1	1
10	**LZT 300.11.010-06**	Oil pan	储油罐部件	1	1	1	1	1	1
11	**GB/T 93**	Single coil spring lock washer 10 -Normal type	垫圈10	2	2	2	2	2	2
12	**GB/T 5783**	Hexagon head bolt-Full thread M10×25-Zn.D	螺栓M10×25-Zn.D	2	2	2	2	2	2
13	**LZT 300.11.011**	Bracket weldment	支架焊合	1	1	1	1	1	1
14	**GB/T 93**	Single coil spring lock washer 8 -Normal type	垫圈8	2	2	2	2	2	2
15	**GB/T 5783**	Hexagon head bolt-Full thread M8×16-Zn.D	螺栓M8×16-Zn.D	2	2	2	2	2	2
16	**ZBJ5001**	Clamp d80	喉箍d80	2	2	2	2	2	2
17	**LZT 300.11.102**	Air hose	空气软管	1	1	1	1	1	1

Note: ①Lijia engine for external wet air cleaner.注：外置湿式配力佳柴油机

https://truckmanualshub.com/

11A/11C 空气滤清系总成

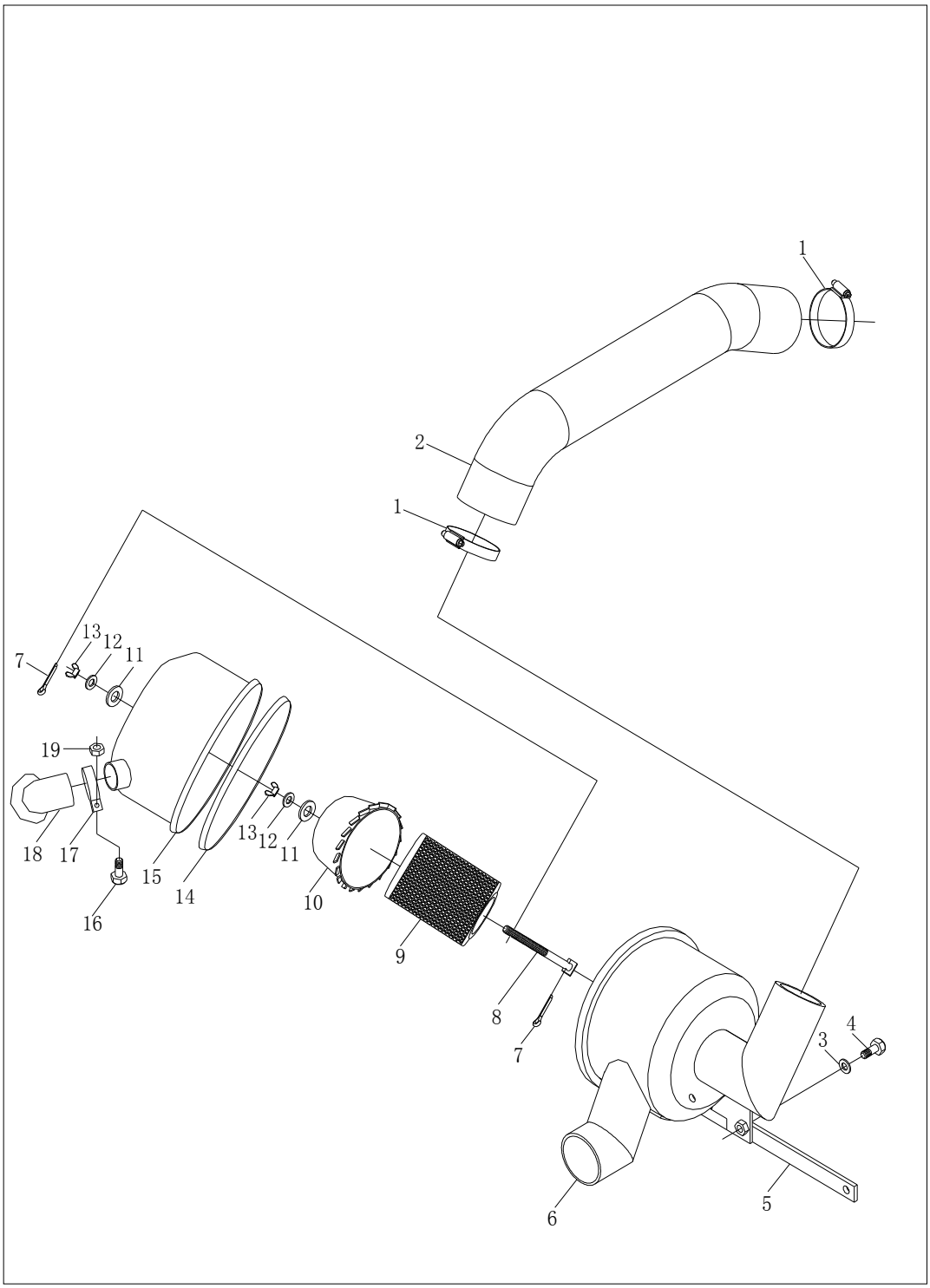

4

11A/11C 空气滤清系总成
Air Cleaner Assembly

标号No.	零部件代号 Drawing No.	Part Name and Standards	零部件名称及规格	适用机型和用量（件） Applied Tractor Models and Qty.(Piece)					
				LZT 300	LZT 304	LZT 350	LZT 354	LZT400 /450/480 /500/520 /550	LZT404 /454/484 /504/524 /554
	LZT 300.11.010	Air cleaner assembly	空气滤清器总成	0	1	1	1	1	1
1	**ZBJ15001**	Clamp D80	喉箍d80	2	2	2	2	2	2
2	**LZT 300.11A.101①**	Intake hose	进气软管	1	1	1	1	1	1
	LZT 300.11A.101②	Intake hose	进气软管	1	1	1	1	1	1
3	**GB/T 97.1**	Plain washer 8-Product grade A	垫圈8	8	8	8	8	8	8
4	**GB/T 5783**	Hexagon head bolt-Full thread M8×25-Zn.D	螺栓M8×25-Zn.D	8	8	8	8	8	8
5	**LZT 300.11A.102**	Bracket,air cleaner	空气滤清器支架	2	2	2	2	2	2
6	**LZT 300.11A.010-03**	Upper cover weldment	上盖合件	1	1	1	1	1	1
7	**GB/T 91**	Split pin	开口销	2	2	2	2	2	2
8	**LZT 300.11A.010-04**	Bolt with hole	带孔螺栓	1	1	1	1	1	1
9	**LZT 300.11A.010-05**	Catridge	滤芯	1	1	1	1	1	1
10	**LZT 300.11A.010-06**	Cartridge house	滤芯壳	1	1	1	1	1	1
11		Rubber cushion	橡胶垫	2	2	2	2	2	2
12	**GB/T 97.1**	Plain washer 8-Product grade A	平垫圈8-A级	2	2	2	2	2	2
13	**GB/T 62**	Wing nut M8	蝶形螺母M8	2	2	2	2	2	2
14		Rubber sealing ring	橡胶密封圈	1	1	1	1	1	1
15	**LZT 300.11A.010-07**	Lower cover weldment	下盖焊合	1	1	1	1	1	1
16	**GB/T 818**	Pan head screw with cross recess	十字槽盘头螺钉	1	1	1	1	1	1
17	**LZT 300.11A.010-08**	Clamp	卡箍	1	1	1	1	1	1
18		Dust bag	排尘袋	1	1	1	1	1	1
19	**GB/T 6170**	Hexagon nut,style 1 M5	I型六角螺母	1	1	1	1	1	1

Note: ①Lijia engine for external wet air cleaner. ②Jiangdong engine for built －in dust air clea
注： ①内置干式配力佳柴油机②内置干式配江动柴油机

https://truckmanualshub.com/

300.13 冷却系总成

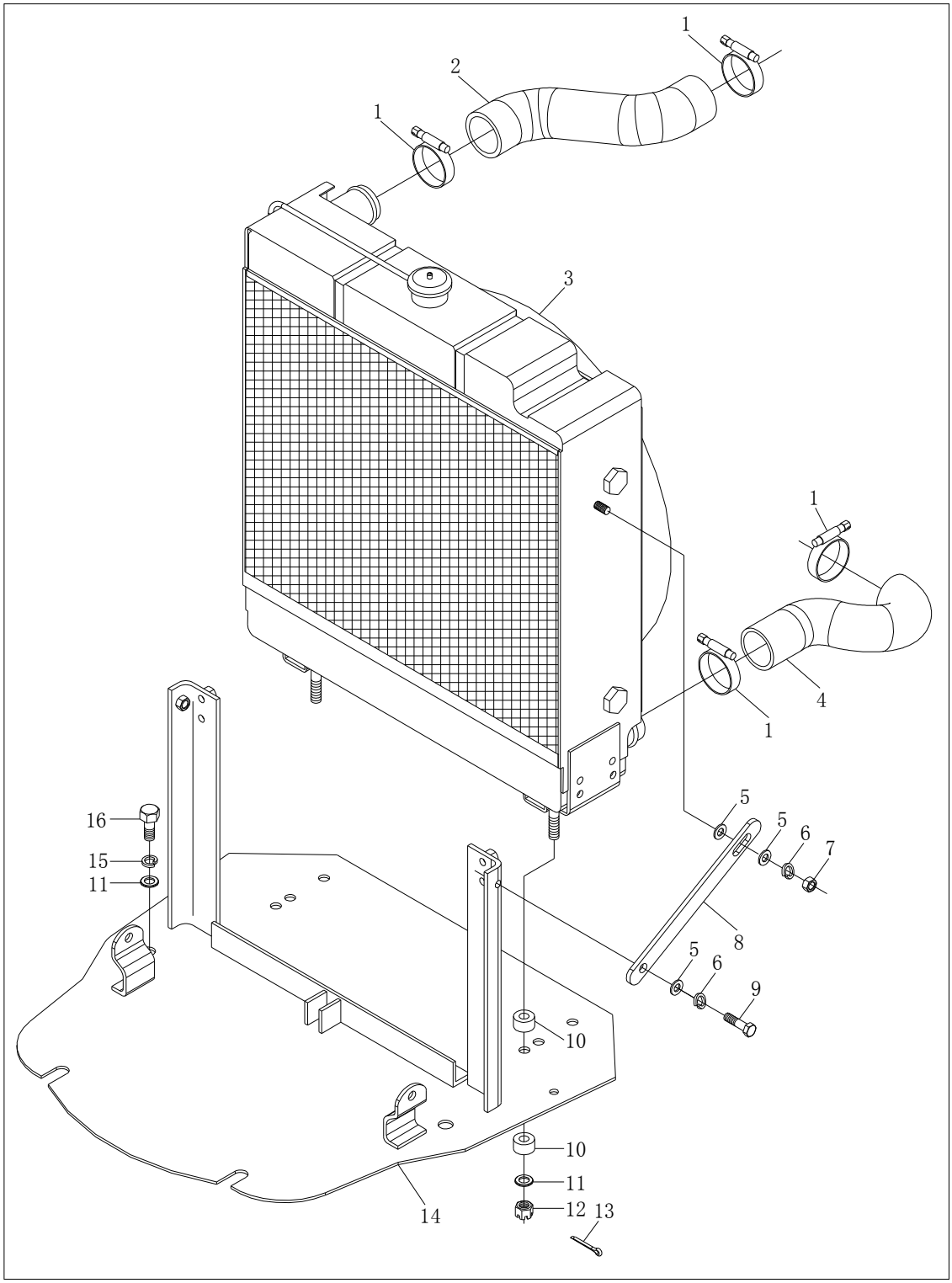

6

13/13C/13D 冷却系总成
Cooling System Assembly

序号 No.	零部件代号 Drawing No.	Part Name and Standards	零部件名称及规格	适用机型和用量（件） Applied Tractor Models and Qty.(Piece)					
				LZT 300	LZT 304	LZT 350	LZT 354	LZT400 /450/480 /500/520 /550	LZT404 /454/484 /504/524 /554
1	**ZBJ15001**	Clamp d60	喉箍d60	4	4	4	4	4	4
2	**LZT300.13.101①**	Inlet hose of water	进水软管	1	1	1	1	1	1
	LZT300.13C.101②③	Inlet hose of water tank	水箱进水管	1	1	1	1		
3	**LZT300.13.010①**	Radiator assembly	散热器总成	1	1	1	1		
	LZT300.13C.010②	Radiator assembly(with guard net)	散热器总成	1	1	1	1		
	LZT300.13D.010③	Radiator assembly	散热器总成	1	1	1	1		
	LZT400.13.010④	Radiator assembly	散热器总成					1	1
4	**LZT300.13.102①**	Outlet hose of water	出水软管	1	1	1	1	1	1
	LZT300.13C.104②③	Outlet hose of water tank	水箱出水管	1	1	1	1		
5	**GB/T96**	Large washer 8	大垫圈8	6	6	6	6	6	6
6	**GB/T93**	Single coil spring lock washer 8-Normal type	弹性垫圈8	4	4	4	4	4	4
7	**GB/T6170**	Hexagon nut,style 1 M8-Zn.D	螺母M8-Zn.D	2	2	2	2	2	2
8	**LZT300.13.204**	Drawbar unit	拉杆	2	2	2	2	2	2
9	**GB/T5781**	Hexagon head bolt-Full thread-Product grade C M8×30-Zn.D	螺栓M8×20-Zn.D	2	2	2	2	2	2
10	**LZT650.13.112**	Rubber washer	橡胶垫块	4	4	4	4	4	4
11	**GB/T5287**	Extra large series 10	特大垫圈10	6	6	6	6	6	6
12	**GB/T6178**	Hexagon slotted and castle nut,style 1 M10-Zn.D	开口螺母M10-Zn.D	2	2	2	2	2	2
13	**GB/T91**	Split pin 2.5×30	销2.5×30	2	2	2	2	2	2
14	**LZT300.13.020**	Bracket weldment of waqter tank	水箱支架焊合	1	1	1	1	1	1
15	**GB/T93**	Single coil spring lock washer 10 -Normal type	垫圈10	4	4	4	4	4	4
16	**GB/T5781**	Hexagon head bolt-Full thread-Product grade C M10×25-Zn.D	螺栓M10×25-Zn.D	4	4	4	4	4	4

Note: ①Adopt Model Lijia SL21058 engine.②Adopt Model Jiangdong TY3951T engine,radiator with guard net. ③Adopt Model Jiangdong TY3951T engine. ④Adopt Model Lijia SL3105 engine.
①配力佳SL2105发动机,②配江动TY395IT发动机,③配江动TY395IT发动机 ④配力佳SL3105发动机

7

https://truckmanualshub.com/

14 减压机构总成

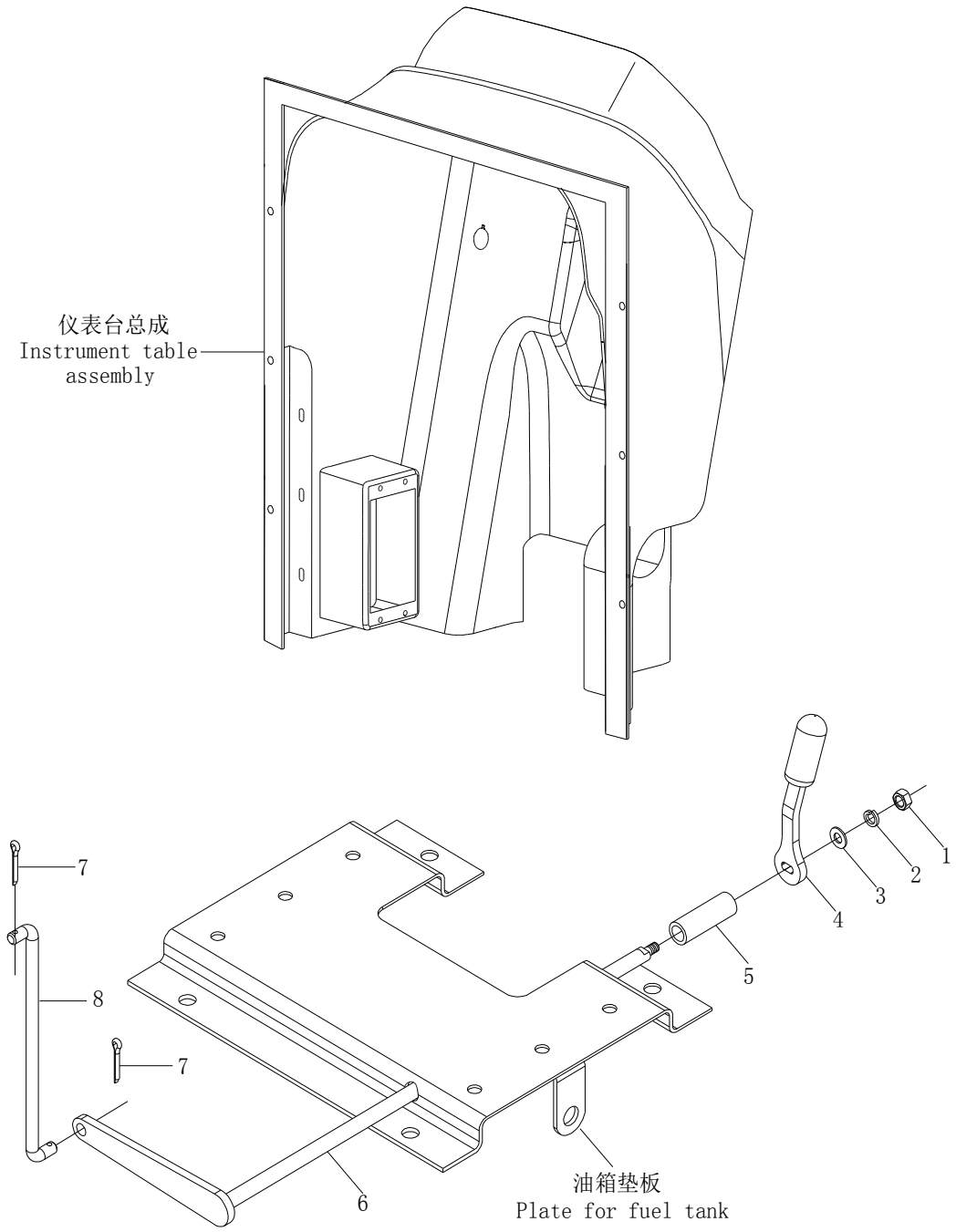

8

https://truckmanualshub.com/

14 减压机构总成
Pressure-Reducing Mechanism Assembly

序号 No.	零部件代号 Drawing No.	Part Name and Standards	零部件名称及规格	适用机型和用量（件） Applied Tractor Models and Qty.(Piece)					
				LZT 300	LZT 304	LZT 350	LZT 354	LZT400 /450/480 /500/520 /550	LZT404 /454/484 /504/524 /554
1	**GB/T6170**	Hexagon nut,style 1 M6-Zn.D	螺母M6-Zn..D	1	1	1	1	1	1
2	**GB/T93**	Single coil spring lock washer6 - Normal type	垫圈6	**1**	**1**	**1**	**1**	**1**	**1**
3	**GB/T97.1**	Plain washer 6- Product grade A	垫圈6	**1**	**1**	**1**	**1**	**1**	**1**
4	**LZT300.14.010**	Control lever weldment	操纵手柄焊合件	**1**	**1**	**1**	**1**	**1**	**1**
5	**LZT300.14.103**	Sleeve	套筒	**1**	**1**	**1**	**1**	**1**	**1**
6	**LZT300.14.020**	Control rod weldment	减压操纵杆焊合件	**1**	**1**	**1**	**1**	**1**	**1**
7	**GB/T91**	Split pin 3.2×18	销3.2×18	**2**	**2**	**2**	**2**	**2**	**2**
8	**LZT300.14.106**	Pressure-reducing link rod	减压连杆	**1**	**1**	**1**	**1**	**1**	**1**

9

https://truckmanualshub.com/

20 发动机操纵机构总成

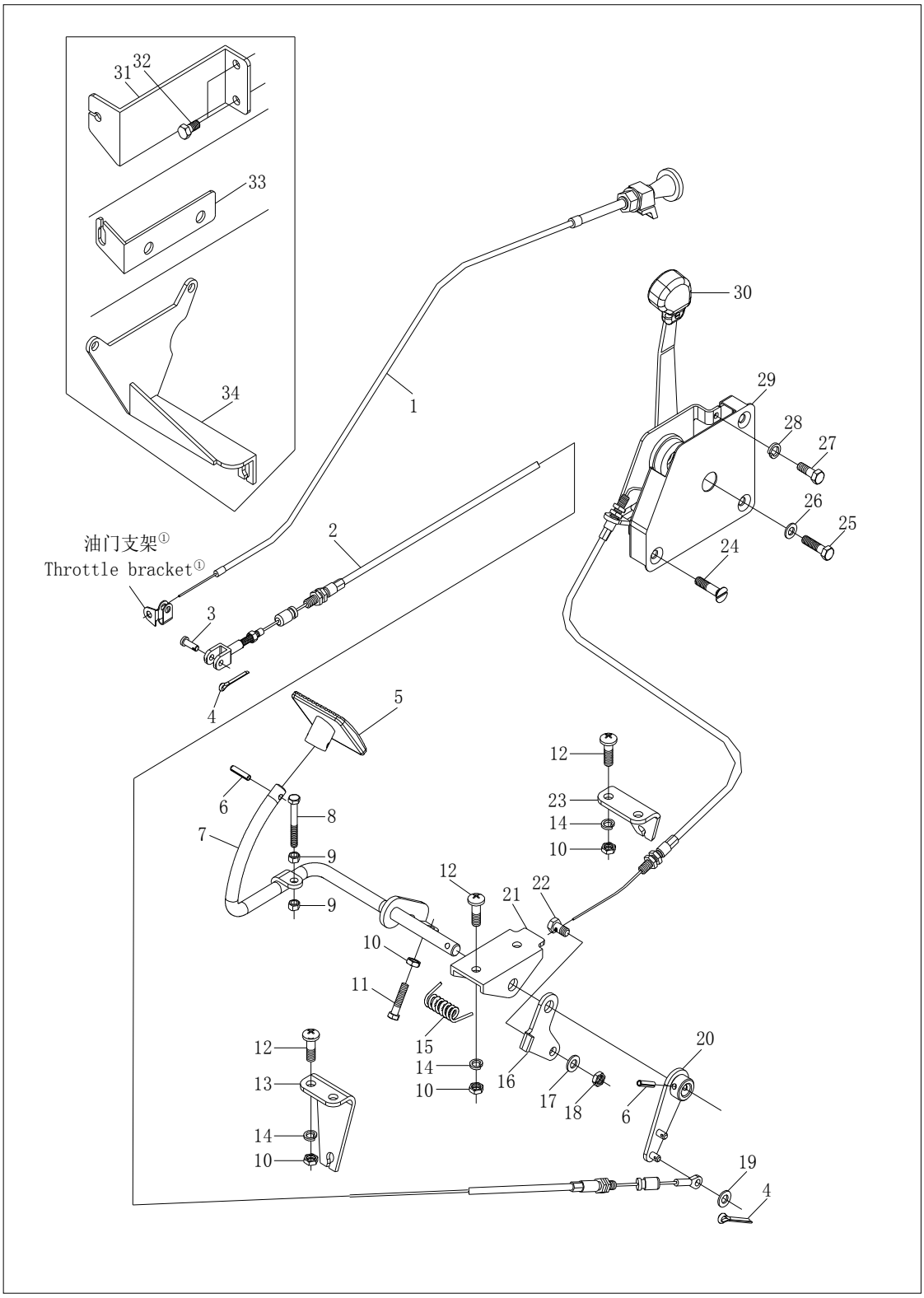

10

https://truckmanualshub.com/

20 发动机操纵机构总成
Control Mechanism Assembly of the Engine

序号 No.	零部件代号 Drawing No.	Part Name and Standards	零部件名称及规格	适用机型和用量（件） Applied Tractor Models and Qty.(Piece)					
				LZT 300	LZT 304	LZT 350	LZT 354	LZT400 /450/480 /500/520 /550	LZT404 /454/484 /504/524 /554
1	**LZT300.20.018**	Extinguish wire assenbly	熄火拉线总成	1	1	1	1		
	LZT400.20.018①	Extinguish wire assenbly	熄火拉线总成	1	1	1	1	1	1
2	**LZT300.20.014**	Foot throttle wire assenbly	脚油门拉线总成	1	1	1	1	1	1
3	**GB/T882**	Pin roll B5×20-Zn.D	销轴B5×20-Zn.D	1	1	1	1	1	1
4	**GB/T91**	Split pin2×12	开口销2×12	2	2	2	2	2	2
5	**LZT650.20.101**	Foot pedal	脚踏板	1	1	1	1	1	1
6	**GB/T879**	Spring-type straight pin5×20	销5×20	2	2	2	2	2	2
7	**LZT300.20.013**	Foot pedal rocker weldment	脚踏板摇臂焊合	1	1	1	1	1	1
8	**GB/T5781**	Hexagon head bolt-full thread-Product grade C M6×40-Zn.D	螺栓M6×40-Zn.D	1	1	1	1	1	1
9	**GB/T6172**	Hexagon thin nut M6-Nn.D	螺母M6-Zn.D	3	3	3	3	3	3
10	**GB/T6172**	Hexagon thin nut M8-Nn.D	螺母M8-Zn.D	8	8	8	8	8	8
11	**GB/T5781**	Hexagon head bolt-full thread-Product grade C M6×45-Zn.D	螺栓M8×45-Zn.D	1	1	1	1	1	1
12	**GB/T818**	Cross recessed pan head screw M8×20	螺钉M8×20	6	6	6	6	6	6
13	**LZT300.20.106**	Bracket for foot throttle wire	脚油门拉线支架	1	1	1	1	1	1
14	**GB/T93**	Single coil spring lock washer 8-Normal type	垫圈8	8	8	8	8	6	6
	GB/T93②	Single coil spring lock washer 8-Normal type	垫圈8	6	6	6	6		

续表1 Continued One

15	**LZT650.20.104**	Torsion spring	扭簧	1	1	1	1	1	1
16	**LZT650.20.114**	Hand throttle rocker	手油门摇臂	1	1	1	1	1	1
17	**GB/T97.1**	Plain washer 8-Product grade A	垫圈8	3	3	3	3	1	1
	GB/T97.1②	Plain washer 8-Product grade A	垫圈8	1	1	1	1		
18	**GB/T6170**	Hexagon nut,style 1 M8-Zn.D	螺母M8-Zn.D	1	1	1	1	1	1
19	**GB/T97.1**	Plain washer 6-Product grade A	垫圈6	1	1	1	1	1	1
20	**LZT300.20.011**	Foot throttle rocker weldment	脚油门摇臂焊合	1	1	1	1	1	1
21	**LZT650.21.108**	Throttle bracket	油门支架	1	1	1	1	1	1
22	**LZT650.20.133**	Fastening bolt	紧固螺钉	1	1	1	1	1	1
23	**LZT300.21.105**	Bracket for hand throttle wire	手油门拉线支架	1	1	1	1	1	1
24	**GB/T68**	Slotted countersunk head screw M8×30	螺钉M8×30	3	3	3	3	3	3
25	**GB/T5780**	Hexagon head bolt M10×45-Zn.D	螺栓M10×45-Zn.D	1	1	1	1	1	1
26	**GB/T96**	Large washer 10	垫圈10	1	1	1	1	1	1
27	**GB/T5781**	Hexagon head bolt-Full thread-Product grade C M6×16-Zn.D	螺栓M6×16-Zn.D	3	3	3	3	3	3
28	**GB/T93**	Single coil spring lock washer 6-Normal type	垫圈6	3	3	3	3	3	3
29	**LZT700.20.324**	Hand throttle cap	手油门盖	1	1	1	1	1	1
30	**LZT700.20.019**	Hand throttle assembly	手油门总成	1	1	1	1	1	1
31	**LZT300.20B.102②**	Bracket for wire	拉线支架	1	1	1	1		
32	**GB/T5781②**	Hexagon head bolt-Full thread-Product grade C M8×16-Zn.D	螺栓M8×16-zn.D	2	2	2	2		
33	**LZT300.20C.103③**	Bracket for wire	发动机油门支架	1	1	1	1		
34	**LZT400.20.102**	Bracket for wire	拉线支架					1	1

Note: ①Adopt three-cylinder engine. ②Adopt Lijia engine(dust-type). ③Adopt Jiangdong engine(wet-type).
注： ①配三缸柴油机 ②配力佳柴油机（干式） ③配江动柴油机（湿式）

https://truckmanualshub.com/

300.21/350.21 离合器总成

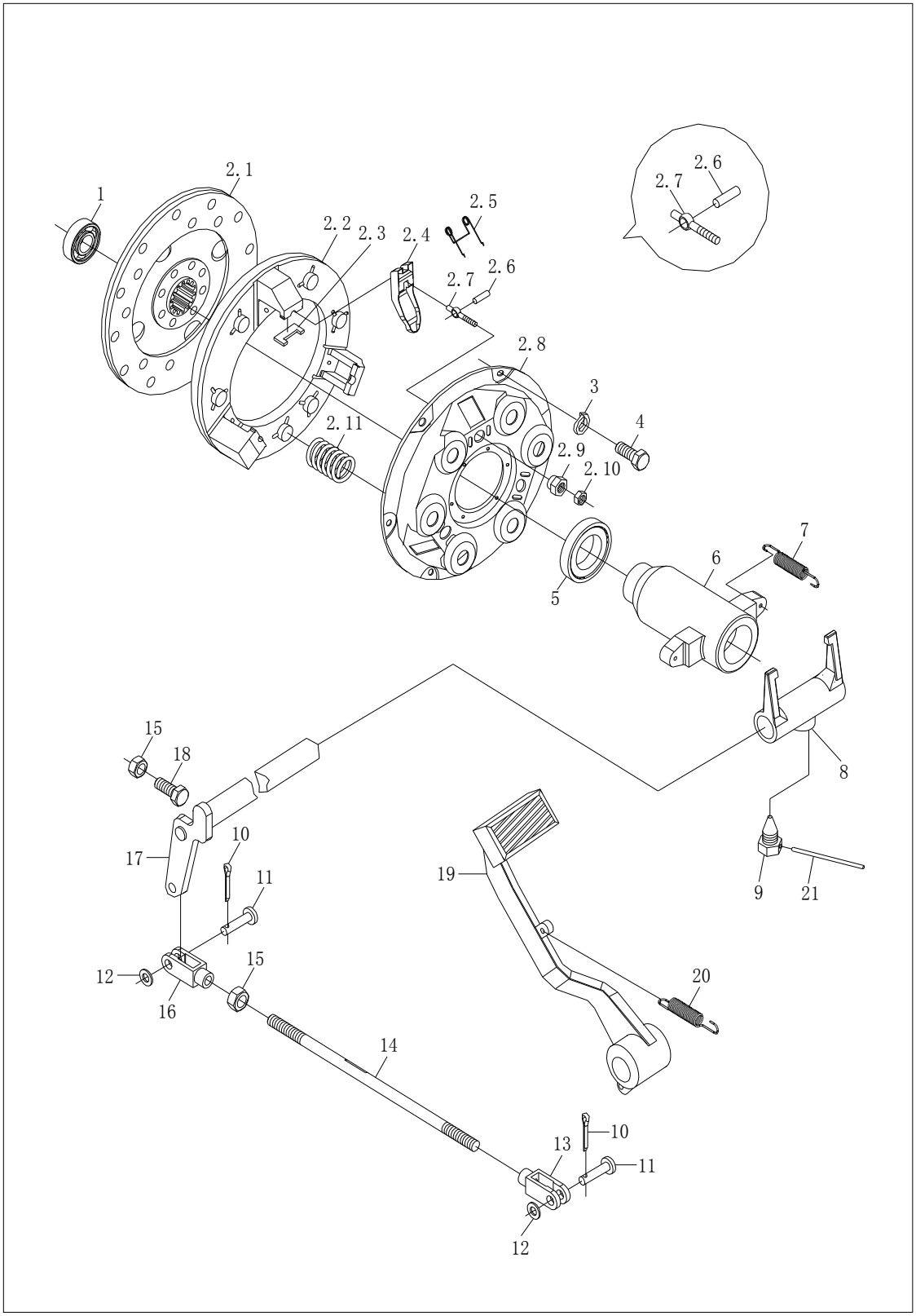

13

https://truckmanualshub.com/

300.21 单作用离合器总成
Single-Stage Clutch Assembly(LZT300)

序号 No.	零部件代号 Drawing No.	Part Name and Standards	零部件名称及规格	适用机型和用量（件） Applied Tractor Models and Qty.(Piece)					
				LZT 300	LZT 304	LZT 350	LZT 354	LZT400 /450/480 /500/520 /550	LZT404 /454/484 /504/524 /554
1	GB/T 276	Rolling bearing-Deep groove ball Bearing 6203-Z	轴承6203-Z	1	1	1	1		
2	LZT 300.21.011	Clutch sub-assembly	离合器分总成	1	1				
	LZT 350.21.011	Clutch sub-assembly	离合器分总成			1	1		
2.1	LZT 300.21.014	Wearing plate,clutch assembly	离合器摩擦片总成	1	1	1	1		
2.2	LZT 300.21.115	Pressure plate,clutch	离合器压盘	1	1	1	1		
2.3	LZT 300.21.118	Latch,release lever	分离杠杆卡铁	3	3	3	3		
2.4	LZT 300.21.121	Release lever	分离杠杆	3	3	3	3		
2.5	LZT 300.21.120	Spring,release lever	分离杠杆弹簧	3	3	3	3		
2.6	LZT 300.21.109	Parallel pin	圆柱销6×25	3	3	3	3		
2.7	LZT 300.21.116	Adjusting bolt of release lever	分离杠杆调整螺栓	3	3	3	3		
2.8	LZT 300.21.117	Clutch cover	离合器盖	1	1	1	1		
2.9	LZT 300.21.119	Adjusting nut of release lever	分离杠杆调整螺母	3	3	3	3		
2.1	GB/T 6171	Hexagon nut,style 1 M8×1	螺母M8×1	3	3	3	3		
2.11	LZT 300.21.122	Hold-down spring	离合器压紧弹簧	6	6				
	LZT 350.21.122	Hold-down spring	离合器压紧弹簧			6	6		

14

续表1 Continued One

3	**GB/T 93**	Single coil spring lock washer 8 -Normal type	垫圈8	6	6	6	6		
4	**GB/T 5783**	Hexagon head bolt-Full thread M8×16	螺栓M8×16	6	6	6	6		
5		Release bearing 688808	分离轴承688808	1	1	1	1		
6	**LZT 300.31.101**	Release bearing seat	分离轴承座	1	1	1	1		
7	**LZT 300.21.102**	Return spring of bearing seat	推力轴承座回位弹簧	2	2	2	2		
8	**LZT 300.21.103**	Release fork	分离拨叉	1	1	1	1		
9	**LZT 300.21.113**	Stop bolt	止动螺钉	1	1	1	1		
10	**GB/T 91**	Split pin 3.2×16	开口销3.2×16	2	2	2	2		
11	**GB/T 882**	Clevis pin with head B10×28-Zn.D	销轴B10×28-Zn.D	2	2	2	2		
12	**GB/T 97.1**	Plain washer 10-Product grade A	垫圈10	2	2	2	2		
13	**LZT 300.43.110**	Rear-fork	拉杆后叉	1	1	1	1		
14	**LZT 300.21.110**	Drawbar	拉杆	1	1	1	1		
15	**GB/T 6170**	Hexagon nut,style 1 M10-Zn.D	螺母M10-Zn.D	2	2	2	2		
16	**LZT 300.43.108**	Front-fork	拉杆前叉	1	1	1	1		
17	**LZT 300.21.013**	Release fork shaft unit	离合器分离叉轴合件	1	1	1	1		
18	**GB/T 5783**	Hexagon head bolt-Full thread M10×40-Zn.D	螺栓M10×40-Zn.D	1	1	1	1		
19	**LZT 300.21.012**	Pedal assembly of clutch	离合器踏板总成	1	1	1	1		
20	**LZT 300.43.130**	Reture spring	回位弹簧	1	1	1	1		
21	**GB/T 343**	Low carbon steel wire SZ-1.40	低碳钢丝SZ-1.40	1	1	1	1		

https://truckmanualshub.com/

300.21/350.21　离合器总成

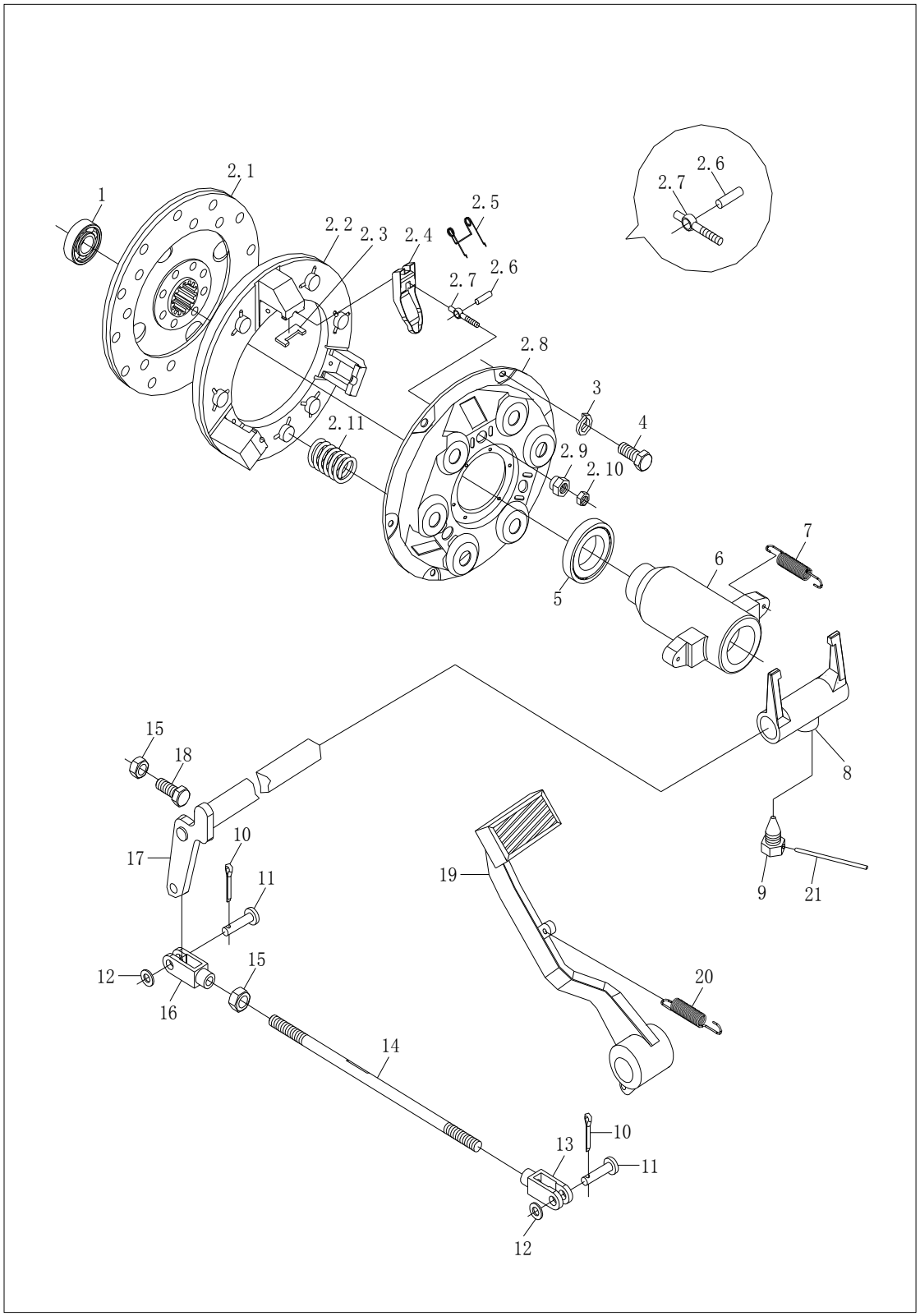

16

https://truckmanualshub.com/

400.21 单作用离合器总成
Single-Stage Clutch Assembly(LZT400)

序号 No.	零部件代号 Drawing No.	Part Name and Standards	零部件名称及规格	适用机型和用量（件） Applied Tractor Models and Qty.(Piece)					
				LZT 300	LZT 304	LZT 350	LZT 354	LZT400 /450/480 /500/520 /550	LZT404 /454/484 /504/524 /554
	LZT 400.21.001	Clutch assembly	离合器总成					1	1
1	**GB/T 276**	Rolling bearing-Deep groove ball Bearing 6204-Z	轴承6204-Z					1	1
2	**LZT 400.21.011**	Clutch sub-assembly	离合器分总成					1	1
2.1	**LZT 400.21.014**	Wearing plate assembly	离合器摩擦片总成					1	1
2.2	**LZT 400.21.115**	Pressure plate of clutch	离合器压盘					1	1
2.3	**LZT 400.21.118**	Latch,release lever	分离杠杆卡铁					3	3
2.4	**LZT 400.21.121**	Release lever	分离杠杆					3	3
2.5	**LZT 400.21.120**	Spring of release lever	分离杠杆弹簧					3	3
2.6	**LZT 300.21.109**	Parallel pin	圆柱销8×30					3	3
2.7	**LZT 400.21.116**	Adjusting bolt of release lever	分离杠杆调整螺栓					3	3
2.8	**LZT 400.21.117**	Clutch cover	离合器盖					1	1
2.9	**LZT 400.21.119**	Adjusting nut of release lever	分离杠杆调整螺母					3	3
2.1	**LZT 400.21.126**	Fastening nut	紧固螺母					3	3
2.11	**LZT 400.21.122**	Hold-down spring	离合器压紧弹簧					6	6
3	**GB/T 93**	Single coil spring lock washer 8 -Normal type	垫圈8					6	6

17

续表1 Continued One

4	**GB/T 5783**	Hexagon head bolt-Full thread M8×16	螺栓M8×16					6	6
5		Release bearing 986911	分离轴承688911					1	1
6	**LZT 300.21.101**	Release bearing seat	分离轴承座					1	1
7	**LZT 300.21.102**	Return spring of bearing seat	推力轴承座回位弹簧					2	2
8	**LZT 300.21.103**	Release fork	分离拨叉					1	1
9	**LZT 300.21.113**	Stop bolt	止动螺钉					1	1
10	**GB/T 91**	Split pin 3.2×16	开口销3.2×16					2	2
11	**GB/T 882**	Clevis pin with head B10×28-Zn.D	销轴B10×28-Zn.D					2	2
12	**GB/T 97.1**	Plain washer 10-Product grade A	垫圈10					2	2
13	**LZT 300.43.110**	Rear-fork of drawbar	拉杆后叉					1	1
14	**LZT 300.21.110**	Drawbar	拉杆					1	1
15	**GB/T 6170**	Hexagon nut,style 1 M10-Zn.D	螺母M10-Zn.D					2	2
16	**LZT 300.43.108**	Front-fork of drawbar	拉杆前叉					1	1
17	**LZT 300.21.013**	Release fork shaft unit of clutch	离合器分离叉轴合件					1	1
18	**GB/T 5783**	Hexagon head bolt-Full thread M10×40-Zn.D	螺栓M10×40-Zn.D					1	1
19	**LZT 400.21.012**	Pedal assembly of clutch	离合器踏板总成					1	1
20	**LZT 300.43.130**	Return spring	回位弹簧					1	1
21	**GB/T 343**	Low carbon steel wire SZ-1.40	低碳钢丝SZ-1.40					1	1

https://truckmanualshub.com/

21B 双作用离合器总成

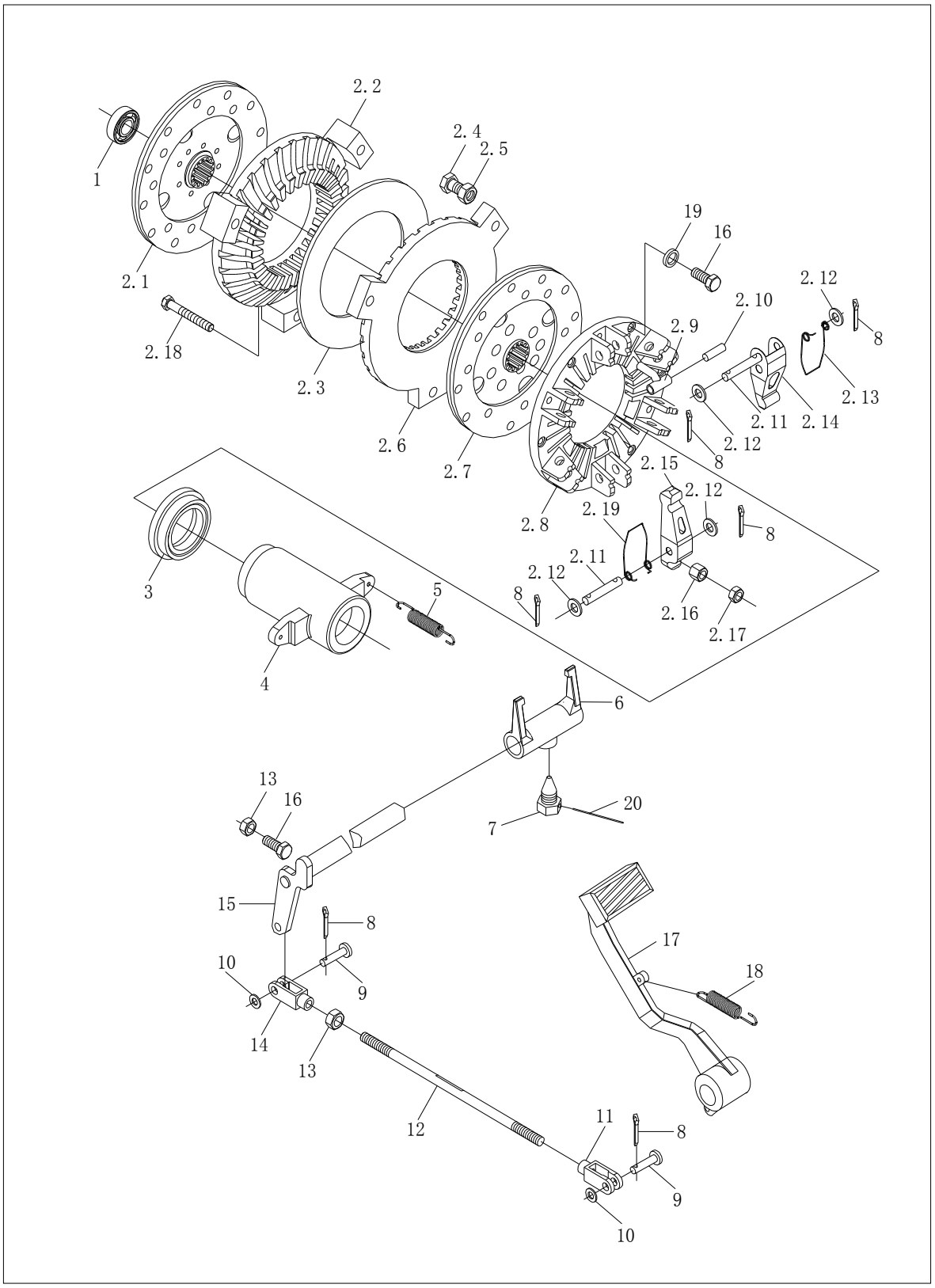

19

21B 双作用离合器总成
Dual-Stage Clutch Assembly

序号 No.	零部件代号 Drawing No.	Part Name and Standards	零部件名称及规格	适用机型和用量（件） Applied Tractor Models and Qty.(Piece)					
				LZT 300	LZT 304	LZT 350	LZT 354	LZT400 /450/480 /500/520 /550	LZT404 /454/484 /504/524 /554
1	GB/T 276	Rolling bearing-Deep groove ball bearing 6203-Z	轴承6203-Z	1	1	1	1		
	GB/T 276	Rolling bearing-Deep groove ball bearing 6204-Z	轴承6204-Z					1	1
2	LZT300.21B.011	Clutch sub-assembly	离合器分总成	1	1				
	LZT 350.21B.011	Clutch sub-assembly	离合器分总成			1	1		
	LZT 400.21B.011	Clutch sub-assembly	离合器分总成					1	1
2.1	LZT 300.21B.015	Wearing plate assembly,auxiliary clutch	副离合器摩擦片总成	1	1	1	1		
	LZT 400.21B.015	Wearing plate assembly,auxiliary clutch	副离合器摩擦片总成					1	1
2.2	LZT 300.21B.102	Pressure plate,auxiliary clutch	副离合器压盘	1	1	1	1		
	LZT 400.21B.102	Pressure plate,auxiliary clutch	副离合器压盘					1	1
2.3	LZT 300.21B.103	Disk spring	蝶形弹簧	1	1				
	LZT 350.21B.103	Disk spring	蝶形弹簧			1	1		
	LZT 400.21B.103	Disk spring	蝶形弹簧					1	1
2.4	LZT 300.21B.114	Adjusting screw,main clutch	主离合器调整螺钉	3	3	3	3	3	3

续表1 Continued One

2.5	**GB/T 6171**	Hexagon nut,style 1M10×1	I型六角螺母M10 X1	3	3	3	3	3	3
2.6	**LZT 300.21B.113**	Pressure plate,main clutch	主离合器压盘	1	1	1	1		
	LZT 400.21B.113	Pressure plate,main clutch	主离合器压盘					1	1
2.7	**LZT 300.21B.014**	Wearing plate assembly,main clutch	副离合器摩擦片总成	1	1	1	1		
	LZT 400.21B.014	Wearing plate assembly,main clutch	副离合器摩擦片总成					1	1
2.8	**LZT 300.21B.112**	Clutch cover	离合器盖	1	1	1	1		
	LZT 400.21B.112	Clutch cover	离合器盖					1	1
2.9	**LZT 300.21B.110**	Spacer sleeve	顶杆	3	3	3	3		
	LZT 400.21B.110	Spacer sleeve	顶杆					3	3
2.1	**LZT 300.21B.109**	Pin roll	销轴	3	3	3	3	3	3
2.11	**LZT 300.21B.111**	Long pin	长销	6	6	6	6	6	6
2.12	**GB/T 848**	Small washer 10-Product grade A	小垫圈10	12	12	12	12	12	12
2.13	**LZT 300.21B.108**	Spring of main release lever	主分离杠杆弹簧	6	6	6	6		
	LZT 400.21B.108	Spring of main release lever	主分离杠杆弹簧					6	6
2.14	**LZT 300.21B.107**	Release lever of main clutch	主离合器分离拉杆	3	3	3	3		
	LZT 400.21B.107	Release lever of main clutch	主离合器分离拉杆					3	3
2.15	**LZT 300.21B.106**	Release lever of auxiliary clutch	副离合器分离拉杆	3	3	3	3		
	LZT 400.21B.106	Release lever of auxiliary clutch	副离合器分离拉杆					3	3
2.16	**LZT 300.21B.105**	Ball nut	球头螺母	3	3	3	3		
2.17	**GB/T 6171**	Hexagon nut,style 1-Fine pitch thread M8×1	I型螺母-细牙M8X1					3	3
2.18	**LZT 300.21B.104**	Drawbar of auxiliary clutch	副离合器拉杆	3	3	3	3		
	LZT 400.21B.104	Drawbar of auxiliary clutch	副离合器拉杆					3	3

续表2 Continued Two

2.19	**LZT 300.21B.120**	Spring of auxiliary release lever	副分离杠杆弹簧	1	1	1	1	1	1
3		Release bearing 996713	分离轴承996713	1	1	1	1	1	1
4	**LZT 300.21B.101**	Release bearing seat	分离轴承座	1	1	1	1		
	LZT 400.21B.101	Release bearing seat	分离轴承座					1	1
5	**LZT 300.21.102**	Return spring of thrust bearing seat	推力轴承座回位弹簧	1	1	1	1	1	1
6	**LZT 300.21.103**	Release fork	分离拨叉	1	1	1	1	1	1
7	**LZT 300.21.113**	Stop bolt	止动螺钉	1	1	1	1	1	1
8	**GB/T 91**	Split pin 3.2×16	开口销3.2X16	2	2	2	2	2	2
9	**GB/T 882**	Clevis pin with head B10×28	销轴 B10X28	2	2	2	2	2	2
10	**GB/T 97.1**	Plain washer 10-Product grade A	平垫圈10-A级	2	2	2	2	2	2
11	**LZT 300.43.110**	Rear-fork of drawbar	拉杆后叉	1	1	1	1	1	1
12	**LZT 300.21.110**	Drawbar	拉杆	1	1	1	1	1	1
13	**GB/T 6170**	Hexagon nut,style M10	螺母M10	2	2	2	2	2	2
14	**LZT 300.43.108**	Front-fork of drawbar	拉杆前叉	1	1	1	1	1	1
15	**LZT 300.21.013**	Release fork shaft unit of clutch	离合器分离叉轴合件	1	1	1	1	1	1
16	**GB/T 5783**	Hexagon head bolt-Full thread M10×40	螺栓-全螺纹M10X40	7	7	7	7	7	7
17	**LZT 300.21.012**	Clutch pedal assembly	离合器踏板总成	1	1	1	1	1	1
18	**LZT 300.43.130**	Return spring	回位弹簧	1	1	1	1	1	1
19	**GB/T 93**	Single coil spring lock washer 10 - Normal type	弹性垫圈10	8	8	8	8	8	8
20	GB/T 343	Low carbon steel wire SZ-1.40	低碳钢丝SZ-1.40	1	1	1	1	1	1

https://truckmanualshub.com/

22 排气系总成

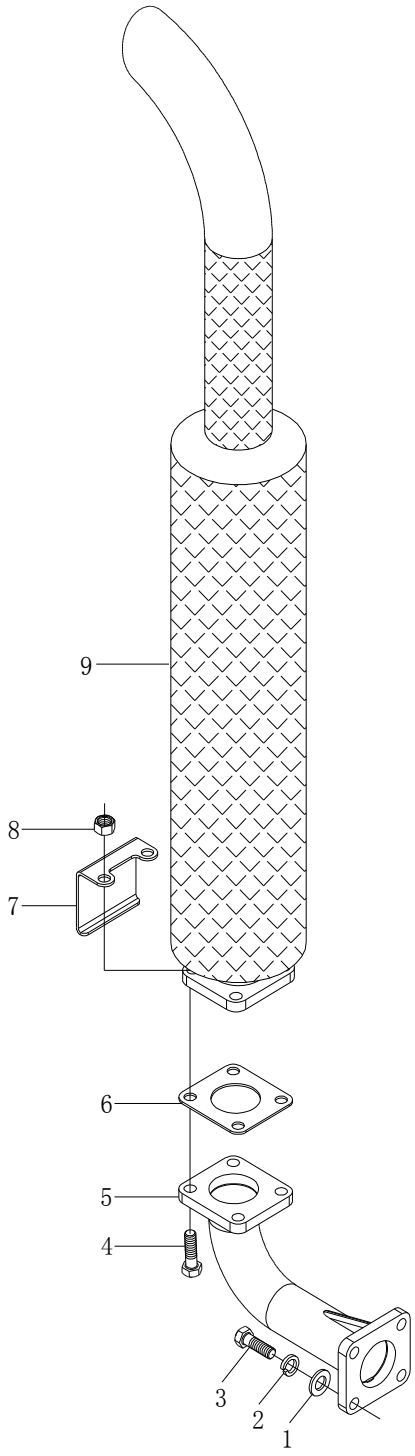

23

22 排气系总成
Exhaust Tube Assembly

序号 No.	零部件代号 Drawing No.	Part Name and Standards	零部件名称及规格	适用机型和用量（件） Applied Tractor Models and Qty.(Piece)					
				LZT 300	LZT 304	LZT 350	LZT 354	LZT400 /450/480 /500/520 /550	LZT404 /454/484 /504/524 /554
1	**GB/T97.1**	Plain washer 10	垫圈10	4	4	4	4	4	4
2	**GB/T93**	Single coil spring lock washer 10-Normal tyep	垫圈10	4	4	4	4	4	4
3	**GB/T5783**	Hexagon head bolt-Full thread M 10×30-Zn.D	螺栓M10×30-Zn.D	4	4	4	4	4	4
4	**GB/T5783**	Hexagon head bolt – Full thead M 10×35- Zn.D	螺栓M10×35-Zn.D	4	4	4	4	4	4
5	**LZT300.22.111a ①**	Exhaust elbow	排气弯管	1	1	1	1	1	1
	LZT300.22C.111②	Exhaust elbow	排气弯管	1	1	1	1		
6	**LZT300.22.030**	Gasket unit	密封垫 合件	1	1	1	1	1	1
7	**LZT300.22.125**	Bracket for label,exhaust tube	排气系标识架	1	1	1	1	1	1
8	**GB/T6184**	Prevailing torque tyre all – metal hexagonnut,style 1 M10 – Zn.d	I型全金属六角锁紧螺母M10-Zn.D	4	4	4	4	4	4
9	**LZT300.22.020**	Muffler assembly	消声器总成	1	1	1	1	1	1

Note: ① Adopt Lijia engine. ② Adopt Jiangdong engine.
注：①配力佳柴油机；②配江动柴油机

24

https://truckmanualshub.com/

31 前轴总成 – 1 31 Front Axle Assembly – 1

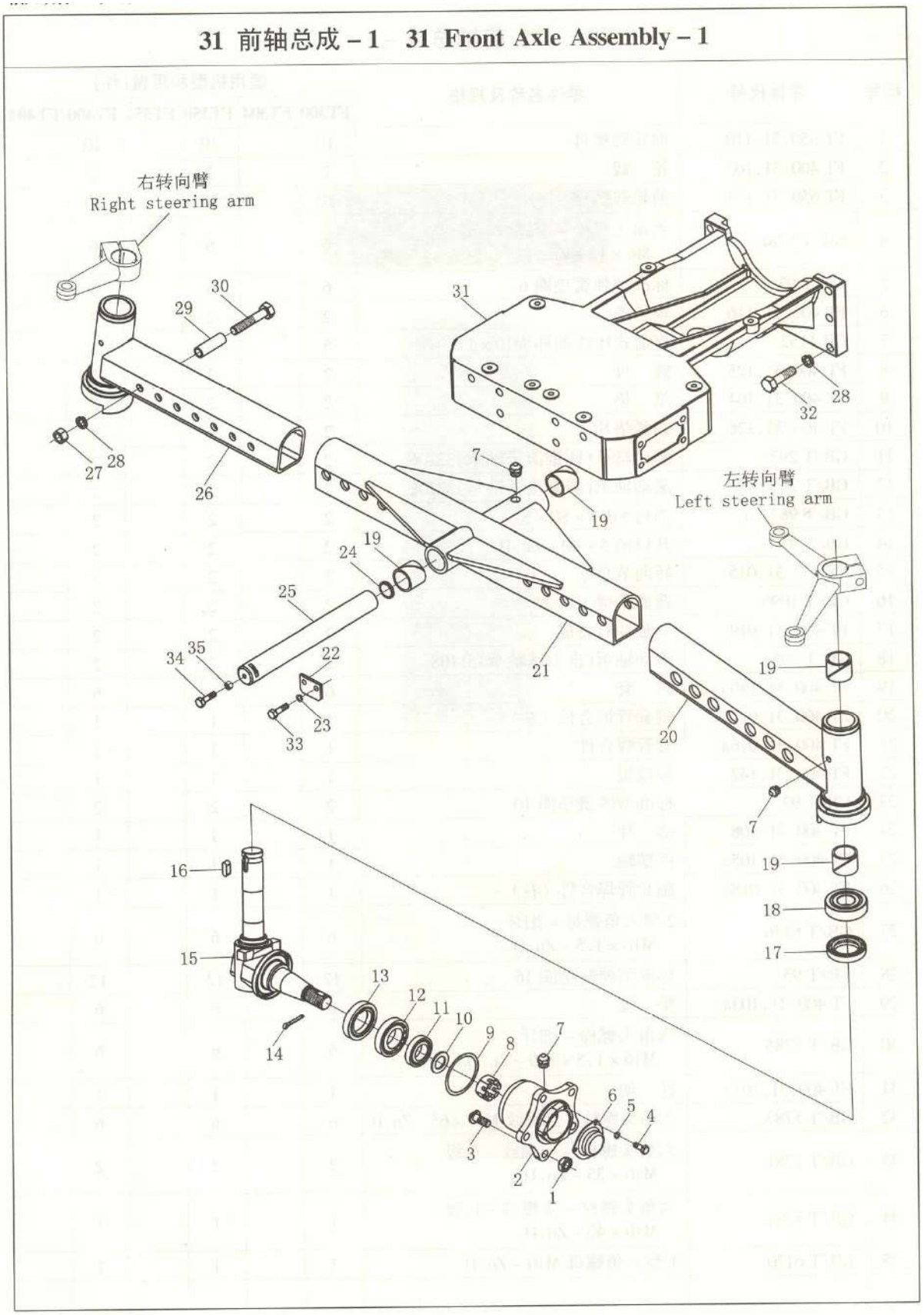

25

31 前轴总成-1
Front Axle Assembly - 1

序号 No.	零部件代号 Drawing No.	Part Name and Standards	零部件名称及规格	适用机型和用量（件） Applied Tractor Models and Qty.(Piece)					
				LZT 300	LZT 304	LZT 350	LZT 354	LZT400 /450/480 /500/520 /550	LZT404 /454/484 /504/524 /554
1	LZT650.31.110	Nut for front hub	前轮毂螺母	10		10		10	
2	LZT400.31.102	Hub	轮毂	2		2		2	
3	LZT650.31.111	Bolt for front hub	前轮毂螺栓	10		10		10	
4	GB/T5781	Hexagon head bolt-Full thread-Product grade C M6×12-Zn.D	螺栓M6×12-Zn.D	6		6		6	
5	GB/T93	Single coil spring lock washer6-Nomal type	垫圈6	2		2		2	
6	LZT400.31.116	Housing of bearing	轴承盖	2		2		2	
7	GB1152-1989	Oil cup M10×1	油杯M10×1	2		2		2	
8	LZT400.31.125	Nut	螺母	2		2		2	
9	LZT400.31.104	Gasket	纸垫	2		2		2	
10	LZT400.31.126	Lock washer	锁紧垫片	2		2		2	
11	GB/T297-1994	Rolling bearing-Tapered roller bearing 32206	滚动轴承32206	2		2		2	
12	GB/T297-1994	Rolling bearing-Tapered roller bearing 32208	滚动轴承32208	2		2		2	
13	GB/T9877.11998	Oil sealing FB55×80×8	油封B55×80×8	2		2		2	
14	GB/T91	Split pin 5×40-Zn.D	销5×40-Zn.D	2		2		2	
15	**LZT400.31.015**	Steering knuckle assembly	转向节总成	2		2		2	
16	GB1096-1979	Plain parallel key 10×25	键10×25	2		2		2	
17	LZT400.31.019	Oil sealing assembly	立轴油封总成	2		2		2	

续表1 Continued One

18	GB/T301-1995	Rolling bearing-Thrust ball bearing 51108	滚动轴承51108	2		2		2	
19	LZT400.31.140a	Sleeve	衬套	6		6		6	
20	LZT400.31.017a	Auxiliary tube weldment,left	副套管焊合件（左）	1		1		1	
21	LZT400.31.016a	Tube weldment	套管焊合件	1		1		1	
22	**LZT400.31.142**	Stop plate	限位板	1		1		1	
23	**GB/T93**	Single coil spring lock washer-10-Nomal type	弹性垫圈10	2		2		2	
24	LZT400.31.108	Washer	垫片	1		1		1	
25	LZT400.31.105a	Swing shaft	摇摆轴	1		1		1	
26	LZT400.31.018a	Auxiliary tube weldment,right	副套管焊合件（右）	1		1		1	
27	GB/T6176	Hexagon nut,style 2-Fine pitch thread M16×1.5-Zn.D	螺母M16×1.5-Zn.D	6		6		6	
28	GB/T93	Single coll spring lock washer 16-Normal type	垫圈16	12		12		12	
29	LZT400.31.103a	Washer sleeve	垫套	6		6		6	
30	GB/T5785	Hexagon head bolt-Fine pitch thread M16×1.5×100-Zn.D	螺栓M16×1.5×100-Zn.D	6		6		6	
31	LZT400.31.101a	Holder	托架	1		1		1	
32	GB/T5783	Hexagon head bolt-Full thread M16×65-Zn.D	螺栓-全螺纹M16×64-Zn.D	6		6		6	
33	GB/T5781	Hexagon head bolt-Full thread-Product grade C M10×35-Zn.D	螺栓-全螺纹-C级M16×65-Zn.D	2		2		2	
34	GB/T5781	Hexagon head bolt-Full thread-Product grade C M10×40-Zn.D	螺栓-全螺纹-C级M16×66-Zn.D	1		1		1	
35	**GB/T6170**	Hexagon nut,style 1 M10-Zn.D	螺母M10-Zn.D	1		1		1	

27

https://truckmanualshub.com/

31 前轴总成 – 2 31 Front Axle Assembly – 2

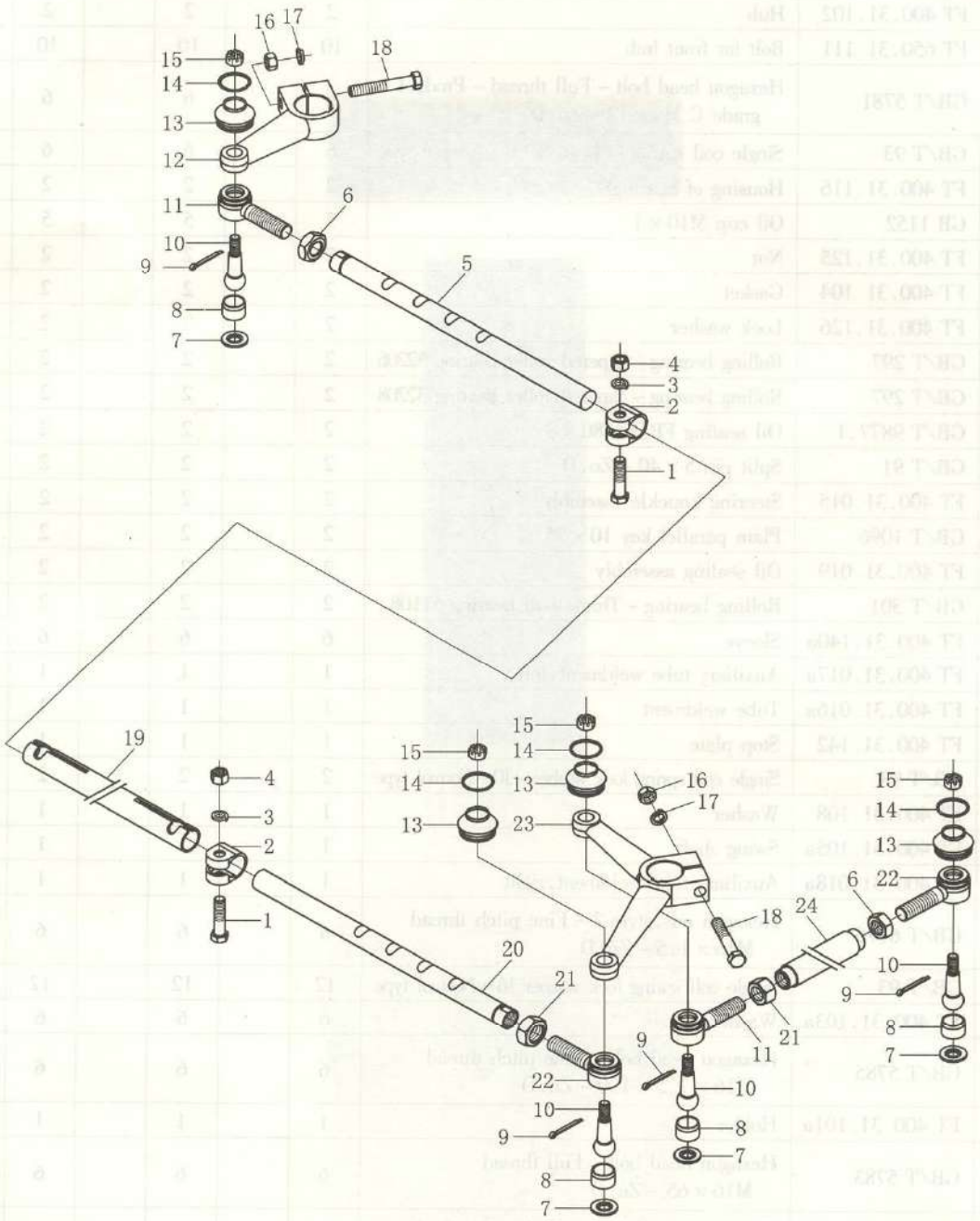

31 前轴总成-2
Front Axle Assembly - 2

序号 No.	零部件代号 Drawing No.	Part Name and Standards	零部件名称及规格	适用机型和用量（件） Applied Tractor Models and Qty.(Piece)					
				LZT 300	LZT 304	LZT 350	LZT 354	LZT400 /450/480 /500/520 /550	LZT404 /454/484 /504/524 /554
1	GB/T5785	Hexagon head bolt-Fine pitch thread M12×1.5×50-Zn.D	细牙螺栓M12X1.5X50-Zn.D	2		2		2	
2	LZT400.31.137	Clip of cross drawbar	横拉杆夹子	2		2		2	
3	GB/T97.1	Single coil spring lock washer 12 - Normal type	弹性垫圈12-140HV-Zn.D	2		2		2	
4	GB/T6171	Hexagon nut,style 1 M12×1.5-Zn.D	细牙螺母M12X1.5-Zn.D	2		2		2	
5	LZT400.31.122	Inner connecting pipe of cross drawbar,right	右横拉杆内接管	1		1		1	
6	GB/T6173	Hexagon thin nut - Fine pitch thread M18×1.5-Zn.D	螺母M18X1.5-Zn.D	1		1		1	
7	LZT400.31.131	Base plate	底板	4		4		4	
8	LZT400.31.132	Ball bowl	球头碗	4		4		4	
9	GB/T91	Split pin 3.2×36-Zn.D	销3.2X36-Zn.D	4		4		4	
10	LZT400.31.139	Ball pin	球销	4		4		4	
11	LZT400.31.133	Right joint	右接头	2		2		2	
12	LZT400.31.118	Steering arm,right	右转向臂	1		1		1	

29

续表1 Continued One

13	LZT400.31.134	Dust cap of joint	接头防尘罩	4		4		4	
14	LZT400.31.130	Keeper of dust cap	防尘罩卡圈	4		4		4	
15	GB/T9457	Hexagon slotted and castele nut,-Fine pitch thread M14×1.5-Zn.D	螺母M12X1.25	4		4		4	
16	GB/T6170	Hexagon nut,style 1M12-Zn.D	螺母12-Zn.D	2		2		2	
17	GB/T93	Single coil spring lock washer 12-Zn.D -Normal type	垫圈12	2		2		2	
18	GB/T5782	Hexagon head bolt M12×80-Zn.D	螺栓M12X70-Zn.D	2		2		2	
19	LZT400.31.120	Cross drawbar	横拉杆	1		1		1	
20	LZT400.31.121	Inner connecting pipe of cross drawbar,left	左横拉杆内接管	1		1		1	
21	LZT400.31.138	Hexagon thin out,-Fine pitch thread M18×1.5LH-Zn.D	左旋螺母	2		2		2	
22	LZT400.31.129	Left joint	左接头	2		2		2	
23	LZT400.31.117	Steering arm,left	左转向臂	1		1		1	
24	LZT400.31.107	Longitudinal drawbar	纵拉杆	1		1		1	
	LZT300.31.107	Longitudinal drawbar	纵拉杆	1		1			

30

https://truckmanualshub.com/

前驱动桥总成-1(烟台桥)

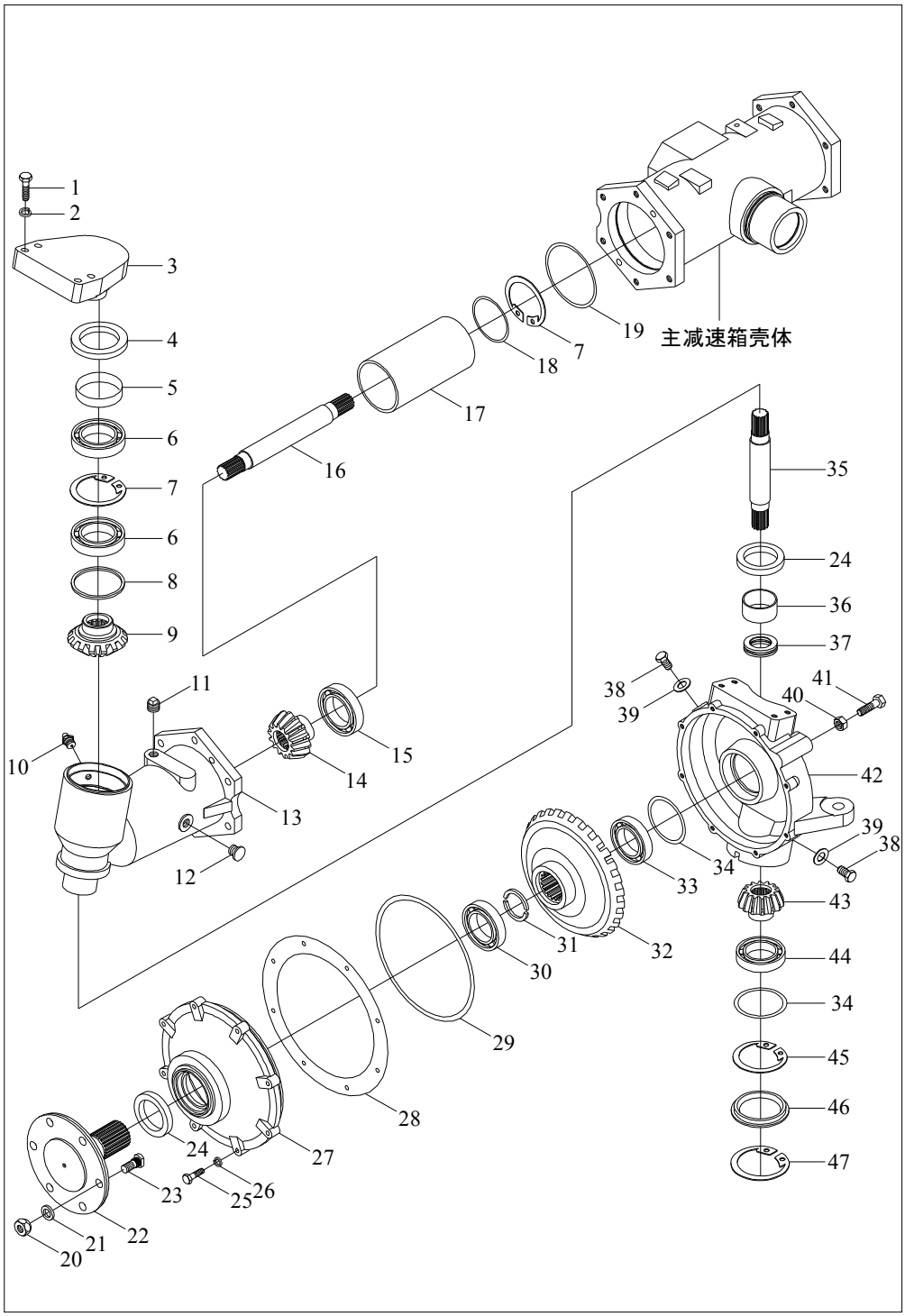

31

前驱动桥总成-1(烟台桥)
Front Driving Axle Assembly(yantai)-1

序号 No.	零部件代号 Drawing No.	Part Name and Standards	零部件名称及规格	适用机型和用量（件） Applied Tractor Models and Qty.(Piece)					
				LZT 300	LZT 304	LZT 350	LZT 354	LZT400 /450/480 /500/520 /550	LZT404 /454/484 /504/524 /554
	LZT304.31F.001	Front driving axle assembly	前驱动桥总成						1
1	**GB/T 5783**	Bolt M12*40	螺栓M12×40						4
2	GB/T 93	Washer 12	垫圈12						4
3	**LZT304.31F.124**	Joint cover	连接盖						1
4	**GB/T 9877.1**	Oil sealing FB8010512	油封FB8010512						1
5	**LZT304.31F.125**	Oil sealing sleeve	油封衬套						1
6	**GB/T 276**	Bearing 6013	轴承6013						2
7	**GB/T 893.1**	Circlip 100	挡圈100						2
8	**LZT304.31F.188**	Plain washer	平垫						1
9	**LZT304.31F.122**	Gear	齿轮						1
10	**JB/T 7940.1**	Oil cup M10*1	油杯M10×1						1
11	**Q/YXF70-1992**	Plug Z3/8"	螺塞Z3/8″						1
12	**GB/T 1160.2**	Oil mark A10	油标A10						1
13	**LZT304.31F.121**	Housing of half axle	半轴壳体						1
14	**LZT304.31F.126**	Gear	齿轮						1
15	**GB/T 276**	Bearing 6309	轴承6309						1
16	**LZT304.31F.128**	Spline shaft	花键轴						1
17	**LZT304.31F.127**	Sleeve	套管						1
18	**LZT304.31F.123**	Adjusting shim	调整垫片						1组
19	**LZT304.31F.130**	Adjusting shim	调整垫片						1组
20	**GB/T 6176**	Nut M14*1.5	螺母M14×1.5						6

续表1 Continued One

21	**LZT204.31F.205**	Washer	垫圈						**6**
22	**LZT304.31F.117**	Front driving axle	前驱动轴						1
23	**LZT304.31F.115**	Knurled bolt	滚花螺栓						6
24		Float oil sealing	浮动油封						**2副**
25	**GB/T 5783**	Bolt M8*35	螺栓M8×35						8
26	GB/T 93	Washer	垫圈						8
27	**LZT304.31F.107**	Terminal big cover	端部大盖						1
28	**LZT304.31F.190**	Adjusting shim	调整垫						**1组**
29	**GB/T 3452.1**	O-seal ring236*5.3G	0型密封圈236×5.3G						**1**
30	**GB/T 276**	Bearing 6310	轴承6310						1
31	**LZT304.31F.114**	Circlip	挡圈						2
32	**LZT304.31F.108**	Terminal large gear	端部大齿轮						1
33	**GB/T 276**	Bearing 6210	轴承6210						1
34	**LZT304.31F.113**	Adjusting shim	调整垫						2
35	**LZT304.31F.110**	Terminal spline shaft	端部花键轴						**1**
36	**LZT304.31F.111**	Sleeve 55*30	衬套55×30						**1**
37	**GB/T 301**	Thrust bearing 8107	推力轴承8107						**1**
38	**LZT304.31F.105**	Plug	螺塞						**2**
39	**LZT304.31F.106**	Washer	垫圈						**2**
40	**GB/T 6170**	Nut M16	螺母M16						**1**
41	**GB/T 5783**	Bolt M16*50	螺栓M16×50						**1**
42	**LZT304.31F.109**	Terminal housing, left	左末端壳体						**1**
43	**LZT304.31F.112**	Terminal small gear	端部小齿轮						**1**
44	**GB/T 276**	Bearing 6308	轴承6308						**1**
45	**GB/T 893.1**	Circlip 90	挡圈90						**1**
46	**LZT304.31F.022**	Sealing cover	密封盖						**1**
47	**GB/T 893.1**	Circlip 102	挡圈102						**1**

33

https://truckmanualshub.com/

前驱动桥总成-2(烟台桥)

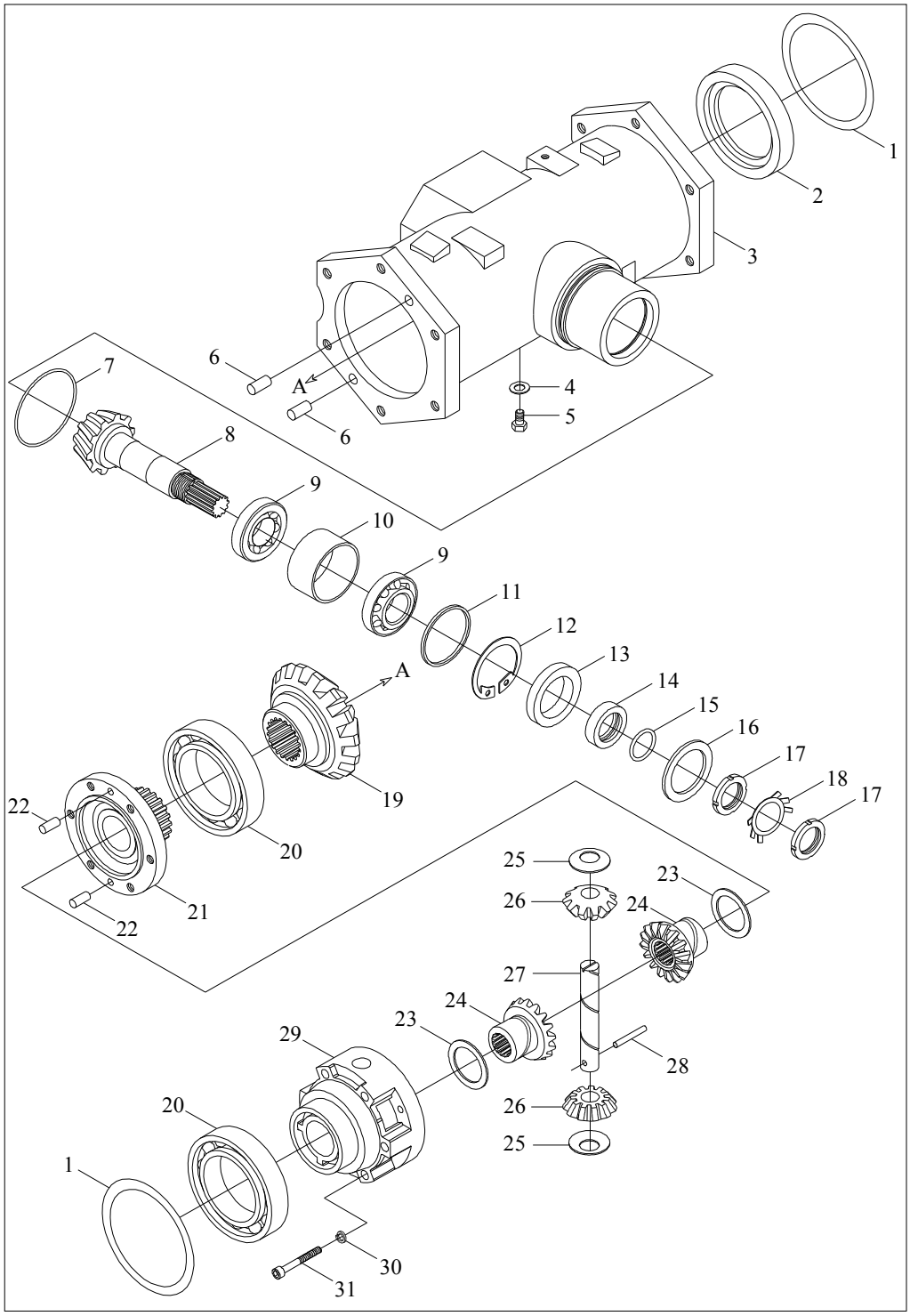

34

https://truckmanualshub.com/

前驱动桥总成-2(烟台桥)
Front Driving Axle Assembly(yantai)-2

序号 No.	零部件代号 Drawing No.	Part Name and Standards	零部件名称及规格	适用机型和用量（件） Applied Tractor Models and Qty.(Piece)					
				LZT 300	LZT 304	LZT 350	LZT 354	LZT400 /450/480 /500/520 /550	LZT404 /454/484 /504/524 /554
	LZT304.31F.001	Front driving axle assembly	前驱动桥总成						1
1	**GB/T 3452.1**	O-seal ring 140*3.5G	O型密封圈140×3.5G						**2**
2	**LZT304.31F.191**	Set plate	定位盘						**1**
3	**LZT304.31F.129**	Main gearbox housing	主减速箱壳体						1
4	**LZT304.31F.106**	Washer	垫圈						**1**
5	**LZT304.31F.105**	Plug	螺塞						**1**
6	**GB/T 119**	Pin B12*20	销B12×20						**4**
7	**GB/T 3452.1**	O-seal ring 90*2.65G	O型密封圈90×2.65G						**1**
8	**LZT304.31F.131**	Main bevel gear shaft	主动螺伞齿轮轴						**1**
9	**GB/T 297**	Bearing 32207	轴承32207						**2**
10	**LZT304.31F.132**	Spacer sleeve	隔套						**1**
11	**LZT304.31F.133**	Adjusting sleeve	调整套						**1**
12	**GB/T 893.1**	Circlip 72	挡圈72						**1**
13	**GB/T 9877.1**	Oil sealing (F)50 72 8D	油封（F）50 72 8D						**1**
14	**LZT304.31F.134**	Housing of oil sealing	油封座						**1**
15	**GB/T 3452.1**	O-seal ring 34.5*3.55G	O型密封圈34.5×3.55G						**1**

35

续表1 Continued One

16	**LZT304.31F.104**	Copper washer	铜垫						**1**
17	**GB/T 810**	Small nut M30*1.5	小圆螺母M30×1.5						**2**
18	**GB/T 858**	Washer 30	垫圈30						**1**
19	**LZT304.31F.138**	Mid driving bevel gear	中央传动大螺伞齿轮						**1**
20	**GB/T 276**	Bearing 6216	轴承6216						**2**
21	**LZT304.31F.137**	Housing of differential, right	差速器右壳						**1**
22	**GB/T 119**	Pin B8*20	销B8×20						**2**
23	**LZT304.31F.139**	Spacer ring	隔圈						**2**
24	**LZT304.31F.144**	Half shaft gear	半轴齿轮						**2**
25	**LZT304.31F.140**	Washer	垫圈						**2**
26	**LZT304.31F.143**	Planetary gear	行星齿轮						**2**
27	**LZT304.31F.142**	Shaft pin	销轴						**1**
28	**LZT304.31F.141**	Arresting pin	止动销						**1**
29	**LZT**	Housing of differential, left	差速器左壳						**1**
30	**GB/T 93**	Washer 10	垫圈10						**6**
31	**GB/T 70**	Screw M10*70	螺钉M10×70						**6**

36

https://truckmanualshub.com/

前驱动桥总成-3(烟台桥)

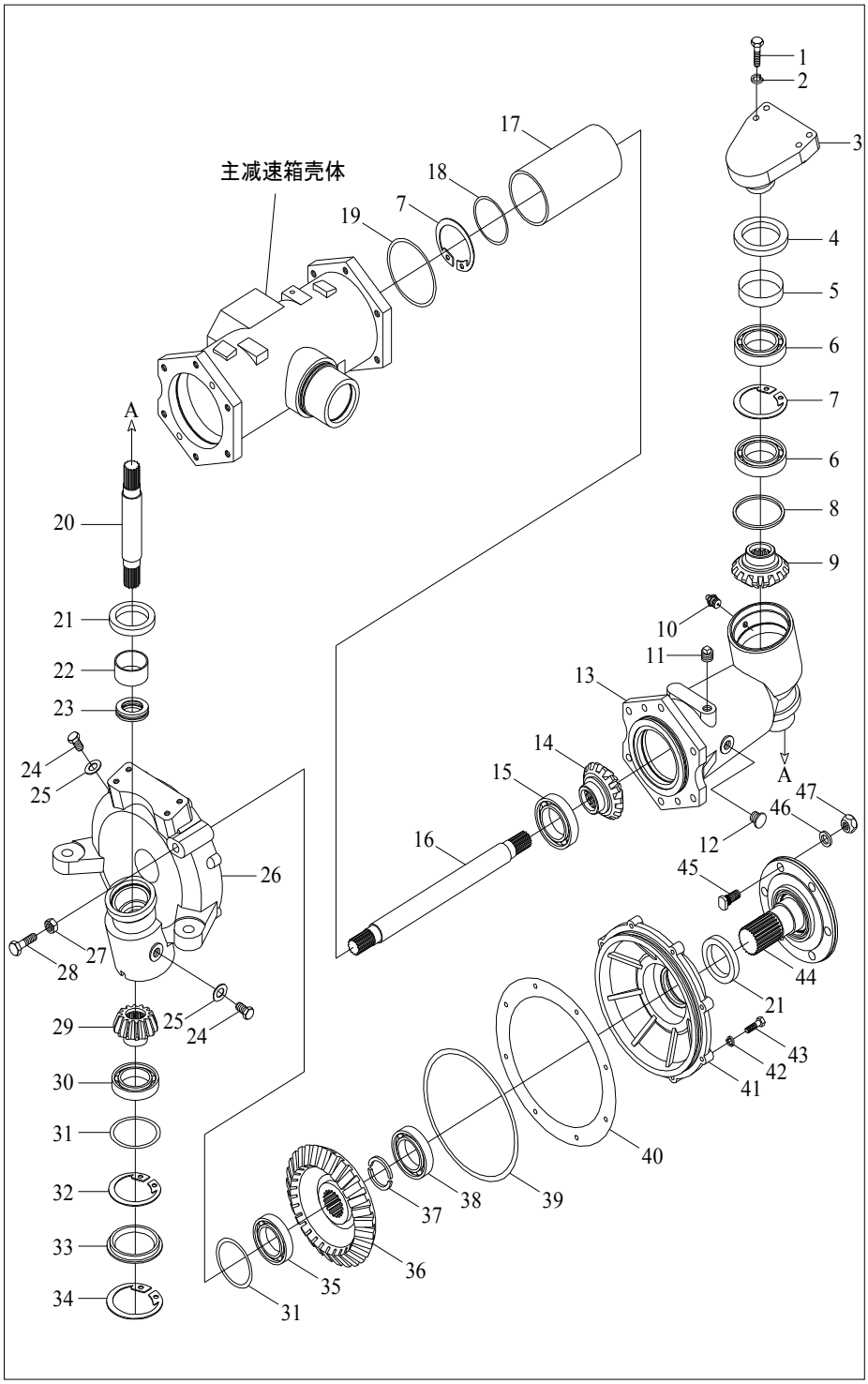

37

前驱动桥总成-3(烟台桥)
Front Driving Axle Assembly(yantai)-3

序号 No.	零部件代号 Drawing No.	Part Name and Standards	零部件名称及规格	适用机型和用量（件） Applied Tractor Models and Qty.(Piece)					
				LZT 300	LZT 304	LZT 350	LZT 354	LZT400 /450/480 /500/520 /550	LZT404 /454/484 /504/524 /554
	LZT304.31F.001	Front driving axle assembly	前驱动桥总成						1
1	**GB/T 5783**	Bolt M12*40	螺栓M12×40						4
2	**GB/T 93**	Washer 12	垫圈12						4
3	**LZT304.31F.124**	Joint cover	连接盖						1
4	**GB/T 9877.1**	Oil sealing FB8010512	油封FB8010512						1
5	**LZT304.31F.125**	Oil sealing sleeve	油封衬套						1
6	**GB/T 276**	Bearing 6013	轴承6013						2
7	**GB/T 893.1**	Circlip 100	挡圈100						2
8	**LZT304.31F.188**	Plain washer	平垫						1
9	**LZT304.31F.122**	Gear	齿轮						1
10	**JB/T 7940.1**	Oil cup M10*1	油杯M10×1						1
11	**Q/YXF70-1992**	Plug Z3/8"	螺塞Z3/8″						1
12	**GB/T 1160.2**	Oil mark	油标A10						1
13	**LZT304.31F.121**	Housing of half axle	半轴壳体						1
14	**LZT304.31F.126**	Gear	齿轮						1
15	**GB/T 276**	Bearing 6309	轴承6309						1
16	**LZT304.31F.145**	Spline shaft	花键轴						1
17	**LZT304.31F.127**	Sleeve	套管						1
18	**LZT304.31F.123**	Adjusting shim	调整垫片						1组
19	**LZT304.31F.130**	Adjusting shim	调整垫片						1组
20	**LZT304.31F.110**	Terminal spline shaft	端部花键轴						1
21		Float oil sealing	浮动油封						2副

38

续表1 Continued One

22	**LZT304.31F.111**	Sleeve 55*30	衬套55×30						**1**
23	**GB/T 301**	Thrust bearing 8107	推力轴承8107						**1**
24	**LZT304.31F.105**	Plug	螺塞						**2**
25	**LZT304.31F.106**	Washer	垫圈						**2**
26	**LZT304.31F.146**	Terminal housing, right	右末端壳体						**1**
27	**GB/T 6170**	Nut M16	螺母M16						**1**
28	**GB/T 5783**	Bolt M16*50	螺栓M16×50						**1**
29	**LZT304.31F.112**	Terminal small gear	端部小齿轮						**1**
30	**GB/T 276**	Bearing 6308	轴承6308						**1**
31	**LZT304.31F.113**	Adjusting shim	调整垫						2
32	**GB/T 893.1**	Circlip 90	挡圈90						**1**
33	**LZT304.31F.022**	Seal cover	密封盖						**1**
34	**GB/T 893.1**	Circlip 102	挡圈102						**1**
35	**GB/T 276**	Bearing 6210	轴承6210						1
36	**LZT304.31F.108**	Terminal large gear	端部大齿轮						1
37	**LZT304.31F.114**	Circlip	挡圈						2
38	**GB/T 276**	Bearing 6310	轴承6310						1
39	**GB/T 3452.1**	O-seal ring 236*5.3G	0型密封圈236×5.3G						**1**
40	**LZT304.31F.190**	Adjusting shim	调整垫						**1组**
41	**LZT304.31F.107**	Terminal big cover	端部大盖						1
42	**GB/T 93**	Washer	垫圈						8
43	**GB/T 5783**	Bolt M8*35	螺栓M8×35						8
44	**LZT304.31F.117**	Front driving shaft	前驱动轴						1
45	**LZT304.31F.115**	Bolt	滚花螺栓						6
46	**LZT204.31F.205**	Washer	垫圈						**6**
47	**GB/T 6176**	Nut M14*1.5	螺母M14×1.5						**6**

39

https://truckmanualshub.com/

前驱动桥总成-4(烟台桥)

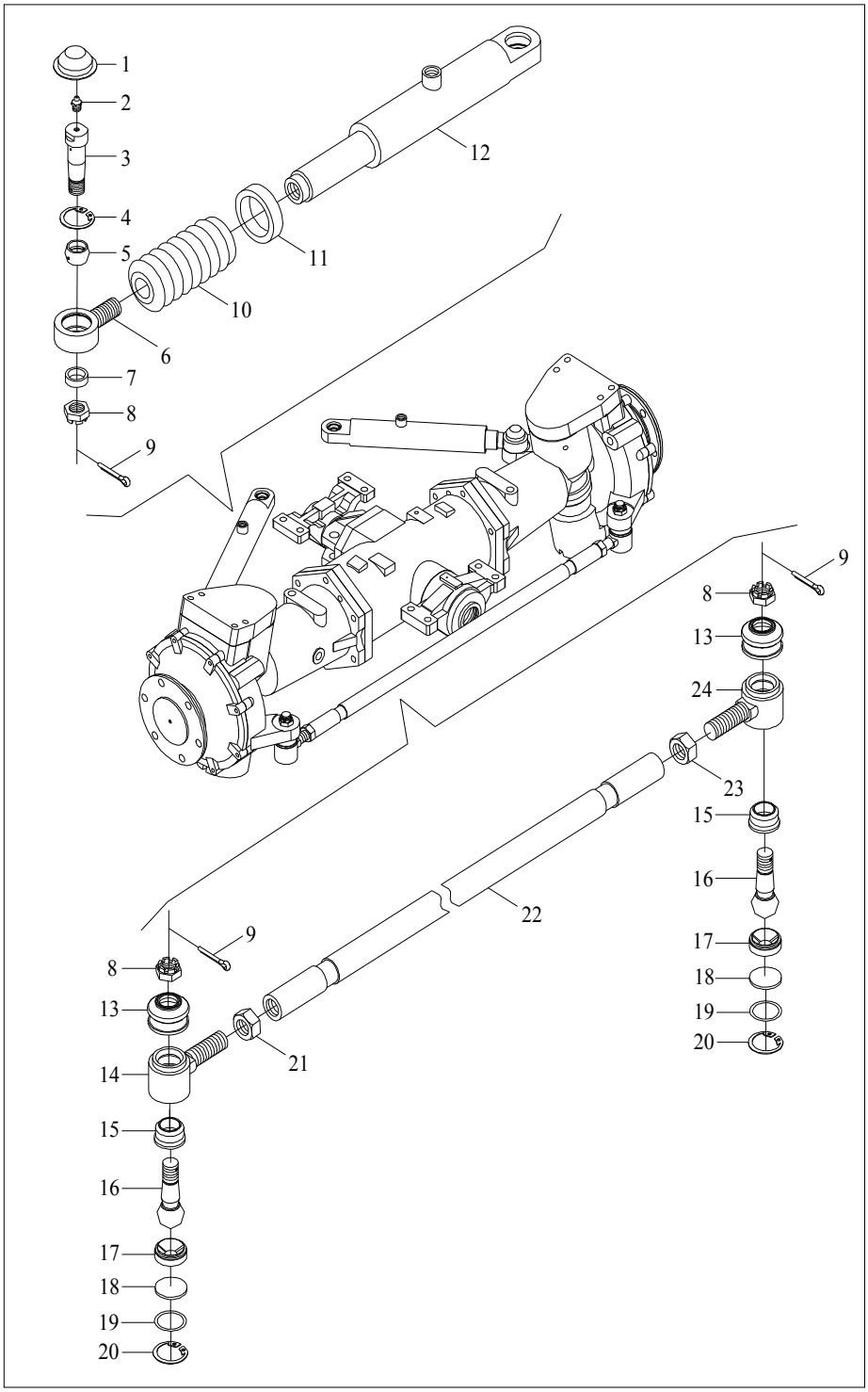

40

前驱动桥总成-4(烟台桥)
Front Driving Axle Assembly(yantai)-4

序号 No.	零部件代号 Drawing No.	Part Name and Standards	零部件名称及规格	适用机型和用量（件） Applied Tractor Models and Qty.(Piece)					
				LZT 300	LZT 304	LZT 350	LZT 354	LZT400 /450/480 /500/520 /550	LZT404 /454/484 /504/524 /554
	LZT304.31F.001	Front driving axle assembly	前驱动桥总成						1
1	**LZT304.31F.160**	Dust cap	防尘帽						1
2	**JB/T 7940.1**	Oil cup M6*1	油杯M6×1						1
3	**LZT304.31F.165**	Anchor pin	固定销						1
4	**GB/T 893.1**	Circlip 35	挡圈35						1
5	**GB/T 9163**	Arthrosis bearing GE20ES	关节轴承GE20ES						1
6	**LZT304.31F.166**	Piston rod ring	活塞杆耳环						1
7	**LZT304.31F.167**	Spacer sleeve	隔套						1
8	**LZT304.31F.168**	Nut with trough	六角开槽螺母						3
9	**GB/T 91**	Split pin 3.2*40	开口销3.2×40						3
10	**LZT304.31F.027**	Dust cover	防尘皮套						1
11		Pipe clamp 50	管箍50						1
12	**LZT304.31F.019**	Cylinder	液压缸						1
13	**LZT304.31F.026**	Dust bursa	防尘皮囊						2
14	**LZT304.31F.174**	Seat for ball pin, left	左球头销座						1
15	**LZT304.31F.178**	Ball pin sleeve	球头销衬垫						2
16	**LZT304.31F.177**	Ball pin	球头销						2
17	**LZT304.31F.180**	Cap for ball pin	球头销盖						2
18	**LZT304.31F.179**	Sleeve	衬垫						2
19	**LZT304.31F.183**	Adjusting shim	调整垫片						2组
20	**GB/T 893.1**	Circlip 37	挡圈37						2
21	**GB/T 6173**	Nut M20*1.5LH	螺母M20×1.5LH						1
22	**LZT304.31F.175**	Drawbar	拉杆						1
23	**GB/T 6173**	Nut M20*1.5	螺母M20×1.5						1
24	**LZT304.31F.176**	Seat for ball pin, right	右球头销座						1

https://truckmanualshub.com/

前驱动桥总成-5(烟台桥)

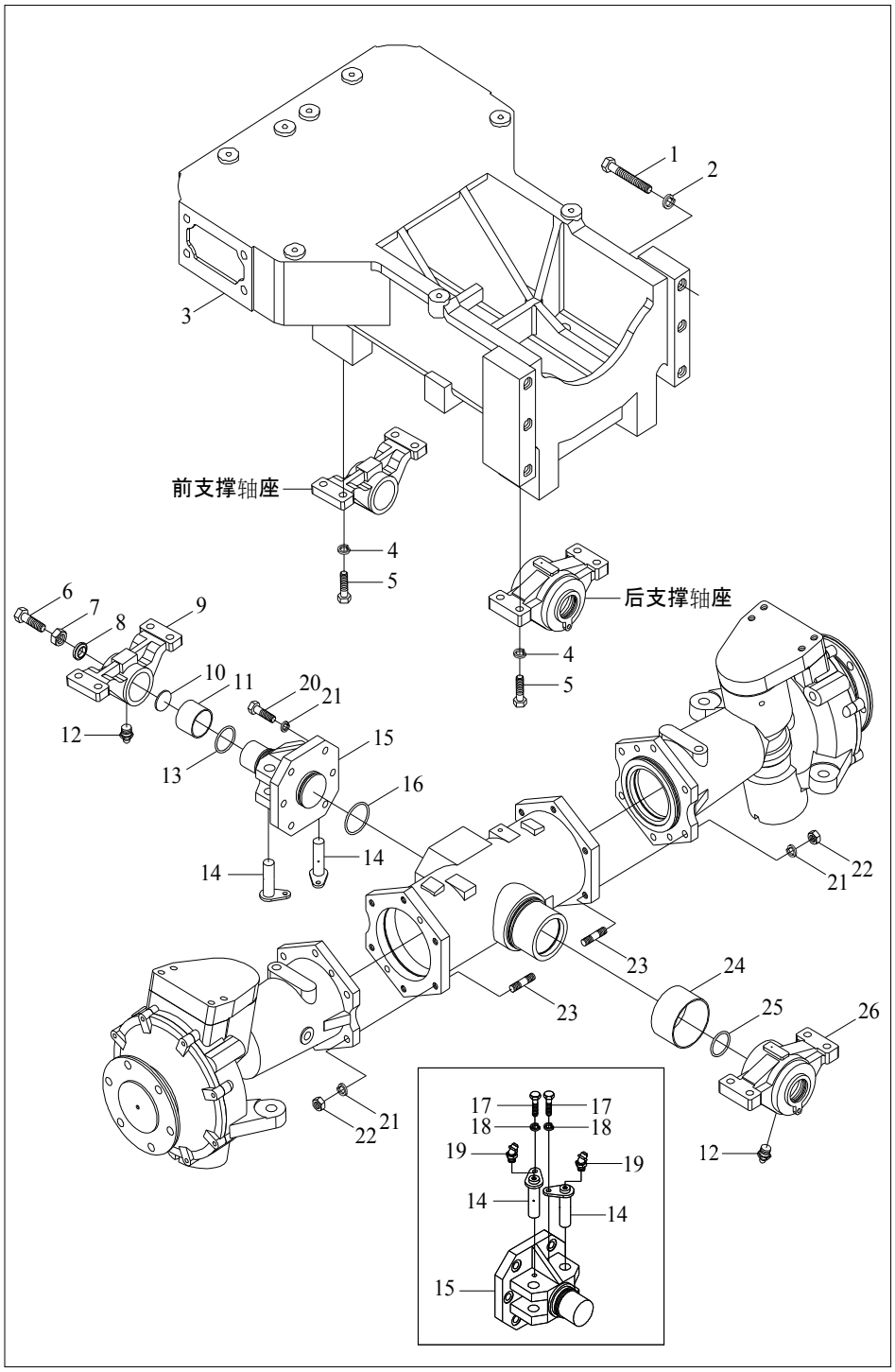

42

https://truckmanualshub.com/

前驱动桥总成-5(烟台桥)
Front Driving Axle Assembly(yantai)-5

序号 No.	零部件代号 Drawing No.	Part Name and Standards	零部件名称及规格	适用机型和用量（件） Applied Tractor Models and Qty.(Piece)					
				LZT 300	LZT 304	LZT 350	LZT 354	LZT400 /450/480 /500/520 /550	LZT404 /454/484 /504/524 /554
	LZT304.31F.001	Front driving axle assembly	前驱动桥总成						1
1	**GB/T 5782**	Bolt M16*100-Zn.D	螺栓M16×100-Zn.D						6
2	**GB/T 93**	Washer 16	垫圈16						**6**
3	**LZT304.31F.101**	Holder	托架						**1**
4	**GB/T 93**	Washer 14	垫圈14						**8**
5	**GB/T 5783**	Bolt M14*40-Zn.D	螺栓M14×40-Zn.D						8
6	**GB/T 5783**	Bolt M14*40-Zn.D	螺栓M16×40-Zn.D						1
7	**GB/T 6170**	Nut M16	螺母M16						**1**
8	**LZT304.31F.025**	Seal ring	密封垫						**1**
9	**LZT304.31F.149**	Holder of front stand axle	前支撑轴座						**1**
10	**LZT304.31F.150**	Washer	垫片						**1**
11	**LZT304.31F.148**	Rolling bearing 50*40	滑动轴承50×40						**1**
12	**GB/T 7940.1**	Cup M8*1	油杯M8×1						**2**

43

续表1 Continued One

13	**GB/T 3452.1**	O-seal ring 47.5*3.55G	O型密封圈47.5×3.55G						1
14	**LZT304.31F.024**	Joint pin	连接销						**2**
15	**LZT304.31F.147**	Stand axle	支撑轴						**1**
16	**GB/T 3452.1**	O-seal ring 58*3.55G	O型密封圈58×3.55G						1
17	**GB/T 5783**	Bolt M8*20-Zn.D	螺栓M8×20-Zn.D						**2**
18	**GB/T 93**	Washer 8	垫圈8						**2**
19	**GB/T 7940.2**	Oil cup 45°M8×1	油杯45° M8×1						**2**
20	**GB/T 5783**	Bolt M12*40-Zn.D	螺栓M12×40-Zn.D						6
21	**GB/T 93**	Washer 12	垫圈12						**18**
22	**GB/T 6170**	Nut M12	螺母M12						**12**
23	**GB/T 900**	Screw AM12×40-8.8-Zn.D	螺柱AM12×40-8.8-Zn.D						**12**
24	**LZT304.31F.156**	Rolling bearing 90*55	滑动轴承90×55						**1**
25	**GB/T 3452.1**	O-seal ring 45*3.55G	O型密封圈45×3.55G						**1**
26	**LZT304.31F.155**	Holder of rear stand axle	后支撑轴座						**1**

44

https://truckmanualshub.com/

31 前驱动桥总成-1

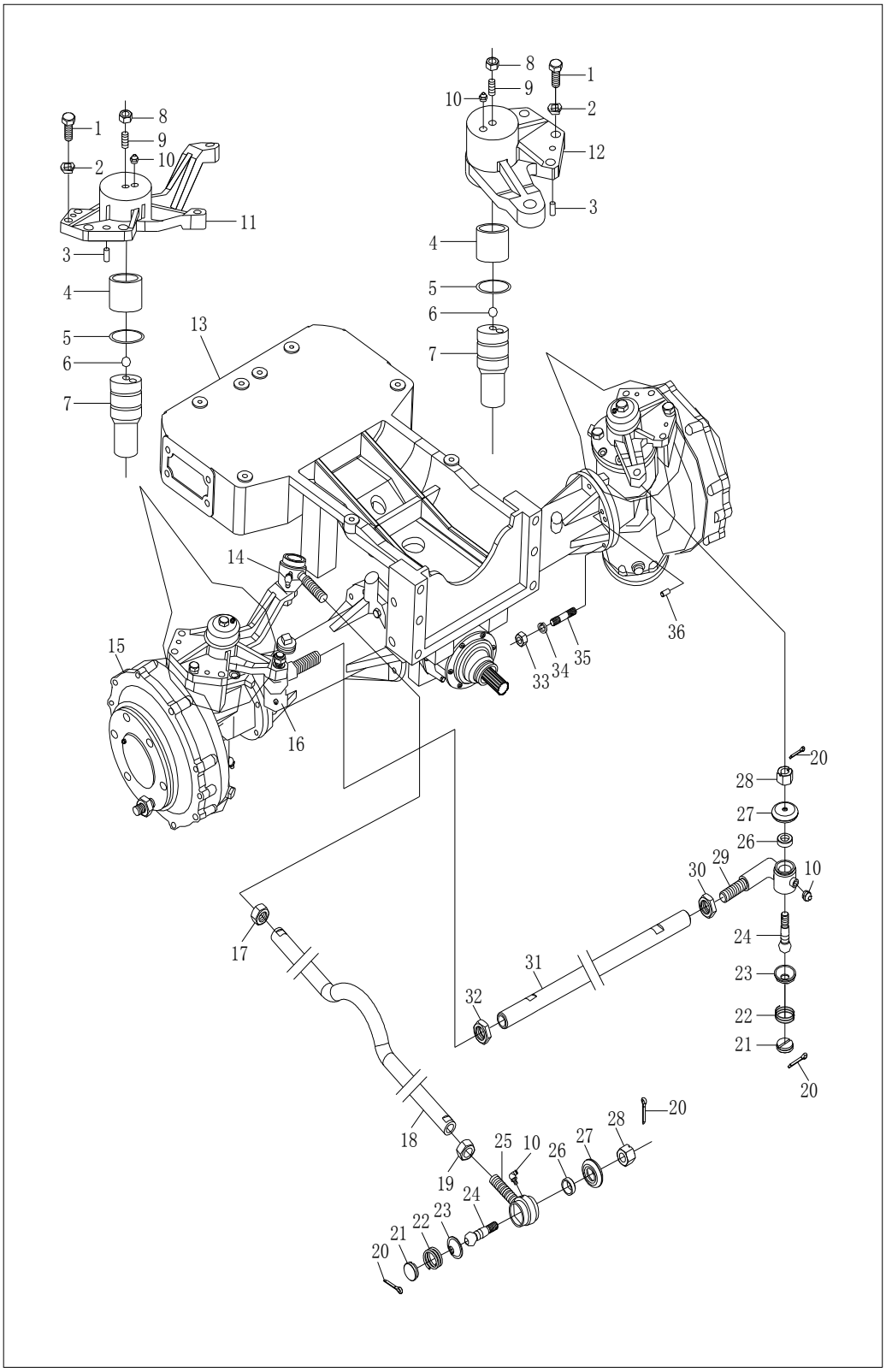

45

31 前驱动桥总成(清江)-1
Front Driving Axle Assembly(qingjiang) - 1

序号 No.	零部件代号 Drawing No.	Part Name and Standards	零部件名称及规格	适用机型和用量（件） Applied Tractor Models and Qty.(Piece)					
				LZT 300	LZT 304	LZT 350	LZT 354	LZT400 /450/480 /500/520 /550	LZT404 /454/484 /504/524 /554
1	**GB/T5783**	Hexagon head bolt-Full thread M12×35	螺栓M12×35		8		8		8
2	**GB/T93**	Single coil spring lock washer 12-Nomal type	垫圈12		8		8		8
3	**GB/T120-1986**	Parallel pin with internal thread 8×30	销8×30		4		4		4
4	**LZT304.31.165**	Shaft sleeve	轴套		2		2		2
5	**GB3452.1**	O-seal ring 43.7×3.15	O形密封圈43.7×3.55		2		2		2
6	**LZT304.31.122**	Steel ball 8.5000G100b	转向摇臂支撑轴		2		2		2
7	**GB/T308-1989**	Supporting shaft of sheering rocker	钢球8.5000G100b		2		2		2
8	**LZT304.31.152**	Nut M10×1	螺母M10×1		2		2		2
9	**LZT304.31.165**	Adjusting screw	调整螺钉		2		2		2
10	**JB/T7940.1-1995**	Oil cup	油杯		4		4		4
11	**LZT304.31.166**	Left steering rocker	左转向摇臂		1		1		1
12	**LZT304.31.180**	Right steering rocker	右转向摇臂		1		1		1
13	**LZT304.31.101**	Holder	托架		1		1		1
14	**LZT304.31.181**	Joint of left drawbar	左拉杆接头		1		1		1
15	**LZT304.31.013**	Transmission assembly,left side	左侧传动总成		1		1		1
16	**LZT304.31.146**	Joint of left cross drawbar	左横拉杆接头		1		1		1
17	**GB/T6171**	Hexagon nut,style 1-Fine pitch thread M18×1.5(left)	螺母M18×1.5（左）		1		1		1

续表1 Continued One

18	**LZT304.31.188**	Longitudinal drawbar	纵拉杆		1		1		
	LZT304.31D.188	Longitudinal drawbar	纵拉杆		1		1		1
19	**GB/T6171**	Hexagon nut,style 1-Fine pitch thread 18×1.5	螺母18×1.5		1		1		1
20	**GB/T91-1986**	Split pin 3.2×50	销3.2×50		4		4		4
21	**LZT304.31.147**	Sealing cap	密封盖		2		2		2
22	**LZT304.31.148**	Hold-down spring	压紧弹簧		2		2		2
23	**LZT304.31.149**	Cap for ball pin	球头销盖		2		2		2
24	**LZT304.31.151**	Ball pin	球头销		2		2		2
25	**LZT304.31.189**	Joint of right drawbar	右拉杆接头		1		1		1
26	**LZT304.31.150**	Seat for ball pin	球头销座		2		2		2
27	**LZT304.31.152**	Sealing roof	密封罩		2		2		2
28	**GB/T6178-1986**	Hexagon slotted and castle nut,style M14	螺母M14		4		4		4
29	**LZT304.31.154**	Joint of right drawbar	右拉杆接头		1		1		1
30	**GB/T6171**	Hexagon nut,style 1-Fine pitch thread M20×1.5(left)	螺母M20X1.5（左）		1		1		1
31	**LZT304.31.153**	Central pipe	中间管		1		1		1
32	**GB/T6171**	Hexagon nut,style 1-Fine pitch thread M20×1.5	细牙螺母M20X1.5		1		1		1
33	**GB/T6170**	Hexagon nut,style M12	细牙螺母M12		12		12		12
34	**GB/T5783**	Single coil spring lock washer 12-Normal type	弹性垫圈		12		12		12
35	**GB/T93**	Double end stub AM12×30-8.8-Zn.D	双头螺柱AM10×30-8.8-Zn.D		12		12		12
36	**GB/T119**	Parallel pin 12×30	圆柱销12X30		4		4		4

47

https://truckmanualshub.com/

31　前驱动桥总成-2

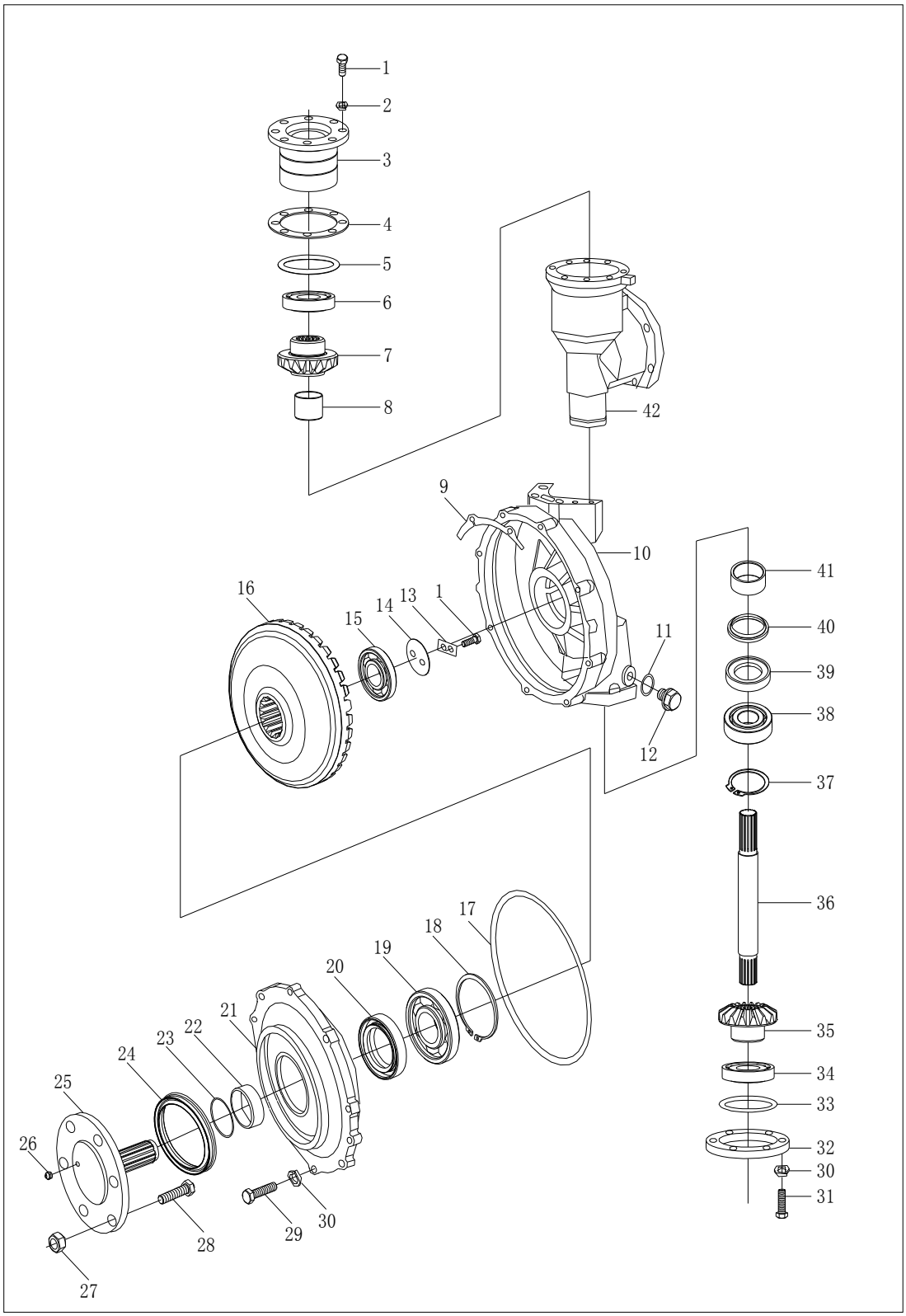

48

31 前驱动桥总成(清江)-2
Front Driving Axle Assembly(qingjiang) - 2

序号 No.	零部件代号 Drawing No.	Part Name and Standards	零部件名称及规格	适用机型和用量（件） Applied Tractor Models and Qty.(Piece)					
				LZT 300	LZT 304	LZT 350	LZT 354	LZT400 /450/480 /500/520 /550	LZT404 /454/484 /504/524 /554
1	**GB/T5783**	Hexagon head bolt-Full thread M8×20	螺栓M8×20		10		10		10
2	**GB/T93**	Single coil spring lock washer 8-Normal type	垫圈8		8		8		8
3	**LZT304.31.123**	Housing of bearing	轴承座		1		1		1
4	**LZT304.31.124**	Adjusting shim	调整垫片		按		按		按需
5	**GB3452.1**	O-seal ring 85×5.3	O形密封圈85×5.3		1		1		1
6	**GB/T297-1994**	Rolling bearing-Tapered roller bearing 30208	轴承30208		1		1		1
7	**LZT304.31.125**	Small driven bevel gear	末端被动直小伞齿轮		2		2		2
8	**LZT304.31.127**	Spacer sleeve	隔套		1		1		1
9	**LZT304.31.134**	Adjusting shim	调整垫片		按需		按需		按需
10	**LZT304.31.121**	Terminal housing,left	左末端壳体		1		1		1
11	**LZT304.31.145**	Washer	垫圈		1		1		1
12	**QC/T379-1999**	Square head tapered plug M10×1	螺塞M10×1		1		1		1
13	**LZT304.31.119**	Stop washer	止退垫		1		1		1
14	**LZT304.31.118**	Circlip	挡圈		1		1		1
15	**GB/T276-1994**	Roll bearing-Deep groove ball bearing 6208	轴承6208		1		1		1
16	**LZT304.31.120**	large conical gear of terminal transmission	最终传动大圆锥齿轮		1		1		1
17	**GB3452.1**	O-seal ring 80×3.55	O形密封圈80×3.5 5		2		2		2
18	**GB/T893.1-1986**	Circlip for hole 110-Type A	挡圈110		1		1		1

续表1 Continued One

19	**GB/T276-1994**	rolling bearing-Deep groove ball bearing 6310	轴承6310		1		1		1
20	**GB/T9877.1-1998**	Oil sealing B65×90×10	油封B65×90×10		1		1		1
21	**LZT304.31.117**	Housing of bearing	轴承座		1		1		1
22	**LZT304.31.114**	Clothing	套		1		1		1
23	**GB3452.1**	O-seal ring 50×2.65	O形密封圈50×2.65		1		1		1
24	**LZT304.31.116**	Dust cap	防尘罩		1		1		1
25	**LZT304.31.115**	Front driving shaft	前驱动轴		1		1		1
26	**JB/T7940.1-1995**	Oil cup	油杯		1		1		1
27	**LZT304.31.112**	Nut	螺母		6		6		6
28	**LZT304.31.113**	Bolt	滚花螺栓		6		6		6
29	**GB/T5783**	Hexagon head bolt-Full thread M10×35	螺栓M10×35		6		6		6
30	**GB/T93**	Single coil spring lock washer 10-Normal type	垫圈10		14		14		14
31	**GB/T5783**	Hexagon head bolt-Full thread	螺栓M10×25		8		8		8
32	**LZT304.31.110**	Terminal cover	端盖		1		1		1
33	**LZT304.31.130**	Adjusting shim	调整垫片		按需		按需		按需
34	**GB/T297-1994**	Rolling bearing-Tapered roller bearing 30210	轴承30210		1		1		1
35	**LZT304.31.131**	Small terminal driving conical gear	末端主动小圆锥齿轮		1		1		1
36	**LZT304.31.129**	main shaft pin	主轴销		1		1		1
37	**GB/T894.1-1986**	Circlip for shaft 55-Type A	挡圈55		1		1		1
38	**GB/T276-1994**	Rolling bearing-Deep groove ball bearing 6011	轴承6011		1		1		1
39	**GB/T9877.1-1998**	Oil sealing B65×85×10	油封B65×85×10		1		1		1
40	**LZT304.31.133**	Dust ring	防尘圈		1		1		1
41	**LZT304.31.132**	Sleeve	衬套		1		1		1
42	**LZT304.31.126**	Housing for left main pin	左主销壳体		1		1		1

50

https://truckmanualshub.com/

31 前驱动桥总成-3

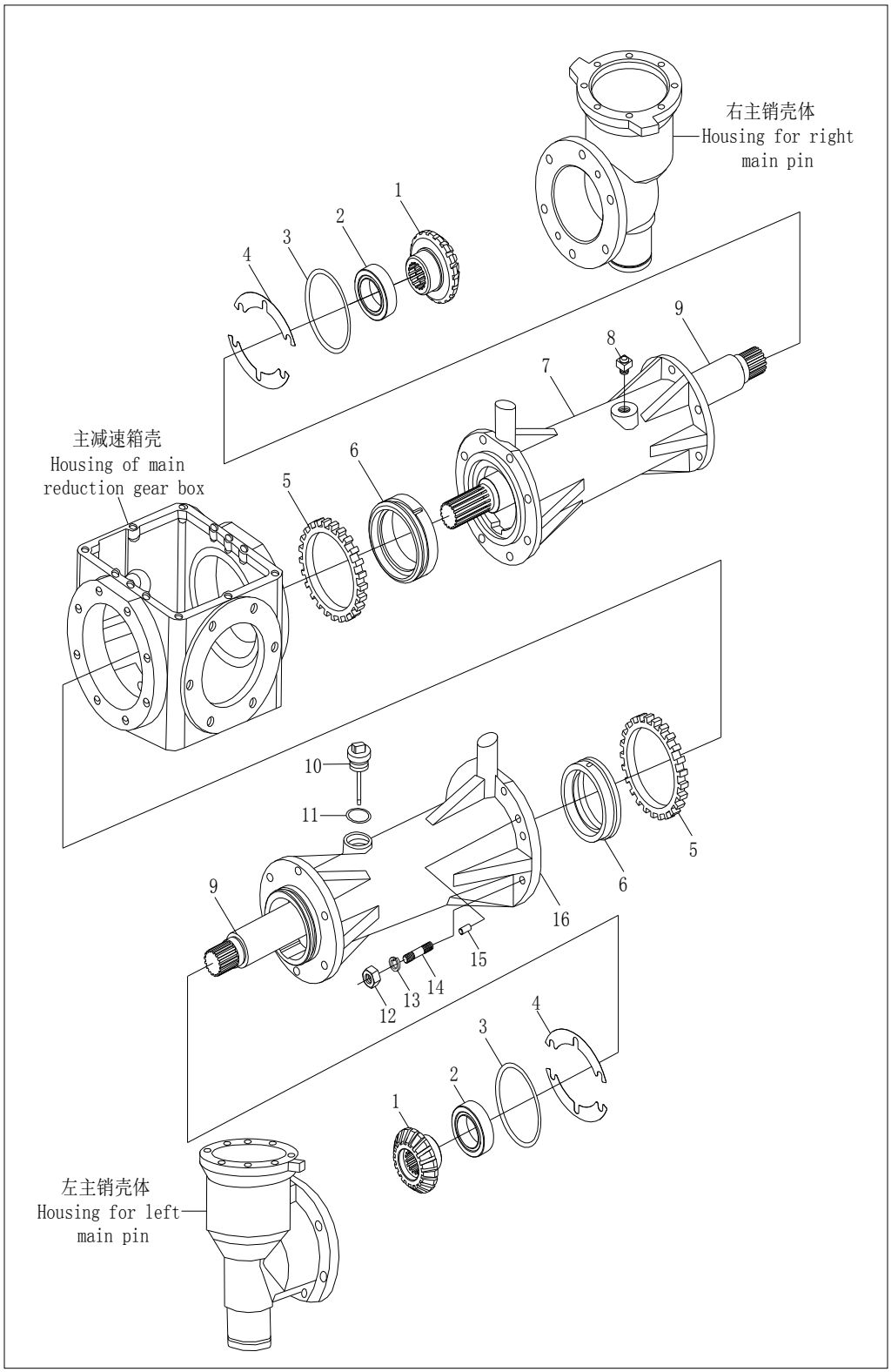

51

31 前驱动桥总成(清江)-3
Front Driving Axle Assembly(qingjiang) - 3

序号 No.	零部件代号 Drawing No.	Part Name and Standards	零部件名称及规格	适用机型和用量（件） Applied Tractor Models and Qty.(Piece)					
				LZT 300	LZT 304	LZT 350	LZT 354	LZT400 /450/480 /500/520 /550	LZT404 /454/484 /504/524 /554
1	**LZT304.31.157**	Small straight bevel gear of half axle	半轴小直伞齿轮		2		2		2
2	**GB/T276**	Rolling bearing-deep groove ball bearing 6209	轴承6209		2		2		2
3	**GB3452.1**	O-seal ring 80×3.55	O形密封圈80×3.55		2		2		2
4	**LZT304.31.134**	Adjusting shim	调整垫片		○		○		○
5	**LZT304.31.139**	Adjusting nut	调整螺母		2		2		2
6	**LZT304.31.138**	Housing of right half axle	差速器轴承座		2		2		2
7	**LZT304.31.105**	sleeve for right half axle	右半轴套管		1		1		1
8	**QC/T410-**	Open-type air plug	常开式通气塞		1		1		1
9	**LZT304.31.158**	Half axle	半轴		1		1		1
10	**QC/T379**	Square head tapered plug M10×1	螺塞M10×1		1		1		1
11	GB3452.1	O-seal ring 30×3.1	O形密封圈 30×3.1		1		1		1
12	**GB/T6170**	Hexagon nut,style 1 M10	I型螺母M10		8		8		8
13	**GB/T93**	Single coil spring lock washer 10-normal type	弹性垫圈		8		8		8
14	**GB/T899**	Double end stub AM10×30-8.8-Zn.D	螺柱AM10×25-8.8-Zn.D		8		8		8
15	**GB/T119**	Paraller pin 12×30	圆柱销12X30		4		4		4
16	**LZT304.31.106**	Sleeve for left half axle	左半轴套管		1		1		1

52

https://truckmanualshub.com/

31 前驱动桥总成-4

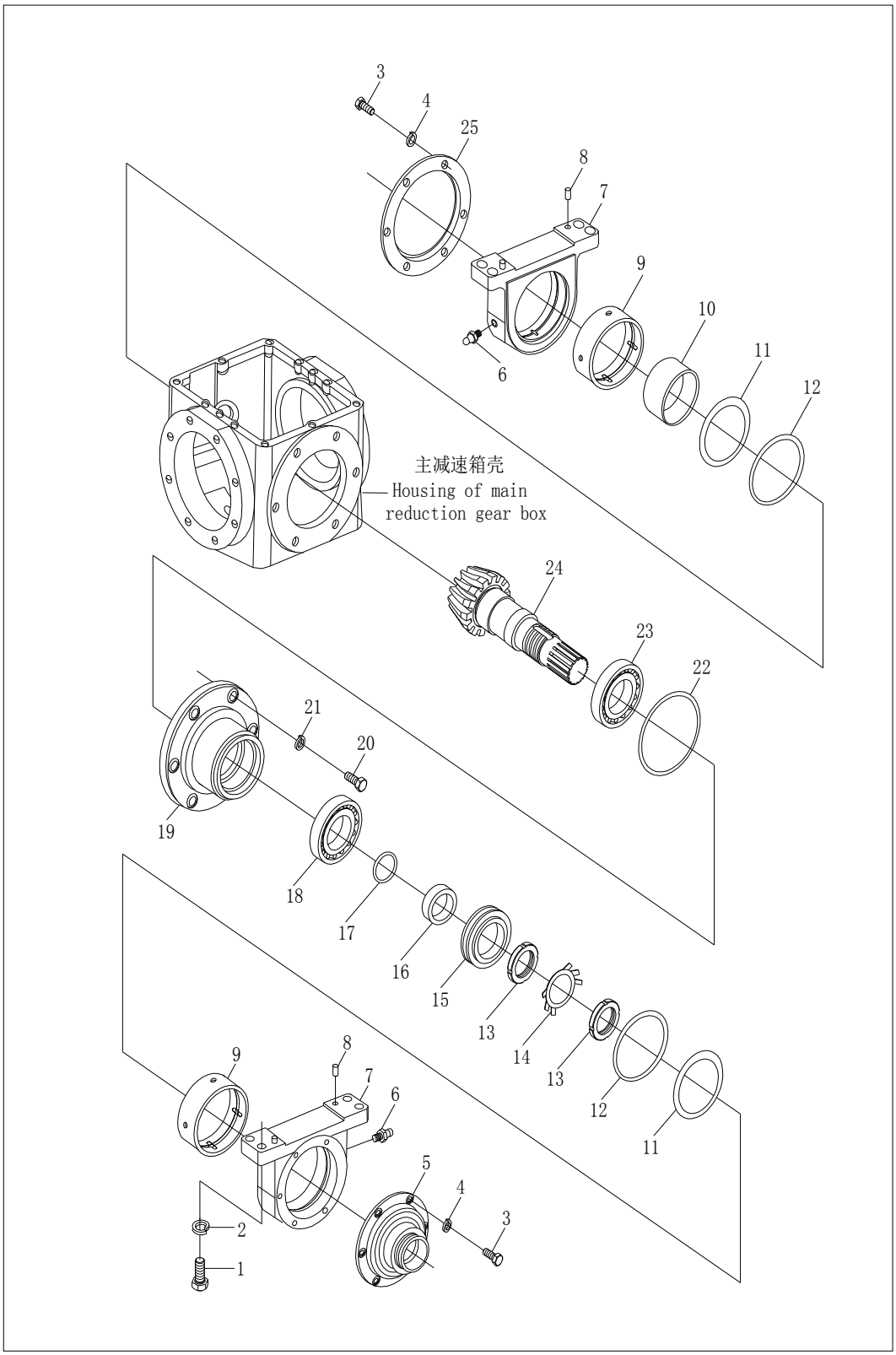

53

31 前驱动桥总成(清江)-4
Front Driving Axle Assembly(qingjiang) - 4

序号 No.	零部件代号 Drawing No.	Part Name and Standards	零部件名称及规格	适用机型和用量（件） Applied Tractor Models and Qty.(Piece)					
				LZT 300	LZT 304	LZT 350	LZT 354	LZT400 /450/480 /500/520 /550	LZT404 /454/484 /504/524 /554
	GB/T5783	Hexagon head bolt-Full thread M12×40	螺栓M12X40		8		8		8
2	**GB/T93**	Single coil spring lock washer12 - Normal type	垫圈12		8		8		8
3	**GB/T5783**	Hexagon head bolt-Full thread M6×16	螺栓M6×16		12		12		12
4	**GB/T93**	Single coil spring lock washer 6-Normal type	垫圈6		12		12		12
5	**LZT304.31.108**	Rear cover	后盖		1		1		1
6	**JB/T7940.1-1995**	Oil cup M10×1	油杯M10×1		2		2		2
7	**LZT304.31.163**	Housing of bearing	轴承座		2		2		2
8	**GB/T119-1986**	Paralle pin D8×20	销D8X20		4		4		4
9	**LZT304.31.162**	Shaft sleeve	轴套		2		2		2
10	**LZT304.31.141**	Sleeve of front oscillating axle	前摆轴衬套		1		1		1

续表1 Continued One

11	**GB3452.1**	O-seal ring 85×3.55	O形密封圈85×3.55		**1**		**1**		**1**
12	**LZT304.31.109**	Washer	垫		按需		按需		按需
13	**GB/T810-1998**	Small round nut M30×1.5	螺母M30×1.5		2		2		2
14	**GB/T858-1998**	Tab washer for round nut 30	垫圈30		1		1		1
15	**GB/T9877.7-1998**	Oil seal B45×70×8	油封B45×70×8		1		1		1
16	**LZT304.31.170**	Spacer sleeve	隔套		1		1		1
17	**GB3452.1**	O-seal ring 33.5×2.65	O形密封圈33.5×2.65		1		1		1
18	**GB/T297-1994**	Rolling bearing-Tapered roller bearing 32007	轴承32007		1		1		1
19	**LZT304.31.169**	End cover of input shaft	输入轴端盖		1		1		1
20	**GB/T5783**	Hexagon head bolt - Full thread M10×30	螺栓M10×30		6		6		6
21	**GB/T93**	Single coil spring lock washer 10-Normal type	垫圈10		6		6		6
22	**GB3452.1**	O-seal ring95×2.65	O形密封圈95×2.65		1		1		1
23	**GB/T297-1994**	Rolling bearing-Tapered roller bearing 30208	轴承30208		1		1		1
24	**LZT304.31.167**	Input gear shaft	输入齿轮轴		1		1		1
25	**LZT304.31.107**	Front cover	前盖		1		1		1

55

https://truckmanualshub.com/

31　前驱动桥总成-5

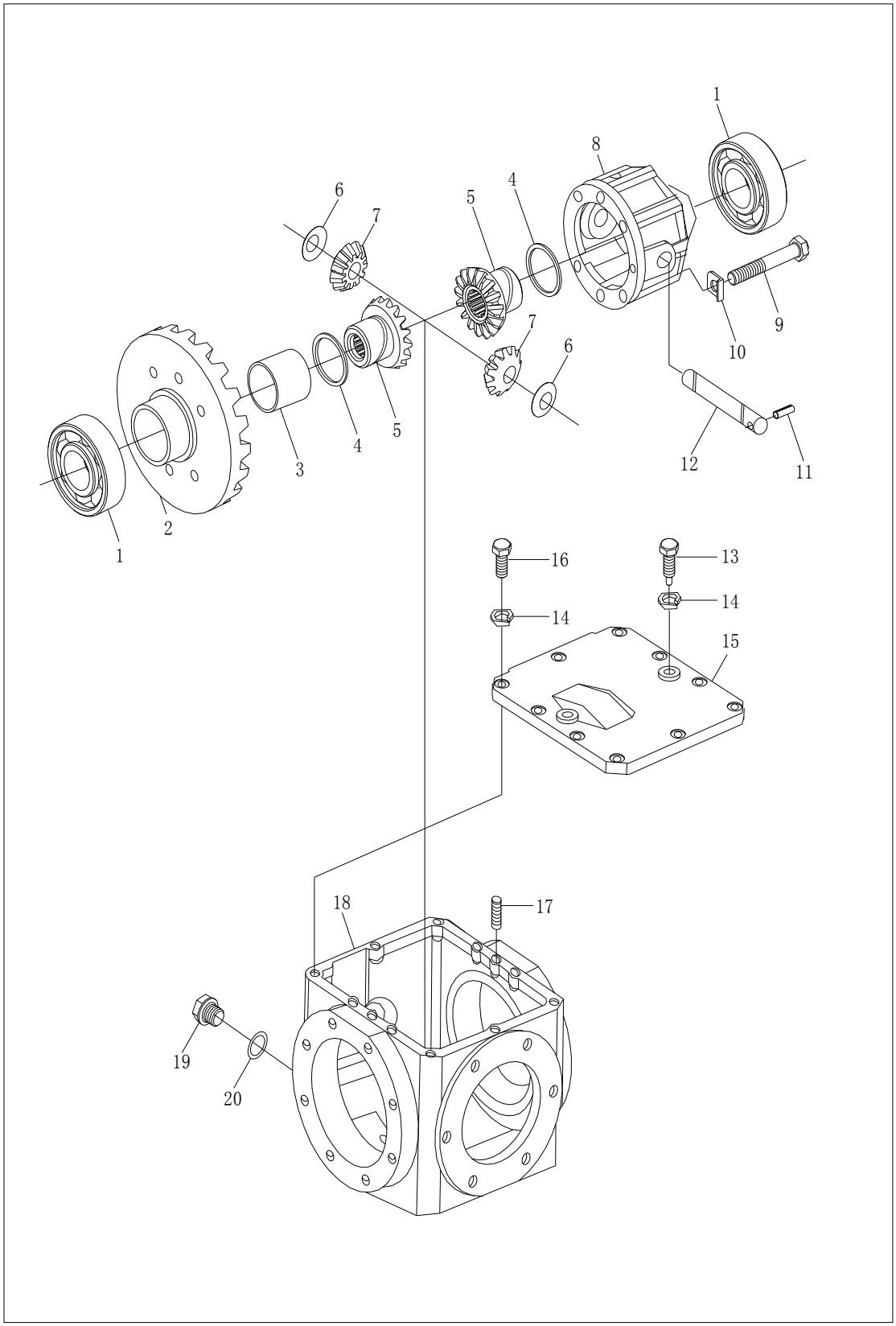

56

31 前驱动桥总成(清江)-5
Front Driving Axle Assembly(qingjiang) - 5

序号 No.	零部件代号 Drawing No.	Part Name and Standards	零部件名称及规格	适用机型和用量（件） Applied Tractor Models and Qty.(Piece)					
				LZT 300	LZT 304	LZT 350	LZT 354	LZT400 /450/480 /500/520 /550	LZT404 /454/484 /504/524 /554
1	**GB/T297-1994**	Rolling bearing-Tapered roller bearing 30211	轴承30211		2		2		2
2	**LZT304.31.172**	Large bevel gear of central transmission	中央传动大螺伞齿轮		1		1		1
3	**LZT304.31.171**	Sleeve of half axle gear	半轴齿轮衬套		1		1		1
4	**LZT304.177**	Washer of half axle gear	半轴齿轮垫片		2		2		2
5	**LZT304.31.176**	Half axle gear	半轴齿轮		2		2		2
6	**LZT304.31.174**	Washer for planetary gear	行星齿轮垫圈		2		2		2
7	**LZT304.31.173**	Planetar gear	行星齿轮		2		2		2
8	**LZT304.31.178**	Housing of differential	差速器壳		12		12		12
9	**GB/T5782**	Hexagon head bolt M10×80	螺栓M10×80		6		6		6
10	**LZT304.31.175**	Lock plate	锁片		6		6		6
11	**GB/T879-1986**	Spring-type straight pin 6×30	弹性销6×30		1		1		1
12	**LZT304.31.179**	Shaft of planetary gear	行星齿轮轴		1		1		1
13	**LZT304.31.144**	Set screw	定位螺钉		2		2		2
14	**GB/T93**	Single coil spring lock washer 8 - Normal type	垫圈8		12		12		12
15	**LZT304.31.142**	Case cover of central transmission	中央传动箱盖		1		1		1
16	**GB/T5783**	Hexagon head bolt Full thread M10×25	螺栓M10×25		10		10		10
17	**GB/T72-1988**	Slotted set screw with cone point M8×20	螺栓M8X20		2		2		2
18	**LZT304.31.140**	Housing of main reduction gear box	主减速箱壳		1		1		1
19	**DC/T379-1999**	Square head tapered plug M10×1	螺塞M10X1		1		1		1
20	**LZT304.31.145**	Washer	垫圈		1		1		1

https://truckmanualshub.com/

31　前驱动桥总成-6

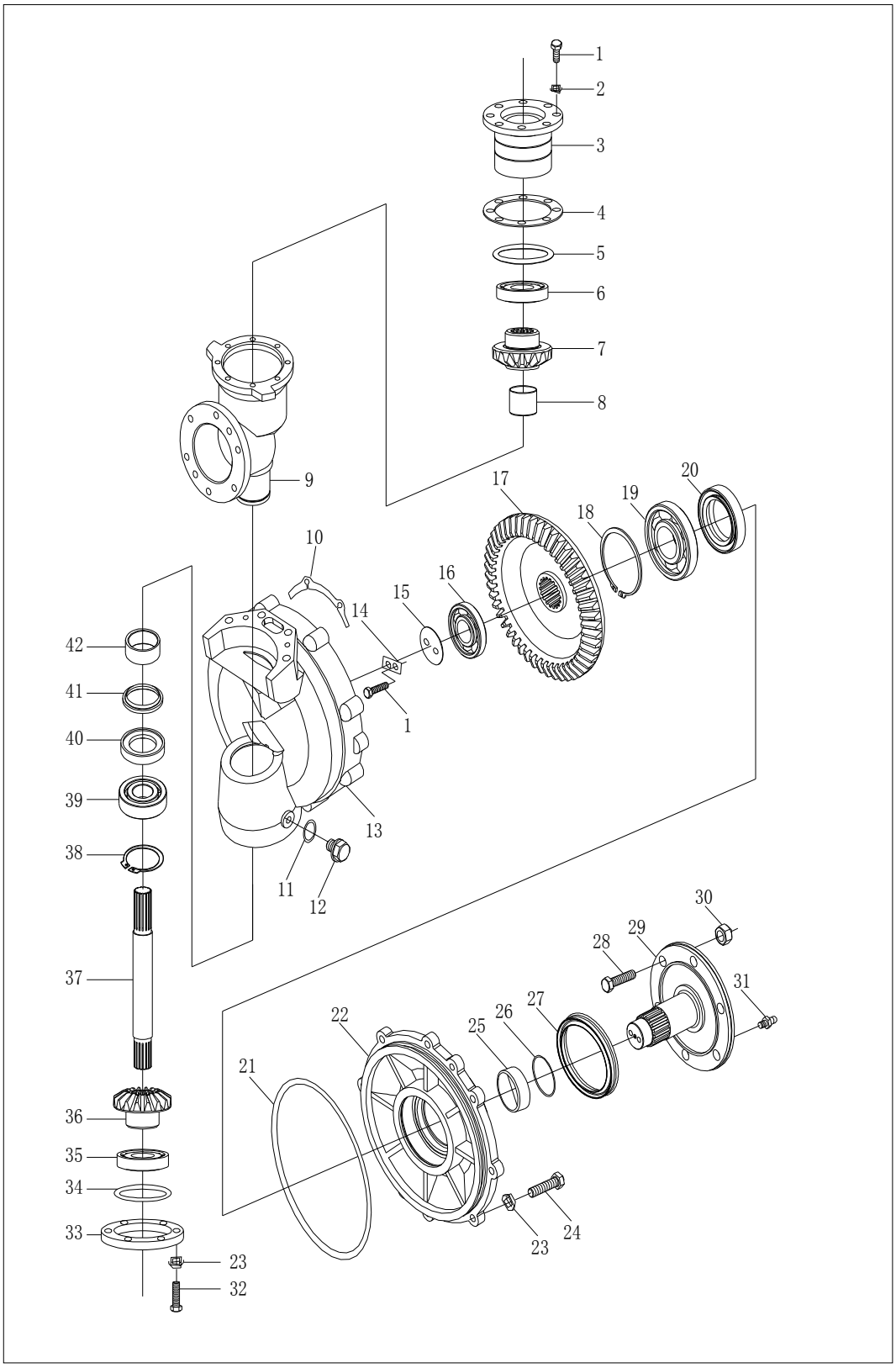

58

31 前驱动桥总成(清江)-6
Front Driving Axle Assembly(qingjiang) - 6

序号 No.	零部件代号 Drawing No.	Part Name and Standards	零部件名称及规格	适用机型和用量（件） Applied Tractor Models and Qty.(Piece)					
				LZT 300	LZT 304	LZT 350	LZT 354	LZT400 /450/480 /500/520 /550	LZT404 /454/484 /504/524 /554
1	**GB/T5783**	Hexagon head bolt - Full thread M8×20	螺栓M8×20		10		10		10
2	**GB/T93**	Single coil spring lock washer 8-Normal type	垫圈8		8		8		8
3	**LZT304.31.123**	Housing of bearing	轴承座		1		1		1
4	**LZT304.31.124**	Adjusting shim	调整垫片		按需		按需		按 需
5	**GB3452.1**	O-seal ring 85×5.3	O形密封圈85×5.3		1		1		1
6	**GB/T297-1994**	Rolling bearing-Tapered roller bearing 30208	轴承30208		1		1		1
7	**LZT304.31.125**	Small driven bevel gear	末端被动直小伞齿轮		2		2		2
8	**LZT304.31.127**	Spacer sleeve	隔套		1		1		1
9	**LZT304.31.160**	Housing for right main pin	右主销壳体		1		1		1
10	**LZT304.31.134**	Adjusting shim	调整垫片		按需		按需		按 需
11	**LZT304.31.145**	Washer	垫圈		1		1		1
12	**QC/T379-1999**	Square head tapered plug M10×1	螺塞M10×1		1		1		1
13	**LZT304.31.161**	Terminal housing,right	右末端壳体		1		1		1
14	**LZT304.31.119**	Stop washer	止退垫		1		1		1
15	**LZT304.31.118**	Circlip	挡圈		1		1		1
16	**GB/T276-1994**	Rolling bearing-Deep groove ball bearing 6208	轴承6208		1		1		1
17	**LZT304.31.120**	Large conical gear of terminal transmission	最终传动大圆锥齿轮		1		1		1
18	**GB/T893.1-1986**	Circip for hole 110-Type A	挡圈110		1		1		1

续表1 Continued One

19	**GB/T276-1994**	Rolling bearing - Deep groove ball bearing 6310	轴承6310		1		1		1
20	**GB/T9877.1-1998**	Oil cup B65×90×10	油封B65×90×10		1		1		1
21	**GB3452.1**	O-seal ring 80×3.55	O形密封圈80×3.5 5		2		2		2
22	**LZT304.31.117**	Housing of bearing	轴承座		1		1		1
23	**GB/T93**	Single coil spring lock washer 10-Normal type	垫圈10		14		14		14
24	**GB/T5783**	Hexagon head bolt - Full thread M10×35	螺栓M10×35		6		6		6
25	**LZT304.31.114**	Clothing	套		1		1		1
26	**GB3452.1**	O-seal ring 50×2.65	O形密封圈50×2.65		1		1		1
27	**LZT304.31.116**	Dust cap	防尘罩		1		1		1
28	**LZT304.31.113**	Bolt	滚花螺栓		6		6		6
29	**LZT304.31.115**	Front driving shaft	前驱动轴		1		1		1
30	**LZT304.31.112**	Nut	螺母		6		6		6
31	**JB/T7940.1-1995**	Oil cup	油杯		1		1		1
32	**GB/T5783**	Hexagon head bolt - Full thread M10×25	螺栓M10×25		8		8		8
33	**LZT304.31.110**	Terminal cover	端盖		1		1		1
34	**LZT304.31.130**	Adjusting shim	调整垫片		按需		按需		按需
35	**GB/T297-1994**	Rolling bearing-Tapered roller bearing 30210	轴承30210		1		1		1
36	**LZT304.31.131**	Small terminal driving conical gear	末端主动小圆锥齿轮		1		1		1
37	**LZT304.31.129**	Main shaft pin	主轴销		1		1		1
38	**GB/T894.1-1986**	Circlip for shaft 55-Type A	挡圈55		1		1		1
39	**GB/T276-1994**	Rolling bearing-Deep groove ball bearing 6011	轴承6011		1		1		1
40	**GB/T9877.1-1998**	Oil sealing B65×85×10	油封B65×85×10		1		1		1
41	**LZT304.31.133**	Dust ring	防尘圈		1		1		1
42	**LZT304.31.132**	Sleeve	衬套		1		1		1

60

https://truckmanualshub.com/

32 前轮总成

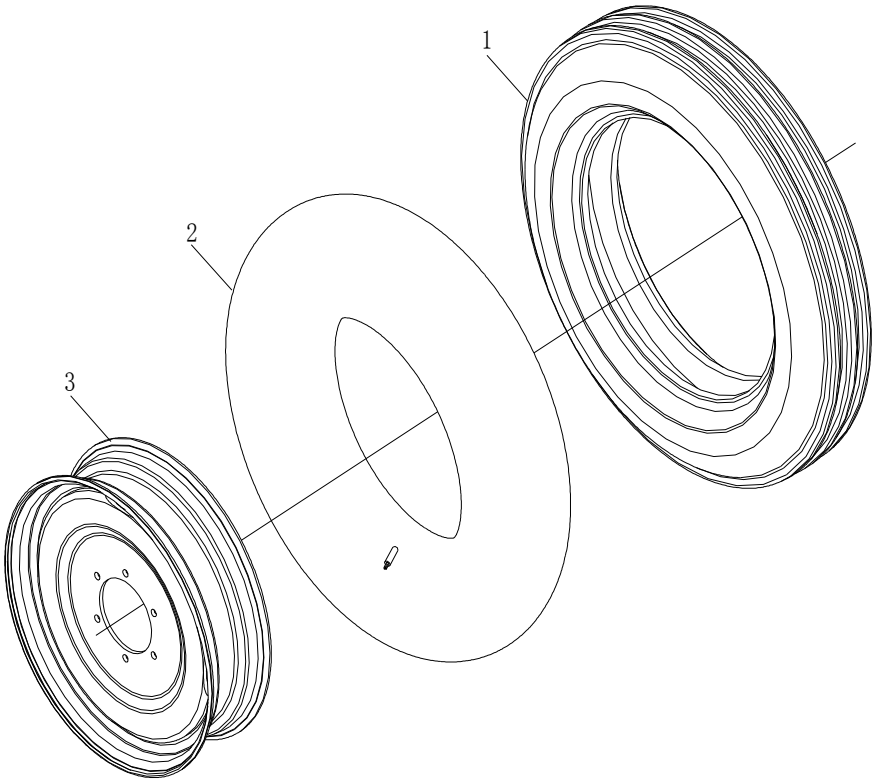

61

https://truckmanualshub.com/

32 前 轮 总 成
Front Driving Wheel Assembly

序号 No.	零部件代号 Drawing No.	Part Name and Standards	零部件名称及规格	适用机型和用量（件） Applied Tractor Models and Qty.(Piece)					
				LZT 300	LZT 304	LZT 350	LZT 354	LZT400 /450/480 /500/520 /550	LZT404 /454/484 /504/524 /554
1	**GB/T2979-1999**	Cover tire 5.00-15	外胎5.00-15	2					
		Cover tire 5.50-16	外胎5.50-16			2			
		Cover tire 6.00-16	外胎6.00-16					2	
2	**GB/T2979-1999**	Inner tube 5.00-15	内胎5.00-15	2					
		Inner tube 5.50-16	内胎5.50-16			2			
		Inner tube 6.00-16	内胎6.00-16					2	
3	**LZT300.32.011**	Rim weldment(4.00E×15)	轮辋4.00E×15焊合件	2					
	LZT400.32.011	Rim weldment(4.00E×16)	轮辋4.00E×16焊合件			2		2	

62

https://truckmanualshub.com/

FT300.32.001前驱动轮总成

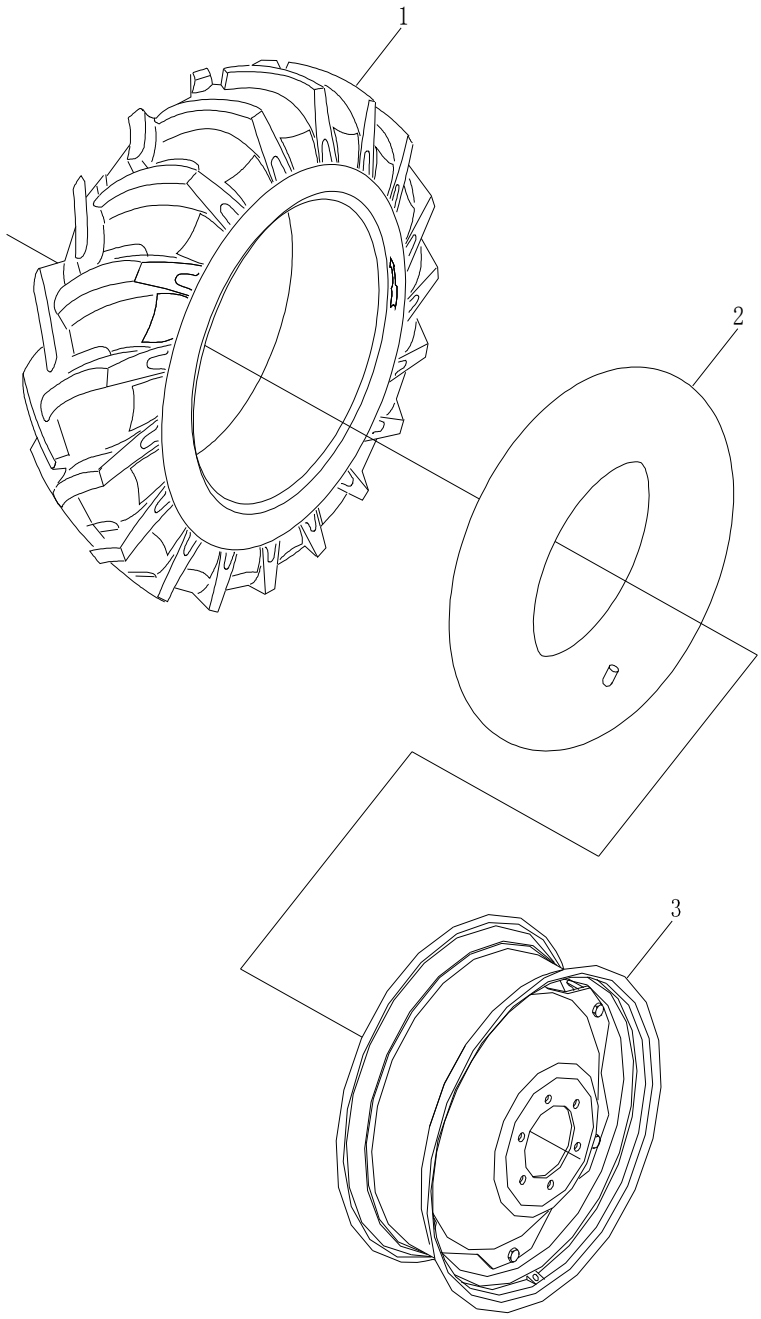

63

32 前驱动轮总成

序号 No.	零部件代号 Drawing No.	Part Name and Standards	零部件名称及规格	适用机型和用量（件） Applied Tractor Models and Qty.(Piece)					
				LZT 300	LZT 304	LZT 350	LZT 354	LZT400 /450/480 /500/520 /550	LZT404 /454/484 /504/524 /554
	LZT 404.32.001	Front driving wheel assembly	前轮总成						2
	LZT 354.32B.001	Front driving wheel assembly	前轮总成				2		
	LZT 404.32B.001	Front driving wheel assembly	前轮总成						2
1	**GB/T 2979**	Cover tire 6.50-16	外胎6.50-16		2				
	GB/T 2979	Cover tire 7.50-16	外胎7.50-16				2		
	GB/T 2979	Cover tire 8.30-20	外胎8.30-20						2
	GB/T 2979	Cover tire 7.50-16(Rice tire)	外胎7.50-16(水田)				2		
	GB/T 2979	Cover tire 8.30-20(Rice tire)	外胎8.30-20(水田)						2
2	**GB/T 2979**	Inner tube6.50-16	内胎6.5-16		2				
	GB/T 2979	Inner tube7.50-16	内胎7.5-16				2		
	GB/T 2979	Inner tube8.30-20	内胎8.3-20						2
	GB/T 2979	Inner tube 7.50-16	内胎7.5-16				2		
	GB/T 2979	Inner tube 8.30-20	内胎8.3-20						2
3	**LZT 304.32.011**	Front rim weldment(5.50F×16)	轮辋5.50FX16焊合件		2		2		
	LZT 404.32.011	Front rim weldment(W7×20)	轮辋W7X20焊合件						2

https://truckmanualshub.com/

34/91　后驱动轮及后配重总成

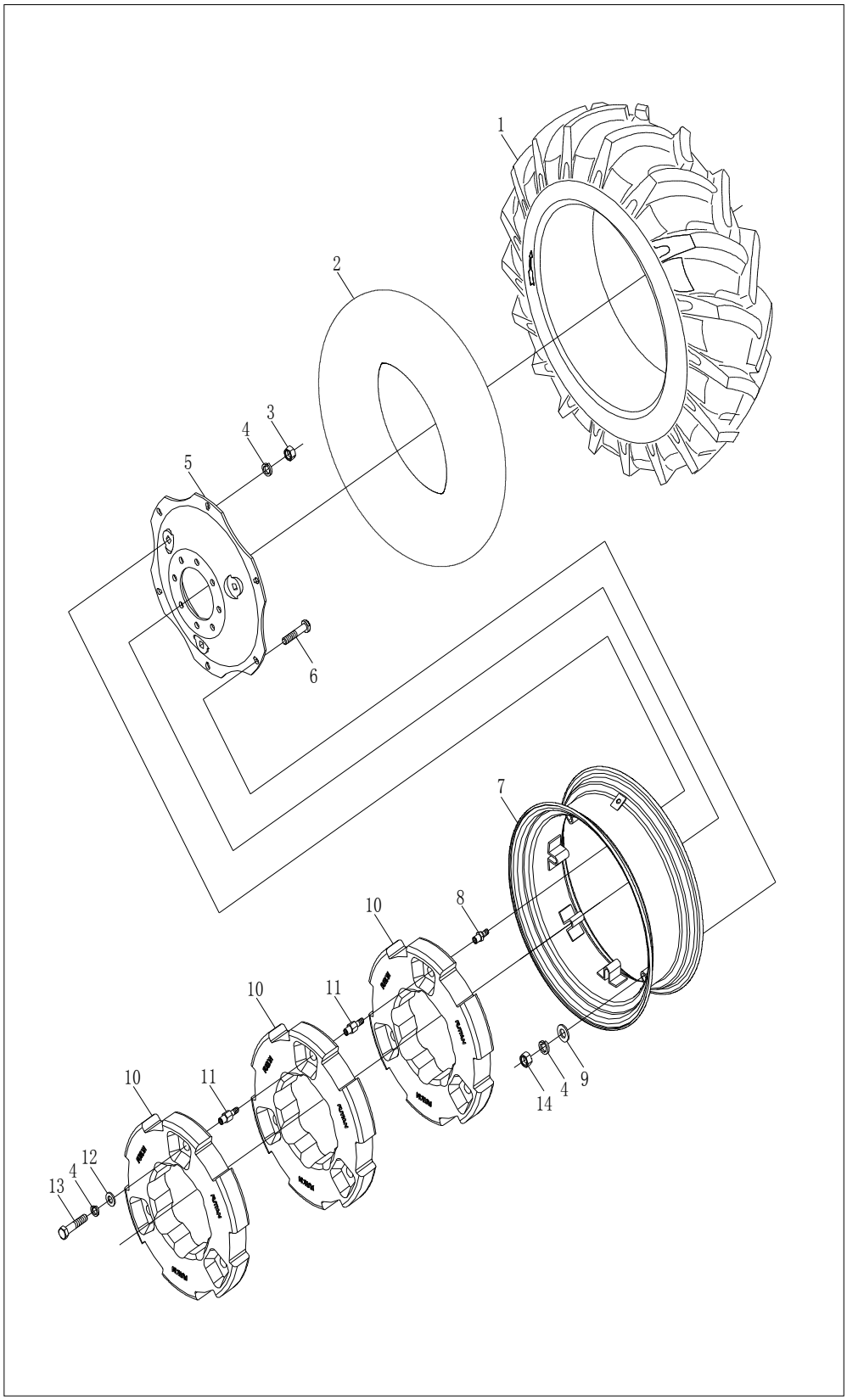

65

34/91 后驱动轮及后配重总成
Rear Driving Wheel and Rear Ballast Assembly

序号 No.	零部件代号 Drawing No.	Part Name and Standards	零部件名称及规格	适用机型和用量（件） Applied Tractor Models and Qty.(Piece)					
				LZT 300	LZT 304	LZT 350	LZT 354	LZT400 /450/480 /500/520 /550	LZT404 /454/484 /504/524 /554
	LZT 300.34.001	Rear driving wheel assembly	后驱动轮总成						
	LZT 350.34.001	Rear driving wheel assembly	后驱动轮总成						
	LZT 400.34.001	Rear driving wheel assembly	后驱动轮总成						
	LZT 404.34.001	Rear driving wheel assembly	后驱动轮总成						
	LZT 404.34B.001	Rear driving wheel assembly	后驱动轮总成						
1	**GB/T 2979**	Cover tire ,driving wheel 11.2-24	驱动轮外胎11.2-24	2	2				
	GB/T 2979	Cover tire ,driving wheel 11.2-28	驱动轮外胎11.2-28	2	2				
	GB/T 2979	Cover tire ,driving wheel 12.4-28①	驱动轮外胎12.4-28			2	2		
	GB/T 2979	Cover tire ,driving wheel 14.9-24	驱动轮外胎14.9-24					2	2
	GB/T 2979	Cover tire ,driving wheel 11-28②	驱动轮外胎11-28(水田轮胎)						
2	**GB/T 2979**	Inner tube, driving wheel11.2-24	驱动轮内胎11.2-24	2	2				
	GB/T 2979	Inner tube, driving wheel 11.2-28	驱动轮内胎11.2-28			2	2		
	GB/T 2979	Inner tube, driving wheel 12.4-28①	驱动轮内胎11-28（水田胎）					2	2
	GB/T 2979	Inner tube, driving wheel 14.9-24	驱动轮内胎12.4-28					2	2

66

续表1 Continued One

	GB/T 2979	Inner tube, driving wheel 11-28	驱动轮内胎11-28(水田轮胎)						
3	**GB/T 6170**	Hexagon nut,style 1 M16-Zn.D	螺母M16×1.5-Zn.D	**8**	**8**	**12**	**12**	**12**	**12**
4	**GB/T 93**	Single coil spring lock washer-Normal type 6-Zn.D	垫圈16	**20**	**20**	24	24	24	24
5	**LZT300.34.104**	Spoke ,Rear driving wheel	辐板	**2**	**2**				
	LZT 400.34.103	Spoke ,Rear driving wheel	辐板			2	2	2	2
	LZT 404.34.102	Spoke ,Rear driving wheel	辐板						
6	**LZT 300.34.102**	Rim bolt	轮辋螺栓	**8**	**8**	12	12	12	12
7	**LZT 300.34.012**	Rim weldment W10*24	轮辋W10×24组合件	**2**	**2**				
	LZT 400.34.012	Rim weldment W10*28	轮辋W10×28组合件			2	2	2	2
	LZT 404.34.012	Rim weldment W12*24	轮辋W12×24组合件						
8	**LZT 400.91.102**	Rear ballast screw(I)	后配重螺钉1	**8**	**8**	12	12	12	12
9	**LZT300.34.106**	Plain washer	垫圈	8	8	12	12	12	12
10	**LZT 300.91.101**	Rear ballast	后配重	6					
	LZT 400.91.101	Rear ballast	后配重		4	6	4	8	8
11	**LZT650.91.103**	Rear ballast screw(II)	后配重螺钉2	12	6	12	6	18	18
12	**LZT 650.34.104**	Plain washer	垫圈	6	6	6	6	6	6
13	**GB/T 5783**	Hexagon head bolt-Full thread M6*45-Zn.D	全螺纹螺栓M16×45-Zn.D	6	6	6	6	6	6
14	**GB/T 6170**	Hexagon nut,style 1 M16-Zn.D	螺母M16-Zn.D	6	6	6	6	6	6
Note :②Rice tire									

67

https://truckmanualshub.com/

35A 牵引机构总成

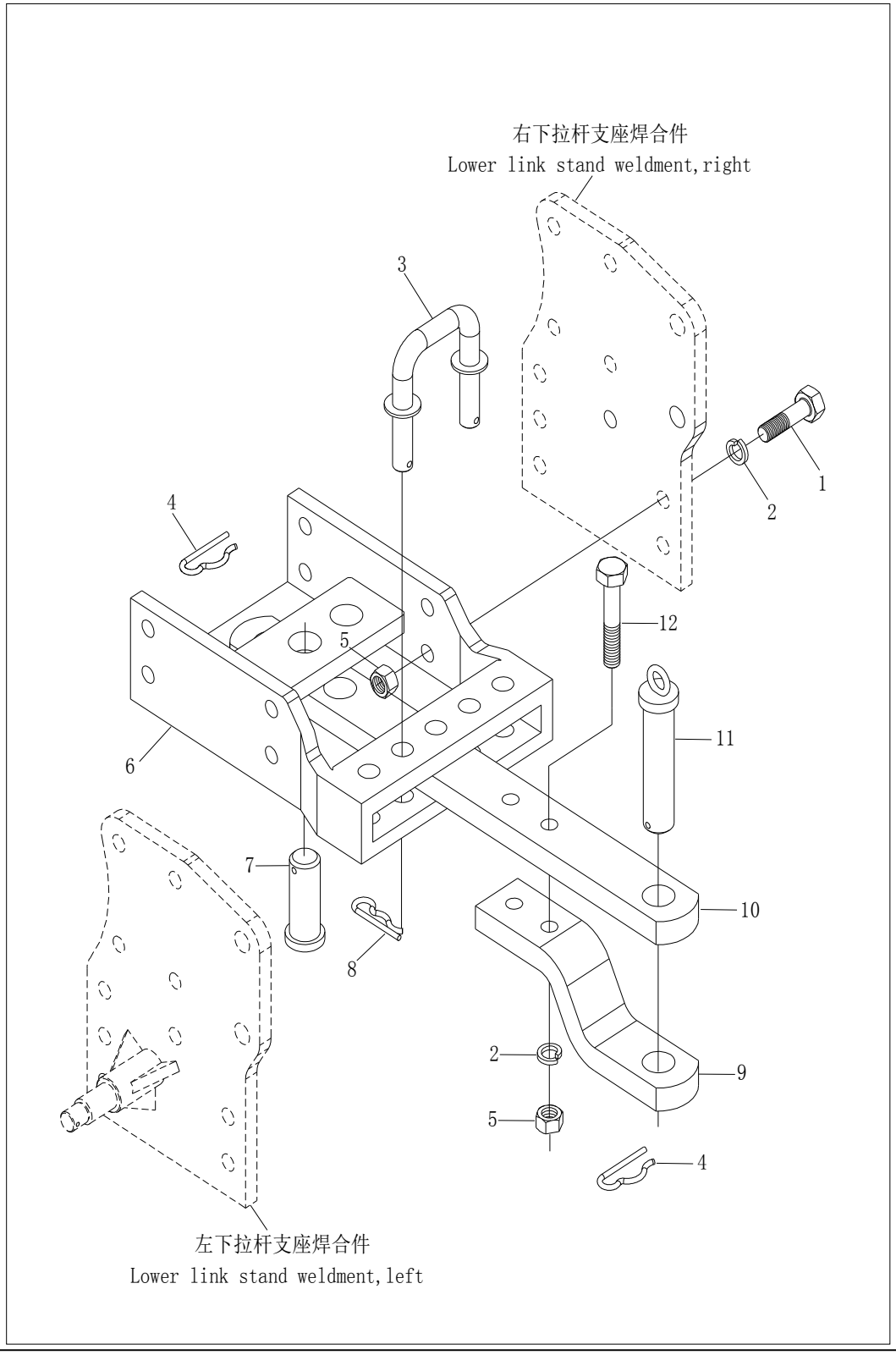

68

35A 牵引机构总成
Towing Mechanism Assembly

序号 No.	零部件代号 Drawing No.	Part Name and Standards	零部件名称及规格	适用机型和用量（件） Applied Tractor Models and Qty.(Piece)					
				LZT 300	LZT 304	LZT 350	LZT 354	LZT400 /450/480 /500/520 /550	LZT404 /454/484 /504/524 /554
1	**GB/T 5783**	Hexagon head bolt-Full thread M16×55－Zn.D	螺栓M16X35-Zn.D	8	8	8	8	8	8
2	**GB/T 93**	Single coil spring lock washer 16-Normal type	垫圈16	10	10	10	10	10	10
3	**LZT300.35C.013**	U-latch weldment	右侧连接板焊合	1	1	1	1	1	1
4	**LZT65.53.103**	Elastic locking pin	U形销焊合	2	2	2	2	2	2
5	**GB/T 6170**	Hexagon nut,style 1 M16-Zn.D	螺母M16-Zn.D	10	10	10	10	10	10
6	**LZT300.35A.012**	Towing frame weldment	牵引架焊合	1	1	1	1	1	1
7	**LZT300.35C.103**	Joint locking pin	左侧连接板焊合	1	1	1	1	1	1
8	**LZT300.35C.131**	Locking pin	连接锁销	2	2	2	2	2	2
9	**LZT300.35C.101**	Lower part of U-hook	U形钩下件	1	1	1	1	1	1
10	**LZT300.35A.102**	Upper part of U-hook	U形钩上件	1	1	1	1	1	1
11	**LZT300.35C.015**	Towing pin roll weldment	牵引销轴焊合	1	1	1	1	1	1
12	**GB/T 5783**	Hexagon head bolt-Full thread M16×80－Zn.D	螺栓M16X80-Zn.D	2	2	2	2	2	2

69

https://truckmanualshub.com/

37变速箱总成（一）

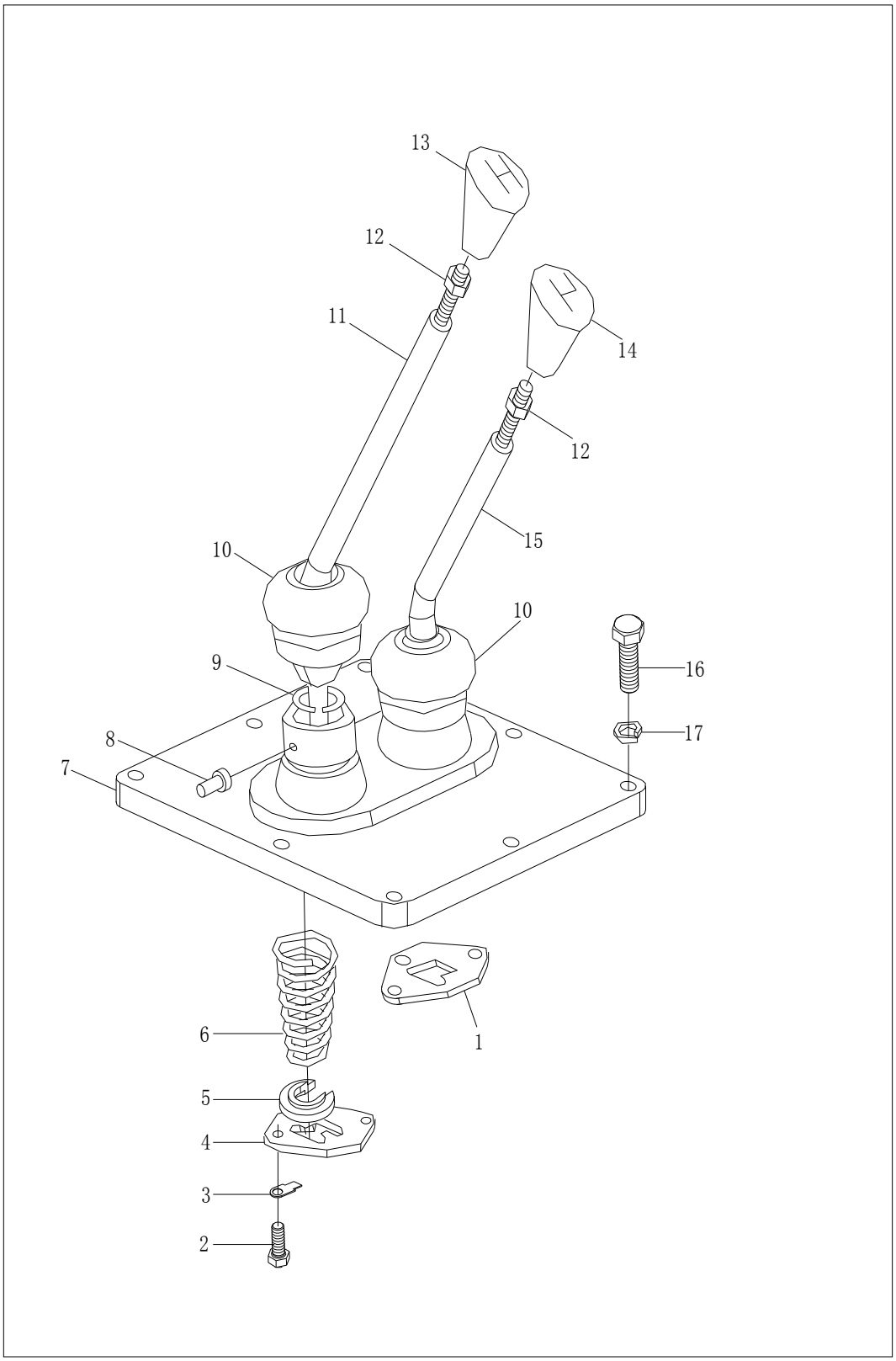

70

https://truckmanualshub.com/

37 变 速 箱 总 成（1）
Gearbox Assembly-1

序号 No.	零部件代号 Drawing No.	Part Name and Standards	零部件名称及规格	适用机型和用量（件） Applied Tractor Models and Qty.(Piece)					
				LZT 300	LZT 304	LZT 350	LZT 354	LZT400 /450/480 /500/520 /550	LZT404 /454/484 /504/524 /554
1	**LZT300.37.161**	Auxiliary gearshift runner	副变速导板	1	1	1	1	1	1
2	**GB/T 5783**	Hexagon head bolt-Full thread M8×16-Zn.D	螺栓 M8X16-Zn.D	4	4	4	4	4	4
3	**GB/T 854**	Tab washer with long tab 8	止动垫圈8	4	4	4	4	4	4
4	**LZT300.37.162**	Main gearshift runner	主变速导板	1	1	1	1	1	1
5	**LZT300.37.164**	Spring snap ring of gear change handle	变速杆弹簧挡圈	2	2	2	2	2	2
6	**LZT300.37.165**	Spring of gear change handle	变速杆弹簧	2	2	2	2	2	2
7	**LZT300.37.163**	Upper housing ,gearbox	变速箱上盖	1	1	1	1	1	1
8	**LZT300.37.177**	Rivet	铆钉	2	2	2	2	2	2
9	**GB/T 893.1**	Circlip for hole 35-Type A	孔用弹性挡圈 35	2	2	2	2	2	2
10	**LZT300.37.166**	Dust cover of gear change handle	变速杆防尘罩	2	2	2	2	2	2
11	**LZT300.37.167**	Gear change handle ,main gearshift	主变速杆	1	1	1	1	1	1
12	**GB/T 6172**	Hexagon thin nut M10-Zn.D	螺母 M10-Zn.D	2	2	2	2	2	2
13	**LZT300.37.015**	Gear change handle assembly ,auxiliary gearshift	主变速操纵手柄总成	1	1	1	1	1	1
14	**LZT300.37.016**	Gear change handle assembly ,auxiliary gearshift	副变速操纵手柄总成	1	1	1	1	1	1
15	**LZT300.37.160a**	Gear change handle of auxiliary gearshift	副变速杆	1	1	1	1	1	1
16	**GB/T 5783**	Hexagon head bolt-Full thread M10×30－Zn.D	螺栓 M10X30-Zn.D	6	6	6	6	6	6
17	**GB/T 93**	Single coil spring lock washer 10-Normal type	弹簧垫圈 10	6	6	6	6	6	6

71

https://truckmanualshub.com/

37变速箱总成（二）

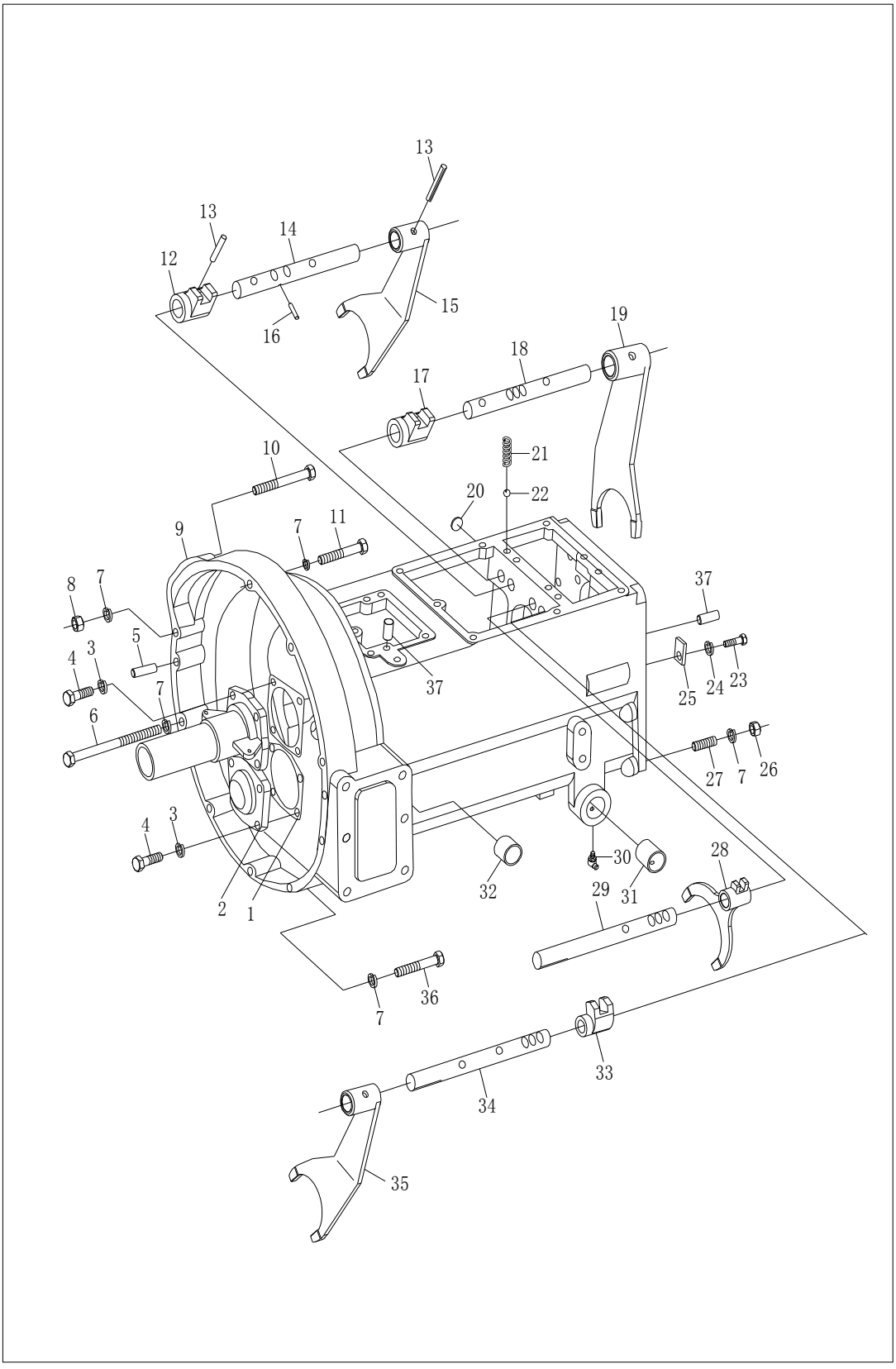

72

37变速箱总成（2）
Gearbox Assembly-2

序号 No.	零部件代号 Drawing No.	Part Name and Standards	零部件名称及规格	适用机型和用量（件） Applied Tractor Models and Qty.(Piece)					
				LZT 300	LZT 304	LZT 350	LZT 354	LZT400 /450/480 /500/520 /550	LZT404 /454/484 /504/524 /554
1	**LZT300.37.119**	Housing gasket of Ⅱ shaft	II轴轴承盖纸垫	1	1	1	1	1	1
2	**LZT300.37.120**	Housing of Ⅱ shaft	II轴轴承盖	1	1	1	1	1	1
3	**GB/T 93**	Single coil spring lock washer 8-Normal type	弹簧垫圈 8	8	8	8	8	8	8
4	**GB/T 5783**	Hexagon head bolt-Full threat M8×25－Zn.D	螺栓 M8X25-Zn.D	8	8	8	8	8	8
5	**GB/T 119-1986**	Paralle pin D12×22－Zn.D	圆柱销 D12X30-Zn.D	4	4	4	4	4	4
6	**GB/T 5782**	Hexagon head bolt M12×110－Zn.D	螺栓 M12X110-Zn.D	2	2	2	2	2	2
7	**GB/T 93**	Single coil spring lock washer 12-Normal type	弹簧垫圈 12-Zn,D	22	22	22	22	22	22
8	**GB/T 6170**	Hexagon nut ,style 1 M 12 －Zn.D	螺母 M12-Zn.D	3	3	3	3	3	3
9	**LZT300.37E.101**	Gearbox housing	变速箱壳体	1	1	1	1	1	1
10	**GB/T 5782**	Hexagon head bolt M12×100－Zn.D	螺栓 M12X100-Zn.D	3	3	3	3	3	3
11	**GB/T 5782**	Hexagon head bolt M12×70－Zn.D	螺栓 M12X70-Zn.D	3	3	3	3	3	3
12	**LZT300.37.153**	Reverse gear fork	倒档拨头	1	1	1	1	1	1
13	**GB/T 879**	Spring type straight pin-Slotted 5×25	弹性圆柱销5X25	7	7	7	7	7	7
14	**LZT300.37.155**	Shaft of reverse gear fork	倒档拨叉轴	1	1	1	1	1	1
15	**LZT300.37.146**	Reverse gear fork	倒档拨叉	1	1	1	1	1	1
16	**LZT300.37.151**	Inter-lock pin	互锁销	1	1	1	1	1	1
17	**LZT300.37.154**	Auxiliary gearshift fork	副变速拨头	1	1	1	1	1	1

73

续表1 Continued One

18	**LZT300.37.156**	Shaft of auxiliary gearshift fork	副变速拨叉轴	1	1	1	1	1	1
19	**LZT300.37.145**	Auxiliary gearshift fork	副变速拨叉	1	1	1	1	1	1
20	**QC/T 387-1999**	Shim	塞片	1	1	1	1	1	1
21	**LZT300.37.135**	Locating spring of fork shaft	拨叉轴定位弹簧	4	4	4	4	4	4
22	**GB/T 308-1989**	Stell ball 8.0000G100b	钢球8.0000G100 b	4	4	4	4	4	4
23	**GB/T 5783**	Hexagon head bolt-Full threat M10×20-Zn.D	螺栓 M10X20-Zn.D	1	1	1	1	1	1
24	**GB/T 93**	Single coil spring lock washer 10-Normal type	弹簧垫圈 10	1	1	1	1	1	1
25	**LZT300.37.140**	Limiting plate for reverse shaft	倒档轴限位板	1	1	1	1	1	1
26	**GB/T 6171**	Hexagon nut,style 1-Fine pitch M12×1.5-Zn.D	螺母 M12X1.5-Zn.D	10	10	10	10	10	10
27	**GB/T 899**	Double end stud AM12-M12×1.5×35-8.8-Zn.D	双头螺柱AM12-M12X1.5X35-8.8-Zn.D	10	10	10	10	10	10
28	**LZT300.37.147**	Ⅲ-Ⅳ gear fork	III-IV档拨叉	1	1	1	1	1	1
29	**LZT300.37.150**	Ⅲ-Ⅳ gear fork shaft	III-IV档拨叉轴	1	1	1	1	1	1
30	**GB/T 1153-1986**	Fitting grease nipple 90°M10×1	油杯 90° MX1	2	2	2	2	2	2
31	**LZT300.37.158**	Sleeve for pedal shaft	踏板轴衬套	2	2	2	2	2	2
32	**LZT300.37.159**	Sleeve for separating fork shaft	分离叉轴衬套	2	2	2	2	2	2
33	**LZT300.37.152**	Ⅰ-Ⅱ gear fork handle	I-II档拨头	1	1	1	1	1	1
34	**LZT300.37.149**	Ⅰ-Ⅱ gear shifting fork shaft	I-II档拨叉轴	1	1	1	1	1	1
35	**LZT300.37.148**	Ⅰ-Ⅱ gear fork	I-II档拨叉	1	1	1	1	1	1
36	**GB/T 5782**	Hexagon head bolt M12×160-Zn.D	螺栓 M12X160-Zn.D	3	3	3	3	3	3
37	**GB/T119**	Parallel pin D12×30－Zn.D	圆柱销 D12X30-Zn.D	3	3	3	3	3	3

74

https://truckmanualshub.com/

37变速箱总成（三）

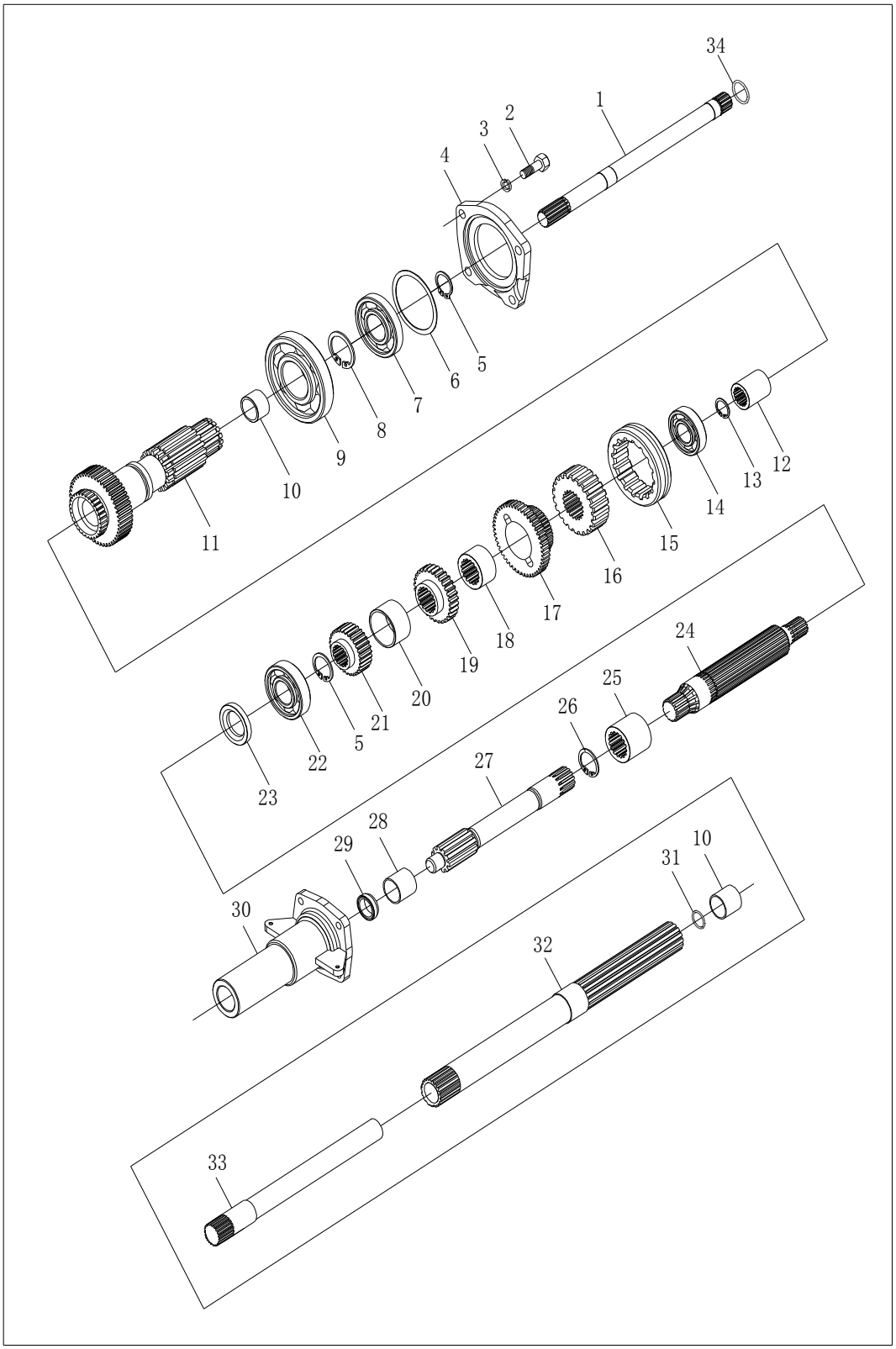

75

37变速箱总成（3）
Gearbox Assembly-3

序号 No.	零部件代号 Drawing No.	Part Name and Standards	零部件名称及规格	适用机型和用量（件） Applied Tractor Models and Qty.(Piece)					
				LZT 300	LZT 304	LZT 350	LZT 354	LZT400 /450/480 /500/520 /550	LZT404 /454/484 /504/524 /554
	LZT300.37.137	Joint shaft ,PTO	动力输出连接轴						
1	**LZT300.37E.137**	Joint shaft ,PTO①	动力输出连接轴①	1	1	1	1	1	1
2	**GB/T 5783**	Hexagon head bolt-Full thread M10×30-Zn.D	螺栓 M10X30-Zn.D	4	4	4	4	4	4
3	**GB/T 93**	Single coil spring lock washer 10 Normal type	弹簧垫圈 10	4	4	4	4	4	4
4	**LZT300.37.139**	Cover of auxiliary gearshift	副变速轴承盖	1	1	1	1	1	1
5	**GB/T 894.1**	Circlip for shaft 40-Type A	轴用弹性挡圈40	2	2	2	2	2	2
6	**LZT300.37.138**	Stop ring	止动环	1	1	1	1	1	1
7	**GB/T 276**	Rolling bearing - Deep grooove ball bearing 6308N	轴承 6308N	1	1	1	1	1	1
8	**GB/T 894.1**	Circlip for shaft 50-Type A	轴用弹性挡圈 50	1	1	1	1	1	1
9	**GB/T 276**	Rolling bearing - Deep grooove ball bearing 6210	轴承 6210	1	1	1	1	1	1
10	**LZT300.37.170**	Sleeve②	衬套②	1	1	1	1	1	1
11	**LZT300.37.169**	Driving gear shaft of auxiliary gearshift	副变速主动齿轮轴	1	1	1	1	1	1
12	**LZT300.37.136**	Joint tube	连接套	1	1	1	1	1	1

76

续表1 Continued One

13	**GB/T 893.1**	Circlip for hole 21-Type A	孔用弹性挡圈 21	1	1	1	1	1	1
14	**GB/T 276**	Rolling bearing - Deep grooove ball bearing 6305③	轴承 6305③	1	1	1	1	1	1
	GB/T 276	Rolling bearing- Deep groove ball bearing 6107④	轴承 6107④	**1**	**1**	**1**	**1**	**1**	**1**
15	**LZT300.37.134**	III-Ⅳ gear engaging sleeve	III-Ⅳ档啮合套	1	1	1	1	1	1
16	**LZT300.37.132**	III-Ⅳ gear engaging tooth holder	III-Ⅳ档啮合齿座	1	1	1	1	1	1
17	**LZT300.37.131**	Driving gear ,III gear	III档主动齿轮	1	1	1	1	1	1
18	**LZT300.37.130**	Gear sleeve ,III gear	III档齿轮衬套	1	1	1	1	1	1
19	**LZT300.37.128**	Driving gear Ⅱgear	II档主动齿轮	1	1	1	1	1	1
20	**LZT300.37.127a**	Space sleeve , Ⅰ - Ⅱ gear③	I-II档齿轮隔套③	1	1	1	1	1	1
	LZT300.37B.127	Space sleeve , Ⅰ - Ⅱ gear④	I-II档齿轮隔套④	1	1	1	1	1	1
21	**LZT300.37.126a**	Driving gear , Ⅰ gear③	I档主动齿轮③	1	1	1	1	1	1
	LZT300.37B.126	Driving gear , Ⅰ gear④	I档主动齿轮④	1	1	1	1	1	1
22	**GB/T 276**	Rolling bearing - Deep grooove ball bearing 6208	轴承 6208	1	1	1	1	1	1
23	**JB 2600**	Skeleton oil sealing PG40×62×10	骨架油封PG40X 62X10	1	1	1	1	1	1
24	**LZT300.37.121**	Ⅰ shaft③	Ⅰ 轴③	1	1	1	1	1	1

77

续表2　Continued Two

25	**LZT800.37.106**	Joint tube ,PTO③	动力输出轴联接套③	1	1	1	1	1	1
26	**GB/T 893.1**	Circlip for hole 28-Type A③	挡圈 28③	1	1	1	1	1	1
27	**LZT300.37E.123a**	Sahft of clutch③	离合器轴③	1	1	1	1		
	LZT400.37E.123	Shaft clutch③	离合器轴③					1	1
28	**LZT800.37.112**	Sleeve ,PTO③	输出轴衬套③	1	1	1	1	1	1
29	**LZT800.37.113**	Oil sealing,PTO③	输出轴油封③	1	1	1	1	1	1
30	**LZT300.37.124a**	Housing of Ⅰshaft③	I轴轴承盖③	1	1	1	1	1	1
	LZT300.37B.124	Housing of Ⅰshaft④	I轴轴承盖④	1	1	1	1	1	1
31	**GB3452.1**	O-seal sring 23.6 ×1.8④	O形密封圈23.6X 1.8④	1	1	1	1	1	1
32	**LZT300.37B.202**	Ⅰshaft④	I 轴④	1	1	1	1	1	1
33	**LZT300.37B.201**	Shaft of auxiliary clutch④	副离合器轴④	1	1	1	1		
	LZT400.37B.201	Shaft of auxiliary clutch④	副离合器轴④					1	1
34	**GB/T 895.2**	Roundwire snap ring for shaft 24 ①	轴用钢丝挡圈24①						

Note: ①Specific for 118 PTO center space housing of rear axle. ②Including 2 pieces used for tractor of dualstage clutch.③Specific for the tractors with single-stage clutch. ④Specific for the tractors with dual-stage clutch,optional.
注：①配118PTO中心距后桥壳体专用②装双作用离合器时，数量为2。③配单作用离合器机型专用，④配双作用离合器机型专用，选装。

78

https://truckmanualshub.com/

37变速箱总成（四）

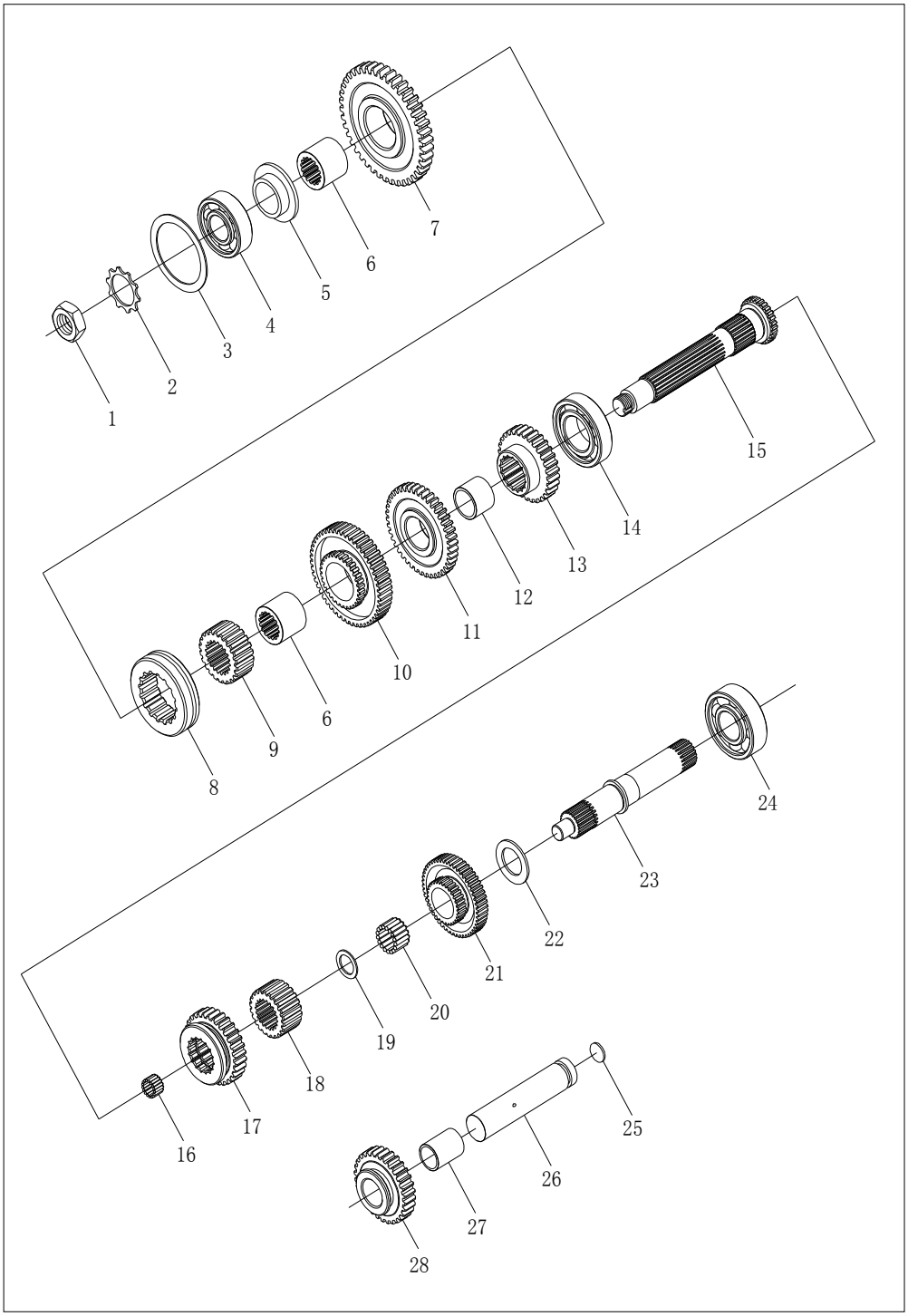

37变速箱总成（4）
Gearbox Assembly-4

79

序号 No.	零部件代号 Drawing No.	Part Name and Standards	零部件名称及规格	适用机型和用量（件） Applied Tractor Models and Qty.(Piece)					
				LZT 300	LZT 304	LZT 350	LZT 354	LZT400 /450/480 /500/520 /550	LZT404 /454/484 /504/524 /554
1	**GB/T 812**	Round nut M24×1.5	螺母 M24X1.5	1	1	1	1	1	1
2	**GB/T 858**	Tab washer for round nut 24	止动垫圈 24	1	1	1	1	1	1
3	**GB/T 305-1989**	Snap ring 68.2/78.6	止动环 68.2/78.6	1	1	1	1	1	1
4	**GB/T 276-1994**	Round bearing - Deep groove ball bearing 6306N	轴承 6306N	1	1	1	1	1	1
5	**LZT300.37.118**	Circlip for Ⅱshaft end	II轴轴端挡圈	1	1	1	1	1	1
6	**LZT300.37.114**	Gear sleeve, Ⅰ-Ⅱgear	I-II档齿轮衬套	2	2	2	2	2	2
7	**LZT300.37.117**	Driven gear, Ⅰgear	Ⅰ档从动齿轮	1	1	1	1	1	1
8	**LZT300.37.115**	Engaging sleeve, Ⅰ-Ⅱgear	Ⅰ-Ⅱ档啮合套	1	1	1	1	1	1
9	**LZT300.37.116**	Engaging tooth holder, Ⅰ-Ⅱgear	Ⅰ-Ⅱ档啮合齿座	1	1	1	1	1	1
10	**LZT300.37.113**	Driven gear, Ⅱgear	II档从动齿轮	1	1	1	1	1	1
11	**LZT300.37.112**	Driven gear,Ⅲgear	III档从动齿轮	1	1	1	1	1	1
12	**LZT300.37.110**	Gear spacer sleeve ,Ⅲ-Ⅳgear	III-IV档齿轮隔套	1	1	1	1	1	1
13	**LZT300.37E.108**	Driven gear,Ⅳgear	IV档从动齿轮	1	1	1	1	1	1

80

续表1 Continued One

14	**GB/T 276-1994**	Rolling bearing - Deep groove ball bearing 6208	轴承 6208	1	1	1	1	1	1
15	**LZT300.37E.109**	Ⅱshaft	II轴	1	1	1	1	1	1
16	**GB/T 5846-1986**	Needle roller bearing K202620	轴承 K202620	1	1	1	1	1	1
17	**LZT300.37.105**	Reverse driven gear	倒档从动齿轮	1	1	1	1	1	1
18	**LZT300.37E.106**	Tooth holder of reverse gear	倒档齿轮啮合齿座	1	1	1	1	1	1
19	**LZT300.37E.111**	Spacer sleeve	隔套	1	1	1	1	1	1
20	**GB/T 5846-1986**	Needle roller bearing KK354334	轴承 KK354334	1	1	1	1	1	1
21	**LZT300.37.103**	Driven gear of auxiliary gearshift	副变速从动齿轮	1	1	1	1	1	1
22	**LZT300.37E.102**	Circlip	挡圈	1	1	1	1	1	1
23	**LZT300.37E.107**	Driven gear of auxiliary gearshift	副变速从动轴	1	1	1	1	1	1
24	**GB/T 276-1994**	Rolling bearing - Deep groove ball bearing 6307	轴承 6307	1	1	1	1	1	1
25	**QC/T 387-1999**	Shim 14	塞片 14	1	1	1	1	1	1
26	**LZT300.37.141**	Central shaft ,reverse	倒档中间轴	1	1	1	1	1	1
27	**LZT300.37.171**	Gear sleeve,reverse	倒档齿轮衬套	1	1	1	1	1	1
28	**LZT300.37.172**	Central gear,reverse	倒档中间齿轮	1	1	1	1	1	1

81

https://truckmanualshub.com/

37变速箱总成（五）（爬行档专用件，选装）

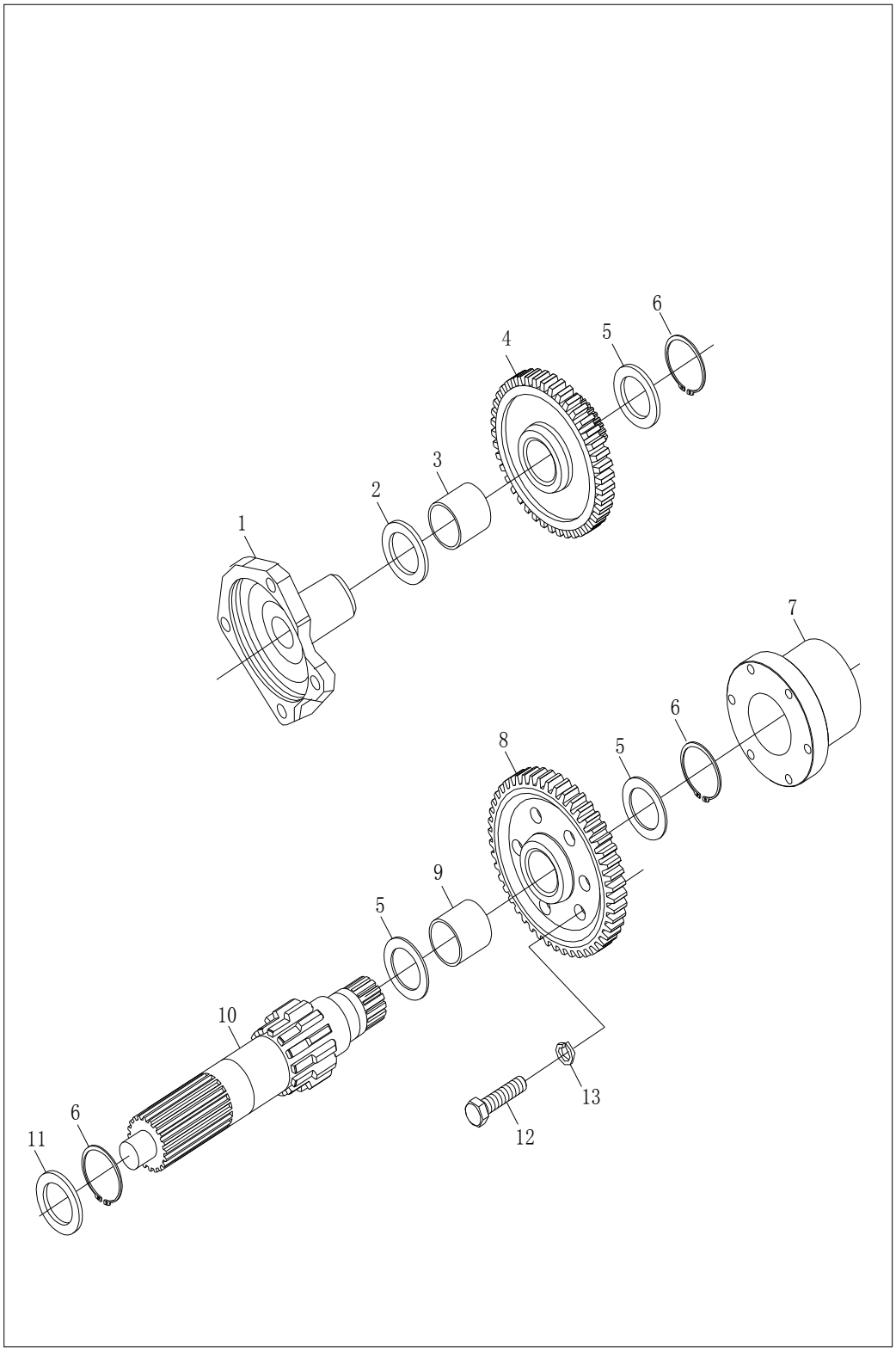

82

https://truckmanualshub.com/

37变速箱总成（5）
Gearbox Assembly(creeper)-5

序号 No.	零部件代号 Drawing No.	Part Name and Standards	零部件名称及规格	适用机型和用量（件） Applied Tractor Models and Qty.(Piece)					
				LZT 300	LZT 304	LZT 350	LZT 354	LZT400 /450/480 /500/520 /550	LZT404 /454/484 /504/524 /554
1	**LZT300.37C.303**	Housing for creep gear	爬行档轴承盖	**1**	1	1	1	1	1
2	**LZT300.37E.102**	Circlip	挡 圈	**1**	1	1	1	1	1
3	**LZT300.37C.306**	Duplex gear sleeve	双联齿轮衬套	**1**	1	1	1	1	1
4	**LZT300.37C.305**	Duplex gear for creep gear	爬行档双联齿轮	1	1	1	1	1	1
5	**LZT300.37C.304**	Circlip for shaft end	轴端挡圈	3	3	3	3	3	3
6	**GB/T 894.1**	Circlip for shaft 35-Type A	轴用弹性挡圈 35	3	3	3	3	3	3
7	**LZT300.37C.308**	Engaging sleeve,creep gear	爬行档啮合套	1	1	1	1	1	1
8	**LZT300.37C.307**	Driven gear,creep gear	爬行档从动齿轮	1	1	1	1	1	1
9	**LZT300.37C.309**	Bush ,driven gear	从动齿轮衬套	1	1	1	1	1	1
10	**LZT300.37C.302**	Gear shaft ,creep gear	爬行档齿轮轴	1	1	1	1	1	1
11	**LZT300.37C.301**	Gag circlip	限位挡圈	1	1	1	1	1	1
12	**GB/T 5783**	Hexagon head bolt-Full thread M8×30-Zn.D	螺栓 M8X30-Zn.D	6	6	6	6	6	6
13	**GB/T 93**	Single coil spring lock washer 8 - Normal type	弹簧垫圈 8	**6**	**6**	**6**	**6**	**6**	**6**

83

https://truckmanualshub.com/

变速箱总成-1(梭式换档机型)

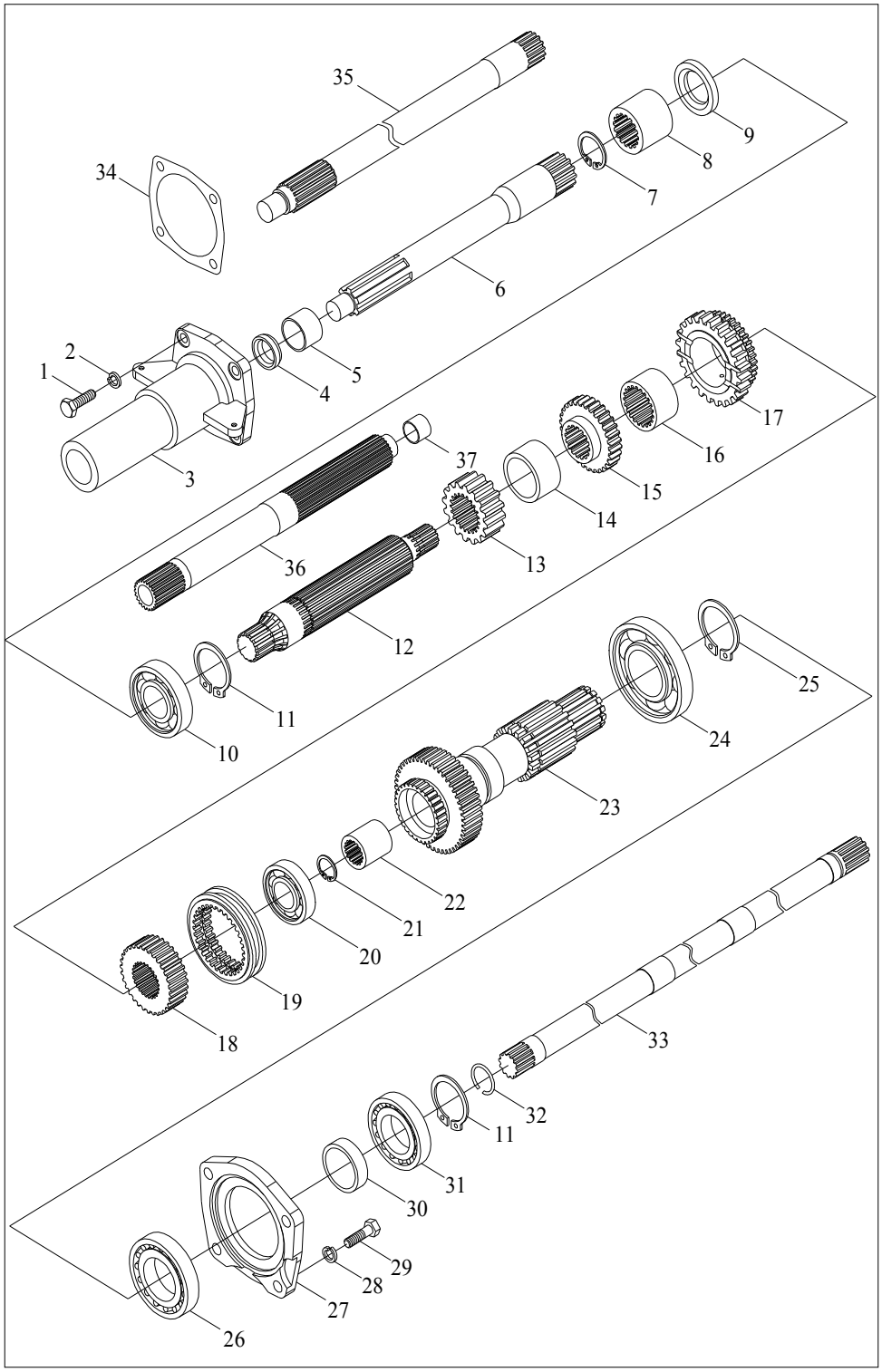

84

https://truckmanualshub.com/

37变速箱总成-1(梭式换档机型)
Gearbox Assembly(shuttle-type gear shift)-1

序号 No.	零部件代号 Drawing No.	Part Name and Standards	零部件名称及规格	适用机型和用量（件） Applied Tractor Models and Qty.(Piece)					
				LZT 300	LZT 304	LZT 350	LZT 354	LZT400 /450/480 /500/520 /550	LZT404 /454/484 /504/524 /554
	LZT300.37J.001	Gearbox assembly	变速箱总成①	1	1	1	1		
	LZT400.37J.001	Gearbox assembly	变速箱总成②					1	1
	LZT300.37K.001	Gearbox assembly	变速箱总成③	1	1	1	1		
	LZT400.37K.001	Gearbox assembly	变速箱总成④					1	1
1	**GB/T 5783**	Bolt M8*25	螺栓M8×25	4	4	4	4	4	4
2	**GB/T 93**	Washer 8	垫圈8	4	4	4	4	4	4
3	LZT300.37.124a	Housing of I shaft	I轴轴承盖①②	1	1	1	1	1	1
	LZT300.37B.124	Housing of I shaft	I轴轴承盖③④	1	1	1	1	1	1
4	LZT300.37.113	Oil sealing,PTO	输入轴油封①②	1	1	1	1	1	1
5	LZT300.37.112	Sleeve ,PTO	输入轴衬套①②	1	1	1	1	1	1
6	LZT300.37.123a	Shaft of clutch	离合器轴①	1	1	1	1		
	LZT400.37.123	Shaft of clutch	离合器轴②					1	1
7	**GB/T 893.1**	Circlip 28	挡圈28①②	1	1	1	1	1	1
8	LZT300.37.106	Jiont tube,PTO	动力输出轴连接套①	1	1	1	1		
	LZT800.37.106	Jiont tube,PTO	动力输出轴连接套②					1	1
9	**JB2600-1980**	Skeleton oil sealing PG40*62*10	骨架油封PG40×62×10	1	1	1	1	1	1
10	**GB/T 276**	Bearing 6208	轴承6208	1	1	1	1	1	1

85

续表1 Continued One

11	**GB/T 894.1**	Circlip 40	挡圈40	**2**	**2**	**2**	**2**	**2**	**2**
12	LZT300.37.121	I shaft	I轴①②	**1**	**1**	**1**	**1**	**1**	**1**
13	LZT300.37.126a	Driving gear,I gear	I档主动齿轮①②	**1**	**1**	**1**	**1**	**1**	**1**
	LZT300.37B.126	Driving gear,I gear	Ⅰ档主动齿轮③④	**1**	**1**	**1**	**1**	**1**	**1**
14	LZT300.37.127a	Spacer sleeve,I-Ⅱ gear	I-Ⅱ档齿轮隔套①②	1	1	1	1	1	1
	LZT300.37B.127	Spacer sleeve,I-Ⅱ gear	Ⅰ-Ⅱ档齿轮隔套③④	1	1	1	1	1	1
15	LZT300.37.128	Driving gear,Ⅱ gear	Ⅱ档主动齿轮	**1**	**1**	**1**	**1**	**1**	**1**
16	LZT300.37.130	Gear sleeve,Ⅲ gear	Ⅲ档齿轮衬套	**1**	**1**	**1**	**1**	**1**	**1**
17	LZT300.37.131	Driving gear,Ⅲ gear	Ⅲ档主动齿轮	**1**	**1**	**1**	**1**	**1**	**1**
18	LZT300.37.132	Ⅲ-Ⅳ gear engaging tooth holder	Ⅲ-Ⅳ档啮合齿座	**1**	**1**	**1**	**1**	**1**	**1**
19	LZT300.37.134	Ⅲ-Ⅳ gear engaging sleeve	Ⅲ-Ⅳ档啮合套	**1**	**1**	**1**	**1**	**1**	**1**
20	**GB/T 276**	Bearing 6305	轴承6305	**1**	**1**	**1**	**1**	**1**	**1**
21	**GB/T 893.1**	Circlip 20	挡圈20	**1**	**1**	**1**	**1**	**1**	**1**
22	LZT300.37.136	Jiont tube	连接套	**1**	**1**	**1**	**1**	**1**	**1**
23	LZT300.37J.169	Driving gear shaft of auxiliary gearshift	副变速主动齿轮轴	**1**	**1**	**1**	**1**	**1**	**1**
24	**GB/T 276**	Bearing 6210	轴承6210	**1**	**1**	**1**	**1**	**1**	**1**
25	**GB/T 894.1**	Circlip 50	挡圈50	**1**	**1**	**1**	**1**	**1**	**1**

续表2　Continued Two

26	**GB/T 283**	NUP308E	NUP308E	**1**	**1**	**1**	**1**	**1**	**1**
27	LZT300.37.139	Cover of auxiliary gearshift	副变速轴承盖	**1**	**1**	**1**	**1**	**1**	**1**
28	**GB/T 93**	Washer 10	垫圈10	**4**	**4**	**4**	**4**	**4**	**4**
29	**GB/T 5783**	Bolt M10*30	螺栓M10×30	**4**	**4**	**4**	**4**	**4**	**4**
30	LZT300.37J.180	Spacer sleeve	隔套	**1**	**1**	**1**	**1**	**1**	**1**
31	**GB/T 283**	NF208E	NF208E	1	1	1	1	1	1
32	**GB/T 895.2**	Roundwire snap ring	钢丝挡圈24	1	1	1	1	1	1
33	LZT300.37J.137	Joint shaft, PTO	动力输出连接轴	1	1	1	1	1	1
34	LZT300.37B.125	Housing gasket of I shaft	Ⅰ轴轴承盖纸垫③④	**1**	**1**	**1**	**1**	**1**	**1**
35	LZT300.37B.201	Shaft of auxiliary clutch	副离合器轴③	**1**	**1**	**1**	**1**		
	LZT400.37B.201	Shaft of auxiliary clutch	副离合器轴④					**1**	**1**
36	LZT300.37B.202	I shaft	I轴③④	**1**	**1**	**1**	**1**	**1**	**1**
37	LZT300.37.170	Sleeve	衬套③④	**1**	**1**	**1**	**1**	**1**	**1**

备注:①单作用梭式换档②单作用梭式换档③双作用梭式换档④双作用梭式换档
①②Specific for shuttle-type gear shift with single-stage clutch. ③④Specific for shuttle-type gear shiftwith dual-stage clutch

87

https://truckmanualshub.com/

变速箱总成-3(梭式换档机型)

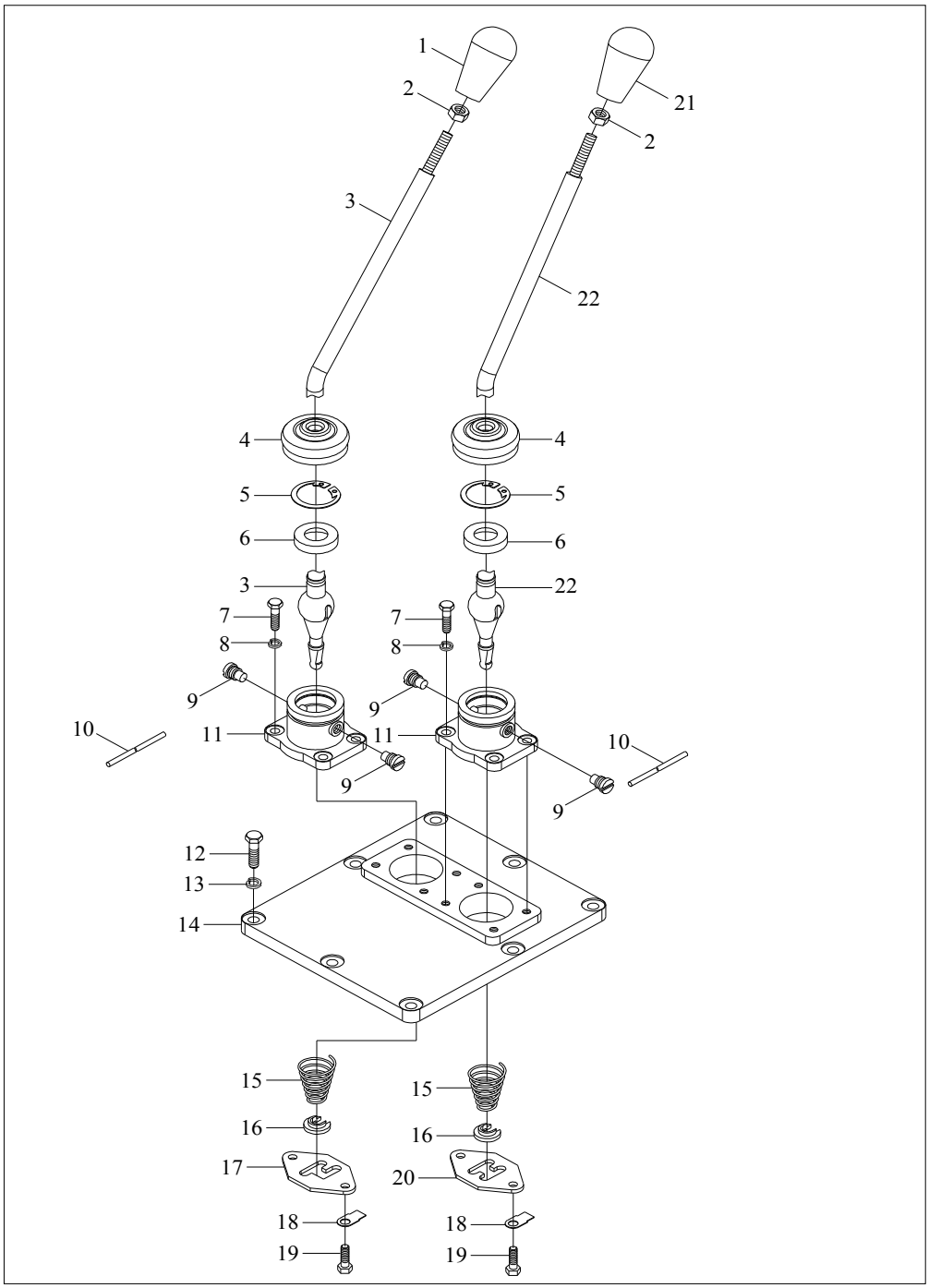

88

变速箱总成-3(梭式换档机型)
Gearbox Assembly(shuttle-type gear shift)-3

序号 No.	零部件代号 Drawing No.	Part Name and Standards	零部件名称及规格	适用机型和用量（件） Applied Tractor Models and Qty.(Piece)					
				LZT 300	LZT 304	LZT 350	LZT 354	LZT400 /450/480 /500/520 /550	LZT404 /454/484 /504/524 /554
	LZT300.37J.001	Gearbox assembly	变速箱总成①	1	1	1	1		
	LZT400.37J.001	Gearbox assembly	变速箱总成②					1	1
	LZT300.37K.001	Gearbox assembly	变速箱总成③	1	1	1	1		
	LZT400.37K.001	Gearbox assembly	变速箱总成④					1	1
1	**LZT300.37J.016**	Gear change handle assembly, auxiliary gearshift	副变速操纵手柄总成	1	1	1	1	1	1
2	**GB/T 6172**	Nut M10-A2L	螺母M10-A2L	2	2	2	2	2	2
3	**LZT300.37.160a**	Gear change handle of auxiliary gearshift	副变速杆	1	1	1	1	1	1
4	**LZT300.37.166a**	Dust cover of gear change handle	变速杆防尘罩	2	2	2	2	2	2
5	GB/T 893.1	Washer 40	挡圈40	2	2	2	2	2	2
6	LZT800A.37.305	Nylon housing	尼龙座	2	2	2	2	2	2
7	**GB/T 5781**	Bolt M8*20-A2L	螺栓M8×20-A2L	8	8	8	8	8	8
8	GB/T 93	Washer 8-AOP	垫圈8-AOP	8	8	8	8	8	8
9	LZT800A.37.326	Shift lever piston pin	变速杆定位销	4	4	4	4	4	4

89

续表1 Continued One

10	**GB/T 3083**	Galvanized wire Zd1.4*250-AOP	镀锌铁丝Zd1.4×250-AOP	**2**	**2**	**2**	**2**	**2**	**2**
11	**LZT300.37.180**	Gear shift lever housing	变速杆支座	**2**	**2**	**2**	**2**	**2**	**2**
12	**GB/T 5783**	Bolt M10*30	螺栓M10×30	8	8	8	8	8	8
13	GB/T 93	Washer 10-AOP	垫圈10-AOP	**8**	**8**	**8**	**8**	**8**	**8**
14	**LZT300.37.163a**	Upper housing, gearbox	变速箱上盖	**1**	**1**	**1**	**1**	**1**	**1**
15	**LZT300.37.165**	Spring of gear change handle	变速杆弹簧	**2**	**2**	**2**	**2**	**2**	**2**
16	**LZT300.37.164**	Spring snap ring of gear change handle	变速杆弹簧挡圈	**2**	**2**	**2**	**2**	**2**	**2**
17	**LZT300.37.161**	Auxiliary gearshift runner	副变速导板	**1**	**1**	**1**	**1**	**1**	**1**
18	GB/T 854	Washer 8	垫圈8	**4**	**4**	**4**	**4**	**4**	**4**
19	**GB/T 5783**	Bolt M8*16-A2L	螺栓M8×16-A2L	**4**	**4**	**4**	**4**	**4**	**4**
20	**LZT300.37.162**	Main gearshift runner	主变速导板	**1**	**1**	**1**	**1**	**1**	**1**
21	**LZT300.37.015**	Gear change handle assembly, main gearshift	主变速操纵手柄总成	**1**	**1**	**1**	**1**	**1**	**1**
22	**LZT300.37.167a**	Gear change handle, main gearshift	主变速杆	**1**	**1**	**1**	**1**	**1**	**1**

备注:①单作用梭式换档②单作用梭式换档③双作用梭式换档④双作用梭式换档
①②Specific for shuttle-type gear shift with single-stage clutch. ③④Specific for shuttle-type gear shift with dual-stage clutch

90

https://truckmanualshub.com/

变速箱总成-4(梭式换档机型)

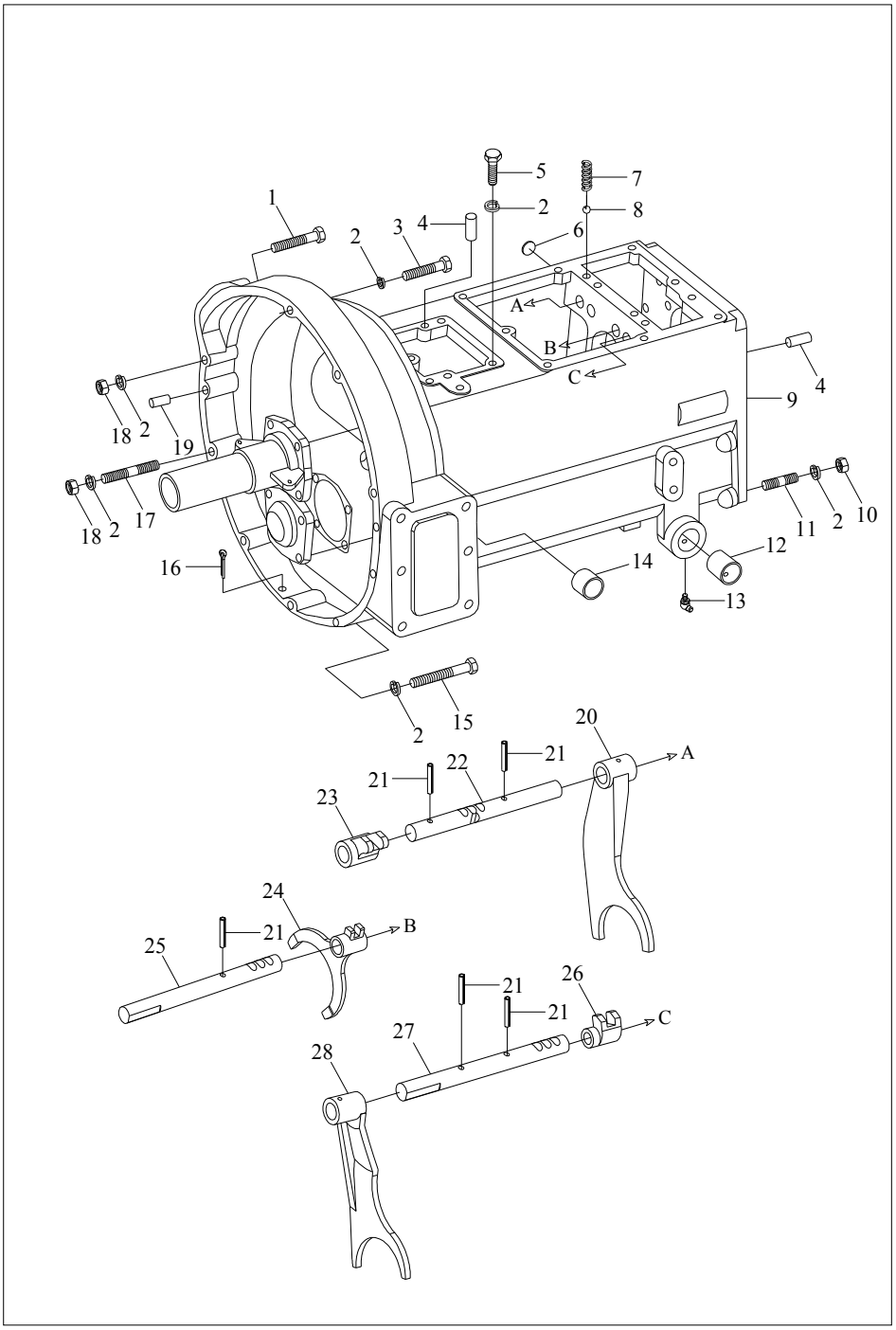

91

变速箱总成-4(梭式换档机型)
Gearbox Assembly(shuttle-type gear shift)-4

序号 No.	零部件代号 Drawing No.	Part Name and Standards	零部件名称及规格	适用机型和用量（件） Applied Tractor Models and Qty.(Piece)					
				LZT 300	LZT 304	LZT 350	LZT 354	LZT400 /450/480 /500/520 /550	LZT404 /454/484 /504/524 /554
	LZT300.37J.001	Gearbox assembly	变速箱总成①	1	1	1	1		
	LZT400.37J.001	Gearbox assembly	变速箱总成②					1	1
	LZT300.37K.001	Gearbox assembly	变速箱总成③	1	1	1	1		
	LZT400.37K.001	Gearbox assembly	变速箱总成④					1	1
1	**GB/T 5782**	Bolt M12*100-Zn.D	螺栓M12×100-Zn.D	3	3	3	3	3	3
2	**GB/T 93**	Washer 12-Zn.D	垫圈12-Zn.D	24	24	24	24	24	24
3	**GB/T 5782**	Bolt M12*70-Zn.D	螺栓M12×70-Zn.D	2	2	2	2	2	2
4	**GB/T 119**	Pin D12*30	销D12×30	5	5	5	5	5	5
5	**GB/T 5783**	Bolt M12*35-Zn.D	螺栓M12×35-Zn.D	4	4	4	4	4	4
6	**QC/T 387**	Shim	塞片	1	1	1	1	1	1
7	**LZT300.37.135**	Locating spring of fork shaft	拨叉轴定位弹簧	3	3	3	3	3	3
8	**GB/T 308**	Steel ball 8.0000G100b	钢球8.0000G100b	3	3	3	3	3	3
9	**LZT300.37.101b**	Gearbox housing	变速箱壳体	1	1	1	1	1	1
10	**GB/T 6171**	Nut M12*1.5-Zn.D	螺母M12×1.5-Zn.D	10	10	10	10	10	10
11	**GB/T 899**	Stud AM12-M12×1.5×35-8.8	螺柱AM12-M12×1.5×35-8.8	10	10	10	10	10	10
12	**LZT300.37.158**	Sleeve for pedal shaft	踏板轴衬套	2	2	2	2	2	2
13	**GB/T 1153**	Fitting grease nipple90° M10×1	油杯90° M10×1	2	2	2	2	2	2

92

续表1 Continued One

14	**LZT300.37.159**	Sleeve for separating fork shaft	分离叉轴衬套	**2**	**2**	**2**	**2**	**2**	**2**
15	**GB/T 5782**	Bolt M12*160-Zn.D	螺栓M12×160-Zn.D	**3**	**3**	**3**	**3**	**3**	**3**
16	**GB/T 91**	Split pin 6.3*30-Zn.D	开口销6.3×30-Zn.D	**1**	**1**	**1**	**1**	**1**	**1**
17	**GB/T 899**	Stud AM12-M12×110-8.8-A1L	螺柱AM12-M12×110-8.8-A1L	**2**	**2**	**2**	**2**	**2**	**2**
18	**GB/T 6170**	Nut M12-Zn.D	螺母M12-Zn.D	**5**	**5**	**5**	**5**	**5**	**5**
19	**GB/T 119**	Pin D12*22	销D12×22	**1**	**1**	**1**	**1**	**1**	**1**
20	**LZT300.37.145**	Auxiliary gearshift fork	副变速拨叉	**1**	**1**	**1**	**1**	**1**	**1**
21	**GB/T 879**	Pin 5*25	销5×25	**5**	**5**	**5**	**5**	**5**	**5**
22	**LZT300.37.156**	Shift of auxiliary gearshift fork	副变速拨叉轴	**1**	**1**	**1**	**1**	**1**	**1**
23	**LZT300.37.154**	Auxiliary gearshift fork	副变速拨头	**1**	**1**	**1**	**1**	**1**	**1**
24	**LZT300.37.147**	III-Ⅳ gear fork	III-Ⅳ档拨叉	**1**	**1**	**1**	**1**	**1**	**1**
25	**LZT300.37.150**	III-Ⅳgear shifting fork shaft	III-Ⅳ档拨叉轴	**1**	**1**	**1**	**1**	**1**	**1**
26	**LZT300.37.152**	Ⅰ-Ⅱgear fork handle	Ⅰ-Ⅱ档拨头	**1**	**1**	**1**	**1**	**1**	**1**
27	**LZT300.37.149**	Ⅰ-Ⅱgear shifting fork shaft	Ⅰ-Ⅱ档拨叉轴	**1**	**1**	**1**	**1**	**1**	**1**
28	**LZT300.37.148**	Ⅰ-Ⅱgear fork	Ⅰ-Ⅱ档拨叉	**1**	**1**	**1**	**1**	**1**	**1**
备注:①单作用梭式换档②单作用梭式换档③双作用梭式换档④双作用梭式换档 ①②Specific for shuttle-type gear shift with single-stage clutch. ③④Specific for shuttle-type gear shiftwith dual-stage clutch									

93

https://truckmanualshub.com/

38后桥总成（一）

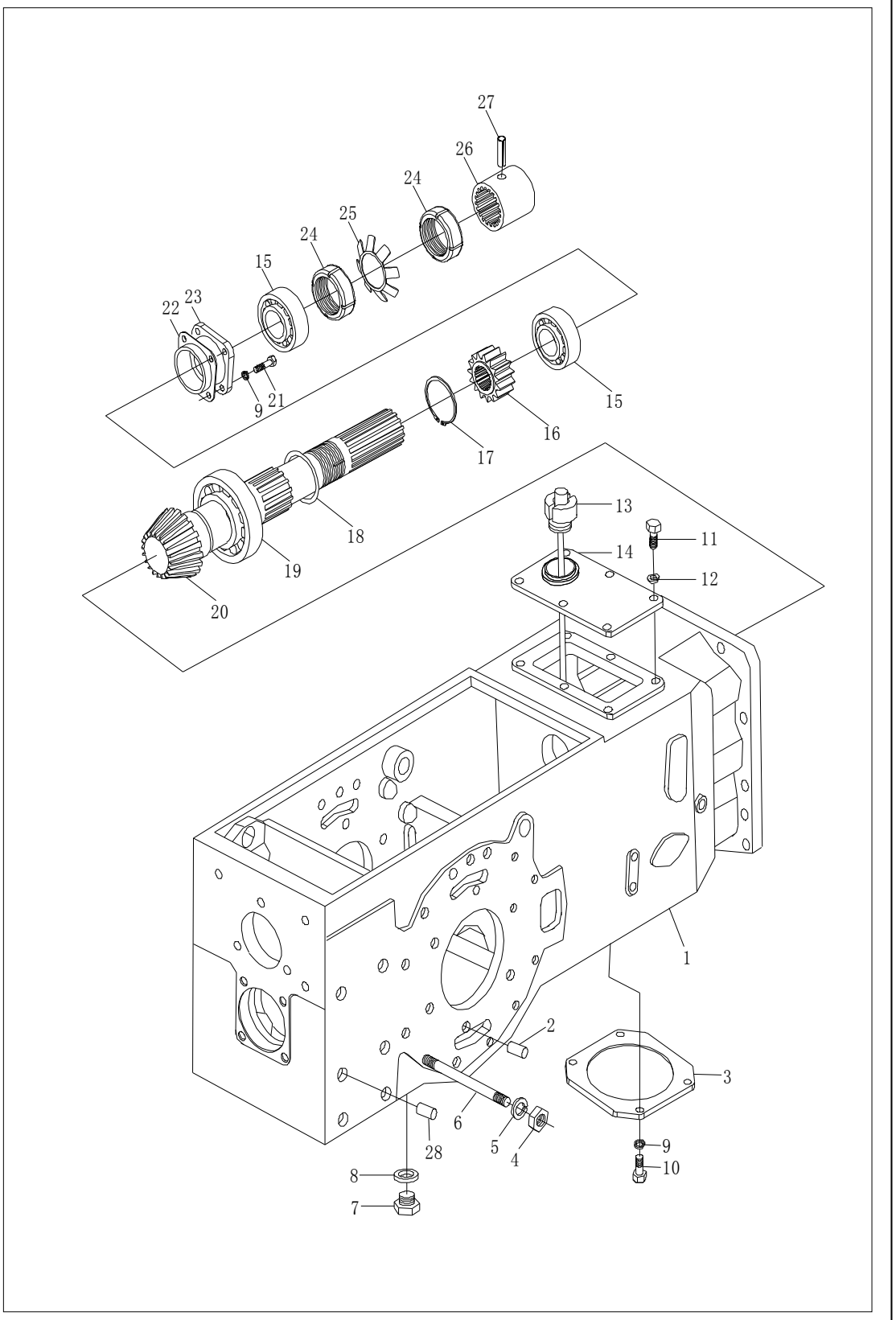

94

38后桥总成（1）
Rear Axle Assembly-1

序号 No.	零部件代号 Drawing No.	Part Name and Standards	零部件名称及规格	适用机型和用量（件） Applied Tractor Models and Qty.(Piece)					
				LZT 300	LZT 304	LZT 350	LZT 354	LZT400 /450/480 /500/520 /550	LZT404 /454/484 /504/524 /554
1	**LZT300.38.101**	Housing of rear axle	后桥壳体	1	1	1	1	1	1
	LZT300.38B.101	Housing of rear axle①☆	后桥壳体①	1	1	1	1	1	1
	LZT300.38E.101	Housing of rear axle★		1	1	1	1	1	1
	LZT300.38F.101	Housing of rear axle①★		1	1	1	1	1	1
2		Parallel pin D12X28-Zn.D	圆柱销 D12X28-Zn.D	2	2	2	2	2	2
3	**LZT300.38.175**	Lower cover	下盖	1		1		1	
4	**GB/T6171**	Hexagon nut ,style 1,with fine pitch thread M12X1.25-Zn.D	螺母 M12X1.25-Zn.D	24	24	24	24	24	24
5	**GB/T93**	Single coil spring lock washer 12-Normal type	弹簧垫圈 12	24	24	24	24	24	24
6	**GB/T899**	Double end stud AM12-M12X1.25X150-8.8-Zn.D	双头螺柱 AM12-M12X1.25X150-8.8-Zn.D	24	24	24	24	24	24
7	**LZT65.38.026**	Oil outlet plug	放油螺塞	1	1	1	1	1	1
8	**JB/T982**	Unit seal washer 30	组合垫圈 30	1	1	1	1	1	1
9	**GB/T93**	Single coil spring lock washer 10-Normal type	弹簧垫圈 10	8	4	8	4	8	4
10	**GB/T5783**	Hexagon head bolt-Full thread M10*25-Zn.D	全螺纹螺栓M10 X25	4		4		4	
11	**GB/T5783**	Hexagon head bolt-Full thread M8*20-Zn.D	全螺纹螺栓M10 X25	6	6	6	6	6	6

95

续表1 Continued One

12	**GB/T93**	Single coil spring lock washer 8-Normal type	弹簧垫圈 8	6	6	6	6	6	6
13	**LZT300.38.016a**	Air plug assembly for oil input	加油通气塞总成	1	1	1	1	1	1
14	**LZT300.38.124a**	Upper cover	上盖	1	1	1	1	1	1
15	**GB/T297**	Tapered roller bearing 32208	圆锥滚子轴承32208	2	2	2	2	2	2
16	**LZT304.38.116**	Front drive output gear	前驱动输出齿轮		1		1		
	LZT404.38.116	Front drive output gear	前驱动输出齿轮						1
17	**GB/T894.1**	Circlip for shaft 48-Type A	轴用弹性档圈48		1		1		1
18	**GB/T894.1**	Circlip for shaft 50-Type A	轴用弹性档圈50	1	1	1	1	1	1
19	**GB/T283**	Cylindrical roller bearing NUP2201	圆柱滚子轴承NUP2201	1	1	1	1	1	1
20	**LZT300.38.115**	Small bevel gear shaft	小圆锥齿轮轴	1		1		1	
	LZT304.38.115	Small bevel gear shaft	小圆锥齿轮轴		1		1		1
21	**GB/T5783**	Hexagon head bolt-Full thread M10*30-Zn.D	全螺纹螺栓M10X30-ZnD	4	4	4	4	4	4
22	**LZT300.38.118**	Adjusting shim,bevel gear shaft	锥齿轮轴调整垫片	○	○	○	○	○	○
	LZT300.38.119	Adjusting shim,bevel gear shaft	锥齿轮轴调整垫片	○	○	○	○	○	○
	LZT300.38.120	Adjusting shim,bevel gear shaft	锥齿轮轴调整垫片	○	○	○	○	○	○
23	**FT300.38.117**	Housing of bearing	轴承座	1	1	1	1	1	1
24	**GB/T812**	Round nut M39*1.5	圆螺母 M39X1.5	2	2	2	2	2	2
25	**GB/T858**	Tab washer for round nut 39	止动垫圈39	1	1	1	1	1	1
26	**LZT300.38.122**	Internal gear sleeve	啮合套	1	1	1	1	1	1
27	**GB/T879**	Spring -type straight pin 6*50	弹性圆柱销6X5	1	1	1	1	1	1
28	**GB/T119**	Parallel pin D16*30-Zn.D	圆柱销 D16X30-Zn.D	4	4	4	4	4	4
Note:①Only for creep gear ,optional.☆Used for 107PTO center space housing of rear axle,★Used for118PTO center space housing of rear axle.○Depending on requirement									

96

https://truckmanualshub.com/

38后桥总成(二)

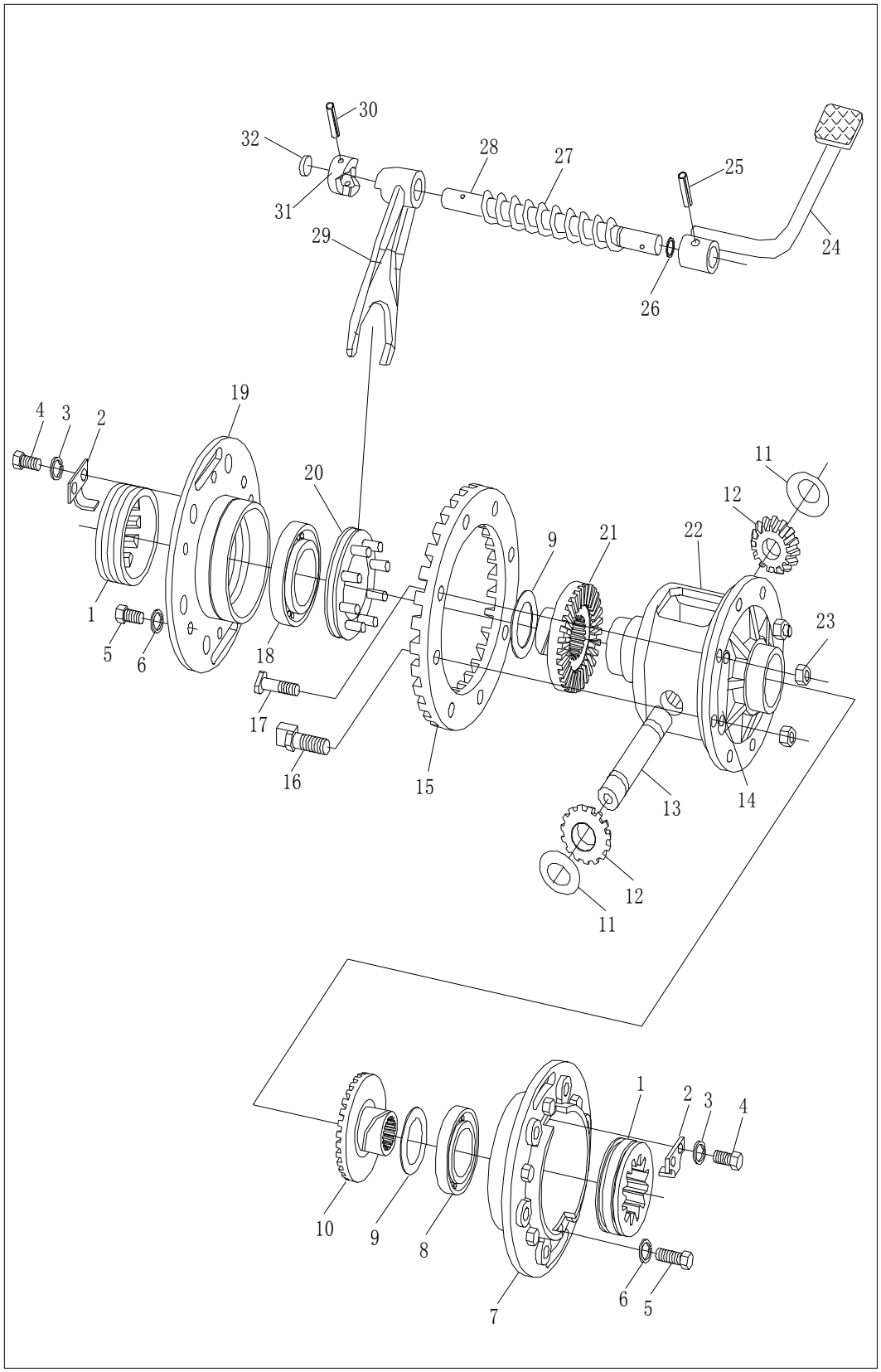

97

后桥总成（2）
Rear Axle Assembly-2

序号 No.	零部件代号 Drawing No.	Part Name and Standards	零部件名称及规格	适用机型和用量（件） Applied Tractor Models and Qty.(Piece)					
				LZT 300	LZT 304	LZT 350	LZT 354	LZT400 /450/480 /500/520 /550	LZT404 /454/484 /504/524 /554
1	**LZT300.38.151**	Adjusting nut	调整螺母	2	2	2	2	2	2
2	**LZT300.38.161**	Washer	垫片	2	2	2	2	2	2
3	**GB/T93**	Single coil spring lock washer 8-normal type	弹簧垫圈8	4	4	4	4	4	4
4	**GB/T5781**	Hexagon head bolt - full thread-product grade C M8*12-Zn.D	螺栓M8×12	4	4	4	4	4	4
5	**GB/T 5783**	Hexagon head bolt - full thread M10*25-Zn.D	螺栓 M10X25-Zn.D	12	12	12	12	12	12
6	**GB/T 93**	Single coil spring lock washer 10-normal type	弹簧垫圈 10	12	12	12	12	12	12
7	**LZT300.38.177**	Housing for right differential	右差速器轴承座	1	1	1	1	1	1
8	**GB/T 297-1994**	Rolling bearing - tapered roller bearing 32013	轴承32013	1	1	1	1	1	1
9	**LZT300.38.147**	Washer for half axle gear	半轴齿轮垫片	2	2	2	2	2	2
10	**LZT300.38.144**	Half axle gear, right	右半轴齿轮	1	1	1	1	1	1
11	**LZT300.38.148**	Washer for half planetary gear	行星齿轮垫片	2	2	2	2	2	2
12	**LZT300.38.145**	Planetary gear	行星齿轮	2	2	2	2	2	2
13	**LZT300.38.146**	Planetary gear shaft	行星齿轮轴	1	1	1	1	1	1
14	**LZT300.38.152**	Lock washer	锁紧垫片	4	4	4	4	4	4

98

续表1 Continued One

15	**LZT300.38.141**	Large conical gear	大圆锥齿轮	1	1	1	1	1	1
16	**LZT300.38.150**	Thrust bolt for planetary gear shaft	行星齿轮轴止推螺栓	2	2	2	2	2	2
17	**LZT300.38.149**	Retainer bolt for large concal gear	大锥齿轮固定螺栓	6	6	6	6	6	6
18	**GB/T 297-1994**	Rolling bearing - tapered roller bearing 30211	轴承 30211	1	1	1	1	1	1
19	**LZT300.38.142**	Housing for left differential	左差速器轴承座	1	1	1	1	1	1
20	**LZT300.38.019**	Differential locl assembly	差速锁总成	1	1	1	1	1	1
21	**LZT300.38.143**	Half axle gear, left	左半轴齿轮	1	1	1	1	1	1
22	**LZT300.38.140**	Differential case	差速器壳体	1	1	1	1	1	1
23	**GB/T 6170**	Hexagon nut,style 1 M12-Zn.D	螺母 M12-Zn.D	8	8	8	8	8	8
24	**LZT300.38.015**	Pedal weldment of differential lock	差速锁踏板焊合件	1	1	1	1	1	1
25	**GB/T 879-1986**	Spring -Type straight pin-Slotted 6*35	弹性圆柱销 6X30	1	1	1	1	1	1
26	**GB 3452.1**	O-seal ring 15*2.65	O形密封圈 15X2.65	1	1	1	1	1	1
27	**LZT300.38.160**	Return spring fo differential lock	差速锁回位弹簧	1	1	1	1	1	1
28	**LZT300.35.158a**	Fork shaft of differential lock	差速锁拨叉轴	1	1	1	1	1	1
29	**LZT300.38.159a**	Fork of differential	差速器拨叉	1	1	1	1	1	1
30	**GB/T 879-1986**	Spring-type straight pin -Slotted6*38	弹性圆柱销 6X38	1	1	1	1	1	1
31	**LZT300.38.190**	Shifting briquet of differential lock	差速锁拨块	1	1	1	1	1	1
32	**QC/T388-1999**	Bowl shim 20	碗形塞片	1	1	1	1	1	1

99

https://truckmanualshub.com/

38 后桥总成（三）（爬行档专用件，选装）

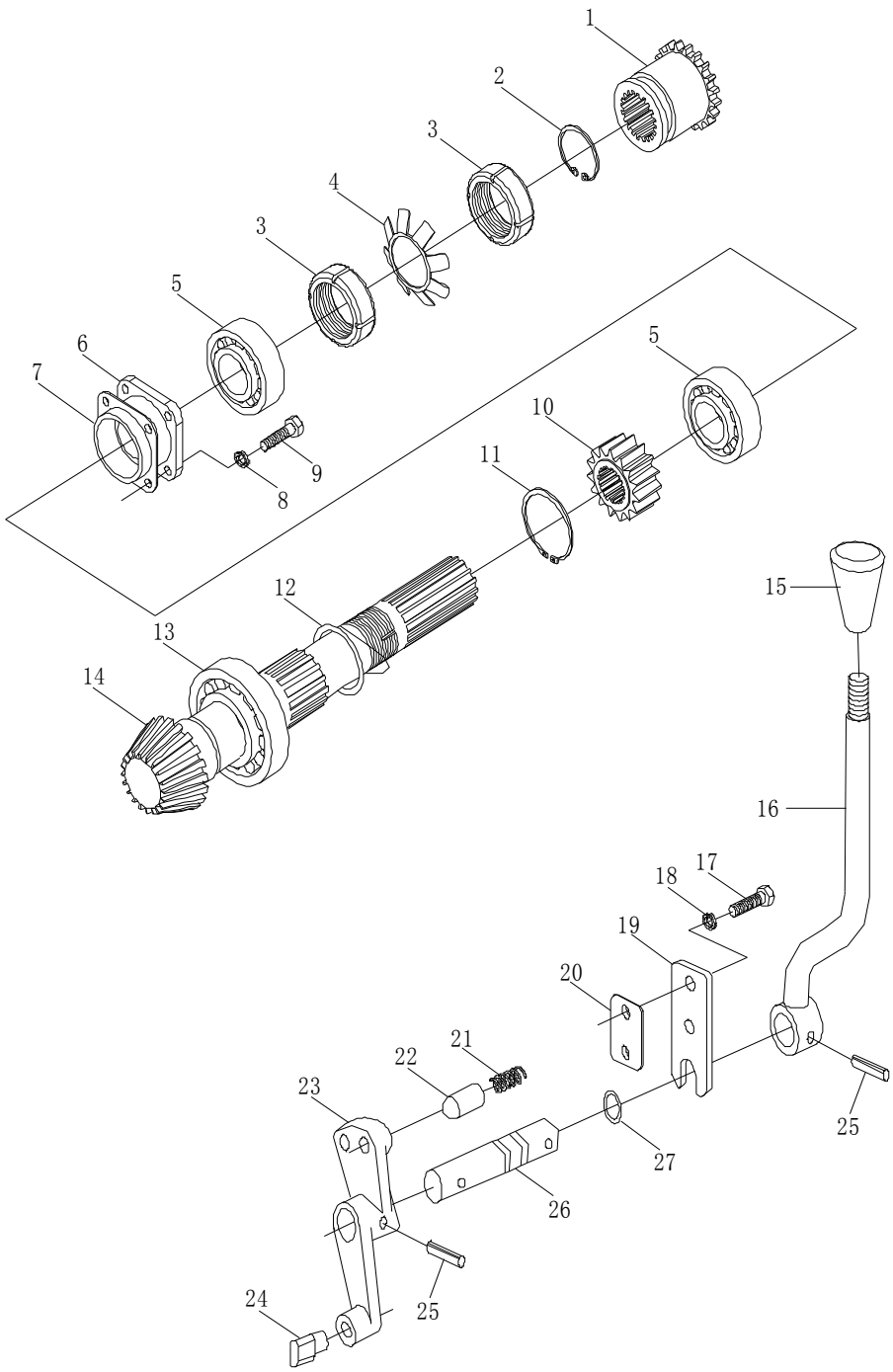

100

38后桥总成（3）
Rear Axle Assembly-3①

序号 No.	零部件代号 Drawing No.	Part Name and Standards	零部件名称及规格	适用机型和用量（件） Applied Tractor Models and Qty.(Piece)					
				LZT 300	LZT 304	LZT 350	LZT 354	LZT400 /450/480 /500/520 /550	LZT404 /454/484 /504/524 /554
1	**LZT300.38B.122**	Engaging sleeve	啮合套	1	1	1	1	1	1
2	**GB/T 894.1**	Circlip for shaft 35-Type A	轴用弹性挡圈 35	1	1	1	1	1	1
3	**GB/T 812**	Round nut M39*1.5	圆螺母 M39X1.5	2	2	2	2	2	2
4	**GB/T 858**	Tab washer for round nut 39	止动垫圈 39	1	1	1	1	1	1
5	**GB/T 297**	Rolling bearing - tapered roller bearing 32208	轴承32208	2	2	2	2	2	2
6	**LZT300.38.117**	Housing of bearing	轴承座	1	1	1	1	1	1
7	**LZT 300.38.118**	Adjusting shim, conical gear shaft	锥齿轮轴调整垫片	○	○	○	○	○	○
	LZT300.38.119	Adjusting shim, conical gear shaft	锥齿轮轴调整垫片	○	○	○	○	○	○
	LZT 300.38.120	Adjusting shim, conical gear shaft	锥齿轮轴调整垫片	○	○	○	○	○	○
8	**GB/T 93**	Single coil spring lock washer 10-normal type	弹簧垫圈 10	4	4	4	4	4	4
9	**GB/T 5783**	Hexagon head bolt - full thread M10*30-Zn.D	螺栓 M10X30-Zn.D	4	4	4	4	4	4
10	**LZT 304.38.116**	Output gear, front driving	前驱动输出齿轮		1		1		
	LZT 404.38.116	Output gear, front driving	前驱动输出齿轮						1
11	**GB/T 894.1**	Circlip for shaft 48-type A	轴用弹性挡圈 48		1		1		1
12	**GB/T 894.1**	Circlip for shaft 50-type A	轴用弹性挡圈50	1	1	1	1	1	1

101

续表1 Continued One

13	**GB/T 283**	Rolling bearing - cylindrical roller bearing NUP2210	轴承 NUP2210	1	1	1	1	1	1
14	**LZT 300.38B.115**	Small conical gear	小圆锥齿轮	1		1		1	
	LZT 304.38B.115	Small conical gear	小圆锥齿轮		1		1		1
15	**LZT300.38B.018**	Control lever assembly, creep gear	爬行档操纵杆焊合件	1	1	1	1	1	1
16	**LZT 300.38B.017**	Control rod weldment, creep gear	爬行档操纵手柄总成	1	1	1	1	1	1
17	**GB/T 5783**	Hexagon head bolt - full thread M8*20-Zn.D	全螺纹螺栓M8X20-ZnD	2	2	2	2	2	2
18	**GB/T 93**	Single coil spring lock washer 8-normal type	弹性垫圈8	2	2	2	2	2	2
19	**LZT 300.38B.137**	Locating plate	定位板	1	1	1	1	1	1
20	**LZT 300.38B.135**	Locating plate pin	定位板衬垫	1	1	1	1	1	1
21	**LZT300.37.135**	Locating spring for gear fork shaft	拨叉轴定位弹簧	1	1	1	1	1	1
22	**LZT 300.38B.136**	Locating pin	定位销	1	1	1	1	1	1
23	**LZT 300.38B.138**	Gear fork, creep gear	爬行档拨叉	1	1	1	1	1	1
24	**LZT 300.38B.139**	Gear fork end, creep gear	爬行档拨叉头	1	1	1	1	1	1
25	**GB/T 879**	Spring-type straight pin 6*30	弹性圆柱销6X30	2	2	2	2	2	2
26	**LZT 300.38B.107**	Gear fork shaft, creep gear	爬行档拨叉轴	1	1	1	1	1	1
27	**GB 3452.1**	O-seal ring 15*2.65	O形密封圈15X2.65	1	1	1	1	1	1

Note:①Specific for creep ,optional.〇Defending on requirement.
注：①为爬行档选装件

102

https://truckmanualshub.com/

后桥总成-1(梭式换档机型)

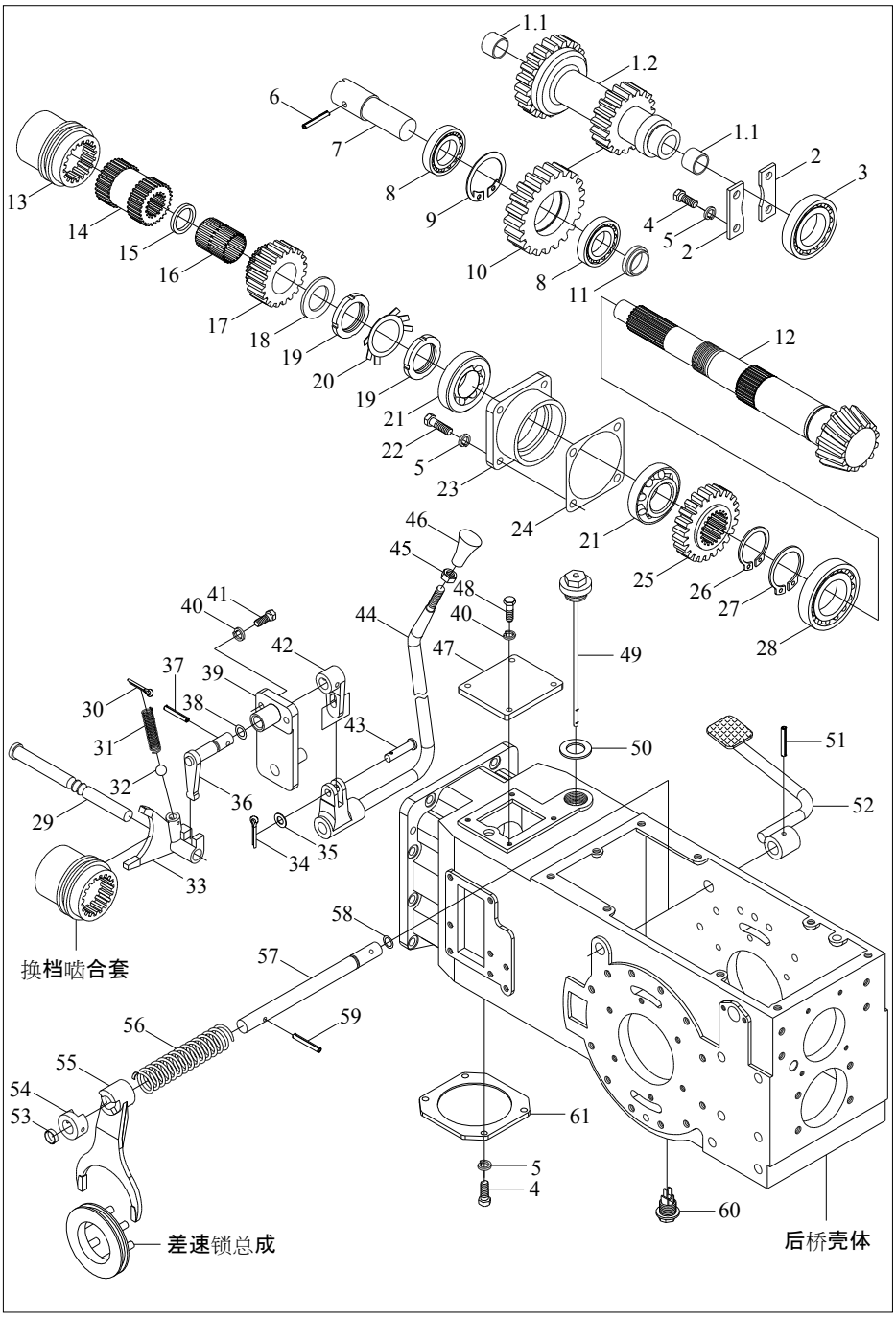

103

后桥总成-1(梭式换档机型) Rear Axle Assembly-1

序号 No.	零部件代号 Drawing No.	Part Name and Standards	零部件名称及规格	适用机型和用量（件） Applied Tractor Models and Qty.(Piece)					
				LZT 300	LZT 304	LZT 350	LZT 354	LZT400 /450/480 /500/520 /550	LZT404 /454/484 /504/524 /554
	LZT404.38J.001	Rear axle assembly	后桥总成①						**1**
	LZT300.38J.001	Rear axle assembly	后桥总成②	**1**		**1**		**1**	
	LZT304.38J.001	Rear axle assembly	后桥总成③		**1**		**1**		
1	**LZT300.38J.020**	Central gear shaft assembly, reverse	倒档中间齿轮轴合件	**1**	**1**	**1**	**1**	**1**	**1**
1.1	**LZT300.37.170**	Sleeve	衬套	**2**	**2**	**2**	**2**	**2**	**2**
1.2	**LZT300.38J.212**	Central gear shaft, reverse	倒档中间齿轮轴	**1**	**1**	**1**	**1**	**1**	**1**
2	**LZT300.38J.204**	Bearing squeeze head	轴承压板	**2**	**2**	**2**	**2**	**2**	**2**
3	**GB/T 283-1994**	Bearing NJ208E	轴承NJ208E	**1**	**1**	**1**	**1**	**1**	**1**
4	**GB/T 5783**	Bolt M8*25-8.8-Zn.D	螺栓M10×25-8.8-Zn.D①						**4**
	GB/T 5783	Bolt M8*25-8.8-Zn.D	螺栓M10×25-8.8-Zn.D②	**8**		**8**		**8**	
	GB/T 5783	Bolt M8*25-8.8-Zn.D	螺栓M10×25-8.8-Zn.D③		**4**		**4**		
5	**GB/T 93**	Washer10	垫圈10①						**8**
	GB/T 93	Washer10	垫圈10②	**12**		**12**		**12**	
	GB/T 93	Washer10	垫圈10③		**8**		**8**		
6	**GB/T 879-1986**	Pin8*30	销8×30	**1**	**1**	**1**	**1**	**1**	**1**
7	**LZT300.38J.207**	Reverse idler gear shaft	倒档惰轮轴	**1**	**1**	**1**	**1**	**1**	**1**

104

续表1 Continued One

8	**GB/T 283-1994**	Bearing NJ206E	轴承NJ206E	**2**	**2**	**2**	**2**	**2**	**2**
9	**GB/T 893.1**	Circlip 62	挡圈62	**1**	**1**	**1**	**1**	**1**	**1**
10	**LZT300.38J.205**	Reverse idler gear	倒档惰轮	**1**	**1**	**1**	**1**	**1**	**1**
11	**LZT300.38J.208**	Reverse idler gear shaft space sleeve	倒档惰轮轴隔套	**1**	**1**	**1**	**1**	**1**	**1**
12	**LZT300.38J.115**	Small bevel gear shaft	小圆锥齿轮轴	**1**	**1**	**1**	**1**	**1**	**1**
13	**LZT300.38J.123**	Internal gear sleeve	啮合套	**1**	**1**	**1**	**1**	**1**	**1**
14	**LZT300.38J.122**	Internal gear housing	啮合座	**1**	**1**	**1**	**1**	**1**	**1**
15	**LZT300.37.111**	Space sleeve	隔套	**1**	**1**	**1**	**1**	**1**	**1**
16	**GB/T 5846-1986**	Bearing KK354334	轴承KK354334	**1**	**1**	**1**	**1**	**1**	**1**
17	**LZT300.38J.201**	Reverse passive gear	倒档被动齿轮	**1**	**1**	**1**	**1**	**1**	**1**
18	**LZT300.38J.202**	Adjusting shim	调整垫圈	**1**	**1**	**1**	**1**	**1**	**1**
19	**GB/T 812**	Nut M39*1.5	螺母M39×1.5	**2**	**2**	**2**	**2**	**2**	**2**
20	**GB/T 858**	Washer 39	垫圈39	**1**	**1**	**1**	**1**	**1**	**1**
21	**GB/T 297-1994**	Bearing 32208	轴承32208	**2**	**2**	**2**	**2**	**2**	**2**
22	**GB/T 5783**	Bolt M10*30-8.8-Zn.D	螺栓M10×30-8.8-Zn.D	**4**	**4**	**4**	**4**	**4**	**4**
23	**LZT300.38.117**	Housing of bearing	轴承座	**1**	**1**	**1**	**1**	**1**	**1**
24	**LZT300.38.118**	Adjusting shim, conical gear shaft	锥齿轮轴调整垫片	**按需**	**按需**	**按需**	**按需**	**按需**	**按需**
	LZT300.38.119	Adjusting shim, conical gear shaft	锥齿轮轴调整垫片	**按需**	**按需**	**按需**	**按需**	**按需**	**按需**
	LZT300.38.120	Adjusting shim, conical gear shaft	锥齿轮轴调整垫片	**按需**	**按需**	**按需**	**按需**	**按需**	**按需**

105

续表2 Continued Two

25	**LZT404.38G.116**	Front drive output gear	前驱动输出齿轮①						**1**
	LZT304.38.116	Front drive output gear	前驱动输出齿轮③		**1**		**1**		
26	**GB/T 894.1**	Circlip48	挡圈48①						**1**
	GB/T 894.1	Circlip48	挡圈48③		**1**		**1**		
27	**GB/T 894.1**	Circlip50	挡圈50	**1**	**1**	**1**	**1**	**1**	**1**
28	**GB/T 283-1994**	Bearing NUP2210E	轴承NUP2210E	**1**	**1**	**1**	**1**	**1**	**1**
29	**LZT300.38J.203**	Fork shaft of reverse gear shaft	倒档拨叉轴	**1**	**1**	**1**	**1**	**1**	**1**
30	**GB/T 91**	Pin 4*32-Zn.D	销4×32-Zn.D	**1**	**1**	**1**	**1**	**1**	**1**
31	**LZT300.41.123**	Locating spring of fork shaft	拨叉轴定位弹簧	**1**	**1**	**1**	**1**	**1**	**1**
32	**GB/T 308-1989**	Steel ball 9.5V	钢球9.5V	**1**	**1**	**1**	**1**	**1**	**1**
33	**LZT300.38J.218**	Fork shaft of reverse gear	倒档拨叉	**1**	**1**	**1**	**1**	**1**	**1**
34	**GB/T 91**	Pin 3.2*40-AOP	销3. 2×40-AOP	**1**	**1**	**1**	**1**	**1**	**1**
35	**GB/T 848**	Washer 10-AOP	垫圈10-AOP	**1**	**1**	**1**	**1**	**1**	**1**
36	**LZT300.38J.023a**	Finger bar weldment	指形拨杆焊合件	**1**	**1**	**1**	**1**	**1**	**1**
37	**GB/T 879-1986**	Pin 6*28	销6×28	**1**	**1**	**1**	**1**	**1**	**1**
38	**GB/T 3452.1**	O-seal ring 11.2*2.65	O型圈11.2×2.65	**1**	**1**	**1**	**1**	**1**	**1**
39	**LZT300.38J.030**	Lever shaft sleeve weldment	拨杆轴套焊合	**1**	**1**	**1**	**1**	**1**	**1**
40	**GB/T 93**	Washer 8	垫圈8	**6**	**6**	**6**	**6**	**6**	**6**
41	**GB/T 5783**	Bolt M8*25-A2L	螺栓M8×25-A2L	**2**	**2**	**2**	**2**	**2**	**2**
42	**LZT300.38J.231**	Rocker	摇臂	1	1	1	1	1	1
43	**GB/T 882**	Pin shaft B10*30-45-AOP	销轴B10×30-45-AOP	**1**	**1**	**1**	**1**	**1**	**1**

106

续表3　Cotinued Three

44	**LZT300.38J.022a**	Control lever assembly, reverse gear	倒档操纵杆总成	**1**	**1**	**1**	**1**	**1**	**1**
45	**GB/T 6170**	Nut M10-Zn.D	螺母M10-Zn.D	**1**	**1**	**1**	**1**	**1**	**1**
46	**LZT800.370.016**	Control lever assembly, PTO	梭式换档操纵手柄	**1**	**1**	**1**	**1**	**1**	**1**
47	**LZT300.38J.124**	Upper cover	上盖	**1**	**1**	**1**	**1**	**1**	**1**
48	**GB/T 5783**	Bolt M8*20-8.8-Zn.D	螺栓M8×20-8.8-Zn.D	**4**	**4**	**4**	**4**	**4**	**4**
49	**LZT300.38.016**	Air plug assembly for oil input	加油通气塞总成①						**1**
	LZT300.38J.016	Air plug assembly for oil input	加油通气塞总成②	**1**		**1**		**1**	
	LZT300.38J.016	Air plug assembly for oil input	加油通气塞总成③		**1**		**1**		
50	**JB/T 982**	Unit washer 36	组合垫圈36	**1**	**1**	**1**	**1**	**1**	**1**
51	**GB/T 879-1986**	Pin 6*35	销6×35	**1**	**1**	**1**	**1**	**1**	**1**
52	**LZT300.38.015**	Pedal weldment of differential lock	差速锁踏板焊合件	**1**	**1**	**1**	**1**	**1**	**1**
53	**QC/T 388-1999**	Bowl shim 20	碗形塞片20	**1**	**1**	**1**	**1**	**1**	**1**
54	**LZT300.38.190**	Shifting briquet of differential lock	差速锁拨块	**1**	**1**	**1**	**1**	**1**	**1**
55	**LZT300.38.159a**	Fork of differential	差速锁拨叉	**1**	**1**	**1**	**1**	**1**	**1**
56	**LZT300.38.160**	Spring of differential lock	差速锁弹簧	**1**	**1**	**1**	**1**	**1**	**1**
57	**LZT300.38.158a**	Fork shaft of differential lock	差速锁拨叉轴	**1**	**1**	**1**	**1**	**1**	**1**
58	**GB/T 3452.1**	O-seal ring 15*2.65	O型圈15×2.65G	**1**	**1**	**1**	**1**	**1**	**1**
59	**GB/T 879-1986**	Pin 6*38	销6×38	**1**	**1**	**1**	**1**	**1**	**1**
60	**LZT65.38.026**	Oil plug assembly	油塞总成	**1**	**1**	**1**	**1**	**1**	**1**
61	**LZT300.38.175**	Lower cover	下盖②	**1**		**1**		**1**	

备注:①四轮驱动,梭式换档机型②两轮驱动,梭式换档机型③四轮驱动,梭式换档机型
① ③4WD with shuttle-type gear shift.②2WD with shuttle-type gear shift.

107

https://truckmanualshub.com/

后桥总成-2(梭式换档机型)

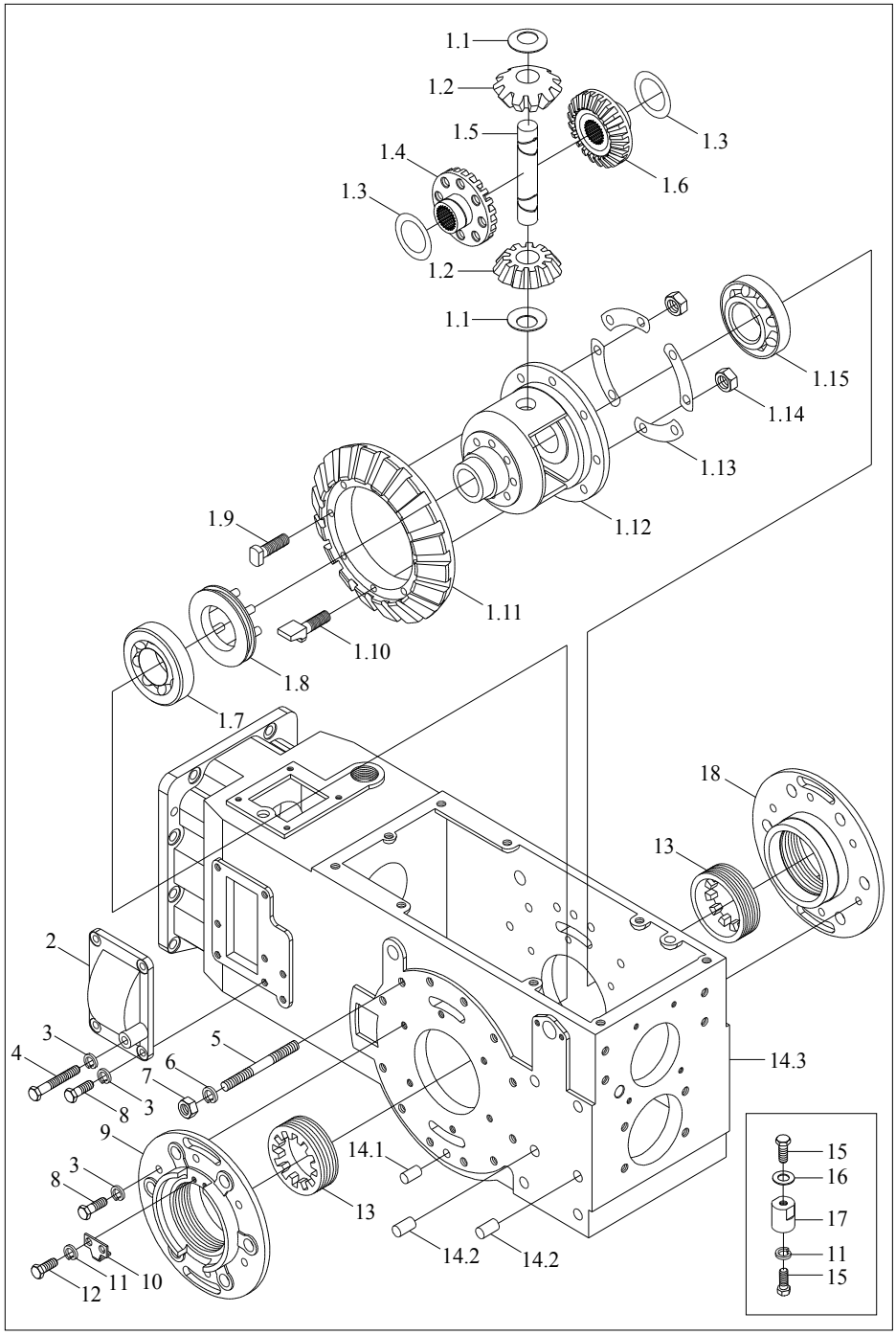

108

后桥总成-2(梭式换档机型)
Rear Axle Assembly-2

序号 No.	零部件代号 Drawing No.	Part Name and Standards	零部件名称及规格	适用机型和用量（件） Applied Tractor Models and Qty.(Piece)					
				LZT 300	LZT 304	LZT 350	LZT 354	LZT400 /450/480 /500/520 /550	LZT404 /454/484 /504/524 /554
	LZT404.38J.001	Rear axle assembly	后桥总成①						1
	LZT300.38J.001	Rear axle assembly	后桥总成②	1		1		1	
	LZT304.38J.001	Rear axle assembly	后桥总成③		1		1		
1	LZT300.38.012	Differential assembly	差速器总成	1	1	1	1	1	1
1.1	LZT300.38.148	Washer for planetary gear	行星齿轮垫片	2	2	2	2	2	2
1.2	LZT300.38.145	Planetary gear	行星齿轮	2	2	2	2	2	2
1.3	LZT300.38.147	Washer for half axle gear	半轴齿轮垫片	2	2	2	2	2	2
1.4	LZT300.38.143	Half axle gear, left	左半轴齿轮	1	1	1	1	1	1
1.5	LZT300.38.146	Planetary gear shaft	行星齿轮轴	1	1	1	1	1	1
1.6	LZT300.38.144	Half axle gear, right	右半轴齿轮	1	1	1	1	1	1
1.7	GB/T 297 -1994	Bearing 30211	轴承30211	1	1	1	1	1	1
1.8	LZT300.38.019	Differential lock assembly	差速锁总成	1	1	1	1	1	1
1.9	LZT300.38.149	Retainer bolt for large conical gear	大锥齿轮固定螺栓	6	6	6	6	6	6
1.1 0	LZT300.38.150	Thrust bolt for planetary gear shaft	行星齿轮轴止推螺栓	2	2	2	2	2	2
1.11	LZT300.38.141	Large conical gear	大圆锥齿轮	1	1	1	1	1	1
1.12	LZT300.38.140	Differential case	差速器壳体	1	1	1	1	1	1
1.13	LZT300.38.152	Lock washer	锁紧垫片	4	4	4	4	4	4
1.14	GB/T 6170	Nut M12-Zn.D	螺母M12-Zn.D	8	8	8	8	8	8
1.15	GB/T 297 -1994	Bearing 2007113	轴承2007113	1	1	1	1	1	1

109

续表1 Continued One

2	**LZT300.38J.206**	Reverse gear side cover	倒档侧盖	**1**	**1**	**1**	**1**	**1**	**1**
3	**GB/T 93**	Washer 10	垫圈10	**18**	**18**	**18**	**18**	**18**	**18**
4	**GB/T 5782**	Bolt M10*60-Zn.D	螺栓M10×60-Zn.D	**1**	**1**	**1**	**1**	**1**	**1**
5	**GB/T 899**	Stud AM12-M12*1.25*150-8.8-Zn.D	螺柱AM12-M12×1.25×150-8.8-Zn.D	**24**	**24**	**24**	**24**	**24**	**24**
6	**GB/T 93**	Washer 12	垫圈12	**24**	**24**	**24**	**24**	**24**	**24**
7	**GB/T 6171**	Nut M12*1.25-Zn.D	螺母M12×1.25-Zn.D	**24**	**24**	**24**	**24**	**24**	**24**
8	**GB/T 5783**	Bolt M10*25-8.8-Zn.D	螺栓M10×25-8.8-Zn.D	**17**	**17**	**17**	**17**	**17**	**17**
9	**LZT300.38.142**	Housing for left differential	左差速器轴承座	**1**	**1**	**1**	**1**	**1**	**1**
10	**LZT300.38.161**	Lock plate	锁片	**2**	**2**	**2**	**2**	**2**	**2**
11	**GB/T 93**	Washer 8	垫圈8	5	5	5	5	5	5
12	**GB/T 5783**	Bolt M8*12-8.8-Zn.D	螺栓M8×12-8.8-Zn.D	4	4	4	4	4	4
13	**LZT300.38.151**	Adjusting nut	调整螺母	2	2	2	2	2	2
14	**LZT300.38J.011**	Housing of rear axle assembly	后桥壳总成	**1**	**1**	**1**	**1**	**1**	**1**
14.1	**GB/T 119-1986**	Pin D12*28	销D12×28	**2**	**2**	**2**	**2**	**2**	**2**
14.2	**GB/T 119-1986**	Pin D14*30	销D14×30	**4**	**4**	**4**	**4**	**4**	**4**
14.3	**LZT300.38J.101**	Housing of rear axle	后桥壳体	**1**	**1**	**1**	**1**	**1**	**1**
15	**GB/T 5783**	Bolt M8*16-8.8-Zn.D	螺栓M8×16-8.8-Zn.D	**2**	**2**	**2**	**2**	**2**	**2**
16	**GB/T 97.1**	Washer 8-140-HV-Zn.D	垫圈8-140-HV-Zn.D	**1**	**1**	**1**	**1**	**1**	**1**
17	**LZT300.38.195**	Limiting stand	限位支座	**1**	**1**	**1**	**1**	**1**	**1**
18	**LZT300.38.177**	Housing for right differential	右差速器轴承座	**1**	**1**	**1**	**1**	**1**	**1**

备注:①四轮驱动,梭式换档机型②两轮驱动,梭式换档机型③四轮驱动,梭式换档机型
① ③4WD with shuttle-type gear shift.②2WD with shuttle-type gear shift.

110

https://truckmanualshub.com/

39最终传动总成

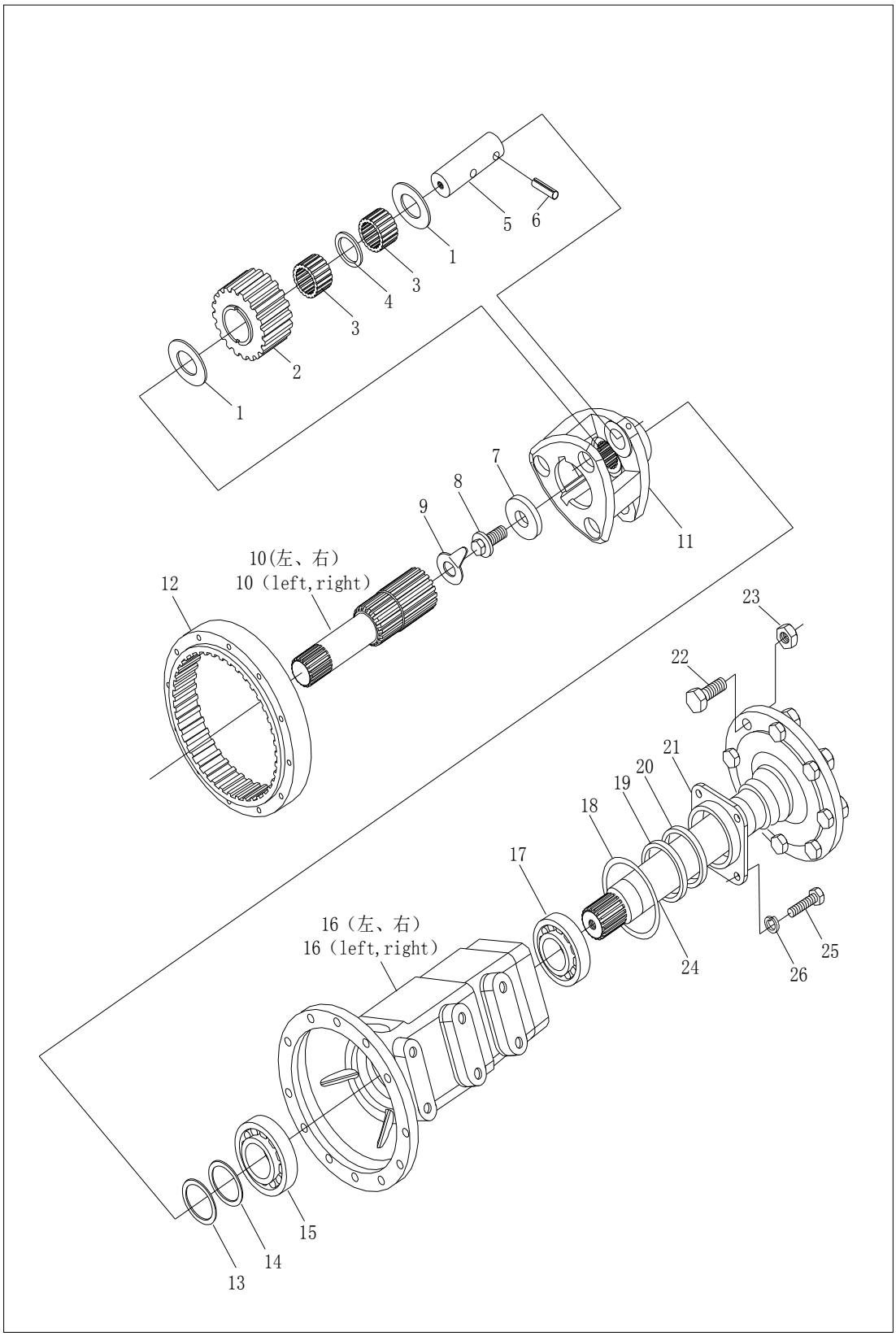

111

https://truckmanualshub.com/

39最终传动总成
Final Drive Assembly

序号 No.	零部件代号 Drawing No.	Part Name and Standards	零部件名称及规格	适用机型和用量（件） Applied Tractor Models and Qty.(Piece)					
				LZT 300	LZT 304	LZT 350	LZT 354	LZT400 /450/480 /500/520 /550	LZT404 /454/484 /504/524 /554
1	**LZT300.39.109**	Outer spacer sleeve	滚针外隔套	12	12	12	12	12	12
2	**LZT300.39.103**	Planetary wheel	行星轮	6	6	6	6	6	6
3	**GB/T 309-1995**	Needle roller 5*23.8	滚针 5X23.8	264	264	264	264	264	264
4	**LZT300.39.105**	Inner spacer sleeve	滚针内隔套	6	6	6	6	6	6
5	**LZT300.39.106**	Shaft of planetary wheel	行星轮轴	6	6	6	6	6	6
6	**GB/T 879-1986**	Spring-type straight pin 8*25	弹性圆柱销 8X25	6	6	6	6	6	6
7	**LZT300.39.111**	Rest	挡块	2	2	2	2	2	2
8	**LZT300.39.112**	Lock bolt of driving shaft	驱动轴锁紧螺栓	2	2	2	2	2	2
9	**LZT300.39.110**	Lock plate of driving shaft	驱动轴锁片	2	2	2	2	2	2
10	**LZT300.39.101**	Half shaft, left	左半轴	1	1	1	1	1	1
	LZT300.39.102	Half shaft, right	右半轴	1	1	1	1	1	1
11	**LZT300.39.104**	Planetary frame	行星架	2	2	2	2	2	2
12	**LZT300.39.107**	Ring gear	齿圈	2	2	2	2	2	2
13	**LZT300.39.121**	Adjusting shim	调整垫片	○	○	○	○	○	○
	LZT300.39.122	Adjusting shim	调整垫片	○	○	○	○	○	○
	LZT300.39.123	Adjusting shim	调整垫片	○	○	○	○	○	○

112

续表1 Continued One

14	**LZT300.39.113**	Spacer sleeve	隔套	2	2	2	2	2	2
15	**GB/T 276-1994**	Rolling bearing - Deep groove ball bearing 6211	轴承 6211	2	2	2	2	2	2
16	**LZT300.39.115**	Case of driving shaft, left	左驱动轴壳体	1	1	1	1	1	1
	LZT300.39.114	Case of driving shaft, right	右驱动轴壳体	1	1	1	1	1	1
17	**GB/T 276-1994**	Rolling bearing - Deep groove ball bearing 6212	轴承 6212	2	2	2	2	2	2
18	**GB 3452.1**	O-seal ring 115*3.55	O形密封圈 115X3.55	2	2	2	2	2	2
19	**JB 2600-1980**	Skeleton oil sealing SG70*95*12	骨架油封 SG70X95X12	2	2	2	2	2	2
20	**LZT300.39.030**	Felt assembly,driving shaft	驱动轴毛毡总成	2	2	2	2	2	2
21	**LZT300.39.116**	Seat for oil sealing	油封座	2	2	2	2	2	2
22	**LZT65.38.140**	Bolt, rear hub	后轮毂螺栓	16	16	16	16	16	16
23	**LZT65.38.139**	Nut, rear hub	后轮毂螺母	16	16	16	16	16	16
24	**LZT300.39.118**	Driving shaft	驱动轴	2	2	2	2	2	2
25	**GB/T 5783**	Hexagon head bolt - full thread M12*25-Zn.D	螺栓 M12X25-Zn.D	8	8	8	8	8	8
26	**GB/T 93**	Single coil spring lock washer 12-normal type	弹簧垫圈 12	8	8	8	8	8	8
Note:○Defending on requirement.									

113

https://truckmanualshub.com/

全液压转向总成-1

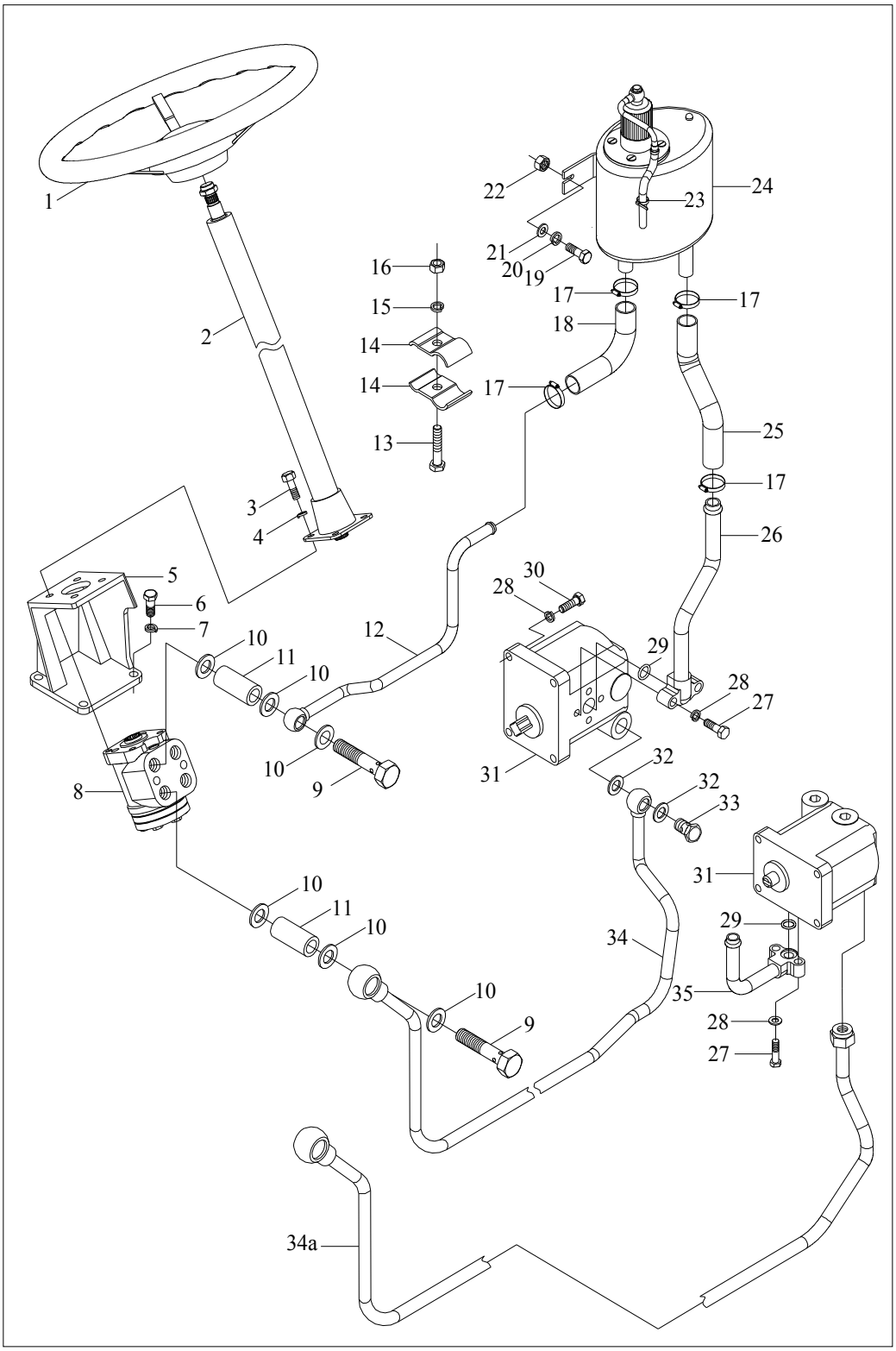

114

全液压转向总成-1
Hydraulic Steering Wheel Assembly-1

序号 No.	零部件代号 Drawing No.	Part Name and Standards	零部件名称及规格	适用机型和用量（件） Applied Tractor Models and Qty.(Piece)					
				LZT 300	LZT 304	LZT 350	LZT 354	LZT400 /450/480 /500/520 /550	LZT404 /454/484 /504/524 /554
	LZT354.40F.001	Hydraulic Steering Wheel Assembly	全液压转向总成		1		1		1
	LZT354.40E.001	Hydraulic Steering Wheel Assembly	全液压转向总成		1		1		1
	LZT354.40C.001	Hydraulic Steering Wheel Assembly	全液压转向总成		1		1		1
	LZT304.40L.001	Hydraulic Steering Wheel Assembly	全液压转向总成		1				
	LZT304.40F.001	Hydraulic Steering Wheel Assembly	全液压转向总成		1		1		
	LZT304.40E.001	Hydraulic Steering Wheel Assembly	全液压转向总成		1		1		
	LZT350.40C.001	Hydraulic Steering Wheel Assembly	全液压转向总成	1		1		1	
	LZT400.40X.001	Hydraulic Steering Wheel Assembly	全液压转向总成					1	
	LZT400.40C.001	Hydraulic Steering Wheel Assembly	全液压转向总成	1		1		1	
	LZT404.40F.001	Hydraulic Steering Wheel Assembly	全液压转向总成		1		1		1
	LZT404.40E.001	Hydraulic Steering Wheel Assembly	全液压转向总成		1		1		1
	LZT404.40C.001	Hydraulic Steering Wheel Assembly	全液压转向总成		1		1		1
	LZT454.40X.001	Hydraulic Steering Wheel Assembly	全液压转向总成						1
	LZT454.40.001	Hydraulic Steering Wheel Assembly	全液压转向总成						

115

续表1 Continued One

1	**LZT400.40.016**	Steering wheel assembly	转向盘总成	1	1	1	1	1	1
2	**LZT354.40C.016**	Steering tube column assembly	转向管拄总成	1	1	1	1	1	1
3	**GB/T6170**	Bolt M10*30-Zn.D	螺栓M10×30-Zn.D	4	4	4	4	4	4
4	**GB/T93**	Washer 10	垫圈10	4	4	4	4	4	4
5	**LZT354.40C.111**	Steering strut	转向器支架	1	1	1	1	1	1
6	**GB/T5783**	Bolt M12*30-Zn.D	螺栓M12×30-Zn.D	4	4	4	4	4	4
7	**GB/T93**	Washer 12	垫圈12	4	4	4	4	4	4
8	**LZT354.40C.015**	Hydraulic steering wheel assembly	液压转向器总成	1	1	1	1	1	1
9	**LZT354.40C.102**	Long hollow bolt	空心长螺栓	2	2	2	2	2	2
10	**JB/T982**	Washer 20	垫圈20	6	6	6	6	6	6
11	**LZT354.40C.109**	Long pipe	长接管	2	2	2	2	2	2
12	**LZT354.40C.021**	Oil return outlet pipe weldment	回油出口管焊合件	1	1	1	1	1	1
	LZT400.40X.021	Oil return outlet pipe weldment	回油出口管焊合件 ①	1	1	1	1	1	1
	LZT404.40C.021	Oil return outlet pipe weldment	回油出口管焊合件 ①	1	1	1	1	1	1
	LZT304.40L.021	Oil return outlet pipe weldment	回油出口管焊合件 ①	1	1	1	1	1	1
13	**GB/T5783**	Bolt M6*30-Zn.D	螺栓M6×30-Zn.D	2	2	2	2	2	2
14	**LZT354.40C.120**	Oil pipe clip	油管夹	4	4	4	4	4	4
15	**GB/T93**	Washer 6	垫圈6	2	2	2	2	2	2
16	**GB/T6170**	Nut M6-Zn.D	螺母M6-Zn.D	2	2	2	2	2	2
17	**ZBJ15001**	Clamp D32	喉箍32	4	4	4	4	4	4

116

续表2 Continued Two

18	**LZT354.40C.107**	Oil return hose	回油软管	1	1	1	1	1	1
19	**GB/T5783**	Bolt M10*25-Zn.D	螺栓M10×25-Zn.D	2	2	2	2	2	2
20	**GB/T93**	Washer 10- Zn.D	垫圈10- Zn.D	2	2	2	2	2	2
21	**GB/T97.1**	Washer 10- Zn.D	垫圈10- Zn.D	2	2	2	2	2	2
22	**GB/T6170**	Nut M10-Zn.D	螺母M10-Zn.D	2	2	2	2	2	2
23	**ZD140×3.5**	Plastic belt can loose	可松式塑料扎带	1	1	1	1	1	1
24	**LZT354.40C.011**	Steering tank and breather assembly	转向油箱及呼吸器总成	1	1	1	1	1	1
25	**LZT354.40C.103**	Oil outlet hose	出油软管	1	1	1	1	1	1
	LZT400.40X.104	Oil outlet hose	出油软管 ①	1	1	1	1	1	1
	LZT404.40C.104	Oil outlet hose	出油软管 ①	1	1	1	1	1	1
26	**LZT354.40C.022**	Oil suction pipe weldment	油泵吸油钢管焊合件	1	1	1	1	1	1
	LZT354.40C.022	Oil suction pipe weldment	油泵吸油钢管焊合件	1	1	1	1	1	1
27	**GB/T5783**	Bolt M8*30-Zn.D	螺栓M8×30-Zn.D	2	2	2	2	2	2
28	**GB/T93**	Washer 8	垫圈8	8	8	8	8	8	8
29	**GB3452.1**	O-seal ring 19×2.65G	O型密封19×2.65G	1	1	1	1	1	1
30	**GB/T5783**	Bolt M8*35-Zn.D	螺栓M8×35-Zn.D	4	4	4	4	4	4
31	**LZT354.40C.023**	Constant overflow pump	恒流溢流泵	1	1	1	1	1	1
	LZT304.40L.023	Constant overflow pump	恒流溢流泵 ①	1	1	1	1	1	1
	LZT404.40C.030	Constant overflow pump	恒流溢流泵 ①	1	1	1	1	1	1

117

续表3　Cotinued Three

	LZT354.40J.011	Constant overflow pump	恒流溢流泵 ①	1	1	1	1	1	1
32	**JB/T982**	Washer 18	垫圈18	2	2	2	2	2	2
33	**LZT650.40.105**	Hollow bolt M18*1.5	空心螺栓M18X1.5	1	1	1	1	1	1
34	**LZT354.40C.020**	Oil outlet pipe weldment	油泵出油钢管焊合件	1	1	1	1	1	1
	LZT304.40L.020	Oil outlet pipe weldment	油泵出油钢管焊合件 ①	1	1	1	1	1	1
	LZT304.40C.020	Oil outlet pipe weldment	油泵出油钢管焊合件 ①	1	1	1	1	1	1
	LZT350.40C.020	Oil outlet pipe weldment	油泵出油钢管焊合件 ①	1	1	1	1	1	1
	LZT354.40E.020	Oil outlet pipe weldment	油泵出油钢管焊合件 ①	1	1	1	1	1	1
	LZT400.40C.020	Oil outlet pipe weldment	油泵出油钢管焊合件 ①	1	1	1	1	1	1
	LZT400.40X.020	Oil outlet pipe weldment	油泵出油钢管焊合件 ①	1	1	1	1	1	1
	LZT404.40E.020	Oil outlet pipe weldment	油泵出油钢管焊合件 ①	1	1	1	1	1	1
	LZT454.40.020	Oil outlet pipe weldment	油泵出油钢管焊合件 ①	1	1	1	1	1	1
34a	**LZT400.40X.020**	Oil outlet pipe weldment	油泵出油钢管焊合件	1	1	1	1	1	1
35	**LZT400.40X.011**	Oil outlet pipe weldment	油泵吸油钢管焊合件 ①	1	1	1	1	1	1
	LZT400.40C.011	Oil outlet pipe weldment	油泵吸油钢管焊合件 ①	1	1	1	1	1	1
	LZT404.40C.011	Oil outlet pipe weldment	油泵吸油钢管焊合件 ①	1	1	1	1	1	1
	LZT304.40L.011	Oil outlet pipe weldment	油泵吸油钢管焊合件 ①	1	1	1	1	1	1
	LZT354.40C.022	Oil outlet pipe weldment	油泵吸油钢管焊合件	1	1	1	1	1	1
注：①选装.									

118

https://truckmanualshub.com/

全液压转向总成-2

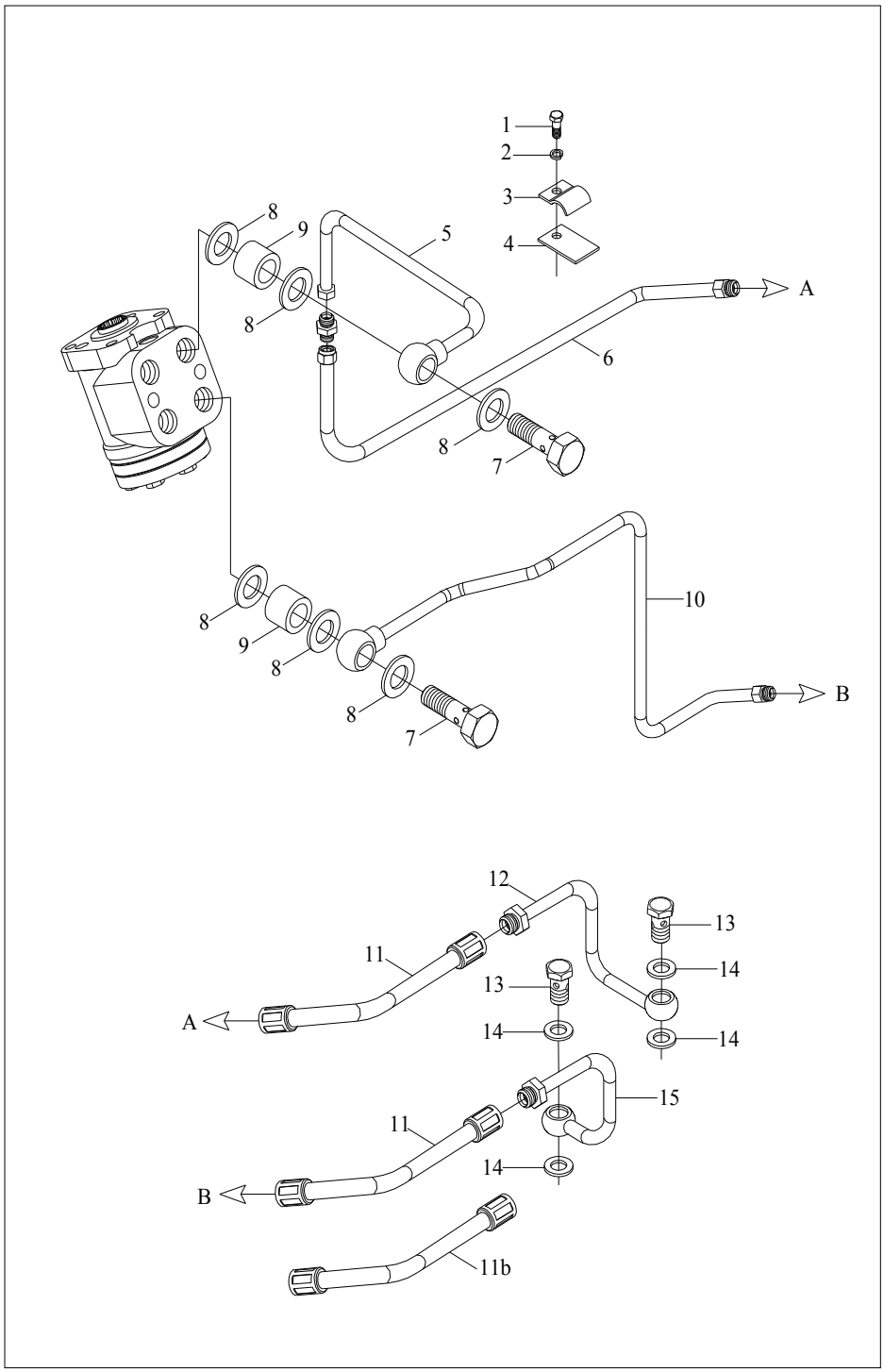

119

全液压转向总成-2
Hydraulic Steering Wheel Assembly-2

标号No.	零部件代号 Drawing No.	Part Name and Standards	零部件名称及规格	适用机型和用量（件） Applied Tractor Models and Qty.(Piece)					
				LZT 300	LZT 304	LZT 350	LZT 354	LZT400 /450/480 /500/520 /550	LZT404 /454/484 /504/524 /554
	LZT354.40F.001	Hydraulic Steering Wheel Assembly	全液压转向总成		1		1		1
	LZT354.40E.001	Hydraulic Steering Wheel Assembly	全液压转向总成		1		1		1
	LZT354.40C.001	Hydraulic Steering Wheel Assembly	全液压转向总成		1		1		1
	LZT304.40L.001	Hydraulic Steering Wheel Assembly	全液压转向总成		1				
	LZT304.40F.001	Hydraulic Steering Wheel Assembly	全液压转向总成		1		1		
	LZT304.40E.001	Hydraulic Steering Wheel Assembly	全液压转向总成		1		1		
	LZT404.40F.001	Hydraulic Steering Wheel Assembly	全液压转向总成		1		1		1
	LZT404.40E.001	Hydraulic Steering Wheel Assembly	全液压转向总成		1		1		1
	LZT404.40C.001	Hydraulic Steering Wheel Assembly	全液压转向总成		1		1		1
	LZT454.40X.001	Hydraulic Steering Wheel Assembly	全液压转向总成						1
1	GB/T5783	Bolt M8*20-Zn.D	螺栓M8×20-Zn.D		2		2		2
2	GB/T93	Washer 8	垫圈8		8		8		8
3	LZT354.40F.121	Single pipe clip	单孔管夹		2		2		2
4	LZT354.40F.122	Oil pipe bracket	油管支架		2		2		2
5	LZT354.40F.015a	Oil feed pipe weldment,left	左输油管焊合件-1		1		1		1
	LZT304.40B.017	Oil feed pipe weldment,left	左输油管焊合件-1 ①		1		1		1

120

https://truckmanualshub.com/

续表1 Continued One

	LZT304.40E.017	Oil feed pipe weldment,left	左输油管焊合件-1①		1		1		1
	LZT304.40L.017	Oil feed pipe weldment,left	左输油管焊合件-1①		1		1		1
	LZT354.40C.017	Oil feed pipe weldment,left	左输油管焊合件-1①		1		1		1
	LZT400.40L.017	Oil feed pipe weldment,left	左输油管焊合件-1①		1		1		1
	LZT400.40X.017	Oil feed pipe weldment,left	左输油管焊合件-1①		1		1		1
	LZT404.40X.017	Oil feed pipe weldment,left	左输油管焊合件-1①		1		1		1
	LZT404.40L.017	Oil feed pipe weldment,left	左输油管焊合件-1①		1		1		1
6	LZT354.40F.016a	Oil feed pipe weldment,left	左输油管焊合件-2		1		1		1
	LZT4044.40F.016a	Oil feed pipe weldment,left	左输油管焊合件-2①		1		1		1
7	LZT354.40C.119	Short hollow bolt	空心短螺栓		2		2		2
8	JB/T982	Washer 20	垫圈20		12		12		12
9	LZT354.40C.108	Short pipe	短接管		2		2		2
10	LZT354.40F.018	Oil feed steel pipe weldment,right	右输油钢管焊合件		1		1		1
	LZT304.40B.018	Oil feed steel pipe weldment,right	右输油钢管焊合件①		1		1		1
	LZT304.40E.018	Oil feed steel pipe weldment,right	右输油钢管焊合件①		1		1		1
	LZT304.40L.018	Oil feed steel pipe weldment,right	右输油钢管焊合件①		1		1		1
	LZT354.40C.018	Oil feed steel pipe weldment,right	右输油钢管焊合件①		1		1		1

121

续表2 Continued Two

	LZT400.40C.018	Oil feed steel pipe weldment,right	右输油钢管焊合件①		1		1		1
	LZT404.40X.018	Oil feed steel pipe weldment,right	右输油钢管焊合件①		1		1		1
	LZT400.40X.018	Oil feed steel pipe weldment,right	右输油钢管焊合件①		1		1		1
	LZT404.40C.018	Oil feed steel pipe weldment,right	右输油钢管焊合件①		1		1		1
	LZT404.40F.018	Oil feed steel pipe weldment,right	右输油钢管焊合件①		1		1		1
	LZT454.40X.018	Oil feed steel pipe weldment,right	右输油钢管焊合件①		1		1		1
11	LZT354.40C.019	Cylinder oil outlet hose assembly,right	油缸右出油软管总成		2		2		2
12	LZT354.40C.013	Cylinder hard pipe weldment,left	油缸左硬管焊合件①		1		1		1
	LZT354.40F.014	Cylinder hard pipe weldment,left	油缸左硬管焊合件		1		1		1
13	LZT650.40.112	Hollow bolt M16*1.5	空心螺栓M16X1.5		2		2		2
14	JB/T982	Washer 16	垫圈16		4		4		4
15	LZT354.40F.014	Cylinder hard pipe weldment,right	油缸右硬管焊合件		1		1		1
	LZT354.40F.013	Cylinder hard pipe weldment,right	油缸右硬管焊合件①						

注：①选装.

122

https://truckmanualshub.com/

全液压转向总成-3

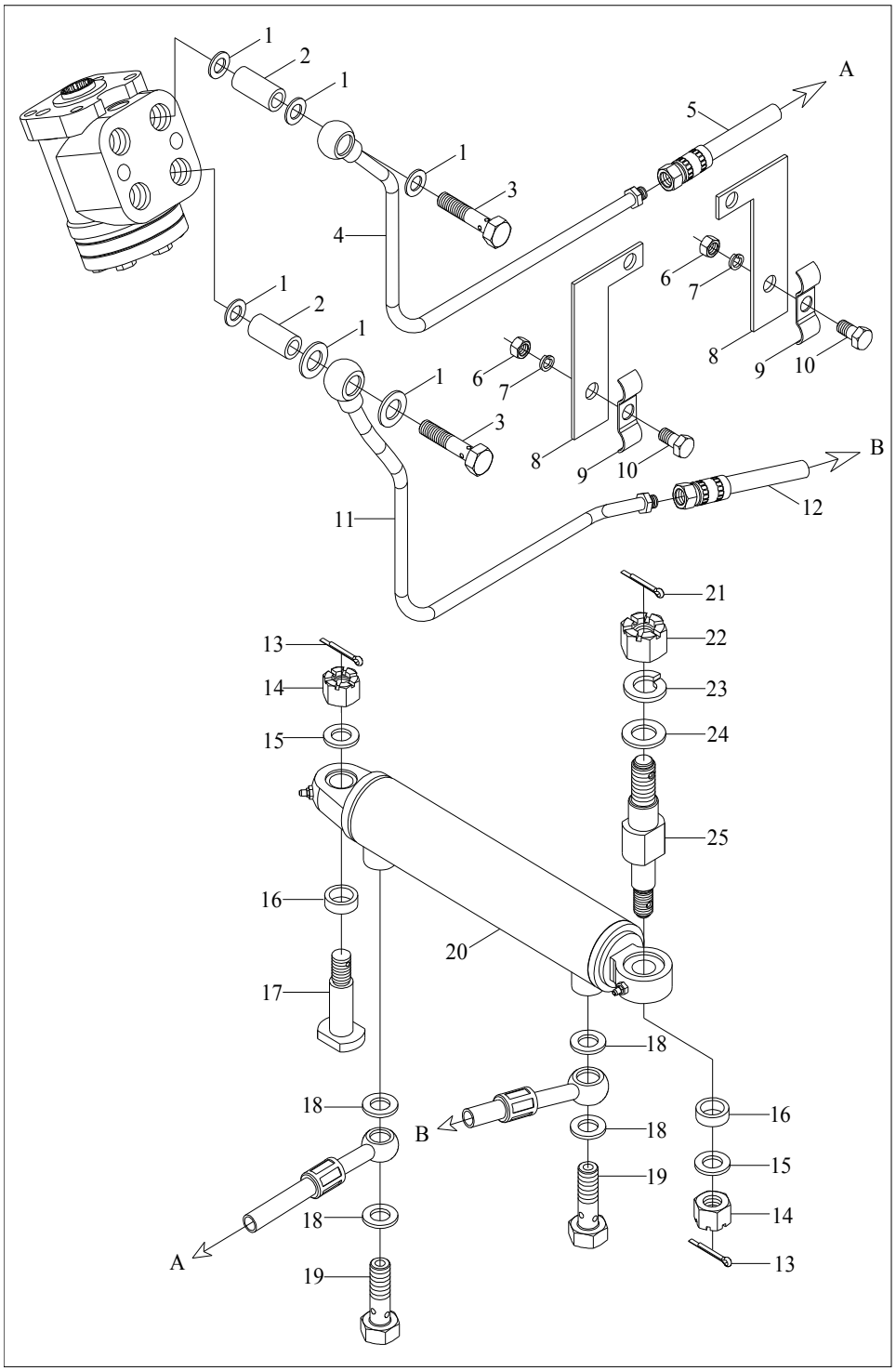

123

https://truckmanualshub.com/

全液压转向总成-3
Hydraulic Steering Wheel Assembly-3

标号No.	零部件代号 Drawing No.	Part Name and Standards	零部件名称及规格	适用机型和用量（件） Applied Tractor Models and Qty.(Piece)					
				LZT 300	LZT 304	LZT 350	LZT 354	LZT400 /450/480 /500/520 /550	LZT404 /454/484 /504/524 /554
	LZT350.40C.001	Hydraulic Steering Wheel Assembly	全液压转向总成	1		1		1	
	LZT400.40X.001	Hydraulic Steering Wheel Assembly	全液压转向总成					1	
	LZT400.40C.001	Hydraulic Steering Wheel Assembly	全液压转向总成	1		1		1	
1	JB/T982	Washer 20	垫圈20	12		12		12	
2	LZT354.40C.108	Short pipe	短接管	2		2		2	
3	LZT354.40C.119	Short hollow bolt	空心短螺栓M20×1.5	2		2		2	
4	LZT400.40X.017	Oil feed pipe weldment,left	左输油管焊合件	1		1		1	
5	LZT400.40C.024	Cylinder oil outlet hose assembly,left	油缸左出油软管总成	1		1		1	
6	GB/T6170	Nut M6-Zn.D	螺母M6-Zn.D	2		2		2	
7	GB/T93	Washer 6-Zn.D	垫圈6-Zn.D	2		2		2	
8	LZT304.40L.122	Oil pipe bracket	油管支架	2		2		2	
9	LZT304.40L.121	Double pipe clip	双孔管夹	2		2		2	
10	GB/T5783	Bolt M6*25-Zn.D	螺栓M6×25-Zn.D	2		2		2	

124

https://truckmanualshub.com/

续表1 Continued One

11	LZT400.40X.018	Oil feed steel pipe weldment,right	右输入钢管焊合件	1		1		1	
12	LZT400.40C.019	Cylinder oil outlet hose assembly,right	油缸右出油软管总成	1		1		1	
13	GB/T91	Split pin 4*28	开口销4×28	2		2		2	
14	GB/T9459	Blot M6*1.5-Zn.D	螺栓M16×1.5-Zn.D	2		2		2	
15	GB/T97.1	Washer 16	垫圈16	2		2		2	
16	LZT400.40C.101	Support tube	支撑套	4		4		4	
17	LZT400.40C.103	Cylinder pin roll	油缸销轴（2）	1		1		1	
18	JB/T982	Washer 16	垫圈16	4		4		4	
19	LZT650.40.112	Hollow bolt M16*1.5	空心螺栓M16×1.5	2		2		2	
20	LZT400.40C.011	Steering cylinder assembly	转向油缸总成	1		1		1	
21	GB/T91	Split pin 4*36-Zn.D	开口销4×36 -Zn.D	1		1		1	
22	GB/T6181	Nut M20-Zn.D	螺母M20-Zn.D	1		1		1	
23	GB/T93	Washer 20-Zn.D	垫圈20-Zn.D	1		1		1	
24	GB/T97.1	Washer 20-Zn.D	垫圈20 -Zn.D	1		1		1	
25	LZT400.40C.102	Cylinder pin roll	油缸销轴（1）	1		1		1	

125

https://truckmanualshub.com/

41动力输出总成（四）（配 118PTO中心距后桥壳体）

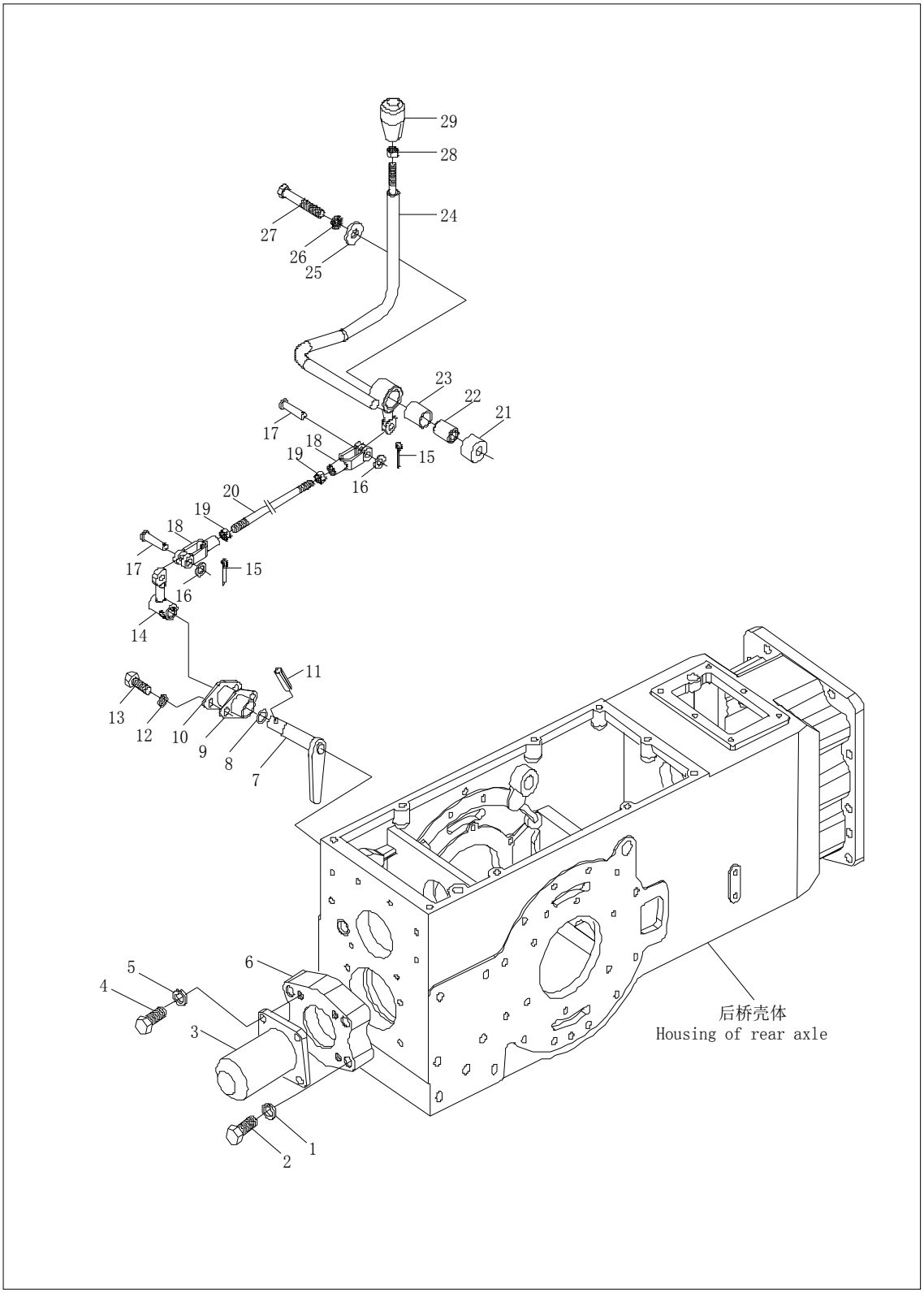

126

41动力输出总成
PTO Shaft Assembly -1

序号 No.	零部件代号 Drawing No.	Part Name and Standards	零部件名称及规格	适用机型和用量（件） Applied Tractor Models and Qty.(Piece)					
				LZT 300	LZT 304	LZT 350	LZT 354	LZT400 /450/480 /500/520 /550	LZT404 /454/484 /504/524 /554
1	**GB/T 93**	Single coil spring lock washer 12-normal type	弹性垫圈12	4	4	4	4	4	4
2	**GB/T 5783**	Hexagon head bolt - full thread M12*55-Zn.D	全螺纹螺栓M12 X55-Zn.D	4	4	4	4	4	4
3	**LZT300.41E.102**	Cover,power take off(PTO)	动力输出轴盖	1	1	1	1	1	1
4	**GB/T 5783**	Hexagon head bolt - full thread M10*25-Zn.D	全螺纹螺栓M10 X25-Zn.D	4	4	4	4	4	4
5	**GB/T 93**	Single coil spring lock washer 10-normal type	弹性垫圈10	4	4	4	4	4	4
6	**LZT300.41E.101**	Rear cover(Ⅰ)	后端盖(I)	1	1	1	1	1	1
7	**LZT300.41E.011**	Finger lever weldment	指形拨杆焊合	1	1	1	1	1	1
8	**GB/T 3452.1**	O-sealing ring 11.2*2.65	O形密封圈 11.2×2.65	1	1	1	1	1	1
9	**LZT300.41.139**	Gasket for lever bush	拨叉轴套衬垫	1	1	1	1	1	1
10	**LZT300.41E.109**	Lever bush	拨杆轴套	1	1	1	1	1	1
11	**GB/T 879**	Spring-type straight pin 6*25	弹性圆柱销6X25	1	1	1	1	1	1
12	**GB/T 93**	Single coil spring lock washer 8-normal type	弹性垫圈8	2	2	2	2	2	2

127

续表1 Continued One

13	**GB/T 5783**	Hexagon head bolt - full thread M8*20-Zn.D	全螺纹螺栓M8X20-Zn.D	2	2	2	2	2	2
14	**LZT300.41.012**	Gearshift lever weldment, PTO	动力输出变速杆焊合件	1	1	1	1	1	1
15	**GB/T 91**	Split pin 3.2*16-Zn.D	开口销3.2*16-Zn.D	2	2	2	2	2	2
16	**GB/T 97.1**	Plain washer 10-140HV-Zn.D	平垫圈10-140HV-Zn.D	2	2	2	2	2	2
17	**GB/T 882**	Clevis pin with head B10*30-Zn.D	销轴 B10*30-Zn.D	2	2	2	2	2	2
18	**LZT300.43.108**	Tenision rod front fork	拉杆前叉	2	2	2	2	2	2
19	**GB/T 6170**	Hexagon nut, style 1 M10-Zn.D	I型螺母 M10-Zn.D	2	2	2	2	2	2
20	**LZT300.41.112**	Control lever	操纵杆	1	1	1	1	1	1
21	**LZT300.41.128**	Spacer	隔套	1	1	1	1	1	1
22	**LZT300.41.130**	Sleeve	轴套	1	1	1	1	1	1
23	**LZT300.41.127**	Bush	衬套	1	1	1	1	1	1
24	**LZT300.41.014**	Control lever weldment,PTO	动力输出操纵杆焊合件	1	1	1	1	1	1
25	**LZT300.41.129**	Washer	垫圈	1	1	1	1	1	1
26	**GB/T 93**	Single coil spring lock washer 12-normal type	弹性垫圈12	1	1	1	1	1	1
27	**GB/T 5782**	Hexagon head bolt M12*75-Zn.D	螺栓M12X75-Zn.D	1	1	1	1	1	1
28	**GB/T 6171**	Hexagon nut, style 1, with fine pitch thread M10*1-Zn.D	I型螺母 - 细牙M10X1-Zn.D	1	1	1	1	1	1
29	**LZT300.41.015**	Control lever handle assembly,PTO	动力输出操纵手柄总成	1	1	1	1	1	1

128

https://truckmanualshub.com/

41动力输出总成（五）（配 118PTO中心距后桥壳体）

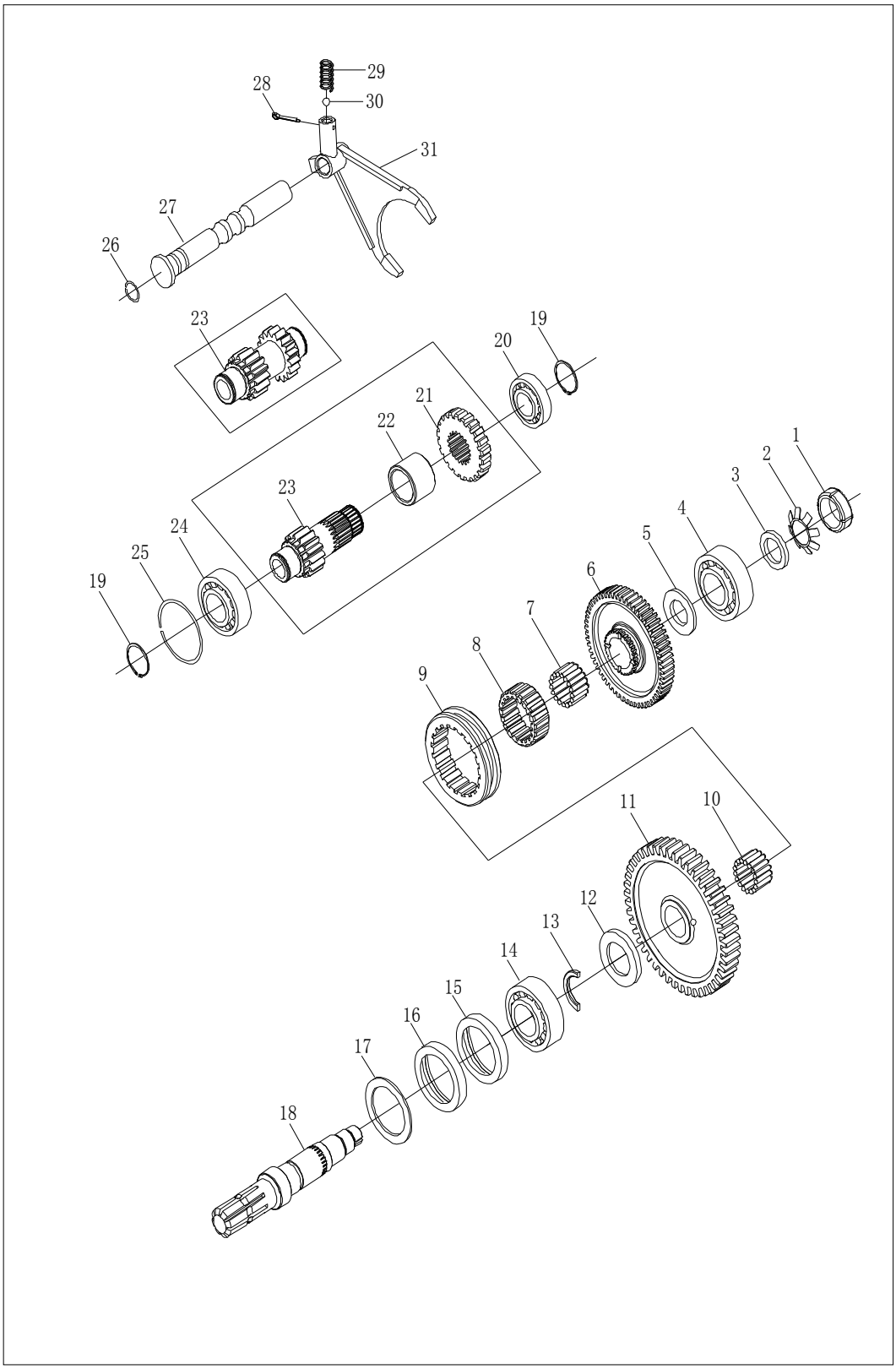

129

41动力输出总成
PTO Shaft Assembly -2

序号 No.	零部件代号 Drawing No.	Part Name and Standards	零部件名称及规格	适用机型和用量（件） Applied Tractor Models and Qty.(Piece)					
				LZT 300	LZT 304	LZT 350	LZT 354	LZT400 /450/480 /500/520 /550	LZT404 /454/484 /504/524 /554
1	**GB/T 812**	Round nut M25*1.5	圆螺母 M25×1.5	1	1	1	1	1	1
2	**GB/T 858**	Tab washer for round nut 25	止动垫圈 25	1	1	1	1	1	1
3	**LZT300.41.122**	Washer	垫圈	2	2	2	2	2	2
4	**GB/T 276**	Rolling bearing - Deep groove ball bearing 6306	滚动轴承 6306	1	1	1	1	1	1
5	**LZT300.41C.118**	Front stop ring, output shaft	输出轴前档环	1	1	1	1	1	1
6	**LZT300.41E.105**	Driven small gear,PTO	PTO被动小齿轮	1	1	1	1	1	1
	LZT300.41G.106	Driven small gear,PTO	PTO被动小齿轮	1	1	1	1		
	LZT400.41G.107	Driven small gear,PTO	PTO被动小齿轮					1	1
7	**GB/T 5846**	Needle roller bearing K35*40*27	滚针轴承 K35X40X27	1	1	1	1	1	1
8	**LZT300.41C.117**	Engaging seat, PTO	动力输出啮合座	1	1	1	1	1	1
9	**LZT300.41C.116**	Engaging sleeve, PTO	动力输出啮合套	1	1	1	1	1	1
10	**GB/T 5846**	Needle roller bearing KK40*46*34	滚针轴承 KK40×46×34	1	1	1	1	1	1
11	**LZT300.41E.103**	Driven big gear,PTO	动力输出被动大齿轮	1	1	1	1		
	LZT300.41F.103	Driven big gear,PTO	动力输出被动大齿轮 ③	1	1	1	1		
	LZT400.41E.103	Driven big gear,PTO	动力输出被动大齿轮					1	1
	LZT400.41F.103	Driven big gear,PTO	动力输出被动大齿轮 ④					1	1
12	**LZT300.41E.114**	Rear stop ring	后挡环	1	1	1	1	1	1
13	**LZT300.41E.119**	Semi stop ring, output shaft	输出轴半挡环	2	2	2	2	2	2
14	**GB/T 276**	Rolling bearing - Deep groove ball bearing 6309	滚动轴承 6309	1	1	1	1	1	1

130

续表1 Continued One

15	**GB/T 9877.1**	Gased oil sealing B50*72*8D	骨架油封B50X72X7D	1	1	1	1	1	1
16	**GB/T 9877.1**	Gased oil sealing FB50*72*8D	骨架油封FB50X72X8D	1	1	1	1	1	1
17	**LZT300.41E.115**	Circlip for oil sealing	油封档圈	1	1	1	1	1	1
18	**LZT300.41E.104**	PTO shaft	PTO轴	1	1	1	1	1	1
	LZT300.41E.104A	PTO shaft ②(Six - key)	PTO轴(六键)②	1	1	1	1	1	1
19	**GB/T 894.1**	Circlip for shaft 40-type A	轴用弹性档圈40-A型	2	2	2	2	2	2
20	**GB/T 276**	Rolling bearing - Deep groove ball bearing 6208	滚动轴承 6208	1	1	1	1	1	1
21	**LZT300.41E.120**	High-speed gear, PTO driving gear	动力输出高档主动齿轮	1	1	1	1	1	1
22	**LZT300.41E.121**	Spacer	隔套	1	1	1	1	1	1
23	**LZT300.41E.106**	Driving gear, PTO	动力输出主动齿轮	1	1	1	1		
	LZT300.41F.106	Driving gear, PTO③	动力输出主动齿轮 ③			1	1		
	LZT300.41G.106	Driving gear, PTO⑤	动力输出主动齿轮 ⑤	1	1	1	1		
	LZT400.41E.106	Driving gear, PTO	动力输出主动齿轮					1	1
	LZT400.41F.106	Driving gear, PTO④	动力输出主动齿轮 ④	1	1			1	1
	LZT400.41G.106	Driving gear, PTO⑥	动力输出主动齿轮⑥					1	1
24	**GB/T 276**	Rolling bearing - Deep groove ball bearing 6308N	滚动轴承 6308N	1	1	1	1	1	1
25	**GB/T 305**	Snap ring 68.2/78.6	止动环68.2X78.6	1	1	1	1	1	1
26	**GB/T 3452.1**	O-seal ring 11.2*2.65	O形密封圈11.2X2.65	1	1	1	1	1	1
27	**LZT300.41C.107**	Gear fork shaft, PTO	动力输出拨叉轴	1	1	1	1	1	1
28	**GB/T 91**	Split pin 4*3.2	开口销4X3.2	1	1	1	1	1	1
29	**LZT300.41.123**	Gag spring, gear fork shaft	拨叉轴定位弹簧	1	1	1	1	1	1
30	**GB/T 308**	Stell ball 9.5V	钢球9.5V	1	1	1	1	1	1
31	**LZT300.41E.108**	Gearshift fork, PTO	PTO拨叉	1	1	1	1	1	1

Note:①Optional.②Sepeific for 2400r/min engine and 760r/min or 1000r/min PTO.③Sepeific for 2200r/min or 2300r/min engine and 760r/min or 1000r/min PTO.④Sepeific for 2300r/min or 2400r/min engine and 540r/min or 760r/min PTO.⑤Sepeific for 2200r/min engine and 540r/min or 760r/min PTO

①选装件②配2400rpm发动机，760/1000rpmPTO专用③配2200rpm或2300rpm发动机，760/1000rpmPTO专用。④配2300rpm或2400rpm发动机，540/760rpmPTO专用⑤配2200rpm发动机，540/760rpmPTO专用

131

https://truckmanualshub.com/

42　分动箱总成-1

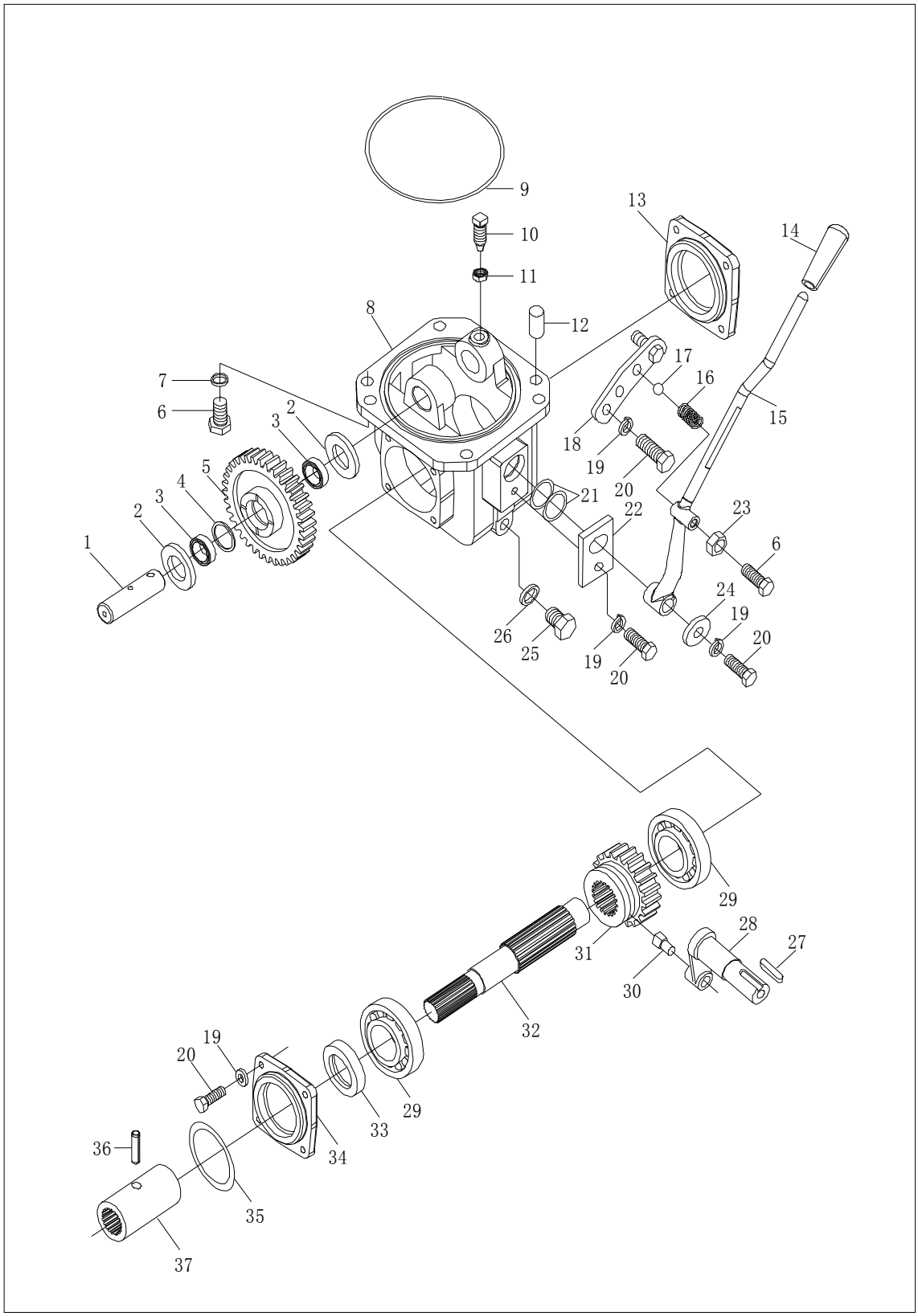

132

42 分动箱总成-1
Transfer Case Assembly-1

序号 No.	零部件代号 Drawing No.	Part Name and Standards	零部件名称及规格	适用机型和用量（件） Applied Tractor Models and Qty.(Piece)					
				LZT 300	LZT 304	LZT 350	LZT 354	LZT400 /450/480 /500/520 /550	LZT404 /454/484 /504/524 /554
	LZT304.42.001a	Transfer case assembly	分动箱总成						
	LZT304.42C.001a	Transfer case assembly	分动箱总成						
1	**LZT304.42.102**	Idler shaft	惰轮轴		1		1		1
2	**LZT304.42.103**	Thrust collar	止推环		2		2		2
3	**GB5846-1986**	Needle roller bearing K253117	轴承K253117		2		2		2
4	**LZT304.42.126**	Inner spacer of needle roller	滚针内隔套		1		1		1
5	**LZT304.42.125**	Idler of transfer case	分动箱惰轮		1		1		1
6	**GB/T5783**	Hexagon head bolt - full thread M10*25	全螺纹螺栓M10×25		5		5		5
7	**GB/T93**	Single coil spring lock washer 10-normal type	垫圈10		4		4		4
8	**LZT304.42.101**	Housing of transfer case	分动箱壳体		1		1		1
9	**GB3452.1**	O-seal ring 132*3.55	O形密封圈132×3.55		1		1		1
10	**LZT304.42.112**	Thrust screw	止推螺钉		1		1		1
11	**GB/T6176**	Hexagon nut, style 2 with fine pitch thread M10*1	螺母M10×1		1		1		1
12	**GB/T119**	Parallel pin A10*22	圆柱销A10×22		2		2		2
13	**LZT304.42.117**	Bearing housing	轴承盖		1		1		1
14	**LZT304.42.134**	Handle cap Ⅱ	手柄套 II		1		1		1
15	**LZT304.42.014a**	Control rod weldment	操纵杆焊合件		1		1		1
16	**LZT304.42.124**	Locating spring	定位弹簧		1		1		1

133

续表1 Continued One

17	**GB/T308-1989**	Stell ball 8	钢球8		1		1		1
18	**LZT304.42.114**	Locating plate	定位板		1		1		1
19	**GB/T93**	Single coil spring lock washer 8-normal type	垫圈8		8		8		8
20	**GB/T5783**	Hexagon head bolt - full thread M8*20	螺栓M8×20		8		8		8
21	**GB3452.1**	O-seal ring 25*26.5	O形密封圈25×26.5		2		2		2
22	**LZT304.42.115**	Hold-down plate	压板		1		1		1
23	**GB/T6170**	Hexagon nut, style 1 M10	螺母M10		2		2		2
24	**LZT304.42.116**	Stick	堵头		1		1		1
25	**JB3798-1984**	Plug M12*1.5	螺塞M12×1.5		1		1		1
26	**LZT304.42.118**	Washer	垫圈		1		1		1
27	**GB/T1096**	Feather key C6*30	平键C6×30		1		1		1
28	**LZT304.42.119**	Gear fork shaft of transhfer case	分动箱拨叉轴		1		1		1
29	**GB/T276**	Rolling bearing - Deep groove ball bearing 306	轴承306		2		2		2
30	**LZT304.42.120**	Gear fork end of transhfer case	分动箱拨叉头		1		1		1
31	**LZT304.42.104**	Driven gear of transfer case	分动箱被动齿轮		1		1		1
32	**LZT304.42.105**	Driven shaft of transfer case	分动箱输出轴		1		1		1
33	**GB/T9877.1**	Skeleton oil sealing 30*52*7	骨架油封30×52×7		1		1		1
34	**LZT304.42.106**	Bearing housing	轴承座		1		1		1
35	**GB3452.1**	O-seal ring 43.7*2.65	O形密封圈		1		1		1
36	**GB/T894.1**	Spring-type straight pin 6*35	轴用弹性挡圈26		1		1		1
37	**LZT304.42.107a**	Hub splines	花键套		2		2		2

134

https://truckmanualshub.com/

42 分动箱 总成-2

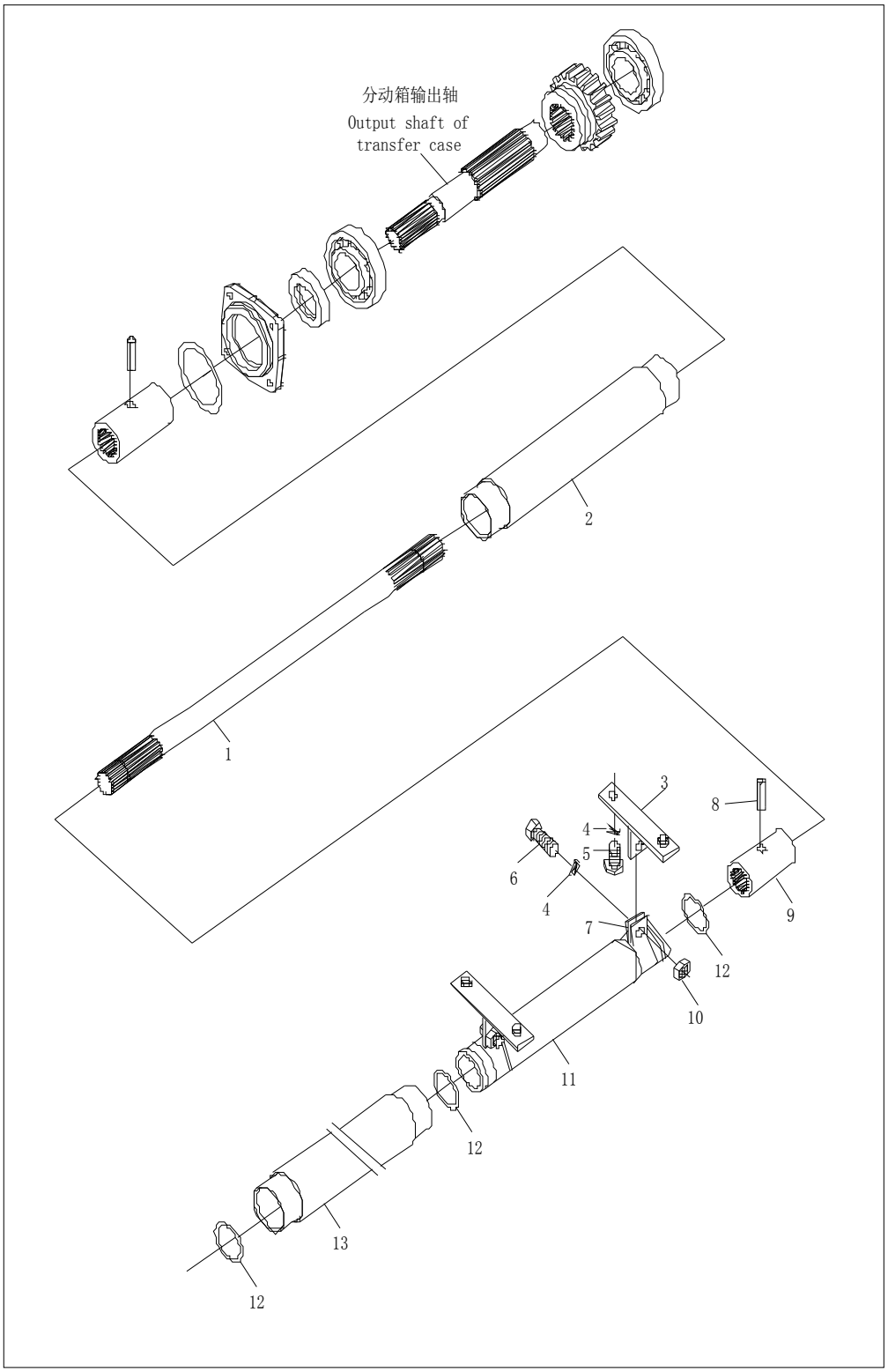

135

42 分动箱总成-2
Transfer Case Assembly-2

序号 No.	零部件代号 Drawing No.	Part Name and Standards	零部件名称及规格	适用机型和用量（件） Applied Tractor Models and Qty.(Piece)					
				LZT 300	LZT 304	LZT 350	LZT 354	LZT400 /450/480 /500/520 /550	LZT404 /454/484 /504/524 /554
	LZT304.42.001a	Transfer case assembly			1		1		1
	LZT304.42C.001a	Transfer case assembly			1		1		1
1	**LZT304.42.128a**	Driving shaft	传动轴		1		1		1
	LZT304.42C.128a	Driving shaft	传动轴		1		1		1
2	**LZT304.42.015**	Guard cap weldment (1)	护套（1）焊合件		1		1		1
3	**LZT304.42.013**	Fixed seat welement	固定座焊合件		2		2		2
4	**GB/T 93**	Single coil spring lock washer 10-normal type	弹性垫圈10		6		6		6
5	**GB/T 5783**	Hexagon head bolt - full thread M10*20	螺栓M10X20		4		4		4
6	**GB/T 5783**	Hexagon head bolt - full thread M10*25	螺栓M10X25		2		2		2
7	**LZT304.42.109**	Clamp	卡箍		2		2		2
8	**GB/T 879**	Spring-type straight pin 6*35	弹性圆柱销6X35		1		1		1
9	**LZT304.42.107**	Hub splines	花键套		2		2		2
10	**GB/T 6170**	Hexagon nut, style 1 M10	I型螺母M10		2		2		2
11	**LZT304.42.110**	Guard cap weldment(2)	护套（2）		1		1		1
12	**GB/T 3452.1**	O-seal ring 43.7*2.65	O形密封圈43.7X 2.65		2		2		2
13	**LZT304.42.016**	Guard cap weldment(3)	护套（3）焊合件		1		1		
	LZT304.42C.016	Guard cap weldment(3)	护套（3）焊合件		1		1		1

https://truckmanualshub.com/

43 制动器总成-1

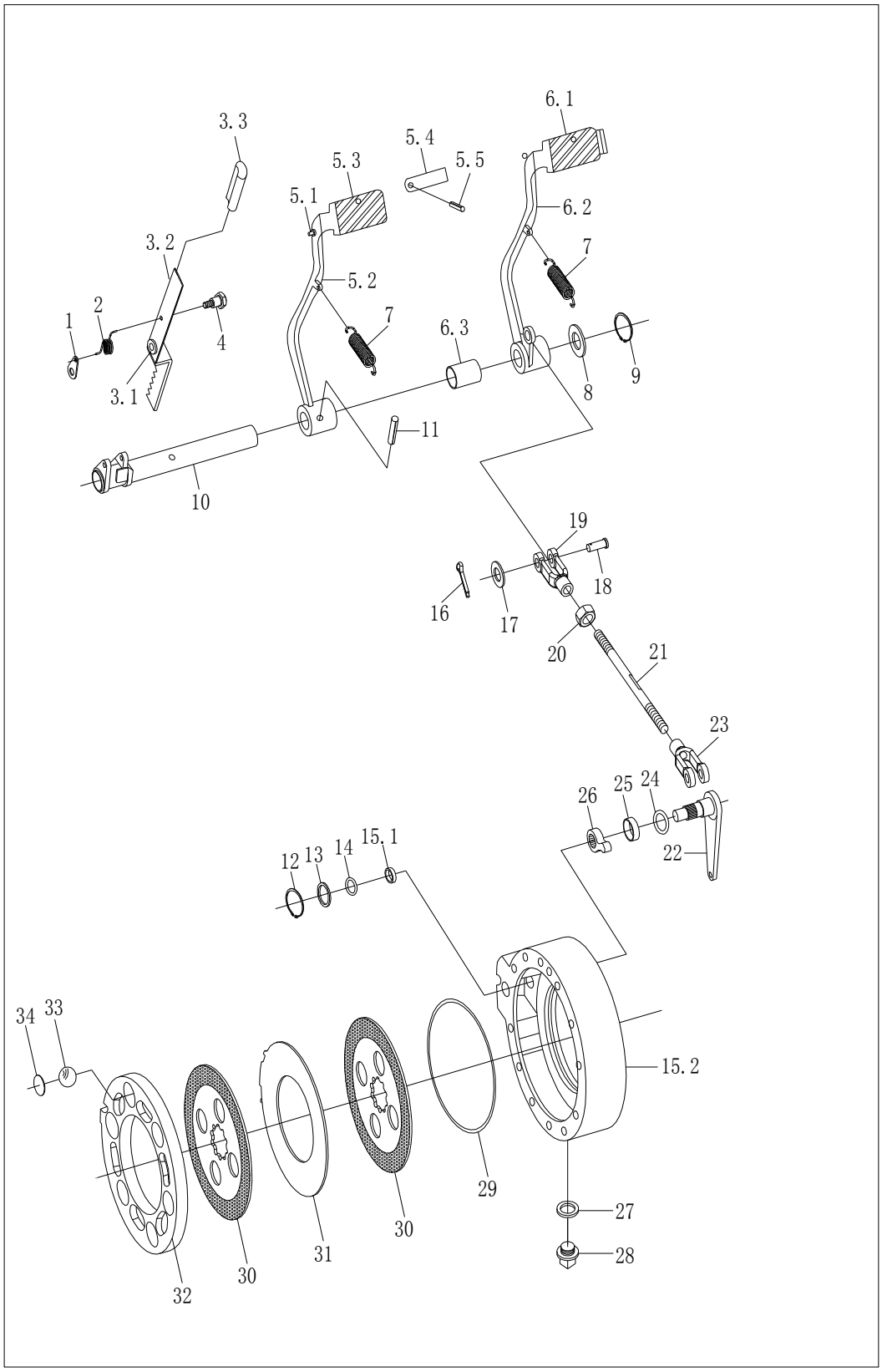

137

43 制动器总成-1
Brake Assembly-1

序号 No.	零部件代号 Drawing No.	Part Name and Standards	零部件名称及规格	适用机型和用量（件） Applied Tractor Models and Qty.(Piece)					
				LZT 300	LZT 304	LZT 350	LZT 354	LZT400 /450/480 /500/520 /550	LZT404 /454/484 /504/524 /554
	LZT300.43.001	Brake assembly	制动器总成	**1**	**1**	**1**	**1**	**1**	**1**
1	**LZT300.43.140**	Plate shim for brake locking	制动锁定板垫	1	1	1	1	1	1
2	**LZT300.43.124**	Torsion spring	扭力弹簧	1	1	1	1	1	1
3	**LZT300.43.025**	Plate unit for brake locking	制动锁定板合件	1	1	1	1	1	1
3.1	**LZT300.43.128**	Brake locking plate sleeve	制动锁定位套	1	1	1	1	1	1
3.2	**LZT300.43.129**	Brake locking plate	制动锁定板	1	1	1	1	1	1
3.3		Handle	手柄	1	1	1	1	1	1
4	**LZT300.43.127**	Bolt for brake lock	制动锁螺栓	1	1	1	1	1	1
5	**LZT300.43.015**	Brake pedal unit,left	左制动踏板合件	1	1	1	1	1	1
5.1	**GB/T 119**	Parallel pin A6*18	圆柱销A6X18	1	1	1	1	1	1
5.2	**LZT300.43.123**	Left brake pedal body	左制动踏板体	1	1	1	1	1	1
5.3	**LZT300.43.125**	Left brake pedal head	左制动踏板头	1	1	1	1	1	1
5.4	**LZT300.43.113**	Coupling plate	联动板	1	1	1	1	1	1
5.5	**GB/T 879**	Spring-type straight pin -slotted 6*25	弹性圆柱销6X25	1	1	1	1	1	1
6	**LZT300.43.016**	Brake locking unit, right	右制动器踏板合件	1	1	1	1	1	1
6.1	**LZT300.43.135**	Right brake pedal head	右制动器踏板头	1	1	1	1	1	1
6.2	**LZT300.43.134**	Right brake pedal body	右制动器踏板体	1	1	1	1	1	1
6.3	**LZT300.43.112**	Sleeve, brake pedal	衬套	1	1	1	1	1	1
7	**LZT300.43.130**	Pedal return spring	踏板回位弹簧	2	2	2	2	2	2
8	**GB/T 97.1**	Plain washer 24-product grade A	平垫圈24	1	1	1	1	1	1
9	**GB/T 894.1**	Circlip for shaft 25 -type A	轴用弹性挡圈25	1	1	1	1	1	1
10	**LZT300.43.020**	Pedal shaft unit	踏板轴合件	1	1	1	1	1	1
11	**GB/T 879**	Spring-type straight pin -slotted 10*40	弹性圆柱销10X40	1	1	1	1	1	1

138

续表1 Continued One

12	**GB/T 894.1**	Circlip for shaft 18 - type A	轴用弹性挡圈18	2	2	2	2	2	2
13	**LZT300.43.109**	Washer	垫圈	2	2	2	2	2	2
14	**GB 3452.1**	O-seal ring 18*2.65	O形密封圈18X2.65	2	2	2	2	2	2
15	**LZT300.43.013**	Right brake housing assembly	右制动器壳总成	1	1	1	1	1	1
15. 1	**LZT300.43.114**	Sleeve of crankshaft	曲柄轴衬套	2	2	2	2	2	2
15. 2	**LZT300.43.122**	Right brake housing	右制动器壳	1	1	1	1	1	1
16	**GB/T 91**	Split pin 3.2*16	开口销3.2X16	4	4	4	4	4	4
17	**GB/T97.1**	Plain washer - product grade A 8-140HV	平垫圈8-140HV	4	4	4	4	4	4
18	**GB/T 882**	Clevis pin with head B8*28	销轴B8X28	4	4	4	4	4	4
19	**LZT300.43.108**	Front fork of drawbar	拉杆前叉	2	2	2	2	2	2
20	**GB/T 6176**	Hexagon nut, style 2 M10	2型细牙螺母M10	2	2	2	2	2	2
21	**LZT300.43.120**	Drawbar	拉杆	2	2	2	2	2	2
22	**LZT300.43.022**	Crank unit, right	右曲柄合件	1	1	1	1	1	1
23	**LZT300.43.110**	Rear fork of drawer	拉杆后叉	2	2	2	2	2	2
24	**GB 3452.1**	O-seal ring 20*2.65	O形密封圈20X2.65	2	2	2	2	2	2
25	**LZT300.43.107**	Spacer sleeve	隔套	2	2	2	2	2	2
26	**LZT300.43.106**	Shift briquet	拨块	2	2	2	2	2	2
27	**LZT300.43.153**	Final drive oil outlet washer, front	前最终传动放油口垫圈	2	2	2	2	2	2
28	**LZT300.43.154**	Plug	螺塞	2	2	2	2	2	2
29	**LZT300.43.101**	O-seal ring	O形圈	1	1	1	1	1	1
30	**LZT300.43.011**	Friction disk assembly	制动器摩擦盘总成	4	4	4	4	4	4
31	**LZT300.43.105**	Retainer	隔板	2	2	2	2	2	2
32	**LZT300.43.104**	Brake pressure disk,right	右制动器压盘	1	1	1	1	1	1
33	**GB/T 308**	Steel ball 18.0000G100b	钢球18.0000G100b	12	12	12	12	12	12
34	**LZT300.43.102**	Bowl plug	碗形塞	12	12	12	12	12	12

139

https://truckmanualshub.com/

43 制动器总成-2

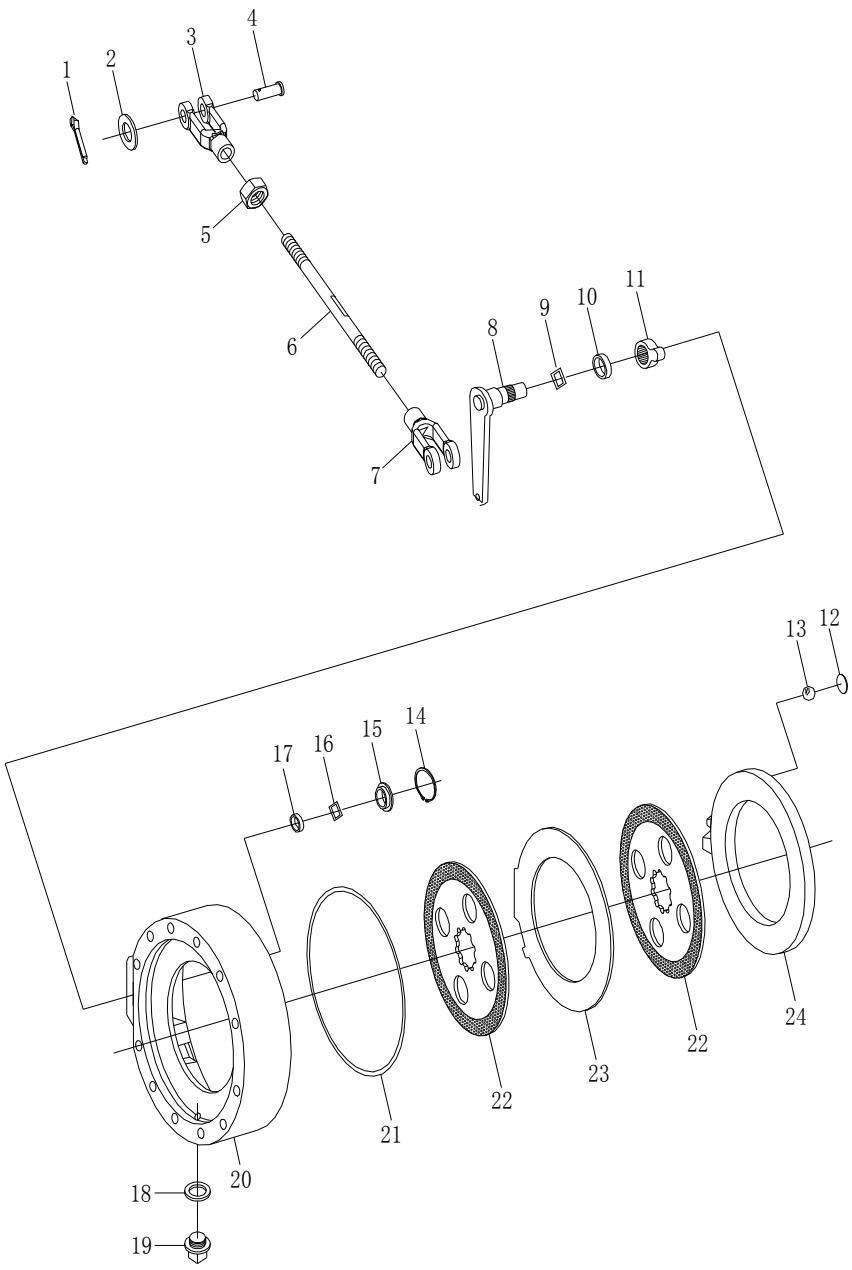

140

43 制动器总成-2
Brake Assembly-2

序号 No.	零部件代号 Drawing No.	Part Name and Standards	零部件名称及规格	适用机型和用量（件） Applied Tractor Models and Qty.(Piece)					
				LZT 300	LZT 304	LZT 350	LZT 354	LZT400 /450/480 /500/520 /550	LZT404 /454/484 /504/524 /554
1	**GB/T91**	Split pin 3.2*16	开口销3.2X16	2	2	2	2	2	2
2	**GB/T97.1**	Plain washer - product grade A 8-140HV	平垫圈8-140HV	2	2	2	2	2	2
3	**LZT300.43.108**	Front fork of drawbar	拉杆前叉	1	1	1	1	1	1
4	**GB/T882**	Clevis pin with head B8*28	销轴B8X28	1	1	1	1	1	1
5	**GB/T6176**	Hexagon nut, style 2 M10	螺母M10	1	1	1	1	1	1
6	**LZT300.43.120**	Drawbar	拉杆	1	1	1	1	1	1
7	**LZT300.43.110**	Rear fork of drawbar	拉杆后叉	1	1	1	1	1	1
8	**LZT300.43.014**	Crank unit,left	左曲柄合件	1	1	1	1	1	1
9	**GB3452.1**	O-seal ring 20*2.65	O形密封圈20X2.65	1	1	1	1	1	1
10	**LZT300.43.107**	Spacer sleeve	隔套	1	1	1	1	1	1
11	**LZT300.43.106**	Shift briquet	拨块	1	1	1	1	1	1
12	**LZT300.43.102**	Bowl plug	碗形塞	6	6	6	6	6	6
13	**GB/T308**	Steel ball 18.0000G100b	钢球18.0000G100b	6	6	6	6	6	6
14	**GB/T894.1**	Circlip for shaft 18 - type A	轴用弹性挡圈18	1	1	1	1	1	1
15	**LZT300.43.109**	Washer	垫圈	1	1	1	1	1	1
16	**GB3452.1**	O-seal ring 18*2.65	O形密封圈18X2.65	1	1	1	1	1	1
17	**LZT300.43.114**	Sleeve of crankshaft	曲柄轴衬套	1	1	1	1	1	1
18	**LZT300.43.153**	Final drive oil outlet washer, front	前最终传动放油口垫圈	1	1	1	1	1	1
19	**LZT300.43.154**	Plug	螺塞	1	1	1	1	1	1
20	**LZT300.43.121**	Left brake housing	左制动器壳	1	1	1	1	1	1
21	**LZT300.43.101**	O-seal ring	O形圈	1	1	1	1	1	1
22	**LZT300.43.011**	Friction disk assembly	制动器摩擦盘总成	2	2	2	2	2	2
23	**LZT300.43.105**	Retainer	隔板	1	2	2	2	2	2
24	**LZT300.43.103**	Brake pressure disk, left	左制动器压盘	1	1	1	1	1	1

141

https://truckmanualshub.com/

44/44B 座椅安装总成

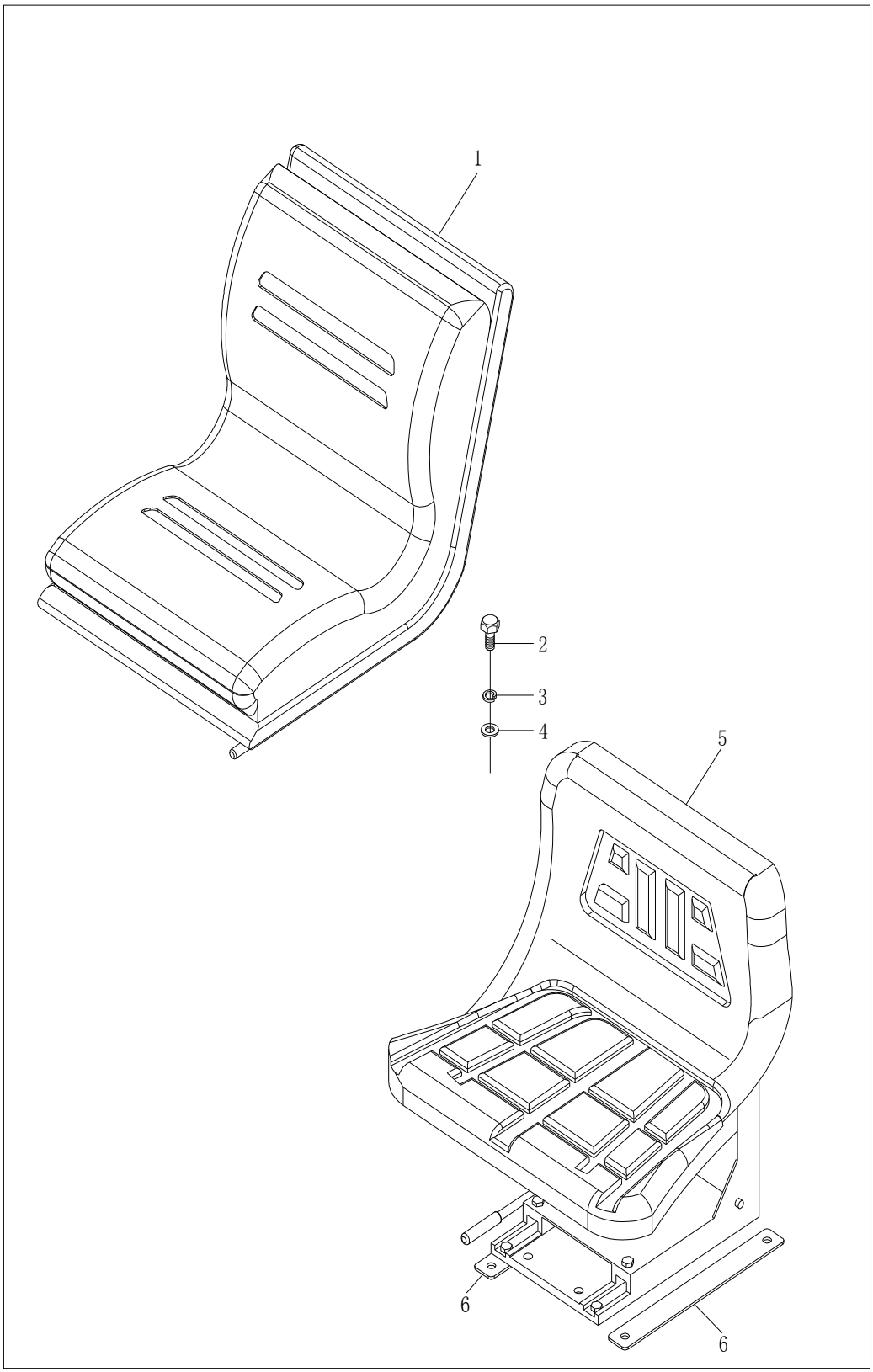

142

https://truckmanualshub.com/

44 座椅安装总成
Driver's Seat Assembly

序号 No.	零部件代号 Drawing No.	Part Name and Standards	零部件名称及规格	适用机型和用量（件） Applied Tractor Models and Qty.(Piece)					
				LZT 300	LZT 304	LZT 350	LZT 354	LZT400 /450/480 /500/520 /550	LZT404 /454/484 /504/524 /554
1	**LZT300.44.010**	Driver's sear assembly	座椅总成	**1**	**1**	**1**	**1**	**1**	**1**
	LZT300.44.001	Seat belt assembly	安全带总成	△	△	△	△	△	△
2	**GB/T 5783**	Hexagon head bolt - full thread M8*20-Zn.D	螺栓M8X20-Zn.D	4	4	4	4	4	4
3	**GB/T 93**	Single coil spring lock washer 8-normal type	垫圈8	4	4	4	4	4	4
4	**GB/T 97.1**	Plain washer 8-product grade A	垫圈8	4	4	4	4	4	4

Note: △ Optional, depending on requirement

44B 座椅安装总成
Driver's Seat Assembly

序号 No.	零部件代号 Drawing No.	Part Name and Standards	零部件名称及规格	适用机型和用量（件） Applied Tractor Models and Qty.(Piece)					
				LZT 300	LZT 304	LZT 350	LZT 354	LZT400 /450/480 /500/520 /550	LZT404 /454/484 /504/524 /554
5	**LZT300.44B.010**	Driver's sear assembly	座椅总成	1	1	1	1	1	1
6	**LZT300.44B.101**	Cushion for driver's seat	座椅垫板	2	2	2	2	2	2

143

https://truckmanualshub.com/

驾驶室总成-1

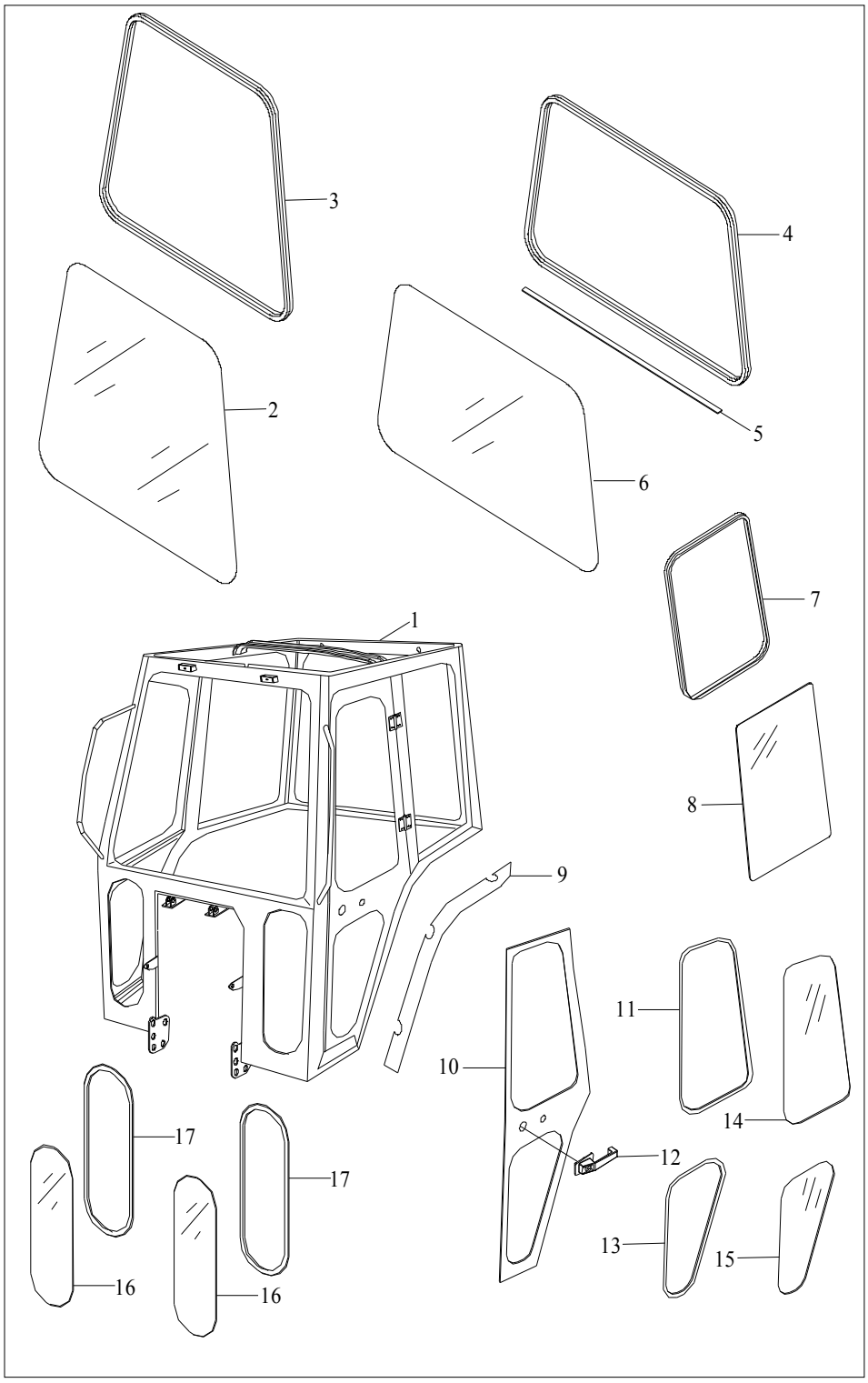

144

驾驶室总成-1
Driver's Cab Assembly-1

标号No.	零部件代号 Drawing No.	Part Name and Standards	零部件名称及规格	适用机型和用量（件） Applied Tractor Models and Qty.(Piece)					
				LZT 300	LZT 304	LZT 350	LZT 354	LZT400 /450/480 /500/520 /550	LZT404 /454/484 /504/524 /554
	LZT300.45.001	Driver's cab assembly	驾驶室总成	**1**	**1**	**1**	**1**	**1**	**1**
1	**LZT300.45.010**	Driver's cab welding assembly	驾驶室焊接总成	1	1	1	1	1	1
2	**LZT300.45.181**	Front wind shield glass	前风挡玻璃	1	1	1	1	1	1
3	**LZT300.45.601**	Packing strip, front wind shield glass	前风挡玻璃嵌条	1	1	1	1	1	1
4	**LZT300.45.602**	Packing strip, rear window	后窗玻璃嵌条	**1**	**1**	**1**	**1**	**1**	**1**
5	**LZT300.45.803**	Rubber strip, rear window	后胶垫	**1**	**1**	**1**	**1**	**1**	**1**
6	**LZT300.45.182**	Glass, rear window	后窗玻璃	**1**	**1**	**1**	**1**	**1**	**1**
7	**LZT300.45.609**	Packing strip, side window	侧窗玻璃嵌条	**2**	**2**	**2**	**2**	**2**	**2**
8	**LZT300.45.183**	Glass, side window	侧窗玻璃	**2**	**2**	**2**	**2**	**2**	**2**
9	**LZT300.45.801**	Long rubber strip	长胶垫	**2**	**2**	**2**	**2**	**2**	**2**
10	**LZT300.45.141**	Frame welding, left door	左车门焊合	1	1	1	1	1	1
	LZT300.45.142	Frame welding, right door	右车门焊合	1	1	1	1	1	1
11	**LZT300.45.604**	Packing strip, upper window	车门上窗玻璃嵌条	2	2	2	2	2	2
12	**LZT300.45.081**	Lock assembly, left door	左门锁总成	1	1	1	1	1	1
	LZT300.45.082	Lock assembly, right door	右门锁总成	1	1	1	1	1	1
13	**LZT300.45.605**	Packing strip, rear window	车门下窗玻璃嵌条	2	2	2	2	2	2
14	**LZT300.45.185**	Glass, left side upper window	左车门上窗玻璃	1	1	1	1	1	1
	LZT300.45.186	Glass, right side upper window	右车门上窗玻璃	1	1	1	1	1	1
15	**LZT300.45.187**	Glass, left side rear window	左车门下窗玻璃	1	1	1	1	1	1
	LZT300.45.188	Glass, right side rear window	右车门下窗玻璃	1	1	1	1	1	1
16	**LZT300.45.184**	Glass, front lower window	前下窗玻璃	2	2	2	2	2	2
17	**LZT300.45.603**	Packing strip, front lower window	前下窗玻璃嵌条	2	2	2	2	2	2

145

https://truckmanualshub.com/

驾驶室总成-2

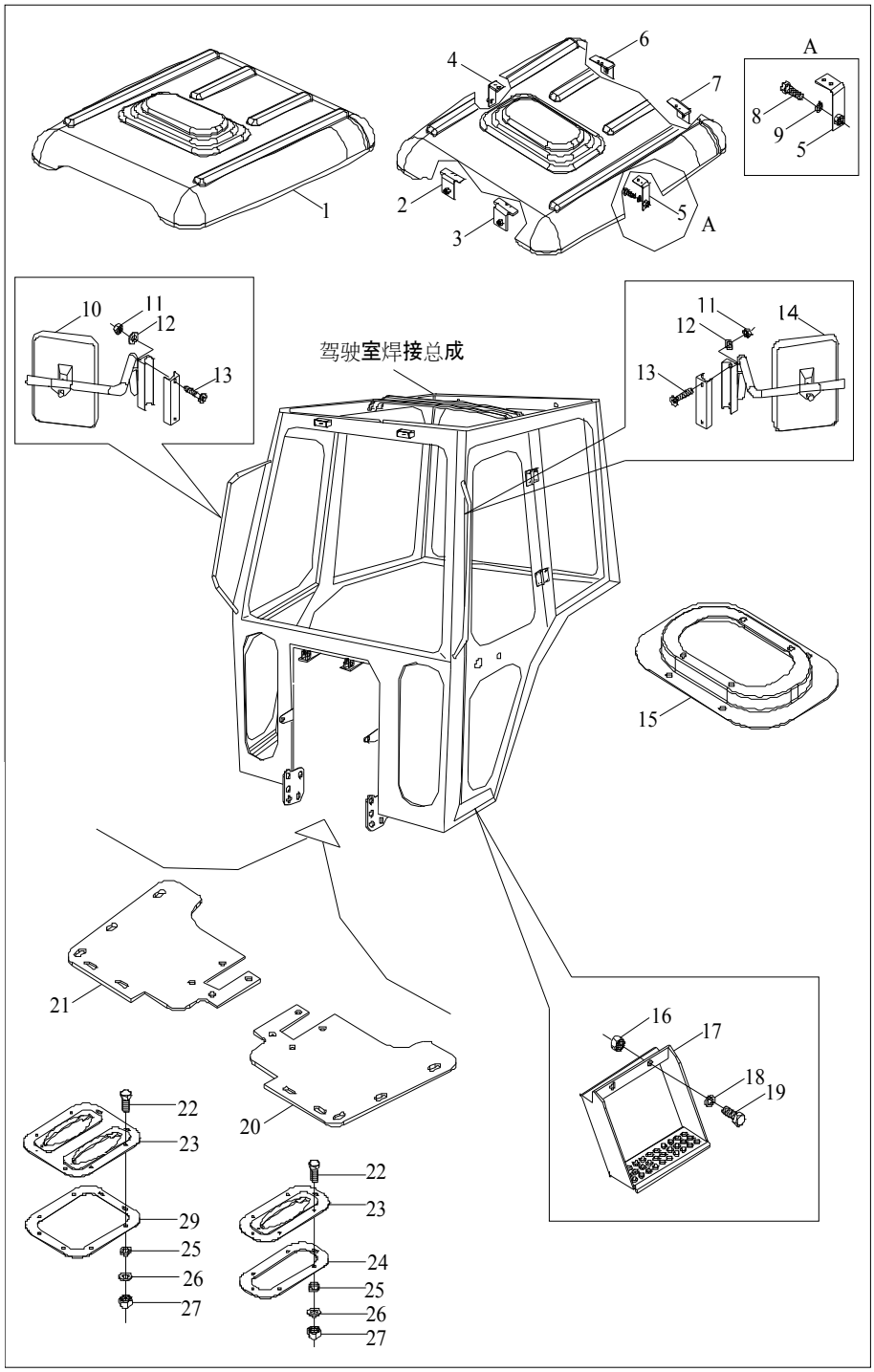

146

https://truckmanualshub.com/

驾驶室总成-2
Driver's Cab Assembly-2

标号No.	零部件代号 Drawing No.	Part Name and Standards	零部件名称及规格	适用机型和用量（件） Applied Tractor Models and Qty.(Piece)					
				LZT 300	LZT 304	LZT 350	LZT 354	LZT400 /450/480 /500/520 /550	LZT404 /454/484 /504/524 /554
1	**LZT300.45.030**	Upper cover weldment	顶盖焊合	1	1	1	1	1	1
2	**LZT300.45.306**	Front plank of upper cover, right	顶盖右前支架	1	1	1	1	1	1
3	**LZT300.45.305**	Front plank of upper cover, left	顶盖左前支架	1	1	1	1	1	1
4	**LZT300.45.308**	Middle plank of upper cover, right	顶盖右中支架	1	1	1	1	1	1
5	**LZT300.45.307**	Middle plank of upper cover, left	顶盖左中支架	1	1	1	1	1	1
6	**LZT300.45.310**	Rear plank of upper cover, right	顶盖右后支架	1	1	1	1	1	1
7	**LZT300.45.309**	Rear plank of upper cover, left	顶盖左后支架	1	1	1	1	1	1
8	**GB/T5783**	Bolt M8*20-A2L	螺栓M8×20-	**6**	**6**	**6**	**6**	**6**	**6**
9	**GB93**	Washer 8-A2L	垫圈8-A2L	6	6	6	6	6	6
10	**LZT65.45.059**	Rear-view mirror, right	右后视镜	1	1	1	1	1	1
11	GB/T91	Nut M6-Zn.D	螺母M6-Zn.D	4	4	4	4	4	4
12	GB/T95	Washer 6-140HV-Zn.D	垫圈6-140HV-Zn.D	4	4	4	4	4	4
13	GB/T819	Cross recessed countersunk head screw	十字槽沉头螺钉	4	4	4	4	4	4
14	**LZT65.45.058**	Rear-view mirror, left	左后视镜	1	1	1	1	1	1
15	**LZT300.45.303**	Fan housing	风扇支座	1	1	1	1	1	1
16	**GB6170**	Nut M10-A2L	螺母M10-A2L	10	10	10	10	10	10
17	**LZT300.45.017**	Pedal assembly, left	左脚蹬总成	**1**	**1**	**1**	**1**	**1**	**1**
	LZT300.45.018	Pedal assembly, right	右脚蹬总成	**1**	**1**	**1**	**1**	**1**	**1**
18	**GB93**	Washer 10-A2L	垫圈10-A2L	**10**	**10**	**10**	**10**	**10**	**10**
19	**GB/T5782**	Bolt M10*70-A2L	螺栓M10×70-A2L	**4**	**4**	**4**	**4**	**4**	**4**
20	**LZT300.45.131**	Front floor, left	左前地板	**1**	**1**	**1**	**1**	**1**	**1**
21	**LZT300.45.141**	Front floor, right	右前地板	**1**	**1**	**1**	**1**	**1**	**1**
22	**GB/T5783**	Bolt M5*20-A2L	螺栓M5×20-A2L	**12**	**12**	**12**	**12**	**12**	**12**
23	**LZT300.45.133**	Dust cover of clutch pedal	离合踏板防尘罩	1	1	1	1	1	1
24	**LZT300.45.134**	Dust cover of clutch pedal layer	离合踏板防尘罩压条	1	1	1	1	1	1
25	**GB93**	Washer 5-A2L	垫圈5-A2L	3	3	3	3	3	3
26	**GB97.1**	Washer 5	垫圈5	12	12	12	12	12	12
27	**GB6170**	Nut M5-A2L	螺母M5-A2L	3	3	3	3	3	3
28	**LZT300.45.143**	Dust cover of brake pedal	制动踏板防尘罩	1	1	1	1	1	1
29	**LZT300.45.144**	Dust cover of brake pedal layer	制动踏板防尘罩压条	1	1	1	1	1	1

147

https://truckmanualshub.com/

LZT400.46.001安全架总成

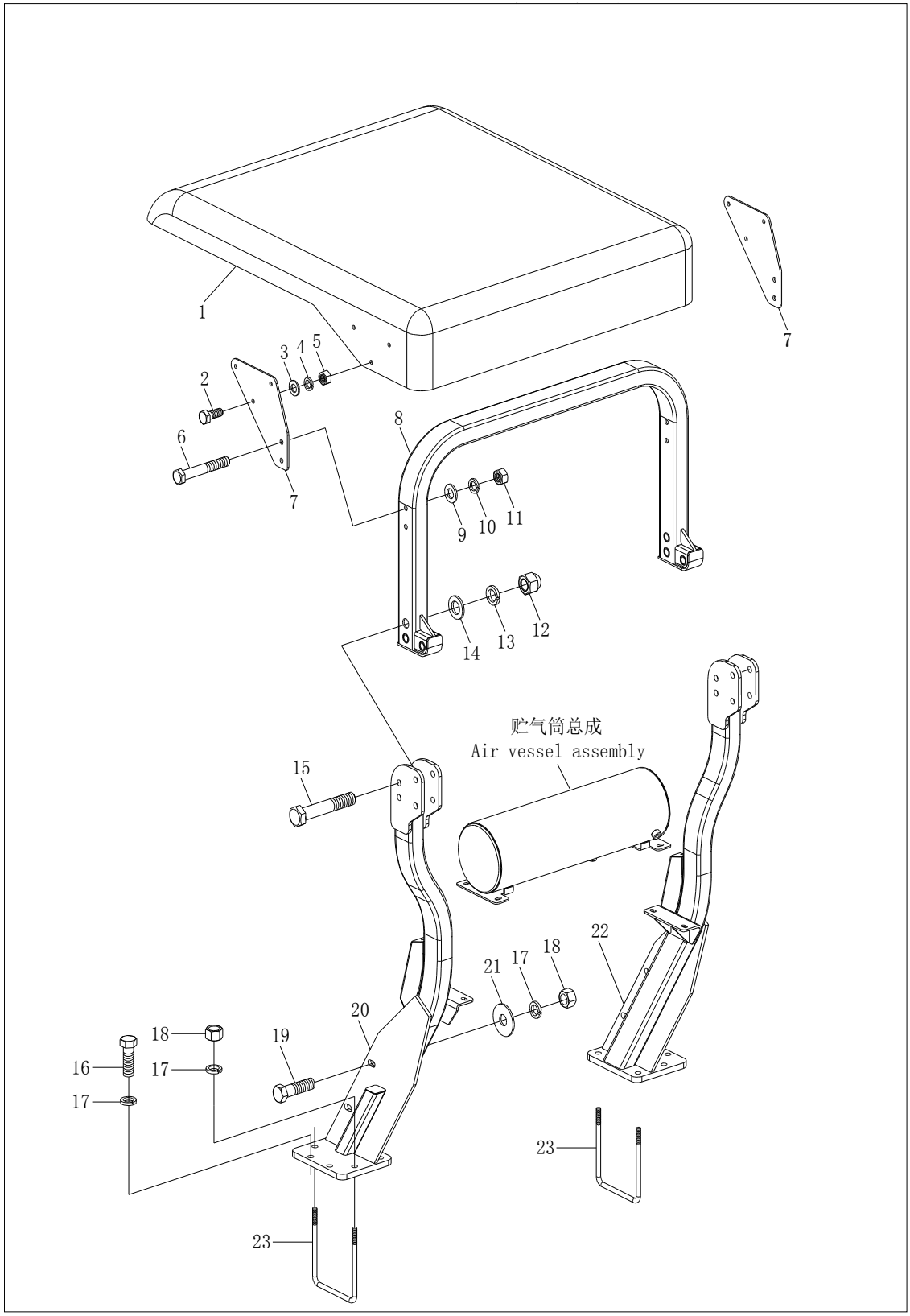

148

46安全架总成
Safety Frame Assembly

序号 No.	零部件代号 Drawing No.	Part Name and Standards	零部件名称及规格	适用机型和用量（件） Applied Tractor Models and Qty.(Piece)					
				LZT 300	LZT 304	LZT 350	LZT 354	LZT400 /450/480 /500/520 /550	LZT404 /454/484 /504/524 /554
	LZT400.46.001	Safety frame assembly	安全架总成	1	1	1	1	1	1
1	**LZT300.46.012**	Sunshade assembly	遮阳棚总成	1	1	1	1	1	1
2	**GB/T 5783**	Hexagon head bolt -full thread M10*25-Zn.D	全螺纹螺栓M10*25-Zn.D	6	6	6	6	6	6
3	**GB/T 95**	Plain washer 10-product grade C	平垫圈10	6	6	6	6	6	6
4	**GB/T 93**	Single coil spring lock washer -normal type 10-Zn.D	弹性垫圈10-Zn.D	6	6	6	6	6	6
5	**GB/T 6170**	Hexagon nut,style 1 M10-Zn.D	I型螺母M10--Zn.D	6	6	6	6	6	6
6	**GB/T 5782**	Hexagon head bolt M12*80-Zn.D	螺栓M12*80-Zn.D	4	4	4	4	4	4
7	**LZT300.46.106**	Fixing plate,sunshade	遮阳棚固定板	2	2	2	2	2	2
8	**LZT400.46.011**	Upper cross beam weldment	上梁焊合	1	1	1	1	1	1
9	**GB/T 95**	Plain washer 12-product grade C	平垫圈12	4	4	4	4	4	4
10	**GB/T 93**	Single coil spring lock washer -normal type	弹性垫圈12-Zn.D	4	4	4	4	4	4

149

续表1 Continued One

11	**GB/T 6170**	Hexagon nut,style 1 M12-Zn.D	I型螺母M12--Zn.D	4	4	4	4	4	4
12	**GB/T 802**	Acorn nut M16-Zn.D	组合盖形螺母M16-Zn.D	6	6	6	6	6	6
13	**GB/T 93**	Single coil spring lock washer -normal type 16-Zn.D	弹性垫圈16-Zn.D	6	6	6	6	6	6
14	**GB/T 95**	Plain washer 16-product grade C	平垫圈16	6	6	6	6	6	6
15	**GB/T 5782**	Hexagon head bolt M16*80-Zn.D	螺栓M12*80-Zn.D	6	6	6	6	6	6
16	**GB/T 5783**	Hexagon head bolt -full thread M14*40-Zn.D	全螺纹螺栓M14X40-Zn.D	4	4	4	4	4	4
17	**GB/T 93**	Single coil spring lock washer -normal type 14-Zn.D	弹性垫圈14-Zn.D	16	16	16	16	16	16
18	**GB/T 6170**	Hexagon nut,style 1 M14-Zn.D	I型螺母M14--Zn.D	12	12	12	12	12	12
19	**GB/T 5783**	Hexagon head bolt -full thread M14*45-Zn.D	全螺纹螺栓M14X45-Zn.D	4	4	4	4	4	4
20	**LZT400.46.013**	Support bearm weldment (left)	左支撑梁焊合	1	1	1	1	1	1
21	**GB/T 97.1**	Plain washer 14-product grade A	平垫圈14	4	4	4	4	4	4
22	**LZT400.46.014**	Support bearm weldment (right)	右支撑梁焊合	1	1	1	1	1	1
23	**LZT400.46.350**	"U" bolt	U型螺栓	4	4	4	4	4	4

150

https://truckmanualshub.com/

47 机罩装置总成（一）

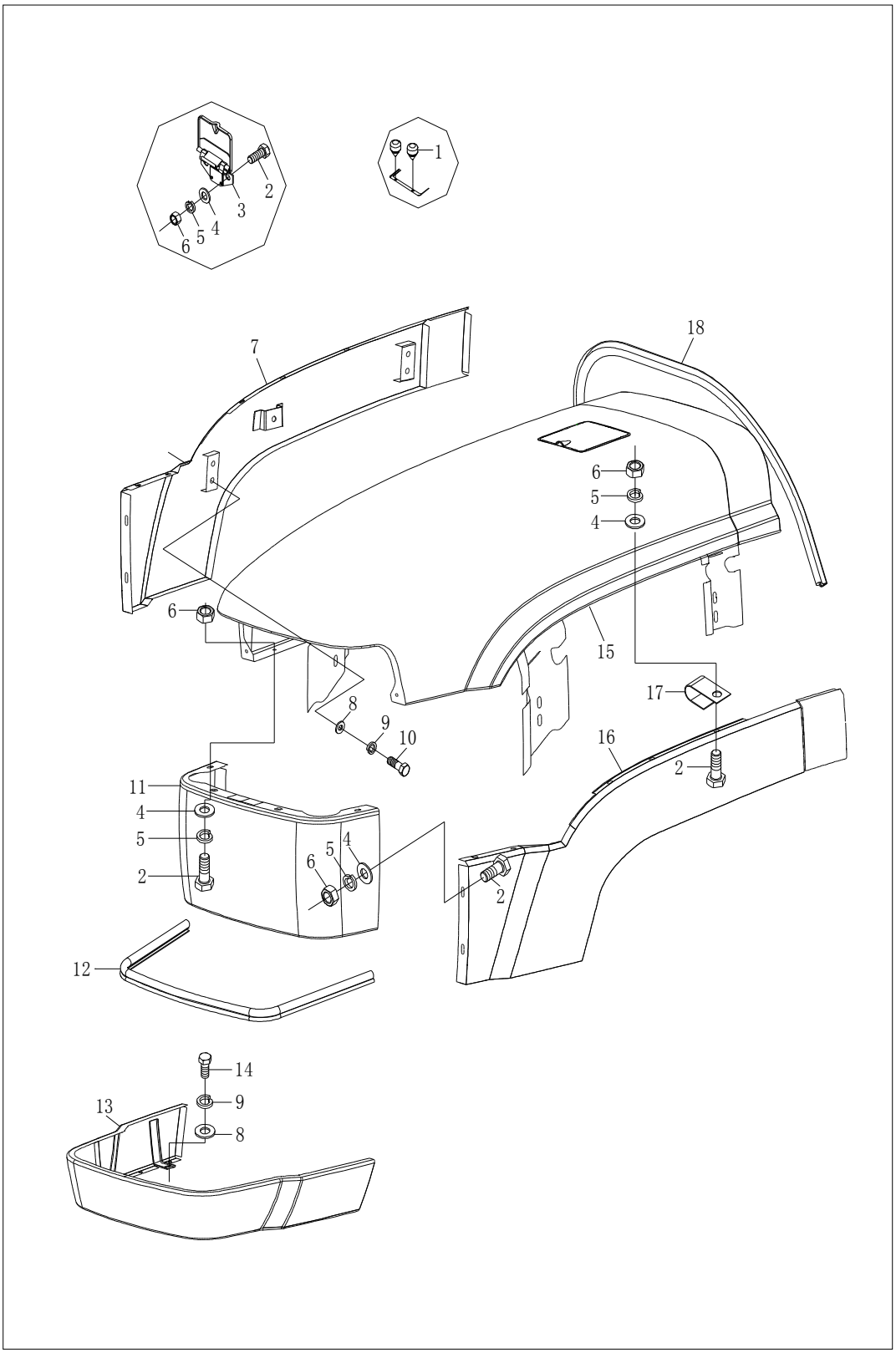

151

https://truckmanualshub.com/

47 机罩装配总成-1
Helmet Structure Assembly-1

序号 No.	零部件代号 Drawing No.	Part Name and Standards	零部件名称及规格	适用机型和用量（件） Applied Tractor Models and Qty.(Piece)					
				LZT 300	LZT 304	LZT 350	LZT 354	LZT400 /450/480 /500/520 /550	LZT404 /454/484 /504/524 /554
1	LZT65.47.111	Cushion-nail	缓冲钉	2	2	2	2	2	2
2	GB/T5783	Hexagon head bolt -full thread M6*16①	螺栓M6X16 ②	11	11	11	11		
	GB/T5783	Hexagon head bolt -full thread M6*16	螺栓M6X16	13	13	13	13	13	13
3	LZT65.47.026	Upper free cover pivot unit	机罩上活盖铰链合件	1	1	1	1	1	1
4	GB/T97.1	Plain washer 6-product grade A①	平垫圈6 ②	16	16	16	16		
	GB/T97.1	Plain washer 6-product grade A	平垫圈6	18	18	18	18	18	18
5	GB/T93	Single coil spring lock washer 6-normal type ①	弹簧垫圈6 ②	16	16	16	16		
	GB/T93	Single coil spring lock washer 6-normal type	弹簧垫圈6	18	18	18	18	18	18
6	GB/T6170	Hexagon nut,style 1 ①	I形六角螺母 ②	16	16	16	16		
	GB/T6170	Hexagon nut,style 1	I形六角螺母	18	18	18	18	18	18
7	LZT300.47.012	Right side plate assembly①	机罩右侧板总成 ②	1	1	1	1		
	LZT400.47.012	Right side plate assembly	机罩右侧板总成	1	1	1	1	1	1

152

续表1 Continued One

8	GB/T97.1	Plain washer 8-product grade A	平垫圈8	12	12	12	12	12	12
9	GB/T93	Single coil spring lock washer 8-normal type	弹簧垫圈8	12	12	12	12	12	12
10	GB/T5783	Hexagon head bolt -full thread M8*25	六角螺栓8X25	8	8	8	8	8	8
11	LZT300.47.011	Screw plate assembly, heldment	机罩网眼板总成	1	1	1	1	1	1
12	LZT65.47.108	Lower cushion-rubber belt,front	前下缓冲胶条	1	1	1	1	1	1
13	LZT300.47.025	Lower end gate assembly,heldment	机罩下尾板总成	1	1	1	1	1	1
14	GB/T5783	Hexagon head bolt -full thread M8*16	螺栓M8X16	4	4	4	4	4	4
15	LZT300.47.010	Upper plate welding, helment①	机罩上板焊接②	1	1	1	1		
	LZT400.47.010	Upper plate welding, helment	机罩上板焊接	1	1	1	1	1	1
16	LZT300.47.013	Left side plate assembly	机罩左侧板总成②	1	1	1	1		
	LZT400.47.013	Left side plate assembly	机罩左侧板总成	1	1	1	1	1	1
17	LZT65.48.097	Harness holder(2)	线束紧固夹（二）	6	6	6	6	6	6
18	LZT300.47.110	Rear packing strip, heldment	机罩后密封条	1	1	1	1	1	1

Note:①Adopt two-cylinder engine.
备注：②配套二缸发动机

153

https://truckmanualshub.com/

47 机罩装置总成（二）

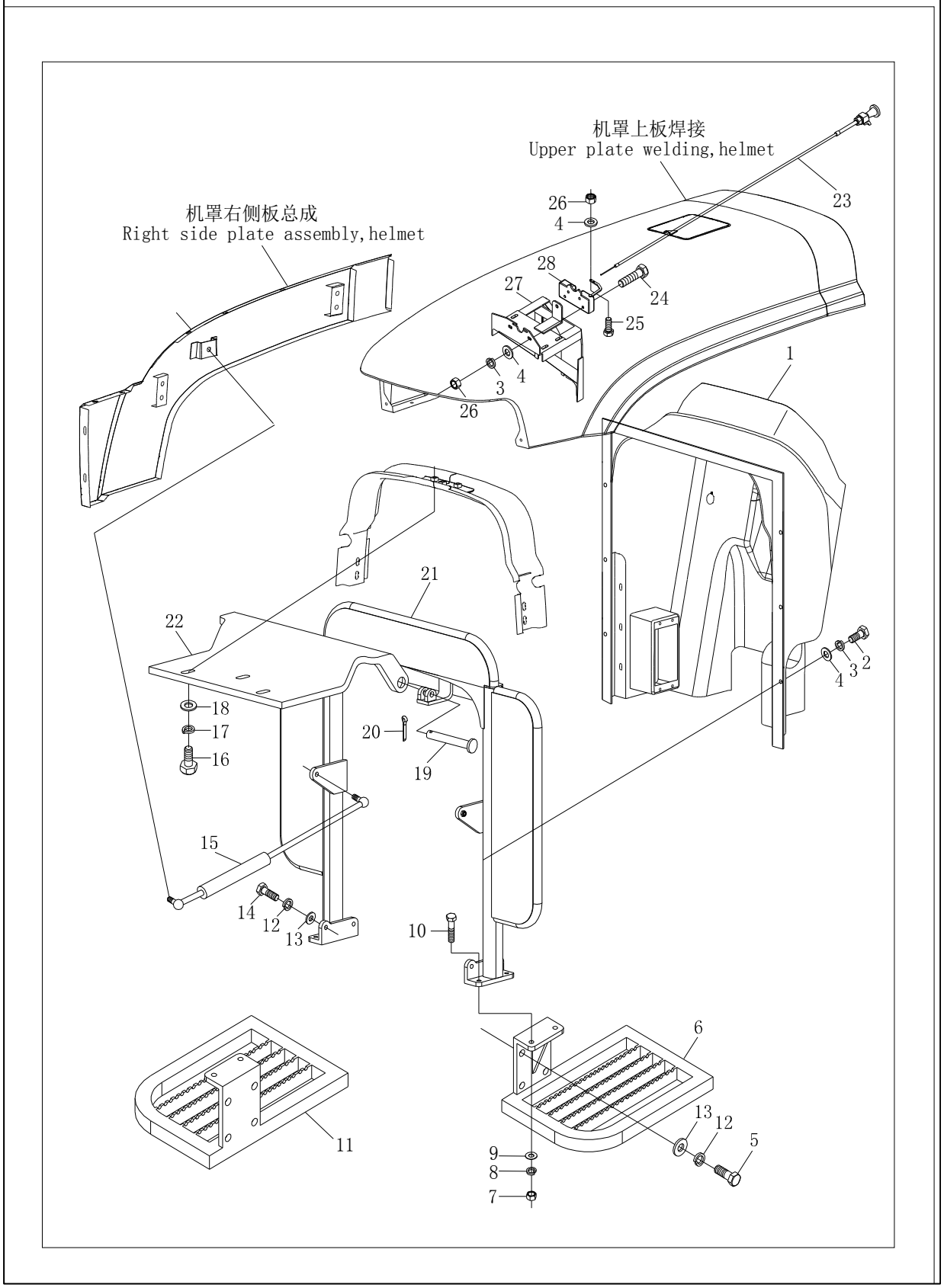

154

https://truckmanualshub.com/

47 机罩装配总成-2
Helmet Structure Assembly-2

序号 No.	零部件代号 Drawing No.	Part Name and Standards	零部件名称及规格	适用机型和用量（件） Applied Tractor Models and Qty.(Piece)					
				LZT 300	LZT 304	LZT 350	LZT 354	LZT400 /450/480 /500/520 /550	LZT404 /454/484 /504/524 /554
1	**LZT300.47.020**	Instrument table assembly	仪表台总成	1	1	1	1	1	1
2	**GB/T5783**	Hexagon head bolt - full thread M6*16	螺栓M6X16	6	6	6	6	6	6
3	**GB/T93**	Single coil spring lock washer 6-normal type	弹簧垫圈6	10	10	10	10	10	10
4	**GB/T97.1**	Plain washer 6-product grade A	平垫圈6	11	11	11	11	11	11
5	**GB/T5783**	Hexagon head bolt - full thread M12*30-Zn.D	六角头螺栓M12 X30	4	4	4	4	4	4
6	**LZT300.47.037**	Left footstep assembly	左脚蹬总成	1	1	1	1	1	1
7	**GB/T6170**	Hexagon nut,style 1 M10	I形六角头螺母 M10	6	6	6	6	6	6
8	**GB/T93**	Single coil spring lock washer 10-normal type	弹簧垫圈10	4	4	4	4	4	4
9	**GB/T97.1**	Plain washer 6-product grade A	平垫圈10	6	6	6	6	6	6
10	**GB/T5783**	Hexagon head bolt - full thread M10*40	六角头螺栓M10 X40	4	4	4	4	4	4
11	**LZT300.47.038**	Right footstep assembly	右脚蹬总成	1	1	1	1	1	1

155

续表1 Continued One

12	**GB/T93**	Single coil spring lock washer 12-normal type	弹簧垫圈12	4	4	4	4	4	4
13	**GB/T97.1**	Plain washer 12-product grade A	平垫圈12	4	4	4	4	4	4
14	**GB/T5783**	Hexagon head bolt - full thread M12*30	六角头螺栓M12 X30	4	4	4	4	4	4
15	**LZT300.47.558**	Spring, helmet (1)①	机罩气弹簧（1）②	2	2	2	2		
	LZT400.47.558	Spring, helmet (2)②	机罩气弹簧（2）	2	2	2	2	2	2
16	**GB/T5783**	Hexagon head bolt - full thread M8*25	六角头螺栓M8X 25	7	7	7	7	7	7
17	**GB/T93**	Single coil spring lock washer 8-normal type	弹簧垫圈8	7	7	7	7	7	7
18	**GB/T97.1**	Plain washer 8-product grade A	平垫圈8	7	7	7	7	7	7
19	**GB/T882**	Clevis pin with head B12*45	销轴B12X45	2	2	2	2	2	2
20	**GB/T91**	Split pin 3.2*20	销3.2X20	2	2	2	2	2	2
21	**LZT300.47.016**	Support beam weldment assembly	机罩支撑梁焊合总成	1	1	1	1	1	1
22	**LZT400.47.105**	Joint plate assembly for pivot②	铰链连接板	1	1	1	1	1	1
23	**LZT65.47.029**	Flexible shafting dragline assembly	机罩锁软轴拉线总成	1	1	1	1	1	1
24	**GB/T818**	Cross recessed pan head screw 6*35	十字槽盘头螺钉6X35	4	4	4	4	4	4
25	**LZT65.47.126**	Locking screw	锁紧螺钉	1	1	1	1	1	1
26	**GB/T6170**	Hexagon nut,style 1 M6	六角薄螺母M6	5	5	5	5	5	5
27	**LZT300.47.023**	Bracket assembly of helmet lock	机罩锁支架总成	1	1	1	1	1	1
28	**LZT65.47.127**	Helmet lock	机罩锁	1	1	1	1	1	1
Note:①Adopt two-cylinder engine.②Adopt three-cylinder engine. 备注①配二缸机②配三缸发动机									

156

https://truckmanualshub.com/

47 机罩装置总成－3　47 Helmet Structure Assembly－3

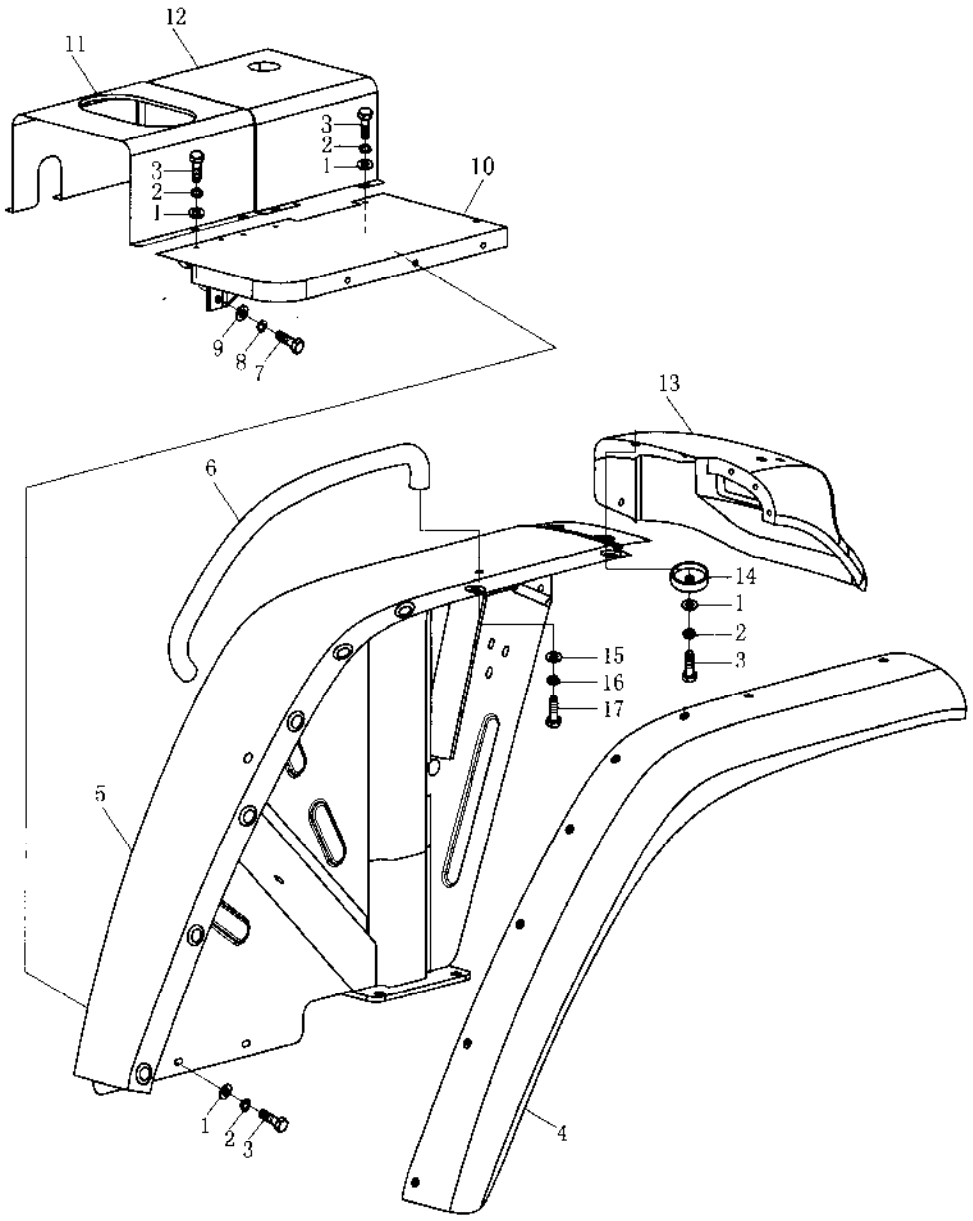

157

47 机罩装配总成-3
Helmet Structure Assembly-3

序号 No.	零部件代号 Drawing No.	Part Name and Standards	零部件名称及规格	适用机型和用量（件） Applied Tractor Models and Qty.(Piece)					
				LZT 300	LZT 304	LZT 350	LZT 354	LZT400 /450/480 /500/520 /550	LZT404 /454/484 /504/524 /554
1	**GB/T97.1**	Plain washer 6-product grade A	垫圈6	20	20	20	20	20	20
2	**GB/T93**	Single coil spring lock washer 6-normal type	垫圈6	20	20	20	20	20	20
3	**GB/T5783**	Hexagon head bolt - full thread M6*12	六角头螺栓M6X 12	20	20	20	20	20	20
4	**LZT300.47.301**	Outer part of left mud guard	左挡泥板外件	1	1	1	1	1	1
5	**LZT300.47.033**	Left mud guard weldment assembly	左挡泥板焊接总成	1	1	1	1	1	1
6	**LZT300.47.035**	Left handrail	左上车扶手	1	1	1	1	1	1
7	**GB/T5783**	Hexagon head bolt - full thread M10*25	六角头螺栓M10 X25	4	4	4	4	4	4
8	**GB/T93**	Single coil spring lock washer 10-normal type	垫圈10	4	4	4	4	4	4
9	**GB/T97.1**	Plain washer 10-product grade A	垫圈10	4	4	4	4	4	4
10	**LZT300.47.031**	Left floor weldment assembly	左地板焊接总成	1	1	1	1	1	1
11	**LZT300.47.310**	U-plate,rear	U形后板	1	1	1	1	1	1
12	**LZT300.47.309**	U-plate,front	U形前板	1	1	1	1	1	1
13	**LZT300.47.251**	Tail lampstand, left	左后尾灯座	1	1	1	1	1	1
14	**LZT300.47.356**	Washer	垫圈	10	10	10	10	10	10
15	**GB/T97.1**	Plain washer 8-product grade A	垫圈8	2	2	2	2	2	2
16	**GB/T93**	Single coil spring lock washer 8-normal type	垫圈8	2	2	2	2	2	2
17	**GB/T5783**	Hexagon head bolt - full thread M8*20	六角头螺栓M8X 20	2	2	2	2	2	2

158

https://truckmanualshub.com/

47 机罩装备总成(四)

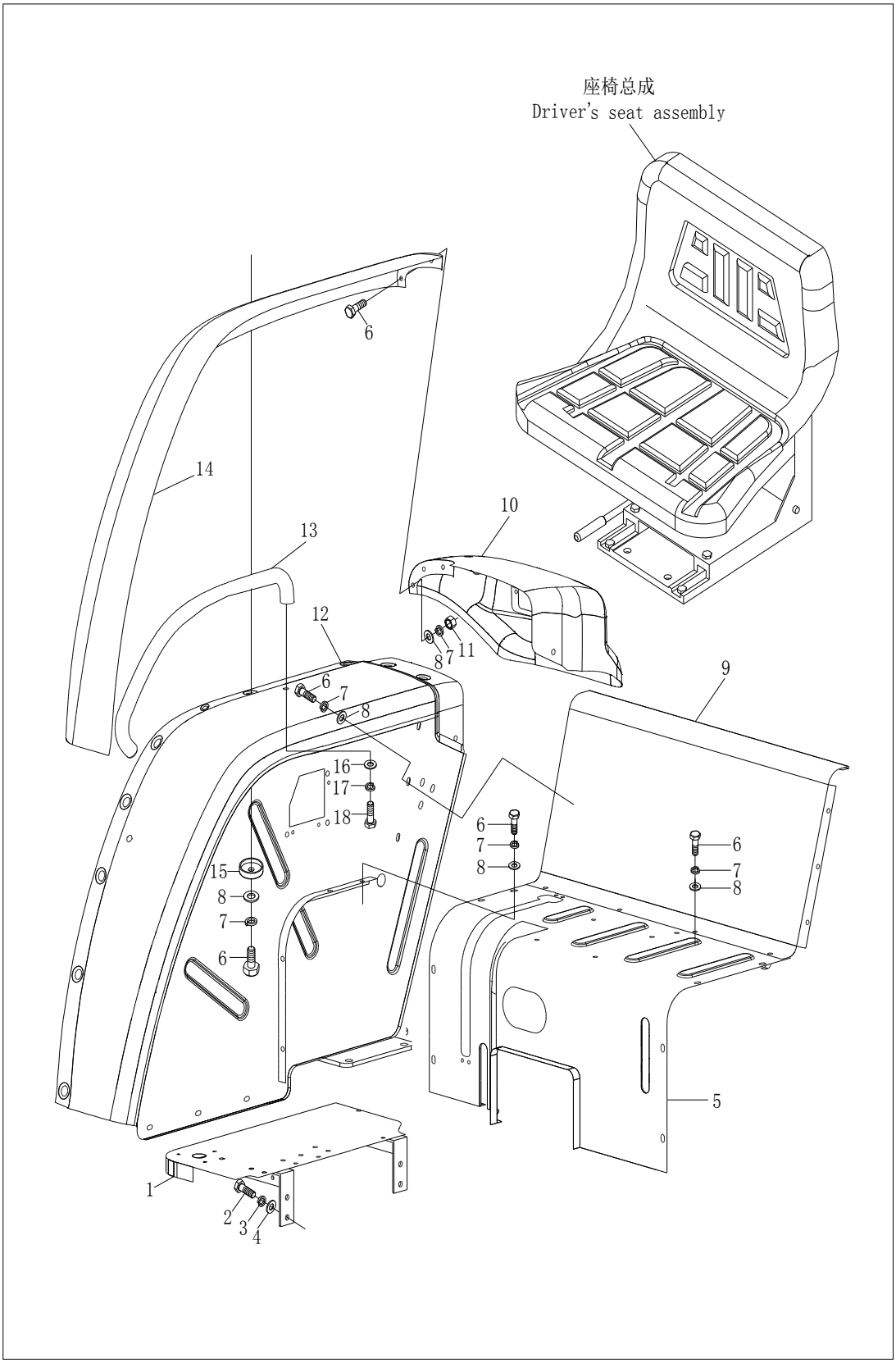

159

47 机罩装配总成-4
Helmet Structure Assembly-4

序号 No.	零部件代号 Drawing No.	Part Name and Standards	零部件名称及规格	适用机型和用量（件） Applied Tractor Models and Qty.(Piece)					
				LZT 300	LZT 304	LZT 350	LZT 354	LZT400 /450/480 /500/520 /550	LZT404 /454/484 /504/524 /554
1	**LZT300.47.032**	Right floor weldment assembly	右地板焊接总成	1	1	1	1	1	1
2	**GB/T5783**	Hexagon head bolt - full thread M10*25	六角头螺栓M10 X25	4	4	4	4	4	4
3	**GB/T93**	Single coil spring lock washer 8-normal type	垫圈10	4	4	4	4	4	4
4	**GB/T97.1**	Plain washer 10-product grade A	垫圈10	4	4	4	4	4	4
5	**LZT300.47.054**	Seat plate assembly	座椅板总成	1	1	1	1	1	1
6	**GB/T5783**	Hexagon head bolt - full thread M6*12	六角头螺栓M6X 12	20	20	20	20	20	20
7	**GB/T93**	Single coil spring lock washer 6-normal type	垫圈6	20	20	20	20	20	20
8	**GB/T97.1**	Plain washer 6-product grade A	垫圈6	20	20	20	20	20	20
9	**LZT300.47.055**	Rear hood assembly	后挡板总成	1	1	1	1	1	1
10	**LZT300.47.252**	Tail lampstand, right	右后尾灯座	1	1	1	1	1	1
11	**GB/T6170**	Hexagon nut,style 1 M6	螺母M6	3	3	3	3	3	3
12	**LZT300.47.034**	Right mud guard weldment assembly	右挡泥板焊接总成	1	1	1	1	1	1
13	**LZT300.47.036**	Right andrail	右上车扶手	1	1	1	1	1	1
14	**LZT300.47.302**	Outer part of right mud guard	右挡泥板外件	1	1	1	1	1	1
15	**LZT300.47.356**	Washer	垫圈	10	10	10	10	10	10
16	**GB/T97.1**	Plain washer 8-product grade A	垫圈8	2	2	2	2	2	2
17	**GB/T93**	Single coil spring lock washer 8-normal type	垫圈8	2	2	2	2	2	2
18	**GB/T5783**	Hexagon head bolt - full thread M8*20	六角头螺栓M8X 20	2	2	2	2	2	2

https://truckmanualshub.com/

48 电气系总成-1

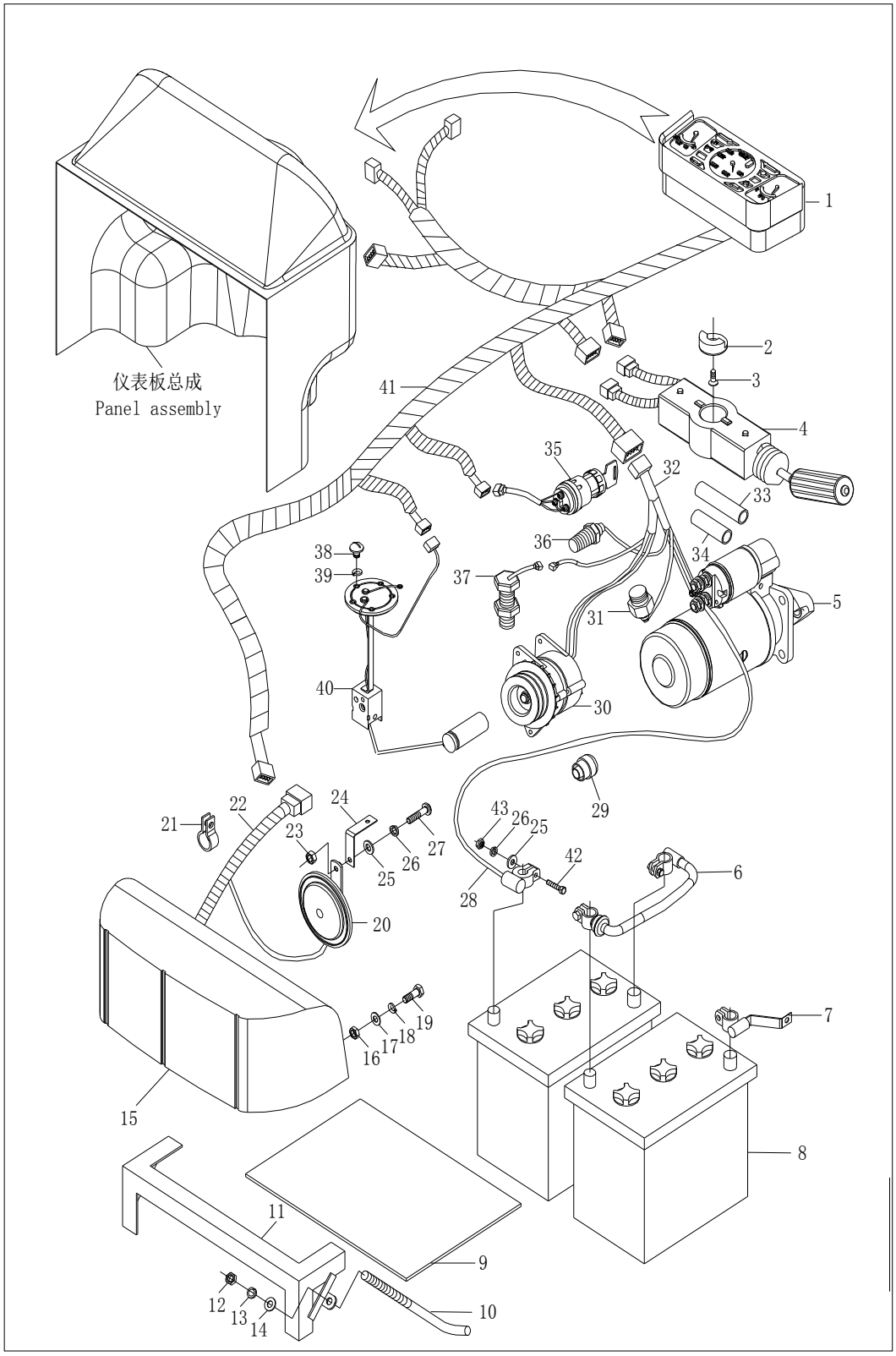

161

48 电器系统总成-1
Electrical System Assembly-1

序号 No.	零部件代号 Drawing No.	Part Name and Standards	零部件名称及规格	适用机型和用量（件） Applied Tractor Models and Qty.(Piece)					
				LZT 300	LZT 304	LZT 350	LZT 354	LZT400 /450/480 /500/520 /550	LZT404 /454/484 /504/524 /554
1	**LZT300.48.061**	Combined instrument assembly	组合仪表总成	1	1	1	1	1	1
2	**LZT300.48.651**	Steering return shift disk	转向回位拨盘	1	1	1	1	1	1
3	**GB/T 68**	Slotted conter sunk head screw M4*6	螺钉M4X6	3	3	3	3	3	3
4	**LZT300.48.065B**	Combined switch assembly	组合开关总成	1	1	1	1	1	1
5		Starter QD143	起动电动机QD143	1	1	1	1		
		Starter QD134SX	起动电动机QD134SX	1	1	1	1	1	1
6	**LZT300.48.016**	Series power source wire	串联电源线	1	1	1	1	1	1
7	**LZT65.48.091**	Ground wire for battery	电瓶搭铁线	1	1	1	1	1	1
8	**LZT300.48.010**	Battery	蓄电池	2	2	2	2	2	2
9	**LZT300.48.102**	Dumped washer for battery	蓄电池减震垫	1	1	1	1	1	1
10	**LZT300.48.101**	Drawbar for battery	蓄电池拉杆	2	2	2	2	2	2
11	**LZT300.48.011a**	Fixed frame weldment	蓄电池固定架焊合	1	1	1	1	1	1
12	**GB/T 6170**	Hexagon nut, style 1 M6	螺母M6	2	2	2	2	2	2
13	**GB/T 93**	Single coil spring lock washer 6-normal type	垫圈6	2	2	2	2	2	2
14	**GB/T 97.1**	Plain washer 6-product grade A	垫圈6	2	2	2	2	2	2

162

续表1 Continued One

15	**LZT300.48.030**	Front lamp unit assembly	前灯组合总成	1	1	1	1	1	1
16	**GB/T 6170**	Hexagon nut, style 1 M6	螺母M6	6	6	6	6	6	6
17	**GB/T 97.1**	Plain washer 8-product grade A	垫圈6	6	6	6	6	6	6
18	**GB/T 93**	Single coil spring lock washer 6-normal type	垫圈6	6	6	6	6	6	6
19	**GB/T 5783**	Hexagon head bolt - full thread M6*20-Zn.D	螺栓M6X20-Zn.D	2	2	2	2	2	2
20	**LZT65.48.340**	Electritical horn	电喇叭	1	1	1	1	1	1
21	**LZT300.48.202**	Holder	线束紧固夹㈡	2	2	2	2	2	2
22	**LZT300.48.023**	Front lamp harness assembly	前灯线束总成	1	1	1	1	1	1
23	**GB/T 6173**	Hexagon thin nut-Fine pitch thread M8-Zn.D	螺母M8-Zn.D	1	1	1	1	1	1
24	**LZT65.48.350**	Bracket, electrical horn	喇叭支架	1	1	1	1	1	1
25	**GB/T 97.1**	Plain washer - product grade A 8-140HV-Zn.D	平垫圈8-140HV-Zn.D	1	1	1	1	1	1
26	**GB/T 93**	Single coil spring lock washer 8-normal type	弹簧垫圈8	1	1	1	1	1	1
27	**GB/T 5781**	Hexagon head bolt - full thread-product grade C M8*20-Zn.D	螺栓M8×20-Zn.D	1	1	1	1	1	1
28	**LZT300.48.017**	Power source wire assembly	电源线总成	1	1	1	1	1	1
29	**LZT800.48L.107**	Retainer	可松式扎带	2	2	2	2	2	2
30		Alternator JF131	交流发电机JF131	1	1	1	1	1	1
		Alternator JF11	交流发电机JF11	1	1	1	1		

163

续表2 Continued Two

31	**LZT300.48.073**	Alarm for oil pressure	机油压力报警器	1	1	1	1	1	1
32	**LZT300.48.025a**	Engine harness assembly	发动机线束总成	1	1				
	LZT350.48.025	Engine harness assembly	发动机线束总成	1	1	1	1		
	LZT400.48.025a	Engine harness assembly	发动机线束总成			1	1	1	1
33	**LZT300.48.201**	Sleeve	套管	1	1	1	1	1	1
34	**LZT400.48.201**	Sleeve	套管	1	1	1	1	1	1
35	**LZT300.48.064**	Ingition lock	点火锁	1	1	1	1	1	1
36	**LZT300.48.072**	Water temperature sensor	水温传感器	1	1	1	1	1	1
37	**LZT300.48.074**	Speed sensor	转速传感器	1	1	1	1	1	1
38	**GB/T 818**	Cross recessed pan head screw M4*8	螺钉M4X8	5	5	5	5	5	5
39	**GB/T 93**	Single coil spring lock washer 4-normal type	垫圈4	5	5	5	5	5	5
40	**LZT300.48.071**	Fuel oil sensor	油量传感器	1	1	1	1	1	1
41	**LZT300.48.022a**	Body harness assembly①	车身线束总成	1	1	1	1	1	1
	LZT300.48C.022a	Body harness assembly	车身线束总成	1	1	1	1		
	LZT400.48C.022	Body harness assembly	车身线束总成			1	1	1	1
42	**GB/T 5783**	Hexagon head bolt - full thread M8*25	螺栓M8X12-Zn.D	1	1	1	1	1	1
43	**GB/T 6170**	Hexagon nut, style 1 M8	I型螺母M8	1	1	1	1	1	1

Note:①The parts are specific for the tractors to be exported.
出口车专用件

164

https://truckmanualshub.com/

48 电器系总成-2

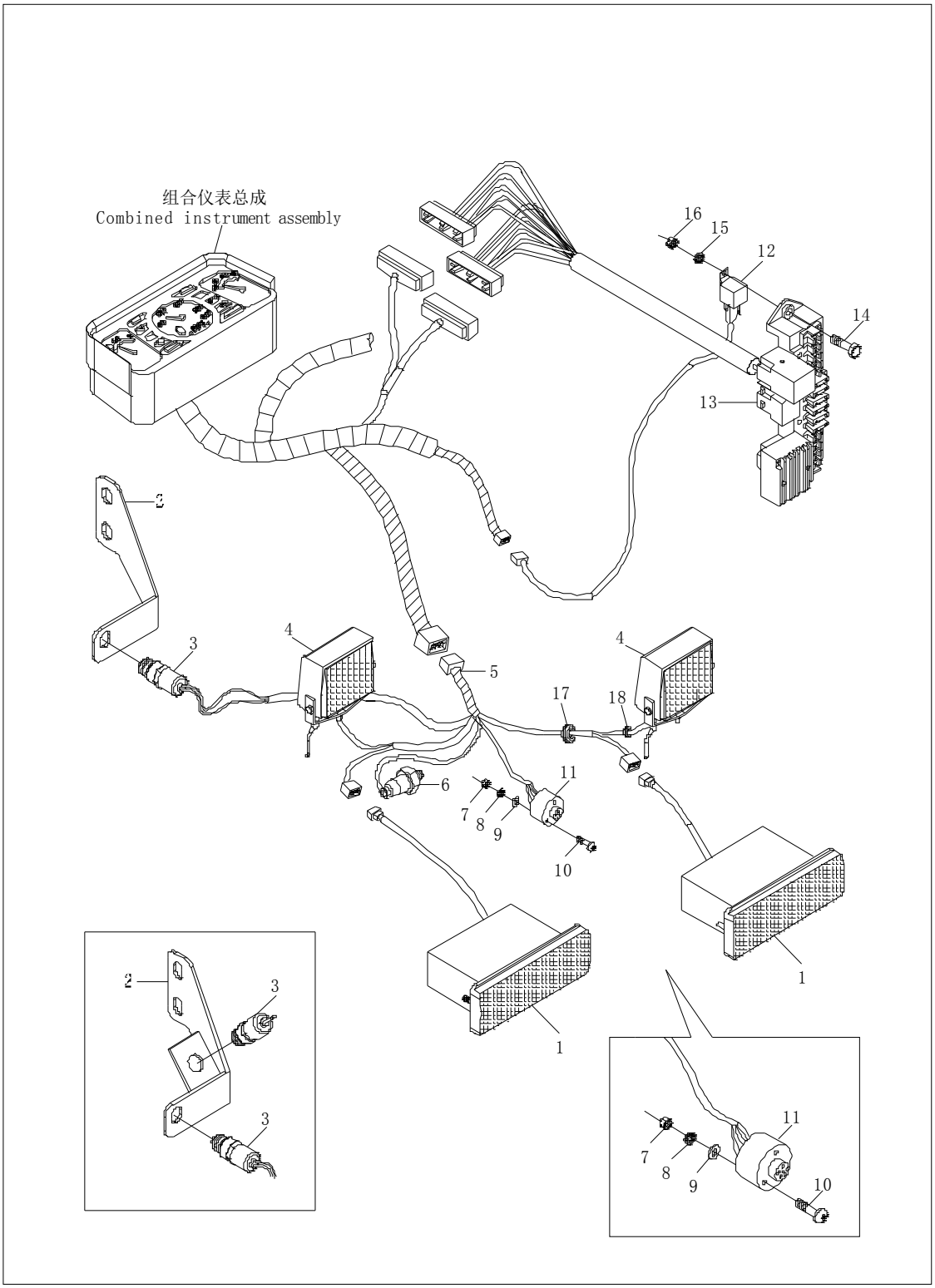

165

48 电器系统总成-2
Electrical System Assembly-2

序号 No.	零部件代号 Drawing No.	Part Name and Standards	零部件名称及规格	适用机型和用量（件） Applied Tractor Models and Qty.(Piece)					
				LZT 300	LZT 304	LZT 350	LZT 354	LZT400 /450/480 /500/520 /550	LZT404 /454/484 /504/524 /554
1	**LZT300.48.052a**	Tail lamp assembly,rear	后尾灯总成	2	2	2	2	2	2
2	**LZT300.48.212**	Brake for brake switch	制动开关安装板	1	1	1	1	1	1
	LZT300.48C.212	Brake for brake switch①	制动开关安装板	1	1	1	1	1	1
3	**JK212J4**	Brake switch	制动开关	1	1	1	1	1	1
	JK212J4	Starting safety switch①	启动安全开关	1	1	1	1	1	1
4	**LZT300.48.053a**	Rear light assemnbly	后照灯总成	2	2	2	2	2	2
5	**LZT300.48.024**	Rear lamp harness assembly	后灯线束总成	1	1	1	1	1	1
	LZT300.48C.024	Rear lamp harness assembly①	后灯线束总成	1	1	1	1	1	1
6	**LZT65.48.087**	Pressure alarm	气压报警器	1	1	1	1	1	1
7	**GB/T6170**	Hexagon nut, style 1 M5-Zn.D	螺母M5-Zn.D	3	3	3	3	3	3
8	**GB/T93**	Single coil spring lock washer 5-normal type	弹簧垫圈5	3	3	3	3	3	3
9	**GB/T97.1**	Plain washer - product grade A5-140HV-Zn.D	平垫圈5-140HV-Zn.D	3	3	3	3	3	3
10	**GB/T818**	Cross recessed pan head screw M5*35-Zn.D	螺钉M5×35-Zn.D	3	3	3	3	3	3
11	**LZT65.48.080**	Socket for rear trailer	后挂车插座（插销）	1	1	1	1	1	1
12	**JD133D-12V**	Relay for starting	启动继电器	1	1	1	1	1	1
13	**LZT300.48.051**	Central appliance box	中央电器盒	1	1	1	1	1	1
	SGD-151ACD12V-130W	Flashlight for alarm	复合报警闪光器	1	1	1	1	1	1
	JFT-125-1500W	Voltage adjuster	电压调节器	1	1	1	1	1	1
	HFV4-40/30A	Light relay	灯光继电器	1	1	1	1	1	1
14	**GB/T5781**	Hexagon head bolt - full thread- M6*20	螺栓M6X20	2	2	2	2	2	2
15	**GB/T93**	Single coil spring lock washer 6-normal type	弹簧垫圈6	2	2	2	2	2	2
16	**GB/T6170**	Hexagon nut, style 1 M6	螺母M6	2	2	2	2	2	2
17	**LZT300.48.211**	Rubber ring(1)	穿线胶圈1	2	2	2	2	2	2
18	**LZT65.48.094**	Rubber ring(2)	穿线胶圈(二)	2	2	2	2	2	2

Note:①The parts are specific for the tractors to be exported.
注：为出口车专用件

https://truckmanualshub.com/

50 油箱与支架总成

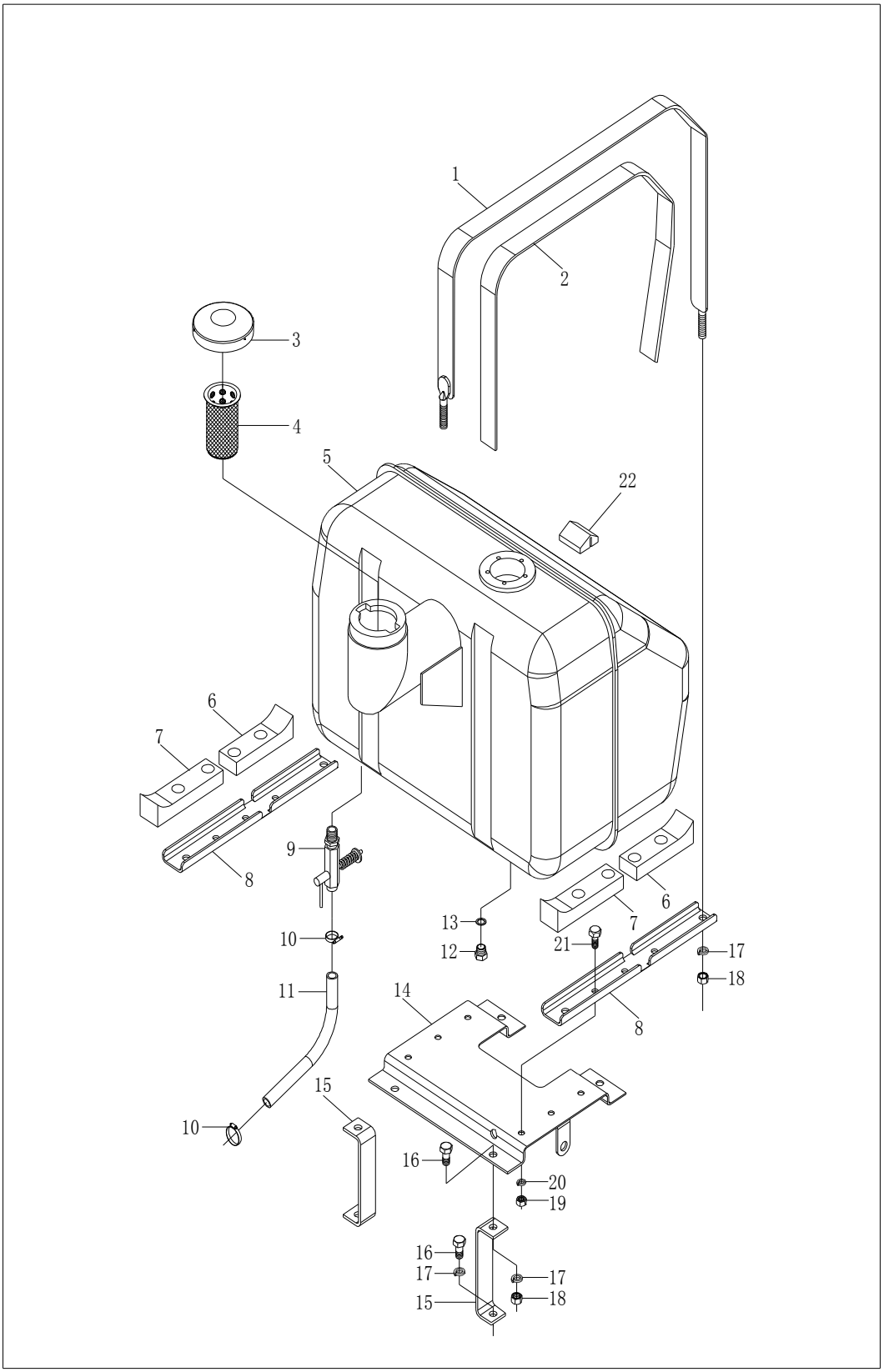

167

https://truckmanualshub.com/

50 油箱与支架总成
Fuel Tank and Bracket Assembly

序号 No.	零部件代号 Drawing No.	Part Name and Standards	零部件名称及规格	适用机型和用量（件） Applied Tractor Models and Qty.(Piece)					
				LZT 300	LZT 304	LZT 350	LZT 354	LZT400 /450/480 /500/520 /550	LZT404 /454/484 /504/524 /554
	LZT300.50.001	Fuel tank and bracket assembly	油箱与支架总成	1	1	1	1	1	1
1	**LZT300.50.014**	Fuel tank binding strip assembly	油箱扎带 总成	2	2	2	2	2	2
2	**LZT404.50.114**	Rubber washer for binding strip, main fuel tank	扎带橡胶垫	2	2	2	2	2	2
3	**LZT65.50.022**	Fuel filler cap assembly	油箱加注口盖总成	1	1	1	1	1	1
4	**LZT65.50.023**	Filter screen assembly	滤网总成	1	1	1	1	1	1
5	**LZT300.50.033**	Fuel tank weldment assembly	油箱总成	1	1	1	1		
	LZT400.50.011	Fuel tank weldment assembly①	油箱总成					1	1
6	**LZT300.50.111**	Rear rubber washer	后橡胶垫	2	2	2	2	2	2
7	**LZT300.50.110**	Front rubber washer	前橡胶垫	2	2	2	2	2	2
8	**LZT300.50.125**	Bracket of fuel tank	油箱支撑骨架	2	2	2	2	2	2
9	**LZT300.50.033**	Switch assembly of fuel tank	油箱开关总成	1	1	1	1	1	1
10	**ZBJ 15001**	Keeper d16	卡箍d16	2	2	2	2	2	2
11	**LZT300.50.104**	Fuel transfer pipe	输油管	1	1	1	1		
	LZT400.50.104	Fuel transfer pipe	输油管					1	1

168

续表1 Continued One

12	**LZT65.50.226**	Fuel outlet plug	放油螺塞	1	1	1	1	1	1
13	**JB/T 982**	Combined sealing washer 16	垫圈16	1	1	1	1	1	1
14	**LZT300.50.124**	Plate for fuel tank	油箱垫板	1		1		1	1
	LZT300.50B.124	Plate for fuel tank②	油箱垫板		1		1		
15	**LZT300.50.123**	U-bracket	U型支架	2	1	2	1	2	2
16	**GB/T 5783**	Hexagon head bolt - full thread M10*20-Zn.D	螺栓M10×20	6	6	6	6	6	6
17	**GB/T 93**	Single coil spring lock washer 10-normal type	垫圈10	10	10	10	10	10	10
18	**GB/T 6170**	Hexagon nut, style 1 M10-Zn.D	螺母M10	10	10	10	10	10	10
19	**GB/T 6170**	Hexagon nut, style 1 M8-Zn.D	螺母M8	6	6	6	6	6	6
20	**GB/T 93**	Single coil spring lock washer 8-Zn.D-normal type	垫圈8	6	6	6	6	6	6
21	**GB/T 5783**	Hexagon head bolt - full thread M8*20-Zn.D	螺栓M8×20	6	6	6	6	6	6
22	**LZT300.50.112**	Rubber pad	橡胶垫块	2	2	2	2	2	2

Note:①Adopt Model jiangdong TY395,Lijia SL3105 engine.②Adopt hydraulic steering wheel tractors.
注：①用于三缸机②配液压转向拖拉机

169

https://truckmanualshub.com/

53 拖挂装置总成

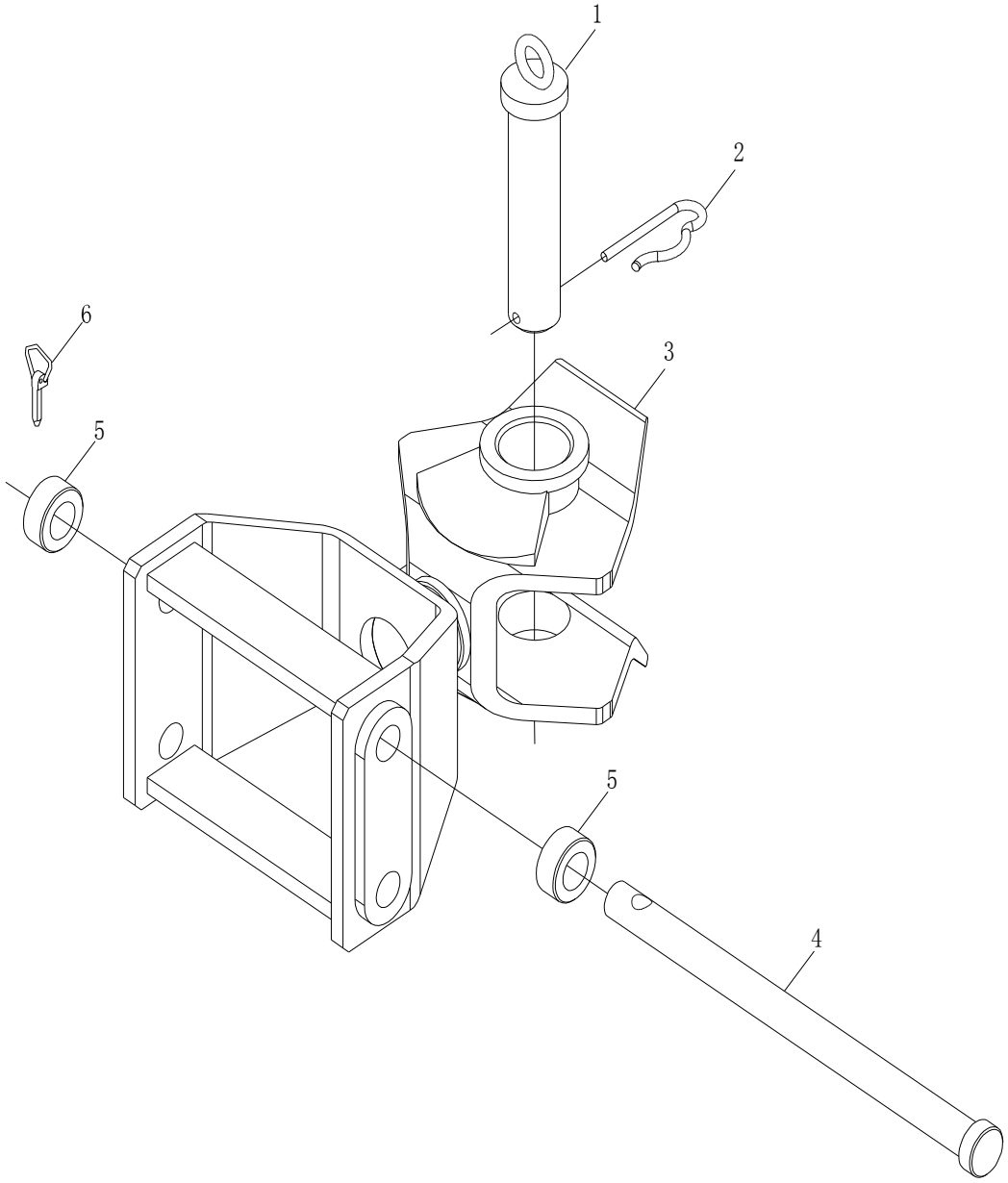

170

https://truckmanualshub.com/

53 拖挂装置总成
Hitch Mechanism Assembly

序号 No.	零部件代号 Drawing No.	Part Name and Standards	零部件名称及规格	适用机型和用量（件） Applied Tractor Models and Qty.(Piece)					
				LZT 300	LZT 304	LZT 350	LZT 354	LZT400 /450/480 /500/520 /550	LZT404 /454/484 /504/524 /554
1	**LZT300.53.012**	Hitching latch welding assembly	牵引销焊接总成	1	1	1	1	1	1
2	**LZT65.53.103**	Elastic latch	弹性锁销	1	1	1	1	1	1
3	**LZT300.53.011**	Hitching frame welding assembly	牵引架焊接总成	1	1	1	1	1	1
4	**LZT300.53.101**	Joint pin	连接销	2	2	2	2	2	2
5	**LZT300.53.107**	Cushion sleeve	垫套	4	4	4	4	4	4
6	**LZT30.56.029**	Latch assembly	锁销总成	2	2	2	2	2	2

171

https://truckmanualshub.com/

55　提升器总成-1

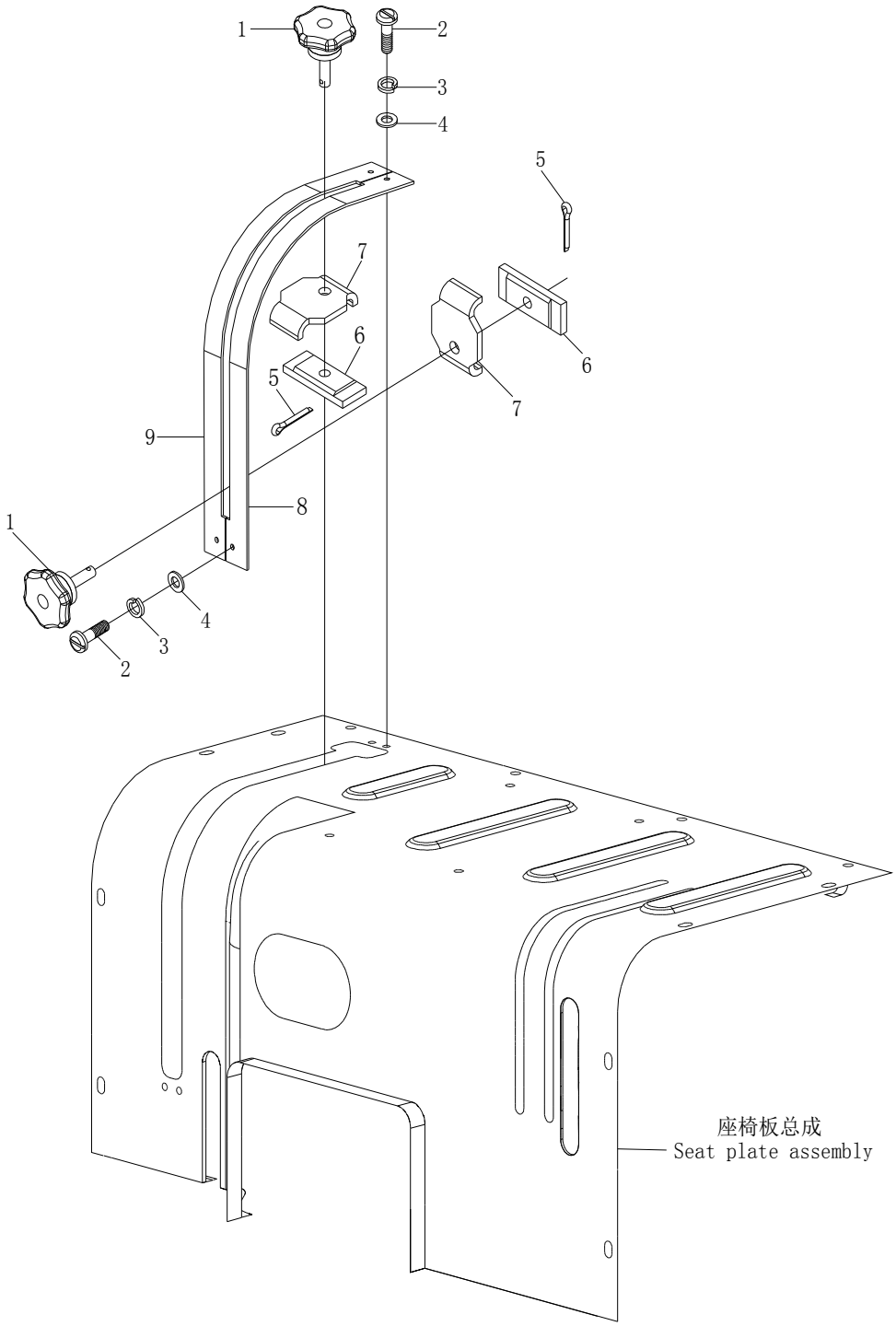

172

https://truckmanualshub.com/

55 提升器总成-1
Lifter assembly -1

序号 No.	零部件代号 Drawing No.	Part Name and Standards	零部件名称及规格	适用机型和用量（件） Applied Tractor Models and Qty.(Piece)					
				LZT 300	LZT 304	LZT 350	LZT 354	LZT400 /450/480 /500/520 /550	LZT404 /454/484 /504/524 /554
1	**LZT65.57.014**	Adjusiting handle ball assembly	调节手柄头总成	2					
2	**GB/T818**	Cross recessed pan head screw 58×16	螺钉5X16	4					
3	**GB/T93**	Single coil spring lock washer 5-normal type	垫圈5	4					
4	**GB/T97.1**	Plain washer 5-product grade A	垫圈5	4					
5	**GB/T91**	Split pin 1.6×12	销1.6X12	2					
6	**LZT65.57.104**	Locating nut	定位螺母	2					
7	**LZT300.55.138**	Locating curved plate	定位弯板	2					
8	**LZT300.55.135**	Mark plate for position control	位调节位牌	1					
9	**LZT300.55.134**	Mark plate for force control	力调节位牌	1					

173

https://truckmanualshub.com/

55 提升器总成-2

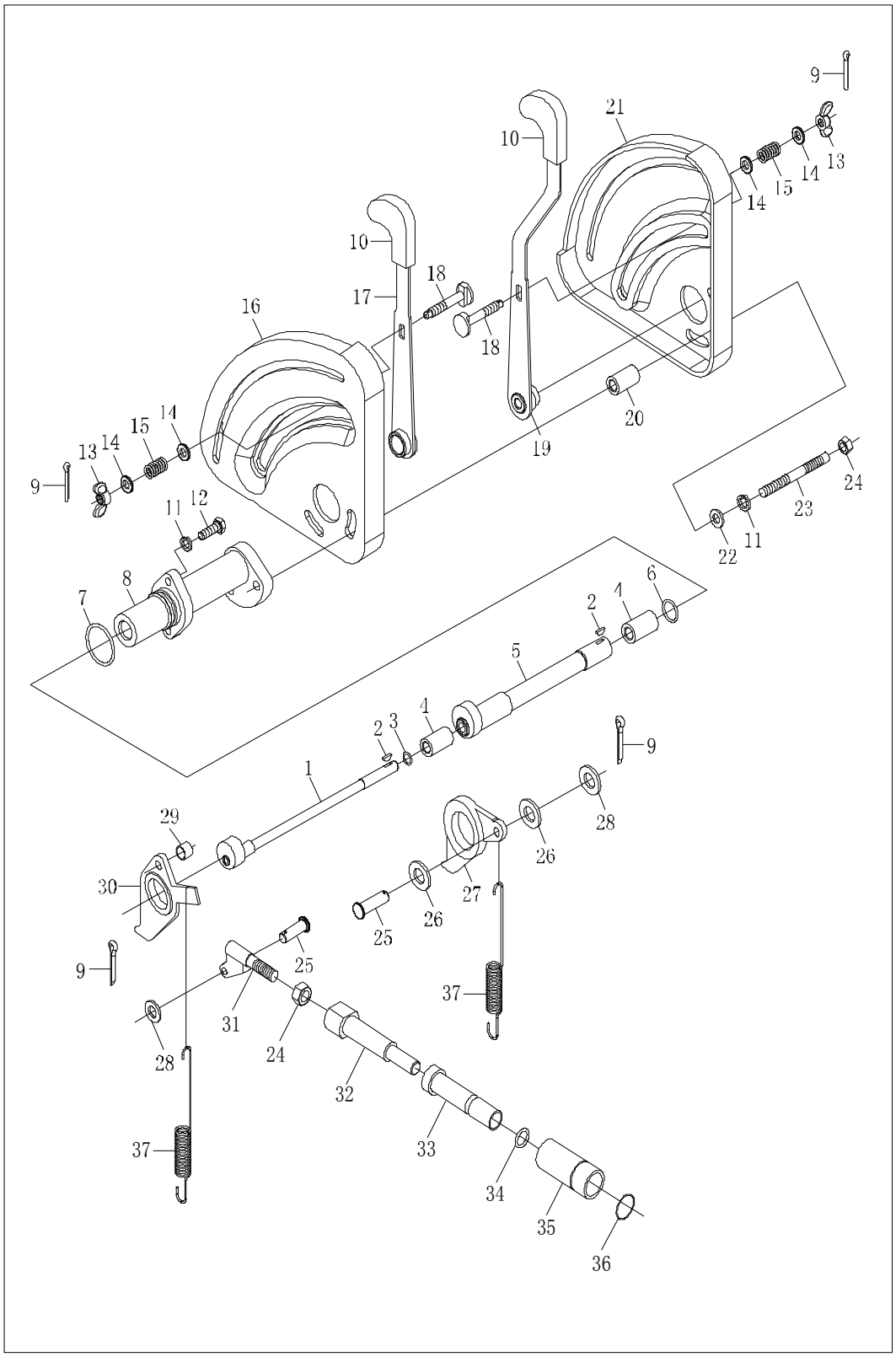

174

55 提升器总成-2
Lifter assembly -2

序号 No.	零部件代号 Drawing No.	Part Name and Standards	零部件名称及规格	适用机型和用量（件） Applied Tractor Models and Qty.(Piece)					
				LZT 300	LZT 304	LZT 350	LZT 354	LZT400 /450/480 /500/520 /550	LZT404 /454/484 /504/524 /554
1	**LZT300.55.029**	Force control eccentric welding assembly	力调节偏心轮焊接总成	1	1	1	1	1	1
2	**GB/T1099**	Woodruff key 4×13	半圆键4X13	2	2	2	2	2	2
3	**GB1235-1976**	O - seal ring 10×1.9	O形密封圈10X1.9	1	1	1	1	1	1
4	**LZT300.55.198**	Handle sleeve	手柄轴套	1	1	1	1	1	1
5	**LZT300.55.038**	Position control eccentric welding assembly	位调节偏心轮焊接总成	1	1	1	1	1	1
6	**GB1235-1976**	O - seal ring 20×204	O形密封圈20X2.4	1	1	1	1	1	1
7	**GB/T1235-1976**	O - seal ring 48×3.5	O形密封圈48X3.5	1	1	1	1	1	1
8	**LZT300.55.136**	Support seat for sector plate	扇形板支座	1	1	1	1	1	1
9	**GB/T91**	Split pin 2×10	开口销2X10	4	4	4	4	4	4
10	**LZT65.57.013**	Hanle end assembly	手柄头总成	2	2	2	2	2	2
11	**GB/T93**	Single coil spring lock washer 10-normal type	弹簧垫圈10	4	4	4	4	4	4
12	**GB/T5783**	Hexagon head bolt - full thread M10×20	螺栓M10X20	2	2	2	2	2	2
13	**GB/T62**	Wing nut M6	蝶形螺母M6	4	4	4	4	4	4
14	**GB/T96**	Large washer 6	平垫圈6	2	2	2	2	2	2
15	**LZT300.55.131**	Pressured spring for handle	弹簧	2	2	2	2	2	2
16	**LZT300.55.195**	Sector plate for position control	位调节扇形板	1	1	1	1	1	1

175

续表1 Continued One

17	**LZT300.55.025**	Position control handle welding assembly	位调节手柄焊接总成	1	1	1	1	1	1
18	**LZT300.55.132**	Pressured screw for handle	螺钉	2	2	2	2	2	2
19	**LZT300.55.024**	Force control handle welding assembly	力调节手柄焊接总成	1	1	1	1	1	1
20	**LZT300.55.137**	Support sleeve for sector plate	扇形板支承套管	2	2	2	2	2	2
21	**LZT300.55.193**	Sector plate for force control	力调节扇形板	1	1	1	1	1	1
22	**GB/T97.1**	Plain washer 10-product grade A	平垫圈10	2	2	2	2	2	2
23	**GB/T899**	Double end stud AM10×55	双头螺柱AM10X55	2	2	2	2	2	2
24	**GB/T6170**	Hexagon nut, style 1 M10	螺母M10	3	3	3	3	3	3
25	**LZT300.55.143**	Pin	销	2	2	2	2	2	2
26	**LZT300.55.144**	Roller wheel	滚轮	2	2	2	2	2	2
27	**LZT300.55.202**	Lever for position control	位调节杠杆	1	1	1	1	1	1
28	**GB/T97.1**	Plain washer 6 - product grade A	平垫圈6	2	2	2	2	2	2
29	**LZT300.55.221**	Lever sleeve for force control	力调节杠杆衬套	1	1	1	1	1	1
30	**LZT300.55.204**	Lever for force control	力调节杠杆	1	1	1	1	1	1
31	**LZT300.55.150**	Joint arm	连接臂	1	1	1	1	1	1
32	**LZT300.55.152**	Push rod for force control	力调节推杆	1	1	1	1	1	1
33	**LZT300.55.113**	Sleeve of push rod	推杆套	1	1	1	1	1	1
34	**GB1235-1976**	O - seal ring 11×1.9	O形密封圈11X1.9	1	1	1	1	1	1
35	**LZT300.55.112**	Sealing tube of force control	力调节密封套	1	1	1	1	1	1
36	**GB1235-1976**	O - seal ring 19×2	O形圈19X2	1	1	1	1	1	1
37	**LZT300.55.126**	Draft spring	拉力弹簧	2	2	2	2	2	2

176

https://truckmanualshub.com/

55 提升器总成-3

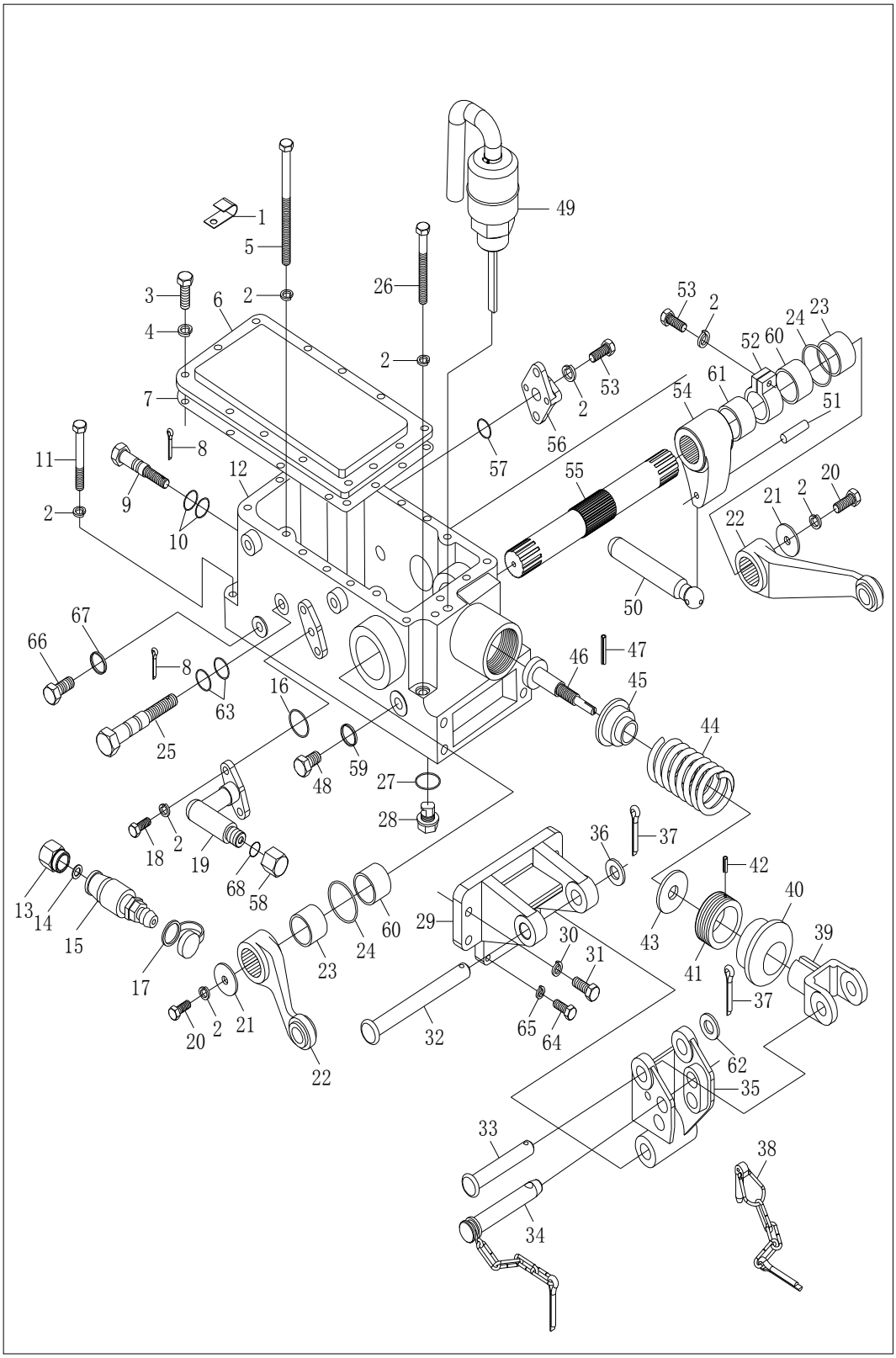

177

55 提升器总成-3
Lifter assembly -3

序号 No.	零部件代号 Drawing No.	Part Name and Standards	零部件名称及规格	适用机型和用量（件） Applied Tractor Models and Qty.(Piece)					
				LZT 300	LZT 304	LZT 350	LZT 354	LZT400 /450/480 /500/520 /550	LZT404 /454/484 /504/524 /554
1	**LZT65.48.095**	Clip of wire harness	线束固定夹	1	1	1	1	1	1
2	**GB/T 93**	Single coil spring lock washer 12 - normal type	垫圈12	13	13	13	13	13	13
3	**GB/T 5781**	Hexagon head bolt - full thread M8×20	螺栓M8X20	13	13	13	13	13	13
4	**GB/T 93**	Single coil spring lock washer 8 - normal type	弹簧垫圈8	13	13	13	13	13	13
5	**GB/T 5782**	Hexagon head bolt M12×215	螺栓M12X215	4	4	4	4	4	4
6	**LZT300.55B.115**	Upper cover of lifter	提升器上盖	1	1	1	1	1	1
7	**LZT300.55B.114**	Gasket, upper cover	提升器上盖纸垫	1	1	1	1	1	1
8	**GB/T 91**	Split pin 2×20	开口销2X20	2	2	2	2	2	2
9	**LZT300.55B.018**	Lowering rate control lever	下降速度调节杆	1	1	1	1	1	1
10	**GB 3452.1**	O - seal ring 11.2×2.65G	O形密封圈13X1.9	4	4	4	4	4	4
11	**GB/T 5783**	Hexagon head bolt - full thread M10×40	螺栓M10X40	3	3	3	3	3	3
12	**LZT300.55B.101**	Lifter housing	提升器壳体	1	1	1	1	1	1
13	**LZT300.61.101**	Oil pipe joint	滤芯总成	1	1	1	1	1	1
14	**LZT654.58.106a**	Washer	出油接头纸垫	2	2	2	2	2	2
15	**LZT704.58C.010**	Self - sealing quick coupling	出油接头	2	2	2	2	2	2
16	**GB 1235**	O- seal ring 22×2.4	O形密封圈22X2.4	1	1	1	1	1	1
17	**LZT654.58.155**	Dust cover	油压输出管接头	1	1	1	1	1	1
18	**GB/T 5783**	Hexagon head bolt - full thread M10×30	螺栓M10X30	2	2	2	2	2	2
19	**LZT300.58B.120a**	Hydraulic pressure output pipe joint	六角螺塞	1	1	1	1	1	1

178

续表1 Continued One

20	**GB/T 5783**	Hexagon head bolt - full thread M10×20	螺栓M10X20	2	2	2	2	2	2
21	**LZT300.55B.126**	Left pressure plate	提升臂压板	2	2	2	2	2	2
22	**LZT300.55B.020**	Lifting arm assembly	提升臂总成	2	2	2	2	2	2
23	**LZT300.55B.104**	Shaft sleeve A	提升轴套	5	5	5	5	5	5
24	**GB 3452.1**	O - seal ring 52×5.3G	O形密封圈52X5.7	2	2	2	2	2	2
25	**LZT300.55B.118**	Control lever for cutoff valve	截断阀调节杆	1	1	1	1	1	1
26	**GB/T 5782**	Hexagon head bolt M12×100	螺栓M12X100	2	2	2	2	2	2
27	**GB 1235**	O - seal ring 24×2.4	O形密封圈24X2.4	1	1	1	1	1	1
28	**LZT300.55B.125**	Spring hookup	弹簧挂钩	1	1	1	1	1	1
29	**LZT300.55B.128**	Rocker bracker for upper hitch point	上挂接点摇臂支架	1	1	1	1	1	1
30	**GB/T 93**	Single coil spring lock washer 12 - normal type	弹簧垫圈12	4	4	4	4	4	4
31	**GB/T 5783**	Hexagon head bolt - full thread M12×50	螺栓M12X50	4	4	4	4	4	4
32	**LZT300.55B.107**	Joint pin of rocker	摇臂连接销	1	1	1	1	1	1
33	**LZT300.55B.116**	Upper joint pin of rocker	摇臂上连接销	1	1	1	1	1	1
34	**LZT300.55B.015**	Front joint pin chain assembly, upper link	上拉杆前连接销链环总成	1	1	1	1	1	1
35	**LZT300.55B.130**	Rocker	上挂接点摇臂	1	1	1	1	1	1
36	**GB/T 97.1**	Plain washer 22 - product grade A	平垫圈22	1	1	1	1	1	1
37	**GB/T 91**	Split pin 5×35	开口销5X35	2	2	2	2	2	2
38	**LZT300.55.016**	Latch chain assembly	锁销链环总成	2	2	2	2	2	2
39	**LZT300A.55.121**	Joint for upper link	上拉杆连接头	1	1	1	1	1	1
40	**25.55.162**	Dust cap	防尘罩	1	1	1	1	1	1
41	**25.55.161**	Nut	螺母	1	1	1	1	1	1
42	**GB/T 119.1**	Parallel pin 4×14	圆柱销C4X14	1	1	1	1	1	1
43	**25.55.160**	Spring hold - down plate	弹簧压板	1	1	1	1	1	1

179

续表2 Continued Two

44	**25.55.157**	Spring for force control	力调节弹簧	1	1	1	1	1	1
45	**25.55.159**	Spring seat	弹簧座	1	1	1	1	1	1
46	**25.55.158**	Spring rod	弹簧杆	1	1	1	1	1	1
47	**GB/T 119**	Parallel pin B3×14	圆柱销B3X40	1	1	1	1	1	1
48	**LZT300.55B.109**	Plug	六角螺塞	1	1	1	1	1	1
49	**LZT300.55B.016a**	Breather assembly	油尺通气塞总成	1	1	1	1	1	1
50	**LZT300.55.154**	Oil plug	油塞顶杆	1	1	1	1	1	1
51	**GB/T 119**	Parallel pin D5×45	圆柱销D5X45	1	1	1	1	1	1
52	**LZT300.55B.113**	Cam wheel for position control	位调节凸轮	1	1	1	1	1	1
53	**GB/T 5783**	Hexagon head bolt - full thread M10×30	螺栓M10X30	3	3	3	3	3	3
54	**LZT300.55.153**	Inner lifting arm	内提升臂	1	1	1	1	1	1
55	**LZT300.55B.127**	Lifting shaft	提升轴	1	1	1	1	1	1
56	**LZT300.55B.103**	Joint plate for oil intake pipe	进油连接板	1	1	1	1	1	1
57	**GB 3452.1**	O - seal ring 17×2.65	O形密封圈17X2.65	1	1	1	1	1	1
58	**LZT300.55.125**	Washer for air plug	通气塞垫圈	1	1	1	1	1	1
59	**LZT300.55B.108**	Aluminium washer	铝垫	1	1	1	1	1	1
60	**LZT300.55B.129**	Axle housing C	轴套C	2	2	2	2	2	2
61	**LZT300.55B.105**	Axle housing B	轴套 B	1	1	1	1	1	1
62	**GB/T 97.1**	Plain washer 20 - product grade A	平垫圈20-A级	1	1	1	1	1	1
63	**GB 1235**	O - seal ring 13×1.9	O形密封圈13X1.9	1	1	1	1	1	1
64	**GB/T 5783**	Hexagon head bolt - full thread M8×35	螺栓M8X35	2	2	2	2	2	2
65	**GB/T 93**	Single coil spring lock washer 8 - normal type	弹性垫圈8	2	2	2	2	2	2
66	**GB/T 5781**	Hexagon head bolt - full thread product C M22×1.5×20	螺栓-C级M22×1.5×20	1	1	1	1	1	1
67	**GB/T 982**	Combined sealing washer 22	组合密封圈22	1	1	1	1	1	1
68	**GB/T 3452.1**	O - seal ring 12.5×2.65G	O形密封圈12.5X2.65G	1	1	1	1	1	1

180

https://truckmanualshub.com/

55 提升器总成-4

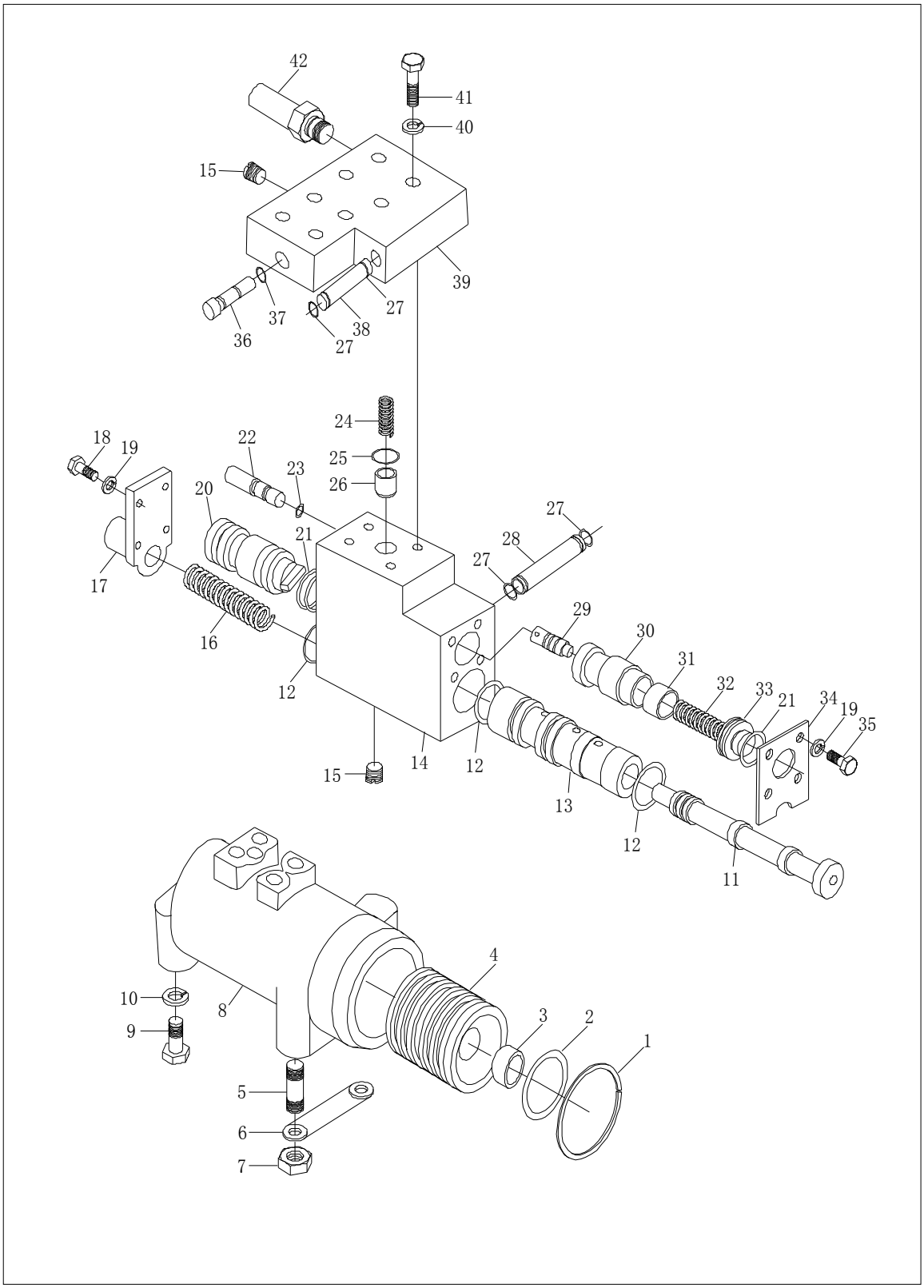

181

55 提升器总成-4
Lifter assembly -4

序号 No.	零部件代号 Drawing No.	Part Name and Standards	零部件名称及规格	适用机型和用量（件） Applied Tractor Models and Qty.(Piece)					
				LZT 300	LZT 304	LZT 350	LZT 354	LZT400 /450/480 /500/520 /550	LZT404 /454/484 /504/524 /554
1	**LZT300.55.222**	Ring	挡圈	1	1	1	1	1	1
2	**GB 3452.1**	O- seal ring 69×5.3	O形密封圈69X5.3	1	1	1	1	1	1
3	**LZT300.55.141**	Piston ball seat	活塞球座	1	1	1	1	1	1
4	**LZT300.55B.122**	Piston	活塞	1	1	1	1	1	1
5	**GB/T 898**	Double end stud GM14 - M14×35	双头螺柱M14X34-8.8	2	2	2	2	2	2
6	**LZT300.55B.123**	Lock piece	锁片	1	1	1	1	1	1
7	**GB/T 6170**	Hexagon nut, style 1 M14	螺母M14	2	2	2	2	2	2
8	**LZT300.55B.136**	Oil cylinder	油缸体	1	1	1	1	1	1
9	**LZT300.55B.137**	Bolt of oil cylinder	油缸螺栓	2	2	2	2	2	2
10	**GB/T 93**	Single coil spring lock washer 14 - normal type	弹簧垫圈14	2	2	2	2	2	2
11	**TS 300.55.172**	Main control valve	主控制阀	1	1	1	1	1	1
12	**GB 1235**	O - seal ring 26×2.4	O形密封圈26X2.4	3	3	3	3	3	3
13	**TS 300.55.217**	Main control valve sleeve	主控制阀套	1	1	1	1	1	1
14	**KM 300.55.120A**	Housing of distrbutor	分配器壳	1	1	1	1	1	1
15	**LZT 300.55.169**	Conical plug Z 1/8	锥螺塞Z1/8	2	2	2	2	2	2
16	**25.55.181**	Spring for main control valve	主控制阀弹簧	1	1	1	1	1	1
17	**TS 300B.55.183**	Front cover of valve	阀门前盖	1	1	1	1	1	1
18	**GB/T 5783**	Hexagon head bolt - full thread M6×20	螺栓M6X20	4	4	4	4	4	4
19	**GB/T 93**	Single coil spring lock washer 6 - normal type	弹簧垫圈6	8	8	8	8	8	8

182

续表1 Continued One

20	**LZT300.55.177**	Front plug, oil return valve	回油阀前堵塞	1	1	1	1	1	1
21	**GB 1235**	O - seal ring 22×2.4	O形密封圈22X2.4	3	3	3	3	3	3
22	**TS300B.55.187-2**	Adjusting valve	调节阀	1	1	1	1	1	1
23	**GB 1235**	O - seal ring 8×1.9	O形密封圈8X1.9	1	1	1	1	1	1
24	**LZT300.55.182**	Spring of one - way valve	单向阀弹簧	1	1	1	1	1	1
25	**GB 3452.1**	O - seal ring 18×2.65	O形密封圈18X2.65	1	1	1	1	1	1
26	**LZT300.55.175**	One - way valve	单向阀	1	1	1	1	1	1
27	**GB 3452.1**	O - seal ring 15×1.8G	O形密封圈16.X2.4	4	4	4	4	4	4
28	**LZT300.55B.102**	Oil inlet pipe	进油管	1	1	1	1	1	1
29	**LZT300.55.173**	Smalll end of oil return valve	回油阀小头	1	1	1	1	1	1
30	**LZT300.55.218**	Sleeve of oil return valve	回油阀套	1	1	1	1	1	1
31	**LZT300.55.174**	Large end of oil return valve	回油阀大头	1	1	1	1	1	1
32	**25.55.184**	Spring of oil return valve	回油阀弹簧	1	1	1	1	1	1
33	**25.55.176**	Rear plug of oil return valve	回油阀后堵塞	1	1	1	1	1	1
34	**KM.55.180**	Limit plate	限位板	1	1	1	1	1	1
35	**GB/T 5783**	Hexagon head bolt - full thread M6×10	螺栓M6X10	1	1	1	1	1	1
36	**KM550.55.122**	Take - off valve	截断阀	4	4	4	4	4	4
37	**GB 1235**	O - seal ring 13×1.9	O形密封圈13X1.9	1	1	1	1	1	1
38	**LZT300.55B.119**	Hydraulic output oil pipe	液压输出油管	1	1	1	1	1	1
39	**LZT300.55B.139**	Seat of distributor	分配器支座	1	1	1	1	1	1
40	**GB/T 93**	Single coil spring lock washer 8 - normal type	弹簧垫圈8	8	8	8	8	8	8
41	**GB/T 5783**	Hexagon head bolt - full thread M×45	螺栓M8X45	8	8	8	8	8	8
42	**LZT300B.55.033**	Safety valve assembly	安全阀总成	1	1	1	1	1	1

183

https://truckmanualshub.com/

56A/B 悬挂机构总成-1

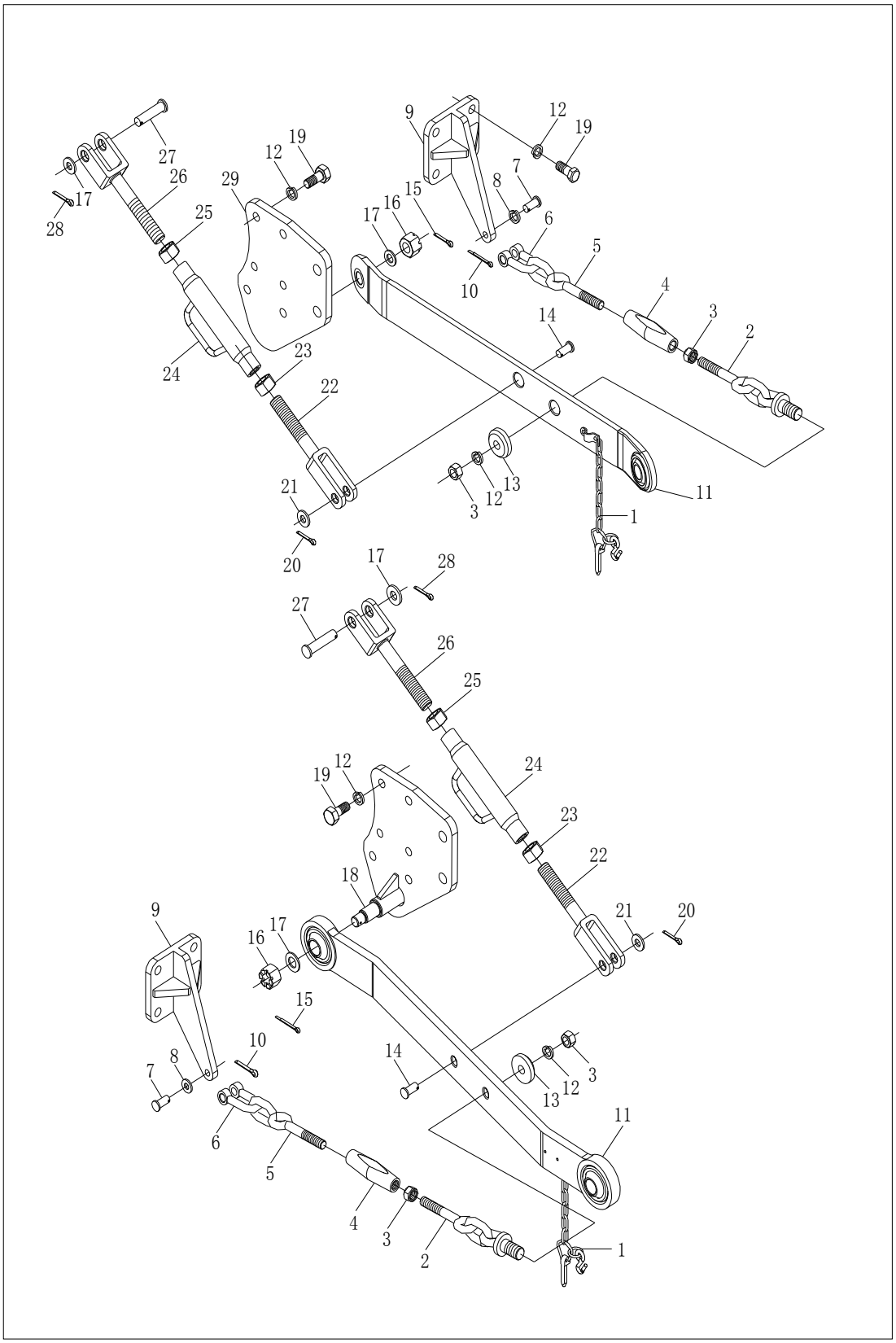

184

https://truckmanualshub.com/

56 悬挂机构总成
Suspension Mechanism Assembly-1

序号 No.	零部件代号 Drawing No.	Part Name and Standards	零部件名称及规格	适用机型和用量（件） Applied Tractor Models and Qty.(Piece)					
				LZT 300	LZT 304	LZT 350	LZT 354	LZT400 /450/480 /500/520 /550	LZT404 /454/484 /504/524 /554
1	**LZT 300.56.028**	Latch chain assembly	锁销链总成	2	2	2	2	2	2
2	**LZT 300.56A.110**	Rear joint pin,gag post	后限位链焊合件	2	2	2	2	2	2
3	**GB/T 91**	Split pin 5*32-Zn.D	开口销5X32-Zn.D	6	6	6	6	6	6
4	**GB/T 882**	Clevis pin with head B18*55-Zn.D	螺母M16—Zn.D	2	2	2	2	2	2
5	**LZT 300.56A.161**	Adjusting screw rod,gag post	限位杆调节套管	2	2	2	2	2	2
6	**GB/T 41**	Hexagon nut-Product grade C M22-Zn.D	螺母-C级M22-Zn.D	2	2	2	2	2	2
7	**LZT 300.56A.023**	Locking pin unit,gag post	限位杆锁销组合	2	2	2	2	2	2
8	**LZT 300.56A.022**	Telescopic pipeline weldment	伸缩导管焊合件	2	2	2	2	2	2
9	**LZT 300.56A.021**	Ball head assembly,telescopic rod	伸缩杆球头总成	2	2	2	2	2	2
10	**LZT 300.56A.103**	Sleeve	套	4	4	4	4	4	4
11	**LZT 300.56A.102**	Joint pin.,gag post	限位杆联接销	2	2	2	2	2	2
12	**LZT 300.56A.017**	Bracket weldment,left gag post	左限位杆支架焊合件	1	1	1	1	1	1
13	**LZT 300.56A.012**	Lower link assembly	下拉杆总成	2	2	2	2	2	2
14	**GB/T 91**	Split pin 4*28-Zn.D	开口销4X28-Zn.D	2	2	2	2	2	2
15	**GB/T 6178**	Hexagon slotted nut,style 1 M16-Zn.D	I型开槽螺母M16-Zn.D	2	2	2	2	2	2
16	**GB/T 97.1**	Plain washer-Product grade A16-140HV-Zn.D	平垫圈16—140HV-Zn.D	4	4	4	4	4	4
17	**LZT300.56A.116**	Round plate	圆板	2	2	2	2	2	2

185

续表1 Continued One

18	**LZT300.56A.112**	Lower connecting pin,lift link	提升杆下联接销	2	2	2	2	2	2
19	**GB/T 91**	Split pin 4*36-Zn.D	开口销4X36-Zn.D	2	2	2	2	2	2
20	**GB/T 6178**	Hexagon nut,style 1 M16-Zn.D	1型螺母M16-Zn.D	2	2	2	2	2	2
21	**GB/T 97.1**	Plain washer-Product grade A20-140HV-Zn.D	垫圈20—140HV—Zn.D	4	4	4	4	4	4
22	**LZT300.56B.015**	Lower link stand weldment,left	左下拉杆支座焊合件	1	1	1	1	1	1
23	**GB/T 5783**	Hexagon head bolt-Full thread M16*35-Zn.D	螺栓M16×35-Zn.D	16	16	16	16	16	16
24	**GB/T 93**	Single coil spring lock washer 16-Normal type	弹性垫圈16	16	16	16	16	16	16
25	**GB/T 97.1**	Plain washer-Product grade A 24-140HV-Zn.D	平垫圈24—140HV—Zn.D	2	2	2	2	2	2
26	**LZT300.56A.108**	Lower joint fork,lift link	提升杆下联接叉	2	2	2	2	2	2
27	**GB/T 6171**	Hexagon nut,style 1-Fine pitch thread M24*2LH-Zn.D	细牙螺母M24×2（左）	2	2	2	2	2	2
28	**LZT 300.56A.033**	Screw tube weldment,lift link	提升杆螺管焊合	2	2	2	2	2	2
29	**GB/T 6171**	Hexagon nut,style 1-Fine pitch thread M24*2-Zn.D	细牙螺母M24×2（右）	2	2	2	2	2	2
30	**LZT300.56A.107**	Upper joint fork,lift link	提升杆上连接叉	2	2	2	2	2	2
31	**LZT300.56A.101**	Joint pin,lift link	提升杆连接销	2	2	2	2	2	2
32	**GB/T 91**	Split pin 5*40-Zn.D	开口销5×40-Zn.D	2	2	2	2	2	2
33	**LZT300.56B.014**	Lower link stand weldment,right	右下拉杆支座焊合件	1	1	1	1	1	1
34	**LZT300.56A.019**	Lower link bracket weldment,right	右限位拉杆支座焊合件	1	1	1	1	1	1
35	**LZT300.56A.014**	Lower link stand weldment,right	右下拉杆支座焊合件	1	1	1	1	1	1
36	**LZT300.56A.015**	Lower link stand weldment,left	左下拉杆支座焊合件	1	1	1	1	1	1

186

https://truckmanualshub.com/

56 悬挂机构总成-2

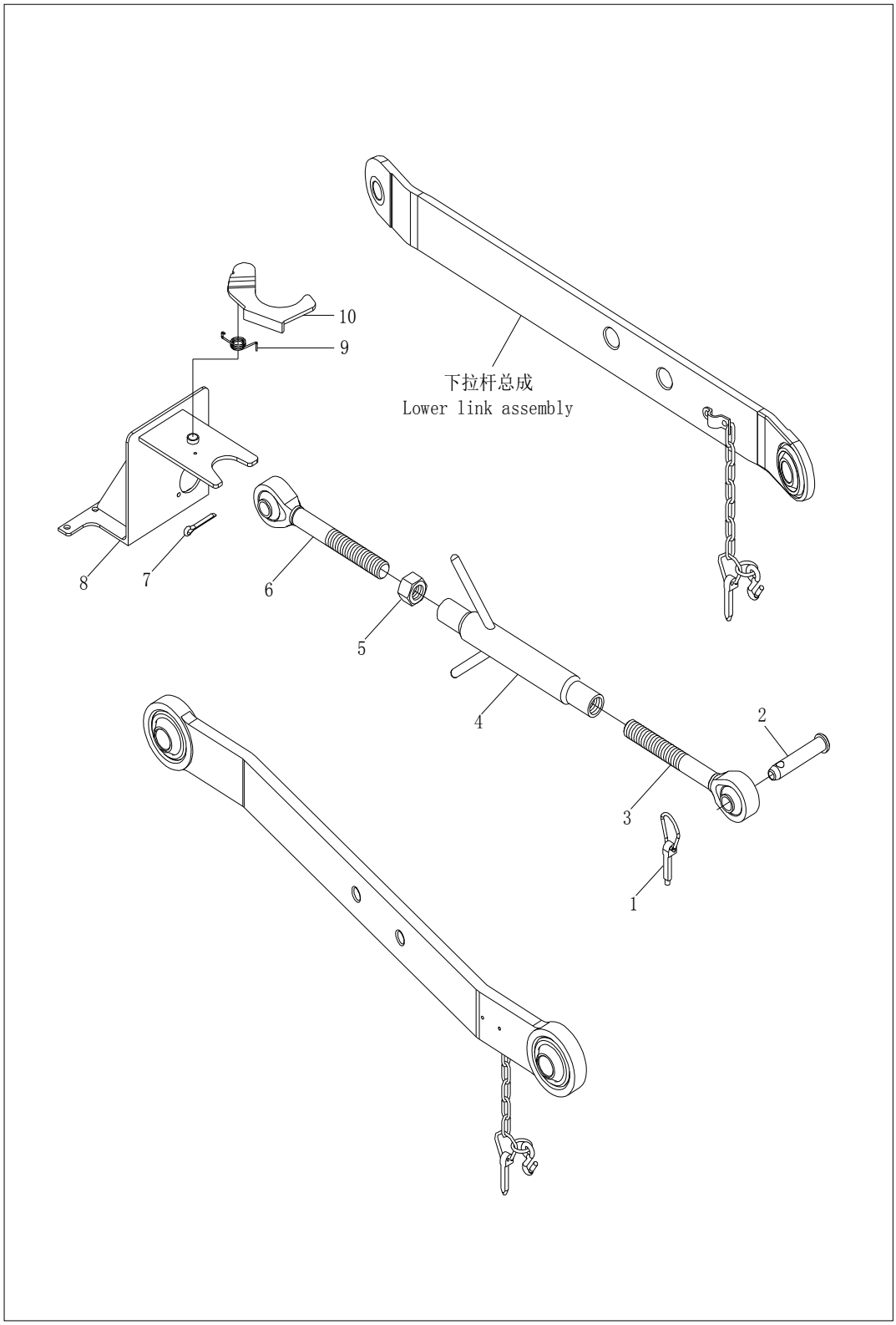

187

56 悬挂机构总成
Suspension Mechanism Assembly-2

序号 No.	零部件代号 Drawing No.	Part Name and Standards	零部件名称及规格	适用机型和用量（件） Applied Tractor Models and Qty.(Piece)					
				LZT 300	LZT 304	LZT 350	LZT 354	LZT400 /450/480 /500/520 /550	LZT404 /454/484 /504/524 /554
1	**LZT300.56.029**	Latch assembly	锁销总成	1	1	1	1	1	1
2	**LZT300.56.160**	Joint pin ,upper link	上拉杆连接销	1	1	1	1	1	1
3	**LZT300.56A.024**	Rear adjusting rod assembly,upper link	后调节杆总成	1	1	1	1	1	1
4	**LZT300.56A.130**	Adjusting screw tube	调节螺管总成	1	1	1	1	1	1
5	**GB/T6171**	Hexagon nut ,style 1, Fine pitch thread M24*2-Zn.D	螺母M24×2—Zn.D	1	1	1	1	1	1
6	**LZT300.56A.026**	Front adjusting rod assembly,upper link	前调节杆总成	1	1	1	1	1	1
7	**GB/T91**	Split pin 3.2*20	销 3.2×20	1	1	1	1	1	1
8	**LZT300.56A.020**	Saddle weldment	座板焊合件	1	1	1	1	1	1
9	**LZT300.56.182**	Torsion spring	扭簧	1	1	1	1	1	1
10	**LZT300.56.021**	Fix clip weldment	固定卡焊合件	1	1	1	1	1	1

188

https://truckmanualshub.com/

300.58A 油泵油管滤油器总成

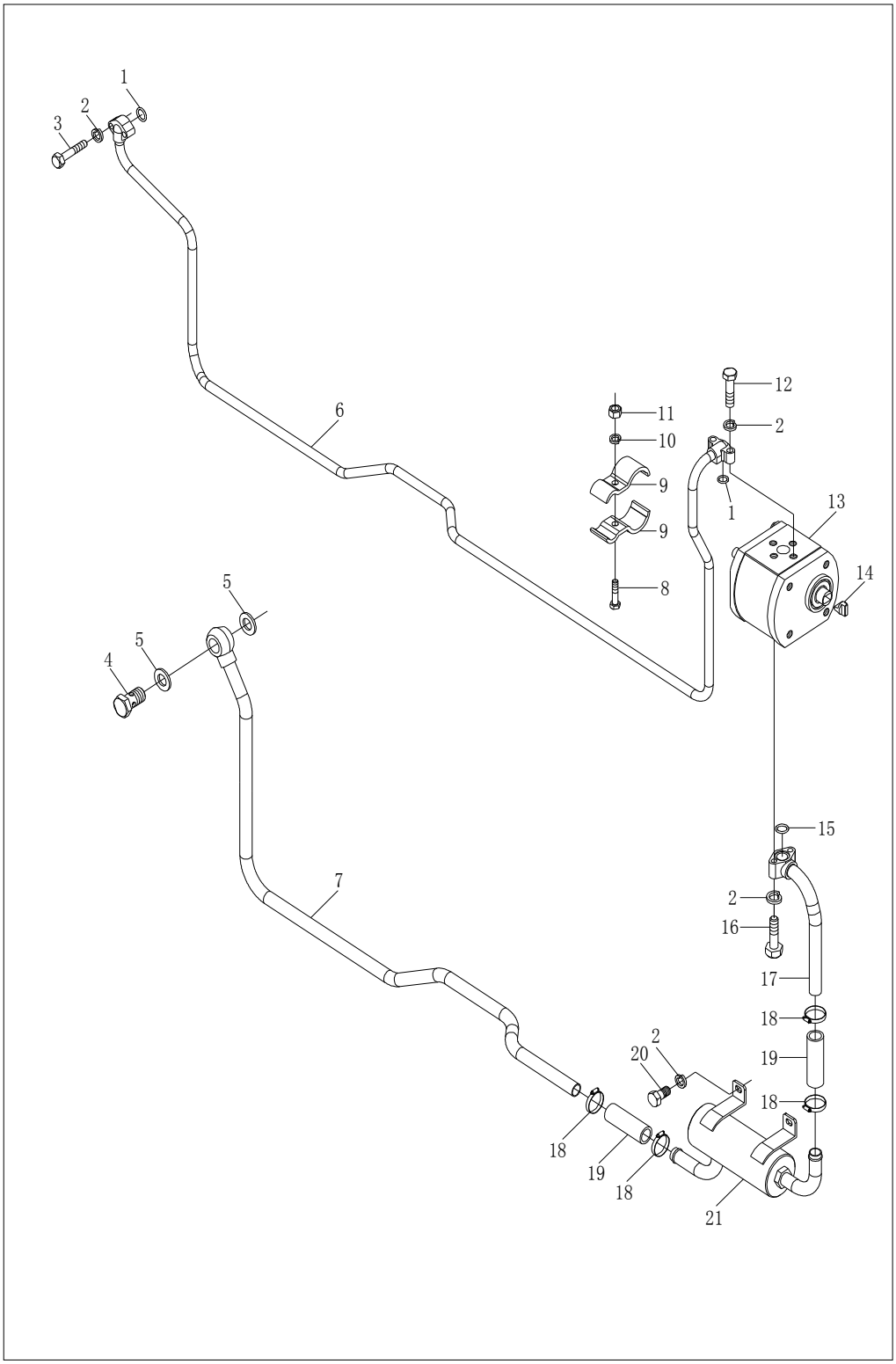

189

58A油泵油管滤清器总成
Gear Pump /Pipe and Filter Assembly(LZT300)

序号 No.	零部件代号 Drawing No.	Part Name and Standards	零部件名称及规格	适用机型和用量（件） Applied Tractor Models and Qty.(Piece)					
				LZT 300	LZT 304	LZT 350	LZT 354	LZT400 /450/480 /500/520 /550	LZT404 /454/484 /504/524 /554
	LZT300.58A.001	Gear pump/pipe and filter assembly①	油泵油管滤清器总成	1	1	1	1		
1	**GB3452.1**	O-seal ring	O形圈15×2.65G	2	2	2	2		
2	**GB/T93**	Single coil spring lock washer -Normal type 8--Zn.D	弹性垫圈8-Zn.D	8	8	8	8		
3	**GB/T5783**	Hexagon head bolt-Full thread M8*30-Zn.D	全螺纹螺栓M8*30-Zn.D	2	2	2	2		
4	**LZT300.58.101**	Hollow bolt	空心螺栓	1	1	1	1		
5	**JB/T982**	Combined sealing washer 22	组合密封垫圈22	2	2	2	2		
6	**LZT300.58A.011**	Pressure oil pipe weldment	压力油管焊合	1	1	1	1		
7	**LZT300.58A.012**	Oil suction pipe weldment(long)	吸油长管焊合	1	1	1	1		
8	**GB/T5783**	Hexagon head bolt-Full thread M6*30-Zn.D	全螺纹螺栓M6*30-Zn.D	3	3	3	3		
9	**LZT300.58.013**	Pipe clamp and rubber cushion	油管夹与胶垫胶合	6	6	6	6		
10	**GB/T93**	Single coil spring lock washer -Normal type 6--Zn.D	弹性垫圈6-Zn.D	3	3	3	3		
11	**GB/T6170**	Hexagon nut ,style 1, M6-Zn.D	1型螺母M6-Zn.D	3	3	3	3		
12	**GB/T5783**	Hexagon head bolt-Full thread M8*35-Zn.D	全螺纹螺栓M8X35-Zn.D	3	3	3	3		
13	**LZT300.58A.020**	Gear pump	齿轮泵	1	1	1	1		
14	**LZT300.58.102**	Cross slider	十字滑块	1	1	1	1		
15	**GB3452.1**	O-seal ring	O形圈19×2.65G	1	1	1	1		
16	**GB/T5783**	Hexagon head bolt-Full thread M8*45-Zn.D	全螺纹螺栓M8X45-Zn.D	2	2	2	2		
17	**LZT300.58A.014**	Oil suction pipe weldment(short)	吸油短管焊合	1	1	1	1		
18	**ZBJ15001**	Keeper d32	喉箍D32	4	4	4	4		
19	**LZT300.58A.104**	Oil suction rubber pipe	吸油胶管	2	2	2	2		
20	**GB/T5783**	Hexagon head bolt-Full thread M8*16-Zn.D	全螺纹螺栓M8X16-Zn.D	2	2	2	2		
21	**LZT300.58A.050**	Oil filter assembly	滤清器总成	1	1	1	1		

Note:Adopt Model Lijia SL2105 engine.

190

https://truckmanualshub.com/

58B 油泵油管滤油器总成(LZT300)
58B Gear Pump/Pipe and Filter Assembly (LZT300)

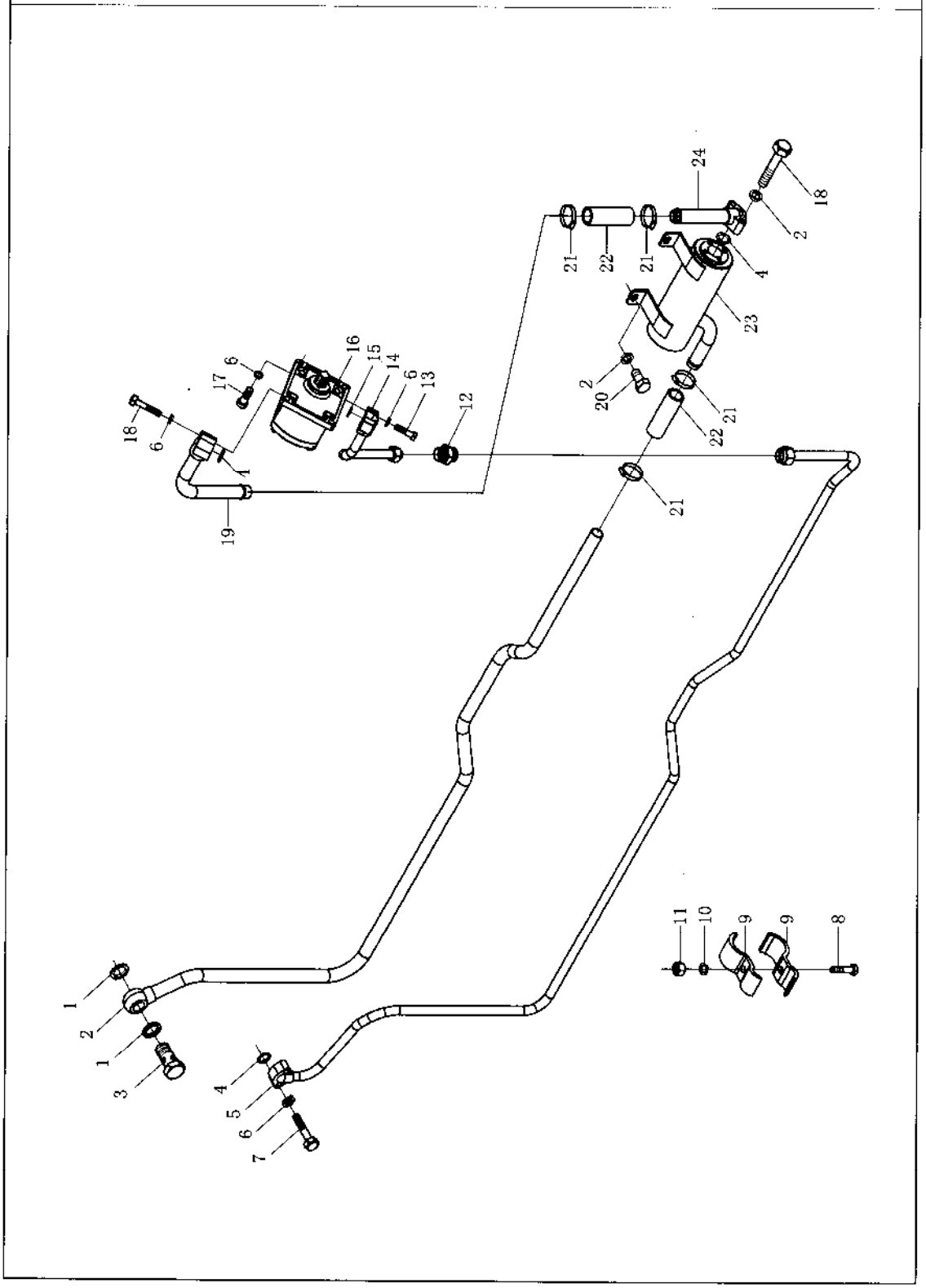

191

58B 油泵油管滤清器总成
Gear Pump/ Pipe and Filter Assembly (LZT300)

序号 No.	零部件代号 Drawing No.	Part Name and Standards	零部件名称及规格	适用机型和用量（件） Applied Tractor Models and Qty.(Piece)					
				LZT 300	LZT 304	LZT 350	LZT 354	LZT400 /450/480 /500/520 /550	LZT404 /454/484 /504/524 /554
	LZT300.58B.001	Gear pump/ pipe and filter assembly	油泵油管滤清器总成	1	1	1	1		
1	**JB/T 982**	Combined sealing washer 22	组合密封垫圈22	2	2	2	2		
2	**LZT300.58B.012**	Oil suction pipe weldment (long)	吸油长管焊合	1	1	1	1		
3	**LZT300.58.101**	Hollow bolt	空心螺栓	1	1	1	1		
4	**GB 3452.1**	O - seal ring 19*2.65G	O形圈19×2.65G	2	2	2	2		
5	**LZT300.58B.011**	Pressure oil pipe weldment - 1	压力油管焊合-1	1	1	1	1		
6	**GB/T 93**	Single coil spring lock washer - Normal type 8 - Zn.D	弹性垫圈8-Zn.D	14	14	14	14		
7	**GB/T 5783**	Hexagon head bolt - Full thread M8*30- Zn.D	全螺纹螺栓M8*30-Zn.D	2	2	2	2		
8	**GB/T 5783**	Hexagon head bolt - Full thread M6*30- Zn.D	全螺纹螺栓M6*30-Zn.D	2	2	2	2		
9	**LZT300.58.013**	Pipe clamp and rubber cushion	油管夹与胶垫胶合	6	6	6	6		

192

续表1 Continued One

10	**GB/T 93**	Single coil spring lock washer - Normal type 6 - Zn.D	弹性垫圈6-Zn.D	3	3	3	3		
11	**GB/T 6170**	Hexagon nut, style 1 M6 - Zn.D	1型螺母M6-Zn.D	3	3	3	3		
12	**LZT700.58A.101**	Direct joint of clip - type	卡套式端直通接头体	1	1	1	1		
13	**GB/T 5783**	Hexagon head bolt - Full thread M8*35-Zn.D	全螺纹螺栓M8X35-Zn.D	2	2	2	2		
14	**LZT300.58B.013**	Pressure oil pipe weldment - 2	压力油管焊合-2	1	1	1	1		
15	**GB 3452.1**	O - seal ring 15*2.65G	O形圈15×2.65G	2	2	2	2		
16	**LZT300.58B.010**	Gear pump	齿轮泵	1	1	1	1		
17	**GB/T 70.1**	Hexagon socket cap head screw M8X45-Zn.D	内六角圆柱头螺钉	4	4	4	4		
18	**GB/T 5783**	Hexagon head bolt - Full thread M8*45-Zn.D	全螺纹螺栓M8X45-Zn.D	4	4	4	4		
19	**LZT300.58B.015**	Oil suction pipe weldment -2	吸油管焊合-2	1	1	1	1		
20	**GB/T 5783**	Hexagon head bolt - Full thread M8*16-Zn.D	全螺纹螺栓M8X16-Zn.D	2	2	2	2		
21	**ZBJ 15001**	Keeper d32	喉箍D32	4	4	4	4		
22	**LZT300.58A.104**	Oil suction rubber pipe	吸油胶管	2	2	2	2		
23	**LZT300.58B.040**	Oil filter assembly	滤清器总成	1	1	1	1		
24	**LZT300.58B.014**	Oil suction pipe weldment -1	吸油管焊合-1	1	1	1	1		
Note:Adopt Modeljiangdong395 engine.									

193

https://truckmanualshub.com/

58A 油泵油管滤油器总成 (LZT400)
58A Gear Pump/Pipe and Filter Assembly (LZT400)

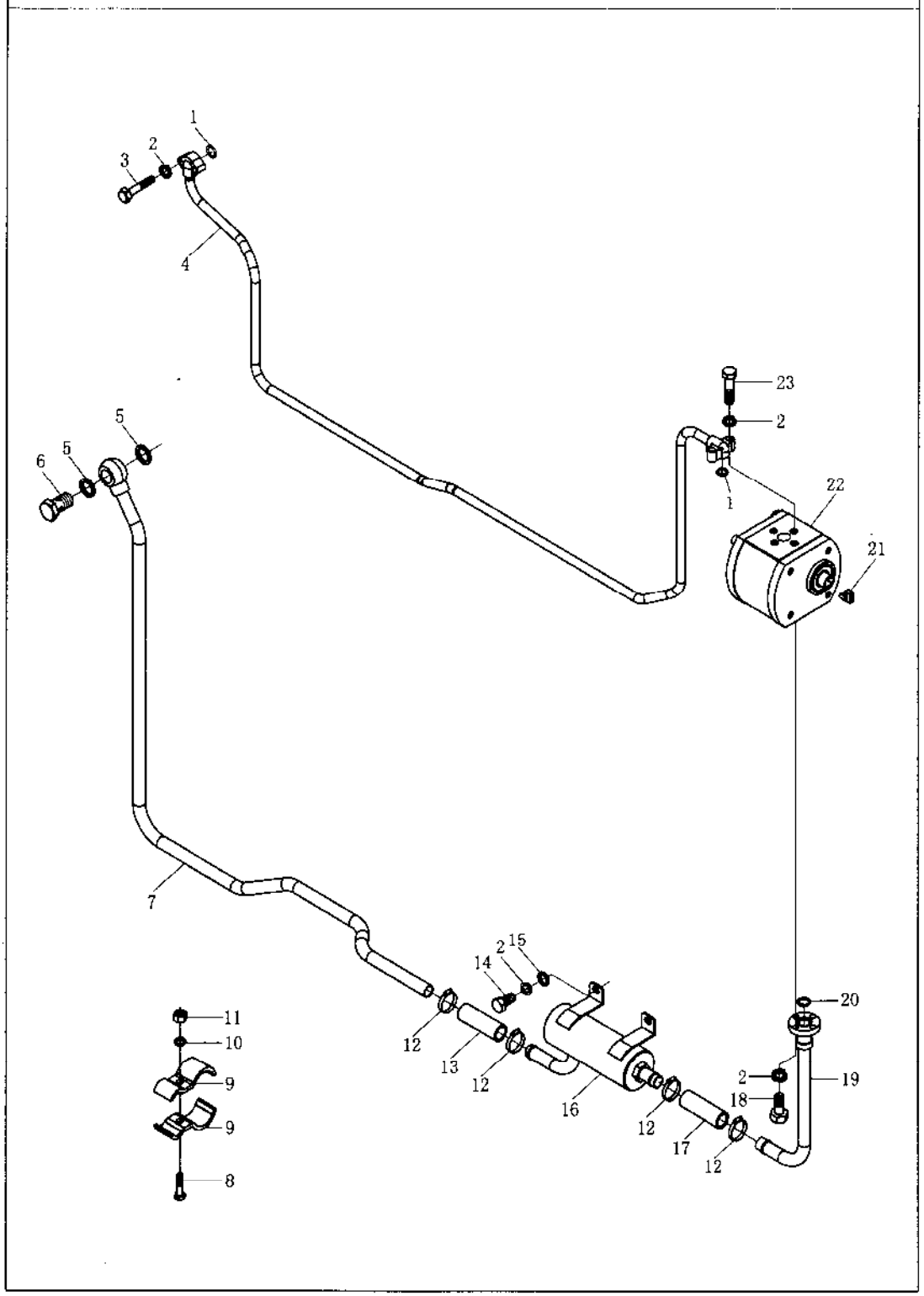

194

58A油泵油管滤清器总成
Gear Pump/ Pipe and Filter Assembly (LZT400)

序号 No.	零部件代号 Drawing No.	Part Name and Standards	零部件名称及规格	适用机型和用量（件） Applied Tractor Models and Qty.(Piece)					
				LZT 300	LZT 304	LZT 350	LZT 354	LZT400 /450/480 /500/520 /550	LZT404 /454/484 /504/524 /554
	LZT400.58A.001	Gear pump/ pipe and filter assembly	油泵油管滤清器总成				1	1	
1	**GB 3452.1**	O - seal ring 15*2.65G	O形圈15×2.65G				2	2	0.8
2	**GB/T 93**	Single coil spring lock washer - Normal type 8 - Zn.D	弹性垫圈8-Zn.D				10	10	0.1
3	**GB/T 5783**	Hexagon head bolt - Full thread M8*30- Zn.D	全螺纹螺栓M8*30-Zn.D				2	2	0.45
4	**LZT400.58A.011**	Pressure oil pipe weldment	压力油管焊合				1	1	55
5	**JB/T 982**	Combined sealing washer 22	组合密封垫圈22				2	2	0.5
6	**LZT300.58.101**	Hollow bolt	空心螺栓				1	1	6.2
7	**LZT300.58A.012**	Oil suction pipe weldment (long)	吸油长管焊合				1	1	35
8	**GB/T 5783**	Hexagon head bolt - Full thread M6*30- Zn.D	全螺纹螺栓M6*30-Zn.D				3	3	0.3
9	**LZT300.58.013**	Pipe clamp and rubber cushion	油管夹与胶垫胶合				6	6	3.5

195

续表1 Continued One

10	**GB/T 93**	Single coil spring lock washer - Normal type 6 - Zn.D	弹性垫圈6-Zn.D				3	3	0.1
11	**GB/T 6170**	Hexagon nut, style 1 M6 - Zn.D	1型螺母M6-Zn.D				3	3	0.2
12	**ZBJ 15001**	Keeper d32	喉箍D32				4	4	2
13	**LZT300.58A.104**	Oil suction rubber pipe	吸油胶管				1	1	5
14	**GB/T 5783**	Hexagon head bolt - Full thread M8*16-Zn.D	全螺纹螺栓M8X16-Zn.D				2	2	0.35
15	**GB/T 97.1**	Plain washer - Product grade A 8 - Zn.D	平垫圈8-A级				2	2	0.1
16	**LZT400.58A.040**	Oil filter assembly	滤清器总成				1	1	110
17	**LZT400.58A.102**	Oil suction rubber pipe	吸油胶管				1	1	5
18	**GB/T 5783**	Hexagon head bolt - Full thread M8*25-Zn.D	全螺纹螺栓M8X25-Zn.D				4	4	0.25
19	**LZT400.58A.015**	Oil suction pipe weldment (short)	吸油短管焊合				1	1	18
20	**GB 3452.1**	O - seal ring 19*2.65G	O形圈19×2.65G				1	1	1
21	**LZT 300.58.102**	Cross slider	十字滑块				1	1	10.5
22	**LZT 300.58A.020**	Gear pump	齿轮泵				1	1	220
23	**GB/T 5783**	Hexagon head bolt - Full thread M8*35 - Zn.D	全螺纹螺栓M8X35-Zn.D				2	2	0.45
Note:Adopt Model Lijia SL3105 engine.									

196

https://truckmanualshub.com/

58A 油泵油管液压输出总成－1(LZT304)

58A Gear Pump/Pipe and Hydraulic Output Assembly－1(LZT304)

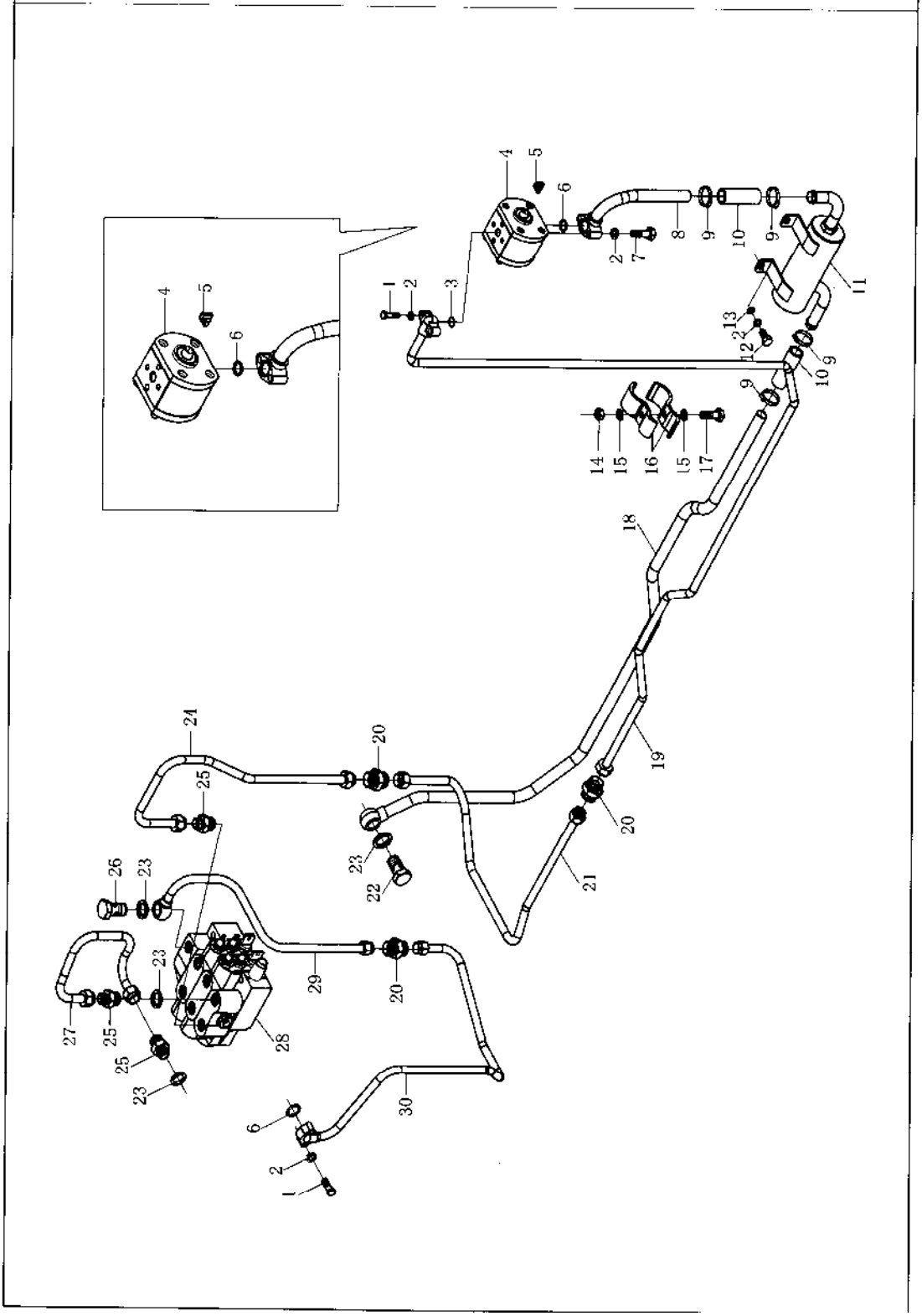

197

58A 油泵油管滤清器总成
Gear Pump/ Pipe and Hydraulic Output Assembly - 1 (LZT304)

序号 No.	零部件代号 Drawing No.	Part Name and Standards	零部件名称及规格	适用机型和用量（件） Applied Tractor Models and Qty.(Piece)					
				LZT 300	LZT 304	LZT 350	LZT 354	LZT400 /450/480 /500/520 /550	LZT404 /454/484 /504/524 /554
	LZT304.58A.001	Gear pump/ pipe and hydraulic output assembly①	油泵油管滤清器总成	1	1	1			
1	**GB/T 5783**	Hexagon head bolt - Full thread M8*30 - Zn.D	全螺纹螺栓M8*30-Zn.D	4	4	4			0.45
2	**GB/T 93**	Single coil spring lock washer 8 - Normal type	弹性垫圈8-Zn.D	18	18	18			0.1
3	**GB 3452.1**	O - seal ring 15*2.65G	O形圈15×2.65G	2	2	2			0.7
4	**LZT300.58A.020**	Gear pump	齿轮泵	1	1	1			220
5	**LZT300.58.102**	Cross slider		1	1	1			10.5
6	**GB 3452.1**	O - seal ring 19*2.65G	O形圈19×2.65G	1	1	1			1
7	**GB/T 5783**	Hexagon head bolt - Full thread M8*45 - Zn.D	全螺纹螺栓M8X45-Zn.D	2	2	2			0.55
8	**LZT300.58A.014**	Oil suction pipe weldment (short)	吸油短管焊合	1	1	1			18
9	**ZBJ 15001**	Keeper	喉箍	4	4	4			2
10	**LZT300.58A.104**	Oil suction rubber pipe	吸油胶管	2	2	2			5
11	**LZT300.58A.050**	Oil filter assembly	滤清器总成	1	1	1			110
12	**GB/T 5783**	Hexagon head bolt - Full thread M8*20 - Zn.D	全螺纹螺栓M8X26-Zn.D	2	2	2			0.35
13	**GB/T 97.1**	Plain washer - Product grade A 8 - Zn.D	平垫圈8-A级	2	2	2			0.1
14	**GB/T 6170**	Hexagon nut, style 1 M6- Zn.D	1型螺母M6-Zn.D	3	3	3			0.2

198

续表1 Continued One

15	**GB/T 93**	Single coil spring lock washer 6 - Normal type	弹性垫圈6-Zn.D	3	3	3			0.1
16	**LZT300.58.013**	Pipe clamp and rubber cushion	油管夹与胶垫胶合	6	6	6			3.5
17	**GB/T 5783**	Hexagon head bolt - Full thread M6*30 - Zn.D	全螺纹螺栓M6*30-Zn.D	3	3	3			0.3
18	**LZT300.58A.012**	Oil suction pipe weldment (long)	吸油长管焊合	1	1	1			35
19	**LZT304.58A.020**	Multi - way valve oil intake pipe assembly - 3	多路阀进油管总成-3	1	1	1			39
20	**LZT700.58A.101**	Direct joint of clip - type	卡套式端直通接头体	3	3	3			5
21	**LZT354.58C.019**	Multi - way valve oil intake pipe assembly - 2	多路阀进油管总成-2	1	1	1			25
22	**LZT300.58.101**	Hinged bolt	铰接螺栓	1	1	1			6.5
23	**JB/T 982**	Combined sealing washer 22	组合密封垫22	15	15	15			4
24	**LZT354.58C.017**	Multi - way valve oil intake pipe assembly - 1	多路阀进油管总成-1	1	1	1			25
25	**LZT654.58B.102**	Direct joint of clip - type 1	卡套式端直通接头体1	5	5	5			5
26	**LZT654.58.102**	Hollow bolt - 1	空心螺栓1	1	1	1			6.5
27	**LZT354.58C.016**	Multi - way valve oil return pipe assembly - 1	多路阀回油管总成	1	1	1			27
28	**LZT654.58B.020**	Multi - way valve assembly DF250F1	多路阀总成DF250F1	1	1	1			870
29	**LZT654.58C.015**	Multi - way valve oil outlet pipe assembly - 1	多路阀输出油管总成-1	1	1	1			26
30	**LZT354.58A.018**	Multi - way valve oil outlet pipe assembly - 2	多路阀输出油管总成-2	1	1	1			32

Note:① Adopt Model Lijia SL 2105 engine, two - way hysraulic output.
配力佳2105发动机带二路多路阀

199

https://truckmanualshub.com/

58A 油泵油管液压输出总成－2（LZT304）
58A Gear Pump/Pipe and Hydraulic Output Assembly－2（LZT304）

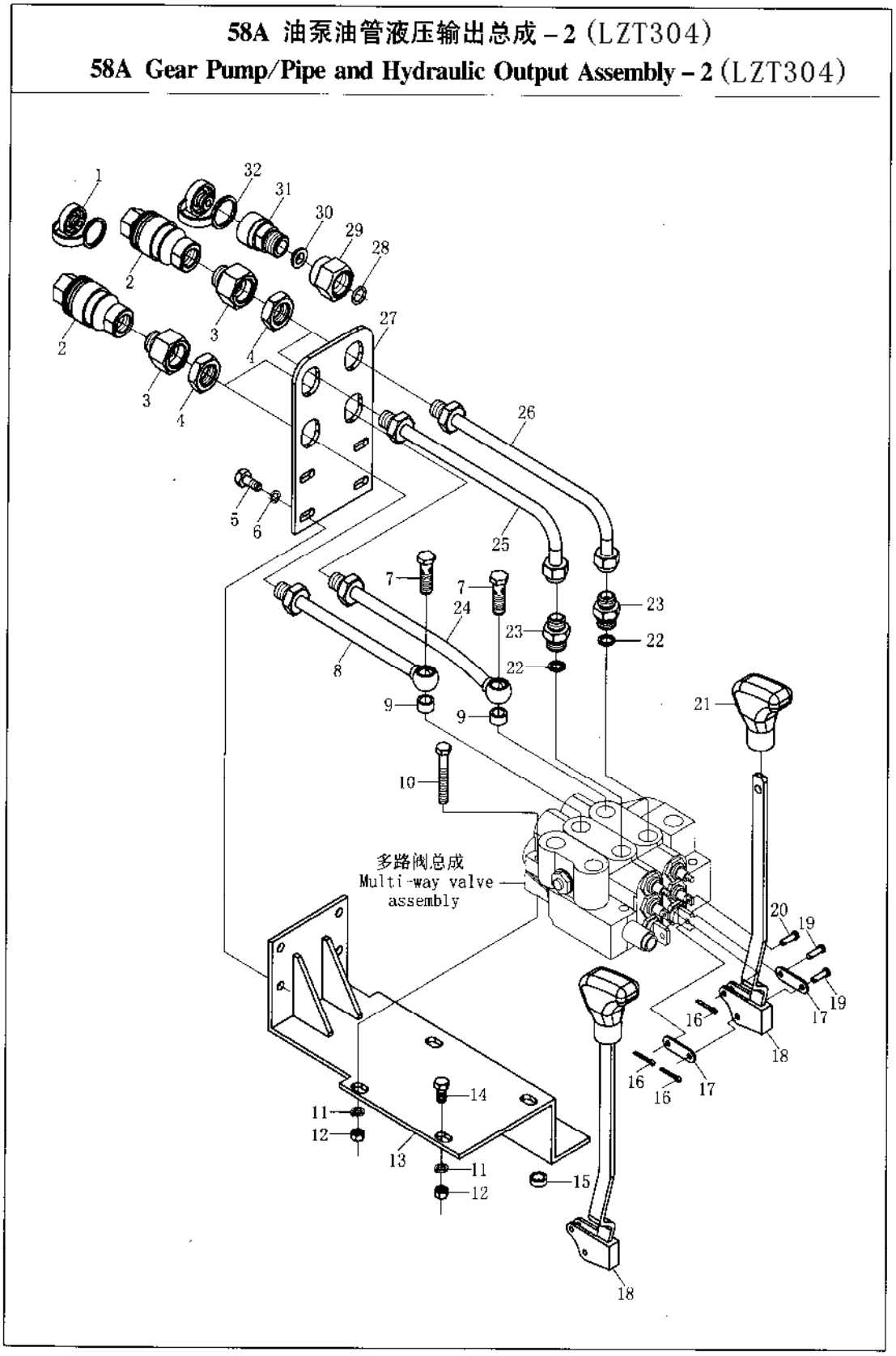

200

58A油泵油管滤清器总成 Gear Pump/ Pipe and Hydraulic Output Assembly - 2 (LZT304)									
序号 No.	零部件代号 Drawing No.	Part Name and Standards	零部件名称及规格	适用机型和用量（件） Applied Tractor Models and Qty.(Piece)					
				LZT 300	LZT 304	LZT 350	LZT 354	LZT400 /450/480 /500/520 /550	LZT404 /454/484 /504/524 /554
	LZT304.58A.001	Gear pump/ pipe and hydraulic output assembly	油泵油管滤清器总成						
1	**LZT354.58A.103**	Dust cover	防尘盖	4	4	4	4		3
2	**LZT354.58A.030**	Snap joint	英制快换接头	4	4	4	4		85
3	**LZT354.58A.104**	Oil pipe joint	英制油管接头	4	4	4	4		12
4	**GB/T 6173**	Hexagon head bolt with fine pitch thread M22*1.5-Zn.D	薄螺母-细牙M22×1.5-Zn.D	4	4	4	4		3
5	**GB/T 5783**	Hexagon head bolt - Full thread M8*25-Zn.D	全螺纹螺栓M8X25-Zn.D	4	4	4	4		0.4
6	**GB/T 93**	Single coil spring lock washer 6 - Normal type - Zn.D	弹性垫圈6	18	18	18	18		0.1
7	**LZT654.58.110**	Hollow bolt - 2	空心螺栓-2	2	2	2	2		6.5
8	**LZT354.58A.016**	Multi- way valve oil outlet pipe assembly - 1	多路阀输出油管总成-1	1	1	1	1		22
9	**LZT654.58.109**	Thick washer - 1	厚垫圈-1	2	2	2	2		0.5
10	**GB/T 5782**	Hexagon heda bolt M10*70- Zn.D	螺栓M10×70-Zn.D	3	3	3	3		0.1
11	**GB/T 93**	Single coil spring lock washer - Normal type 10	弹性垫圈10	4	4	4	4		0.1
12	**GB/T 6170**	Hexagon nut, style 1 M10	1型螺母M10	3	3	3	3		0.35

续表1 Continued One

13	**LZT354.58A.022a**	Fixed bracket weldment of multi - way valve	多路阀固定支架焊合	1	1	1	1		19
14	**GB/T 5783**	Hexagon head bolt - Full thread M10*16- Zn.D	全螺纹螺栓M10X16-Zn.D	1	1	1	1		0.3
15	**LZT354.58A.101**	Spacer briquet	垫块	2	2	2	2		1
16	**GB/T 91**	Split pin 2*12 - Zn.D	开口销2X12-	6	6	6	6		0.2
17	**LZT 654.58.103**	Joint plate	联接板	4	4	4	4		1.5
18	**LZT354.58C.014**	Control handle weldment	操纵手柄焊合	2	2	2	2		14
19	**GB/T 882**	Clevis pin with head B6*26 - Zn.D	销轴B6×26-Zn.D	4	4	4	4		0.8
20	**GB/T 882**	Clevis pin with head B6*20- Zn.D	销轴B6×20-Zn.D	2	2	2	2		0.8
21	**LZT65.57.013**	Handle end assembly	手柄头总成	2	2	2	2		7
22	**JB/T 982**	combined sealing washer 22	组合密封垫22	15	15	15	15		0.3
23	**LZT654.58B.102**	Direct joint of clip - type 1	卡套式端直通接头体1	5	5	5	5		5
24	**LZT354.58A.014**	Multi - way valve oil outlet pipe assembly - 3	多路阀输出油管总成-3	1	1	1	1		25
25	**LZT354.58A.017**	Multi - way valve oil outlet pipe assembly - 2	多路阀输出油管总成-2	1	1	1	1		25
26	**LZT354.58A.015**	Multi - way valve oil outlet pipe assembly - 4	多路阀输出油管总成-4	1	1	1	1		25
27	**LZT354.58A.111a**	Fixed bracket of snap joint	快换接头固定支架	1	1	1	1		13
28	**GB 3452.1**	O - seal ring 12.5*2.65G	O形圈12.5×2.65G	4	4	4	4		0.7
29	**LZT354.58A.102**	Oil pipe joint	油管接头	4	4	4	4		8
30	**LZT654.58.106a**	Washer	垫圈	4	4	4	4		1.5
31	**ft704.58C.010**	Snap joint	快换接头	4	4	4	4		67
32	**LZT654.58.155**	Dust cover	防尘盖	4	4	4	4		3

202

https://truckmanualshub.com/

58A 油泵油管液压输出总成－1 (LZT354)

58A Gear Pump/Pipe and Hydraulic Output Assembly－1 (LZT354)

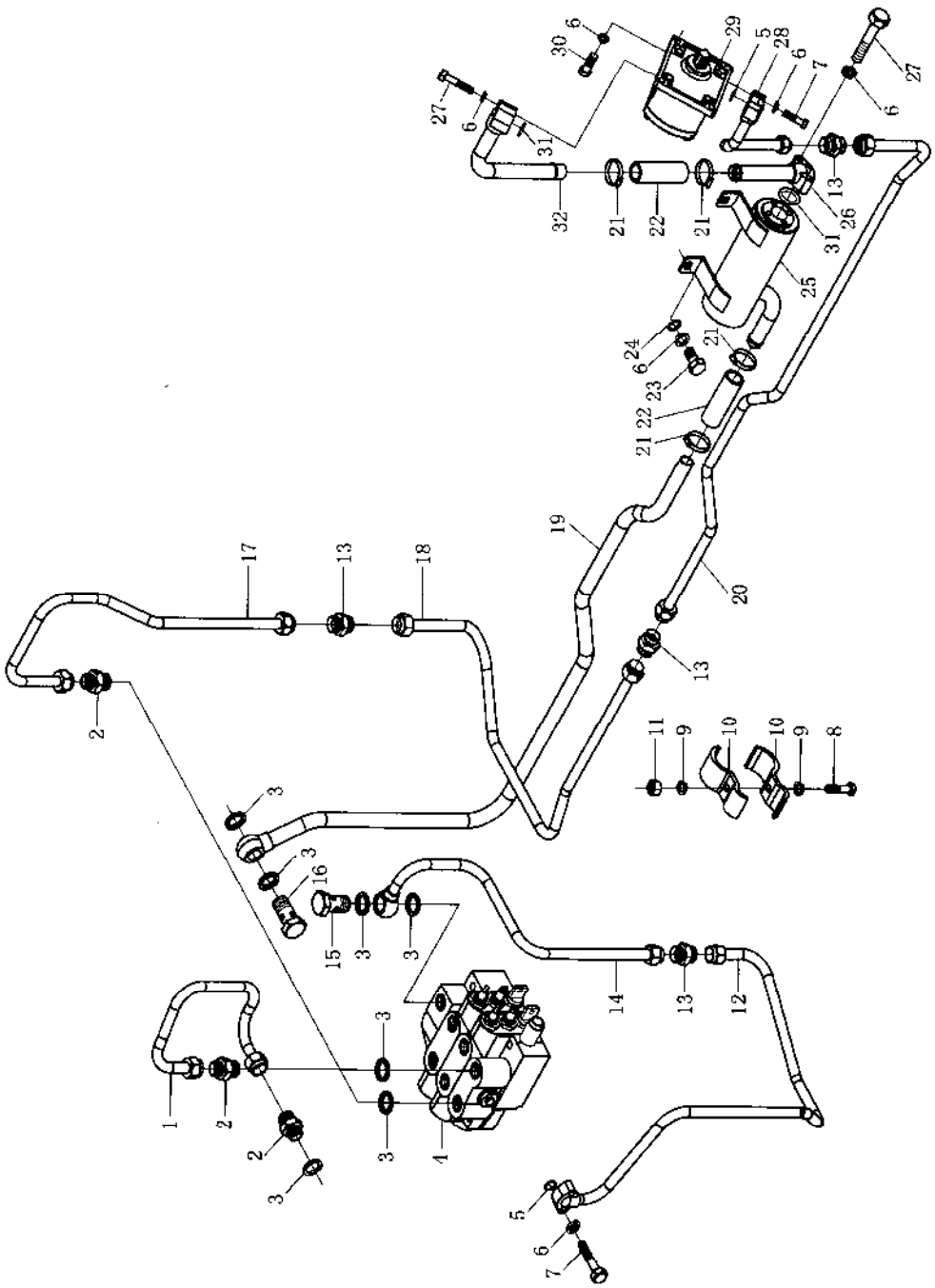

203

58A油泵油管滤清器总成
Gear Pump/ Pipe and Hydraulic Output Assembly - 1 (LZT354)

序号 No.	零部件代号 Drawing No.	Part Name and Standards	零部件名称及规格	适用机型和用量（件） Applied Tractor Models and Qty.(Piece)					
				LZT 300	LZT 304	LZT 350	LZT 354	LZT400 /450/480 /500/520 /550	LZT404 /454/484 /504/524 /554
	LZT354.58A.001	Gear pump/ pipe and hydraulic output assembly①	油泵油管滤清器总成	1	1	1	1		
1	**LZT354.58C.016**	Multi- way valve oil return pipe assembly	多路阀回油管总成	1	1	1	1		27
2	**LZT654.58B.102**	Direct joint of clip - type	卡套式端直通接头体	5	5	5	5		5
3	**JB/T 982**	Combined sealing washer 22	组合密封垫22	11	11	11	11		4
4	**LZT654.58B.020**	Multi- way valve assembly DF250F1	多路阀总成DF250F1	1	1	1	1		870
5	**GB 3452.1**	O - seal ring 15*2.65G	O形圈15×2.65G	2	2	2	2		0.7
6	**GB/T 93**	Single coil spring lock washer 8 - Normal type	弹性垫圈8-Zn.D	18	18	18	18		0.1
7	**GB/T 5783**	Hexagon head bolt - Full thread M8*30-Zn.D	全螺纹螺栓M8*30-Zn.D	4	4	4	4		0.45
8	**GB/T 5783**	Hexagon head bolt - Full thread M6*30-Zn.D	全螺纹螺栓M6*30-Zn.D	3	3	3	3		0.3
9	**GB/T 93**	Single coil spring lock washer 6 - Normal type	弹性垫圈6-Zn.D	6	6	6	6		0.1
10	**LZT300.58.013**	Pipe clamp and rubber cushion	油管夹与胶垫胶合	6	6	6	6		3.5
11	**GB/T 6170**	Hexagon nut, style 1 M6-Zn.D	1型螺母M6-Zn.D	3	3	3	3		0.2
12	**LZT354.58A.018**	Multi - way valve oil outlet pipe assembly - 2	多路阀输出油管总成-2	1	1	1	1		32
13	**LZT700.58A.101**	Direct joint of clip - type	卡套式端直通接头体	4	4	4	4		5

续表1 Continued One

14	**LZT354.58C.015**	Multi - way valve oil outlet pipe assembly - 1	多路阀输出油管总成-1	1	1	1	1		26
15	**LZT654.58.107**	Hollow bolt - 1	空心螺栓-1	1	1	1	1		6.5
16	**LZT300.58.101**	Hinged bolt	铰接螺栓	1	1	1	1		6.5
17	**LZT354.58C.017**	Multi - way valve oil intake pipe assembly - 1	多路阀进油管总成-1	1	1	1	1		25
18	**LZT354.58C.019**	Multi - way valve oil intake pipe assembly - 2	多路阀进油管总成-2	1	1	1	1		25
19	**LZT300.58B.012**	Oil suction long pipe weldment	吸油长管焊合	1	1	1	1		35
20	**LZT354.58A.020**	Multi - way valve oil intake pipe assembly - 3	多路阀进油管总成-3	1	1	1	1		39
21	**ZBJ 15001**	Keeper d32	喉箍D32	4	4	4	4		2
22	**LZT300.58A.104**	Oil suction rubber pipe	吸油胶管	2	2	2	2		5
23	**GB/T 5783**	Hexagon head bolt - Full thread M8*20-Zn.D	全螺纹螺栓M8X20-Zn.D	2	2	2	2		0.35
24	**GB/T 97.1**	Plain washer - Product grade A 8 - Zn.D	平垫圈8-A级	2	2	2	2		0.1
25	**LZT 300.58B.040**	Oil filter assembly	滤清器总成	1	1	1	1		110
26	**LZT 300.58B.014**	Oil suction short pipe weldment - 1	吸油短管焊合-1	1	1	1	1		68
27	**GB/T 5783**	Hexagon head bolt - Full thread M8*45-Zn.D	全螺纹螺栓M8X45-Zn.D	4	4	4	4		0.55
28	**LZT300.58B.013**	Pressure oil pipe weldment - 2	压力油管焊合-2	1	1	1	1		18
29	**LZT300.58B.010**	Gear pump	齿轮泵	1	1	1	1		220
30	**GB/T 5783**	Hexagon head bolt - Full thread M8*35-Zn.D	全螺纹螺栓M8X35-Zn.D	4	4	4	4		0.45
31	**GB 3452.1**	O seal ring 19*2.65G	O形圈19×2.65G	2	2	2	2		1
32	**LZT300.58B.015**	Oil suction short pipe weldment - 2	吸油短管焊合-2	1	1	1	1		18
Note:①Adopt Model Jiangdong TY395 engine, two - way hydraulic output 配江动TY395发动机 配二路液压输出									

205

https://truckmanualshub.com/

58A 油泵油管液压输出总成－2 (LZT354)
58A Gear Pump/Pipe and Hydraulic Output Assembly－2 (LZT354)

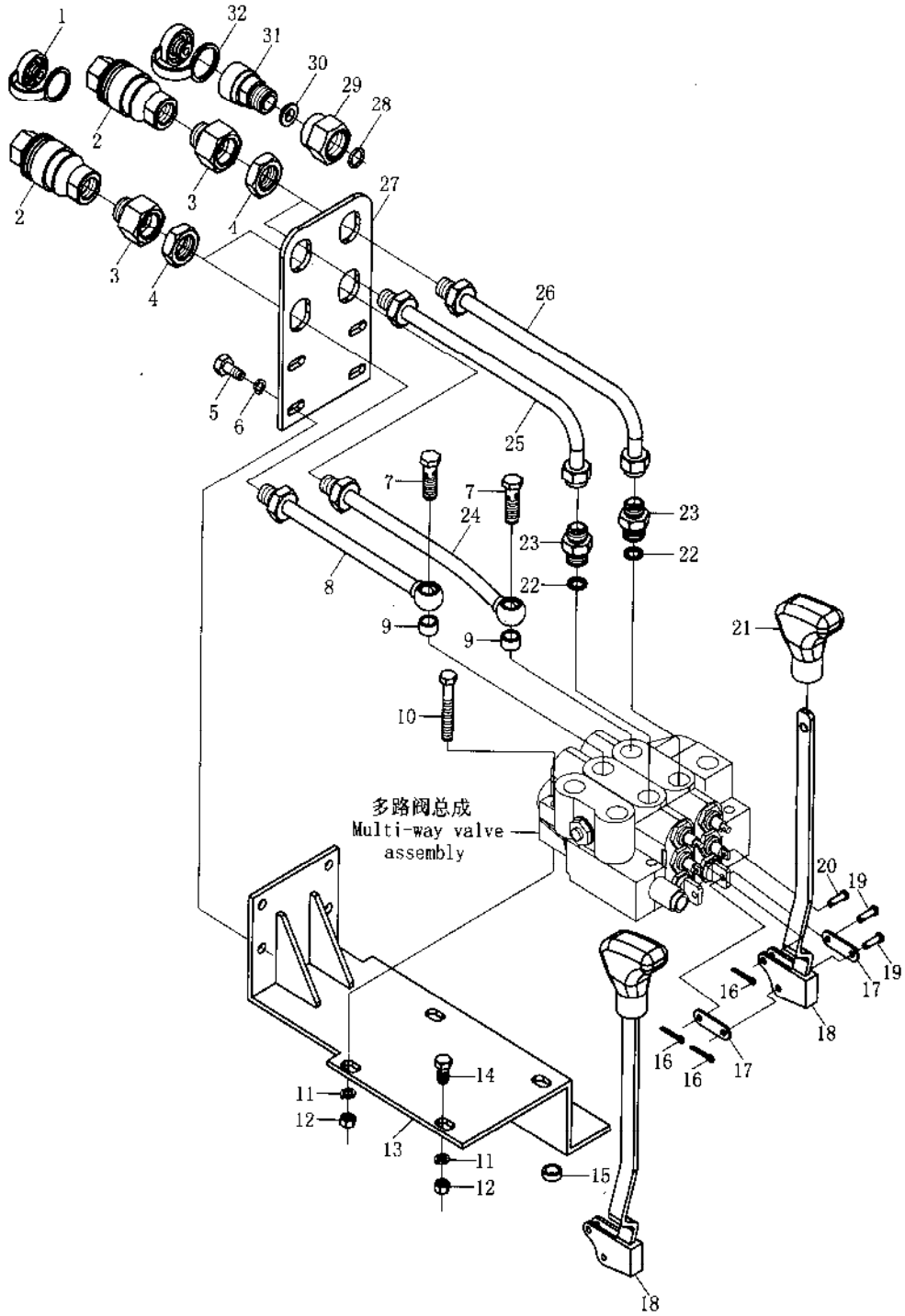

206

58A 油泵油管滤清器总成
Gear Pump/ Pipe and Hydraulic Output Assembly - 2 (LZT354)

序号 No.	零部件代号 Drawing No.	Part Name and Standards	零部件名称及规格	适用机型和用量（件） Applied Tractor Models and Qty.(Piece)					
				LZT 300	LZT 304	LZT 350	LZT 354	LZT400 /450/480 /500/520 /550	LZT404 /454/484 /504/524 /554
	LZT354.58A.001	Gear pump/ pipe and hydraulic output assembly	油泵油管滤清器总成						
1	**LZT354.58A.103**	Dust cover	防尘盖	4	4	4	4		3
2	**LZT354.58A.030**	Snap joint	英制快换接头	4	4	4	4		85
3	**LZT354.58A.104**	Oil pipe joint	英制油管接头	4	4	4	4		12
4	**GB/T 6173**	Hexagon head bolt with fine pitch thread M22*1.5-Zn.D	薄螺母-细牙M22×1.5-Zn.D	4	4	4	4		3
5	**GB/T 5783**	Hexagon head bolt - Full thread M8*25-Zn.D	全螺纹螺栓M8X25-Zn.D	4	4	4	4		0.4
6	**GB/T 93**	Single coil spring lock washer - Normal type 8-Zn.D	弹性垫圈6	18	18	18	18		0.1
7	**LZT654.58.110**	Hollow bolt - 2	空心螺栓-2	2	2	2	2		6.5
8	**LZT354.58A.016**	Multi - way valve oil outlet pipe assembly - 1	多路阀输出油管总成-1	1	1	1	1		22
9	**LZT354.58.109**	Thick washer - 1	厚垫圈-1	2	2	2	2		0.5
10	**GB/T 5782**	Hexagon head bolt M10*70 - Zn.D	螺栓M10×70-Zn.D	3	3	3	3		1.5
11	**GB/T 93**	Single coil spring lock washer 10-Normal type	弹性垫圈10	4	4	4	4		0.1
12	**GB/T 6170**	Hexagon nut, style 1 M10	1型螺母M10	3	3	3	3		0.35

207

续表1 Continued One

13	**LZT 354.58A.022a**	Fixed bracket weldmet of multi - way valve	多路阀固定支架焊合	1	1	1	1		19
14	**GB/T 5783**	Hexagon head bolt - Full thread M10*16-Zn.D	全螺纹螺栓M10X16-Zn.D	1	1	1	1		0.3
15	**LZT 354.58C.101**	Spacer brique	垫块	2	2	2	2		1
16	**GB/T 91**	Split pin 2*12 - Zn.D	开口销2X12-Zn.D	6	6	6	6		0.2
17	**LZT654.58.103**	Joint plate	联接板	4	4	4	4		1.5
18	**LZT354.58C.014**	Control handle weldment	操纵手柄焊合	2	2	2	2		14
19	**GB/T 882**	Clevis pin with head B6*26 - Zn.D	销轴B6×26-Zn.D	2	2	2	2		0.3
20	**GB/T 882**	Clevis pin with head B6*20 - Zn.D	销轴B6×20-Zn.D	4	4	4	4		0.3
21	**LZT 65.57.013**	Handle end assembly	手柄头总成	2	2	2	2		7
22	**JB/T 982**	Combined sealing washer 22	组合密封垫22	15	15	15	15		4
23	**LZT 654.58B.102**	Direct joint of clip - type (1)	卡套式端直通接头体1	5	5	5	5		5
24	**LZT654.58A.014**	Multi - way valve oil outlet pipe assembly - 3	多路阀输出油管总成-3	1	1	1	1		25
25	**LZT 654.58A.017**	Multi - way valve oil outlet pipe assembly - 2	多路阀输出油管总成-2	1	1	1	1		25
26	**LZT 654.58A.015**	Multi - way valve oil outlet pipe assembly - 4	多路阀输出油管总成-4	1	1	1	1		25
27	**LZT 654.58A.111a**	Fixed bracket of snap joint	快换接头固定支架	1	1	1	1		13
28	**GB3452.1**	O - seal ring 12.5*2.65G	O形圈12.5×2.65G	4	4	4	4		0.7
29	**LZT354.58A.102**	Oil pipe joint	油管接头	4	4	4	4		8
30	**LZT654.58.106a**	Washer	垫圈	4	4	4	4		1.5
31	**LZT704.58C.010**	Snap joint	快换接头	4	4	4	4		67
32	**LZT654.58.155**	Dust cover	防尘盖	4	4	4	4		3

208

https://truckmanualshub.com/

58A 油泵油管液压输出总成－1(LZT404)
58A Gear Pump/Pipe and Hydraulic Output Assembly－1(LZT404)

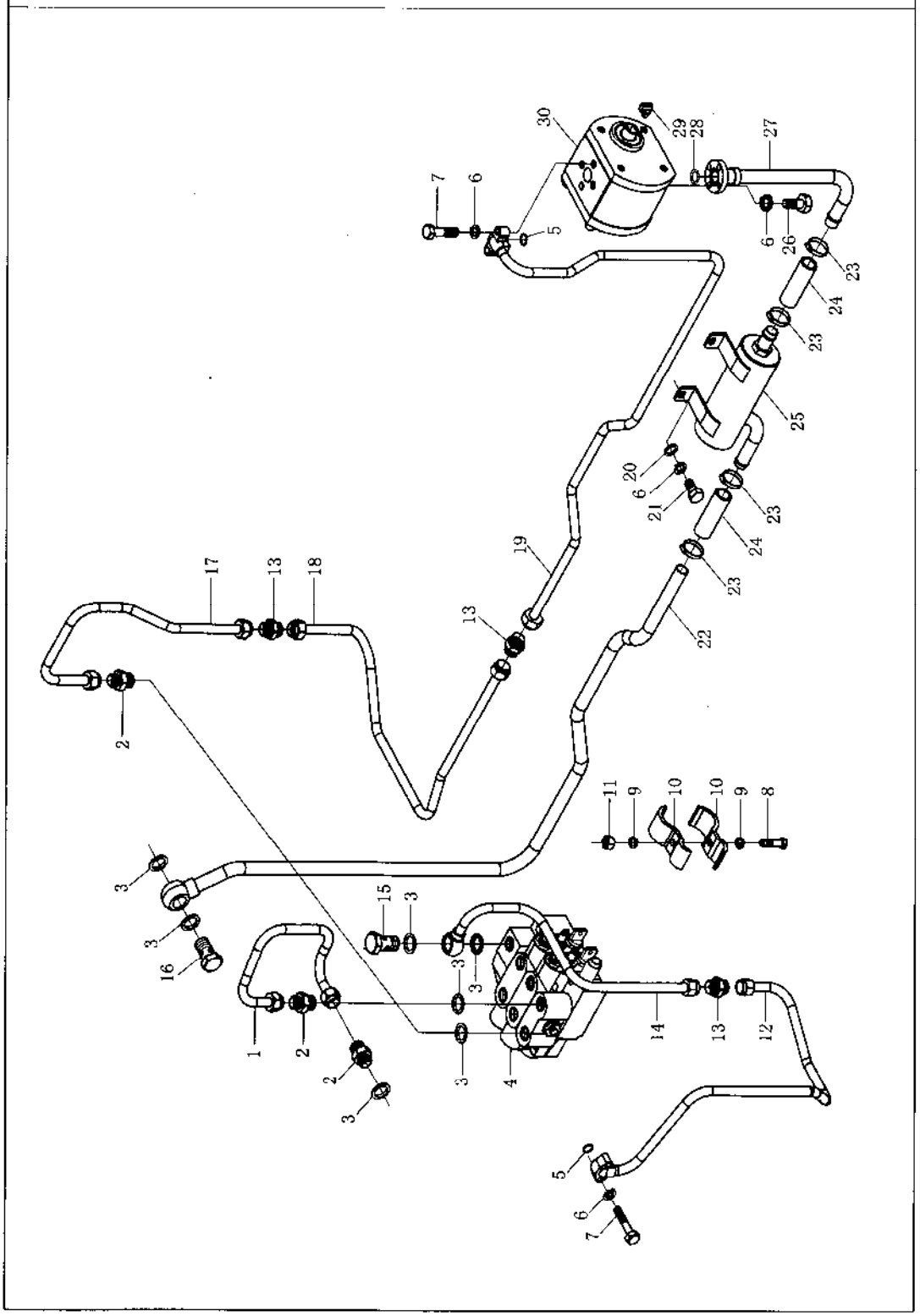

209

58A油泵油管滤清器总成
Gear Pump/ Pipe and Hydraulic Output Assembly - 1(LZT404)

序号 No.	零部件代号 Drawing No.	Part Name and Standards	零部件名称及规格	适用机型和用量（件） Applied Tractor Models and Qty.(Piece)					
				LZT 300	LZT 304	LZT 350	LZT 354	LZT400 /450/480 /500/520 /550	LZT404 /454/484 /504/524 /554
	LZT404.58.001	Gear pump/pipe and hydraulic output assembly ①	油泵油管滤清器总成				1	1	
1	**LZT354.58C.016**	Multi - way valve oil return pipe assembly	多路阀回油管总成				1	1	27
2	**LZT654.58B.102**	Direct joint of clip - type	卡套式端直通接头体				3	3	5
3	**JB/T 982**	Combined sealing washer 22	组合密封垫22				15	15	4
4	**LZT654.58B.020**	Multi - way valve assembly DF250F1	多路阀总成DF250F1				1	1	870
5	**GB 3452.1**	O - seal ring 15*2.65G	O形圈15×2.65G				2	2	0.8
6	**GB/T 93**	Single coil spring lock washer 8 - Normal type	弹性垫圈8-Zn.D				18	18	0.1
7	**GB/T 5783**	Hexagon head bolt - Full thread M8*30-Zn.D	全螺纹螺栓M8*30-Zn.D				4	4	0.45
8	**GB/T 5783**	Hexagon head bolt - Full thread M6*30-Zn.D	全螺纹螺栓M6*30-Zn.D				3	3	0.3
9	**GB/T 93**	Single coil spring lock washer 6 - Normal type	弹性垫圈6-Zn.D				6	6	0.1
10	**LZT300.58.013**	Pipe clamp and rubber cushion	油管夹与胶垫胶合				6	6	3.5
11	**GB/T 6170**	Hexagon nut, style 1 M6-Zn.D	1型螺母M6-Zn.D				3	3	0.2
12	**LZT354.58A.018**	Multi - way valve oil outlet pipe assembly - 2	多路阀输出油管总成-2				1	1	32
13	**LZT700.58A.101**	Direct joint of clip - type	卡套式端直通接头体				3	3	5

210

续表1 Continued One

14	**LZT354.58C.015**	Multi - way valve oil outlet pipe assembly - 1	多路阀输出油管总成-1				1	1	26
15	**LZT654.58.107**	Hollow bolt - 1	空心螺栓-1				1	1	6.5
16	**LZT300.58.101**	Hinged bolt	铰接螺栓				1	1	6.5
17	**LZT354.58C.017**	Multi - way valve oil intake pipe assembly - 1	多路阀进油管总成-1				1	1	25
18	**LZT354.58C.019**	Multi - way valve oil intake pipe assembly - 2	多路阀进油管总成-2				1	1	25
19	**LZT404.58A.020**	Multi - way valve oil intake pipe assembly - 3	多路阀进油管总成-3				1	1	25
20	**GB/T 97.1**	Plain washer - Product grade A 8 - Zn.D	平垫圈8-A级				2	2	0.1
21	**GB/T 5783**	Hexagon head bolt - Full thread M8*25- Zn.D	全螺纹螺栓M8X 25-Zn.D				2	2	0.4
22	**LZT300.58A.012**	Oil suction long pipe weldment	吸油长管焊合				1	1	35
23	**ZBJ 15001**	Keeper d32	喉箍D32				4	4	2
24	**LZT300.58A.104**	Oil suction rubber pipe	吸油胶管				2	2	5
25	**LZT400.58A.040**	Oil filter assembly	滤清器总成				1	1	110
26	**GB/T 5783**	Hexagon head bolt - Full thread M8*25- Zn.D	全螺纹螺栓M8X 45-Zn.D				4	4	0.4
27	**LZT400.58A.015**	Oil suction short pipe weldment	吸油短管焊合				1	1	18
28	**GB 3452.1**	O - seal ring 19*2.65G	O形圈19×2.65G				1	1	1
29	**LZT300.58.102**	Cross slider	十字滑块				1	1	10.5
30	**LZT300.58A.020**	Gear pump	齿轮泵				1	1	220
Note:① Adopt Model Lijia SL3105 engine, two-way hysraulic output 力佳3105发动机 配二路阀。									

211

https://truckmanualshub.com/

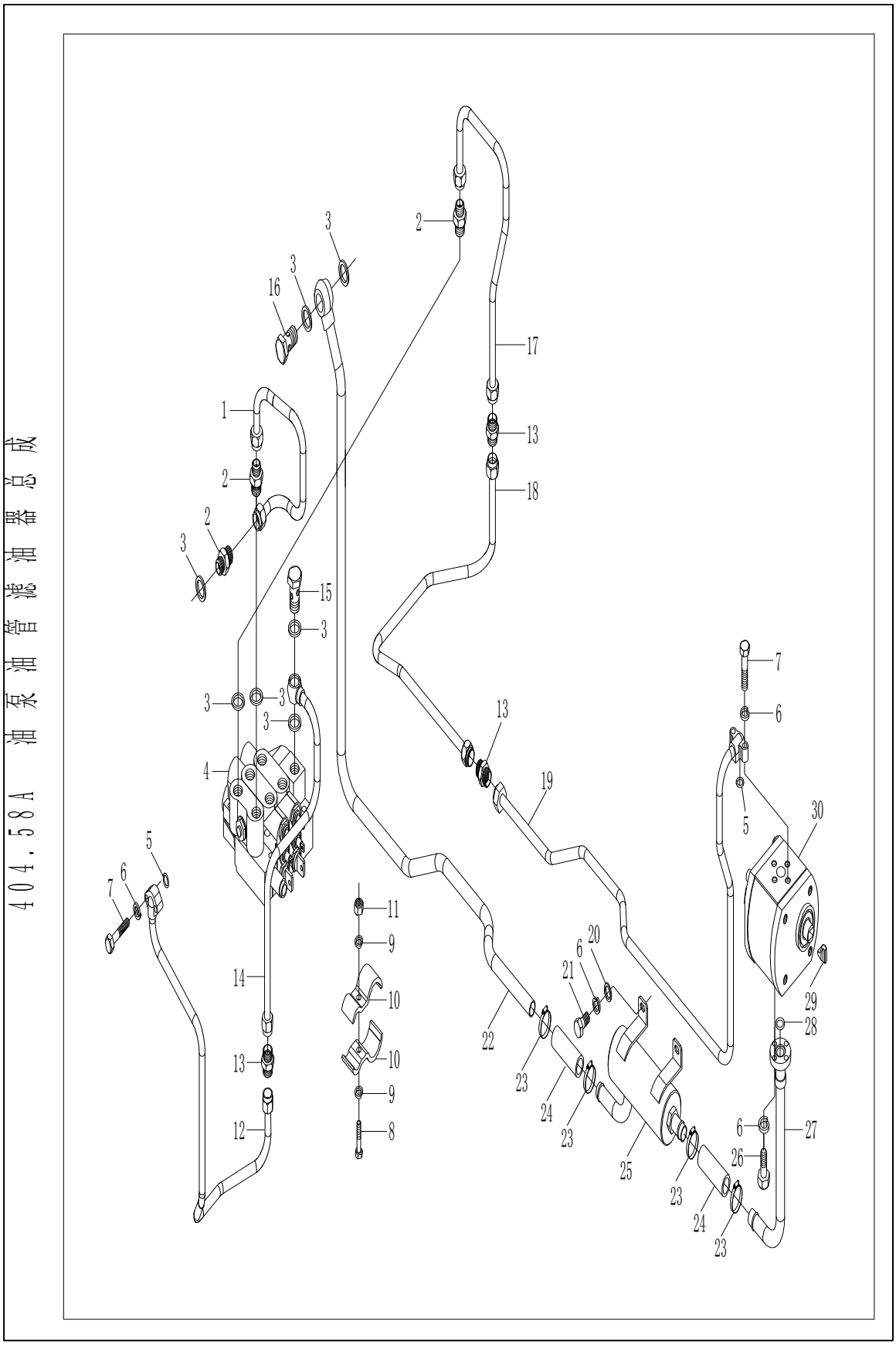

212

58A 油泵油管滤清器总成
Gear Pump/ Pipe and Hydraulic Output Assembly - 2 (LZT404)

序号 No.	零部件代号 Drawing No.	Part Name and Standards	零部件名称及规格	适用机型和用量（件） Applied Tractor Models and Qty.(Piece)					
				LZT 300	LZT 304	LZT 350	LZT 354	LZT400 /450/480 /500/520 /550	LZT404 /454/484 /504/524 /554
	LZT404.58A.001	Gear Pump/ pipe and Hydraulic Output Assembly	油泵油管滤清器总成						
1	**LZT354.58A.103**	Dust cover	防尘盖				**4**	**4**	**3**
2	**LZT354.58A.030**	Snap joint	英制快换接头				**4**	**4**	**85**
3	**LZT354.58A.104**	Oil pipe joint	英制油管接头				**4**	**4**	**12**
4	**GB/T 6173**	Hexagon head bolt with fine pitch thread M22*1.5-Zn.D	薄螺母-细牙M22×1.5-Zn.D				**4**	**4**	**3**
5	**GB/T 5783**	Hexagon head bolt - full thread M8*25-Zn.D	全螺纹螺栓M8X25-Zn.D				**4**	**4**	**0.4**
6	**GB/T 93**	Single coil spring lock washer - Normal type 8-Zn.D	弹性垫圈8				**18**	**18**	**0.1**
7	**LZT654.58.110**	Hollow bolt - 2	空心螺栓-2				**2**	**2**	**6.5**
8	**LZT354.58A.016**	Multi - way valve oil outlet pipe assembly - 1	多路阀输出油管总成-1				**1**	**1**	**22**
9	**LZT354.58.109**	Thick washer - 1	厚垫圈-1				**2**	**2**	**0.5**
10	**GB/T 5782**	Hexagon head bolt M10*70-Zn.D	螺栓M10×70-Zn.D				**3**	**3**	**1.5**
11	**GB/T 93**	Single coil spring lock washer - Normal type 10	弹性垫圈10				**4**	**4**	**0.1**
12	**GB/T 6170**	Hexagon nut, style 1 M 10	1型螺母M10				**3**	**3**	**0.35**

213

续表1 Continued One

13	**LZT354.58A.022a**	Fixed bracket weldment of multi - way valve	多路阀固定支架焊合				**1**	**1**	**19**
14	**GB/T 5783**	Hexagon head bolt - full thread M10*16-Zn.D	全螺纹螺栓M10X16-Zn.D				**1**	**1**	**0.3**
15	**LZT354.58A.103**	Spacer briquet	垫块				**2**	**2**	**1**
16	**GB/T 91**	Split pin 2*12 - Zn.D	开口销2X12-Zn.D				**6**	**6**	**0.2**
17	**LZT654.58.103**	Joint plate	联接板				**4**	**4**	**1.5**
18	**LZT354.58C.014**	Control handle weldment	操纵手柄焊合				**2**	**2**	**14**
19	**GB/T 882**	Clevis pin with head B6*26 - Zn.D	销轴B6×26-Zn.D				**2**	**2**	**0.3**
20	**GB/T 882**	Clevis pin with head B6*20 - Zn.D	销轴B6×20-Zn.D				**4**	**4**	**0.3**
21	**LZT65.57.013**	Handle end assembly	手柄头总成				**2**	**2**	**7**
22	**JB/T 982**	Combined sealing washer 22	组合密封垫22				**15**	**15**	**4**
23	**LZT654.58B.102**	Direct joint of clip - type (1)	卡套式端直通接头体1				**5**	**5**	**5**
24	**LZT654.58A.014**	Multi - way valve oil outlet pipe assembly - 3	多路阀输出油管总成-3				**1**	**1**	**25**
25	**LZT654.58A.017**	Multi - way valve oil outlet pipe assembly - 2	多路阀输出油管总成-2				**1**	**1**	**25**
26	**LZT654.58A.015**	Multi - way valve oil outlet pipe assembly - 4	多路阀输出油管总成-4				**1**	**1**	**25**
27	**LZT654.58A.111a**	Fixed bracket of snap joint	快换接头固定支架				**1**	**1**	**13**
28	**GB 3452.1**	O - seal ring 12.5*2.65G	O形圈12.5×2.65G				**4**	**4**	**0.7**
29	**LZT354.58A.102**	Oil pipe joint	油管接头				**4**	**4**	**8**
30	**LZT654.58.106a**	Washer	垫圈				**4**	**4**	**1.5**
31	**LZT704.58C.010**	Snap joint	快换接头				**4**	**4**	**67**
32	**LZT654.58.155**	Dust cover	防尘盖				**4**	**4**	**3**

214

https://truckmanualshub.com/

油泵油管多路阀总成-1

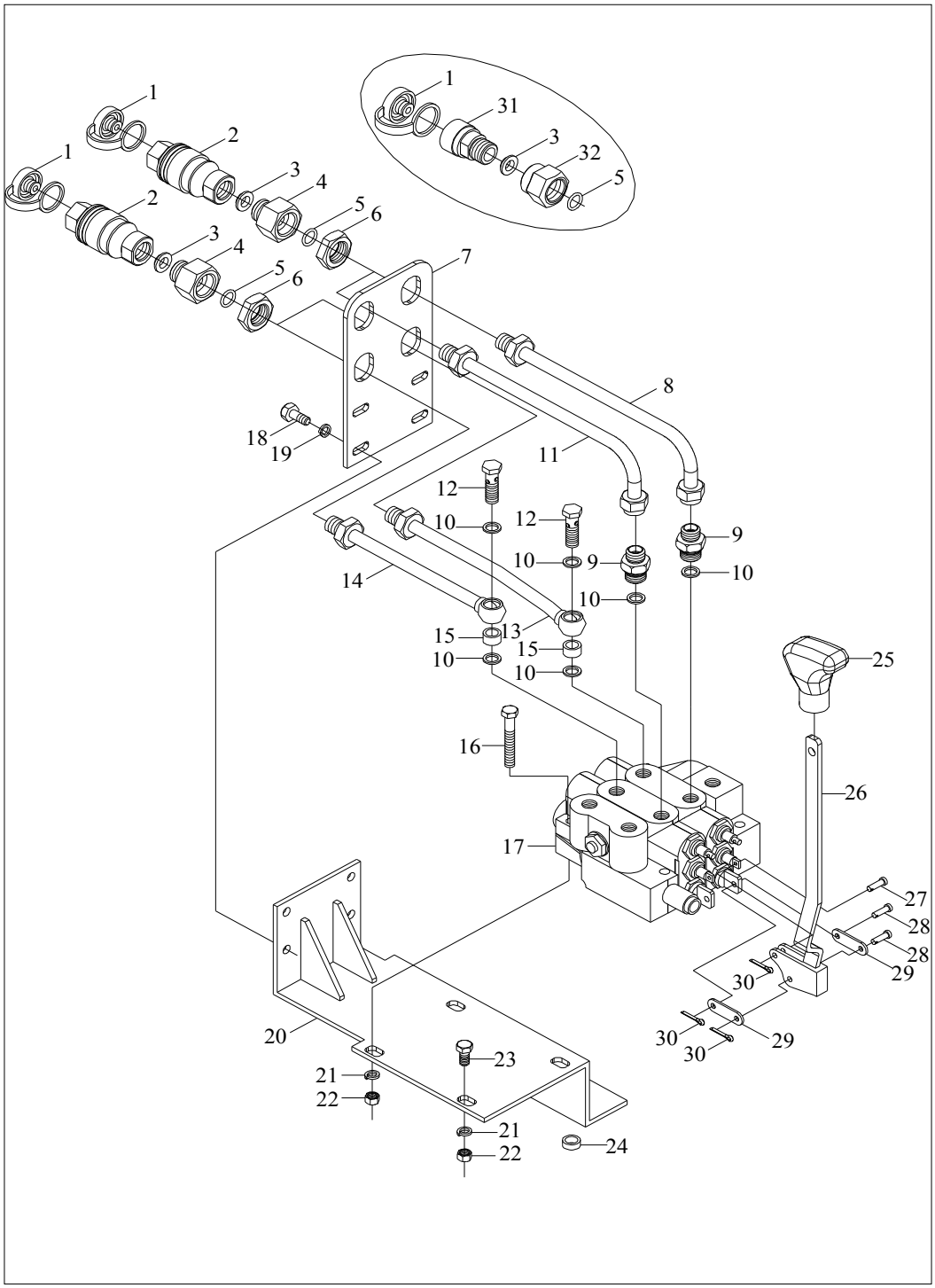

215

https://truckmanualshub.com/

58油泵油管多路阀总成-1
Gear Pump/Pipe and Multi-way Valve Assembly-1

标号No.	零部件代号 Drawing No.	Part Name and Standards	零部件名称及规格	适用机型和用量（件） Applied Tractor Models and Qty.(Piece)					
				LZT 300	LZT 304	LZT 350	LZT 354	LZT400 /450/480 /500/520 /550	LZT404 /454/484 /504/524 /554
	LZT454.58.001	Gear Pump/Pipe and Multi-way Valve Assembly	油泵油管多路阀总成①						1
	LZT404.58X.001	Gear Pump/Pipe and Multi-way Valve Assembly	油泵油管多路阀总成②						1
1	LZT354.58A.103	Dust cover	防尘盖						4
2	LZT654.58.010	Snap joint	快换接头						4
3	LZT654.58.106a	Washer	垫圈						4
4	LZT354.58A.102a	Oil pipe joint	油管接头						4
5	GB3452.1	O-seal ring 12.5*2.65G	O形圈12.5×2.65G						4
6	GB/T6173	Nut M22*1.5-Zn.D	螺母M22×1.5-Zn.D						4
7	LZT354.58A.111a	Fixed bracket of snap joint	快换接头固定支架						1
8	LZT354.58A.015	Multi-way valve oil outlet pipe assembly-4	多路阀输出油管总成-4						1
9	LZT654.58B.102	Direct joint of clip-type	卡套式端直通接头体1						5
10	JB/T982	Combined sealing washer 22	组合密封垫圈22						15
11	LZT354.58A.017	Multi-way valve oil outlet pipe assembly-2	多路阀输出油管总成-2						1
12	LZT654.58.110	Hollow bolt-2	空心螺栓-2						2
13	LZT354.58A.014	Multi-way valve oil outlet pipe assembly-3	多路阀输出油管总成-3						1

216

续表1 Continued One

14	LZT354.58A.016	Multi-way valve oil outlet pipe assembly-1	多路阀输出油管总成-1						1
15	LZT654.58.109	Thick washer-1	厚垫圈-1						2
16	GB/T5782	Bolt M10*70-Zn.D	螺栓M10×70-Zn.D						3
17	LZT654.58B.020	Multi-way valve assembly DF250F1	多路阀总成DF250F1						1
18	GB/T5782	Bolt M8*25-Zn.D	螺栓M8×25-Zn.D						8
19	GB/T93	Washer 8-Zn.D	垫圈8-Zn.D						18
20	LZT354.58A.022a	Fixed bracket weldment of multi-way valve	多路阀固定支架焊合						1
21	GB/T93	Washer 10-Zn.D	垫圈10-Zn.D						4
22	GB/T6170	Nut M10-Zn.D	螺母M10-Zn.D						3
23	GB/T5783	Bolt M10*16-Zn.D	螺栓M10×16-Zn.D						1
24	LZT354.58A.101	Spacer briquet	垫块						2
25	LZT65.57.013	Handle end assembly	手柄头总成						2
26	LZT354.58C.014	control handle weldment	操纵手柄焊合						2
27	GB/T882	Clevis pin with head B6×20-Zn.D	销轴B6×20-Zn.D						2
28	GB/T882	Clevis pin with head B6×26-Zn.D	销轴B6×26-Zn.D						4
29	LZT654.57.103	Joint plate	联接板						4
30	GB/T91	Pin 2*12	销2×12						6
31	LZT354.58A.030	Snap joint	英制快换接头						4
32	LZT354.58A.104	Oil pipe joint	英制油管接头						4

注：①配全柴495发动机；②配新昌490BT-20D发动机。②选装。
① Adopt Model Quanchai495engine,② Adopt Model Xinchang490BT-20D engine

217

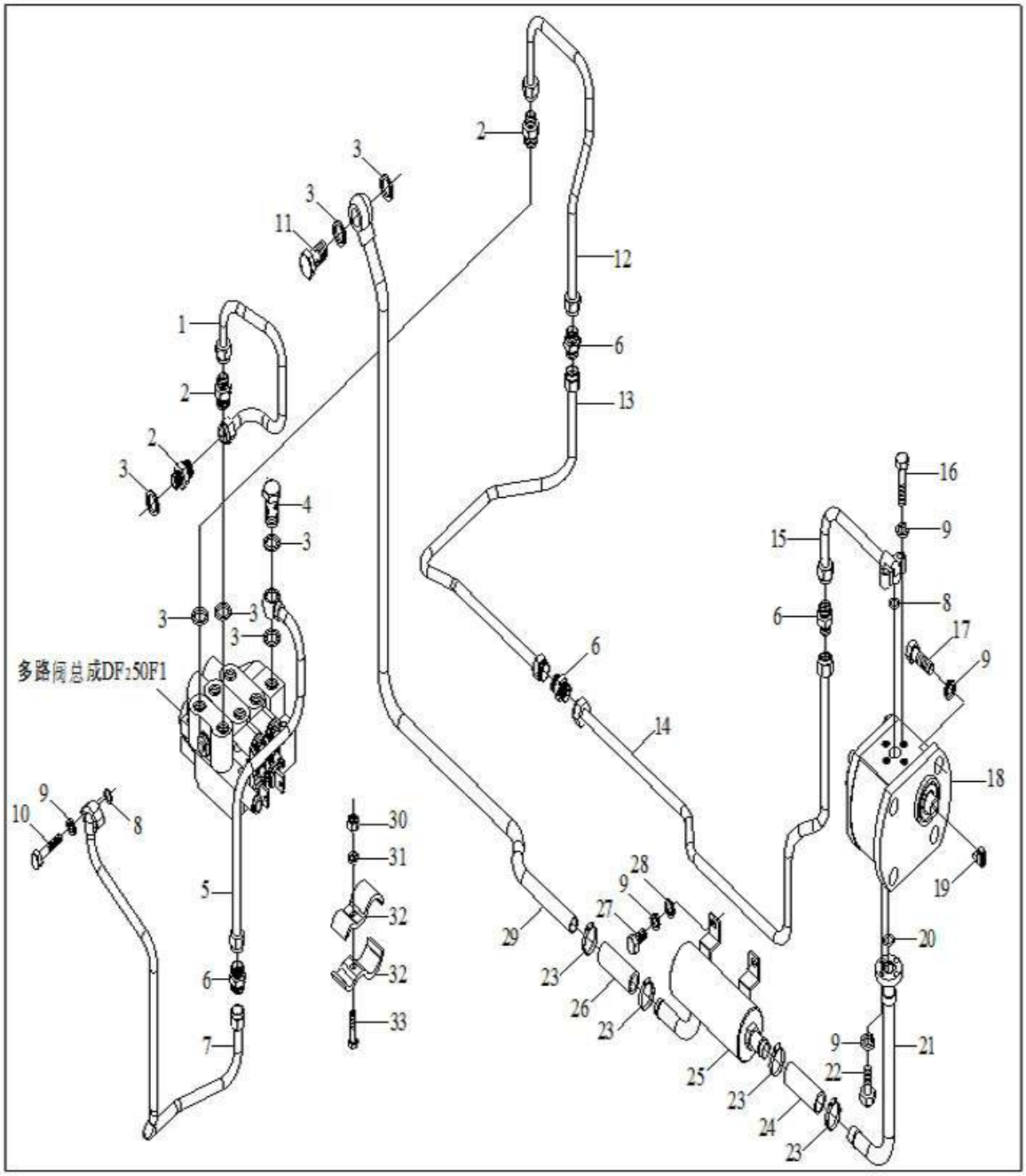

218

58油泵油管多路阀总成-2
Gear Pump/Pipe and Multi-way Valve Assembly-2

标号No.	零部件代号 Drawing No.	Part Name and Standards	零部件名称及规格	适用机型和用量（件） Applied Tractor Models and Qty.(Piece)					
				LZT 300	LZT 304	LZT 350	LZT 354	LZT400 /450/480 /500/520 /550	LZT404 /454/484 /504/524 /554
	LZT454.58.001	Gear Pump/Pipe and Multi-way Valve Assembly-1	油泵油管多路阀总成①						1
	LZT404.58X.001	Gear Pump/Pipe and Multi-way Valve Assembly-1	油泵油管多路阀总成②						1
1	**LZT354.58C.013**	Multi-way Valve oil return pipe assembly	多路阀回油管总成						1
2	**LZT654.58B.102**	Direct joint of clip-type 1	卡套式端直通接头体1						5
3	**JB/T982**	Combined sealing washer 22	组合密封垫圈22						**15**
4	**LZT654.58.107**	Hollow bolt-1	空心螺栓-1						**1**
5	**LZT354.58C.015**	Multi-way Valve oil outlet pipe assembly-1	多路阀出油管总成-1						1
6	**LZT700.58A.101**	Direct joint of clip-type	卡套式直通接头体						4
7	**LZT454.58X.011**	Multi-way Valve oil outlet pipe assembly	多路阀出油管总成						1
8	**GB3452.1**	O-seal ring 15*2.65G	O形橡胶密封圈15×2.65G						2
9	**GB/T93**	Washer 8-Zn.D	垫圈8-Zn.D						18
10	**GB/T5783**	Bolt M8*30-Zn.D	螺栓M8×30-Zn.D						4
11	**LZT300.58.101**	Hollow bolt	空心螺栓						1
12	**LZT354.58C.017**	Multi-way Valve oil intake pipe assembly-1	多路阀进油管总成-1						1

219

续表1 Continued One

13	**LZT354.58C.019**	Multi-way Valve oil intake pipe assembly-2	多路阀进油管总成-2						1
14	**LZT450.58.012**	Pressure oil pipe assembly	压力油管总成						1
	LZT404.58X.012	Multi-way Valve oil intake pipe assembly	多路阀进油管总成②						1
15	**LZT404.58X.011**	Pressure oil pipe assembly-1	压力油管总成-1						1
16	**GB/T5783**	Bolt M8*35-Zn.D	螺栓M8×35-Zn.D						2
17	**GB/T97.1**	Screw M8*35-Zn.D	螺钉M8×35-Zn.D						4
18	**LZT304.58L.010**	Gear pump	齿轮泵						1
19	**LZT300.58.102**	Cross slider	十字滑块						1
20	**GB3452.1**	O-seal ring 21.2*1.8G	O形橡胶密封圈21.2×1.8G						1
21	**LZT400.58X.015**	Oil suction short pipe weldment	吸油短管焊合						0
22	**GB/T5783**	Bolt M8*25-Zn.D	螺栓M8×25-Zn.D						8
23	**ZBJ15001**	Keeper d32	喉箍d32						4
24	**LZT450.58.103**	Oil suction rubber pipe	吸油软管						1
25	**LZT454.58.040**	Oil filter assembly	滤油器总成						1
	LZT400.58X.040	Oil filter assembly	滤油器总成②						1
26	**LZT300.58A.104**	Oil suction rubber pipe	吸油胶管						2
27	**GB/T5783**	Bolt M8*16-Zn.D	螺栓M8×16-Zn.D						2
28	**GB/T95**	Washer 8-Zn.D	垫圈8-Zn.D						2
29	**LZT450.58.011**	Oil suction pipe weldment	吸油管焊合						1
	LZT400.58X.013	Oil suction long pipe weldment	吸油长管焊合②						1
30	**GB/T6170**	Nut M6-Zn.D	螺母M6-Zn.D						3
31	**GB/T93**	Washer 6-Zn.D	垫圈6-Zn.D						3
32	**LZT300.58.013**	Pipe clamp and rubber cushion	油管夹与胶垫胶合						6
33	**GB/T5783**	Bolt M6*30-Zn.D	螺栓M6×30-Zn.D						3

注：①配全柴495发动机；②配新昌490BT-20D发动机。②选装。
① Adopt Model Quanchai495engine,② Adopt Model Xinchang490BT-20D engine

220

https://truckmanualshub.com/

油泵油管滤油器总成

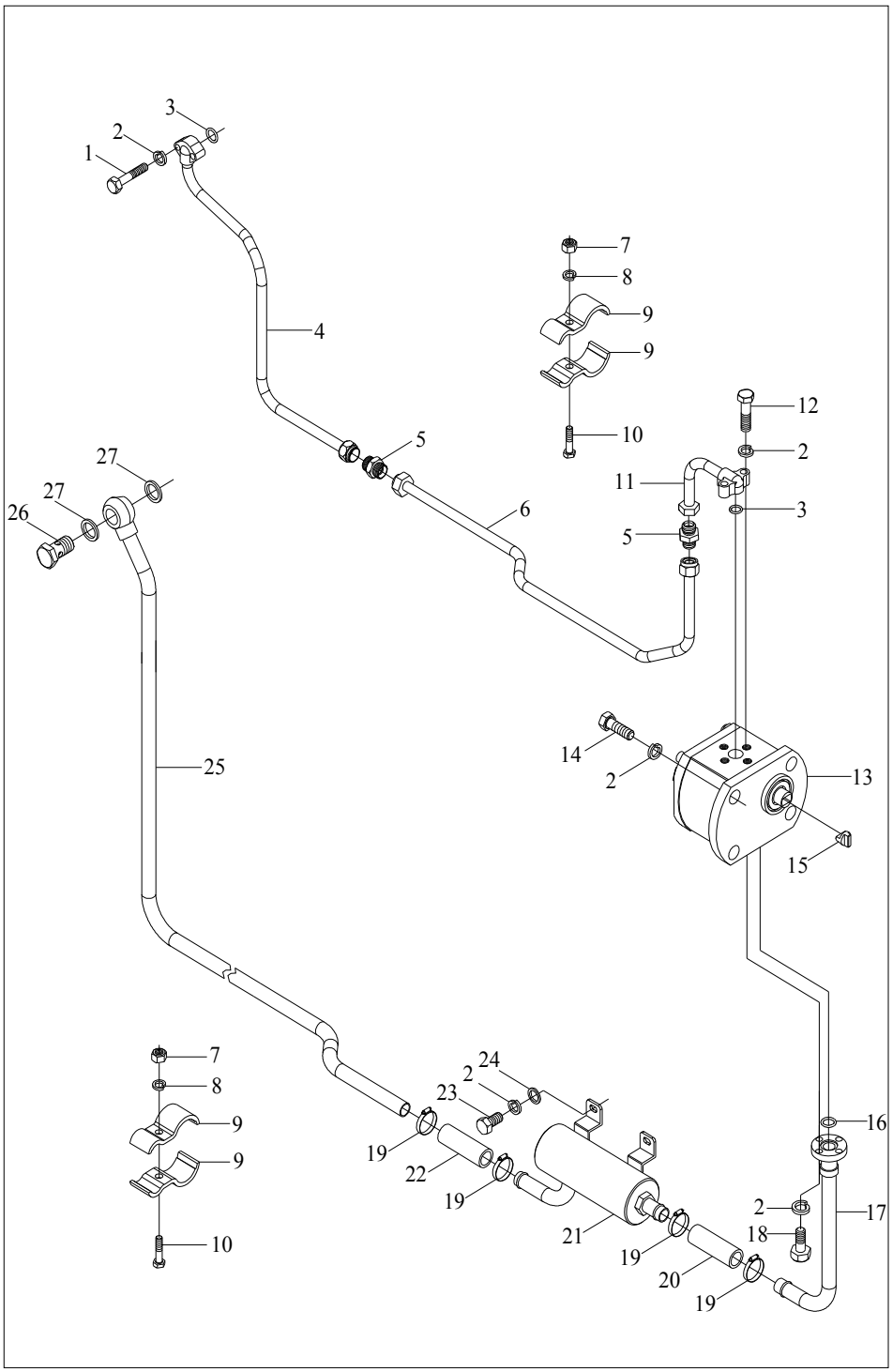

221

58油泵油管滤油器总成
Gear Pump/Pipe and Oil Filter Assembly

标号No.	零部件代号 Drawing No.	Part Name and Standards	零部件名称及规格	适用机型和用量（件） Applied Tractor Models and Qty.(Piece)					
				LZT 300	LZT 304	LZT 350	LZT 354	LZT400 /450/480 /500/520 /550	LZT404 /454/484 /504/524 /554
	LZT450.58.001	Gear Pump/Pipe and Oil Filter Assembly	油泵油管滤油器总成①					**1**	
	LZT400.58X.001	Gear Pump/Pipe and Oil Filter Assembly	油泵油管滤油器总成②					**1**	
1	**GB/T5783**	Bolt M8*30-Zn.D	螺栓M8×30-Zn.D					**2**	
2	**GB/T93**	Washer 8-Zn.D	垫圈8-Zn.D					**14**	
3	**GB3452.1**	O-seal ring 15*2.65	O形橡胶密封圈15×2.65G					**2**	
4	**LZT450.58X.011**	Pressure oil pipe assembly-1	压力油管总成-1					**1**	
	LZT300.58L.010	Oil suction pipe weldment	吸油管焊合②					**1**	
5	**LZT700.58A.101**	Direct joint of clip-type	卡套式直通接头体					**2**	
6	**LZT454.58.012**	Pressure oil pipe assembly	压力油管总成					**1**	
	LZT404.58X.012	Multi-way Valve oil intake pipe assembly	多路阀进油管总成②					**1**	
7	**GB/T6170**	Nut M6-Zn.D	螺母M6-Zn.D					3	
8	**GB/T93**	Washer 6-Zn.D	垫圈6-Zn.D					3	
9	**LZT300.58.013**	Pipe clamp and rubber cushion	油管夹与胶垫胶合					6	
10	**GB/T5783**	Bolt M6*30-Zn.D	螺栓M6×30-Zn.D					3	
11	**LZT404.58X.011**	Pressure oil pipe assembly-1	压力油管总成-1					1	

222

续表1 Continued One

12	**GB/T5783**	Bolt M8*35-Zn.D	螺栓M8×35-Zn.D					2	
13	**LZT304.58L.010**	Gear pump	齿轮泵					1	
14	**GB/T70.1**	Bolt M8*35-Zn.D	螺钉M8×35-Zn.D					4	
15	**LZT300.58.102**	Cross slider	十字滑块					1	
16	**GB3452.1**	O-seal ring 21.2*1.8G	O形橡胶密封圈21.2×1.8G					1	
17	**LZT400.58X.015**	Oil suction short pipe weldment	吸油短管焊合					1	
18	**GB/T5783**	Bolt M8*25-Zn.D	螺栓M8×25-Zn.D					4	
19	**ZBJ15001**	Keeper d32	喉箍d32					4	
20	**LZT450.58.103**	Oil suction rubber pipe	吸油软管					1	
21	**LZT450.58.040**	Oil Filter Assembly	滤油器总成					1	
	LZT400.58X.040	Oil Filter Assembly	滤油器总成②					1	
22	**LZT300.58A.104**	Oil suction rubber pipe	吸油胶管					1	
23	**GB/T5783**	Bolt M8*20-Zn.D	螺栓M8×20-Zn.D					2	
24	**GB/T95**	Washer 8-Zn.D	垫圈8-Zn.D					2	
25	**LZT450.58.011**	Oil suction pipe weldment	吸油管焊合					1	
	LZT400.58X.011	Oil suction long pipe weldment	吸油长管焊合②					1	
26	**LZT300.58.101**	Hollow bolt	空心螺栓					**1**	
27	**JB/T982**	Combined sealing washer 22	组合密封垫圈22					**2**	

注：①配全柴495发动机；②配新昌490BT-20D发动机。②选装。
① Adopt Model Quanchai495engine,② Adopt Model Xinchang490BT-20D engine

223

https://truckmanualshub.com/

74 前配重总成

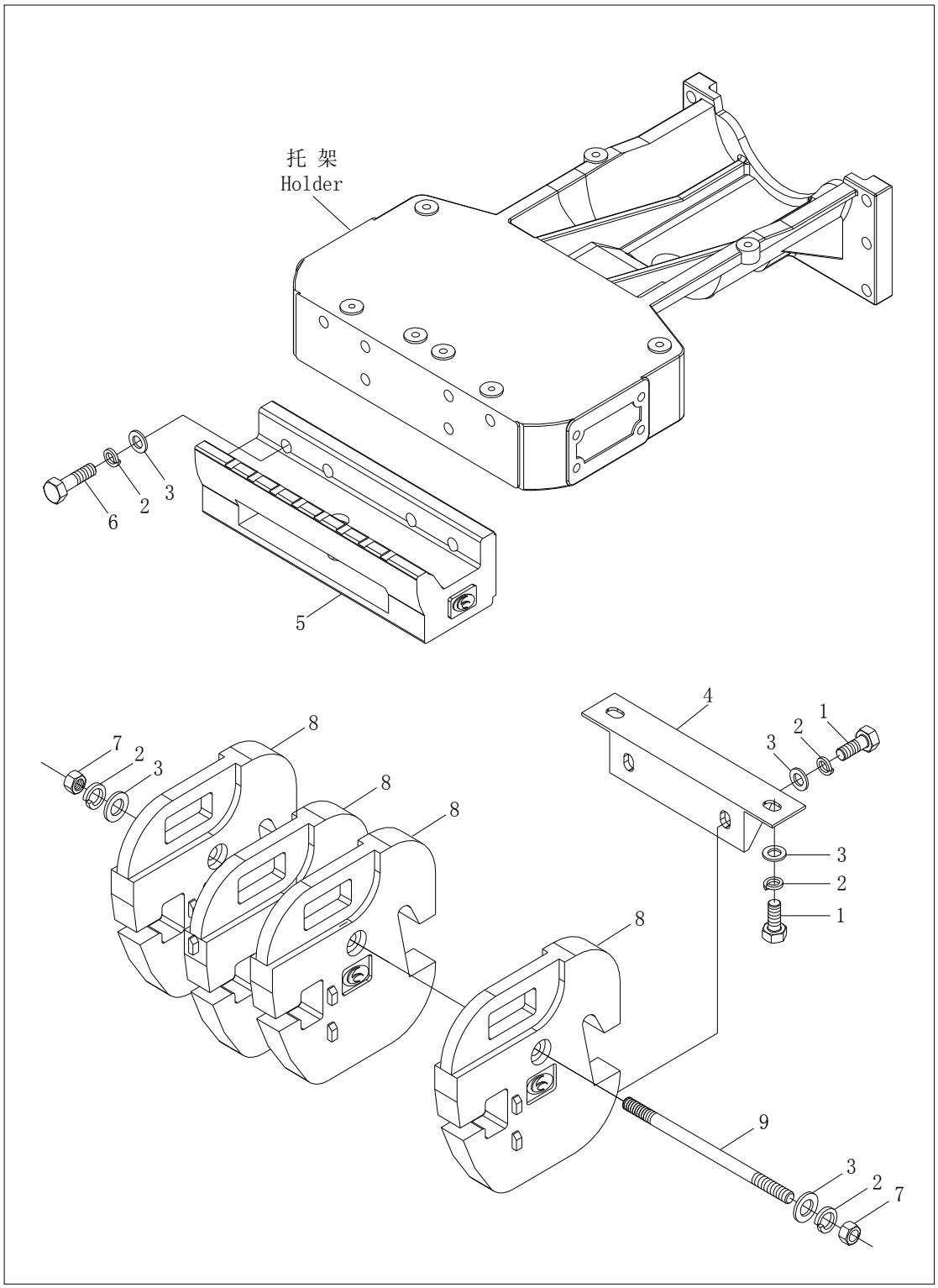

224

https://truckmanualshub.com/

74 前配重总成
Front Ballast Bracket Assembly

标号No.	零部件代号 Drawing No.	Part Name and Standards	零部件名称及规格	适用机型和用量（件） Applied Tractor Models and Qty.(Piece)					
				LZT 300	LZT 304	LZT 350	LZT 354	LZT400 /450/480 /500/520 /550	LZT404 /454/484 /504/524 /554
	LZT 300.74A.001	Front Ballast Bracket Assembly	前配重总成	1		1			
1	**GB/T 5783**	Hexagon head bolt-Full thread M6*35-Zn.D	全螺纹螺栓M6*35-Zn.D	4	4	4	4	4	4
2	**GB/T 93**	Single coil spring lock washer16 Normal type	弹性垫圈16	12	12	12	12	12	12
3	**GB/T 97.1**	Plain washer16-Product grade A	平垫圈16-A级	12	12	12	12	12	12
4	**LZT 300.74A.107**	Fixt bracket	固定架	1	1	1	1	1	1
5	**LZT 300.74A.101**	Front Ballast Bracket Assembly	前配重架总成	1	1	1	1	1	1
6	**GB/T 5780**	Hexagon head bolt-Product gradeCM16*50-Zn.D	螺栓-C级M6*50-Zn.D	6	6	6	6	6	6
7	**GB/T 6170**	Hexagon nut,style 1 M16-Zn.D	1型螺母 M16-Zn.D	2	2	2	42	2	2
8	**LZT 300.74A.106**	Ballast	配重块	4	6	4	6	6	8
9	**LZT 300.74A.108**	Connecting bolt	连接螺栓	1		1			
	LZT 304.74A.108	Connecting bolt	连接螺栓		1		1	1	
	LZT 404.74A.108	Connecting bolt	连接螺栓						1

225

https://truckmanualshub.com/

80 气刹装置总成

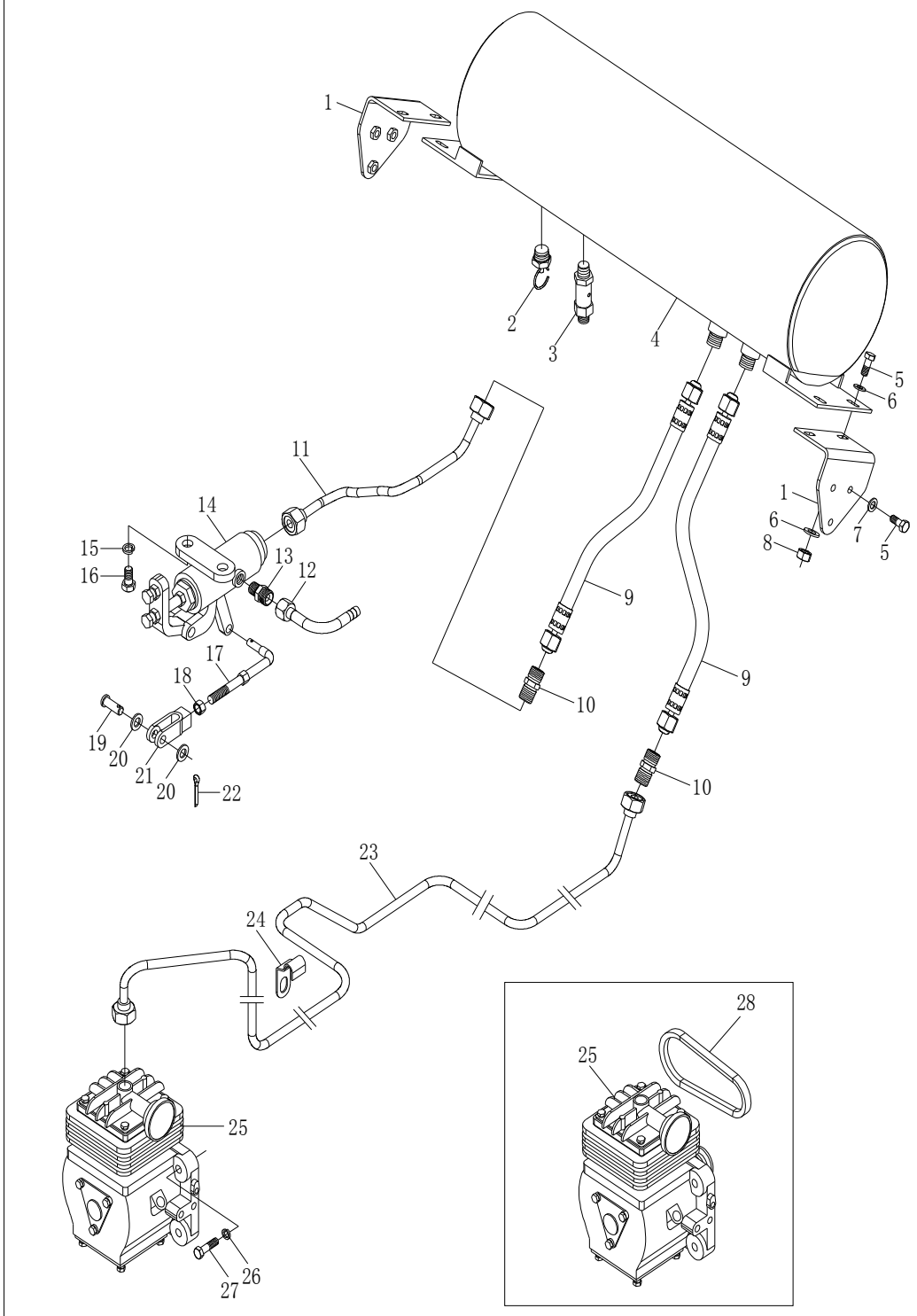

226

80气刹装置总成
Pneumatic braking system assembly

标号No.	零部件代号 Drawing No.	Part Name and Standards	零部件名称及规格	适用机型和用量（件） Applied Tractor Models and Qty.(Piece)					
				LZT 300	LZT 304	LZT 350	LZT 354	LZT400 /450/480 /500/520 /550	LZT404 /454/484 /504/524 /554
	LZT300.80.001	Pneumatic braking system assembly	气刹装置总成	**1**	**1**	**1**	**1**		
	LZT400.80A.001	Pneumatic braking system assembly	气刹装置总成					**1**	**1**
1	**LZT300.80.036**	Bracket welding assembly	支架焊接总成	2	2	2	2	2	2
2	**LZT300.80.033**	Water drain valve assembly	放水阀总成	**1**	**1**	**1**	**1**	**1**	**1**
3	**LZT300.80.034**	Safety valve assembly	安全阀总成	**1**	**1**	**1**	**1**	**1**	**1**
4	**LZT300.80.012**	Air vessel assembly	贮气筒焊接总成	**1**	**1**	**1**	**1**	**1**	**1**
5	**GB/T5783**	Bolt M8*20-Zn.D	螺栓M8×20 -Zn.D	**8**	**8**	**8**	**8**	**8**	**8**
6	**GB96**	Washer 8	垫圈8	**8**	**8**	**8**	**8**	**8**	**8**
7	**GB/T848**	Washer 8-140HV	垫圈8-140HV	4	4	4	4	4	4
8	**GB6170**	Nut M8-Zn.D	螺母M8-Zn.D	8	8	8	8	8	8
9	**LZT300.80.037**	Air braking hose unit	气制动软管组合件	2	2	2	2		
	LZT400.80A.038	Air braking hose unit	气制动软管组合件					2	2
10	**LZT300.80.103**	Snap joint	直管接头	2	2	2	2	2	2
11	**LZT300.80.016**	Air outlet assembly	出气管总成	1	1	1	1	1	1

227

续表1 Continued One

12	**LZT300.80.013**	Air intet assembly	输气管总成	1	1	1	1	1	1
13	**LZT300.80.104**	Waste pipe joint	排气管接头	1	1	1	1	1	1
14	**LZT300.80.011**	Pneumatic braking valve assembly	气制动阀总成	1	1	1	1	1	1
15	**GB/T93**	Washer 10	垫圈10	2	2	2	2	2	2
16	**GB/T5783**	Bolt M10*20-Zn.D	螺栓M10×20-Zn.D	2	2	2	2	2	2
17	**LZT300.80.014**	Adjusting tension rod unit	调节杆合件	1	1	1	1	1	1
18	**GB/T6170**	Nut M10-Zn.D	螺母M10-Zn.D	1	1	1	1	1	1
19	**GB/T882**	Pin 10*28	销10×28	1	1	1	1	1	1
20	**GB/T848**	Washer 10	垫圈10	1	1	1	1	1	1
21	**LZT300.80.105**	Adjusting fork	调节叉	2	2	2	2	2	2
22	**GB/T91**	Pin 3.2*16	销3.2×16	1	1	1	1	1	1
23	**LZT300.80.015**	Compressor air outlet pipe assembly	空压机出气管总成	1	1	1	1		
	LZT400.80A.015	Compressor air outlet pipe assembly	空压机出气管总成					1	1
24	**LZT300.80.101a**	Pipe ferrule	管夹	2	2	2	2	2	2
25	**LZT300.80.018**	Compressor air outlet pipe assembly	空气压缩机	1	1	1	1	1	1
26	**GB/T93**	Washer 8	垫圈8	4	4	4	4	4	4
27	**GB/T5783**	Bolt M8*35-Zn.D	螺栓M8×35-Zn.D①	4	4	4	4	4	4
		Bolt M8*100-Zn.D	螺栓M8×100-Zn.D ②	4	4	4	4	4	4

注：①用于郓成气泵，②选装，用于龙口气泵。
① Adopt Model Yuncheng Air pump,② Adopt Model Longkou Air pump

228