https://truckmanualshub.com/

SAE Net Horsepower: 268 HP (200 kW)
Operating Weight: 103,617 lbs. (47 000 kg)
Max Reach: 50 ft 5 in (15.37 m)

380X4
Material Handler

SPECIFICATIONS

Link-Belt
MATERIAL HANDLERS

https://truckmanualshub.com/

Performance, Productivity and Reliabilty Come Standard

Link-Belt X4 Series Material Handlers are built to exceed your expectations. We redesigned the control spools and incorporated spool stroke control (SSC) functions into the hydraulic system to reduce pressure loss and distribute hydraulic oil more smoothly, improving cycle times by up to 16%. Expect more power and fuel efficiency, thanks to an innovative Final Tier 4 engine that delivers up to 23% improved fuel consumption*, **without a Diesel Particulate Filter (DPF) to maintain or replace!** Settle in to the roomiest, most accommodating cab in its class, with more legroom and a new high-back, heated seat. Our exclusive SteadyCab™ anti-vibration system provides shift-long comfort and productivity. Serviceability is standard, too, with convenient access to all service points, easily accessed by hand..

https://truckmanualshub.com/

Innovation and Attention to Details at Every Level

- Three power modes (Speed Priority, Heavy and Applied Power) let you **choose the best blend of power, precision and fuel savings** for the work you're doing

- EPA Final Tier 4 engine is **fuel efficient without sacrificing power**

- **No DPF** to ever worry about!
- 2-3% DEF (Diesel Exhaust Fluid) consumption rate of fuel burned

- Convenient access to routine service points lets you **cut daily maintenance down to just minutes**

- Quiet, pressurized cab offers **excellent visibility and comfortable, best-in-class seating**
- Enough floor space to **accommodate the largest of work boots**, with cup holders and roomy storage compartments for cell phones, snacks and other personal items

- Hydraulic elevating cab riser and **SteadyCab™ anti-vibration system** for increased comfort and stability

- Ergonomic joysticks **fit your hand perfectly**

- 7" high-definition LCD monitor **keeps you connected to your machine and work environment**

- 5 LED lights (2-cab, 2-arm and 1-RHS) are standard; optional LED for rear view

- Full-time, rear-view camera display is standard; add the WAVES™ option for a **seamless 270° view around the machine**; optional under-view camera instead of mirror

- RemoteCARE® telematics **keeps a watchful eye** on performance, maintenance intervals and theft deterrence

- Structural improvements to the boom and arm **reduce stress and provide greater durability**

- Robust undercarriage features **up-sized components and thicker plating for longer life**
- Arm top guard and adjustable flow for grapple rotate line

- Large step, catwalk with handgrip, handrails and ISO guard rails provide **easy accessibility**

**All improvements and percentage increases are in reference to Link-Belt 370LX-MH, unless otherwise stated. Figures vary with independent operators, end attachment variation and its size.*

https://truckmanualshub.com/

Quick and Responsive to Take On Tough Challenges

Increased lift capacities and faster cycle times start with our innovative Spool Stroke Control (SSC) system, which reduces pressure loss and distributes hydraulic oil more smoothly. Pilot pressure sensors detect the type of work being done—such as lifting or swinging—and then relays that data to proportional solenoid valves that quickly determine where optimal hydraulic pressures should be directed for that operation.

Two electronically-controlled Kawasaki variable-displacement axial-piston pumps and one Kawasaki gear pump assure that hydraulic power is delivered precisely when and where it's needed. At the same time, hydraulic flows in noncritical areas of the system are reduced.

The result is more lifting strength and faster machine response...with up to 16% faster cycle times, 18% higher reach in 90 deg. swing and improved fuel efficiency!

- Proprietary hydraulic system
- New control valve with larger ports; less restriction means improved hydraulic flow for increased performance
- Electronically-controlled pumps for improved cycle times, quicker response and more efficient machine operation
- Move more material per gallon of fuel
- Gen-set hydraulics ready as standard

https://truckmanualshub.com/

https://truckmanualshub.com/

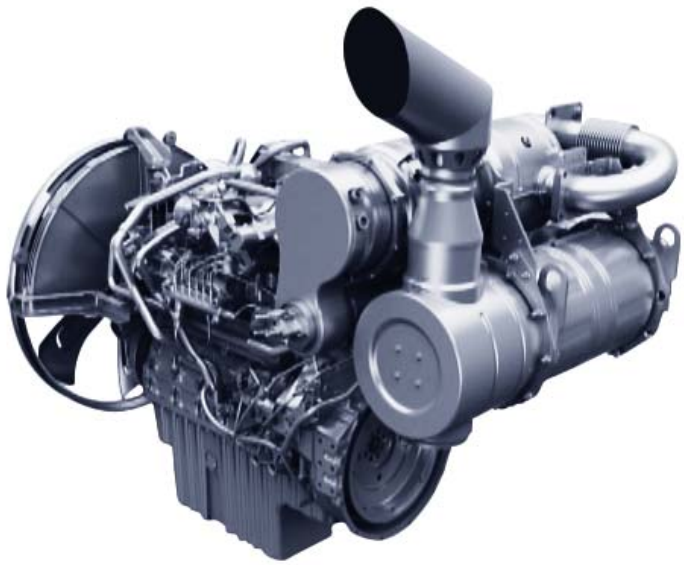

The X4 Series features innovative EPA-certified Final Tier 4 engines from Isuzu that strike the ultimate balance between power, productivity and fuel efficiency. You'll experience up to 27% improved fuel efficiency, without having to worry about costly diesel particulate filters (DPF) to maintain or replace. Three engine modes provide reliable power and control for any machine application. Choose Speed Priority (SP mode) to get jobs done quickly, Heavy (H mode) for the best blend of power and fuel savings or Applied Power (A mode), with 13 different RPM settings for precise control of heavy lifting or fine control work.

- EPA-certified Tier 4 Final
- No DPF to maintain
- Up to 23% improved fuel economy
- 500-hr. fuel filter service interval
- 7-8 diesel tank refills per 1 diesel exhaust fluid (DEF) refill
- 2-3% DEF consumption rate
- Two-stage DEF anti-freeze system for protection in harsh operating conditions
- 30 hrs. between SCR regenerations, only takes 5-10 minutes to complete!
- VGT Turbocharger

https://truckmanualshub.com/

Power and Efficiency Without Compromise

https://truckmanualshub.com/

More Room, Comfort and Control For Operators

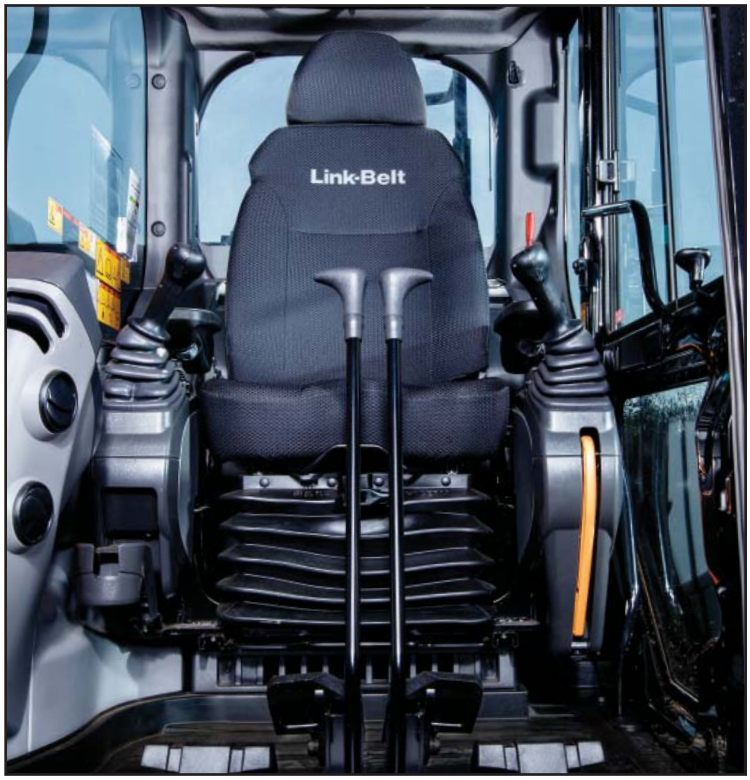

The X4 Series offers one of the most advanced and roomiest cabs in its class. Comfortable, automotive-grade high-back seat with head rest provides superior lumbar back support. With a longer and wider seating surface, it reclines to a 155° maximum reclining angle to create a relaxed environment during breaks. Mechanical suspension is standard, with air suspension, seat tilting adjustment and seat heaters available as options. Parallel link hydraulic elevating cab riser with HD cylinder and innovative SteadyCab™ anti-vibration system provide increased comfort and safety, while letting you choose the most advantageous field of view for your operation. The system features an angle sensor at arm end that detects and reduces the shock of machine operations such as arm open end; arm close; boom up end, and start up action/riser.

The cab layout also includes ergonomically-designed arm rests that move with console, maintaining a constant distance between joysticks and arm rests no matter how the seat is adjusted.

- Quiet, pressurized cab
- Joysticks with easy-to-hold grip & switches
- Handy 'radio mute' & one touch wiper switch
- Air-suspension, heated & tilted seat as standard
- Cup holder & storage areas for cell phones & other small items
- Dual LED cab lights standard, less energy & 3X brighter.
- Full time rear camera display
- Optional RH & LH side cameras
- Optional underview camera
- OPG level 1 front guard is standard & complies w/FOPS level 1; optional level 2 guard available
- Front sun visor is standard
- Improved radio with USB port & Bluetooth for hands-free communication

https://truckmanualshub.com/

High-Definition LCD monitor has a full-color 7" display that rivals the resolution found in luxury automobiles. Controls are easy to read and easy to use. The rear-view camera activates automatically whenever the machine is started, and sight guidelines have been added for increased safety.

- Anti-glare coating on screen
- Track up to 14 service maintenance reminders
- System/machine warning messages
- Monitor SCR auto regeneration
- In-cab flow & pressure controls for auxiliary hydraulics
- Anti-theft system
- Anti-interference system with cab & end attachment
- Auto-adjusts for time and calendar
- 24 languages available
- Ability to view fuel consumption

270° WAVES™
WIDE-ANGLE VISUAL ENHANCEMENT SYSTEM

For the ultimate in visibility, X4 machines can be fitted with the **Wide Angle View Enhancement System**—or **WAVES** for short. Using three closed-circuit cameras, this optional viewing system provides an unbelievable 270° visual coverage around the machine, eliminating any potential blind spots from the operator's line of sight. WAVES images can be displayed on the standard X4 monitor.

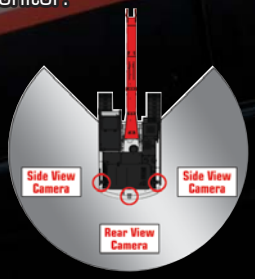

https://truckmanualshub.com/

Get Working Fast With Easy Access to Service Points

Maintenance is a snap, with ground level access to all routine service points, including batteries, fuel filters, engine oil filter, dual-element air filter and cab fresh air filter.

- Radiator screens are easy to remove & clean ... no tools needed!
- A/C Condenser tilts for easy cleaning and maintenance
- Easy battery compartment access; 2 hand-turn knobs
- Improved battery disconnect switch with no keys needed
- Convenient engine and hydraulic oil sample ports in pump compartment
- Green drain plug and hose
- More data collection points
- Automatic door locking mechanism on side door
- Quick and easy access to grease all attachment pivot points
- Grease cylinder track adjusters make adjusting track tension a breeze
- In-cab reminders track 14 different maintenance procedures
- Optional Auto Grease system
- Gen-set hydraulic ready for easier local installation
- Standard catwalk with handgrip, handrails, steps and ISO guardrails for access and maintenance

https://truckmanualshub.com/

TELEMATICS WITH NO SUBSCRIPTION FEE

RemoteCARE® lets you remotely monitor and track machine location, operational performance, working status and periodic maintenance requirements - now at no cost to you. It tracks and records both routine and major service intervals for your machines, giving you more flexibility and control when scheduling maintenance procedures. It also lets you be more proactive if potential failure conditions arise; whenever a diagnostic trouble code (DTC) is detected, a warning message appears on the machine display, and an e-mail alert is automatically sent to you. RemoteCARE also assists in theft prevention by offering 24/7 surveillance and geofencing capabilities.

FREE Subscription Includes:

- ✓ 24/7 Remote Monitoring and Security
- ✓ Machine Location
- ✓ Geo-fence & Curfew Range
- ✓ Actual Fuel Consumption
- ✓ Fuel Levels
- ✓ Hour Meter Reading
- ✓ Radiator Water Temperature
- ✓ Machine Working Time/Idle Time
- ✓ Attachment Working Hours
- ✓ Working Modes
- ✓ Service Maintenance Reminders
- ✓ Service Warnings

REMOTECARE® APP

Manage your Link-Belt equipment with this user friendly telematics management tool with GPS technology. The RemoteCARE App provides timely and reliable machine utilization – as well as assisting in DTC notifications. With RemoteCARE you will be able to remotely monitor and track your machine's location, operational performance, and working status. Contact your local Link-Belt dealer for questions.

App features include...

- Machine location
- Fuel consumption
- Utilization report
- Fuel efficiency
- Analytical snapshots
- Idle rate
- DTC notification history
- Favorite list

Download Apple or Android app at **lbxco.com/apps** for phone and tablet.

https://truckmanualshub.com/

Built Strong to Handle Anything

The 380X4-MH is more rugged and durable, with a robust revolving frame with 12% thicker and stronger material used, along with a new factory-designed heavy duty boom and arm with dual arm cylinder and gooseneck arm.

Boom & Arm

- New 2-piece attachment design with dual arm cylinders covers the same working envelope as the previous 3-piece attachment
- Improved boss shapes reduce stress on boom & arm pin
- Boom/arm in and out structure change for more reliability
- Guard bar in arm bottom plate for connecting link interference damage protection
- Thicker plate protection for connector box on arm top
- Stronger cylinder mounts

Lowers

- Rigid and durable High-Wide undercarriage
- Sized-up components and frame size; 490X4-size components and equivalent Forestry machine components even in Tub and TTB size!
- Wide open steps and non-symmetry position for easier climb up access in any direction
- Swivel guard of 490X4-size applied

Customer Support is Just a Call Away

A network of Link-Belt Excavator dealers across the U.S. and Canada is waiting to serve you. Expect fast and dependable service, backed by 24/7 access to parts.

Rock-Solid Warranty Coverage

All X4 machines are backed by a 3-year/3,000 hour Full Machine Warranty*, 2-year/3,000 hour Engine Warranty (2,000 hrs. electrical parts), 3-year/5,000 hour Powertrain Warranty, 3-year/10,000 hour XtraStructure Warranty, 5-year/3,000 hour EPA Emissions Warranty and participation in the X4 Fluids Analysis Program for the life of the warranty. Extended warranty coverage packages are also available.

**Applies to 2018 or newer serialized machines only.*

https://truckmanualshub.com/

SPECIFICATIONS

Engine

Isuzu AQ-6HK1X Final Tier 4 turbocharged diesel engine with electronic control (ECM) and high pressure common-rail fuel injection, 6-cylinder, water-cooled, cooled Exhaust Gas Recirculation (EGR), Intercooler, Variable-Geometry Turbocharger (VGT), Diesel Oxidation Catalyst (DOC) and Selective Catalytic Reduction (SCR) system with Dosing Control Module and heated DEF lines and tank. Electronic fuel pump and priming, Fuel cooler, Auto-idle start, Auto warm-up, EPF engine protection, dual-stage fuel filtration, remote oil filter, engine oil sample port, green plug oil drain, double element air filter.

SAE J 1349 net horsepower	268 hp (200 kW) @ 1,900 rpm
Displacement	475 cu in (7.8 L)
Maximum Torque	729 lbf-ft (988 Nm) @ 1,500 rpm
Starter	24V-5.0kW
Alternator	50 amp
Battery	(2) 12-volt 128 amp hours

Cab and Controls

FOPS Level 1 certified with automatic climate control A/C and heat with defroster, 7" LCD Hi-Definition color monitor with full-time rear-view camera display, fuel efficiency gauge, low-effort joysticks are pre-wired for auxiliary hydraulics, dual cab lights, safety glass windows, sunroof with sunshade, shockless cab suspension with four fluid cab mounts, SCM High-Back reclining suspension seat, sliding 4-position tilting control consoles, AM/FM sound system with MP3 auxiliary input jack, digital clock, dome light, seat belt, coat hook, cup holder, storage compartments, floor mat, footrests, ashtray, 24V cigarette lighter, 12V outlet, travel alarm, handrails, mirrors, external cab filter.

Three selectable work modes, RemoteCARE Telematics GPS system, anti-theft password protection system, onboard self-diagnostic system with memory and service interval reminders, auto idling system, one-touch decelerator, auto-idle engine shutdown, auto-power boost, neutral safety start, gate-lock safety shutoff.

Hydraulic System

Open-center system, two variable-displacement electronically controlled axial-piston pumps and one gear pump for pilot controls, main control valve with one 4-spool section and one 5-spool section with auxiliary spool: stackable, Auxiliary Control System, oil cooler, Auto-Power boost, boom and arm holding valves, 6 micron return filter, firewall, hydraulic oil sample port, hose burst check valve.

Hydraulic Pumps

Pump Output	2 x 79.3 gpm (300 L/min)
Pilot Pump Maximum Flow	7.5 gpm (28.5 L/min)

Relief Valve Settings

Boom Up / Arm Out	4,970 psi (34.3 MPa)
Swing Circuit	4,270 psi (29.4 MPa)
Travel Circuit	4,970 psi (34.3 MPa)

Hydraulic Cylinders

	number of cylinders - bore x stroke
Boom	2 - 6.3" x 55.1" (160 mm x 1,400 mm)
Arm	1 - 5.3" x 57.5" (135 mm x 1,460 mm)

Swing

Planetary reduction powered by axial-piston motor, Internal ring gear with grease cavity for swing pinion, Swing bearing is single-row, shear type ball bearing, Mechanical disc swing brake, Auto-power swing.

Swing Speed	7.5 rpm
Tail Swing	11' 8" (3.55 m)
Swing Torque	110,600 lbf-ft (150 kNm)

Undercarriage

Improved heavy-duty undercarriage, Sealed and strutted track chain with track guide, Sealed rollers and idlers, Two-speed independent hydrostatic travel with planetary final drive, Disc type brakes, Adjustable track tension, Carbody belly pan.

Carrier Rollers	2 per Side
Track Rollers	9 per Side
Track Link Pitch	9.0" (229 mm)
Shoes	50 per Side
Shoe Width	29.5" (750 mm)
Ground Pressure	10.7 psi (0.074 MPa)

Travel System

Two-speed independent hydrostatic travel with axial-piston motors, Hydraulic motor powered output shaft coupled to a planetary reduction drive and track sprocket, All hydraulic components mounted within the width of side frame, Automatic downshift for high torque to overcome obstacles, Spring-applied hydraulic release parking brake built into each motor, Travel motors equipped with counterbalance valve to prevent over-speeding down an incline, Single-pedal straight line travel.

Travel Speeds	1.7 - 2.8 mph (2.7 - 4.5 km/h)
Drawbar Pull	76,200 lbf (339 kN)
Gradeability	70% (35°)

Attachment

Boom	29' 7" (9.02 m)
Arm	22' 1" (6.73 m)

Capacities

Fuel Tank	153 Gallons (580.0 Liters)
Hydraulic System	92 Gallons (350.0 Liters)
Hydraulic Tank	46 Gallons (175.0 Liters)
Final Drive (per side)	4 Gallons (15 Liters)
Swing Drive	2.8 Gallons (10.5 Liters)
Engine Oil	12.7 Gallons (48.0 Liters)
DEF Tank	40 Gallons (152.0 Liters)
Coolant System	10.0 Gallons (38.0 Liters)

Operating Weight - No Tool

Working weight with 29.5" (750 mm) shoes, 29' 7" (9.02 m) boom, 22' 1" (6.73 m) arm, 19,400 lb. (8 800 kg) counterweight - no tool

103,617 lbs. (47 000 kg)

https://truckmanualshub.com/

Working Range & Travel Dimensions

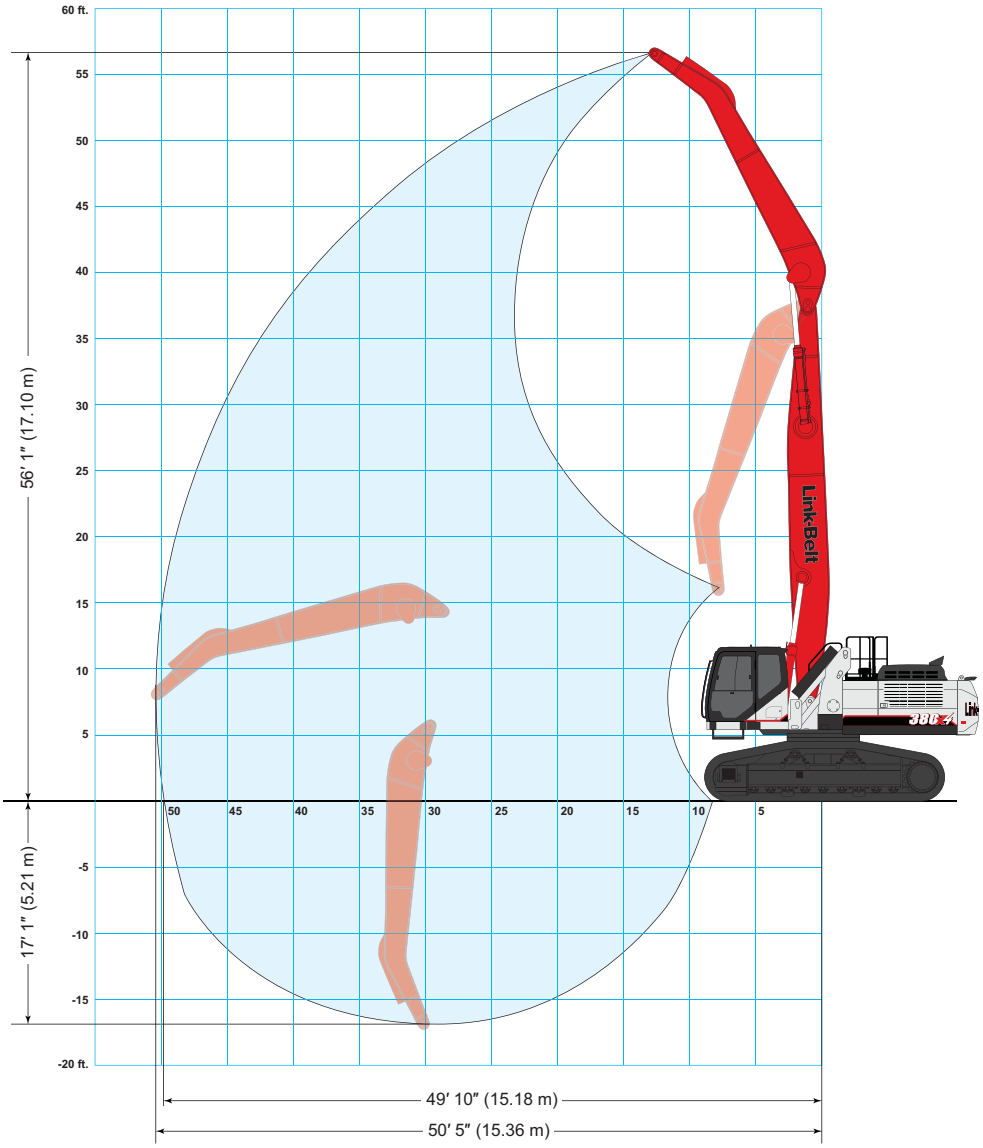

Machine Equipped with 29' 7" (9.02 m) Boom	Arm 22' 1" (6.73 m)
A. Maximum reach	50' 5" (15.36 m)
B. Maximum reach @ ground level	49' 10" (15.18 m)
C. Maximum depth	17' 1" (5.21 m)
D. Maximum height	56' 1" (17.10 m)

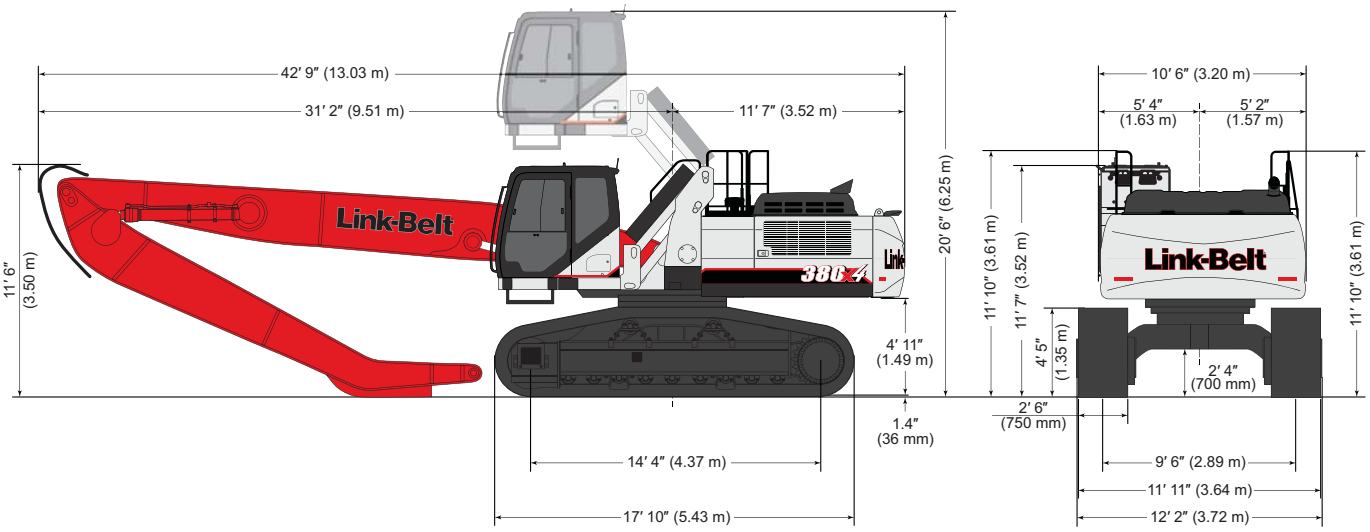

https://truckmanualshub.com/

Lift Capacities

Radius of Load 22' 1" (6.40 m) Arm with 29' 7" (9.02 m) Boom																					
End	Side	10' 0" (3.0 m)		15' 0" (4.5 m)		20' 0" (6.0 m)		25' 0" (7.5 m)		30' 0" (9.0 m)		35' 0" (10.5 m)		40' 0" (12.0 m)		45' 0" (13.5 m)		50' 0" (15.0 m)		Max. Reach	
		End	Side	End	Side	End	Side	End	Side	End	Side	End	Side	End	Side	End	Side	End	Side	End	Side
+55' 0"	lbs																			15,150*	15,150*
(16.5 m)	kg																			6 370*	6 370*
+50' 0"	lbs							13,600*	13,600*											11,300*	11,300*
(15.0 m)	kg							6 730*	6 730*											4 970*	4 970*
+45' 0"	lbs							17,400*	17,400*	14,050*	14,050*									9,750*	9,750*
(13.5 m)	kg							8 130*	8 130*	6 790*	6 790*									4 360*	4 360*
+40 0"	lbs							19,300*	19,300*	17,150*	17,150*	13,500*	13,500*							8,950*	8,950*
(12.0 m)	kg							8 910*	8 910*	8 020*	8 020*	6 560*	6 560*							4 020*	4 020*
+35 0"	lbs							20,850*	20,850*	18,850*	18,850*	16,600*	15,450	11,950*	11,950*					8,450*	8,450*
(10.5 m)	kg							9 560*	9 560*	8 650*	8 650*	7 780*	7 200	5 950*	5 650					3 820*	3 820*
+30' 0"	lbs							21,600*	21,600*	19,050*	19,050*	17,000*	15,300	15,250*	12,100	8,400*	8,400*			8,150*	8,150*
(9.0 m)	kg							9 920*	9 920*	8 740*	8 740*	7 810*	7 120	7 020*	5 640	4 610*	4 500			3 690*	3 690*
+25' 0"	lbs					24,700*	24,700*	22,300*	22,300*	19,450*	19,300	17,200*	15,000	15,300*	11,900	12,200*	9,600			8,000*	8,000*
(7.5 m)	kg					11 280*	11 280*	10 270*	10 270*	8 940*	8 940*	7 910*	6 960	7 050*	5 550	6 080*	4 480			3 630*	3 630*
+20' 0"	lbs					28,000*	28,000*	23,300*	23,300*	20,000*	18,550	17,450*	14,500	15,400*	11,600	13,550*	9,450			8,000*	8,000*
(6.0 m)	kg					12 930*	12 930*	10 750*	10 750*	9 210*	8 610	8 040*	6 740	7 090*	5 400	6 260*	4 400			3 620*	3 620*
+15' 0"	lbs	53,500*	53,500*	39,600*	39,600*	30,150*	30,150*	24,450*	23,300	20,550*	17,650	17,700*	13,900	15,450*	11,250	13,400*	9,200			8,050*	7,650
(4.5 m)	kg	27 360*	27 360*	18 340*	18 340*	13 920*	13 920*	11 270*	10 790	9 480*	8 190	8 160*	6 460	7 120*	5 220	6 210*	4 290			3 650*	3 470
+10' 0"	lbs			43,300*	43,300*	31,900*	29,950	25,300*	21,750	21,000*	16,700	17,850*	13,300	15,350*	10,850	13,150*	8,950	9,150*	7,500	8,200*	7,450
(3.0 m)	kg			20 030*	20 030*	14 740*	13 850	11 690*	10 060	9 680*	7 740	8 230*	6 170	7 090*	5 030	6 110*	4 170	5 030*	3 500	3 720*	3 370
+5' 0"	lbs			15,950*	15,950*	32,500*	27,500	25,600*	20,300	21,000*	15,800	17,650*	12,700	15,050*	10,450	12,700*	8,750	9,450*	7,400	8,450*	7,350
(1.5 m)	kg			6 750*	6 750*	15 000*	12 730	11 820*	9 400	9 700*	7 310	8 160*	5 890	6 950*	4 850	5 900*	4 060	4 770*	3 440	3 840*	3 330
Ground	lbs	4,800*	4,800*	12,200*	12,200*	31,350*	25,800	25,000*	19,150	20,500*	15,050	17,100*	12,200	14,350*	10,100	11,850*	8,500			8,850*	7,350
Line	kg	2 110*	2 110*	5 320*	5 320*	13 300*	11 950	11 530*	8 880	9 460*	6 960	7 910*	5 650	6 660*	4 690	5 540*	3 960			4 020*	3 340
-5' 0"	lbs			12,650*	12,650*	24,850*	24,800	23,300*	18,400	19,200*	14,500	15,950*	11,800	13,200*	9,850	10,550*	8,400			7,850*	7,550
(1.5 m)	kg			5 570*	5 570*	10 770*	10 770*	10 770*	8 530	8 880*	6 710	7 400*	5 470	6 160*	4 570	4 970*	3 890			3 570*	3 430
-10' 0"	lbs			14,200*	14,200*	23,900*	23,900*	20,550*	18,050	17,100*	14,150	14,150*	11,600	11,400*	9,700	8,400*	8,350			7,500*	7,500*
(3.0 m)	kg			6 280*	6 280*	10 430*	10 430*	9 510*	8 360	7 930*	6 570	6 590*	5 370	5 370*	4 500	4 070*	3 870			3 390*	3 390*
-15' 0"	lbs							16,700*	16,700*	14,050*	14,050*	11,450*	11,450*							9,000*	9,000*
(4.5 m)	kg							7 770*	7 770*	6 560*	6 530	5 390*	5 340							4 030*	4 030*

Notes: Excavator lifting capacities

1. Lifting capacities shown should not be exceeded. Weight of all lifting accessories must be deducted from the above lifting capacities.
2. Lifting capacities are based on machine standing on firm, uniform supporting surface. User must make allowances for job conditions such as soft or uneven ground.
3. Lifting capacities shown do not exceed 75% of minimum tipping loads or 87% of hydraulic capacities. **Capacities marked with an asterisk (*) are limited by hydraulic capacities.**
4. Least stable position is over the side.
5. Operator should be fully acquainted with the Operator's Manual & Operating Safety Booklet, furnished by LBX before operating the machine.
6. Capacities apply only to the machine as originally manufactured and normally equipped by LBX Company, LLC.
7. Lift capacity ratings are based on ISO 10567, "Earthmoving Machinery - Hydraulic Excavators - Lift Capacity."

https://truckmanualshub.com/

Standard & Optional Equipment

Standard Equipment

CAB

- 12V Power Outlet
- AM/FM Sound System
- Anti-Interference Device
- Anti-Theft Device
- Auxiliary Switches on Control Lever
- Bluetooth
- Cab Filter - External
- Cab Handrails
- Cab Interior Light
- Cab ISO-Mounts
- Cab Light (2 LED)
- Clear Roof Window
- Climate Control A/C and Heater
- Cup Holder
- Defroster
- Digital Clock
- Emergency Exit and Hammer
- Face Vent
- Floor Mat
- FOPS Level 1 Certified
- Front Guard (OPG 1)
- Front Window One-Touch Lock
- Gate Lock Hydraulic Activation
- Horn
- Hour Meter (Digital)
- Hydraulic Cab Riser
- LCD Color Monitor
- Magazine Storage Rack
- Maintenance Interval Reminders
- MP3 Auxiliary Input Jack
- On-Board Diagnostic System
- One-Piece Right Window
- Radio Mute Switch
- Rear View Camera
- Rear View Mirrors (2)
- RemoteCARE Support System (GPS)
- Roof Sun Shade
- Safety Glass Windows
- SCM Air-Suspension Seat with Tilt & Heater
- Seat Recline
- Selectable Monitor Languages
- Small Storage
- Travel Alarm with Cancel Switch
- Trip Meter (Digital)
- USB Input
- Wiper & Washer
- Wiper Switch on RH Joystick

ENGINE

- 50A Alternator
- Air Filter (Double Element)
- Air Filter Restriction Indicator
- Air Pre-Cleaner (Cyclone type)
- Auto Warm-Up System
- Auto-Idle
- Auto-Idle Engine Shutdown
- Battery Disconnect Switch
- Cooling Fan
- Diesel Oxidation Catalyst (DOC)
- Drain for Fuel Tank
- Dual Remote Fuel Filters with Water Separators
- EGR Coolers
- Emergency Engine Stop
- Engine Idle System
- Engine Oil Sample Port
- Engine Protection Feature
- External Fuel Gauge
- External DEF Gauge
- Fan Housing
- Fuel Cooler
- Fuel Filter Restriction Indicator
- Fuel Management System
- Fuel Shut-Off Valve
- Fuel Usage History
- Fuel Usage Monitor
- Glow Plug Pre-Heat
- Idle-Start
- Intercooler
- Neutral Start
- One-Touch Idle
- Passive Emissions Regeneration
- Radiator / Oil Cooler / Intercooler Protective Screen
- Remote Engine Oil Drain
- Remote Oil Filter
- Selective Catalytic Reduction (SCR)
- DEF Gauge on Monitor
- VGT Turbocharger

HYDRAULICS

- Arm Regeneration
- Arm Speed Assistance (2 Pump Flow)
- Attachment Cushion Valve
- Auto Swing Priority
- Auxiliary Flow Control
- Auxiliary Tool Settings (Memory)
- Auxiliary Valve
- Boom Regeneration
- Boom Speed Assistance (2 Pump Flow)
- Control Levers Pre-Wired for Auxiliary Hyd.
- Electronically Controlled Hydraulic Pumps
- Fire Wall
- Free Swing
- Holding Valve (Arm & Boom)
- Hose Burst Check Valve
- Hydraulic Filter Restriction Indicator
- Hydraulic Oil Sample Port
- Long Life Hydraulic Oil (5,000 Hour)
- Neutral Pump De-Stroke
- Oil Cooler
- Power Save
- Pressure Reading on Monitor
- Pump Stand-By Pressure
- Single Pedal Travel
- Straight Travel Circuit

UNDERCARRIAGE

- 750 mm (29.5" in) 3-Bar Steel Grousers
- Carbody Belly Pan (Swivel Guarding)
- Double Track Guard
- Lashing Points (Tie-Downs)
- Long Undercarriage
- Sealed Link Chain
- Steps
- Strutted Track Chain
- X-Pattern Carbody

UPPERSTRUCTURE

- Belly Pans
- Center Cover (Over Main CV)
- Fuel Tank Belly Pan
- Hand Rail (RH access)
- ISO Guard Rails
- Lifting Eyes for Counterweight
- Lockable Fuel Cap and Service Doors
- Turntable Tub
- Work Lights (Arm and Gen Box, LED)
- Catwalks

ATTACHMENT

- 22' 1" (6.73 m) Arm
- 29' 7" (9.02 m) Main Boom Section
- Arm Work Light (2 LED)
- Chrome Pins
- Easy Maintenance System (EMS)
- Remote Lube Bank
- Teardrop Pin Retention Keepers

PARTS KIT

- Engine Manual
- Engine Oil Filter
- Filter Wrench
- Fuel Filters
- Grease Gun
- Green Plug Drain Hose for Engine Oil Drain
- Hydraulic Return Filter
- Ignition Keys
- Pilot Circuit Hydraulic Filter
- Rearview Mirrors
- Work Lights for Arm

Optional Equipment

CAB

- 270° WAVES™ Camera System
- Cab Light (Rear, LED)
- Cab Sun Screen (rear)
- FOPS Head Guard (Level 2)
- Front Guard (Mesh)
- Front Guard (OPG 2)
- LED Light Kit for Side Camera (2)
- LED Lights for Rear Camera (1)
- Rain Deflector
- Under Cab Camera

ENGINE

- Refuel Pump

HYDRAULICS

- Proportional Hydraulic Controls

UNDERCARRIAGE

- Full-Length Track Guard

ATTACHMENT

- 20 kW Genset Baldor/Hubbell
- Fully Automatic Lube System

Litho in USA 2/18 #LBX2365 supersedes #LBX2331

LBX® and Link-Belt® are registered trademarks. Copyright 2018. All rights reserved. We are constantly improving our products and therefore reserve the right to change designs and specifications.