https://truckmanualshub.com/

Electrical System

https://truckmanualshub.com/

https://truckmanualshub.com/

SP001038

Electrical System

Edition 1

https://truckmanualshub.com/

MEMO

https://truckmanualshub.com/

Table of Contents

Electrical System

Safety Precautions 7
Applicable Models 7
Introduction 9
Electrical Supply System 10
Engine Starting Circuit 12
- Start Operation 12
- After Start 14

Engine Preheating System 16
Engine Stop 18
Charging System 20
Monitoring System 21
- Instrument Panel 22
- Monitoring System Schematic 24

Operation 26
- Instruments 26

Warning and Indicator Lights 28
- Indication of Warning Lights 28
- Indication of Multifunction Gauge and Letter Information Area 29

Initial Operation 31
Mode Selector Switch 31
Graphic Information Area Display 32
- Overview 32
- Main Menus for the Graphic Display Area 33
- Menu Selector Buttons 33

Main Menu 34
- Language 34
- Set Clock 35
- Filter/Oil Info 35
- Adjust Display 36

https://truckmanualshub.com/

Set Password 37
Special Menu 38
Entering/Accessing and Exiting/Escaping Menus 38
Special Menu Selections 39
Electronic Hydraulic Control System (e-EPOS) .. 56
Control System Schematic 56
Power Mode Control 58
Operation 60
Power Mode Control - Circuit Diagram 62
Work Mode Control 64
Operation 65
Work Mode Control - Circuit Diagram 66
Engine Control System 67
Engine Control Dial 68
Engine Control Circuit Diagram 69
Automatic Deceleration Control
(Auto Idle Control) 70
Engine Overheat Protection System 72
Power Boost Mode 74
Operation 74
Power Boost Control - Circuit Diagram 76
Automatic Travel Speed Control 78
Automatic Travel Speed Control - Circuit Diagram 80
Self-diagnostic Function 81
e-EPOS Controller 81
Air Conditioner System 83
Outline 83
Internal and External Filters 84
Air-Conditioning System Layout 86
Air Conditioner/heater Circuit Diagram 87
Air Conditioner/heater Unit 88
Ambient Air Temperature Sensor 93

https://truckmanualshub.com/

Sun Sensor 94
Control Panel 94
Compressor 102
Receiver Dryer 102
Troubleshooting 103
Weight of R134a Gas Used In Machines 105
Refrigerant System Repairs 106
Refrigerant Safe Handling Procedures 106
Repair and Replacement Procedure 107
Refrigerant Recovery 109
Vacuuming Refrigerant System 109
Leakage Check 111
Refrigerant Charging 111
Inspecting System For Leakage 113
Wiper System 114
Wiper Circuit 114
Wiper operation 115
Lighting System 118
Lighting System Circuit Diagram 118
Kind of Light 119
Operation 119
Audio Controller 120
Audio Controller Circuit Diagram 120

https://truckmanualshub.com/

MEMO

https://truckmanualshub.com/

SAFETY PRECAUTIONS

CAUTION!

Follow all safety recommendations and safe shop practices outlined in the front of this manual or those contained within this section.

Always use tools and equipment that are in good working order.

Use lifting and hoisting equipment capable of safely handling load.

Remember, that ultimately safety is your own personal responsibility.

APPLICABLE MODELS

The contents of this section apply to the following models and serial number ranges.

MODEL	SERIAL NUMBER RANGE
DX140LC	5001 and Up
DX180LC	5001 and Up

https://truckmanualshub.com/

https://truckmanualshub.com/

INTRODUCTION

The electrical system for this equipment is DC 24 volts. The rated voltage for all electric components is 24 volts with the exception of the stereo and the air-conditioning control actuator. The system contains two 12 volt batteries connected in series and a three phase AC generator with a rectifier. The electric wiring used in the system is easily identifiable by the insulator color. The color symbols used in the electrical system are listed in the following chart.

Electric Wire Color

Symbol	Color
W	White
G	Green
Or	Orange
B	Black
L	Blue
Lg	Light green
R	Red
Gr	Gray
P	Pink
Y	Yellow
Br	Brown
V	Violet

NOTE: *RW: Red wire with White stripe*

R - Base Color, W - Stripe Color

NOTE: *0.85G: Nominal sectional area of wire core less insulator = 0.85 mm^2*

https://truckmanualshub.com/

ELECTRICAL SUPPLY SYSTEM

The electric power circuit supplies electric current to each electric component. It consists of a battery, battery relay, starter switch, circuit breaker, fusible link and fuse box.

The negative terminal of the battery is grounded to the vehicle body.

Even when the starter switch (5) is in the "OFF" position, electric current is supplied to the following components through battery (1) → fusible link (3) → fuse box (6).

1. Terminal "1" of DC-DC converter (for memory backup of stereo)
2. Terminal "B" of starter switch
3. Hour meter
4. Engine controller
5. Fuel feeder pump switch
6. Terminal "6" of wiper motor
7. Terminal "13" of wiper controller
8. Terminal "CN6-11" of instrument panel
9. Terminal "CN9-6" of air conditioner panel
10. Cabin light

When the starter switch (5) is in the "ON or START" positions, the current flows from the battery (1) → fusible link (3) → fuse box (6) → "B" terminal of starter switch (5) → "BR" terminal of starter switch (5) → "BR" terminal of battery relay (2) which activates the coil of the battery relay and the electric supply system is energized.

When the battery relay's contacts are connected, all electric devices can be operated.

While the engine is not running, the electric power for all electric devices are supplied by the battery. Once the engine is started the power is supplied from the alternator (7).

https://truckmanualshub.com/

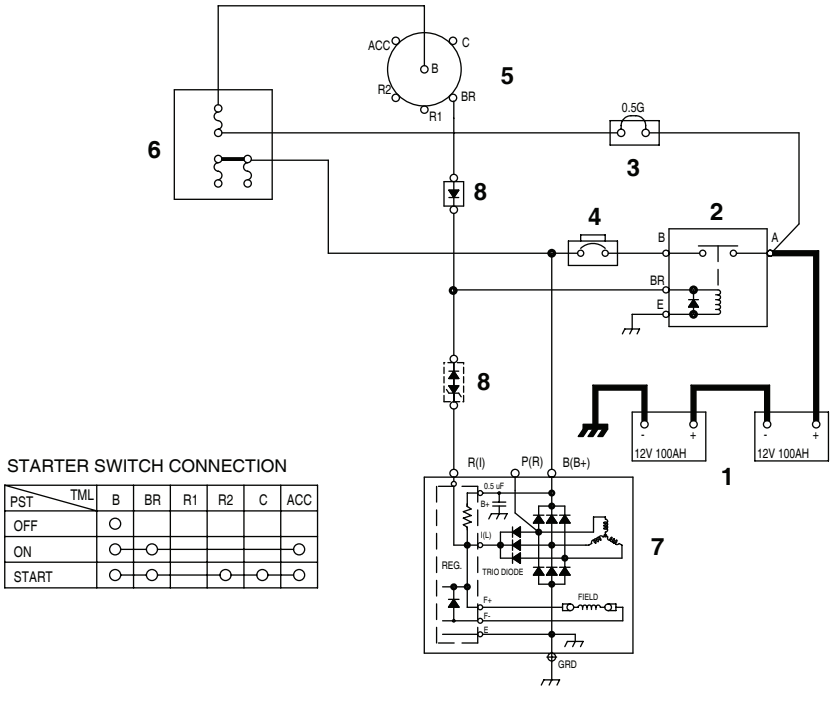

FG007233

Figure 1 ELECTRIC POWER CIRCUIT DIAGRAM

Reference Number	Description
1	Battery
2	Battery Relay
3	Fusible Link
4	Circuit Breaker

Reference Number	Description
5	Starter Switch
6	Fuse Box
7	Alternator
8	Diode

https://truckmanualshub.com/

ENGINE STARTING CIRCUIT

Start Operation

When the starter switch is turned to the "START" position, the "S" and "E" terminals of the starter controller (7) are connected. At this time the contacts in the starter relay (8) are closed by the current flow from the battery (1) → fusible link (3) → fuse box (6) → "B" terminal of starter switch (5) → "C" terminal of starter switch (5) → "30" terminal of starter relay (12) - "87a" terminal → "C" terminal of starter relay (8) - "D" terminal → "S" terminal of starter controller (7) - "E" terminal → ground.

When the contact point "B" and "PP" of starter relay (8) are connected, the pinion gear of the starter (9) is pushed forward and makes contact with the ring gear of the flywheel and the internal contacts of the starter are connected. The current flows from the battery (1) → "A" terminal of the battery relay (2) → "B" terminal of the battery relay (2, Figure 3) → "B" terminal of the starter (9). The starter motor is rotated and the engine is started.

If the instrument panel has the password function activated , input number should match the set number, otherwise the start circuit closes and the engine does not start.

NOTE: *If the security system is "LOCKED," a four-digit password will be required to start the engine. If the system is "UNLOCKED," no password will be required and this display screen will not appear.*

In the event the security system is locked, current flows from battery (1) → fusible link (3) → fuse box (6) → "B" terminal of starter switch (5) → "ACC" terminal of starter switch (5) → "86" terminal of starter relay (12) → "85" terminal of starter relay (12) → "CN1-15" terminal of e-EPOS (13) → ground. This current flow causes the coil in starter relay (12) to be activated, opening contacts at "87a" terminal. This prevents starter relay (8) from functioning.

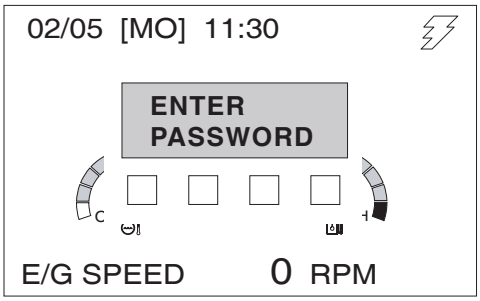

FG001445

Figure 2

https://truckmanualshub.com/

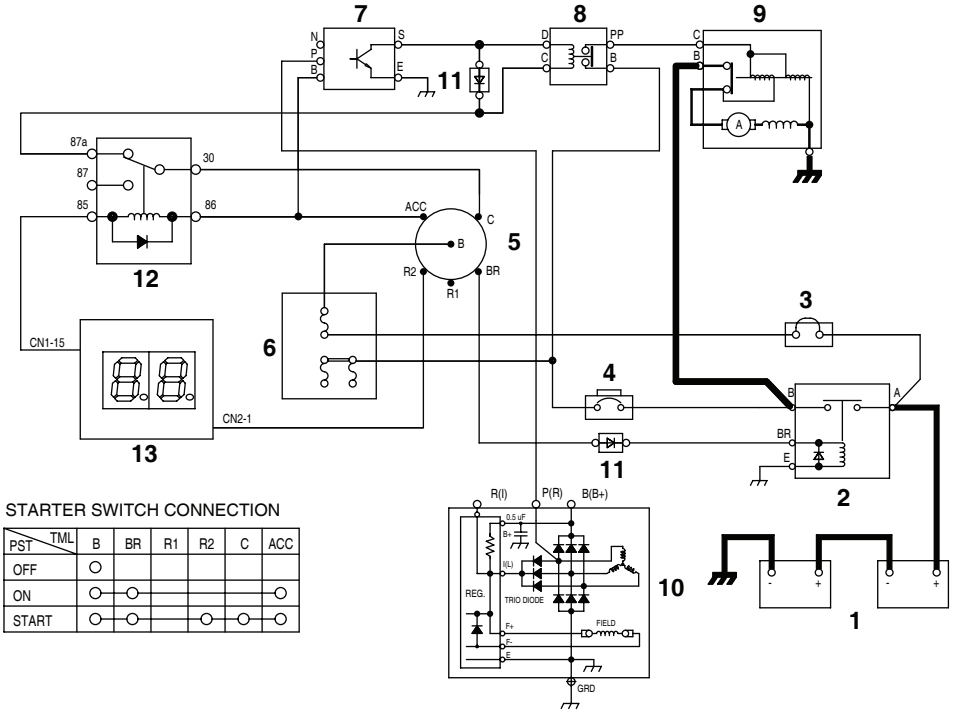

FG007234

Figure 3 STARTER CIRCUIT (1) - WHILE STARTING

Reference Number	Description
1	Battery
2	Battery Relay
3	Fusible Link
4	Circuit Breaker
5	Starter Switch
6	Fuse Box
7	Starter Controller

Reference Number	Description
8	Starter Relay
9	Starter
10	Alternator
11	Diode
12	Starter Relay 2
13	e-EPOS Controller

https://truckmanualshub.com/

After Start

Once the engine has been started, the belt driven alternator (10) generates a current.

The output generated by the alternator (10) is a square wave pulse voltage through the "P" terminal and the frequency of the pulse voltage is proportional to the rotation of the alternator.

The starter controller (7) monitors the frequency of the output current. Once the frequency is equivalent to 500 rpm, it is sensed and the connection between "S" and "E" terminals and the connection between "B" and "PP" terminals are opened. As a result the rotation of the starter (9) is stopped. Once the engine is running, the starter (9) will not operate even if the starter switch (5) is moved to the start position, preventing possible damage to the starter.

https://truckmanualshub.com/

Operation of the Start Circuit (2) - Immediately After Start

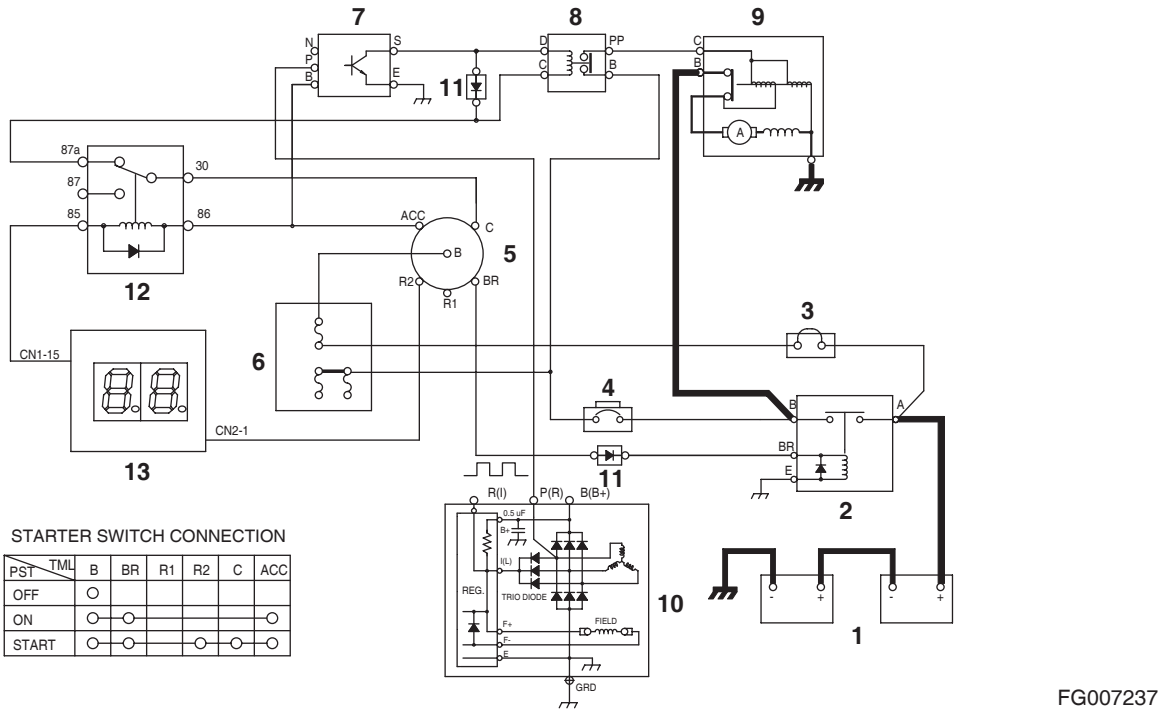

Figure 4 OPERATION OF START CIRCUIT (2) - IMMEDIATELY AFTER START

Reference Number	Description
1	Battery
2	Battery Relay
3	Fusible Link
4	Circuit Breaker
5	Starter Switch
6	Fuse Box
7	Starter Controller

Reference Number	Description
8	Starter Relay
9	Starter
10	Alternator
11	Diode
12	Starter Relay 2
13	e-EPOS Controller

https://truckmanualshub.com/

ENGINE PREHEATING SYSTEM

An air heater (8) is installed in the intake manifold of the engine. When the starter switch (5) is turned "ON," the current flows from the battery (1) → fusible link (3) → fuse box (6) → "B" terminal of starter switch (5) → "BR" terminalof starter switch (5) → "1-39" terminal of engine controller (12), causing current to flow though "1-16" terminal of engine controller (12) → "C and D" terminals of preheat relay (7) → "1-04" terminals of engine controller (12) → ground.

This current flow causes the coil in preheat relay (7) to be activated, closing contacts.

When the contacts of the preheat relay (7) are closed, the heating coils of the air heating device (8) are heated by current flowing from the battery (1) → battery relay (2) → preheat relay (7) → air heater (8) → ground.

The duration of the heating cycle depends on the temperature of engine coolant. The preheat indicator light in the instrument panel (9) will turn "ON" during preheating cycle.

The preheat relay (7) is controlled by the engine controller (12) and operates only at temperatures of 10°C (50°F) and below.

The longer the preheating period, the lower the temperature of coolant is.

https://truckmanualshub.com/

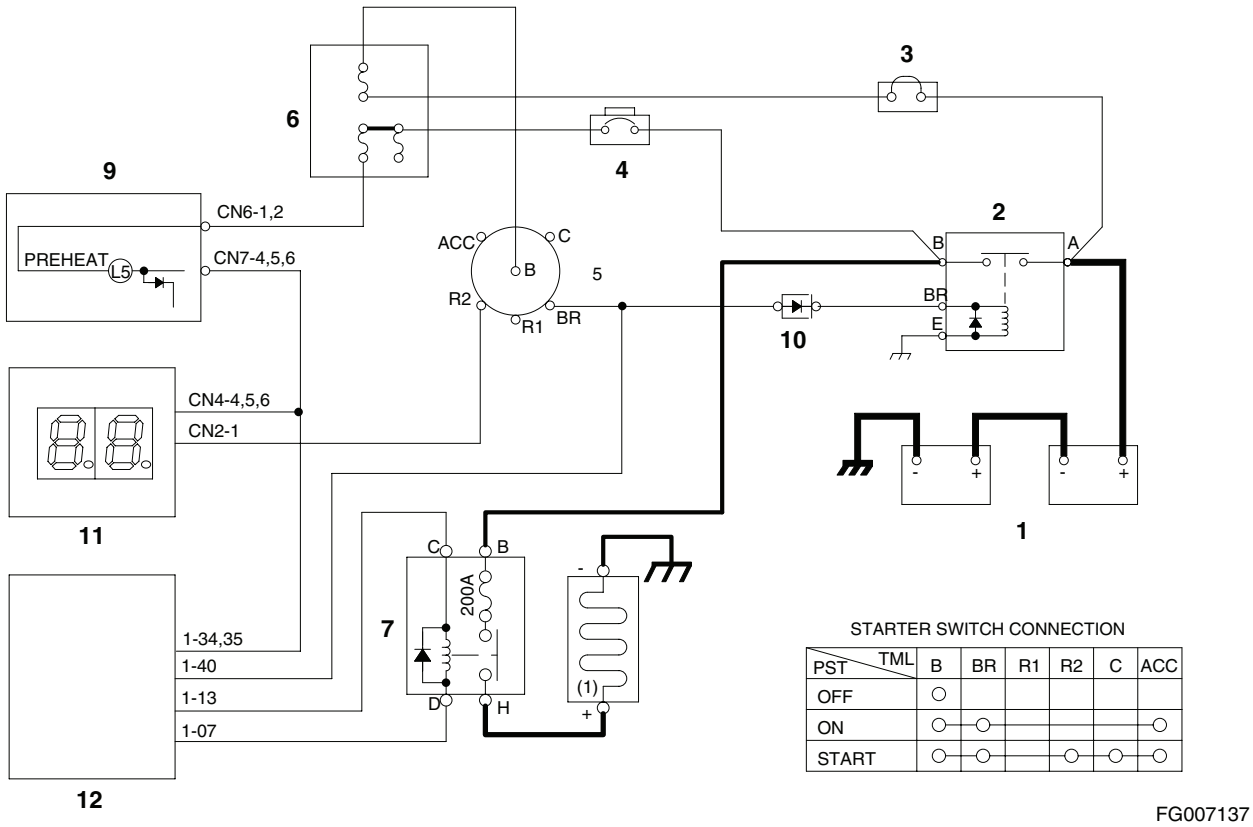

Figure 5 ENGINE PREHEAT CIRCUIT

Reference Number	Description
1	Battery
2	Battery Relay
3	Fusible Link
4	Circuit Breaker
5	Starter Switch
6	Fuse Box

Reference Number	Description
7	Preheat Relay
8	Air Heater
9	Preheat Indicator Light
10	Diode
11	e-EPOS Controller
12	Engine Controller

https://truckmanualshub.com/

ENGINE STOP

When starter switch (5) is turned "ON" the engine controller (8) is activated. The engine controller monitors and controls the engine including the injector solenoid (9). It controls the fuel deliver rate and the injection timing for each cylinder.

NOTE: *There is an individual injector solenoid (9) for each of the six cylinders. Only one soleniod is shown in Figure 7.*

When starter switch (5) is turned "OFF," the engine controller stops suppling power to the injector solenoid (9). This stops fuel from being injexted into the engine cylinder, thus stopping the engine.

In the event that the engine can be shut down using the starter switch (5), an emergency stop switch (10) is provided to shut down engine. To activate the emergancy stop switch, move it to the "I" (EMERGENCY STOP) position.

The emergency stop switch (10) is in its "O" (OFF) position during normal operation. The switch must be moved and held in the "I" (EMERGENCY STOP) position until the engine stops. When released it will automatically move back to the "O" (OFF) position.

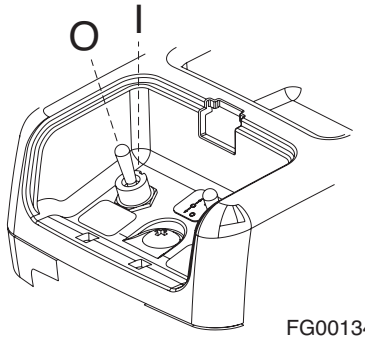

Figure 6 ENGINE EMERGENCY STOP SWITCH

https://truckmanualshub.com/

STARTER SWITCH CONNECTION

PST \ TML	B	BR	R1	R2	C	ACC
OFF	○					
ON	○	○				○
START	○	○		○	○	○

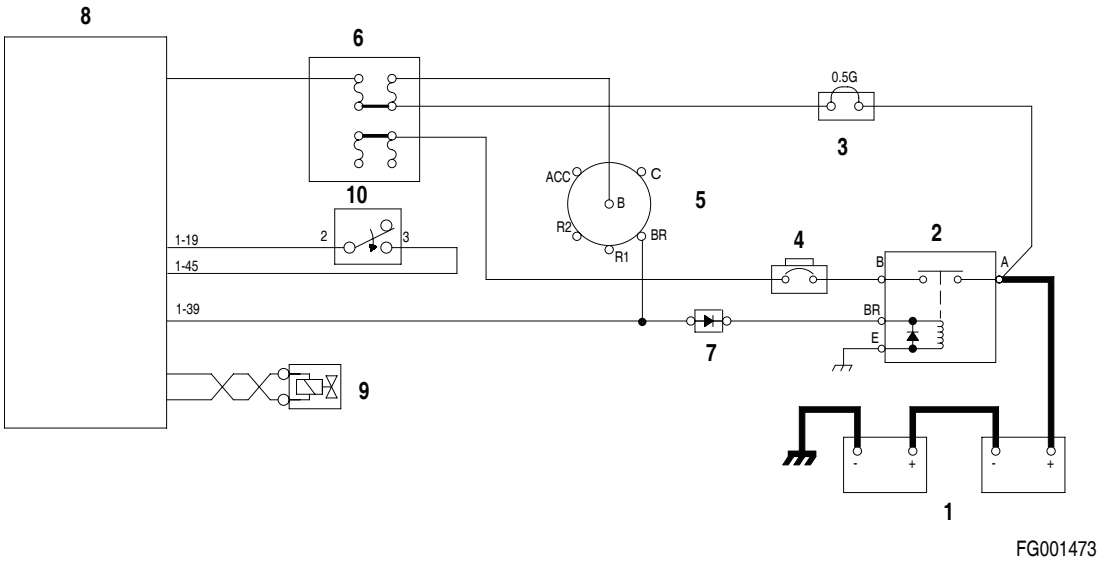

Figure 7 ENGINE STOP CIRCUIT

Reference Number	Description
1	Battery
2	Battery Relay
3	Fusible Link
4	Circuit Breaker
5	Starter Switch

Reference Number	Description
6	Fuse Box
7	Diode
8	Engine Controller
9	Injector Solenoid
10	Emergency Stop Switch

https://truckmanualshub.com/

CHARGING SYSTEM

When the starter switch (5) is turned to the "ON" position, an initial excited current flows to the field coil of the alternator (7) through the battery relay (2) and circuit breaker (4). When the engine is started from this condition the alternator (7) starts charging. The current flows from the "B(B+)" terminal of alternator (7) → circuit breaker (4) → battery relay (2) → battery (1).

The alternator also supplies electric current to other electrical components. When the alternator (7) starts to operate, a current flows from the "R(I)" terminal of alternator → diode (8) → battery relay (2) coil securing a path for the charging current to the battery (1). Thus preventing the possibility of a high voltage build up and possible damage to the electric system.

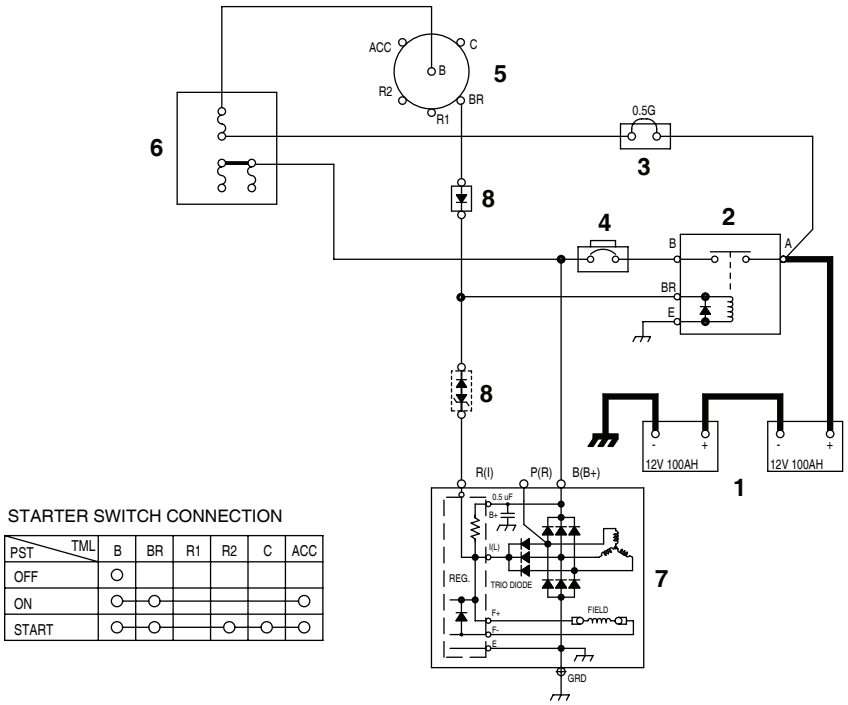

FG007238

Figure 8 CHARGING CIRCUIT

Reference Number	Description
1	Battery
2	Battery Relay
3	Fusible Link
4	Circuit Breaker

Reference Number	Description
5	Starter Switch
6	Fuse Box
7	Alternator
8	Diode

https://truckmanualshub.com/

MONITORING SYSTEM

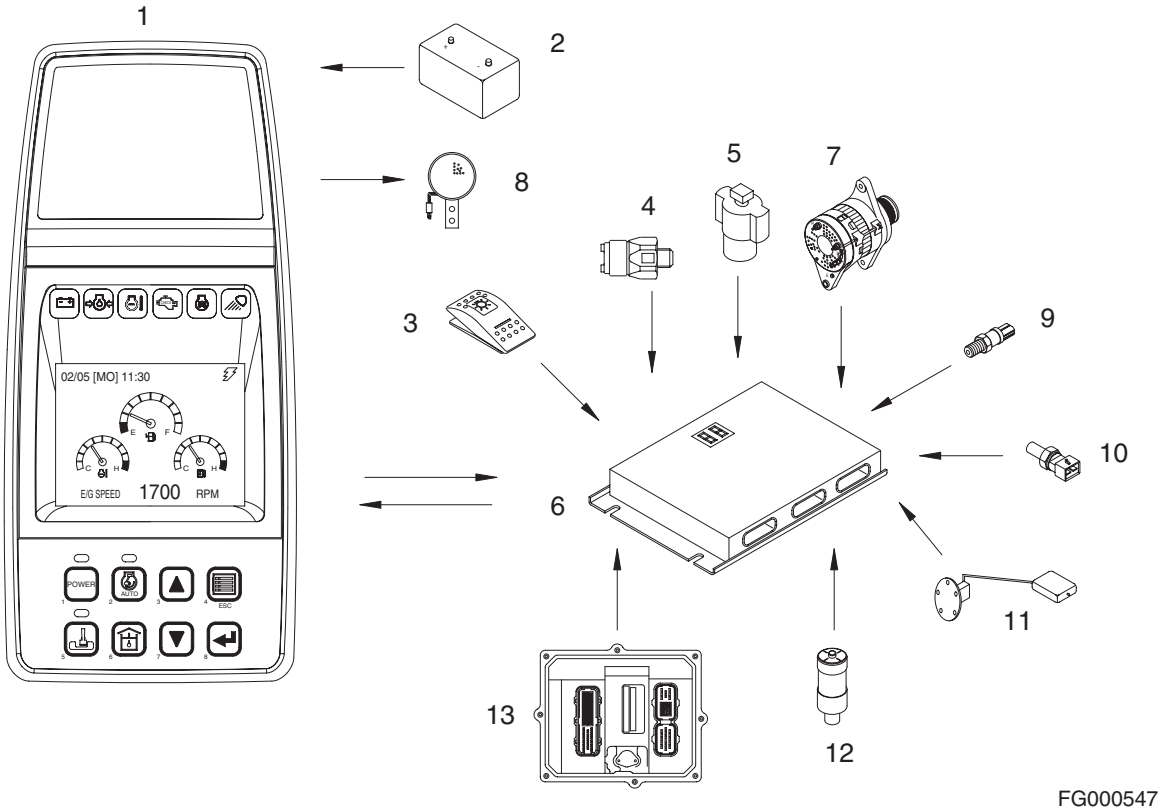

Figure 9

Reference Number	Description
1	Instrument Panel
2	Battery
3	Light Switch
4	Return Filter Switch
5	Pilot Filter Switch
6	e-EPOS Controller
7	Alternator

Reference Number	Description
8	Warning Buzzer
9	Pump Discharge Pressure Sensor
10	Hydraulic Oil Temperature Sensor
11	Fuel Sensor
12	Air Cleaner Indicator
13	Engine Controller

The monitoring system displays the various data and warning signals onto the instrument panel by processing the information gathered from the e-EPOS controller. It displays information selected by the operator.

https://truckmanualshub.com/

Instrument Panel

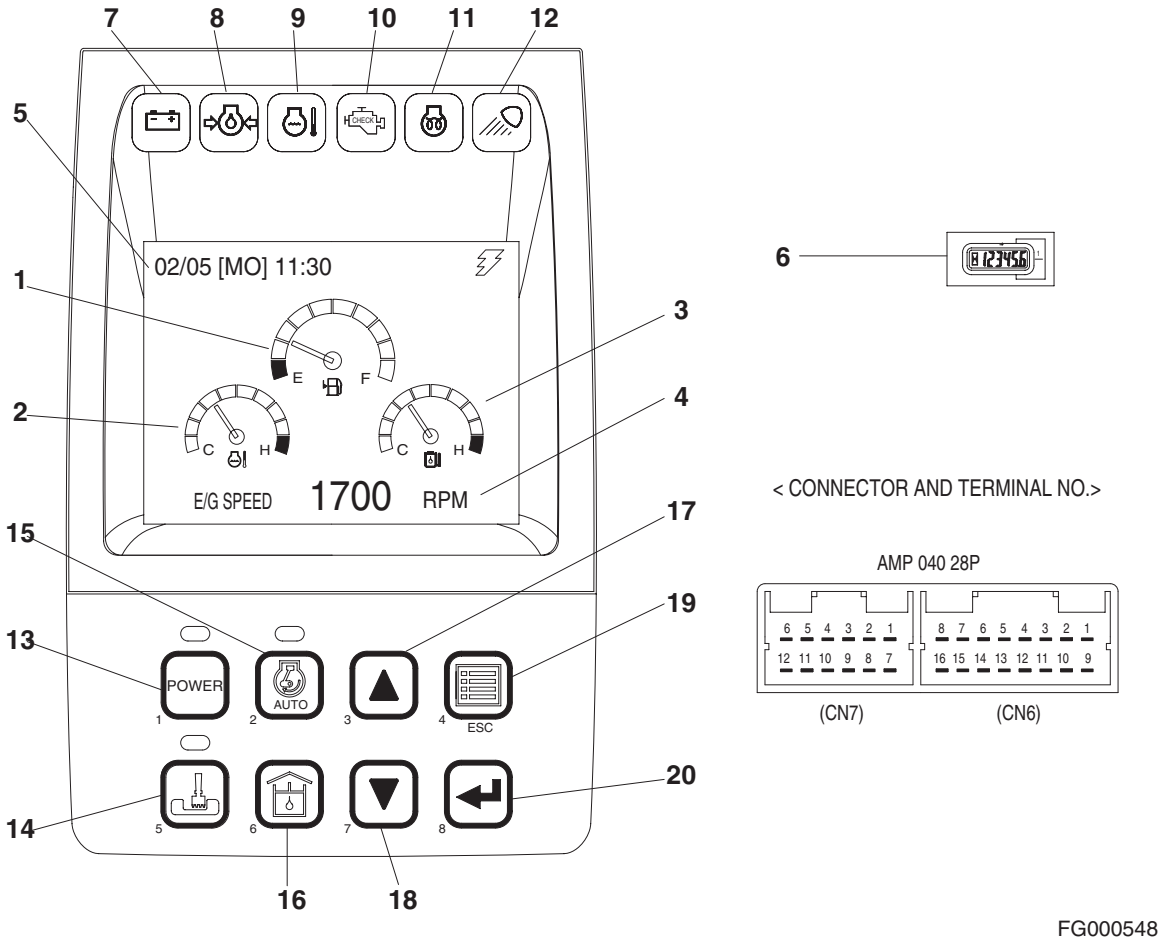

Figure 10

https://truckmanualshub.com/

Gauges	Warning Lights	Mode Selector Switches
1. Fuel Gauge 2. Engine Coolant Temperature Gauge 3. Hydraulic Oil Temperature Gauge 4. Multifunction Gauge and Letter Information Area 5. Digital Clock 6. Hour Meter	7. Charge Warning Light 8. Engine Oil Pressure Warning Light 9. Coolant Temperature Warning Light 10. Engine Check Warning Light 11. Preheat Indicator Light 12. Work Light Indicator Light	13. Power Mode Selector Switch and Indicator 14. Work Mode Selector Switch and Indicator 15. Auto Idle Switch and Indicator 16. Flow Adjusting Switch 17. Up Button Switch 18. Down Button Switch 19. Display Selector Switch 20. Selector Button Switch

When the engine starter switch is turned to the "I" (ON) position, all gauge bands, switch/button indicator lights and indicator/ warning lights will turn "ON" and the alarm buzzer will sound about two seconds.

During this functional check, a LOGO will appear on the multi function gauge in the graphic information area

https://truckmanualshub.com/

Monitoring System Schematic

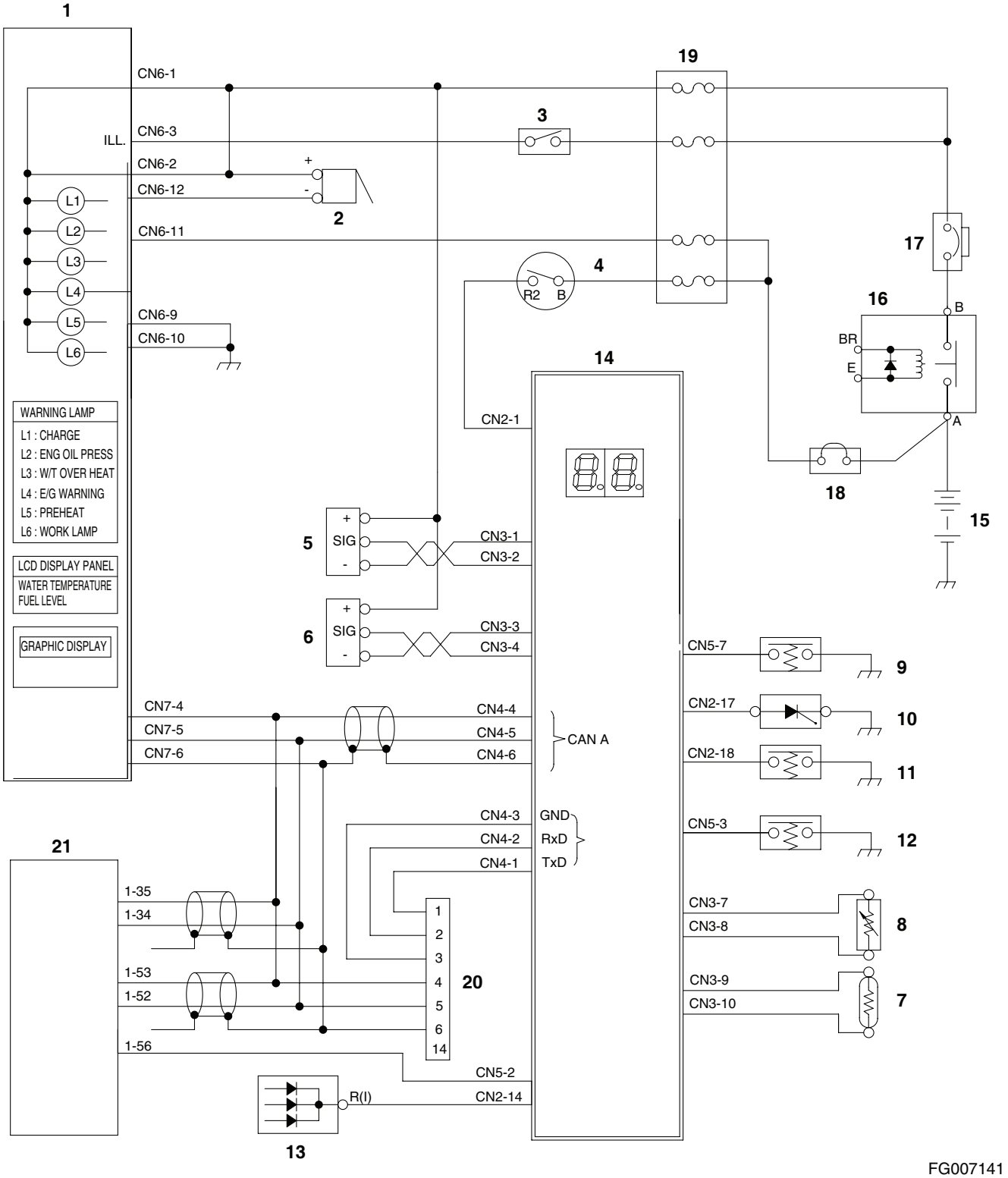

FG007141

Figure 11

https://truckmanualshub.com/

Reference Number	Description
1	Instrument Panel
2	Pilot Buzzer
3	Light Switch
4	Starter Switch
5	Front Pump Pressure Sensor
6	Rear Pump Pressure Sensor
7	Hydraulic Oil Temperature Sensor
8	Fuel Sensor
9	Pedal Pressure Switch (Optional)
10	Air Cleaner Indicator

Reference Number	Description
11	Pilot Filter Switch
12	Return Filter Switch
13	Alternator
14	e-EPOS Controller
15	Battery
16	Battery Relay
17	Circuit Breaker
18	Fusible Link
19	Fuse Box
20	Check Connector
21	Engine Controller

https://truckmanualshub.com/

OPERATION

Instruments

Function	Display	Sensor Specification	
		Input Terminal	Input Specification
Coolant Temperature	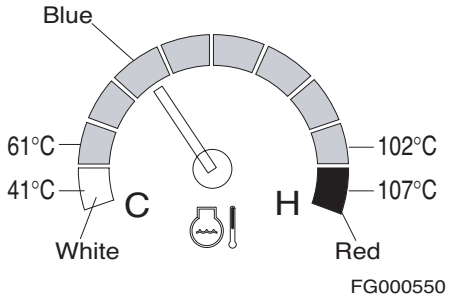	ECU-CAN Communication	
Fuel Level	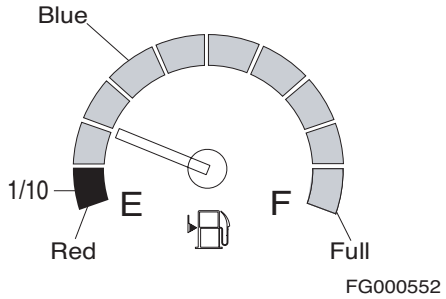	CN3-7 CN3-8	1/10 LCD (Red Zone) Blinking → over 5K ohms FULL → under 525 ohms
Hydraulic Oil Temperature	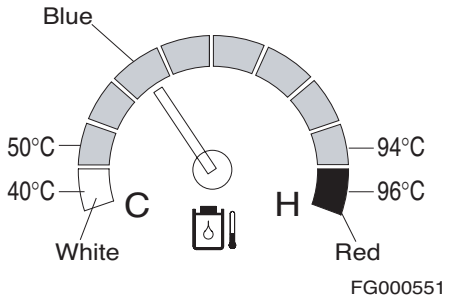	CN3-9 CN3-10	40°C (104°F) → 1,397 ohms 50°C (122°F) → 1,139 ohms 60°C (140°F) → 881 ohms 94°C (201°F) → 190 ohms 96°C (205°F) → 177 ohms (When reading increase)
Flow Adjusting	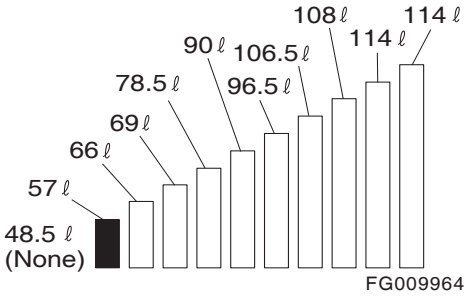	(Output Terminal) CN1-19 CN1-20	48.5 l/min → 610 mA 57 l/min → 583 mA 66 l/min → 555 mA 78.5 l/min → 466 mA (Default Set) 108 l/min → 343 mA 114 l/min → 290 mA

https://truckmanualshub.com/

Function	Display	Sensor Specification	
		Input Terminal	Input Specification
Tachometer	E/G SPEED 1700 RPM FG000049	ECU-CAN Communication	N = 162 f / 60 N = Engine speed (rpm) f = Frequency of engine speed sensor (Hz)
Voltmeter	BATTERY 28.0 VOLT FG000050	CN2-14	0 - 32 VDC
Main pump discharge pressure (front pump)	FRONT PUMP 320 BAR FG000051	CN3-1 CN3-2	V = 0.00816 x P + 1.0 V: Sensor output voltage (V) P: Displayed pressure (Bar)
Main pump discharge pressure (rear pump)	REAR PUMP 313 BAR FG000052	CN3-3 CN3-4	

https://truckmanualshub.com/

WARNING AND INDICATOR LIGHTS

Indication of Warning Lights

Description	Symbol	Input Terminal	Operation	Remarks
Charge	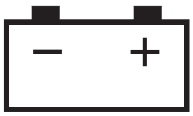 HAOA610L	CN2 - 14	It lights in case of no charge [voltage of "R(I)" terminal is below 12 ±1V] or overcharge [voltage of "R(I)" terminal is above 33(V)].	Normally, it lights when starting engine and is out after engine starts.
Engine Oil Pressure	HAOA620L	ECU-CAN Communication	It lights when engine oil pressure is below the reference.	After starting engine, if engine oil pressure is insufficient after 8 seconds, a warning buzzer will sound.
Engine Check	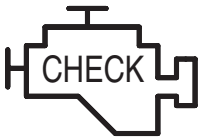 FG000045	ECU-CAN Communication	It lights in case of failure in engine system.	
Coolant Temperature	HAOD350L	ECU-CAN Communication	It lights when engine coolant temperature sensor resistant is below about 128 ohms.	
Preheating	HAOA639L	CN5-2	It lights during preheating ("CN5-2" terminal voltage is below 2V) and turns "OFF" after completion of preheating.	Preheating period depends on coolant temperature. No preheating at above 10°C 10 sec preheating at 5°C 20 sec preheating at below 0°C

https://truckmanualshub.com/

Description	Symbol	Input Terminal	Operation	Remarks
Work Light	HB4O2003	CN2 - 6	It lights when work light turns "ON" (24V applied).	

Indication of Multifunction Gauge and Letter Information Area

Description	Symbol	Input Terminal	Operation	Remarks
Hydraulic Oil Temperature	FG000056	CN3-9 CN3-10	When hydraulic oil temperature is above about 96°C.	
Fuel Exhausted	FG000057	CN3-7 CN3-8	When fuel is almost exhausted.	
Air Cleaner	FG000053	CN2-17	When air cleaner is clogged.	
Return Filter	R FG000054	CN5-3	When return filter pressure is above about 1.50 kg/cm² (21 psi)	

https://truckmanualshub.com/

Pilot Filter	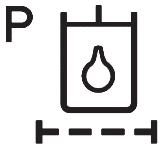 FG000055	CN2-18	When pilot filter pressure is above about 1 kg/cm² (14 psi)	
Overload Warning	FG000253	CN3-5 CN3-6	Warning buzzer also starts when boom pressure sensor output voltage is about 2.7V while overload warning switch is "ON."	It flickers in case of 2.71V and above and lights continuously in case of 2.8V and above (and warning buzzer also starts).
Boost	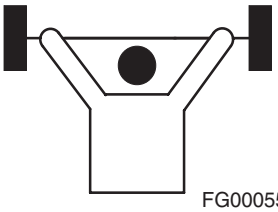 FG000554	CN2-2	It lights when boost is selected.	
Breaker	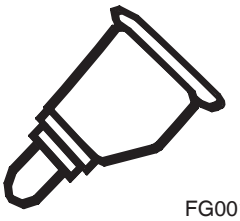 FG001470	CN2-10	It lights when breaker is selected.	
Shear	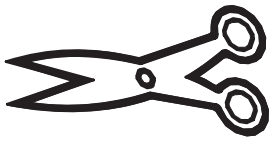 FG001471	CN2-9	It lights when shear is selected.	

https://truckmanualshub.com/

INITIAL OPERATION

Item	Input (Terminal)	Output (Operation and initial setting mode)
Initial Operation	When "CN6-1,2" is applied battery voltage (starter switch shifts from "OFF" to "ON"	• LCD, all of LED and warning lights are turned "ON" and turned "OFF" after about 2 seconds. • Warning buzzer is activated and turned "OFF" after about 2 seconds. • Power mode: Standard mode. • Work Mode: Digging mode. • Auto Idle: High Output (Activation). • Display: Indicating coolant temperature, Fuel level, Hydraulic oil temperature, Engine speed. • Clock: Current time display.

NOTE: *Refer to method for setting clock in operation manual for setting time.*

MODE SELECTOR SWITCH

Power Mode / Trenching Mode Switch

Operation Mode		Output Check (Operation mode display LED)	e-EPOS Output		
			Electromagnetic Proportional Pressure Reducing Valve (E.P.P.R Valve) Current (mA)	Swing Priority Solenoid Valve	7-Segment Display
Power Mode	Power Mode	ON	No-load: 150 ±20mA Load: Variable output (Max. current: 600 ±20mA)	-	9 x
	Standard Mode	OFF	No-load: 250 ±20mA Load: Variable output (Max. current: 600 ±60mA)	-	7 x
Work Mode	Trenching Mode	OFF	-	ON	x 2
	Digging Mode	ON	-	OFF	x 0

NOTE: *When the engine speed is below 1,000 rpm, the output current of E.P.P.R valve is fixed to be 600 ±60mA.*

Auto Idle Switch

Operation Mode		Output Check (Operation mode display LED)
Auto Idle	Activation	ON
	Cancellation	OFF

https://truckmanualshub.com/

GRAPHIC INFORMATION AREA DISPLAY

Overview

Many kinds of condition of machine are displayed on the letter information display department. The information display department is divided into two menus. One is main menu for user and the other is special menu for specialist. These menus can be moved from normal display mode by the combination of selector buttons.

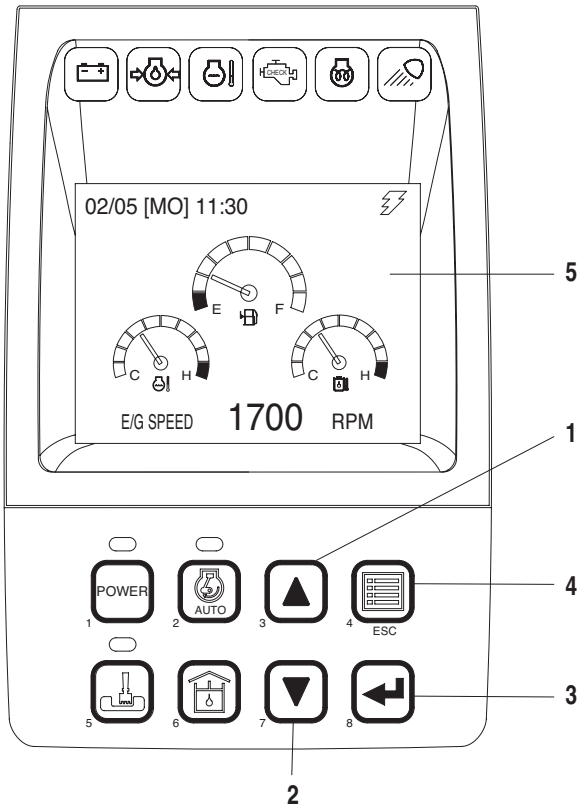

FG000557

Figure 12

Selector Buttons	Graphic Display Area
1. Up Arrow Button	5. Letter Information Display Department
2. Down Arrow Button	
3. Enter Button	
4. Escape Button	

https://truckmanualshub.com/

Main Menus for the Graphic Display Area

1. Main menu: Language setting, Time setting, Filter/Oil information, Brightness adjustment, Password
2. Special menu: Information of machine status, failure information, Information of machine operation.

Menu Selector Buttons

1. Up Arrow Button (▲, 1 on Figure 12): Move the cursor to up, left and previous screen.
2. Down Arrow Button (▼, 2 on Figure 12): Move the cursor to down, right and next screen.
3. Enter Button (↵, 3 on Figure 12): Move the menu to selected mode. When setting the menu, this button is used to function as the selector button.
4. Escape Button (ESC, 4 on Figure 12): Move a screen to previous menu or main menu.

https://truckmanualshub.com/

MAIN MENU

When the "ESC" button is pressed for more than 3 seconds, the main menu screen is displayed.

Main menu offers sub-menus (language setting, time setting, or filter/oil information, brightness adjustment, password) to the operator.

Refer to the "Operation and Maintenance Manual" for details.

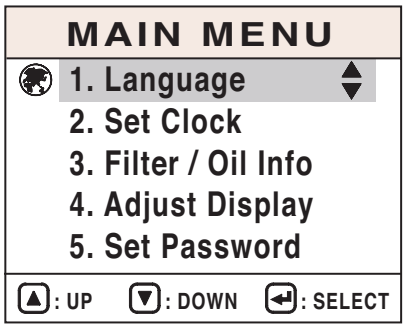

FG000072

Figure 13

Language

Put the cursor on Language in the main menu and put the Enter Button (↵, 3 on Figure 12) and the language select view appears.

The default language is Korean, but it will memorize and use the newly set language.

Use the Up Arrow Button (▲, 1 on Figure 12) or Down Arrow Button (▼, 2 on Figure 12) to move cursor to a language to be selected on the Language Select display and press the Enter Button (↵, 3 on Figure 12) and the selected language is indicated in the right bottom of the screen.

At this point pressing the Enter Button (↵, 3 on Figure 12) or the Escape Button (ESC, 4 on Figure 12) more than 1 second brings the main menu with changed language and then pressing the ESC button again shows the default view.

Without pressing a button more than 20 seconds, the default view appears.

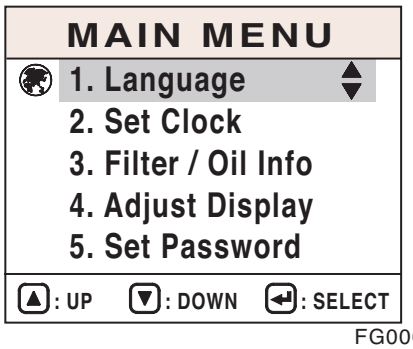

FG000072

Figure 14

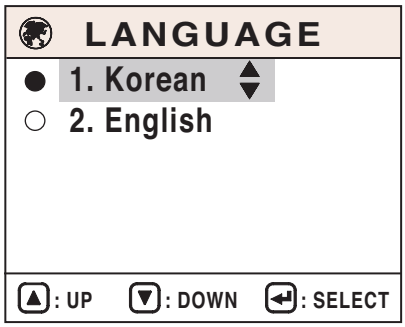

FG000783

Figure 15

https://truckmanualshub.com/

Set Clock

It is used to adjust time of the digital clock.

Pressing the Enter Button (↵, 3 on Figure 12) in the Main Menu after putting cursor on Set Clock brings Set Clock display.

Without pressing a button more than 20 seconds, the default view appears.

Please refer to the Operation Manual for detailed information on Time Setting.

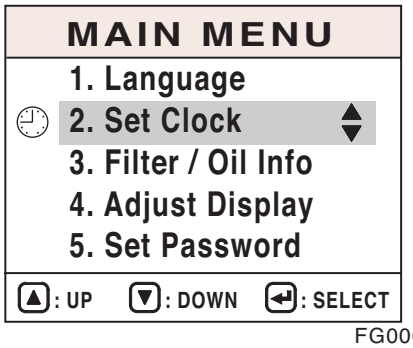

FG000075

Figure 16

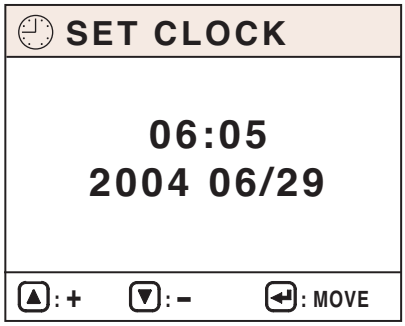

FG000076

Figure 17

Filter/Oil Info

This mode displays total operating hours of filters and oils.

After changing the filter and oil, reset the operating hour and then the operating hours until the next service interval can be easily checked.

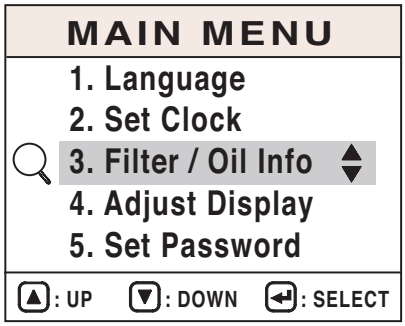

FG000077

Figure 18

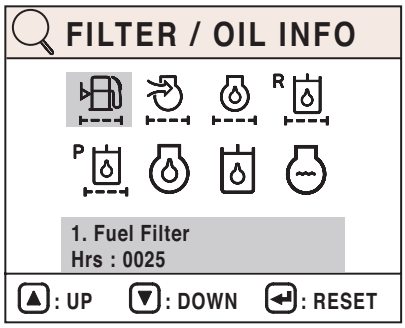

FG000078

Figure 19

https://truckmanualshub.com/

Menu Display Order and Icon Explanation

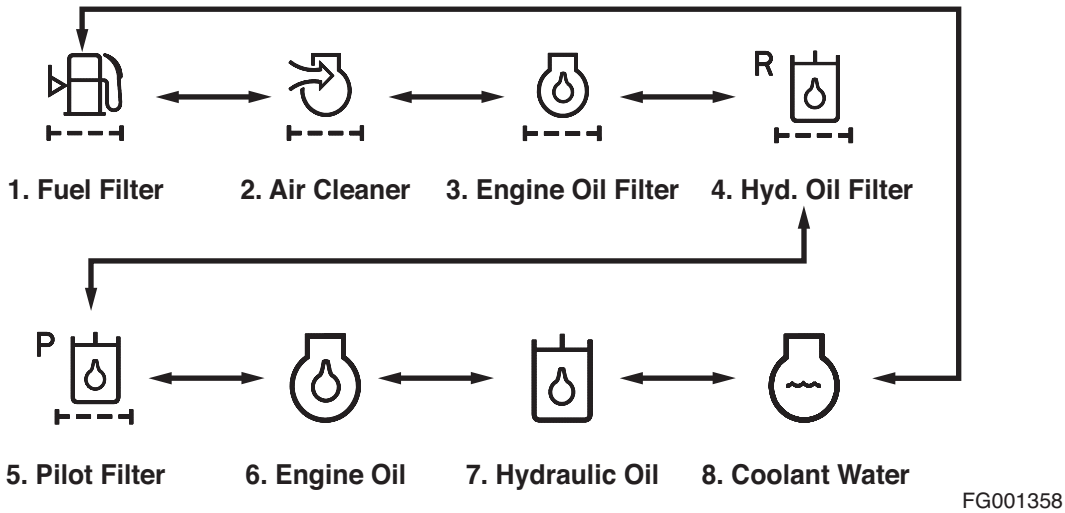

Figure 20

Adjust Display

Pressing the Enter Button (↵, 3 on Figure 12) in the main menu after putting cursor on Adjust Display brings Adjust Display.

Screen brightness can be adjusted using the Up Arrow Button (▲, 1 on Figure 12) or the Down Arrow Button (▼, 2 on Figure 12).

The default brightness is set to 50%.

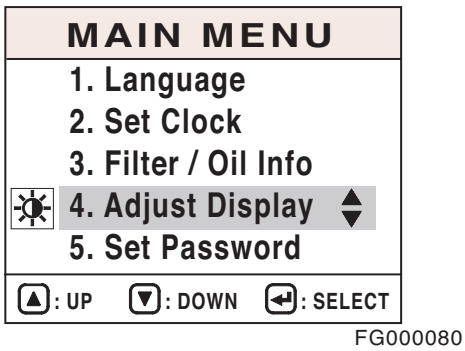

Figure 21

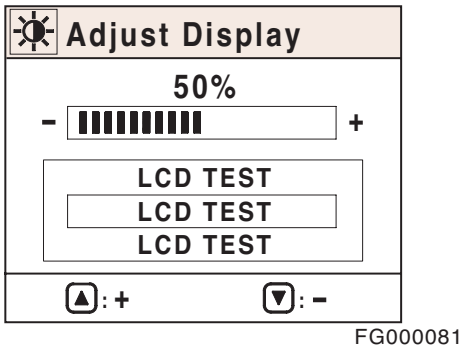

Figure 22

https://truckmanualshub.com/

Set Password

This menu is used to apply (lock), release, or change password.

Please refer to the Operation Manual for detailed information on Password Setting.

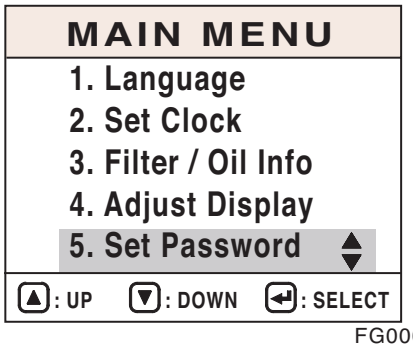

FG000227

Figure 23

https://truckmanualshub.com/

SPECIAL MENU

In this menu, many types of operating conditions and functions can be accessed and displayed, including the e-EPOS controller. This menu is mainly used for machine testing and failure diagnostics.

The special menu offers three sub-menus:

1. Machine status.
2. Failure information.
3. Information on machine operation.

Entering/Accessing and Exiting/Escaping Menus

Entering/Accessing Menus

When normal mode screen is displayed, if the enter button (↵, 3) and escape button (ESC, 4) are pressed simultaneously for more than 3 seconds, normal mode screen (Figure 25) will be changed to special menu screen (Figure 26).

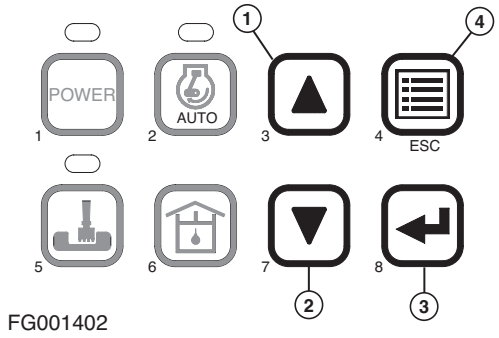

FG001402

Figure 24

Normal Mode Screen

NOTE: *Normal mode screen can display many kinds of display mode by selecting, for example, engine speed (RPM), battery voltage (VOLT), front pump pressure (BAR), rear pump pressure (BAR) and so on by selecting.*

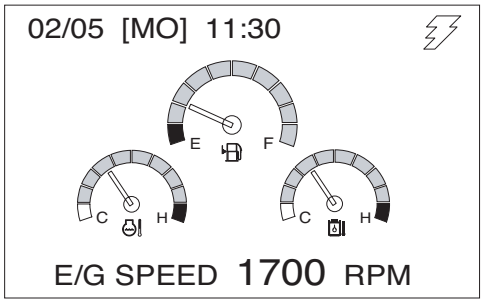

FG000043

Figure 25

https://truckmanualshub.com/

Special Menu Screen

NOTE: *Displayed language on the special menu screen consists of Korean and English.*

If any language except for Korean is selected during language selection mode of main menu, only English will be displayed on special menu screen.

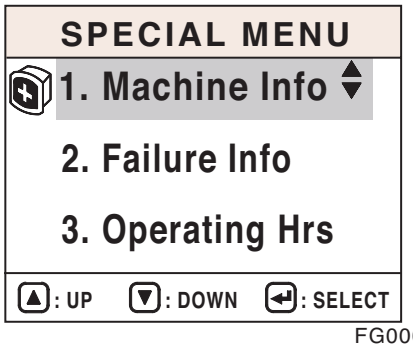

FG000558

Figure 26

Exiting/Escaping Menus

1. If escape button (ESC, 4 on Figure 24) is pressed for more than 1 second, the special menu screen will be returned to the normal mode screen.
2. If this special menu is "ON" without any activity, for more than 20 seconds, it will turn to the normal mode screen.
3. After the turning starter switch to the "OFF" position, turn it back to the "ON" position, and the normal mode screen displayed once again.

Special Menu Selections

Submenu Selection Method

Various sub-menus can be selected by pressing "Up (▲, 1 on Figure 24)" and "Down (▼, 2 on Figure 24)" button.

Move the cursor to desired menu and a selected menu will be inverse displayed.

When the selected menu is inverse displayed, press the "Enter (↵, 3 on Figure 24)" button for menu selection.

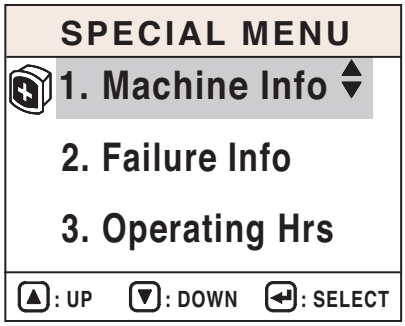

FG000558

Figure 27

Information of Machine Status

1. Entering Sub-menus: When cursor is located on "Machine Info" of special menu screen, press "Enter (↵, 3 on Figure 24)" button and the "Machine Info" will be displayed.
2. Exiting Sub-menus: If escape button (ESC, 4 on Figure 24) is pressed for more than 1 second, display will be turned to previous screen.

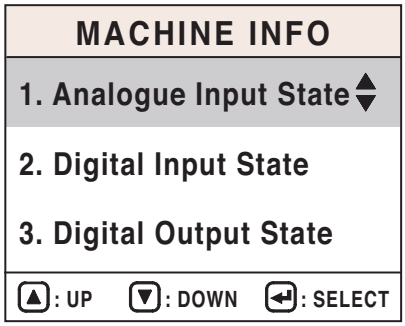

FG000559

Figure 28

https://truckmanualshub.com/

Analog Inputs Description

Analog Input Items	Display	Remark
1. Pump P/V	mA	Current in pump proportional valve.
2. Cooling Fan P/V	mA	N.A.
3. Flow Control P/V	mA	N.A.
4. Dial	mV	Indicating dial voltage.
5. TPS	mV	N.A.
6. E/G Control Motor	mV	N.A.
7. Boom Pressure	BAR	Boom cylinder head pressure.
8. Pilot Gear Pump Press	BAR	N.A.
9. Boost Pressure	BAR	Pump pressure for boost.
10. Intake Manifold Temperature	°C	Temperature of air incoming to intake manifold.
11. E/G Oil Pressure	BAR	Engine oil pressure.
12. Fuel Temperature	°C	Fuel temperature.
13. E/G Oil Temperature	°C	Engine oil temperature.
14. Load At Cur. Spd	%	Current load ratio of equipment.

Submenu Selections

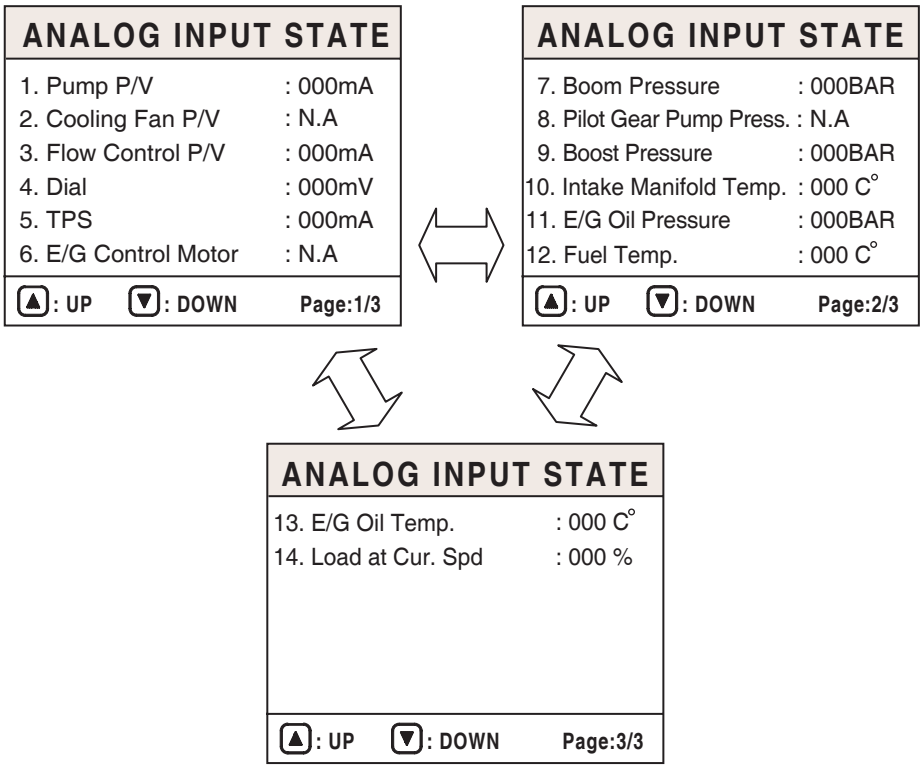

FG008126

Figure 29

https://truckmanualshub.com/

Digital Inputs Descriptions

Digital Inputs Items	Mark	Remark
1. Alternator	ON / OFF	Lights up when output at alternator "R(I)" terminal is above 12 ±1V.
2. Travel Select SW		N.A. (only for wheel type equipment)
3. High Speed Sel. SW (M)		Lights up when the travel speed selector switch is set to the "I" position.
4. High Speed Sel. SW (A)		Lights up when the travel speed selector switch is set to the "II" position.
5. Pressure SW (Py)		Lights up when the pressure switch (Py) is "ON."
6. Pressure SW (Px)		Lights up when the pressure switch (Px) is "ON."
7. E/G Oil Press. SW		N.A. (only for mechanical engine)
8. Air Cleaner Clogged		Lights up when the air cleaner indicator contact is "ON."
9. Return Filter Clogged		Lights up when the return filter pressure switch is "ON."
10. Pilot Filter Clogged		Lights up when the pilot filter pressure switch is "ON."
11. OWD Warning SW		Lights up when the overload warning selector switch is "ON."
12. Brake Oil Press. SW		N.A. (only for wheel type equipment)
13. Pedal Press. SW		Lights up when the pedal pressure switch is ON.
14. One Way Sel. SW		Lights up when the selector switch is turned to breaker.
15. Two-way Sel. SW		Lights up when the Selector Switch is turned to "SHEAR."
16. Power Max. SW		Lights up when the boost button is "ON" with the Select switch turned to "BOOST."
17. Breaker SW		Lights up when the boost button is "ON" with the selector switch turned to "BREAKER."
18. Preheat Select		N.A.
19. Quick Coupler		Lights up when the Quick Coupler switch is "ON."
20. F and R Lever		N.A. (only for wheel type equipment)
21. Preheat Select		Lights up during preheating (CN5-2) terminal voltage is below 2V.
22. Reverse Fan SW		N.A.
23. Pilot Cutoff SW		N.A.

https://truckmanualshub.com/

Menu Select

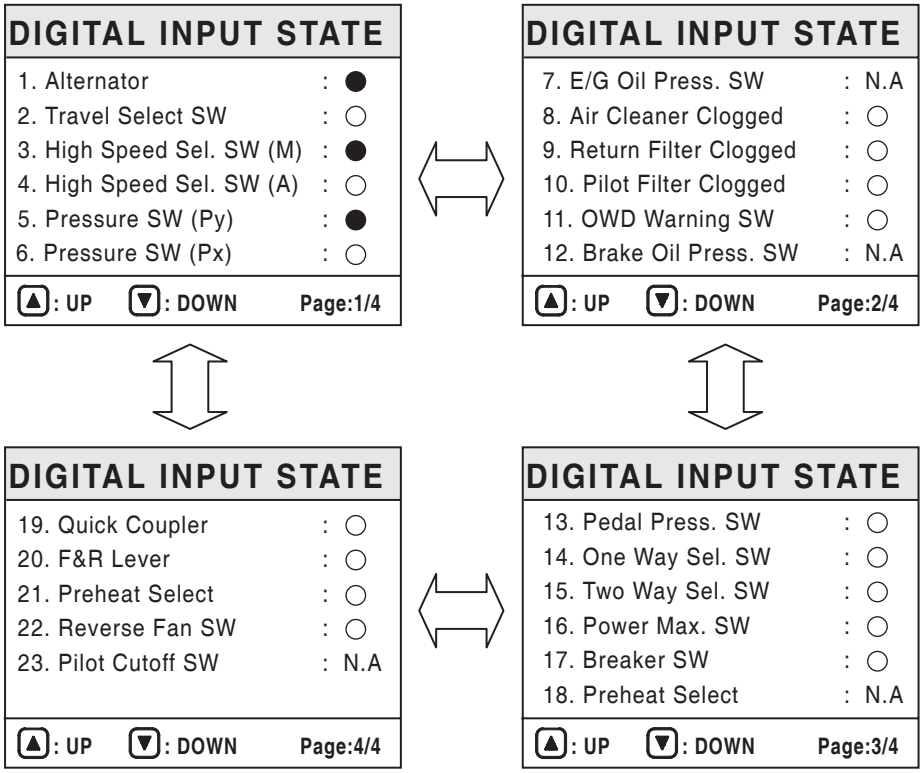

FG008136

Figure 30

https://truckmanualshub.com/

Digital Outputs Descriptions

Digital Outputs Items	Mark	Remark
1. Relief Press. Up S/V	ON / OFF	Lights up when the relief press up solenoid valve is "ON."
2. High Speed S/V		Lights up when the high speed solenoid valve is "ON."
3. Swing Priority S/V		Lights up when the swing priority solenoid valve is "ON."
4. Reverse Fan S/V		N.A.
5. Starter Relay		When the starter relay is "ON."
6. After Heat Relay		N.A.

Menu Select

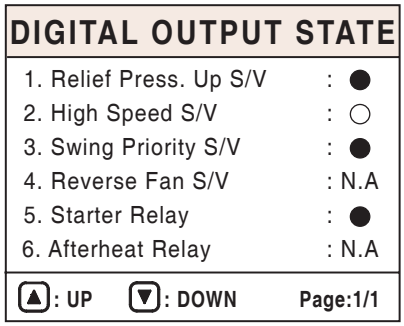

FG003930

Figure 31

Failure Information

1. Entering Sub-menus: When a cursor is located in "Failure Info" of special menu screen press enter button (↵, 3 on Figure 24) and "Failure Info" screen is displayed.
2. Exiting Sub-menus: If escape button (ESC, 4 on Figure 24) is pressed for more than 1 second, this information screen will be returned to previous screen.

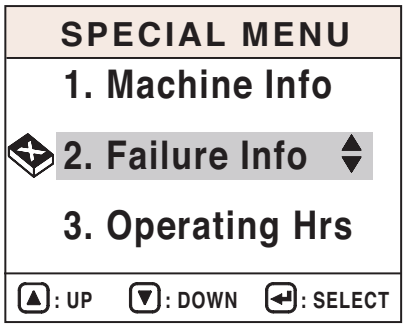

FG000563

Figure 32

* Real-time Failure:
Current status of failure is displayed.

* Failure Log:
Memorized record of past failure is displayed.

* Delete Fail Log:
This mode is used to delete all of the memorized record of past failure.

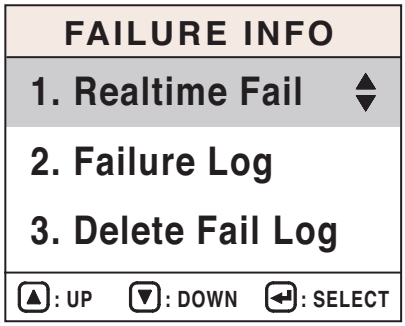

FG000564

Figure 33

https://truckmanualshub.com/

A. Current failure information

Current status of failure is displayed (Failure code, failure contents).

When a number of failures are produced, failure information can be checked using "UP" (▲, 1 on Figure 24) or "DOWN" (▼, 2 on Figure 24) button.

* 1/2: A serial number of current failure/ total quantity of failure.

* Vxxx-xx: Vxxx is a unique code and xx is a FMI (Failure Mode Identifier) number.

  - V: Machine related failure code

  - E: Engine related failure code

Refer to the failure information code for unique codes and FMI numbers.

This example shows one of two failures.

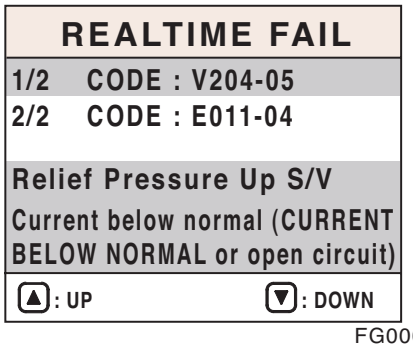

FG000565

Figure 34

B. Past failure information

Memorized record of past failure is displayed (Failure code, failure contents).

When a number of failures are produced, failure information can be checked using "UP" (▲, 1 on Figure 24) or "DOWN" (▼, 2 on Figure 24) button.

NOTE: *" Number: xxx ": "xxx" means that the totally counted number of the same failure.*

" Period:xxxxxHrxxm ": It indicates the period for which machine has operated until a failure takes place. (For more than two occurrences of the same failure, until the first occurrence time.)

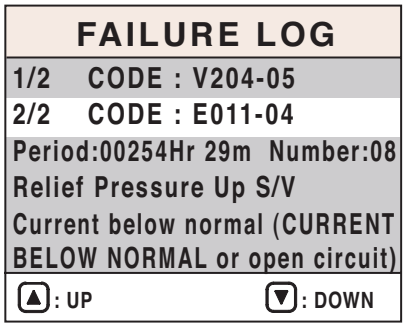

FG000566

Figure 35

C. Failure record deletion

This mode is used to delete the memorized record of past failure. If this mode is selected, all records will be deleted.

When "YES" (↵, 3 on Figure 24) button is pressed, the memorized record will be deleted.
At this time, deletion signal will be displayed and the screen will move to previous menu after deletion.

This screen will be displayed during 3 seconds.

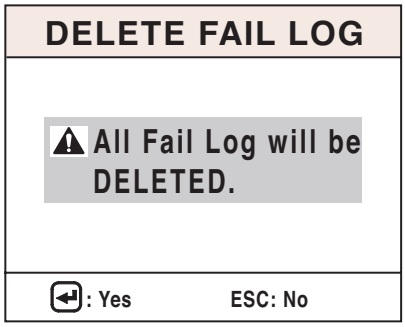

FG000567

Figure 36

https://truckmanualshub.com/

Input your password with one of No. 1 - 8 switches.

When "NO" (ESC, 4 on Figure 24) button is pressed, the screen will recover to previous menu without deletion.

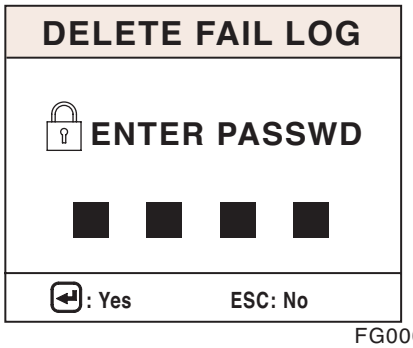

FG000568

Figure 37

Delete Completed screen will appear 3 seconds and the screen will move to Failure Info screen.

It has been shown 3 seconds upon deleting Fail Log.

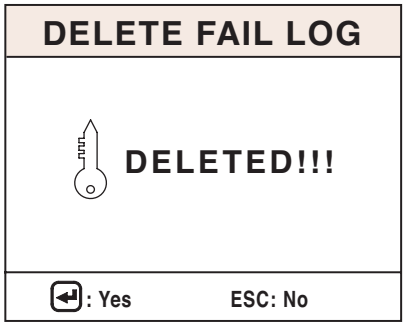

FG000569

Figure 38

The screen shown on the left will appear 3 seconds in case of wrong password input and then Enter Password screen appears again.

It has been shown 3 seconds in case of password failure.

FG000570

Figure 39

https://truckmanualshub.com/

Failure Information Code at Machine Side

Code	Failure Component	Measuring Points	Correct Value		Remarks
			Active	Passive	
V201	Gauge Panel Communication Error	CN7-4 CN7-5	-	R = 60 ±5 Ω	It is a composite resistance of CAN line. This value has to be measured by connected condition of CAN line.
V202	Ecu Communication Error	CN4-4 CN4-5	-	R = 60 ±5 Ω	
V210	Pump P/V	CN1-10 CN1-21	-	R = 18 ±2 Ω (25°C (77°F))	Pump proportional pressure reducing valve.
V211	Cooling Fan P/V		-	-	N.A.
V212	Flow Control P/V	CN1-19 CN1-20	-	R = 14 ±2 Ω (25°C (77°F))	Flow control proportional pressure reducing valve.
V213	Relief Pressure Up S/V	CN1-1 CN1-11	V = V_volt (Note 4.)	R = 26.2 ±2 Ω (25°C (77°F))	Breaker/boost/ shear selector switch has to be selected as a boost function and the boost switch on the right-hand joystick is "ON" status.
V214	High Speed S/V	CN1-1 CN1-12	V = V_volt	R = 26.2 ±2 Ω (25°C (77°F))	Voltage is only measured when the pressure switch (Py) is turned "ON."
V215	Swing Priority S/V	CN1-1 CN1-13	V = V_volt	R = 26.2 ±2 Ω (25°C (77°F))	Work mode has to be selected as a trenching mode.
V216	Reverse Fan Speed S/V		-	-	N.A.
V217	Starter Relay	CN1-1 CN1-15	V = V_volt	-	It has to be measured in engine start up state.
V218	After Heat Relay		-	-	N.A.

https://truckmanualshub.com/

Code	Failure Component	Measuring Points	Correct Value		Remarks
			Active	Passive	
V220	Front Pump Press. Sensor	CN3-1 CN3-2	V = IV	-	It has to be measured in engine stop state.
V221	Rear Pump Press. Sensor	CN3-3 CN3-4	V = IV	-	
V222	Hyd. Oil Temperature Sensor	CN3-9 CN3-10	-	R = 2.45 ±0.25 kΩ (25°C (77°F)) R = 320 ±32 Ω (80°C (176°F))	
V223	Water Temperature Sensor		-	-	N.A.
V224	Engine Speed Sensor		-	-	N.A.
V225	Fuel Level Sensor	CN3-7 CN3-8	-	Empty: 5 ±0.25 kΩ Full: 320 ±32 Ω	
V226	Alternator Potential	CN2-14 CN1-8	V = 2 ±1V	-	It has to be measured in engine stop state.
V227	Dial	CN3-16 CN3-7	-	R = 1.0 ±0.3 kΩ R = 4.0 ±1.5 kΩ	
V228	Tps (Wheel)		-	-	N.A.
V229	Parking Brake Press. Sensor		-	-	N.A.
V230	E/g Control Motor Sensor		-	-	N.A.

NOTE: *1. Active value: Starter switch has to be turned "ON"*

Measuring points between component and wire harness have to be connected.

2. Passive value: Starter switch has to be turned "OFF"

Measuring points between component and wire harness have to be disconnected.

3. Measuring points are engine controller's points and passive value is each component's value.

4. V–batt: Source power of equipment.

Failure Information Code at Engine Side

Code	Failure Component	Measuring Points	Current Valve		Remarks
			Active	Passive	
E011	Coolant temperature sensor	2-26 2-15	-	R=186 ±5 Ω (100°C (212°F))	
E012	Fuel temperature sensor	2-26 2-35	-	R=186 ±5 Ω (100°C (212°F))	
E013	Boost air temperature sensor	2-36 2-25	-	R=186 ±5 Ω (100°C (212°F))	
E014	Boost air pressure sensor	2-33 2-34	V = 1,071 ±58mV (at 23°C (73°F) and absolute pressure 1bar)	-	It has to be measured in engine running state.
E017	E/G oil temperature sensor	2-28 2-24	-	R=186 ±5 Ω (100°C (212°F))	
E018	E/G oil pressure sensor	2-32 2-27	V = 2,318 ±80mV (at 23°C (73°F) and absolute pressure 3bar)	-	It has to be measured in engine running state.
E021	Battery voltage	1-03 1-06	V = V–volt (Note 4.)	-	
E022	Fuel pressure sensor	3-09 3-10	V = 1,833 ±28mV (at 23°C (73°F) and absolute pressure 300bar)	-	It has to be measured in engine running state.
E032	Fuel pressure monitoring MPROP	2-14 2-12	-	R=2.60 ±3.15 Ω (20°C (68°F))	
E037	CAN module	1-53 and 1-52 1-35 and 1-34	-	R=60 ±5 Ω (20°C (68°F))	It is a composite resistance of CAN line. This value has to be measured by connected condition of CAN line.
E038	Engine overspeed		-	-	
E039	Main relay (ECU)		-	-	
E041	Redundant shutoff path		-	-	Abnormal engine stop.
E042	E/G speed (Crankshaft)	2-23 2-19	-	R=860 ±6 Ω (20°C (68°F))	
E043	E/G speed (Camshaft)	2-09 2-10	-	-	

https://truckmanualshub.com/

Code	Failure Component	Measuring Points	Current Valve		Remarks
			Active	Passive	
E044	Engine speed sensor		-	-	Synchronizing error between crank shaft speed sensor and cam shaft speed sensor.
E045	EEPROM		-	-	Data storing error when engine stop.
E046	Recovery		-	-	
E047	Monitoring of PRV		-	-	When the pressure sensor of common rail or high-pressure pump has a defect.
E048	Power supply	1-03 1-06	V = V–volt	-	
E049	Booster voltage C1		-	-	
E051	Booster voltage C2 (#6, 2 and 4)		-	-	
E058	Solenoid power stage 1	3-13 3-04	-	R=0.31 ±0.42 Ω (20°C (68°F))	
E059	Solenoid power stage 2	3-11 3-06	-	-	
E061	Solenoid power stage 3	3-05 3-12	-	-	
E062	Solenoid power stage 4	3-03 3-14	-	-	
E063	Solenoid power stage 5	3-01 3-16	-	-	
E064	Solenoid power stage 6	3-02 3-15	-	-	
E066	Preheat light (E/G: Lowside Power stage 2)	1-56 1-06	-	-	
E072	Preheat relay (E/G: Highside Power stage 1)	1-13 1-07	V = V–volt	R=40 ±5 Ω (25°C (77°F))	Voltage is only measured when afterheat function is operating status.

https://truckmanualshub.com/

Code	Failure Component	Measuring Points	Current Valve		Remarks
			Active	Passive	
E083	Fuel HI pressure pump (E/G: Current controlled Highside power stage 1)	-	-	-	Fuel metering unit error of high-pressure pump.
E091	System start-up test for shutoff path	-	-	-	Power supply error Engine controller error.
E092	Monitoring of misfire cylinder 1	-	-	-	Injector error Speed signal error of cam shaft speed sensor or crank shaft speed sensor.
E093	Monitoring of misfire cylinder 2	-	-	-	
E094	Monitoring of misfire cylinder 3	-	-	-	
E095	Monitoring of misfire cylinder 4	-	-	-	
E096	Monitoring of misfire cylinder 5	-	-	-	
E097	Monitoring of misfire cylinder 6	-	-	-	
E098	Monitoring of misfire multiple cylinder	-	-	-	
E099	Monitoring of overrun	-	-	-	
E101	Engine speed redundant	-	-	-	

NOTE: *1. Active value: Starter switch has to be turned "ON"*

Measuring points between component and wire harness have to be connected.

2. Passive value: Starter switch has to be turned "OFF"

Measuring points between component and wire harness have to be disconnected.

3. Measuring points are engine controller's points and passive value is each component's value.

4. V–batt: Source power of equipment.

https://truckmanualshub.com/

FMIs (Failure Mode Identifier)

FMI 0	Above normal range (DATA VALID but ABOVE NORMAL OPERATIONAL RANGE)
FMI 1	Below normal range (DATA VALID but BELOW NORMAL OPERATIONAL RANGE)
FMI 2	Incorrect signal (DATA ERRATIC, INTERMITTENT OR INCORRECT)
FMI 3	Voltage above normal (VOLTAGE ABOVE NORMAL OR SHORTED TO HIGH SOURCE)
FMI 4	Voltage below normal (VOLTAGE BELOW NORMAL OR SHORTED TO LOW SOURCE)
FMI 5	Current below normal (CURRENT BELOW NORMAL OR OPEN CIRCUIT)
FMI 6	Current above normal (CURRENT ABOVE NORMAL OR GROUNDED CIRCUIT)
FMI 8	Abnormal signal (ABNORMAL FREQUENCY OR PULSE WIDTH OR PERIOD)
FMI 11	Failure mode not identifiable (ROOT CAUSE NOT KNOWN - Malfunction)
FMI 31	NOT AVAILABLE OR CONDITION EXISTS

Information of Machine Operation

Accumulated operation hour of each mode and status is displayed.

1. Operating Hour Information

   A. Entering Sub-menus: When a cursor is located in "Operating Hrs" of special menu screen (Figure 40) press enter button (↵, 3 on Figure 24) and "Operating Hrs" screen will be displayed (Figure 41).

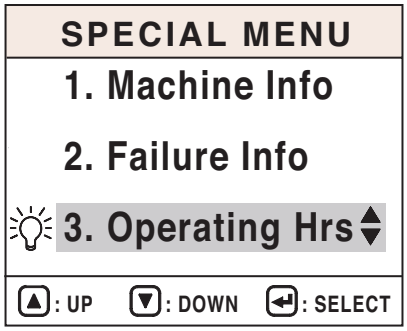

FG000571

Figure 40

   B. Information screen of machine operation (Figure 41).

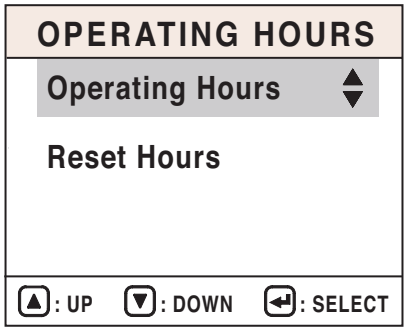

FG000572

Figure 41

https://truckmanualshub.com/

C. Operating Hours Screen

D. Exiting Sub-menus: If escape button (ESC, 4 on Figure 24) is pressed for more than 1 second, this information screen will be returned to previous screen.

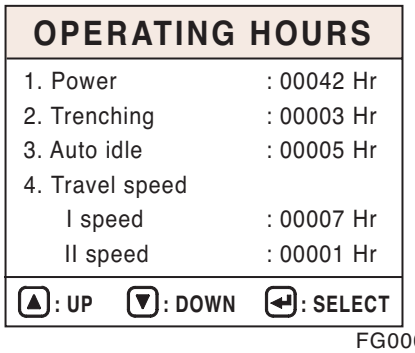

FG000573

Figure 42

Information contents of operation hour

Item	Information Contents	Detection Method
Power Mode	Operation hours used power mode are displayed.	Power mode switch (Instrument panel) - "ON" status and Alternator signal (CN2-14) is "HI"
Trenching Mode	Operation hours used trenching mode are displayed.	Trenching mode switch (Instrument panel) - "ON" status and Alternator signal (CN2-14) is "HI"
Auto Idle	Operation hours used auto idle status are displayed.	Auto idle switch (Instrument panel) - "ON" status and Alternator signal (CN2-14) is "HI"
Travel Speed: -1st - 2nd	Operation hours used low speed and high speed are displayed.	1st: High speed s/v "OFF" status 2nd: High speed s/v and travel pressure switch "Py" (control valve) - "ON" status.
Hydraulic Oil Temperature Distribution (°C (°F))	Temperature of hydraulic oil is classified 6 steps. And operation hours of each step are displayed Under 30°C (87°F) 31 - 50°C (88 - 123°F) 51 - 75°C (124 - 168°F) 76 - 85°C (169 - 186°F) 86 - 95°C (187 - 203°F) Over 96°C (204°F)	The resistance delivered from temperature sensor of hydraulic oil is classified 6 steps. And operation hours of each step are displayed. (Alternator output HI status)
Coolant Temperature Distribution (°C (°F))	Temperature of coolant is classified 6 steps. And operation hours of each step are displayed. Under 40°C (105°F) 41 - 60°C (106 - 141°F) 61 - 85°C (142 - 186°F) 86 - 95°C (187 - 204°F) 96 - 105°C (205 - 222°F) Over 106°C (223°F)	The resistance delivered from coolant sensor is classified 6 steps. And operation hours of each step are displayed. (Alternator output HI status)

https://truckmanualshub.com/

Menu Selection of Operation Hour Information

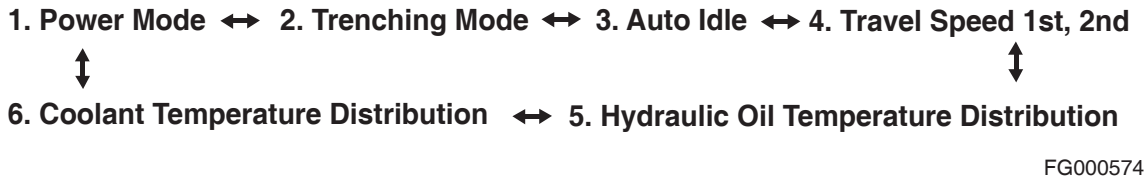

FG000574

Figure 43

Example of Machine Operation Info Screen

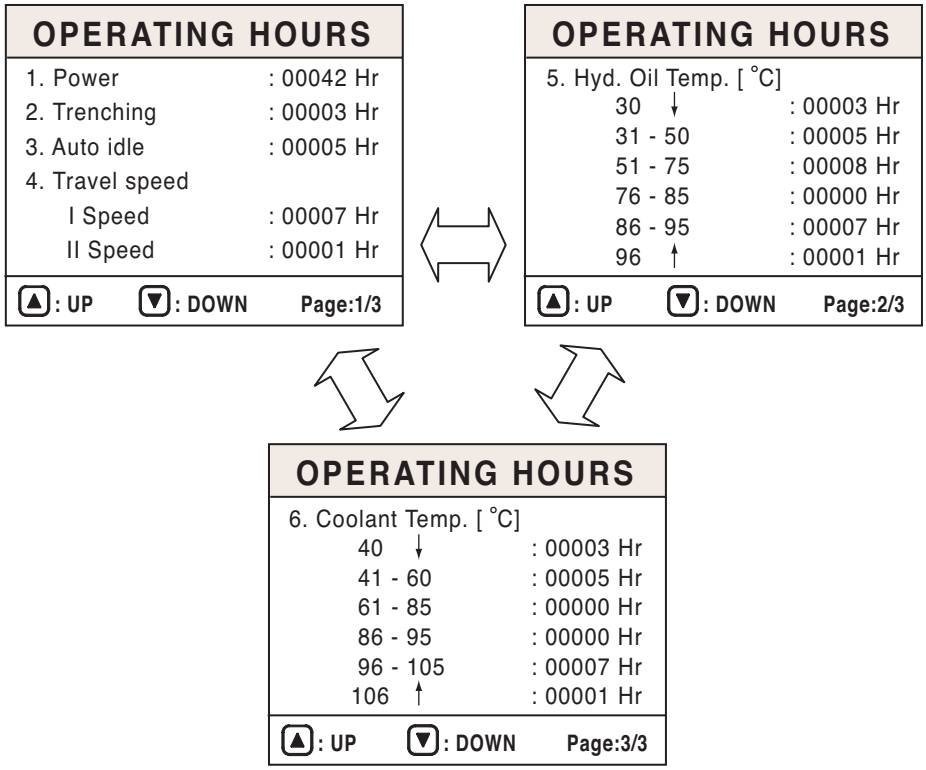

FG000575

Figure 44

2. Operation hour reset

   A. Entering Sub-menus: When cursor is located in "Reset Hrs" of information screen of operating hours press enter button (↵, 3 on Figure 24) and "Machine Operation Info" screen will be displayed.

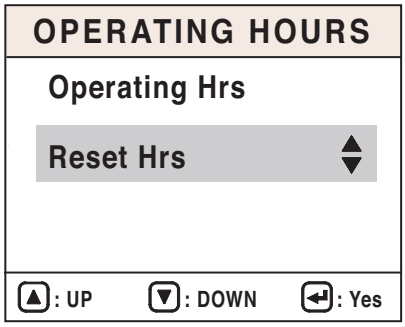

FG000578

Figure 45

https://truckmanualshub.com/

B. Reset screen of operation hour

C. Exiting Sub-menus: If escape button (ESC, 4 on Figure 24) is pressed for more than 1 second, this information screen will be returned to previous screen.

NOTE: *When "YES" (↵, 3 on Figure 24) button is pressed, operation hours will reset.*
At this time, resetting signal will be displayed and the screen will move to previous menu after resetting.

NOTE: *When "NO" (ESC, 4) button is pressed, the screen will recover to previous menu without resetting.*

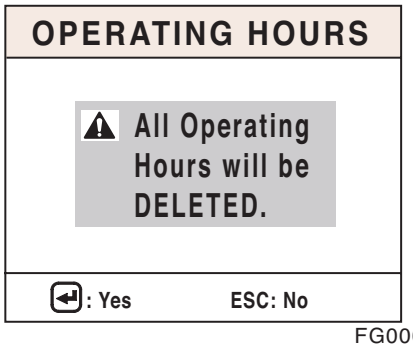

FG000579

Figure 46

Machine Operation Info Screen

1. If you press the YES" (↵, 3 on Figure 24) button, password entrance screen appears.

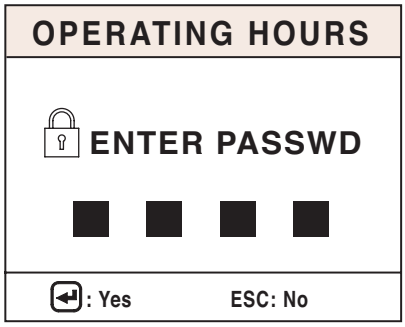

FG000576

Figure 47

2. When right password is input, machine operation periods will be deleted and Reset Completed screen will appear 3 seconds.

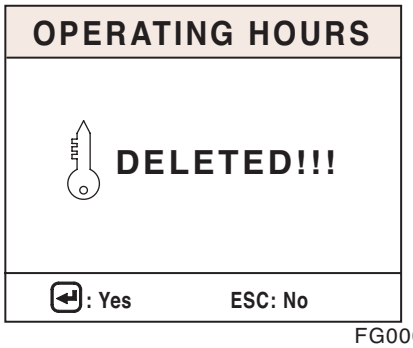

FG000577

Figure 48

3. If you press the "NO" (ESC, 4) button, the previous screen appears without resetting operation periods.

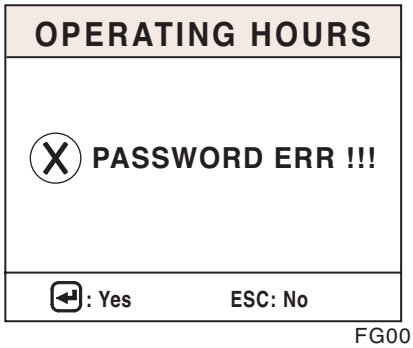

FG001086

Figure 49

https://truckmanualshub.com/

https://truckmanualshub.com/

ELECTRONIC HYDRAULIC CONTROL SYSTEM (e-EPOS)

Control System Schematic

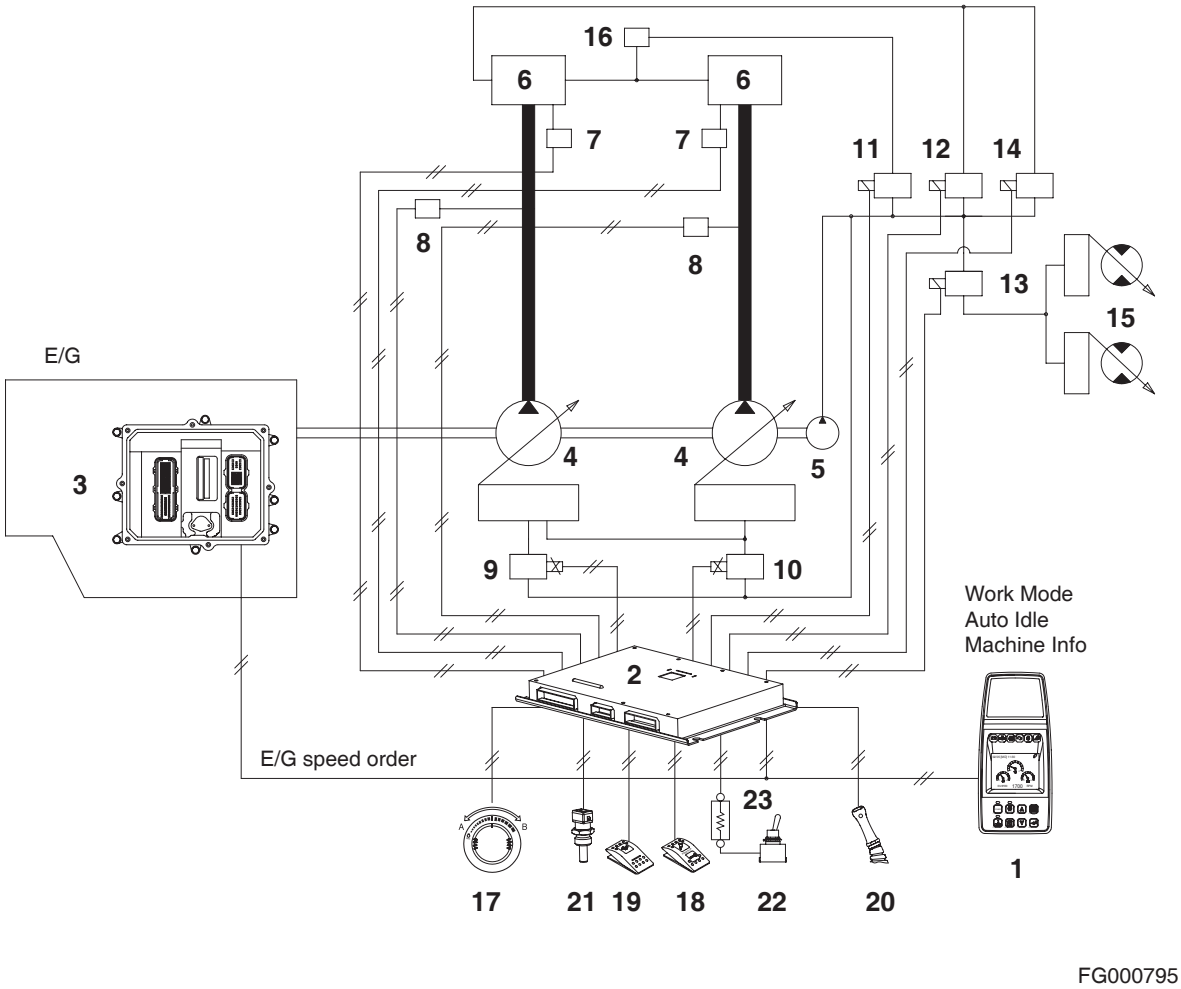

Figure 50

https://truckmanualshub.com/

Reference Number	Description
1	Instrument Panel
2	e-EPOS Controller
3	Engine Controller (ECU)
4	Main Pump
5	Aux Pump
6	Control Valve
7	Pressure Switch
8	Pump Pressure Sensor
9	Electromagnetic Proportional Pressure Reducing Valve (Attachment)
10	Electromagnetic Proportional Pressure Reducing Valve (Mode Control)
11	Solenoid Valve (Boost)

Reference Number	Description
12	Solenoid Valve (Swing Priority)
13	Solenoid Valve (High Speed)
14	Solenoid Valve (Breaker)
15	Travel Motor
16	Main Relief Valve
17	Engine Control Dial
18	Breaker/Boost/Shear Selector Switch
19	Auto Travel Selector Switch
20	Boost Switch (Right Work Lever)
21	Sensor
22	Aux Mode Switch
23	Aux Mode Resistor

https://truckmanualshub.com/

POWER MODE CONTROL

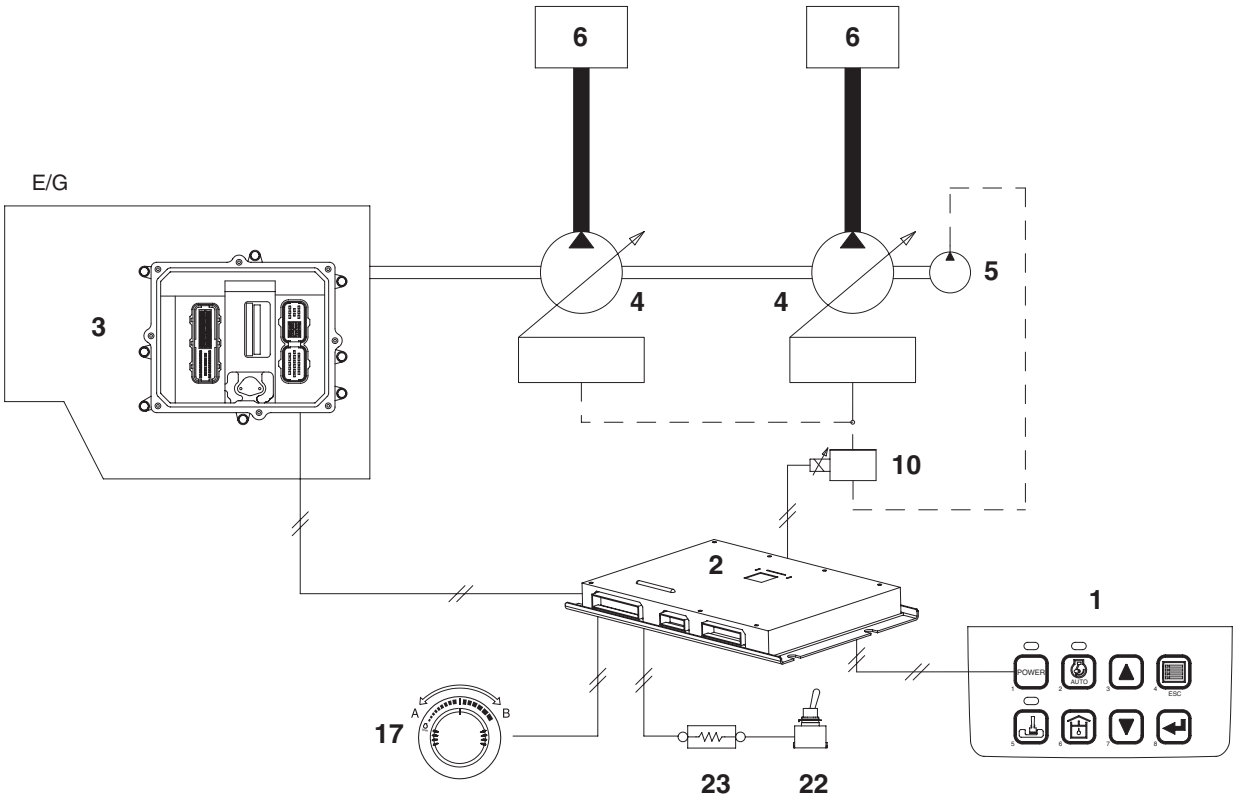

FG000796

Figure 51

Reference Number	Description
1	Instrument Panel (Power Mode Selector Switch)
2	e-EPOS Controller
3	Engine Controller (ECU)
4	Main Pump
5	Aux Pump
6	Control Valve

Reference Number	Description
10	Electromagnetic Proportional Pressure Reducing Valve (Mode Control)
17	Engine Control Dial
22	Aux Mode Switch
23	Aux Mode Resistor

https://truckmanualshub.com/

The power mode switch permits the selection of the appropriate engine power depending on the working condition. One of the two, Power Mode or Standard Mode, setting can be selected. When the engine starter switch is turned "ON," the power mode is automatically defaulted to standard mode. The desired mode can be selected by pressing the selector button on the instrument panel. When the power mode is selected, the indicator light will turn "ON" to display the selected mode.

The quantity of oil discharged by the pump and the engine speed are determined by the mode selected by the operator. The pump output in each mode is determined by the mode selection and is listed in the following table

Mode	**Standard Mode**	**Power Mode**
Output (%)	Approximately 85%	100%

https://truckmanualshub.com/

Operation

1. Power Mode

This mode should be selected for high speed work. In this mode the engine output is most efficiently utilized due to the discharged oil volume being controlled based on the equivalent horsepower curve at various loaded pressures. The e-EPOS controller compares the target engine speed with the actual engine speed and controls the signal to the E.P.P.R. (Electromagnetic Proportional Pressure Reducing) valve which in turn varies the pump output quantity.

ARO0260L

Figure 52

If the load increases, the engine speed will fall below the rated speed. When this occurs, the controller senses this decrease and immediately reduces the pump discharge volume to maintain the engine speed at the rated level.

On the other hand, if the load is decreased the controller increases the discharge volume of the pump to maintain the engine speed at the rated level.

By repeating these control operations, the engine speed is maintained at the rated speed so that maximum power can be generated.

In Power Mode, the e-EPOS controller receives engine speed signals from the engine control dial and the engine controller (ECU) and converts it to an operating signal current and is then transferred to the pump's E.P.P.R valve. At this time the E.P.P.R. valve converts the electric signal to the corresponding control pressure and sends it to the two pumps, adjusting the pump discharge volume to the desired level.

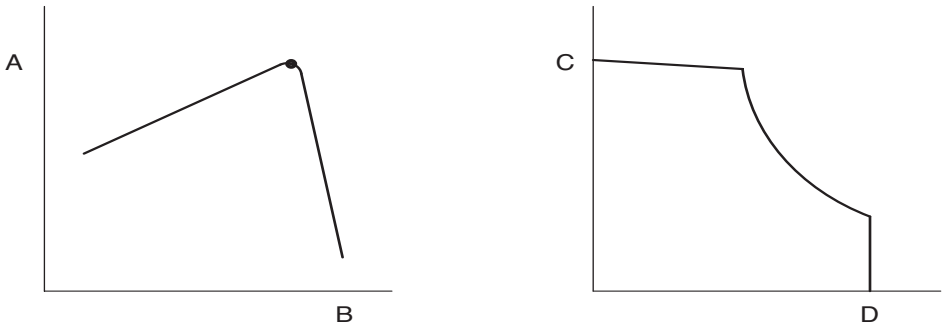

FG000580

Figure 53

Reference Number	Description
A	Engine Horsepower (hp)
B	Engine Speed (rpm)
C	Pump Discharge Volume (lpm)

Reference Number	Description
D	Pump Discharge Pressure (kg/cm^2)

https://truckmanualshub.com/

2. Standard Mode

Standard Mode is used for general work. When this mode is selected it will reduce noise and fuel consumption in comparison with Power Mode. The current to the E.P.P.R. valve is shut off and pump discharge volume is controlled by pump regulator.

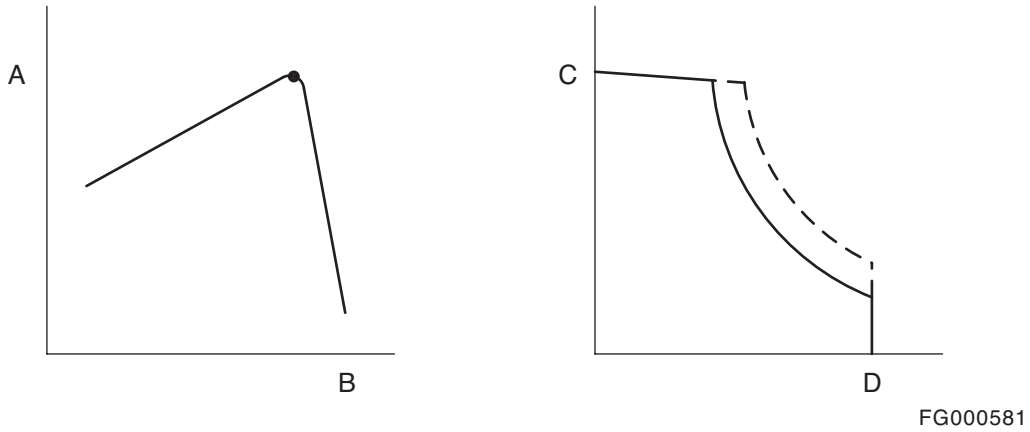

Figure 54

Reference Number	Description
A	Engine Horsepower (hp)
B	Engine Speed (rpm)
C	Pump Discharge Volume (lpm)

Reference Number	Description
D	Pump Discharge Pressure (kg/cm^2)

3) Operation in case of failure in the control system (Aux mode operation

Though it is impossible to control current of the E.P.P.R (Electromagnetic Proportional Pressure Reducing) Valve controlling the discharge volume of pump due to fault in control system, the machine can be operated in the aux mode.

Upon turning "ON" the aux mode switch, the E.P.P.R Valve controlling the discharge volume of pump comes into contact with the aux mode resistor to let current of a certain value flow. At this time, the discharge volume of pump follow the control by the pump regulator, nearly at quantity roughly similar to that in the standard mode.

https://truckmanualshub.com/

POWER MODE CONTROL - CIRCUIT DIAGRAM

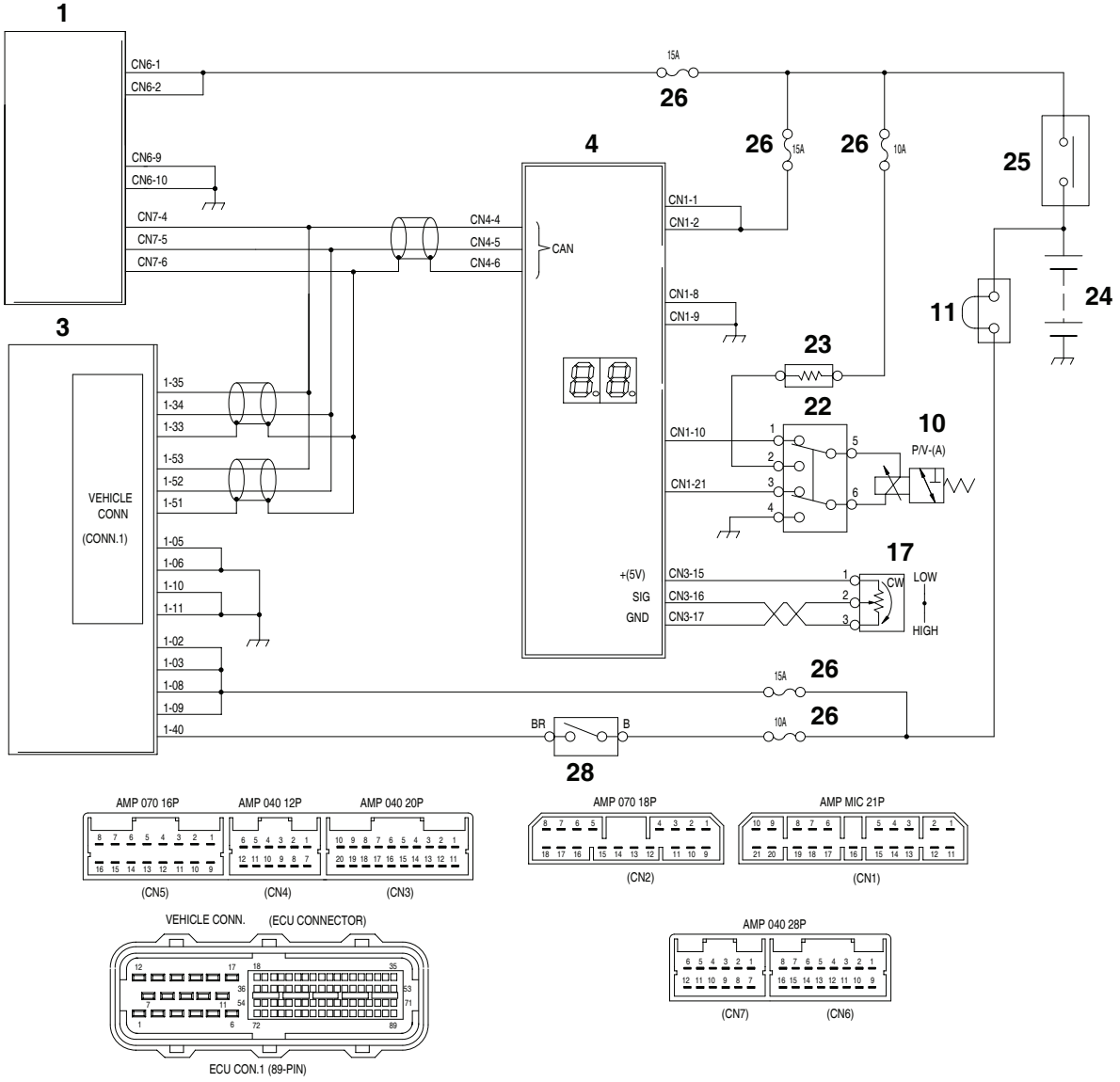

FG008165

Figure 55

https://truckmanualshub.com/

Reference Number	Description
1	Instrument Panel
3	Engine Controller
4	e-EPOS Controller
10	E.P.P.R. Valve (Electromagnetic Proportional Pressure Reducing)
17	Engine Control Dial
22	Aux Mode Switch

Reference Number	Description
23	Aux Mode Resistor
24	Battery
25	Battery Relay
26	Fuse
27	Fusible Link
28	Starter Switch

https://truckmanualshub.com/

WORK MODE CONTROL

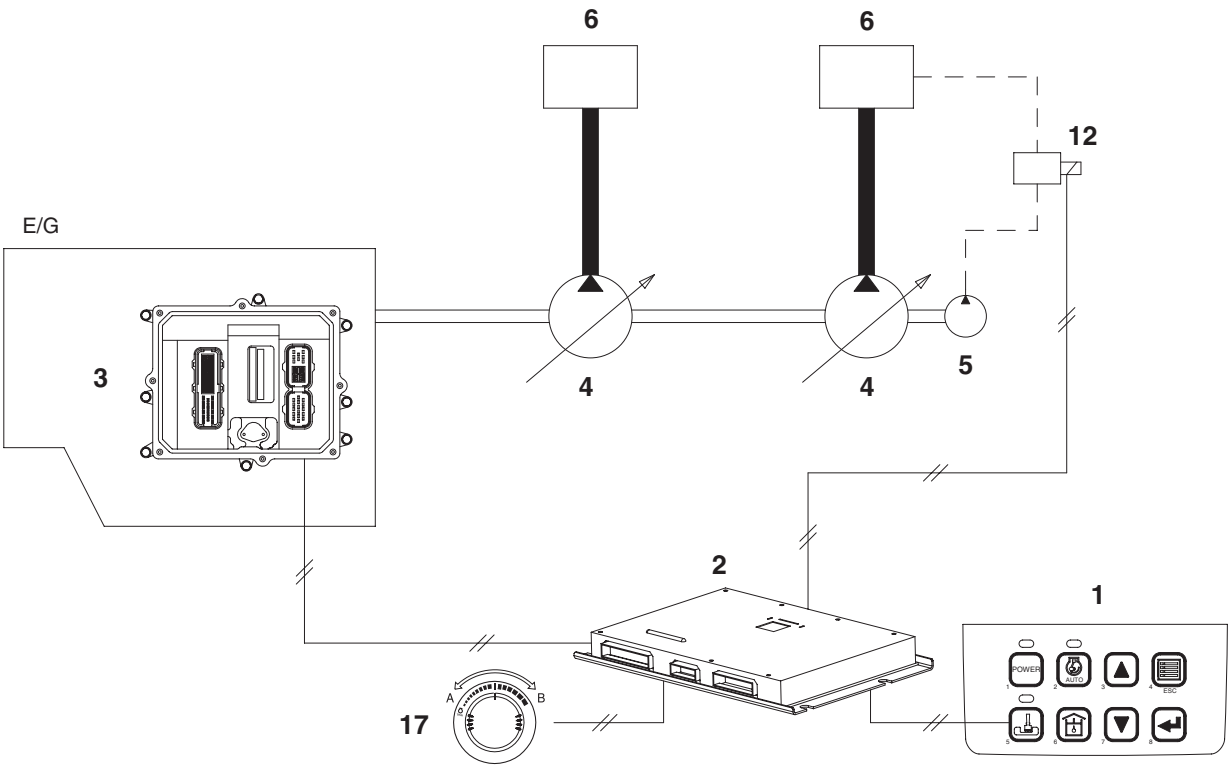

FG000797

Figure 56

Reference Number	Description
1	Instrument Panel (Trenching Mode Selector Switch)
2	e-EPOS Controller
3	Engine Controller
4	Main Pump

Reference Number	Description
5	Aux Pump
6	Control Valve
12	Solenoid Valve
17	Engine Control Dial

Depending on the working condition, one of two work modes, "DIGGING" or "TRENCHING" can be selected from the instrument panel.

When the engine starter switch is turned "ON," the work mode is automatically defaulted to digging mode.

Depending on the trenching mode selected, the control valve solenoid adjusts the assignment of hydraulic oil flow to each device on the equipment.

https://truckmanualshub.com/

Operation

1. Digging Mode

This mode is used for general digging work, loading work and ground leveling work requiring quick stops. The current to the solenoid valve for swing priority is shut off.

2. Trenching Mode

This mode is used for heavy duty ditch digging work or for loading work requiring big swing angles. The voltage is assigned to the swing priority control valve activating the swing control valve restricting the flow of oil to the boom and the arm.

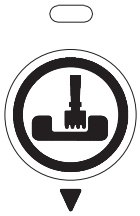

ARO0270L

Figure 57

https://truckmanualshub.com/

WORK MODE CONTROL - CIRCUIT DIAGRAM

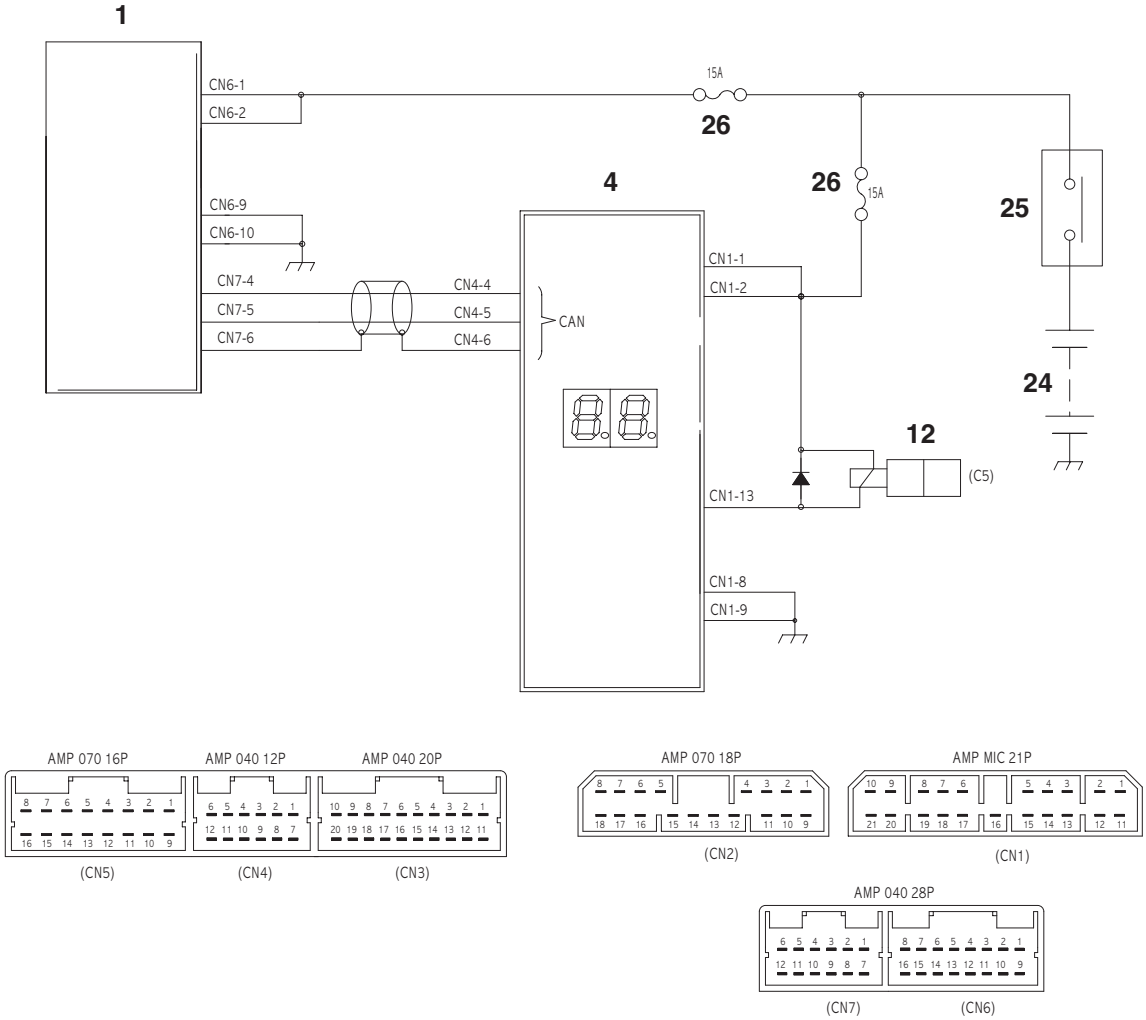

FG000583

Figure 58

Reference Number	Description
1	Instrument Panel
2	e-EPOS Controller
12	Solenoid Valve (Swing Priority)

Reference Number	Description
24	Battery
25	Battery Relay
26	Fuse

https://truckmanualshub.com/

ENGINE CONTROL SYSTEM

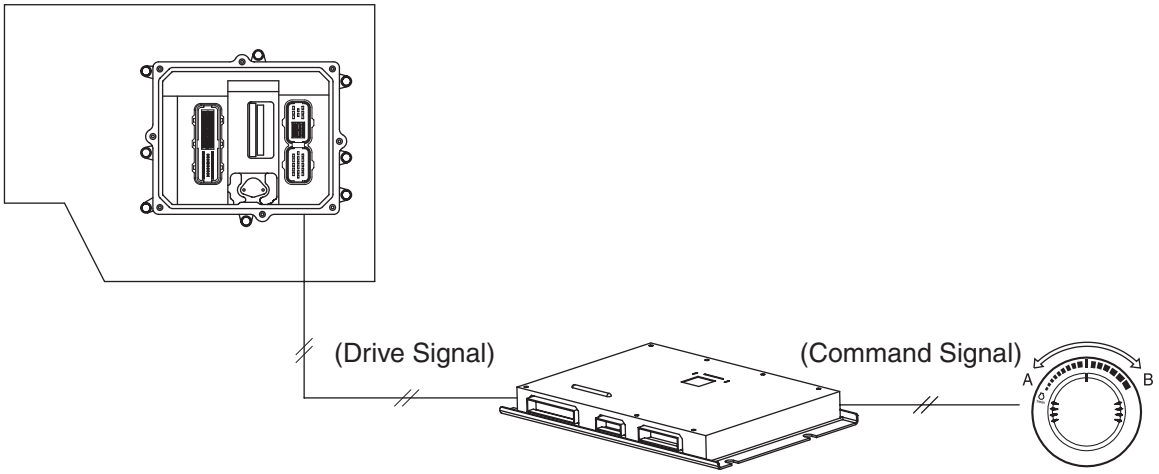

FG000584

Figure 59

Reference Number	Description
3	Engine Controller
4	e-EPOS Controller

Reference Number	Description
17	Engine Control Dial

When the engine control dial is moved the output voltage changes according to the dial position.

The e-EPOS controller converts this output voltage of dial to digital signal and sends it to the engine controller by CAN line. According to the dial command, the quantity of fuel injection is adjusted.

https://truckmanualshub.com/

ENGINE CONTROL DIAL

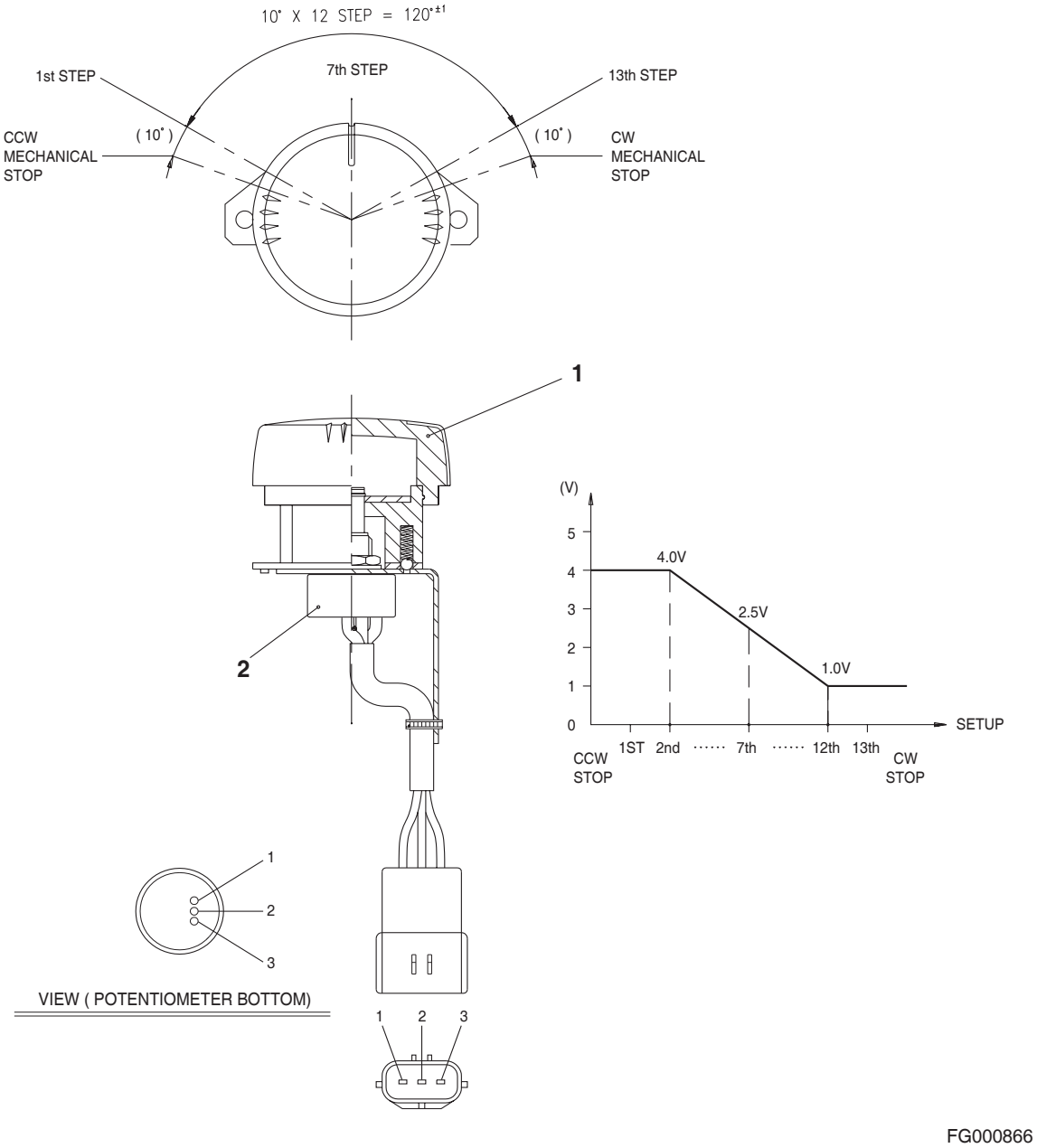

Figure 60

Reference Number	Description
1	Knob

Reference Number	Description
2	Potentiometer (Variable Resistor)

The engine control dial has a built in potentiometer. When the control knob is moved the output voltage (through "2 and 3" terminals) will vary from the 5 V supplied from the e-EPOS controller as shown in the graph.

https://truckmanualshub.com/

ENGINE CONTROL CIRCUIT DIAGRAM

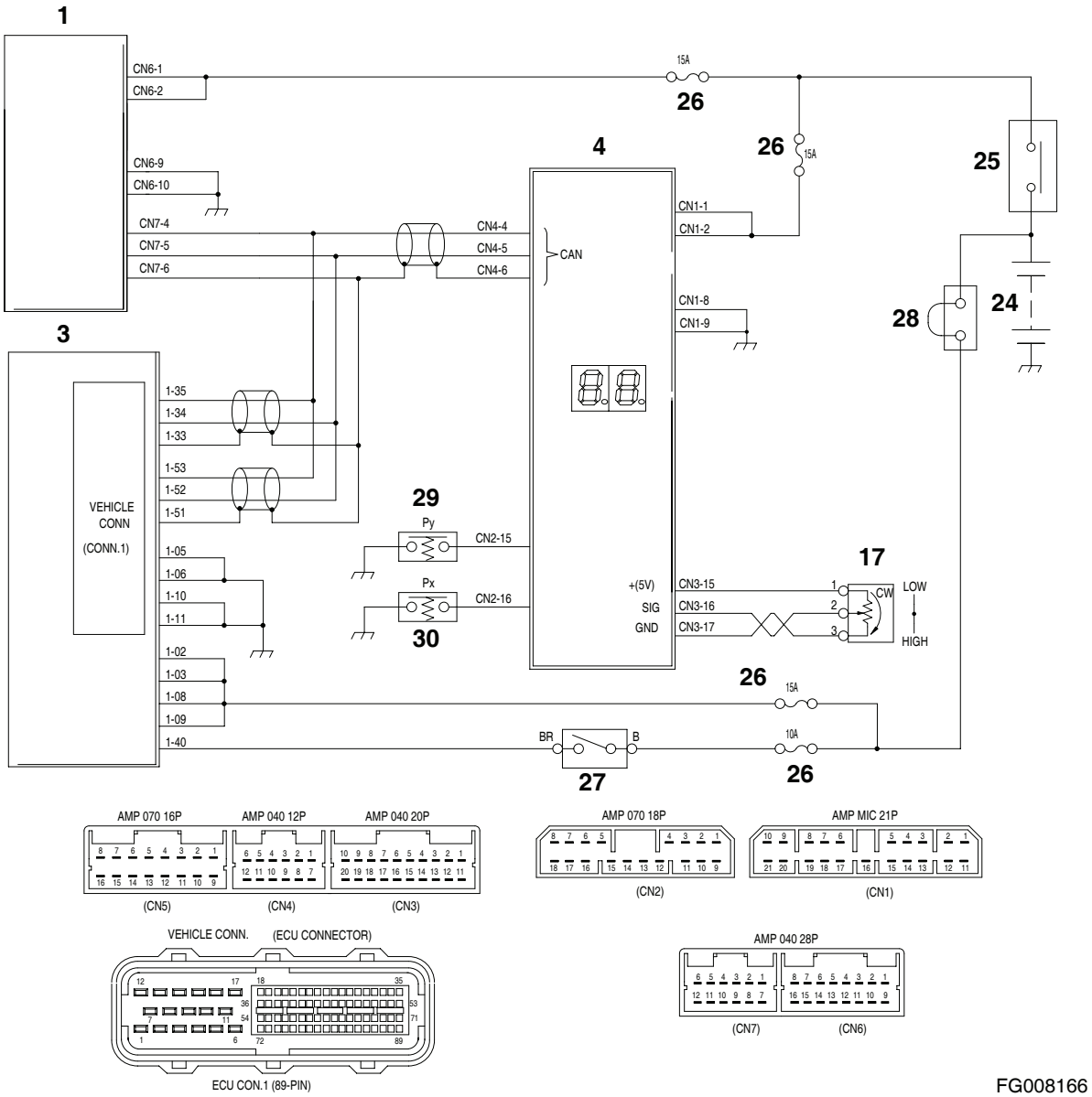

Figure 61

Reference Number	Description
1	Instrument Panel
3	Engine Controller
4	e-EPOS Controller
17	Engine Control Dial
24	Battery
25	Battery Relay

Reference Number	Description
26	Fuse
27	Starter Switch
28	Fusible Link
29	Pressure Switch (Py)
30	Pressure Switch (Px)

https://truckmanualshub.com/

AUTOMATIC DECELERATION CONTROL (AUTO IDLE CONTROL)

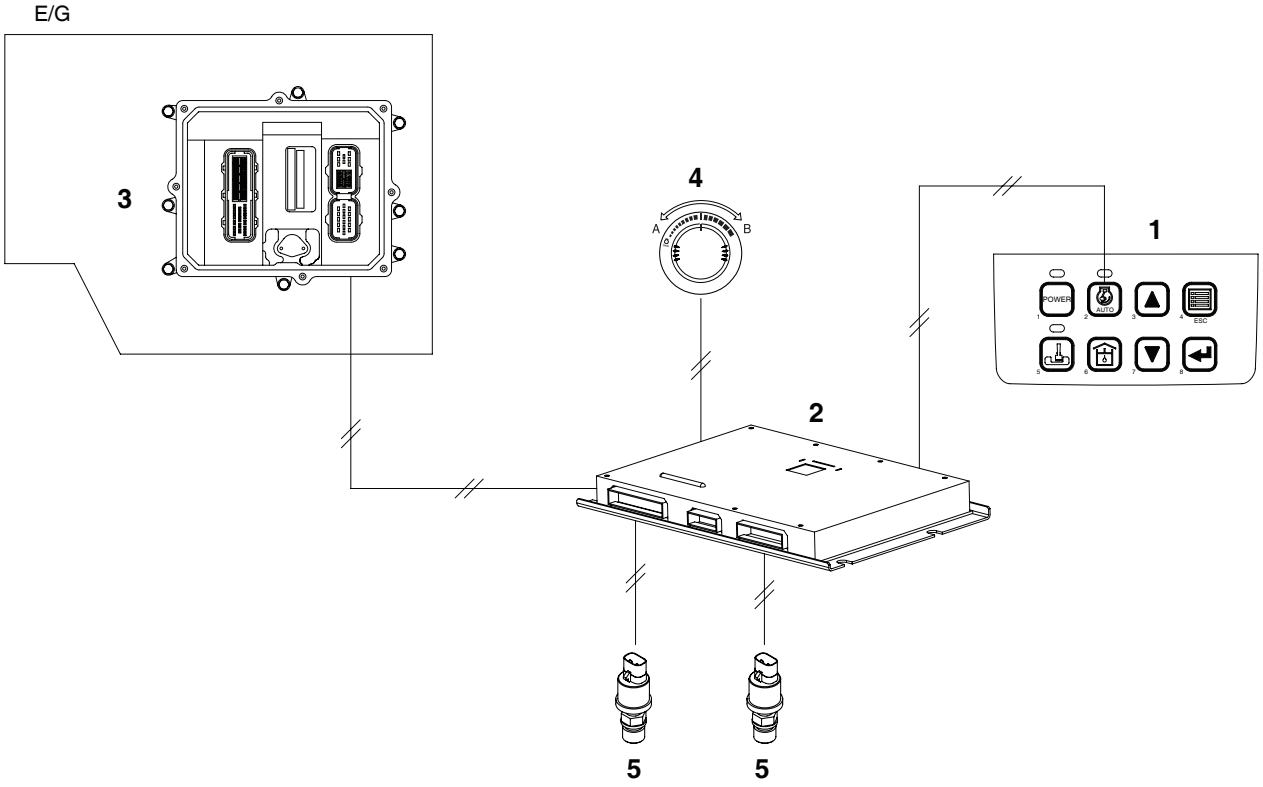

FG000798

Figure 62

Reference Number	Description
1	Instrument Panel (Auto Idle Switch)
2	e-EPOS Controller

Reference Number	Description
3	Engine Controller
4	Engine Control Dial
5	Pressure Switch

https://truckmanualshub.com/

If the machine is idling without the controls being operated or is waiting for a dump truck the engine speed is automatically lowered. Once the controls are operated and work is being started the machine will be restored to the previous settings. As a result, noise and fuel consumption will be reduced. This function can be selected or cancelled through the Auto Idle Selector Switch on the instrument panel.

The initial setting at start-up is with this switch in the select position. Approximately 4 seconds after this function is selected, if all work levers are in the neutral position, the e-EPOS controller compares the automatic reduction signal with the signal set by engine control dial. The lower of the two signals is selected, the e-EPOS controller sends a signal to the engine controller to control the engine speed.

The neutral status of the machine is detected by the two pressure switches in the control valve. When the work levers are in the neutral position, the switch is in the "OFF" position.

https://truckmanualshub.com/

ENGINE OVERHEAT PROTECTION SYSTEM

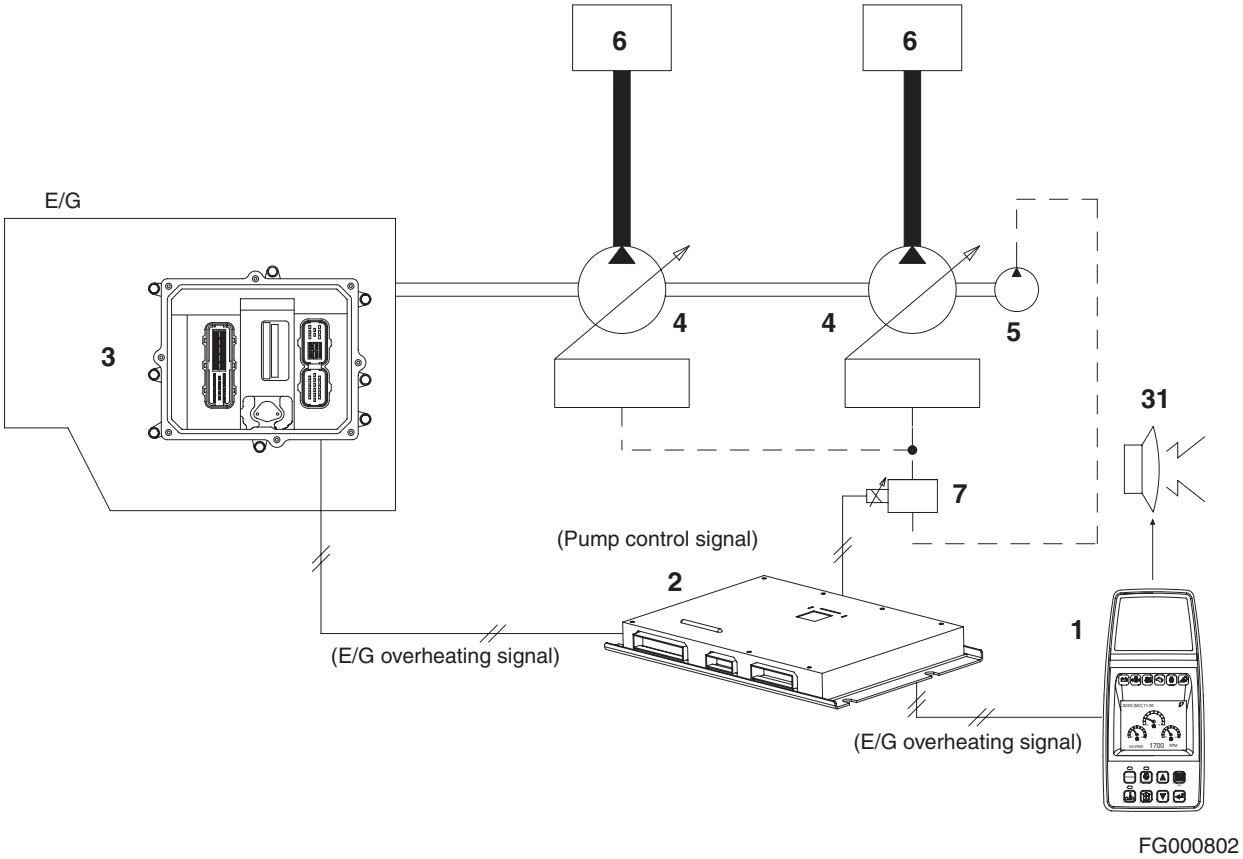

Figure 63

Reference Number	Description
1	Instrument Panel
2	e-EPOS Controller
3	Engine Controller
4	Main Pump
5	Aux Pump

Reference Number	Description
6	Control Valve
10	E.P.P.R. Valve (Electromagnetic Proportional Pressure Reducing Valve)
31	Warning Buzzer

https://truckmanualshub.com/

When the engine coolant temperature increases to over 107°C (225°F), the engine controller detects it from the sensor mounted in the coolant line and will send a signal to the e-EPOS controller. The e-EPOS controller sends a overheat signal to the instrument panel turning "ON" the warning light and buzzer simultaneously.

Also, the e-EPOS controller returns an overheat signal to the engine controller and changes power mode to standard mode. The engine speed is then set to a low speed by the engine controller.

When coolant temperature falls below 95°C (203°F), normal operation will resume.

https://truckmanualshub.com/

POWER BOOST MODE

Operation

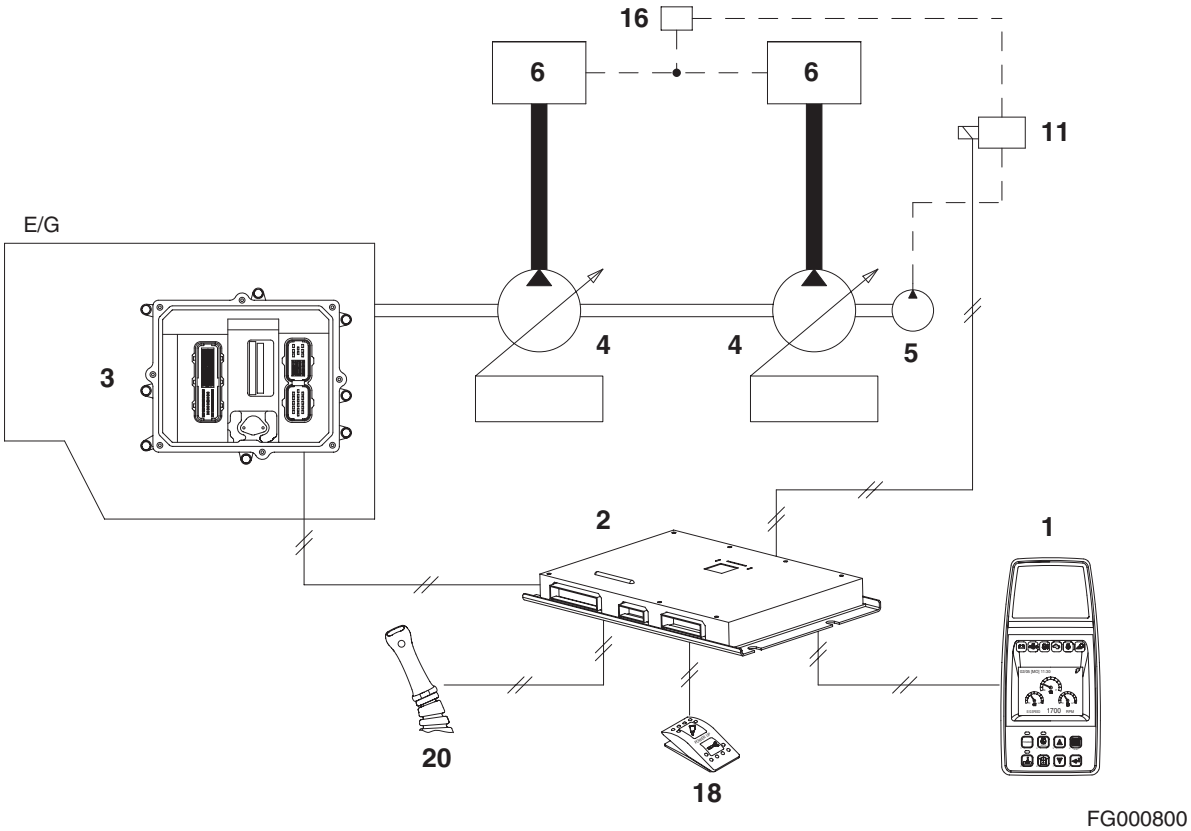

Figure 64

Reference Number	Description
1	Instrument Panel
2	e-EPOS Controller
3	Engine Controller
4	Main Pump
5	Aux Pump
6	Control Valve

Reference Number	Description
11	Solenoid Valve (Boost)
16	Main Relief Valve
18	Breaker/Boost/Shear Selector Switch
20	Power Boost Switch (Top of Right Work Lever)

https://truckmanualshub.com/

The Power Boost function is used to temporarily increase the main relief pressure to enhance excavation ability. When the breaker/boost/shear selector switch is set to "BOOST" and the power boost button on the center of the right-hand work lever (joystick) is pressed during work, the e-EPOS controller will activate the power boost solenoid valve and increase the relief valve pressure from 330 - 350 kg/cm^2 (4,700 - 5,000 psi). The excavation ability is increased by approximately 6%.

When the power boost function is in activated, a power boost symbol appears on the information display department of instrument panel.

NOTE: *Do not use this switch for more than 10 seconds.*

https://truckmanualshub.com/

Power Boost Control - Circuit Diagram

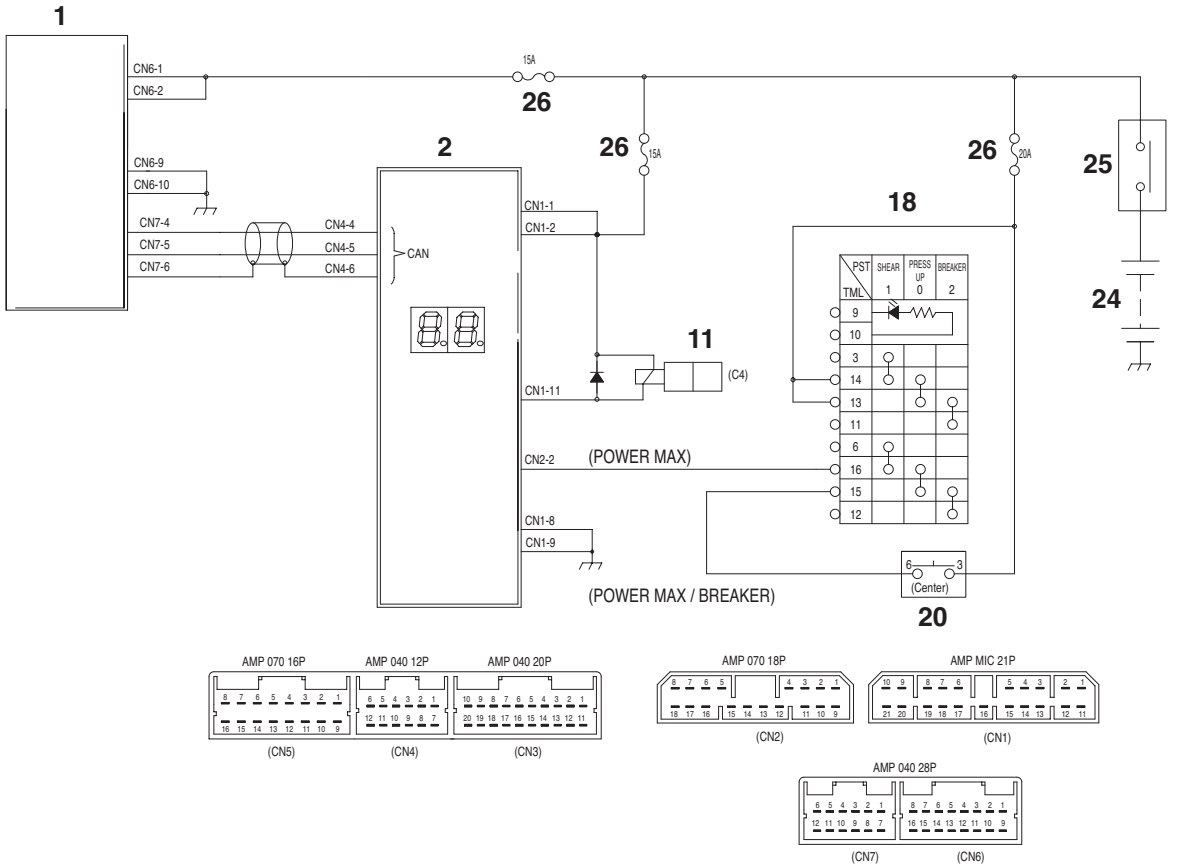

Figure 65

Reference Number	Description
1	Instrument Panel
2	e-EPOS Controller
11	Solenoid Valve (Pressure Up)
18	Breaker/Boost/Shear Selector Switch

Reference Number	Description
20	Power Boost Switch (Top of Right Work Lever)
24	Battery
25	Battery Relay
26	Fuse

https://truckmanualshub.com/

https://truckmanualshub.com/

AUTOMATIC TRAVEL SPEED CONTROL

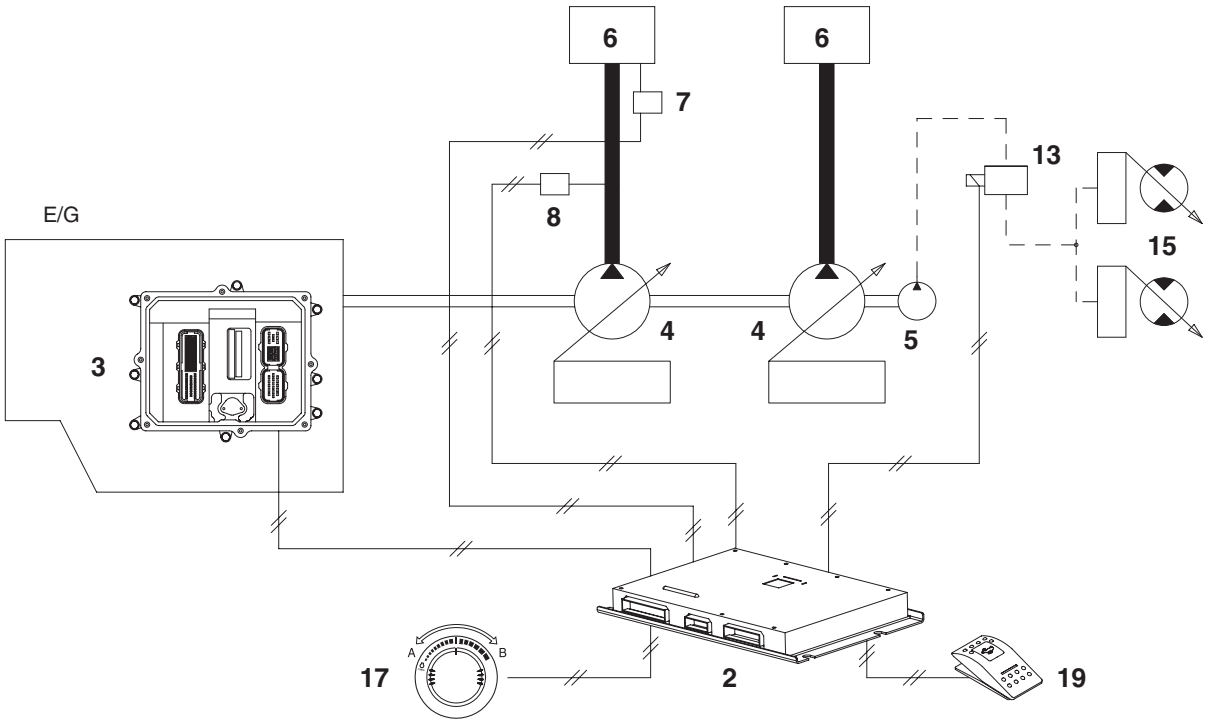

FG000799

Figure 66

Reference Number	Description
2	e-EPOS Controller
3	Engine Controller
4	Main Pump
5	Aux Pump
6	Control Valve
7	Pressure Switch (Py Port)

Reference Number	Description
8	Pump Pressure Sensor
13	Solenoid Valve (High speed)
15	Travel Motor
17	Engine Control Dial
19	Selector Switch For Automatic Travel

https://truckmanualshub.com/

If the automatic travel speed control switch is set to the "OFF" position, the travel motor will run in the I-speed (low speed) range. If the selector switch is set to the "I" position, the travel motor will run in the II-speed (high speed) range. If the selector switch is set to the "II" position, the e-EPOS controller will monitor the main pump discharge pressure and automatically select the "ON" - "OFF" status of the II - speed travel solenoid valve based on the travel load. The travel speed is changed between the I-speed and the II-speed mode.

The travel load is monitored by the two pressure sensors in the discharge lines of the front (upper) and rear (lower) pumps. When the travel load is high (pressure over 300 kg/cm^2 (4,300 psi) the solenoid valve is turned "OFF" and I-speed (low) is selected. In the case when the travel load is low (pressure under 160 kg/cm^2 (2,280 psi), the solenoid valve will be turned "ON" and the II-speed will be selected. But, if the engine speed control switch dial is set below approximately 1400 rpm, the travel speed will be set to I-speed mode.

https://truckmanualshub.com/

Automatic Travel Speed Control - Circuit Diagram

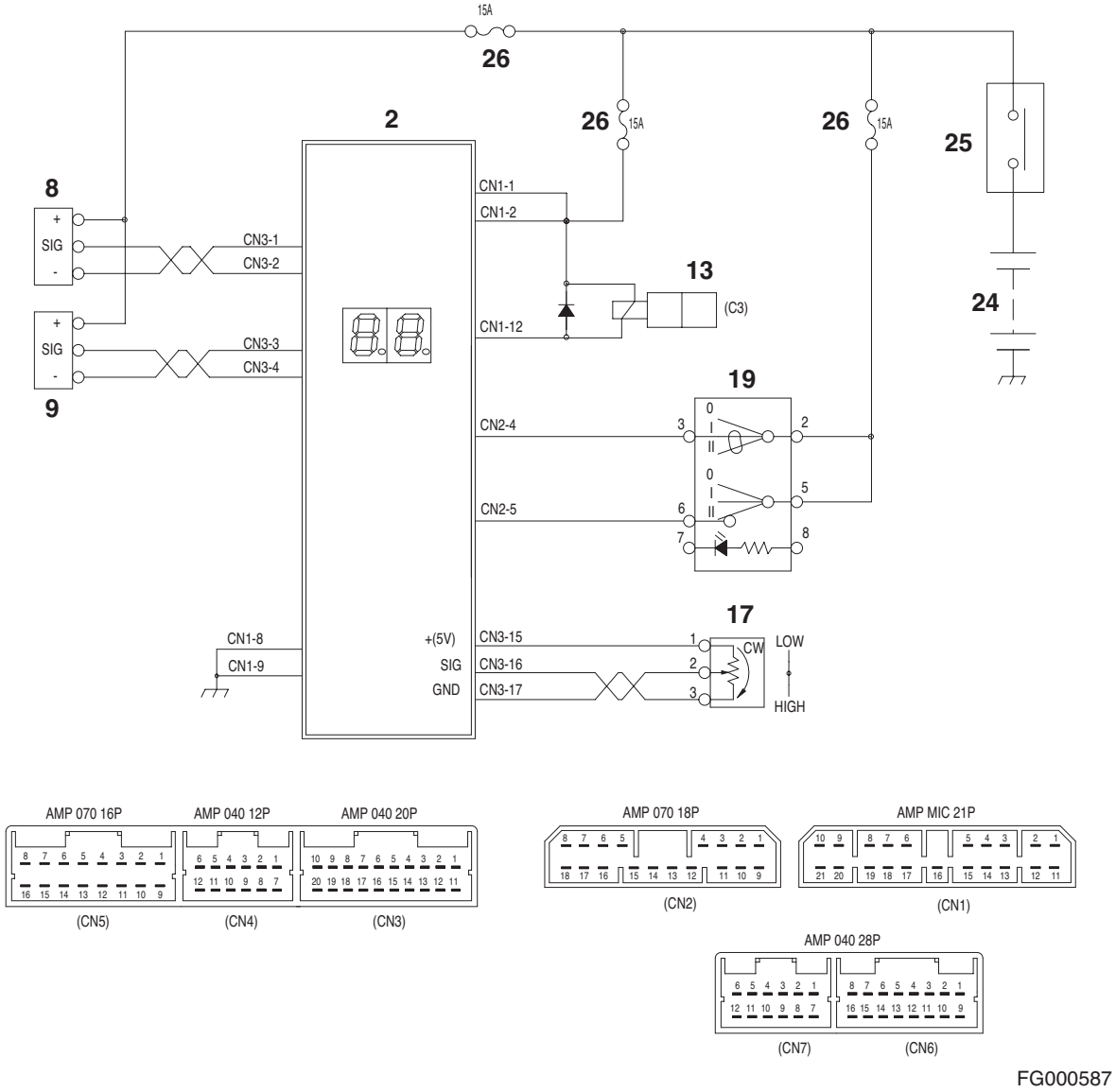

Figure 67

Reference Number	Description
2	e-EPOS Controller
8	Pressure Sensor (Front Pump)
9	Pressure Sensor (Rear Pump)
13	Solenoid Valve (High speed)
17	Engine Control Dial

Reference Number	Description
19	Selector Switch For Automatic Travel
24	Battery
25	Battery Relay
26	Fuse

https://truckmanualshub.com/

SELF-DIAGNOSTIC FUNCTION

e-EPOS Controller

The system operation status and malfunction codes can be checked through the display on top of the e-EPOS controller box the rear cover behind the operator's seat.

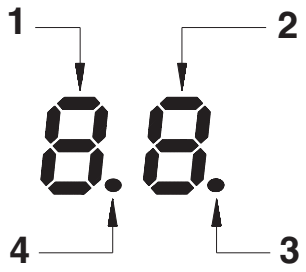

FG000588

Figure 68

Reference Number	Description
1	Upper Digit
2	Lower Digit
3	Engine Speed Monitor LED (Flash Interval Increases With Engine Speed.)

Reference Number	Description
4	Power Monitor (Stays "ON" While Power Is In Normal Range,)

1. **Power Monitor**

   This LED is turned "OFF" when the input voltage to the e-EPOS controller is below 18.5 ±1 V or above 32.5 ±1 V. Stays "ON" while in normal range.

2. **Engine Speed Monitor**

   This LED light flashes according to the engine speed. The flashing interval is proportional to the engine speed.

https://truckmanualshub.com/

3. Normal Operation Display Readout

Mode Selection		Display Readout		Operation Status
		Upper Digit	Lower Digit	
Power Mode	Power Mode	9 HAOH340L		Normal Operation Power Mode
	Standard Mode	7 HAOH350L		Normal Operation Standard Mode
Work Mode	Digging		0 HAOH370L	Normal Operation Digging Mode
	Trenching		2 HAOH380L	Normal Operation Trenching Mode

4. Communication Monitor

What are shown in the 7-SEGMENT LED are same as those in the Error Codes.

Error Code	Indication Code	Fault Location
V201	01	Communication error in instrument panel.
V202	02	Communication error in engine controller.

https://truckmanualshub.com/

AIR CONDITIONER SYSTEM

Outline

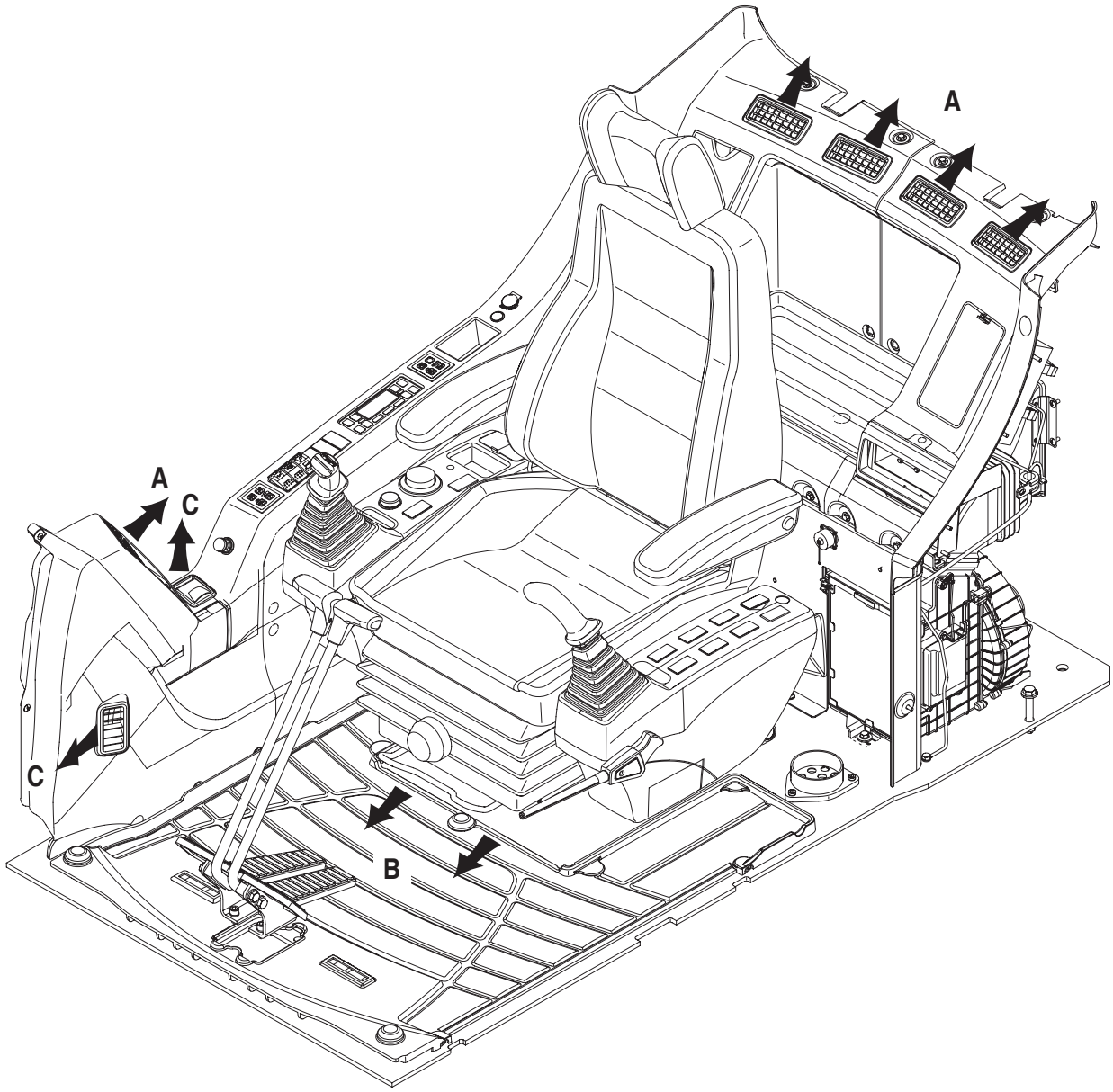

FG000784

Figure 69

Solid-type heater and air conditioner are installed in the cover behind the operator's seat.

Temperature of the operator's room is adjusted automatically to the temperature set by operator.

https://truckmanualshub.com/

(Please refer to the Operation Manual for detailed full automatic control.

Vent mode selects the direction of discharged air.

Outlets by vent modes

Modes					
Outlets	A	A+B	B	B+C	C

Internal and External Filters

Internal and external air purification filters are installed for the operator's room.

Filters should be cleaned every 500 hours.

If machine operates in an excessively contaminated environment, filters should be cleaned more frequently and if necessary, replaced with new ones.

How to Check Internal Air Filter

1. Press both levers on the left and right side at the top of the filter installed at the rear of the operator's seat.

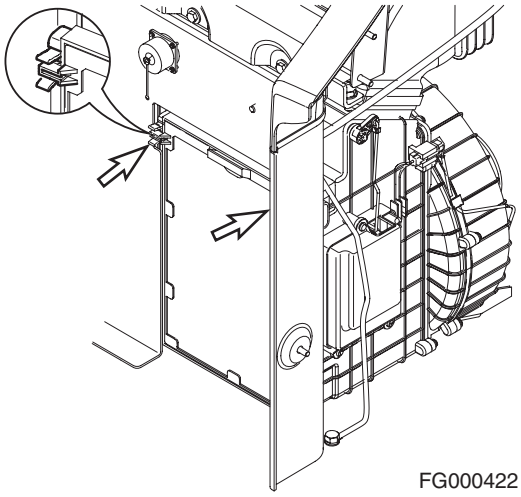

Figure 70

How to Check External Air Filter

1. Open the door at the left side of machine and loosen four marked bolts to remove the cover (1, Figure 71).

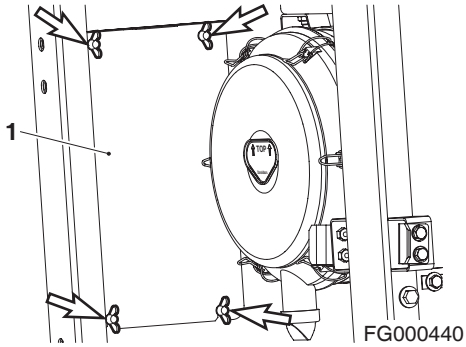

Figure 71

https://truckmanualshub.com/

2. Turn marked knobs (1, Figure 72) at the rear side of the cabin to open the cover.

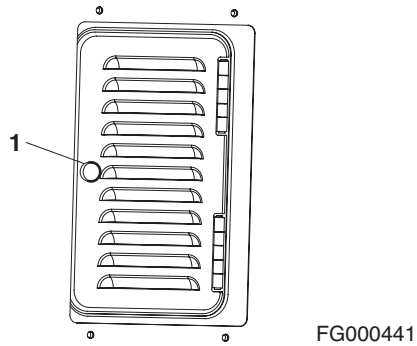

Figure 72

3. Remove the filter attached to the cover and clean the contaminated filter using compressed air.
4. Close the cover, replace the knobs, and secure the cover to the support with butterfly bolts.

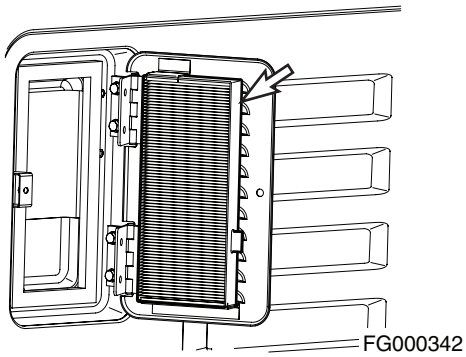

Figure 73

https://truckmanualshub.com/

Air-Conditioning System Layout

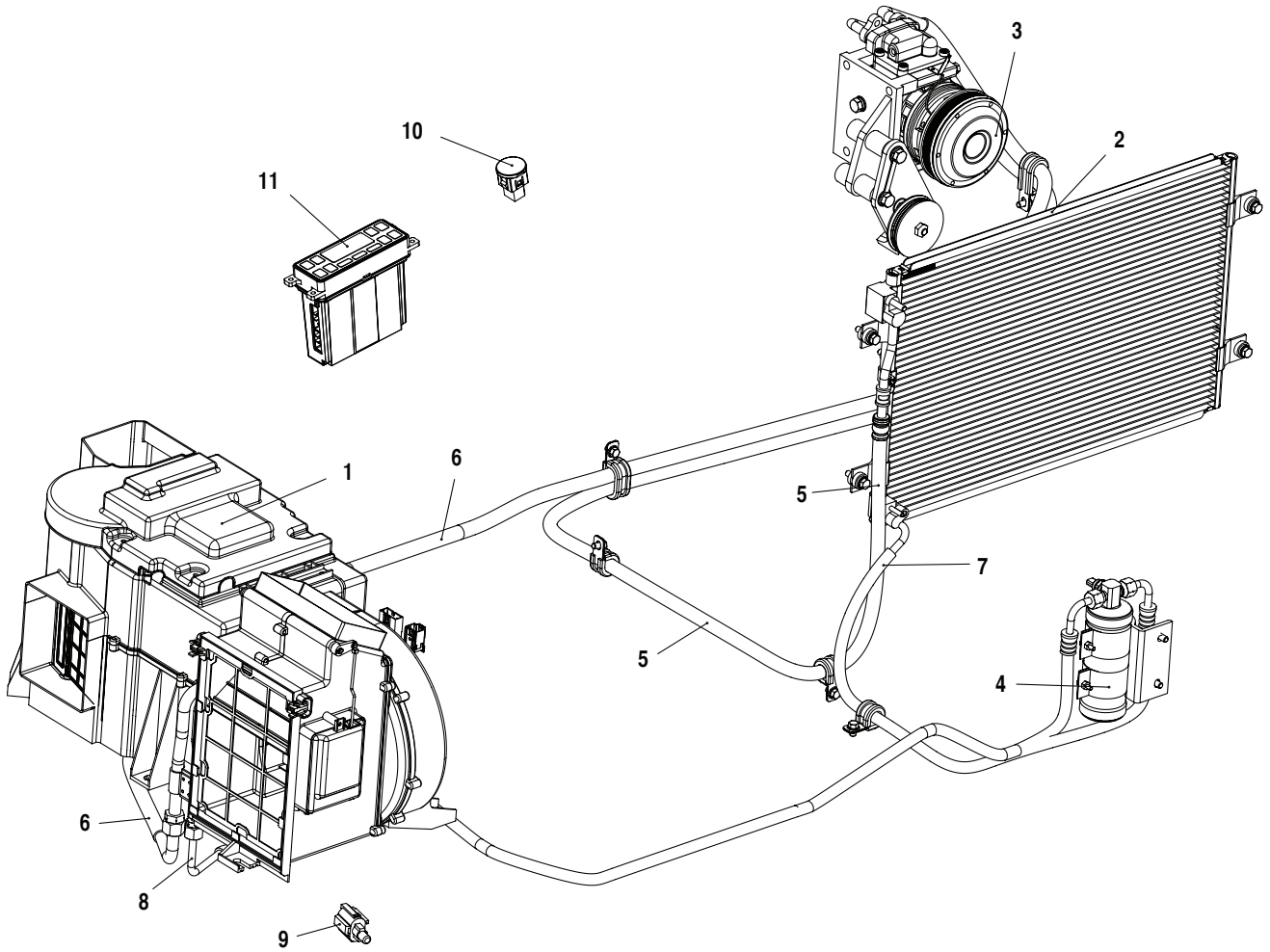

FG007144

Figure 74

Reference Number	Description
1	Air Conditioner/heater Unit
2	Condenser
3	Compressor
4	Receiver Dryer
5	Discharge Hose
6	Suction Hose

Reference Number	Description
7	Liquid Hose (1)
8	Liquid Hose (2)
9	Ambient Temperature Sensor
10	Sun Sensor
11	Control Panel

https://truckmanualshub.com/

Air Conditioner/heater Circuit Diagram

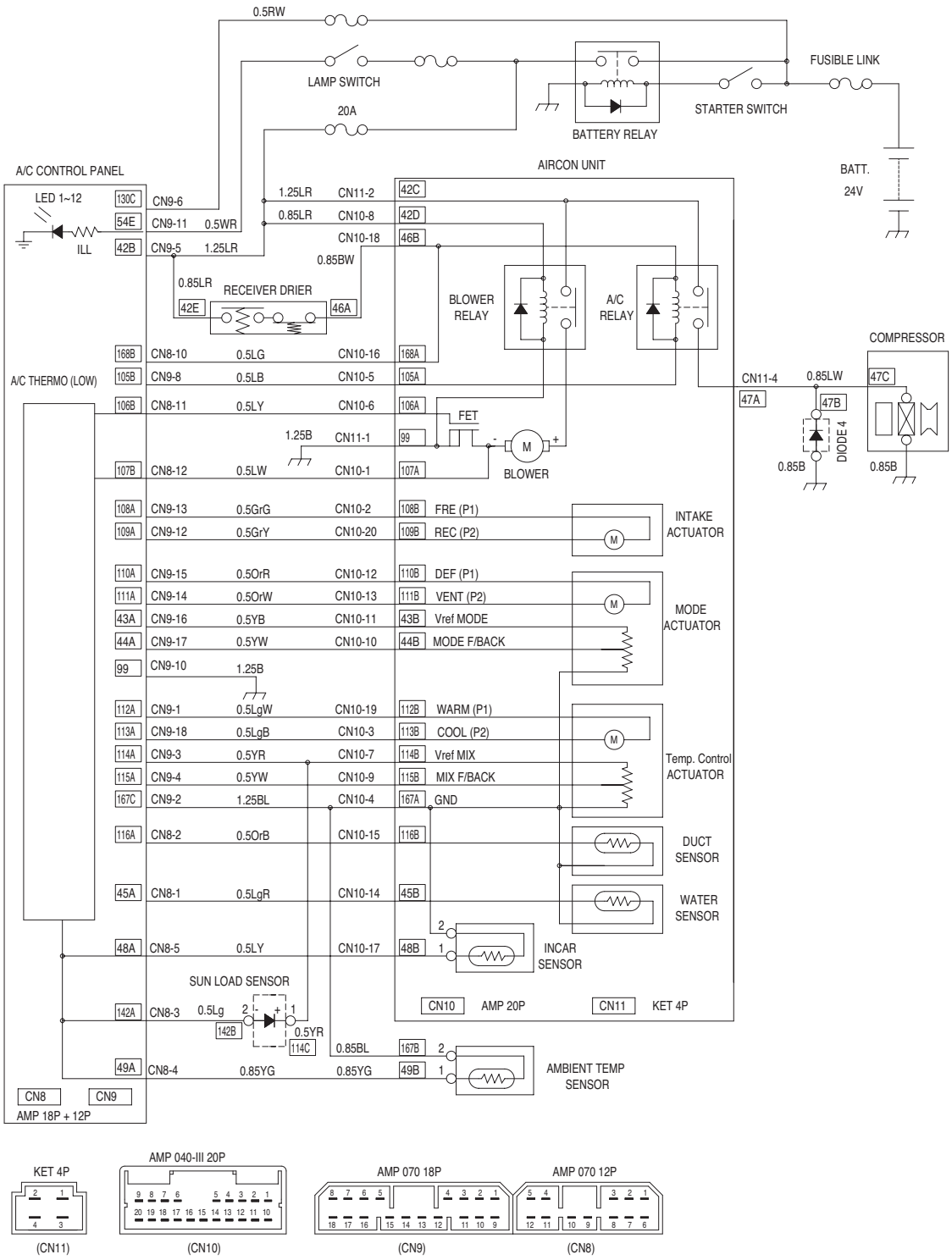

Figure 75

https://truckmanualshub.com/

Air Conditioner/heater Unit

Air Flow Diagram

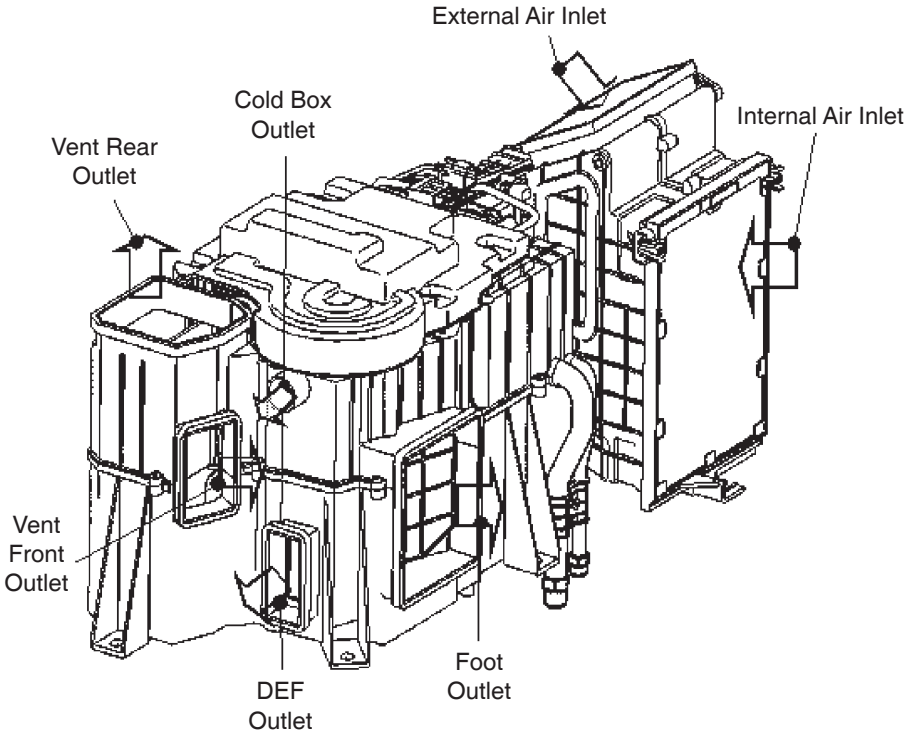

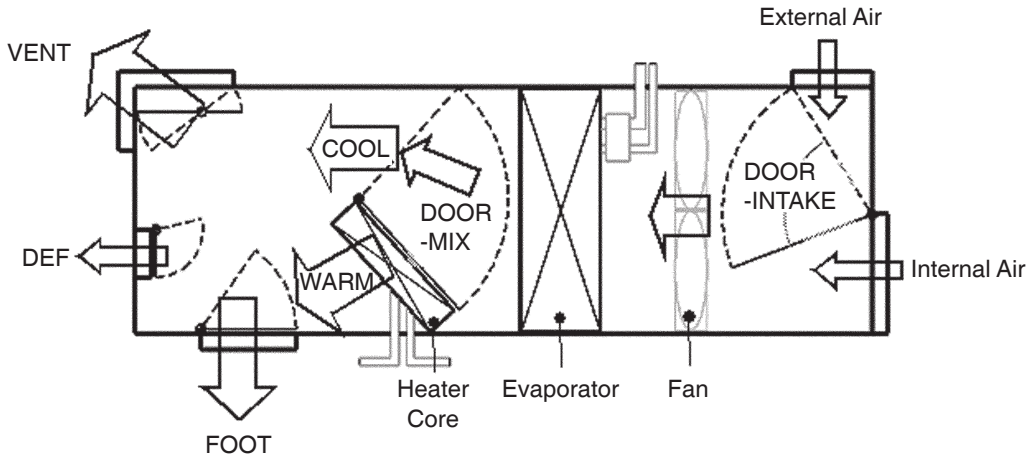

FG001359

Figure 76

https://truckmanualshub.com/

Door Open by Vent Modes

Door	Mode				
	Vent	Bi-level	Foot	Def/foot	Def
Vent	100	60	0	0	0
Foot	0	40	100	80	60
Def	0	0	0	20	40

Main Components

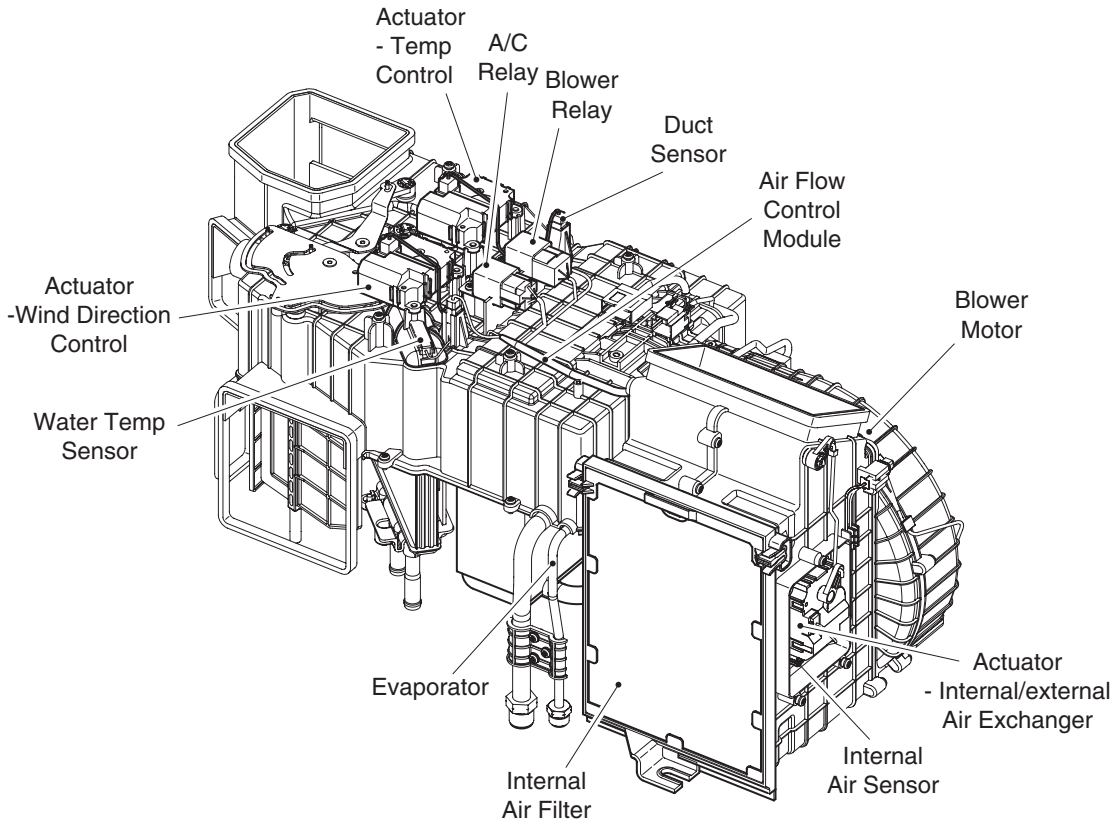

Figure 77

https://truckmanualshub.com/

Actuator - Wind Direction Control

Change of discharged air flow according to selected wind direction mode

Change of wind direction: Direction changes in the order of VENT→ BI-LEVEL → FOOT → FOOT/DEF → VENT.

Actuator - Temperature Control

Change of discharged air temperature by controlling the position of temperature control door.

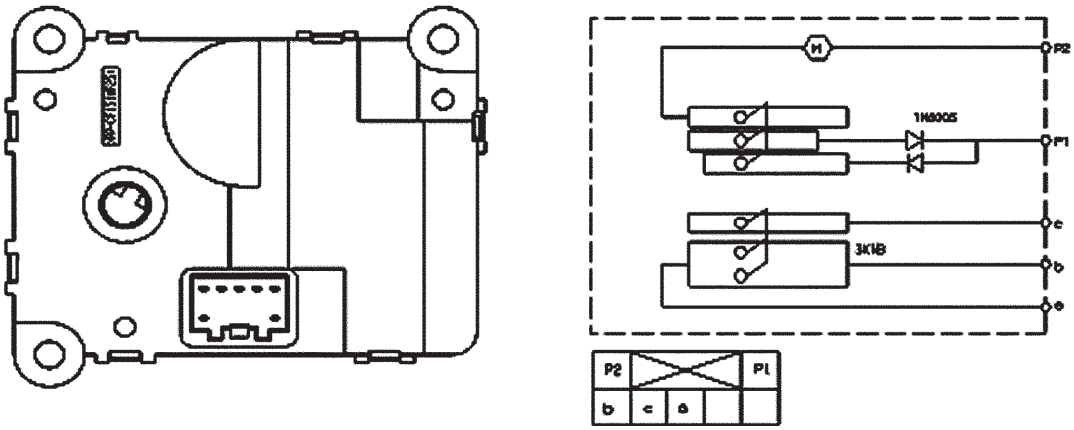

FG001361

Figure 78

Actuator - Wind Direction Control

Wind Direction Mode	Output Terminal	Voltage
Vent	c(+): CN10-10 b(-): CN10-4	0.5 ± 0.2V
Bi-level		1.3 ± 0.2V
Foot		2.45 ± 0.2V
Foot/def		3.5 ± 0.2V
Def		4.5 ± 0.2V

Actuator - Temperature Control

Set Temperature	Output Terminal	Voltage
Max cooling	c(+): CN10-9 b(-): CN10-4	Below 0.4V
Max heating		Above 4.5V

https://truckmanualshub.com/

Actuator - Internal/external Air Exchange

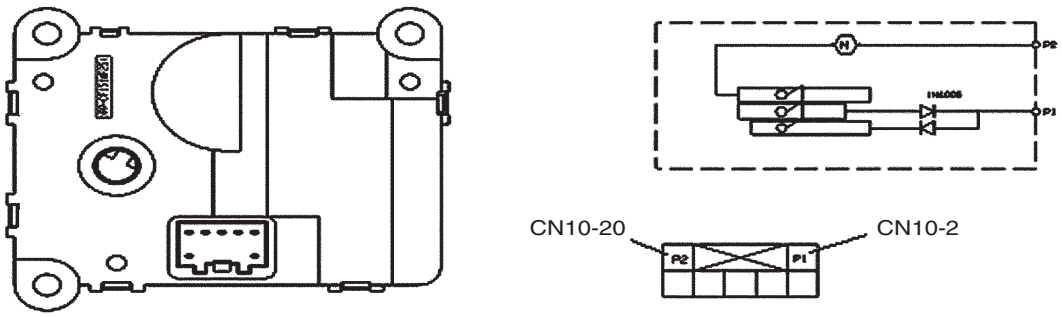

FG001055

Figure 79

Mode	Output Terminal	Output
Intake	P1(+), P2(-)	Moving of exchange door by selecting intake.
Recirculate	P1(-), P2(+)	Moving of exchange door by selecting recirculate.

Air Flow Control Module

Air flow is controlled through the control of voltage between GATE and SOURCE.

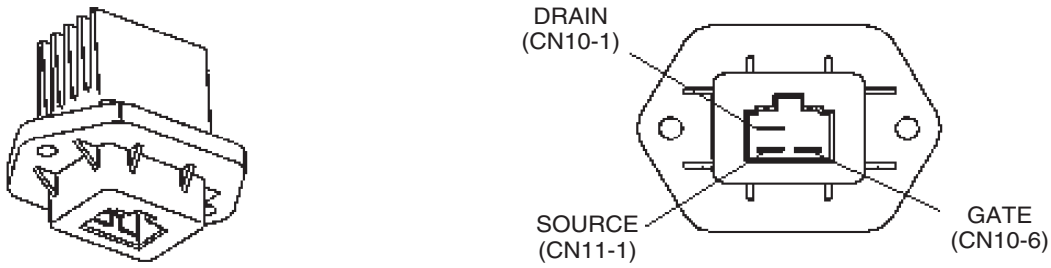

FG001056

Figure 80

Air flow	Output Terminal		Output
1st	CN11-2	CN10-1	10 ± 0.5V
2nd			12.5 ± 0.5V
3rd			15 ± 0.5V
4th			17.5 ± 0.5V
5th			20.0 ± 0.5V
6th			22.0 ± 0.5V
7th			More than 25V

Input voltage is 27.5V.

The air flow is based on manual set.

https://truckmanualshub.com/

Relay - Blower: Power is supplied to the blower motor when the system is turned "ON."

Specifications	
Rated voltage	24V
Rated current	20A

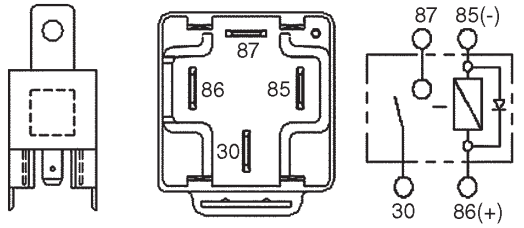

FG001057

Figure 81

Relay - A/C: Power is supplied to the magnetic clutch of the compressor.

Specifications	
Rated voltage	24V
Rated current	10A

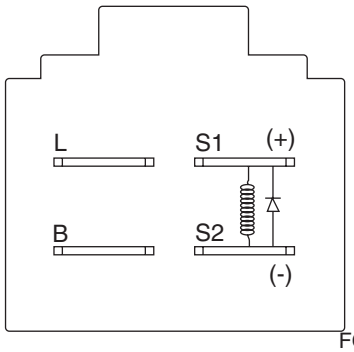

FG001058

Figure 82

Duct Sensor: It is inserted in the core of the evaporator to prevent freezing of the evaporator.

The sensor consist of negative characteristic thermistor that resistant value increases and decreases when the temperature rises and falls, respectively.

Temperature (°C)	Resistance (KΩ)
0	11.36 ± 0.1
2	10.39 ± 0.2
2.5	10.17 ± 0.2
3	9.95 ± 0.2
3.5	9.73 ± 0.2
4	9.52 ± 0.2
5	9.12 ± 0.2
10	7.36 ± 0.15
25	4.02 ± 0.08
30	3.33 ± 0.07

FG001059

Figure 83

https://truckmanualshub.com/

Water Temperature Sensor: It senses the temperature of coolant water in the heater core.

Temperature (°C)	Resistance (KΩ)
-10	55.8 ± 1.7
0	32.9 ± 0.9
15	15.76 ± 0.5
25	10.0 ± 0.3
35	6.5 ± 0.2

FG001060

Figure 84

Internal Air Temperature Sensor: Built in the internal air filter, it senses the internal temperature.

Temperature (°C)	Resistance (KΩ)
-15	218.2 ± 7.5
0	97.83 ± 0.9
15	47.12 ± 0.7
25	30.0 ± 0.36
35	19.60 ± 0.3

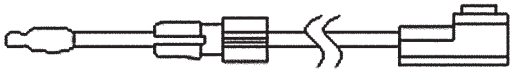

FG001061

Figure 85

Ambient Air Temperature Sensor

Built at the bottom of the cockpit, it senses the temperature of external air.

Temperature (°C)	Resistance (KΩ)
-10	163 ± 4.9
0	96.9 ± 2.9
10	59.4 ± 1.8
20	37.4 ± 1.1
25	30 ± 0.9
30	24.2 ± 0.7

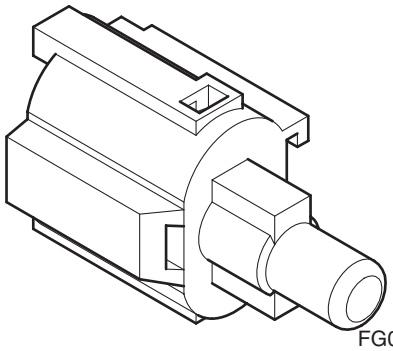

FG001064

Figure 86

https://truckmanualshub.com/

Sun Sensor

Built beside the socket of spare power, it senses the quantity of the sun radiation to optimize discharge temperature and air flow as set by operator.

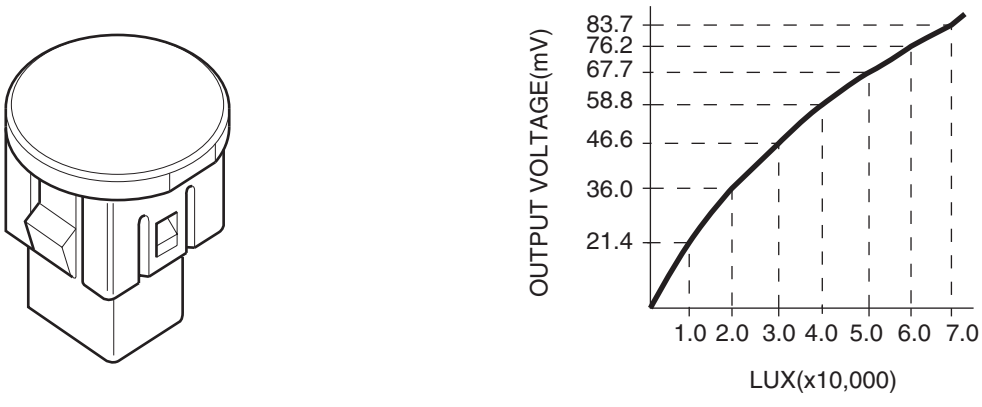

Figure 87

Control Panel

Appearance and Terminal Arrangement

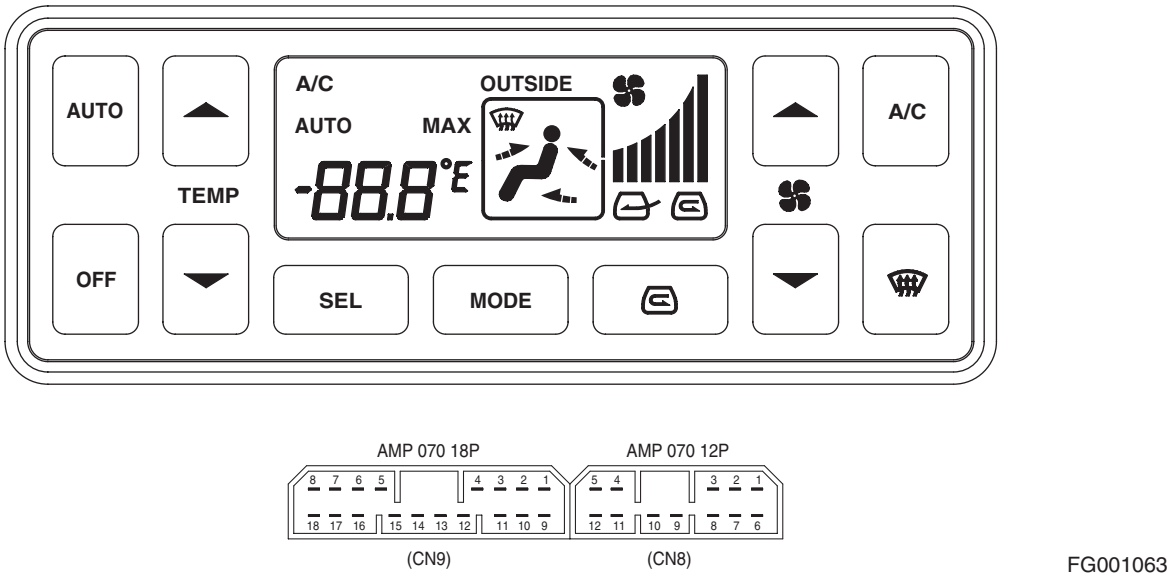

Figure 88

Refer to "Air Conditioner and Heater" of operation manual.

https://truckmanualshub.com/

Terminal Terms

CN	Term No.	Terms
CN9	1	Temperature control (warm)
	2	Sensor ground
	3	Temperature control Power (5V)
	4	Mix feedback
	5	Power (KEY "ON")
	6	Back-up
	7	-
	8	A/C output (LOW)
	9	-
	10	Ground
	11	Illumination
	12	Intake/Recirculate (Recirculate)
	13	Intake/Recirculate (Intake)
	14	Wind direction control (VENT)
	15	Wind direction control (DEF.)
	16	Wind direction control Power (5V)
	17	Wind direction control (feedback)
	18	Temperature control (cool)

CN	Term No.	Terms
CN8	1	Water temperature sensor
	2	Duct sensor
	3	Sun sensor
	4	Ambient air temperature sensor
	5	Internal air temperature sensor
	6	-
	7	-
	8	-
	9	-
	10	D.P.S CHECK
	11	Air flow module (gate)
	12	Blower motor (feedback)

Control Logic

Categories	Inputs	System Operation
AUTO	Set temperature Internal air temperature sensor Ambient air temperature sensor Water temperature sensor Sun sensor	1. Automatically adjust room temperature as set and then next items. Temperature, Wind direction, Recirculate/Intake, Air flow, Compressor 2. Auto mode is released when manually setting any switch except, Temperature Control switch in Auto mode. 3. Upon the releasing of Auto mode, all of functions except selected switch are controlled automatically.

https://truckmanualshub.com/

<table>
<tr><th>Categories</th><th>Inputs</th><th>System Operation</th></tr>
<tr><td>Sensor compensation</td><td>Set temperature
Internal air temperature sensor
Ambient air temperature sensor
Water temperature sensor</td><td>1. In case of sensor failure, following defaults are applied:
Internal air temperature sensor: 25°C, Ambient air temperature sensor: 25°C, Duct sensor: -2°C
Temperature control actuator:
- Set Temperature 17 - 24.5°C: Max cooling, Set Temperature 25 - 32°C: Max heating
Wind direction mode actuator
- VENT: VENT fix, modes other than VENT: Fixed to DEF
* Sun sensor is not compensated.</td></tr>
<tr><td>Max cooling/ heating control</td><td>Auto Setting</td><td>1. Set Temperature 32°C: Max heating
2. Set Temperature 17°C: Max cooling
<table><tr><th></th><th>Max Cooling (17 ℃)</th><th>Max Heating (32 ℃)</th></tr><tr><td>Temp Control Actuator</td><td>FULL COOL</td><td>FULL HOT</td></tr><tr><td>Air Flow</td><td>MAX HI</td><td>AUTO HI</td></tr><tr><td>Compressor</td><td>Forced ON</td><td>OFF</td></tr><tr><td>Intake/Recircle</td><td>Recircle</td><td>Intake</td></tr><tr><td>Wind Direction Mode</td><td>VENT</td><td>FOOT</td></tr></table>* Max cooling/heating control is possible only in Auto mode.</td></tr>
<tr><td>Starting Control of Cooling</td><td>Auto mode
Duct sensor</td><td>1. Prevention of discharge of hot air before discharge temperature drops enough in hot summer weather
2. Start conditions (AND condition)
(1) A/C on (AUTO or manual)
(2) Temperature sensed by the duct sensor is above 30°C
(3) Air flow: Auto mode
3. One time control in the cycle of engine OFF → engine run
4. Initial cooling control is executed when the Auto switch is "ON" in the manual status (A/C "OFF" and manual control of air flow) in 5 seconds after engine run.
5. Initial cooling control should be before max cooling.
6. Release condition (OR condition)
(1) A/C "OFF"
(2) Air flow: Manual control
(3) Release is possible with the "OFF" switch but not allowed within 12 seconds (after Start "ON") while the system is off using the "OFF" switch and during the time of initial cooling control.</td></tr>
</table>

https://truckmanualshub.com/

Categories	Inputs	System Operation
Starting control of heating (1)	Water temperature sensor Internal air temperature sensor Auto mode Set Temperature	1. Start condition (AND condition) (1) When wind direction mode is one of the following modes in the Auto or manual control mode - BI-LEVEL, FOOT or FOOT/DEF (2) The Water temperature sensor is stable and the water temperature < 73°C (3) Air flow: Auto mode (4) Set temperature > Internal air temperature + 3°C * Air flow falls gradually up to 12 seconds when operation released. 2. One time control in the cycle of engine OFF → engine run 3. Initial heating control should be before max heating. 4. Air flow is controlled only when the wind direction is in the manual mode and BI-LEVEL, FOOT, or FOOT/DEF is set. 5. Control through the water temperature sensor for start. 6. Starting control of heating (2) starts in case of fault of the water temperature sensor during controlling. 7. Operation release (OR condition) (1) Only air flow is released if it is selected manually. (2) When handling the wind direction mode switch, only wind direction is released but the air flow control is performed only for the remaining period of the starting control of heater. (3) When Max Cooling (17°C) is selected. (4) Water temperature sensor > 73°C.

https://truckmanualshub.com/

Categories	Inputs	System Operation
Starting control of heating (2)	Water temperature sensor Ambient air temperature sensor Internal air temperature sensor Auto mode	1. Entry condition (AND condition) (1) Auto Mode (2) Ambient air temperature < 5°C and difference between ambient and internal air temperature ≤ 5°C (3) Failure of water temperature sensor 2. Only one time of engine OFF → engine run 3. Starting control of heating is before max heating. 4. Operation release (OR condition) (1) Air flow: Manual selection (2) When handling the wind direction mode switch, only wind direction is released but the air flow control is performed only for the remaining period of the starting control of heater. (3) Difference between internal and ambient air temperature>15°C (4) When Max Cooling (17°C) is selected. 5. Exceptional case Starting control of heating is performed only once during the remaining period if the entry condition is satisfied within the starting control period that is the accumulation of initial start times. (Inclusive of Auto mode "ON" case within the period of starting control of heater.) * Air flow should be reduced slowly for up to 12 seconds in case of exceptional entry case.

https://truckmanualshub.com/

Categories	Inputs	System Operation
Compressor control	Duct sensor	1. Function: Magnetic clutch of compressor is turned "ON/OFF" depending on temperature of the duct sensor to prevent the freezing of the evaporator with A/C being "ON." 2. Control pattern. 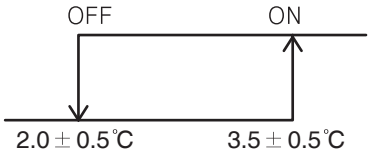
	External temperature sensor	1. Function: Prevention of compressor in winter. 2. Control pattern. 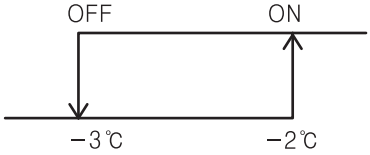 *Only for Auto mode.

https://truckmanualshub.com/

Self Diagnosis

How to start self diagnosis

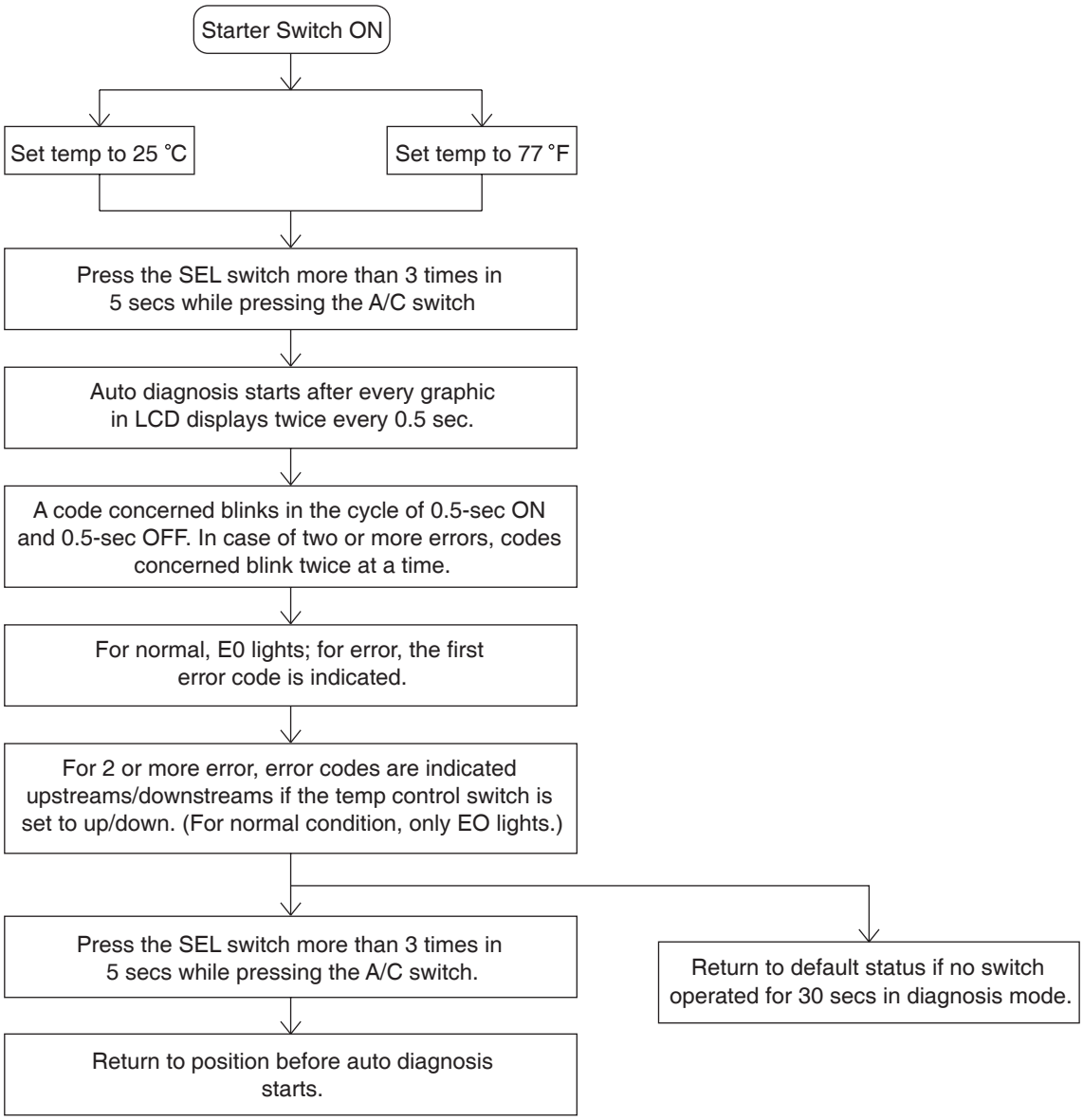

Figure 89

https://truckmanualshub.com/

Error codes

Code	Description
E0	Normal
E1	Internal air temperature sensor short
E2	Internal air temperature sensor open
E3	Ambient air temperature sensor short
E4	Ambient air temperature sensor open
E5	Duct sensor short
E6	Duct sensor open
E7	Sun sensor short
E8	Sun sensor open
E9	Water temperature sensor short
E10	Water temperature sensor open
E11	D.P.S open
E12	Position error of wind direction actuator
E13	Position error of temperature control actuator

NOTE: *The position error means that it fails to move to designated place in 40 seconds.*

Sun sensor displays E8 in case of no sunlight.

2 and more fails: Codes concerned blinks twice at a time.

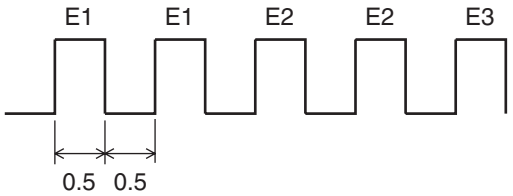

FG001067

Figure 90

Ambient Temperature Display

Selection of both the SEL and MODE switch for more than 3 seconds indicates the ambient temperature in the set temperature display department.

- Range of temperature display: -40 - +60°C

NOTE: *Display of ambient temperature may be released in the same way for its entry way.*

It returns automatically to default mode 5 seconds after entering the ambient air temperature display mode.

https://truckmanualshub.com/

Compressor

Categories	Specifications
Output	155.3 cc/rev
Oil Level	120 cc (ND-OIL8)
Refrigerant	R134a
Rated Voltage	24V
Relief Valve	Open: 35 - 42.2 kg/cm^{2}G Close: 28.1 kg/cm^{2}G

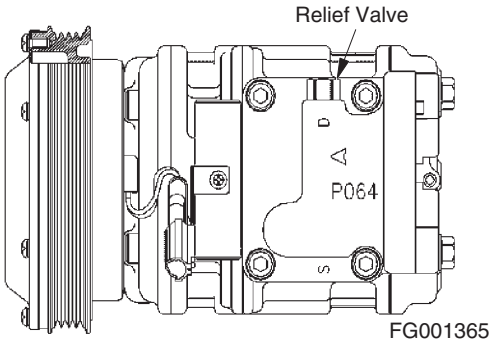

Figure 91

Compressor sucks in refrigerant which evaporates completely in the evaporator and discharges it to the condenser.

Refrigerant undergoes repeated status change in the order of liquid, gas, and liquid in the freezing cycle, and the compressor makes evaporated refrigerant a high temperature and high-pressured gas to freeze it in the condenser.

Receiver Dryer

The receiver dryer reserves refrigerant enough to ensure smooth freezing cycle responding immediately to the change of level in the freezing cycle.

As liquid refrigerant from the condenser may contain refrigerant gas with bubbles whose presence in the expansion valve decreases the freezing power excessively, it separates liquid and gas and sends liquid only to the expansion valve.

Water in refrigerant shall be eliminated with dryer and through filter.

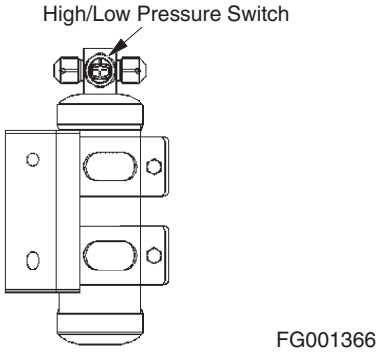

Figure 92

Volume of refrigerant by model

Model	Volume of Refrigerant
DX140LC	800 ± 20 grams
DX180LC	800 ± 20 grams
DX225LC	800 ± 20 grams
DX225NLC	800 ± 20 grams
DX255LC	800 ± 20 grams
DX300LC	800 ± 20 grams
DX340LC	800 ± 20 grams
DX420LC	800 ± 20 grams
DX480LC	800 ± 20 grams
DX520LC	800 ± 20 grams

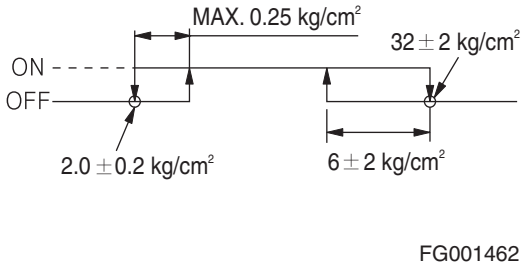

Figure 93

https://truckmanualshub.com/

TROUBLESHOOTING

Refrigerant Pressure Check

1. Open all doors and windows.
2. Install manifold gauge set.
3. Start engine and maintain engine speed at 1,800 - 2,000 rpm.

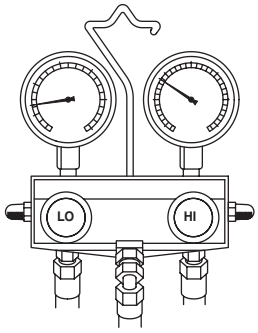

HDA6074L

Figure 94

4. Check high / low-pressure of refrigerant.

1	**High-pressure: 8.0 - 10.0 kg/cm^2 (114 - 142 psi)** **Low-pressure: Approximately 1.0 kg/cm^2 (14 psi)**		
Possible Cause: Low Refrigerant Level			
Step	**Inspection Item**		**Remedy**
1	Check for traces of refrigerant oil.	Yes	Reassemble using correct tightening torque.
		No	Go to next step.
2	Using a leak detection device or soapy water check for refrigerant leakage at all major components and joints.	Yes	Repair leaking component.
		No	Recharge system to correct pressure.

2	**High-pressure: Over 23 kg/cm^2 (327 psi)** **Low-pressure: Approximately 2.5 - 3.0 kg/cm^2 (36 - 43 psi)**		
Possible Cause: Overcharge, Frost on condenser			
Step	**Inspection Item**		**Remedy**
1	Check for condenser pin damage or contamination.	Yes	Clean, repair or replace condenser.
		No	Refrigerant overcharge.

3	**High-pressure: Approximately 20 - 25 kg/cm^2 (285 - 356 psi)** **Low-pressure: Approximately 2.5 - 3.5 kg/cm^2 (36 - 50 psi)**
Possible Cause: Air in system.	
1. Recover any remaining refrigerant. 2. Vacuum out system. 3. Recharge system. **NOTE:** *If the system has been exposed to the air for a long period of time, replace the receiver dryer.*	

4	**High-pressure: Over 6 kg/cm^2 (85 psi)** **Low-pressure: Approximately 760 mmHg (Negative Pressure)**		
Possible Cause: Refrigerant does not circulate			
Step	**Inspection Item**		**Remedy**
1	1. Connect manifold gauge and start engine. 2. Turn on air conditioner. 3. Set blower switch to HIGH position. 4. Turn air conditioner OFF and wait 10 minutes. 5. Recheck high / low-pressure readings. High-pressure: 13.0 - 19.0 kg/cm^2 (185 - 270 psi) Low-pressure: 1.5 - 3.3 kg/cm^2 (21.3 - 46.9 psi)	Yes	Moisture in system, replace receiver dryer.
		No	Contaminated system, replace expansion valve. (Replace evaporator core assembly.)

5	**High-pressure: Over 6 - 18 kg/cm^2 (85 - 256 psi)** **Low-pressure: 500 mmHg (Negative Pressure) - Dial indicator needle unstable.**
Possible Cause: Moisture in system has iced up the expansion valve. **NOTE:** *When the absorbed moisture freezes the pressure readings may look normal. Careful readings should be made to determine whether pressure is in normal range.*	
1. Recover any remaining refrigerant. 2. Vacuum out system. 3. Recharge system. **NOTE:** *If the system has been exposed to the air for a long period of time, replace the receiver dryer.*	

6	**High-pressure: Over 22.0 - 23 kg/cm^2 (313 - 327 psi)** **Low-pressure: 2.5 kg/cm^2 (36 psi)**		
Possible Cause: Refrigerant pressure problem due to defective expansion valve or temperature sensor.			
Step	**Inspection Item**		**Remedy**
1	Inspect whether the temperature sensor is installed properly.	Yes	Replace expansion valve.
		No	Exchange duct sensor.

7	**High-pressure: Over 7.0 - 11.0 kg/cm^2 (100 - 156 psi)** **Low-pressure: 4.0 - 6.0 kg/cm^2 (57 - 85 psi)**
Possible Cause: Low refrigerant pressure due to poor compressor compression.	
Inspect and replace compressor if necessary.	

https://truckmanualshub.com/

WEIGHT OF R134a GAS USED IN MACHINES

Model	Weight of Gas
DX140LC	800 ±20 grams (28 ±0.7 oz)
DX180LC	800 ±20 grams (28 ±0.7 oz)
DX225LC	800 ±20 grams (28 ±0.7 oz)
DX225NLC	800 ±20 grams (28 ±0.7 oz)
DX255LC	800 ±20 grams (28 ±0.7 oz)
DX300LC	800 ±20 grams (28 ±0.7 oz)
DX340LC	800 ±20 grams (28 ±0.7 oz)
DX420LC	800 ±20 grams (28 ±0.7 oz)
DX480LC	800 ±20 grams (28 ±0.7 oz)
DX520LC	800 ±20 grams (28 ±0.7 oz)

https://truckmanualshub.com/

REFRIGERANT SYSTEM REPAIRS

WARNING!

Always wear protective glasses and gloves when handling refrigerant. If refrigerant comes in contact with the skin or eyes, immediately flush with clean, running water and consult a physician.

Select a clean and well ventilated area to work.

The refrigerant container is under high-pressure and should be stored below 40°C (104°F). Be careful not to drop the container from a high location.

The contents are under high-pressure and should not be used with compressed air or near an open flame.

Refrigerant Safe Handling Procedures

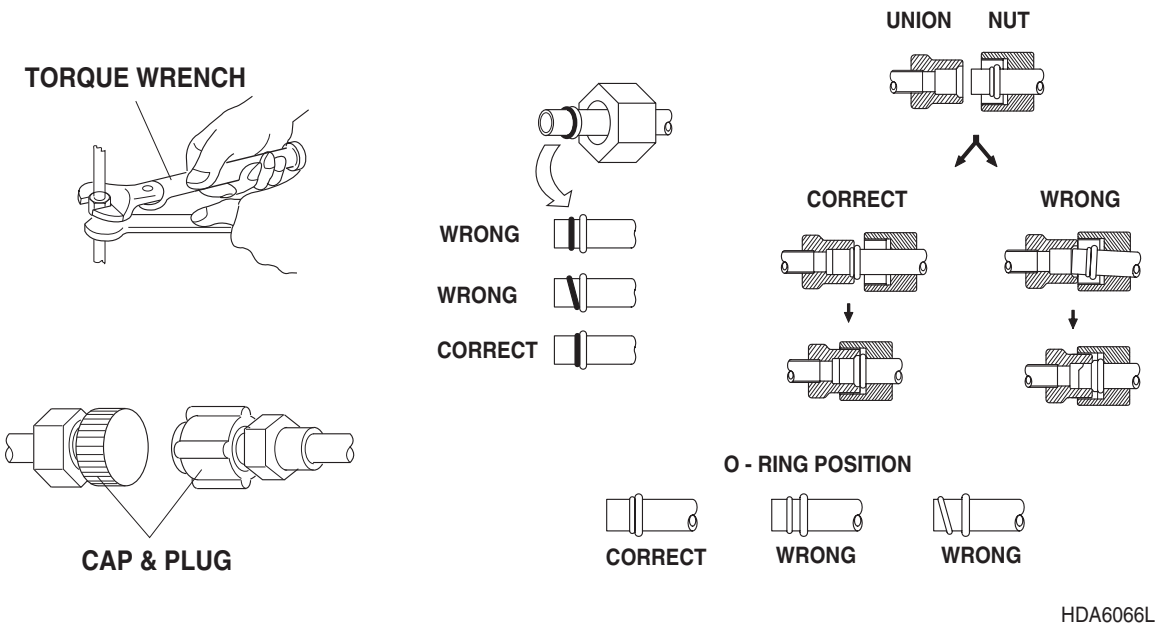

Figure 95

The following procedures should be observed for safe handling of refrigerant during vacuum and charging process.

1. Use an approved recovery / charging device which can safely perform vacuum and charge work simultaneously.
2. The new refrigerant has improved cooling characteristics than the old type and care should be used not to overcharge the system.

https://truckmanualshub.com/

3. Do not over tighten connections when working on refrigerant system.
4. The new refrigerant system standards require new tools, equipment and parts. DO NOT attempt to use equipment use in servicing the old refrigerant system.
5. The new refrigerant oil (PAG type) has a high moisture absorption characteristic. When the refrigerant system vacuum seal has been broken, immediately plug up all openings to prevent moisture from entering into the system.
6. When joining unions which use O-ring seals, lightly coat O-rings with refrigerant oil. Be careful not to drip oil on the threads of the nut.
7. Be certain the O-rings are seated properly on the refrigerant line lip. Always use new O-rings when reassembling parts. Do not reuse old O-rings.
8. Use a vacuum pump to evacuate refrigerant system of air.
9. When charging the refrigerant system with the engine running, do not open the high-pressure valve on the manifold gauge as the reverse flow of high-pressure refrigerant will rupture the hose.
10. When releasing the high-pressure hose after completing the charging process, quickly disconnect the hose to minimize refrigerant released to the air.

Repair and Replacement Procedure

1. Work Procedure
   A. Before repairing or replacing any refrigerant components first, return all refrigerant oil to the compressor and perform recovery procedures.
2. Operating Condition
   A. Run engine at maximum engine speed.
   B. Select 'HI' blower fan speed and select A/C switch to 'ON'.
   C. Set the temperature control switch for maximum cooling and leave running for approximately 20 minutes.

      NOTE: *The manifold gauge dial pointer can vary depending on the outdoor temperatures.*

https://truckmanualshub.com/

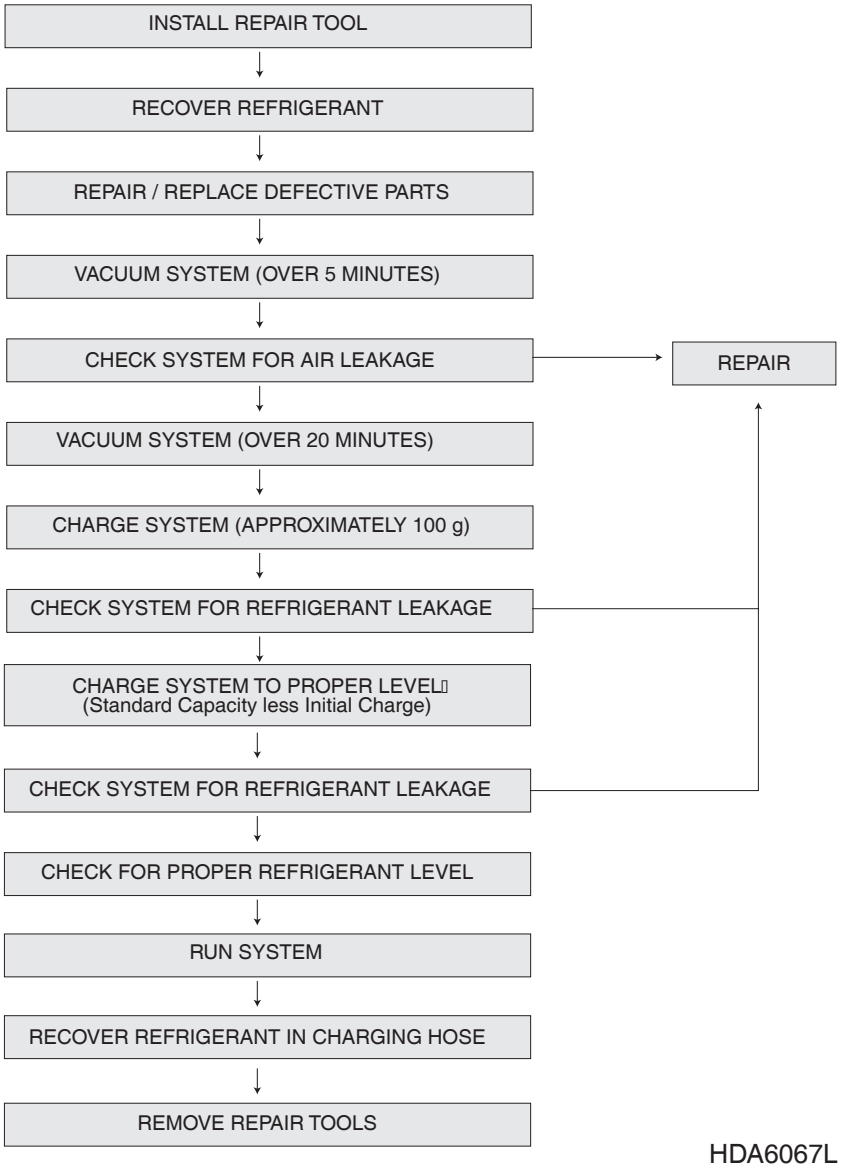

Figure 96

https://truckmanualshub.com/

Refrigerant Recovery

Reference Number	Description
1	To Compressor
2	Low-pressure Side
3	High-pressure Side
4	From Receiver
5	Refrigerant Recovery Tank

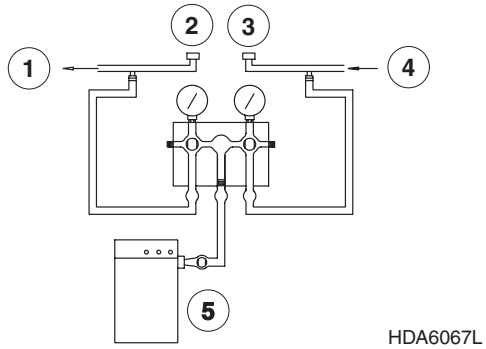

Figure 97

1. Attach the manifold gauges and the refrigerant recovery unit to the refrigerant lines as shown.

   NOTE: *Be careful not to switch the connections for the low and high-pressure valves.*

2. Open the high-pressure valve slowly to release the refrigerant to the recovery unit.

   NOTE: *Open the valve slowly, while checking to see that refrigerant is not leaking out.*

3. When the manifold gauge dial falls below 3.5 kg/cm^2 (50 psi), slowly open the low-pressure valve.

4. Open both the high and low-pressure valves slowly until the manifold gauge dials indicates 0 kg/cm^2 (0 psi).

Vacuuming Refrigerant System

Reference Number	Description
1	To Compressor
2	Low-pressure Side
3	High-pressure Side
4	From Receiver
5	Vacuum Pump

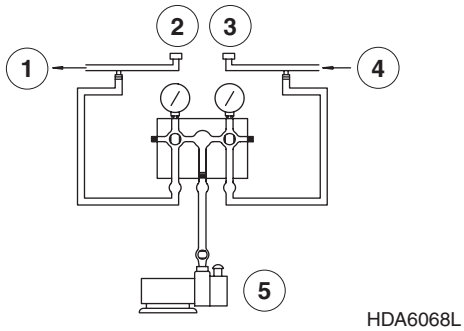

Figure 98

1. Vacuuming Procedure

   NOTE: *When the A/C system has been exposed to the air, it must be vacuumed out. Perform vacuum process for 30 minutes for complete moisture and air evacuation.*

   A. Attach the manifold gauges and vacuum pump to the refrigerant system as shown.

   B. Turn on the vacuum pump and open both valves.

   C. When the low-pressure gauge shows approximately 710 mmHg, close both valves and turn off vacuum pump.

https://truckmanualshub.com/

2. Check system for vacuum leak.

   Allow system to sit for 10 minutes and check whether the system is holding the pressure. If the pressure has dropped, it must be repaired before proceeding to the next step.

3. Vacuuming Procedure

   If the system is holding the pressure and it has not changed for 10 minutes, vacuum out the system for an additional 20 minutes.

   A. Turn on the vacuum pump and slowly open both valves.

   B. Allow vacuum pump to run for additional 20 minutes until the low-pressure gauge dial reads approximately 750 mmHg.

   C. Close both valves and stop the vacuum pump.

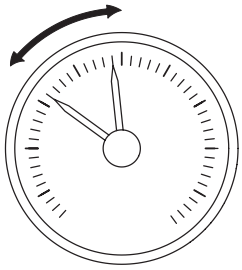

HDA6069L

Figure 99

4. Installation of Refrigerant Container

Reference Number	Description
1	Handle
2	Hose Connection
3	Mounting Disk

   A. Before mounting valve on the container, make sure the handle is in the counterclockwise most position, with the puncture pin retracted and the mounting disk is in the raised position.

   B. Attach the manifold gauge center hose to the valve assembly.

   C. Turn the disk in the clockwise direction and securely mount valve onto refrigerant container.

   D. Turn the valve handle in the clockwise direction and puncture the container seal with the pin.

   E. Once the can has been punctured, turn the handle in the counterclockwise direction so the refrigerant can flow into the manifold gauge center hose. At this time, do not open the low and high-pressure valves of the manifold gauge.

   F. Press the manifold gauge low side valve to eliminate the trapped air in the hose.

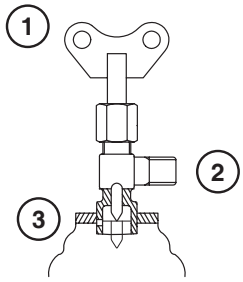

HDA6070L

Figure 100

https://truckmanualshub.com/

Leakage Check

NOTE: *Perform the leakage check after completing vacuuming process.*

1. After attaching the manifold gauge, open the high side valve.
2. Charge system until the low side gauge dial indicates a pressure of 1 kg/cm^2 (14 psi) and close the high side valve.
3. Using a refrigerant leak detector or soapy water check each joint for leakage.

Reference Number	Description
1	Refrigerant Leak Detection Device

4. If a leak is detected, check for O-ring damage or correct tightening torque and replace or repair as necessary.
5. If no leaks are detected, proceed with the charging process.

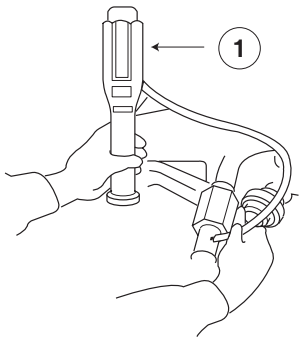

HDA6071L

Figure 101

WARNING!

For accurate refrigerant leak detection, perform leak detection procedure in a well ventilated area.

Refrigerant Charging

1. Perform the vacuuming procedure, vacuum holding and leaking tests as described in the proceeding headings.

   NOTE: *First charge the refrigerant system with 100g (3.5 ounces) of refrigerant with the engine off. Then using the manifold gauges as a guide fully charge the system with the engine running.*

   When exchanging refrigerant containers, press the manifold gauge low side valve to eliminate air from the charging hose.

Reference Number	Description
1	To Compressor
2	Low-pressure Side
3	High-pressure Side
4	From Receiver
5	Refrigerant Supply Container

2. Charge the system by opening the manifold gauge low side valve.

   Initial charge amount: 100 g (3.5 ounces).

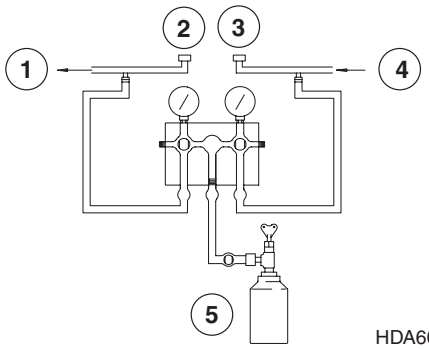

HDA6072L

Figure 102

https://truckmanualshub.com/

3. If refrigerant does not flow freely into system, try starting engine first before operating air conditioner.
   - Temperature control switch setting: Maximum Cooling

     Blower Speed Setting: Hi (3 step)

     Engine Speed: 1,300 - 1,500 rpm

WARNING!

When charging refrigerant system with the engine running:

- **Always keep refrigerant supply container in the upright position.**
- **Never open the high side pressure valve.**

4. Open the manifold gauge low side valve and charge system to standard capacity.

Gauge Dial	Standard Reading
High Side Gauge	13 - 20 kg/cm^2 (185 - 285 psi)
Low Side Gauge	1.5 - 3.5 kg/cm^2 (22 - 50 psi)

NOTE: *These standards are for outside temperatures between 30° - 35°C (86° - 95°F). The gauge readings may vary for extreme temperature conditions.*

WARNING!

- **When outside temperature is low, warm the refrigerant supply container with warm water not exceeding 40°C (104°F). Do not allow water to come in contact with the charging adapter valve handle.**
- **When outside temperature is high, cool off refrigerant supply container and condenser to aid the refrigerant charging process.**

5. Close low-pressure side valve.
6. Shut off engine and close refrigerant supply container adapter valve. Disconnect manifold gauge hoses from vehicle.

https://truckmanualshub.com/

Inspecting System For Leakage

After completing charging procedures, clean all joints and connections with a clean dry cloth. Using a refrigerant leak detecting device or soapy water, inspect system for leaks starting from the high-pressure side.

NOTE: *When the refrigerant circulation has been stopped the high-pressure will start to decrease and the low-pressure will start to increase until they are equalized. Starting the inspection from the high side will result in a accurate test.*

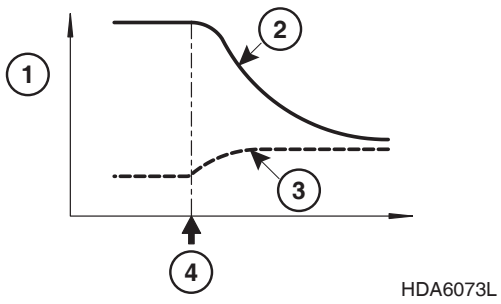

Figure 103

Reference Number	Description
1	Pressure
2	High-pressure
3	Low-pressure
4	Compressor Stop

Inspection Procedure

1. High-pressure Side

   Compressor outlet → condenser inlet → receiver dryer inlet → air conditioner unit inlet.

2. Low-pressure side

   Compressor inlet → air conditioner unit outlet.

3. Compressor

   Compressor shaft area, bolt hole area and magnetic clutch area.

4. Receiver dryer

   Pressure switch and plug area.

5. Connection valve area

   Inspect all valve areas.

   Verify all valves are capped to prevent leaking.

   Check for foreign material inside of valve cap.

6. Interior of air-conditioning unit.

   After stopping engine, insert detector probe into drain hose. (Leave inserted for 10 seconds minimum.)

   NOTE: *When inspecting leakage from the air-conditioning unit, perform the inspection in a well ventilated area.*

https://truckmanualshub.com/

WIPER SYSTEM

Wiper Circuit

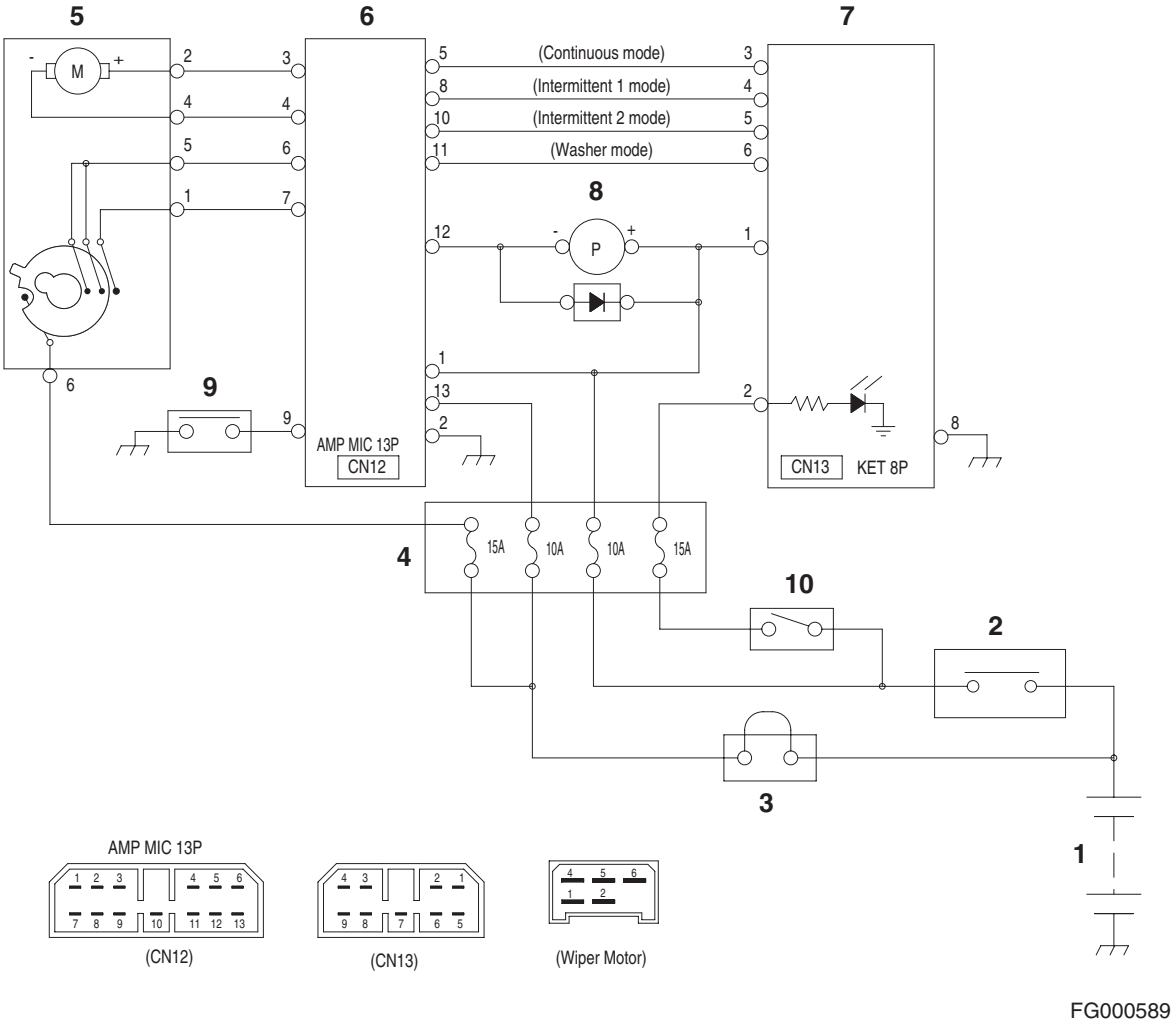

Figure 104

Reference Number	Description
1	Battery
2	Battery Relay
3	Fusible Link
4	Fuse Box
5	Wiper Motor

Reference Number	Description
6	Wiper Controller
7	Wiper Switch Panel
8	Window Washer
9	Wiper Cutoff Switch
10	Light Switch

https://truckmanualshub.com/

Wiper operation

Continuous operation

- Operation of wiper motor

Pressing the successive operation switch on the wiper switch panel (7) changes the voltage of the "5" terminal of the wiper controller (6) from HIGH (about 5.5 ±0.5V) to LOW (0+0.5V) and also current flows via the "3" terminal of the wiper controller (6) → the "2" and "4" terminals of the wiper motor (5) → the "4" terminal of the wiper controller (6) to run the wiper motor (5) continuously.

- Stop of wiper motor

Pressing again the successive operation switch on the wiper switch panel (7) changes the voltage of the "5" terminal of the wiper controller (6) from LOW (0+0.5V) to HIGH (about 5.5 ±0.5V). As the "5" and "6" terminals of the wiper motor are connected still that power is supplied to the "6" terminal of the wiper controller (6),

However, the controller (6) runs the wiper motor continuously and then rotates the motor reversely by " letting current flow via the "4" terminal of the wiper controller (6) → the "2" and "4" terminals of the wiper motor (5) → the "3" terminal of he wiper controller (6) when the "1" and "6" terminals of he wiper motor (5) are connected and thus power voltage is supplied to the "7" terminal of the wiper controller (6).

The Wiper motor (5) stops reverse revolution when the contact of a cam switch connected to the "6" terminal of the wiper motor (5) moves to an insulation area of the cam plate to disconnect the "5" and "6" terminals of the wiper motor (5).

When the wiper motor (5) stops, arm and blade connected to it move to the stop positions of the right pole in the cabin.

Intermittent operation

- Intermittent 1st (3-second)

Pressing once the Intermittent switch in the switch panel (7) changes voltage of the "8" terminal in the wiper controller (6) from HIGH (about 5.5 ±0.5V) to LOW (0+0.5V) and current flows through the "3" terminal in the wiper controller (6) → the "2" and "4" terminals in the wiper motor (5) → the "4" terminal in the wiper controller (6) to start the cycle that wiper stops 3 seconds after every operation.

https://truckmanualshub.com/

- Intermittent 2nd (6-second)

Pressing twice the Intermittent switch in the switch panel (7) changes voltage of the "10" terminal in the wiper controller (6) from HIGH (about 5.5 ±0.5V) to LOW (0+0.5V) and current flows through the "3" terminal in the wiper controller (6) → the "2" and "4" terminals in the wiper motor (5) → the "4" terminal in the wiper controller (6) to start the cycle that wiper stops 6 seconds after every operation.

- Stopping the intermittent action

Pressing three times the Intermittent switch in the switch panel (7) while the wiper is operating stops the action of the wiper motor.

NOTE: *The wiper system does not work when the wiper cutoff switch (9) is "ON."*

https://truckmanualshub.com/

https://truckmanualshub.com/

LIGHTING SYSTEM

Lighting System Circuit Diagram

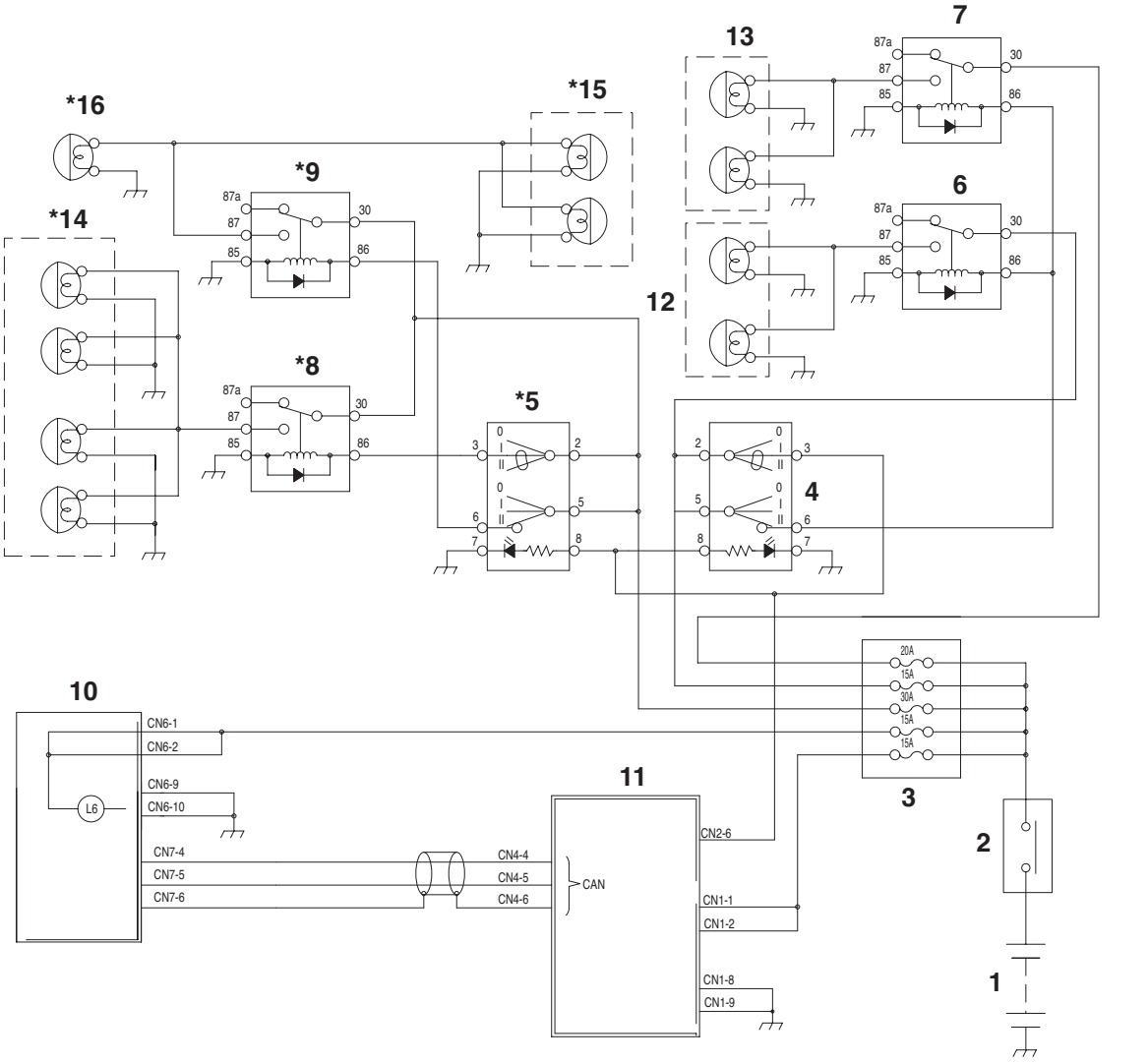

Figure 105

https://truckmanualshub.com/

Reference Number	Description
1	Battery
2	Battery Relay
3	Fuse Box
4	Light Switch
5	Cabin Light Switch
6	Headlight Relay (Work Light Indicate Light)
7	Work Light Relay
8	Front Cabin Light Relay

Reference Number	Description
9	Front Cabin Light / Rear Work Light Relay
10	Instrument Panel
11	e-EPOS Controller
12	Headlight (2 ea.)
13	Work Light (2 ea.)
14	Front Cabin Light (4 ea.)
15	Rear Cabin Light (2 ea.)
16	Rear Work Light (1 ea.)

NOTE: *The "*" mark are optional parts.*

Kind of Light

The lighting system is consists of headlights, work lights, cabin lights (optional), relays and switches.

Operation

Switch	Position	Connected Terminal of switch	Activated Relay	Lit Light
Light Switch	1	"2-3" Terminal	-	Illumination Light of Switch
	2	"2-3" Terminal	-	Illumination Light of Switch
		"5-6" Terminal	Headlight Relay	Headlight (2 Ea.)
			Work Relay	Work Light (2 Ea.) Indicator Light of Work Light (L6)
Cabin Light Switch	1	"2-3" Terminal	Front Cabin Light Relay	Front Cabin Light (2 Ea.) or Front Cabin Light (4 Ea.)
	2	"2-3" Terminal	Front Cabin Light Relay	Front Cabin Light (2 Ea.) or Front Cabin Light (4 Ea.)
		"5-6" Terminal	Rear Cabin Light Relay / Rear Work Light Relay	Rear Cabin Light (2 Ea.) and Rear Work Light (1 Ea.)

https://truckmanualshub.com/

AUDIO CONTROLLER

Audio Controller Circuit Diagram

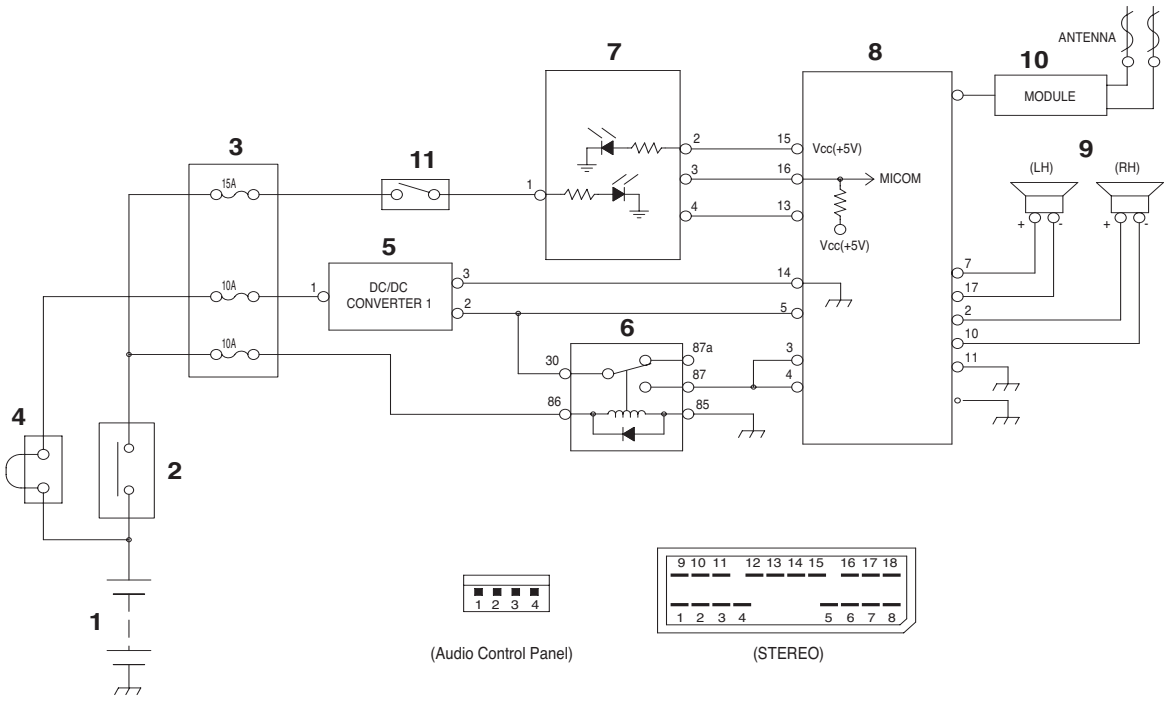

Figure 106

Reference Number	Description
1	Battery
2	Battery Relay
3	Fuse Box
4	Fusible Link
5	Converter
6	Stereo Relay

Reference Number	Description
7	Audio Control Panel
8	Stereo
9	Speaker
10	Antenna Module
11	Light Switch

Operations Via Audio Control Panel

Switch	Connected Terminal of switch	Measured values	Operations
PWR	"3-4"	4.36 ±0.2V	Stereo ON, OFF
▲		1.24 ±0.2V	Volume up
▼		0+0.2V	Volume down
SCAN		2.49 ±0.2V	Frequency selection

https://truckmanualshub.com/

SP001357

Electrical Schematic (DX140LC)

Edition 1

https://truckmanualshub.com/

MEMO

https://truckmanualshub.com/

Table of Contents

Electrical Schematic (DX140LC)

Safety Precautions 5
Applicable Models 5
DX140LC 7

https://truckmanualshub.com/

MEMO

https://truckmanualshub.com/

SAFETY PRECAUTIONS

CAUTION!

Follow all safety recommendations and safe shop practices outlined in the front of this manual or those contained within this section.

Always use tools and equipment that are in good working order.

Use lifting and hoisting equipment capable of safely handling load.

Remember, that ultimately safety is your own personal responsibility.

APPLICABLE MODELS

The contents of this section apply to the following models and serial number ranges.

MODEL	SERIAL NUMBER RANGE
DX140LC	5001 and Up

https://truckmanualshub.com/

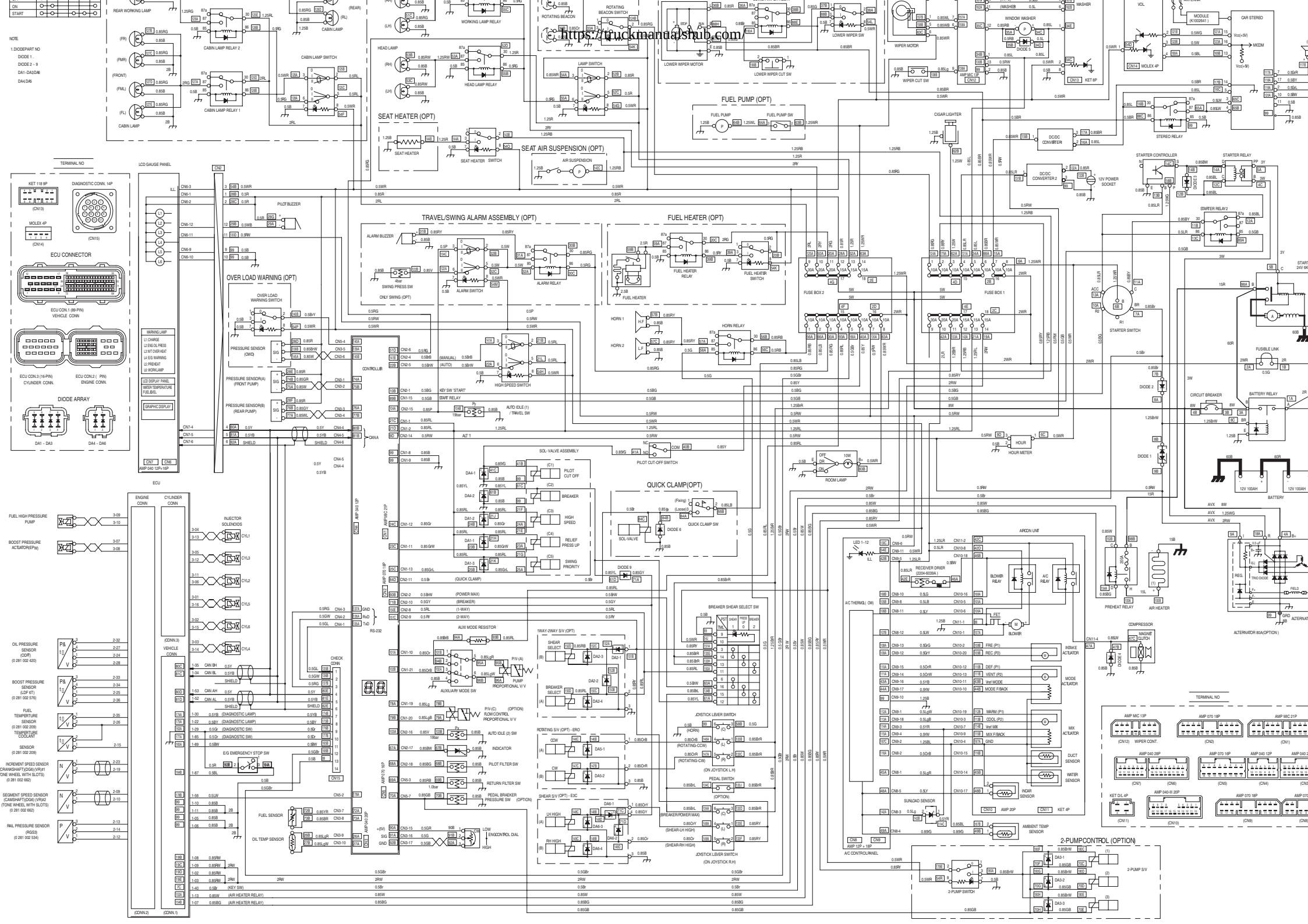

https://truckmanualshub.com