https://truckmanualshub.com/

DYNAPAC
FAYAT GROUP

Instruction manual

Operating & Maintenance

4812160801_G.pdf

Vibratory roller
CC800/900/1000

Engine
Kubota D1105-E4B
Kubota D1105-E4B T4F / Stage V

Serial number
10000357xxA012892 -
10000358xxA012889 - xA023346
10000360xxA012890 - xA023344
10000440xxA023605 -
10000441xxA023347 -
10000443xxA023345 -

Translation of original instruction

Reservation for changes
Printed in Sweden

EN

https://truckmanualshub.com/

https://truckmanualshub.com/

Table of Contents

Introduction 1
The machine 1
Intended use 1
Signal symbols and meaning 1
Safety information 1
General 2
CE marking and Declaration of conformity 3
Safety - General instructions 5
Safety - when operating 7
Sitting position 7
Work driving 7
Driving near edges 8
Special instructions 9
Standard lubricants and other recommended oils and fluids 9
Higher ambient temperatures, above +40°C (104°F) 9
Lower ambient temperature - Freeze risk 9
Temperatures 9
High pressure cleaning 9
Fire fighting 10
Roll Over Protective Structure (ROPS) 10
Battery handling 10
Jump starting 11
Technical specifications 13
Vibrations - Operator station 13
Noise level 13
Electrical system 13
Slopes 13
Dimensions, side view 14
Dimensions, top view 15
Weights and volumes 16

https://truckmanualshub.com/

Working capacity ... 16
General ... 17
CO_2-emission ... 17
Tightening torque ... 18
ROPS - bolts ... 19
Hydraulic system ... 19
Machine description ... 21
Diesel engine ... 21
Electrical system ... 21
Propulsion system/Transmission ... 21
Brake system ... 21
Steering system ... 21
ROPS ... 21
Identification ... 22
Product identification number on the frame ... 22
Machine plate ... 23
Explanation of 17PIN serial number ... 23
Engine plates ... 24
Decals ... 25
Location - decals ... 25
Location - decals, CALIFORNIA ... 27
Safety decals ... 27
Info decals ... 30
Fuel ... 31
Instruments/Controls ... 32
Locations - Instruments and controls ... 32
Locations - Control panel and controls ... 33
Function description ... 34
Electrical system ... 36
Fuses ... 36

https://truckmanualshub.com/

Fuses in engine compartment ... 37
Relays ... 37
Operation ... 39
Before starting ... 39
Battery isolation switch - On - Optional ... 39
PLUS version ... 39
CC version ... 39
Driver seat (CC version) - Adjustment ... 39
Driver seat (Plus version) - Adjustment ... 40
Instruments and lamps - Checking ... 40
Interlock ... 41
Operator position ... 42
Starting ... 43
Starting the engine ... 43
Driving ... 45
Operating the roller ... 45
Interlock/Emergency stop/Parking brake - Check ... 46
Vibration ... 46
Manual/Automatic vibration ... 46
Manual vibration - Switching on ... 47
Braking ... 47
Normal braking ... 47
Emergency braking ... 48
Switching off ... 48
Parking ... 49
Chocking the drums ... 49
Master switch - Optional ... 49
PLUS version ... 49
CC version ... 49
Long-term parking ... 51

https://truckmanualshub.com/

Engine ... 51
Battery ... 51
Air cleaner, exhaust pipe ... 51
Sprinkler system ... 51
Fuel tank ... 51
Hydraulic reservoir ... 52
Steering cylinder, hinges, etc. ... 52
Hoods, tarpaulin ... 52
Miscellaneous ... 53
Lifting ... 53
Locking the articulation ... 53
Lifting the roller ... 53
Unlocking the articulation ... 54
Transport ... 54
Securing CC800/900/1000 for loading ... 55
Towing/Recovering ... 56
Releasing the brake ... 57
Towing the roller ... 58
Operating instructions - Summary ... 59
Preventive maintenance ... 61
Acceptance and delivery inspection ... 61
Warranty ... 61
Maintenance - Lubricants and symbols ... 63
Maintenance symbols ... 65
Maintenance - Maintenance schedule ... 67
Service and maintenance points ... 67
General ... 68
Every 10 hours of operation (Daily) ... 68
After the FIRST 50 hours of operation ... 69
Every 50 hours of operation (Weekly) ... 69

https://truckmanualshub.com/

Every 250 / 750 / 1250 / 1750 hours of operation 69
Every 500 / 1500 hours of operation 70
Every 1000 hours of operation 71
Every 2000 hours of operation 72
Service - Checklist 73
Maintenance, 10h 75
Diesel engine Check oil level 75
Hydraulic reservoir, Level check - Filling 76
Check - Coolant system 76
Refueling 77
Water tank - Filling 77
Sprinkler system/Drum
Cleaning of sprinkler nozzle 78
Sprinkler system - Check, cleaning 78
Air circulation - Check 79
Scrapers - Check, adjustment 79
Warning lamps - Check 80
Air cleaner indicator 80
Brakes - Check 81
Maintenance - 50h 83
Air cleaner - emptying 83
Rubber elements and fastening screws - Check 84
Belt tension on the hydraulic vibration and steering pump drive belt - Check 84
Maintenance measures - 250 h 85
Air cleaner - Cleaning - Change 85
Hydraulic fluid cooler - Cleaning 86
Forward/Reverse controls and joints - Check and lubrication 86
Maintenance measures - 500 h 87
Hydraulic fluid cooler - Cleaning 87

https://truckmanualshub.com/

Forward/Reverse controls and joints - Check and lubrication 88
Air cleaner - Cleaning - Change 89
Engine oil and oil filter - Change 90
Check - Coolant system 91
Drum - Checking the oil level 91
Hydraulic reservoir - Check/venting 92
Belt tension on the hydraulic vibration and steering pump drive belt - Check 92
Maintenance - 1000h 93
Hydraulic fluid cooler - Cleaning 93
Forward/Reverse controls and joints - Check and lubrication 94
Air cleaner - Cleaning - Change 95
Engine oil and oil filter - Change 96
Check - Coolant system 97
Drum - Checking the oil level 97
Hydraulic reservoir - Check/venting 98
Hydraulic fluid filter - Change 99
Alternator belt - Checking tension - Change 99
Belt tension on the hydraulic vibration and steering pump drive belt - Check 100
Maintenance - 2000h 101
Hydraulic fluid cooler - Cleaning 101
Forward/Reverse controls and joints - Check and lubrication 102
Air cleaner - Cleaning - Change 103
Engine oil and oil filter - Change 104
Check - Coolant system 105
Drum - Checking the oil level 105
Hydraulic reservoir - Check/venting 106
Hydraulic fluid filter - Change 107
Hydraulic reservoir - fluid change 108

https://truckmanualshub.com/

Alternator belt - Checking tension - Change 109
Water tank - Cleaning 109
Drum - Changing the oil 110
Fuel tank - Cleaning 110
Steering joint - Check 111
Belt tension on the hydraulic vibration and steering pump drive belt - Check 111

https://truckmanualshub.com/

https://truckmanualshub.com/

Introduction

The machine

Dynapac CC800/900/1000 are self-propelled vibratory tandem rollers in the 1,6 metric tonnes class featuring 800/900/1000 mm wide drums. The machine is equipped with drive, brakes, and vibration on both drums.

Intended use

CC800/900/1000 are primarily used for smaller compaction works, such as minor roads, sidewalks, cycle ways and minor parking places.

Signal symbols and meaning

WARNING ! Indicates potential hazardous situation/procedure which, if not avoided, could result in death or serious injury.

CAUTION ! Indicates potential hazardous situation/procedure which, if not avoided, could result in minor or moderate injury, damage to the machine or property.

Safety information

It is recommended to at least train operators in handling and daily maintenance of the machine in accordance with the instruction manual. Passengers are not allowed on the machine, and you must sit in the seat when operating the machine.

The safety manual supplied with the machine must be read by all roller operators. Always follow the safety instructions. Do not remove the manual from the machine.

We recommend that the operator reads the safety instructions in this manual carefully. Always follow the safety instructions. Ensure that this manual is always easily accessible.

Read the entire manual before starting the machine and before carrying out any maintenance.

https://truckmanualshub.com/

Ensure good ventilation (extraction of air by fan) where the engine is run indoors.

Replace immediately the instruction manuals if lost, damaged or unreadable.

Prevent persons from entering or remaining in the risk zone, i.e. a distance of at least 7 m (23 ft) in all directions from operating machines. The operator may allow a person to remain in the risk zone, however he/she must be attentive and operate the machine only when the person is fully visible or has given a clear indication of where he or she is.

CALIFORNIA

Proposition 65

Decal and location of decal shown in section Machine description.

⚠ **WARNING**: Breathing diesel engine exhaust exposes you to chemicals known to the State of California to cause cancer and birth defects or other reproductive harm.

- Always start and operate the engine in a well-ventilated area.
- If in an enclosed area, vent the exhaust to the outside.
- Do not modify or tamper with the exhaust system.
- Do not idle the engine except as necessary.

For more information go to www.P65warnings.ca.gov/diesel.

General

This manual contains instructions for machine operation and maintenance.

The machine must be correctly maintained for maximal performance.

The machine should be kept clean so that any leakages, loose bolts and loose connections are discovered at as early a point in time as possible.

Inspect the machine every day, before starting.

https://truckmanualshub.com/

Inspect the entire machine so that any leakages or other faults are detected.

Check the ground under the machine. Leakages are more easily detected on the ground than on the machine itself.

THINK ENVIRONMENT ! Do not release oil, fuel and other environmentally hazardous substances into the environment. Always send used filters, drain oil and fuel remnants to environmentally correct disposal.

This manual contains instructions for periodic maintenance, where maintenance after every 10 and 50 hours of operation can be performed by the machine operator. Other maintenance intervals must be carried out by accredited (Dynapac) service personnel.

Additional instructions for the engine can be found in the manufacturer's engine manual.

Specific maintenance and checks on diesel engines must be performed by engine supplier authorized personnel.

CE marking and Declaration of conformity

(Applies to machines marketed in EU/EEC)

This machine is CE marked. This shows that on delivery it complies with the basic health and safety directives applicable for the machine in accordance with machinery directive 2006/42/EC and that it also complies with other regulations and directives applicable for this machine.

A "Declaration of conformity" is supplied with this machine, which specifies the applicable regulations and directives with supplements, as well as the harmonized standards and other regulations that are applied and according to the regulations must be declared in writing.

https://truckmanualshub.com/

https://truckmanualshub.com/

Safety - General instructions

(Also read the safety manual)

- **The operator must be familiar with the contents of the OPERATION section before starting the roller.**
- **Ensure that all instructions in the MAINTENANCE section are followed.**
- **Only the operator is allowed to be on the roller. Remain seated at all times when operating the roller.**
- **Never use the roller if it is in need of adjustment or repair.**
- **Only ascend and descend the roller when it is stationary. Use the intended footsteps, grips and rails. Always use the three-point grip (both feet and one hand, or one foot and both hands) when ascending or descending the machine. Never jump down from the machine.**
- **Dynapac always recommends mounted ROPS (Roll Over Protective Structure), or a ROPS-approved cab and seat belt usage.**
- **Drive slowly in sharp bends.**
- **Avoid driving across slopes. Drive straight up or straight down the slope.**
- **Never operate with the drum outside the edge, the substrate might not have full bearing strength or the edge is close to a slope. Avoid operating close to edges and ditches and the like as well as on poor ground conditions that jeopardizes the bearing strength and capacity to support the roller.**
- **Make sure that there are no obstacles in the direction of travel, on the ground, in front of or behind the roller, or overhead.**
- **Drive particularly carefully on uneven ground.**
- **Keep the roller clean. Clean any dirt or grease that accumulates on the footsteps or operator platform to avoid slipping risk. Keep all signs and decals clean and legible.**
- **Safety measures before refueling:**
  - Stop the engine
  - Do not smoke.
  - No naked flames in the vicinity of the roller.
  - Earth the filling equipment nozzle by keeping it in contact to the tank opening to avoid sparks.
- **Before repairs or service:**
  - Chock the drums/wheels.
  - Lock the articulation if necessary.
  - Place blocks under overhanging equipment, such as strike-off blade, edge cutter/compactor and chip spreader.

https://truckmanualshub.com/

- **Hearing protection is recommended if the noise level exceeds 80 dB(A). The noise level can vary depending on the equipment on the machine and the surface the machine is being used on.**

- **Modifications to the roller, including the use of any attachment/equipment, not approved by Dynapac that might compromise safety (including visibility) are not allowed. Any modifications are only to be made after written approval has been given by Dynapac.**

- **Avoid using the roller before the hydraulic fluid has reached its normal working temperature. Braking distances can be longer than normal when the fluid is cold.**

- **For your own protection always wear:**
  - working boots with steel toecaps
  - ear protectors
  - reflecting clothing/high visibility jacket
  Also wear:
  - helmet if no cab or FOPS, or if required by worksite management
  - working gloves if no cab and for work outside operator´s platform.

- **If the machine seems to be responding abnormally during travel, stop and check it.**

https://truckmanualshub.com/

Safety - when operating

Prevent persons from entering or remaining in the risk zone, i.e. a distance of at least 7 m (23 ft) in all directions from operating machines.
The operator may allow a person to remain in the risk zone, however he/she must be attentive and operate the machine only when the person is fully visible or has given a clear indication of where he or she is.

Avoid driving across a slope. Drive straight up and down sloping ground.

Sitting position

Remain seated at all times when operating the roller. If the operator stands up during operation, a buzzer sounds. After 4 seconds the brakes are activated and the engine stops. Brace yourself for a sudden stop.

Always use the seat belt where fitted. Where the seat belt is not used, there is a great risk that the operator will be thrown off and land under the machine if the machine topples over.

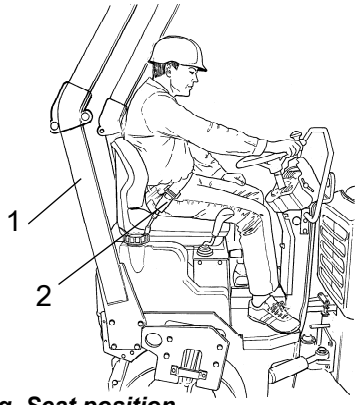

Fig. Seat position
1. ROPS
2. Seat belt

The seat belt is standard equipment on rollers fitted with Roll Over Protective Structure (ROPS) (1).

ROPS should always be in the raised position when machines with foldable ROPS are operated

Work driving

Dynapac always recommends mounted ROPS (Roll Over Protective Structure) and seat belt usage.
On machines with foldable ROPS, make sure that the ROPS is correctly mounted in the upright position during all operation.

https://truckmanualshub.com/

Avoid operating close to edges and ditches and the like as well as on poor ground conditions that jeopardizes the bearing strength and capacity to support the roller. Pay attention to potential obstacles above the machine, such as overhead cables and the branches of trees etc.

Pay particular attention to the stability of the substrate when compacting close to edges and holes. Do not compact with a large overlap from the previous track in order to maintain roller stability. Consider other compaction methods such as remote-control or a walk-behind roller close to steep slopes or where the bearing strength of the substrate is unknown.

Driving near edges

Never operate with the drum outside the edge, the substrate might not have full bearing strength or the edge is close to a slope.

Keep in mind that the machine's center of gravity moves outwards when steering. For example, the center of gravity moves to the right when you steer to the left.

https://truckmanualshub.com/

Special instructions

Standard lubricants and other recommended oils and fluids

Before leaving the factory, the systems and components are filled with the oils and fluids specified in the lubricant specification. These are suitable for ambient temperatures in the range -15°C to +40°C (5°F - 105°F).

The maximum ambient temperature for biological hydraulic fluid is +35°C (95°F).

Higher ambient temperatures, above +40°C (104°F)

For operation of the machine at higher ambient temperatures, however maximum +50°C (122°F), the following recommendations apply:

The diesel engine can be run at this temperature using normal oil. However, the following fluids must be used for other components:

Hydraulic system - mineral oil Shell Tellus S2V100 or similar.

Lower ambient temperature - Freeze risk

Make sure that the watering system is empty/drained of water (sprinkler, hoses, tank/s) or that anti-freeze has been added, to prevent the system freezing.

Temperatures

The temperature limits apply to standard versions of rollers.

Rollers equipped with additional equipment, such as noise suppression, may need to be more carefully monitored in the higher temperature ranges.

High pressure cleaning

Do not spray water directly onto electrical components or the instrument panels.

Place a plastic bag over the fuel filler cap and secure with a rubber band. This is to avoid high pressure water entering the vent hole in the filler cap. This could cause malfunctions, such as the blocking of filters.

Never aim the water jet directly at the fuel tank cap, or into exhaust pipe. This is particularly important when using a high-pressure cleaner.

https://truckmanualshub.com/

Fire fighting

If the machine catches fire, use an ABC-class powder fire extinguisher.

A BE-class carbon dioxide fire extinguisher can also be used.

Roll Over Protective Structure (ROPS)

Never carry out any welding or drilling in the Roll Over Protective Structure (ROPS).

Never repair a damaged ROPS structure, it must be replaced with a new one.

Battery handling

When removing batteries, always disconnect the negative cable first.

When fitting batteries, always connect the positive cable first.

Dispose of old batteries in an environmentally friendly way. Batteries contain toxic lead.

Do not use a quick-charger for charging the battery. This may shorten battery life.

https://truckmanualshub.com/

Jump starting

Do not connect the negative cable to the negative terminal on the dead battery. A spark can ignite the oxy-hydrogen gas formed around the battery.

Check that the battery used for jump starting has the same voltage as the dead battery.

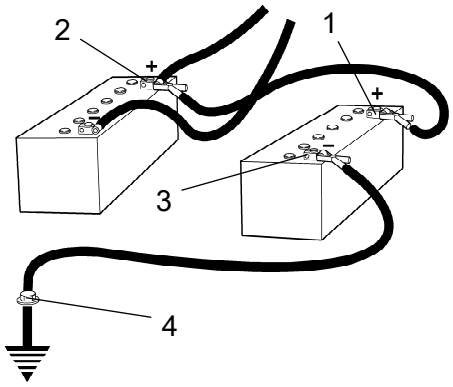

Fig. Jump starting

Turn the ignition and all power consuming equipment off. Switch off the engine on the machine which is providing jump start power.

First connect the jump start battery's positive terminal (1) to the flat battery's positive terminal (2).Then connect the jump start battery's negative terminal (3) to, for example, a bolt (4) or the lifting eye on the machine with the flat battery.

Start the engine on the power providing machine. Let it run for a while. Now try to start the other machine. Disconnect the cables in the reverse order.

https://truckmanualshub.com/

https://truckmanualshub.com/

Technical specifications

Vibrations - Operator station

(ISO 2631)

The vibration levels are measured in accordance with the operational cycle described in EU directive 2000/14/EC on machines equipped for the EU market, with vibration switched on, on soft polymer material and with the operator's seat in the transport position.
Measured whole-body vibrations are below the action value of 0.5 m/s² as specified in Directive 2002/44/EC. (Limit is 1.15 m/s²)
Measured hand/arm vibrations also were below the action level of 2.5 m/s² specified in the same directive. (Limit is 5 m/s²)

Noise level

The noise level is measured in accordance with the operational cycle described in EU directive 2000/14/EC on machines equipped for the EU market, on soft polymer material with vibration switched on and the operator's seat in the transport position.

Guaranteed sound power level, L_{wA}	104 dB (A)
Sound pressure level at the operator's ear (platform), L_{pA}	80 ±3 dB (A)

Electrical system

Machines are EMC tested in accordance with EN 13309:2000 'Construction machinery'

Slopes

Max 20° or 36%

The recommended max slope angle is for a straight machine on hard, flat surface.

Unstable ground, vibration on, speed and steering the machine can all cause the machine to topple at smaller angles than specified here.

https://truckmanualshub.com/

Dimensions, side view

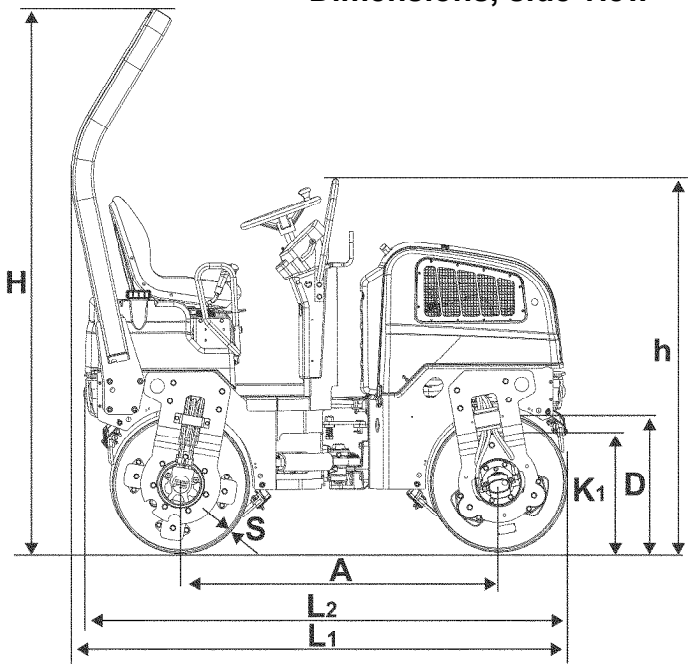

	Dimensions	mm	in
A	Wheel base	1350	53.2
D	Diameter, drum	588	23.2
H	Height, with ROPS	2300	90.6
h	Height, without ROPS	1520	59.8
K_1		465	18.3
L_1		2095	82.5
L_2		2040	80.3
S	Thickness, drum amplitude, Nominal		
	CC800	14	0.55
	CC900	15	0.59
	CC1000	13	0.51

https://truckmanualshub.com/

Dimensions, top view

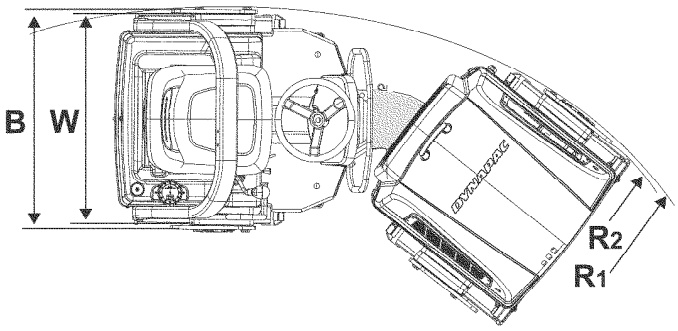

	Dimensions	mm	in
B	Machine width		
	CC800	874	34.4
	CC900	974	38.4
	CC1000	1074	42.3
R_1	Turning radius, outer		
	CC800	2650	104.3
	CC900	2700	106.3
	CC1000	2750	108.3
R_2	Turning radius, outer, drum edge		
	CC800	2610	102.8
	CC900	2660	104.7
	CC1000	2710	106.7
W	Drum width		
	CC800	800	31.5
	CC900	900	35.4
	CC1000	1000	39.4

https://truckmanualshub.com/

Weights and volumes

Weights

Service weight with ROPS (EN500)		
CC800	1510 kg	3,329 lbs
CC900	1580 kg	3,483 lbs
CC1000	1650 kg	3,638 lbs

Fluid volumes

Fuel tank	23 liters	6,0 gal
Water tank		
- Standard (CC version)	110 liters	29 gal
- Large (Plus version)	190 liters	50 gal

Working capacity

Compaction data

Static linear load	Front	Rear	
CC800	8,8	10,1	kg/cm
	49,3	56,6	pli
CC900	8,6	8,9	kg/cm
	48,2	49,9	pli
CC1000	8,1	8,4	kg/cm
	45,4	47	pli

Amplitude				
CC800	0,4	mm	0.02	in
CC900	0,4	mm	0.02	in
CC1000	0,35	mm	0.01	in

Vibration frequency	68	Hz	4,080	rpm

Centrifugal force	17	kN	3,825	lb

https://truckmanualshub.com/

Propulsion

Speed range	0-8	kph	0-5	mph
Climbing capacity (theoretical)	40	%		

Note: The frequency is measured at high revs. The amplitude is measured as the real value and not the nominal.

General

Engine

Manufacturer/Model	Kubota D1105-E4B
Power	
- kW	18.1
- HP	24,6
Engine speed	2800 rpm

CO_2-emission

CO_2-emissions measured according to applicable test cycle in Regulation (EU) 2016/1628.

Manufacturer/Model	Test-cycle	CO_2-emission (g/kWh)
Kubota D1105-E4B T4F / Steg V Stage V	NRSC	1018.0

NRTC: Non-road transient test cycles.

Electrical system

Battery	12V 60Ah
Alternator	12V 40A
Fuses	See the Electrical system section - fuses

https://truckmanualshub.com/

Tightening torque

Tightening torque in Nm for oiled or dry bolts tightened with a torque wrench.

Metric coarse screw thread, bright galvanized (fzb):

STRENGTH CLASS:

M - thread	8.8, Oiled	8.8, Dry	10.9, Oiled	10.9, Dry	12.9, Oiled	12.9, Dry
M6	8,4	9,4	12	13,4	14,6	16,3
M8	21	23	28	32	34	38
M10	40	45	56	62	68	76
M12	70	78	98	110	117	131
M14	110	123	156	174	187	208
M16	169	190	240	270	290	320
M20	330	370	470	520	560	620
M22	446	497	626	699	752	839
M24	570	640	800	900	960	1080
M30	1130	1260	1580	1770	1900	2100

Metric coarse thread, zinc-treated (Dacromet/GEOMET):

STRENGTH CLASS:

M - thread	10.9, Oiled	10.9, Dry	12.9, Oiled	12.9, Dry
M6	12,0	15,0	14,6	18,3
M8	28	36	34	43
M10	56	70	68	86
M12	98	124	117	147
M14	156	196	187	234
M16	240	304	290	360
M20	470	585	560	698
M22	626	786	752	944
M24	800	1010	960	1215
M30	1580	1990	1900	2360

https://truckmanualshub.com/

ROPS - bolts

Bolt dimensions :	M12 (PN 4700508063)
Strength class :	8.8
Tightening torque :	70 Nm

ROPS-bolts which are to be torque tightened must be dry.

Hydraulic system

Opening pressure	MPa	Psi
Drive system	35,0	5076
Supply system	2,0	290
Vibration system	22,0	3190
Control systems	7,0	1015
Brake disengagement	2,0	290

https://truckmanualshub.com/

https://truckmanualshub.com/

Machine description

Diesel engine

The machine is equipped with a water-cooled, straight three cylinder, four-stroke, turbocharged diesel engine.

Electrical system

The machine has the following control units (ECU, Electronic Control Unit) and electronic units.

- Main ECU (for the machine)

Propulsion system/Transmission

The propulsion system is a hydrostatic system with a hydraulic pump supplying two motors connected in parallel.
The motors drive the front and rear drums.

The speed of the machine is proportional to the deflection/angle of the control lever from neutral.

Brake system

The brake system consists of a service brake, secondary brake and parking brake.
The service brake is hydrostatisc and is activated by moving the control lever to neutral.

Secondary/Parking brake

The secondary and parking brake system consists of sprung multiple disc brakes in the motors. The brakes are released with hydraulic pressure and are operated with a switch on the instrument panel.

Steering system

The steering system is a hydrostatic system.
The control value on the steering column distributes the flow to the control cylinder, which actuates the articulation.
The steering angle is proportional to the deflection of the steering wheel.

ROPS

ROPS is the abbreviation for "Roll Over Protective Structure".

If any part of the ROPS structure's protective construction displays plastic deformation or cracks, the ROPS structure must be replaced immediately.

Never perform unauthorized modifications on the ROPS structure without first having discussed the modification with Dynapac's production unit. Dynapac

https://truckmanualshub.com/

determines whether the modification could result in the approval according to the ROPS standards becoming invalid.

Identification

Product identification number on the frame

The machine PIN (Product Identification Number) (1) is punched on the right edge of the front frame.

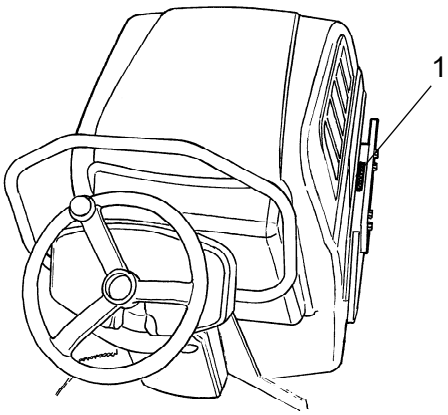

Fig. PIN right side

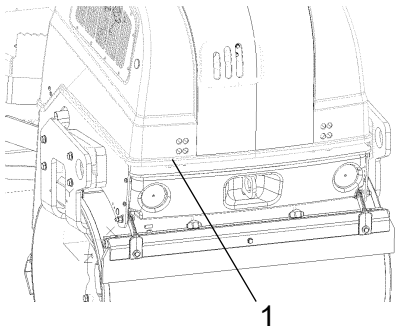

Fig. PIN front right

https://truckmanualshub.com/

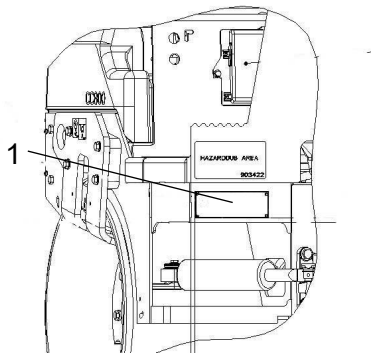

Fig. Operator's platform, right side
1. Machine plate

Machine plate

The machine plate (1) is attached to the front right side of the rear frame, beside the steering joint.

The plate specifies the manufacturers name and address, the type of machine, the PIN, Product Identification Number (serial number), operating weight, engine power and year of manufacture. CE markings and the year of manufacture may be omitted on machines supplied to markets outside the EU.

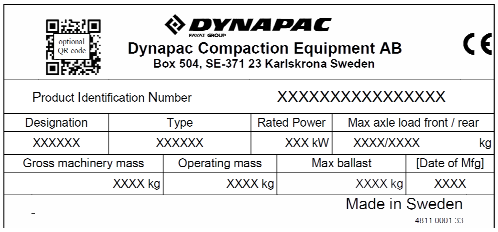

optional QR code

DYNAPAC FAYAT GROUP

Dynapac Compaction Equipment AB
Box 504, SE-371 23 Karlskrona Sweden

CE

Product Identification Number			
XXXXXXXXXXXXXXXX			
Designation	Type	Rated Power	Max axle load front / rear
XXXXXX	XXXXXX	XXX kW	XXXX/XXXX kg

Gross machinery mass	Operating mass	Max ballast	[Date of Mfg]
XXXX kg	XXXX kg	XXXX kg	XXXX

Made in Sweden

Please state the machine's PIN when ordering spares.

Explanation of 17PIN serial number

100	00123	V	x	A	123456
A	B	C	F		

A= Manufacturer

B= Family/Model

C= Check letter

F= Serial number

https://truckmanualshub.com/

Engine plates

The engine's type plate (1) is located on top of the cylinder head cover.

The plate specifies the type of engine, its serial number and the engine specification.

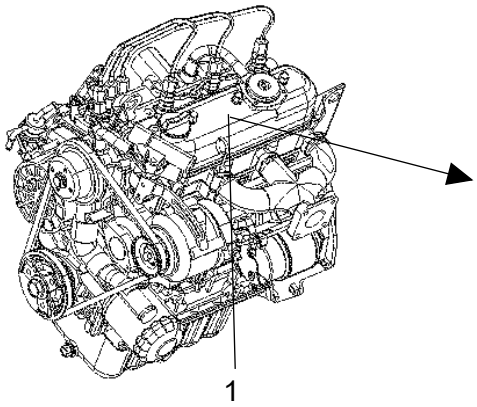

Fig. Engine
1. Type plate

Please specify the engine serial number when ordering spares. Refer also to the engine manual.

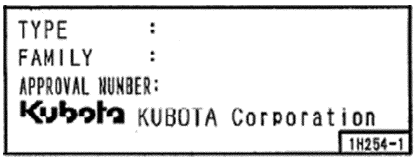

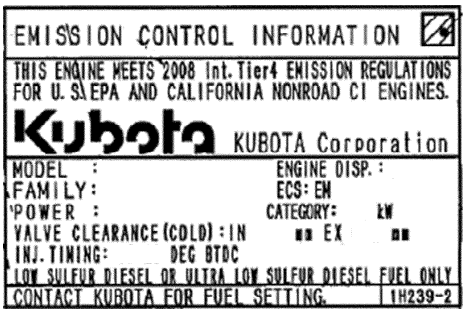

https://truckmanualshub.com/

Decals

Location - decals

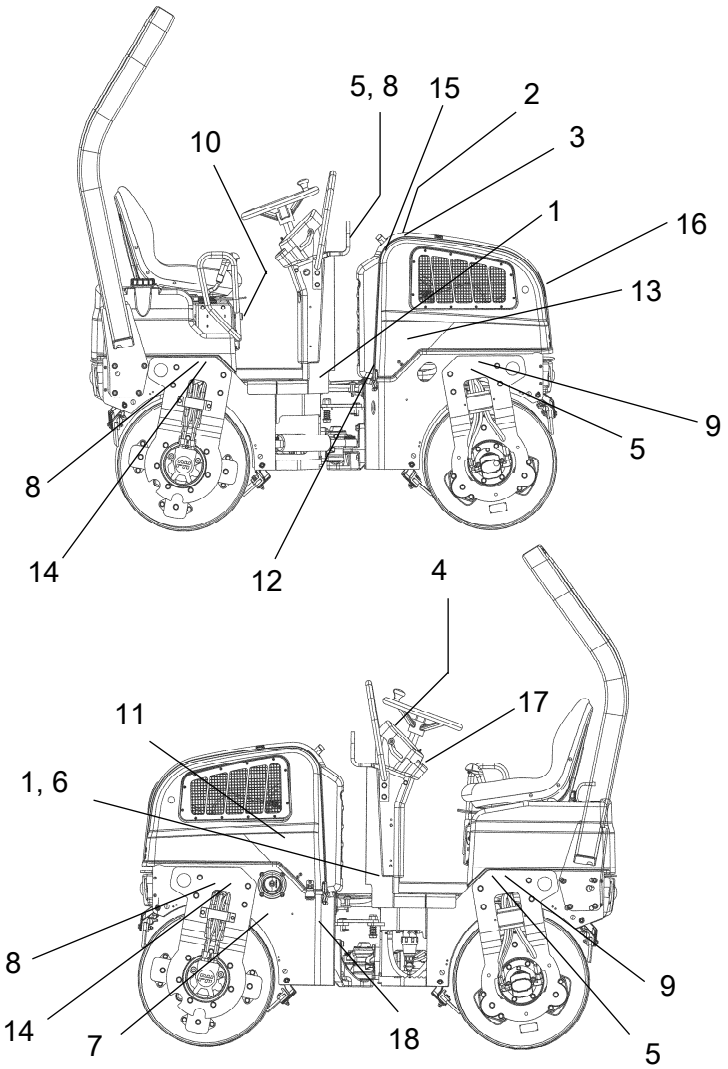

Fig. Location, decals and signs

1.	Warning, Crush zone	4700903422
2.	Warning, Rotating engine components	4700903423
3.	Warning, Hot surfaces	4700903424
4.	Warning, Instruction manual	4700903459
5.	Warning, Locking	4700908229
6.	Acoustic power level	4700791293
7.	Diesel fuel	4700991658
8.	Lifting point	4700357587
9.	Hoisting plate	4700904870
10.	Handbook compartment	4700903425
11.	Battery disconnector (Option)	4700904835
12.	Hydraulic fluid level	4700272373
13.	Bio hydraulic fluid PANOLIN (Option)	4700792772
14.	Fixing point	4700382751
15.	Warning, Tip-over risk *)	4811000351
16.	Warning, Starting gas	4700791642
17.	Starting instruction	4700379012
18.	Warning - Locking during transport	4812125363

*) Applies only CC800/900 equipped with ROPS.

https://truckmanualshub.com/

Decals

Location - decals

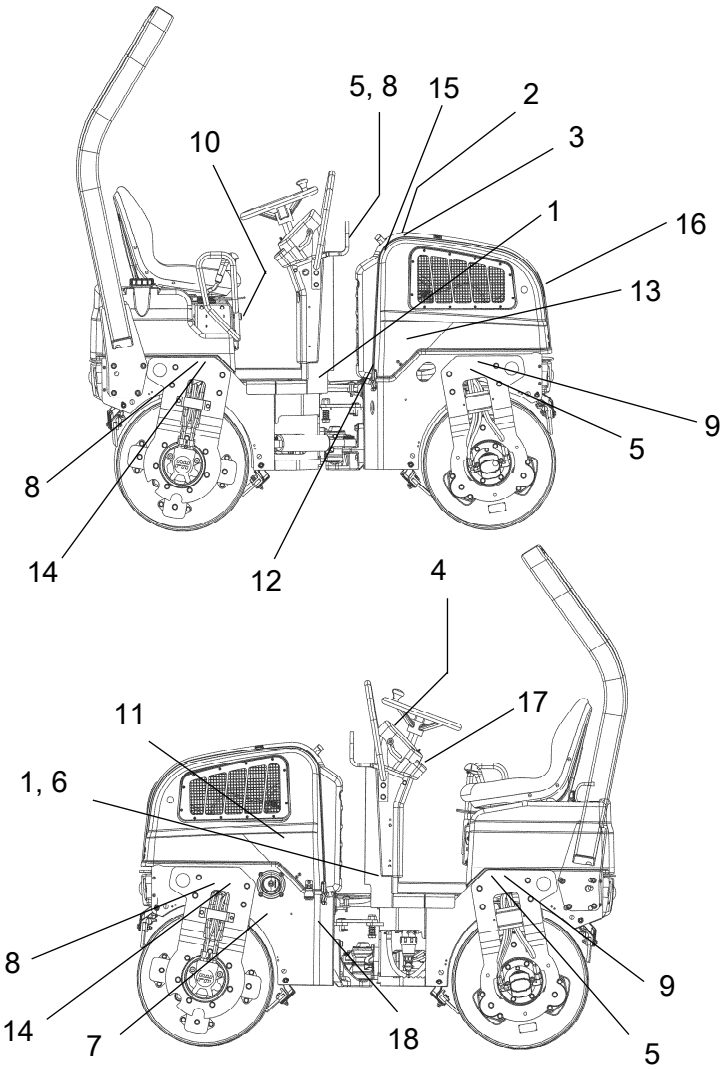

Fig. Location, decals and signs

1.	Warning, Crush zone	4700903422
2.	Warning, Rotating engine components	4700903423
3.	Warning, Hot surfaces	4700903424
4.	Warning, Instruction manual	4700903459
5.	Warning, Locking	4700908229
6.	Acoustic power level	4700791293
7.	Diesel fuel	4700991658
8.	Lifting point	4700357587
	*) Applies only CC800/900 equipped with ROPS.	
9.	Hoisting plate	4700904870
10.	Handbook compartment	4700903425
11.	Battery disconnector (Option)	4700904835
12.	Hydraulic fluid level	4700272373
13.	Bio hydraulic fluid PANOLIN (Option)	4700792772
14.	Fixing point	4700382751
15.	Warning, Tip-over risk *)	4811000351
16.	Warning, Starting gas	4700791642
17.	Starting instruction	4700379012
18.	Warning - Locking during transport	4812125363

https://truckmanualshub.com/

Location - decals, CALIFORNIA

Proposition 65

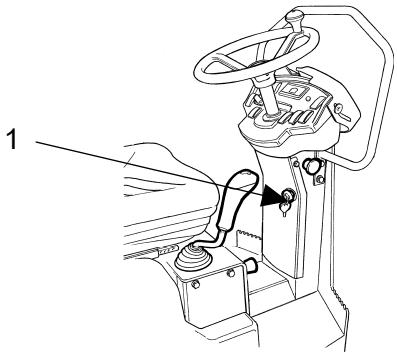

Fig. Location

1.	Warning, CALIFORNIA Proposition 65	4812129673

Safety decals

Always make sure that all safety decals are completely legible, and remove dirt or order new decals if they have become illegible. Use the part number specified on each decal.

If a part is replaced and this part have a decal, make sure to also order the decal.

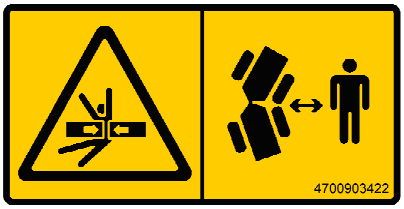

4700903422
Warning - Crush zone, articulation/drum.

Maintain a safe distance from the crush zone.
(Two crush zones on machines fitted with pivotal steering)

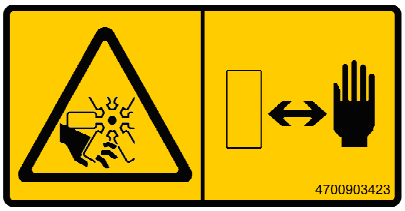

4700903423
Warning - Rotating engine components.

Keep your hands at a safe distance.

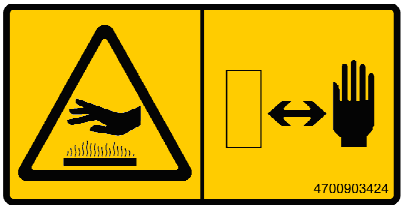

4700903424
Warning - Hot surfaces in the engine compartment.

Keep your hands at a safe distance.

https://truckmanualshub.com/

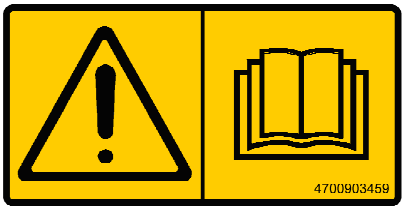

4700903459
Warning - Instruction manual

The operator must read the safety, operation and maintenance instructions before operating the machine.

4700908229
Warning - Risk of crushing

The articulation must be locked when lifting.

Read the instruction manual.

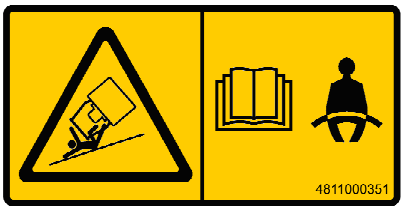

4811000351
Warning - Risk of tip over

If ROPS (Roll Over Protective Structure) is fitted to the roller, always wear the seat belt.

Read the instruction manual.

4700791642
Warning - Starting gas

Starting gas is not to be used.

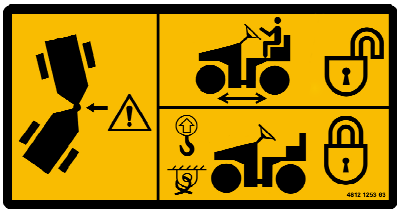

4812125363
Warning - Locking

The articulation must be locked during transport and lifting,

but be open during operation.

Read the instruction manual.

https://truckmanualshub.com/

4812129673
Warning

CALIFORNIA - Proposition 65

WARNING

Breathing diesel engine exhaust exposes you to chemicals known to the State of California to cause cancer and birth defects or other reproductive harm.

- Always start and operate the engine in a well-ventilated area.
- If in an enclosed area, vent the exhaust to the outside.
- Do not modify or tamper with the exhaust system.
- Do not idle the engine except as necessary.

For more information go to
www.P65warnings.ca.gov/diesel

4812129673

https://truckmanualshub.com/

Info decals

Noise power level

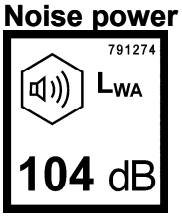

Diesel fuel

Lifting point

Hoisting plate

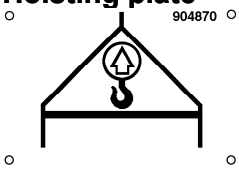

Handbook compartment

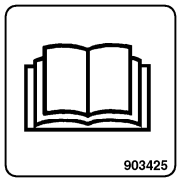

Battery isolation switch

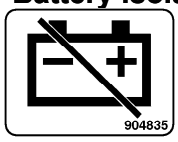

Hydraulic oil level

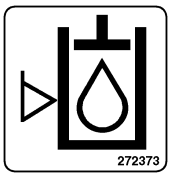

Biological hydraulic fluid PANOLIN

Securing point

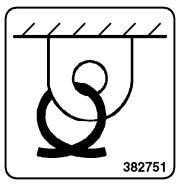

Starting instruction

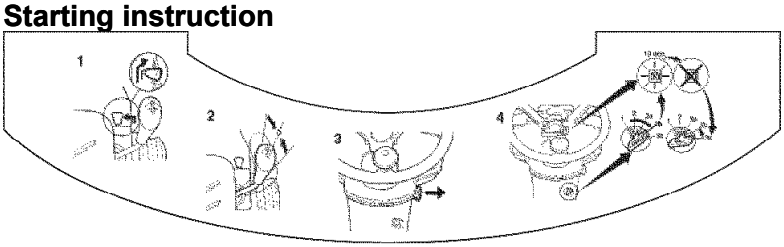

https://truckmanualshub.com/

Fuel

If using diesel fuel not compliant with EN 590 or ASTM D975, consult the engine manual.
The Diesel Fuel Specification Type and Sulfur content % (ppm) used, must be compliant with all applicable emission regulations for the area in which the machine is operating.
Ultra low sulfur fuel (< 15 ppm) is for example mandatory when operated in US EPA regulated areas, in Regulation (EU) 2016/1628 areas, in South Korea and in Japan.
It is always recommended to use < 15 ppm sulfur fuel to comply with declared engine emission levels.
Though, this engine can be operated on diesel fuel with sulfur content up to 1000 ppm without engine harm, but with higher emission levels.
If fuel with even higher sulfur content than 1000 ppm is used consult the engine manual regarding restrictions including engine oil and filter change intervals.

https://truckmanualshub.com/

Instruments/Controls

Locations - Instruments and controls

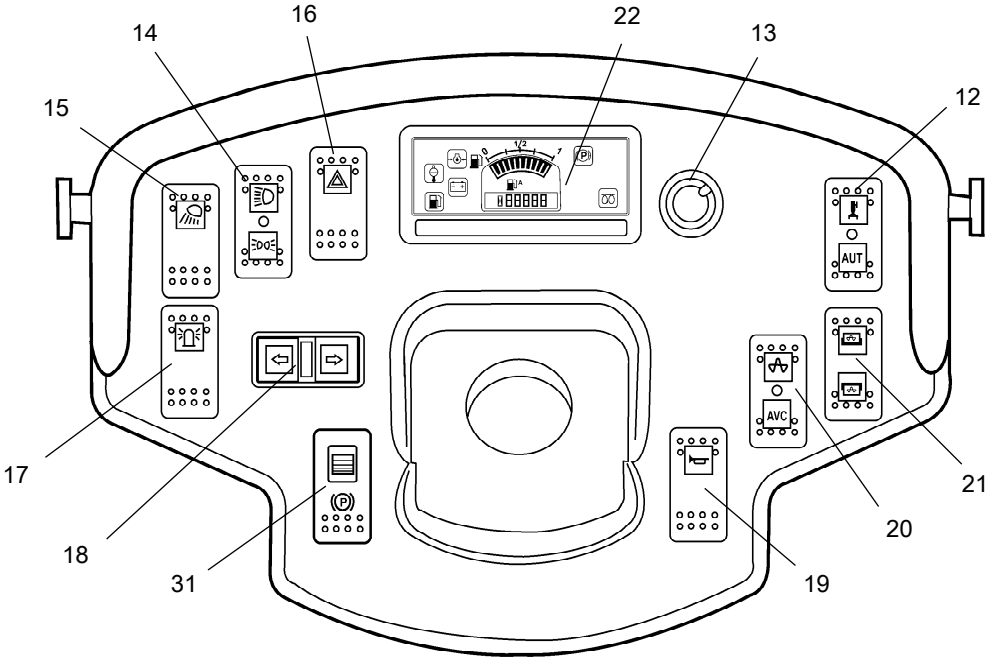

Fig. Instruments and control panel

12.		Manual/automatic sprinkler	17.	*	Hazard beacon
13.	*	Sprinkler timer	18.	*	Direction indicators
14.	*	Road lights	19.		Horn
15.		Working lights	20.		Vibration manual/automatic
16.	*	Hazard warning lights	21.	*	Vibration selector Front/rear drum
			22.		Control panel
	*	= Option	31.		Parking brake On/Off

https://truckmanualshub.com/

Locations - Control panel and controls

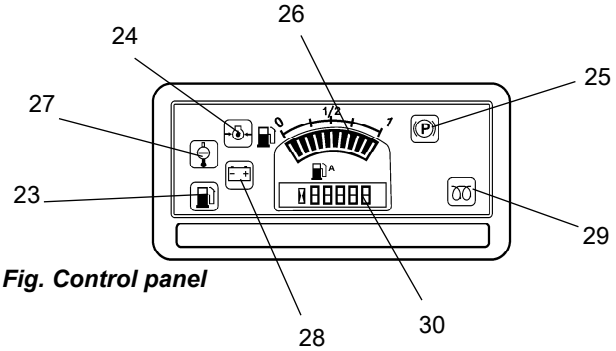

Fig. Control panel

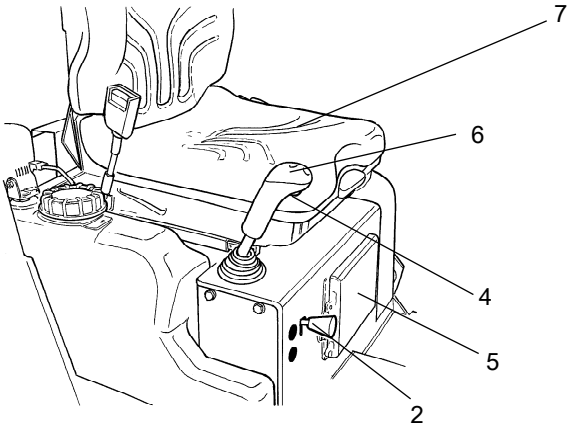

Fig. Operator position

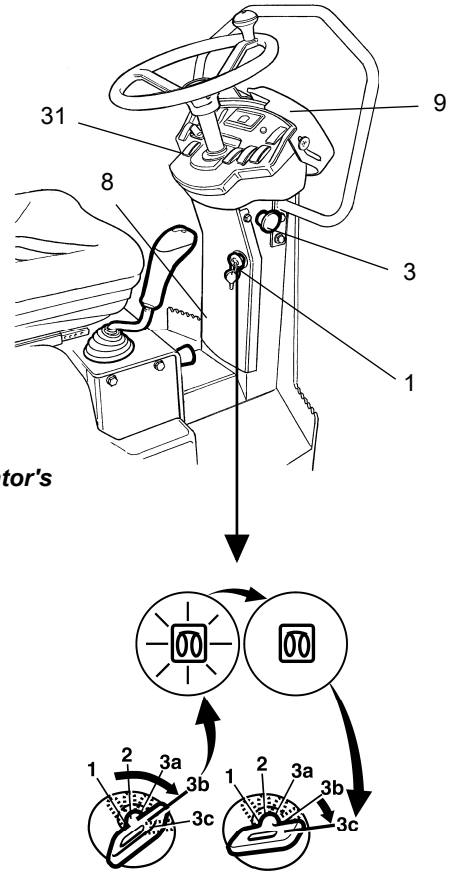

Fig. Operator's station

1	Starter switch	23	Low fuel level
2	Engine speed control	24	Oil pressure, engine
3	Emergency stop	25	Parking brake lamp
4	Vibration On/Off	26	Fuel level
5	Handbook compartment	27	Water temperature, engine
6	Forward/reverse lever	28	Battery/charging
7	Seat switch	29	Glow plug
8	Fuse box	30	Hourmeter
9	Instrument cover	31	Parking brake

https://truckmanualshub.com/

Function description

No	Designation	Symbol	Function
1.	Starter switch		Positions 1-2: Shut off position, key can be removed. Position 3a: All instruments and electric controls are supplied with power. Position 3b: Glowing. Hold the starter switch in this position until the lamp goes out. The starter motor is activated in the next position. Position 3c: Starter motor activation.
2.	Engine speed control		Raise the lever and release it into the groove to the left to set engine speed to operating speed. To select idling speed, move the lever to the right and downwards.
3.	Emergency stop		When pressed, the emergency stop is activated. The engine switches off and the brakes are activated. Brace yourself for a sudden stop.
4.	Vibration On/Off. Switch		Press once and release to switch vibration on. Press again to switch the vibration off.
5.	Handbook compartment		Pull up and open the top of the compartment for access to handbooks.
6.	Forward/Reverse lever		The engine can only be started when the lever is in neutral. The engine will not start if the forward/reverse lever is not in the neutral position. Direction of travel and speed of the roller is regulated with the forward/reverse lever. Move the lever forward to drive the roller forwards, etc. The speed of the roller is proportional to the distance of the lever from the neutral position. The further the lever is from the neutral position, the higher the speed.
7.	Seat switch		Remain seated at all times when operating the roller. If the operator stands up during operation, a buzzer sounds. After 4 seconds the brakes are activated and the engine stops.
8.	Fuse box (on control column)		Contains fuses for the electrical system. See under the heading 'Electrical system' for a description of fuse functions.
9.	Instrument cover		Lowered over the instrument plate to protect the instruments from the weather and sabotage. Lockable
12.	Sprinkler, switch	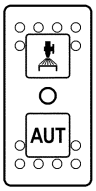	Upper position = switching on of flow of water to drum. Intermediate position = Sprinkling switched off Lower position = switching on of water to drum via forward/reverse lever. The flow of water can be controlled by means of the sprinkler timer (13).
			Watering off
		AUTO	Water supply to drum via forward/reverse lever in AUTO mode. The flow of water can be controlled by means of the sprinkler timer (13).

https://truckmanualshub.com/

No	Designation	Symbol	Function
13.	Sprinkler timer (Optional)		Stepless regulation of the water flow from 0-100%. Only functions where AUTO (12.) is depressed.
14.	Road lights, switch (Optional)	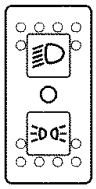	Where the upper position is depressed, the road lights are on. Where the lower position is, depressed the parking lights are on.
15.	Working lights, switch	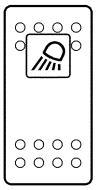	When depressed, the working lights are on
16.	Hazard warning lights, switch (Optional)	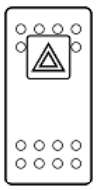	Where depressed, the hazard warning lights are on
17.	Hazard beacon, switch	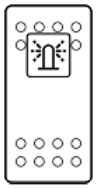	Where depressed, the hazard beacon is on
18.	Direction indicators, switch (Optional)	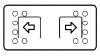	When depressed to the left, the left direction indicators are on etc. In the middle position the function is shut off.
19.	Horn, switch	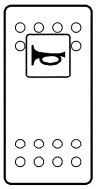	Press to sound the horn.
20.	Vibration MAN/AUTO switch	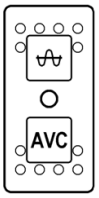	In the upper position, the vibration is switched on/off with the switch on the forward/reverse lever. The function is activated with the switch. In the middle position, the vibration system is switched off. In the lower position, vibration is automatically switched on or off via the forward/reverse lever.
21.	Vibration selector front/rear drum, switch (Optional)	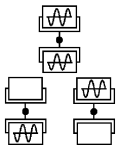	In the depressed forward position, vibration is activated on the front drum. In the middle position, vibration is activated on both drums. In the depressed rear position, vibration is activated on the rear drum.
22.	Control panel	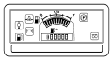	
23.	Warning lamp, low fuel level		The lamp comes on when the fuel level in the tank is low.

https://truckmanualshub.com/

No	Designation	Symbol	Function
24.	Warning lamp, oil pressure		This lamp lights if the lubricating pressure in the engine is too low. Stop the engine immediately and locate the fault.
25.	Warning lamp, parking brake		The lamp lights when the parking brake is activated.
26.	Fuel level		Shows the fuel level in the diesel tank.
27.	Warning lamp, water temperature		The light comes on if the water temperature is too high.
28.	Warning lamp, battery charging		If the lamp lights while the engine is running the alternator is not charging. Stop the engine and locate the fault.
29.	Warning lamp, glow plug		The lamp must go out before the starter switch is moved to position 3c for activation of the starter motor.
30.	Hourmeter		Shows the number of hours the engine has run.
31.	Parking brake On/Off, switch		To activate the brakes, press the top of the switch to change the position of the lever. To disengage the brakes, press down the red part at the same time as the switch, and change the position of the lever. NOTE: When starting the machine, the parking brake must be activated. **Always use the parking brake when the machine is stationary on a sloping surface.**

Electrical system

Fuses

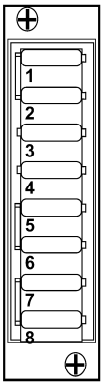

Fig. Fuse box

The figure shows the position of the fuses.

The table below gives fuse amperage and function. All fuses are flat pin fuses.

Fuses in the fusebox

1.	ECU Instrument panel, Sprinkler	20A	5.	Hazard beacon	10A
2.	Horn, Alternator, Fuel pump	10A	6.	Direction indicators, Power socket 12V	10A
3.	Right direction indicators, Side repeaters	5A	7.	Driving lights, Working lights main headlight front	15A
4.	Left direction indicators, Side repeaters	5A	8.	Driving lights, Position lights, Brake lights, Working lights rear, Number sign lighting	15A

https://truckmanualshub.com/

Fuses in engine compartment

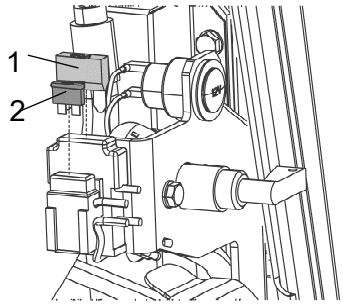

Fig. Fuses, engine compartment
1. Heater plugs
2. Main fuse

The figure shows the position of the fuses.

The amperage and function of the fuses are shown below. All fuses are flat pin fuses.

Fuses in engine compartment		
F10	Main fuse (Type E - High)	30A
F20	Heater plugs	50A

Relays

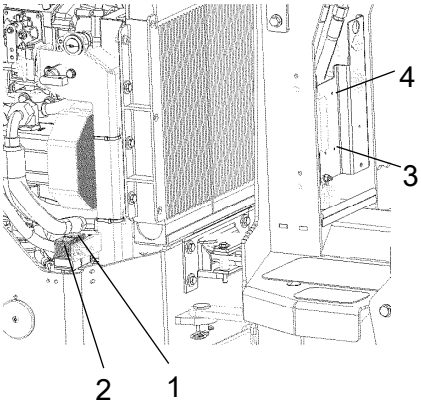

Fig. Relays

1.	*K1*	*Starting*
2.	*K5*	*Glow plug*
3.	*K9*	*Direction indicators*
4.	*K10*	*Brake lights*

https://truckmanualshub.com/

https://truckmanualshub.com/

Operation

Before starting

Battery isolation switch - On - Optional

Remember to carry out daily maintenance. Refer to the maintenance instructions.

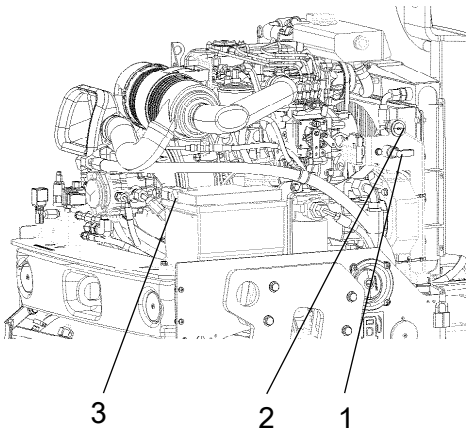

Fig. Left side of engine
1. Battery disconnector (only PLUS version)
2. Power socket, 12V
3. Cable lug

PLUS version

The battery disconnector is located on the left side of the engine compartment.

Turn the key (1) to the On position.

CC version

Fix the red cable lug (3) on the plus terminal on the battery.

The roller is now supplied with power.

The engine cover must be unlocked when operating, so that the battery can be quickly disconnected if necessary.

Driver seat (CC version) - Adjustment

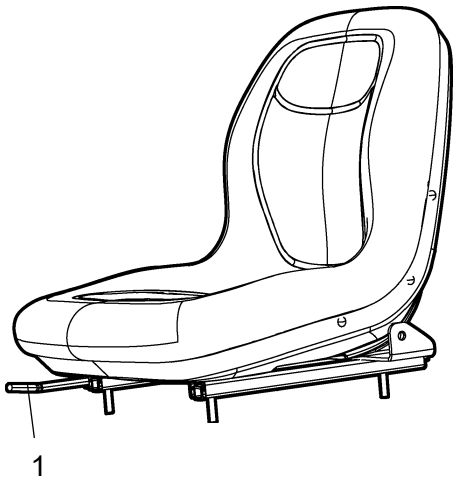

Fig. Operator's seat
1. Length adjustment

Adjust the operator’s seat so that the position is comfortable and so that the controls are within easy reach.

The seat can be adjusted lengthways (1).

https://truckmanualshub.com/

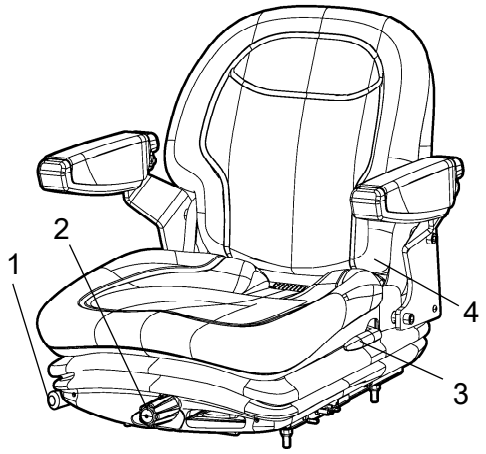

Fig. Driver seat
1. Lock lever - Length adjustment
2. Weight adjustment
3. Back support angle
4. Seat belt

Driver seat (Plus version) - Adjustment

Adjust the operator's seat so that the position is comfortable and so that the controls are within easy reach.

The seat can be adjusted as follows.

- Length adjustment (1)
- Weight adjustment (2)
- Back support angle (3)

Always make sure that the seat is secure before beginning operation.

Do not forget to use the seat belt (4).

Instruments and lamps - Checking

Make sure that the emegency stop is pulled out and the parking brake is activated. When the forward/reverse lever is in neutral, the automatic brake function is engaged.

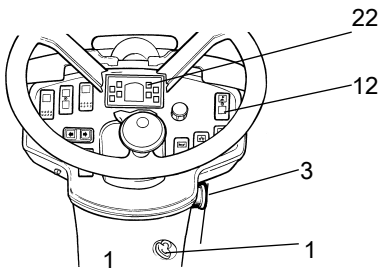

Figure. Instrument panel
1. Starter switch
3. Emergency stop
12. Switch, watering
22. Warning panel

Turn the switch (1) to position 3a.

Check that the warning lamps in the warning panel (22) come on.

Set the sprinkler switch (12) to the operating position and check that the system is functioning.

https://truckmanualshub.com/

Interlock

The roller is equipped with Interlock.

Roller equipped with **Sauer-Danfoss** ECU:

The diesel engine with switch off after 4 seconds if the operator gets off the seat when going forwards/backwards.

If the control is in neutral when the operator stands up a buzzer will go on until the parking brake button is activated.

The engine does not stop if the parking brake is activated.

The diesel engine will switch off immediately if for any reason the forward/reverse lever is moved out of neutral when the operator is not sitting down and the parking brake button has not been activated.

Roller equipped with **HY-TTC 71** ECU:

If the operator is leaving the seat with the diesel engine running, travel lever in neutral position and parking brake disengaged, the buzzer will set and the diesel engine will shut down after four seconds.

During these four seconds the diesel engine shut down can be rescinded either by engaging the parking brake or to be seated.

If the operator is not seated and move the travel lever out of neutral position, the buzzer will set and the diesel engine will shut down instantly.

Sit down for all operations!

https://truckmanualshub.com/

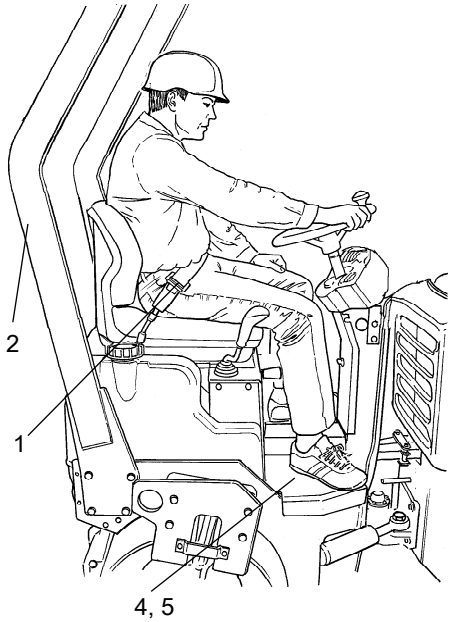

Fig. Operator's seat
1. Seatbelt
2. ROPS
4. Rubber element
5. Anti-slip

Operator position

Replace the seat belt (1) if it shows signs of wear or has been subjected to high levels of force.

Never use the forward/reverse levers as a handle when mounting or disembarking from the roller.

Check that the rubber elements (4) on the platform are intact. Worn elements will reduce comfort.

Ensure that the anti-slip (5) on the platform is in good condition. Replace where anti-slip friction is poor.

Machines with folding ROPS must always be operated with the ROPS raised and locked in position.

The interlock must always be checked before operating. To do this the operator stands up from the seat as shown in the instructions in the section Operation.

If ROPS (Roll Over Protective Structure) is fitted to the roller, always wear the seat belt (1) provided and wear a protective helmet.

https://truckmanualshub.com/

Starting

Starting the engine

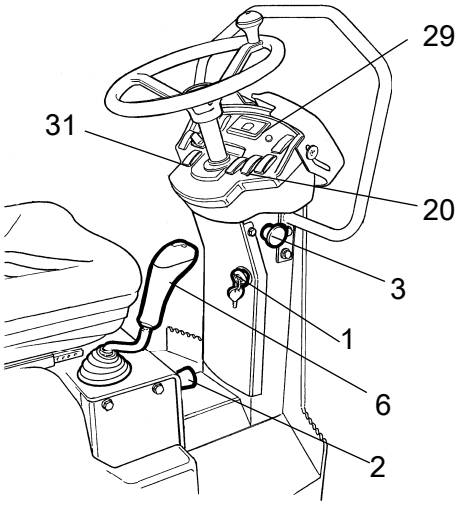

Figure. Control panel
1. Starter switch
2. Engine speed control
3. Emergency stop
6. Forward/Reverse lever
20. Vibration switch man/auto
29. Glow lamp
31. Parking brake

The operator must remain seated when starting.

Make sure that the emegency stop (3) is pulled out and the parking brake (31) is activated.

Set the forward/reverse lever (6) in neutral. The engine can only be started when the lever is in neutral.

Set the vibration switch (20) for manual/automatic vibration in (position O).

Do not run the starter motor for too long. If the engine does not start, wait a minute or so before trying again.

At high ambient temperatures, set the speed control (2) to the position just over idling.

Set the speed control to full speed when starting a cold engine. Preheating: Turn key to position II. When the glow lamp (29) goes off: Turn the starter switch (1) to the right. As soon as the engine starts, release the starter switch and reduce the engine speed to just over idling (because high revs can damage a cold engine). As soon as the engine is running smoothly, reduce the revs down to idling.

Warm up the engine at idling speed for a few minutes, although longer if ambient temperature is below +10°C (50°F).

https://truckmanualshub.com/

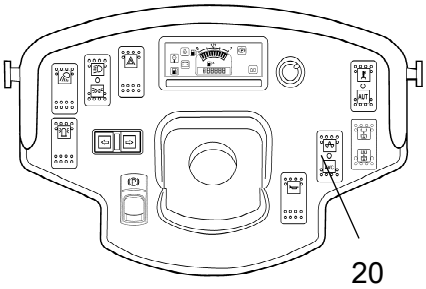

Fig. Instrument panel
20. Vibration switch

Check while warming the engine that the warning lamps for the oil pressure (24) and charging (28) go out.

The warning lamp (25) should remain on.

When starting and driving a machine that is cold, remember that the hydraulic fluid is also cold and that braking distances can be longer than normal until the machine reaches the working temperature.

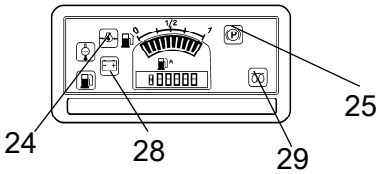

Fig. Control panel
24. Oil pressure lamp
25. Brake lamp
28. Charging lamp
29. Glow lamp

Ensure that there is good ventilation (air extraction) if the engine is run indoors. Risk of carbon monoxide poisoning.

https://truckmanualshub.com/

Driving

Operating the roller

Under no circumstances is the machine to be operated from the ground. The operator must be seated inside the machine during all operation.

Make sure that the area in front of and behind the roller is clear.

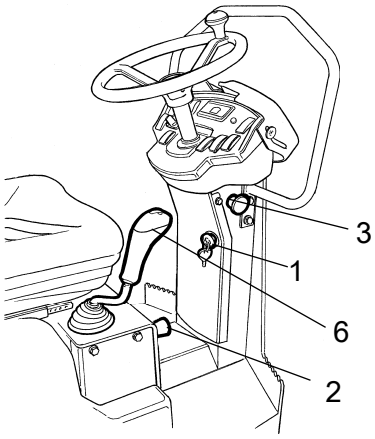

Figure. Instrument panel
1. Starter switch
2. Engine speed control
3. Emergency stop
6. Forward/reverse lever

Release the parking brake (31) and check that the parking brake lamp (25) goes off.

Turn the engine speed control upwards (2) and lock it in the working position.

Check that the steering is working correctly by turning the steering wheel once to the right and once to the left while the roller is stationary.

When compacting asphalt, remember to turn on the sprinkler system (12).

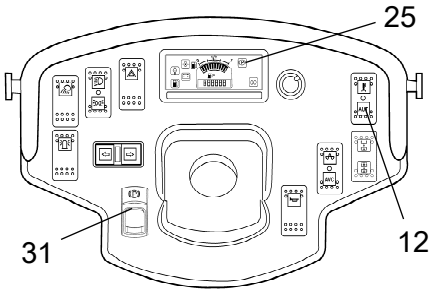

Figure. Instrument panel
12. Switch for sprinkler
25. Parking brake lamp
31. Parking brake

Carefully move the forward/reverse lever (6) forwards or backwards, depending on which direction of travel is required.

Speed increases as the lever is moved away from the neutral position.

The speed should always be controlled using the forward/reverse lever and never by changing the engine speed.

Check when operating that the warning lamps do not come on.

https://truckmanualshub.com/

Interlock/Emergency stop/Parking brake - Check

The interlock, emergency stop and parking brake must be checked daily before operating. A function check of the interlock and emergency stop requires a restart.

The interlock function is checked by the operator standing up from the seat when the roller is moving very slowly forwards/backwards. (Check in both directions). Hold the steering wheel firmly and brace yourself for a sudden stop. A buzzer goes on and after 4 seconds the engine switches off and the brakes are activated.

Check the function of the emergency stop by pressing the emergency stop when the roller is moving slowly forwards/backwards. (Check in both directions). Hold the steering wheel firmly and brace yourself for a sudden stop. The engine switches off and the brakes are activated.

Check the function of the parking brake by activating the parking brake when the roller is moving very slowly forwards/backwards. (Check in both directions). Hold the steering wheel and brace yourself for a sudden stop when the brakes are activated. The engine does not switch off.

Vibration

Manual/Automatic vibration

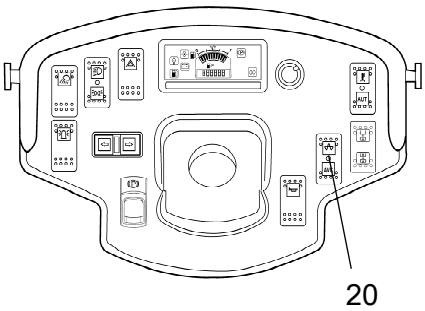

Fig. Instrument panel
20. Switch Man/Aut.

Manual or automatic vibration activation/deactivation is selected using switch (20).

In the manual position, the operator must activate the vibration using the switch(4) on underside of the forward/reverse lever grip.

In the automatic position, vibration is activated when the pre-set speed is reached. Vibration is automatically deactivated when the lowest pre-set speed is reached.

https://truckmanualshub.com/

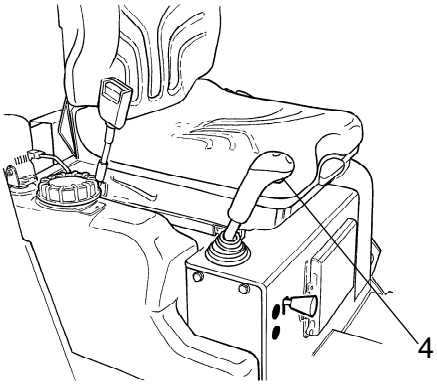

Fig. Forward/Reverse lever
4. Switch, vibration On/Off

Manual vibration - Switching on

Vibration should not be active when the roller is stationary. This can damage both the surface and the machine.

Engage and disengage vibration using the switch (4) on the underside of the forward/reverse lever.

Always switch off vibration before the roller comes to a standstill.

Braking

Normal braking

Braking is normally activated using the forward/reverse lever. The hydrostatic transmission brakes the roller when the lever is moved towards the neutral position.

Press the switch (4) to switch off the vibration.

Move the forward/reverse lever (6) to the neutral position to stop the roller.

When starting and driving a machine that is cold, remember that the hydraulic fluid is also cold and that braking distances can be longer than normal until the machine reaches the working temperature.

Never leave the operator platform without activating the parking brake (31).

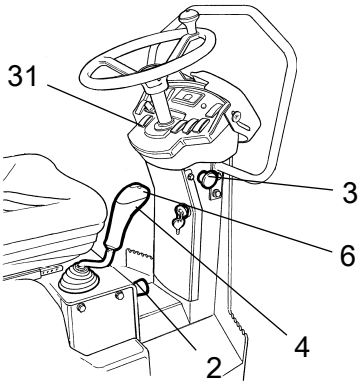

Figure. Control panel
2. Engine speed control
3. Emergency stop
4. Vibration On/off
6. Forward/reverse lever
31. Parking brake

https://truckmanualshub.com/

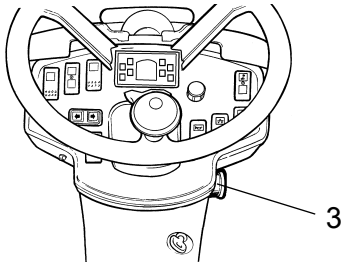

Fig. Control panel
3. Emergency stop

Emergency braking

There is a brake in each drum motor that acts as an emergency brake during operation.

To brake in an emergency situation, push in the emergency stop (3), hold the steering wheel firmly and be prepared for a sudden stop. The diesel engine stops.

After braking, return the forward/reverse lever to the neutral position and pull out the emergency stop. Restart the engine.

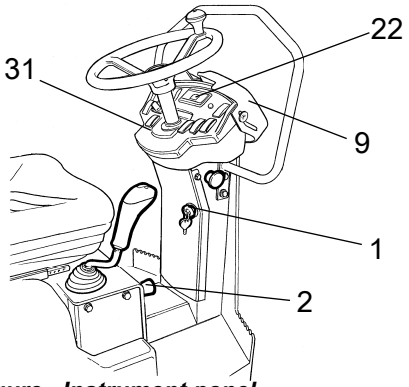

Figure. Instrument panel
1. Starter switch
2. Engine speed control
9. Instrument cover
22. Panel for warning lamps
31. Parking brake

Switching off

Turn the engine speed control (2) back to idling. Allow the engine to idle for a few minutes to cool.

Activate the parking brake (31).

Check instruments and warning lamps to see if any faults are indicated. Switch off all lights and other electrical functions.

Turn the starter switch (1) to the left to the switched off position. At the end of the shift, fold over the instrument cover (9) and lock.

https://truckmanualshub.com/

Parking

Chocking the drums

Never leave the operator platform without activating the parking brake (31).

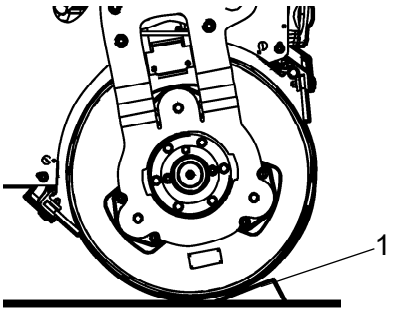

Fig. Set-up
1. Chocks

Make sure that the roller is parked in a safe place with respect to other road users. Chock the drums if the roller is parked on sloping ground.

Keep in mind that there is a risk of freezing during the winter. Drain the water tanks and water lines.

Master switch - Optional

The power to the roller should be disconnected at the end of the working shift.

PLUS version

Put the battery disconnector (1) in the Off position and remove the key.

CC version

Remove the red cable lug (3) from the plus terminal on the battery.

This will prevent battery discharging and will also make it difficult for unauthorized persons to start and operate the machine. Lock also the engine cover.

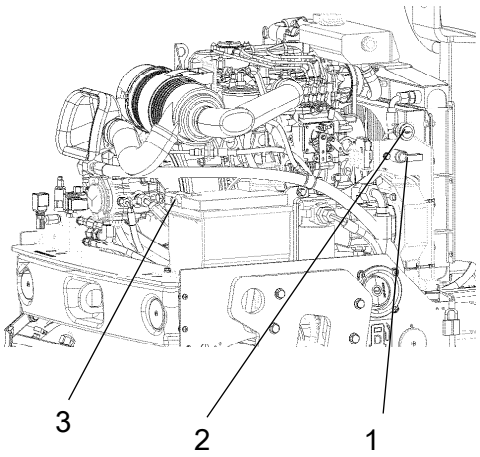

Fig. Battery compartment
1. Battery disconnector (only PLUS version)
2. Power socket, 12V
3. Cable lug

https://truckmanualshub.com/

https://truckmanualshub.com/

Long-term parking

The following instructions should be followed when long term parking (more than one month).

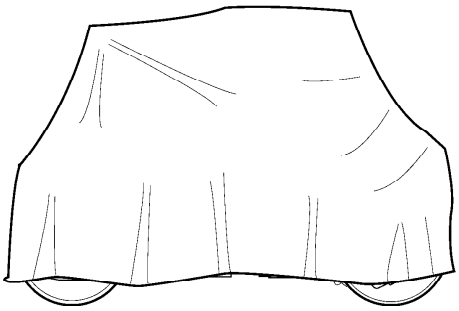

Fig. Roller weather protection

These measures apply when parking for a period of up to 6 months.

Before re-commissioning the roller, the points marked with an asterisk * must be returned to the pre-storage state.

Wash the machine and touch up the paint finish to avoid rusting.

Treat exposed parts with anti-rust agent, lubricate the machine thoroughly and apply grease to unpainted surfaces.

Engine

* Refer to the manufacturer's instructions in the engine manual that is supplied with the roller.

Battery

* Remove the battery from the machine, clean, grease the cable connectors (terminals) and trickle charge the battery once a month. The battery is otherwise maintenance free.

Air cleaner, exhaust pipe

* Cover the air cleaner (see under the heading 'Every 50 hours of operation' or 'Every 500 hours of operation') or its inlet with plastic or tape. Also cover the exhaust pipe opening. This is to avoid moisture entering the engine.

Sprinkler system

* Drain the water tank completely (see under the heading 'Every 2000 hours of operation'). Drain all hoses, filter housings and the water pump. Remove all sprinkler nozzles (see under the heading 'Every 10 hours of operation').

Fuel tank

Fill the fuel tank completely full to prevent condensation.

https://truckmanualshub.com/

Hydraulic reservoir

Fill the hydraulic reservoir to the uppermost level mark (see under the heading ‘Every 10 hours of operation.’)

Steering cylinder, hinges, etc.

Grease the steering cylinder piston with conservation grease.

Grease the hinges on the doors to the engine compartment. Grease both ends of the forward/reverse control (bright parts) (see under the heading ‘Every 500 hours of operation’).

Hoods, tarpaulin

* Lower the instrument cover over the instrument panel.

* Cover the entire roller with a tarpaulin. A gap must be left between the tarpaulin and the ground.

* If possible, store the roller indoors and ideally in a building where the temperature is constant.

https://truckmanualshub.com/

Miscellaneous

Lifting

Locking the articulation

Before lifting the roller the steering joint must be locked to prevent it turning.

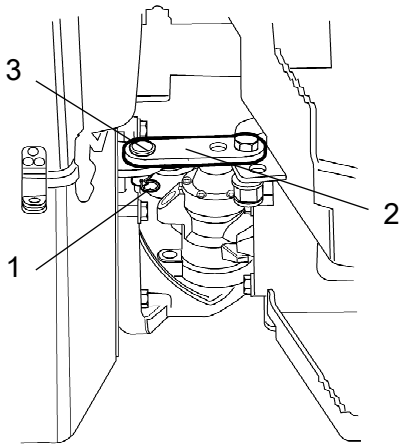

Fig. Steering joint
1. Cotter pin
2. Locking arm
3. Locking bolt

Turn the steering wheel to the straight ahead position.

Switch off the machine. Apply the parking brake.

Pull out the locking pin (1), turn the locking arm (2) to the front frame, secure the locking arm to the front frame half by inserting the locking bolt (3) through the bracket in the front frame and the locking arm.

Secure the position of the locking arm by refitting the locking pin (1).

Lifting the roller

The machine's gross weight is specified on the hoisting plate (1). Refer also to the Technical specifications.

Weight: refer to the hoisting plate on the roller

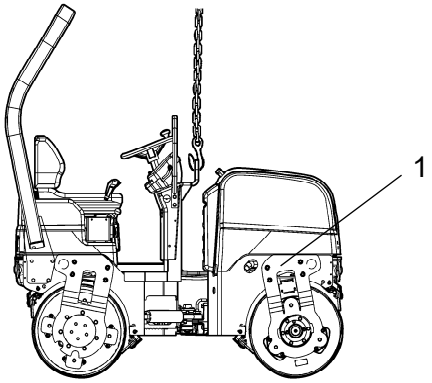

Fig. Roller prepared for lifting
1. Hoisting plate

Lifting gear such as chains, steel wires, straps, and lifting hooks must be dimensioned and used in accordance with the applicable safety regulations for lifting devices.

Stand well clear of the hoisted machine! Make sure that the lifting hooks are properly secured.

https://truckmanualshub.com/

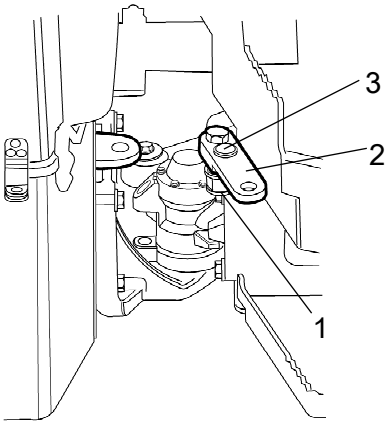

Fig. Articulation
1. Locking pin
2. Locking arm
3. Locking bolt

Unlocking the articulation

Remember to unlock the articulation before operating.

Pull out the locking pin (1), turn the locking arm (2) for the rear frame, secure the locking arm by inserting the locking bolt (3) through the mounting in the rear frame and locking arm. Insert the locking pin.

Transport

Tie-down and secure the machine according to the Cargo Securing Certificate for the specific machine if this is avaliable and applicable.

If not, tie down and secure the machine according to the cargo securing rules that are valid for the country where the transport takes place.

Never lash over the machine's articulated joint, nor over the machine's operator platform.

Before securing the machine ensure that :

- the parking brake is applied and in good working condition
- the articulated joint is in closed position
- the machine is centered laterally on the platform
- the lashings are in good condition and fulfills the corresponding rules for transport securing.

https://truckmanualshub.com/

Securing CC800/900/1000 for loading

Securing the CC800/900/1000 vibratory roller from Dynapac for transport.

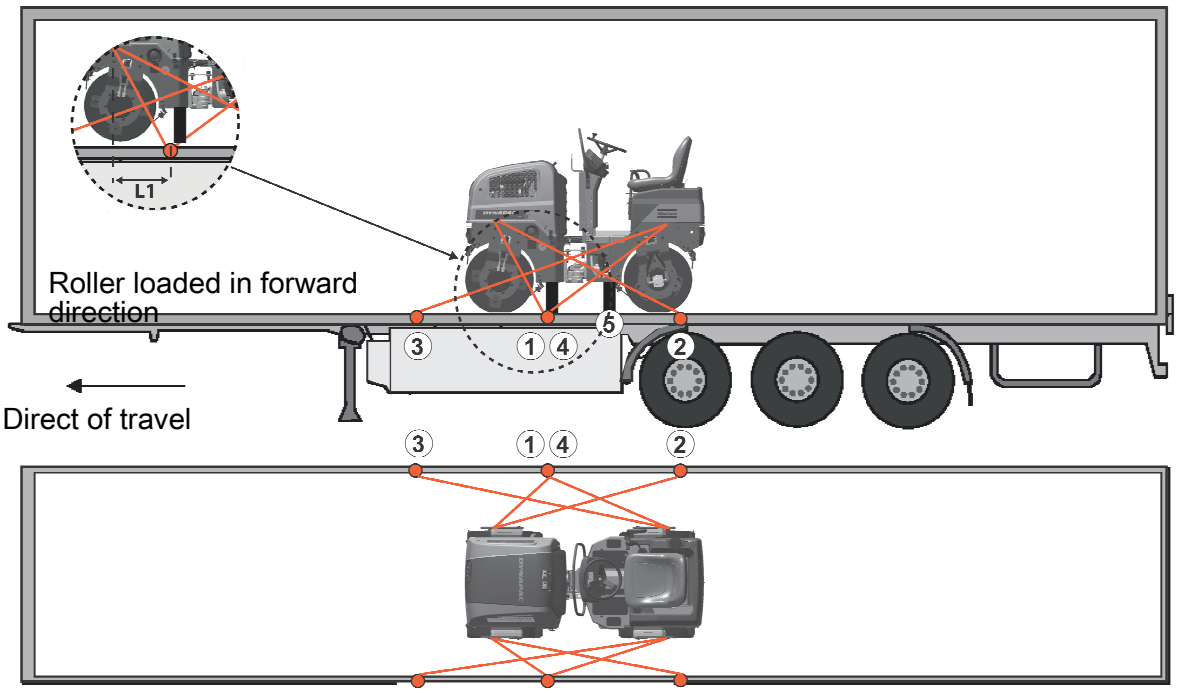

1 - 2 = double lashings, i.e. one lashing with two parts secured to two different lashing mounts,
3 - 4 symmetrically located on the right and left sides.
5 = rubber

The lashings' permitted distance interval in meters		
(1 - 4: Double lashings, LC at least 1.7 tonnes (1700 daN), S_{TF} 300 kg (300daN))		
Double L_1 - L_2	Double L_3 - L_4	
0,6 - 3,0	0,1 - 3,0	

*The distance **L_1** above is between points **D** and **E**. **D** is the projected point directly at right angles laterally in relation to the edge of the platform from the lashing mount **C** on the roller. **E** is the lashing mount at the edge of the platform. **L_2 – L_3** have a corresponding relationship.*

https://truckmanualshub.com/

Load carrier

- When loaded, the vibratory roller is centered laterally on the platform (± 5 cm).
- The parking brake is applied and in good working condition, and the articulated joint lock is closed.
- The drum is placed on a rubber liner, so that the static friction between the surfaces is at least 0.6.
- The contact surfaces must be clean, wet or dry, and free from frost, ice and snow.
- The lashing mounts on the load carrier have LC/MSL at least 2 tonnes.

Lashings

- The lashings comprise a lashing strap or chain with a permitted load (LC/MSL) of at least 1.7 tonnes (1,700 daN) and a pre-tension S_{TF} of at least 300 kg (300 daN). The lashings are re-tightened as required.
- Each of lashings 1-3 is either a double or two single lashings. A double lashing runs in a sling through a lashing point or around a machine part and down into two different mounts on the platform.
- Lashings in the same direction are placed in different lashing mounts on the trailer. Lashings that are pulled in opposite directions may be placed in the same lashing mount, however.
- The lashings are as short as possible.
- The lashing hooks must not lose grip if the lashings become slack.
- The lashings are protected against sharp edges and corners.
- The lashings are located symmetrically in pairs on the right and left sides.

Towing/Recovering

The roller can be moved up to 300 meters (330 yards) using the instructions below.

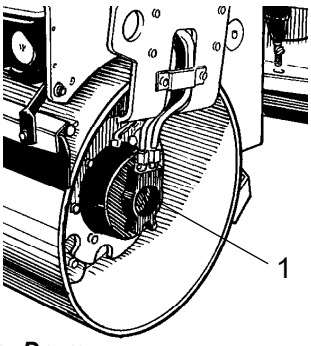

Fig. Drum
1. Propulsion motor, located left front and right rear.

Switch off the diesel engine and push in the emergency stop knob. Chock the drum to prevent the roller from moving when the brakes are disengaged.

The brakes in each propulsion motor must be mechanically released, as described below, before the roller is towed.

https://truckmanualshub.com/

Releasing the brake

1. Remove the 2 plugs (191).

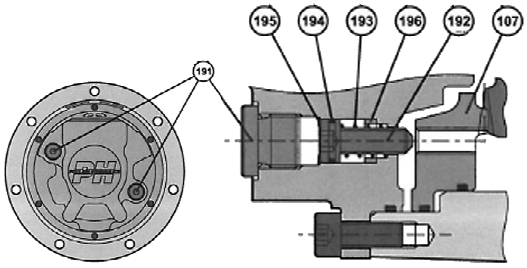

Figure. Releasing the brake

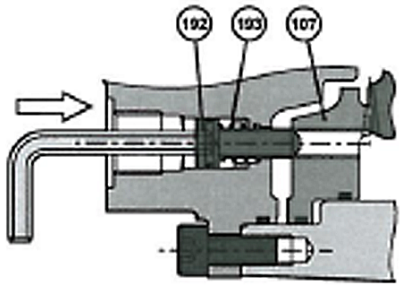

2. Press the screws (192) inwards to compress the springs (193) so that the screw reaches the brake (107) inner thread.

3. Tighten the two screws (192) alternately a little at a time so that the brake piston (107) loose (screw approximately 2 turns).

Tightening the screws (192) too hard can damage the inner mechanism

The machine should be started with reactivated brake.

https://truckmanualshub.com/

Restored brake

Undo the two screws (192) alternately, and then insert the plugs (191).

Tightening torque

Screws (192)	33 Nm max	24.3 lbf.ft max
Plugs (191)	60±6 Nm max	44.2 ± 4.4 lbf.ft

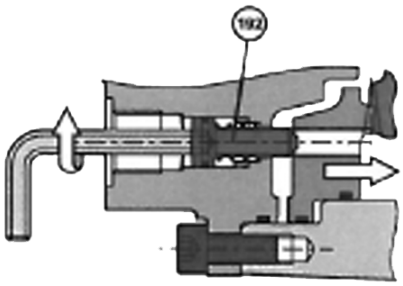

Towing the roller

A towing bar must be used when towing, as the roller has no brakes and can only be slowed and stopped by the vehicle towing the roller.

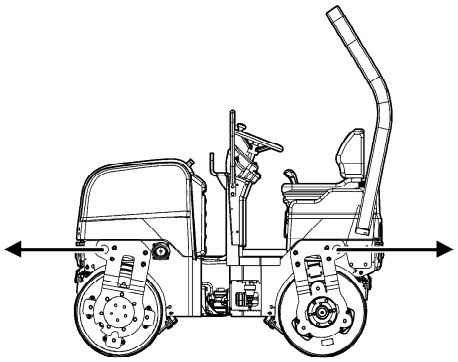

Fig. Towing the roller

The roller must be towed slowly, max. 3 km/h (2 mph) and for short distances only, max. 300 m (1000 ft).

When towing/recovering a machine, the towing device must be connected to both lifting holes. Pulling forces shall act longitudinally on the machine as illustrated. Max total towing force 50.8 kN (11,430 lbf), 25.4 kN (5,715 lbf) per fork.

Reset the steps taken for towing as described in the towing instructions on the previous page.

https://truckmanualshub.com/

Operating instructions - Summary

1. **Follow the SAFETY INSTRUCTIONS specified in the Safety Manual.**

2. Make sure that all instructions in the MAINTENANCE section are followed.

3. Turn the master switch to the ON position.

4. Move the forward/reverse lever to the NEUTRAL position.

5. Set the switch for Manual/Automatic vibration to the 0 position.

6. Set the engine speed control to full speed.

7. Set the emergency stop in the pulled out position.

8. Start the engine and allow it to warm up.

9. Set the engine speed control to the operating position.

10. **Drive the roller. Operate the forward/reverse lever with care.**

11. **Check the brakes, drive slowly. Remember that the braking distance will be longer if the roller is cold.**

12. Use vibration only when the roller is in motion.

13. Check that the drums are thoroughly watered when watering is required.

14. **IN AN EMERGENCY:**
    - Press the EMERGENCY STOP
    - Hold the steering wheel firmly.
    - Brace yourself for a sudden stop. The engine stops.

15. Parking: - Stop the engine and chock the drums.

16. When lifting: - Refer to the relevant section in the Instruction Manual.

17. When towing: - Refer to the relevant section in the Instruction Manual.

18. When transporting: - Refer to the relevant section in the Instruction Manual.

19. When recovering - Refer to the relevant section in the Instruction Manual.

https://truckmanualshub.com/

https://truckmanualshub.com/

Preventive maintenance

Complete maintenance is necessary for the machine to function satisfactorily and at the lowest possible cost.

The Maintenance section includes the periodic maintenance that must be carried out on the machine.

The recommended maintenance intervals assume that the machine is used in a normal environment and working conditions.

Acceptance and delivery inspection

The machine is tested and adjusted before it leaves the factory.

On arrival, before delivery to the customer, delivery inspection must be conducted as per the check list in the warranty document.

Any transport damage must be reported immediately to the transport company, as this is not covered by the product warranty.

Warranty

The warranty is only valid if the stipulated delivery inspection and the separate service inspection have been completed as per the warranty document, and when the machine has been registered for starting under the warranty.

The warranty is not valid if damage has been caused by inadequate service, incorrect use of the machine, the use of lubricants and hydraulic fluids other than those specified in the manual, or if any other adjustments have been made without the requisite authorization.

https://truckmanualshub.com/

CALIFORNIA

Proposition 65

Decal and location of decal shown in section Machine description.

⚠ **WARNING**: Breathing diesel engine exhaust exposes you to chemicals known to the State of California to cause cancer and birth defects or other reproductive harm.

- Always start and operate the engine in a well-ventilated area.
- If in an enclosed area, vent the exhaust to the outside.
- Do not modify or tamper with the exhaust system.
- Do not idle the engine except as necessary.

For more information go to www.P65warnings.ca.gov/diesel.

https://truckmanualshub.com/

Maintenance - Lubricants and symbols

Fluid volumes

Hydraulic reservoir	12 liters	3,2 gal
Engine	5,1 liters	5.4 qts
Coolant	5,2 liters	5.5 qts
Drum		
- CC800	2,5 liters	2.6 qts
- CC900	3,5 liters	3.7 qts
- CC1000	4,5 liters	4.8 qts

Always use high-quality lubricants and the amounts recommended. Too much grease or oil can cause overheating, resulting in rapid wear.

Other fuel and lubricants are required when operating in areas with extremely high or extremely low ambient temperatures. See the ‘Special instructions’ chapter, or consult Dynapac.

https://truckmanualshub.com/

ENGINE OIL	Air temperature -15°C - +50°C (5°F-122°F)	**Dynapac Engine Oil 200**	P/N 4812161855 (5 liter) P/N 4812161856 (20 litres) P/N 4812161857 (209 liter)
HYDRAULIC FLUID	Air temperature -15°C - +40°C (5°F-104°F)	**Dynapac Hydraulic 300**	P/N 4812161868 (20 liter) P/N 4812161869 (209 liter)
	Air temperature over +40°C (104°F)	Shell Tellus S2 V100	
Bio-Hydr. BIOLOGICAL HYDRAULIC FLUID, PANOLIN	When it leaves the factory, the machine may be filled with biologically degradable fluid. The same type of fluid must be used when changing or topping up.	PANOLIN HLP Synth 46 (www.panolin.com)	
BIOLOGICAL HYDRAULIC FLUID	When it leaves the factory, the machine may be filled with biologically degradable fluid. The same type of fluid must be used when changing or topping up.	BP Biohyd SE-S46	
DRUM OIL	Air temp. -15°C - +40°C (5°F-104°F)	**Dynapac Gear Oil 300**	P/N 4812161883 (5 liter) P/N 4812161884 (20 liter) P/N 4812161885 (209 liter)
	Air temp. 0°C (32°F) - above +40°C (104°F)	Shell Spirax AX 85W/140, API GL-5	
GREASE			**Dynapac Roller Grease** P/N 4812030096 (0.4 kg)
FUEL	See engine manual. To comply with emission requirements for Kubota D1105 you must use fuel with a low or extremely low sulphur content.	-	-
COOLANT	Anti-freeze protection down to about -37°C (-34.6°F)	**Dynapac Coolant 100** (mixed 50/50 with water)	P/N 4812161854 (20 liter)

https://truckmanualshub.com/

Maintenance symbols

	Engine, oil level		Air filter
	Engine, oil filter		Battery
	Hydraulic reservoir, level		Sprinkler
	Hydraulic fluid, filter		Sprinkler water
	Drum, oil level		Recycling
	Lubricating oil		Fuel filter
	Coolant level		

https://truckmanualshub.com/

https://truckmanualshub.com/

Maintenance - Maintenance schedule

Service and maintenance points

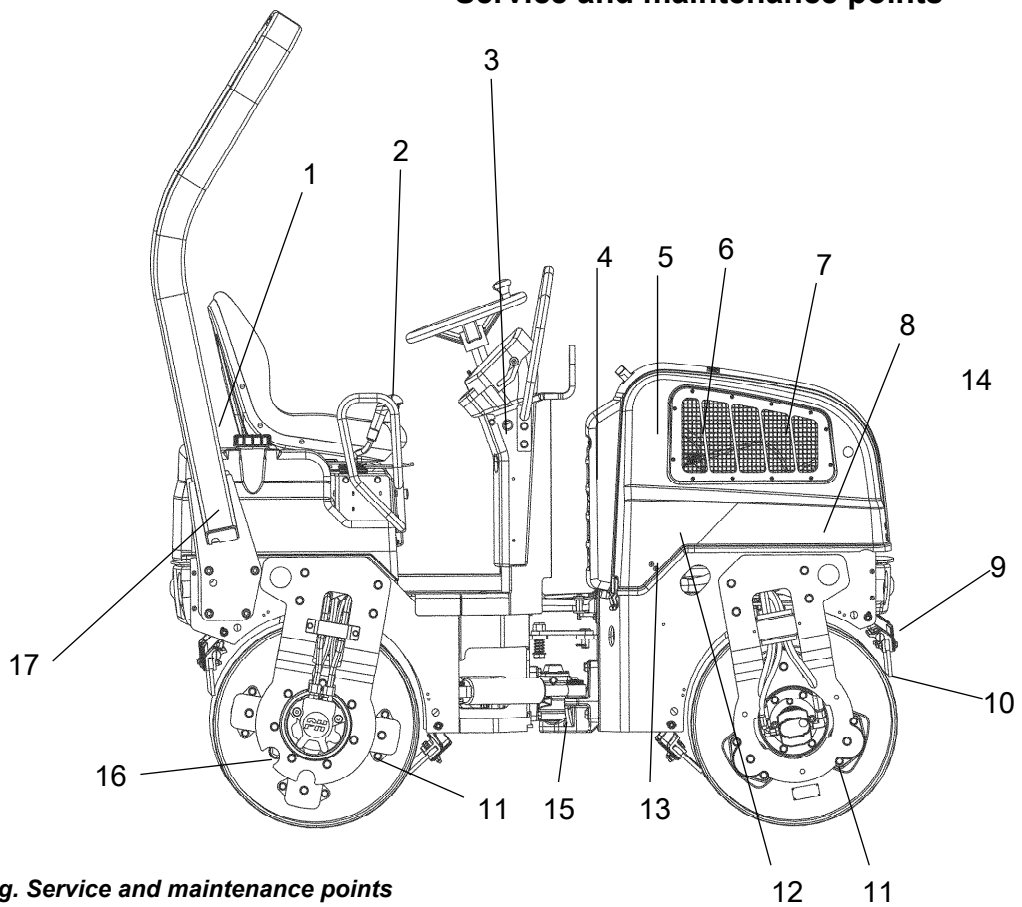

Fig. Service and maintenance points

1. Water tank, filling
2. Forward/Reverse lever
3. Emergency brake
4. Hydraulic fluid cooler/ radiator
5. Alternator belt
6. Engine
7. Air cleaner
8. Battery (maintenance free)
9. Sprinkler
10. Scrapers
11. Rubber element
12. Hydraulic fluid filter
13. Hydraulic fluid, filling
14. Fuel tank, refilling (left side)
15. Steering joint
16. Drums, filling with oil
17. ROPS

https://truckmanualshub.com/

General

Periodic maintenance should be carried out after the number of hours specified. Use the daily, weekly etc. periods where number of hours cannot be used.

! Remove all dirt before filling, when checking oils and fuel and when lubricating using oil or grease.

! The manufacturer's instructions found in the engine manual also apply.

Specific maintenance and checks on diesel engines must be carried out by the engine supplier's certified personnel.

! Where both operational hours and time intervals are specified, maintenance should be carried out at the point in time that occurs first.

Every 10 hours of operation (Daily)

Refer to the contents to find the page number of the sections referred to !

Pos. in fig	Action	Comment
	Before starting up for the first time on that day	
6	Check the engine oil level	Refer to the engine manual
13	Check the hydraulic reservoir level	
4	Check the coolant level	
14	Refuel	
1	Fill the water tanks	
9	Check the sprinkler system	
4	Check for free circulation of cooling air	
10	Check the scraper setting	
	Check the warning lamps	
7	Check the air cleaner indicator	
3	Test the brakes	

https://truckmanualshub.com/

After the FIRST 50 hours of operation

Refer to the contents to find the page number of the sections referred to !

	Action	Comment
6	Change the engine oil and oil filter	Refer to the engine manual
12	Change the hydraulic fluid filter	
	Check the belt tension on the hydraulic vibration and steering pump drive belt	

Every 50 hours of operation (Weekly)

Refer to the contents to find the page number of the sections referred to !

Pos. in fig	Action	Comment
7	Empty the air cleaner dust trap	
11	Check rubber elements and bolted joints	

Every 250 / 750 / 1250 / 1750 hours of operation

Refer to the contents to find the page number of the sections referred to !

Pos. in fig	Action	Comment
7	Clean the air cleaner filter element, check that hoses and connectors are tight	
4	Clean the outside of the radiator core.	In dusty environments, as necessary.
2	Check lubrication of controls and pivots	Lubricate as necessary
5	Check fan belt tension and condition	Replace where necessary
6	Change the engine oil and oil filter	Refer to the engine manual

https://truckmanualshub.com/

Every 500 / 1500 hours of operation

Refer to the contents to find the page number of the sections referred to !

Pos. in fig	Action	Comment
4	Clean the outside/inside of the radiator core	In dusty environments, as necessary
2	Check lubrication on controls and joints	Lubricate if necessary
5	Check the tension and condition of the fan belt	Replace if necessary
7	Replace the air cleaner filter element, check that hoses and connectors are tight	
6	Change the fuel filter	Refer to the engine manual
6	Change the engine oil and oil filter	Refer to the engine manual
4	Check coolant freezing point	Change the coolant every other year
16	Check the oil level in the drums	
5	Replace fan belt	Refer to the engine manual
13	Check the hydraulic reservoir cover/breather	
	Check the belt tension on the hydraulic vibration and steering pump drive belt	

https://truckmanualshub.com/

Every 1000 hours of operation

Refer to the contents to find the page number of the sections referred to !

Pos. in fig	Action	Comment
4	Clean the outside/inside of the radiator core	In dusty environments, as necessary
2	Check lubrication on controls and joints	Lubricate if necessary
5	Check the tension and condition of the fan belt	Replace if necessary
7	Replace the air cleaner filter element, check that hoses and connectors are tight	
6	Change the fuel filter	Refer to the engine manual
6	Change the engine oil and oil filter	Refer to the engine manual
4	Check coolant freezing point	Change the coolant every other year
16	Check the oil level in the drums	
13	Check the hydraulic reservoir cover/breather	
12	Change hydraulic fluid filter	
6	Check the engine valve clearances	Refer to the engine manual
5	Replace fan belt	Refer to the engine manual
	Check the belt tension on the hydraulic vibration and steering pump drive belt	

https://truckmanualshub.com/

Every 2000 hours of operation

Refer to the contents to find the page number of the sections referred to !

Pos. in fig	Action	Comment
4	Clean the outside/inside of the radiator core	In dusty environments, as necessary
2	Check lubrication on controls and joints	Lubricate if necessary
5	Check the tension and condition of the fan belt	Replace if necessary
7	Replace the air cleaner filter element, check that hoses and connectors are tight	
6	Change the fuel filter	Refer to the engine manual
6	Change the engine oil and oil filter	Refer to the engine manual
4	Check coolant freezing point	Change the coolant every other year
16	Check the oil level in the drums	
13	Check the hydraulic reservoir cover/breather	
12	Change hydraulic fluid filter	
6	Check the engine valve clearances	Refer to the engine manual
5	Replace fan belt	Refer to the engine manual
13	Change the hydraulic fluid	
6	Replace the breather valve on the engine	Refer to the engine manual
16	Change the oil in the drums	
1	Drain and clean the water tank	
14	Drain and clean the fuel tank	
15	Check the condition of the articulation	
	Check the belt tension on the hydraulic vibration and steering pump drive belt	
	Replace the hydraulic pump drive belt	

Service - Checklist

Pos	Action	Every 10 hours of operation (Daily)	After the FIRST 50 hours of operation	Every 50 hours of operation (Weekly)	Every 250 hours of operation	Every 500 hours of operation	Every 750 hours of operation	Every 1000 hours of operation	Every 1250 hours of operation	Every 1500 hours of operation	Every 1750 hours of operation	Every 2000 hours of operation	Every 24 the month	NOTE
6	Check the engine oil level	O												Refer to the engine manual
13	Check/Change fluid level in hydraulic reservoir	O										●		
4	Check/Change coolant level	O				O							●	
14	Refuel	●												
1	Fill the water tank	●												
9	Check the sprinkler system	O												
4	Check for free circulation of cooling air	O												
10	Check the scraper setting	O												
	Check the warning lamps	O												
7	Check the air cleaner indicator	O												
3	Test the brakes	O												
6	Change the engine oil and oil filter		●		●	●	●	●	●	●	●	●		Refer to the engine manual
12	Change the hydraulic fluid filter		●					●				●		
6	Check the engine valve clearance							O				O		
	Check the belt tension on the hydraulic pump drive belt		O					O				O		
7	Drain the air cleaner dust trap			●										
11	Check the rubber elements and bolted joints			O										
7	Clean the air cleaner filter element				O	O	O	O	O	O	O	O		
7	Check that hoses and couplings are not leaking				O	O	O	O	O	O	O	O		
4	Clean the coolers				O	O	O	O	O	O	O	O		In duty environments, as necessary
2	Check controls and joints				O	O	O	O	O	O	O	O		Lubricate as necessary
5	Check fan belt tension and condition				O		O	O	O		O	O		Replace where necessary
6	Change the fuel filter					O		O		O		O		Refer to the engine manual
4	Check coolant freezing point					O		O		O		O	●	
16	Check the oil level in the drums					O		O		O		O		
13	Check the hydraulic reservoir cover/breather					O		O		O		O		
5	Change the fan belt							●				●		
6	Change the engine breather valve											●		Refer to the engine manual
16	Change the oil in the drums											●		
1	Drain and clean the water tank											●		
14	Drain and clean the fuel tank											●		
15	Check the condition of the articulation											O		
7	Inspect/clean the filter element in the air cleaner											O●		
	Replace the hydraulic pump drive belt											●		

O Check ● Change

https://truckmanualshub.com/

https://truckmanualshub.com/

Maintenance, 10h

Every 10 hours of operation (Daily)

Park the roller on a level surface.
The engine must be switched off and the parking brake activated when checking or adjusting the roller, unless otherwise specified.

Ensure that there is good ventilation (air extraction) if the engine is run indoors. Risk of carbon monoxide poisoning.

Ensure that the engine cover is fully open when work is carried out under the cover.

Diesel engine Check oil level

Open the engine cover lock and lower the engine cover forwards.

Check the oil level using the dipstick (1). The level should be between the marks. If the level is near the lower mark, top off with fresh engine oil via the filler cap (2). See under the heading lubricants for the correct oil grade.

Never overfill with oil, as this can damage the engine.

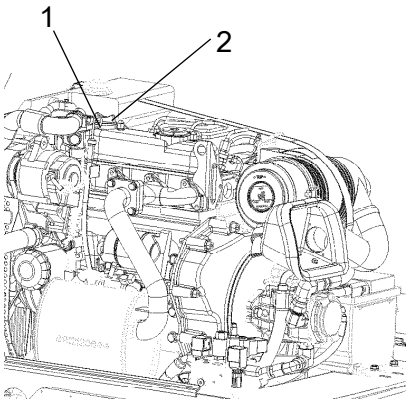

Fig. Engine
1. Dipstick
2. Filler cap

https://truckmanualshub.com/

Hydraulic reservoir, Level check - Filling

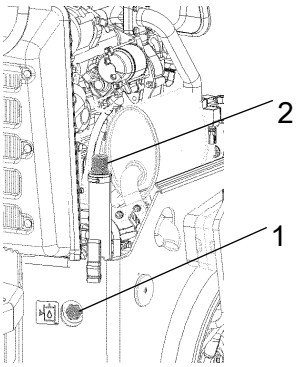

Fig. Hydraulic reservoir
1. Sight glass
2. Filler hose

Wipe the sight glass (1) clean. Check that the fluid level is between the min. and max. markings. Where required, top off with fresh hydraulic fluid through the filler hose (2).

See under the heading ‘Lubricants’ for the correct fluid grade.

Check - Coolant system

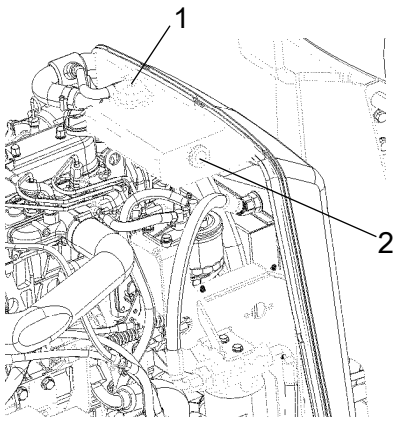

Figure. Cooling water container
1. Filler cap
2. Level marking

Check that all hoses/hose connectors are intact and tight. Fill with coolant as specified in the lubricants specification.

Take great care when opening the radiator cap while the engine is hot. Wear protective gloves and goggles.

Also check the freezing point. Change the coolant every other year.

https://truckmanualshub.com/

Refueling

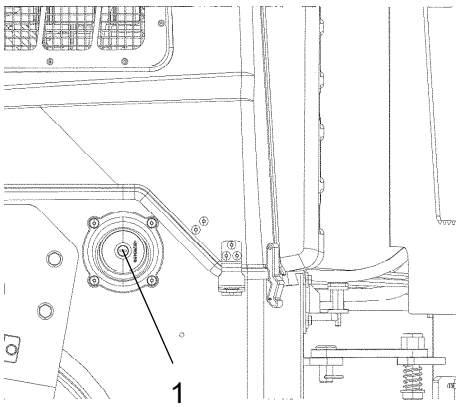

Fig. Left side
1. Filler pipe/cap

Refuel the tank every day before starting work. Open the tank cap and fill through the filler pipe (1).

Never refuel while the engine is running. Do not smoke and avoid spilling fuel.

Stop the engine. Short circuit the fueling nozzle during refueling by pressing it against the filler pipe (1)

The tank holds 23 liters (6.1 gal) of fuel.

Water tank - Filling

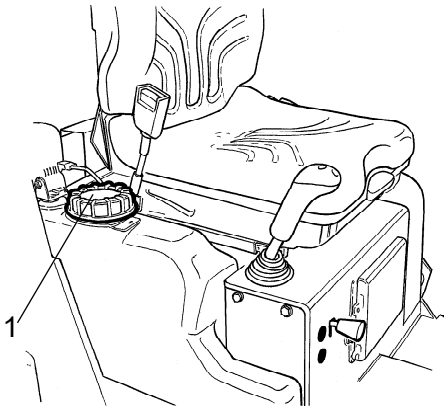

Fig. Water tank
1. Tank cap

Unscrew the tank cap (1), and fill with clean water.

Fill the water tank.

The CC version tank holds 110 liters.

The Plus version tank holds 190 liters.

Only additive: A small amount of environmentally friendly antifreeze.

https://truckmanualshub.com/

Sprinkler system/Drum
Cleaning of sprinkler nozzle

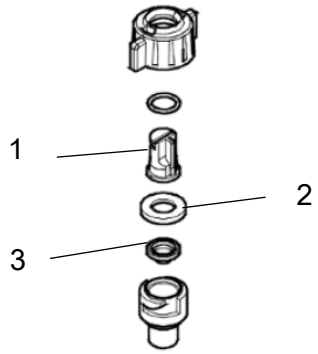

Figure. Nozzle
1. Nozzle
2. Gasket
3. Filter

Dismantle the blocked nozzle by hand.

Blow the nozzle (1) and fine filter (3) clean using compressed air. Alternatively, fit replacement parts and clean the blocked parts later on.

Nozzle	Colour	l/min (at 2.0 bar)	gal/min (at 40 psi)
Standard	yellow	0.63	0.20
Option	blue	0.98	0.30
Option	red	1.31	0.40
Option	brown	1.63	0.50

After inspecting and carrying out any necessary cleaning, start the system and check that it works.

Wear protective goggles when working with compressed air.

Sprinkler system - Check, cleaning

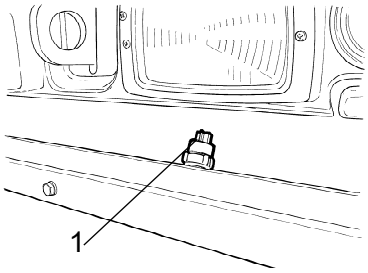

Fig. Sprinkler system
1. Sprinkler nozzles

Check that the holes in the sprinkler nozzles (1) are not blocked. Clean where necessary.

https://truckmanualshub.com/

Sprinkler system - Check, cleaning

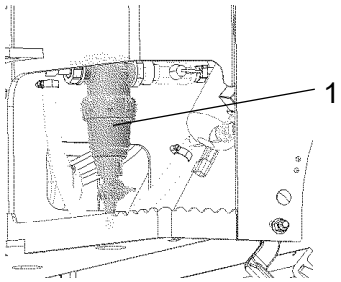

Fig. Bay under the floor
1. Water filter

Check that the water filter (1) is not blocked. Clean where necessary. Clean the water filter by unscrewing the filter's lower section, and clean the strainer and filter housing. Reassemble in the reverse order.

Air circulation - Check

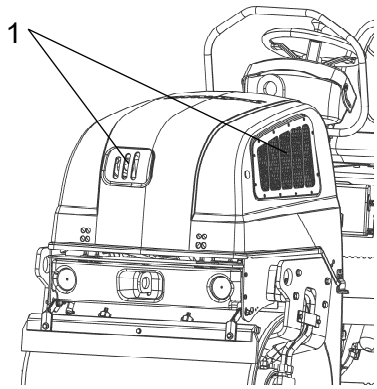

Fig. Engine cover
1. Cooling air grille/engine

Check that the circulation of air to the engine through the grille in the engine cover is unobstructed.

Scrapers - Check, adjustment

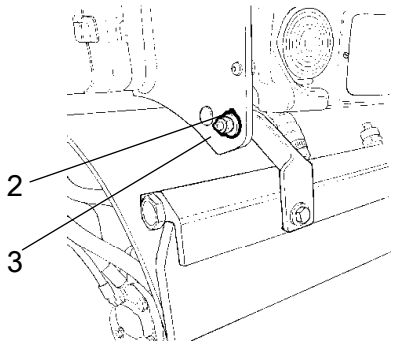

Fig. Front scrapers in transport position
2. Locking nut
3. Mounting plate

Make sure that the scrapers are undamaged. Adjust the scrapers if necessary in the following way:

For firmer application of the scraper, undo the locking nut (2) and adjust it until the desired application is achieved.

Lock the setting by tightening the lock nut against the mounting bracket (3).

Adjust the pressure on both scraper brackets.

To set a lower scraper pressure, adjust in the reverse order to the above.

https://truckmanualshub.com/

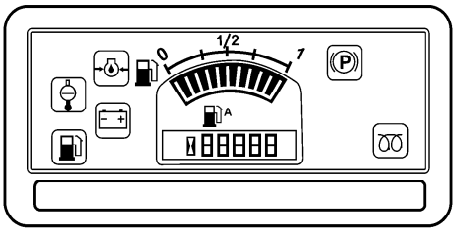

Fig. Control panel.

Warning lamps - Check

Check that the warning lamps on the control panel function.

Air cleaner indicator

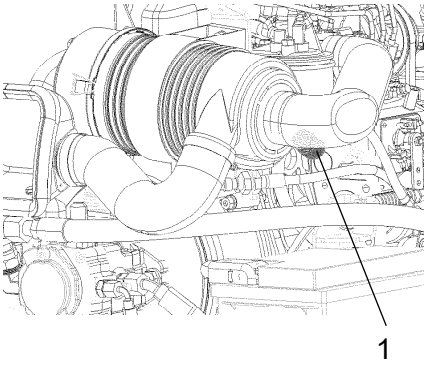

Fig. Air cleaner
1. Indicator

If the indicator (1) on the air cleaner turns red, empty the dust pouch (2) on the air cleaner. The dust pouch is emptied by pressing the rubber bellows with your fingers. Check also that the air hoses are in good condition.

Clean the air cleaner when operated in extremely dusty environments.

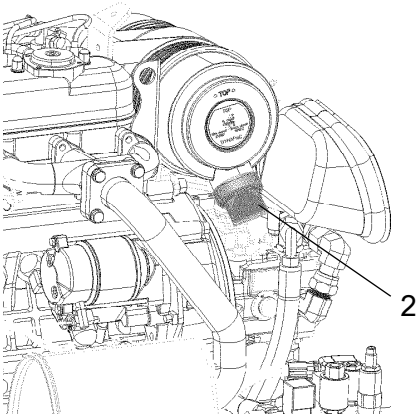

Fig. Air cleaner, right side
2. Dust pouch

https://truckmanualshub.com/

Brakes - Check

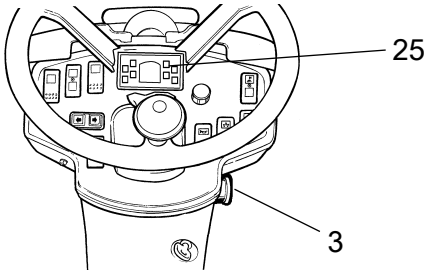

Figure. Instrument panel
3. Emergency stop
25. Parking brake lamp

Check operation of the brakes as follows:

Run the roller very slowly forward. Hold the steering wheel firmly and brace yourself for a sudden stop.

Press in the emergency stop button (3). The roller will stop abruptly and the engine will switch off.

After testing the brakes, set the forward/reverse lever in neutral.

Pull out the emergency stop button (3). Start the engine.

The roller is now ready for operation.

Refer also to the section in the manual on operation.

https://truckmanualshub.com/

https://truckmanualshub.com/

Maintenance - 50h

Every 50 hours of operation (Weekly)

Park the roller on a level surface.
The engine must be switched off and the parking brake activated when checking or adjusting the roller, unless otherwise specified.

Ensure that there is good ventilation (air extraction) if the engine is run indoors. Risk of carbon monoxide poisoning.

Ensure that the engine cover is fully open when work is being carried out under it

After the first 50 hours of operation, the oil filters should be changed.

Air cleaner - emptying

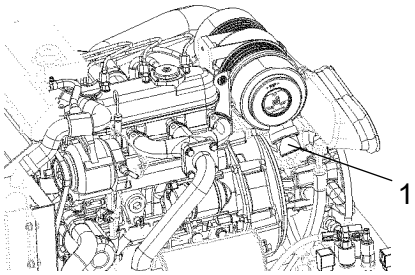

Fig. Air cleaner
1. Dust trap

Empty the air cleaner dust trap (1) through pressing the rubber bellows using the fingers. Check also that the air hoses are intact.

Clean the air cleaner when operated in extremely dusty environments .

Refer also to the section in the manual on operation.

https://truckmanualshub.com/

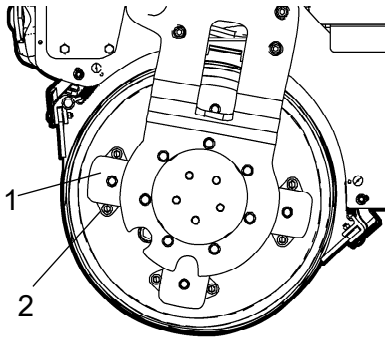

Figure. Drum suspension
1. Rubber element
2. Fastening screws

Rubber elements and fastening screws - Check

Check all the rubber elements (1), and replace all the elements if more than 20% of them on one side of the drum are cracked deeper than 10-15 mm.

Use a the blade of a knife or pointed object to check.

Check also that the screw fasteners (2) are tightened.

! The screws on the rubber elements are sealed with Loctite. Check the rubber elements on both sides of the roller.

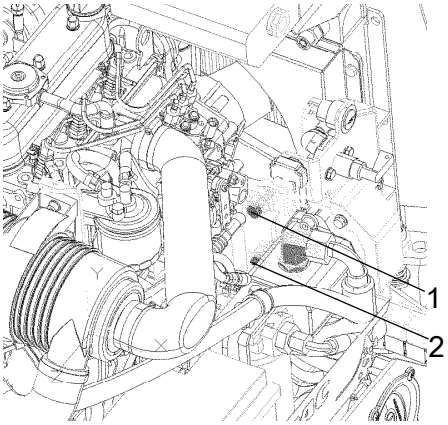

Fig. Engine compartment
1. Screw
2. Screw

Belt tension on the hydraulic vibration and steering pump drive belt - Check

If the hydraulic pump drive belt can be pressed in 5-6 mm between the pulleys with a force of 50 Nm, then the belt is correctly tensioned.

Do as follows to tension the belt:

- Undo the screws (1) and (2).

- Press over the hydraulic pump so that the belt tensions to the specified extent.

- Tighten screw (1) and then screw (2).

- Check that the belt still has the correct tension after tightening.

Replace the belt when necessary, or after 2000 h.

https://truckmanualshub.com/

Maintenance measures - 250 h

Every 250/750/1250/1750..... hours of operation (every 3 months)

Park the roller on a level surface.
The engine must be switched off and the parking brake activated when checking or adjusting the roller, unless otherwise specified.

Ensure that there is good ventilation (air extraction) if the engine is run indoors. Risk of carbon monoxide poisoning.

Ensure that the engine cover is fully open when work is being carried out under it

Air cleaner - Cleaning - Change

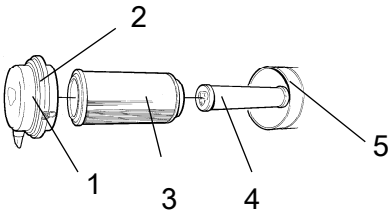

Fig. Air cleaner
1. Catches
2. Cover
3. Main filter
4. Backup filter
5. Filter housing

Clean the air cleaner. Remove the main filter (3) by undoing the catches (1), and then the cover (2).

Check that the filter element is undamaged. Clean the element by banging it against your hand or other soft object.

Then blow clean with compressed air (max 5 bars) from the inside of the filter. Also clean the filter housing (5) and the cover (2).

Replace the filter cartridge after 5 cleanings or more frequently.

https://truckmanualshub.com/

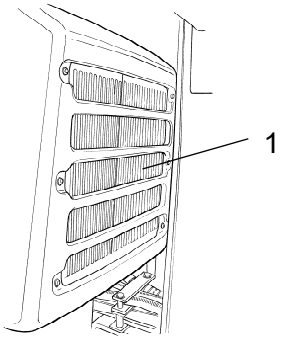

Fig. Engine compartment
1. Hydraulic fluid cooler

Hydraulic fluid cooler - Cleaning

Clean the hydraulic fluid cooler's cooling flanges, ideally with compressed air. Blow the cooler clean by blowing air from the inside outwards.

Wear gloves and eye protectors when working with compressed air.

Forward/Reverse controls and joints - Check and lubrication

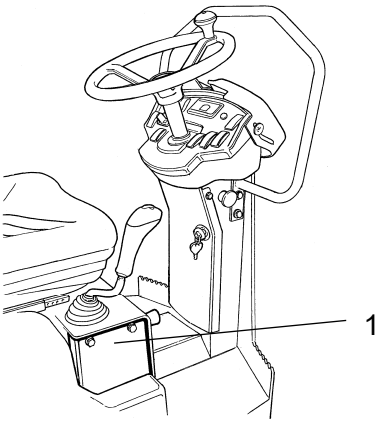

Fig. Forward/Reverse lever
1. Plate

Remove the plate (1). Check the friction of the forward/reverse controls. The friction screws should be set so that the forward/reverse lever remains in the position in which it is set whilst the machine is operated. The control's '0 position' is determined by a screw which engages with the groove on the shaft between the controls.

If the control begins to be stiff after a longer period of use, lubricate the controls by the bearings and the control cable with a few drops of oil.

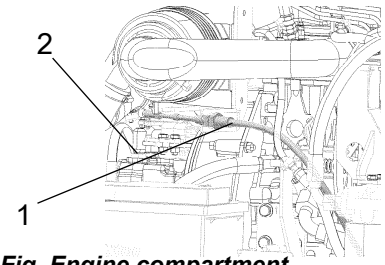

Fig. Engine compartment
1. F/R-control cable
2. Propulsion pump

If the forward/reverse lever still is stiff after the above adjustments, lubricate the other end of the control cable with a few drops of oil. The cable is located on the top of the propulsion pump.

https://truckmanualshub.com/

Maintenance measures - 500 h

Every 500/1500..... hours of operation (every six months)

Park the roller on a level surface.
The engine must be switched off and the parking brake activated when checking or adjusting the roller, unless otherwise specified.

Ensure that there is good ventilation (air extraction) if the engine is run indoors. Risk of carbon monoxide poisoning.

Ensure that the engine cover is fully open when work is being carried out under it

Hydraulic fluid cooler - Cleaning

Clean the hydraulic fluid cooler's cooling flanges, ideally with compressed air. Blow the cooler clean by blowing air from the inside outwards.

Wear gloves and eye protectors when working with compressed air.

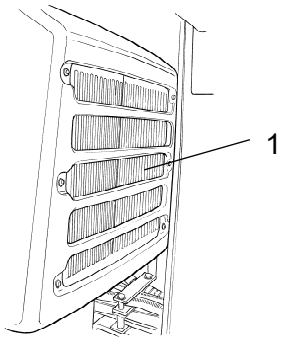

Fig. Engine compartment
1. Hydraulic fluid cooler

https://truckmanualshub.com/

Forward/Reverse controls and joints - Check and lubrication

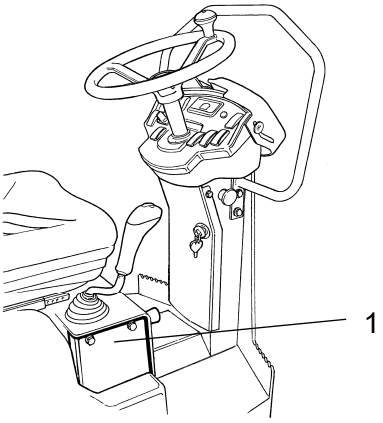

Fig. Forward/Reverse lever
1. Plate

Remove the plate (1). Check the friction of the forward/reverse controls. The friction screws should be set so that the forward/reverse lever remains in the position in which it is set whilst the machine is operated. The control's '0 position' is determined by a screw which engages with the groove on the shaft between the controls.

If the control begins to be stiff after a longer period of use, lubricate the controls by the bearings and the control cable with a few drops of oil.

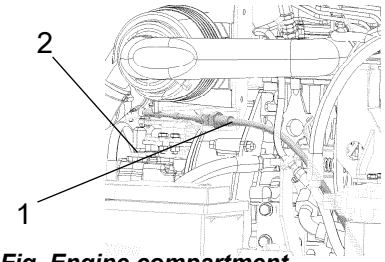

Fig. Engine compartment
1. F/R-control cable
2. Propulsion pump

If the forward/reverse lever still is stiff after the above adjustments, lubricate the other end of the control cable with a few drops of oil. The cable is located on the top of the propulsion pump.

https://truckmanualshub.com/

Air cleaner - Cleaning - Change

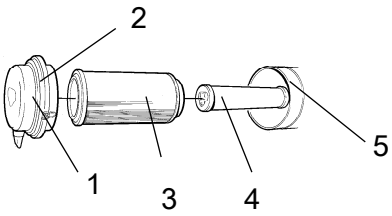

Fig. Air cleaner
1. Catches
2. Cover
3. Main filter
4. Backup filter
5. Filter housing

Clean the air cleaner. Remove the main filter (3) by undoing the catches (1), and then the cover (2).

Check that the filter element is undamaged. Clean the element by banging it against your hand or other soft object.

Then blow clean with compressed air (max 5 bars) from the inside of the filter. Also clean the filter housing (5) and the cover (2).

Replace the filter cartridge after 5 cleanings or more frequently.

https://truckmanualshub.com/

Engine oil and oil filter - Change

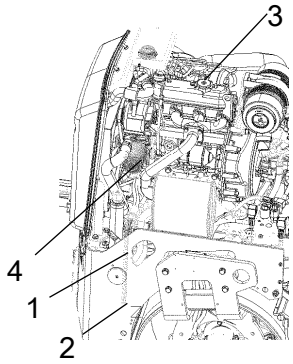

Fig. Engine compartment left side
1. Drain hose
2. Plug
3. Filler cap
4. Oil filter

Run the engine until it is warm before draining the oil .

Switch off the engine and push in the emergency brake button.

Take great care when draining fluids and oils. Wear protective gloves and goggles.

Set a container which can hold at least 5 liters (1,3 gal) under the drain plug (2).

Undo the oil filler cap (3), and undo the plug (2) in the end of the drain hose (1). Let all the engine oil flow out.

Deliver the drained oil to special waste handling.

Refer to the engine manual for detailed instructions when changing oil and filters.

Remove the oil filter (4) and fit a new filter.

Collect any spillage.

Fit the drain plug (2) to the end of the hose.

Fill with fresh engine oil. See under the heading lubricants, for the correct oil grade. Fit the filler cap (3) and check that the oil level is correct using the dipstick.

Start the engine and allow it to idle for a few minutes. During this time, check around the oil filter for leaks.

Switch off the engine, wait for a minute or so and then check the oil level. Top up with more oil if necessary.

https://truckmanualshub.com/

Check - Coolant system

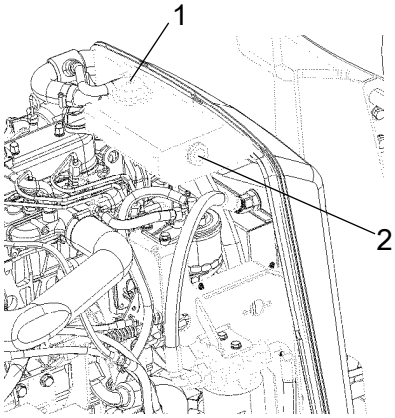

Figure. Cooling water container
1. Filler cap
2. Level marking

Check that all hoses/hose connectors are intact and tight. Fill with coolant as specified in the lubricants specification.

Take great care when opening the radiator cap while the engine is hot. Wear protective gloves and goggles.

Also check the freezing point. Change the coolant every other year.

Drum - Checking the oil level

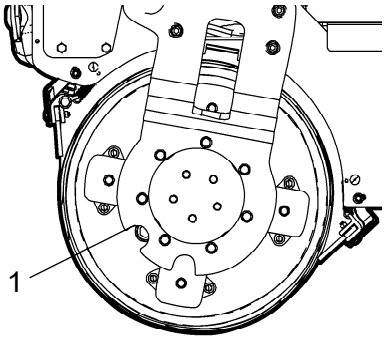

Fig. Drum drive side
1. Oil plug

Park the roller on a level surface, and drive the roller slowly until the oil plug (1) is in the middle of the semicircle shaped notch in the drum suspension.

Switch off the engine, disconnect the power and push in the emergency stop button.

Unscrew the plug and check that the oil level reaches the hole's lower edge. If necessary, top off with fresh transmission fluid. See under the heading lubricants for correct fluid grade.

Clean the magnetic oil plug (1) from any metallic residue, and refit the plug.

https://truckmanualshub.com/

Hydraulic reservoir - Check/venting

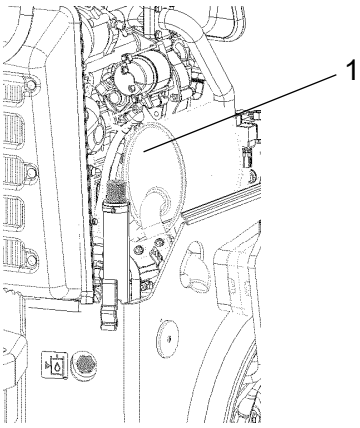

Figure. Engine compartment, right side
1. Hydraulic fluid tank cap

Unscrew and make sure that the reservoir cap is not blocked. Air must have unobstructed passage through the cap in both directions.

If blocked in either direction, clean with a little diesel oil and blow with compressed air until unblocked or replace the cap with a new one.

Wear eye protectors and gloves when working with compressed air.

Belt tension on the hydraulic vibration and steering pump drive belt - Check

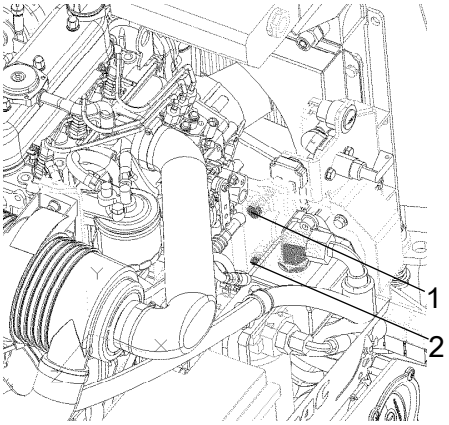

Fig. Engine compartment
1. Screw
2. Screw

If the hydraulic pump drive belt can be pressed in 5-6 mm between the pulleys with a force of 50 Nm, then the belt is correctly tensioned.

Do as follows to tension the belt:

- Undo the screws (1) and (2).

- Press over the hydraulic pump so that the belt tensions to the specified extent.

- Tighten screw (1) and then screw (2).

- Check that the belt still has the correct tension after tightening.

Replace the belt when necessary, or after 2000 h.

https://truckmanualshub.com/

Maintenance - 1000h

Performed after 1000 operating hours (each year)

Park the roller on a level surface.
The engine must be switched off and the parking brake activated when checking or adjusting the roller, unless otherwise specified.

Ensure that there is good ventilation (air extraction) if the engine is run indoors. Risk of carbon monoxide poisoning.

Ensure that the engine cover is fully open when work is being carried out under it

Hydraulic fluid cooler - Cleaning

Clean the hydraulic fluid cooler's cooling flanges, ideally with compressed air. Blow the cooler clean by blowing air from the inside outwards.

Wear gloves and eye protectors when working with compressed air.

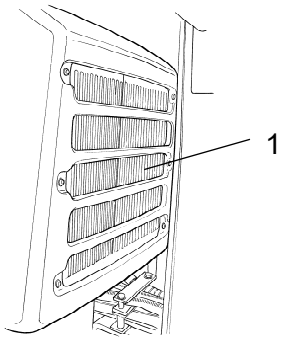

Fig. Engine compartment
1. Hydraulic fluid cooler

https://truckmanualshub.com/

Forward/Reverse controls and joints - Check and lubrication

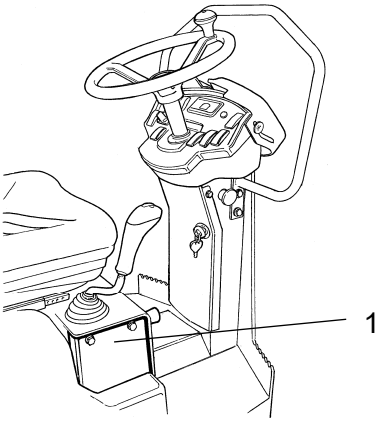

Fig. Forward/Reverse lever
1. Plate

Remove the plate (1). Check the friction of the forward/reverse controls. The friction screws should be set so that the forward/reverse lever remains in the position in which it is set whilst the machine is operated. The control's '0 position' is determined by a screw which engages with the groove on the shaft between the controls.

If the control begins to be stiff after a longer period of use, lubricate the controls by the bearings and the control cable with a few drops of oil.

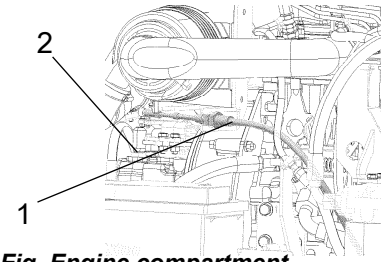

Fig. Engine compartment
1. F/R-control cable
2. Propulsion pump

If the forward/reverse lever still is stiff after the above adjustments, lubricate the other end of the control cable with a few drops of oil. The cable is located on the top of the propulsion pump.

https://truckmanualshub.com/

Air cleaner - Cleaning - Change

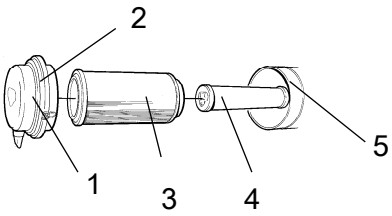

Fig. Air cleaner
1. Catches
2. Cover
3. Main filter
4. Backup filter
5. Filter housing

Clean the air cleaner. Remove the main filter (3) by undoing the catches (1), and then the cover (2).

Check that the filter element is undamaged. Clean the element by banging it against your hand or other soft object.

Then blow clean with compressed air (max 5 bars) from the inside of the filter. Also clean the filter housing (5) and the cover (2).

Replace the filter cartridge after 5 cleanings or more frequently.

https://truckmanualshub.com/

Engine oil and oil filter - Change

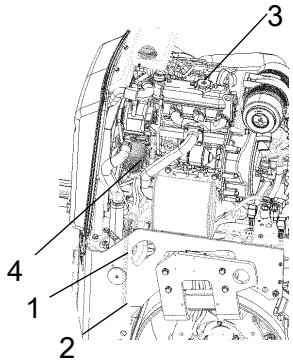

Fig. Engine compartment left side
1. Drain hose
2. Plug
3. Filler cap
4. Oil filter

Run the engine until it is warm before draining the oil .

Switch off the engine and push in the emergency brake button.

Take great care when draining fluids and oils. Wear protective gloves and goggles.

Set a container which can hold at least 5 liters (1,3 gal) under the drain plug (2).

Undo the oil filler cap (3), and undo the plug (2) in the end of the drain hose (1). Let all the engine oil flow out.

Deliver the drained oil to special waste handling.

Refer to the engine manual for detailed instructions when changing oil and filters.

Remove the oil filter (4) and fit a new filter.

Collect any spillage.

Fit the drain plug (2) to the end of the hose.

Fill with fresh engine oil. See under the heading lubricants, for the correct oil grade. Fit the filler cap (3) and check that the oil level is correct using the dipstick.

Start the engine and allow it to idle for a few minutes. During this time, check around the oil filter for leaks.

Switch off the engine, wait for a minute or so and then check the oil level. Top up with more oil if necessary.

https://truckmanualshub.com/

Check - Coolant system

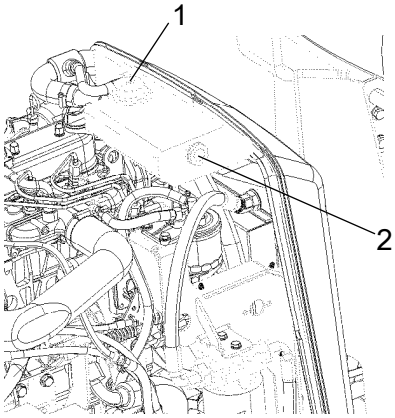

Figure. Cooling water container
1. Filler cap
2. Level marking

Check that all hoses/hose connectors are intact and tight. Fill with coolant as specified in the lubricants specification.

Take great care when opening the radiator cap while the engine is hot. Wear protective gloves and goggles.

Also check the freezing point. Change the coolant every other year.

Drum - Checking the oil level

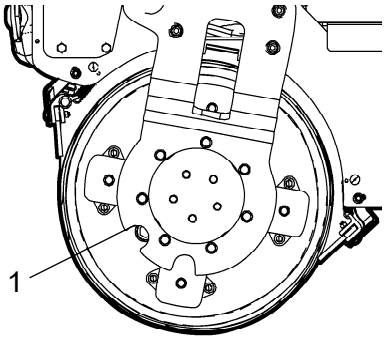

Fig. Drum drive side
1. Oil plug

Park the roller on a level surface, and drive the roller slowly until the oil plug (1) is in the middle of the semicircle shaped notch in the drum suspension.

Switch off the engine, disconnect the power and push in the emergency stop button.

Unscrew the plug and check that the oil level reaches the hole's lower edge. If necessary, top off with fresh transmission fluid. See under the heading lubricants for correct fluid grade.

Clean the magnetic oil plug (1) from any metallic residue, and refit the plug.

https://truckmanualshub.com/

Hydraulic reservoir - Check/venting

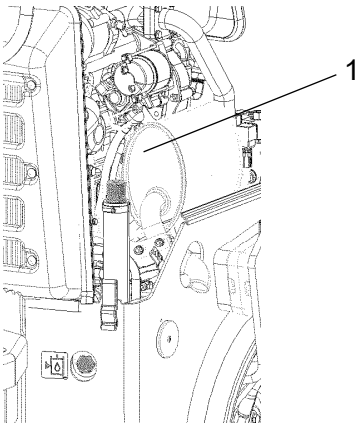

Figure. Engine compartment, right side
1. Hydraulic fluid tank cap

Unscrew and make sure that the reservoir cap is not blocked. Air must have unobstructed passage through the cap in both directions.

If blocked in either direction, clean with a little diesel oil and blow with compressed air until unblocked or replace the cap with a new one.

Wear eye protectors and gloves when working with compressed air.

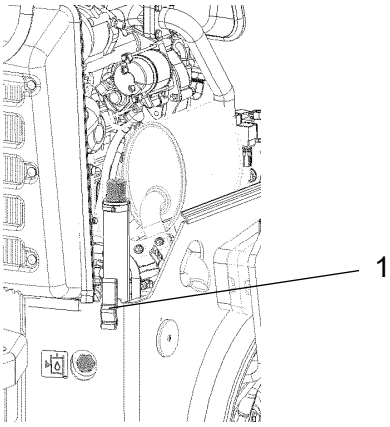

Fig. Engine compartment, right side
1. Sight glass

Check the hydraulic oil level in the sight glass (1) and top off where necessary. See under the heading ‘Every 10 hours of operation’.

https://truckmanualshub.com/

Hydraulic fluid filter - Change

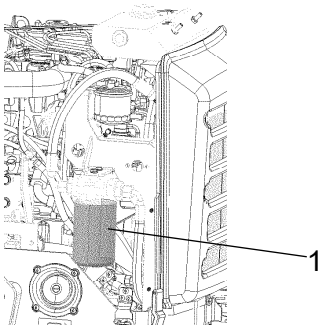

Fig. Engine compartment, left side
1. Hydraulic fluid filter

Remove the filter (1) and deliver to special waste handling. This is a single-use filter and cannot be cleaned.

Thoroughly clean the filter holder sealing surface.

Apply a thin coat of fresh hydraulic fluid to the rubber gasket on the new filter.

Screw the filter on by hand, firstly until the filter gasket makes contact with the filter base. Then rotate a further ½ turn.

Do not over-tighten. The seal can be damaged.

Start the engine and check that the filter does not leak.

Alternator belt - Checking tension - Change

Switch off the engine, disconnect the power and switch on the emergency brake button.

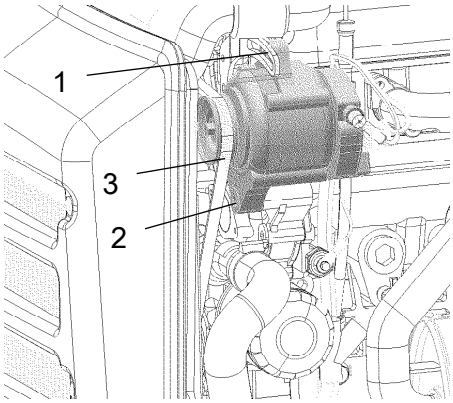

Fig. Alternator viewed from the front
1. Mounting screw
2. Mounting screw
3. Alternator belt

Undo the two hexagonal socket screws (1) and (2). Bend off the old alternator belt and replace with a new

Press the alternator across so that the alternator belt is tensioned to the measurement given below.

When the alternator belt (3) can be pressed by hand in around 10 mm halfway between the pulleys, it is correctly tensioned.

Tighten first screw (1) and then screw (2). Check that the belt still has the correct tension after tightening.

https://truckmanualshub.com/

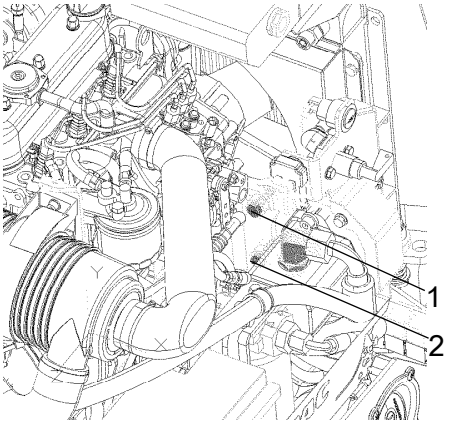

Fig. Engine compartment
1. Screw
2. Screw

Belt tension on the hydraulic vibration and steering pump drive belt - Check

If the hydraulic pump drive belt can be pressed in 5-6 mm between the pulleys with a force of 50 Nm, then the belt is correctly tensioned.

Do as follows to tension the belt:

- Undo the screws (1) and (2).

- Press over the hydraulic pump so that the belt tensions to the specified extent.

- Tighten screw (1) and then screw (2).

- Check that the belt still has the correct tension after tightening.

Replace the belt when necessary, or after 2000 h.

https://truckmanualshub.com/

Maintenance - 2000h

Performed after 2000 operating hours (every two years)

Park the roller on a level surface.
The engine must be switched off and the parking brake activated when checking or adjusting the roller, unless otherwise specified.

Ensure that there is good ventilation (air extraction) if the engine is run indoors. Risk of carbon monoxide poisoning.

Ensure that the engine cover is fully open when work is being carried out under it

Hydraulic fluid cooler - Cleaning

Clean the hydraulic fluid cooler's cooling flanges, ideally with compressed air. Blow the cooler clean by blowing air from the inside outwards.

Wear gloves and eye protectors when working with compressed air.

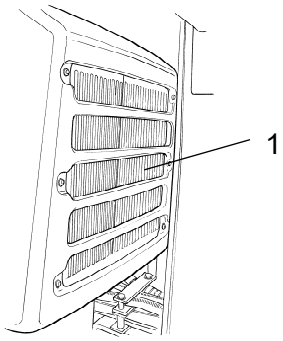

Fig. Engine compartment
1. Hydraulic fluid cooler

https://truckmanualshub.com/

Forward/Reverse controls and joints - Check and lubrication

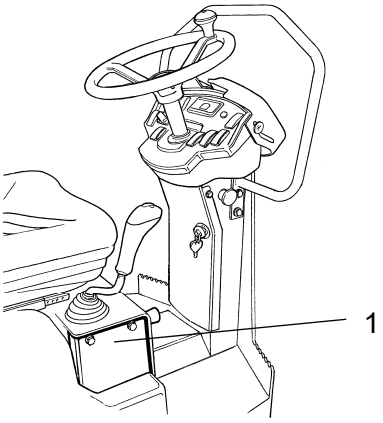

Fig. Forward/Reverse lever
1. Plate

Remove the plate (1). Check the friction of the forward/reverse controls. The friction screws should be set so that the forward/reverse lever remains in the position in which it is set whilst the machine is operated. The control's '0 position' is determined by a screw which engages with the groove on the shaft between the controls.

If the control begins to be stiff after a longer period of use, lubricate the controls by the bearings and the control cable with a few drops of oil.

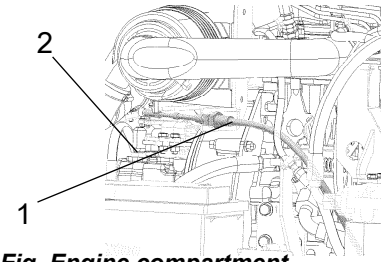

Fig. Engine compartment
1. F/R-control cable
2. Propulsion pump

If the forward/reverse lever still is stiff after the above adjustments, lubricate the other end of the control cable with a few drops of oil. The cable is located on the top of the propulsion pump.

https://truckmanualshub.com/

Air cleaner - Cleaning - Change

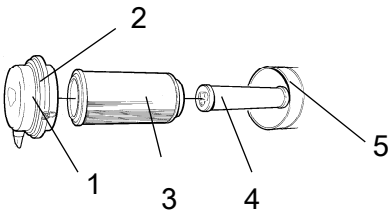

Fig. Air cleaner
1. Catches
2. Cover
3. Main filter
4. Backup filter
5. Filter housing

Clean the air cleaner. Remove the main filter (3) by undoing the catches (1), and then the cover (2).

Check that the filter element is undamaged. Clean the element by banging it against your hand or other soft object.

Then blow clean with compressed air (max 5 bars) from the inside of the filter. Also clean the filter housing (5) and the cover (2).

Replace the filter cartridge after 5 cleanings or more frequently.

https://truckmanualshub.com/

Engine oil and oil filter - Change

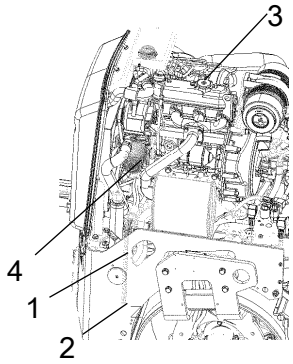

Fig. Engine compartment left side
1. Drain hose
2. Plug
3. Filler cap
4. Oil filter

Run the engine until it is warm before draining the oil .

Switch off the engine and push in the emergency brake button.

Take great care when draining fluids and oils. Wear protective gloves and goggles.

Set a container which can hold at least 5 liters (1,3 gal) under the drain plug (2).

Undo the oil filler cap (3), and undo the plug (2) in the end of the drain hose (1). Let all the engine oil flow out.

Deliver the drained oil to special waste handling.

Refer to the engine manual for detailed instructions when changing oil and filters.

Remove the oil filter (4) and fit a new filter.

Collect any spillage.

Fit the drain plug (2) to the end of the hose.

Fill with fresh engine oil. See under the heading lubricants, for the correct oil grade. Fit the filler cap (3) and check that the oil level is correct using the dipstick.

Start the engine and allow it to idle for a few minutes. During this time, check around the oil filter for leaks.

Switch off the engine, wait for a minute or so and then check the oil level. Top up with more oil if necessary.

https://truckmanualshub.com/

Check - Coolant system

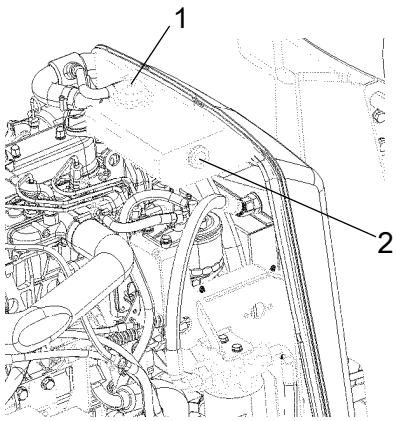

Figure. Cooling water container
1. Filler cap
2. Level marking

Check that all hoses/hose connectors are intact and tight. Fill with coolant as specified in the lubricants specification.

Take great care when opening the radiator cap while the engine is hot. Wear protective gloves and goggles.

Also check the freezing point. Change the coolant every other year.

Drum - Checking the oil level

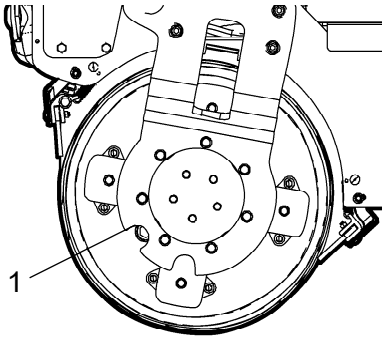

Fig. Drum drive side
1. Oil plug

Park the roller on a level surface, and drive the roller slowly until the oil plug (1) is in the middle of the semicircle shaped notch in the drum suspension.

Switch off the engine, disconnect the power and push in the emergency stop button.

Unscrew the plug and check that the oil level reaches the hole's lower edge. If necessary, top off with fresh transmission fluid. See under the heading lubricants for correct fluid grade.

Clean the magnetic oil plug (1) from any metallic residue, and refit the plug.

https://truckmanualshub.com/

Hydraulic reservoir - Check/venting

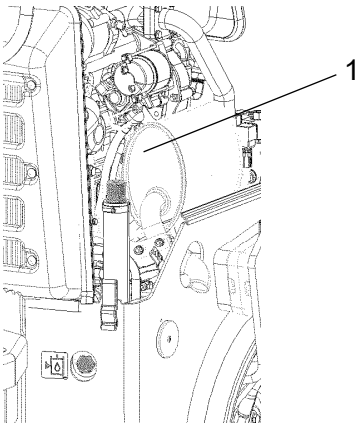

Figure. Engine compartment, right side
1. Hydraulic fluid tank cap

Unscrew and make sure that the reservoir cap is not blocked. Air must have unobstructed passage through the cap in both directions.

If blocked in either direction, clean with a little diesel oil and blow with compressed air until unblocked or replace the cap with a new one.

Wear eye protectors and gloves when working with compressed air.

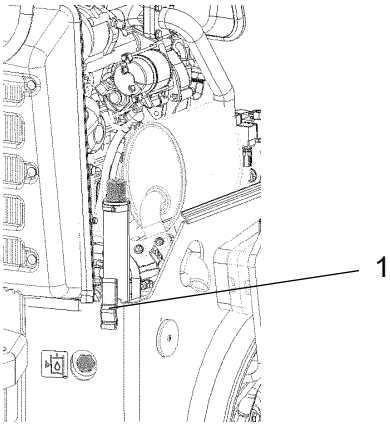

Fig. Engine compartment, right side
1. Sight glass

Check the hydraulic oil level in the sight glass (1) and top off where necessary. See under the heading ‘Every 10 hours of operation’.

https://truckmanualshub.com/

Hydraulic fluid filter - Change

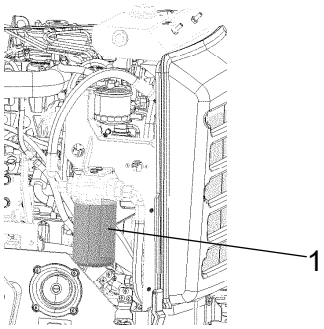

Fig. Engine compartment, left side
1. Hydraulic fluid filter

Remove the filter (1) and deliver to special waste handling. This is a single-use filter and cannot be cleaned.

Thoroughly clean the filter holder sealing surface.

Apply a thin coat of fresh hydraulic fluid to the rubber gasket on the new filter.

Screw the filter on by hand, firstly until the filter gasket makes contact with the filter base. Then rotate a further ½ turn.

Do not over-tighten. The seal can be damaged.

Start the engine and check that the filter does not leak.

https://truckmanualshub.com/

Hydraulic reservoir - fluid change

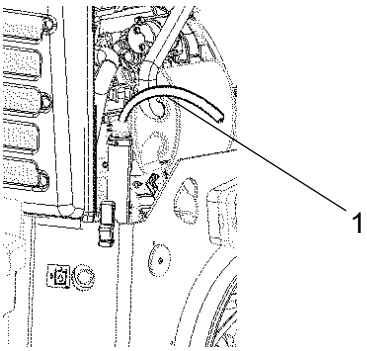

Fig. Hydraulic reservoir
1. Draining

Use an external drainage pump when draining/emptying the hydraulic reservoir.

Risk of burn injuries when draining hot oil. Wear protective gloves and goggles.

Unscrew the tank cap. Place the pump's suction hose in the filler/drain outlet in the hydraulic tank. Place the other hose in a container.

Use a receptacle that holds at least 15 liters (4 gal).

Start the pumpen so that it sucks out the fluid from the tank.

Check that the hose to the pump reaches the bottom of the hydraulic reservoir to ensure that as much of the fluid as possible is drained.

Collect the oil and deliver to special waste handling.

Fill up with the recommended hydraulic fluid to the correct level. Replace the cap on the tank and wipe clean.

Change the hydraulic fluid filter, see under heading 'Every 1000 hours of operation'.

Start the engine and operate the various hydraulic functions. Check the level in the reservoir and top off as required.

https://truckmanualshub.com/

Alternator belt - Checking tension - Change

Switch off the engine, disconnect the power and switch on the emergency brake button.

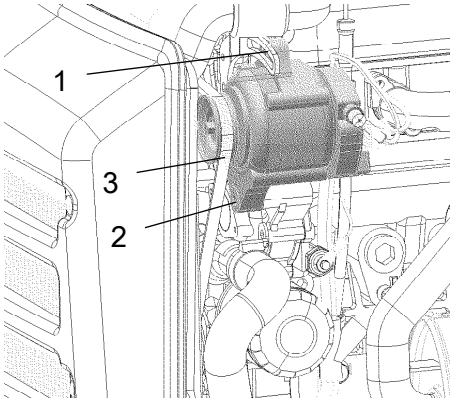

Fig. Alternator viewed from the front
1. Mounting screw
2. Mounting screw
3. Alternator belt

Undo the two hexagonal socket screws (1) and (2). Bend off the old alternator belt and replace with a new

Press the alternator across so that the alternator belt is tensioned to the measurement given below.

When the alternator belt (3) can be pressed by hand in around 10 mm halfway between the pulleys, it is correctly tensioned.

Tighten first screw (1) and then screw (2). Check that the belt still has the correct tension after tightening.

Water tank - Cleaning

Keep in mind that there is a risk of freezing in winter. Drain the tank, pump and lines.

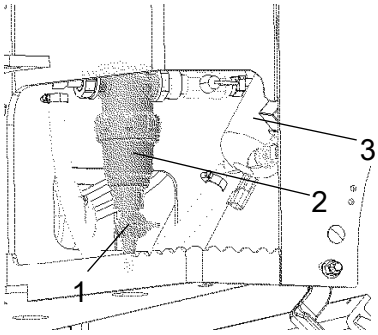

Fig. Bay under the floor
1. Drainage tap
2. Water filter
3. Water pump

Drain the tank through the drainage tap (1) alongside the filter.

Clean the tanks with water and a suitable detergent for plastic surfaces.

Clean the water filter (2). Fill the tank with water and check that the sprinkler functions.

The water tanks are made of plastic (polyethylene) and are recyclable.

https://truckmanualshub.com/

Drum - Changing the oil

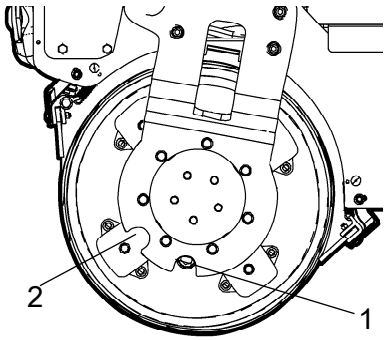

Fig. Drum, vibration side
1. Oil plug (1) in position for draining the oil.
2. The oil plug position for level check and filling.

Park the roller on a level surface, and drive the roller slowly until the plug (1) is in the bottom position.

Switch off the engine, disconnect the power and push in the emergency stop button.

Place a receptacle that will hold at least 4 liters (1 gal) under the plug.

Remove the plug (1) and let the oil run out.

Deliver the drained oil to special waste handling.

Refit the plug. Top up with new oil in position 2. See 'Every 500 hours of operation' for filling oil.

Fuel tank - Cleaning

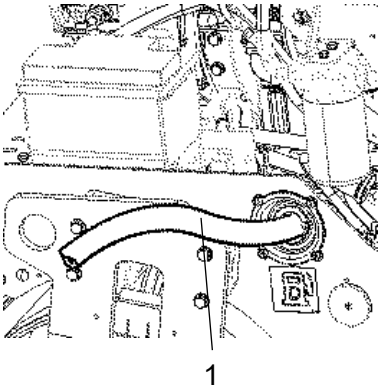

Fig. Fuel tank
1. Hose from external pump

It is easiest to clean the tank when it is almost empty.

Pump out any bottom sediment using an external pump.

To remove any additional bottom sediment, fill the tank with two liters of diesel, and then pump it out using the external pump.

Collect in a container which holds at least 28 liters and deliver to special waste handling.

Keep in mind fire risk when handling fuel.

The fuel tank is made of plastic (polyethylene) and is recyclable.

https://truckmanualshub.com/

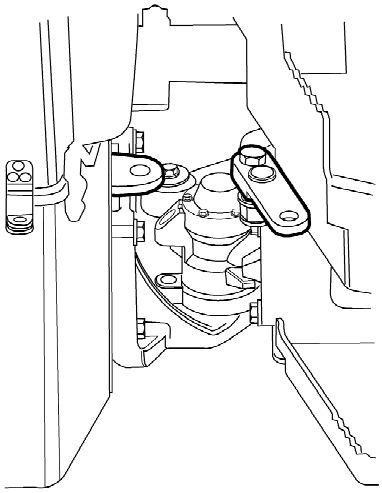

Fig. Steering joint

Steering joint - Check

Inspect the steering joint to detect any damage or cracks.

Check and tighten any loose bolts.

Check also for any stiffness and play in the steering joint. Rectify if necessary.

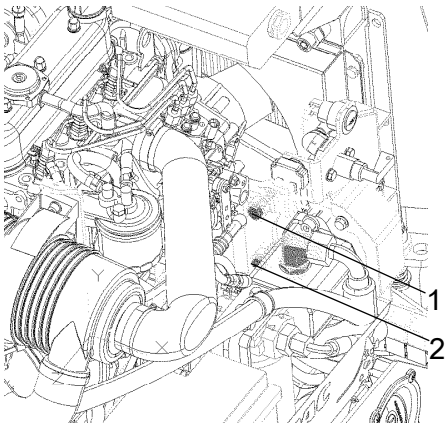

Fig. Engine compartment
1. Screw
2. Screw

Belt tension on the hydraulic vibration and steering pump drive belt - Check

If the hydraulic pump drive belt can be pressed in 5-6 mm between the pulleys with a force of 50 Nm, then the belt is correctly tensioned.

Do as follows to tension the belt:

- Undo the screws (1) and (2).

- Press over the hydraulic pump so that the belt tensions to the specified extent.

- Tighten screw (1) and then screw (2).

- Check that the belt still has the correct tension after tightening.

Replace the belt when necessary, or after 2000 h.

https://truckmanualshub.com/

Dynapac Compaction Equipment AB
Box 504, SE 371 23 Karlskrona, Sweden

www.dynapac.com