https://truckmanualshub.com/

Operator's manual

Menzi Muck AG
9451 Kriessern/Switzerland

Telefon +41 (0)71 727 12 12
Fax +41 (0)71 727 12 13
www.menzimuck.com
info@menzimuck.com

https://truckmanualshub.com/

(Original instructions)

EN

operating instructions

mini-excavator 12VXE

serial numbers from n°:
EB12*0010

09/12 - R01
code. 2032707038

IHIMER
a joint venture IHI GROUP
ihimer.com

https://truckmanualshub.com/

SCHEDULED MAINTENANCE

Proper maintenance is essential to long service life and optimal operation. IHIMER has scheduled a series of controls and work to be done at our authorised service centres.
WARNING: Scheduled services are required by the Manufacturer. Failure to observe this requirement voids the warranty.

PROGRAMMED SERVICE TABLE

HOURS / JOB	50	250	500	750	1000	1250	1500	1750	2000
Diesel engine oil and filter change	●	●	●	●	●	●	●	●	●
Hydraulic circuit return filter change	●		●	●	●	●	●	●	●
Fuel filter change		●	●	●	●	●	●	●	●
Fan belt inspection and tensioning		●	●	●	●	●	●	●	●
Engine coolant change		●	●	●	●	●	●	●	●
Setting fasteners			●		●		●		●
Air filter change			●		●		●		●
Check and adjust track tension			●		●		●		●
Travel gear reducer check			●		●		●		●
Travel gear reducer oil change					●				●
Hydraulic plant fluid and filter change					●				●

SERVICE REGISTER

SPACE RESERVED FOR REGISTERING SCHEDULED SERVICES.

Determine the service schedule from the scheduled service table and indicate the type of work to be done (**SERVICE** or **REPAIR** - indicate in the notes) fill in all other fields.

IHIMER **JOB N°1** ☐ **SERVICE** ☐ **JOB** ***(*)***

notes : _____

_____

_____

_____

_____

STAMP AND SIGNATURE

DONE AT HOURS : _____ **DATE :** _____ _____

( )INDICATE THE TYPE OF INTERVENTION PERFORMED IN THE NOTES FIELD*

https://truckmanualshub.com/

IHIMER

JOB N°2

☐ SERVICE ☐ JOB *(*)*

notes : _____

STAMP AND SIGNATURE

DONE AT HOURS : _____ DATE : _____ _____

IHIMER

JOB N°3

☐ SERVICE ☐ JOB *(*)*

notes : _____

STAMP AND SIGNATURE

DONE AT HOURS : _____ DATE : _____ _____

IHIMER

JOB N°4

☐ SERVICE ☐ JOB *(*)*

notes : _____

STAMP AND SIGNATURE

DONE AT HOURS : _____ DATE : _____ _____

IHIMER

JOB N°5

☐ SERVICE ☐ JOB *(*)*

notes : _____

STAMP AND SIGNATURE

DONE AT HOURS : _____ DATE : _____ _____

( )INDICATE THE TYPE OF INTERVENTION PERFORMED IN THE NOTES FIELD*

https://truckmanualshub.com/

IHIMER

JOB N°6

☐ SERVICE ☐ JOB *(*)*

notes : _____

STAMP AND SIGNATURE

DONE AT HOURS : _____ DATE : _____ _____

IHIMER

JOB N°7

☐ SERVICE ☐ JOB *(*)*

notes : _____

STAMP AND SIGNATURE

DONE AT HOURS : _____ DATE : _____ _____

IHIMER

JOB N°8

☐ SERVICE ☐ JOB *(*)*

notes : _____

STAMP AND SIGNATURE

DONE AT HOURS : _____ DATE : _____ _____

IHIMER

JOB N°9

☐ SERVICE ☐ JOB *(*)*

notes : _____

STAMP AND SIGNATURE

DONE AT HOURS : _____ DATE : _____ _____

( )INDICATE THE TYPE OF INTERVENTION PERFORMED IN THE NOTES FIELD*

https://truckmanualshub.com/

IHIMER **JOB N°10** ☐ SERVICE ☐ JOB *(*)*

notes : _____

STAMP AND SIGNATURE

DONE AT HOURS : _____ DATE : _____ _____

IHIMER **JOB N°11** ☐ SERVICE ☐ JOB *(*)*

notes : _____

STAMP AND SIGNATURE

DONE AT HOURS : _____ DATE : _____ _____

IHIMER **JOB N°12** ☐ SERVICE ☐ JOB *(*)*

notes : _____

STAMP AND SIGNATURE

DONE AT HOURS : _____ DATE : _____ _____

IHIMER **JOB N°13** ☐ SERVICE ☐ JOB *(*)*

notes : _____

STAMP AND SIGNATURE

DONE AT HOURS : _____ DATE : _____ _____

( )INDICATE THE TYPE OF INTERVENTION PERFORMED IN THE NOTES FIELD*

https://truckmanualshub.com/

1) **DECLARATION OF CONFORMITY (ORIGINAL)**
(Directive 2006/42/EC , Annex II, 1A)

2) Manufacture: **IHIMER** S.p.A.

3) Address: località CUSONA - 53037 SAN GIMIGNANO (SI) - ITALY

4) Technical file compiled by: **IHIMER** S.p.A. Technical department manager

5) Address: località CUSONA - 53037 SAN GIMIGNANO (SI) - ITALY

6) Hereby we declare that the machine category:
EARTH-MOVING MACHINERY / HYDRAULIC EXCAVATOR

7) Type: 12VXE

8) Serial number: EB_____

9) Net power installed (kW/rpm): 9.5 / 2200

10) Is in conformity with the provisions of the <<Machinery Directive>> **2006/42/EC**, as amended and the regulations transposing it into national law;

11) Also complies with the provisions "noise emission in the environment by equipment for use outdoors" directive 2000/14/EC and the regulations transposing it into national law
- Machine category: Hydraulic excavator *annex I n°20*
- Conformity assessment procedure followed: *internal control of production with assessment of technical documentation and periodical checking, annex VI. (1st procedure)*
- The notified body : *ECO S.p.A. – via Mengolina, 33 – 48018 Faenza (RA) – Italy*
- Measured sound power level: **L_{WA} 93 dB**
- Guaranteed sound power level: **L_{WA} 93 dB**

12) The following respective requirements fulfil: 2004/108/ EC (2004)

13) Harmonised EN-standards taken: EN ISO 12100-1 (2003)+A1:2009;
EN ISO 12100-2 (2003)+A1:2009; EN ISO 3744 (2009); EN 474 -1 (2006) +A1:2009;
EN 474 -5 (2006) +A1:2009

14) Place / Date: San Gimignano / …... - ……

……

15) Name:

16) Position: President of IHIMER S.p.A.

EXAMPLE SIMILE

https://truckmanualshub.com/

ITALIAN (Traduzione)

1) DICHIARAZIONE "CE" DI CONFORMITÁ
(Direttiva 2006/42/CE,allegato II, 1A)
2) Fabbricante:
3) Indirizzo:
4) File tecnico compilato da: Direttore tecnico IHIMER S.p.A.
5) Indirizzo:
6) Dichiara che la macchina categoria: escavatore idraulico
7) Tipo :
8) Numero di serie:
9) Potenza netta installata:
10) È conforme ai requisiti della Direttiva Macchine 2006/42/CE, come modificata e alla legislazione nazionale che la traspone:
11) È conforme alle condizioni della Direttiva 2000/14/CE "emissione acustica ambientale delle macchine ed attrezzature destinate a funzionare all'aperto" e alla legislazione nazionale che la traspone.
-Categoria macchina: escavatore idraulico *allegato I*
-Procedure applicate per le valutazioni di conformità: *controllo interno della produzione con valutazione della documentazione tecnica e controlli periodici, all. VI.*
- Ente notificato:
- Livello di potenza sonora misurato:
- Livello di potenza sonora garantito:
12) È conforme alle condizioni della seguente direttiva:
13) Sono state applicate le seguenti norme armonizzate:
14) Luogo / Data:
15) Nome:
16) Posizione:

FRENCH (Traduction)

1) DECLARATION « CE » DE CONFORMITE
(Directive 2006/42/CE, annexe II , 1A)
2) Nom du constructeur:
3) Adresse:
4) Fichier technique rédigé par: Directeur technique IHIMER S.p.A.
5) Adresse:
6) Déclare que la machine décrite ci-dessous désignée: pelle
7) Type du materiel:
8) Numéro de série:
9) Puissance net installée:
10) Est conforme aux dispositions de la directive «machines » 2006/42/CE modifiée et aux législations nationales la transposant :
11) Est également conforme aux dispositions de la directive « émissions sonores des équipements utilisés à l'extérieur des bâtiments » 2000/14/CE et aux législations nationales la transposant.
- Machine: pelle, *annexe I*
- Procédure appliquée pour l'évaluation de la conformité :*procédure de contrôle interne de la production, avec évaluation de la documentation technique et contrôle périodique, annex VI.*
- Organisme notifié :
- Niveau de puissance acoustique mesuré :
- Niveau de puissance acoustique garanti :
12) Est égalment conforme aux dispositions de la directive suivantes :
13) Est conforme aux normes harmonisées suivantes:
14) Adresse / Date :
15) Signataire :
16) Qualite du signataire :

SPANISH (Traducciòn)

1) DECLARACION "CE" DE CONFORMIDAD
(Directriz 2006/42/CE, anexo II, 1A)
2) Fabricante:
3) Direccion:
4) Archivo técnico compilado por: Director técnico IHIMER S.p.A.
5) Direccion:
6) Con el presente documento declaramos que la maquina categoria: excavadora
7) Tipo:
8) Numero de serie:
9) Potencia neta instalada:
10) Cumple la Directriz Maquinas 2006/42/CE, incluidas les modificationes de la misma:
11) Cumple la Directriz 2000/14/CE sobre "emisiones sonoras en el entorno debidas a las máquinas de uso al aire libre" incluidas les modificationes de la misma:
-Categoria maquina: excavadora, *anexo I*
- Procedimiento de evaluación de la conformidad que se ha seguido: *control de la producción con evaluación de la documentación técnica y comprobaciones periódicas, anexo VI.*
- Organismo notificado:
- Nivel de potencia acústica medido:
- Nivel de potencia acústica garantizado:
12) Satisfacen la siguente directriz:
13) Cumplen les normas armonizadas:
14) Direccion / Data:
15) Nombre:
16) Puesto:

GERMAN (Ubersetzung)

1) EG-KONFORMITÄTSERKLÄRUNG
(Direktive 2006/42/EG, Nachtrag II, 1A)
2) Hersteller:
3) Adresse:
4) Technische Datei erstellt von: Technischer Leiter IHIMER S.p.A.
5) Adresse:
6) Erklärt hiermit, dass die Maschine-Kategorie : bagger
7) Typ :
8) Seriennummer:
9) Installierte Nutzleitung
10) Konform ist mit den einschlägigen Bestimmungen der EG-Maschinenrichtlinie (EG-Richtlinie 2006/42/EG) inklusive deren Änderungen, und der nationalen Gesetzgebung welch diese Bestimmungen umsetzt:
11) Konform ist mit den Bedingungen der EG-Richtlinie 2000/14/EG über «umweltbelastende Geräuschemissionen von zur Verwendung im Freien vorgesehenen Geräten und Maschinen», inklusive deren Änderungen.
- Maschine-Kategorie: bagger, *nachtrag I*
- Angewandtes Konformitätsbewertungsverfahren : *interne fertigungskontrolle mit begutachtung der technischen unterlagen und regelmässiger prüfung, Anhang VI.*
- Der beteiligten benannten Stelle :
- Gemessener Schalleistungspegel :
- Garantiertter Schalleistungspegel :
12) Konform ist mit den folgenden Bedingungen der EG-Richtlinie :
13) Folgende harmonisierte Normen zur Anwendung gelangen:
14) Adresse / Datum :
15) Name :
16) Position:

DUTCH (Vertaling)

1) EG-VERKLARING VAN OVEREENSTEMMING
(EG-Richtljn 2006/42/EG, Anhang II, 1 A)
2) Fabrikant:
3) Adres:
4) Technisch bestand opgesteld door: Technisch directeur IHIMER S.p.A.
5) Adres:
6) Hierbij werklaren wij dat onderstaande machines categorie: graafmachine
7) Type:
8) Serie Nummer:
9) Netto geinstalleerd vermogen:
10) Overeenstemmen met de gewijzigde richtlijn EG-Richtlinie 2006/42/EG en de naar nationale wetgeving transponerende regelingen.
11) Voldoest bovendien aan de bepalingen van de richtlijn 2000/14/EG „Geluidsemissein het milieu door materieel voor gebruik buitenshuis" en de naar nationale wetgeving transponerende regelingen.
- Machines categorie: graafmachine, *anhang I*
- Overeenstemmingsbeoordelingsprocedure: *interne controle van productie met beoordeling van technische documentatie en periodieke keuring, bijlage VI.*
- Betrokken aangemelde instantie:
- Gemeten geluidsvermogensniveau:
- Gewaarborgd geluidsvermogensniveau:
12) De volgende respectievelijke eisen voldoen:
13) Geharmoniseerde EN-Standaarden:
14) Adres / Datum:
15) Naam:
16) Functie:

DANISH (Oversættelse)

1) OVERENSSTEMMELSES ERKL RING
(Direktiv 2006/42/EC, annex II, 1A)
2) Produktion:
3) Adresse:
4) Teknisk fil kompileret af: Teknisk direktør IHIMER S.p.A.
5) Adresse:
6) Vierkel re herved at maskinen kategori: gravemaskine
7) Type:
8) Serie nummer:
9) Netto Ydelse:
10) Er i overensstemmelse med Direktiv 2006/42/EC, som tilrettet
11) Opfylder bestemmelser med seneste andringer for « stojudslip i miljoet for undendors udstyr » direktiv 2000/14/EC og reguleringer omsat til national lov :
- Maskinen kategori: gravemaskine, *annex I*
- Procedure ansogt for opfyldelse af regler vedrorende : *intern kontrol af produktion med fastsattelse af teknisk dokumentation og periodisk kontrol, annex VI.*
- Anmeldt til :
- Malt stojnivot :
- Garanteret stojnivot :
12) Folgende respektive krav opfylder
13) Harmoniseret EN-standard er opfyldt
14) Adresse / Dato
15) Navn:
16) Stilling:

IHIMER S.p.A.
Loc. Cusona 53037 San Gimignano (SI) ITALY
Tel. +39 057795121 Fax +39 0577982400

https://truckmanualshub.com/

FOREWORD

This manual provides all the procedures and instructions required for operating, checking and servicing the excavator. The procedures are designed to ensure the best productivity, efficiency and safety. Bear in mind the following rules:

- Keep the manual on board the machine in the provided compartment or in the pocket in the operator's seat.

- Before operating the machine make sure you have understood the contents of this manual.

- Given that not all the contents of this manual may be understood on a first reading, read it again until you have acquired a certain skill as operator.

- Experience in operating the machine in real conditions and under supervision will complement the information given in this manual.

- The illustrations in this manual are intended above all to draw your attention to hazards.
  Some of the illustrations given in this manual may not coincide with your machine due to the normal technical evolution of the machine. If you have any questions in relation to your machine or this manual, contact your dealer for
  further information.

https://truckmanualshub.com/

CONTENTS

FOREWORD
CONTENTS
SAFETY INFORMATION

1. SAFETY MEASURES

1-1 GENERAL INFORMATION 1-1
1-2 GETTING ON AND OFF THE MACHINE 1-5
1-3 BEFORE STARTING THE ENGINE 1-6
1-4 STARTING THE ENGINE 1-6
1-5 BEFORE OPERATING THE MACHINE. 1-7
1-6 MANEUVERING THE EXCAVATOR 1-8
1-7 DRIVING SAFELY 1-22
1-8 TOWING 1-25
1-9 TRANSPORT 1-26
1-10 PARKING 1-27
1-11 MAINTENANCE 1-28
1-12 SAFETY LABELS AND SIGNS 1-33

2. OPERATING INSTRUCTIONS

2-1 DESCRIPTION 2-1
2-2 INSTRUMENTS AND CONTROLS 2-2
2-3 CONTROLS BEFORE STARTING UP 2-11
2-4 STARTING THE ENGINE 2-12
2-5 USING THE BATTERY AND CABLES TO START 2-13
2-6 PREHEATING THE MACHINE 2-14
2-7 CONTROL LEVERS 2-15
2-8 OPERATION OF THE AUXILIARY HYDRAULICS FOR SPECIAL ACTUATORS 2-17
2-9 MOVING THE MACHINE 2-19
2-10 RETRACTING/EXPANDING THE CARRIAGE 2-22
2-11 LOWERING THE ARM WHEN THE ENGINE IS OFF 2-23
2-12 TOWING 2-23
2-13 LIFTING THE MACHINE 2-24
2-14 LOADING AND UNLOADING THE MACHINE 2-25
2-15 PRECAUTIONS WHEN USING RUBBER TRACKS 2-26
2-16 DRIVING THROUGH LOW OPENINGS 2-27
2-17 PARKING THE MACHINE 2-28
2-18 EMERGENCY STOP 2-28

3. MAINTENANCE

MAINTENANCE INTERVALS 3-1
3-1 TABLE OF LUBRICATION AND CHECKS 3-2
3-2 RECOMMENDED LUBRICANT TABLE 3-3
3-3 OCCASIONAL CHECKS AND MAINTENANCE 3-4
3-4 DAILY CHECKS AND MAINTENANCE 3-9
3-5 CHECKS AND MAINTENANCE EVERY 50 HOURS 3-13
3-6 CHECKS AND MAINTENANCE EVERY 250 HOURS 3-14
3-7 CHECKS AND MAINTENANCE EVERY 500 HOURS 3-20
3-8 CHECKS AND MAINTENANCE EVERY 1000 HOURS 3-24
3-9 CHECKS AND MAINTENANCE EVERY 2 YEARS 3-27
3-10 SPECIAL OPERATING CONDITIONS 3-29
3-11 LENGTHY STORAGE 3-32

https://truckmanualshub.com/

4. ANALYSING FAULTS

4-1 TROUBLESHOOTING 4-1

5. HYDRAULIC SYSTEM DIAGRAM

5-1 HYDRAULIC CIRCUIT DIAGRAM 5-1

6. ELECTRICAL CIRCUIT DIAGRAM

6-1 ELECTRIC SYSTEM DIAGRAM 6-1

7. SPECIFICATIONS

7-1 GENERAL SPECIFICATIONS 7-1
7-2 DIMENSIONS OF MACHINE 7-3
7-3 WORK AREA 7-4
7-4 WEIGHT DIAGRAM – RANGE - HEIGHT 7-6

https://truckmanualshub.com/

SAFETY INFORMATION

This manual is a safe, practical guide to the safe operation and control of the machine.
The machine has been designed and manufactured for digging and loading earth, inerts and similar material, small demolitions and restructuring. It is mainly used in construction and earth moving in general. It can also be used for agriculture to perform all those jobs requiring working in small spaces. **ANY USE DIFFERENT FROM THAT SPECIFIED IS TO BE CONSIDERED IMPROPER AND THEREFORE FORBIDDEN.** It is also forbidden to perform any unauthorised modifications to the machine.
Before operating the machine, the operator must familiarise himself with its contents. This is the simplest way to prevent accidents.
Incorrect operation, control or servicing may result in injury or death.
Warnings are marked on the machine and throughout the manual with the symbol ⚠ and graded according to their severity with the words **DANGER - WARNING - CAUTION**.
The classification is as follows:

⚠ **DANGER**

A hazardous situation which may result in injury or death if not avoided.

⚠ **WARNING**

A potentially dangerous situation which may cause injury or death.

⚠ **CAUTION**

A potentially hazardous situation which may result in slight or moderate injury. May also be used to notify the operator and prevent damage to the machine or its parts.

We have made every effort to prevent accidents when operating the machine, however we cannot be held responsible for all possible types of danger in all possible situations.
The owner and operator of the machine are responsible for **ALWAYS** taking care when working with the machine and for familiarising themselves with the basic information required to it.

⚠ **WARNING**

- **Before operating, inspecting or servicing the machine, make sure you have read and understood the contents of this manual.**
- **Incorrect operation or servicing of the machine may result in accidents, injury or death.**
- **Keep this manual always near to hand for reference.**
- **If it is lost or damaged, ask your dealer for a new copy.**
- **There are a variety of federal, state and local regulations governing construction machinery. Since these regulations are subject to change and differ from one country to another, we are unable to include them in this manual. It is the operator's and owner's responsibility to be familiar with these regulations.**
- **The machine's components and specifications are subject to change without notice.**

https://truckmanualshub.com/

1 SAFETY MEASURES

SAFETY WARNINGS

this section explains the safety warnings in the manual and posted on the machine itself. Check the plates bearing these warnings from time to time. If they are damaged, clean or replace them. For replacements, contact your dealer with the code number (see spare parts catalogue). Note that the provided safety warnings cannot cover all types of hazard encountered in using the machine.

1-1 GENERAL INFORMATION

1. TO ENSURE SAFETY, FOLLOW THE BASIC RULES

The knowledge, experience and ability of the operator are the most important factors in the safe operation of the machine. it is therefore important that the operator have read and understood the instruction and have been trained.

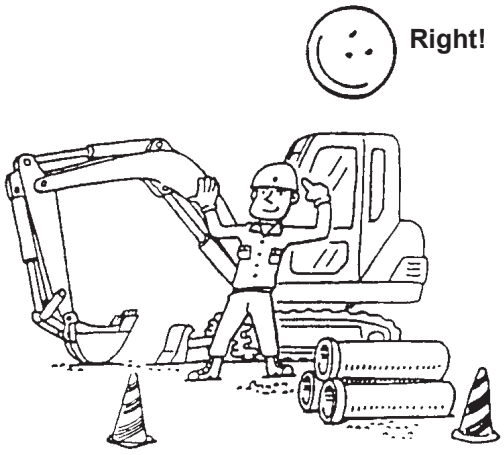

2. QUALIFIED OPERATORS

The driving and operation of hydraulic excavators must be entrusted to specialised and trained operators in perfect psychophysical condition. The operator must be aware of all hazards and safety measures associated with operation of the excavator. The operator must therefore be authorized, trained and sufficiently skilled to do so.

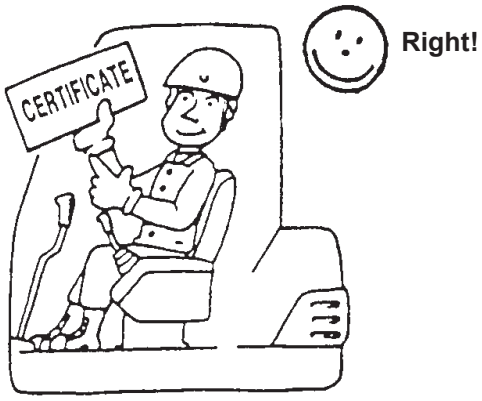

https://truckmanualshub.com/

3. FAMILIARISE YOURSELF WITH THE INSTRUCTIONS AND WARNINGS.

This manual and the plates and stickers on the machine give the information required for operating it safely and properly. The user must familiarise himself with this information; failure to do so may result in serious accidents. Do not leave anything to chance if you have failed to understand it. Your dealer is always pleased to give you any supplementary information you require. If you lose or damage the manual, the plates or stickers, contact your dealer for new copies.

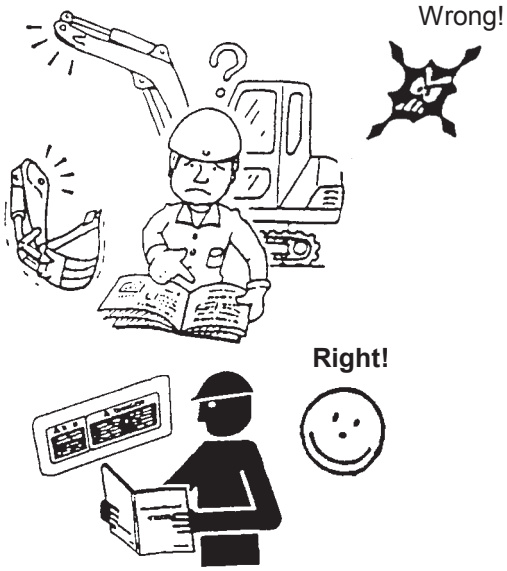

4. HEALTH

Take special care of your mental and physical health and note that the operator of a complicated machine should be physically fit.

NEVER operate the machine under the influence of alcohol, medicines or drugs of any kind.

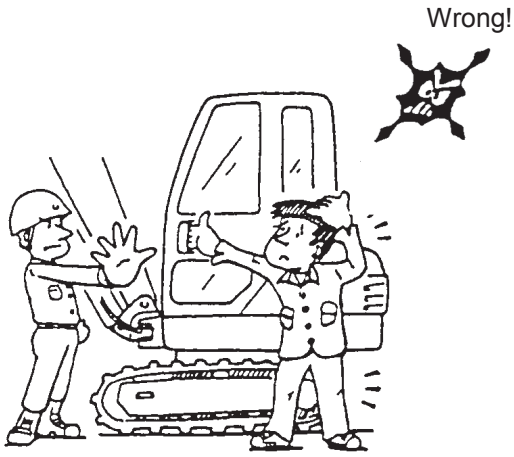

5. SNUG FITTING WORK CLOTHES

Your work clothing must be snug, without lose sleeves, rings or other jewelry, as they may become trapped in moving parts. Before operating the excavator, clean all grease and mud off your boots. Always wear the necessary clothes and accessories, including: helmet, safety gloves, visible clothing, safety boots and ear defenders.

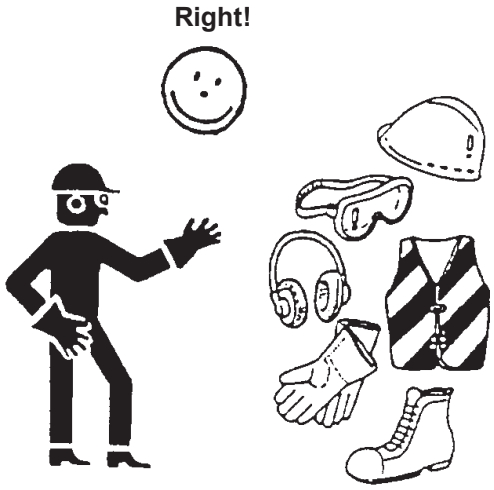

https://truckmanualshub.com/

6. CHECK YOUR EXCAVATOR

Before starting work, walk around and check the excavator and make sure that there are no persons or obstacles in the work area.

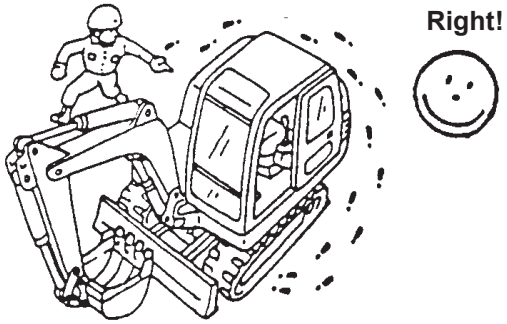

7. NEVER TAKE ANYTHING FOR GRANTED

Today, as you start work, do not assume that everything is OK, only because it was all OK yesterday evening. Before starting, carefully check the excavator for signs of wear and defects.

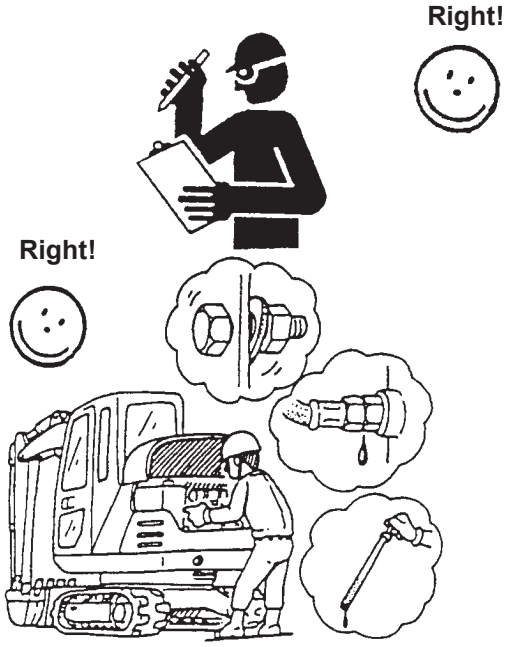

8. MAKE A WORK PLAN

Before starting work, carefully inspect the work area. If there are any obstacles or hazards, notify all affected persons of their presence. Avoid overlooking anything that may cause an accident. Prepare a work plan and procedures and inform your colleagues accordingly.

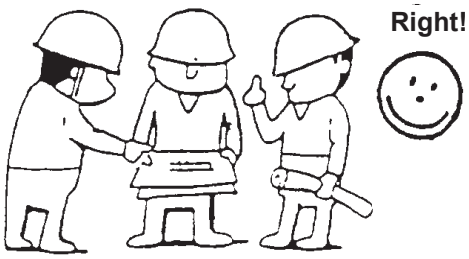

https://truckmanualshub.com/

9. BE CAREFUL OF PUBLIC UTILITY LINES AND PIPES

Before starting work, inspect the work area. identify all gas, service, sewer, overhead and underground electrical lines, and any other obstacles and hazards. The worksite supervisor is responsible for marking the locations of all underground utility lines to prevent accidents. If necessary, ask for the said lines to be closed or transferred.

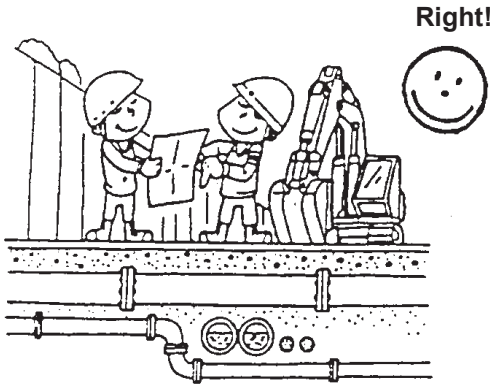

10. WORK AREA

ALWAYS, before starting work, carefully inspect the work area and identify any hazards. Do not operate the machine close to a drop.

Given that the machine is not designed for use in explosive atmospheres, **NEVER** operate it inside a tunnel or explosive area to prevent the risk of explosion. The machine is not roadworthy, and must be used only on the worksite; if necessary, it must be moved to other areas by truck.

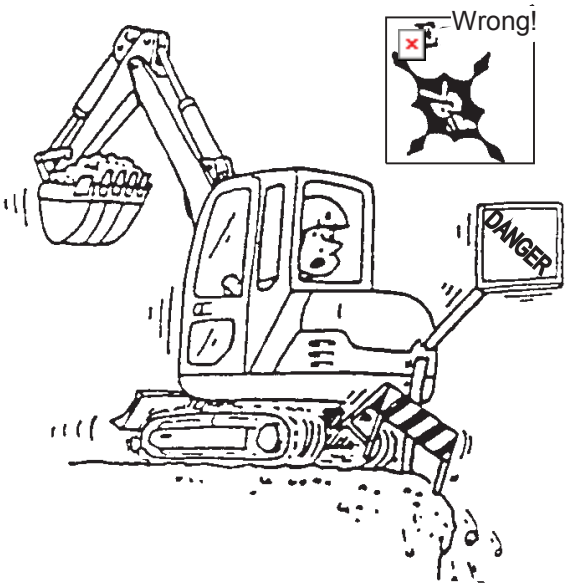

11. KEEP YOU REYES OPEN

Keep your eyes open before and during your work and especially when you slew the tools in crowded areas. In more complicated situations, we recommend using an assistant who can supervise the area and give signals; pay attention to his signals before operating the excavator.

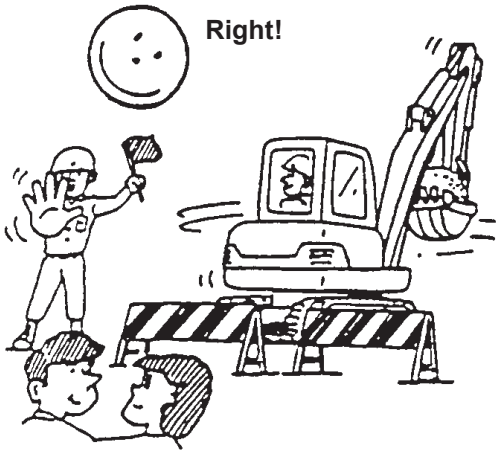

https://truckmanualshub.com/

12. MAINTAIN GOOD VENTILATION

Do not use the machine for indoor works.
Take all precautions to vent exhaust gas externally before starting the engine if working in a hole in the ground, tunnel or trench. In such a place, the air trends to stagnate. Breathing exhaust gas is very dangerous. Note that exhaust gases are fatally poisonous.
In case of excavations or earthworks involving noxious substances, the user must take all the necessary safety measures.

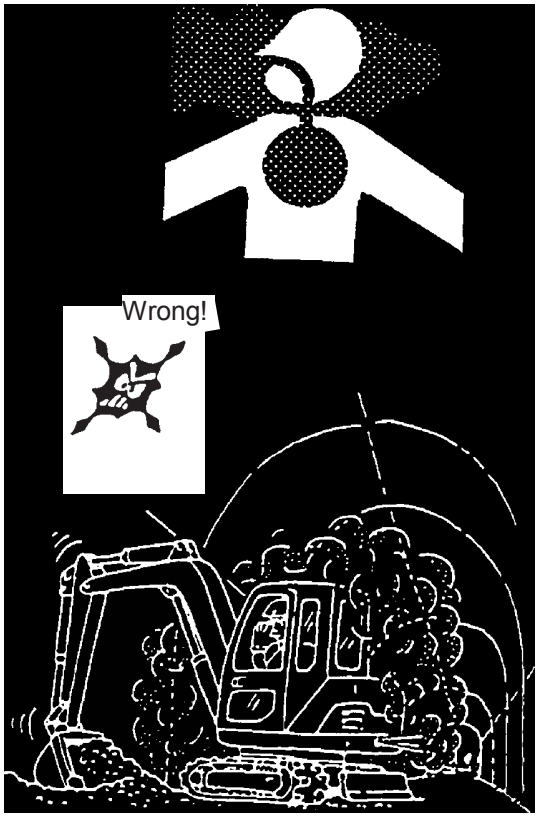

13. DO NOT TAMPER WITH THE ROPS/TOPS

Do not tamper with the **rops/tops** unless instructed to do so by the installation manual.
Welding, drilling or cutting the frames can weaken them and degrade their protection.
The **rops/tops** cannot be repaired if damaged, but must be replaced.

1-2 GETTING ON AND OFF THE MACHINE

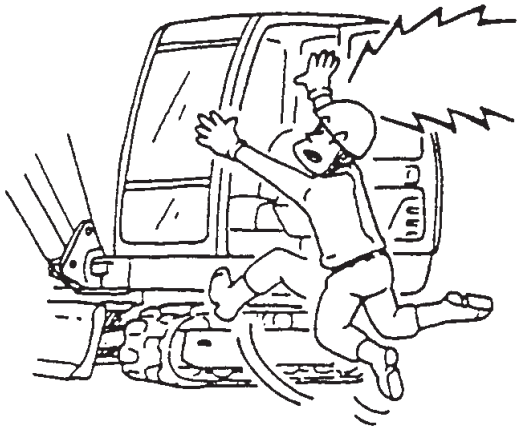

1. TAKE CARE WHEN GETTING ON AND OFF THE MACHINE

When getting on and off the machine, **ALWAYS** grip the handles and use the steps.

NEVER grip the control levers when getting on or off the machine.

NEVER get on or off the machine while it is in motion.

NEVER jump down from the machine.

Never attempt to get onto the machine with your hands full.

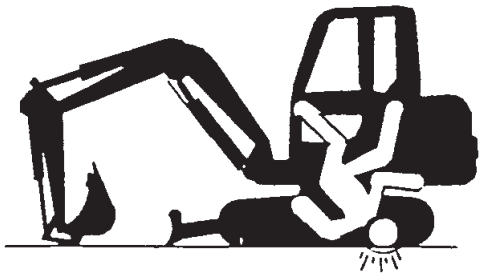

1 SAFETY MEASURES

1-3 BEFORE STARTING THE ENGINE

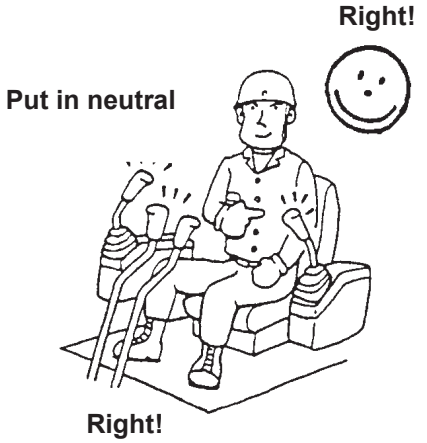

1. TAKE THE FOLLOWING PRECAUTIONS

- Make sure that there are no persons or obstacles in the work area.
- Put the gear into neutral.
- Make sure the levers are in **NEUTRAL** before starting the engine.
- Check the condition of the seat belt and fittings.
- Fasten the seat belt.
- Adjust the seat for your comfort.

1-4 STARTING THE ENGINE

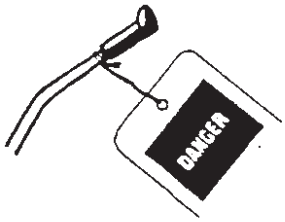

Do not operate

1. MAKE SURE TO:

- **ALWAYS** start the engine when seated, and following the procedure given in this manual.
- If a "**DO NOT OPERATE**" label is on the starter or controls, do not start the engine or operate the controls.
- **NEVER** short circuit the starter or battery terminals.

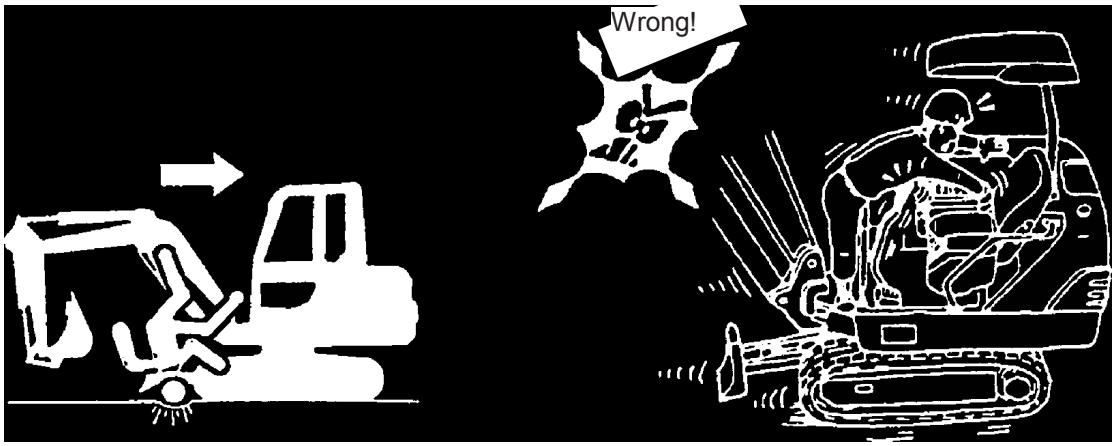

https://truckmanualshub.com/

1-5 BEFORE OPERATING THE MACHINE

1. IMMEDIATELY AFTER STARTING THE ENGINE

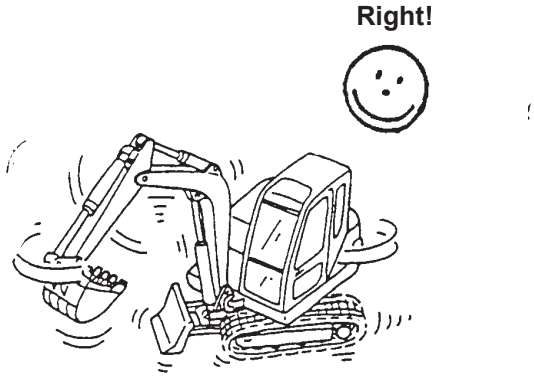

- Check all instruments.
- Make sure the work area is safe.
- Operate all levers to check them.
- Listen for strange noises.
- Check the accelerator lever.
- Check the warning lamps and all safety and signaling equipment.
- Repair any damaged parts.
- Operate the controls to familiarize yourself with them.

2. PREHEATING

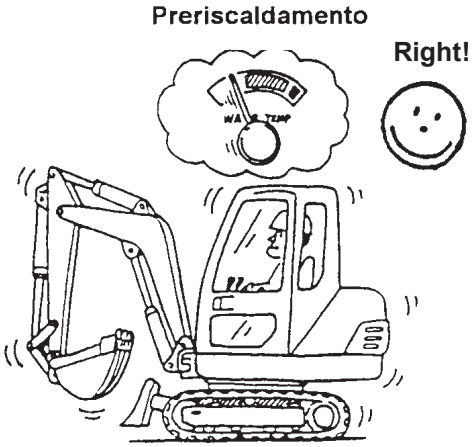

Since all equipment is hydraulically controlled, it is **EXTREMELY IMPORTANT** to make sure that the hydraulic fluid is up to temperature **BEFORE** starting work. While the fluid is heating up, the operator must check the operation of the machine and whether it needs servicing. Remember: hydraulic equipment is operated by the flow of fluid through its circuit. If you hear a high pitched grinding noise, this means that the pump is insufficiently lubricated due to cavitation, which may be due to the use of too dense or heavy fluid. **UNDER NO CIRCUMSTANCES MAY THE MACHINE BE OPERATED** in this condition; doing so can seriously damage the pump.

3. CLOSE ALL HATCHES

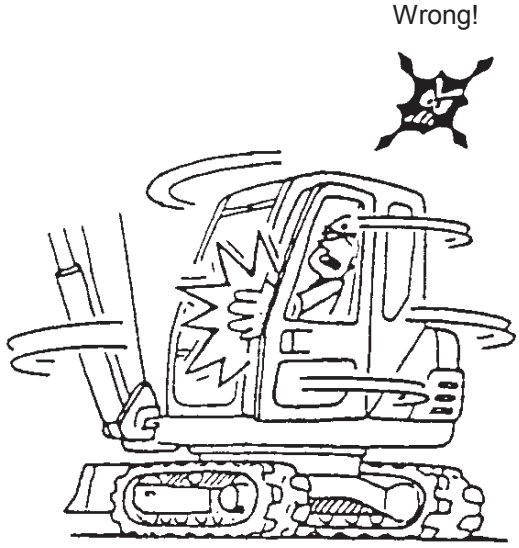

Make sure to close or secure all hatches and covers before starting work. Working with the door open is hazardous.

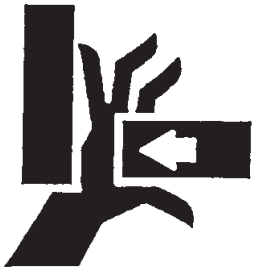

Crushing hazard

https://truckmanualshub.com/

1-6 MANEUVERING THE EXCAVATOR

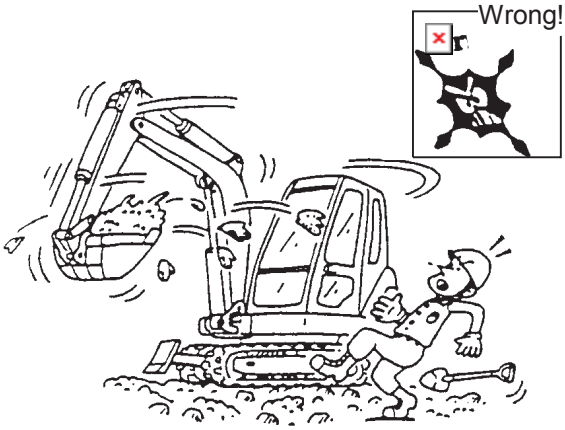

1. ALWAYS WORK IN OBSERVANCE OF SAFETY REGULATIONS.

Take great care when operating the machine. Operating the machine jerkily can damage it and reduce its efficiency. Always observe regulations governing safety in the workplace.

2. OPERATE THE CONTROL LEVERS PROPERLY

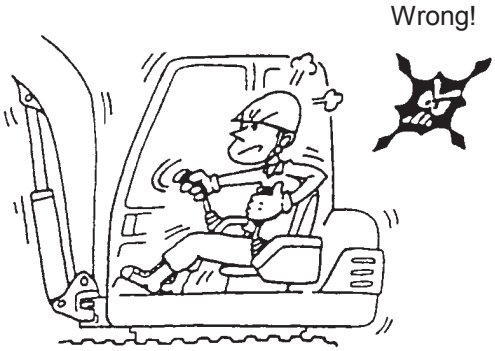

If the machine is operated irresponsibly or overloaded, its engine is also loaded beyond its rated capacity. If you are angry, do not operate the levers angrily. Operating the machine angrily is hazardous.

3. OBSERVE THE FOLLOW PRECAUTIONS TO WORK SAFELY

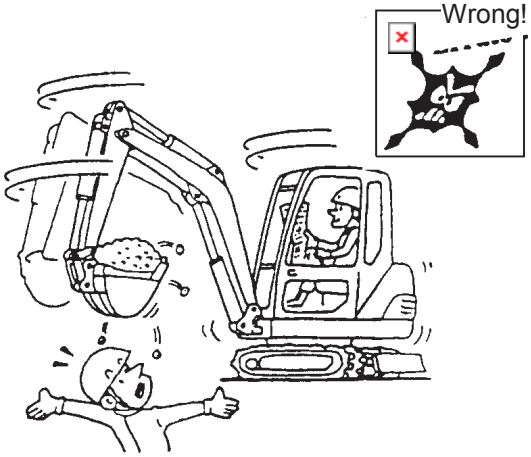

- Do not read.
- Do not drink.
- Do not eat.
- Give your entire attention to the work you are engaged in. If distracted by anything, it is far better to stop the machine.

4. OPERATE THE MACHINE FROM A SEATED POSITION

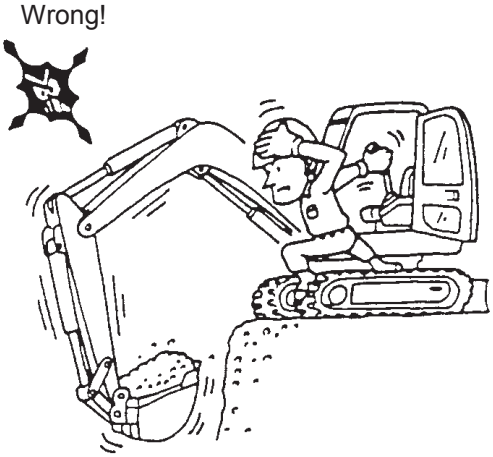

NEVER operate the machine unless when seated at the driver's seat. Operating the machine form any other position, e.g. standing up at the window or door, compromises safe operation and can result in accidents. NEVER get on or off the machine while it is moving.

https://truckmanualshub.com/

5. BEWARE OF ELECTRICAL LINES AND CABLES

Take care not to touch or even come close to overhead cables with the machine's arm. Check the machine's maximum height and radius of action. If working in the vicinity of overhead cables, keep a distance from them of at least 5 metres. Treat all cables as if they were electrical lines carrying high voltage.

WARNING

IF THE MACHINE CONTACTS AN UNDERGROUND ELECTRICAL CABLE BY ACCIDENT, REMAIN SEATED ON THE MACHINE UNTIL THE ARM IS LONGER IN CONTACT WITH IT OR THE CURRENT IT CARRIES HAS BEEN SHUT OFF. IF YOU HAVE TO ABANDON THE MACHINE IN SUCH CONDITIONS: JUMP OFF IT.

DANGER

CONTACT WITH ELECTRICAL LINES MAY BE FATAL.

ALWAYS CONTACT THE PERSONS RESPONSIBLE FOR OR OWNERS OF ANY ELECTRICAL LINES IN THE WORK AREA. MAKE SURE THEIR CURRENT HAS BEEN SHUT OFF OR THE LINES THEMSELVES HAVE BEEN REMOVED OR ISOLATED BEFORE STARTING WORK.

NEVER OPERATE MACHINE AT CLOSER THAN 5 METRES TO AN ELECTRICAL LINE.

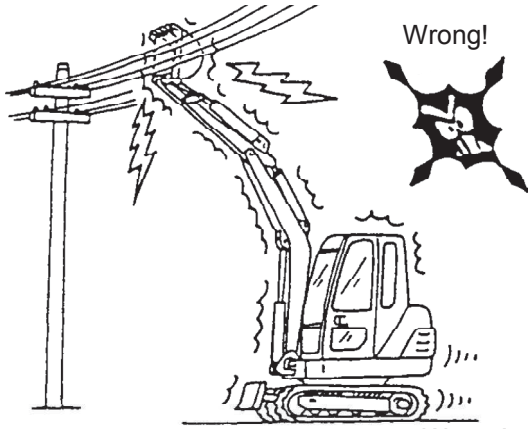

Electric shock

6. NEVER LEAVE THE LOAD SUSPENDED OVERHEAD

NEVER leave the load suspended overhead if the machine is out of service or unsupervised. **ALWAYS** lower the load/bucket to the ground.

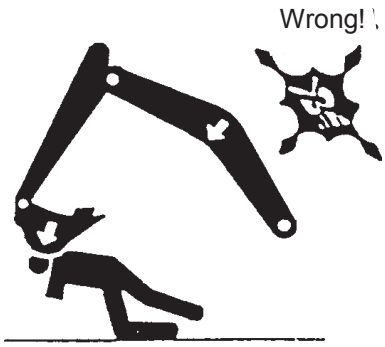

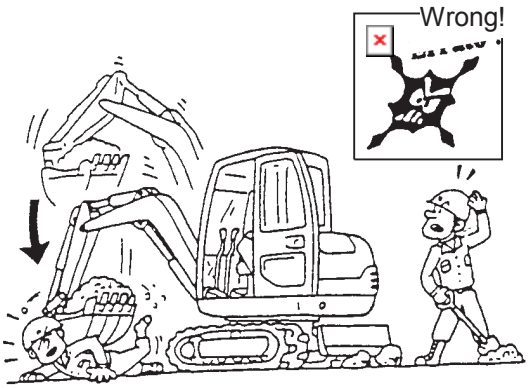

https://truckmanualshub.com/

7. DO NOT ALLOW ANYONE TO CLIMB UP ONTO THE MOVING PARTS OR THE LOAD ITSELF

Hydraulic excavators are designed for digging and are not equivalent to cranes. Digging tools can fall to the ground in numerous circumstances. Hence: **DO NOT** lift, slew or lower loads while anyone is beneath them, and do not permit anyone to climb onto the digging tools while they are moving. **TO DO SO IS EXTREMELY HAZARDOUS.**

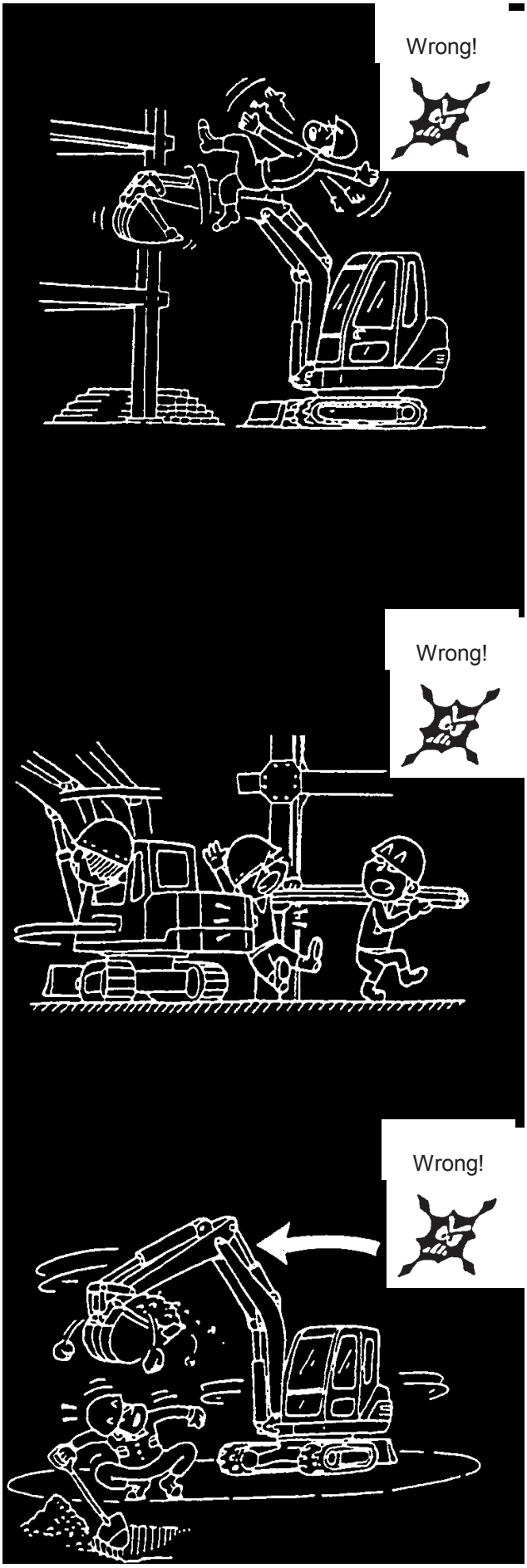

8. LEAVE CLEARANCE AT THE BACK OF THE MACHINE

Make sure there is sufficient clearance for the machine to turn. The operator tends to forget about the clearance required behind the machine. Before turning the machine, make sure there are no obstacles or persons at the rear of the machine.

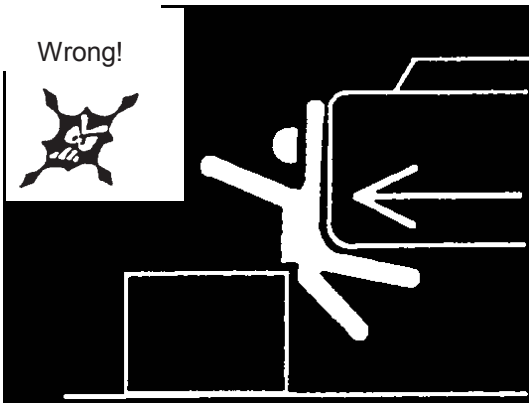

WARNING

ALWAYS CHECK FOR PERSONS AND OBJECTS AROUND THE MACHINE BEFORE TURNING IT.

9. NOTICES INDICATING NO ACCESS FOR WORKERS

Prevent anyone approaching the machine's radius of action. Do not slew the bucket over people's heads. Things may fall out of the bucket and seriously injure anyone standing beneath it.

https://truckmanualshub.com/

10. LOADING A TRUCK

If possible, load trucks from the rear or sides. Dropping the load from a "**considerable height**" directly into the truck is very hazardous. Use the bucket's tipping motion to empty it.

NEVER pass the load over the truck's cab.
ALWAYS check that the driver is not inside the cab and is out of the unloading area.

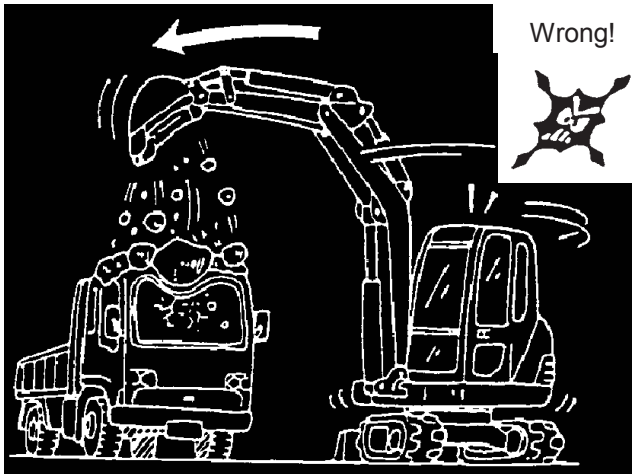

11. ALWAYS KEEP AN EYE ON THE BUCKET AND LOAD

While operating the machine, **ALWAYS** keep a close eye on the bucket/load. Moving the bucket/load carelessly can cause serious injury and damage. If you have to look away from the bucket/load, stop the machine.

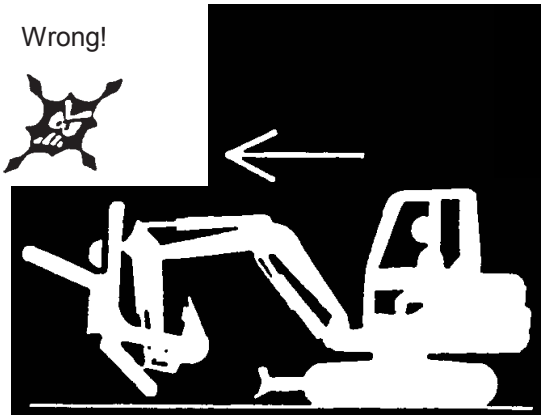

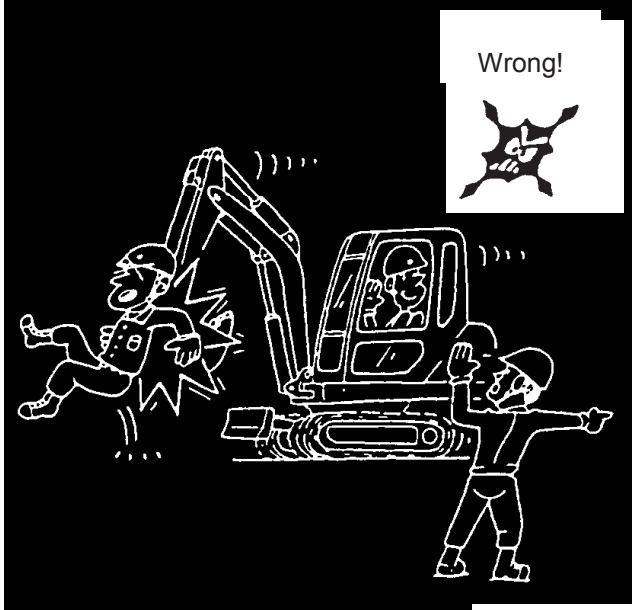

12. IMPACT DAMAGE TO THE HYDRAULIC CYLINDERS

Take care not damage the hydraulic cylinders as this can bend the cylinder rods. To avoid such damage, always operate machine with care.

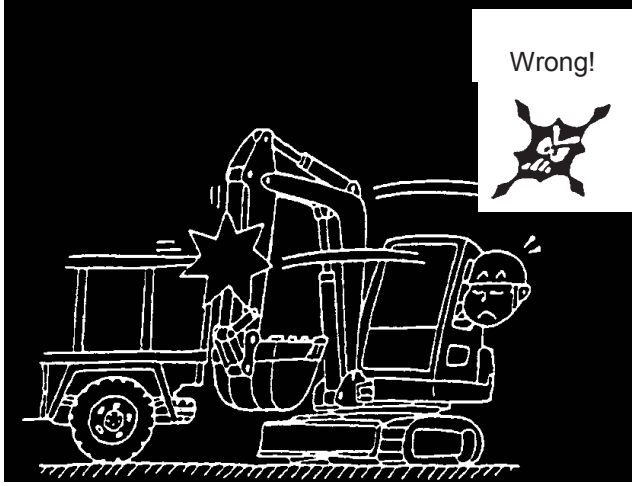

https://truckmanualshub.com/

13. ALWAYS USE A FLAG MAN

Only use signals which are familiar to everyone. Always follow the signals given by a single person.

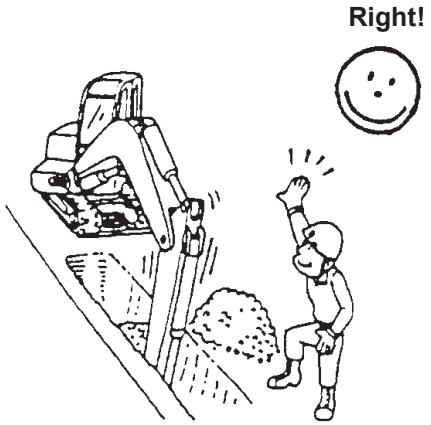

14. DO NOT GIVE RIDES

The excavator is single-person machine and only one person may be at the controls at any time. Do not transport persons or allow them to climb up while the machine is working.

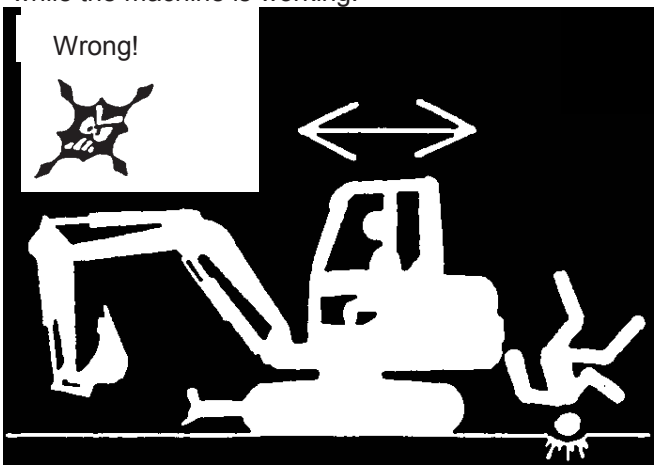

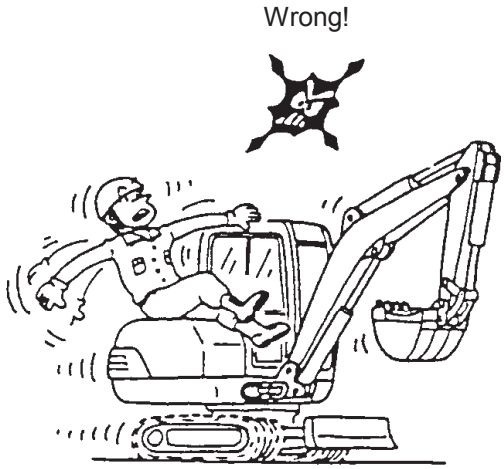

15. MOVE THE BUCKET WITH CAUTION

When the bucket is loaded and moves towards the excavator's cab, reduce speed and operate the bucket carefully to prevent the load falling onto the cab.

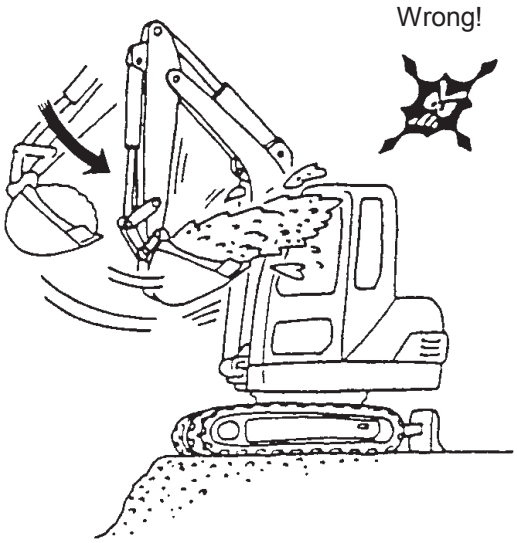

https://truckmanualshub.com/

16. DO NOT BANG THE BUCKET AGAINST THE SIDES OF THE DIG

Take care not to bang the bucket against the sides of the dig. This can happen when the machine is being loaded and loaded alternately. Move the bucket slowly and carefully.

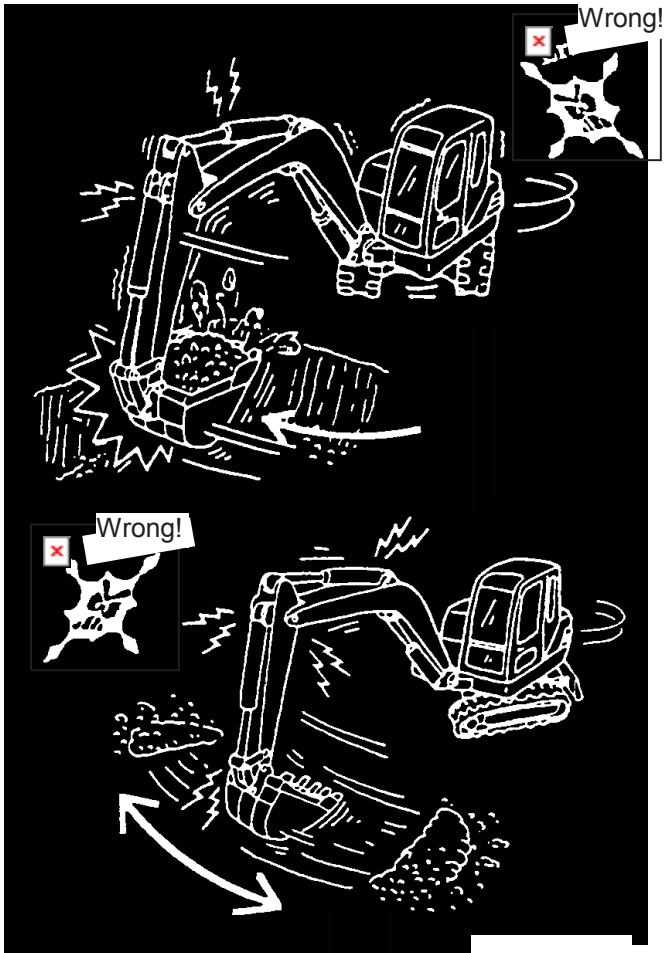

17. NEVER FLATTEN GROUND BY SLEWING THE BUCKET

NEVER SCRAPE THE GROUND WITH THE BUCKET to level it.

18. DO NOT OPERATE THE DIGGING TOOLS TO FULL STROKE

If the cylinder rods are extended to full stroke, the cylinder is overloaded and the machine will suffer. Operate the machine in such a way as to avoid extending the pistons fully. When the hydraulic pistons are fully extended, operate with care

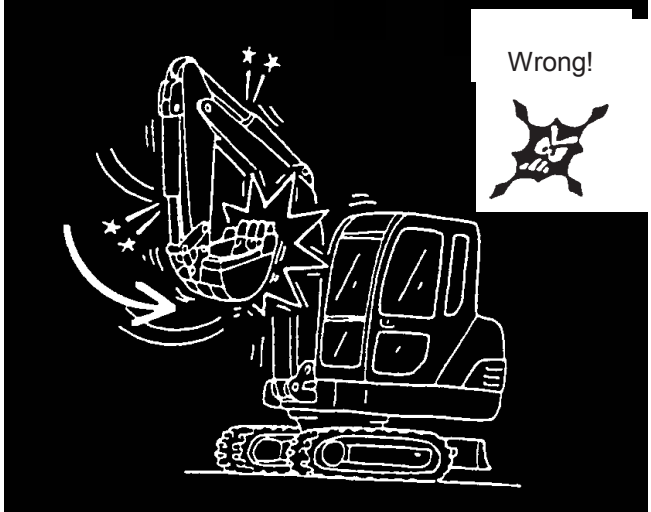

19. THINGS NOT TO DO WHEN OPERATING THE MACHINE

Never get into extreme circumstances and remember: IT'S THE LAST STRAW THAT BREAKS THE CAMEL'S BACK. Never attempt to break concrete with the bucket's teeth. This is hard enough for a pneumatic hammer, let alone a digger.

https://truckmanualshub.com/

20. DO NOT OVERLOAD THE MACHINE

Do not overload any of the hydraulic cylinders to the extent of tripping a safety valve. Such overloads overheat the hydraulic fluid and reduce the service life of the hydraulic componentry.

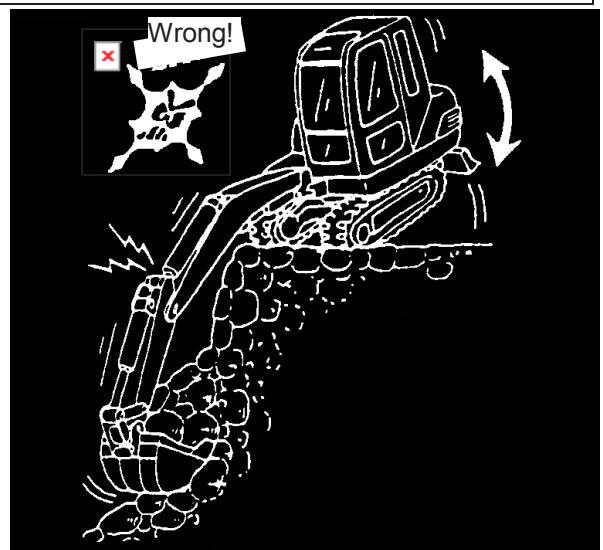

21. BREAKAGES DUE TO FALLS

Do not apply digging force to such an extent that the rear of the machine lifts off the ground and then drops back again.

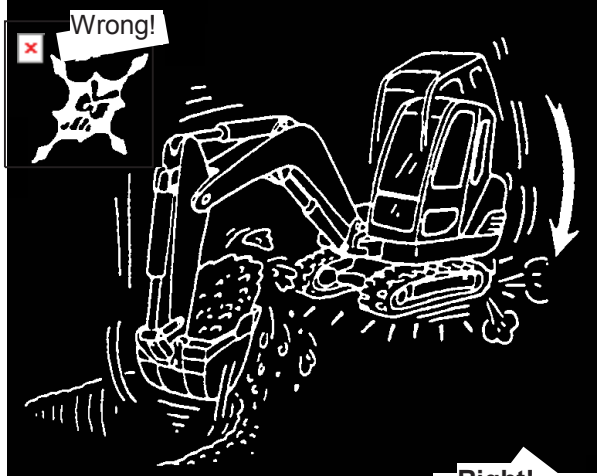

22. MEASURE THE DEPTH OF THE WATER AND CHECK THE CONDITION OF THE RIVER BED BEFORE FORDING A WATER COURSE

Before fording a river, measure the depth of the water and check the bed for holes, bumps and other hazards as follows:

- First measure the depth of the water;
- Stop the machine and slew the bucket under water to check for obstacles and bumps;
- Lower the bucket to measure the depth of the water and check for holes.

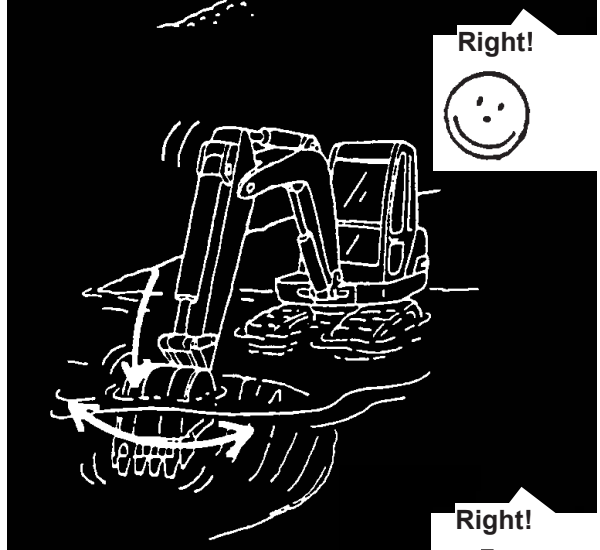

23. DO NOT EXCEED THE MAXIMUM FORDING DEPTH RATING FOR THE MACHINE

When working in water or fording a river, never exceed the indicated depth; before entering the water with the machine, carefully check the condition of the river bed.

https://truckmanualshub.com/

24. USING THE MACHINE TO BREAK A PATH CAN CAUSE DAMAGE

Do not advance or retreat with the bucket touching the ground or dug into it to level it.

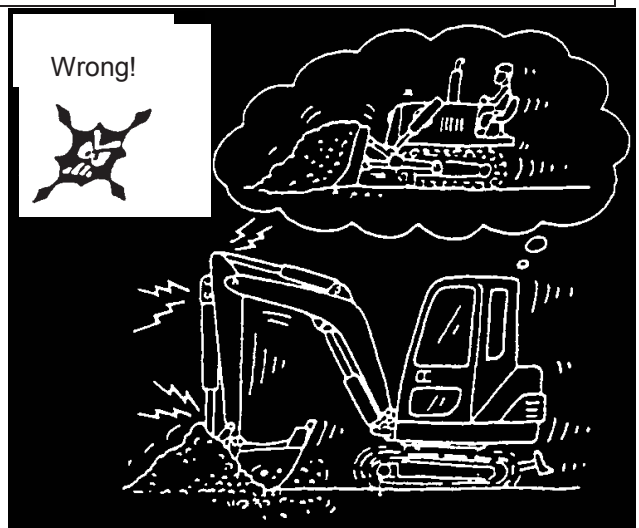

25. USE THE SHOVEL AS A STABILISER WHEN WORKING

When digging, the shovel can be used as a stabiliser. Proceed as follows:

- Lower the shovel and check that it is firmly in contact with the ground. Make sure that the ground is flat; do not do this on uneven/broken ground.
- Do not raise the chassis using the shovel in this way. You may lower the shovel as a stabilizer until the tracks behind the shovel raise slightly.

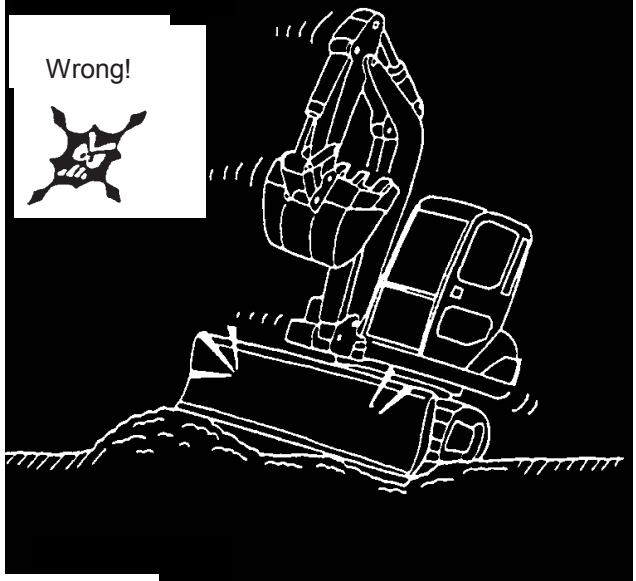

26. KEEP THE SHOVEL IN THE CORRECT POSITION

When digging deep, do not raise the shovel until it contacts the arm or its cylinder. If not necessary, position the shovel at the rear.

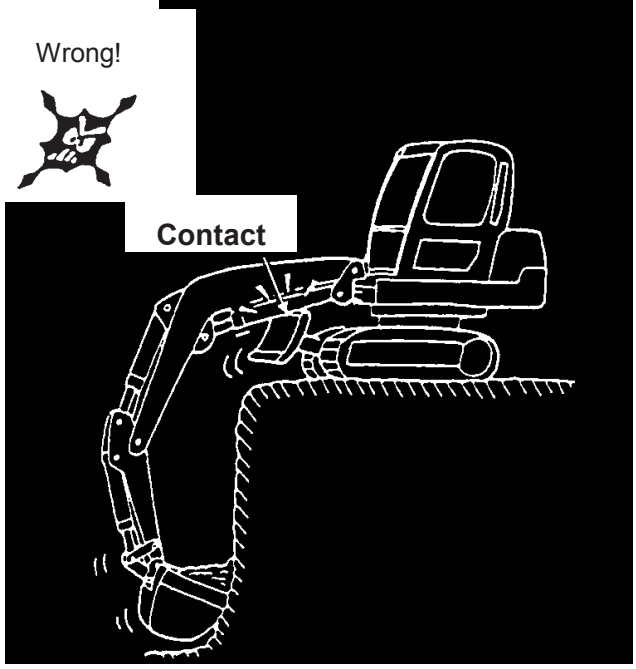

https://truckmanualshub.com/

27. TOPS PROTECTS THE OPERATOR AGAINST CRUSHING WHEN TIPPING OVER

The machine is equipped either with a standard **TOPS** cab (Tip Over Protection System) or standard **TOPS** roof. **ALWAYS** fasten your seat belt when using the machine.

Wrong!

NEVER jump out of the machine if it tips over; you will be crushed and even killed.

Never jump out of cab

28. THE FRONT PROTECTION PROTECTS THE OPERATOR FROM IMPACT WITH OBJECTS COLLIDING WITH THE FRONT OF THE MACHINE

When the machine is used to break materials, things may be thrown against the front of the machine. It is advisable to use the front protection in such circumstances. If it is not fitted, such objects can cause injury or even death.

The front protection is an optional accessory. Contact your local dealer.

Right!

Stay in cab

Right!

29. FOPS (TOP PROTECTION) PROTECTS THE OPERATOR AGAINST FALLING OBJECTS

When working under a drop or knocking down a building with the machine, **ALWAYS** use the **FOPS** (protection against falling objects); failure to do so can cause serious injury or death.

The **FOPS** is an optional accessory.
Contact your local dealer.

Right!

https://truckmanualshub.com/

30. SOLID SUPPORT FOR SAFE OPERATION

Level the ground in the work area to provide a stable support for the machine. If you have to operate the machine on the verge of a road or on a slope, make sure to check the slope/roughness of the ground and the machine's equilibrium to avoid it slipping or tipping over.

31. STABILITY DURING SLEWS, BEWARE OF TIPPING OVER

If the bucket is heavily loaded, slew it as slowly and close to the machine as possible. Take care and be ready to prevent the machine tipping over if the bucket is trapped by an underground obstacle. **CAREFULLY FOLLOW THE INSTRUCTIONS** for operating not only the bucket, but also other tools.

32. DO NOT UNDERMINE THE MACHINE

Do not dig too close to the machine especially on loose or soft ground. In most cases, the edge of a slope is not stable enough to support the excavator.

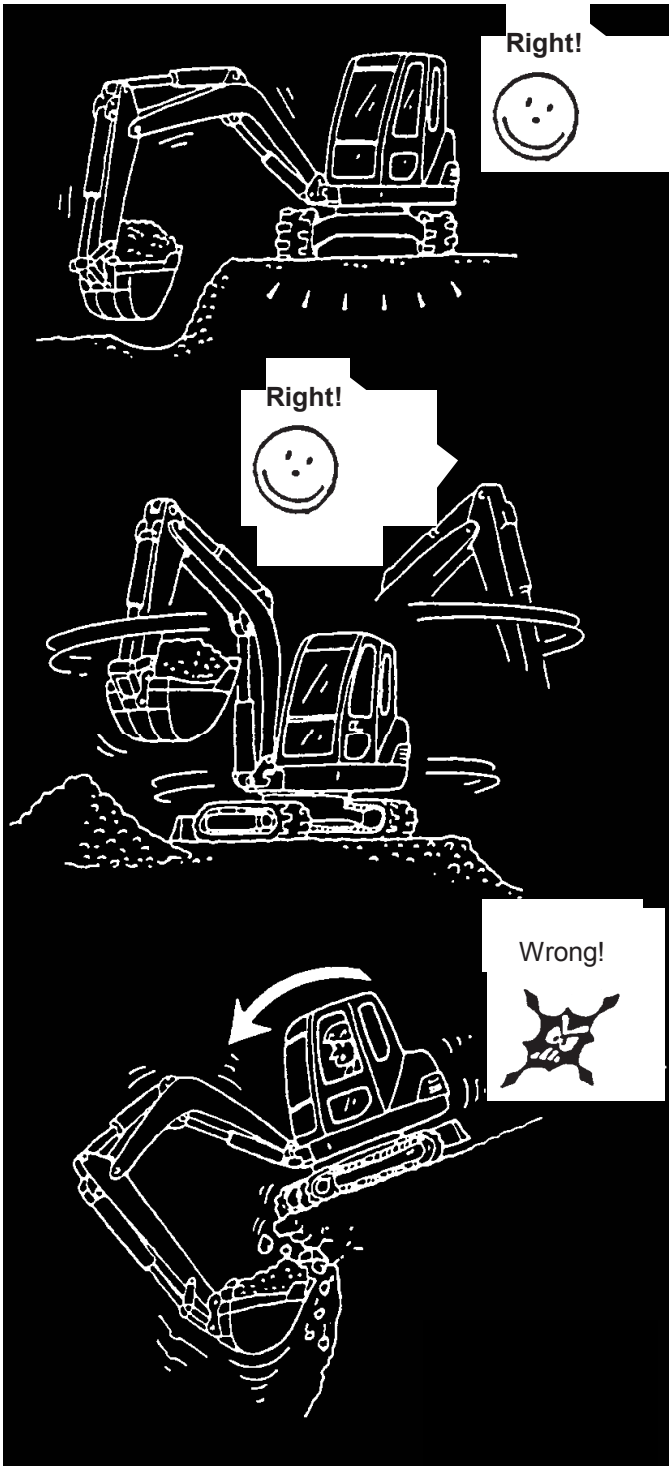

https://truckmanualshub.com/

33. CHECK YOUR SUPPORTS WHILE SLEWING

Check the level of the stabilizers when slewing to prevent the machine tipping over.

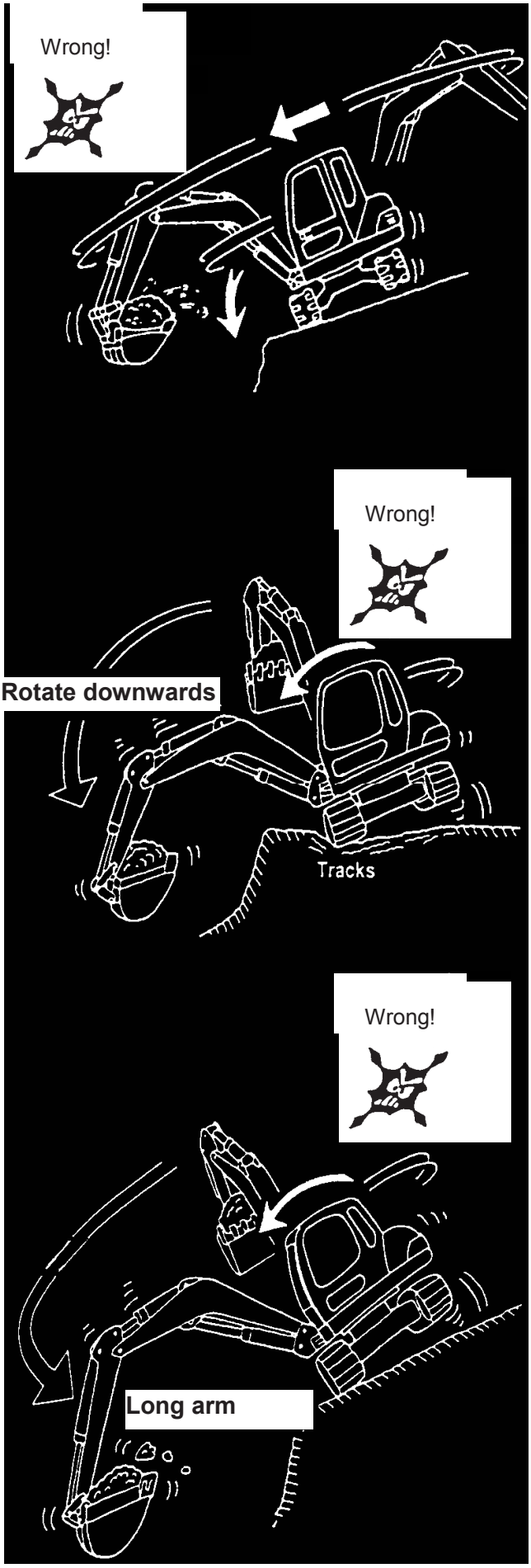

34. TAKE CARE WHEN OPERATING THE MACHINE WITH THE TRACKS SIDEWAYS

Since the width of each track is less than its length, the vehicle is less stable laterally than along its length. Lowering the arm while turning the machine from front to sideways on can tip the machine over due to inertia. Take special care on slopes where the machine is operating at its limits. In such conditions, retract the arm, reduce the slew radius and operate the machine very slowly.

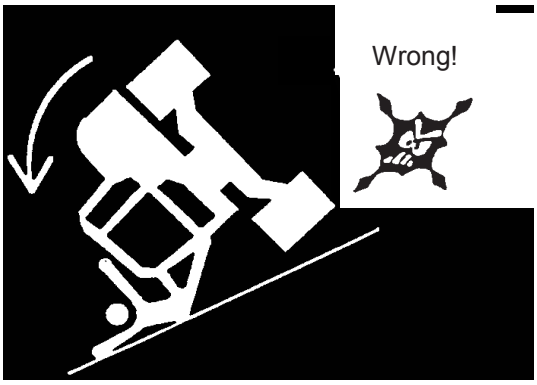

35. PRECAUTIONS WHEN USING THE LONG ARM

The following precautions must be observed when using the long arm:

1) Do not use improper (i.e., unspecified) combinations of arm and bucket.
2) Do not use the hammer fitting.
3) Do not lower and slew the arm at the same time on soft or sloping ground. Work slowly with the arm retracted and a reduced slew radius.

https://truckmanualshub.com/

36. OPERATING LIMITS

1. The machine should be run on flat ground, but if digging on sloping ground, make sure that the tracks are in line with the slope and not across it. If you have to work on soft, rough or sloping ground, take the greatest care not to tip the machine over.

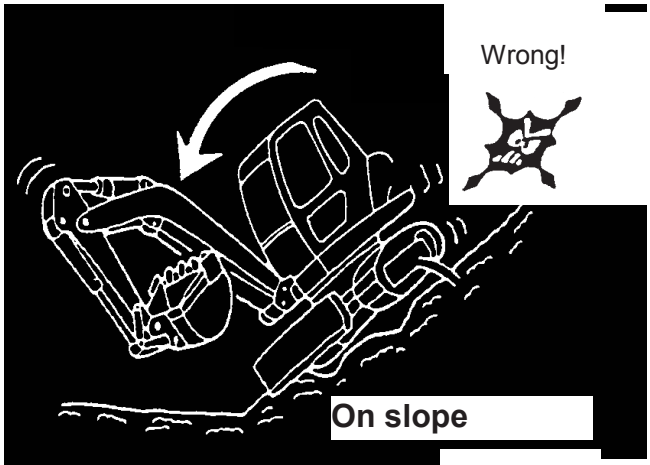

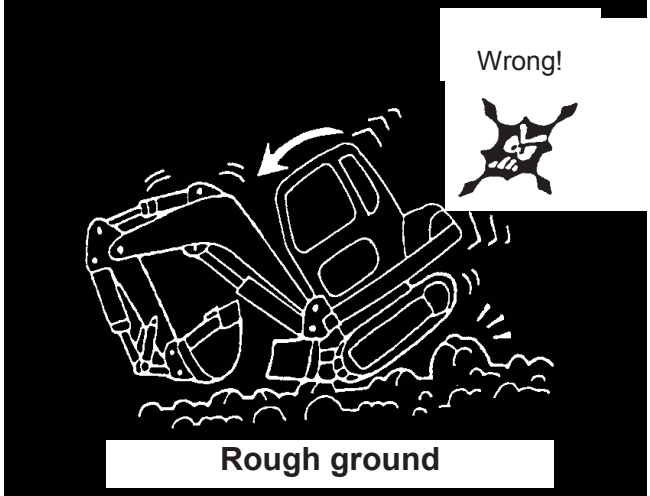

2. Using digging tools:

   (1) Using a long digger arm reduces the machine's stability. Using this accessory reduces the bucket's effective capacity. When using the long arm, check the condition of the ground and reduce working speed accordingly.

   (2) Selecting the bucket. The larger the bucket, the less stable the machine, so when using a bigger bucket take special care in relation to the condition of the ground and working speed.

   (3) **NEVER** USE A LARGER BUCKET THAN THAT SPECIFIED BY THE MANUFACTURER.

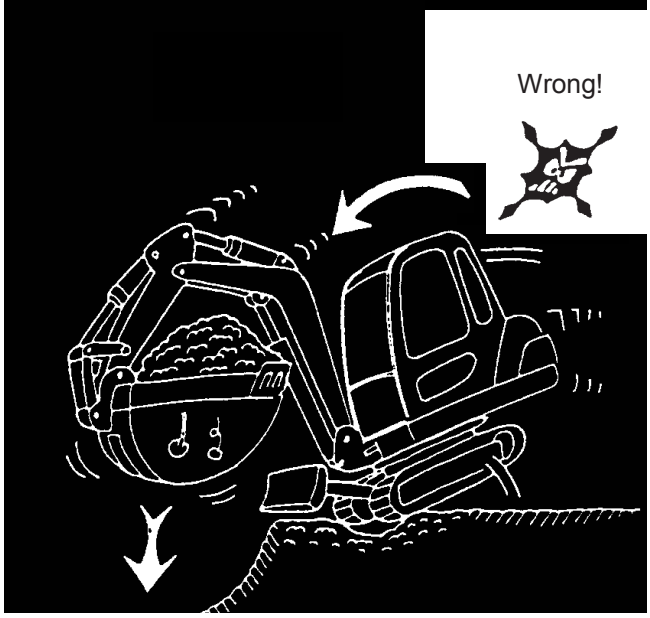

https://truckmanualshub.com/

37. HANDLING LOADS

One person must assume the responsibility for all aspects of lifting loads. In particular, he is responsible for: the operator, machine, other persons, stability of the load and the work area. He must also evaluate risks, be familiar with the procedures and exercise a considerable amount of common sense.

- *For the safe attachment of load-moving equipment, a hitching device including a system for protecting against accidental tube breakage is available on request.*

WARNING

THE MACHINE MUST NOT BE USED FOR LIFTING LOADS, EXCEPT IN EXTRAORDINARY AND OCCASIONAL SITUATIONS. FREQUENT USE OF THE MACHINE FOR LIFTING IS GOVERNED BY ESTABLISHED LEGISLATION REGARDING LIFTING EQUIPMENT. SEE THE NATIONAL REGULATIONS FOR DETAILS.

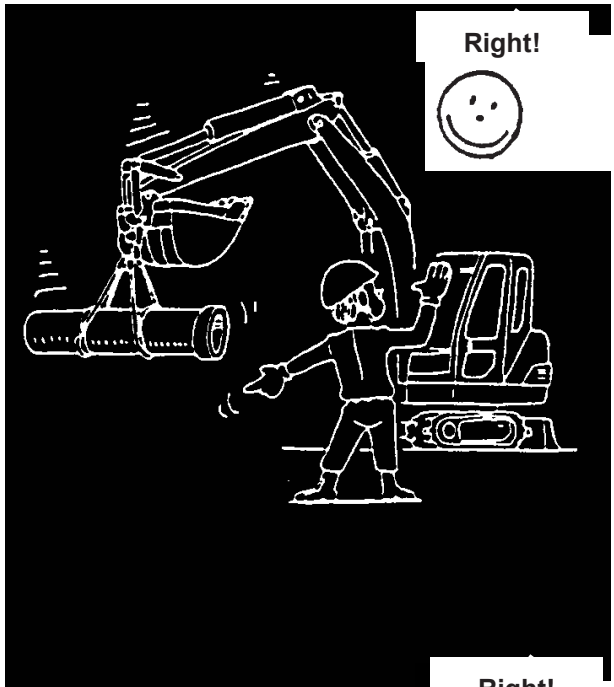

38. NEVER OVERLOAD THE MACHINE

To use the machine safely, refer to the load tables provided by the manufacturer. Move the load gently and smoothly to prevent damaging the machine or injuring anyone.
BEFORE LIFTING A LOAD, **ALWAYS** REFER TO THE LOADING SHEET POSTED IN THE OPERATOR'S CAB.

Attention, if the machine is not levelled, it can tip over. To prevent this, always use short harnesses to prevent the load swinging about.

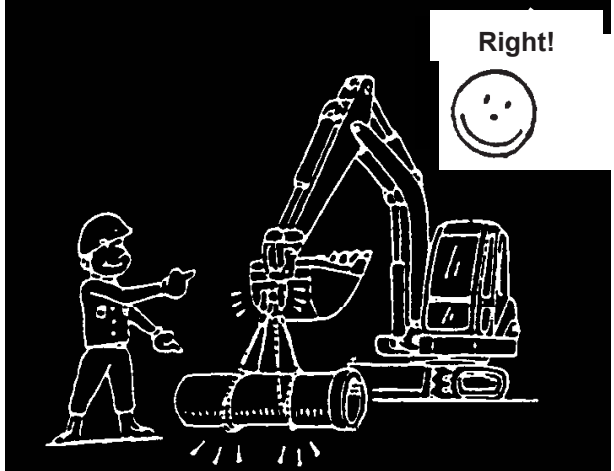

39. CHECK THE HARNESS ROPES AND EQUIPMENT

Before loading the materials, **ALWAYS** ensure that the harnesses, ropes and hooks are correctly positioned, secured, adequately rated for the load and in good condition.

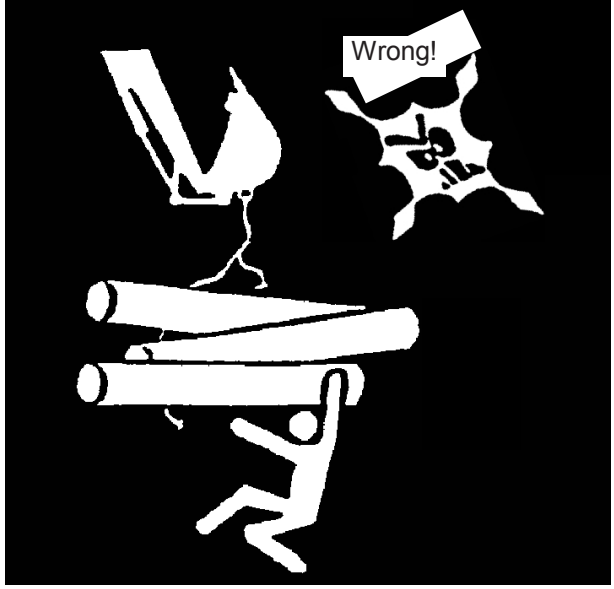

https://truckmanualshub.com/

40. LIFTING AND TILTING THE LOWER STRUCTURE

It is dangerous to raise the machine too high and in the wrong direction. If you attempt to raise the machine too high or incorrectly, levering against the ground with the arm to the side of the excavator, the tracks may raise off the ground and the machine tip over. Especially when the arm is fully extended lifting the machine slightly tilted can cause the tracks on one side to dig in and the machine tip over. When lifting the machine the tracks must be parallel or angled 90' toi the direction of the arm's point of contact. Raise by the smallest amount possible.

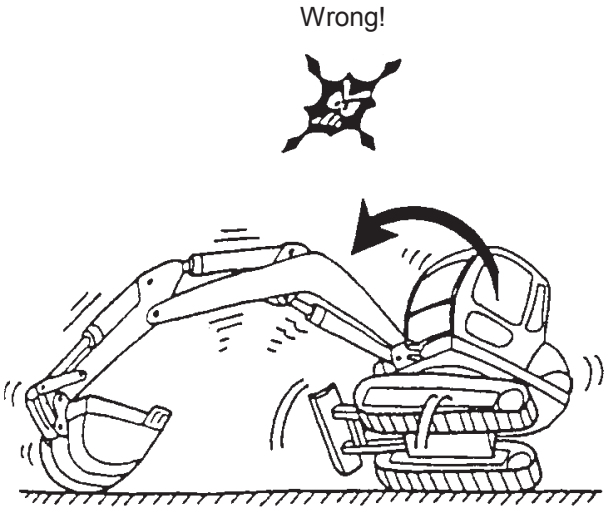

41. POSITION THE ARM VERTICALLY

Do not attempt to lift the front of the machine with the arm or bucket cylinder completely extended. Position the arm vertically.

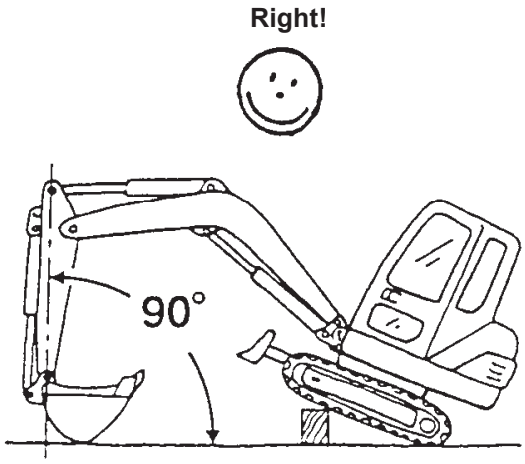

42. DO NOT USE THE BUCKET TO PULL POLES OUT OF THE GROUND

Do not use the shovel to raise the machine while pulling poles out of the ground. The power delivered by the shovel cylinder can overstress other parts of the machine (including: fittings, cylinders and other parts). This can seriously damage the machine.

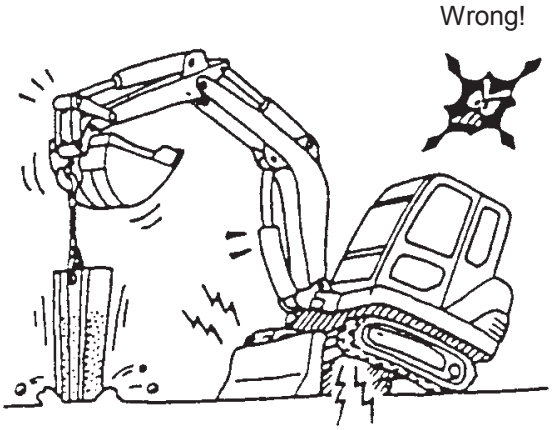

https://truckmanualshub.com/

1-7 DRIVING SAFELY

1. ALWAYS MONITOR THE DIRECTION OF TRAVEL

ALWAYS check in which direction the superstructure of the machine is turned before operating the travel lever. The machine can easily move in the opposite direction if the superstructure is turned backwards.

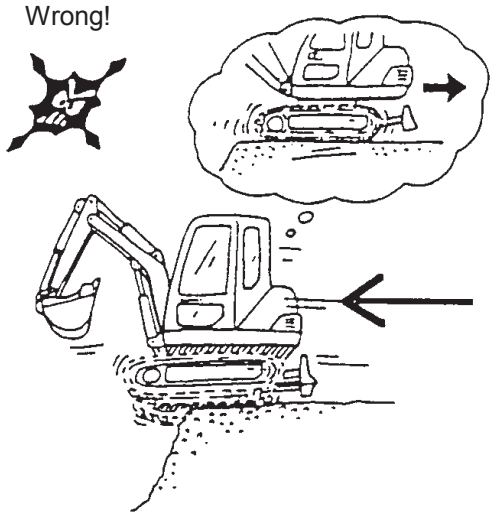

2. OVERHEAD CLEARANCE

ALWAYS look out for overhead obstacles and make sure that there is enough clearance at the sides when travelling. If the operator cannot directly check the clearance form his position, he must use an assistant on the ground for this.

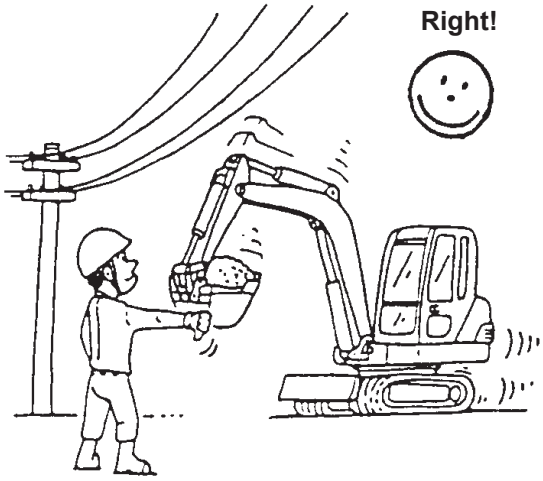

3. TAKE SPECIAL CARE IN RESTRICTED AREAS

NEVER move the machine in the presence of other people.
ALWAYS maintain a safety clearance around the machine. In restricted areas place signals or use a flagman to guide the operator.
Before moving, clear other people out of the area.

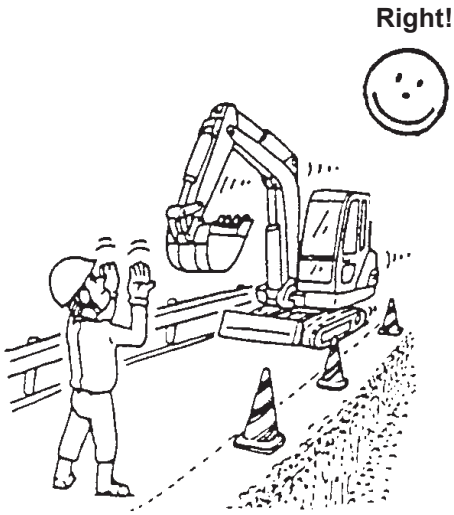

https://truckmanualshub.com/

4. TAKE GREAT CARE WHEN DRIVING ON SLOPES.

When moving on slopes, keep the bucket at 200 to 300 mm (A) off the ground. If the machine starts to slip or tip over, immediately lower the bucket and stop the machine.
DO NOT DRIVE IN REVERSE.

When driving uphill, always keep the arm on the upwards side of the machine.

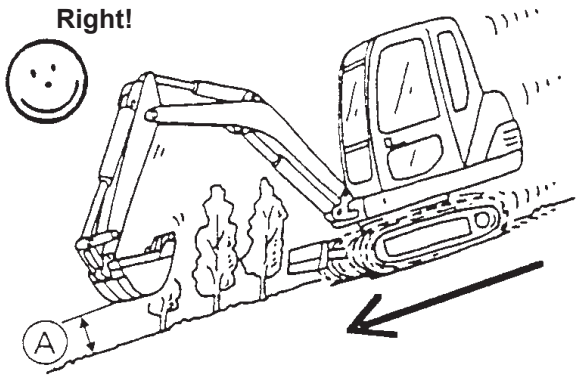

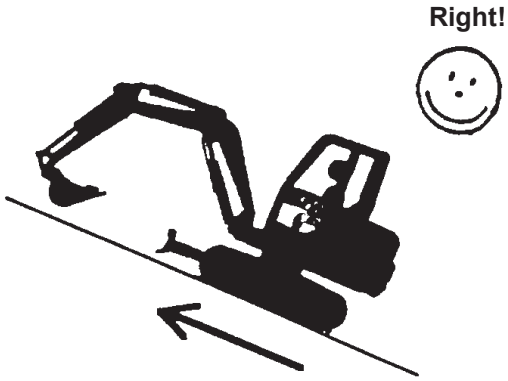

5. NEVER STEER ON SLOPES

NEVER STEER on sloping or unstable ground; doing so can tip the machine over.

NEVER drive across slopes. When working on sloping ground, always drive the machine in line with the slope (up or down the slope). Take great care when driving on icy ground as the machine may slip.

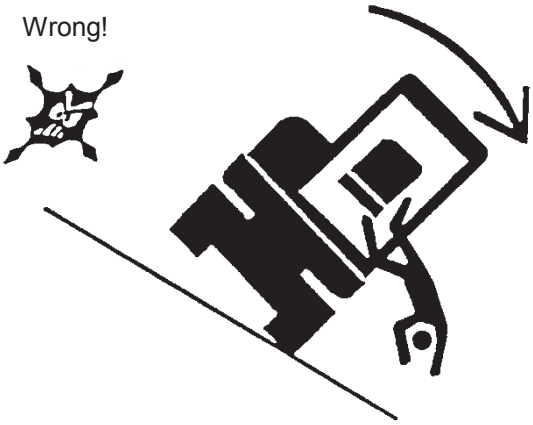

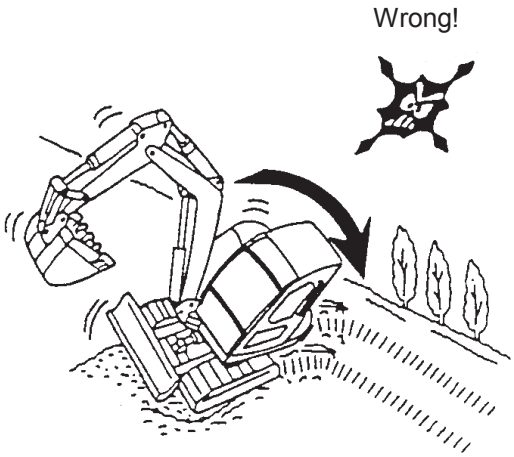

6. ALWAYS CHECK THAT BRIDGES ARE SAFE TO DRIVE OVER

Always check that capacity of every bridge you encounter is sufficient to support the weight of the machine.

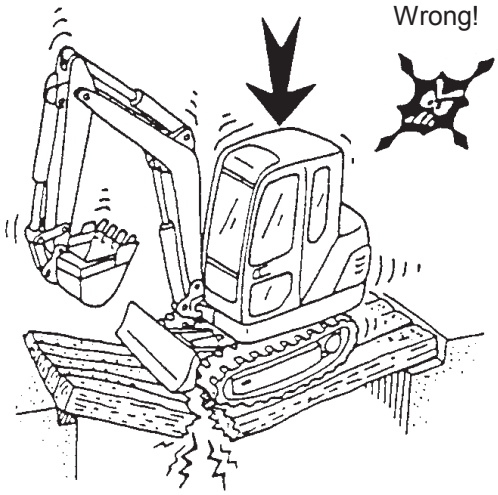

https://truckmanualshub.com/

7. DRIVING IN SPECIAL CONDITIONS

If the ground is very rough or covered with rocks, drive very slowly. Check the travel speed with the engine speed.
NEVER drive in such a way as to strain the tracks or the machine itself.

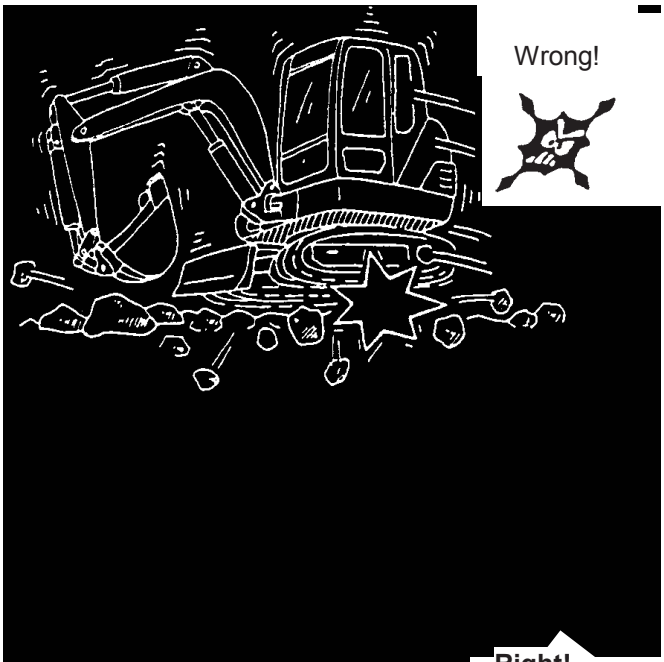

8. CORRECT POSITION OF DRIVE WHEEL

ALWAYS drive with the drive wheel at the rear, especially over long distances. This increases the service life of the machine's undercarriage.

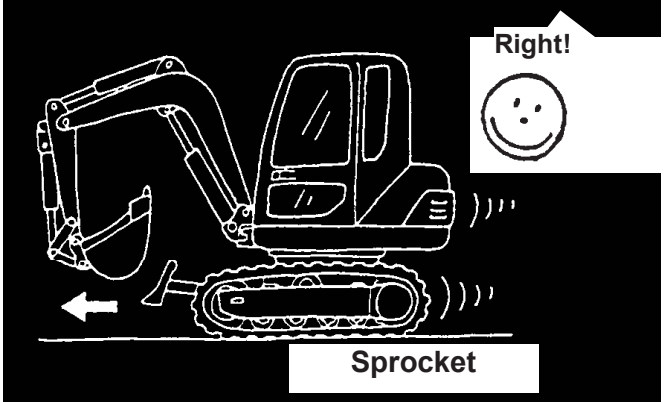

9. UTILIZE MATS AT A SPECIAL JOB SITE

Use mats made of lumbers to support the machine on the soft ground or in a marsh. Use the clean and level mats for safe operation. **Remember** that the mats cannot support the machine in every condition.
Carefully check the job site first and confirm that safety can be secured by the mats.

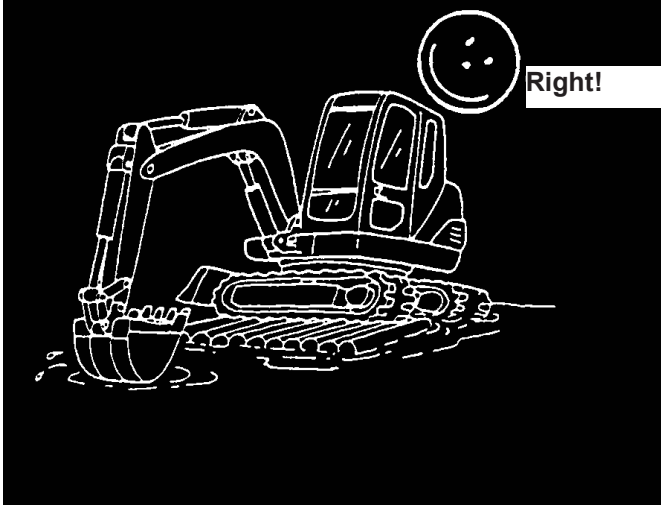

https://truckmanualshub.com/

10. STEER SLOWLY

In conditions (non-emergency) **ALWAYS** steer as gradually as possible. Steering suddenly or around the machine's own axis when stationary can reduce its service life. Steer slowly to avoid overloading the drive wheel, especially on uneven, loose ground.

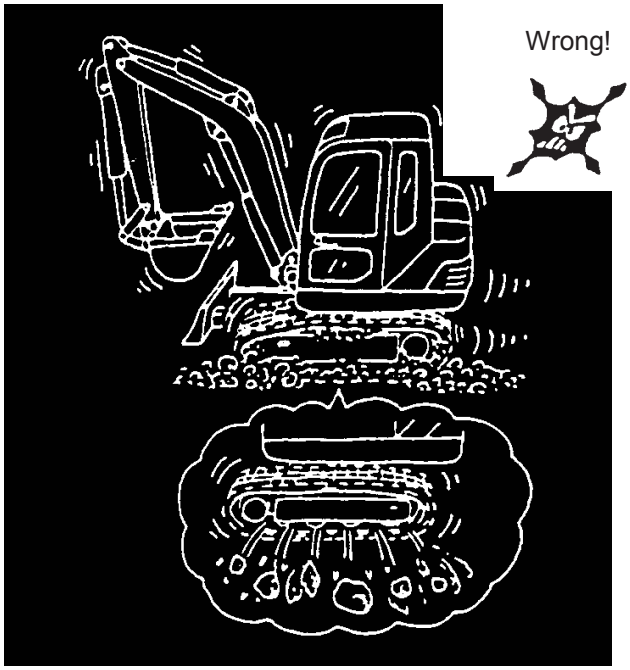

1 - 8 TOWING

1. TOWING THE MACHINE

If the machine gets stuck in soft ground and cannot be freed without outside help, a towing machine can be attached with a harness to the towing hook.

NEVER tow the machine sideways as the hook may fail and cause damage or injury.

2. USE THE TOWING HOOK PROPERLY

Always use the towing hook for pulling small loads. The towing hook is rated for ***500 kg***.

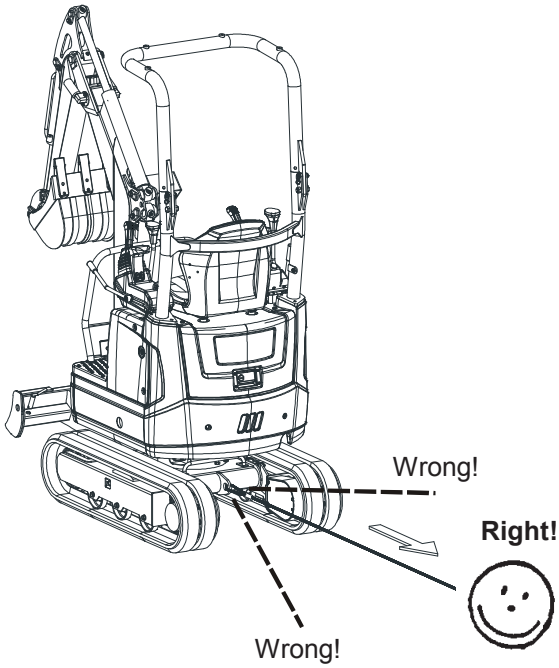

https://truckmanualshub.com/

1 - 9 TRANSPORT

1. PRECAUTIONS WHEN LOADING/ UNLOADING THE EXCAVATOR

ALWAYS load and unload the dumper on level ground.
ALWAYS **use** ramps which are strong, wide, long and thick enough for the machine.
Remove any ice, snow or loose material from the ramps and truck load bed before loading the machine.
NEVER **steer** on the ramps.
Do not raise the arm too far when loading/unloading the machine.

2. DO NOT LOAD/UNLOAD THE MACHINE WITHOUT RAMPS - IT CAN TIP OVER

NEVER use the arm for loading/unloading the machine. Doing so is extremely dangerous.

ALWAYS make sure that the ramp is long and strong enough to support the machine (length and weight).

3. TRANSPORT

Secure the machine to the truck with steel rope and other equipment. Before starting, check that the height clearance of tunnels and underpasses along the way is sufficient.

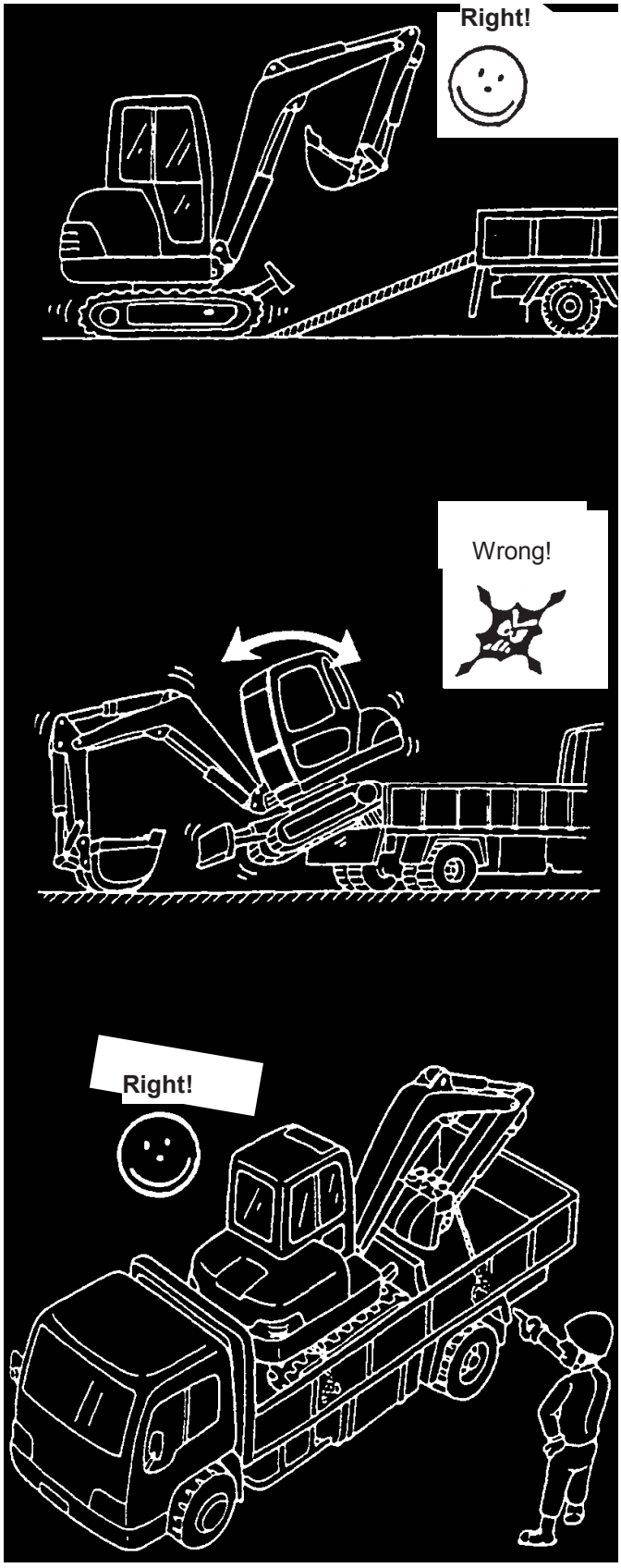

https://truckmanualshub.com/

1 - 10 PARKING

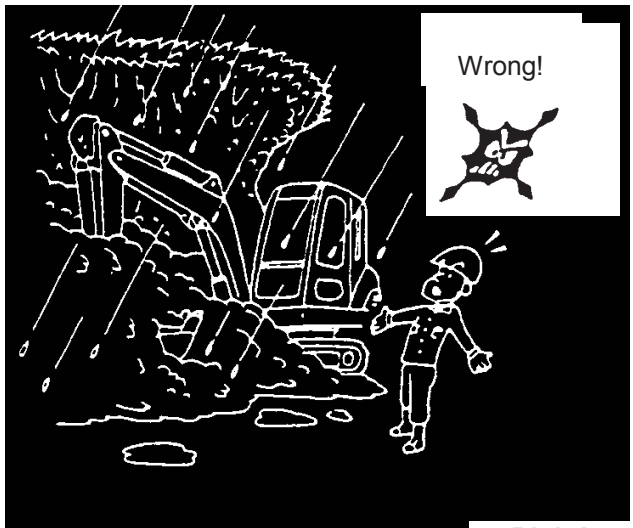

1. SLOPES AND EMBANKMENTS

NEVER LEAVE THE MACHINE PARKED on or near to an embankment, or on the edge of a dig or quarry. They may collapse under its weight. Moe the machine away from such dangerous areas when it is to left unused for a period of time. If possible, park the machine on level ground.

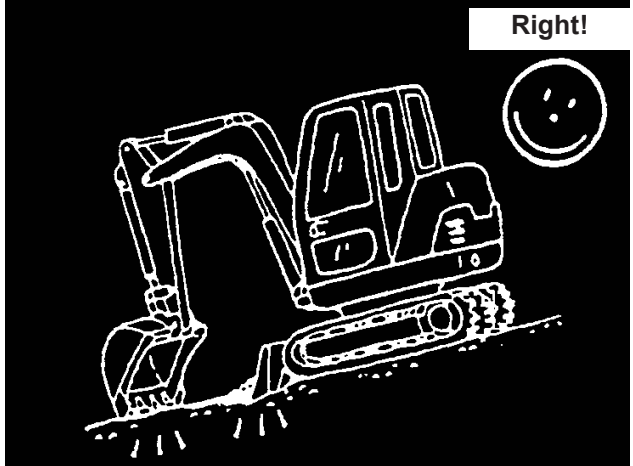

2. PARKING THE EXCAVATOR ON A SLOPE

If you cannot avoid parking on a slope, **ALWAYS** lower the bucket and shovel to the ground downslope of the machine, as shown in the figure, and block the machine.

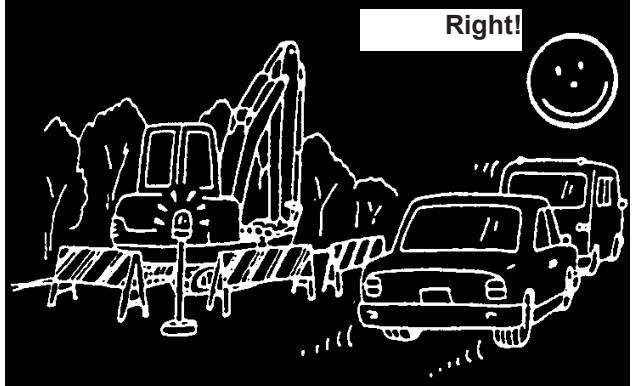

3. PARKING ON THE ROAD

If the machine must be parked on a road, always place barriers, banners, lights and notices to warn motorists of the fact.

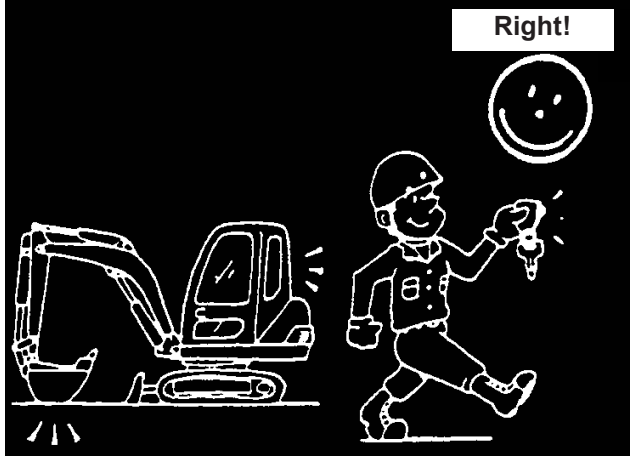

4. LEAVING THE MACHINE UNSUPERVISED

When leaving the machine unsupervised, **ALWAYS** lower the arm, lay the blade on the ground and shut off the engine. Check that the blocking equipment is positioned correctly, remove the ignition key and lock the cab shut.

https://truckmanualshub.com/

1 - 11 MAINTENANCE

1. SCHEDULED MAINTENANCE

Maintenance may be hazardous if the proper precautions are not observed. Maintenance staff must be aware of the risks and observe the safety procedure. Before doing maintenance or repair work, consult the instruction manual. Before servicing the machine, shut off the engine.

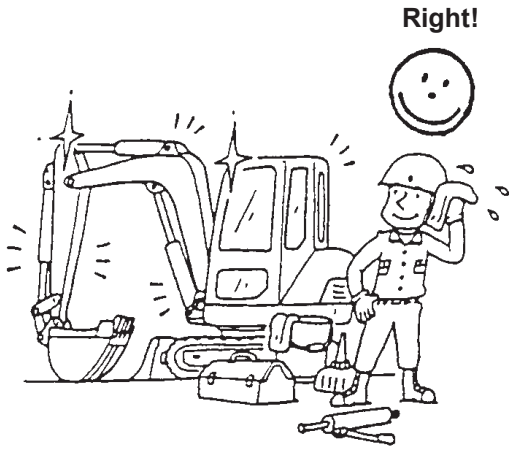

2. DO MAINTENANCE WORK AS INSTRUCTED

When working on the machine, mark the drive levers with labels. These labels should only be removed by persons aware of the situation and able to ensure that safety rules are fully observed.

3. KEEP THE MACHINE CLEAN

Keep the machine clean. Remove all dirt ad grease from the cab, check the equipment and clean the windows. Do not leave flammable materials in the machine's work area.

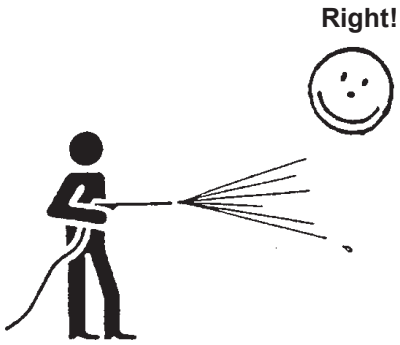

4. SET THE HYDRAULIC PRESSURE TO THE CORRECT VALUE

Qualified persons may measure and adjust the hydraulic pressure following the provided procedure and using proper equipment.
If no such qualified persons are available, contact your dealer.

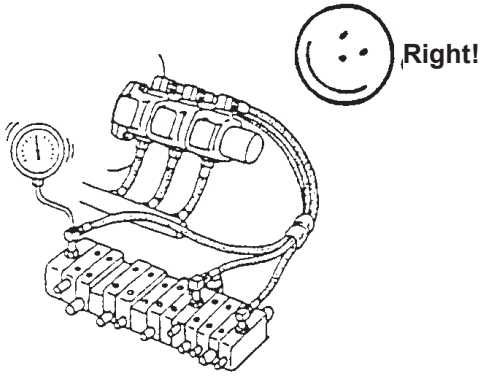

https://truckmanualshub.com/

5. BEWARE OF CRUSHING AND SHEARING HAZARDS

Before **ANY** adjustments or service, stop the engine and immobilise the machine.

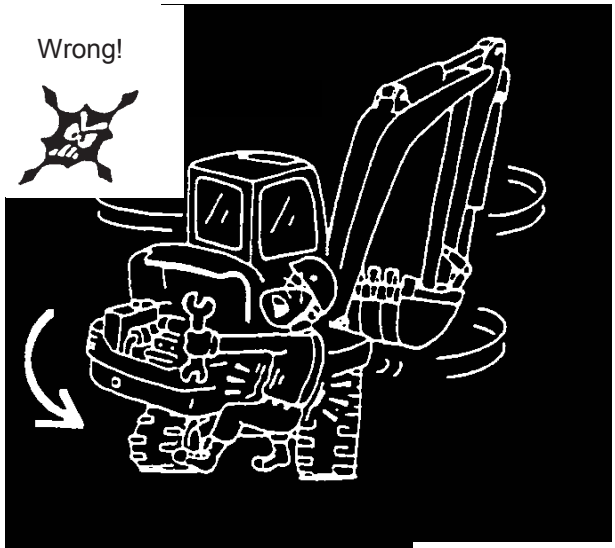

6. NEVER LEAN OUT OF THE WINDOWS

The operator must keep all parts of his body inside the cab.

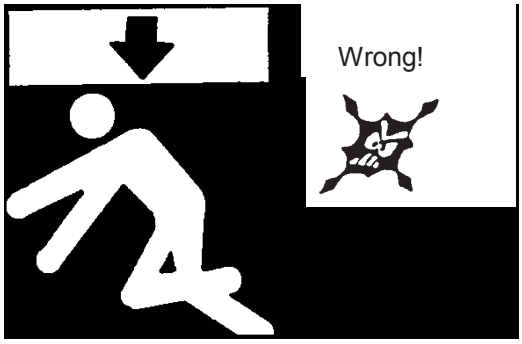

The excavator arm may fall if the control levers are actuated accidentally. If the window is missing or broken, replace it immediately.

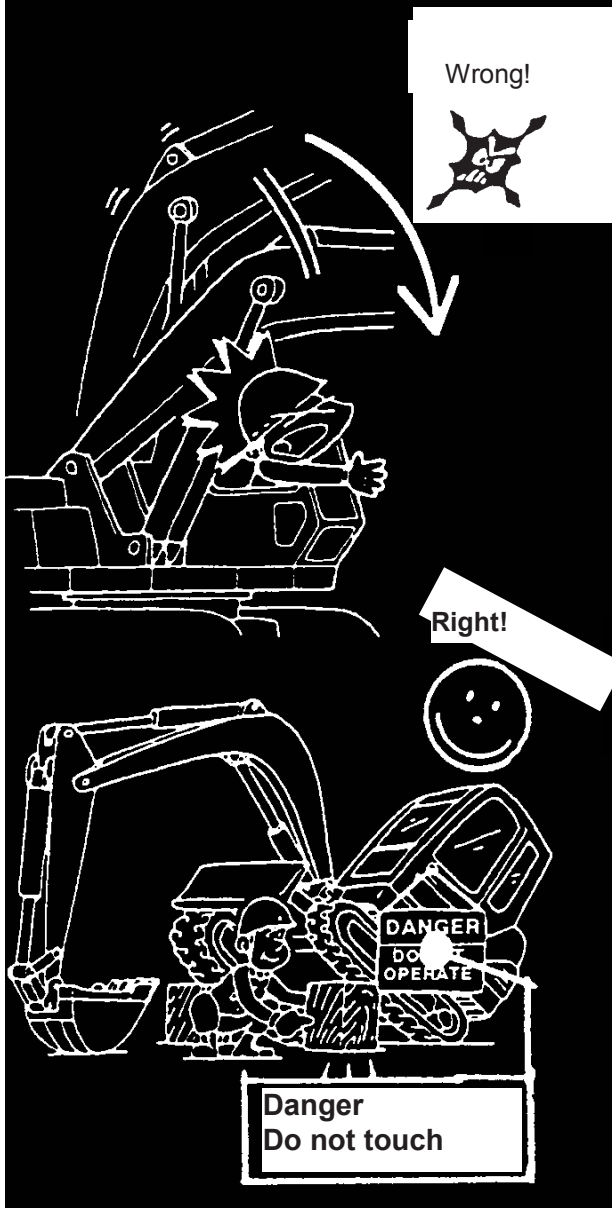

7. SUPPORT THE UNDERCARRIAGE WHEN WORKING UNDER THE TRACKS

NEVER ALLOW ANYONE to work on the undercarriage if it is raised but not securely locked. Check that the machine is supported on securely placed blocks. Never leave the machine raised on the arm alone. Post a notice: "**DANGER - DO NOT TOUCH**".

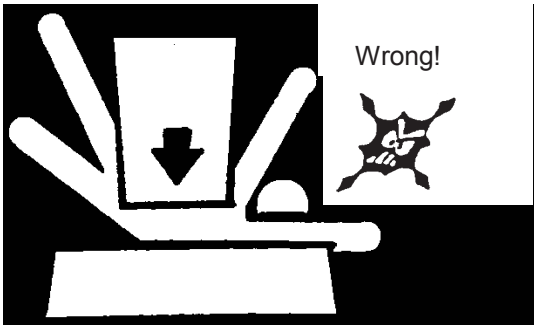

https://truckmanualshub.com/

8. FIRE AND EXPLOSIONS

Always keep fuel, lubricants and cooling fluids away from heat and flames. Many such fluids are extremely flammable.

NEVER refuel or grease the machine with the engine running.

9. NEVER SMOKE while refueling.

DO NOT SMOKE while refuelling or in the vicinity of flammable materials.

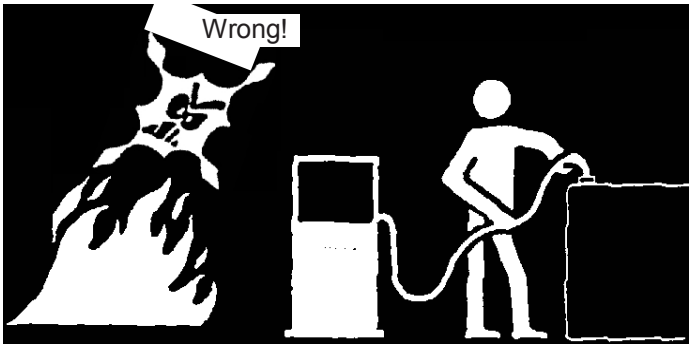

10. NEVER TOUCH THE BATTERY

Never touch the batteries internal components.

Battery acid burns the skin and can result in blindness in contact with the eyes.

In case of contact with the acid, rinse it off the skin with abundant water.
To neutralise the acid, apply bicarbonate of sodium.

If the acid comes into contact with the eyes, rinse abundantly with water and get immediate medical attention.

When servicing the battery, remember that a highly explosive mix of hydrogen and oxygen forms when charging/discharging it.
This gas can ignite in the presence of open flames or sparks.

Always wear **safety glasses and gloves**when working on the battery.

https://truckmanualshub.com/

ALWAYS DISCHARGE ALL RESIDUAL PRESSURE WHEN DISASSEMBLING HYDRAULIC UNIONS

Before disconnecting a hydraulic line, make sure that:
- the arm is lowered to the ground;
- the engine is off;
- all pressurized air has been discharged from the hydraulic reservoir;
- the control levers have been moved back and forth several times to lower the pressure in the cylinders.

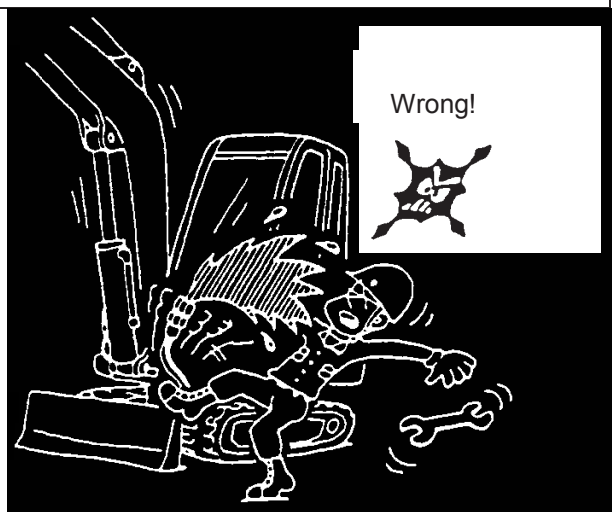

12. PRESSURISED HYDRAULIC FLUID CAN PENETRATE THE SKIN AND RESULT IN SERIOUS INJURY OR EVEN DEATH

Before starting the engine again, make sure that all connections have been tightened down and all lines and fittings are in good condition.

Fluid leaks from small holes can be almost invisible. Check for leaks with absorbent paper or a piece of wood - do not use your bare hands.

If hit by pressurised hydraulic fluid, seek immediate medical attention; the fluid can cause serious reactions on contact.

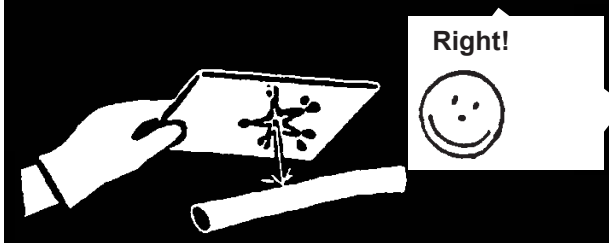

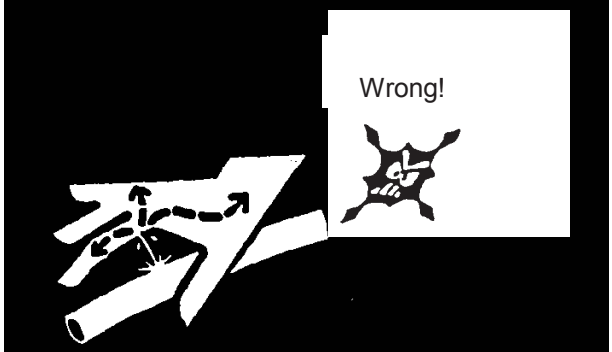

13. NEVER STAND IN LINE WITH THE SAFETY VALVE WHEN ADJUSTING THE TRACKS

When working on the tracks, always take care top avoid potential sprays of grease. The grease used to adjust the tension of the tracks is under high pressure and can cause serious injury or even death. Follow the track adjustment procedure in full.

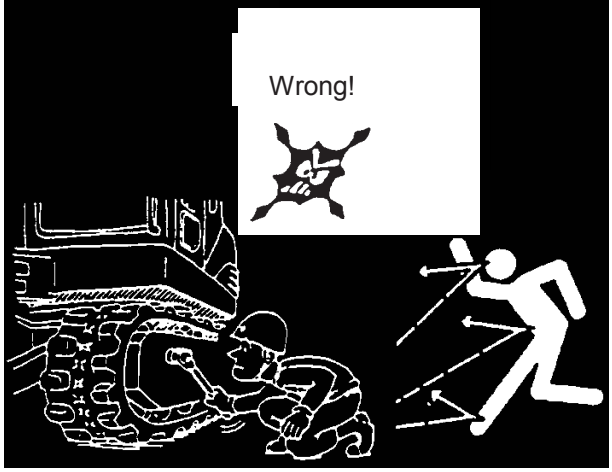

https://truckmanualshub.com/

14. BEWARE OF ROTATING AND MOVING PARTS

DO NOT approach moving or rotating parts like belts and fans. Do not approach any objects to moving or rotating parts. Doing so can result in serious accidents.

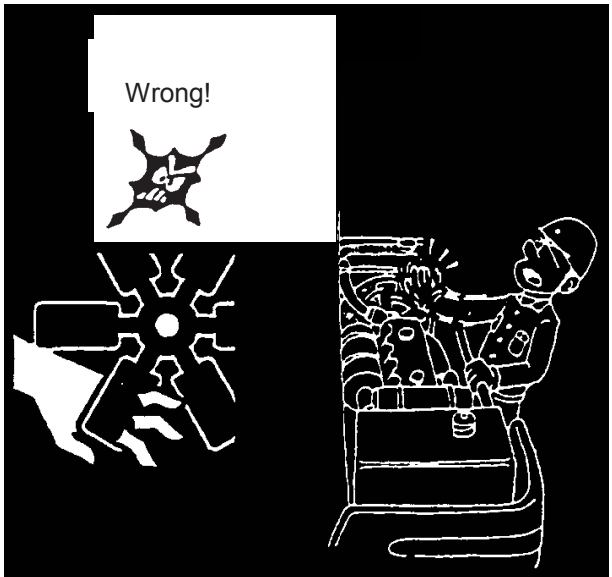

15. BE CAREFUL OF HOT PARTS OF THE ENGINE.

DO NOT touch the engine or exhaust when the machine is operating or has not cooled down after operation. These parts are very hot and cause serious burns.

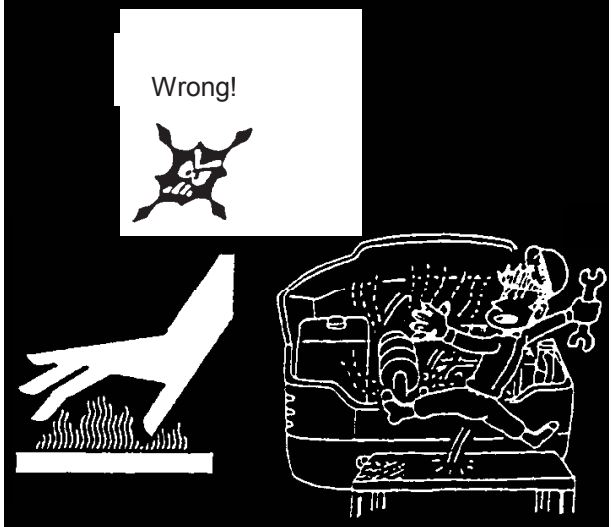

16. BEWARE OF THE MACHINE'S COOLANT CIRCUIT

NEVER OPEN the coolant tank plug while the engine Is running or before it has had time to cool down; very hot steam can burst out of it and cause serious burns. Wait for the coolant to cool down. Open the plug slowly to vent the pressure in the tank. Do not touch the engine radiator, use a rag or gloves when handling it. Do not ingest or inhale coolant or allow it come into contact with your eyes. If using antifreeze, seek immediate medical attention if any of the above occur. After every service, before starting the engine once more, make sure you have left no tools lying on the machine.

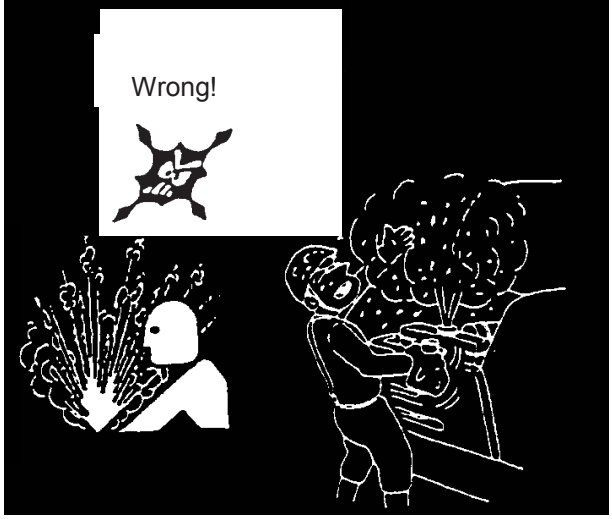

https://truckmanualshub.com/

1-12 SAFETY LABELS AND SIGNS

The machines bear various safety plates and lables.
We describe their locations and the hazards they warn of in this section.

Make sure that all safety labels are legible. Clean and replace illegible signs.
When cleaning the labels use a cloth, water and soap Do not use solvents or petrol.

If a label is attached to a part which is to be replaced, make sure to affix a new label on the replacement part.

Location of labels WARNING!

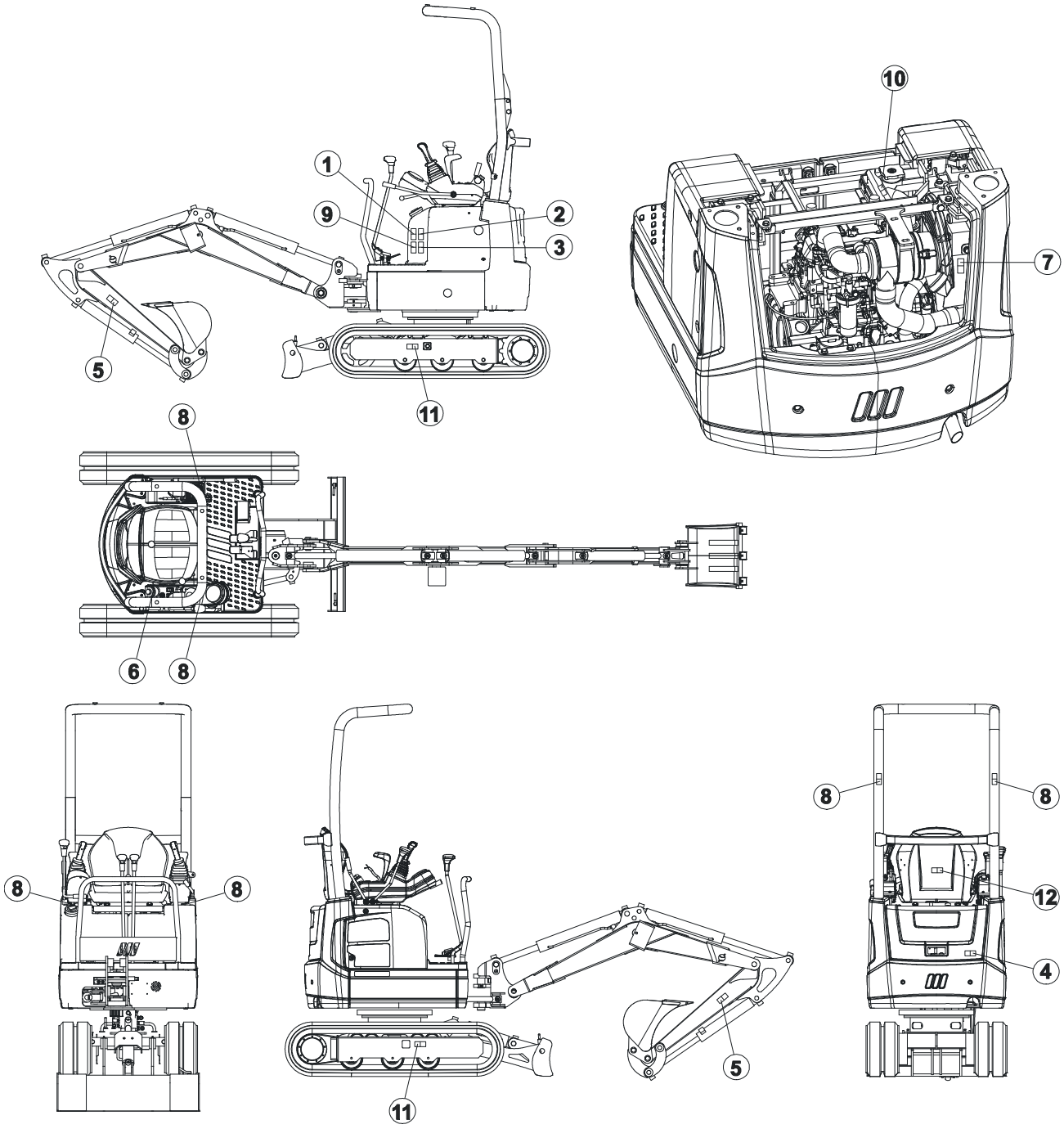

1 SAFETY MEASURES

Symbol illustrated	Warning, explanation	Symbol illustrated	Warning, explanation
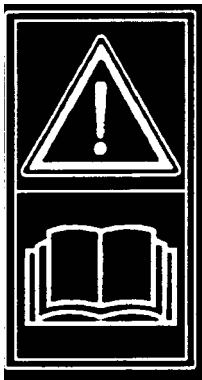	1 **Warning!** Read the manual before operating, servicing or transporting the machine.		2 The sign indicates an electrocution hazard if the machine is used close to electrical lines. Always maintain the safety distance given in the manual.
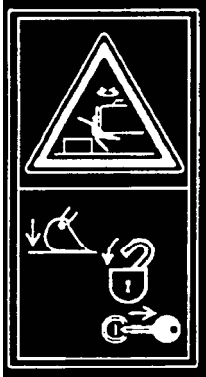	3 The sign indicates the hazard of impact or crushing if the machine moves unexpectedly. Always lower the arm to the ground, lock the controls and remove the ignition key before leaving the machine unsupervised.	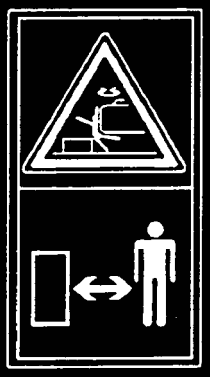	4 The sign indicates the hazard of impact or crushing by the upper rotating section of the machine. Keep out of the machine's radius of action.
	5 The sign indicates the hazard of being hit by the machine's tool. Keep out of the machine's radius of action.		6 The sign indicates the hazard due to moving parts (gears, belts, etc.). Always switch the machine off before inspecting or servicing it.
	7 The sign indicates the hazard due to rotating parts (such as fan). Always switch the machine off before inspecting or servicing it.	8 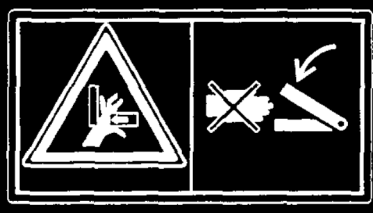	The sign warns against putting your hands into the machine. Moving parts in danger areas can seriously injure your hands.

https://truckmanualshub.com/

1 SAFETY MEASURES

Symbol illustrated	Warning, explanation	Symbol illustrated	Warning, explanation

9 The sign indicates the electrocution hazard due to high voltage lines.
Refer to the manual for safety measures

10 The sign indicates the burn hazard due to radiator water or hydraulic fluid if the radiator/reservoir are opened when the fluids in question are still hot.
Allow the coolant and hydraulic fluid to cool down before removing the plugs.

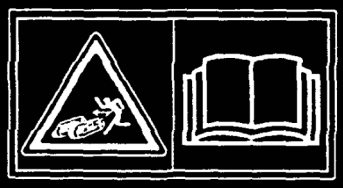

11 The sign indicates the danger of being struck by the track tensioner device cap.
Read the manual for safe track adjustment instructions.

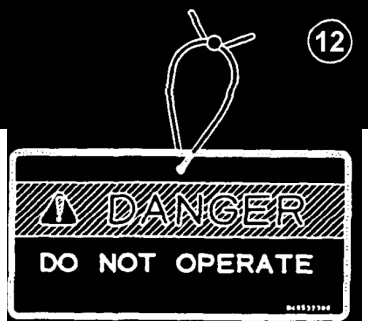

12 **DANGER!**
Post a "**DO NOT TOUCH**" notice on the starter switch and controls before servicing or repairing the machine.
Do not start the engine or move the controls when the "**DO NOT TOUCH**" or similar notice is posted on the starter switch or controls.
ALWAYS keep a "**DO NOT TOUCH**" notice in the machine's tools compartment.

13 **Nameplate Serial number.**

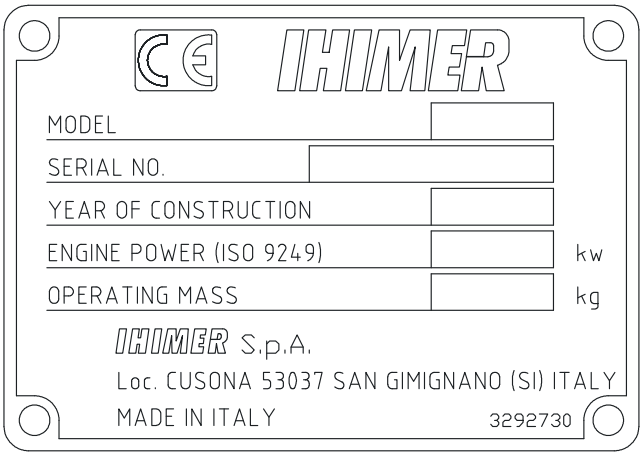

14 **Punching Serial number.**

The chassis is punched with the serial number given on the machine's nameplate.

https://truckmanualshub.com/

2 OPERATING INSTRUCTIONS

2 - 1 DESCRIPTIONS

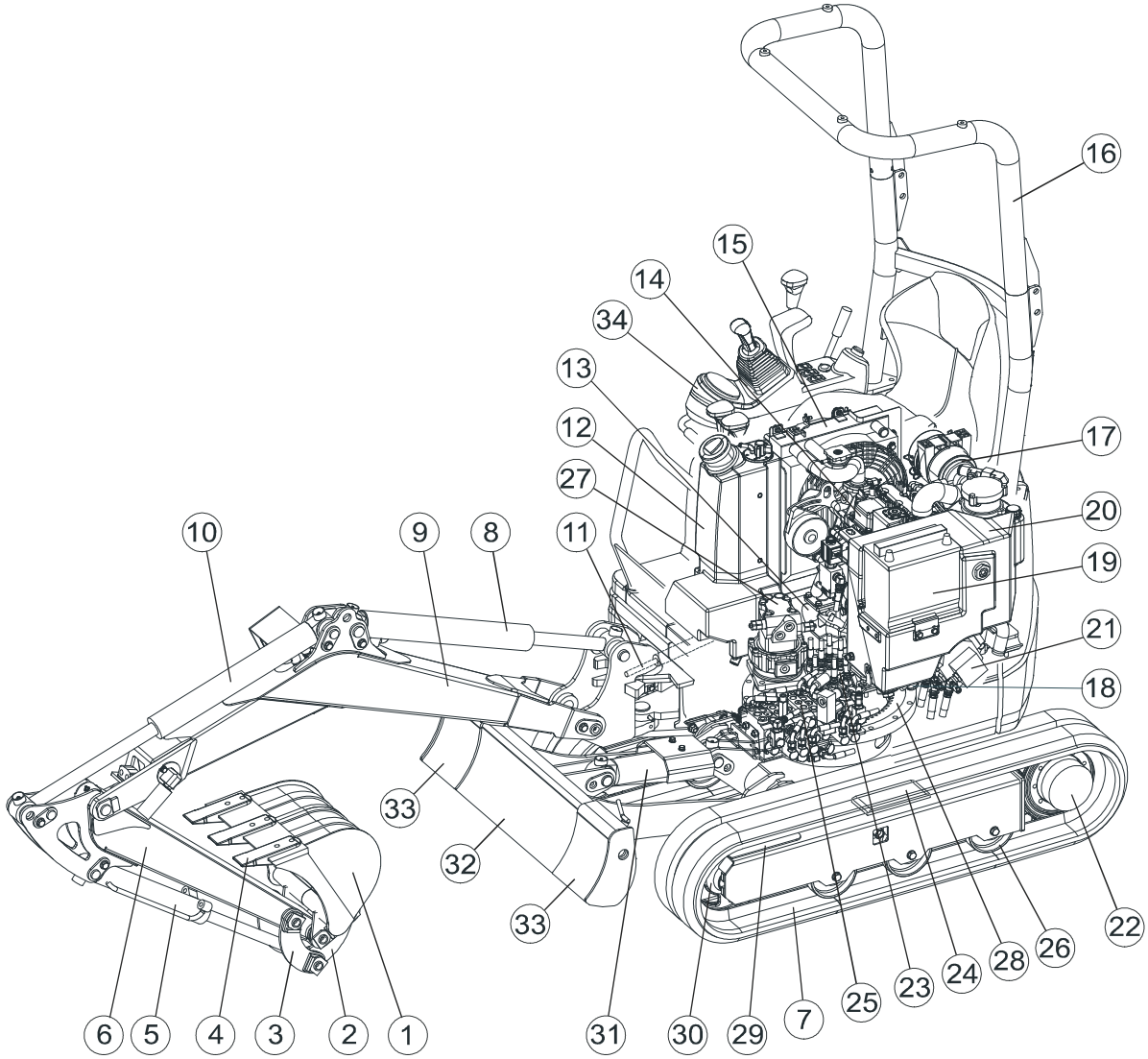

(1) Bucket
(2) Bucket attachment
(3) Arm attachment
(4) Tooth
(5) Bucket cylinder
(6) Arm
(7) TRack
(8) Large arm cylinder
(9) Large arm
(10) Arm cylinder
(11) Arm slew cylinder
(12) Fuel tank
(13) Silencer
(14) Diesel engine
(15) Radiator
(16) TOPS roof
(17) Air cleaner
(18) Return filter
(19) Battery
(20) Hydraulic Oil Tank
(21) Hydraulic pump
(22) Travel gearmotor
(23) Rotary coupling
(24) Driving plate
(25) Control valve
(26) Track roller
(27) Slewing engine
(28) Fifth wheel
(29) Track tensioner
(30) Idle wheel
(31) Shovel cylinder
(32) Shovel
(33) Shovel extensions
(34) Control panel

https://truckmanualshub.com/

2 OPERATING INSTRUCTIONS

2 - 2 INSTRUMENTS AND CONTROLS

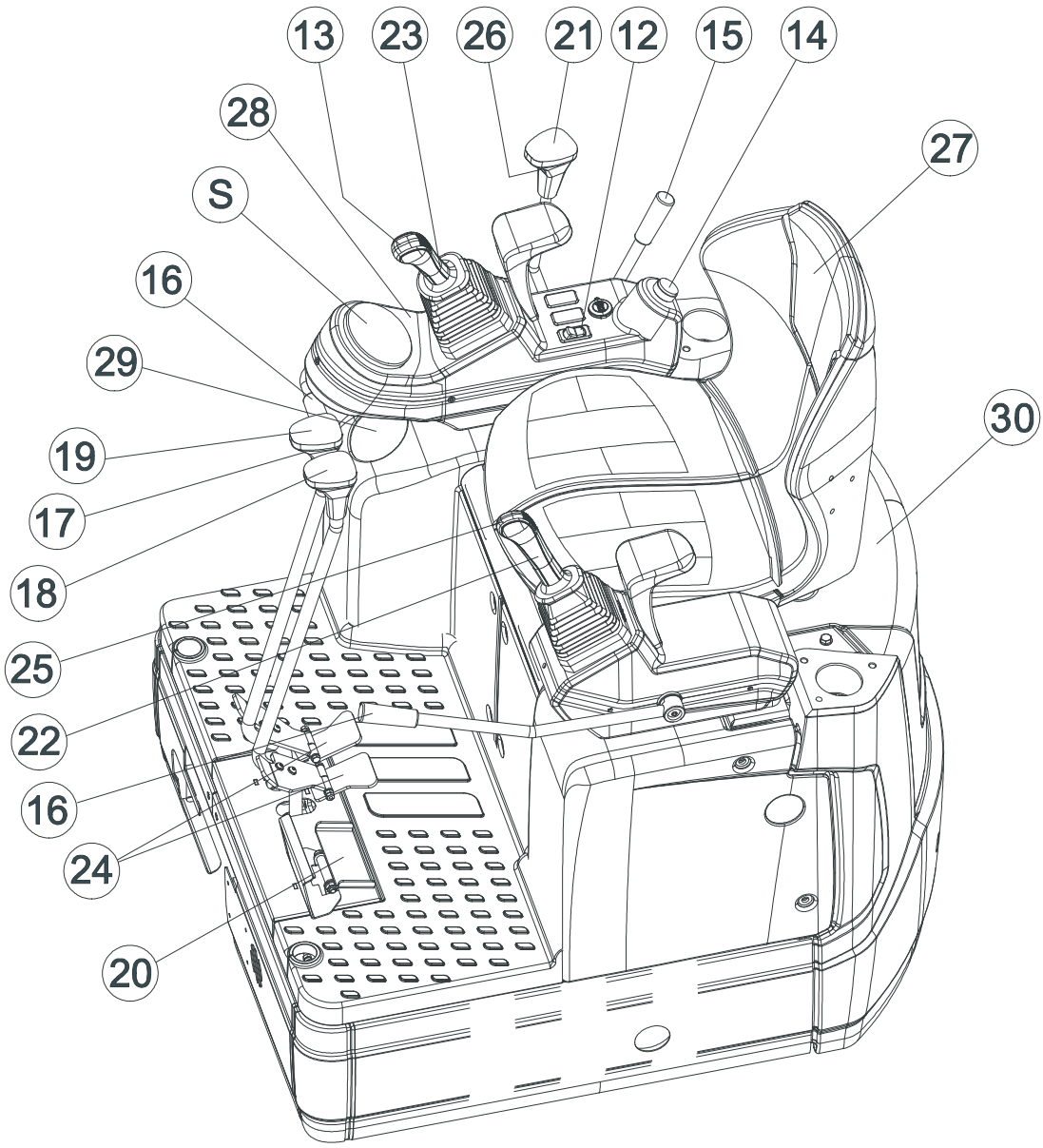

(S) Instrument panel
(12) Worklamp switch
(13) Buzzer
(14) Engine starter
(15) Engine throttle lever
(16) Control locking lever
(17) Double speed button
(18) LH travel lever
(19) RH travel lever
(20) Auxiliary hydraulic pedal
(21) Shovel / carriage expand lever
(22) LH lever
(23) RH lever
(24) Travelling pedals
(25) Arm slew control button
(26) Carriage expand button
(27) Operator seat
(28) Control panel
(29) Fuel tank
(30) Engine hatch

2 OPERATING INSTRUCTIONS

(S) INSTRUMENT PANEL

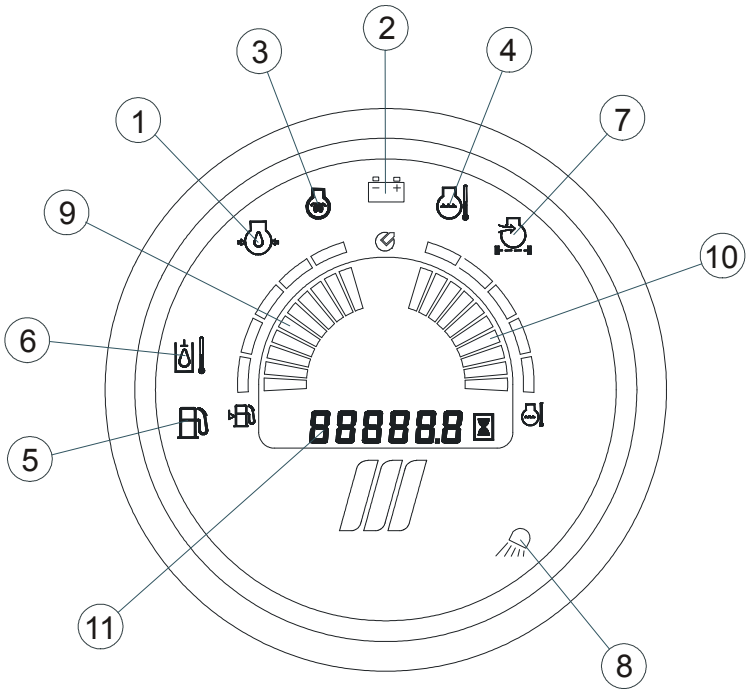

(1) Engine oil pressure warning lamp.
(2) Battery charge warning lamp.
(3) Glowplugs preheating warning lamp.
(4) Engine water temperature warning lamp.
(5) Fuel reserve warning lamp.
(6) Hydraulic fluid temperature warning lamp.
(7) Air cleaner warning lamp.
(8) Worklight warning lamp
(9) Fuel level.
(10) Engine water temperature.
(11) Hour meter

NOTE: (RPM) FUNCTION IS NOT AVAILABLE.

1. WARNING LAMPS

(1) ENGINE OIL PRESSURE WARNING LAMP

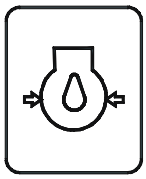

The lamp turns on when the oil pressure is too low. Stop the engine immediately and identify the cause of the pressure drop.

(2) BATTERY CHARGE WARNING LAMP

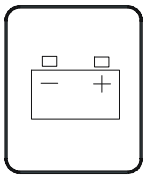

The lamp turns on and the buzzer sounds to indicate that the battery is delivery power. If they do not go off when the engine starts, there is a fault in the charging circuit.

(3) GLOWPLUGS WARMING LAMP.

The lamp stays on together with the buzzer while the glowplugs are preheating. They turn on when the key is turned to "PREHEAT" and turn of when the glowplugs are heated. This takes longer when the engine is colder.

(4) ENGINE WATER TEMPERATURE WARNING LAMP.

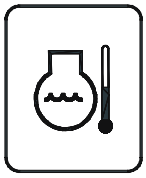

The lamp turns on when the water temperature gauge (10) is in the red. The lamp turns on and the buzzer sounds to indicate that the coolant is too hot. There may be a coolant leak or fault with the radiator.

https://truckmanualshub.com/

(5) FUEL RESERVE WARNING LAMP.

The lamp turns on when the fuel gauge (9) is in the red. Top up the tank immediately.

(6) HYDRAULIC FLUID TEMPERATURE WARNING LAMP.

The lamp turns on to indicate the hydraulic fluid is too hot. The machine may have been used too heavily for too long or the cooling circuit radiator may be dirty. Stop the machine and restore normal working conditions.

(7) AIR CLEANER WARNING LAMP

The lamp turns on to indicate that the cleaner is blocked. Immediately replace or clean the cleaner.

(8) WORKLIGHT WARNING LAMP

The lamp turns on when the worklight is on, and off when the worklight turns off.

2. GAUGES AND HOUR METER

(9) FUEL LEVEL

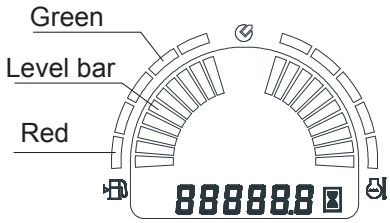

Indicates the amount of fuel in the tank. The number of bars illuminated indicates the fuel level. Top up when the level bars are in the red and the reserve warning lamp (5) turns on.

(10) ENGINE WATER TEMPERATURE

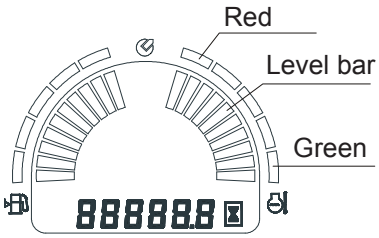

Indicates the coolant temperature. At starting, only the first bars are illuminated. The temperature is normal when the gauge is in the green. If the bars in the green zone are all on, reduce engine speed and wait for a few bars to turn off before starting work again. If the bars in the red zone turn on, the engine is overheated. Stop working and reduce engine speed. When the coolant temperature is low enough (green zone), stop the engine and check the fan belt (broken), radiator (undamaged, clean) and the coolant level.

(11) HOUR METER

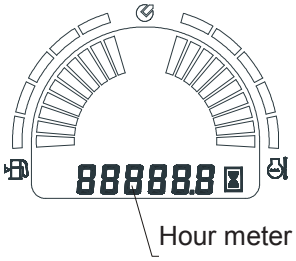

The digital hour meter indicates how many hours the machine has been running. It starts when the engine is started.

https://truckmanualshub.com/

3. SWITCHES

(12) WORKLIGHT

Pressing the switch [ ] turns the arm worklight on. Press it the opposite way to switch it off. The worklight warning lamp (8) turns on and off with the worklight itself.

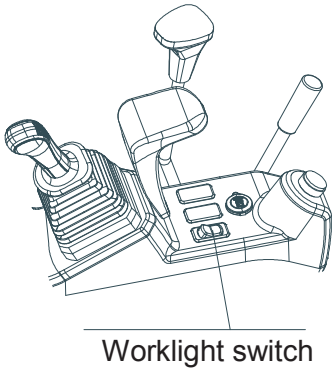

(13) HORN

The horn button is on the top of the RH lever.

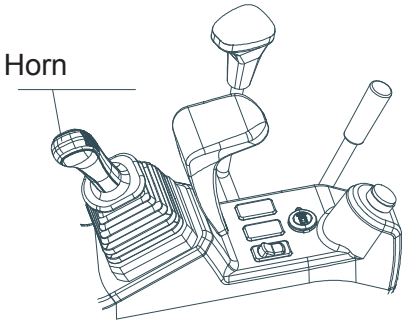

(14) STARTER

WARNING

IF THE ENGINE DOES NOT START WITHIN 10 SECONDS, SET THE KEY TO OFF. WAIT TWO MINUTES BEFORE TRYING TO START THE ENGINE AGAIN.

OFF The key may be inserted/extracted in this position. When the key is in this position the entire electrical system is off and the engine stops.

ON When the key is in this position the electrical circuit is active. The key returns automatically to ON when released from START.

START Turn the key to this position to start the engine. When the key is released, it return to ON.

HEAT In cold weather, preheating facilitates starting the engine. (This is not necessary if the engine is already warm). When the key is turned to HEAT the glowplugs heat up.
Do not do this for more than 10 seconds. (The glowplugs can burn if the key is kept to HEAT for longer).
Turn the key to START to start the engine immediately after heating the glowplugs.

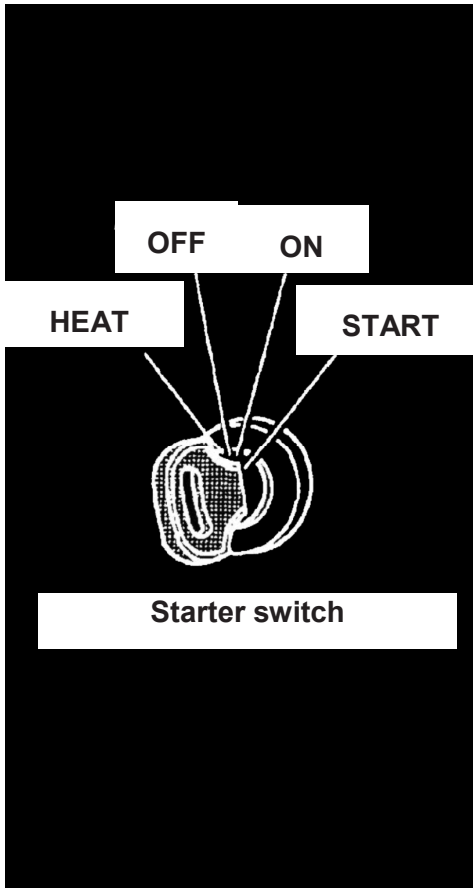

https://truckmanualshub.com/

4. MACHINE CONTROLS

(15) ENGINE THROTTLE LEVER

(1) Decelerate ( )

Push the lever forwards to reduce the engine speed.

(2) Accelerate ( )

Pull the lever back to increase engine speed.

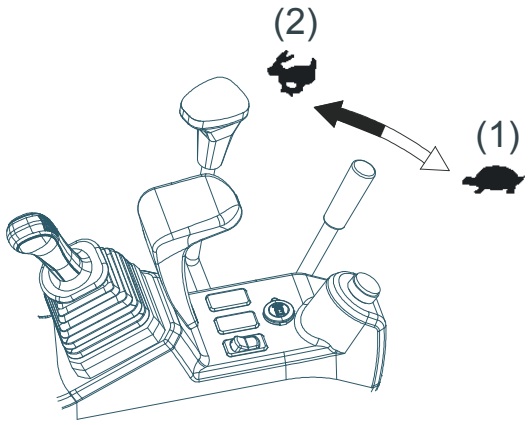

Throttle lever

(16) LH CONTROL LOCK LEVER

WARNING

WHEN GETTING ON OR OFF THE MACHINE, MAKE SURE THE LEVER IS SET TO LOCK.
IF IT IS SET TO UNLOCK, THE UPPER SECTION OF THE MACHINE MAY SLEW (SWING AROUND) AND CAUSE SERIOUS ACCIDENTS.

Pull lever (16) up

Locked: Pull the lever back to LOCK. This disables all hydraulic controls

Unlocked: Push the lever forwards to UNLOCK. This enables the hydraulic controls.

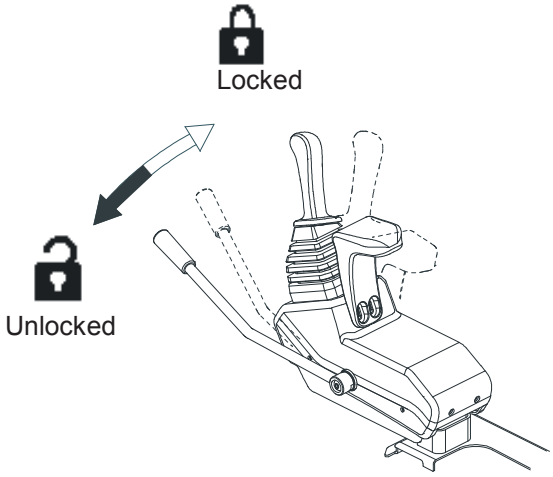

Controls lock lever

(17) DOUBLE SPEED BUTTON

WARNING

- **NEVER use double speed when loading or unloading the machine.**

Single speed
Release the button to travel at single speed. Use single speed on loose or soft ground. Single speed is also used to load/unload the machine

Double speed
Hold down the button (17) to drive the machine at double speed. Use double speed on hard, even ground.

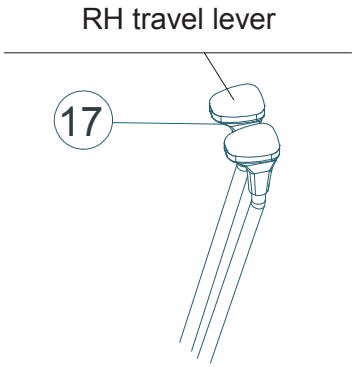

https://truckmanualshub.com/

(18) TRAVEL LEVER (LH)
(19) TRAVEL LEVER (RH)

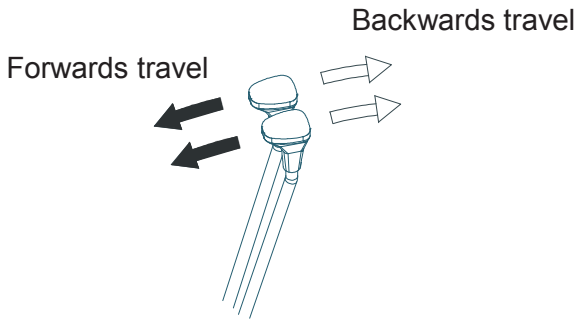

WARNING

- ❖ **BEFORE USING THE CONTROLS, CHECK THE DIRECTION OF THE CARRIAGE. NOTE THAT THE LEVERS OPERATE IN REVERSE WHEN THE SHOVEL IS AT THE REAR.**
- ❖ **ALWAYS TRAVEL WITH THE SHOVEL AT THE FRONT.**

Forwards travel
Push both levers forwards. The machine moves forwards (shovel side).
Stop
Release the levers to stop the machine.
Backwards travel
Pull both levers back. The machine will move backwards (drive wheel side).

See “TRAVELLING” in this manual.

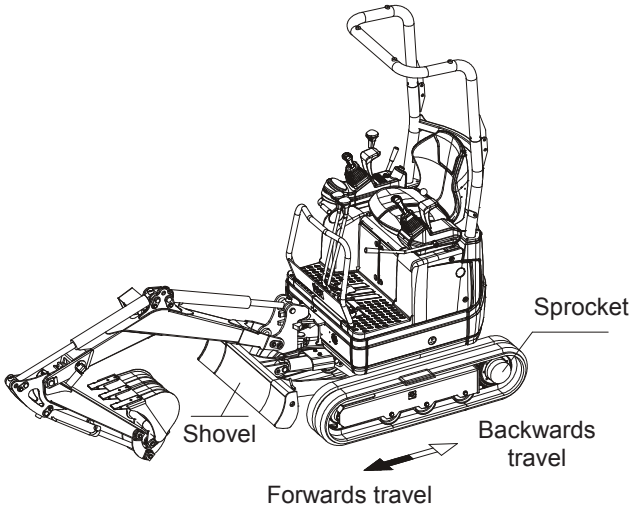

(20) Auxiliary hydraulic circuit pedal

WARNING

Always lock the pedal when the auxiliary circuits are not in use.

Locked:
Close the pedal onto itself to lock out the auxiliaries.
Unlocked:
Unfold the pedal to enable the auxiliaries.

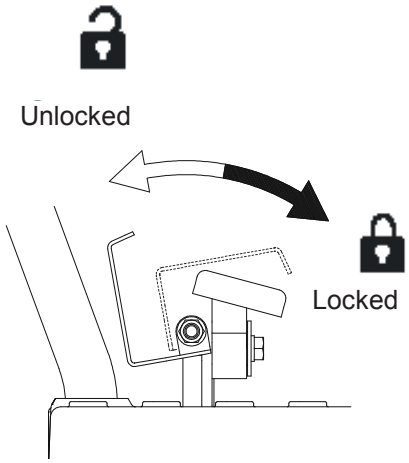

(21) SHOVEL / CARRIAGE EXPAND LEVER

SHOVEL OPERATION (*BUTTON 26 NOT DEPRESSED*):

Lower shovel: Push the lever forwards to lower the shovel.
Raise shovel: Pull the lever back to raise the shovel.

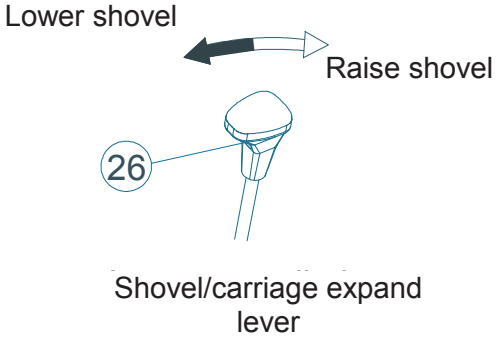

https://truckmanualshub.com/

(22) LH LEVER

Slew superstructure and control arm.

1 **Extend arm:**
Push lever forwards

2 **Retract arm:**
Pull lever back.

3 **Slew right:**
Move lever to right.

4 **Slew left:**
Move lever to left.

5 **STOP:**
The lever returns to the center (stop) when released.

The slew and arm functions can be operated together. For example, to extend the arm and slew right at the same time, push the lever forwards to the right.

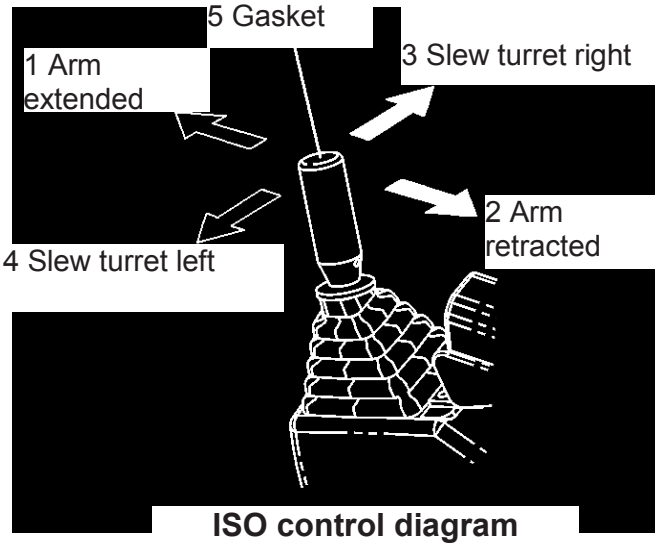

ISO control diagram

(23) RH LEVER

Bucket and large arm controls

1 **Lower arm:**
Push lever forwards.

2 **Raise arm:**
Pull lever back.

3 **Bucket dump:**
Move lever to right.

4 **Bucket dig:**
Move lever to left to close the bucket.

5 **STOP:**
The lever returns to the center (stop) when released.

The arm and bucket can be operated together. For example, to lower the arm and dump the bucket at the same time, push the lever forwards to the right.

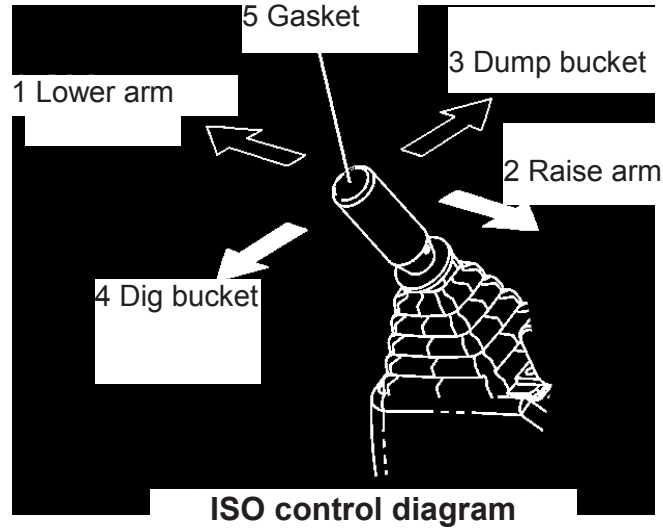

ISO control diagram

(24) TRAVELLING PEDALS

The pedals can be used to travel while digging so the hands are free.

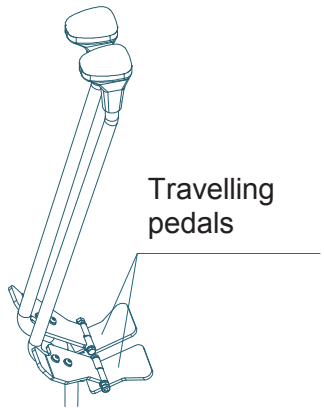

https://truckmanualshub.com/

(25) ARM SLEW CONTROL BUTTON

The LH lever mounts the arm slew button. To slew the arm, use the turret slew functions.

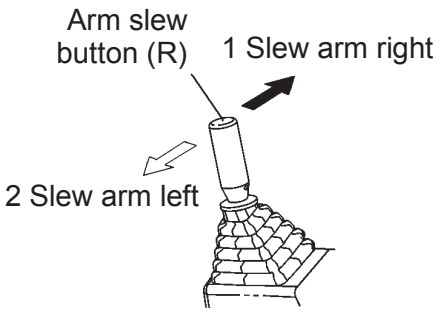

1 **Slew arm right:**
Press the button (R) and move the lever to the right.

2 **Slew arm left:**
Press the button (R) and move the lever to the left.

(26) CARRIAGE EXPAND BUTTON

The red carriage expand button (26) enables the carriage expand lever while inhibiting shovel operation.

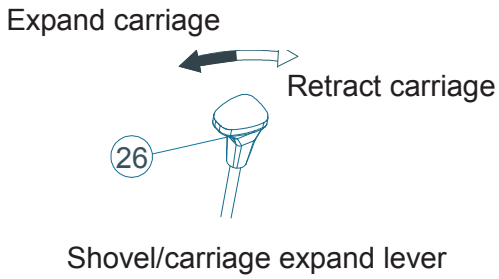

EXPAND CARRIAGE (*BUTTON 26 PRESSED*):

Expand carriage: Press the red button (26) and push the lever forwards to expand the carriage.
Retract carriage: Push the red button (26) and pull the lever back to retract the carriage.

(27) OPERATOR SEAT

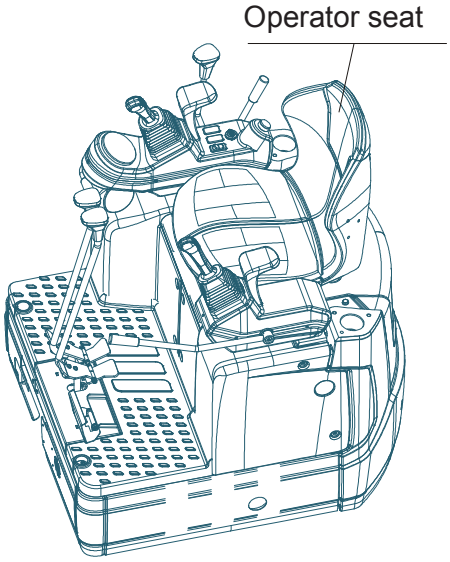

WARNING

- **THE SEAT CAN BE ADJUSTED AT THE BEGINNING OF EACH SHIFT OR WHEN THE OPERATOR CHANGES.**
- **ADJUST THE SEAT WITH THE ENGINE OFF AND THE BUCKET LOWERED TO THE GROUND.**

Seat Adjustment
The seat can be moved forwards or back. The correct position gives easy access to the travel levers and pedals

To adjust the seat forwards/back.
Pull and hold the lock lever to the right and adjust the seat position. Release the lever to lock the seat in position.

SEATBELTS

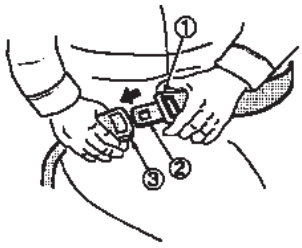

WARNING

ALWAYS SECURE THE SEATBELT WHEN OPERATING THE MACHINE. BEFORE SECURING THE SEATBELT, CHECK ITS CONDITION AND THAT THE AUTOMATIC TENSIONER IS OPERATING PROPERLY. REPLACE THE BELT IF DAMAGED.

1 Make sure the belt (1) is not twisted and fit the lock (2) onto the buckle (3) Always make sure it has engaged properly.
2 Push ”PRESS” on the buckle and release the belt.

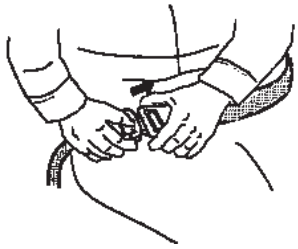

https://truckmanualshub.com/

(28) CONTROL PANEL

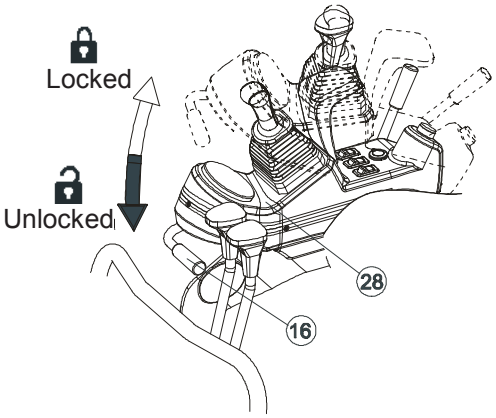

WARNING

WHEN GETTING ON OR OFF THE MACHINE, MAKE SURE THE LEVER IS SET TO LOCK.
IF IT IS SET TO UNLOCK, THE UPPER SECTION OF THE MACHINE MAY SLEW (SWING AROUND) AND CAUSE SERIOUS ACCIDENTS.

Locked: Pull the lever (16) up, and lift the control panel (28), to lock the machine. This disables all hydraulic controls.

Unlocked: Pull the lever (16) up, and lower the control panel to unlock the machine. This enables the hydraulic controls.

(29) FUEL TANK

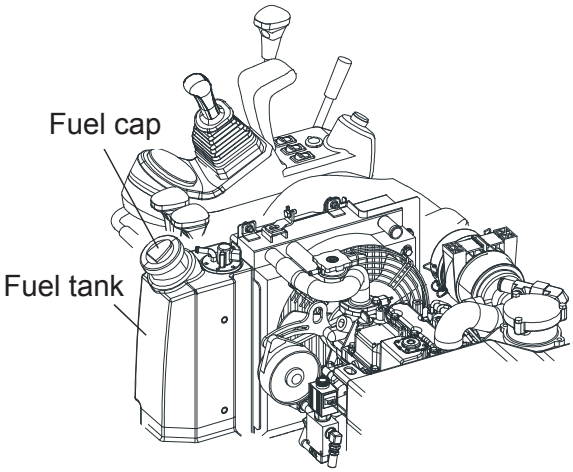

The fuel tank is located on the RH side under the control panel. The key-lock plug prevents incorrect use and tampering.
To refuel, raise the control panel (pull lever 16) to access the filler cap.

(30) ENGINE HATCH

Opening the engine hatch

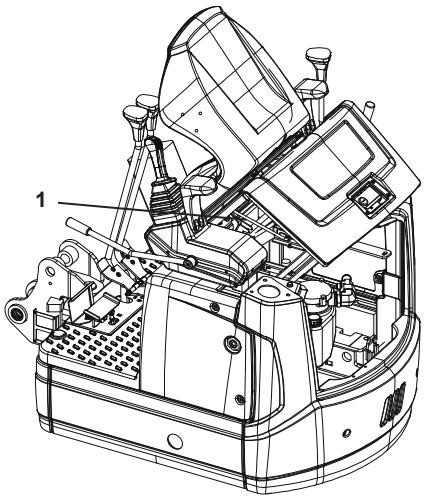

All maintenance must be done with the engine off. The majority of parts requiring maintenance are located under the protective engine hatch.
To gain access to these components, raise the hatch, which is mounted to the seat.
The hatch opens in two steps, controlled by a linkage which slides in a guide with two detents which automatically engage when the hatch is opened. When closing the hatch, the linkage must be disengaged manually. For routine daily maintenance, simply open the hatch to the first detent with the LH controls lock lever and control panel raised. The hatch can only be opened fully to the second detent when the LH controls lock lever and control panel are lowered. When opening the hatch, take care not to jam it against the seat belt, grippers or raised control panels.

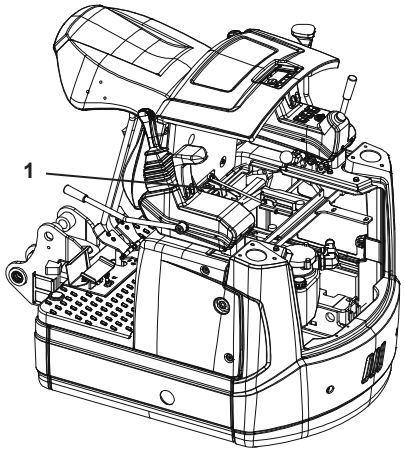

WARNING

ALWAYS LOCK THE HATCH WITH THE IGNITION KEY TO PREVENT ACCESS TO THE ENGINE FOR ANY PURPOSE OTHER THAN INSPECTION OR MAINTENANCE.
ALWAYS SWITCH OFF THE ENGINE BEFORE INSPECTING OR SERVICING IT.

https://truckmanualshub.com/

2 - 3 CONTROLS BEFORE STARTING UP

Every day, before starting up, run the following checks.

- **General inspection**

Check for : loose fasteners (*arm split pin, bucket tooth bolts, fifth wheel bolts, travel drive gear bolts, lower and upper roller, etc.*), dirt (*heat exchanger, dust indicator, sludge filter, etc.*) , oil/coolant leaks, broken/worn parts. Check the condition of the hydraulic fittings and components (*unions, hoses, pistons, etc.*).

Inspect the operator position and keep it clean.

Check for broken arm pins or piston mounts and fix them.

For the inspection methods, refer to the instructions in this manual.

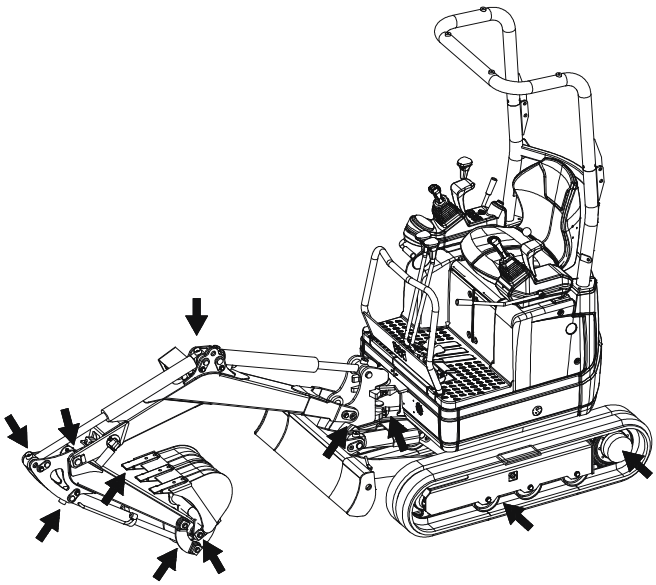

- **Lubrication**

Run daily lubrication as required by the lubrication schedule. Make sure the bushings and pins of all cylinders are lubricated.

- **Checks before starting the engine**

Check the hydraulic fluid, engine oil, coolant and fuel levels.

For these checks, see the section "Daily checks" in this manual.

- **Access to the driving seat**

Make sure the control lock lever is up (unlocked). Clean mud and dirt off you boots to guard against slipping. Climb up facing the driver's seat, holding the rear roll-bar and front guard.

***Warning: DO NOT** use the control lock lever as a handle.*

- **Check seat and seatbelt**

Adjust the seat for easy access to all pedals and control levers when seated.

Check the seatbelts and their fittings. Replace any broken or worn parts. Check that the mounting bolts are tight.

Lock the seat before starting the engine.

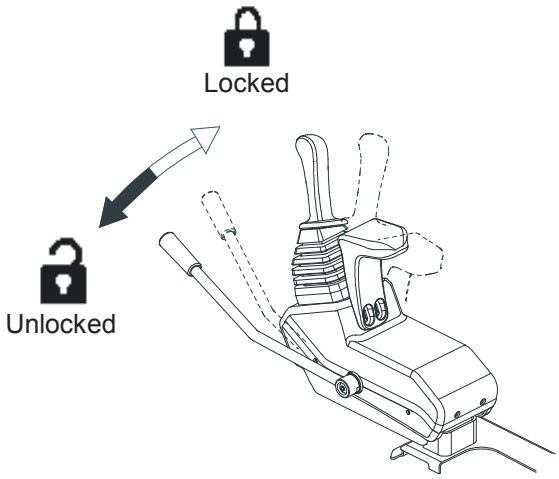

Controls lock lever

https://truckmanualshub.com/

2 - 4 STARTING THE ENGINE

Once the above checks have been run, you may start the engine.

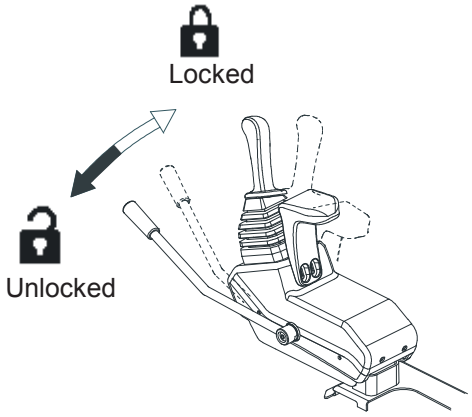

Controls lock lever

STARTING AT NORMAL TEMPERATURE

WARNING

1 **Do not run the starter motor for more than 15 sec. a time. If the engine does not start in 15 sec., allow the starter motor to cool for 2 minutes before trying again. Turn the key to OFF before trying again.**
2 **Run the engine until the operative oil temperature and pressure are reached.**

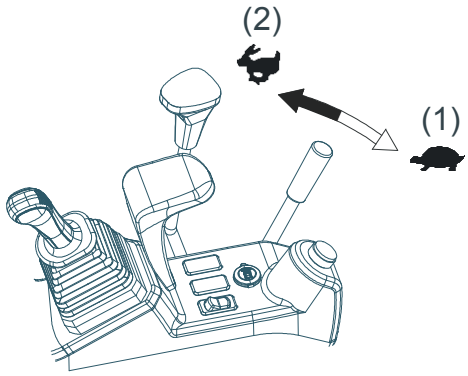

Throttle lever

1. Set the control lock lever to **UNLOCKED**
2. Set all controls to neutral.
3. Set the throttle lever to its mid position.
4. Insert the ignition key and turn it to **ON**.
5. Turn the key to **START.**
   Do not run the starter motor for more than 15 sec. a time. If the engine does not start in 15 sec., allow the starter motor to cool for 2 minutes before trying again. Turn the key to OFF before trying again.
6. Once the engine has started leave the key alone.
7. Put the throttle lever to idle to allow the engine to warm up.

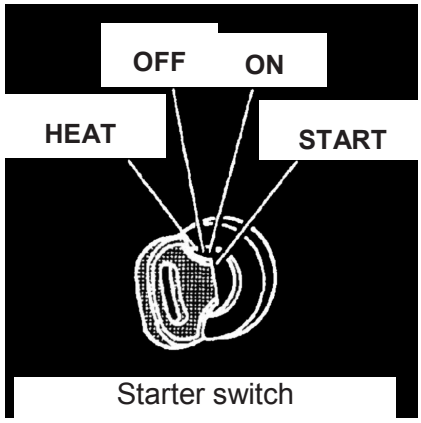

Starter switch

STARTING AT LOW TEMPERATURE

DANGER

NEVER USE ETHYL ALCOHOL TO START THE ENGINE.

1. Repeat the procedure given in points 1 and 4 of the paragraph **"STARTING AT NORMAL TEMPERATURE"**
2. Turn the key to **"HEAT"** to preheat the interior of the engine. After around 15 seconds the "glowplug preheating" lamp turns off.
   This indicates that the engine is ready to be started.
3. Repeat the procedure given in points 5 and 7 of the paragraph **"STARTING AT NORMAL TEMPERATURE".**

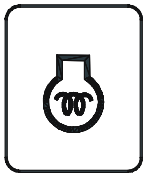

https://truckmanualshub.com/

2 - 5 USING THE BACKUP BATTERY AND CABLES TO START

WARNING

THE BATTERY CAN EMIT FLAMMABLE FUMES - EXPLOSION HAZARD

When using another machine for starting make sure the two machine are not in contact with each other.

Always connect the positive (+) of he machine's battery with the positive (+) of the backup battery and the negatives (-) with each other.

Only use 12V batteries as backups.

BEFORE fitting the cables, make sure the start key is set to OFF.

USING JUMPER CABLES

1. Approach the two machines so that they are not touching, then connect the jumper cables.
2. Lower the bucket to the ground, set all controls to neutral and stop the engine of the machine providing the jump start.
3. Make sure the machine's ignition key is set to **OFF** and that all accessory equipment is turned off.
4. Connect the red cable to the external battery's POSITIVE (+).
5. Connect the other end of the red cable to the POSITIVE (+) of the battery of the machine being started. Make sure neither terminal is touching the other pole nor any metal part of either machine.
6. Connect the black cable to the external battery's NEGATIVE (+).
7. Connect the other terminal to the chassis of the machine being started (NOT to its NEGATIVE (-)) away from the battery and fuel circuit.
8. Start the engine of the machine giving the jump start.
9. Wait for two minutes to allow the battery of the machine being started to charge up a bit.
10. Try starting the engine of the machine. See "Starting the engine" in this manual.
11. Once the engine has started, disconnect the cables in reverse order (first the black chassis cable, then the opposite black terminal on the functioning machine, then the red cable from the machine's POSITIVE (+). Finally, remove the opposite red terminal from the other machine's battery).
12. Conclude analysing the fault in the stalled machine's charging/ignition circuit now that the engine is running and the charging system is operating.

https://truckmanualshub.com/

2 - 6 PREHEATING THE MACHINE

WARNING

Run the engine at low speed until the oil pressure warning lamp goes out. If this doesn't happen within 10 seconds, stop the engine and resolve the problem before starting the engine again. Not following this instruction can seriously damage the engine.

For all hydraulic systems, the hydraulic fluid must be up to temperature before they are operated.

The time required to preheat the fluid can be spent in running maintenance checks. Before operating at full load, follow these instructions in full:

1 Allow the engine to heat up slowly at low engine speed for 5 minutes. Actuate the arm controls to heat up the hydraulic components more quickly.

2 To heat the hydraulic fluid, run the engine at a moderate speed. Keep the engine running for 5 minutes and operate the bucket dump control lever. Operate the bucket lever for 10-15 seconds, then return it to the neutral position for 10 seconds.

3 Run the engine at full speed for a further 5 minutes while operating the bucket lever at the dump position. This enables the oil to reach dump pressure and heat it more quickly.

4 One at a time, operate all controls so that the hot oil circulates in all cylinders and hoses.

5 Keep an eye on the monitor while doing so.

It is advisable to run the preheating procedure when the fluid temperature is below 20°.

https://truckmanualshub.com/

2 - 7 CONTROL LEVERS

	type A levers - ISO	functions
CONTROLS	**MOVEMENT OF CONTROLS**	**MOVEMENT OF MACHINE**
LARGE ARM	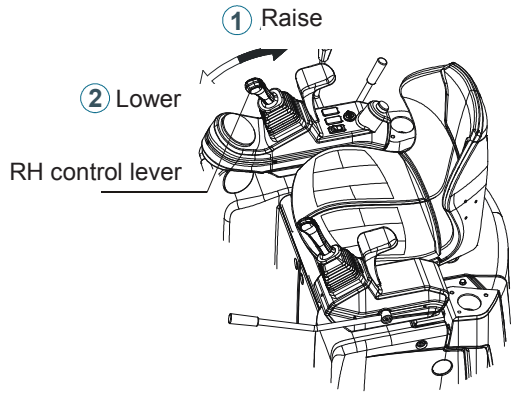	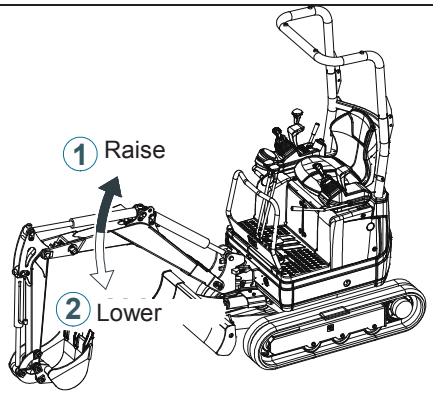
BUCKET	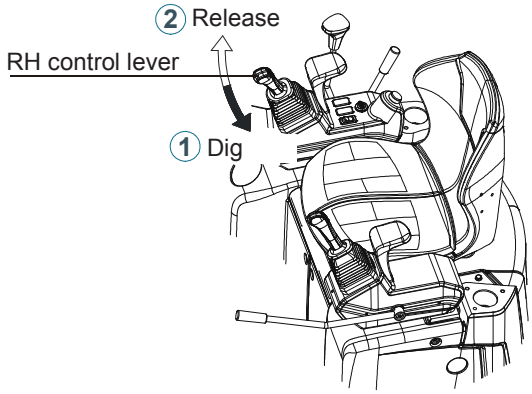	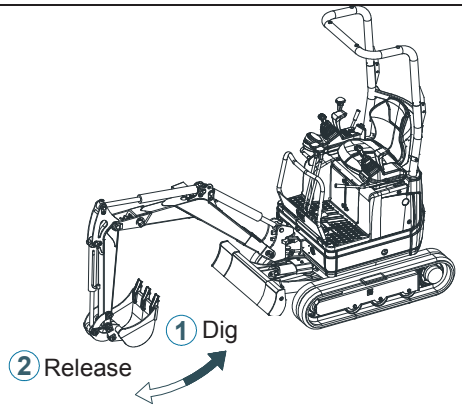
ARM	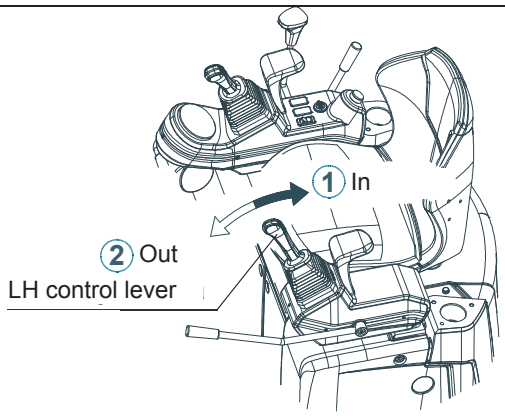	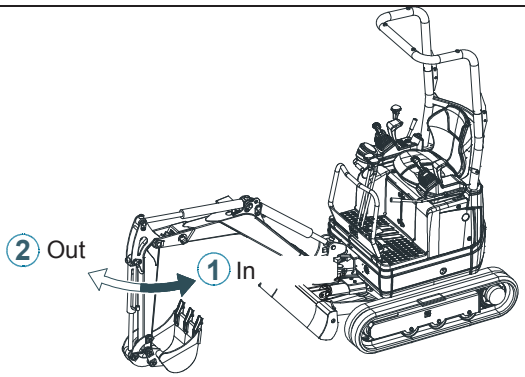
SLEW TURRET	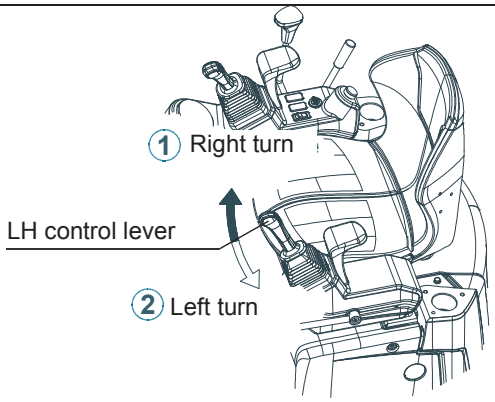	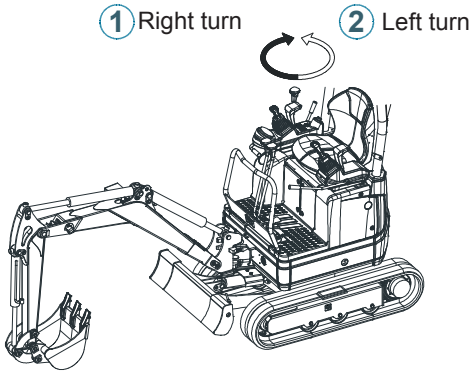

SWITCH OFF THE ENGINE AND LOWER THE ARM AND BUCKET TO THE GROUND BEFORE LEAVING THE MACHINE UNSUPERVISED.

https://truckmanualshub.com/

	type A levers - ISO	functions
CONTROLS	**MOVEMENT OF CONTROLS**	**MOVEMENT OF MACHINE**
SLEW ARM	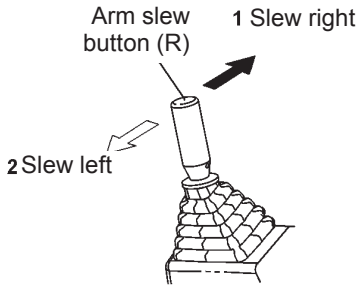 **Press the button (R) and slew the arm with the LH lever**	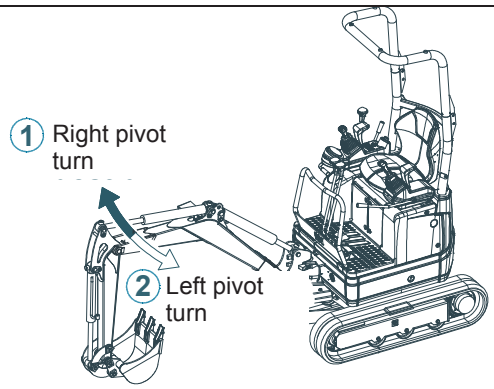
SHOVEL	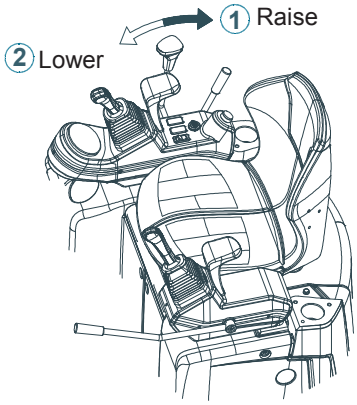	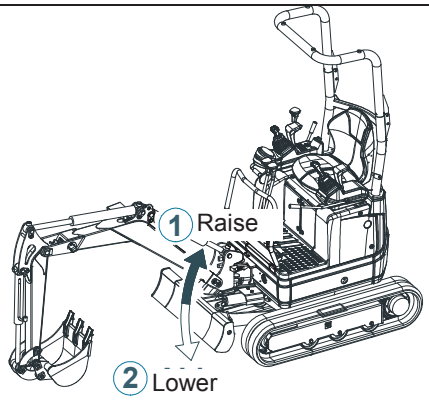
EXPANSION	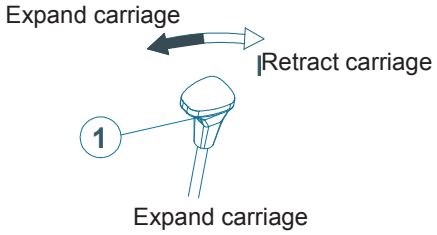 **Press button (1) then expand/retract the carriage with the lever**	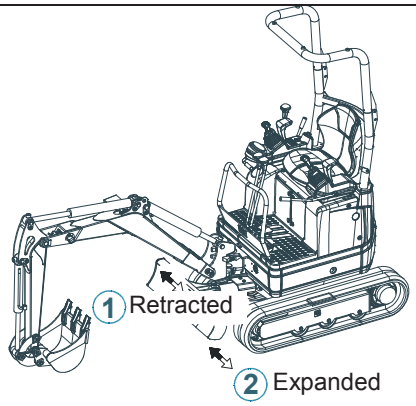

SWITCH OFF THE ENGINE AND LOWER THE ARM AND BUCKET TO THE GROUND BEFORE LEAVING THE MACHINE UNSUPERVISED.

https://truckmanualshub.com/

2 - 8 OPERATION OF THE AUXILIARY HYDRAULIC CIRCUIT FOR SPECIAL ACTUATORS AND INTERCHANGEABLE EQUIPMENT

WARNING

- TO SELECT ANY HYDRAULIC HAMMER, FORK OR SPECIAL ACTUATOR APPLICABLE TO THE MACHINE'S BODY, CONSULT WITH YOUR LOCAL DEALER.

PRECAUTIONS WHEN USING SPECIAL ACTUATORS AND INTERCHANGEABLE EQUIPMENT.

- WHEN USING INTERCHANGEABLE EQUIPMENT, MAKE SURE THE EQUIPMENT'S OPERATION AND MAINTENANCE MANUAL EXPRESSLY ALLOWS USING THE MODEL OF THE MACHINE WITH WHICH THE EQUIPMENT IS BEING USED (12VXE EXCAVATOR). IN ANY CASE IT IS ADVISABLE TO CONTACT THE MANUFACTURER OF THE INTERCHANGEABLE EQUIPMENT FOR ACCURATE AND SAFE INFORMATION ON CHOOSING THE APPROPRIATE MODEL.
- BEFORE USING A SPECIAL ACTUATOR, CAREFULLY READ THE USER'S MANUAL TO LEARN THE REQUIRED OPERATION AND SERVICING PROCEDURES.
- WHEN WORKING WITH A SPECIAL ACTUATOR, CERTAIN MACHINE FEATURES SUCH AS STABILITY, OPERATING RADIUS, LIFTING HEIGHT, ETC., MAY BE SUBJECT TO CHANGE. ACCORDINGLY, BEFORE STARTING WORK, SET A SAFETY LIMIT FOR EACH SPECIFIC FEATURE THAT WILL ENSURE THE SAFETY OF BOTH THE OPERATOR AND THE MACHINE.

1. OPERATIONS WITH SINGLE-ACTING ACTUATORS AND EQUIPMENT
Hydraulic hammer and other actuators

WARNING

IF THE MARK ON THE VALVE IS HORIZONTAL (-), THE RETURN PRESSURE IS INCREASED AND THE HAMMER DOES NOT OPERATE PROPERLY. THE MARK MUST ALWAYS BE VERTICAL (|).

Switching the hydraulic circuit
Check the position of the mark on the switching valve (1). Turn the valve cock with a wrench so that the mark is vertical (|).

1. Raise the pedal guard (2) so that it is operable.

2. Move the pedal to activate the actuator

Activate hammer: press the pedal (2) to the left to activate the hammer.
Deactivate hammer: Release the pedal (2) to deactivate the hammer.

NOTE: When the PTO is out of service **ALWAYS** close the pedal guard (2) to lock it out.

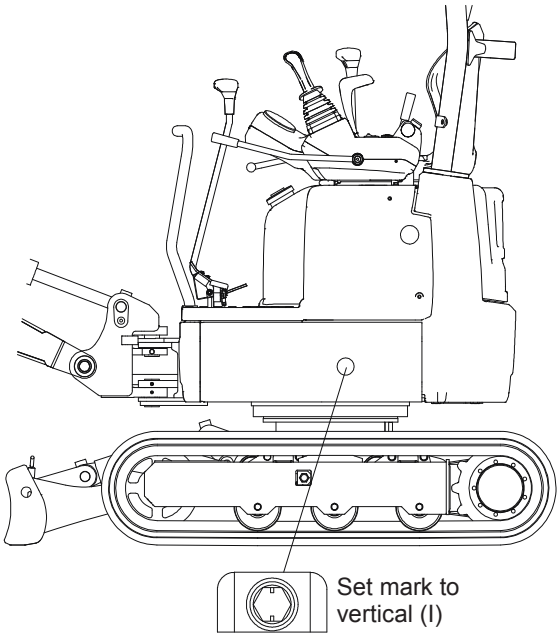

1 Switching valve

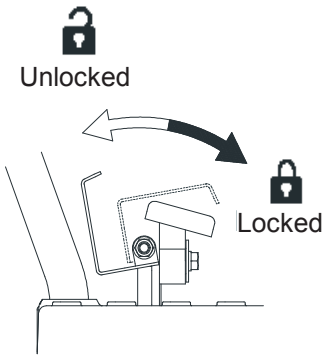

2 Control pedal

https://truckmanualshub.com/

WARNING

The single action hoses are located on both sides of the small arm (see diagram). To use the actuators, connect the high pressure (delivery) hose to port "A" and the low pressure (return) hose to port "B".

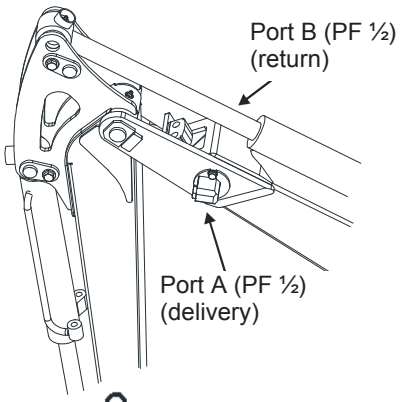

2. OPERATIONS WITH DOUBLE-ACTING ACTUATORS AND EQUIPMENT for grabs, drills and other actuators

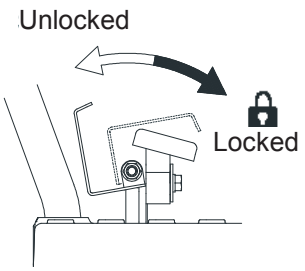

2 Control pedal

WARNING

MAKE SURE THE SWITCHING VALVE MARK IS HORIZONTAL (—), IF VERTICAL (|) PORT B WOULD NOT BE UNDER PRESSURE.

Switching the hydraulic circuit
Check the position of the mark on the switching valve (1). Turn the valve cock with a wrench so that the mark is horizontal (—).

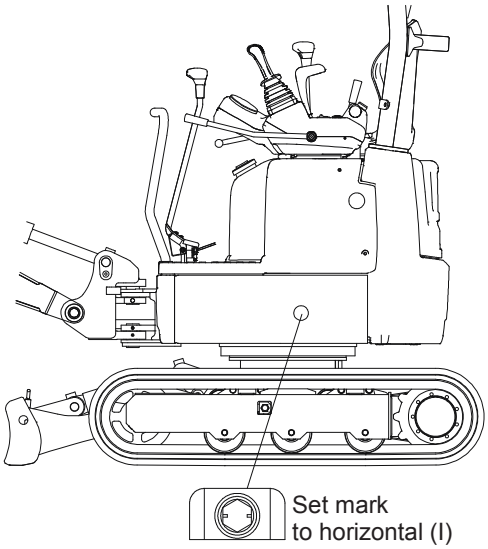

1 Switching valve

3. Raise the pedal guard (2) so that it is operable.

4. Move the pedal to activate the actuator

Activate port A: press the pedal (2) to the left to pressurize port A.
Activate port B: press the pedal (2) to the right to pressurize port B.

NOTE: When the PTO is out of service **ALWAYS** close the pedal guard (2) to lock it out.

WARNING

The single action hoses are located on both sides of the small arm (see diagram).

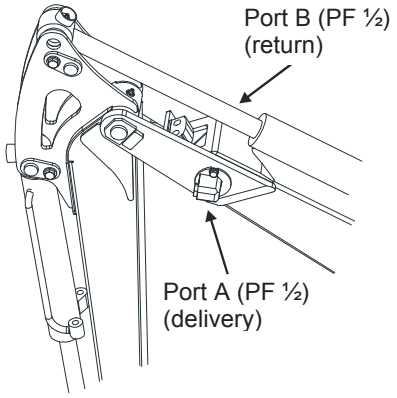

https://truckmanualshub.com/

2 - 9 MOVING THE MACHINE

WARNING

- **TO PREVENT ACCIDENTS:**
  MAKE SURE NO-ONE IS WORKING ABOVE OR IN THE IMMEDIATE VICINITY OF THE MACHINE.
  SUPERVISE THE MACHINE THROUGHOUT
- **ALWAYS CHECK THE ORIENTATION OF THE TURRET BEFORE OPERATING THE TRAVEL LEVERS..**
- **ALWAYS MOVE THE MACHINE WITH THE DRIVE MOTORS AT THE REAR AND THE SHOVEL IN FRONT.**

TRAVEL CONTROLS

1. Move the throttle lever (1) to the operative position.
2. Move the control lock lever (2) to UNLOCK.
3. Raise the arm and shovel off the ground
4. Control right and left travel levers (3) as follows.

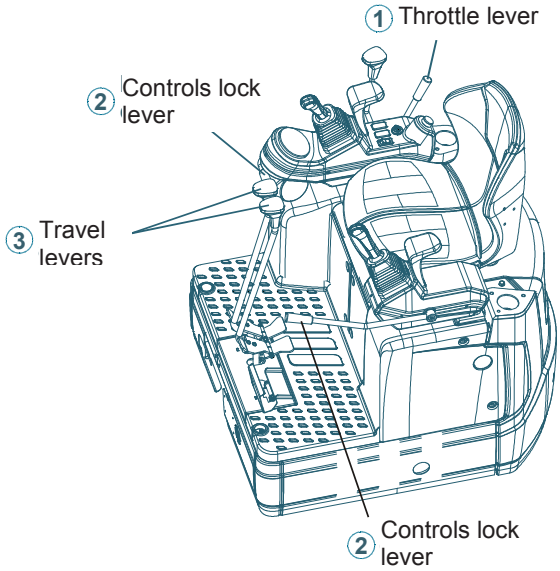

STRAIGHT TRAVEL

- **FORWARDS travel**
Push both levers (3) gradually forwards. The machine will travel in the direction of the shovel.

- **STOP**
Move both levers (3) gradually back to the STOP position to stop the machine and engage the brake.

- **BACKWARDS travel**
Pull both levers (3) gradually back. The machine will travel in the direction of the drive motors.

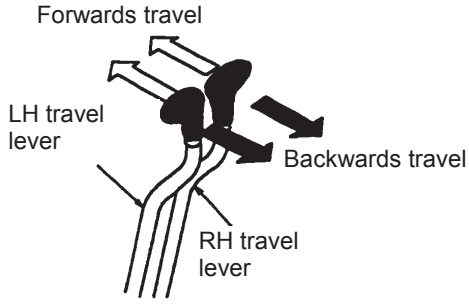

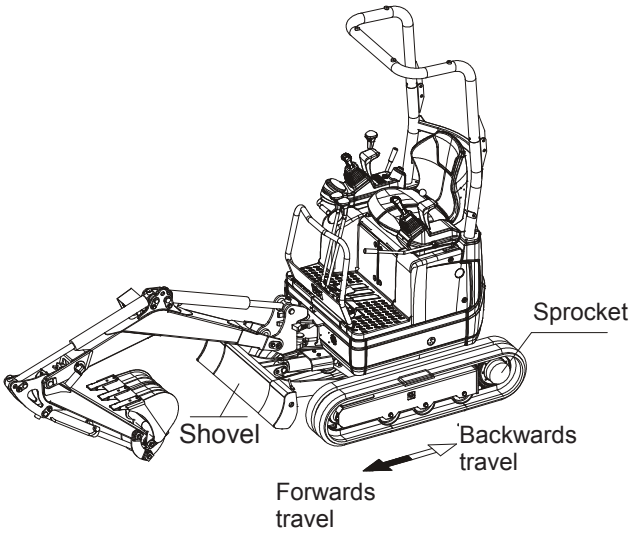

https://truckmanualshub.com/

STEERING

To steer, operate the levers as follows.

1. Steering left
Push the RH lever (1) forwards to turn left when travelling forwards, and back to turn left when travelling backwards.

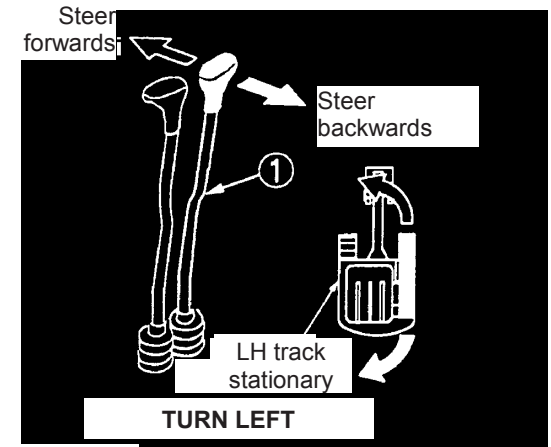

2. Steering right
Push the LH lever (2) forwards to turn right when travelling forwards, and back to turn right when travelling backwards.

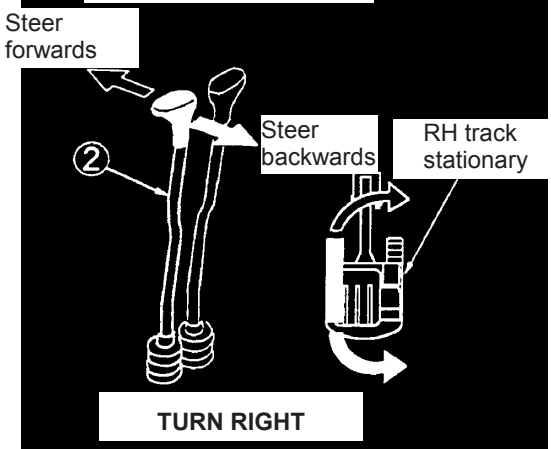

PIVOT TURN

Warning: *Only do this if strictly necessary.*

1. Left pivot turn
Push the RH lever (1) forwards and the LH lever (2) back. This results in a fast turn to the left without moving.

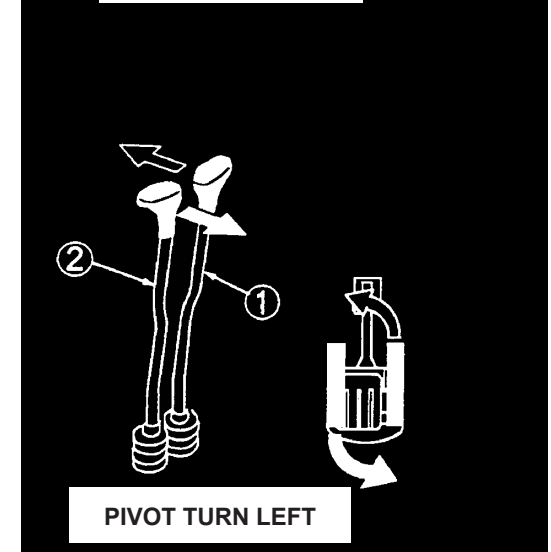

2. Right pivot turn
Push the LH lever (2) forwards and the RH lever (1) back. This results in a fast turn to the right without moving.

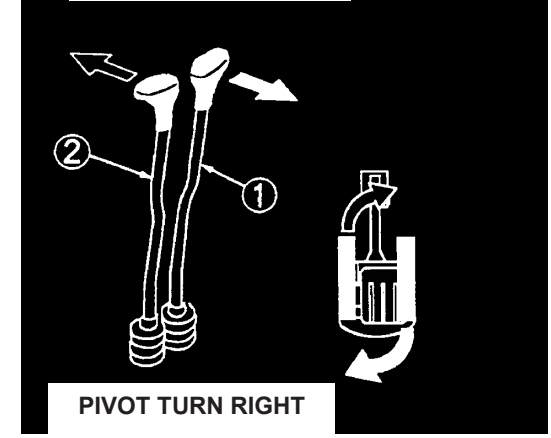

https://truckmanualshub.com/

TRAVEL PEDALS

The travel levers are equipped with pedals for operation with hands free.
This is useful for moving the machine while digging.

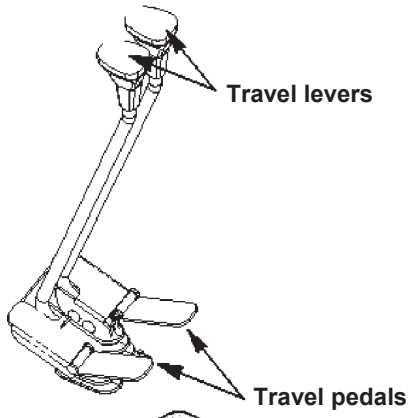

HIGH SPEED TRAVEL

WARNING

DO NOT CHANGE THE TRAVEL SPEED WHEN DRIVING DOWNHILL
NEVER USE DOUBLE SPEED WHEN LOADING OR UNLOADING THE MACHINE.

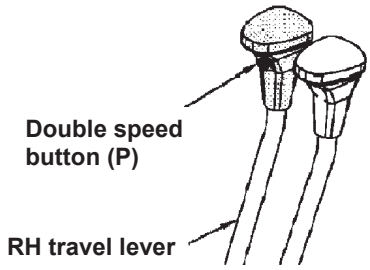

Hold down button (P) to travel at double speed.
The machine will return to normal single speed travel when the button is released

PRECAUTIONS WHEN DRIVING ON SLOPING GROUND

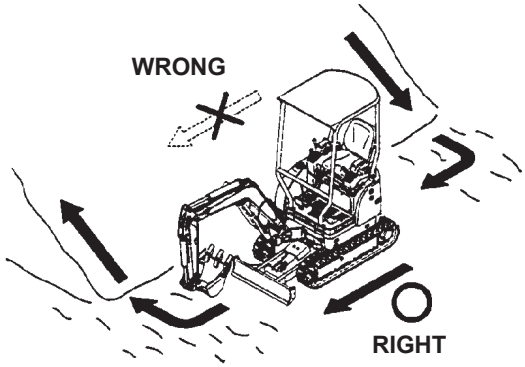

WARNING

- **Lower the engine speed when working in restricted spaces or passing over a drain.**
- **Do not change the travel speed when driving downhill.**
- **When driving on sloping ground, make sure that the tracks are in line with the slope and not across it.**
- **Never drive across a slope.**
- **Avoid steering on slopes as this can result in skidding or tipping over.**
- **Kep the small arm at the rear and the large arm low to the ground.**
- **When starting the climb a steep slope or going over a drain cover, keep the arm as close to the ground as possible.**

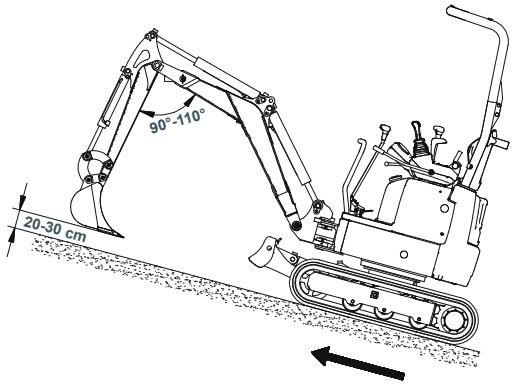

1. When climbing a slope of more than 15° maintain the position shown at the right and run the engine at low speed.

2. When climbing a slope of more than 15° maintain the position shown at the right.

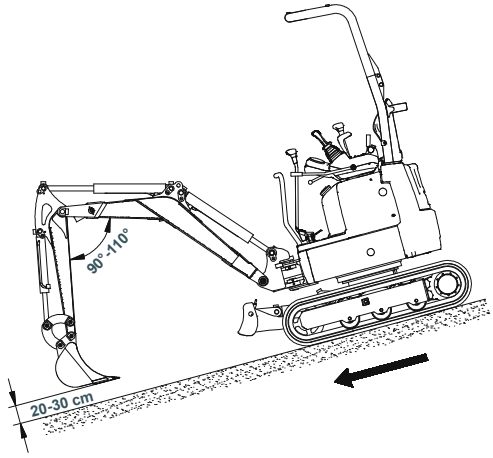

https://truckmanualshub.com/

2 - 10 RETRACTING/EXPANDING THE CARRIAGE

Contracting and expanding the carriage

This machine is equipped with a spanner mechanism (expansion/retraction).
Use the spanner mechanism as indicated below.

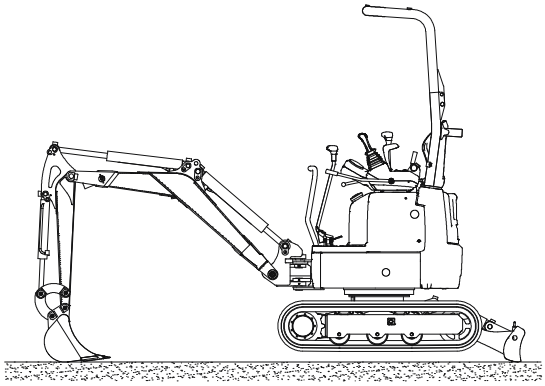

1. Place the arm to the rear of the machine (drive motor side). Use the arm and shovel to raise the carriage off the ground on both sides to enable the carriage to expand or contract as required.

2. Run the engine at moderate to high speed. Hold down the red “Expand carriage” button, then move the “Shovel/carriage expansion” lever forwards or back to expand / contract the carriage.

   Expand carriage: Push the lever forwards.

   Contract carriage: Pull the lever back.

3. When the carriage is expanded, slide out the shovel extensions on both side of the shovel. To do this, slide out the pin (1) after having removed the split pin and pull out the extensions. Refit the pin to lock the extensions and fit the split pin again. When the carriage is retracted, restore the extensions to the retracted position and secure them.

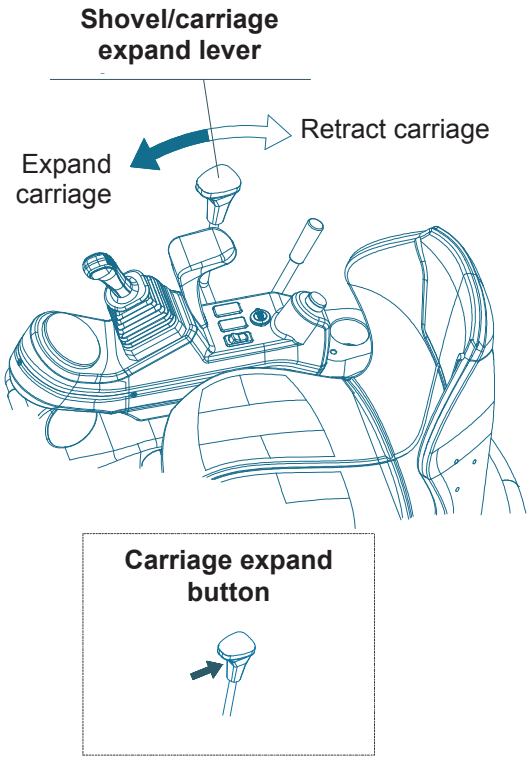

WARNING

THE CARRIAGE CAN BE EXPANDED/CONTRACTED EVEN WITHOUT RAISING THE MACHINE OFF THE GROUND.
DO THIS ONLY ON GROUND WITHOUT OBSTACLES OF ANY SORT.
OBSTACLES CAN INCREASE RESISTANCE TO THE CARRIAGE’S EXPANSION/RETRACTION AND RENDER IT IMPOSSIBLE.

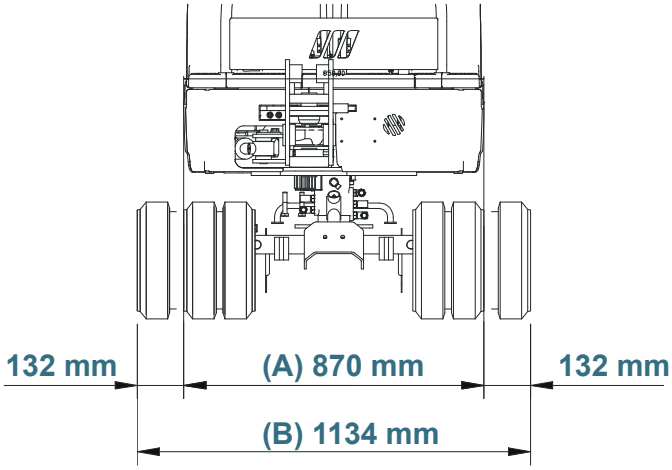

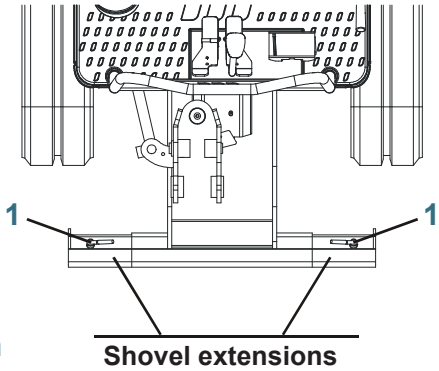

https://truckmanualshub.com/

2 - 11 LOWERING THE ARM WHEN THE ENGINE IS OFF

WARNING

- IF YOU SWITCH OFF THE ENGINE OR EXPERIENCE A HYDRAULICS MALFUNCTION WITH THE ARM RAISED, SAFE THE MACHINE BY LOWERING THE ARM TO THE GROUND.
- MAKE SURE THE AREA IS CLEAR BEFORE LOWERING THE ARM MANUALLY.
- CLEAR THE AREA OF ACTION OF THE ARM OF UNAUTHORIZED PERSONS.

Proceed as follows if you need to lower the arm with the engine off or in case of hydraulics malfunction.

1) Remove the rubber carpet (1) and the cover beneath it;
2) Slacken off locknut (2), then use a wrench to gradually undo screw (3) until the arm starts to lower itself slowly to the ground. Allow the arm to lower completely to the ground;
3) Now tighten screw (3) fully down. Tighten down locknut (2).

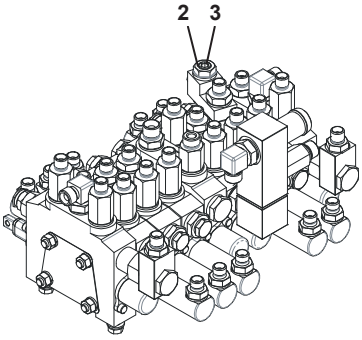

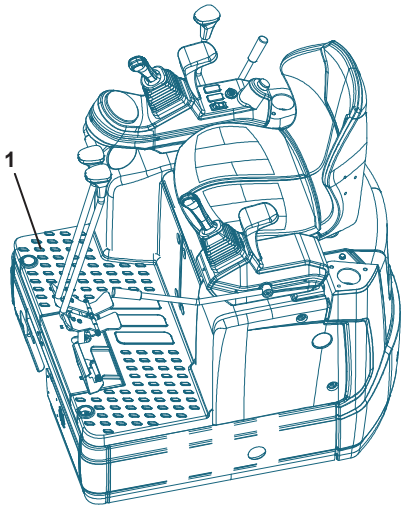

Troubleshoot the malfunction. Run the necessary repair and restore the machine to service.

2 - 12 TOWING

DANGER

- NOT TOWING THE MACHINE CORRECTLY CAN LEAD TO ACCIDENTS AND DEATH.
- THE CORRECT TOWING PROCEDURE IS GIVEN BELOW.
- DO NOT ALLOW ANYONE TO STAND BETWEEN THE TWO MACHINES WHEN TOWING IS IN PROGGRESS.
- SUDDEN MOVEMENTS CAN OVERLOAD THE TWO ROPE AND CREATE OVERPRESSURES RESULTING IN BREAKAGE. MOVE SLOWLY AND SMOOTHLY
- MAKE SURE THAT THE TOW IS STRAIGHT AWAY FROM THE HOOK, NOT TO THE SIDE.
- TOWING THE MACHINE SIDEWAYS CAN CAUSE THE HOOK MAY FAIL AND CAUSE DAMAGE OR INJURY.

If the machine gets stuck in soft ground and cannot extract itself, use the towhook on the rear axle to tow it. Use a rope with load rating of at least 4000 kg.

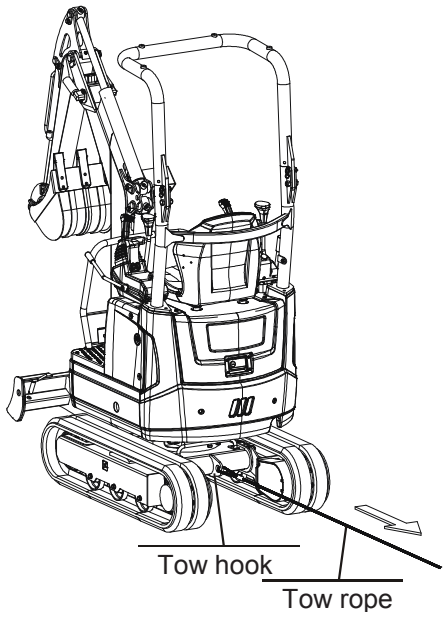

https://truckmanualshub.com/

2 - 13 LIFTING THE MACHINE

WARNING

LIFTING THE MACHINE INCORRECTLY CAN CAUSE DAMAGE, INJURY AND DEATH

- **USE ADEQUATE STEEL ROPES AND EQUIPMENT FOR LIFTING. THE LIFTING CABLES MUST BE LONG ENOUGH TO AVOID CONTACT WITH THE MACHINE ITSELF ALONG THEIR LENGTH.**
- **USE LIFTING EQUIPMENT ABLE TO SUPPORT THE WEIGHT OF THE MACHINE.**
- **NEVER LIFT THE MACHINE WITH ANYONE ON-BOARD.**
- **USE SIGNS AND OTHER NOTICES TO MARK OFF THE LOADING AREA.**
- **ALWAYS USE ROPES AND OTHER EQUIPMENT RATED TO LIFT AT LEAST 4 TON LOADS**

LIFTING PROCEDURE

1. Start the engine and make sure the shovel is at the rear.
2. Position the machine on the ground with all cylinders fully extended (see figure).
3. Align the arm with the machine's longitudinal axis with the machine's slew pedal.
4. Stop the engine.
5. Hook the lifting ropes to the two holes on the shovel and that on the arm, using snaps. (see figure).
6. Hook the ropes onto the lifting machine's hook.
7. Check for obstacles and persons around the machine; the operator must not be seated at the controls of the machine.
8. Lift the machine a few centimetres off the ground and check that it is well balanced.

Total weight of machine (kg)
1200

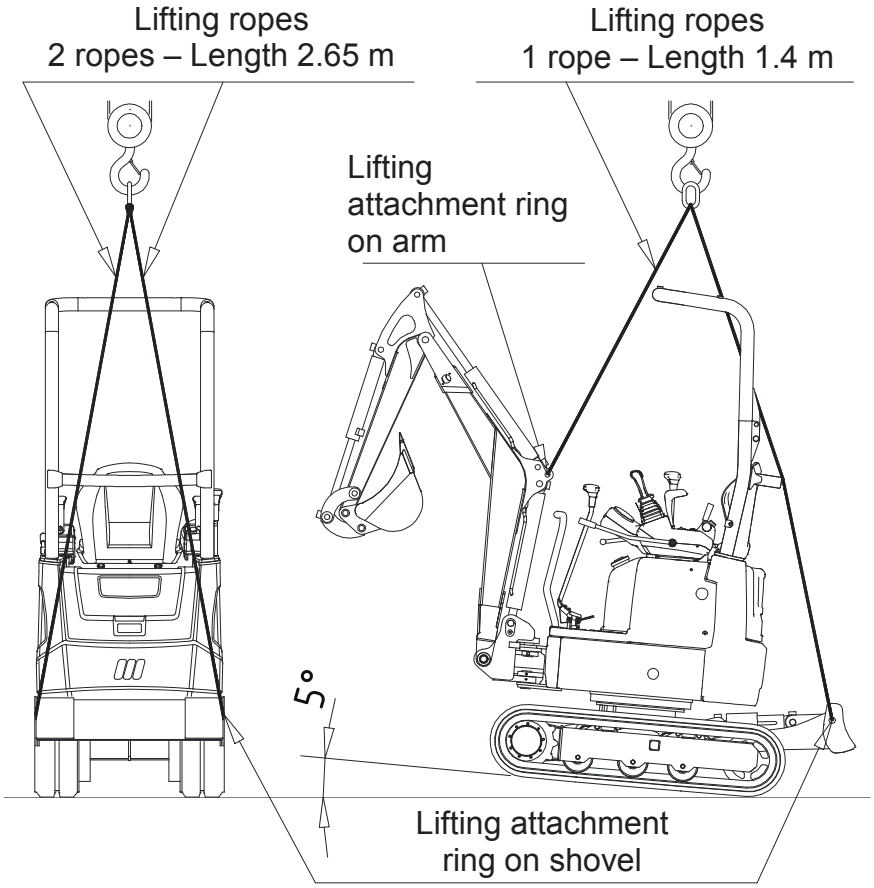

https://truckmanualshub.com/

2 - 14 LOADING AND UNLOADING THE MACHINE

DANGER

- **LOAD AND UNLOAD THE MACHINE ON LEVEL, STABLE GROUND.**
- **USE RAMP WHICH IS SUFFICIENTLY LONG, WIDE AND THICK TO SUPPORT THE WEIGHT OF THE MACHINE.**
- **TO PREVENT SKIDDING ON THE RAMPS AND SLIDING ABOUT DURING TRANSPORT, CLEAN ALL GREASE, OIL, ICE AND SO ON OFF THE MACHINE, RAMP AND LOAD BED BEFORE PROCEEDING.**
- **NEVER USE THE DOUBLE TRAVEL SPEED WHEN LOADING/UNLOADING THE MACHINE FROM A TRUCK.**
- **IN VERY COLD PERIODS, PREHEAT THE MACHINE BEFORE LOADING AND UNLOADING IT.**
- **NEVER RAISE THE ARM TOO HIGH WHEN LOADING/UNLOADING THE MACHINE.**
- **NEVER STEER ON THE LOADING RAMP. IN CASE OF NEED, DRIVE BACK OFF THE RAMP TO CHANGE DIRECTION.**

LOADING THE MACHINE ONTO A TRUCK

ALWAYS use ramps for loading and unloading the machine and observe the following procedures in full.

1. Block the truck wheels before loading the machine.
2. Lower the truck's sides.
3. Secure the ramps to the truck. The ramps should form no more than 15° angle with the ground. The ramps must be wide enough for the tracks.
4. Position the machine so that it is in front of and with its tracks parallel with the ramps. Do not operate the control levers, except for the travel levers, when the machine is on the ramps.
5. Keep the centre of gravity of the machine within the area of the loading ramps.
6. Make sure the ramps are stable.

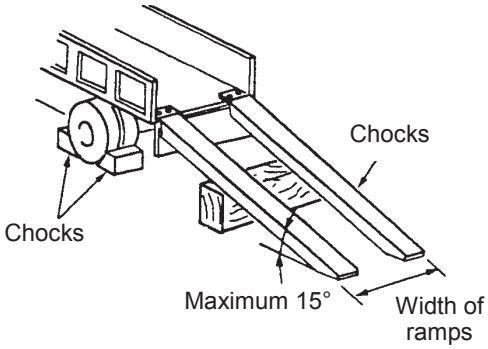

SECURING THE MACHINE FOR TRANSPORT

WARNING

- **IF THE TURRET MOVES UNEXPECTEDLY IT CAN CAUSE SERIOUS ACCIDENTS.**

1. Align the superstructure with the tracks.
2. Move the control lock lever to LOCK.
3. Turn the ignition key to OFF and remove it.
4. Fix the tracks and secure the machine to the load bed with chains or steel rope as shown in the figure.

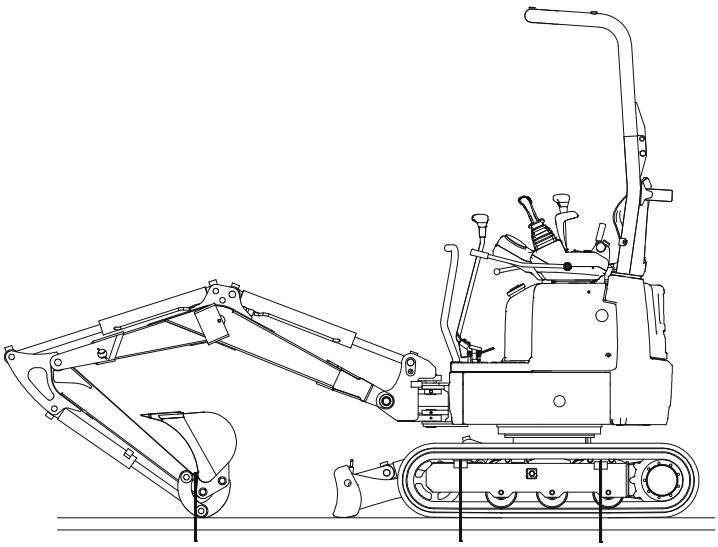

Secure with chains or steel rope and protective straps

https://truckmanualshub.com/

2 - 15 PRECAUTIONS WHEN USING RUBBER TRACKS

DANGER

RUBBER TRACKS CAN BE DAMAGED OR WORN BY ADVERSE WORKING CONDITIONS. IT IS THUS IMPORTANT TO ACCOUNT FOR THE WORKING CONDITIONS AND OPERATIVITY OF THE MACHINE.

STRUCTURE OF RUBBER TRACKS

The figure to the right shows the structure of rubber tracks.
They are metal cords of:
- metal wires which support the tension of the tracks.
- cast iron inserts which support the track itself.
- external covering in rubber.

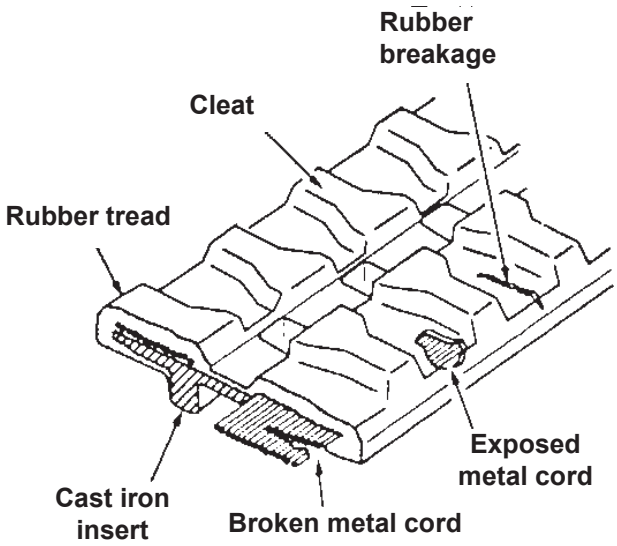

WARNING

IF A CRACK IN THE RUBBER PROPAGATES AS FAR AS THE METAL CORDS, THEY MAY RUST, CORRODE AND BREAK. AS SOON AS YOU SEE A CRACK, VULCANISE THE TRACK TO REPAIR IT.

PRECAUTIONS

1. Adjust the track tension at regular intervals.
   - too low tension allows the tracks to jump out of their guides and wears the drive wheels and metal inserts of the tracks themselves very quickly.
   - too much tension increases the resistance to travel and this may result in wear of the undercarriage as well as overtensioning the tracks which may break prematurely.

2. To avoid damaging rubber tracks, do not use them in the following conditions
   - quarries and sharp rocks
   - river beds or paths crossed by wooden slats
   - metal bars and waste material
   - edges and corners of metal and concrete objects
   - fire and other sources of heat
   - driving in contact with cement flooring and walls

3. Clean any diesel, hydraulic fluid and grease off the tracks with a rag.
4. Do not turn the machine quickly on the tracks.
5. If the machine is not used for a long time (more than 3 months) store the tracks away from direct sunlight and rain.
6. When using rubber tracks, only operate the machine in the temperature range -25℃ to +55℃.

https://truckmanualshub.com/

2 - 16 DRIVING THROUGH LOW OPENINGS

If you have to drive through a low opening, you can fold down the top of the TOPS without removing it completely.

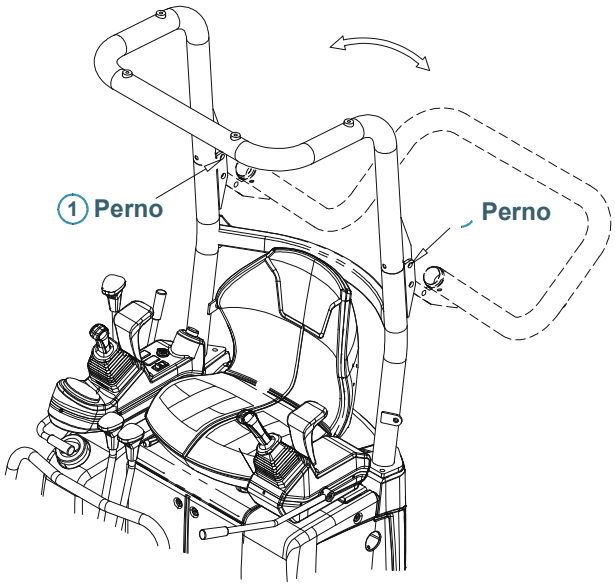

FOLDING DOWN THE UPPER SECTION OF THE TOPS

1. Park the machine on flat ground and stop the engine.
2. Remove the first pin (1) after having removed the split pin.
3. Hold the top section in place by pushing it towards the front of the machine and remove the second pin (1).
4. Swing the top section completely down.

Start the machine, pass through the low opening, then restore the TOPS structure by following procedure in reverse order.