https://truckmanualshub.com/

333514B

Mobile Lubrication Library

Komatsu PC210-11/PC240-11/PC290-11 and PC360-11/ PC390-11/PC490-11 Excavator Installation Instructions

Instructions for installing a Graco automatic lubrication system on a Komatsu PC210-11/PC240-11/PC290-11 and PC360-11/PC390-11/PC490-11 Excavator.

Part No. 17J900

Maximum System Working Pressure: 2750 psi (18.96 MPa, 189.6 bar)

Important Safety Information

Read all warnings and instructions in all Graco related component manuals and all Komatsu equipment manuals. Save all instructions.

Related Graco Component Manuals*	
Manual No.	**Manual Title**
332291	G3 Pump
3A2960	GLC2200 Controller
312497	MSP Divider Valves

**Refer to these instruction manuals for additional information related to the installation and operation of system components.*

WARNING

FLUID INJECTION HAZARD

Fluid leaks from incorrectly installed or ruptured components, and/or failure to verify the components are properly installed and tested, can result in serious injury such as fluid spraying in the eyes or on skin and fluid injection, or equipment damage. Installation must be done by a qualified professional or Komatsu certified technician and tested prior to use.

The information contained in this document is only a recommendation for an automatic lubrication system and is not intended to replace the installation and maintenance instructions provided by the original equipment manufacturer.

https://truckmanualshub.com/

Table of Contents

Installation Checklist 3
Recommended Tools and Supplies 4
Installation Notes 4
Typical Installation 5
Installation 6
Before You Start 6
Bearing Point Fittings 7
MSP Divider Valves 14
MSP Valve Component Identification 14
MSP Divider Valve Assembly 14
MSP Divider Valve Assembly 16
Weld Stud Guidelines 17
G3 Pump 21
G3 Mounting Bracket Installation 23
Remote Fill Installation 24
GLC2200 Controller 28
GLC2200 Controller Wiring 30
Hose Assemblies 33
Hose Assembly Instructions 33
Hose Routing 34
Hose Installation 34
Arm and Bucket Valve 37
Boom and Swing Circle Valve 40
GLC2200 Controller Programming 43
Filling and Purging 46
Testing 47
Routine Service and Equipment Maintenance . . 47
Troubleshooting 48
Parts 50
Notes 51
Graco Information 52

NOTE: *Photographs may include optional equipment.*

https://truckmanualshub.com/

Installation Checklist

The following checklist is provided as a tool to ensure all installation procedures are completed.

Completed	Description	Page
	Walk around the equipment; use a grease gun to verify that all lube points receive grease.	6
	Grease all zerks, before removal	6
	Remove zerks and Komatsu extensions.	6
	Install bearing point fittings	7
	Assemble MSP Divider Valves	14
	Install P-clamp, anchor and MSP valve weld studs	19
	Assemble the G3 pump and fittings	21
	Install G3 pump	22
	Install remote fill	24
	Install and route G3 power cable	25
	Install GLC2200 controller	28
	Wire GLC2200 controller and pump	30
	Route and wrap hoses between divider valves, bearing points and pump	34
	Install P-clamps, zip ties, and other anchors	34
	Program GLC2200 controller	43
	Fill the G3 pump reservoir with grease; purge the main feed lines	46
	Run test program; verify all connections are tight; verify all points are receiving lubricant	47

NOTE: *Photographs may include optional equipment.*

https://truckmanualshub.com/

Recommended Tools and Supplies

Tool	Size/Description	
	US	Metric
Combination wrench*	1/4 in. - 3/4 in.	6 mm - 20 mm
Socket set, standard and deep well with ratchet*	3/8 in. - 3/4 in.	9.5 mm - 20 mm
Screwdrivers: standard and Phillips	1 short; 1 long	
Adjustable wrench	1 small; 1 medium	
High speed drill (corded or cordless)		
Drill bit - steel, high quality	5/16 in., 11/16 in.	
Center punch	fine point	
Pipe taper tap	1/8 in. NPT	
Hammer		
Angle grinder		
Grinding disc	Heavy grade grinding disc	
Flap disc	60 - 80 grit	
Cutoff disc	High quality disc	
Cutting blade / knife	Razor blade cutting tool	
Standard pliers	Rubber handle	
Needle nose pliers	Rubber handle	
Side cut pliers (diagonal cutters)	Rubber handle	
Slip joint pliers	Rubber handle	
Locking pliers	Small or medium	
Electrician's wire striper / crimper	General duty wire striper / crimper	
Soldering iron	30 watt minimum	
Electrical solder		
Soldering flux		
Shrink tubing	Various sizes	
Electrical tape	Black, small roll	
Thread sealant	Liquid thread sealant such as Loctite® 656	
Multi-tester / voltmeter	Must test DC/AC/Ohms	
Electrical connectors	Ring connectors (14 gauge)	
Tape measure	Standard / metric	
Komatsu primer and paint	Color should match the Komatsu equipment	
Documentation / writing implements	Small note pad, pen, pencil, marker	

*Both US and Metric sizes of these tools are recommended.

Loctite® is a registered trademark of the Henkel Corporation.

All other Trademarks used herein are the property of their respective owners.

Installation Notes

- Do not use PTFE tape on fitting threads. Liquid pipe sealant is recommended for use in lubrication systems to eliminate the potential for contamination. If you must use PTFE tape, always skip the first two threads on the fitting.
- Refer to the Installation Checklist provided on page 3 to ensure all installation procedures have been completed.
- Prime and paint all bare metal surfaces prior to installation with matching Komatsu primer and paint.

NOTE: *Photographs may include optional equipment.*

https://truckmanualshub.com/

Typical Installation

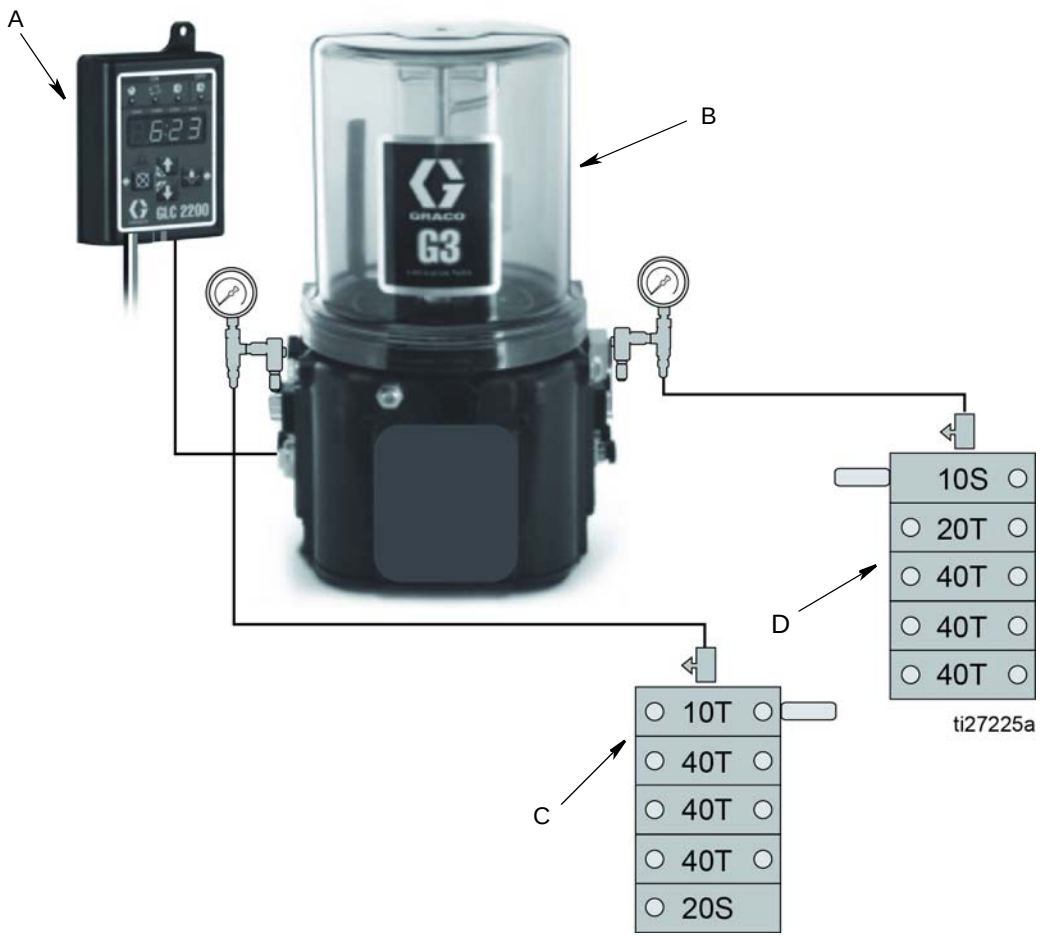

Key

A GLC2200 Controller
B G3 Automatic Lubrication Pump
C MSP Divider Valve - Boom and Swing Circle Valve
D MSP Divider Valve - Arm and Bucket Valve

Run Time

MODEL	Pump ON Time	Pump OFF Time
PC210-11/PC240-11	1 minutes and 45 seconds	1 hour
PC290-11/PC360-11	2 minutes	1 hour
PC390-11/PC490-11	2 minutes and 10 seconds	1 hour

NOTE: *Photographs may include optional equipment.*

https://truckmanualshub.com/

Installation

Before You Start

WARNING

Disconnect battery before installing the lubrication equipment. Installing lubrication equipment on powered machinery could result in serious injury from skin injection or parts moving unexpectedly.

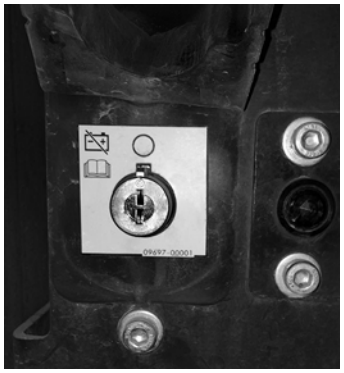

FIG. 1: Battery Disconnect

1. Walk around the machine with a grease gun and verify that every bearing point is accepting grease. (Refer to FIG. 3, page 7 to identify lubrication points). This will ensure that the valves can dispense grease to the bearing points by identifying potentially blocked passages from the grease zerk to the bearing point.

Zerk Fittings

a. Use a clean cloth or rag to remove excessive grease, contaminants and dirt from the work area.

b. Remove all grease zerks and Komatsu extensions from their installation locations.

c. Use a clean cloth or rag to remove any remaining grease, contaminants or dirt from the area around the passage way to the bearing points.

d. If required use 1/8 in. NPT pipe tap to chase the passage threads.

2. Flip over the H-link on the excavator bucket (FIG. 2). (The zerk fittings must face the inside of the arm.)

3. After the H-link is reversed, manually grease the lube points again to verify grease is being accepted.

NOTICE

It may be necessary to rotate the pins while greasing to get the grease to purge.

FIG. 2

NOTE: *Photographs may include optional equipment.*

https://truckmanualshub.com/

Bearing Point Fittings

1. Apply thread sealant to supplied bearing point fittings.
2. Install fittings in bearing points. Refer to FIG. 3 and the Bearing Point Fitting Table, page 8 for installation locations and parts.
3. Refer to Bearing Point Fitting Table, beginning on page 8, to determine the location of the bearing points on your model.

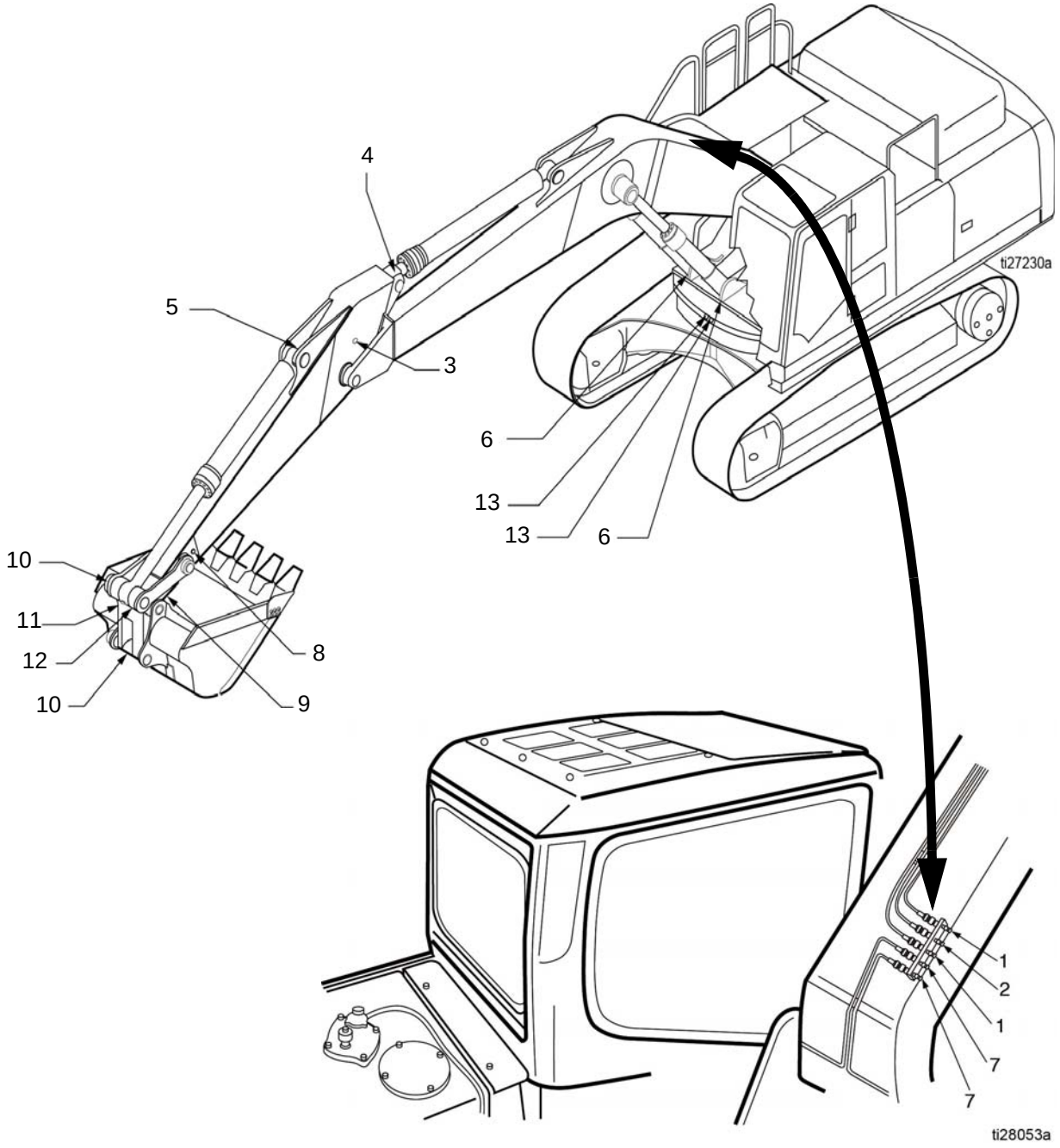

FIG. 3

NOTE: *Photographs may include optional equipment.*

https://truckmanualshub.com/

Bearing Point Fittings Table: PC210-11/PC240-11 Models

NOTE: Before starting a lube cycle, set the machine to the greasing posture. If you are unsure of this procedure, see the Komatsu Excavator instruction manual.

Ref No.	Location	Part No.	Description	
1	Boom cylinder rod pins (2 places)	17K062 556763	Adapter, long, BSPT x NPT Elbow, JIC 90° 1/8 inch x 4	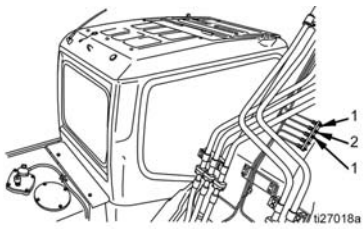
2	Arm cylinder foot pin (1 place)	17K062 556763	Adapter, long, BSPT x NPT Elbow, JIC 90° 1/8 inch x 4	
3	Boom and arm connection pin (1 place)	17G422 556763	Adapter, short, BSPT x NPT Elbow, JIC 90° 1/8 inch x 4	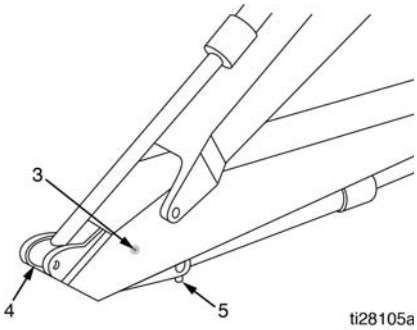
4†	Arm cylinder rod end (1 place)	556763	Elbow, JIC 90° 1/8 inch x 4	
5	Bucket cylinder foot pin (1 place)	17G422 556763	Adapter, short, BSPT x NPT Elbow, JIC 90° 1/8 inch x 4	
6	Boom cylinder foot pins (2 places)	17G422 556763	Adapter, short, BSPT x NPT Elbow, JIC 90° 1/8 inch x 4	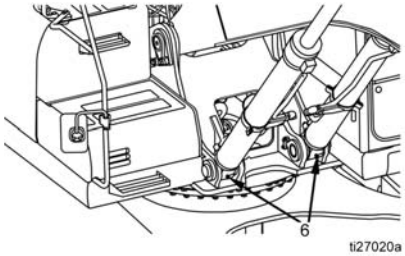
7	Boom foot pins (2 places)	17K062 556763	Adapter, long, BSPT x NPT Elbow, JIC 90° 1/8 inch x 4	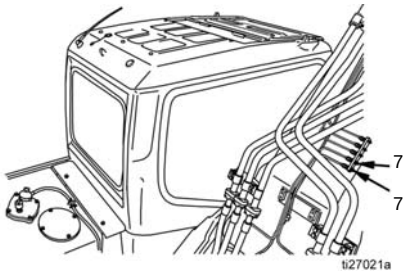
7*		17K062 17K061 555749	Adapter, long, BSPT x NPT Adapter, street elbow, BSPT x NPT Connector, #4, JIC, 1/8 PM	

NOTE: *Photographs may include optional equipment.*

https://truckmanualshub.com/

8◆	Arm and link connection pin (1 place)	17K061 555749	Adapter, street elbow, BSPT x NPT Connector, #4, JIC, 1/8 PM	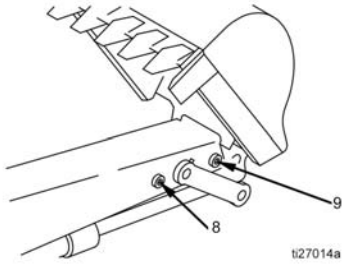
9◆	Arm and bucket connection pin (1 place)	17K061 555749	Adapter, street elbow, BSPT x NPT Connector, #4, JIC, 1/8 PM	
10	H-Link connecting pins (2 places)	17G422 556763	Adapter, short, BSPT x NPT Elbow, JIC 90° 1/8 inch x 4	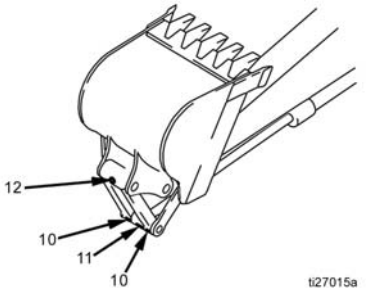
11◆	Bucket cylinder rod pin (1 place)	17K061 555749	Adapter, street elbow, BSPT x NPT Connector, #4, JIC, 1/8 PM	
12	Bucket and link connection pin (1 place)	17G422 556763	Adapter, short, BSPT x NPT Elbow, JIC 90° 1/8 inch x 4	
13	Swing circle (2 places)	17K062 556763	Adapter, long, BSPT x NPT Elbow, JIC 90° 1/8 inch x 4	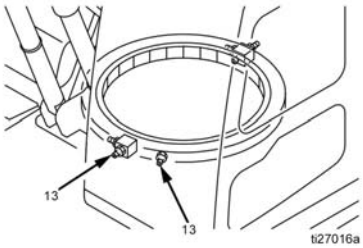

† *Tap rod end with 1/8 NPT tap. Rod end may need to be flipped over to allow clearance for fittings during articulation*
◆ *Grind slot in cap around zerk wide enough to tighten fittings approximately 1-1/4 inch wide.*

NOTE: *Photographs may include optional equipment.*

https://truckmanualshub.com/

Bearing Point Fittings Table: PC290-11/PC360-11 Models

NOTE: Before starting a lube cycle, set the machine to the greasing posture. If you are unsure of this procedure, see the Komatsu Excavator instruction manual.

Ref No.	Location	Part No.	Description	
1	Boom cylinder rod pins (2 places)	17K062 556763	Adapter, long, BSPT x NPT Elbow, JIC 90° 1/8 inch x 4	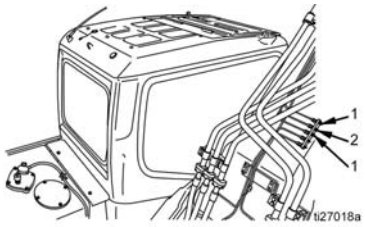
2	Arm cylinder foot pin (1 place)	17K062 556763	Adapter, long, BSPT x NPT Elbow, JIC 90° 1/8 inch x 4	
3	Boom and arm connection pin (1 place)	17K061 555749	Adapter, street elbow, BSPT x NPT Connector, #4, JIC, 1/8 PM	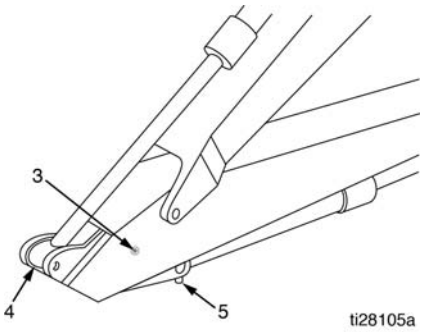
4†	Arm cylinder rod end (1 place)	556763	Elbow, JIC 90° 1/8 inch x 4	
5	Bucket cylinder foot pin (1 place)	17G422 556763	Adapter, short, BSPT x NPT Elbow, JIC 90° 1/8 inch x 4	
6❖	Boom cylinder foot pins (2 places)	17G422 556763	Adapter, short, BSPT x NPT Elbow, JIC 90° 1/8 inch x 4	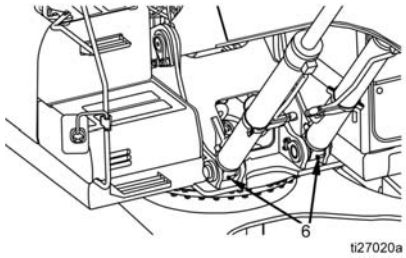
7	Boom foot pins (2 places)	17K062 556763	Adapter, long, BSPT x NPT Elbow, JIC 90° 1/8 inch x 4	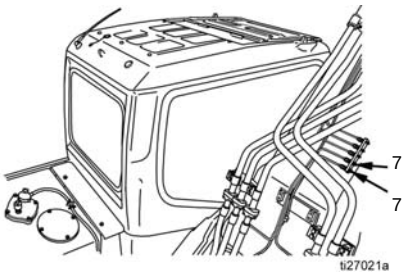

NOTE: *Photographs may include optional equipment.*

https://truckmanualshub.com/

8◆	Arm and link connection pin (1 place)	17K061 555749	Adapter, street elbow, BSPT x NPT Connector, #4, JIC, 1/8 PM	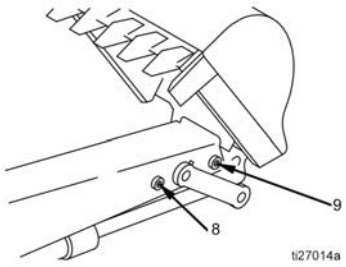
9◆	Arm and bucket connection pin (1 place)	17K061 555749	Adapter, street elbow, BSPT x NPT Connector, #4, JIC, 1/8 PM	
10	H-Link connecting pins (2 places)	17G422 556763	Adapter, short, BSPT x NPT Elbow, JIC 90° 1/8 inch x 4	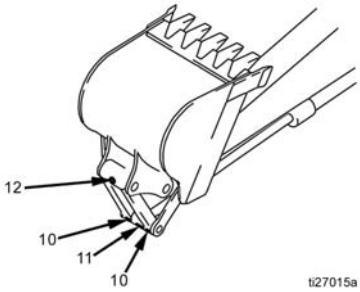
11◆	Bucket cylinder rod pin (1 place)	17K061 555749	Adapter, street elbow, BSPT x NPT Connector, #4, JIC, 1/8 PM	
12	Bucket and link connection pin (1 place)	17K062 556763	Adapter, long, BSPT x NPT Elbow, JIC 90° 1/8 inch x 4	
13	Swing circle (2 places)	17K062 556763	Adapter, long, BSPT x NPT Elbow, JIC 90° 1/8 inch x 4	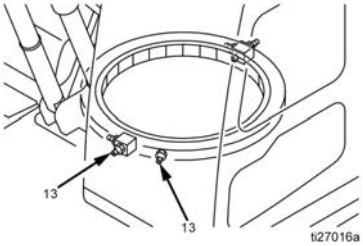

† *Tap rod end with 1/8 NPT tap. Rod end may need to be flipped over to allow clearance for fittings during articulation.*
❖ *Remove plug from cylinder end and install plug on opposite side of cylinder where zerk was located.*
◆ *Grind slot in cap around zerk wide enough to tighten fittings approximately 1-1/4 inch wide.*

NOTE: *Photographs may include optional equipment.*

https://truckmanualshub.com/

Bearing Point Fittings Table: PC390-11/PC490-11 Models

NOTE: Before starting a lube cycle, set the machine to the greasing posture. If you are unsure of this procedure, see the Komatsu Excavator instruction manual.

Ref No.	Location	Part No.	Description	
1	Boom cylinder rod pins (2 places)	17K062 556763	Adapter, long, BSPT x NPT Elbow, JIC 90° 1/8 inch x 4	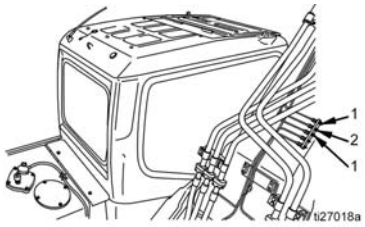
2	Arm cylinder foot pin (1 place)	17K062 556763	Adapter, long, BSPT x NPT Elbow, JIC 90° 1/8 inch x 4	
3	Boom and arm connection pin (1 place)	17K061 555749	Adapter, street elbow, BSPT x NPT Connector, #4, JIC, 1/8 PM	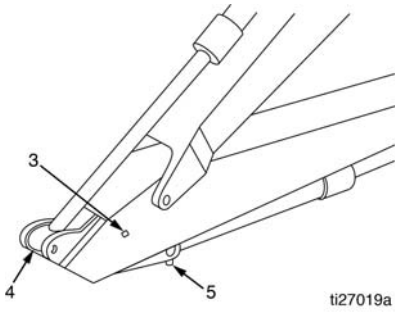
4	Arm cylinder rod end (1 place)	17K062 15K783 555749	Adapter, long, BSPT x NPT Elbow, street Connector, #4, JIC, 1/8 PM	
5	Bucket cylinder foot pin (1 place)	17G422 556763	Adapter, short, BSPT x NPT 1/8 inch x 4 JIC 90° elbow	
6❖	Boom cylinder foot pins (2 places)	17G422 556763	Adapter, short, BSPT x NPT Elbow, JIC 90° 1/8 inch x 4	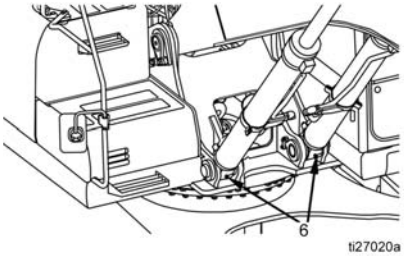
7	Boom foot pins (2 places)	17K062 556763	Adapter, long, BSPT x NPT Elbow, JIC 90° 1/8 inch x 4	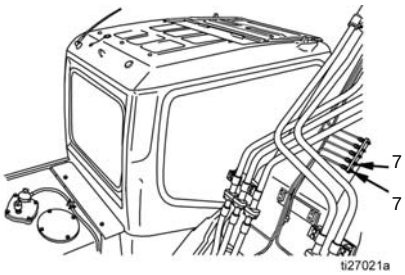

NOTE: *Photographs may include optional equipment.*

https://truckmanualshub.com/

8◆	Arm and link connection pin (1 place)	17K062 556763	Adapter, long, BSPT x NPT Elbow, JIC 90° 1/8 inch x 4	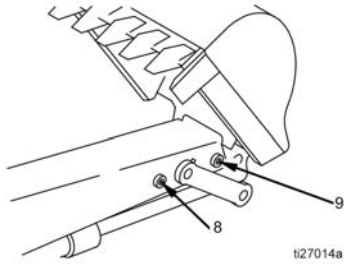
9◆	Arm and bucket connection pin (1 place)	17K061 555749	Adapter, street elbow, BSPT x NPT Connector, #4, JIC, 1/8 PM	
10	H-Link connecting pins (2 places)	17K062 556763	Adapter, long, BSPT x NPT Elbow, JIC 90° 1/8 inch x 4	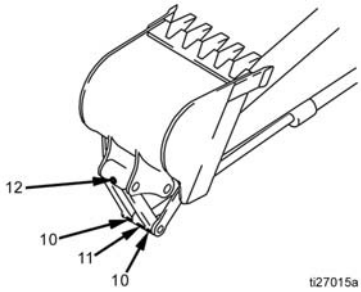
11◆	Bucket cylinder rod pin (1 place)	17K061 555749	Adapter, street elbow, BSPT x NPT Connector, #4, JIC, 1/8 PM	
12	Bucket and link connection pin (1 place)	17K062 556763	Adapter, long, BSPT x NPT Elbow, JIC 90° 1/8 inch x 4	
13	Swing circle (2 places)	17K062 556763	Adapter, long, BSPT x NPT Elbow, JIC 90° 1/8 inch x 4	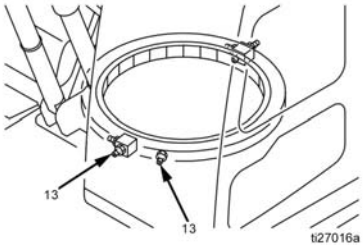

❖ *Remove plug from cylinder end and install plug on opposite side of cylinder where zerk was located.*

◆ *Grind slot in cap around zerk wide enough to tighten fittings approximately 1-1/4 inch wide.*

NOTE: *Photographs may include optional equipment.*

https://truckmanualshub.com/

MSP Divider Valves

The Divider Valve Assembly includes the following components:

- MSP divider valve base
- MSP divider valve assembly
- 1/8 in. x 4 JIC straight outlet fittings
- Inlet fittings
- Cycle indicators
- Performance indicators

Prepare a clean, flat area to assemble the valves.

MSP Valve Component Identification

NOTE: The MSP Divider Valves shown in FIG. 4 - FIG. 10 are provided for reference only. The MSP Divider Valves used in your installation may include fewer or more blocks and appear slightly different than those shown in the reference figures.

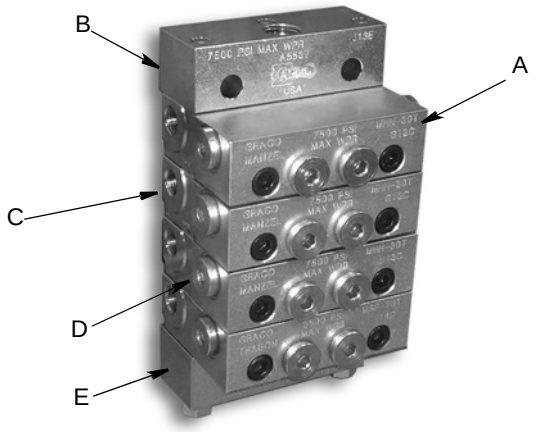

FIG. 4

Key:

A Valve Section
B Inlet Section
C Indicator / Port Plug
D End Plug
E End Section

MSP Divider Valve Assembly

1. The MSP Divider Valves require assembly (FIG. 5).

   NOTE: Refer to the MSP Divider Valve Assembly Table and MSP Divider Valve and Lube Points Assembly reference illustrations, FIG. 12 - FIG. 13 (page 16), to verify assembly orientation.

   a. Remove components from packaging.

   b. Assemble metering valves to base plates as shown in FIG. 5.

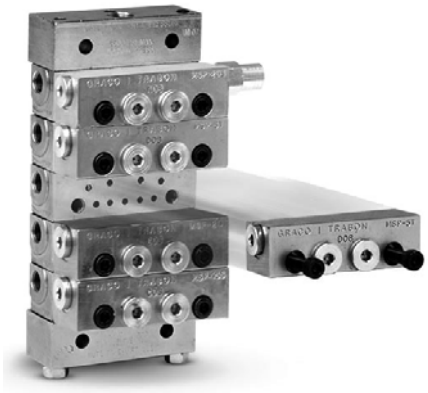

FIG. 5

NOTE: *Photographs may include optional equipment.*

https://truckmanualshub.com/

2. Install inlet fitting assembly in ports (FIG. 6).
   - Inlet fitting assembly includes: a 1/4 inch tee, a 1/4 x 4 JIC and a zerk fitting
   - Orient zerk fitting so it is always easily accessible (see FIG. 6 and FIG. 7).

FIG. 6

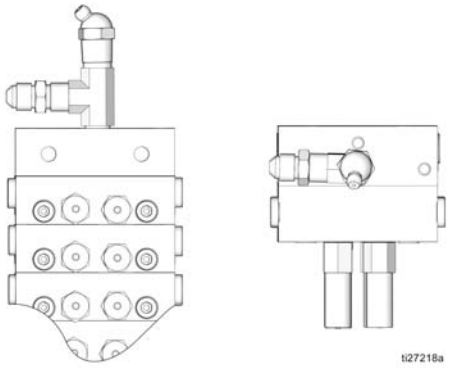

FIG. 7

3. Install grease zerk fittings and zerk cover (FIG. 8).

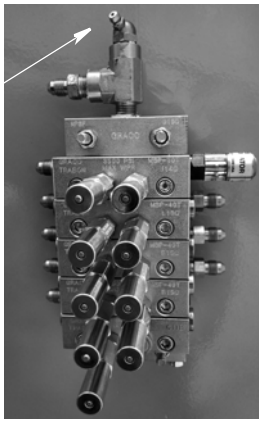

FIG. 8

4. Remove end plugs and indicator port plugs before installing performance and cycle indicators in the MSP Divider Valve assembly.

5. Install 1500 psi (10.34 bar, 103.4 MPa) performance indicators in ports (FIG. 9):

   NOTE: Refer to the MSP Divider Valve Assembly (page 16) to verify assembly orientation.

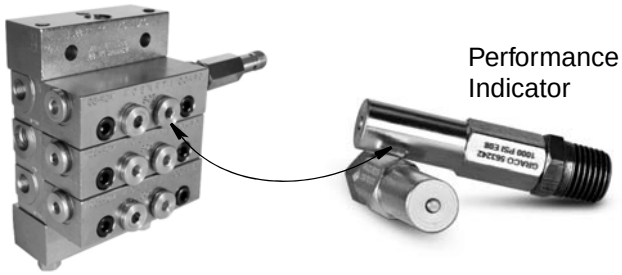

FIG. 9

6. Install cycle indicators in valves (FIG. 10).
   - Magnetic Cycle indicators (quantity 2)

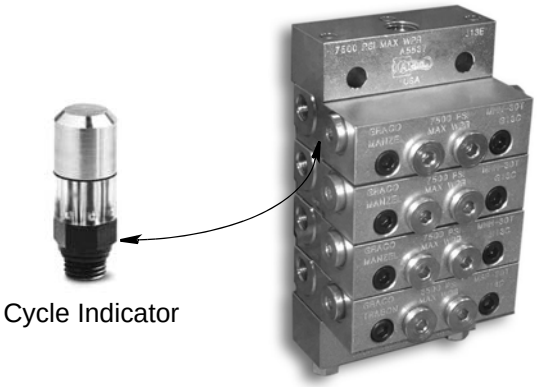

FIG. 10

7. Install outlet plugs in all open ports as shown in the MSP Divider Valve Assembly reference illustrations (FIG. 12 and FIG. 13, page 16.

8. Install outlet fittings in all ports (FIG. 11).
   - All outlets use 1/8 in. x 4 JIC straight fittings (included in kit).

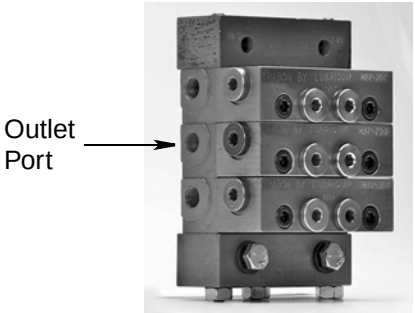

FIG. 11

NOTE: *Photographs may include optional equipment.*

https://truckmanualshub.com/

MSP Divider Valve Assembly

Boom and Swing Circle Valve (FIG. 12)			Arm and Bucket Valve (FIG. 13)
10T		Plug	10S
40T			20T
40T			40T
40T			40T
20S	Plug		40T

MSP Divider Valve and Lube Points Assembly

Boom and Swing Circle Valve (FIG. 12)

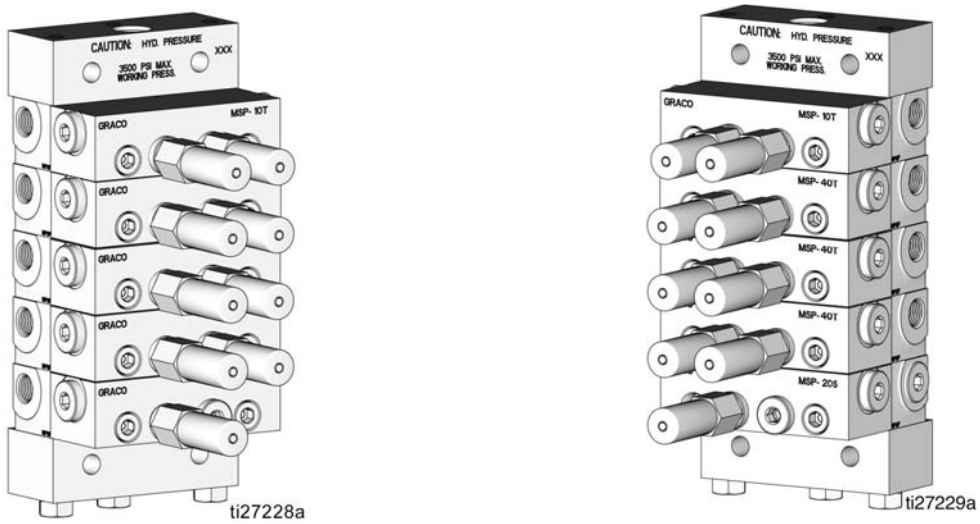

FIG. 12

Arm and Bucket Valve (FIG. 13)

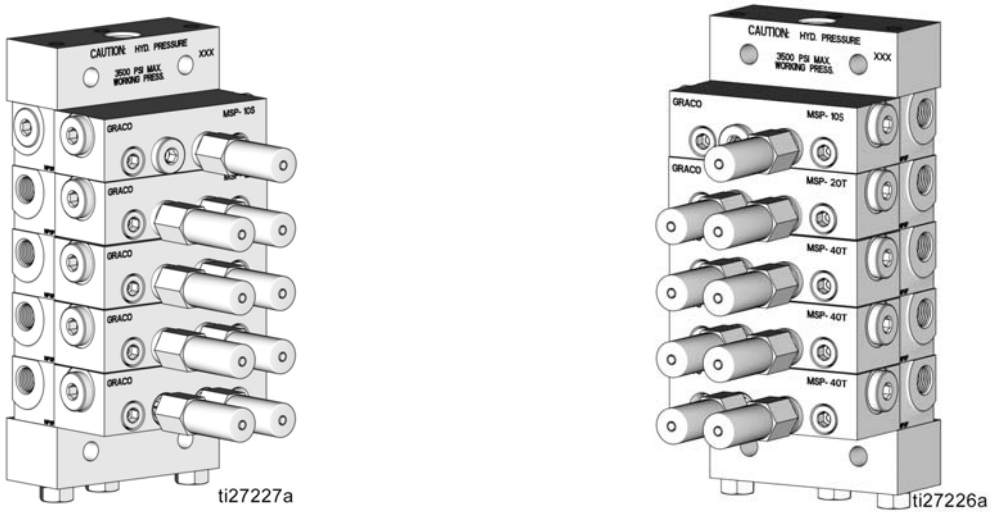

FIG. 13

NOTE: *Photographs may include optional equipment.*

https://truckmanualshub.com/

Weld Stud Guidelines

NOTICE
To avoid damaging the equipment, consult the Komatsu operations and maintenance manual before welding.

- Weld studs are provided in the installation kit. However, the installer may use their own weld studs if preferred.
- Specific Weld Stud installation instructions and suggested locations are provided in the respective sections of this manual.
- Make sure any welding done is at least 2 inches from any edge, mating surface or existing factory weld.

1. Use a marker or paint pen to mark the weld stud locations.
2. Adjust and clean the surfaces for the weld stud locations as needed before tack welding the weld studs.
3. Tack weld the weld studs.
4. Clean the weld stud with a flap disk or grinding disk.
5. Prime the weld surface with Komatsu primer. When primer has dried, apply a few coats of matching Komatsu colored paint.

Boom and Swing Circle Valve Installation

The Boom and Swing Circle Valve is installed to the right rear side of the boom. It should be centered top to bottom and centered between the fitting block and hose mount on the excavator, see FIG. 14.

1. Mark the location of the first Boom and Swing Circle Valve weld stud location. Then use the Boom and Swing Circle Valve to mark the location of the other weld studs. Make any minor adjustments before installing the weld studs.
2. Set the Boom and Swing Circle Valve aside. Tack weld the weld studs where marked. See the Weld Stud Guidelines.
3. Install Boom and Swing Circle Valve to the equipment using nuts included in the kit (FIG. 14).

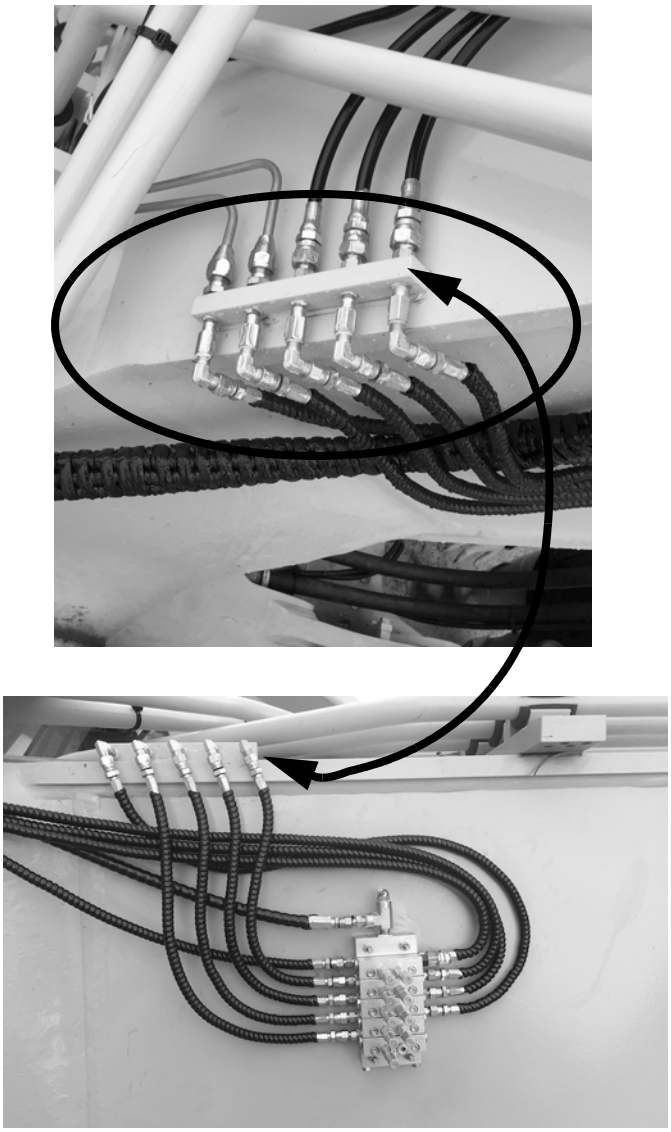

FIG. 14

NOTE: *Photographs may include optional equipment.*

https://truckmanualshub.com/

Arm and Bucket Valve Installation

The Arm and Bucket Valve is installed to the left side of the arm. The weld studs should be installed at least 3 inches (76.2 mm) from the weld, centered below the inlet on the bucket cylinder foot pin.

1. Mark the location of the first Arm and Bucket Valve weld stud location. Then use the Arm and Bucket Valve to mark the location of the other weld studs. Make any minor l adjustments before installing the weld studs.
2. Set the Arm and Bucket Valve aside. Tack weld the weld studs where marked. See the Weld Stud Guidelines.
3. Install Arm and Bucket Valve to the equipment using bolts included in the kit (FIG. 15 - FIG. 16).

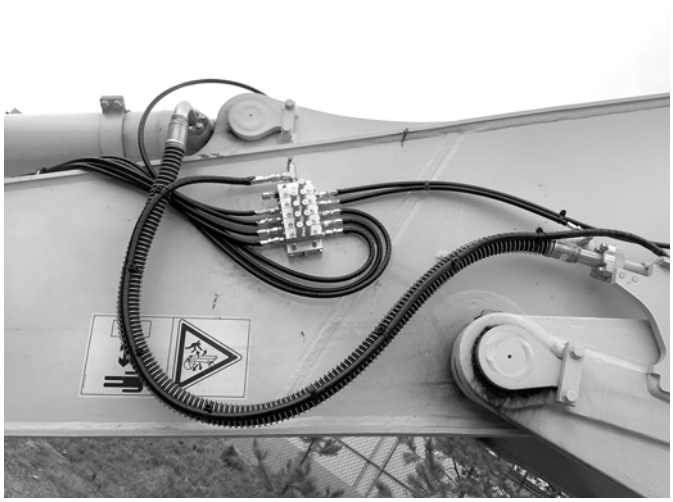

FIG. 15: PC210-11/PC240-11/PC290-11 Models

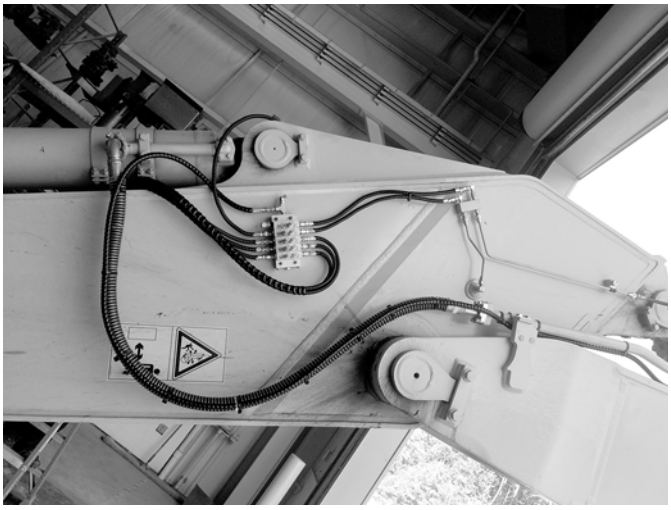

FIG. 16: PC360-11/PC390-11/PC490-11 Models

NOTE: *Photographs may include optional equipment.*

https://truckmanualshub.com/

P-Clamp Installation

P-Clamps are installed along the arm and on the H-Link on the excavator.

- Weld studs for P-Clamp installation should be centered half way across the arm and spaced evenly down the arm as shown in FIG. 17 and FIG. 18.

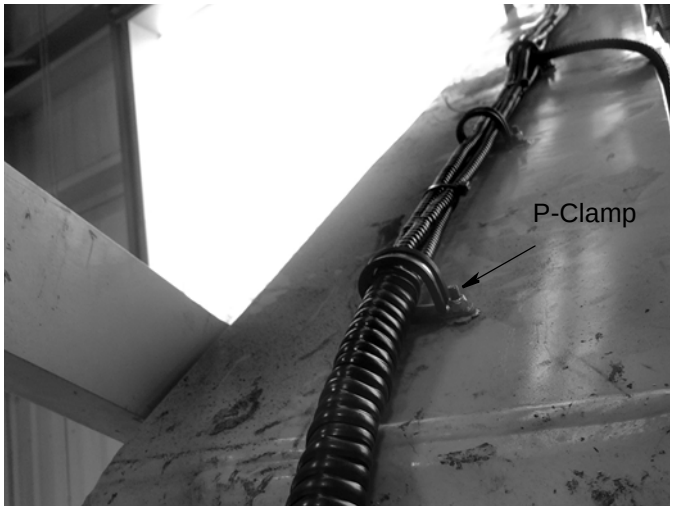

FIG. 17

FIG. 18

- Only one weld stud is required for P-Clamp installation on the H-Link. It should be installed to the casting protrusion in the middle of the H-Link (FIG. 19).

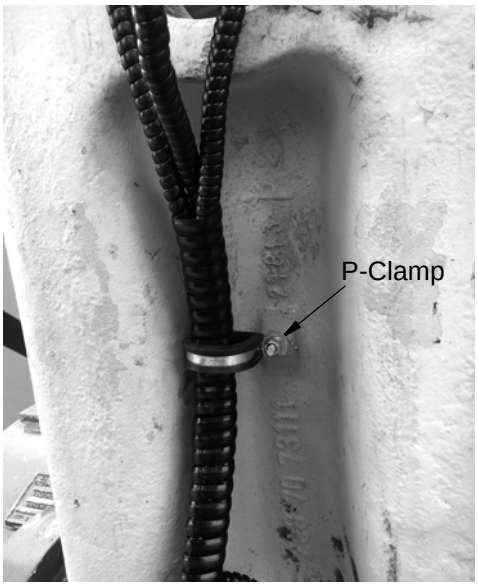

FIG. 19

NOTE: *Photographs may include optional equipment.*

https://truckmanualshub.com/

Anchor Block

Install the anchor block weld stud near the cylinder end and 4 inches (101.6 mm) from the edge of the boom (FIG. 20).

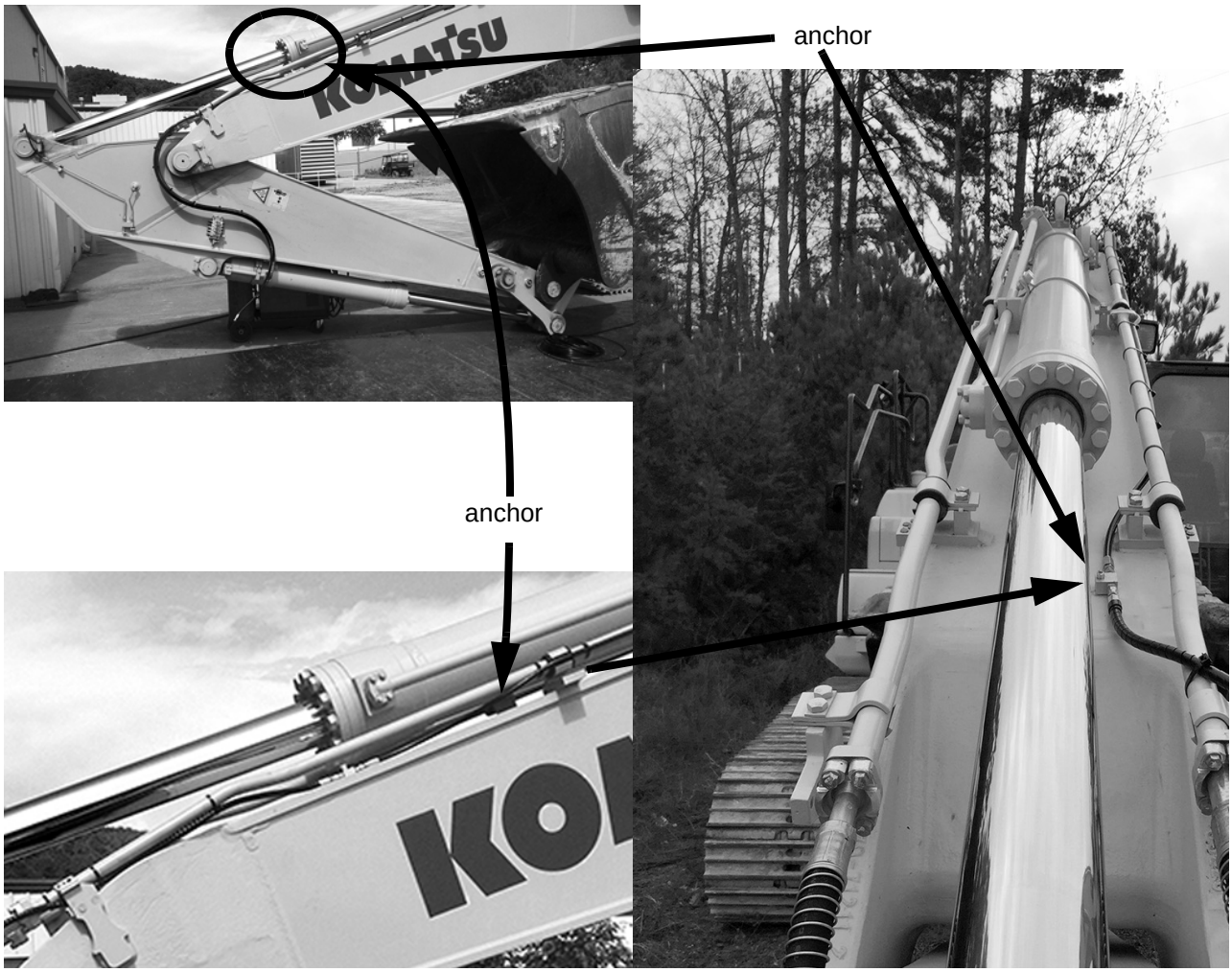

FIG. 20

NOTE: *Photographs may include optional equipment.*

https://truckmanualshub.com/

G3 Pump

The G3 Pump includes the following components:

- Pump with attached reservoir
- Pressure relief valve (required to protect system from damage)
- Pressure gauge (used to monitor system performance and to assist with troubleshooting).
- Mounting bracket and hardware
- CPC power cable
- Zip ties
- Pump element spacers
- Washers - 4 total
- Nuts - 4 total

1. Remove all components from the packaging and place all parts on a clean, flat surface.

FIG. 21

2. Assemble the pressure relief valve.

   a. Apply thread sealant (user supplied) to threads of pressure relief valve (a) (FIG. 22).

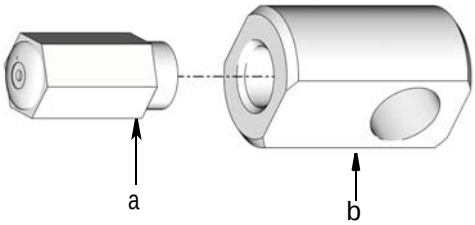

FIG. 22

   b. Install pressure relief valve (a) into banjo fitting (b). Wrench tighten (FIG. 22).

   c. Install one washer (c) over end banjo bolt (d). Then install banjo fitting (b) on banjo bolt, followed by the second washer (c) (FIG. 23).

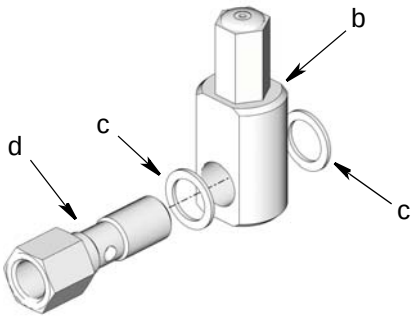

FIG. 23

3. Install banjo bolt (d) into pump element (e) (FIG. 24).

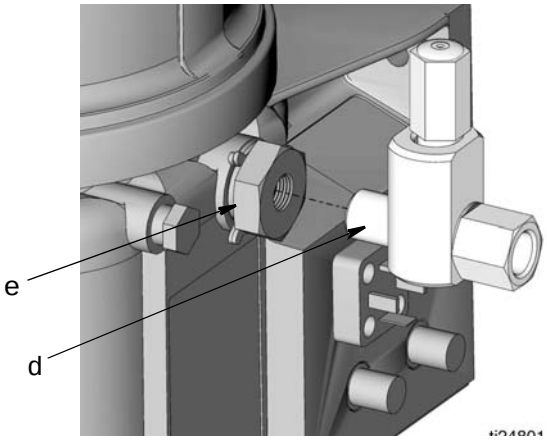

FIG. 24

4. Use two wrenches to tighten banjo fitting. Place one wrench on the pump element (e) and the second wrench over the end of the banjo bolt (d). ONLY tighten the banjo bolt (d) while holding the pump element (e) securely in place. Torque banjo bolt (d) to 35 ft. lbs (45.7 N•m) (FIG. 25). Take care to not over-tighten.

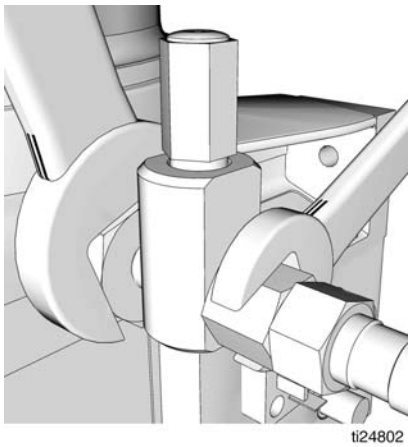

FIG. 25

NOTE: *Photographs may include optional equipment.*

https://truckmanualshub.com/

5. Remove plug from left side of the G3 Pump. Install pump element and 2 shims (a) as shown in FIG. 26.

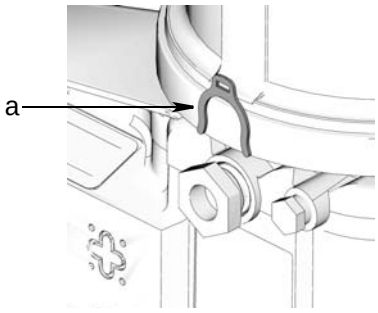

FIG. 26

6. Assemble pressure relief valve and banjo fitting as described in Steps 2 - 4, page 21.

7. Install the pressure gauge fitting, pressure gauge and outlet fitting in the pressure relief valves on both sides of the pump as shown in FIG. 27 and FIG. 28.

   NOTE: Hold the pressure relief valve securely in place while installing the pressure gauge assembly.

FIG. 27

FIG. 28

G3 Mounting Bracket Installation

- For the PC210-11/PC240-11/PC290-11 models: Install the pump to the platform on the left-hand side of the equipment behind the cab, near the handrails as shown in FIG. 31.

- For the PC360-11/PC390-11/PC490-11 models: Install the pump to the platform on the right-hand side of the equipment, near the handrails as shown in FIG. 32.

1. For PC210-11/PC240-11/PC290-11 Models: Install the pump bracket behind the cab on the left side of the machine. Slide the pump bracket up next to the kick-plate as far as it will go (FIG. 31).

   For PC360-11/PC390-11/PC490-11 models: On the right hand side of the machine, center the mounting bracket between the hand rail and the engine cover.

   Measure in approximately 2.5 inches (63.5 mm) from the outside edge of the platform. Use a marker or pen to mark the location of the first mounting hole (FIG. 29).

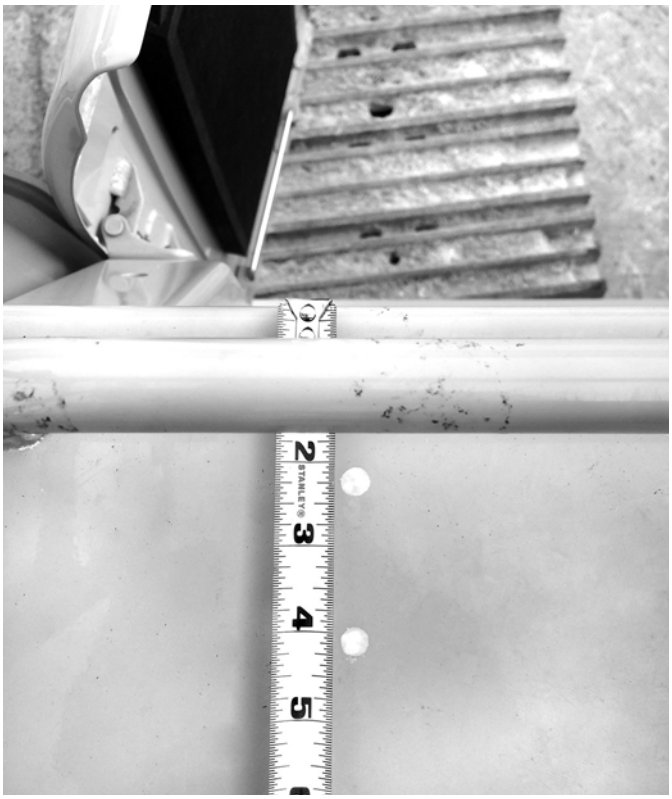

FIG. 29

NOTE: *Photographs may include optional equipment.*

https://truckmanualshub.com/

2. Square and align the bracket over the mark made in Step 1. Use a marker or paint pen to mark the locations of the remaining mounting holes in the bracket (FIG. 30).

FIG. 30

3. Use a drill to drill the mounting holes in the platform.
4. Secure G3 pump to mounting bracket.
5. Align mounting bracket with the drilled holes in the platform.
6. Insert bolts through holes in the bracket and platform. Thread the nuts over the end of the bolts and tighten nuts to hold the bracket securely to platform (FIG. 32).

FIG. 31: G3 Pump installed on left side of PC210-11/PC240-11/PC290-11 Models

FIG. 32: G3 Pump installed on PC360-11/PC390-11/PC490-11 Models

NOTE: *Photographs may include optional equipment.*

https://truckmanualshub.com/

Remote Fill Installation

Remote Fill Parts

Ref*	Part No.	Description	Qty
16	556762	CONNECTOR, #4, JIC, 1/4 PM	1
45	557950	BULKHEAD, remote fill	1
46	100840	FITTING, elbow, 1/4 in., street	1
47	557896	STUD, fill, 1/4 inch NPTF (f)	1
48	556408	FITTING, 1/4 x 1/8 inch NPTF Hex	1
49	555749	CONNECTOR, #4, JIC, 1/8 PM	1
50	15K783	FITTING, elbow	1

*See Parts, page 50.

Instructions

1. Install the remote fill to the engine cover support rail that is located closest to the G3 pump.
2. Use an oversized step bit to enlarge one of the existing holes in the engine cover framework to a diameter large enough to accommodate the remote fill; approximately 1 to 2 mm.

FIG. 33

3. Connect one end of the remote fill hose to the G3 pump.
4. Route the hose from the G3 pump to the remote fill.
5. Trim the hose, hose loom and hose ends to the necessary length.
6. Apply thread sealant to threads of connector (49). Install bulkhead fitting (45) to the connector (49). Remove mounting nut.
7. Install bulkhead fitting (45) through bulkhead hole drilled in Step 1. Reinstall mounting nut over end of bulkhead fitting to secure bulkhead fitting to support rail (FIG. 34).

   NOTE: When installing the bulkhead fitting (45) make sure connector (49) is oriented upward as shown in FIG. 34

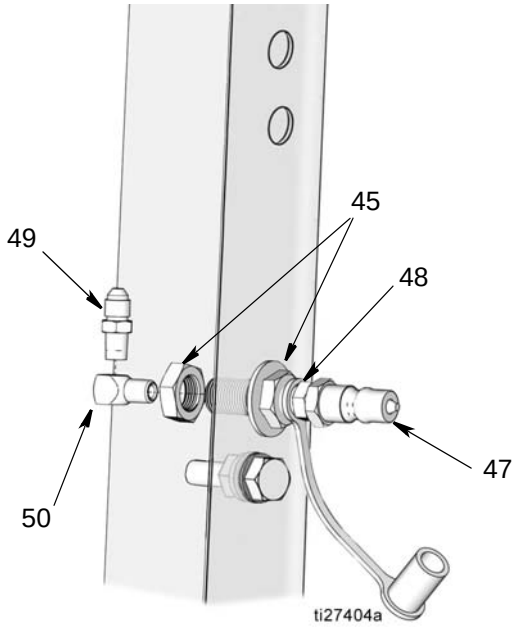

FIG. 34

8. Join connector (49) to end of remote fill hose.
9. Apply thread sealant to I.D. threads of bulkhead fitting (45) and to threads of coupler (48). Install coupler to the bulkhead fitting. Tighten securely.

NOTE: *Photographs may include optional equipment.*

https://truckmanualshub.com/

10. Connect fill stud (47) to coupler (48). Tighten securely.

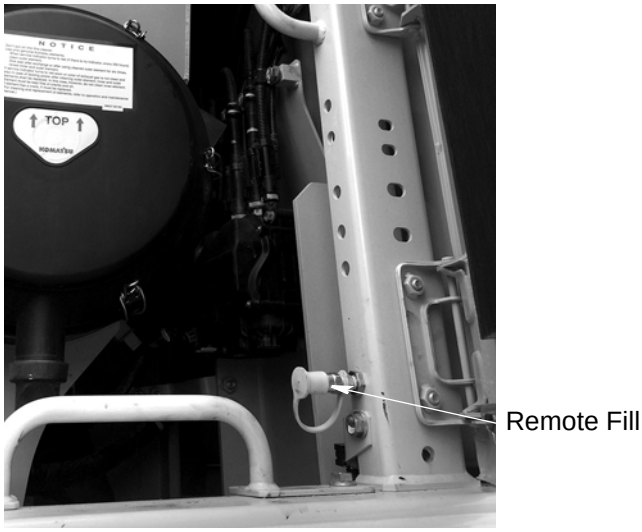

FIG. 35

Installing and Routing G3 Power Cable

NOTE: Before the pump wiring can be installed, the excavator must be rotated 90° so that the boom and arm are facing over the track. See the Komatsu Excavator instruction manual for these instructions.

1. Remove the metal access panel located below the cab.

FIG. 36

2. Wrap the G3 pump CPC power cable with the 1/4 in. cable loom.
3. Connect the end of the power cable to the G3 pump.
4. Route the power cable through the mounting bracket and into the engine compartment as shown in FIG. 37 and FIG. 40.

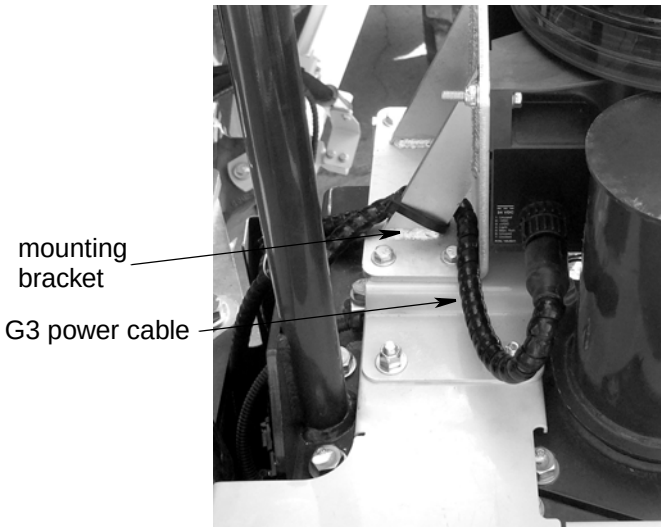

FIG. 37: PC210-11/PC240-11/PC290-11 Models

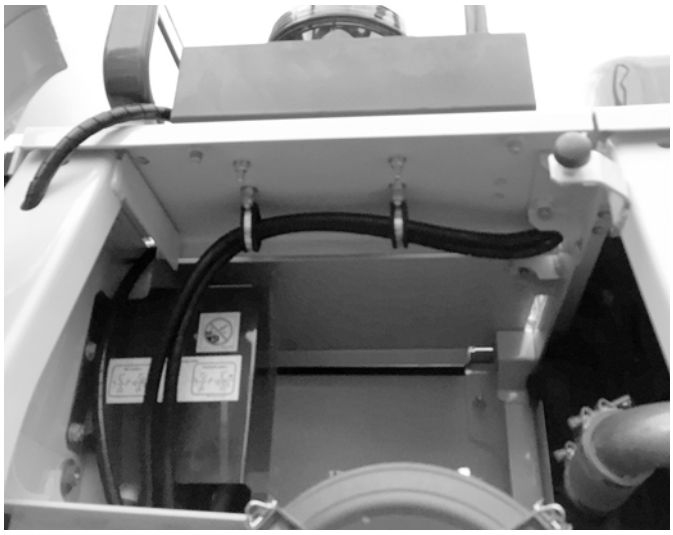

FIG. 38: PC210-11/PC240-11/PC290-11 Models

https://truckmanualshub.com/

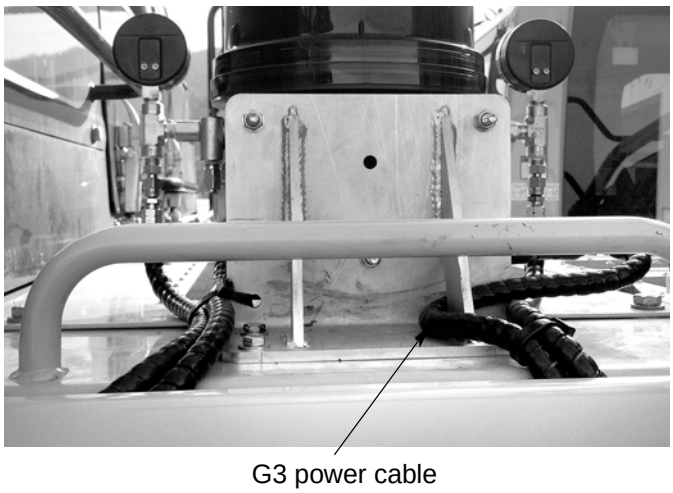

FIG. 39: PC360-11/PC390-11/PC490-11 Models

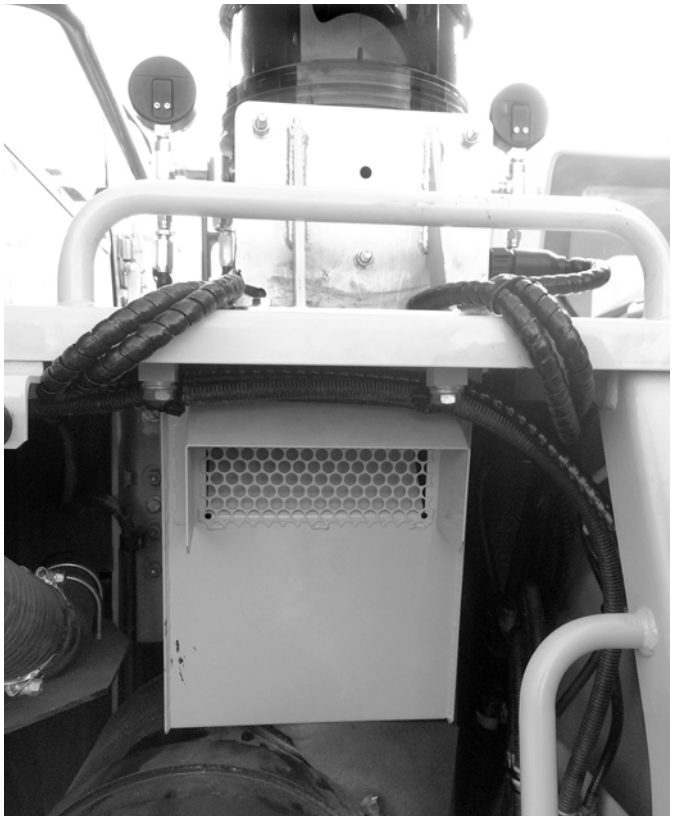

FIG. 40: PC360-11/PC390-11/PC490-11 Models

5. Route the G3 power cable through the back of the engine bay toward the center of the machine. Either feed the power cable through the access grommet or through the foam insulation in the back of the engine bay (FIG. 41).

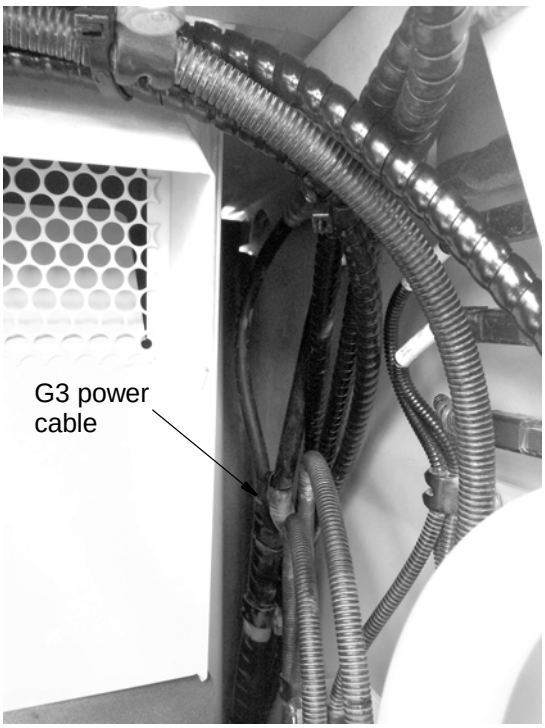

FIG. 41

6. Route the G3 power cable either directly under the boom and into the access panel (left side pump mounting) or under the boom through the open gussets and then into the access panel (right side pump mounting) FIG. 42 - FIG. 44.

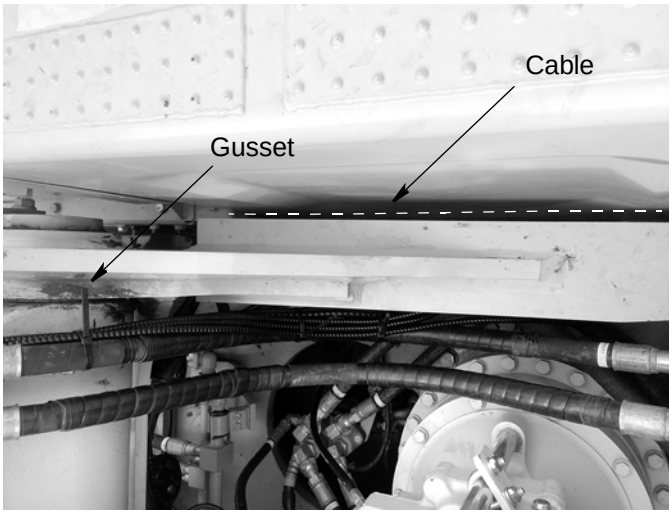

FIG. 42

NOTE: *Photographs may include optional equipment.*

https://truckmanualshub.com/

FIG. 43

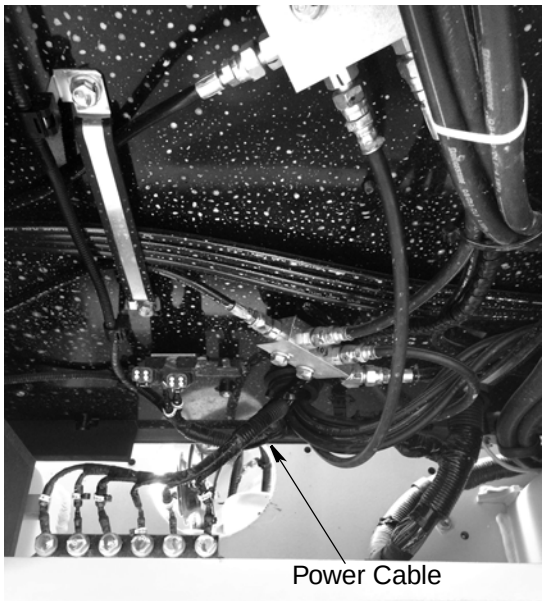

FIG. 44

7. Secure the power cable with zip ties up to where it enters the access hole under the cab.

   NOTE: The GLC2200 wiring needs to be routed to the access panel to complete the wiring procedure. See GLC2200 Controller Wiring instructions, page 28.

https://truckmanualshub.com/

GLC2200 Controller

The GLC2200 Controller includes the following components:

- GLC2200 Controller
- Mounting bracket and hardware
- GLC2200 cable
- Zip ties

Remove all components from the packaging and place all parts on a clean, flat surface.

GLC 2200 Mounting Bracket Installation

The mounting bracket kit includes the following components:

Ref	Description	Qty
a	Mounting Bracket	1
b	Mounting Bolts	6
c	Washers	14
d	Nuts	6
e	Mounting Base Plate	1
f	Mounting Plate	1
g	Mounting Bracket to Cab	2
h	Washer, nylon	2
j	Screw, pan head	2
k	Nut	2

1. Assemble the GLC2200 mounting bracket:

   a. Use an 5/16 inch drill bit to enlarge the diameter of hole (g1).

   b. Install the GLC2200 mounting base plate (e) to the mounting bracket (a) using bolts (b), washers (c) and nuts (d) as shown in FIG. 45. Wrench tighten nuts securely.

   c. Install bracket fasteners (g) to mounting bracket (a) using bolts (b), washers (c) and nuts (d) as shown in FIG. 45. Fasten loosely to allow for final adjustment when installed to the Komatsu equipment.

   d. Install the GLC200 mounting plate (f) to the mounting base plate (e) using bolts (b), washers (c) and nuts (d) as shown in FIG. 46. Be sure washer (h) is installed between the mounting plate (f) and mounting base plate (e) on the top an bottom. Wrench tighten nuts securely.

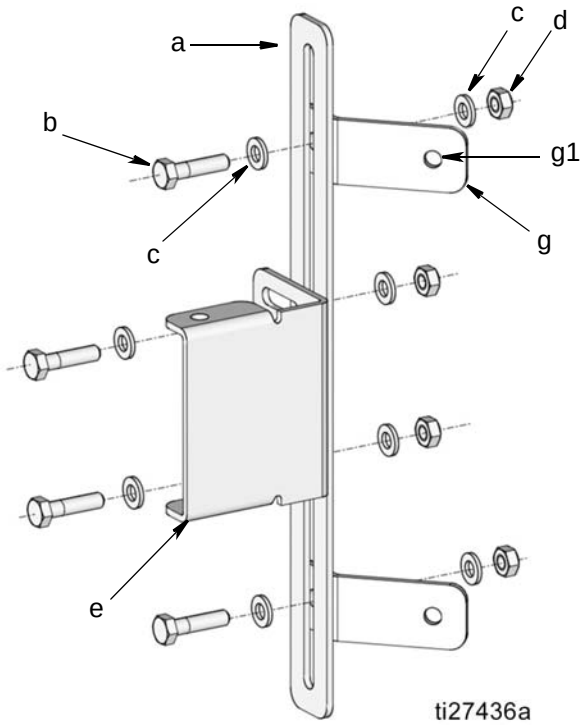

FIG. 45

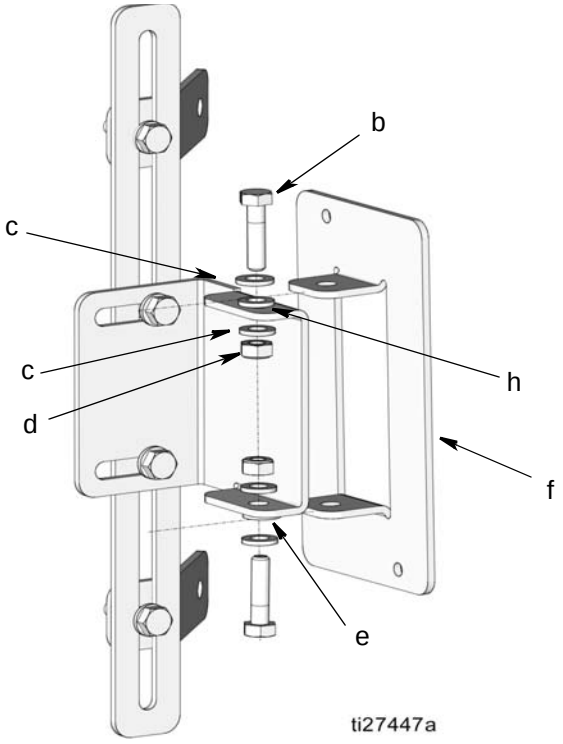

FIG. 46

NOTE: *Photographs may include optional equipment.*

https://truckmanualshub.com/

e. Install the GLC200 controller on the mounting plate (f) using screws (j), and nuts (k) as shown in FIG. 47. Tighten mounting bolts just enough to secure the controller in the bracket. Adjust the GLC2200 controller for the best viewing angle then wrench tighten bolts securely.

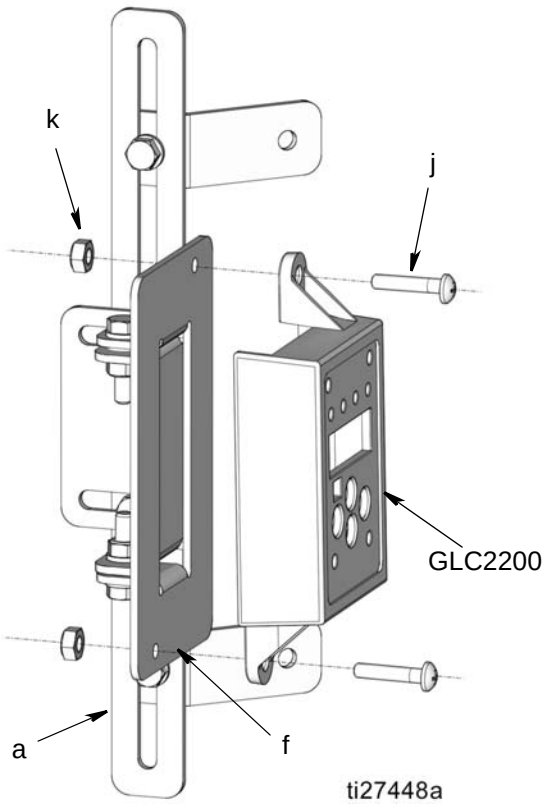

FIG. 47

f. Adjust bracket fasteners (g) for installation in the cab; matching the holes in the brackets to the location of the bolt holes available after removing bolts and washers in Step 2.

g. Wrench tighten nuts (d) to secure bracket fasteners (g) to bracket (a).

2. Remove bolts and washer (a) to remove panel located on the inside of the cab, next to the driver's seat as shown in FIG. 48.

FIG. 48

3. Install the assembled bracket and GLC2200 to the mounting holes exposed in Step 2. Use bolts (b) and washer (c) and washer (w) to secure bracket fasteners (g) to the holes.

FIG. 49

4. Connect the GLC2200 wiring harness to the GLC2200 controller.

NOTE: *Photographs may include optional equipment.*

https://truckmanualshub.com/

GLC2200 Controller Wiring

NOTICE

To avoid damaging the loader:

- Turn off and disconnect power at the battery before installing equipment.
- All electrical wiring must be done by a qualified professional or Komatsu certified technician.

NOTE: Before the GLC2200 Controller can be mounted in the excavator cab, the controller cable must be routed behind the panels on the left side of the operator's seat.

1. Loosen or remove the bolts holding the panels to the cab FIG. 50.

FIG. 50

2. Remove the fuse panel cover located behind the operator's seat.

3. Splice the GLC2200 cable approximately 2-3 feet from the connector end (FIG. 51).

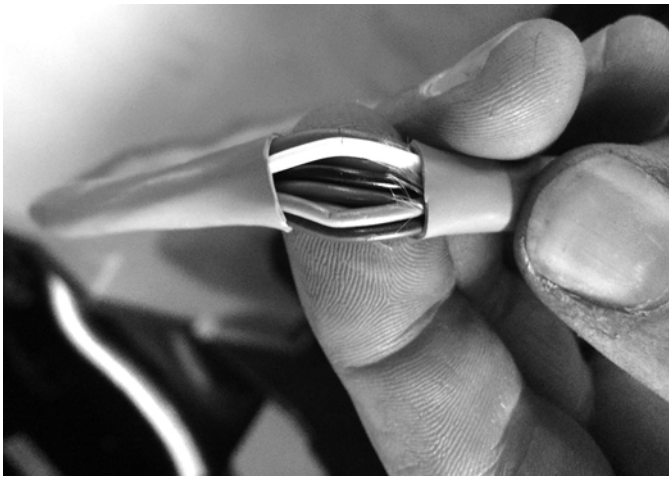

FIG. 51

4. Extract the read (+) and black (-) wires from the cable assembly. Ensure that care is taken not to cut any other wires in the cable. There must be enough wire extracted to feed the red and black wires behind the cab covers and into the fuse panel (FIG. 52).

FIG. 52

5. Seal the open splice with electrical tape or shrink tubing for added protection.

6. Feed the red and black power wires behind the cab covers and into the fuse panel.

7. Feed the remaining GLC2200 cable down the cab cover, below the window on the left side of the cab.

NOTE: *Photographs may include optional equipment.*

https://truckmanualshub.com/

Then feed the cable through the cable gland on the floor, below the operator's seat (FIG. 53).

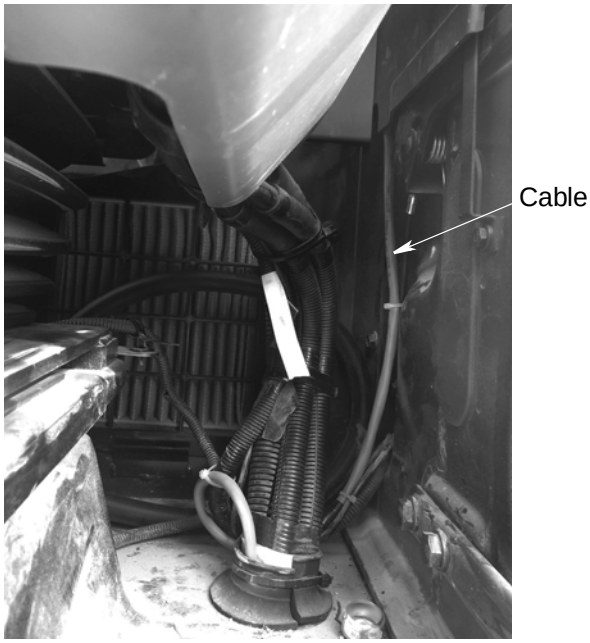

FIG. 53

8. Route the GLC2200 cable to mate with the G3 pump power cable in the access panel under the cab. Use zip ties to secure the controller cable.

FIG. 54

Each wire connection should be assembled using the following Wire Splicing procedure:

Refer to the following Wiring Table for wire connection between the GLC2200 controller, G3 pump and main power.

GLC2200 Wiring Table

GLC2200 Harness			Pump
Color	**Description**	**+/-**	**Color**
Blue	Pump	-	Black
Purple	Unused (cut)	-	
Brown	Low Level Input	-	Orange
White			
Black	Voltage Input 24VDC	-	
Orange	Pump	+	Red
Green	Unused (cut)	+	
Yellow	Low Level Input	+	White
Gray	Unused (cut)	+	
Red	Voltage Input 24VDC	+	

Wire Splicing

1. Remove 1 inch of insulation using a wire stripper (FIG. 55).

FIG. 55

2. Slide 1.5 inches of shrink tubing over end of one piece of wire.
3. Connect two (or more) wire ends together by twisting the stripped wire ends of wires together (FIG. 56).

FIG. 56

4. Solder connection with a soldering iron.
5. Slide the shrink tubing over the soldered wires. Use a heat gun to contract the shrink tubing (FIG. 57).

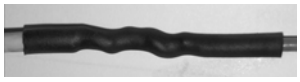

FIG. 57

6. Repeat Steps 1 - 5 for all wires.

NOTE: *Photographs may include optional equipment.*

https://truckmanualshub.com/

7. Wrap wiring assembly with electrical tape or cable loom to protect connection.

8. Secure the mated G3 pump power cable and the GLC2200 controller cable with zip ties to provide added protection.

9. Reinstall the cover underneath the cab and tighten the bolts.

10. Remove the fuse panel cover.

FIG. 58:

11. Pull the cable through the back of the relay panel, into the fuse panel and out through the panel cover (FIG. 61). Complete the wiring form the main power and ground for the controller.

12. Attach an ATM fuse splice connector to the power wire of the controller (FIG. 59) using the wiring procedure described in Steps 1- 5, page 31. Install a 5 Amp fuse.

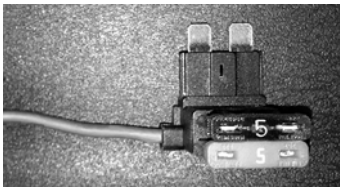

FIG. 59

13. Install the 5 Amp fuse (included in the kit) into the Add-A-Fuse slot with the wire lead.

14. Remove fuse from slot 14. Install fuse into the Add-A-Fuse.

15. Install the Add-A-Fuse into the fuse panel into slot 14 named “5A KEY ACC SIGNAL”.

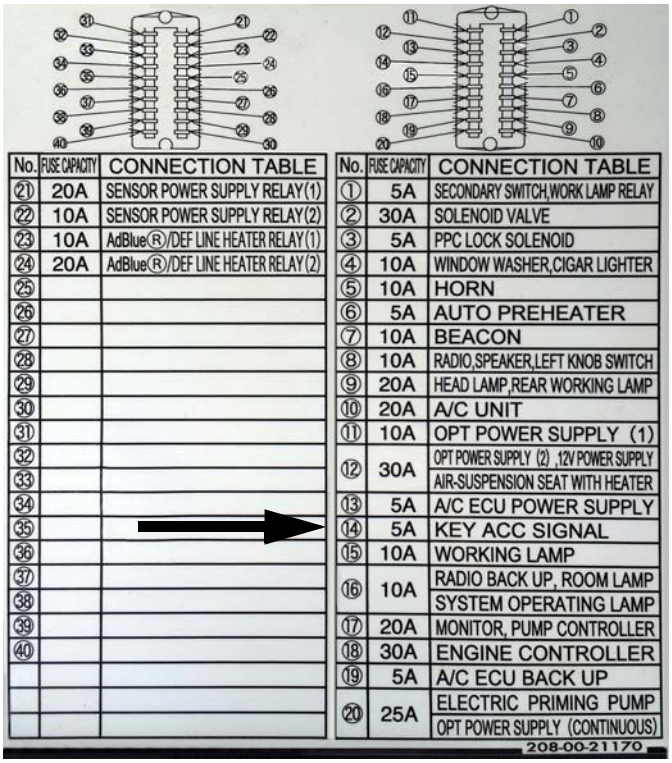

No.	FUSE CAPACITY	CONNECTION TABLE
21	20A	SENSOR POWER SUPPLY RELAY(1)
22	10A	SENSOR POWER SUPPLY RELAY(2)
23	10A	AdBlue®/DEF LINE HEATER RELAY(1)
24	20A	AdBlue®/DEF LINE HEATER RELAY(2)
25		
26		
27		
28		
29		
30		
31		
32		
33		
34		
35		
36		
37		
38		
39		
40		

No.	FUSE CAPACITY	CONNECTION TABLE
1	5A	SECONDARY SWITCH,WORK LAMP RELAY
2	30A	SOLENOID VALVE
3	5A	PPC LOCK SOLENOID
4	10A	WINDOW WASHER,CIGAR LIGHTER
5	10A	HORN
6	5A	AUTO PREHEATER
7	10A	BEACON
8	10A	RADIO,SPEAKER,LEFT KNOB SWITCH
9	20A	HEAD LAMP,REAR WORKING LAMP
10	20A	A/C UNIT
11	10A	OPT POWER SUPPLY (1)
12	30A	OPT POWER SUPPLY (2) ,12V POWER SUPPLY
		AIR-SUSPENSION SEAT WITH HEATER
13	5A	A/C ECU POWER SUPPLY
14	5A	KEY ACC SIGNAL
15	10A	WORKING LAMP
16	10A	RADIO BACK UP, ROOM LAMP
		SYSTEM OPERATING LAMP
17	20A	MONITOR, PUMP CONTROLLER
18	30A	ENGINE CONTROLLER
19	5A	A/C ECU BACK UP
20	25A	ELECTRIC PRIMING PUMP
		OPT POWER SUPPLY (CONTINUOUS)

208-00-21170

FIG. 60

16. Follow the same wiring splicing procedure for the ground cable as described in Steps 1- 5, page 31. Attach a ring terminal to the controller ground wire (FIG. 61).

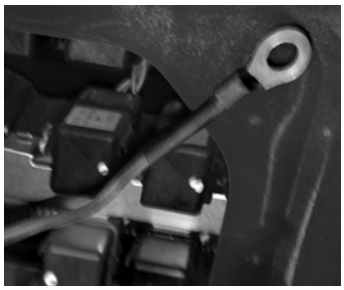

FIG. 61

17. Remove a bolt from the relay rail closest to the fuse panel and connect the ground wiring ring to a bolt in the relay rail.

18. Reinstall the fuse cover over the top of the fuse panel and the Add-A-Fuse.

19. Reinstall the cab cover panels and bolts.

NOTE: *Photographs may include optional equipment.*

https://truckmanualshub.com/

Hose Assemblies

The hose in the kit is provided in bulk and the fittings are field installable; a crimper is not required.

Hose Assembly Instructions

1. Wrap or slide spiral wrap (sw) over the end of the cut-to-length hose (h) until the entire length of the hose is encased in the spiral wrap.

2. Trim the spiral wrap (sw), leaving approximately 1 inch (25.4 mm) of the hose end unwrapped (FIG. 62).

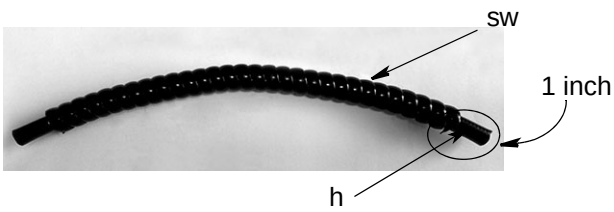

FIG. 62

Spring Guard†

Some hoses require additional protection and should also be wrapped with a hose spring guard.

a. Slide the hose spring guard (sg) over the end of the spiral wrapped hose. Feed the hose assembly into the hose spring guard until the entire length of the hose is encased in the hose spring guard.

b. Trim the hose spring guard (sg) so it is long enough to cover hose assembly.

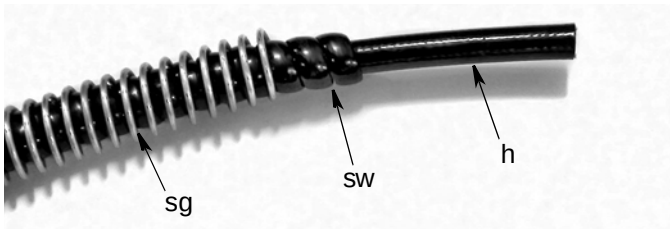

FIG. 63

3. Remove two hose fittings from their package and disassemble the two pieces (FIG. 64).

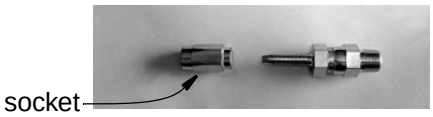

FIG. 64

4. Connect the socket to the end of the hose. Rotate the fitting counter-clockwise to thread the hose fitting onto the hose (FIG. 65).

   NOTE: A wrench and pliers may be needed to assist with this assembly. If socket is difficult to install, apply lubricant that is compatible with the hose material.

FIG. 65

5. Leave approximately 1/16 in. of the hose end before completely seating the hose into the fitting. This will allow enough space for the second half of the fitting to be connected (FIG. 66).

6. Generously lubricate nipple, socket, threads and hose inside diameter.

FIG. 66

NOTE: *Photographs may include optional equipment.*

https://truckmanualshub.com/

7. Thread the stud of the nipple clockwise into the socket installed in the hose until the nipple nearly bottoms out against the socket shoulder (FIG. 67).

   NOTE: Two hand wrenches may be needed to assist with this assembly.

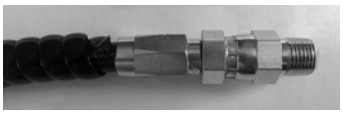

FIG. 67

NOTICE
Do not over tighten the fittings during final assembly. After the two fittings are securely connected, stop tightening the fittings. Over-tightening can damage the fittings and a new hose assembly will need to be made. If the ferrule sleeve is difficult to install, check the hose for proper lubrication. Reapply lubricant as needed. Installation without proper lubrication can cause damage to the core tube.

8. Repeat Steps 1-7 for all hose assemblies.

Hose Routing

Routing hose lines takes time. It is easier when there are two people working on the installation together.

- Identify the internal and external swing circle points to ensure proper hose lengths are applied. If hoses are too short, they will bind and eventually break. If hoses are too long, they can easily get snagged on external debris, or pinched in the machine and break.

- Care must be taken to ensure hoses are installed to move with the machine. To make the lube system part of the machine consideration must be given to the many swing circle, oscillation, extension and pinch point areas of a equipment. Before cutting and securing hoses, have a qualified technician move the various parts of the machine to ensure proper routing is achieved.

- Look for access points. Utilize grommets, supports, or cutouts in equipment's frame. Routing hoses through these areas keeps the hoses inside the machine and provides protection. It will also provide a cleaner, more professional looking installation.

Hose Length

Hose lengths are dependent on:
- the machine model
- MSP valve placement on machine
- optional mechanical equipment

To determine the hose length:
1. Loosely connect fitting end of the hose to the MSP Valve outlet.

2. Route the section of hose from the valve to the lubrication point following the path of the already installed electrical or hydraulic lines. Allow sufficient hose for complete articulation that does not place stress on the hose fittings and connections during daily operation.

3. Trim hose.

4. Install hose guard.

5. Install fitting to cut end of hose.

Hose Installation

- Route the lines to the bearing point **but do not connect the lines to the bearings**. Take care to ensure dirt and/or debris do not get on the grease fitting or introduced into the system.
- Secure lines using the supplied zip ties.
- Secure hoses to arm using P-Clamps.
- Use larger P-Clamps to bundle the hoses together and keep them tight.

***NOTE:** Photographs may include optional equipment.*

https://truckmanualshub.com/

Hose Routing Pump to Valves

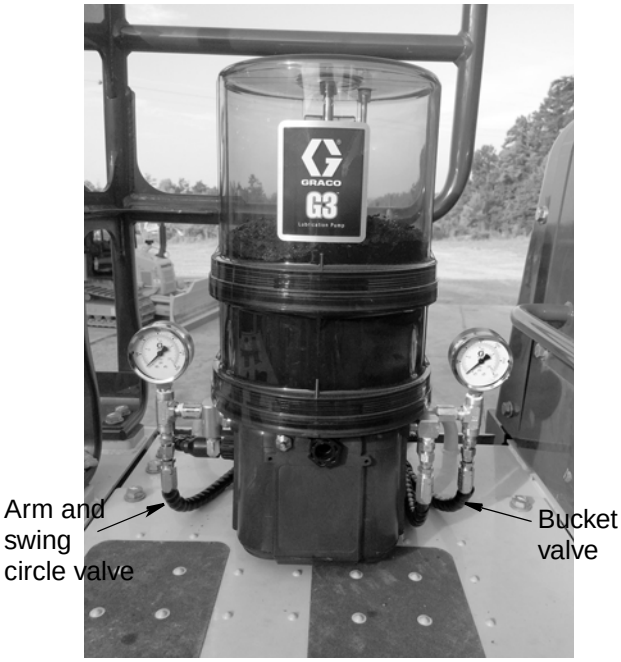

FIG. 68: Model PC490-11 shown

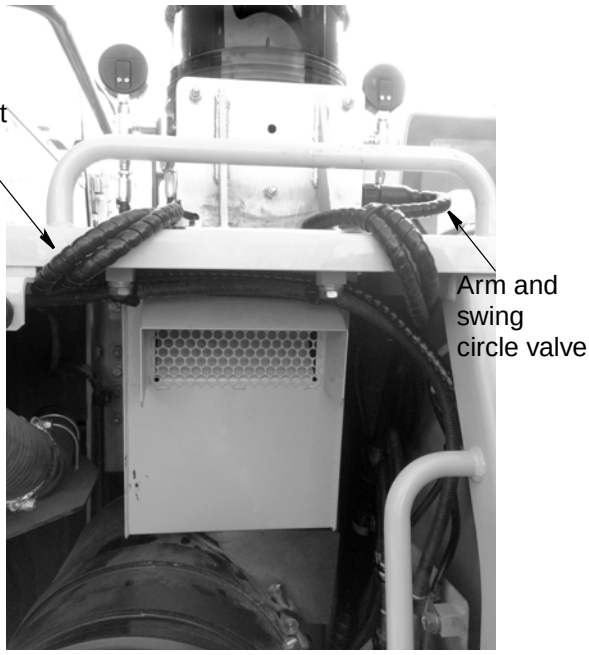

FIG. 69: Model PC490-11 shown

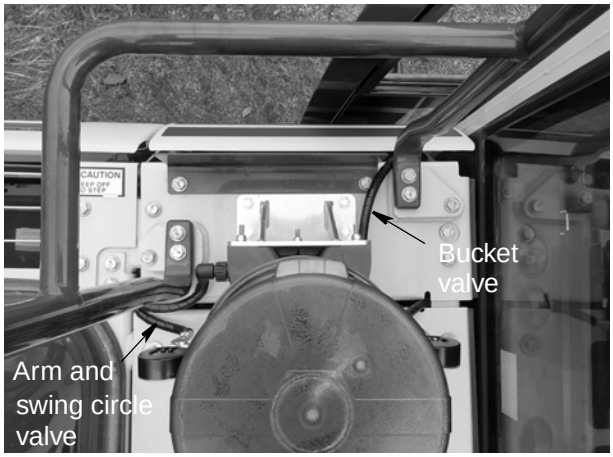

FIG. 70: Model PC240-11 shown

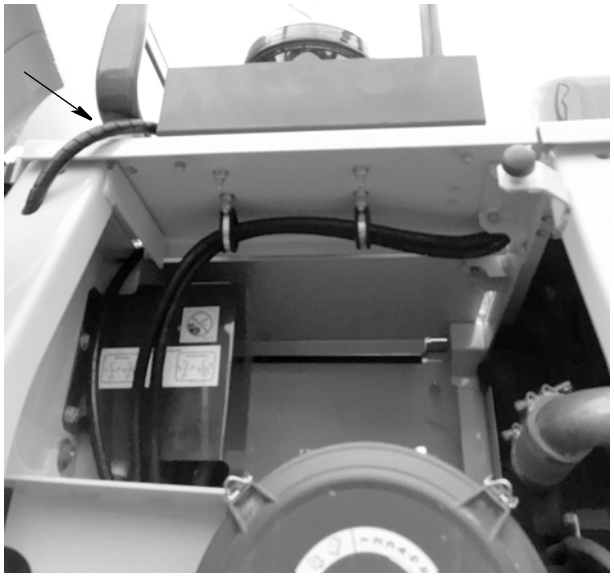

FIG. 71: Model PC240-11 shown

FIG. 72: Model PC240-11 shown

NOTE: *Photographs may include optional equipment.*

https://truckmanualshub.com/

FIG. 73: Model PC490-11 shown

FIG. 74: Model PC490-11 shown

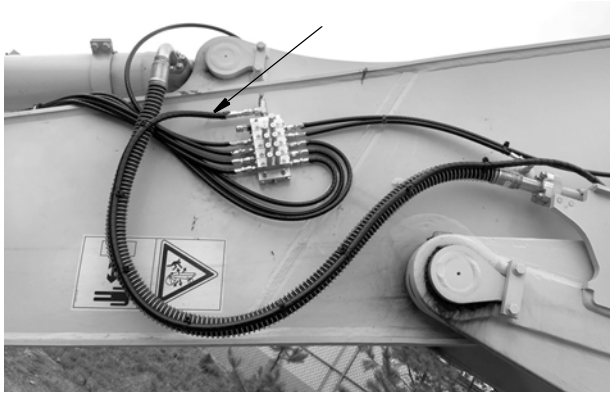

FIG. 75: Model PC360-11 shown

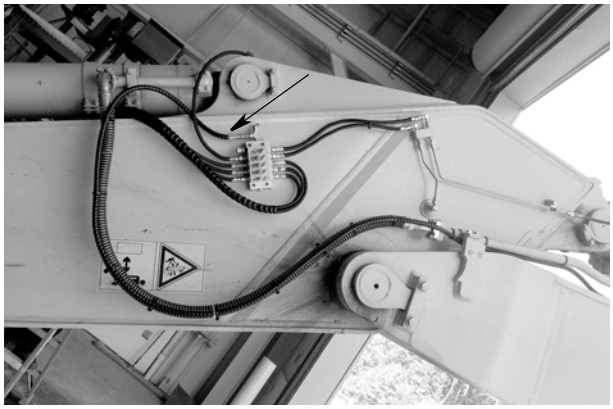

FIG. 76: Model PC490-11 shown

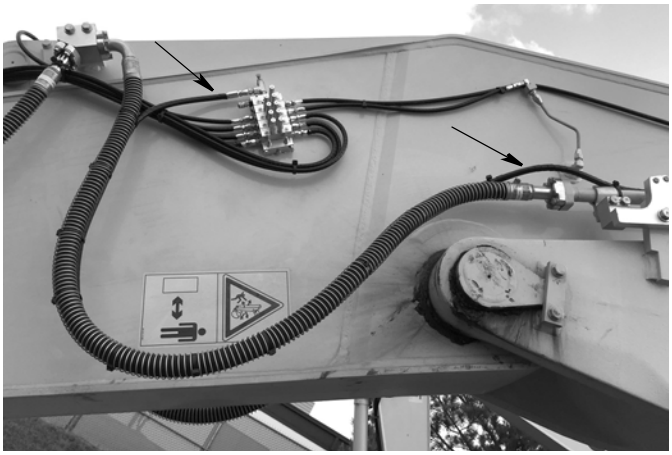

FIG. 77: Model PC240-11 shown

NOTE: *Photographs may include optional equipment.*

https://truckmanualshub.com/

Arm and Bucket Valve

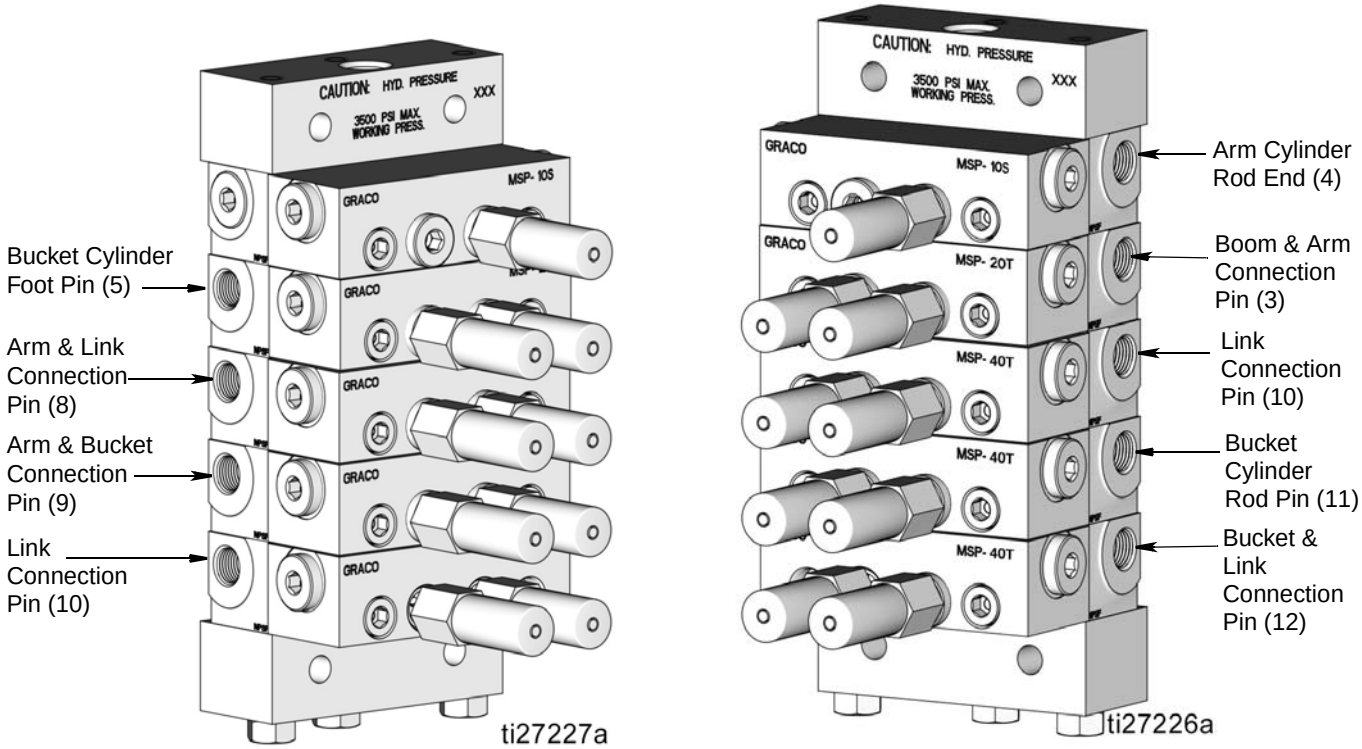

FIG. 78

Before routing hose lengths, the bucket must be fully curled to ensure proper length is allowed for the bucket. Loosely connect hoses to the Arm and Bucket Valve and route to lubrication points. Secure hose lines together using the supplied zip ties.

Refer to FIG. 79 - FIG. 88 for all hose routing connections to the Arm and Bucket Valve.

FIG. 79: Model PC490-11 shown

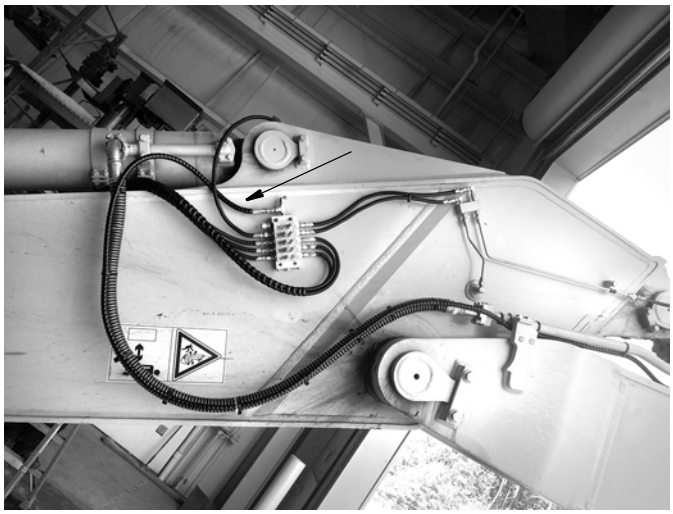

FIG. 80: Model PC490-11 shown

NOTE: *Photographs may include optional equipment.*

https://truckmanualshub.com/

FIG. 81: Model PC490-11 shown

FIG. 82: Model PC490-11 shown

FIG. 83: Model PC490-11 shown

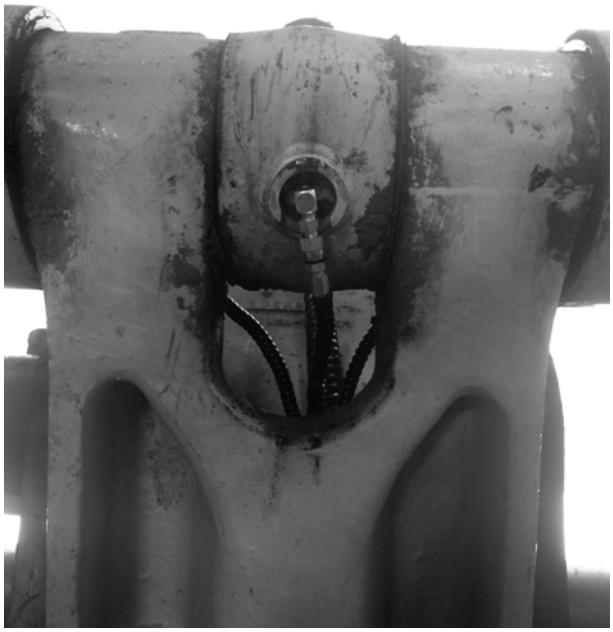

FIG. 84: Model PC490-11 shown

NOTE: *Photographs may include optional equipment.*

https://truckmanualshub.com/

FIG. 85: Model PC490-11 shown

FIG. 87: Model PC490-11 shown

FIG. 86: Model PC490-11 shown

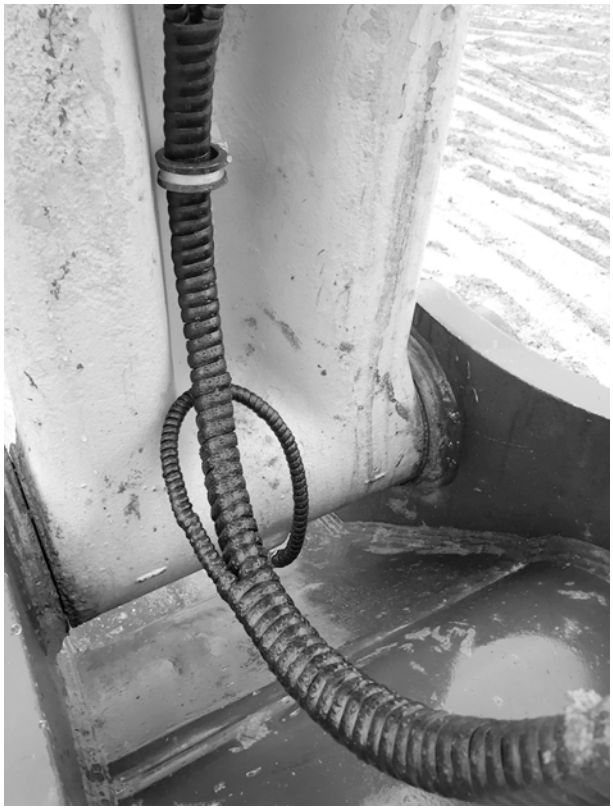

FIG. 88: Model PC490-11 shown

NOTE: *Photographs may include optional equipment.*

https://truckmanualshub.com/

Boom and Swing Circle Valve

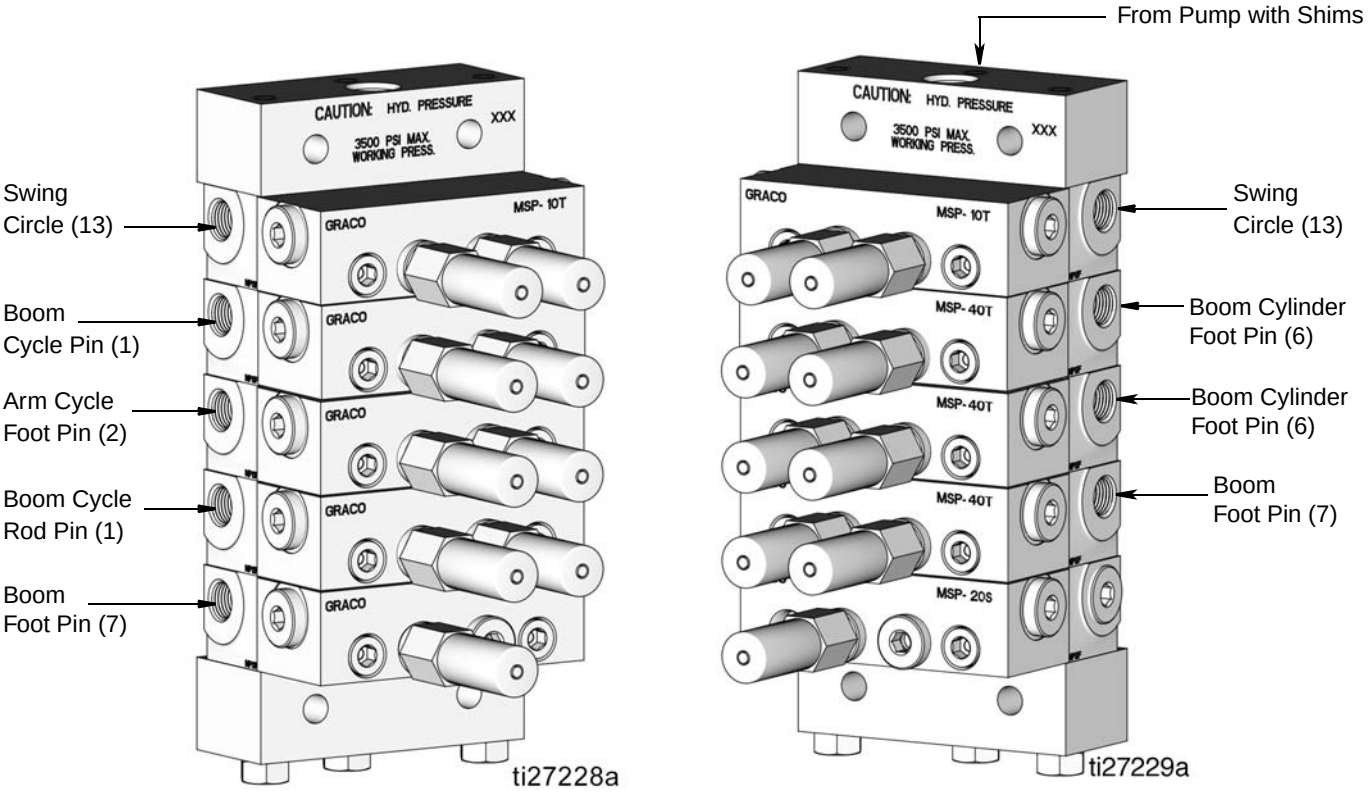

FIG. 89

Boom and Swing Circle Valve Hose Connections

Loosely connect the hose to the pump. Run the main feed line hose between the pump and the Boom and Swing Circle Valve. Secure hose lines together using the supplied zip ties.

Refer to FIG. 90 - FIG. 98 for all hose routing connections to the Boom and Swing Circle Valve.

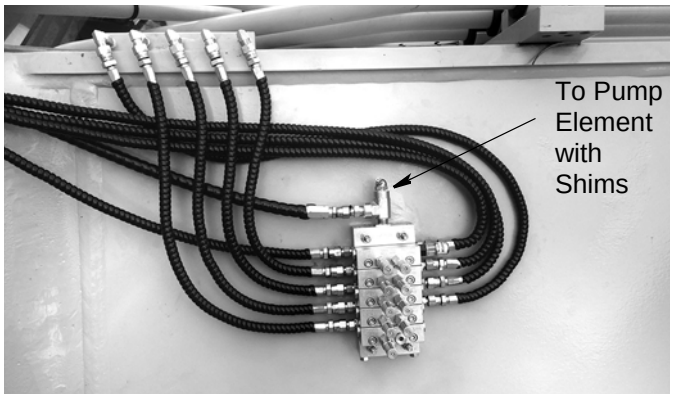

FIG. 90: Model PC490-11 shown

FIG. 91: Model PC360-11 shown

NOTE: *Photographs may include optional equipment.*

https://truckmanualshub.com/

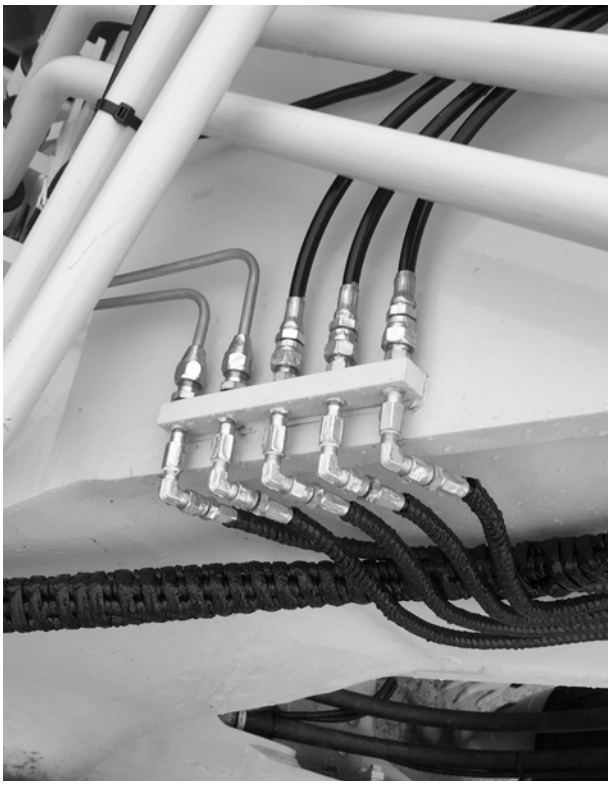

FIG. 92: Model PC490-11 shown

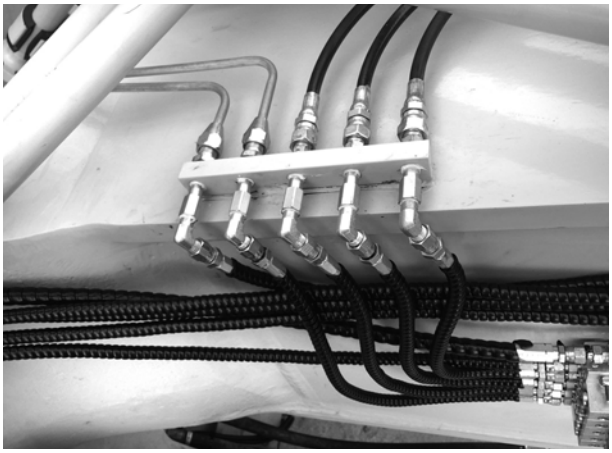

FIG. 93: Model PC490-11 shown

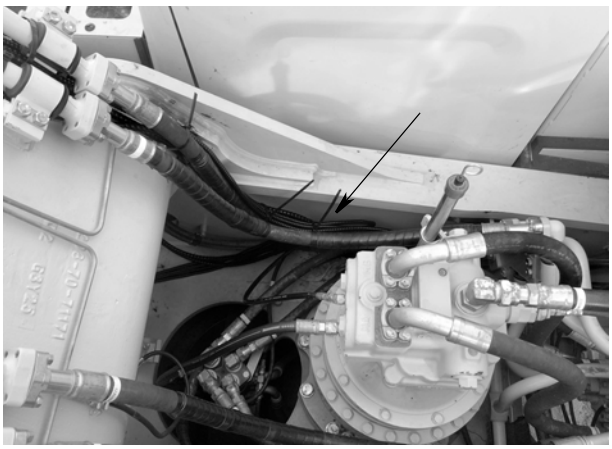

FIG. 94: Model PC490-11 shown

FIG. 95: Model PC240-11 shown

FIG. 96: Model PC360-11 shown

NOTE: *Photographs may include optional equipment.*

https://truckmanualshub.com/

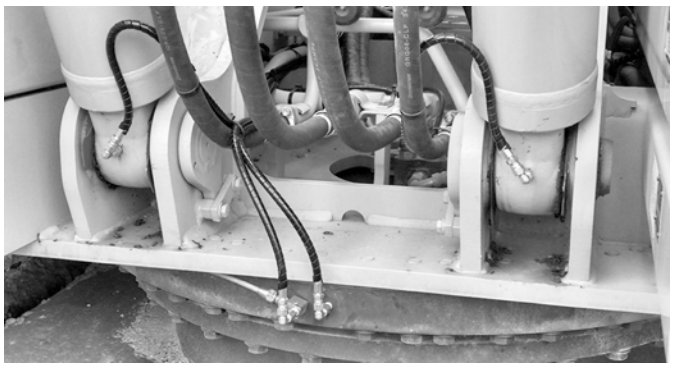

FIG. 97:Model PC240-11 shown

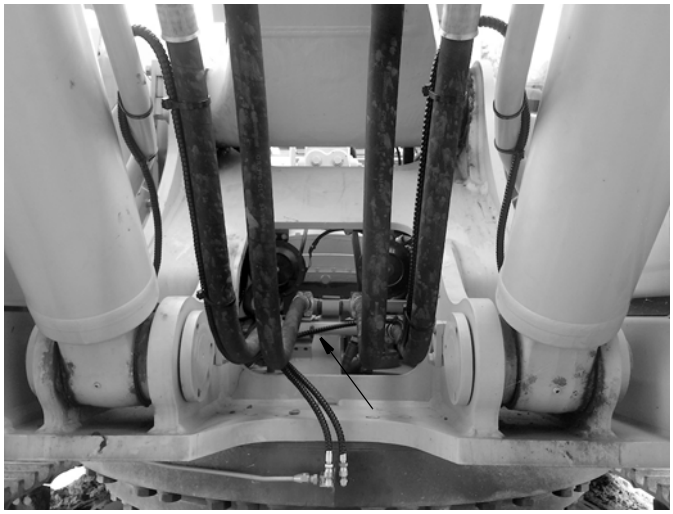

FIG. 98: Model PC490-11 shown

NOTE: *Photographs may include optional equipment.*

https://truckmanualshub.com/

GLC2200 Controller Programming

Component Identification

Keypad, Display, and Icons

NOTICE

To prevent damage to soft key buttons, do not press the buttons with sharp objects such as pens, plastic cards, or fingernails.

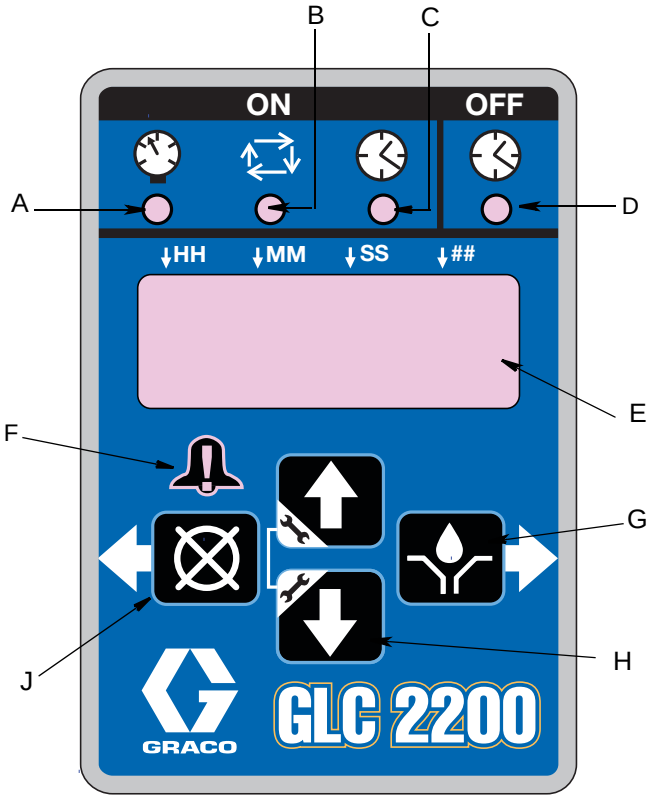

FIG. 99

Pump ON LEDs (A, B, C)

A Pressure Control LED: In RUN MODE illuminates indicating function mode that is currently running.

B Cycle Control LED: In RUN MODE illuminates indicating function mode that is currently running.

C Time Control LED: In RUN MODE illuminates indicating function mode that is currently running.

Pump OFF LED (D)

- In RUN MODE this LED illuminates when in the OFF or RESET portion of the RUN CYCLE.

Display (E)

- A blinking field on the display indicates the controller is in SETUP MODE.
- In RUN MODE field of numbers on the display will not blink.

Alarm LED (F)

Illuminates when any alarm is detected. When an alarm is active an error code displays and an audible alarm also sounds.

RIGHT Direction Arrow / MANUAL RUN / ENTER (G)

- In SETUP MODE, saves entry, moves cursor in display one field to the right or to the next setup step.
- In RUN MODE activates the pump for one complete ON cycle if actuated during the OFF portion of the RUN cycle.

UP and DOWN Direction Arrows (H)

- Press and hold both the UP and DOWN Arrow keys together for 3 seconds to enter SETUP MODE.
- In SETUP MODE increase or decrease number values associated with the various RUN MODES.

LEFT Direction Arrow / RESET (J)

- In SETUP MODE moves cursor in display one field to the left.
- In RUN MODE, Pressing RESET starts a PUMP OFF cycle.
- In ALARM MODE, Press once to clear buzzer; Press and hold for 3 seconds to clear warning and switch controller to OFF MODE.

NOTE: See the GLC2200 Controller Instruction manual for detailed descriptions of the display features.

NOTE: *Photographs may include optional equipment.*

https://truckmanualshub.com/

Programming the GLC200 Controller

Before programming the GLC2200 controller:

- Restore power to the equipment by engaging the main power switch to the equipment.
- Key on the machine to the “Acc” position.

1. Press both the UP and DOWN ARROW buttons together for three seconds.

2. Use the UP ARROW until **on:ti** displays.

3. Press the ENTER button.

The LED below the clock in the ON field lights, indicating the ON TIME is being programmed. ON TIME is the amount of time the pump runs.

NOTE: The ON TIME entry is a 4-digit number setting MM (minutes) and SS (seconds). For this installation the on time is:

- PC210-11/PC240-11 - 01 minute and 45 seconds. A leading zero (0) must be entered in the first MM field.
- PC290-11/PC360-11 - 02 minute and 00 seconds. A leading zero (0) must be entered in the first MM field.
- P390/PC490-11 - 02 minute and 10 seconds. A leading zero (0) must be entered in the first MM field.

4. Program the first minute field by pressing the UP or DOWN ARROW button until 0 appears in the first MM (minutes) field.

5. Press the ENTER button. The next MM number field to the right flashes indicating it is ready for programming.

6. Repeat steps 4 - 5 to set each of the remaining next MM and the SS (seconds) fields.

7. After pressing the ENTER button to set the last SS field, all the programmed Time information is saved.

The controller automatically switches to the OFF Time SETUP MODE.

The LED below the OFF TIME Symbol Illuminates.

NOTE: The OFF TIME entry is a 4-digit number setting HH (hours) and MM (minutes). For all models the time is 01 hour.

- HH fields - enter 01. A leading zero (0) must be entered in the first HH field.
- MM fields - enter 00. There are no additional minutes.

To set the OFF TIME:

8. Program the first hour field by pressing the UP or DOWN ARROW button until 0 appears in the first HH (hour) field.

9. Press the ENTER button. The next HH number field to the right flashes indicating it is ready for programming.

10. Repeat steps 8 - 9 to set each of the remaining next HH and the MM (minutes) fields. Press the ENTER button.

NOTE: *Photographs may include optional equipment.*

https://truckmanualshub.com/

The controller automatically switches to the LOW LEVEL SETUP MODE.

LOW LEVEL SETUP programs how the low level is detected by the controller. For this installation the LOW LEVEL SETUP is programmed to LL:02.

1. Use the UP or DOWN ARROW until LL:02 displays.

2. Press the ENTER button.

Setup is complete. Listen for an audible “beep” signaling the controller is now programmed and has exited the SETUP MODE.

NOTE: See the GLC2200 Controller Instruction manual for detailed programming instructions.

https://truckmanualshub.com/

Filling and Purging

- An automatic lubrication system must be free of air in order to generate enough pressure to cycle grease through the valves.
- Take care to ensure dirt and/or debris do not get on the grease fitting or introduced into the system.

1. Connect a pneumatically powered grease gun to the grease zerk (a) on the G3 pump. Fill the G3 pump reservoir with grease to the “MAX” line mark (b) on the front of the reservoir (FIG. 100).

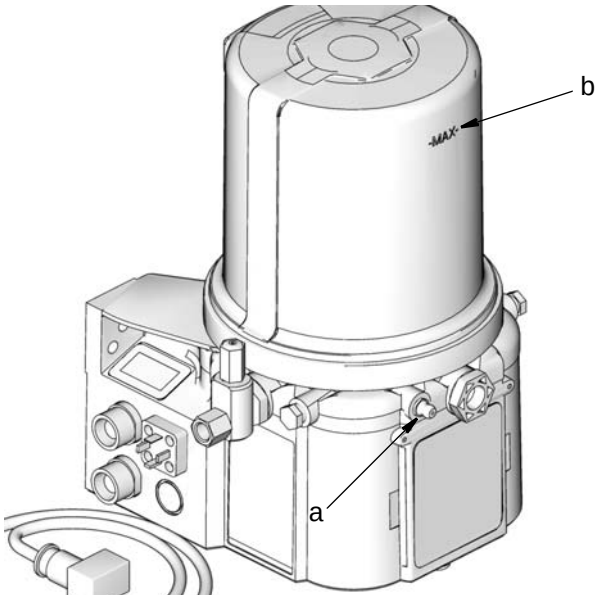

FIG. 100

2. Connect a pneumatically powered grease gun to the grease zerk (c) on the master valve to the pump (FIG. 101). Have a colleague stand next to the pump to identify when the main feed line from the pump is full and the air is purged from the line. Wrench tighten the fitting on the G3 pump, securely.

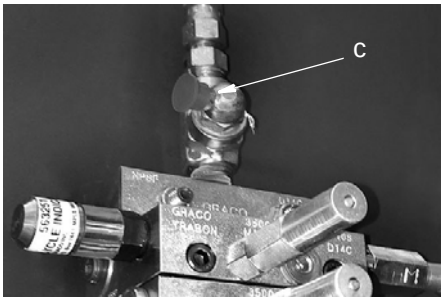

FIG. 101

3. Continue to fill the master valve and the grease lines to the secondary valves (FIG. 101). Have a colleague identify when the lines are filled and air is purged from the lines. Wrench tighten the inlet hose fittings on the secondary valves, securely.

   NOTE: Use a waste container to capture excess grease from the feed lines.

4. Connect a pneumatically powered grease gun to the grease zerk (d) on the secondary valve to fill the secondary valves and their grease lines (FIG. 102). Have a colleague stand next to the grease lines from the secondary valves to the bearing points to identify when the lines are filled and air is purged from the lines. Wrench tighten the secondary lines to the bearing points, securely.

   NOTE: Use a waste container to capture excess grease from the secondary lines.

FIG. 102

NOTE: *Photographs may include optional equipment.*

https://truckmanualshub.com/

Testing

Before testing the system:

- be sure the G3 pump reservoir is filled,
- all supply lines are connected securely,
- verify all bearing point fittings and hose connections are tight,
- valves and grease lines are filled with grease and purged of air.

1. Turn on the battery disconnect to the machine and key on power in the cab to the “Acc” position.
2. Verify the GLC2200 Controller has power.
3. Press the Manual Run button on the GLC2200 Controller to run the lube system through several lube events.

4. While the pump is running, walk around the machine and inspect all pump, valve hose fittings and bearing point connections to verify there are no leaks in the system.

WARNING

SKIN INJECTION HAZARD

High-pressure fluid from dispensing device, hose leaks, or ruptured components will pierce skin. This may look like just a cut, but it is a serious injury that can result in amputation. Get immediate surgical treatment.

- Do not put your hand over the fluid outlet.
- Do not stop or deflect leaks with your hand, body, glove, or rag.
- Follow the **Pressure Relief Procedure** included in your pump instruction manual when you stop dispensing and before cleaning, checking, or servicing equipment.
- Tighten all fluid connections before operating the equipment.
- Check hoses and couplings daily. Replace worn or damaged parts immediately.

5. If any of the fittings or connections are leaking, tighten fittings and/or make adjustments as needed.
6. Put the machine into service and manually run the lubrication system.
   - Articulate all working sections of the machine to ensure there is sufficient hose length supplied to all lubrication points.
   - Inspect all pump, valve hose fittings and bearing point connections to verify there are no leaks, the hoses are secure and that all points are receiving grease.
7. If any of the fittings or connections are leaking, tighten fittings and/or make adjustments as needed.

Routine Service and Equipment Maintenance

Every time you complete the vehicle inspection checklist, walk around the machine to inspect all pump, valve hose fittings and bearing point connections to verify there are no leaks in the system. This will ensure any damage to hoses or fittings is identified and repaired properly.

NOTE: *Photographs may include optional equipment.*

https://truckmanualshub.com/

Troubleshooting

NOTE: If the problem is not attributed to the Graco Lubrication System, consult the Komatsu Operations and Maintenance manual or your Komatsu dealer.

Problem	Cause	Solution
GLC2200 Controller does not turn on	No power to the machine	Check that the battery disconnect is ON and the keyed power is in the “Acc” position.
	GLC2200 Controller not wired correctly	Check to ensure the controller has been wired correctly by reviewing the GLC2200 Wiring Table on page 28.
GLC2200 Controller is in alarm mode; will not operate correctly	Fault is not cleared on controller	For 3 seconds, hold down the fault clear button (located on the left side of the controller). Controller fault should clear and begin OFF TIME countdown. See GLC2200 Controller instruction manual.
GLC2200 Controller goes into fault mode and displays ER:LL	G3 pump reservoir is empty	Refill G3 pump reservoir. After filling, press and hold the fault clear button on the GLC2200 controller for 3 seconds. See GLC2200 Controller instruction manual.
Audible alarm is sounding during machine operation	Machine requires service	To silence the alarm, press the fault clear button on the GLC2200 Controller for one second. Release button. The alarm will silence, but the system will remain in alarm mode until the machine is serviced.
GLC2200 Controller is in fault mode and displays ER:Cy or ER:Pr	The controller is set incorrectly programmed to run on cycles.	Reprogram controller to ON:ti. See Programming the GLC2200 Controller, page 44.
MSP Valves fail to accept grease	MSP valve not torqued to required specification or overtightened	Check MSP valve torque. Tighten if not torqued to required specification. If overtightened, adjust valve assembly and retest.

https://truckmanualshub.com/

Problem	Cause	Solution
Bearings not receiving enough grease	GLC220 Controller OFF TIME set too long.	Reset the GLC2200 Controller OFF TIME to a shorter amount of time. This will engage a lube event more frequently and increase the amount of grease the bearings receive in a day. Alternative settings: 50 minutes = 30% increase 45 minutes = 50% increase 30 minutes = 100% increase See OFF TIME setup beginning with Step 8, page 44
GLC2200 will not allow programmed time	Hours, minutes or seconds field not set correctly on GLC2200 Controller	Verify you are programming the hours, minutes, and seconds fields correctly. Refer to Programming the GLC2200 Controller instructions, page 43 or refer the GLC2200 Controller instruction manual,.
G3 Pump does not build or hold pressure	Broken hose	The kit comes with extra hoses and fittings. If a replacement hose is needed, use these extra parts to make a replacement or contact your local Graco distributor to order a replacement part.

https://truckmanualshub.com/

Parts

Part	Description
17K063	TIE, cable, 14.75" X .31" BLK
128570	HOSE, 1/8" ID, 3000 PSI (210 bar), 200 ft (60.9 m)
128573	HOSE,1/4" ID, 2750 PSI (190 bar),125 ft (38.1 m)
128579	GUARD, hose, 3/8" ID, 160 ft (48.7 m)
128582	GUARD, hose, 1/2" ID,100 ft (30.5)
24N468	CONTROL, GLC 2200
24W981	CABLE, harness, GLC 2200 10 ft (3.0 m)
96G198	PUMP, G3, 8L
17G007	KIT, GLC 2200 mounting
17K782	KIT, valves for excavator
128806	LABEL, lubrication fill port
17G422	ADAPTER, 1/8M BSPT X 1/8F NPT
17K061	FITTING, elbow,street,1/8 NPT BSPT
17K062	FITTING, adapter lg 1/8 NPT to BSPT
128561	FITTING, swivel hose,1/8" ID #4JIC
128563	FITTING, swivel hose,1/4" ID #4JIC
555749	FITTING, connector,1/4”T X 1/8”P X 7/16””
556407	FITTING, tee, male branch, 1/4”
556420	FITTING, tee stl 1/4” FP X 1/4” MP
556762	CONNECTOR, #4 JIC 1/4” MP
556763	FITTING, elbow,1/4” T X 1/8” MP
557349	PLUG, DRYSEAL 1/8” NPTF
563251	INDICATOR, cycle assy soft seal
563256	INDICATOR, reset assy 1500 PSI (103.4 bar)
100527	WASHER, plain
100840	FITTING, elbow, street
556429	FITTING, zerk
556402	FITTING, reducer, 1/4 x 1/8 NPT(f), hex
102040	NUT, lock, hex
102547	SCREW, cap, hex hd

Part	Description
111040	NUT, lock, insert, nylock, 5/16”
127512	STUD, weld, 1/4”-20 X 0.710
127514	STUD, weld, 1/4”-20 X 1.2”
127515	CLAMP, hose, OD 1.50”
128006	CLAMP, hose, 0.375” OD
556408	FITTING, nipple 1/4” x 1/8” stl hex
557875	CAP, dust 3/4”
557896	STUD, fill 1/4” NPTF
557950	FITTING, union, blk hd, 5/8” X 1/8”
17K485	CAP, dust, zerk
560540	COUPLING, anchor str 1/8”
15K783	FITTING, elbow, street, 1/8”
17D024	STUD, weld, 1/4”-20 X 2”
125910	BRACKET, pump, windmill
557264	FUSE, blade type 5 AMP
102814	GAUGE, pressure, fluid
563161	VALVE, relief, 3000 psi (210 bar) assy
571041	KIT, acc, pump element
571058	KIT, accessory, output adapter
17D688	HOLDER, fuse, add a circuit
556872	LABEL, identification, blank

NOTE: *Photographs may include optional equipment.*

https://truckmanualshub.com/

Notes

https://truckmanualshub.com/

For additional information about these Graco products; including Warnings, Troubleshooting, and Technical Data refer to the Graco instruction manuals included with the equipment or visit the Graco website at www.graco.com to download the latest versions of Graco instruction manuals.

NOTE: *Photographs may include optional equipment.*