TS2712EN

Troubleshooting Manual

Allison Transmission Electronic Control

OCTOBER 1994

Allison Transmission
Division of General Motors Corporation
P.O. Box 894 Indianapolis, Indiana 46206-0894
www.allisontransmission.com

Printed in U.S.A.

© 1994 General Motors Corp.

ALLISON TRANSMISSION ELECTRONIC CONTROLS TROUBLESHOOTING MANUAL

NOTE

This publication is revised periodically to include improvements, new models, special tools, and procedures. Revision is indicated by letter suffix to publication number. Check with your Allison Transmission service outlet for currently applicable publication. Additional copies of this publication may be purchased from authorized Allison Transmission service outlets. See your yellow pages under Engines—Diesel or Transmissions—Truck, Tractor, etc.

COPYRIGHT 1994 GENERAL MOTORS CORP.

IMPORTANT SAFETY NOTICE

It is your responsibility to be completely familiar with the warnings and cautions described in this manual. These warnings and cautions advise against the use of specific service methods that can result in personal injury, damage to equipment, or cause the equipment to be unsafe. It is, however, important to understand that these warnings and cautions are not exhaustive. Allison Transmission could not possibly know, evaluate, and advise the service trade of all conceivable ways in which service might be done or of the possible hazardous consequences of each way. Consequently, Allison Transmission has not undertaken any such broad evaluation. Accordingly, ANYONE WHO USES A SERVICE PROCEDURE OR TOOL WHICH IS NOT RECOMMENDED BY ALLISON TRANSMISSION MUST first be thoroughly satisfied that neither personal safety nor equipment safety will be jeopardized by the service methods selected.

Proper service and repair is important to the safe, reliable operation of the equipment. The service procedures recommended by Allison Transmission and described in this service manual are effective methods for performing service operations. Some of these service operations require the use of tools specially designed for the purpose. The special tools should be used when and as recommended.

WARNINGS, CAUTIONS, AND NOTES

Three types of headings are used in this manual to attract your attention.

WARNING: Is used when an operating procedure, practice, etc., which, if not correctly followed, could result inpersonal injury or loss of life.

CAUTION: Is used when an operating procedure, practice, etc., which, if not strictly observed, could result in damage to or destruction of equipment.

NOTE: **Is used when an operating procedure, practice, etc., is essential to highlight.**

COPYRIGHT 1994 GENERAL MOTORS CORP.

ALLISON TRANSMISSION ELECTRONIC CONTROLS TROUBLESHOOTING MANUAL

FOREWORD — (How to Use This Manual)

This manual provides the technician with the most current information for troubleshooting the Allison Transmission Electronic Control.

There are two generations of Electronic Control. This document focuses on the first generation. It covers the following on- and off-highway transmission models:

On-Highway	**Off-Highway**
MT(B) 648	CLBT 5962 and 6062
HT(B) 741, 746 and 748	DP 8963
HT(B) 755CR and 755DR	CL(B)T 9681
V 731, V 731RH, VR 731, VR 731RH	CLT 755 and CL(B)T 755

Allison's second generation Electronic Control is mandatory for all Allison World Transmissions. Refer to the World Transmission Troubleshooting Manual when troubleshooting WT transmissions.

This manual is divided into sections and includes:

- Definitions and descriptions of commonly used terms and abbreviations.
- An overview of system operation.
- Component installation and adjustment procedures.
- Vehicle interface wiring procedures and a description of available electronic options.
- A description of the system's self-diagnostic capabilities.
- Detailed procedures for troubleshooting diagnostic codes.
- Procedures for troubleshooting intermittent diagnostic codes.
- Troubleshooting procedures when codes are not present.
- Additional information regarding connector and terminal repair, connector terminal designations, and hydraulic and electrical schematics.

To be an effective troubleshooter, you must understand how the Electronic Control operates. Review the Operational Overview, Component Installation and Adjustment, Vehicle Interface and Electronic Options, and Self-Diagnostics sections carefully.

Once you understand system components and operation, refer to the appropriate troubleshooting section (Codes Present, Intermittent Codes, or No Codes). Each section overviews the troubleshooting process, and explains how to proceed using additional information located in the Appendices.

In some instances, you may need to refer to specific Repair Manuals or Parts Catalogs for the latest repair procedures and replacement part numbers. Service Information Letters (SIL's) are sometimes published to provide additional service information. Use these resources to stay informed and updated.

COPYRIGHT 1994 GENERAL MOTORS CORP.

ALLISON TRANSMISSION ELECTRONIC CONTROLS TROUBLESHOOTING MANUAL

TABLE OF CONTENTS

DEFINITIONS AND ABBREVIATIONS v

OPERATIONAL OVERVIEW

Introduction 1-1
Applications 1-2
Electronic Control Unit (ECU) 1-3
Programmable Read Only Memory (PROM) 1-4
Output Speed Sensor 1-5
Throttle Position Sensor 1-6
Shift Selectors 1-8
Reverse and Forward Pressure Switches 1-9
Oil Pressure Switches/Sensors 1-10
Temperature Sensor 1-12
Chassis Wiring Harness 1-13
Cab Wiring Harness 1-14
Secondary Wiring Harness 1-15
Electro-Hydraulic Valve Body 1-16
Solenoids 1-17
Typical On-Highway Fluid Flows 1-19
Typical Off-Highway Fluid Flows 1-29

COMPONENT INSTALLATION AND ADJUSTMENT

Introduction 2-1
Electronic Control Unit (ECU) 2-2
Programmable Read Only Memory (PROM) 2-3
Output Speed Sensor 2-4
Throttle Position Sensor 2-5
Shift Selectors 2-8
Wiring Harnesses 2-11

VEHICLE INTERFACE

Introduction 3-1
Electronic Control Inquiry System 3-1
Mandatory Vehicle Interface 3-2
Optional Cab Harness Interface 3-12
Optional Secondary Harness Interface 3-28

SELF-DIAGNOSTICS 4-1

TROUBLESHOOTING–TROUBLE CODES PRESENT 5-1

TROUBLESHOOTING–INTERMITTENT TROUBLE CODES 6-1

TROUBLESHOOTING–NO TROUBLE CODES PRESENT 7-1

COPYRIGHT 1994 GENERAL MOTORS CORP.

ALLISON TRANSMISSION ELECTRONIC CONTROLS TROUBLESHOOTING MANUAL

TABLE OF CONTENTS

APPENDIX A–TROUBLESHOOTING STEPS–TROUBLE CODES PRESENT A-1

APPENDIX B–TROUBLESHOOTING STEPS–NO TROUBLE CODES PRESENT B-1

APPENDIX C–CONNECTOR, TERMINAL, AND WIRE REPAIR C-1

APPENDIX D–ADDITIONAL TERMINAL DESIGNATIONS D-1

APPENDIX E–ELECTRICAL SCHEMATICS E-1

APPENDIX F–HYDRAULIC SCHEMATICS F-1

APPENDIX G–SPECIAL TOOLS G-1

APPENDIX H–DIAGNOSTIC CODE BACKGROUND INFORMATION H-1

COPYRIGHT 1994 GENERAL MOTORS CORP.

DEFINITIONS AND ABBREVIATIONS

Allison Transmission Electronic Control System — The complete electronic control system for the transmission, including all detail components.

Bi-Directional Communication Link (BDCL) — Hard wire connections which allow the Allison Electronic Control system to communicate with other engine or transmission controls.

Check Transmission Light — Optional instrument panel warning light that alerts the operator that a problem has occurred and the vehicle should be serviced as soon as possible. Also used by the technician to read diagnostic codes when a diagnostic data reader is not used.

Detroit Diesel Electronic Controls (DDEC) — Detroit Diesel's electronic engine control system.

Diagnostic Codes (Trouble Codes) — Two-digit codes stored in the electronic control ECU memory. These codes are set when system self-diagnostics detects problems. Technicians access codes and use them to help troubleshoot problems.

Diagnostic Data Link (DDL) — Cab harness connector which allows a diagnostic data reader to interface with the Allison Electronic Control system.

Digital Display Unit (DDU) — Optional electronic component that displays various system operating and warning information.

Digital Volt Ohmmeter (DVOM) — Electrical device used for performing voltage, continuity and resistance tests.

Do Not Shift Light — Warning lamp located on the shift selector. This indicator alerts the driver that a potentially serious problem has been detected and shift selection has been limited.

Electronic Control Inquiry System (ECIS) — On-line data base (available through Distributor Parts Departments) that indicates which options are programmed on a particular PROM.

Electronic Control Unit (ECU) — The Allison Electronic Control system onboard microcomputer. This is the electronic "brain" for the system.

Fluidic Oil Level Sensor (FOLS) — One of the three types of switches that signal the ECU when a low lube pressure or low oil level condition exists. The FOLS uses a separate housing that bolts to the bottom of the valve body. It is very similar to the Low Oil Pressure/Level Sensor, but does not use a bi-metal strip.

Infinity (∞) — An indication that circuit or component resistance is so high it can not be measured. Generally, this means continuity is not present (the circuit is open).

Jumper Wire — A short piece of wire used to connect two electrical circuits or bypass a portion of a circuit.

Low Oil Level/Pressure Sensor — One of the three types of switches that signal the ECU when a low lube pressure or low oil level condition exists. The Low Oil Level/Pressure Sensor uses a separate housing that bolts to the bottom of the valve body. It is very similar to the Fluidic Oil Level Sensor and uses a bi-metal strip to compensate for cold oil temperatures until the transmission warms up.

Lube Pressure Switch — One of the three types of switches that signal the ECU when a low lube pressure or low oil level condition exists. The Lube Pressure Switch is configured like the forward and reverse pressure switches. It plumbs directly into the lubrication oil passage.

Ohm (Ω) — A unit of electrical resistance measurement.

COPYRIGHT 1994 GENERAL MOTORS CORP.

DEFINITIONS AND ABBREVIATIONS

Options — Programmed special features. Examples — Bed Hoist Interlock, Loading Hold, Neutral-To-Range Inhibit, etc. Options must be programmed in the PROM and properly wired.

Programmable Read Only Memory (PROM) — This is the microchip that contains all the transmission shift and control information. The PROM is located in the ECU.

Power Take-Off (PTO) — Transmission-mounted accessory drive unit. PTOs are used to operate pumps and other accessories on specialty vehicles.

Self-Diagnostics — The Allison Transmission Electronic Control's built-in capability to recognize system problems.

Solenoid — Components in the electro-hydraulic valve body that act as switches to direct hydraulic pressure into specific passages or to exhaust.

Speed Sensor (Output Speed Sensor) — Provides the electronic control system with output speed information. The speed sensor replaces the conventional hydraulic governor system.

Splice — A connection of two or more wires. When repairing harness wires, they are spliced using special butt connectors.

Temperature Sensor — Monitors sump oil temperature for the ECU. On-highway sensors are mounted on the solenoid control circuit (on the internal wiring harness). Off-highway sensors are mounted in the lock-up valve body.

Throttle Position Sensor (TPS) — Provides the electronic control system with throttle position information. The TPS replaces the conventional hydraulic modulator system.

Transmission Engine Communication Link (TECL) — A type of Bi-Directional Communication Link (BDCL) that allows the Allison Transmission Electronic Control to communicate with engine controls.

Transmission Test Switch — Vehicle manufacturer-installed switch that places the electronic control system in its diagnostic mode. When the switch is on, trouble codes can be retrieved.

Transmission to Transmission Communication Link (TTCL) — A type of Bi-Directional Communication Link (BDCL) that allows the Allison Transmission Electronic Control to communicate with other transmission controls.

Vehicle Interface — Term describing the electrical connections between the vehicle and the Allison Transmission Electronic Control system.

COPYRIGHT 1994 GENERAL MOTORS CORP.

OPERATIONAL OVERVIEW

INTRODUCTION

The Allison Transmission Electronic Control provides the shifting “thought” process for several Allison transmissions. Electronically-controlled transmissions use the same clutch and planetary gear components as conventional transmissions, but utilize a digital electronic system to control the transmission hydraulics.

The Electronic Control uses an electro-hydraulic valve body. The hydraulic circuits within the electro-hydraulic valve body are controlled by solenoids. These solenoids take the place of conventional on-highway shift signal valves and off-highway solenoids. They are switched on and off by signals from the Electronic Control Unit (ECU).

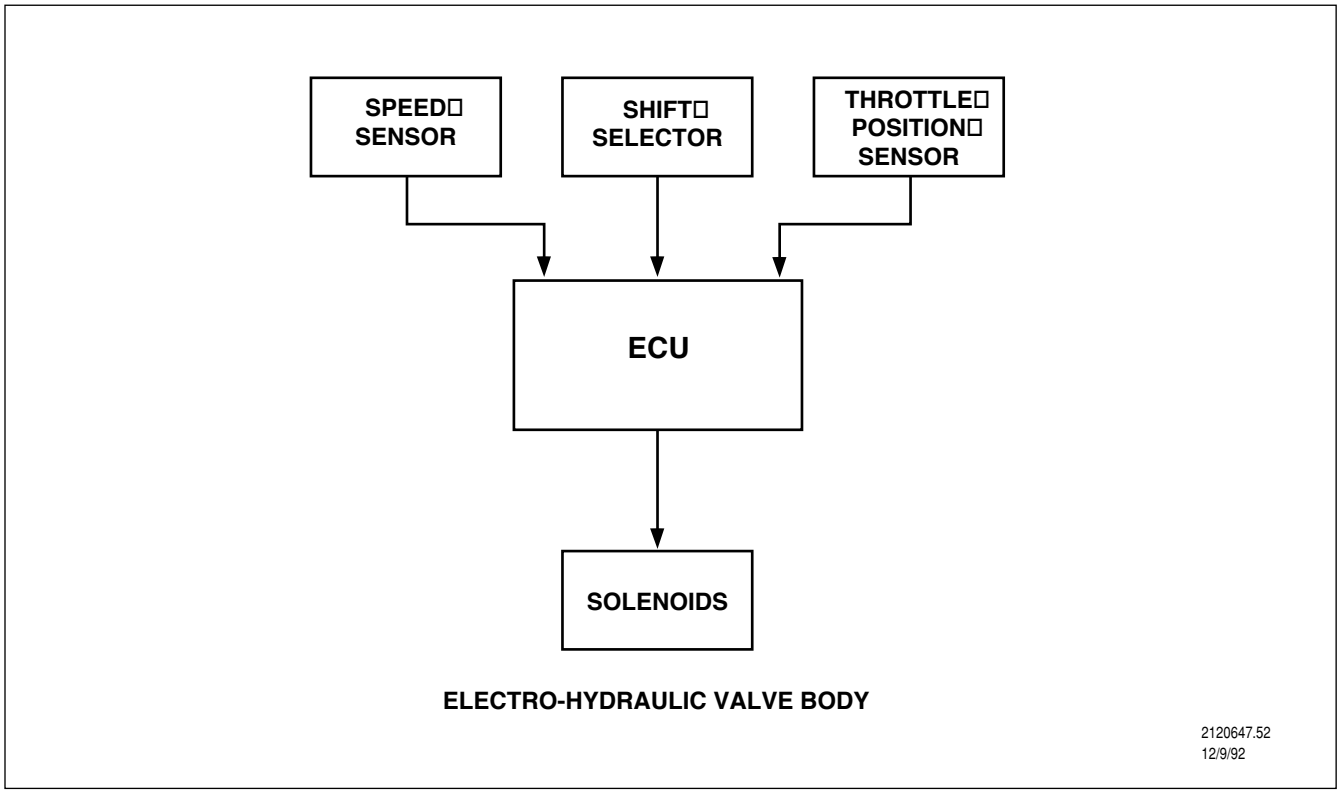

Electronic Control System

The Electronic Control needs “sensing” input. Speed sensor input replaces governor pressure. Throttle position sensor input replaces on-highway modulator pressure. Mechanical shift selector components are replaced by electronic push button or lever selectors. And the Electronic Control Unit (ECU) also receives input from a temperature sensor and various pressure switches.

The Electronic Control can be designed with a variety of operational options. Hard wiring between the Electronic Control and the vehicle is called “interface.” Some interface wires provide input signals to the ECU, often to enable a specific option. Other interface wires are used for signals sent from the ECU to various Electronic Control and vehicle components. The entire system communicates and interfaces through a series of wiring harnesses.

COPYRIGHT 1994 GENERAL MOTORS CORP.

APPLICATIONS

The transmission model number indicates when a transmission is equipped with the Electronic Control. On-highway models that are equipped with the Electronic Control include the following:

- MT(B) 648
- HT 746
- HT(B) 741 and HT(B) 748
- HT(B) 755CR and HT(B) 755DR
- V 731, V 731RH, VR 731, and VR 731RH

These units are commonly found in delivery, refuse, bus, and emergency vehicles.

The following off-highway models are equipped with the Electronic Control:

- CLBT 5962 and 6062
- DP 8963
- CL(B)T 9681
- CL(B)T 755

These units are often found in dump trucks, scrapers, oil field equipment, and agricultural and logging vehicles.

COPYRIGHT 1994 GENERAL MOTORS CORP.

ELECTRONIC CONTROL UNIT (ECU)

The ECU is an onboard microcomputer. It receives information through a wiring harness from a variety of sources. Based on this information and the system configuration, the ECU controls special features and determines how and when shifts occur.

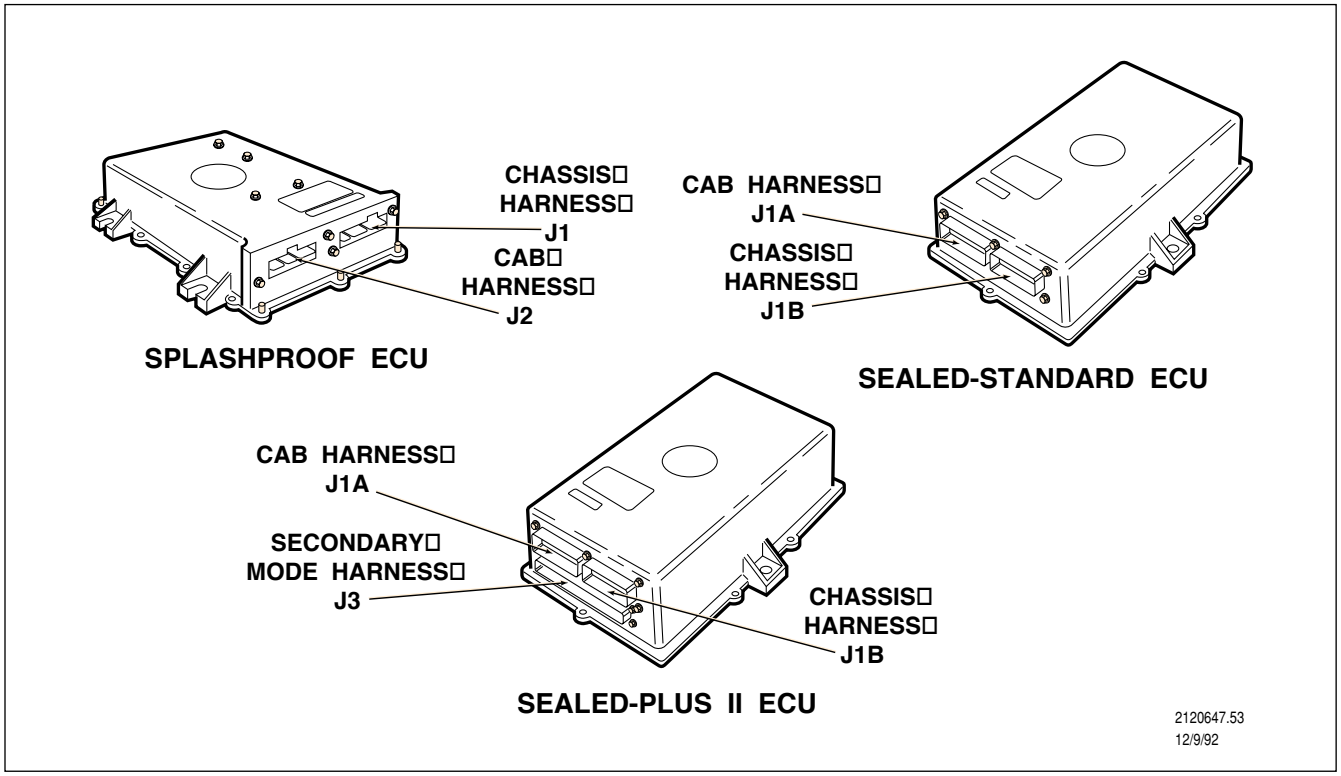

Types of ECUs

There are three types of ECU's:

- Splash Proof - this is the earliest model, no longer in production.
- Sealed Standard - replaced the Splash Proof model.
- Sealed Plus II - this unit includes an additional connector to accommodate a secondary shift selector and capabilities for additional special features.

The ECU is a sealed component. The only field service performed on the ECU is Programmable Read Only Memory (PROM) chip replacement. The ECU has self-diagnosis capabilities - if an Electronic Control problem is detected, the ECU can store pertinent information in the form of diagnostic codes.

COPYRIGHT 1994 GENERAL MOTORS CORP.

PROGRAMMABLE READ ONLY MEMORY (PROM)

The PROM is the ECU's data bank. Different PROMs are available for a wide variety of vehicle and equipment applications and special features.

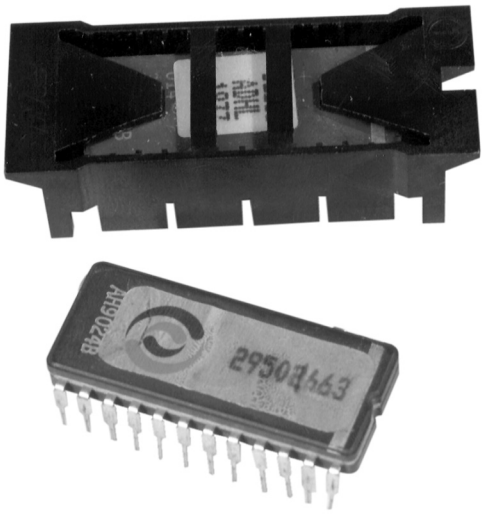

2120647.54
12/19/92

PROM and Retainer (top), PROM (bottom)

The PROM is located inside the ECU, accessed through a cover in the ECU case. PROMs with specific features are available from Allison, and installing the wrong PROM can alter the Electronic Control performance.

COPYRIGHT 1994 GENERAL MOTORS CORP.

OUTPUT SPEED SENSOR

The output speed sensor provides the Electronic Control with output speed information. It replaces the conventional hydraulic governor system and is located at the rear of the transmission.

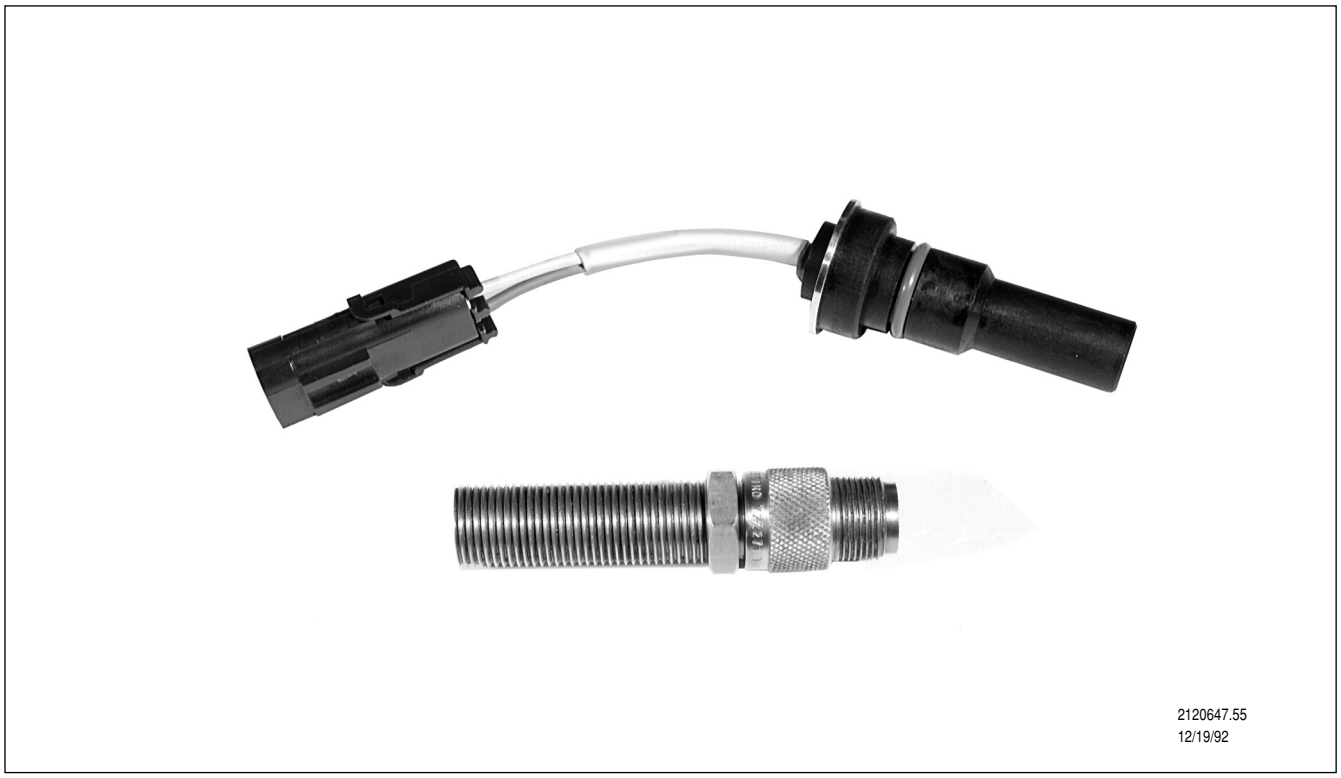

On-Highway Output Speed Sensor (top) and Off-Highway Output Speed Sensor (bottom)

The output speed sensor has a magnetic pick-up that “reads” the movement of a speed sensor gear located on the transmission output shaft. Output shaft rotation causes the speed sensor gear teeth to pass through a magnetic field at the end of the sensor. As each tooth passes, it creates an electrical pulse which is directed to the ECU. The ECU uses this signal to help control upshifts, downshifts, retarder application and lock-up clutch application.

The on-highway speed sensor uses a 16-tooth gear, and the off-highway speed sensor uses 39 or 41-tooth gears, depending on transmission model.

COPYRIGHT 1994 GENERAL MOTORS CORP.

THROTTLE POSITION SENSOR

The throttle position sensor replaces the conventional hydraulic modulator pressure valve and related circuits. It consists of a pull actuation cable and a linear potentiometer. One end of the cable is attached to the engine fuel lever and the other end is attached to the potentiometer inside the sensor's protective housing.

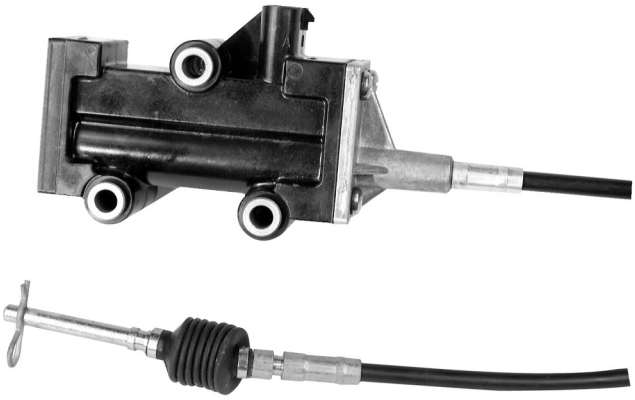

2120647.56
12/19/92

Throttle Position Sensor and Cable

Throttle movement causes a change in the electronic signal to the ECU. The ECU is programmed to recognize the signal as "percent of throttle." The sensor linear potentiometer converts throttle movement into a voltage signal. As the wiper moves across the resistive strip, resistance changes, varying the voltage the ECU sees or "counts."

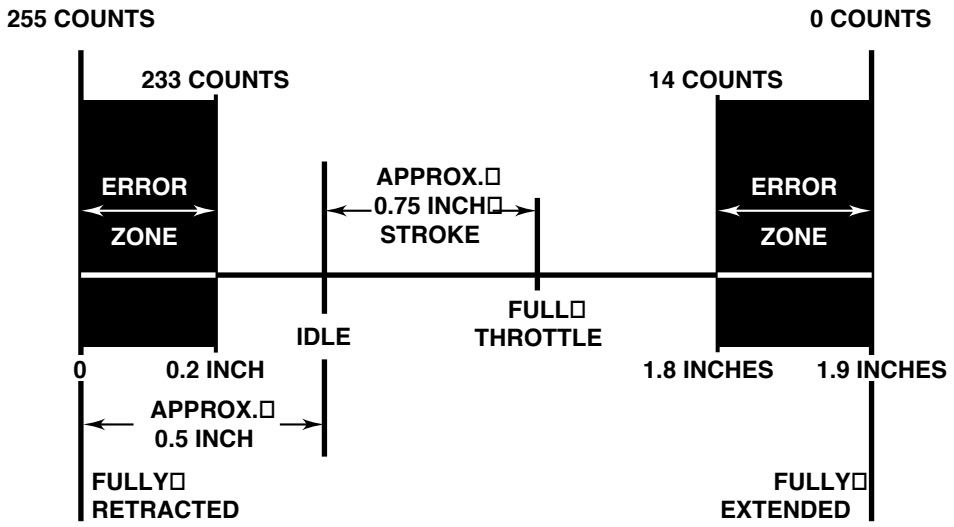

2120647.57
12/10/92

TPS Movement and Electronic "Counts"

COPYRIGHT 1994 GENERAL MOTORS CORP.

THROTTLE POSITION SENSOR

The throttle position sensor produces anywhere from 0 to 255 counts, although its actual movement is only a small area within those counts (total sensor travel is about 2 inches, but actual sensor travel when properly installed is only about 3/4 inch). If the sensor produces 233 or more counts at idle, it is said to be in an "error zone." If the sensor produces 14 or fewer counts at full throttle, the sensor is within an error zone. Either of these conditions logs a diagnostic code in the ECU memory and causes full throttle shift points.

Once initial adjustment is performed, the throttle position sensor is "self-adjusting." Every time the vehicle is started and the ECU is initialized, the sensor is re-calibrated. The ECU stores the sensor readings at vehicle shut-down. When the ECU is powered, idle counts are decreased by 15 from the previous reading, and full throttle counts are increased by 15 from the previous reading. This narrowed count band is widened once the operator steps on the throttle. The ECU reads actual sensor travel and continually re-adjusts to the highest and lowest counts it sees. This compensates for minor cable, mounting, and component wear.

When the throttle is wide open, the ECU commands upshifts to occur near the engine governed speed. Part throttle causes upshifts to occur at lower engine speeds. The difference between full throttle and part throttle upshifts is determined by the shift calibration in the PROM.

NOTE: When the Allison Transmission Electronic Control is interfaced with DDEC, both systems share the same throttle position sensor signal (from the engine). DDEC II sensor interface is provided by a non-Allison supplied interface module. Two levels of DDEC II interface are available, a Basic Interface (which provides only throttle position sensor information) and a Maximum Feature Interface (which provides additional communication signals). Refer to the Vehicle Interface section of this manual for more information.

COPYRIGHT 1994 GENERAL MOTORS CORP.

SHIFT SELECTORS

The Electronic Control uses two general types of shift selectors -push button and lever.

Push Button Shift Selector

Lever Shift Selector

Earlier push button selectors had a membrane switch, and new style selectors use a snap dome switch.

Lever selectors operate using Hall Effect magnetic switches. The Hall Effect switch is a sensor which detects a magnetic field. The magnetic system responds to the physical quantity to be sensed – in our case, the position of the lever shift selector. General features include true solid state, long life, contactless operation and broad temperature range. The lever selector has up to eight positions, and shift patterns and detent mechanisms vary between applications. These electronic components replace conventional shift selector mechanisms and linkages.

COPYRIGHT 1994 GENERAL MOTORS CORP.

REVERSE AND FORWARD PRESSURE SWITCHES

The on-highway Electronic Control uses pressure switches to communicate signals to the ECU.

Reverse and forward pressure switches indicate when the transmission is in reverse or a forward range. They can be either of two styles (threaded and bolt down) and plumb directly into clutch apply circuits.

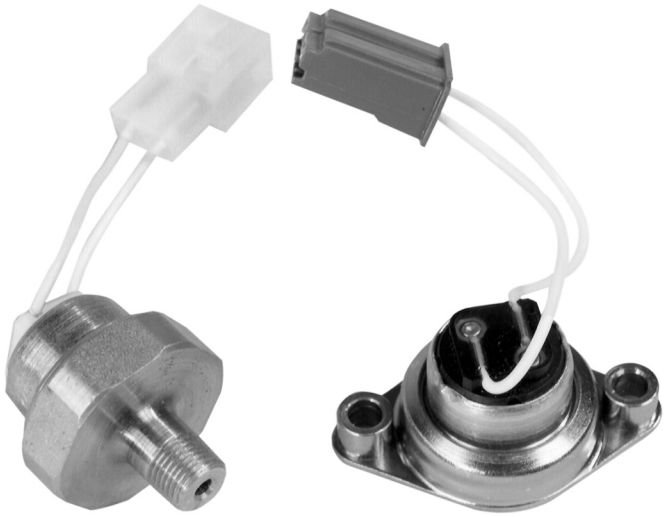

Threaded and Bolt-Down Pressure Switches

COPYRIGHT 1994 GENERAL MOTORS CORP.

OIL PRESSURE SWITCHES/SENSORS

The oil pressure switch signals the ECU when a low lube pressure or low oil level condition exists. There are three different types of oil pressure switches – the lube pressure switch, the low oil level/pressure sensor and the fluidic oil level sensor. The transmission will only be equipped with one of these switches. The transmission assembly number determines the original switch for the transmission, but the parts catalog identifies the latest switch available for service. The PROM and the chosen switch must be compatible (the PROM must be programmed for the type of switch used).

The lube pressure switch is configured like the forward and reverse pressure switches and plumbs directly into a lubrication oil passage. The lube pressure switch is normally open, and lube pressure closes the switch. When lube pressure is low, the switch opens. When other relevant parameters have been met, this generates a trouble code.

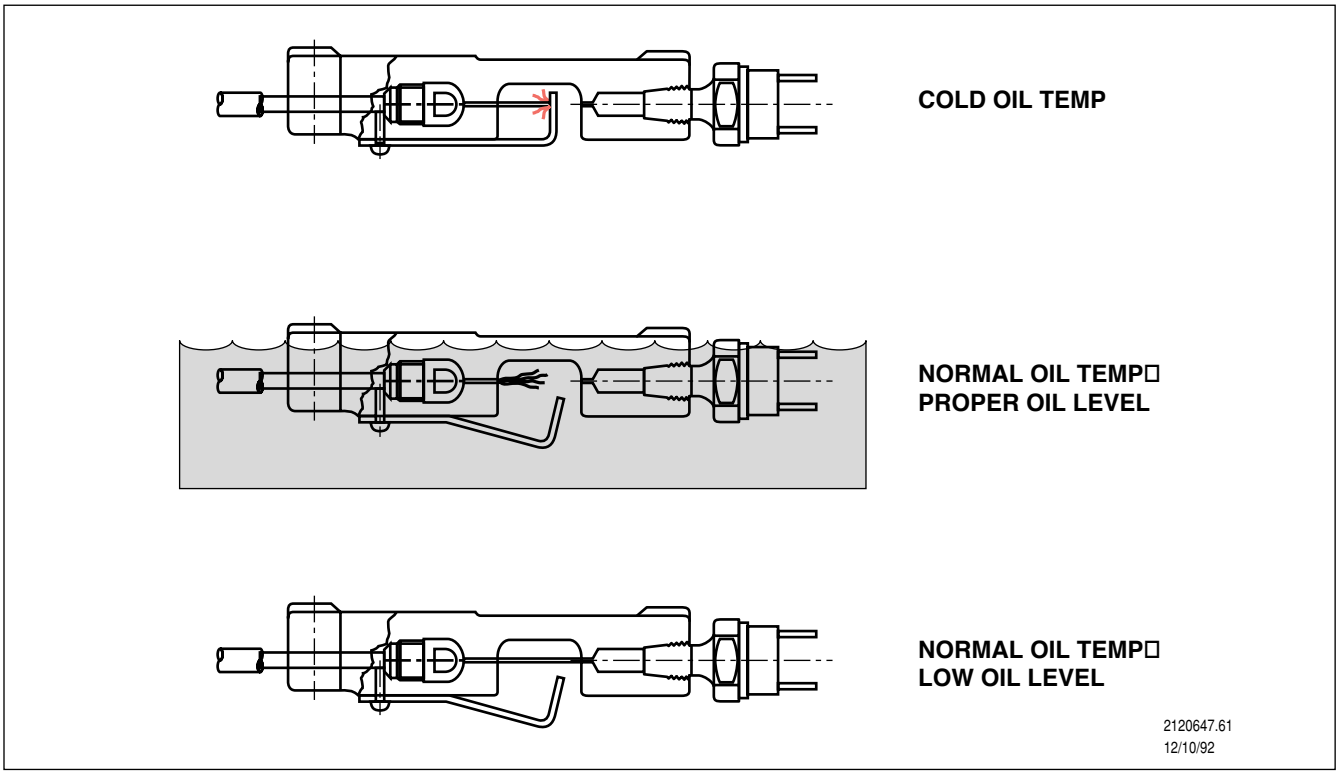

Low Oil Level/Pressure Sensor

The low oil level/pressure sensor uses a separate housing that bolts to the bottom of the valve body. An orifice in the sensor housing produces a pressurized stream of oil that is directed to a switch on the opposite side of the housing. A bi-metal strip compensates for oil level changes as the transmission warms up. The strip blocks the flow of pressurized oil until the oil is warm. This allows the oil level to rise before a trouble code is generated. As the transmission warms, the bi-metal strip moves out of the way. The low oil level/pressure sensor is normally open, and if oil still reaches the switch after the transmission is warm, the switch closes, generating a code. Pressurized oil can only reach the switch if the warm oil level in the pan is too low. If the oil level is correct, it blocks the flow of pressurized oil.

COPYRIGHT 1994 GENERAL MOTORS CORP.

PRESSURE SWITCHES/SENSORS

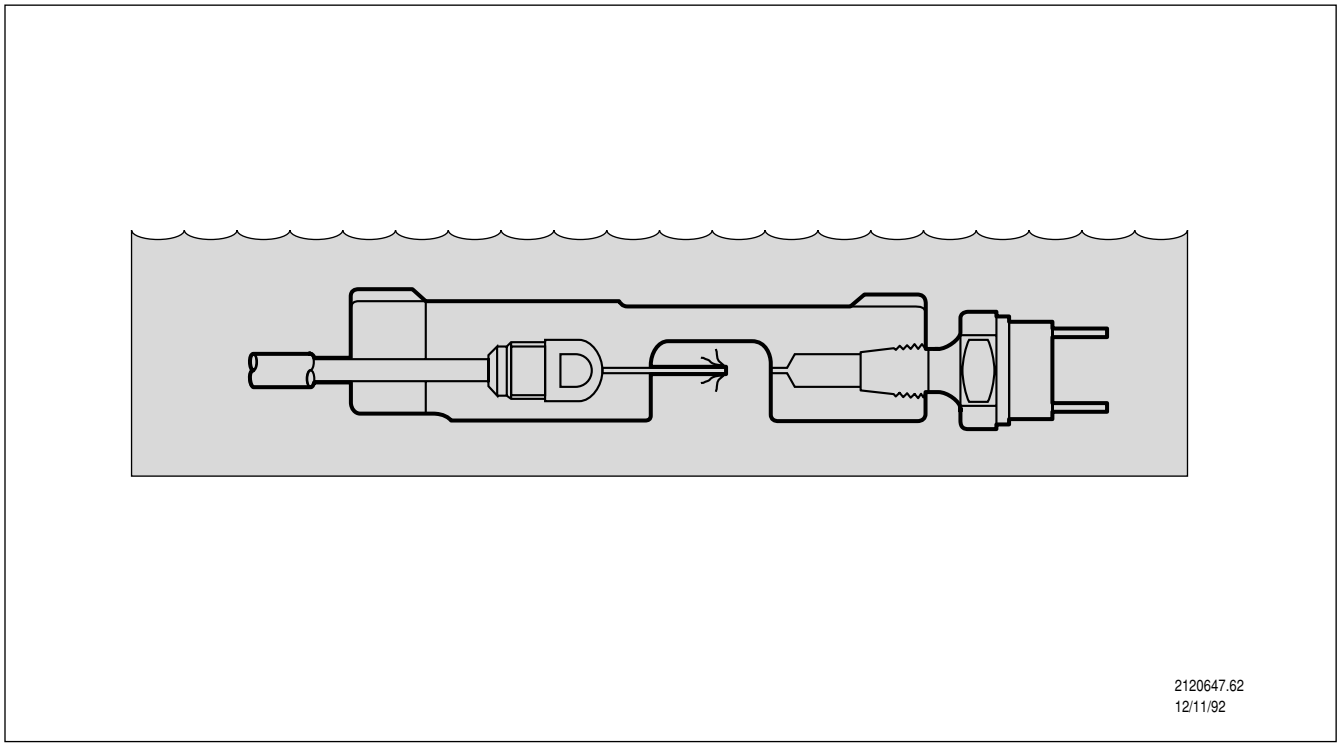

Fluidic Oil Level Sensor

The fluidic oil level sensor is similar to the low oil level/pressure sensor. The primary physical difference is the absence of the bi-metal strip. The ECU is programmed to ignore low oil level signals until the temperature sensor indicates the oil in the sump is warm. This eliminates the need for the bi-metal strip. The fluidic oil level sensor is normally closed, and when pressurized oil contacts the pressure switch during normal operating temperatures, the switch contacts open, generating a trouble code.

COPYRIGHT 1994 GENERAL MOTORS CORP.

TEMPERATURE SENSOR

The temperature sensor is part of the internal valve body wiring harness and monitors sump oil temperature for the ECU. On-highway sensors are mounted in the internal wiring harness. Off-highway sensors are mounted in the lockup valve body.

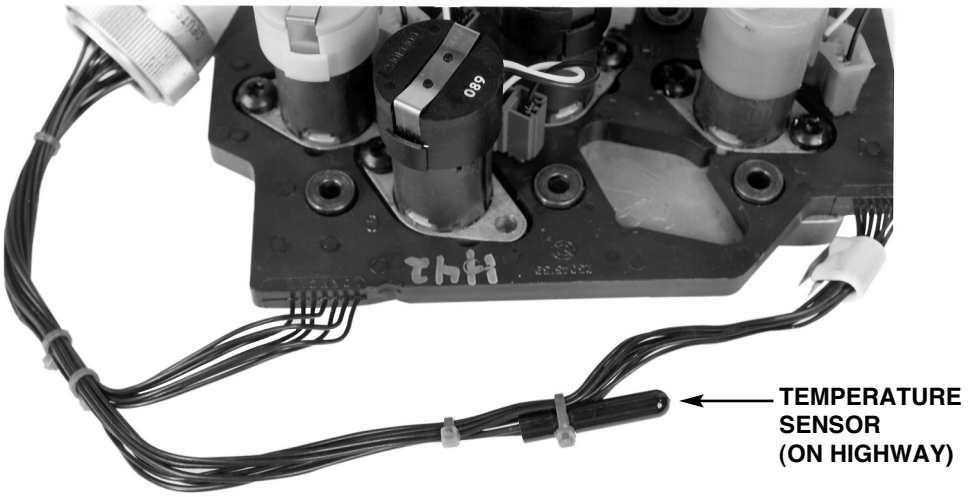

Temperature Sensor

When oil temperature is below -25 degrees (F), all shifts are blocked. When oil temperature is between -25 degrees (F) and 25 degrees (F), transmission shifting is limited to neutral, 1st and reverse. Above 270 degrees (F), the Hot light comes on (if equipped), a trouble code is stored in memory and the highest gear is blocked for on-highway models. The highest two gears are blocked for off-highway models. Some applications (emergency vehicles, for example) are often exempt from shift inhibit during temperature extremes, but the Check Transmission light may still come on and codes may be logged in the ECU memory.

COPYRIGHT 1994 GENERAL MOTORS CORP.

CHASSIS WIRING HARNESS

The chassis harness connects the throttle position sensor, output speed sensor and electro-hydraulic valve body to the ECU.

Bulkhead Connector, ECU Connector, Output Speed Sensor Connector, and the TPS Connector (from left to right)

Special connectors allow the harness to plug into each component. The wire numbers within the chassis harness are all 100 series numbers (111, 114, etc.).

COPYRIGHT 1994 GENERAL MOTORS CORP.

CAB WIRING HARNESS

The cab harness connects the shift selector and interface components to the ECU. The wire numbers within the cab harness are all 200 series wires (201, 224, etc.).

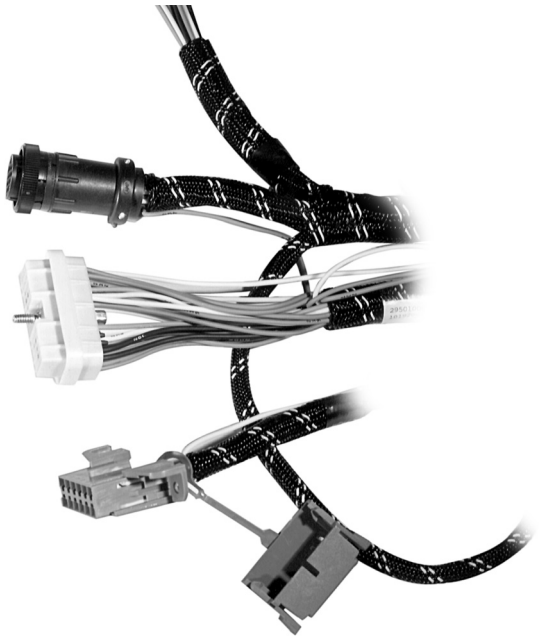

Shift Selector Connector, ECU Connector, and DDL Connector (from top to bottom)

The harness can include loose interface wires, or a factory-supplied interface connector. The Diagnostic Data Link (DDL) connector is part of the cab harness. Service personnel can plug a diagnostic reader into this connector to monitor trouble codes and system operation.

The cab harness also includes Bi-Directional Communication Link (BDCL) wires. BDCL allows the Electronic Control to communicate with DDEC I equipped vehicles.

COPYRIGHT 1994 GENERAL MOTORS CORP.

SECONDARY WIRING HARNESS

The Sealed Plus II ECU is equipped to handle several additional optional features. These options are wired through the secondary harness. The wire numbers within the secondary harness are all 300 series wires (309, 317, etc.).

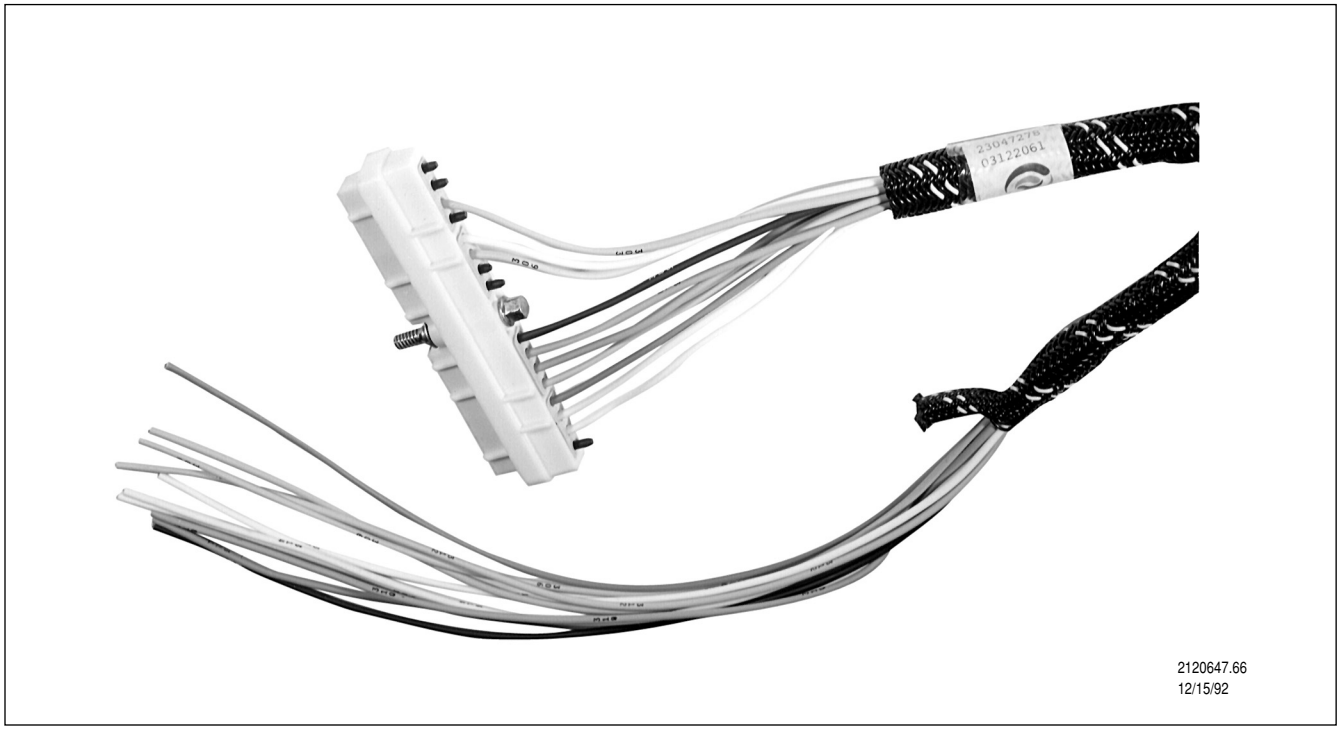

Secondary Harness and Connector

The secondary harness can also connect a secondary shift selector to the ECU. The secondary wiring harness is only used on Sealed Plus II ECU's.

COPYRIGHT 1994 GENERAL MOTORS CORP.

ELECTRO-HYDRAULIC VALVE BODY

An Electronically-Controlled transmission's hydraulic circuits and valves are controlled by a series of solenoids mounted on the transmission's electro-hydraulic valve body. These solenoids are activated and deactivated by electrical signals generated by the ECU.

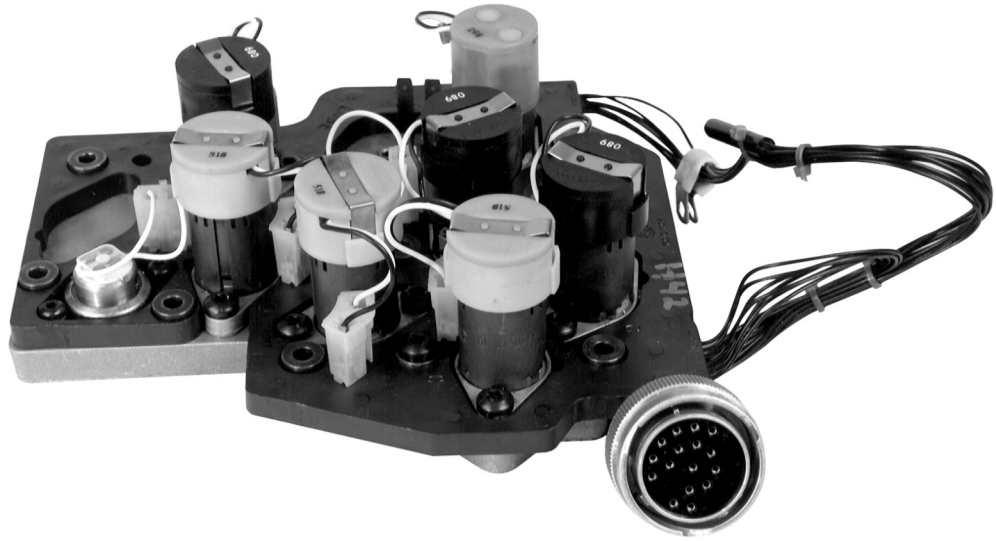

Typical On-Highway Solenoids

The on-highway valve body also contains the forward and reverse pressure switches and one type of oil level or pressure sensor (lube pressure switch, low oil level/pressure sensor or fluidic oil level sensor).

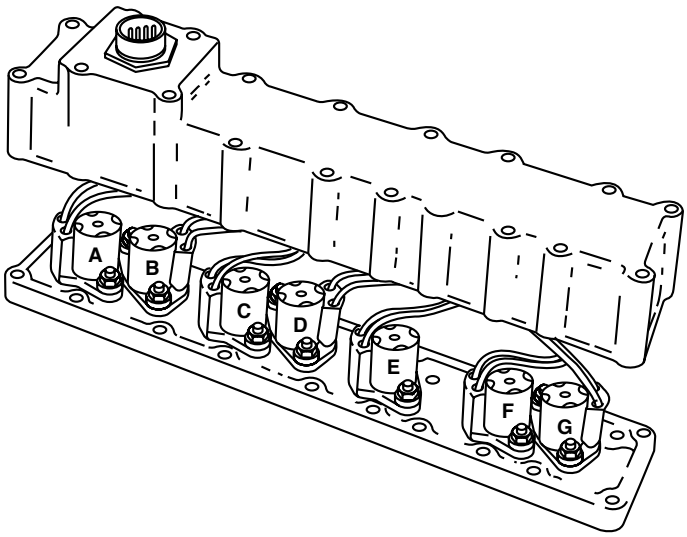

Typical Off-Highway Solenoids

COPYRIGHT 1994 GENERAL MOTORS CORP.

SOLENOIDS

Solenoids in the electro-hydraulic valve body act as switches to direct hydraulic pressure into specific passages or to exhaust. Each solenoid is positioned on the valve body so that solenoid pressure flows to its inlet port.

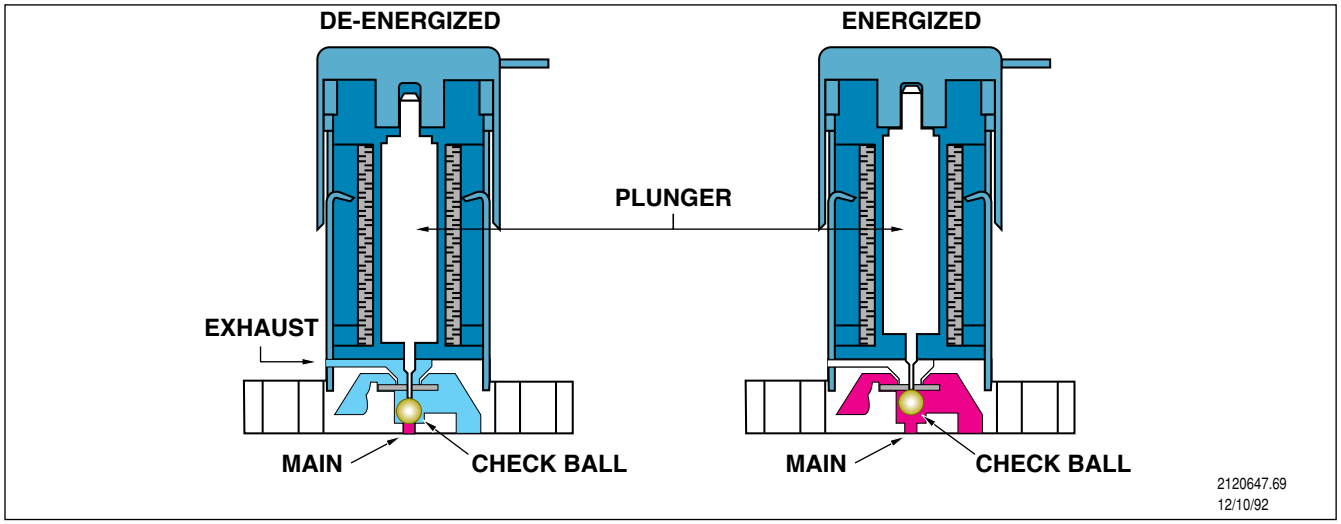

Solenoid (sectional view) — On-Highway

The inlet port is regulated by check ball position. When the solenoid is de-energized, the check ball is held down by a plunger, blocking the oil pressure port. In this position, solenoid pressure located above the ball exhausts. When the solenoid is electrically energized, the plunger moves up, allowing the check ball to move. This blocks the exhaust port and allows oil pressure to pass through.

The Electronic Control uses two general types of solenoids - latching and non-latching. When latching solenoids are energized, they move one direction and stay there until they receive another signal. Only a short application of power is required to position the solenoid and it stays in that position until it is energized again.

Non-latching solenoids require constant power to remain in position. When power is applied, the non-latching solenoid moves into position and stays there as long as it remains energized.

On-highway solenoids can be either latching or non-latching. Off-highway solenoids are always non-latching.

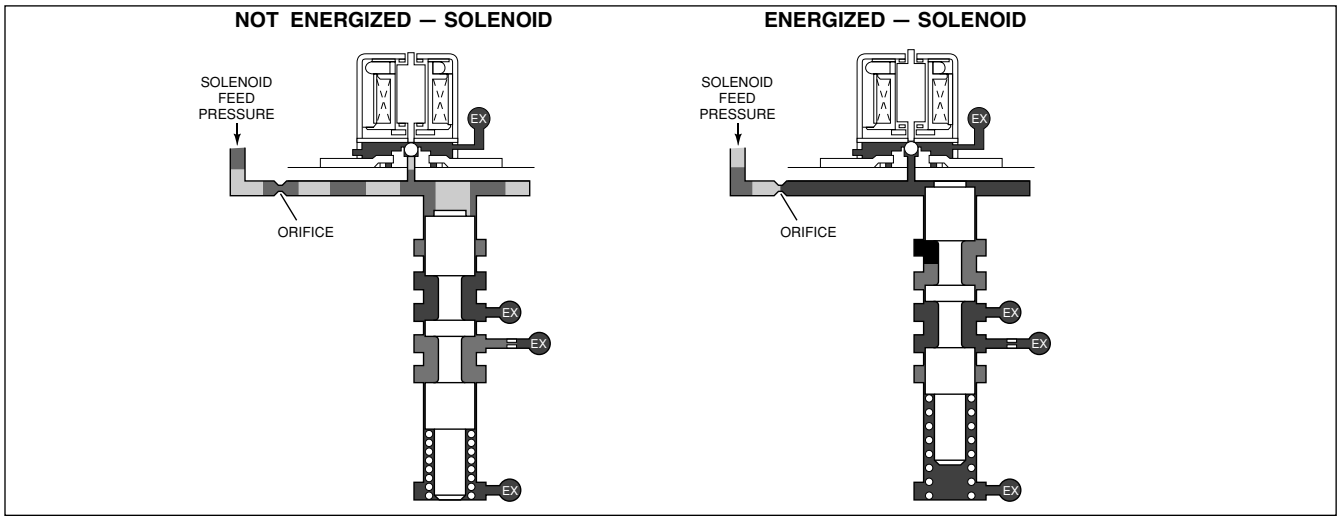

Solenoid and Shift Valve (sectional view) — Off-Highway

COPYRIGHT 1994 GENERAL MOTORS CORP.

SOLENOIDS

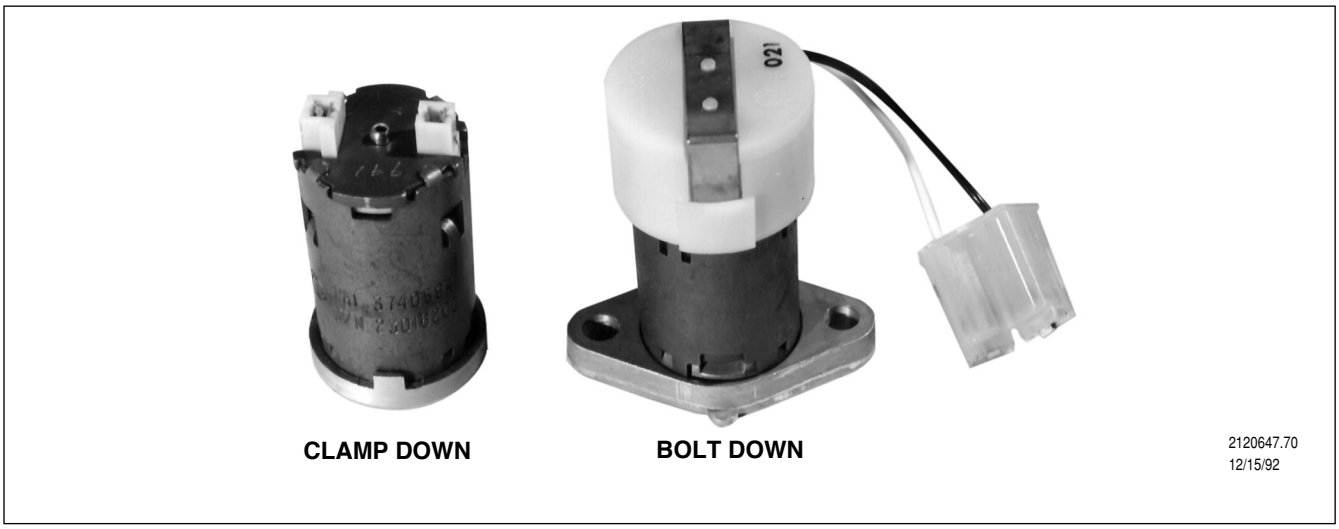

Latching Solenoids — On-Highway

On-highway solenoids are either bolted or clamped to the valve body. Clamped solenoids are “sandwiched” between the valve body and a mounting plate. Bolted solenoids are secured to the valve body with torx-head screws.

On-highway clamp down latching solenoids are identified by a single tab at the solenoid base. Bolt down latching solenoids have a tab centered between the two bolt holes.

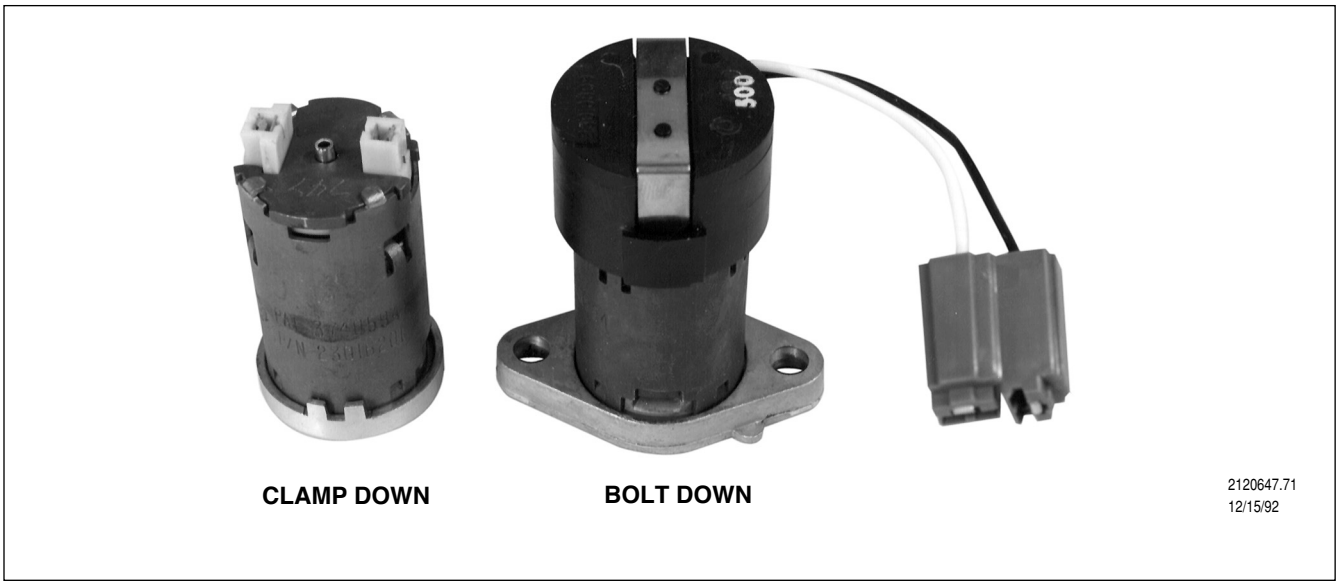

Non-Latching Solenoids — On-Highway

On-highway clamp down non-latching solenoids have two tabs on their base. Bolt down non-latching solenoids have a tab slightly off-center between the two bolt holes.

COPYRIGHT 1994 GENERAL MOTORS CORP.

TYPICAL FLUID FLOWS - ON-HIGHWAY OVERVIEW

Component Description and Configuration

The Electronic Control sensors eliminate the need for conventional hydraulic governor pressure, modulator pressure and selector valves. The output speed sensor provides the ECU with output speed information, the throttle position sensor provides throttle position information, and electronic shift selectors provide operator input. Based on these signals, plus vehicle interface and oil pressure, temperature and level input, the ECU energizes and de-energizes solenoids in the electro-hydraulic valve body.

Conventional shift signal valves are replaced by latching solenoids in the electro-hydraulic valve body. These solenoids control the position of shift valves. Shift valves control hydraulic flow in the transmission clutch-apply circuits. During a shift, shift valve movement exhausts the applied clutch and applies the oncoming clutch.

The neutral range valve is controlled by one latching and one non-latching solenoid. In neutral, this valve blocks the flow of main pressure to the forward/reverse valve. In range, the valve allows main pressure to the forward/reverse valve. The neutral range valve controls the transmission shifts from neutral to a range, and from a range back to neutral.

The forward/reverse valve is controlled by a latching solenoid. Depending on the solenoid position and the neutral range valve's position, the forward/reverse valve directs main pressure into either the fourth or forward clutch apply circuit. The forward/reverse valve controls whether the transmission shifts into a forward range or reverse.

The electro-hydraulic valve body uses trimmer valves to regulate oncoming clutch application. The trimmer regulator valve controls pressure under the trimmer valve plug, regulating trimmer valve operation. The trimmer regulator valve is controlled by a non-latching solenoid.

The lockup relay valve is controlled by a non-latching solenoid. Depending on solenoid position, the lockup relay valve exhausts or applies the lockup clutch apply circuit.

The solenoids, neutral range valve and trimmer regulator valve all receive continuous main pressure from the solenoid priority valve and direction priority valve. These valves ensure a steady flow of main pressure regardless of transmission range or activity.

Each solenoid is designated by letter. Latching solenoids A, B, C and D control shift valves. In five-speed models, solenoid A controls the low-1 shift valve, solenoid B controls the 1-2 shift valve, solenoid C controls the 2-3 shift valve and solenoid D controls the 3-4 shift valve. In four-speed models, solenoid A is not used and solenoids B, C, and D control the same shift valves. In three-speed models, solenoids A and B are not used. Solenoid C controls the 1-2 shift valve and solenoid D controls the 2-3 shift valve.

Non-latching solenoid E controls trimmer regulator valve position.

Latching solenoid F controls forward/reverse valve position. Non-latching solenoid G controls the position of the lockup relay valve. Non-latching solenoid H controls main pressure flow to the bottom of the neutral range valve, and latching solenoid J controls main pressure flow to the top of the neutral range valve.

NOTE: The following fluid flow description is based on a typical, four-speed, on-highway electronically-controlled transmission. Although some components vary slightly between models, the same operating principles apply.

COPYRIGHT 1994 GENERAL MOTORS CORP.

NEUTRAL FLUID FLOW (ON-HIGHWAY)

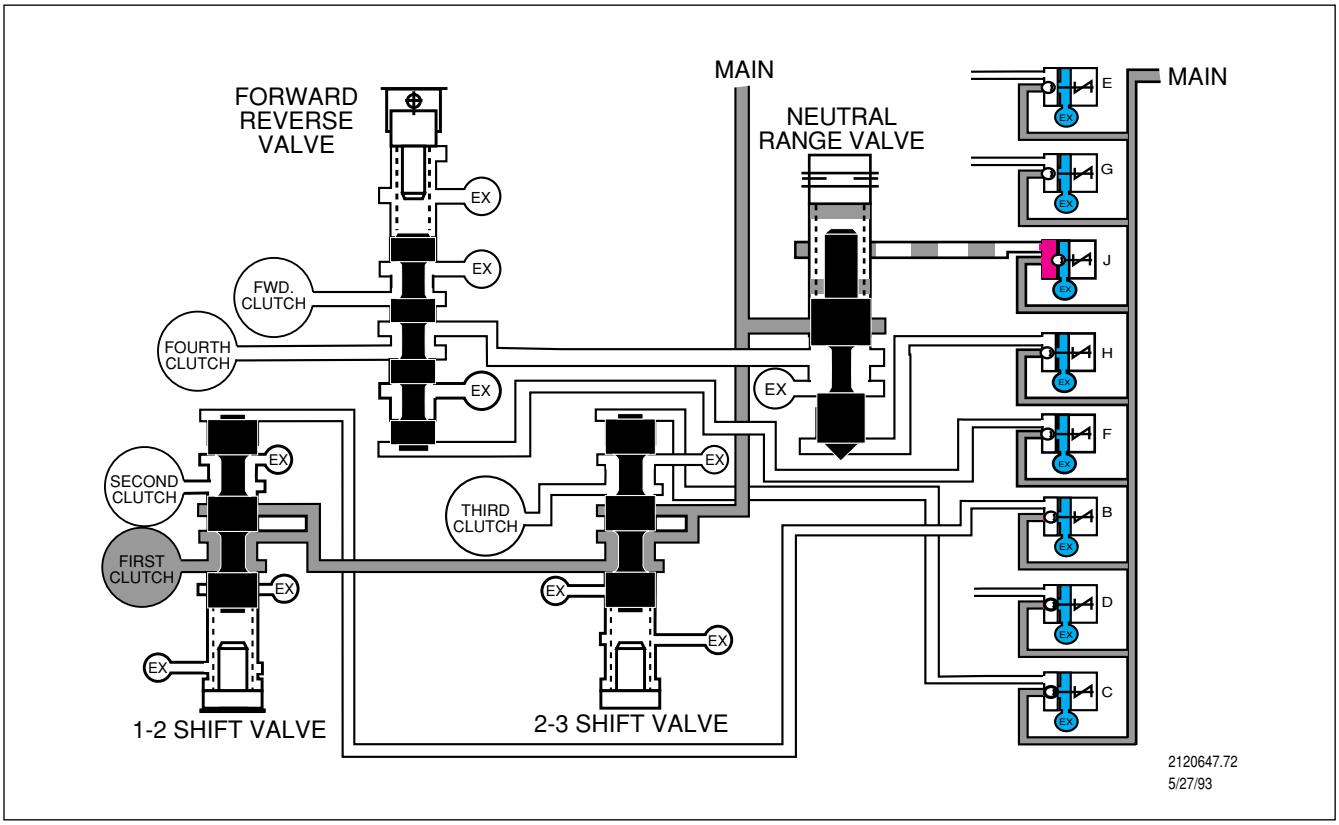

In Neutral, solenoid J is energized. Solenoids B, C, D and F are not energized.

When the vehicle is started, main pressure from the solenoid priority valve feeds all the solenoids. Main pressure from the neutral range valve flows to the direction priority valve and finally to the shift valves. Main pressure cascades “downstream” from the direction priority valve through the 2-3 shift valve and the 1-2 shift valve into the first-clutch apply circuit.

In neutral, J is the only energized solenoid. It directs main pressure to the top of the neutral range valve, which, along with spring pressure, keeps the neutral range valve positioned down. This causes main pressure to “deadhead” at the neutral range valve. Main pressure cascading through the 2-3 shift valve and the 1-2 shift valve keeps first clutch applied. Since only first clutch is applied, the transmission is in neutral.

COPYRIGHT 1994 GENERAL MOTORS CORP.

FIRST RANGE FLUID FLOW (ON-HIGHWAY)

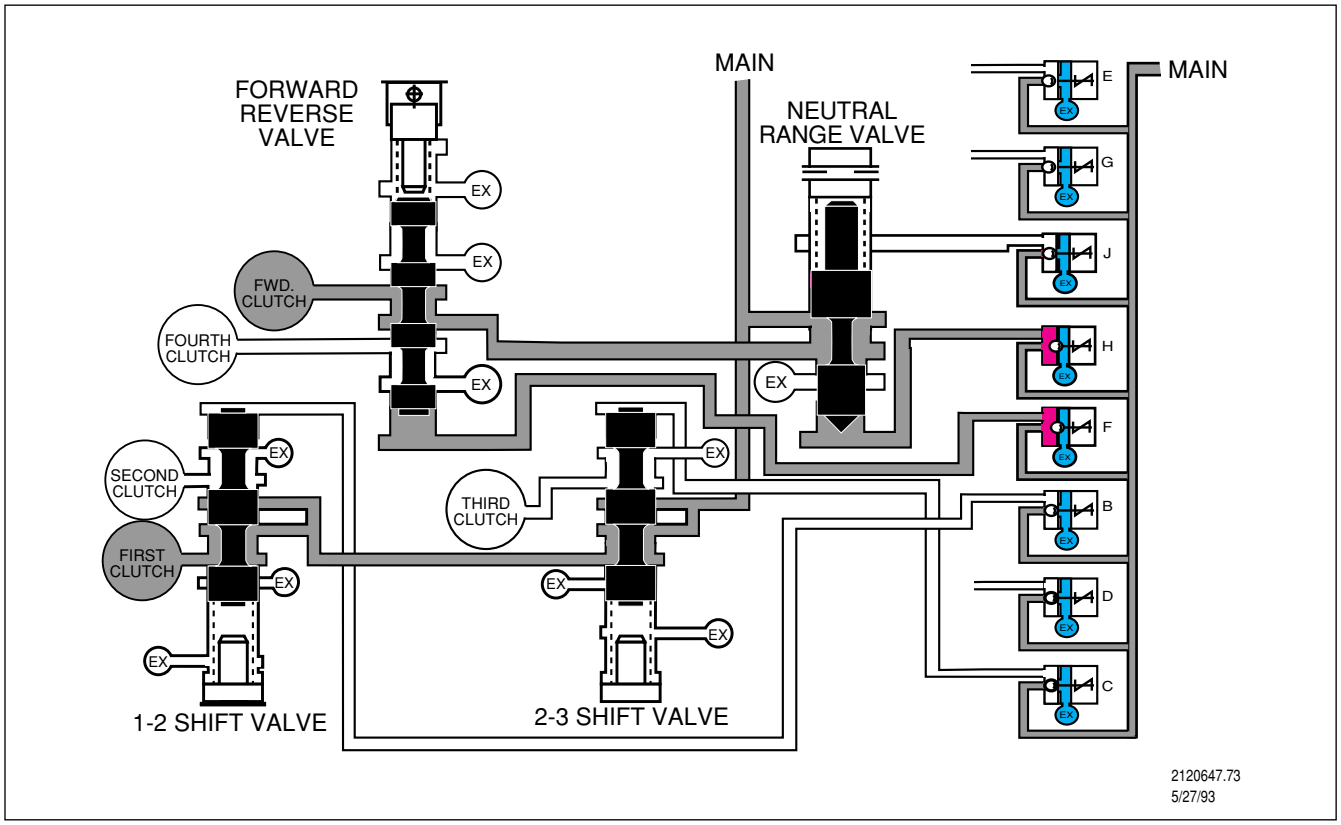

In First Range, solenoids F and H are energized. Solenoids B, C, D and J are not energized.

When the transmission is shifted into drive or first range, solenoid J is de-energized and solenoids H and F are energized. Solenoid H directs main pressure to the bottom of the neutral range valve. Since solenoid J is no longer energized, main pressure on top of the neutral range valve is exhausted, allowing the neutral range valve to move up. This allows main pressure from the solenoid priority valve to flow through the neutral range valve to the forward/reverse valve. Main pressure from solenoid F has the forward/reverse valve positioned up. This allows main pressure from the neutral range valve to flow through the forward/reverse valve into the forward-clutch apply circuit, applying forward clutch. First clutch remains applied, resulting in first range.

COPYRIGHT 1994 GENERAL MOTORS CORP.

SECOND RANGE FLUID FLOW (ON-HIGHWAY)

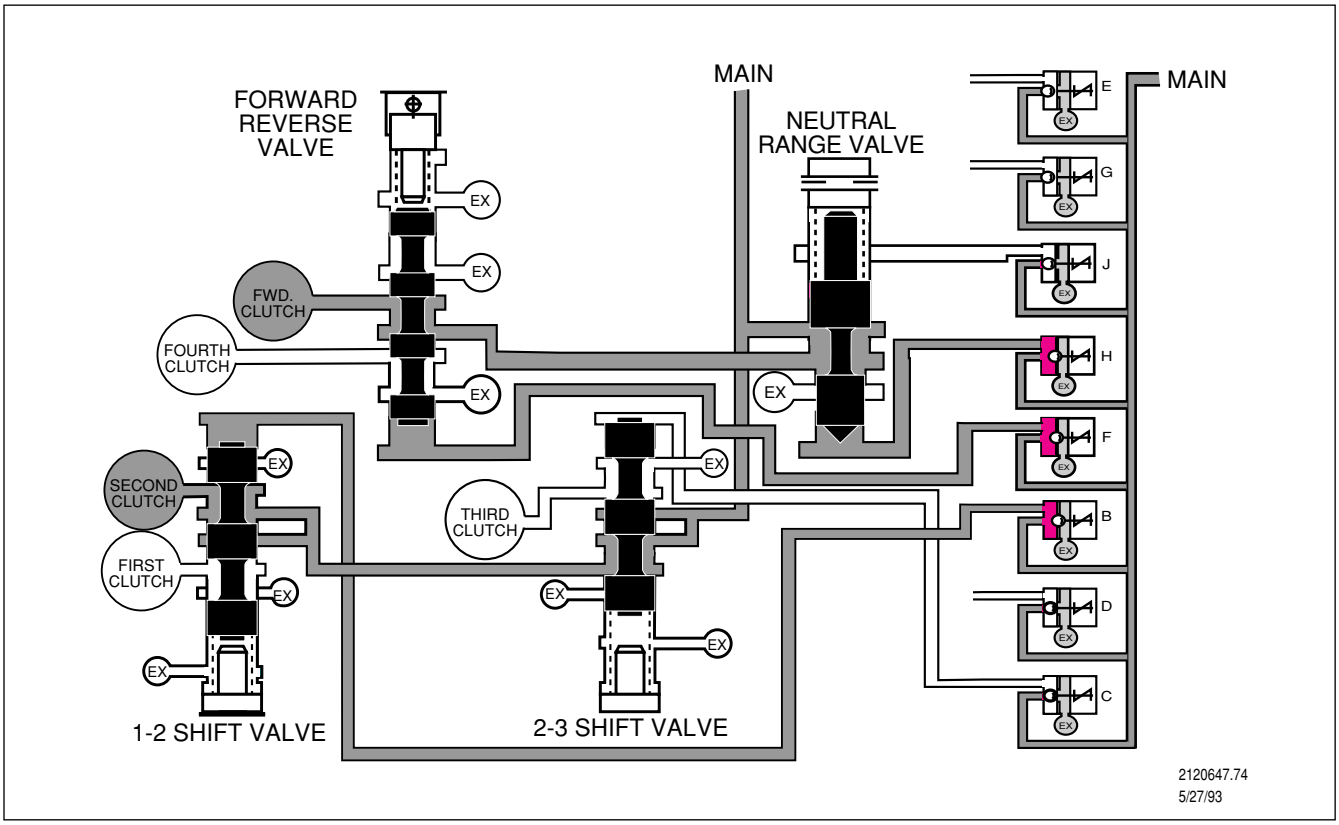

In Second Range, solenoids B, F and H are energized. Solenoids C, D and J are not energized.

As the transmission shifts into second range, solenoid B is energized. This directs main pressure to the top of the 1-2 shift valve, forcing it down. This exhausts the first-clutch apply circuit and allows main pressure into the second-clutch apply circuit. Forward-clutch remains applied, and since second clutch is now applied, the transmission shifts into second range.

COPYRIGHT 1994 GENERAL MOTORS CORP.

THIRD RANGE FLUID FLOW (ON-HIGHWAY)

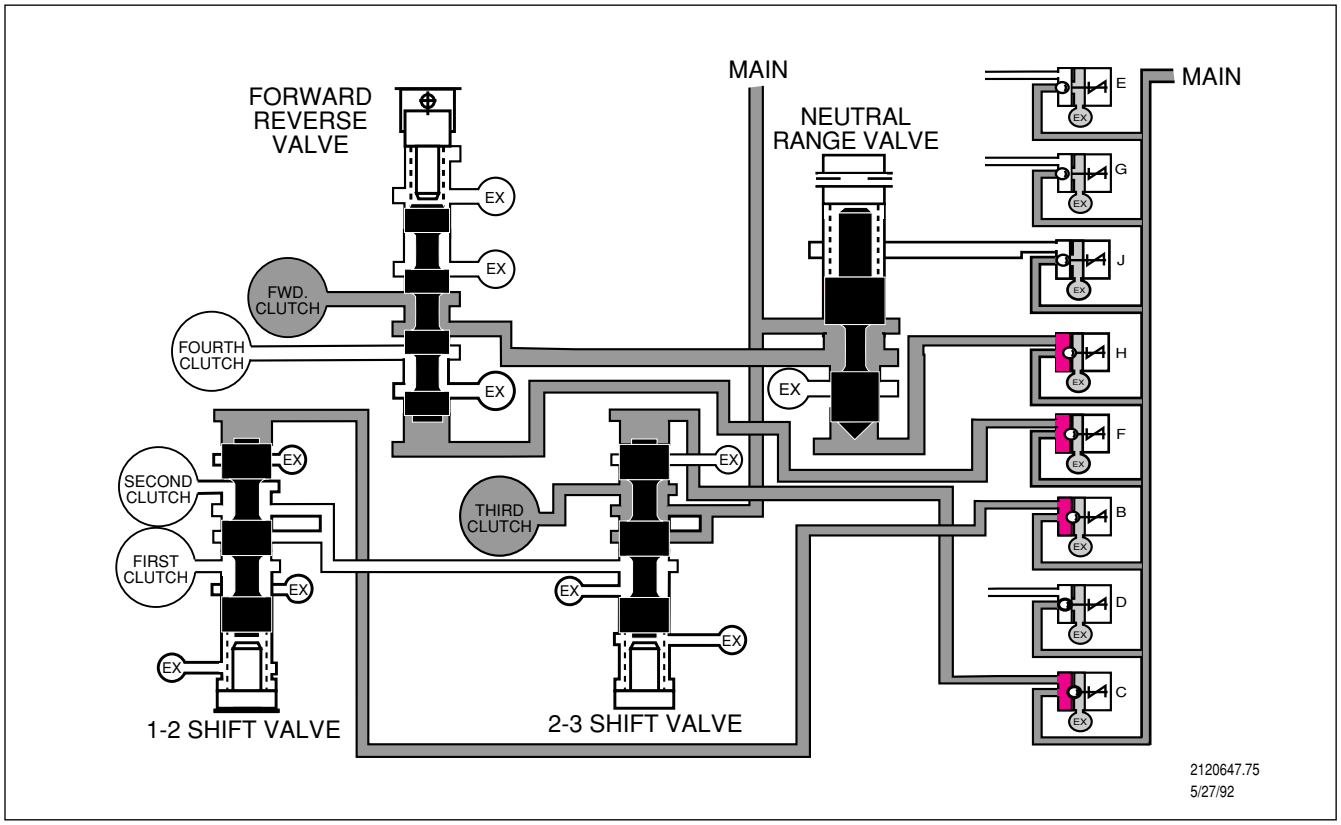

In Third Range, solenoids B, C, F and H are energized. Solenoids D and J are not energized.

In third range, solenoid C becomes energized. This directs main pressure to the top of the 2-3 shift valve, forcing it down. This exhausts the second-clutch apply circuit and allows main pressure into the third-clutch apply circuit. Forward clutch remains applied, and since third clutch is now applied, the transmission shifts into third range.

COPYRIGHT 1994 GENERAL MOTORS CORP.

FOURTH RANGE FLUID FLOW (ON-HIGHWAY)

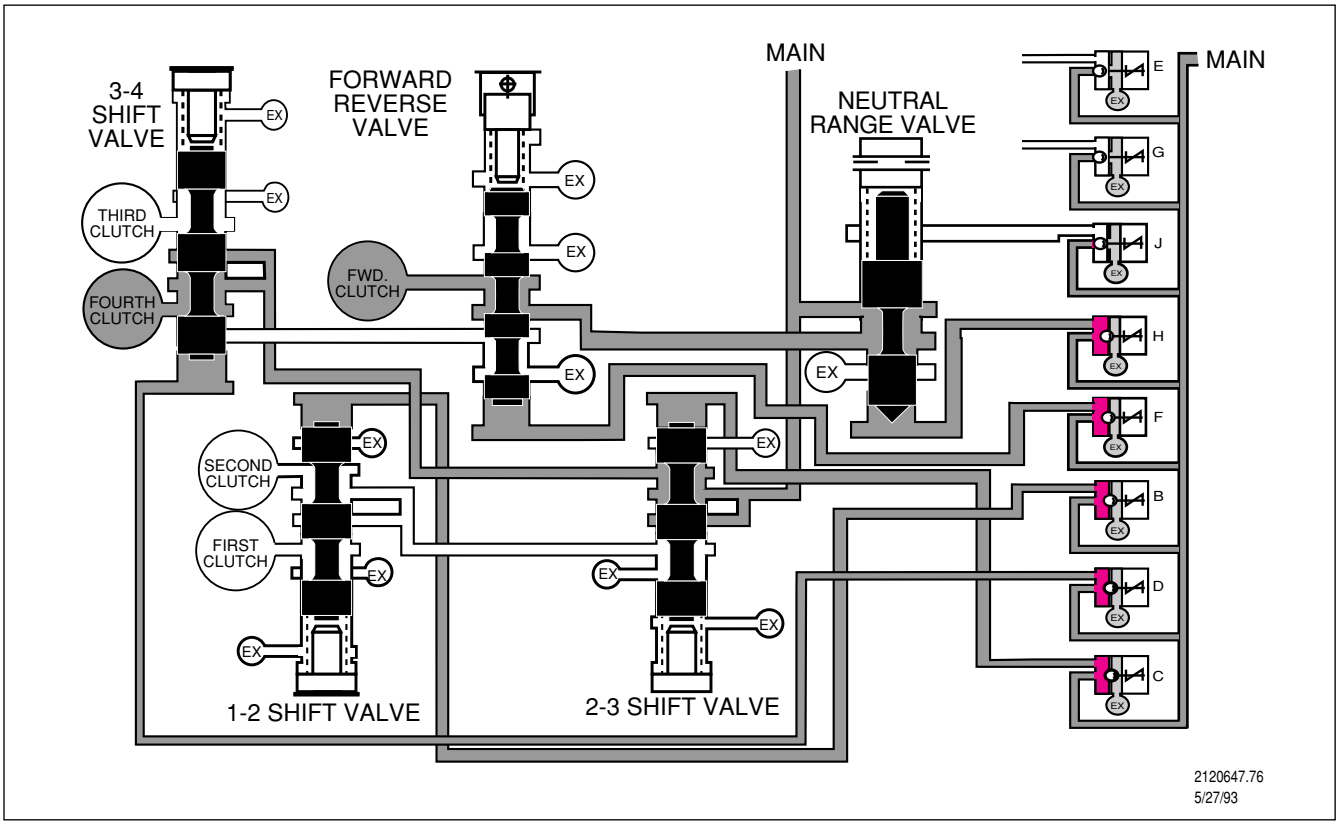

In Fourth Range, solenoids B, C, D, F and H are energized. Solenoid J is not energized.

In fourth range, solenoid D becomes energized. This directs main pressure to the bottom of the 3-4 shift valve, forcing it up. This exhausts the third-clutch apply circuit and allows main pressure into the fourth-clutch apply circuit. Forward-clutch remains applied, and since fourth clutch is now applied, the transmission shifts into fourth range.

COPYRIGHT 1994 GENERAL MOTORS CORP.

REVERSE FLUID FLOW (ON-HIGHWAY)

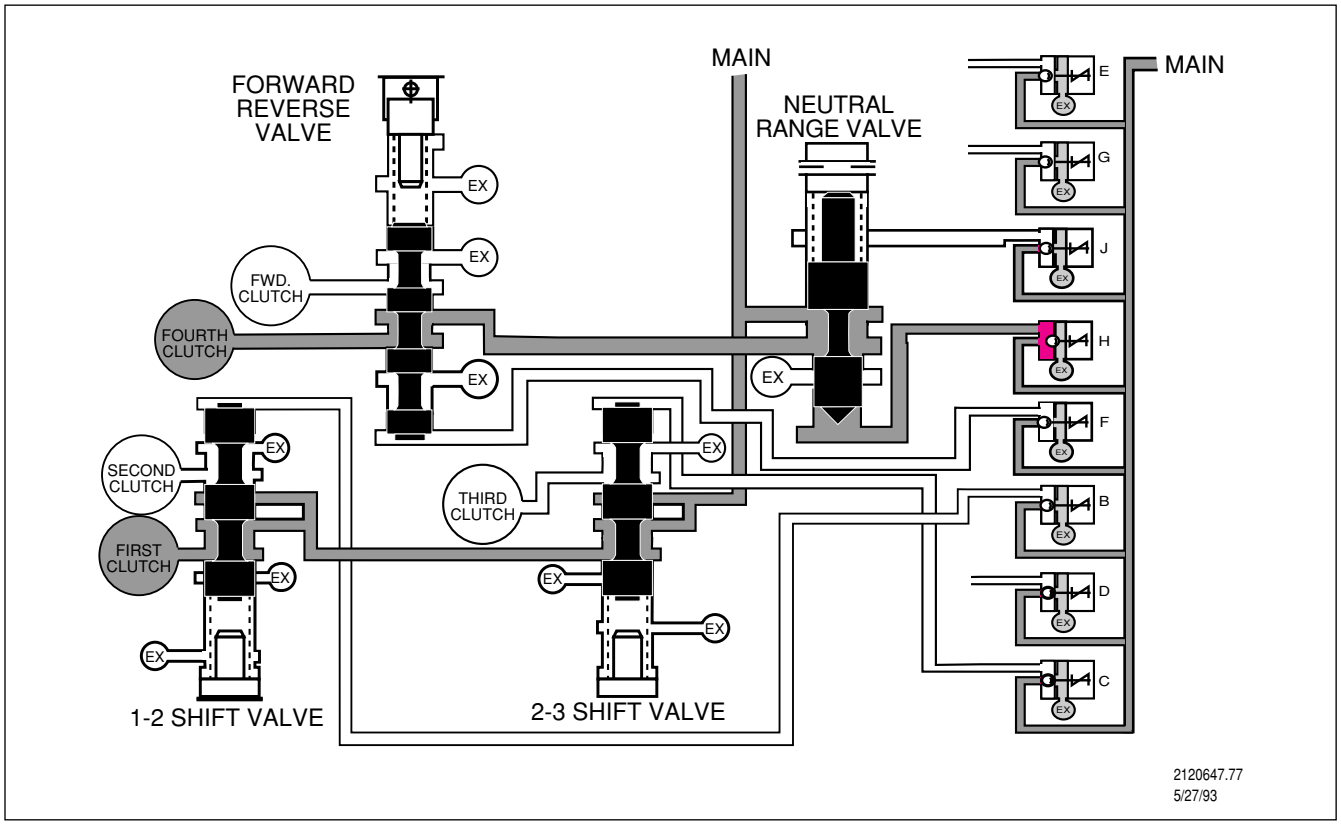

In Reverse, only solenoid H is energized. All other solenoids are not energized.

The shift to reverse begins with the transmission in Neutral. In Neutral, J is the only energized solenoid. It directs main pressure to the top of the neutral range valve, which, along with spring pressure, keeps the neutral range valve positioned down. This causes main pressure to “deadhead” at the neutral range valve. Main pressure cascading through the 2-3 shift valve and the 1-2 shift valve keeps first clutch applied. Since only first clutch is applied, the transmission is in Neutral.

When Reverse is selected, solenoid J is de-energized and solenoid H is energized. Solenoid J exhausts pressure on top of the neutral range valve, and solenoid H directs main pressure to the bottom of the neutral range valve, positioning it up against spring pressure. This allows main pressure to flow through the neutral range valve to the forward/reverse valve, which is positioned down. Main pressure flows through the forward/reverse valve into the fourth-clutch apply circuit. Since first clutch and fourth clutch are applied, the transmission shifts into Reverse.

COPYRIGHT 1994 GENERAL MOTORS CORP.

TRIMMER REGULATOR VALVE OPERATION (ON-HIGHWAY)

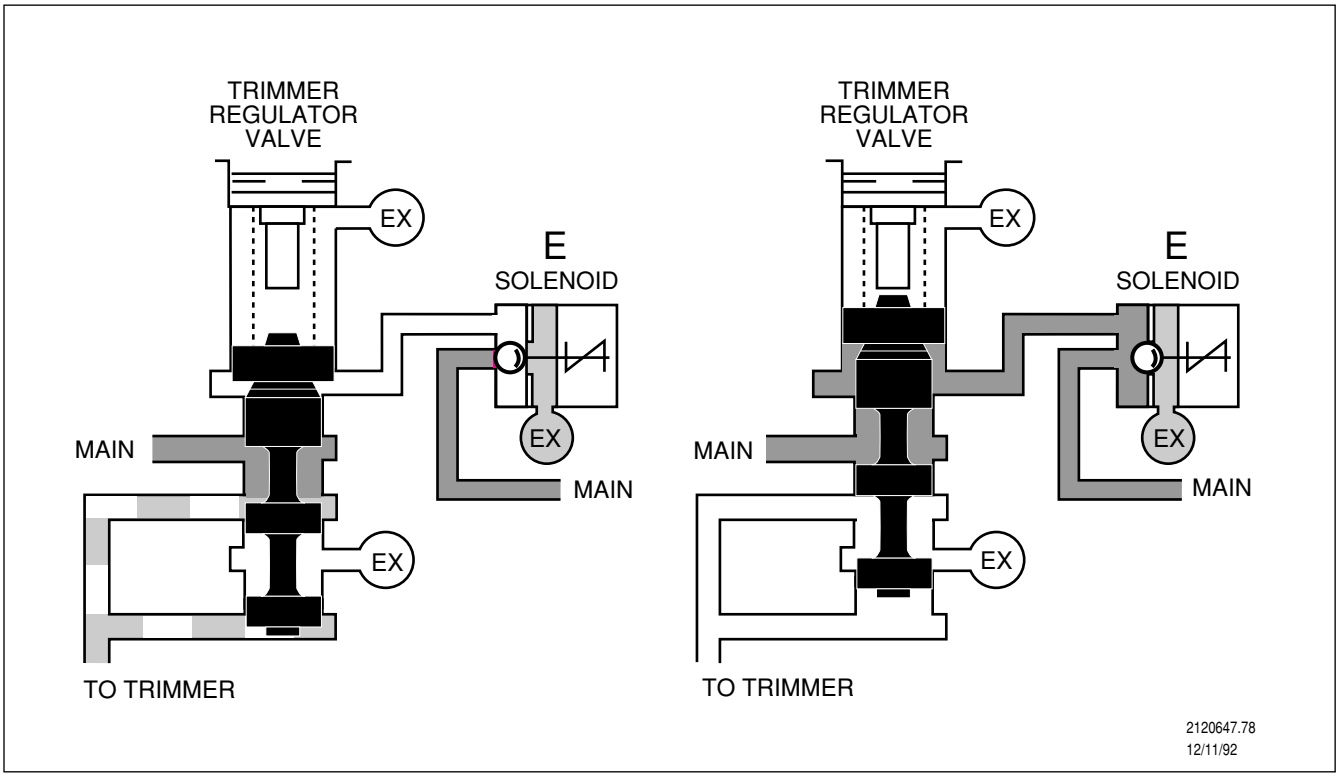

During forward operation, the ECU may energize or de-energize solenoid E. When solenoid E is de-energized, the trimmer regulator valve is moved down by spring force. This allows oil pressure to flow through the trimmer regulator to the bottom of the trimmer valves. This pressure works with the trimmer spring to create higher initial clutch-apply pressure and firm shifts.

When solenoid E is energized, the trimmer regulator valve is lifted up against spring force, blocking the flow of oil pressure through the trimmer regulator to the bottom of the trimmers. This lowers the initial clutch-apply pressure, resulting in smoother shifts.

COPYRIGHT 1994 GENERAL MOTORS CORP.

LOCKUP CLUTCH APPLICATION (ON-HIGHWAY)

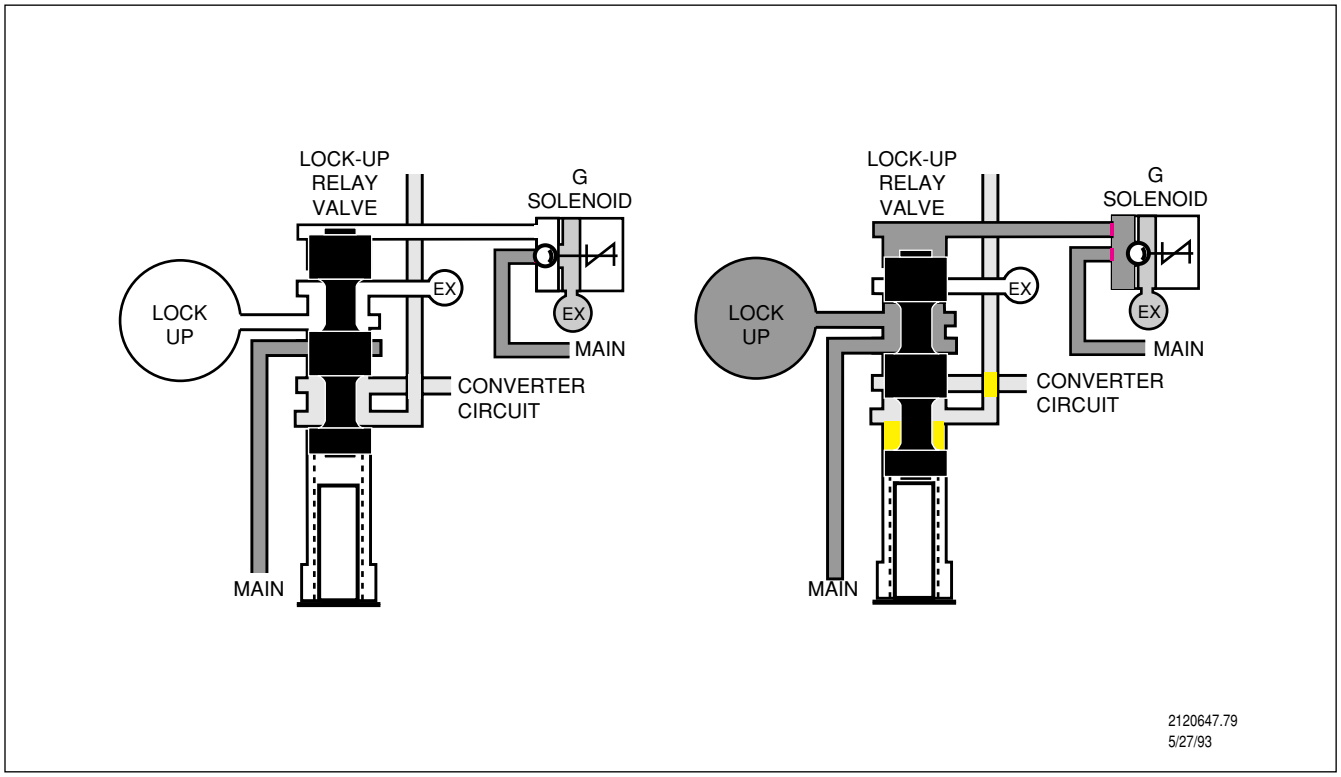

When the ECU senses the appropriate conditions, it can initiate lockup by energizing solenoid G. When solenoid G is energized, it directs main pressure to the top of the lockup relay valve. This positions the valve down, allowing main pressure to enter the lockup-clutch apply circuit.

COPYRIGHT 1994 GENERAL MOTORS CORP.

ELECTRICAL FAILURE (ON-HIGHWAY)

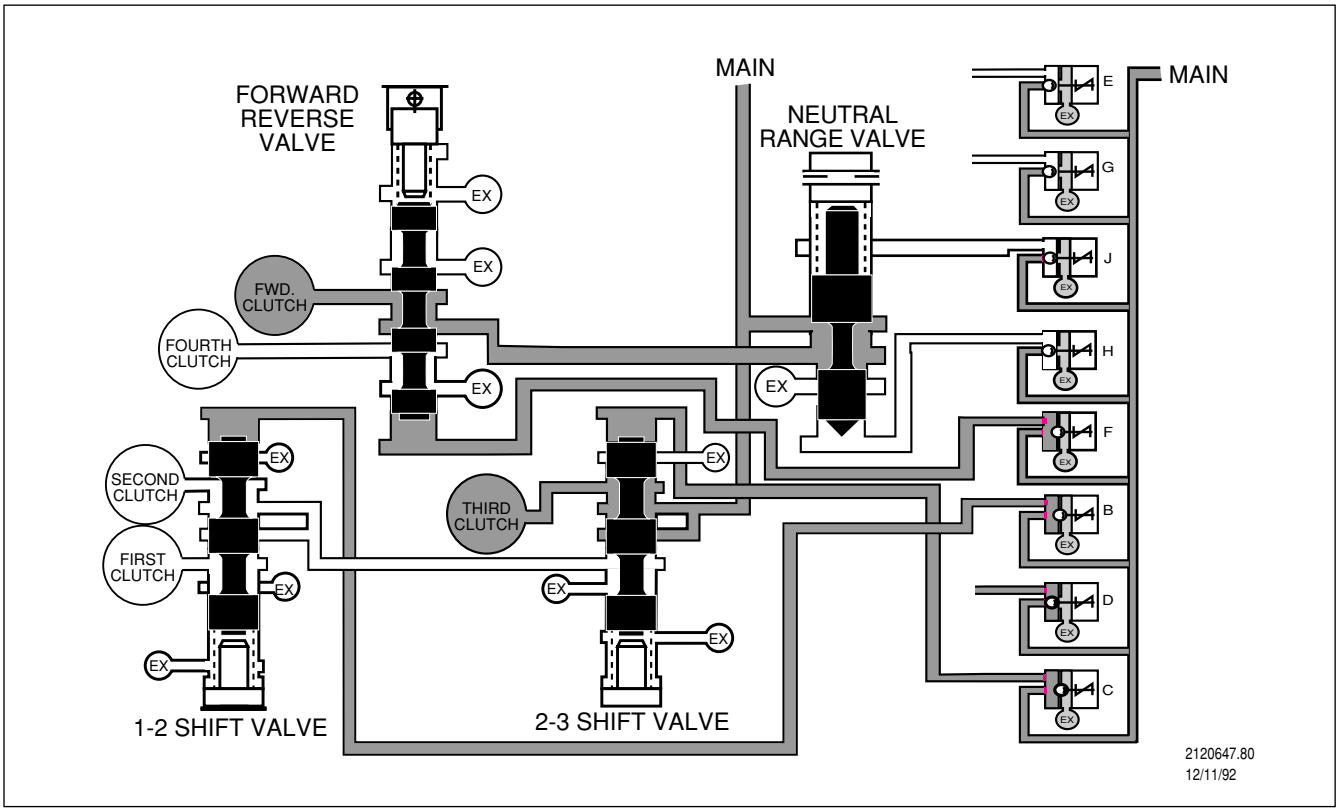

The system's latching and non-latching solenoid configuration provides transmission operation during electrical failure. When electrical failure occurs, all latching solenoids stay in position. This locks the transmission in range, inhibiting all shifts.

Non-latching solenoids become immediately de-energized, exhausting main pressure. Solenoid G exhausts the lockup clutch. Solenoid E no longer directs main pressure to the trimmer regulator valve, allowing the valve to move down. De-energizing solenoid H stops the flow of main pressure to the bottom of the neutral range valve. But since the valve upper land area is larger, main pressure keeps the valve positioned up, allowing pressure to continue flowing to the forward/reverse valve.

As long as the engine continues running, the neutral range valve stays up and the latching solenoids keep their corresponding valves in position. Once the engine is stopped and main pressure flow ceases, the neutral range valve moves down due to spring pressure, exhausting the main pressure flowing to the forward/reverse valve. If electrical failure still exists upon re-start, the previously-energized latching solenoids continue to direct pressure, but the forward clutch is no longer applied, resulting in Neutral.

COPYRIGHT 1994 GENERAL MOTORS CORP.

TYPICAL FLUID FLOWS - OFF-HIGHWAY OVERVIEW

Component Description and Configuration

The off-highway Electronically-Controlled valve body relies on solenoids to control fluid flow throughout the transmission. The valve body configuration is similar to Shift Pattern Generator (SPG) units. A solenoid pressure regulator valve creates solenoid pressure and directs it to a series of shift valves. Each shift valve has a corresponding, non-latching solenoid. Solenoid B controls reverse shift valve position, solenoid C controls the first-and-second shift valve, solenoid D controls the third-and-fourth shift valve, solenoid E controls the fifth-and-sixth shift valve, and solenoid F controls the splitter shift valve. When a solenoid is de-energized, solenoid pressure is directed to the top of the shift valve, forcing it down. Energizing a shift valve solenoid opens an exhaust passage, allowing solenoid pressure to exhaust and spring force to move the shift valve up.

Main pressure from the priority valve cascades through the shift valves. Depending on shift valve position, main pressure is either directed into a clutch-apply circuit, or the clutch-apply circuit is exhausted. Trimmer valves may be located in clutch-apply circuits to regulate oncoming clutch application.

Two additional non-latching solenoids are located under the first-and-second shift valve and the splitter shift valve. Solenoid A, when energized, exhausts first-and-second clutch-apply circuit pressure under the first-and-second shift valve. And solenoid G, when energized, exhausts splitter-direct clutch-apply circuit pressure under the splitter shift valve. These two solenoids are critical to “lock-in-range” during electrical failure (discussed later).

NOTE: The following fluid flow description is based on a CLBT 6062 transmission, a typical, six-speed, off-highway electronically-controlled transmission. Although some components vary slightly between models, the same operating principles apply.

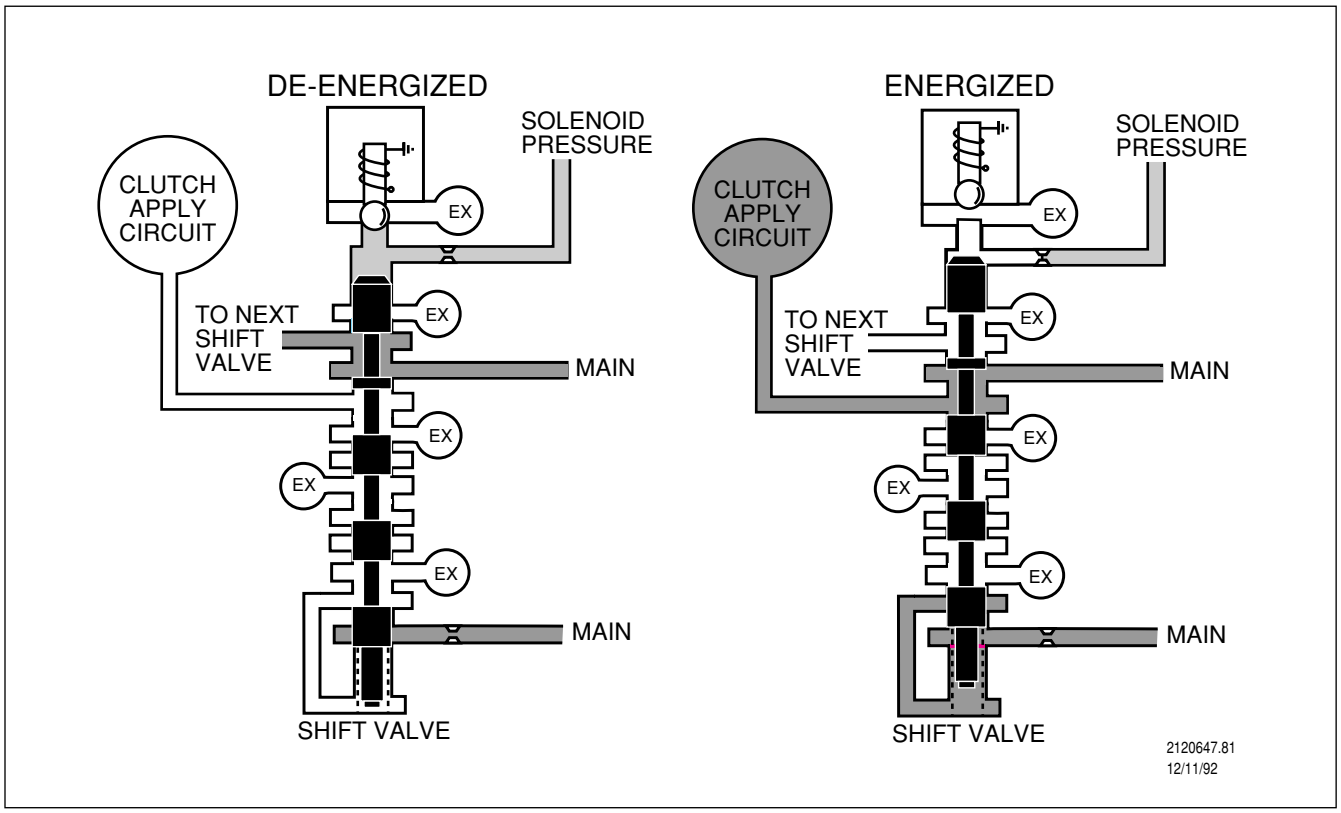

COPYRIGHT 1994 GENERAL MOTORS CORP.

NEUTRAL FLUID FLOW (OFF-HIGHWAY)

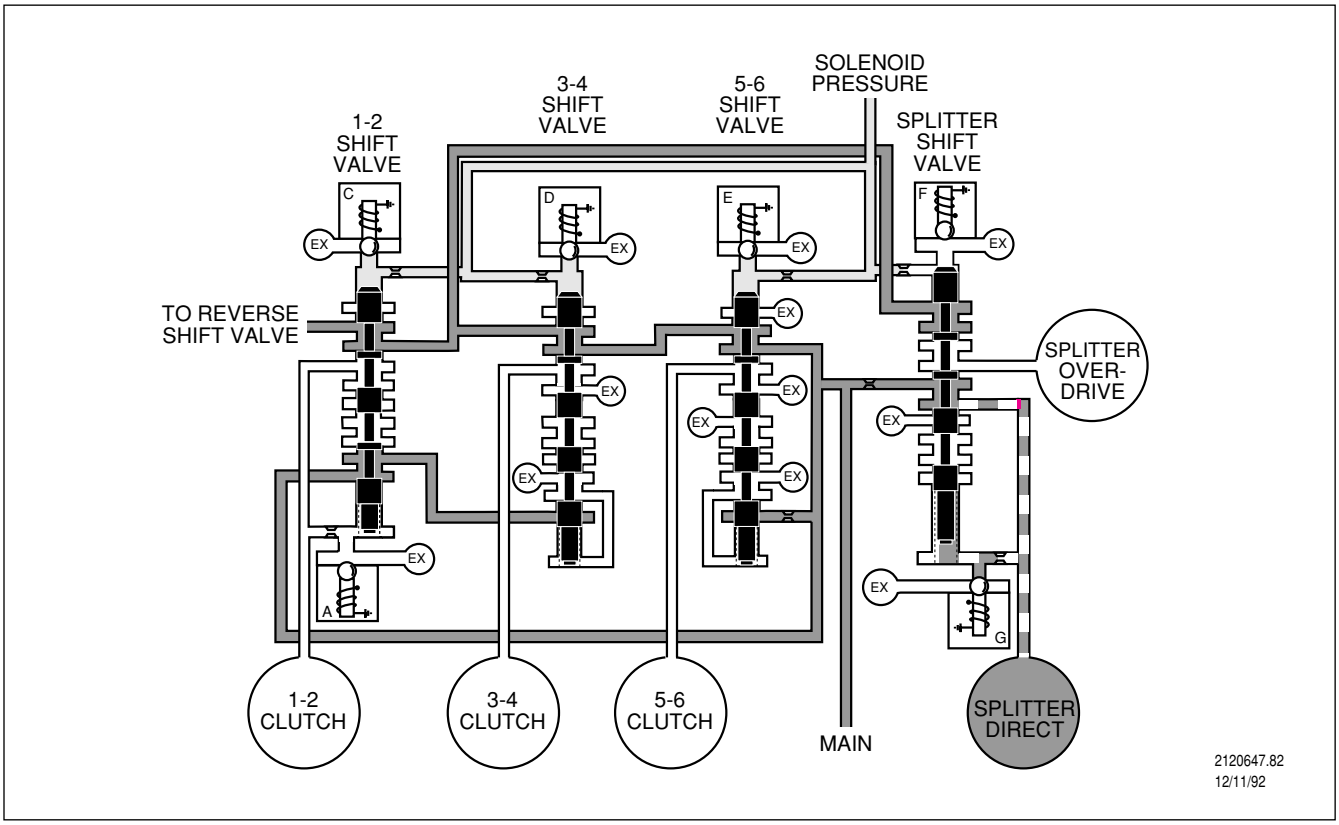

In Neutral, solenoids A and F are energized. Solenoid A is not used in models with Lock-To-Neutral.

In neutral, solenoids A and F are energized. Solenoid F exhausts solenoid pressure above the splitter shift valve and solenoid A ensures any clutch-apply pressure under the first-and-second shift valve is exhausted. The splitter shift valve is moved up by spring force, allowing main pressure to enter the splitter-direct clutch-apply circuit. Since splitter-direct is the only clutch applied, the transmission is in Neutral.

COPYRIGHT 1994 GENERAL MOTORS CORP.

FIRST RANGE FLUID FLOW (OFF-HIGHWAY)

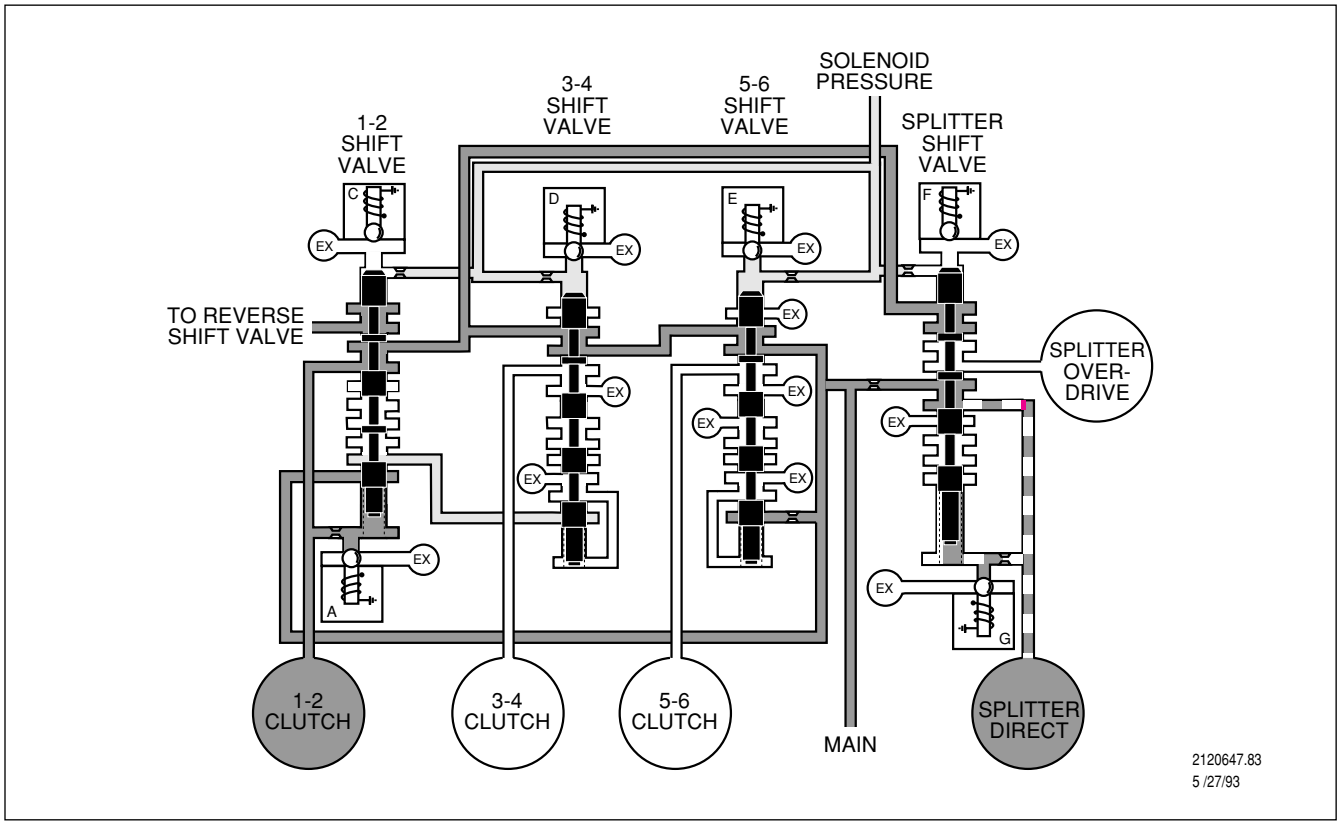

In First Range, solenoids C and F are energized.

As the transmission shifts into first, solenoid F remains energized, solenoid A is de-energized and solenoid C becomes energized. Solenoid C exhaust passage opens, allowing the first-and-second shift valve to move up. This allows main pressure into the first-and-second clutch-apply circuit. Clutch-apply pressure is also directed to the bottom of the first-and-second shift valve. Since the splitter-direct clutch and first-and-second clutch are applied, the transmission shifts into first range.

COPYRIGHT 1994 GENERAL MOTORS CORP.

SECOND RANGE FLUID FLOW (OFF-HIGHWAY)

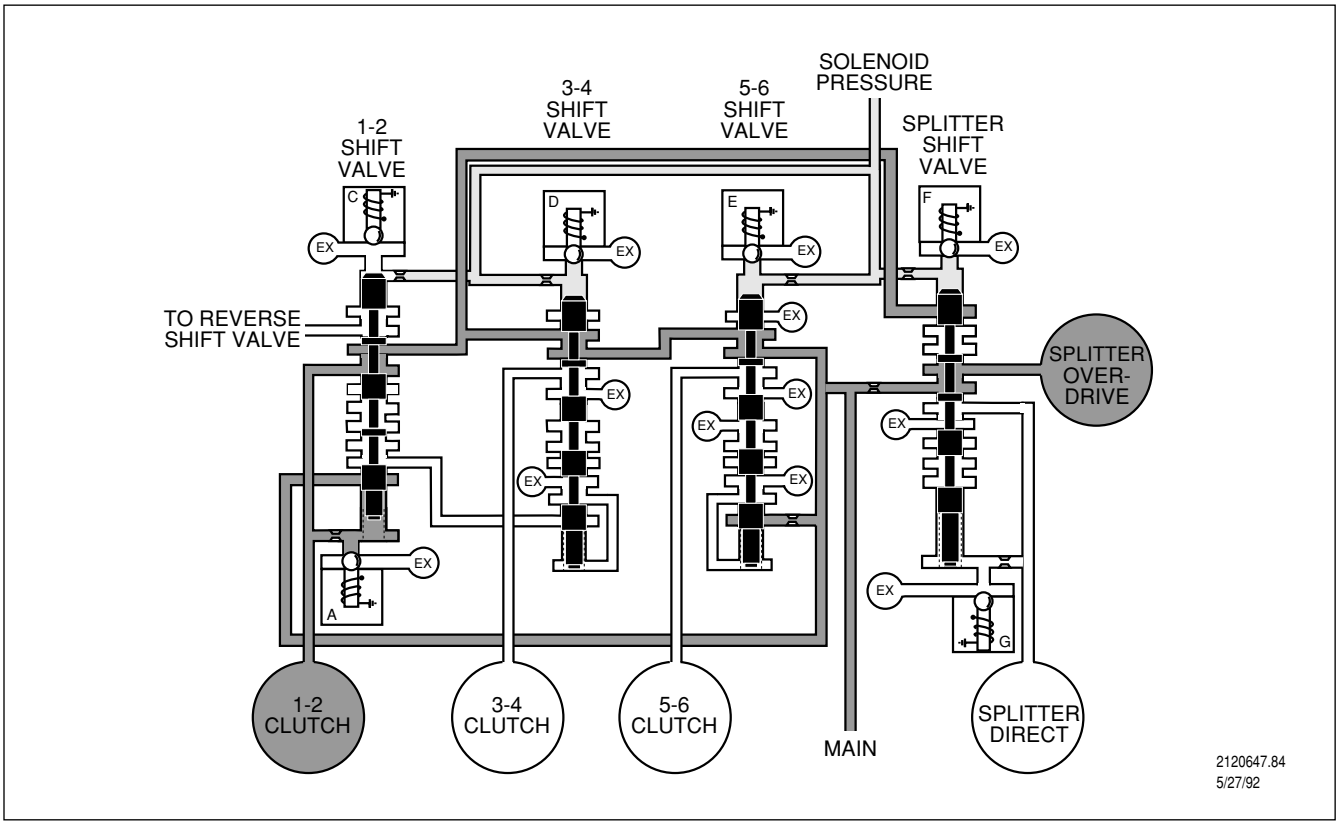

In Second Range, solenoids C and G are energized. Solenoid G is not used in models with Lock-To-Neutral

In second range, solenoid F is de-energized, solenoid G is energized, and solenoid C remains energized. The first-and-second shift valve continues to direct main pressure into the first-and-second clutch apply circuit. Solenoid G exhausts splitter-direct clutch-apply pressure under the splitter-direct shift valve, allowing the valve to move down (solenoid F is no longer energized). This directs main pressure into the splitter-overdrive clutch-apply circuit. Since the splitter-overdrive clutch and the first-and-second clutch are applied, the transmission shifts into second range.

COPYRIGHT 1994 GENERAL MOTORS CORP.

THIRD RANGE FLUID FLOW (OFF-HIGHWAY)

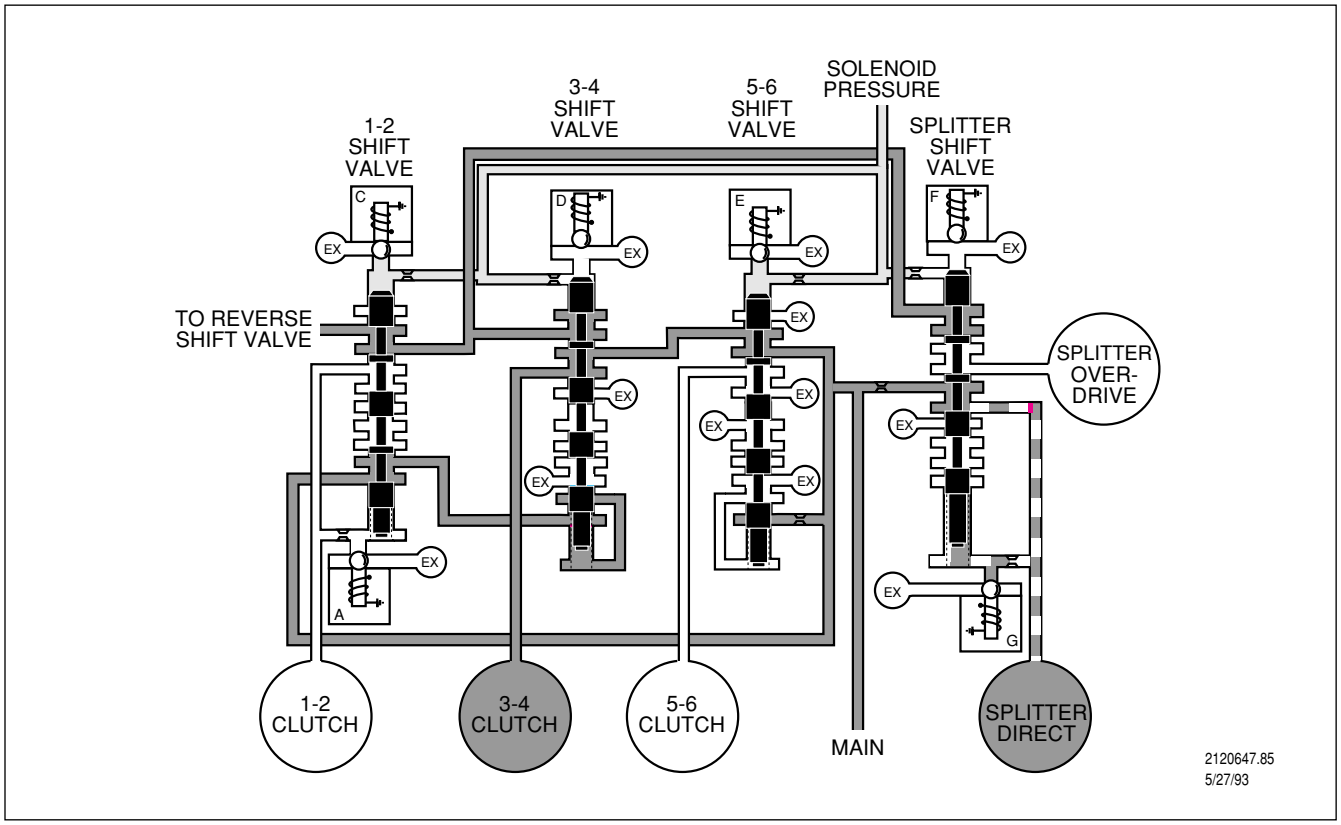

In Third Range, solenoids D and F are energized.

As the transmission shifts into third range, solenoids C and G are de-energized. The first-and-second shift valve is moved down against spring force, and solenoid G blocks the splitter-direct exhaust passage under the splitter shift valve. Solenoids D and F become energized. The splitter shift valve moves up, allowing main pressure into the splitter-direct clutch-apply circuit. The third-and-fourth shift valve moves up, allowing main pressure into the third-and-fourth clutch-apply circuit. This results in third range.

COPYRIGHT 1994 GENERAL MOTORS CORP.

FOURTH RANGE FLUID FLOW (OFF-HIGHWAY)

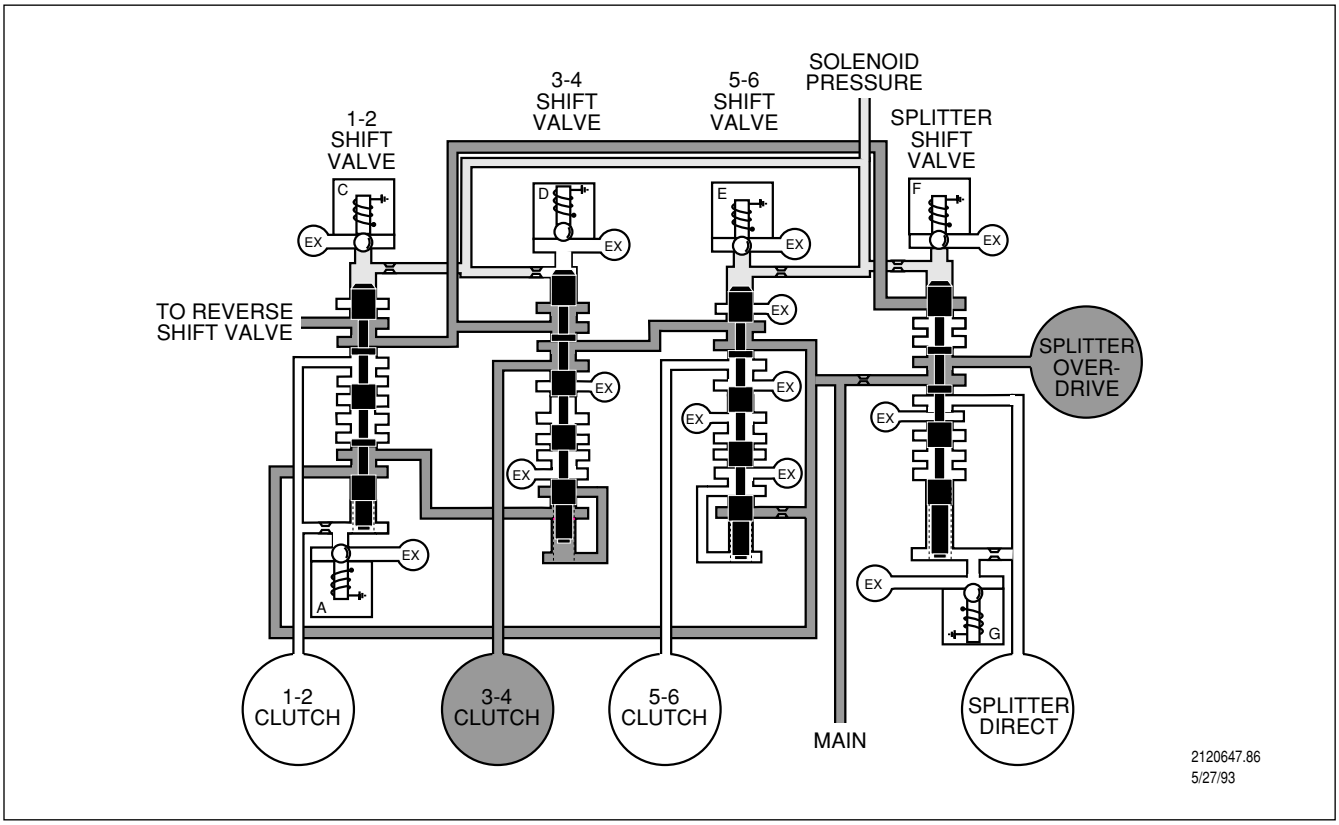

In Fourth Range, solenoids D and G are energized. Solenoid G is not used in models with Lock-To-Neutral.

In fourth range, solenoid D remains energized, keeping the third-and-fourth shift valve up and the third-and-fourth clutch applied. Solenoid G becomes energized, exhausting splitter-direct clutch-apply pressure under the splitter shift valve. Since solenoid F is now de-energized, the splitter shift valve moves down, allowing main pressure into the splitter-overdrive clutch-apply circuit. This results in fourth range.

COPYRIGHT 1994 GENERAL MOTORS CORP.

FIFTH RANGE FLUID FLOW (OFF-HIGHWAY)

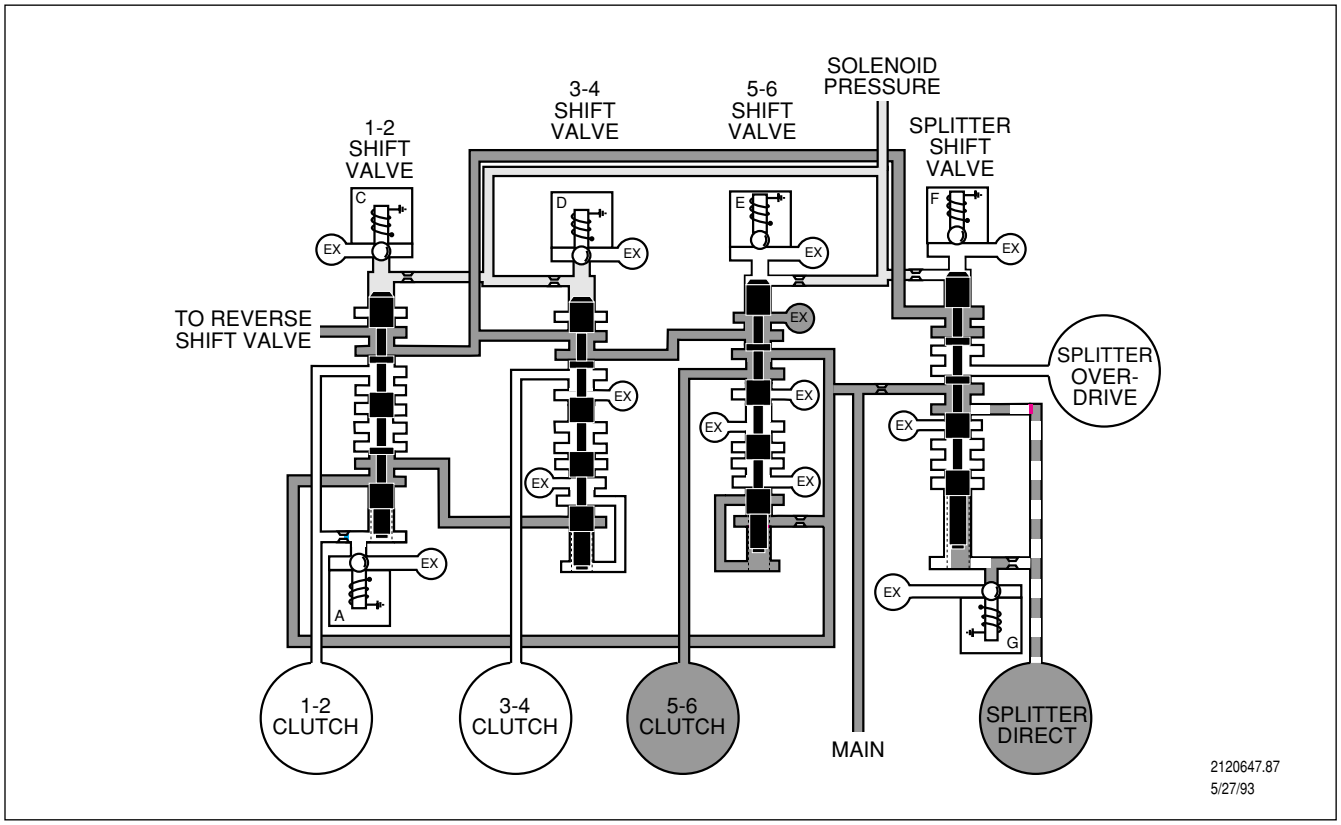

In Fifth Range, solenoids E and F are energized.

As the transmission shifts into fifth range, solenoids D and G are de-energized and solenoids E and F are energized. Solenoid E opens the exhaust passage above the fifth-and-sixth shift valve, allowing the valve to move up, directing main pressure into the fifth-and-sixth clutch-apply circuit. Solenoid G blocks the splitter-direct clutch-apply circuit exhaust under the splitter shift valve, and solenoid F exhausts solenoid pressure above the splitter shift valve. This positions the splitter shift valve up, allowing main pressure into the splitter-direct clutch-apply circuit. Since the fifth-and-sixth clutch and splitter-direct clutch are applied, the transmission shifts into fifth range.

COPYRIGHT 1994 GENERAL MOTORS CORP.

SIXTH RANGE FLUID FLOW (OFF-HIGHWAY)

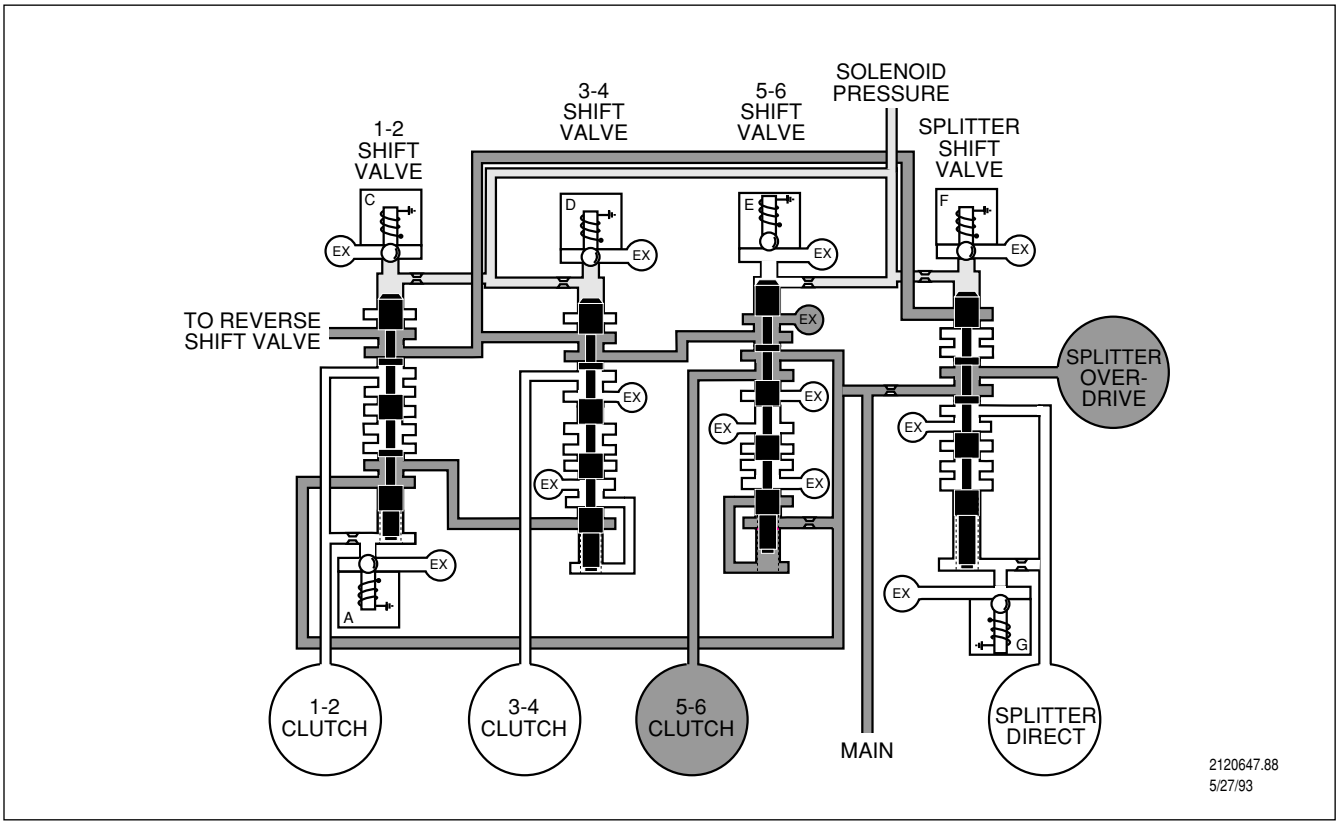

In Sixth Range, solenoids E and G are energized. Solenoid G is not used in models with Lock-To-Neutral

In sixth range, solenoid E remains energized, keeping the fifth-and-sixth clutch applied. Solenoid G becomes energized, exhausting splitter-direct clutch-apply pressure under the splitter shift valve. Since solenoid F is now de-energized, the splitter shift valve moves down, allowing main pressure into the splitter-overdrive clutch-apply circuit. This results in sixth range.

COPYRIGHT 1994 GENERAL MOTORS CORP.

REVERSE FLUID FLOW (OFF-HIGHWAY)

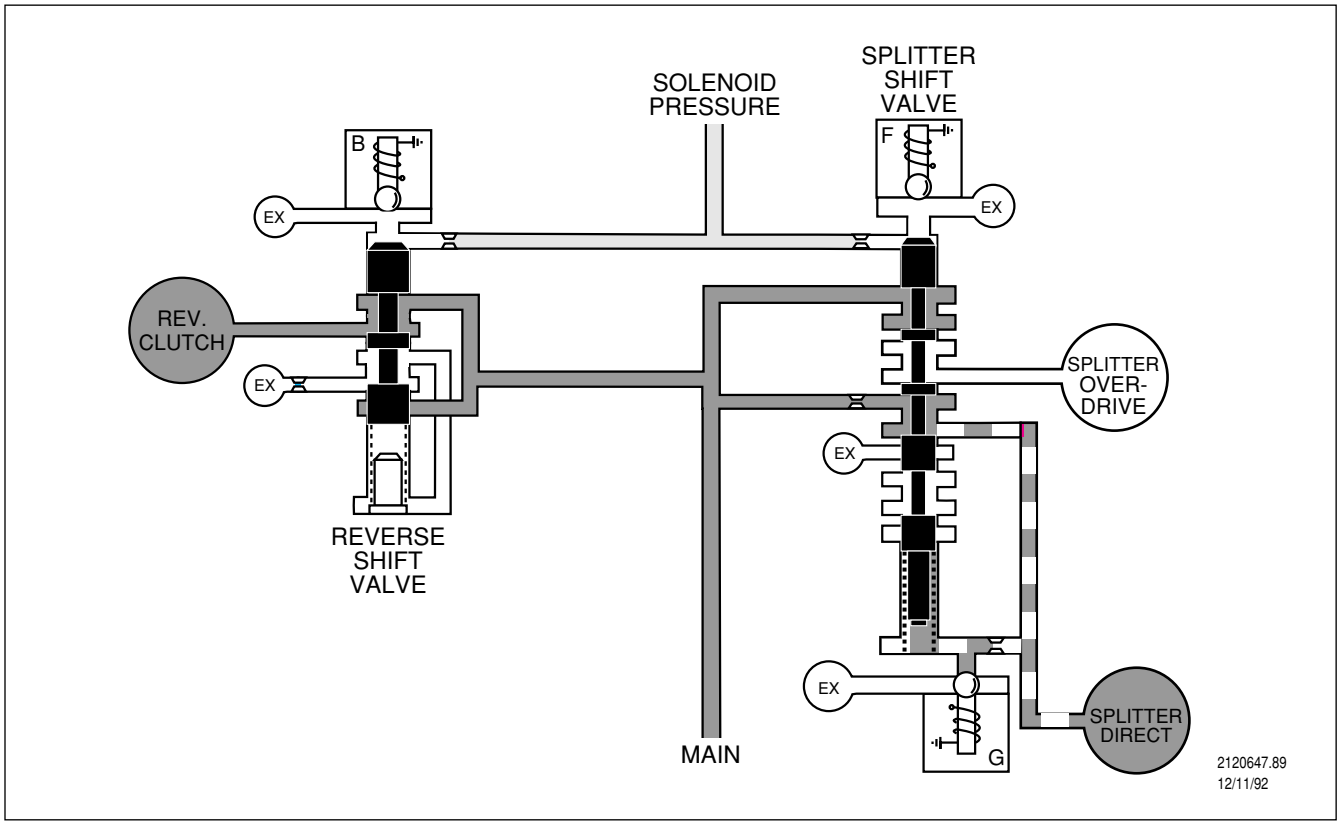

In Reverse, solenoids A, B and F are energized. Solenoid A is not used in models with Lock-To-Neutral.

The shift to Reverse begins with the transmission in neutral. Solenoids A and F are energized, positioning the splitter shift valve up, allowing main pressure into the splitter-direct clutch-apply circuit. When reverse is selected, solenoid B becomes energized. This exhausts solenoid pressure above the reverse shift valve, positioning the valve up, allowing main pressure into the reverse clutch-apply circuit. Since splitter-direct clutch and reverse clutch are applied, the transmission shifts into Reverse.

COPYRIGHT 1994 GENERAL MOTORS CORP.

LOCKUP CLUTCH APPLICATION (OFF-HIGHWAY)

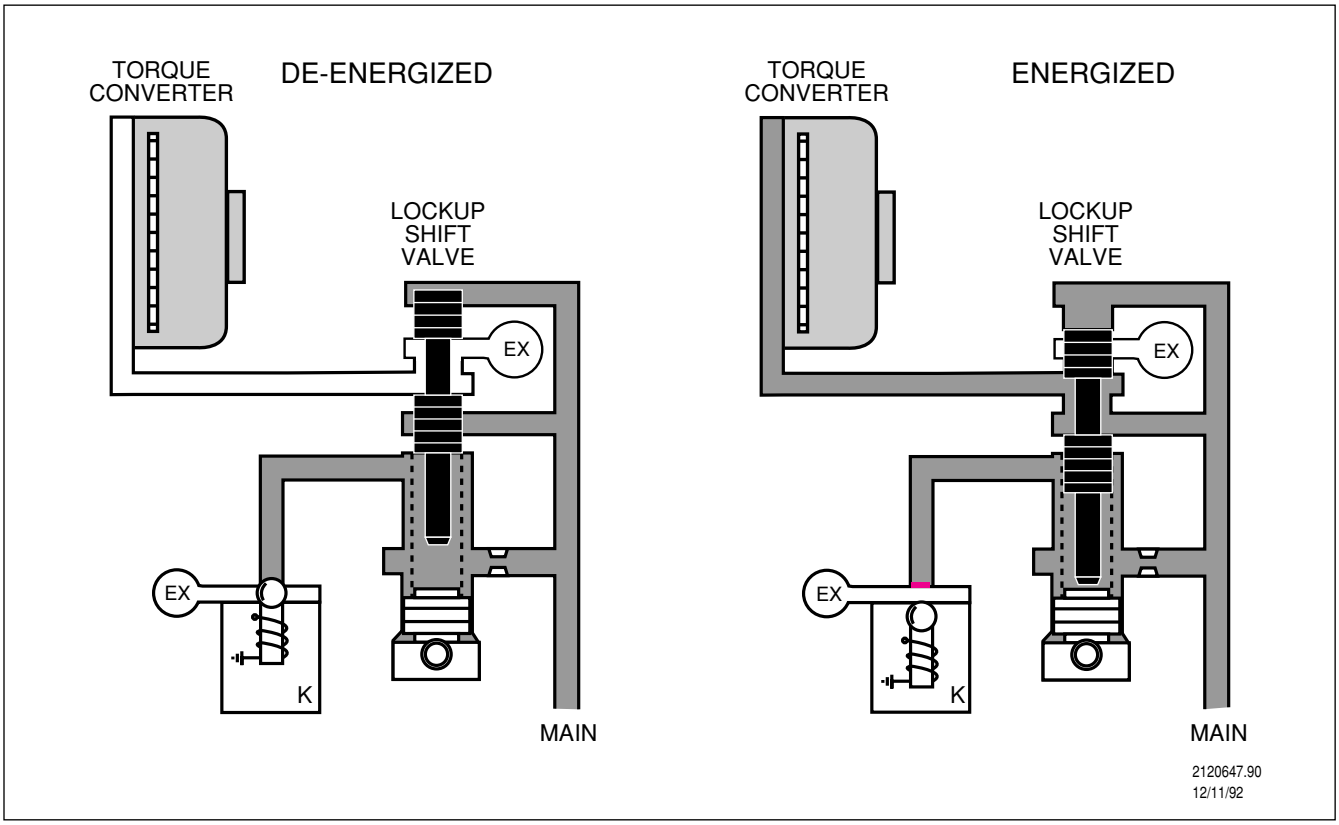

When the ECU senses the appropriate conditions, it can initiate lockup by energizing solenoid K. When solenoid K is energized, it exhausts main pressure under the lockup shift valve. The shift valve moves down, allowing main pressure from the priority valve to enter the lockup clutch-apply circuit. This eliminates the need for pitot pressure in conventional valve bodies.

COPYRIGHT 1994 GENERAL MOTORS CORP.

ELECTRICAL FAILURE (OFF-HIGHWAY)

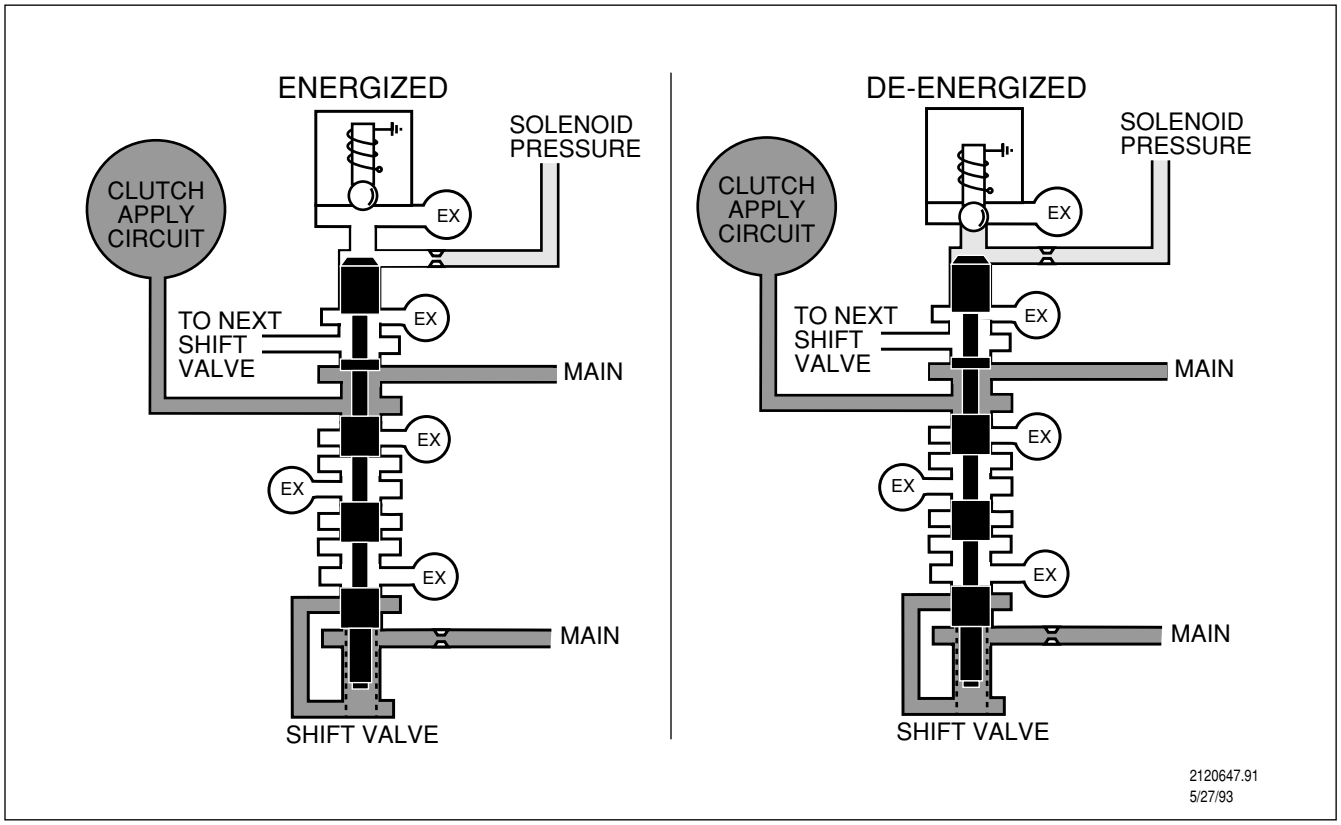

The system design allows it to “lock-in-range” during electrical failure. Whenever a shift valve is positioned up, clutch apply or cascading main pressure is directed to the bottom of the shift valve. During electrical failure, all solenoids are de-energized, but the constant flow of pressure under the shift valve keeps it positioned up. All shifts are blocked, but applied clutches remain applied as long as the engine is running. Once the engine is shut down, pressure is no longer directed to the bottom of shift valves previously positioned up. If the electrical failure still exists after the engine is re-started, none of the solenoids are energized and all shift valves are forced down by solenoid pressure. This results in neutral, with only the splitter-overdrive clutch applied.

COPYRIGHT 1994 GENERAL MOTORS CORP.

COMPONENT INSTALLATION AND ADJUSTMENT

INTRODUCTION

Proper Electronic Control component installation and adjustment is critical to proper system performance. Though applications vary, the following guidelines must be followed for proper system operation.

ELECTRONIC CONTROL UNIT (ECU)

Mount the ECU in an area protected from direct exposure to weather, road hazards, cleaning sprays and high concentrations of dust and sunlight.

Mount the unit in an area free from road splash. Do not allow the ECU to be immersed in water.

Mount the ECU in the coolest practical location with good ventilation. Avoid exposing the ECU to temperature extremes.

	Operational	Non-Operational
Maximum continuous	55°C (130°F)	85°C (185°F)
Maximum startup	71°C (160°F)	—
Maximum intermittent (up to 1 hr.)	—	105°C (220°F)
Minimum exposure	-40°C (-40°F)	-54°C (-65°F)

ECU Temperature Limits

Do not mount the ECU to the vehicle's power package (transmission, engine or driveline). Bolt the ECU securely to the vehicle's cab or chassis.

COPYRIGHT 1994 GENERAL MOTORS CORP.

ELECTRONIC CONTROL UNIT (ECU)

Position the connectors “down” to prevent water from entering the connectors or ECU. If the connectors can’t be positioned down, they may be placed at either 3 or 9 o’clock. Never position the connectors “up.”

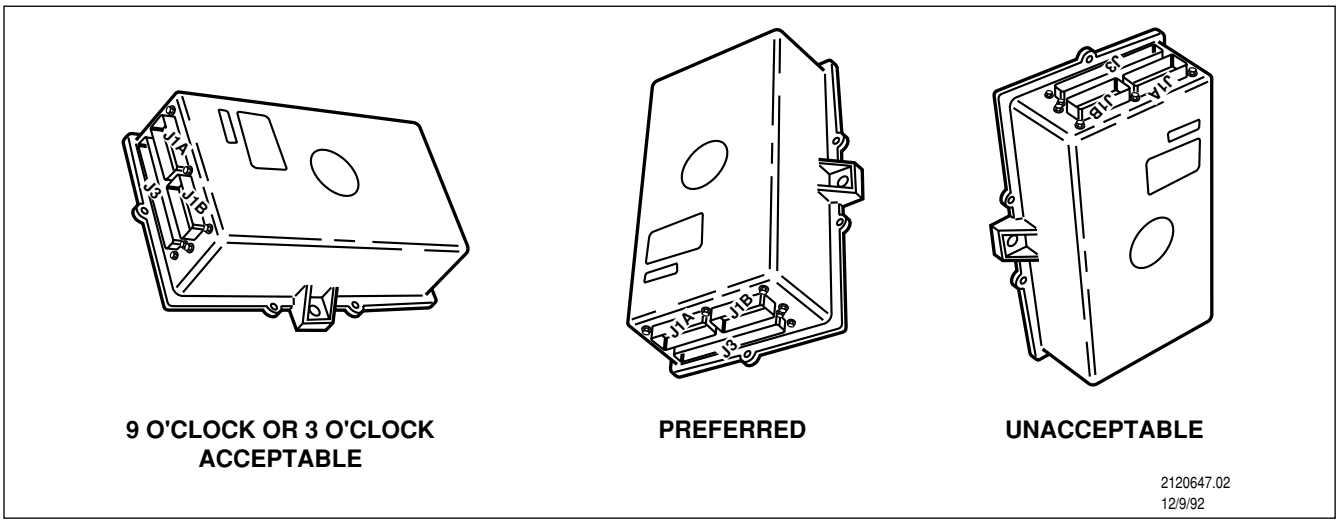

ECU Mounting Orientation

Mount the ECU in a location that minimizes operator and service personnel contact. Leave enough clearance (at least 8 inches) to allow connector removal without having to remove the ECU. Allow room for slack in the harnesses; this reduces stress on the harnesses and connectors.

Mount the ECU as close to the power source as possible. Long battery power wires result in voltage drops. Keep the power wires short to help the ECU meet voltage requirements. The ECU’s main power and ground inputs should be “dedicated” - no other electrical components should share the ECU’s power and ground inputs. The ECU requires a minimum of 10 volts for operation. 16 volts is the maximum continuous voltage the system handles, and 19 volts is the maximum intermittent voltage the system can sustain.

In some applications, ECU power must be supplied by dual power sources (off-highway and emergency vehicle applications, and vehicles equipped with Jacobs engine brakes). An engine or transmission oil pressure switch and the master ignition switch should both supply ECU power. This assures that power is supplied to the ECU under all operating conditions. (Detailed wiring information is located in the Vehicle Interface section of this document.)

The ECU requires continuous power for storing diagnostic codes and throttle sensor calibration values. This memory must be powered by 12 volts even when the engine is shut down and the ignition switch is “off.” Without continuous memory, all diagnostic and throttle sensor information is lost; when power is restored, all information necessary for operation is automatically regenerated by the ECU, but previously stored information (trouble codes, throttle position, etc.) is lost.

The ECU is a sealed component and is not serviceable in the field. PROM removal and replacement is the only field service performed on ECU’s and should be done only by authorized Allison service outlets.

COPYRIGHT 1994 GENERAL MOTORS CORP.

PROGRAMMABLE READ ONLY MEMORY (PROM)

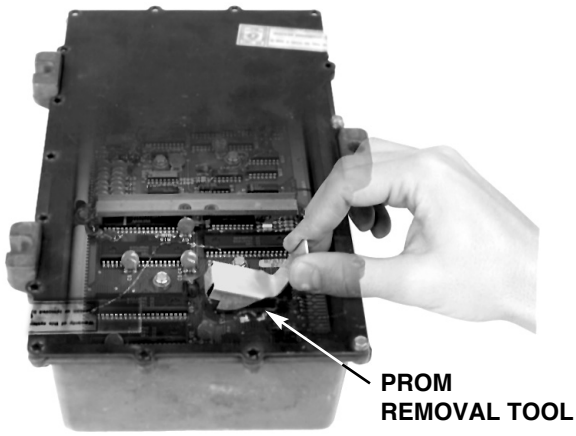

PROM Removal and Installation

The Electronic Control PROM can be removed and replaced. The PROM's tangs are indexed, and though it is difficult, it is possible to install the PROM incorrectly. Installing the PROM incorrectly will erase the stored information and may also cause physical damage.

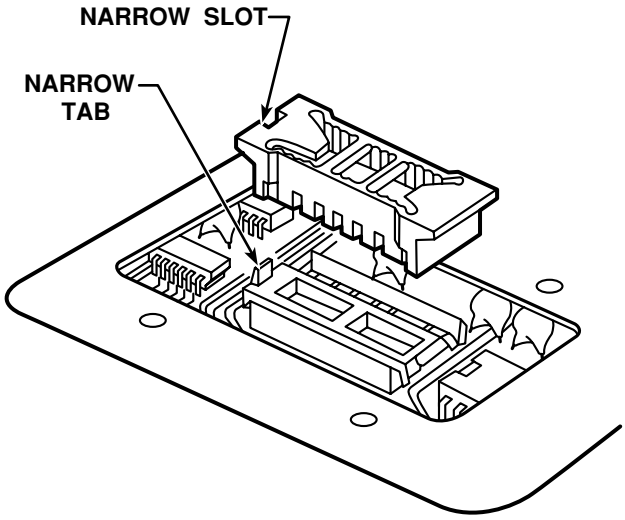

PROM Indexing

Make sure the PROM slides gently into place. If more than light resistance is encountered, check tang indexing and alignment and gently re-insert the PROM. Forcing the PROM or installing it backwards results in damage. Static electricity can also damage the PROM. Avoid touching the PROM legs with your fingers or placing the PROM on static producing surfaces.

COPYRIGHT 1994 GENERAL MOTORS CORP.

OUTPUT SPEED SENSOR

On-highway output speed sensors fit into the transmission rear cover and are secured with a bolt. No adjustment is required.

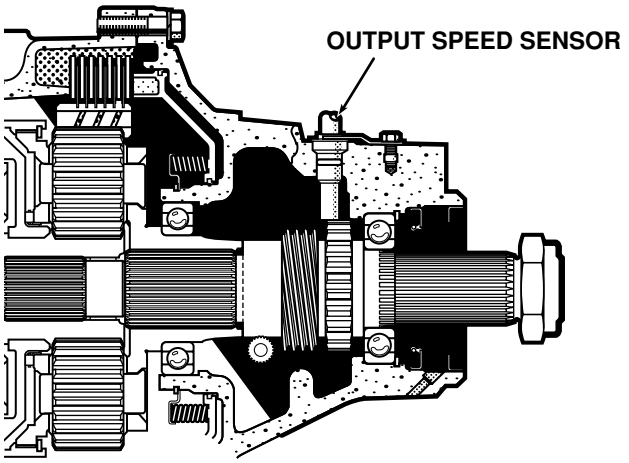

Output Speed Sensor Located on Rear Cover of Transmission

Off-highway output speed sensors must be adjusted. Thread the sensor into the transmission housing until it makes contact with one of the speed sensor gear's teeth, then back it out 3/4 to 1 turn and secure it with the jam nut. Make sure contact is made on the tip of the tooth and not between the teeth. Serious damage to the speed sensor and speed sensor gear teeth could result from improper installation/adjustment.

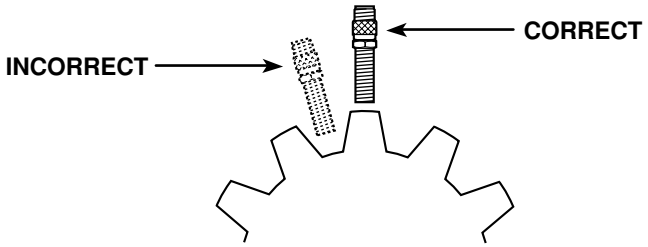

Off-Highway Output Speed Sensor Installation and Adjustment

The output speed sensor wiring is used for the speed sensor only. Do not connect any other devices to the output speed sensor wiring, connector, or pick-up. Do not use this signal for an electric speedometer or tachograph. Connecting other components to this circuit can cause improper shifting, diagnostic codes and damage.

COPYRIGHT 1994 GENERAL MOTORS CORP.

THROTTLE POSITION SENSOR (TPS)

Installation

The throttle position sensor can be mounted on the chassis or power package. When mounted on the power package, an Allison-supplied isolator must be used. Provide a solid mount - avoid unsupported brackets or thin, flexible mounting bases. Mount the sensor on a flat surface (within 0.030 in.) to avoid sensor housing distortion. The sensor body should be mounted above the engine fuel control connection with its cable pointing down.

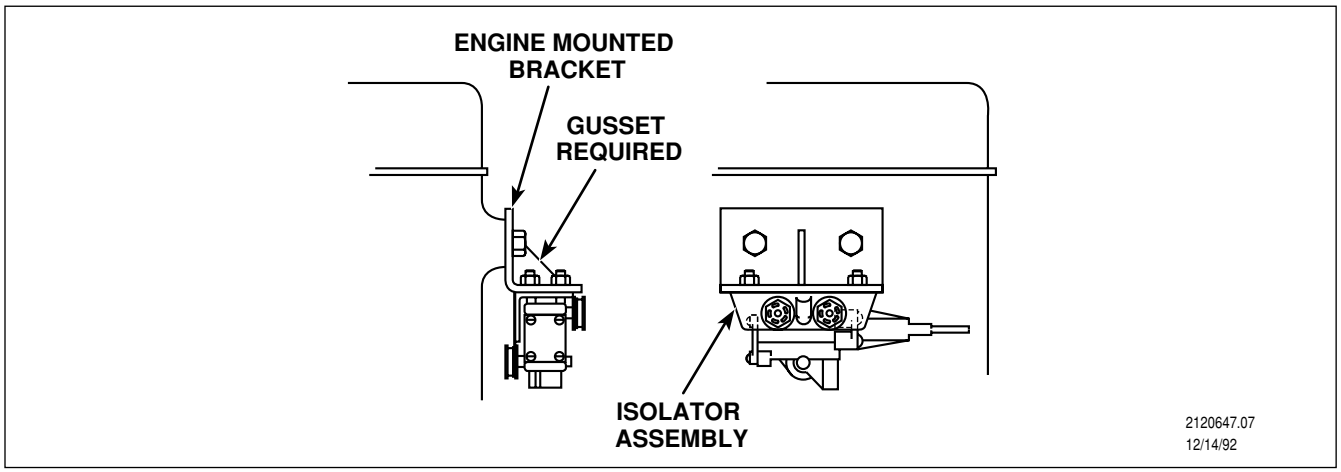

TPS Mounting Bracket

Add protective shrouding if the sensor is mounted in an area susceptible to operator or technician damage. Shield the sensor and any of its components that are within 12 inches of turbochargers, exhaust manifolds, or other heat sources. The sensor is designed to withstand no more than 250 degree (F) continuous temperatures and 300 degree (F) intermittent heat soaks.

The throttle position sensor must read actual fuel shaft movement, not throttle breakover movement. If the sensor reads breakover movement, it sees the additional travel as fuel shaft movement and self-adjusts incorrectly. Be sure that the breakover force is capable of overcoming the return force of the throttle sensor and all other attached linkages.

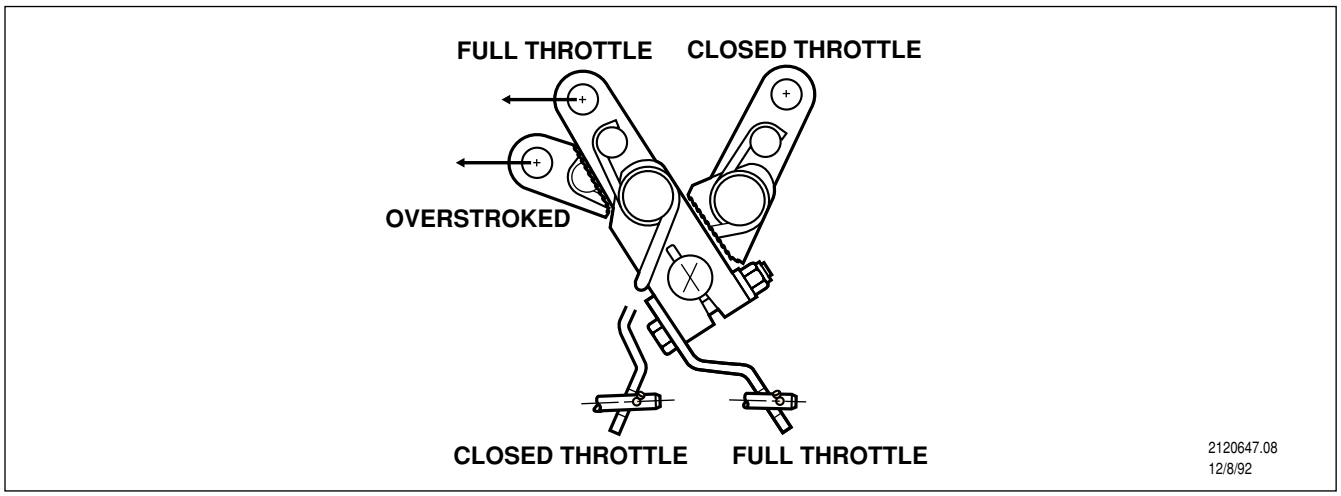

Throttle Breakover Movement

COPYRIGHT 1994 GENERAL MOTORS CORP.

THROTTLE POSITION SENSOR (TPS)

Installation (continued)

The throttle position sensor cable must be installed without excessive bends or angles. Do not exceed a 10 degree maximum installed cable angle. Linkages should move freely without binding or sticking. Be sure the sensor cable mounting won't interfere with throttle movement.

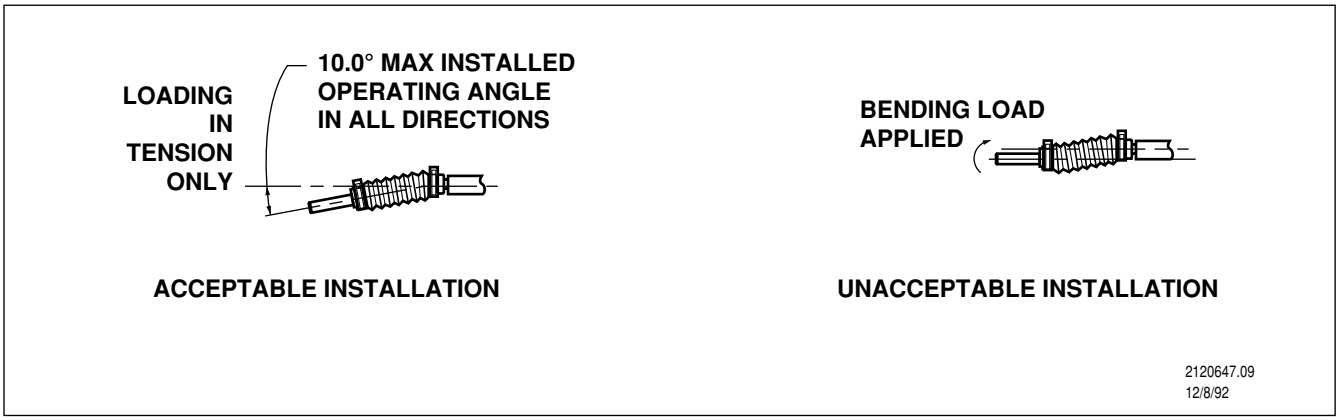

Acceptable TPS Cable Angle

Adjustment

Although the throttle position sensor is self-adjusting, an initial adjustment must be performed whenever the sensor is first installed or removed and reinstalled. Throttle sensor cables are available with slotted ends (standard for earlier models) and hitch pin ends (later models). Adjustments are necessary when changing from one style to the other.

Initial throttle position sensor adjustment should "center" the sensor between the error zones.

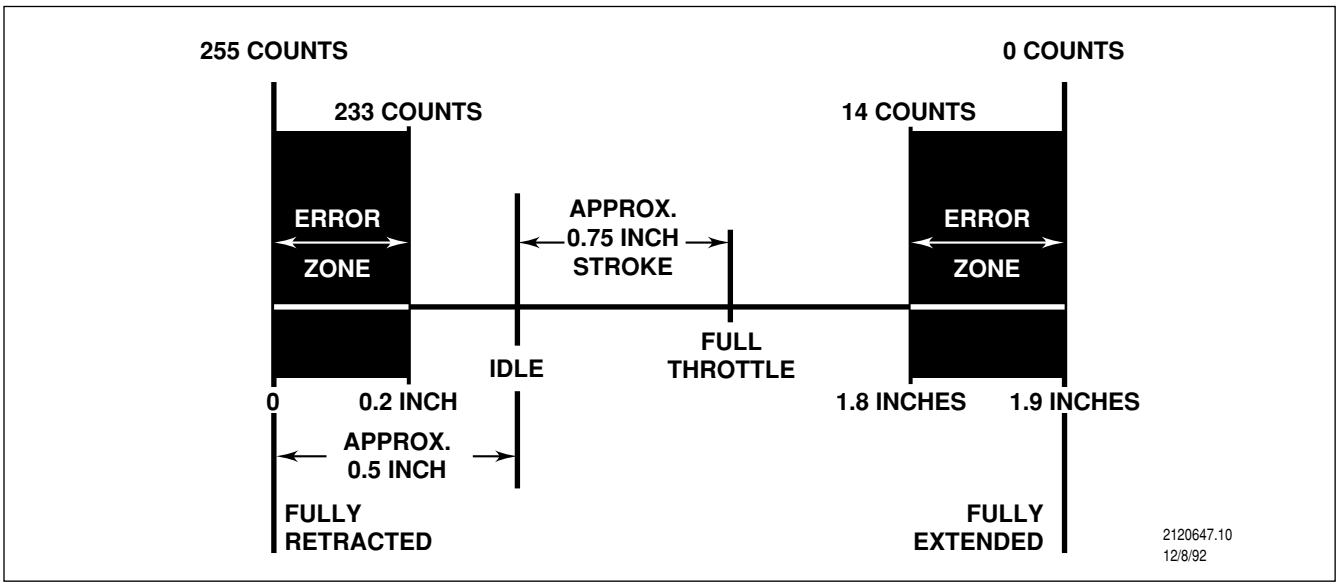

Initial TPS Adjustment - Error Zones

COPYRIGHT 1994 GENERAL MOTORS CORP.

THROTTLE POSITION SENSOR (TPS)

Adjustment (continued)

Pull the cable 0.5 inch from the fully retracted position - this sets closed throttle position. Make sure that 0.625 to 0.9 inch working stroke exists. When properly adjusted, the throttle position sensor will still have travel left when the throttle is wide open (the sensor should not be fully extended when the throttle is wide open). From fully retracted to fully extended, the sensor will travel about 1.9 inches. Adjusting an initial 0.5 inch from fully retracted will place the sensor in a safe range for most applications. No further adjustment is required unless the sensor is replaced or linkage/cable problems occur.

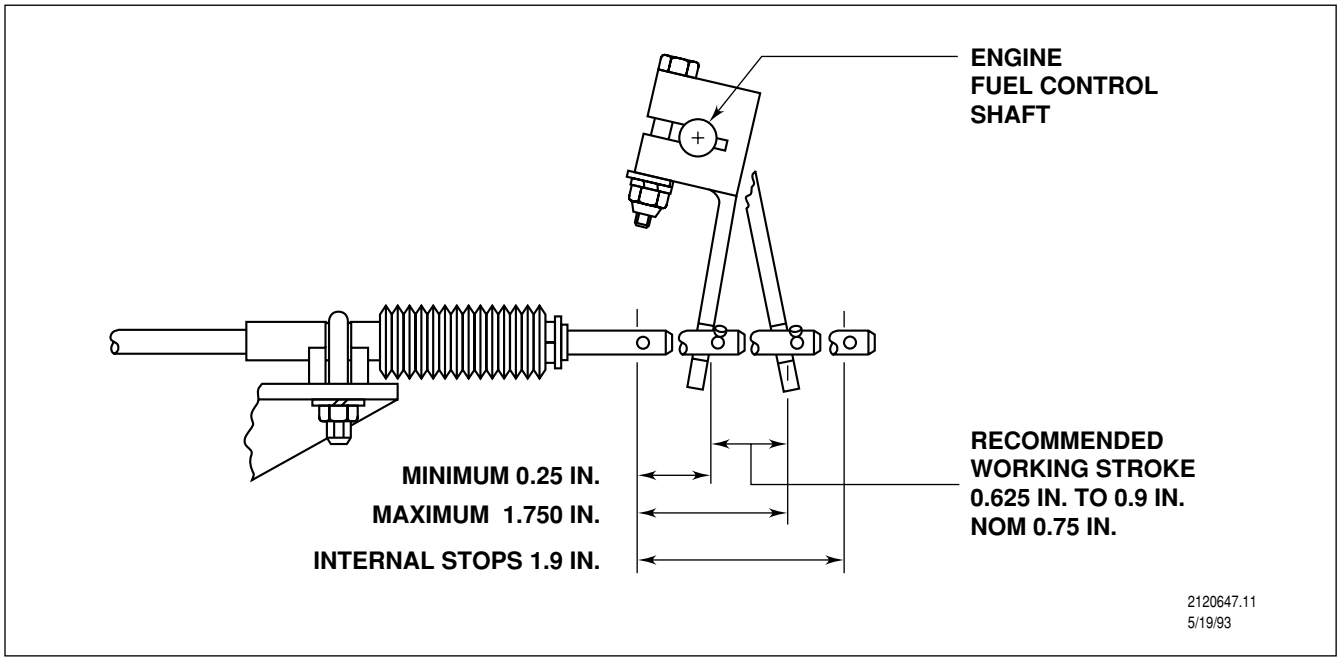

Initial TPS Adjustment

COPYRIGHT 1994 GENERAL MOTORS CORP.

SHIFT SELECTORS

The Electronic Control uses two types of shift selectors - push button and lever. Sealed Plus II ECU's sometimes use secondary shift selectors. Installation requirements for primary and secondary selectors are the same.

Push Button Shift Selector

The push button shift selector is designed for use in an enclosed cab, protected from direct contact with moisture, high concentrations of dust and direct sunlight. Like the ECU, the shift selector must be protected from temperature extremes.

	Operational	Non-Operational
Maximum continuous	55°C (130°F)	85°C (185°F)
Maximum startup	71°C (160°F)	—
Maximum intermittent (up to 1 hr.)	—	105°C (220°F)
Minimum exposure	-40°C (-40°F)	-54°C (-65°F)

Shift Selector Temperature Limits

Mount the shifter in the vehicle cab using the four mounting holes on the top of the selector. Secure the selector to a solid base or panel. Use fasteners that allow shift selector removal and reinstallation (cage nuts, threaded mounting holes, etc.).

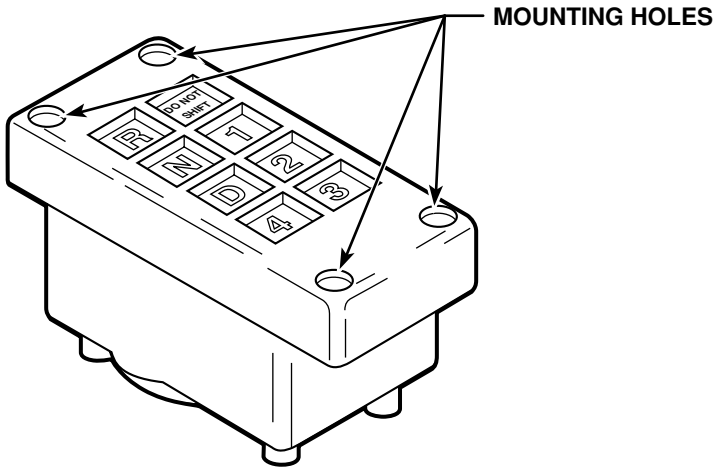

Mounting the Push Button Shift Selector

COPYRIGHT 1994 GENERAL MOTORS CORP.

SHIFT SELECTORS

Push Button Shift Selector

Mount the selector at a minimum 20-1/2 degree angle (longitudinally) from the vehicle horizontal axis. This is necessary to keep liquid and dirt from accumulating on the shifter face. Mount the selector so that Range Displays and the DO NOT SHIFT light are clearly visible to the operator.

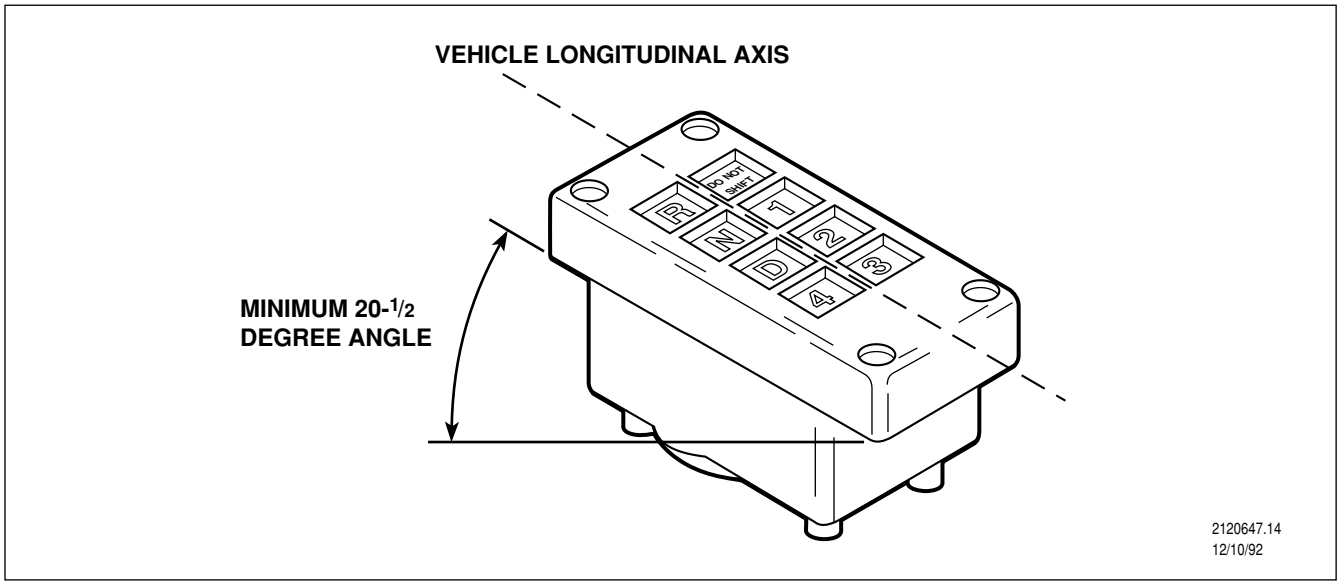

Mounting Angle for Push Button Shift Selector

The push button shift selector connector is not sealed. Mount the selector so that the connector and harness are protected from moisture and dirt, as well as operator, technician, or passenger contact. Leave a minimum of 6 inches of slack in the harness to reduce stress on the harness and connector and allow for connector removal.

COPYRIGHT 1994 GENERAL MOTORS CORP.

SHIFT SELECTORS

Lever Shift Selector

The lever shift selector and its connector are sealed. They can withstand moisture, but should not be immersed in water.

The lever selector has two mounting provisions. Top mounting is similar to push button shift selectors. Remove the selector's bezel, mount the selector with four fasteners, then reinstall the bezel.

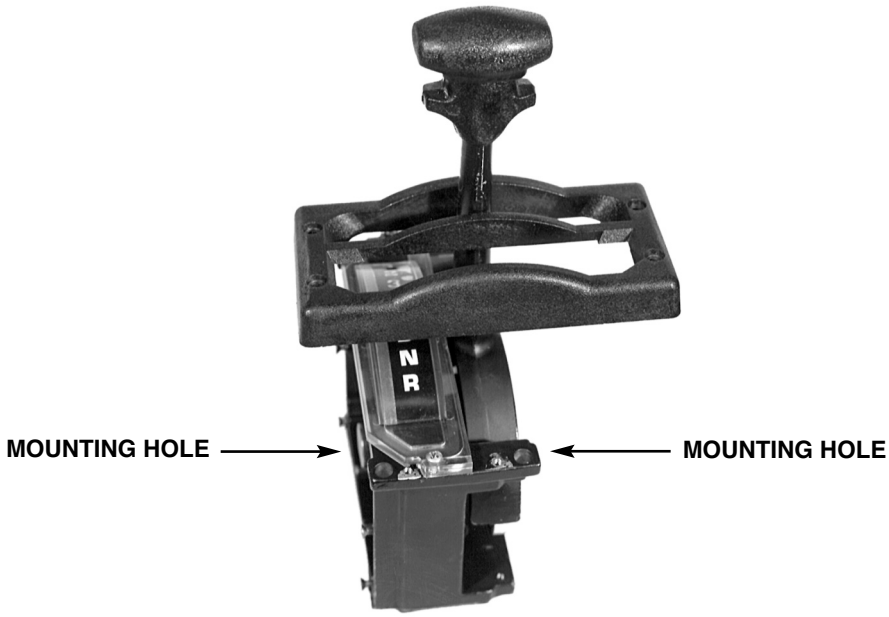

Mounting the Lever Shift Selector

The lever selector can also be side mounted. The selector housing has four tapped holes (metric M6 X 1.00 - 6H) that can be used for mounting the shifter to the side of a pedestal.

COPYRIGHT 1994 GENERAL MOTORS CORP.

WIRING HARNESSES

Allison provides wiring harnesses for properly connecting Electronic Control components. Harnesses not supplied by Allison (if used) must be produced by a qualified harness manufacturer. Proper harness quality, integrity, and configuration are essential to system performance.

The installer is responsible for warranty on any components not supplied by Allison. The installer is also responsible for any damage to or claims against Allison Transmission Electronic Control components resulting from the failure of components not supplied by Allison. Improper harness installation and connections can cause false trouble codes and damage.

Protecting The Harness

All wiring harnesses must be carefully routed to avoid sharp bends, kinking, pinching, cutting, binding, rubbing, and excessive pulling.

Protect the cable from road hazards, sharp surfaces, high temperatures, and corrosives by using tubes and shielding (harnesses are designed to withstand no more than 250 degrees F/121 degrees C).

Use nylon ties (or similar tie wraps) to secure the harness to the vehicle. Coil any excess harness and secure it with nylon ties, also.

When routing through sheet metal, insert rubber guards or grommets to prevent nicks or cuts to the harness. Do not run screws through the harness when installing accessories.

NOTE: The harness must be installed so that the connectors are not strained or stressed. Do not allow the connectors to support the weight of the harness. Secure the harness using nylon ties or appropriate strain reliefs.

COPYRIGHT 1994 GENERAL MOTORS CORP.

WIRING HARNESSES

Harness Connectors

WARNING: Always disconnect the Electronic Control wiring harnesses before arc welding on the vehicle. Never jump start the vehicle using arc welding equipment.

The *Diagnostic Data Link (DDL) connector* is part of the cab wiring harness. Mount the DDL connector in the cab where it can be easily accessed by technicians, but out of the way of the operator and passengers.

Output speed sensor and throttle position sensor harness connectors are installed by pushing the connector into the sensor body until a “click” is heard.

The *main transmission connector* plugs into the electrical bulkhead in the transmission housing. The connector is indexed so it can only be installed one way. Once the harness connector pins are seated in the bulkhead connector, the connector outer locking collar must be rotated. This secures the harness connector to the transmission bulkhead connector.

ECU connectors are indexed for proper orientation. Carefully insert the connectors into the ECU. Once the connectors are seated, torque the center locking screw to 7-13 inch pounds. Lever shift selector connectors are installed using the same procedures. Avoid excessive pushing or bending when tightening the center screw on any connector.

Push button shift selector connectors are indexed for proper installation. Carefully insert the connector into the back of the selector, index the connector, then thread the connector locking collar onto the selector housing.

COPYRIGHT 1994 GENERAL MOTORS CORP.

VEHICLE INTERFACE

INTRODUCTION

The term “vehicle interface” describes the electrical connections between the vehicle and the Electronic Control. These connections are made through the cab and secondary mode wiring harnesses and supply power, ground and option input/output signals to the ECU.

Interface connections can be either mandatory or optional. Mandatory interface connections are required for every application. Optional connections are signal input and output wires that are connected when specific options exist in the PROM.

This document provides isolated schematics that focus on each specific interface item, plus detailed operational descriptions of each option. You will also find additional wiring information and suggestions that will guide you through each interface connection.

ELECTRONIC CONTROL INQUIRY SYSTEM (ECIS)

The Electronic Control Inquiry System (ECIS) is an on-line data system that indicates which options are programmed in a particular PROM. ECIS is updated daily and is available through all Distributor Parts Departments. The system provides detailed PROM programming information, upshift points and downshift points for primary mode and, if applicable, secondary mode operation.

The ECIS Users Manual provides step-by-step accessing information. It also contains a glossary with pertinent explanations and definitions. Use ECIS and the Users Manual to determine which options are programmed and how they should operate.

COPYRIGHT 1994 GENERAL MOTORS CORP.

MANDATORY VEHICLE INTERFACE

Connections Required For Basic Vehicle Operation

The following wiring connections are required for Electronically Controlled transmissions to operate.

- Use 18 AWG minimum wire except where noted.
- Always use good quality relays, connectors, and fasteners.
- When discussing relays, the “activation” circuit controls the relay and the “power” circuit is the circuit switched on and off by the relay.
- Potentially high load junction points (bus bars, power strips, etc.) must be properly fused and fed by an appropriately sized wire (16 AWG or bigger, depending on the load).

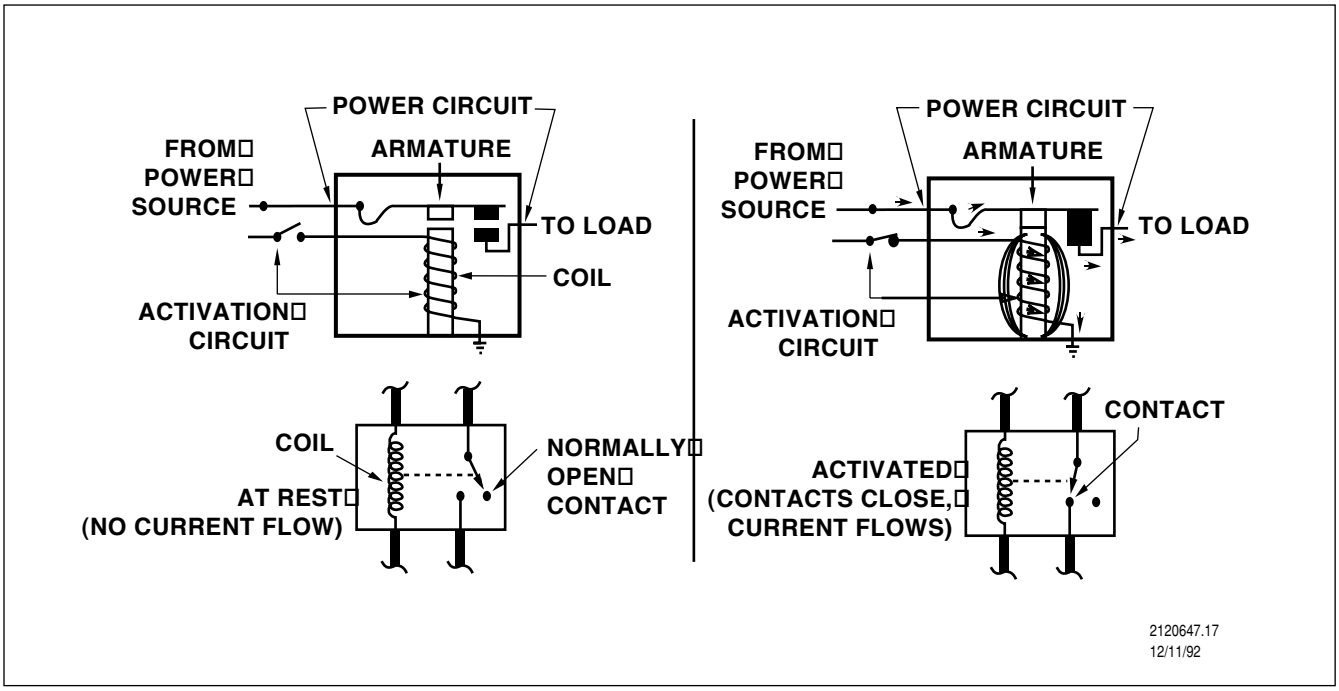

Relay Activation and Power Circuits

COPYRIGHT 1994 GENERAL MOTORS CORP.

MANDATORY VEHICLE INTERFACE

EMI Shielding Ground - Wire 201

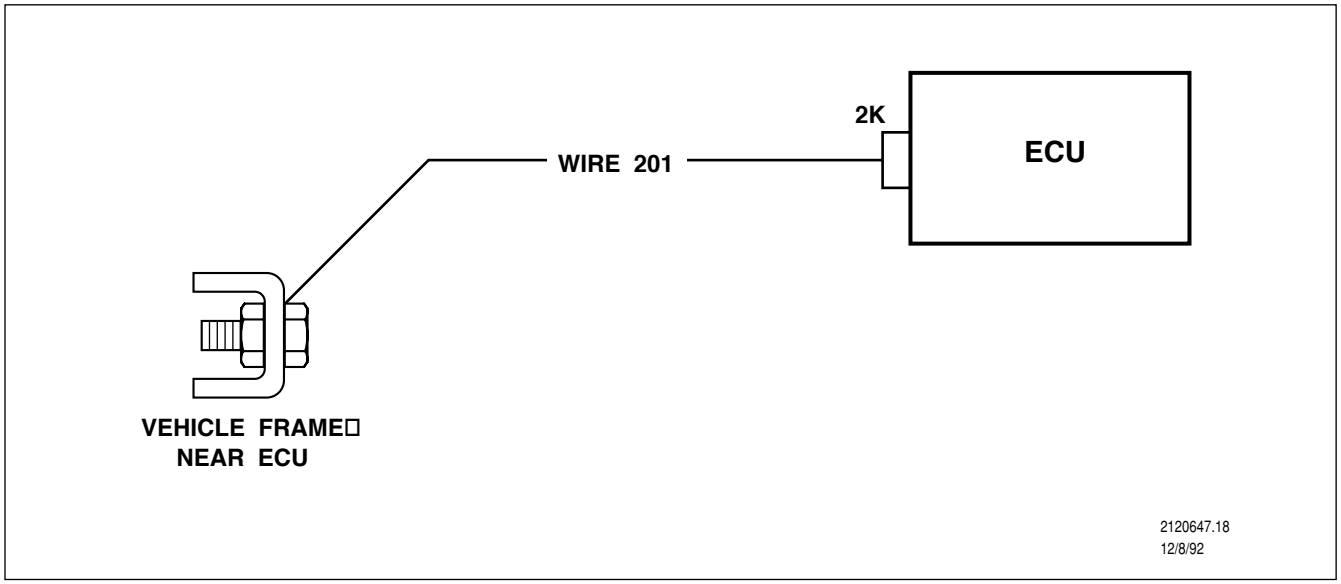

Wire 201 is the ECU electromagnetic shielding ground. Ground this wire to the vehicle chassis to minimize operational problems (improper shifting, false diagnostic codes, etc.) caused by electromagnetic interference (EMI).

- Ground wire 201 directly to a metal, non-painted portion of the chassis.
- Do not change the wire length.
- Do not connect wire 201 to battery ground or any other ground wires.

COPYRIGHT 1994 GENERAL MOTORS CORP.

MANDATORY VEHICLE INTERFACE

ECU Power - Wires 202A, 223A

Wires 202A and 223A provide positive power for the ECU.

- The Electronic Control requires at least 10 volts for operation.
- The system is designed to handle 16 volts continuously and up to 19 volts intermittently.
- Wires 202A and 223A can be connected using one of the following options.

Option 1

CAUTION: Connecting wire 215 directly to power causes damage to ECU.

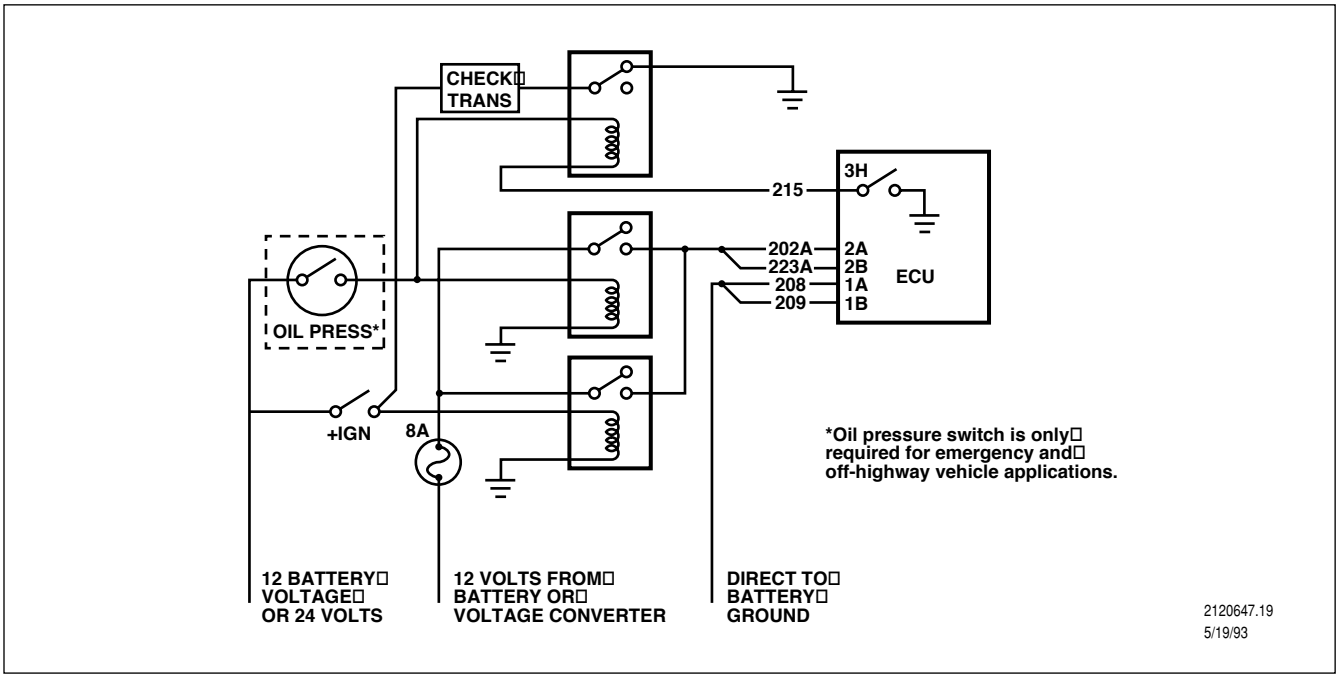

Using Option 1, a wire connected directly to the battery is routed through an 8-amp fuse to the power circuit of two relays.

- Positive voltage directly from the battery or voltage converter must be routed to each relay power circuit through an 8-amp fuse.
- The oil pressure switch can be either a transmission oil pressure switch or an engine oil pressure switch. Regardless of switch type, it must remain closed whenever the engine is running.
- Voltage coming out of the oil pressure switch can also be directed to the Check Transmission light relay activation circuit (if used).
- The single wire running to wires 202A and 223A must always be at least 12 AWG up to the junction point.
- Dual power is required on emergency vehicles and off-highway vehicles.
- Wires 202A and 223A can be connected to buss bars as long as the buss bars are dedicated to the electronic control system and are in close proximity to the battery.

COPYRIGHT 1994 GENERAL MOTORS CORP.

MANDATORY VEHICLE INTERFACE

ECU Power - Wires 202A, 223A

Option 2

CAUTION: Connecting wire 215 directly to power causes damage to ECU.

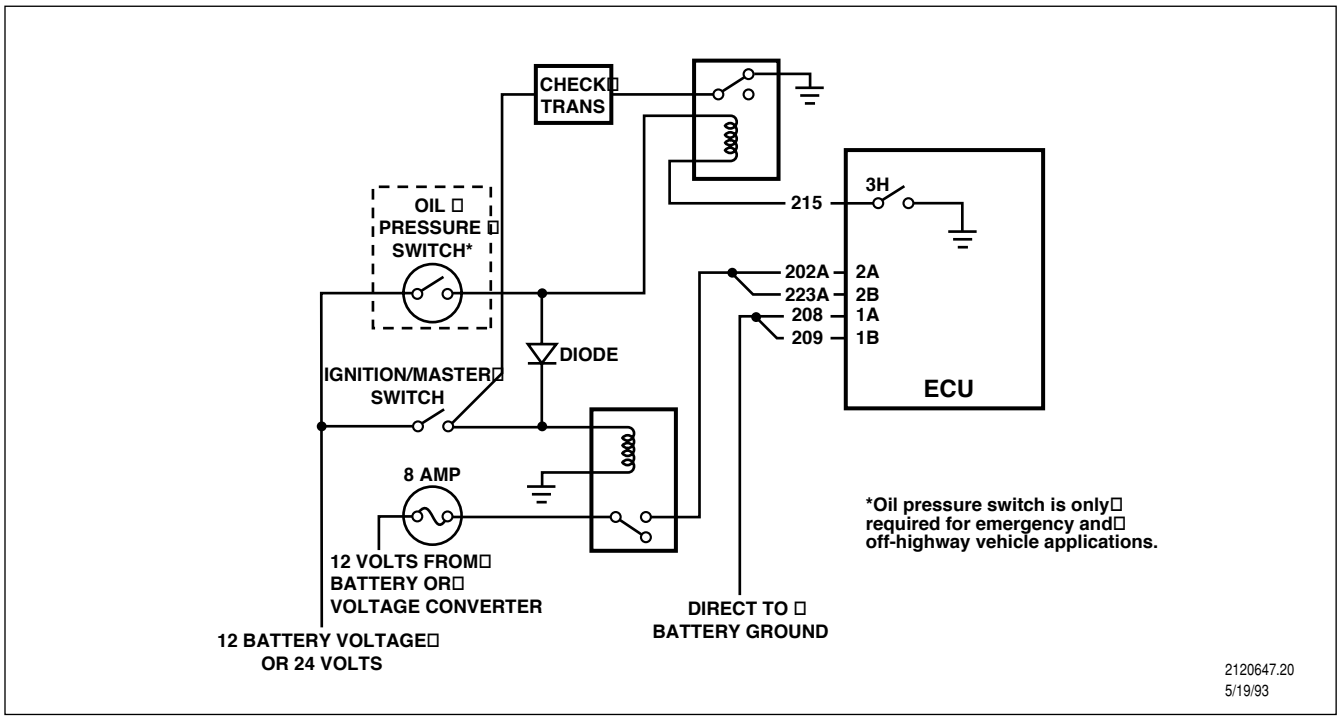

Using Option 2, positive voltage directly from the battery or voltage converter is routed through an 8-amp fuse to the power circuit of one relay.

- The diode must be capable of handling full circuit current and voltage when the vehicle master ignition switch is open.
- The relay can be deleted if the master switch shown is dedicated to ECU wires 202A/223A only (no other circuits can be connected to the switch contacts). When the relay is deleted, the switch must be capable of handling ECU current draw (approximately 6 amps).
- The oil pressure switch can be either a transmission oil pressure switch or an engine oil pressure switch. Regardless of switch type, it must remain closed whenever the engine is running.
- Voltage coming out of the oil pressure switch can also be directed to the Check Transmission light relay activation circuit (if used).
- The single wire running to wires 202A and 223A must always be at least 12 AWG up to the junction point.
- Wires 202A and 223A can be connected to buss bars as long as the buss bars are dedicated to the electronic control system and are in close proximity to the battery.

COPYRIGHT 1994 GENERAL MOTORS CORP.

MANDATORY VEHICLE INTERFACE

ECU Continuous Power Memory - Wire 203

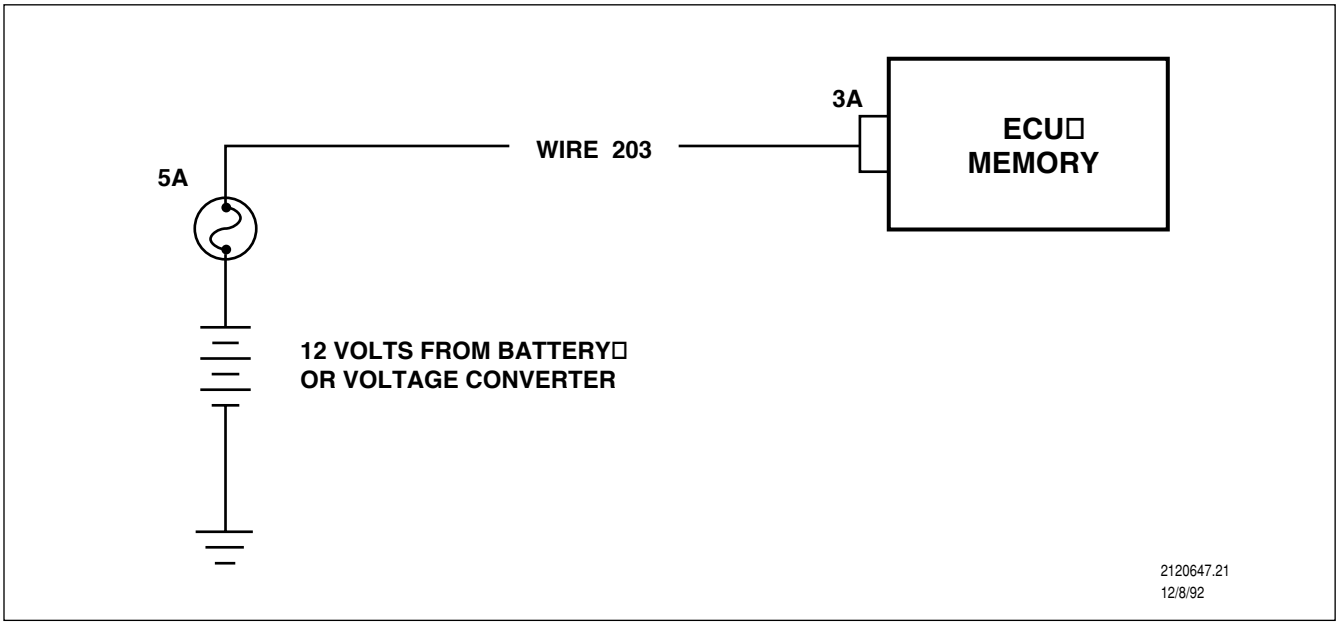

Wire 203 supplies continuous power to the ECU's memory for storing diagnostic codes and throttle position sensor calibration values.

- Wire 203 must be connected directly to the positive terminal of the battery or voltage converter through a 5-amp fuse.
- If wire 203 loses power, all historic diagnostic and throttle sensor calibration information will be lost. Calibration information is regenerated when the vehicle is restarted, but previous diagnostic information remains lost.

COPYRIGHT 1994 GENERAL MOTORS CORP.

MANDATORY VEHICLE INTERFACE

ECU Ground - Wires 208, 209

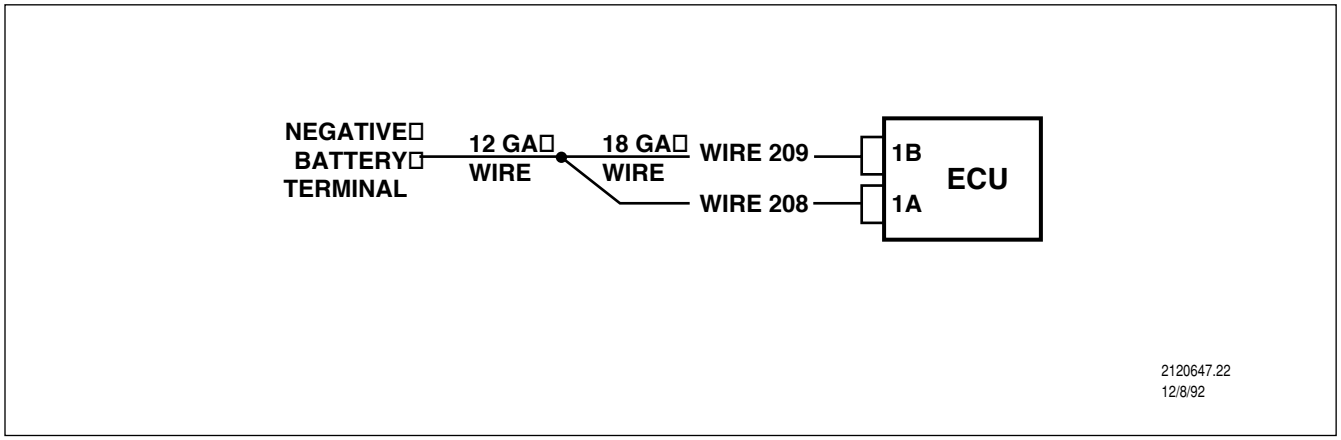

Wires 208 and 209 are connected directly to the battery negative terminal and provide ECU ground.

- A single wire should be run directly from the battery negative terminal to wires 208 and 209.
- The single wire running to wires 208 and 209 must always be at least 12 AWG up to the junction point.
- Do not ground wires 208 and 209 to the vehicle chassis.
- Wires 208 and 209 can be connected to buss bars as long as the buss bars are dedicated to the electronic control system and are in close proximity to the battery.

COPYRIGHT 1994 GENERAL MOTORS CORP.

MANDATORY VEHICLE INTERFACE

Reverse Signal - Wire 214

CAUTION: Connecting wire 214 directly to power causes damage to ECU.

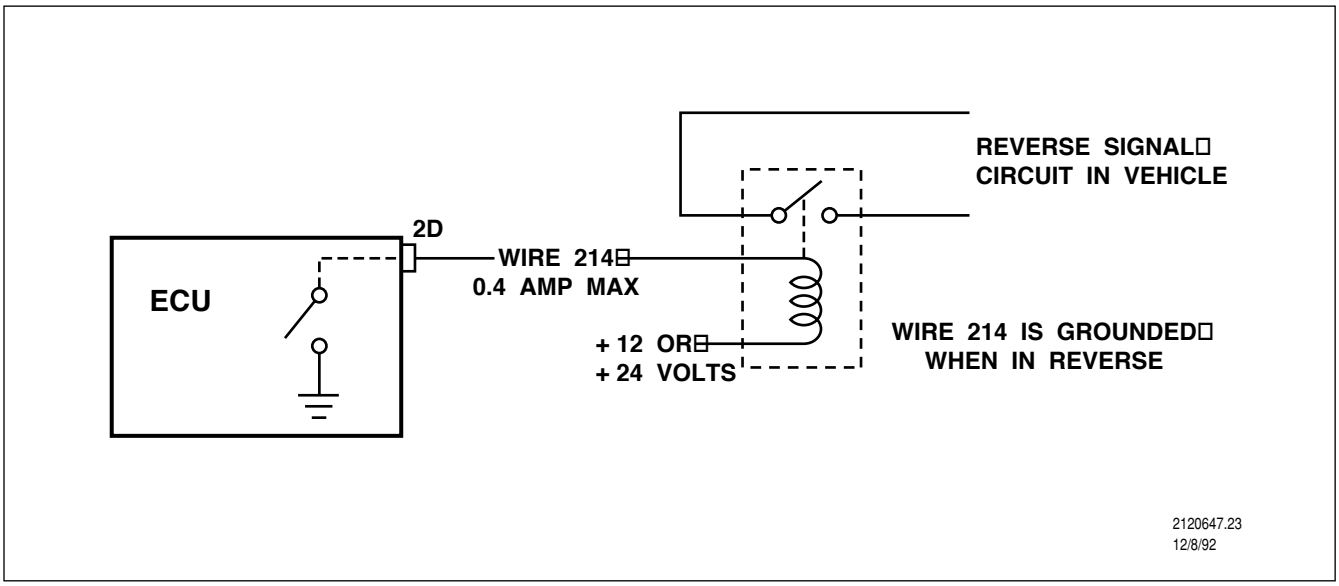

Wire 214 provides a negative (ground) signal whenever the transmission is in reverse.

- When the transmission is in reverse, wire 214 goes from open to ground.
- This provides an activation circuit signal to an OEM-supplied relay. This relay controls the vehicle reverse warning device.

COPYRIGHT 1994 GENERAL MOTORS CORP.

MANDATORY VEHICLE INTERFACE

Shift Selector Power - Wire 225 or 235

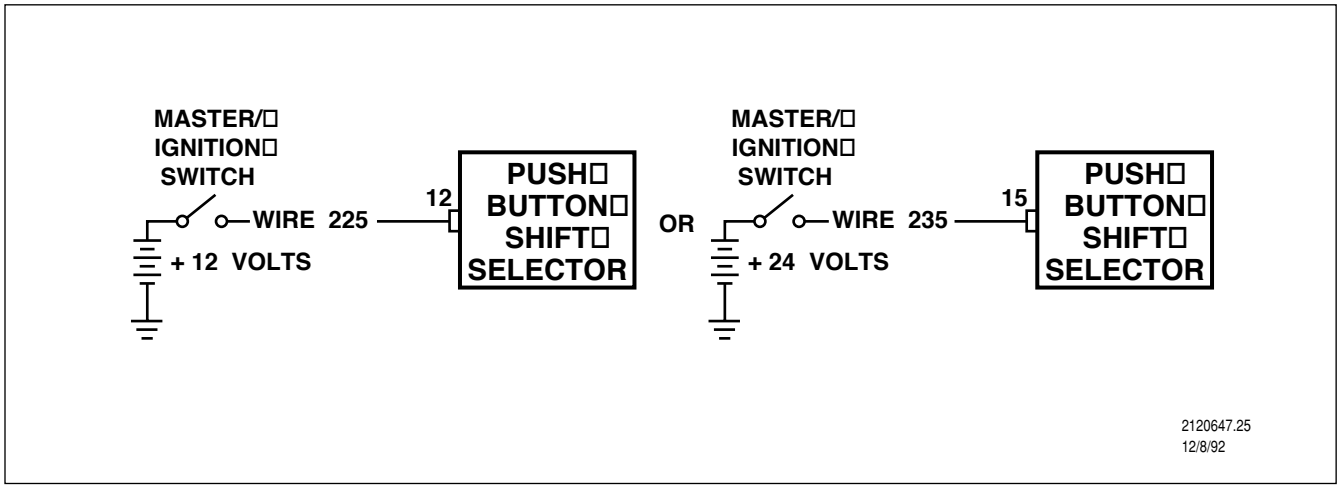

Shift selector power is supplied using either wire 225 or wire 235.

- Use wire 225 for 12-volt systems (lever and push button selectors).
- Use wire 235 for 24-volt systems (lever and push button selectors).

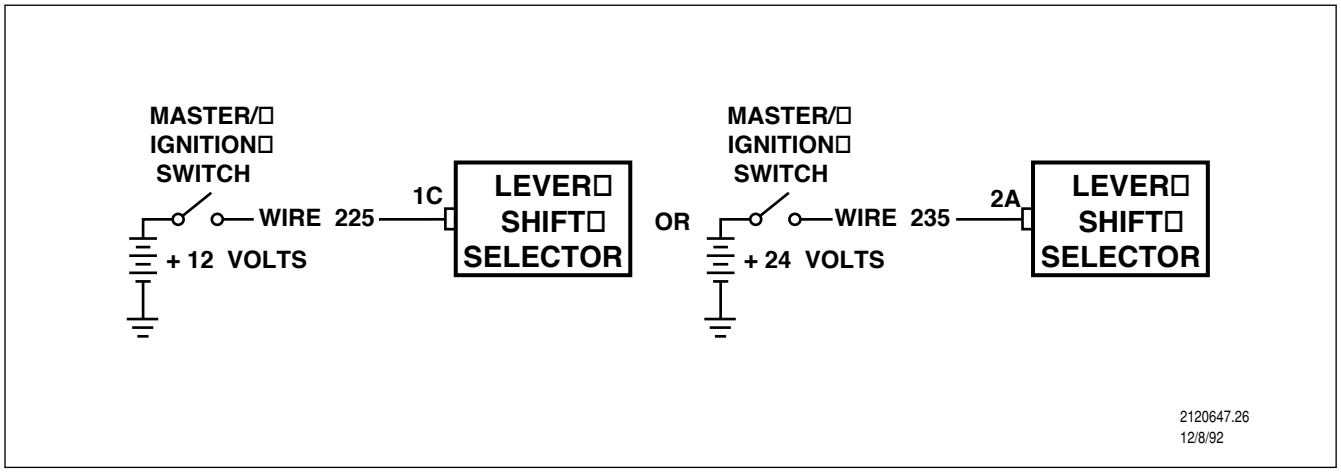

COPYRIGHT 1994 GENERAL MOTORS CORP.

MANDATORY VEHICLE INTERFACE

Selector Lamp Circuit - Wires 230, 233 and 234

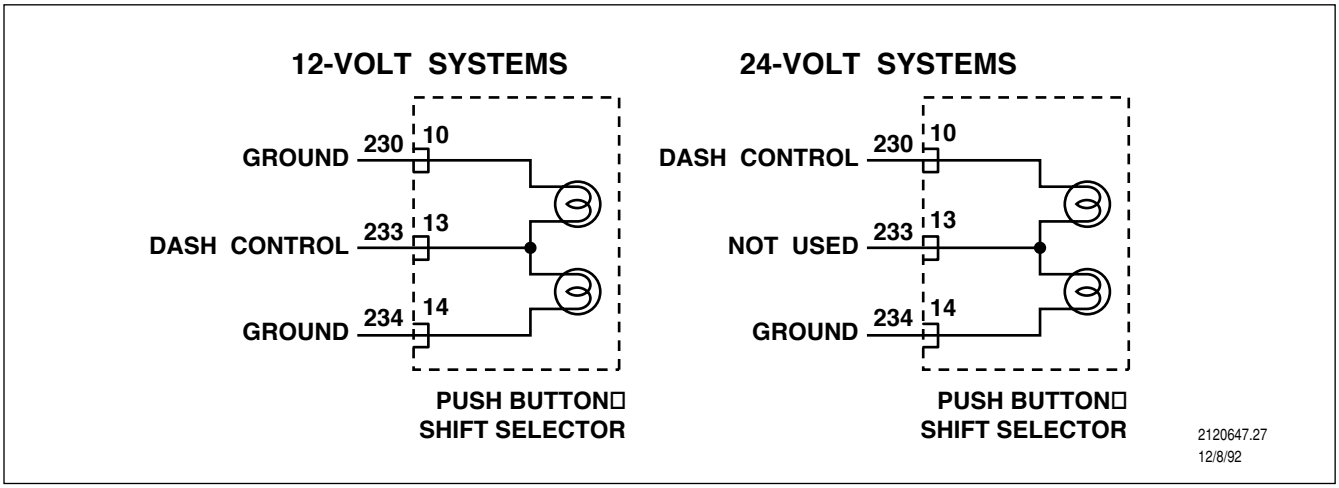

The shift selector has two 12-volt, one watt lamps which are controlled by the vehicle dash-dimmer rheostat.

- Wire 234 (ground for 12- and 24-volt circuits) should be connected to vehicle ground at the earliest convenient point.
- On 12-volt systems, wire 230 is grounded and positive voltage is supplied from the dashboard illumination control through wire 233.
- On 24-volt systems, wire 233 is not used and positive voltage from the dashboard illumination control is supplied through wire 230.

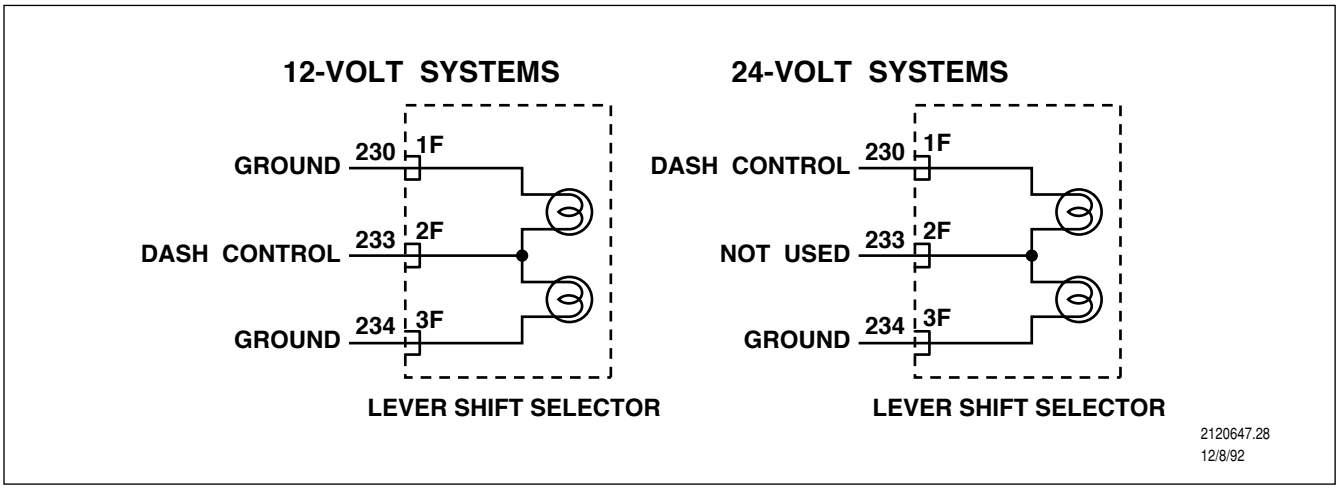

COPYRIGHT 1994 GENERAL MOTORS CORP.

MANDATORY VEHICLE INTERFACE

Neutral Start - Wire 231

CAUTION: Connecting wire 231 directly to power causes damage to ECU.

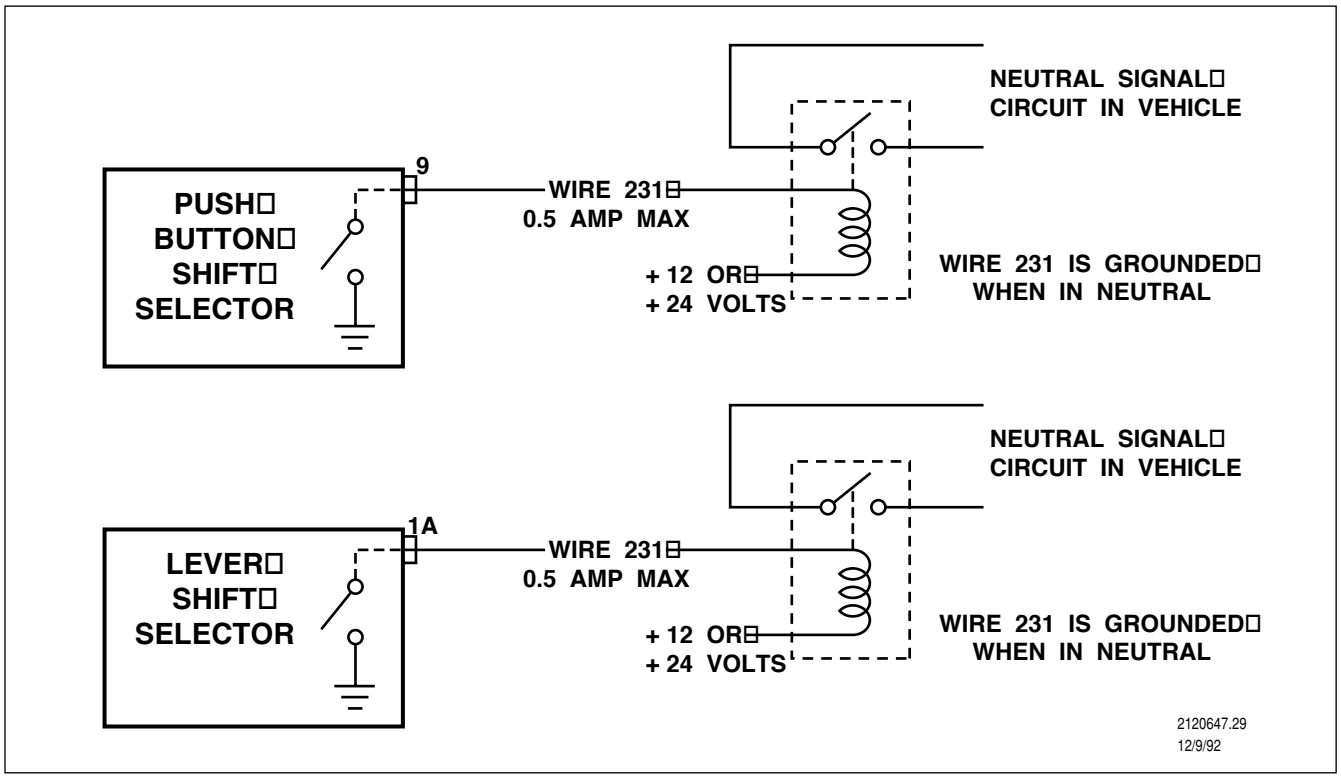

When the vehicle master switch is turned on and the shift selector is in neutral, wire 231 is grounded. This ground signal is used with an OEM-supplied relay to control the vehicle's neutral start circuit.

- When the selector is in neutral and the vehicle master switch is on, wire 231 provides a ground to the neutral start relay activation circuit.

COPYRIGHT 1994 GENERAL MOTORS CORP.

OPTIONAL CAB HARNESS INTERFACE

Optional cab harness interface connections are wired through the cab wiring harness (200 series wires). Options must be programmed and properly wired to operate. Simply wiring the option will not enable it - the option must be programmed. If necessary, determine PROM characteristics using ECIS.

Electronic Speedometer Output - Wire 205

CAUTION: Connecting wire 205 to power causes damage to the ECU.

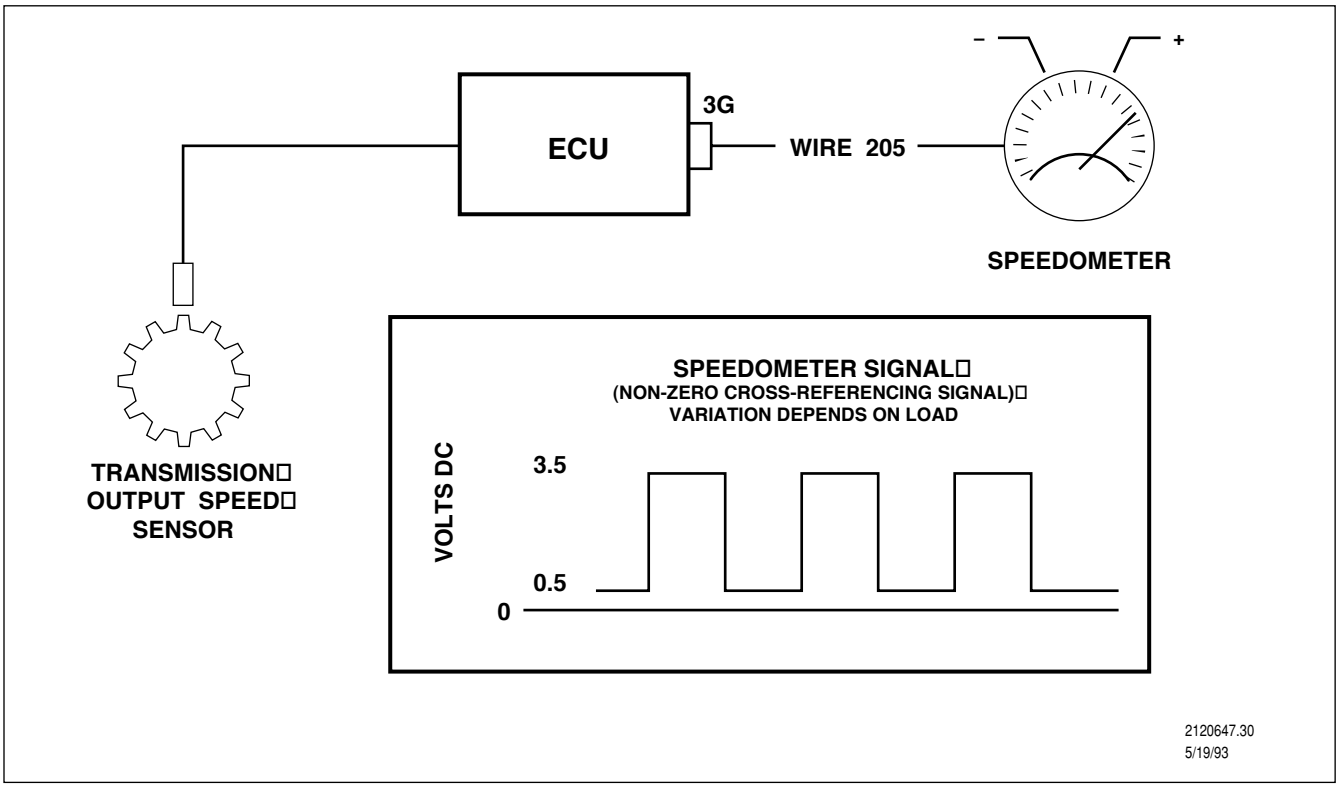

Wire 205 is an output that provides a pulse signal from the ECU for electronic speedometers, odometers or tachs to use.

- Connecting wire 205 to positive voltage can damage the ECU.
- Do not connect electronic speedometers, tachs, etc. to the speed sensor circuit.
- Wire 205 provides a square wave, non-zero crossing signal which varies from 0 to +5 volts. Pulse frequency varies, depending on transmission model.
  - On highway - 16 pulses per output shaft revolution.
  - Off-highway 5000 and 6000 series - 39 pulses per output shaft revolution.
  - Off-highway 8000 and 9000 series - 41 pulses per output shaft revolution.
- Wire 205 can support up to two low-power loads (high impedance). If more than two devices need to be installed, contact Allison Transmission Engineering.

COPYRIGHT 1994 GENERAL MOTORS CORP.

OPTIONAL CAB HARNESS INTERFACE

Retarder Enable and Output - Wires 211 and 213

CAUTION: Connecting wire 213 directly to power causes damage to the ECU.

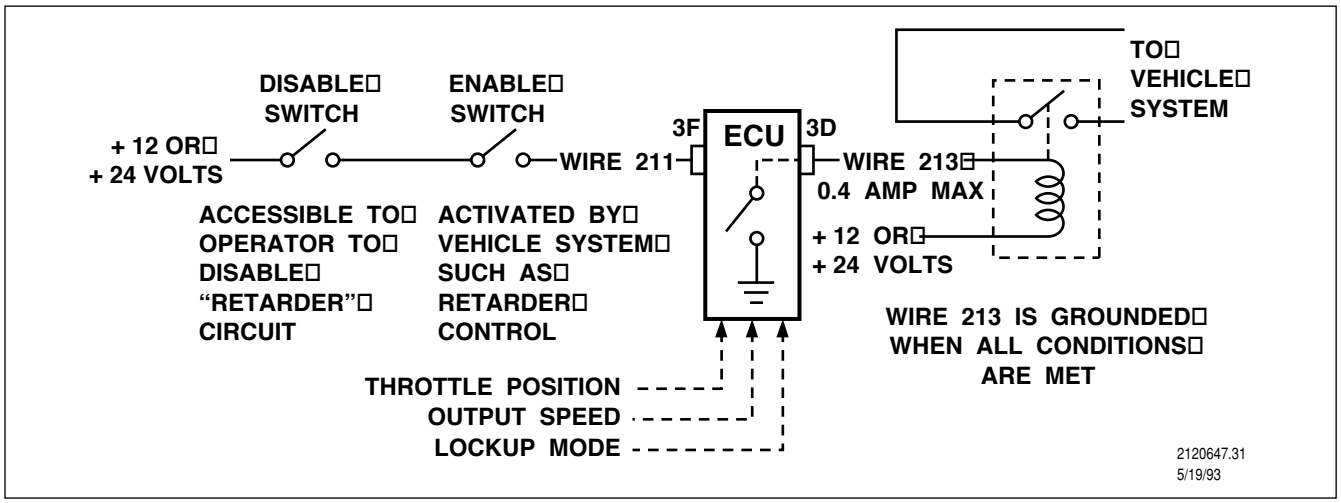

When the ECU detects power on wire 211, it recognizes that the operator has requested retarder or compression brake operation.

If programmed conditions are correct, wire 213 goes from open to ground, applying the compression brake or retarder.

- Wire 211 is an input for retarder enable. When the ECU recognizes positive voltage on wire 211, it recognizes a request for retarder or compression brake application.
- Wire 213 is an output for retarder apply. When the ECU recognizes retarder or compression brake request (through wire 211), it checks the condition of certain items. When the ECU senses the appropriate conditions, wire 213 (which is directed to the retarder/compression brake relay activation circuit) goes from open to ground.

COPYRIGHT 1994 GENERAL MOTORS CORP.

OPTIONAL CAB HARNESS INTERFACE

Retarder Enable and Output - Wires 211 and 213

Retarder Options

Retarder options indicate the type of signals the ECU must receive before the retarder will apply. There are four retarder options.

`Option 1`

Option 1 lets the retarder apply when requested, without checking any other conditions.

- When wire 211 is connected to positive voltage, the ECU grounds wire 213, enabling the retarder.

This option is used primarily in off-highway applications.

`Option 3`

Option 3 (there is no Option 2) lets the retarder apply once all of the following conditions are met:

- Wire 211 is connected to positive voltage.
- The throttle position is near zero (fully closed).
- The transmission output speed is above a programmed value.
- The lock-up clutch is applied.

When these conditions are met, the ECU grounds wire 213. This option is used primarily with engine brake applications.

`Option 4`

Option 4 applies the retarder when the following conditions are met:

- Wire 211 is connected to positive voltage.
- The throttle position is near zero (fully closed).

When these conditions are met, the ECU grounds wire 213 and keeps it grounded until the throttle is advanced. This option is available, but used in very few applications.

`Option 5`

Option 5 applies the retarder when the following conditions are met:

- Wire 211 is connected to positive voltage.
- The throttle position is near zero (fully closed).
- The transmission output speed exceeds a programmed value.

When these conditions are met, the ECU grounds wire 213. This option is used primarily for on-highway applications.

COPYRIGHT 1994 GENERAL MOTORS CORP.

OPTIONAL CAB HARNESS INTERFACE

Retarder Enable and Output - Wires 211 and 213

Retarder Option Modifiers

Three modifiers (A, B, and AB) provide additional programming functions that add more flexibility to the four retarder options. Modifiers are usually mentioned after the retarder option (***Example:*** Option 1, Modifier AB).

Modifier A

With Modifier A, the retarder applies as programmed (depending on the retarder option). However, when a turbine overspeed condition is sensed by the ECU, the following conditions exist:

- During turbine overspeed, wire 213 becomes grounded, activating the retarder application relay. This occurs regardless of other programmed conditions.
- During turbine overspeed, wire 224 (a spare output wire in the cab harness) becomes grounded. This wire is used to activate an overspeed warning circuit (light, buzzer, etc.) in the vehicle cab.

Modifier A does not always affect retarder operation, but lets the ECU ground wires 213 and 224 when a turbine overspeed condition exists.

Modifier B

With Modifier B, the retarder applies as programmed, but the ECU commands the transmission to downshift during retarder application.

- The downshift procedure is known as “Preselect Downshift.”
- The lowest downshifted range during Preselect Downshift can vary, depending on the PROM used.

Modifier AB

Modifier AB is a combination of Modifier A and Modifier B. When a turbine overspeed condition exists:

- The ECU grounds wires 213 and 224, regardless of any other retarder operations. Wire 213 activates the retarder apply circuit and wire 224 activates an overspeed warning circuit.
- The ECU commands Preselect Downshift.

Modifier AB controls retarder, overspeed warning circuit, and Preselect Downshift operation regardless of whether or not the retarder is applied.

COPYRIGHT 1994 GENERAL MOTORS CORP.

OPTIONAL CAB HARNESS INTERFACE

Retarder Enable and Output - Wires 211 and 213

Additional Retarder Information

Cutoff Below Feature (Options)

Once applied, the retarder remains applied until the appropriate conditions no longer exist. The Cutoff Below feature disables the retarder when output shaft speed falls below a programmed point.

- When the vehicle slows to the Cutoff Below output speed point, the retarder is disabled.
- The PROM must include the Cutoff Below feature for it to be active (ECIS tells whether or not the PROM includes Cutoff Below).

Overspeed Signal (Modifiers A and AB)

In certain retarder option/modifier situations, the ECU is sensitive to overspeed conditions. Various PROM's are available with different overspeed limits.

- If the PROM contains overspeed signal programming, the overspeed RPM limit is also in the PROM. Different PROM's are available for varying vehicle applications.
- ECIS lists overspeed limits (in RPM) for specific PROM's.

Preselect to Range (Modifiers B and AB)

Preselect to Range is the range the transmission will downshift to during retarder operation.

- The final downshift range can change depending on the PROM used.
- ECIS lists the range downshifted to during Preselect to Range.

COPYRIGHT 1994 GENERAL MOTORS CORP.

OPTIONAL CAB HARNESS INTERFACE

Check Transmission Light - Wire 215

CAUTION: Connecting wire 215 directly to power causes damage to the ECU.

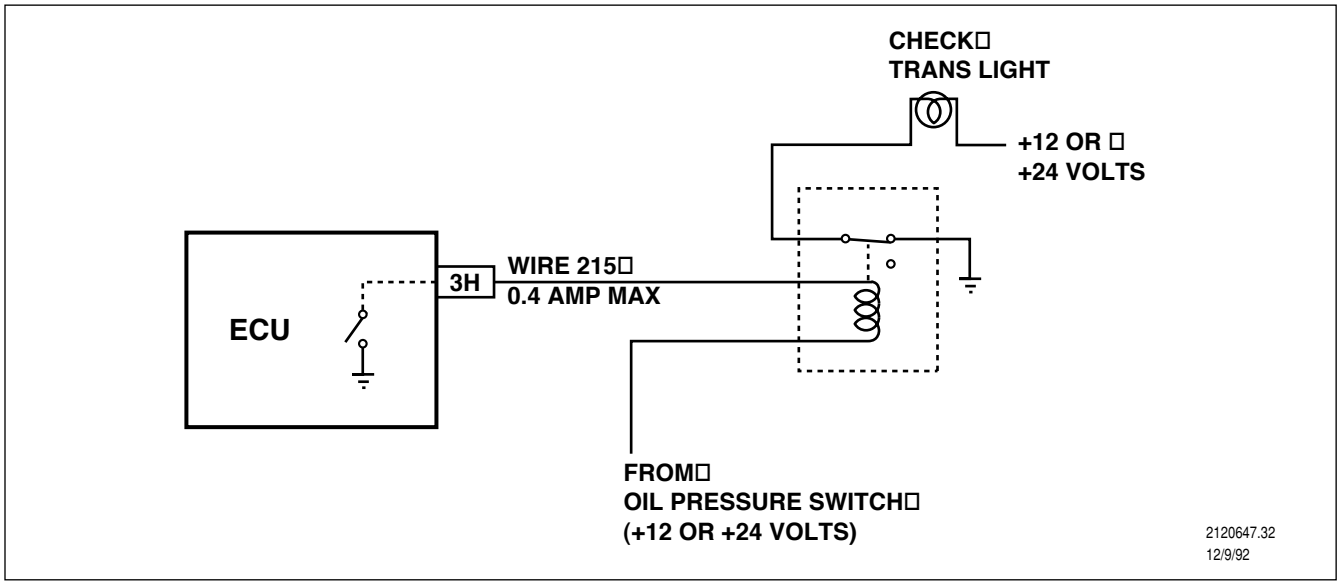

Wire 215 provides ground to the Check Transmission light relay during normal system operation.

- The Check Transmission light relay is normally closed. The relay activation circuit is wired to receive constant positive voltage when the engine is running. (This can be supplied from the oil pressure switch, depending on ECU power wiring discussed earlier.)
- Under normal operating conditions, wire 215 remains grounded, opening the relay power circuit (the Check Transmission light is off).
- When the system encounters problems or is placed in the diagnostic mode, wire 215 can become open, closing the relay's power circuit (the Check Transmission light is on).

COPYRIGHT 1994 GENERAL MOTORS CORP.

OPTIONAL CAB HARNESS INTERFACE

Test Mode Switch - Wire 216A

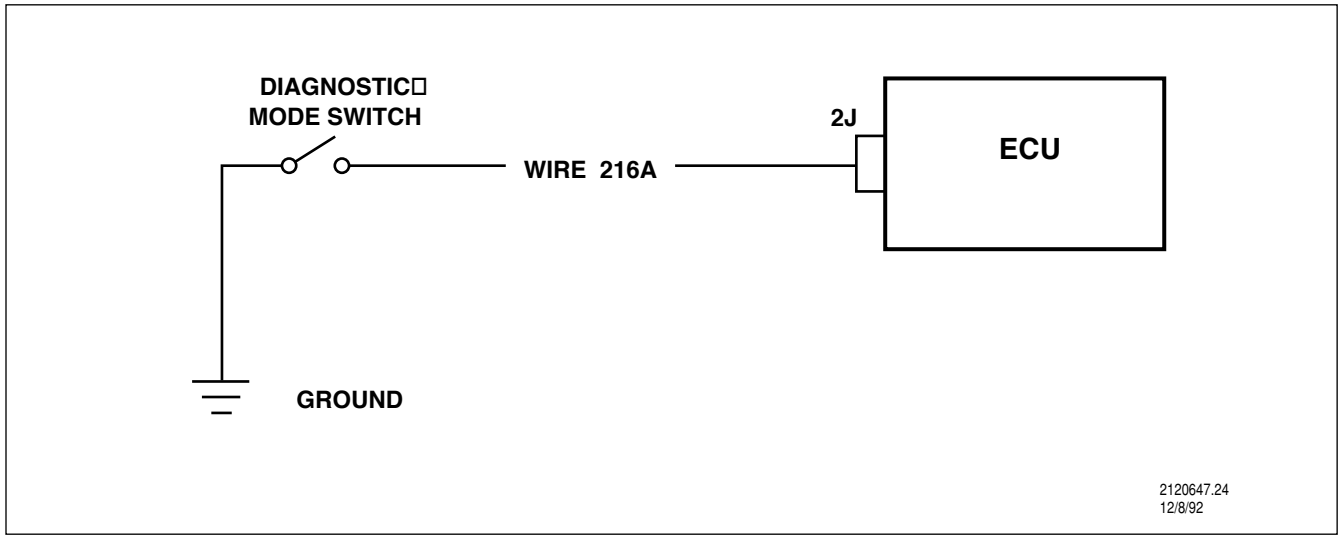

When wire 216A is grounded, the Electronic Control attains the diagnostic mode.

- An OEM-supplied switch grounds wire 216A when it is closed. During normal operation, the switch is open.
- The switch must offer less than 0.1 ohms resistance from contact to contact when closed.
- The Check Transmission light flashes stored diagnostic codes when wire 216A is grounded.
- Connecting and activating a Diagnostic Data Reader (DDR) to the Electronic Control also places the ECU in the diagnostic mode. The Check Transmission light will flash any stored codes and the Digital Display Unit (DDU), if used, will be de-activated.

COPYRIGHT 1994 GENERAL MOTORS CORP.

OPTIONAL CAB HARNESS INTERFACE

Range Commanded - Wire 217

CAUTION: Connecting wire 217 directly to power causes damage to the ECU.

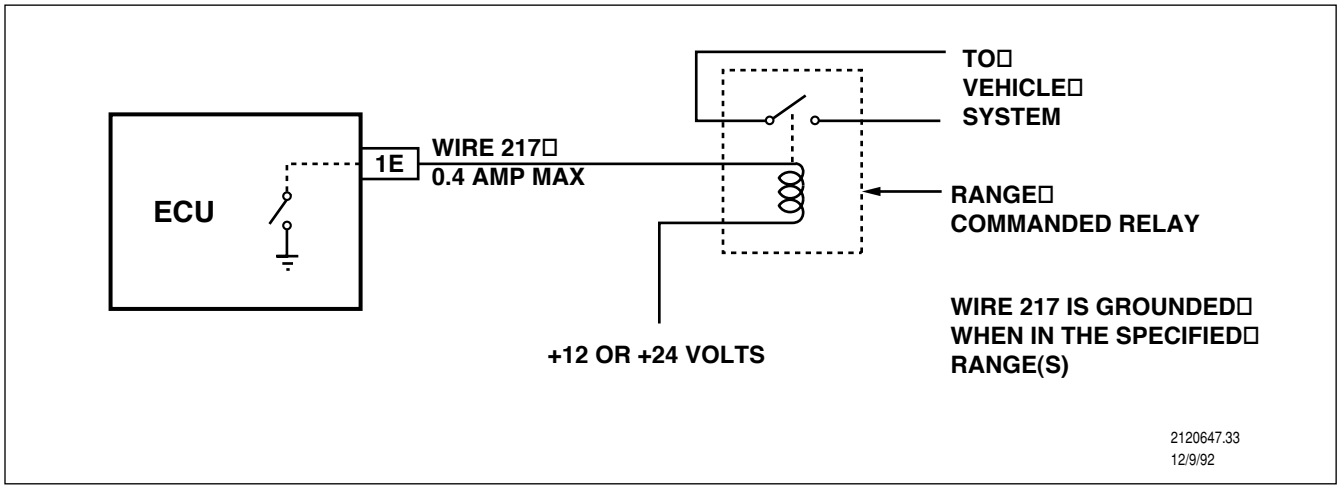

Wire 217 is an output that goes from open to ground when the ECU commands a programmed range or ranges.

- Wire 217 is normally programmed for Range Commanded. Range Commanded is an option that is used in conjunction with a two-speed engine governor. When the Range Commanded circuit is energized, governed high range engine speed is reduced.
- Wire 217 can be used as a negative output signal whenever a programmed range is attained (it can be used for operations other than Range Commanded).
- ECIS lists which ranges ground wire 217.

COPYRIGHT 1994 GENERAL MOTORS CORP.

OPTIONAL CAB HARNESS INTERFACE

Special Input - Wire 222

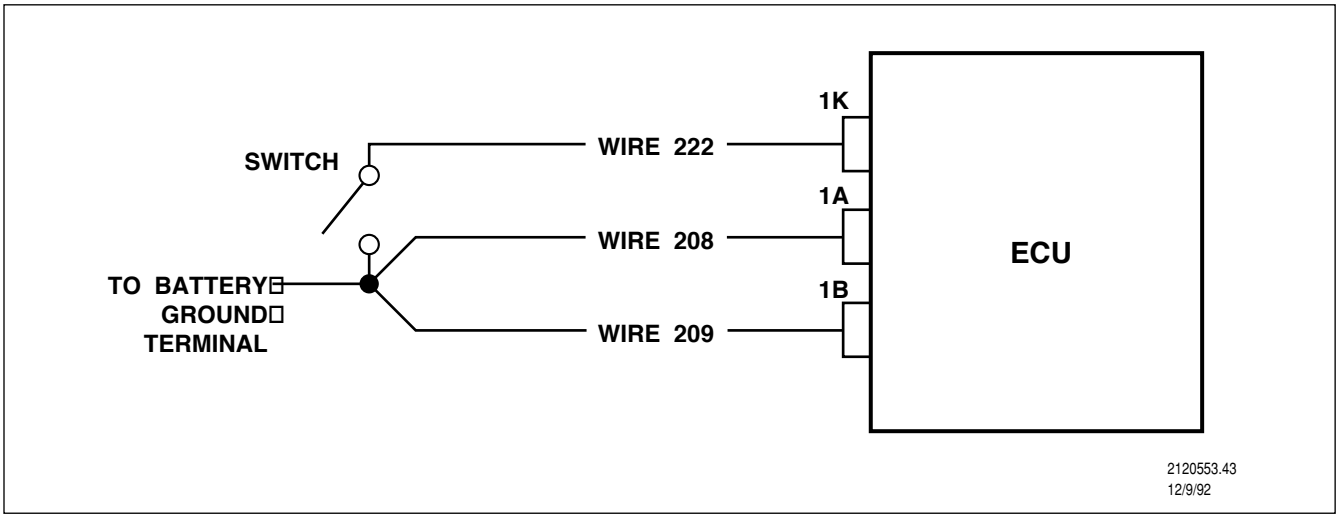

Wire 222 is an input wire that signals the ECU to activate one of three options (Quick-To-Neutral, Neutral-To-Range Inhibit or Stall Check).

- Wire 222 is a negative input - the ECU can attain one of three programmed options when wire 222 is either grounded or open.
- Options activated by wire 222 must be programmed - simply wiring the option doesn't activate it.
- Wire 222 must be grounded (through a switch) directly to wires 208 and 209 (or to wire 309 in the Sealed Plus II ECU's secondary harness).
- ECIS lists the option (if any) that is programmed for the special input.

COPYRIGHT 1994 GENERAL MOTORS CORP.

OPTIONAL CAB HARNESS INTERFACE

Special Input - Wire 222

Special Input Options

`Quick-To-Neutral`

When Quick-To-Neutral is programmed, opening wire 222 causes an immediate shift to neutral regardless of the shift selector position or any other inputs.

- The transmission operates normally as long as wire 222 is grounded. Quick-To-Neutral is attained when wire 222 is open.
- To de-activate Quick-To-Neutral, the shift selector must be placed in Neutral and wire 222 must then be grounded.
- This option can be programmed for use in primary mode, secondary mode or both primary and secondary modes.
- Quick-To-Neutral is commonly used in stationary equipment where a pump (or other device) must be quickly disengaged.
- Quick-To-Neutral is not allowed on mobile equipment.

`Neutral-To-Range Inhibit`

When Neutral-To-Range Inhibit is programmed, opening wire 222 while in neutral and at low output speed will prevent the transmission from shifting into range. There are two options for de-activating Neutral-To-Range Inhibit:

- Option B1 requires wire 222 to be grounded and neutral to be selected before the transmission will go into range.
- Option B2 only requires wire 222 to be grounded - shift selector position does not matter.
- Option B2 allows an immediate shift to range when wire 222 is grounded. Do not use this option unless wire 222 is intentionally grounded by the vehicle operator (driver's seat switch, brake pedal switch, etc).
- If the output speed exceeds a programmed value and the shift selector is moved into range, Neutral-To-Range Inhibit is automatically de-activated, regardless of the programmed de-activation option or wire 222 condition.
- When Neutral-To-Range Inhibit is programmed, wire 222 must be grounded for the transmission to shift into range.

`Stall Check`

When Stall Check is programmed, grounding wire 222 through an OEM-supplied switch shifts the transmission into a high range with lock-up off. In this condition, the vehicle can be stall tested to troubleshoot power package performance problems.

- Always follow the appropriate procedures and safety guidelines when stall testing. Stall test for troubleshooting purposes only.
- To activate Stall Check, the vehicle must be stopped, neutral must be selected, wire 222 must be grounded and the throttle must be closed. When these conditions are met, the shift selector must be moved to Drive.
- To de-activate Stall Check, return the throttle to the closed position, shift to Neutral, then open wire 222.

COPYRIGHT 1994 GENERAL MOTORS CORP.

OPTIONAL CAB HARNESS INTERFACE

Spare Output - Wire 224

CAUTION: Connecting wire 224 directly to power causes damage to the ECU.

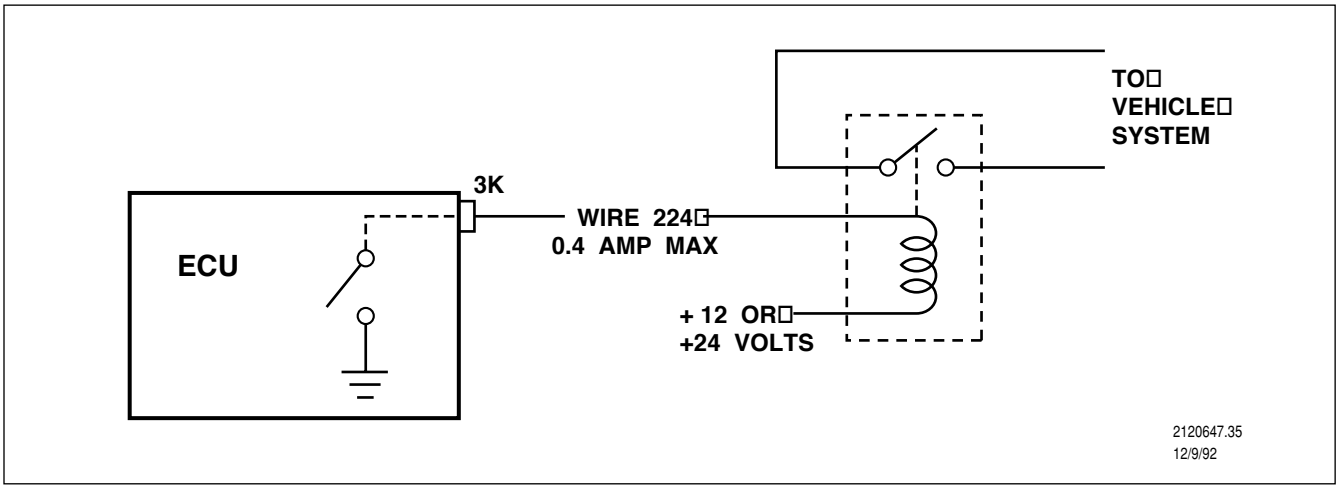

Wire 224 is an output that goes from open to ground when certain programmed conditions are met.

- Wire 224 must be programmed as a spare output to be operational.
- Wire 224 can be programmed for three options (Engine Overspeed, Oil Level/Pressure and Fire Truck Special). Only one option can be chosen.
- Wire 224 is directed from the ECU to a relay activation circuit. The relay can be either 12- or 24-volt, but the current through the activation circuit must be limited to 0.4 amps by the coil resistance.
- ECIS tells which option (if any) is programmed on wire 224.

COPYRIGHT 1994 GENERAL MOTORS CORP.

OPTIONAL CAB HARNESS INTERFACE

Spare Output - Wire 224

Spare Output Options

Engine Overspeed

Engine Overspeed is commonly programmed on wire 224. When an overspeed condition is detected, wire 224 goes from open to ground. When the overspeed condition is no longer present, wire 224 returns to open.

- Overspeed condition RPM is programmable. ECIS lists the RPM where wire 224 goes to ground.
- Using this option, wire 224 provides ground to a relay which activates an overspeed warning/alert system.

Oil Level/Pressure

The Oil Level/Pressure option is not as common as the Engine Overspeed option. When the ECU recognizes a valid low transmission oil level or pressure situation wire 224 goes from open to ground.

- Using this option, wire 224 provides ground to a relay which activates a low oil level/pressure warning device.

Fire Truck Special

This option is available with Sealed Plus II ECU's only.

- If secondary mode is activated and Fire Truck logic is programmed as the secondary mode, wire 224 goes to ground once the vehicle attains a forward range.
- Wire 224 can activate a relay that turns on an Okay To Pump or similar warning/informational device (Fire Truck Special is covered in more detail in the Optional Secondary Harness Interface section of this document).

COPYRIGHT 1994 GENERAL MOTORS CORP.

OPTIONAL CAB HARNESS INTERFACE

Bi-Directional Communication Links (BDCLs) - Wires 238, 239, 240, and 241

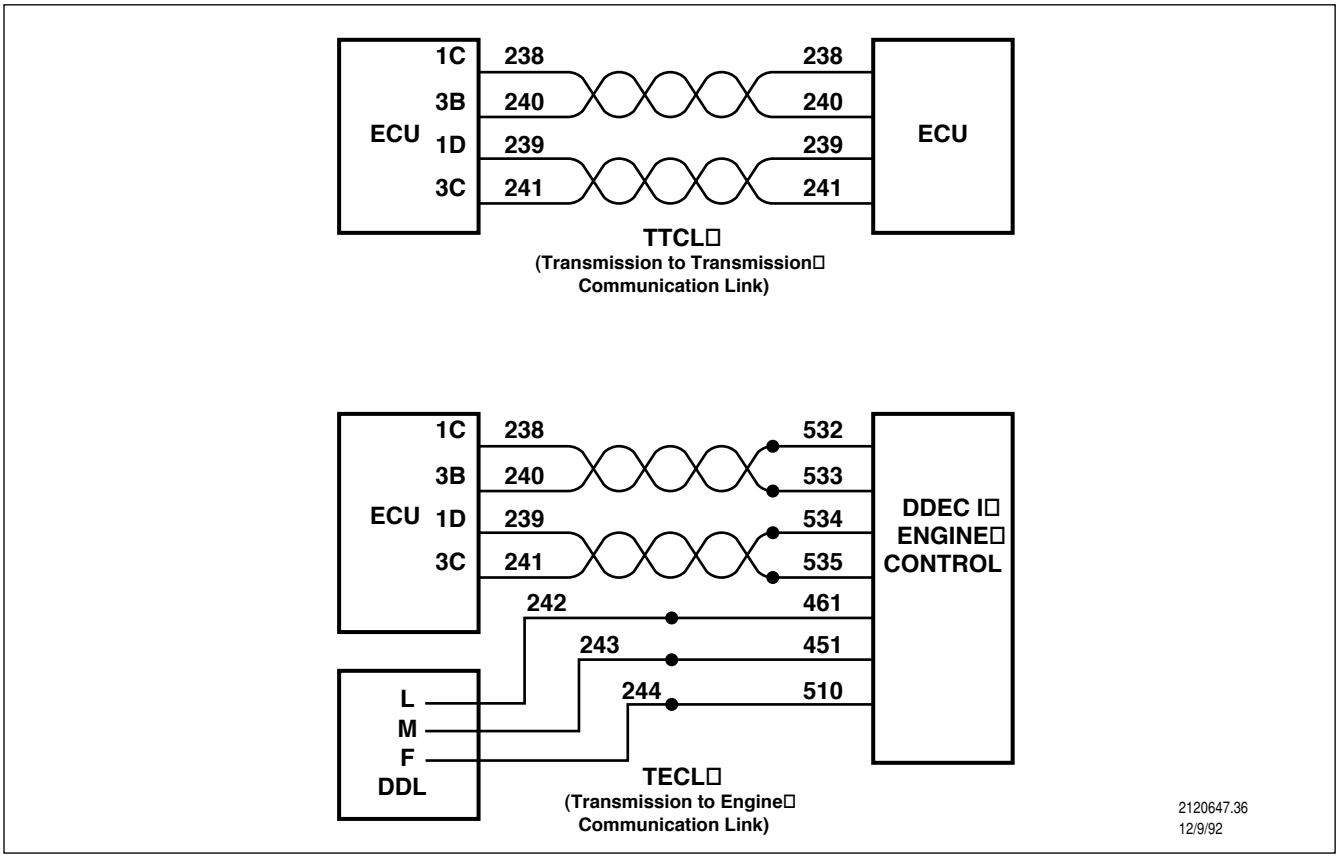

Bi-Directional Communication Links (BDCLs) allow the Electronic Control to communicate with other engine or transmission electronic controls.

- BDCL is only operational when programmed for specific applications.
- BDCL can provide either transmission-to-transmission communication (allowing one Electronic Control system to control two transmissions) or transmission-to-engine communication (allowing the transmission Electronic Control and the engine's electronic control to share signals).
- BDCL wires must be installed as twisted pairs (1 twist per 25 millimeters, or 1 twist per inch). Pairs must be wires 238 and 240 and wires 239 and 241.

COPYRIGHT 1994 GENERAL MOTORS CORP.

OPTIONAL CAB HARNESS INTERFACE

Bi-Directional Communication Links (BDCLs) - Wires 238, 239, 240, and 241

BDCL Transmission-to-Transmission Communication

A BDCL programmed for transmission-to-transmission communication is primarily used in dual power package vehicles or stationary equipment.

- Transmission-to-transmission communication checks that shift schedules for both transmissions are not more than one range apart.

BDCL Transmission-to-Engine Communication

A transmission-to-engine BDCL allows DDEC I and the Allison Transmission Electronic Control to communicate. Three additional wires can be added to allow the transmission DDL connector to be used for engine and transmission diagnosis.

- The additional DDL wires (242, 243 and 244) do not need to be twisted like the other BDCL wires.
- The transmission-to-engine communication link allows the DDEC I ECM to send throttle position data to the transmission ECU.

COPYRIGHT 1994 GENERAL MOTORS CORP.

OPTIONAL CAB HARNESS INTERFACE

DDEC II Interface

DDEC II communicates with the ECU through a non-Allison supplied interface module. Two levels of interface are available - Basic Interface and Maximum Feature Interface.

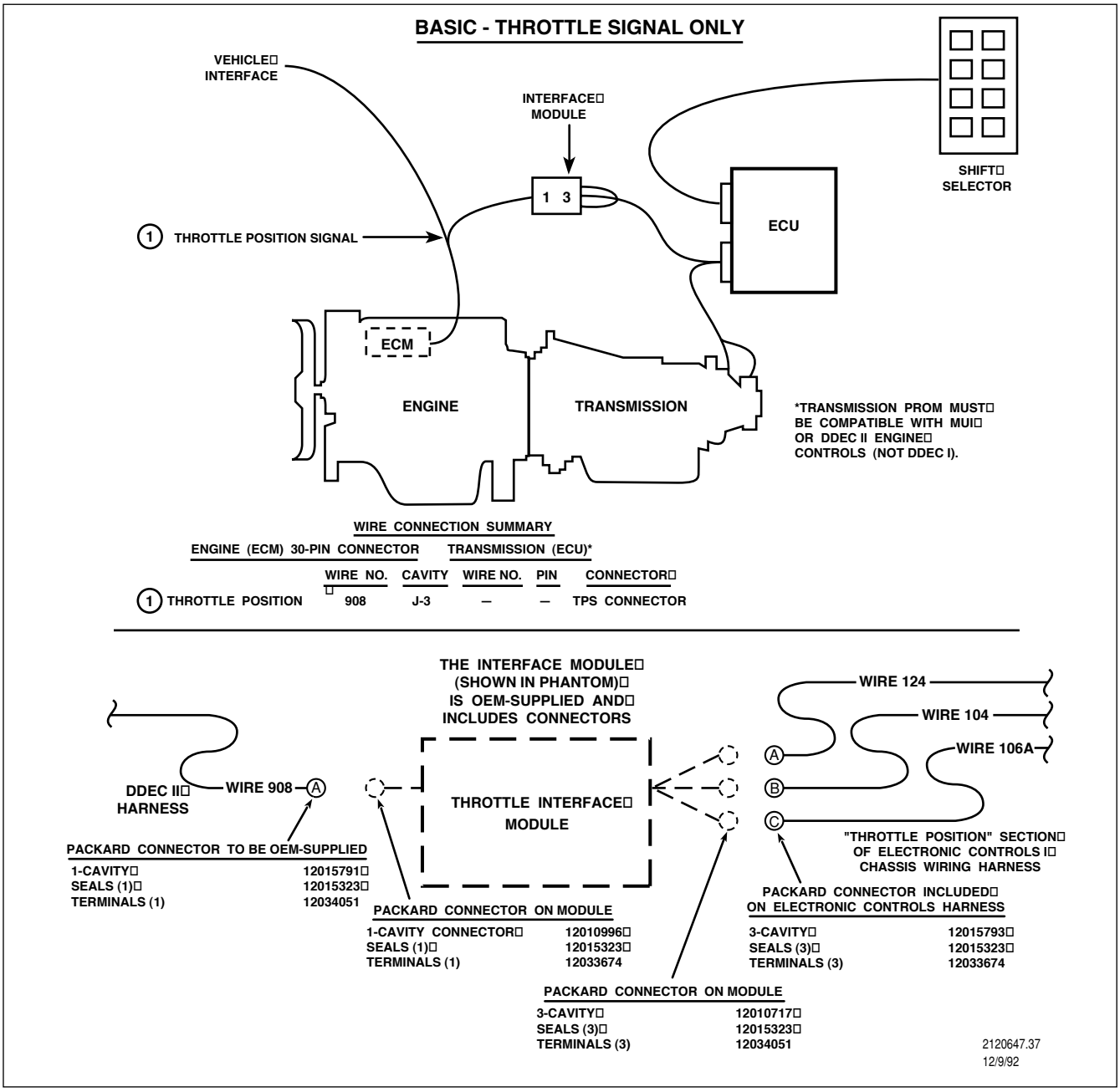

Basic Interface

In the Basic Interface, DDEC II sends throttle position sensor information through an interface module to the transmission ECU.

COPYRIGHT 1994 GENERAL MOTORS CORP.

OPTIONAL CAB HARNESS INTERFACE

DDEC II Interface

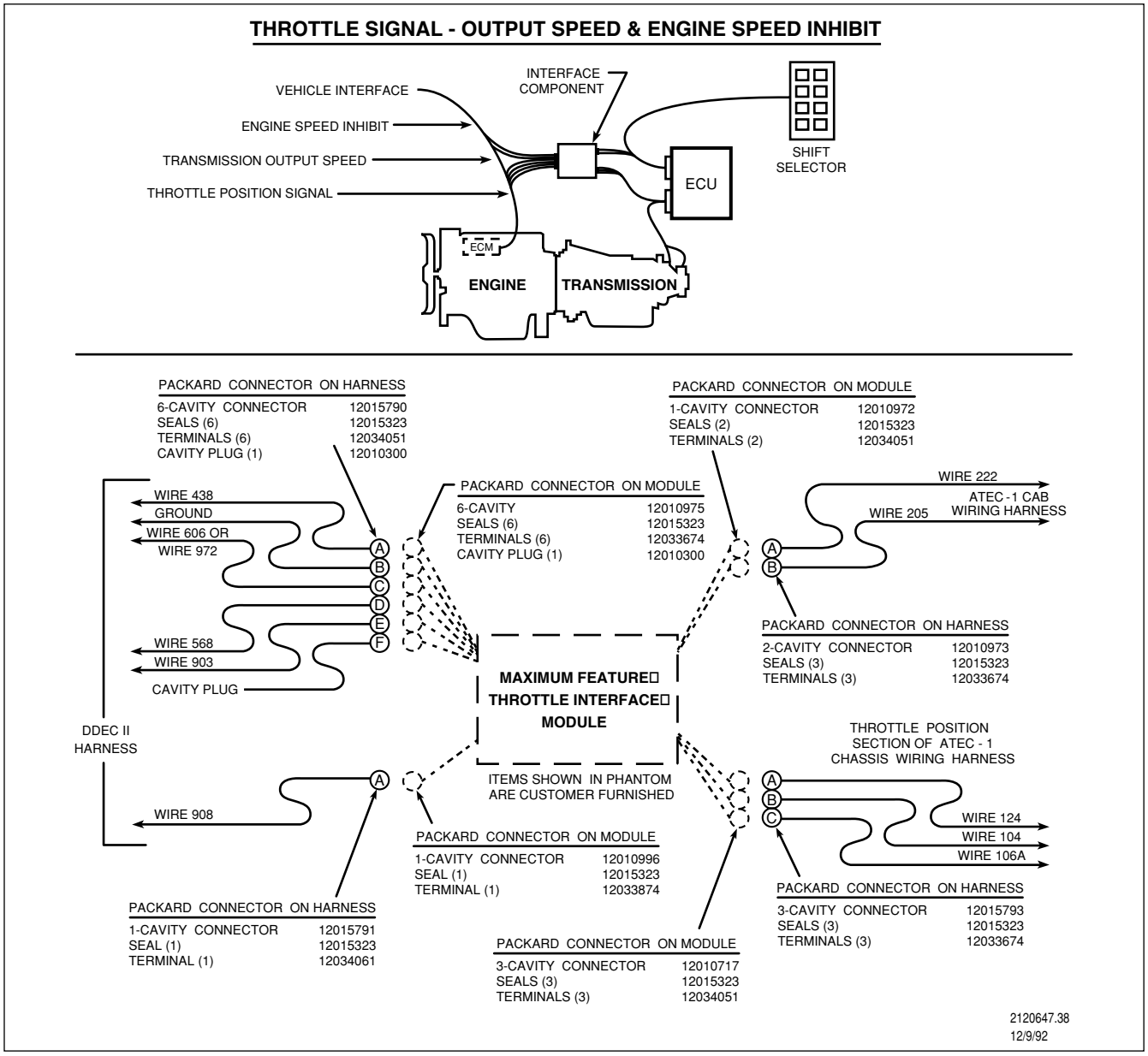

Maximum Feature Interface

In the Maximum Feature Interface, DDEC II is sending the ECU throttle position sensor information through an interface module (like Basic Interface), but provides additional communication signals.

- Maximum Feature Interface sends transmission output shaft speed signals back to the DDEC II ECM. These signals are used for cruise control/road speed limiting logic.
- Maximum Feature Interface incorporates an integral engine speed switch which sends a signal to the ECU. The signal provides input for the logic that prevents shifting into range above programmed engine speeds.

COPYRIGHT 1994 GENERAL MOTORS CORP.

OPTIONAL SECONDARY HARNESS INTERFACE

Optional secondary harness interface connections are wired through the secondary wiring harness (300 series wires), available only with Sealed Plus II ECU's. Options must be programmed and properly wired to operate. Simply wiring the option will not enable it - the option must be programmed. If necessary, determine PROM characteristics using ECIS.

Secondary Logic Return - Wire 309

CAUTION: Connecting wire 309 directly to power causes damage to the ECU.

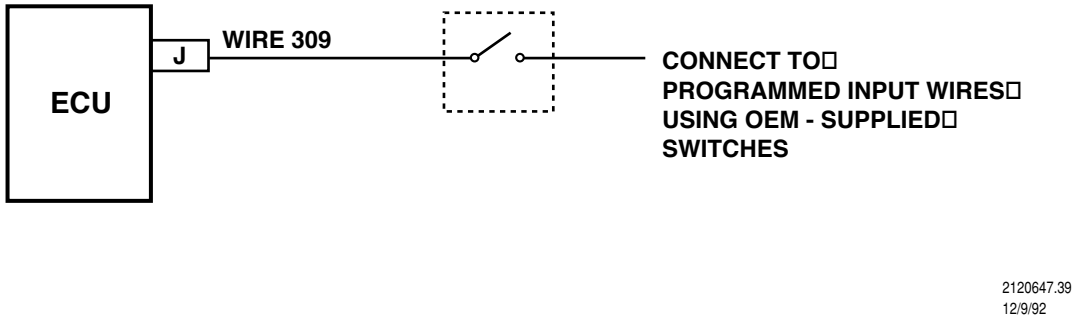

Secondary Logic Return (wire 309) is connected in parallel to a variety of switches. Wire 309 senses when any of these switches are closed and carries a signal back to the ECU.

- Only specified wires should be connected to wire 309.
- Wire 309 and its related circuits should not be connected to chassis or frame ground.

COPYRIGHT 1994 GENERAL MOTORS CORP.

OPTIONAL SECONDARY HARNESS INTERFACE

Dual Mode Selection - Wires 313 and 315

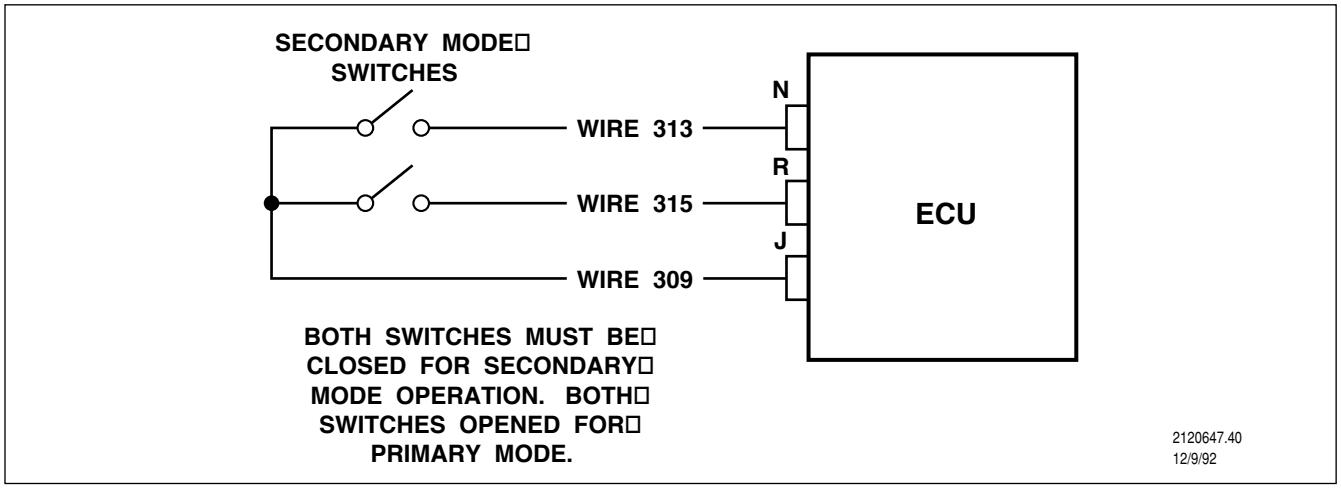

The ECU changes to one of two pre-programmed secondary modes (Secondary Shift Schedule or Fire Truck Special) when wires 313 and 315 are connected to wire 309 simultaneously.

- The primary shift selector (and secondary shift selector, if used) must be in neutral to attain secondary mode.
- The ECU changes back to primary mode when wires 313 and 315 are opened with the selector(s) in Neutral.

COPYRIGHT 1994 GENERAL MOTORS CORP.

OPTIONAL SECONDARY HARNESS INTERFACE

Dual Mode Selection - Wires 313 and 315

Secondary Mode Options

Secondary Shift Schedule

Secondary Shift Schedules can include:

- Fuel economy schedules
- Performance schedules
- Fixed upshifts
- Different number of available ranges
- Second range start
- Modulated upshifts

Fire Truck Special

Secondary mode is often programmed as the Fire Truck Special. Fire trucks utilize this option to operate water pumps and related equipment. To attain a programmed Fire Truck Special, the transmission must be in secondary mode.

- Vehicles using Fire Truck Special can use a dash switch that connects wires 313 and 315 to wire 309 simultaneously. The vehicle can also use a combination of two switches - both on the dash, or one on the dash, and one at the vehicle split-shaft PTO.
  - ***Example:*** The operator might have to connect wire 313 to wire 309 by activating a dash switch. The operator then shifts the split-shaft PTO to engage the pump which (through a micro-switch) connects wire 315 to wire 309.
- Once secondary mode is attained and the vehicle is placed in a forward range, wire 224 goes from open to ground. This can be used to activate a light or similar device that lets the operator know the equipment is ready to begin pumping.
- The transmission responds by going into high range with the lockup clutch off.
- The operator brings the engine to the desired RPM for pump operation. Once transmission output speed reaches a programmed limit, the Electronic Control applies the lockup clutch. The pump is now being driven by the transmission in high range, lockup on.
- When dual shift selectors are used, a switch for wire 315 to wire 309 should be at one shift selector and switch for wire 313 to wire 309 should be at another. This helps prevent unwanted mode changes.

COPYRIGHT 1994 GENERAL MOTORS CORP.

OPTIONAL SECONDARY HARNESS INTERFACE

Bed Hoist Interlock - Wire 305

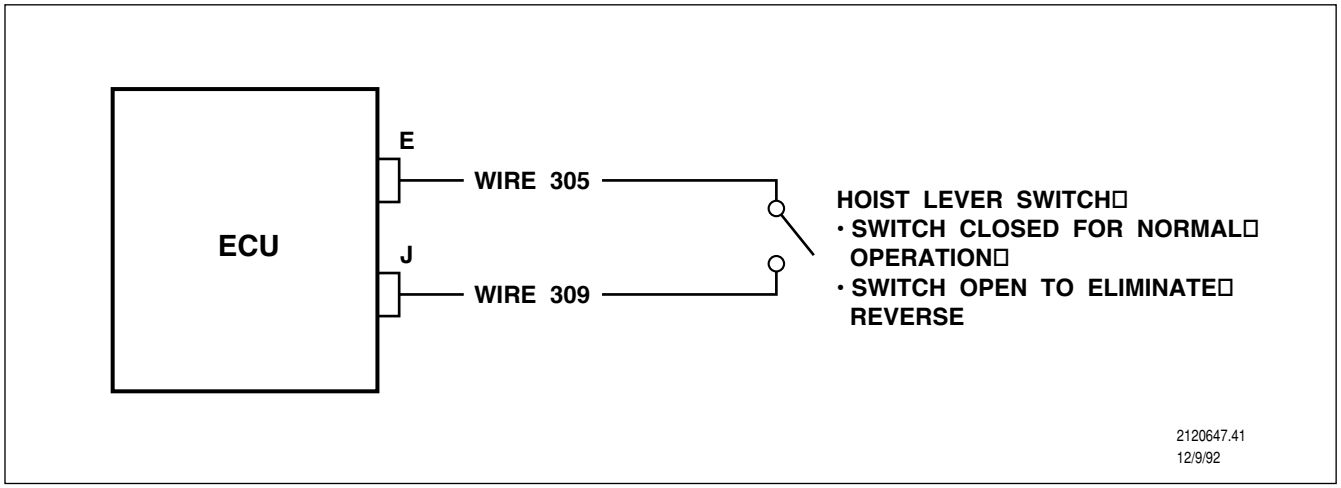

When Bed Hoist Interlock is programmed, wires 305 and 309 must be connected (through an OEM-supplied switch) for normal operation. When wires 305 and 309 are not connected, the transmission shifts from reverse to neutral.

- The OEM-supplied switch is mounted so that it is open when the vehicle dump bed is up and closed when the dump bed is down.
- Once Bed Hoist Interlock has been activated, the switch must be closed and neutral or any forward range must be selected before reverse is selected and can be attained.
- Bed Hoist Interlock does not inhibit shifts to a forward range – just reverse. If Bed Hoist Interlock is programmed and wires 305 and 309 are not connected (physically or through the OEM-supplied switch), the transmission will not go into reverse. If the feature is programmed but not used, permanently connect wires 305 and 309.
- Bed Hoist Interlock is not available in software developed before 1987. Some earlier model harnesses do not include wire 305.
- Bed Hoist Interlock is standard in most off-highway hauling transmission applications (beginning in 1987).
- Bed Hoist Interlock is used to prevent inadvertent reverse operation while the vehicle is dumping.

COPYRIGHT 1994 GENERAL MOTORS CORP.

OPTIONAL SECONDARY HARNESS INTERFACE

Secondary Spare Input - Wire 303

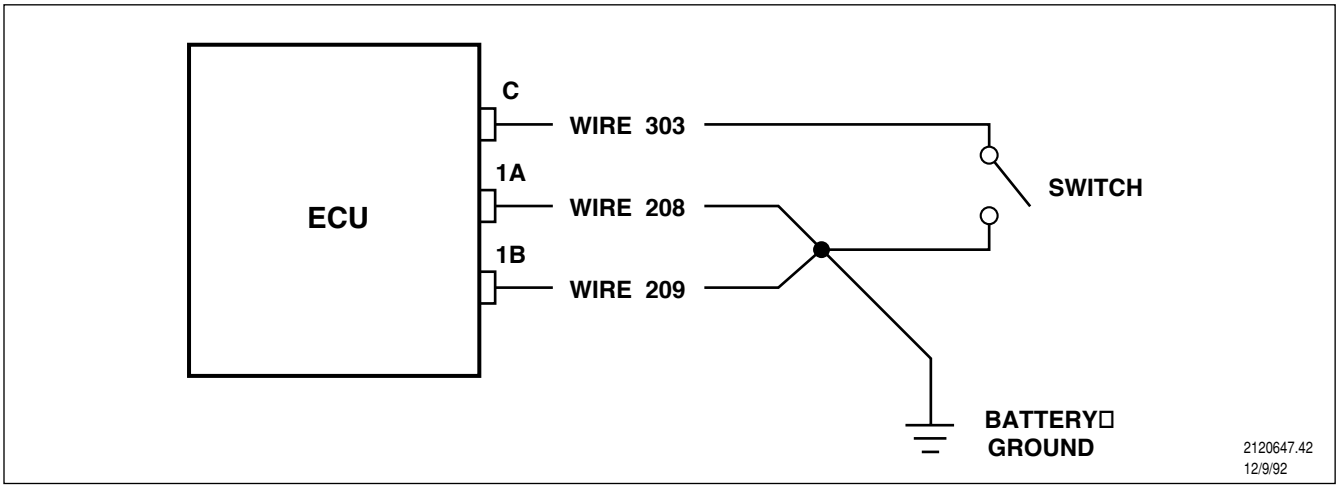

A spare input is available in the secondary mode harness only if a secondary shift selector is not used. Connecting wire 303 to wires 208 and 209 (direct ECU battery ground) enables the Secondary Spare Input, if programmed.

- A Secondary Spare Input is not available on ECU's prior to model year 1987. Earlier model harnesses may not include wire 303.
- There is currently only one option available for Secondary Spare Input - Stall Check. If programmed, Secondary Spare Input provides the same Stall Check feature as the Special Purpose Input (wire 222).

COPYRIGHT 1994 GENERAL MOTORS CORP.

OPTIONAL SECONDARY HARNESS INTERFACE

Hold Feature - Wire 310

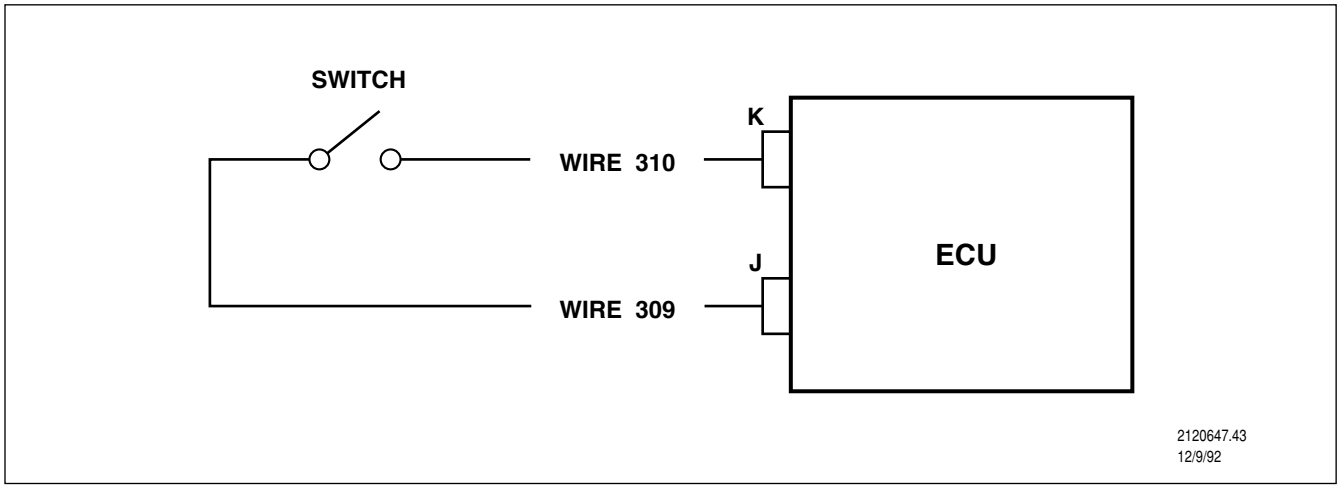

The Hold Feature can be attained (when programmed) by connecting wire 310 to wire 309 through an OEM-supplied switch.

- Two Hold Feature Options are available – Loading Hold and Neutral Hold. Only one of these options can be programmed, not both.

COPYRIGHT 1994 GENERAL MOTORS CORP.

OPTIONAL SECONDARY HARNESS INTERFACE

Hold Feature - Wire 310

Hold Feature Options

Loading Hold

During Loading Hold, normal downshifts occur, but upshifts occur on the Hold Upshift schedule.

- When Loading Hold is programmed and attained, the transmission will not upshift beyond the range currently attained. The transmission will downshift below the attained range as normal.
- Opening wire 310 returns the system to the normal shift calibration.
- Loading Hold is available in forward ranges only.
- This application is often used while loading a scraper or other applications where an automatic upshift is not desirable.

Neutral Hold

Neutral Hold inhibits shifting from neutral to any drive range when wires 310 and 309 are not connected and output speed is low.

- The transmission operates normally when wires 310 and 309 are connected through an OEM-supplied switch.
- The feature is de-activated when wires 310 and 309 are connected regardless of shift selector position. It can also be de-activated if the output speed exceeds a programmed value and the shift selector is moved to a drive range. This allows a shift to Drive even if wires 310 and 309 are not connected.
- This Neutral Hold feature provides the same operational characteristics as Neutral-To-Range Inhibit Option B2 (wired on Special Input Wire 222). Use wire 222 for this option unless the Special Input is used for another option.

COPYRIGHT 1994 GENERAL MOTORS CORP.

OPTIONAL SECONDARY HARNESS INTERFACE

Forced Neutral - Wires 310 and 311

CAUTION: A neutral lamp (from wire 217) must be wired and warning signs must be posted in the vehicle alerting operators of potential hazards.

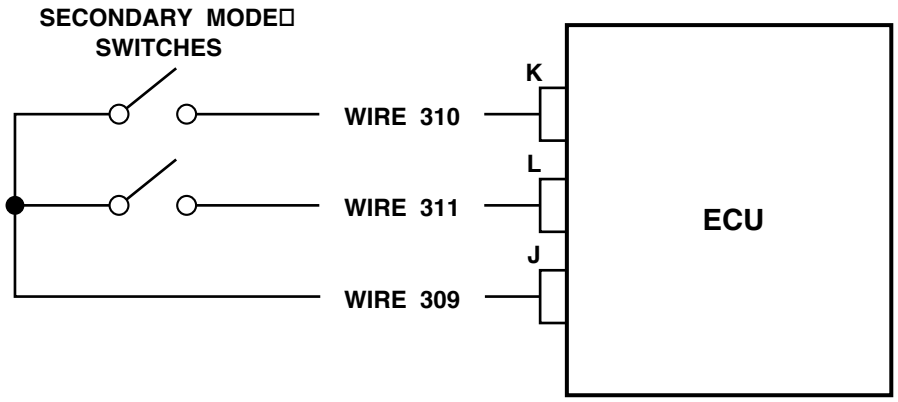

When programmed, Forced Neutral is attained when wires 310 and 311 are simultaneously connected to wire 309. This allows the vehicle operator to command a shift from range to neutral without selecting Neutral on the shift selector.

- This option is only available in specific software (contact Allison Sales for availability information).
- This option is only available for vehicles utilizing dual shift selectors.

WARNING: If the operator does not select Neutral and the OEM-supplied Forced Neutral circuitry fails, the vehicle may suddenly attain range.

- Opening the connection between wires 310, 311 and 309 returns the transmission to normal operation.
- Forced Neutral is normally used in dual station garbage packers. The driver would be on the curb side of the vehicle, stop the vehicle and apply a brake. The brake application connects wires 310 and 311 to 309, and the transmission goes to Neutral. When the driver re-enters the vehicle and releases the brake, the transmission re-attains range.

COPYRIGHT 1994 GENERAL MOTORS CORP.

OPTIONAL SECONDARY HARNESS INTERFACE

Manual Mode - Wires 311, 313 and 315

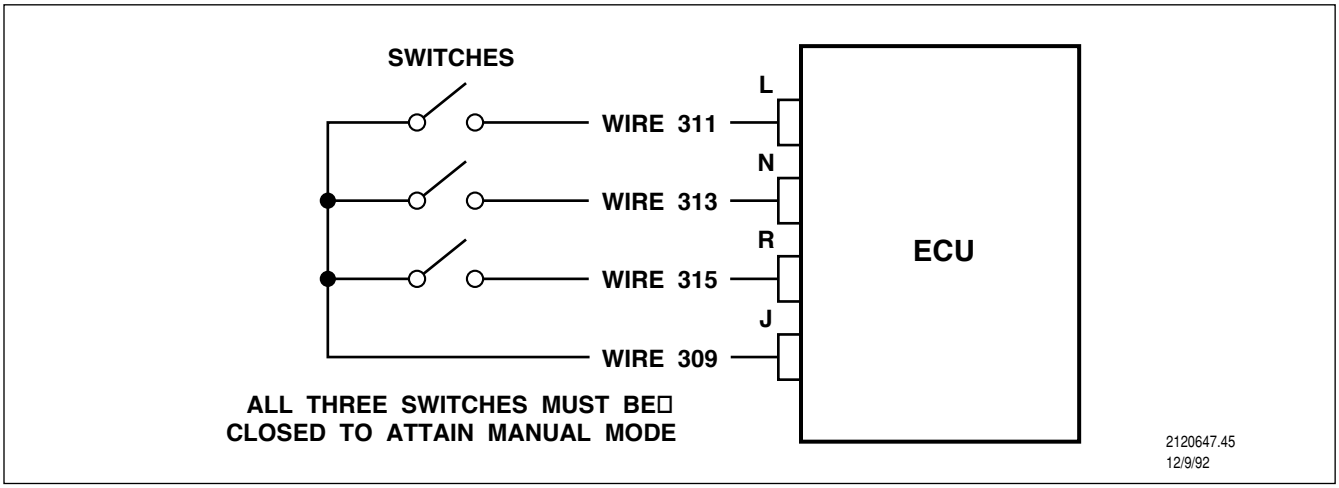

Manual Mode is a programmed feature that blocks automatic shifts. Shifts are commanded based on the range selected on the shift selector.

- When wires 311, 313 and 315 are connected (through an OEM-supplied switch) to wire 309, the controls attain Secondary Mode and (if programmed) Manual Mode.
- Manual Mode is de-activated when wire 311 becomes open. If wires 313 and 315 remain connected to wire 309, the controls remain in Secondary Mode, but Manual Mode is not operational.
- This feature is used primarily for stationary equipment with low inertia loads (oil field pumping equipment, etc.). Manual Mode can also be used to diagnose clutch capacity, for stall checks, etc.
  - High inertia load equipment should not be operated in Manual Mode.
  - Access to the Manual Mode switch in these applications should be limited to service personnel.

COPYRIGHT 1994 GENERAL MOTORS CORP.

OPTIONAL SECONDARY HARNESS INTERFACE

Lockup On - Wire 314

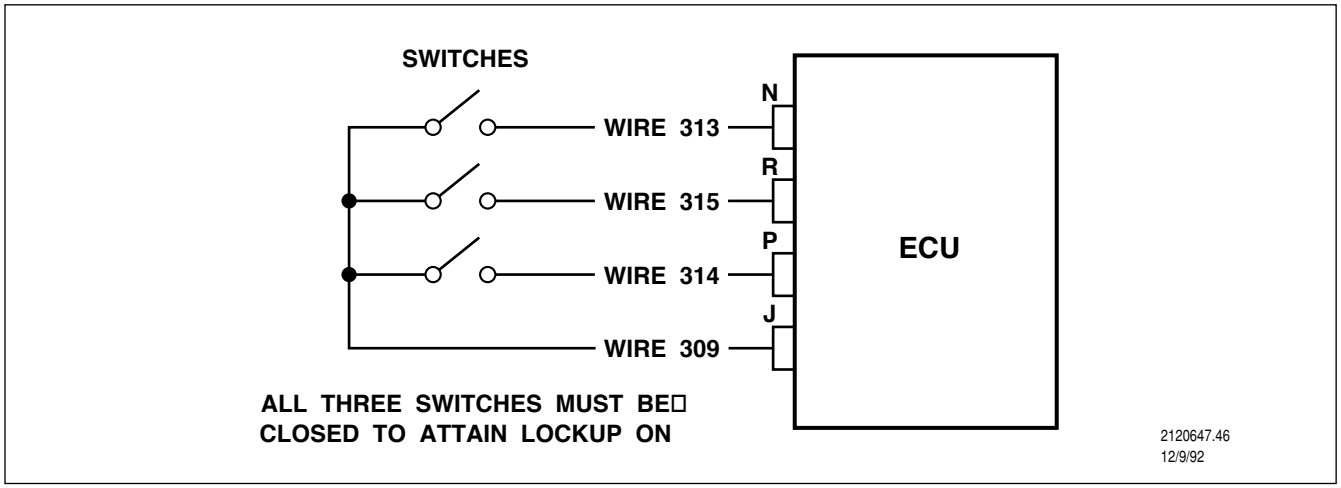

When wire 314 is connected to wire 309 while in Secondary Mode, lockup clutch operation is modified.

- To attain Lockup On, wires 313, 315 and 314 must all be connected (through OEM-supplied switches) to wire 309.
- When Lockup On is activated and the transmission is in neutral, the lockup clutch remains applied at all times.
- When Lockup On is activated while the transmission is in range, lockup is applied for each range attained.
  - ***Example:*** If the normal shift schedule is 1C, 2C, 3C, 3L, 4C, 4L, 5L, the Lockup On shifting mode becomes 1C, 1L, 2C, 2L, 3C, 3L, 4C, 4L, 5L.
- Opening wire 314 de-activates Lockup On, but if wires 313 and 315 remain connected to wire 309, the controls stay in Secondary Mode.
- This option is often used when operating a converter-driven PTO in neutral.

COPYRIGHT 1994 GENERAL MOTORS CORP.

OPTIONAL SECONDARY HARNESS INTERFACE

Lockup Off - Wire 312

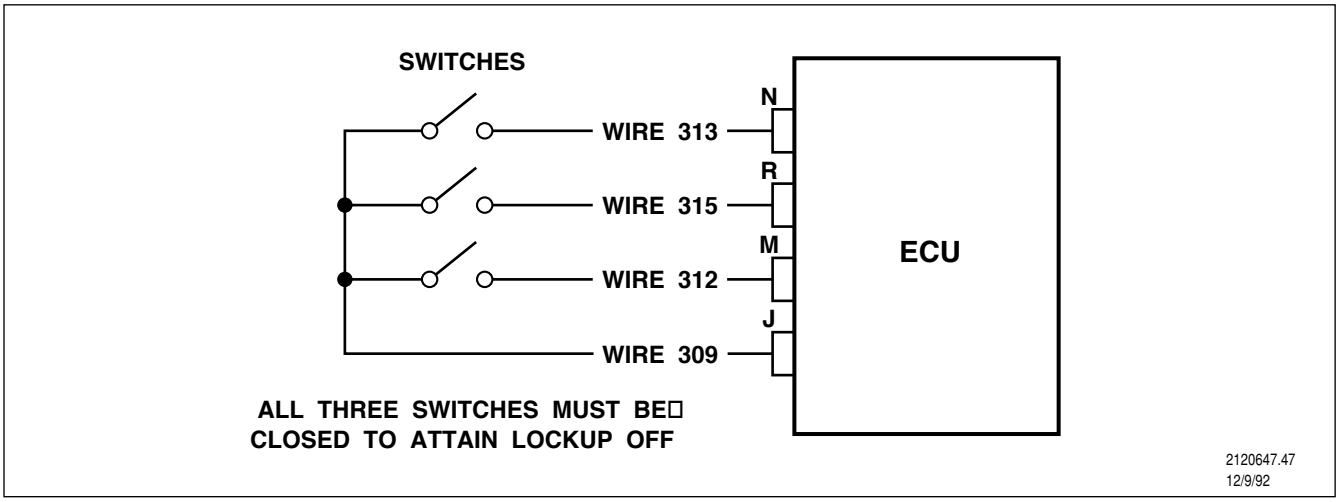

When wire 312 is connected to wire 309 while in secondary mode, the lockup clutch will remain off.

- Opening wire 312 returns the transmission to normal lockup operation, but Secondary Mode remains attained as long as wires 313 and 315 are connected to wire 309.
- If Lockup On and Lockup Off are both activated, Lockup On is dominant.

COPYRIGHT 1994 GENERAL MOTORS CORP.

OPTIONAL SECONDARY HARNESS INTERFACE

Secondary Shift Selector Lamp Circuit - Wires 317, 318 and 319

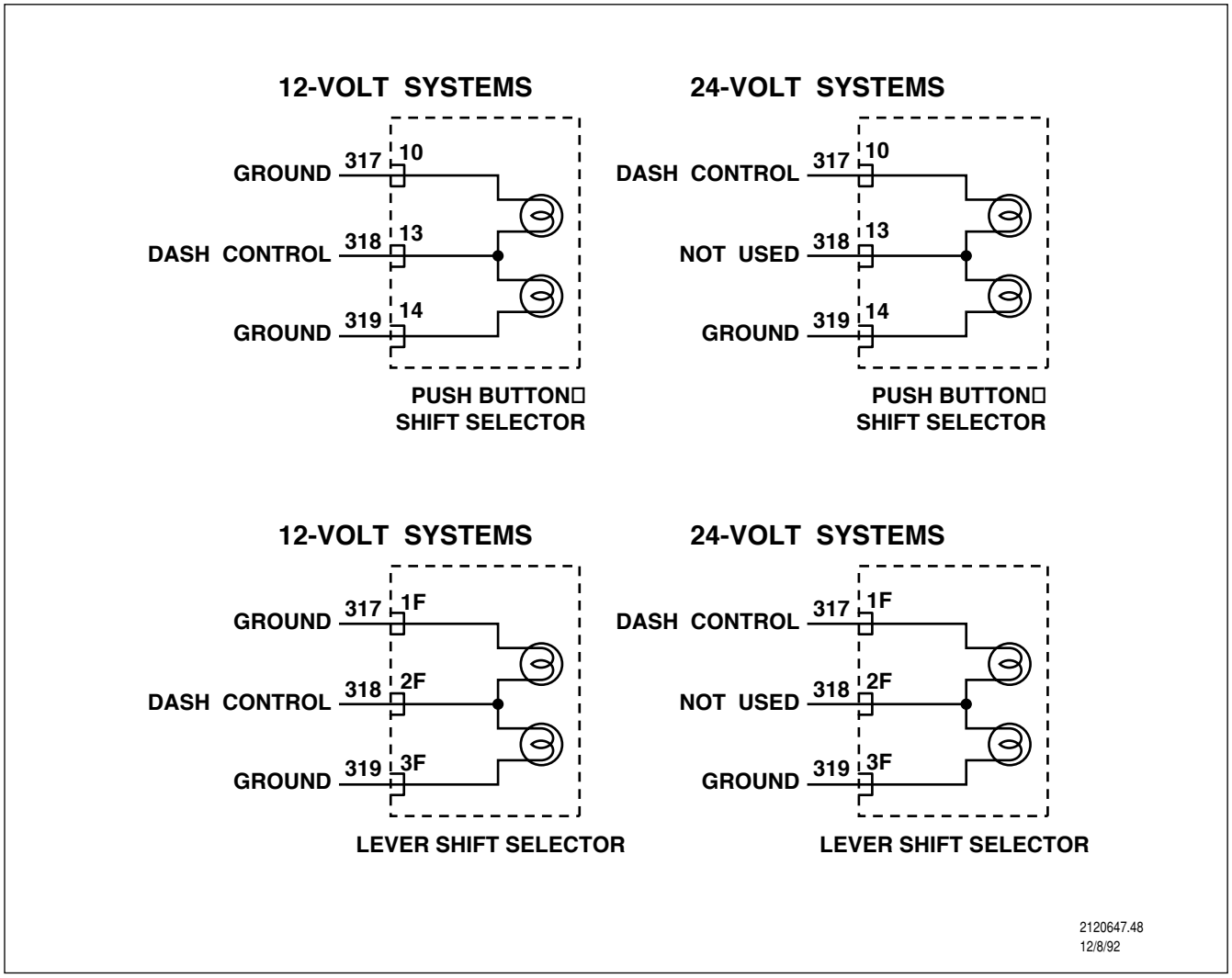

If a secondary shift selector is used, illumination lamp power must be provided through the secondary mode harness interface.

- In 12-volt systems, wires 317 and 319 are grounds - wire 318 supplies voltage to the circuit through the vehicle dash illumination rheostat.
- In 24-volt systems, wire 319 is ground and wire 318 is not used -wire 317 supplies 24 volts to the circuit through the vehicle dash illumination rheostat.

COPYRIGHT 1994 GENERAL MOTORS CORP.

OPTIONAL SECONDARY HARNESS INTERFACE

Secondary Shift Selector Power - Wires 321, 323 and 324

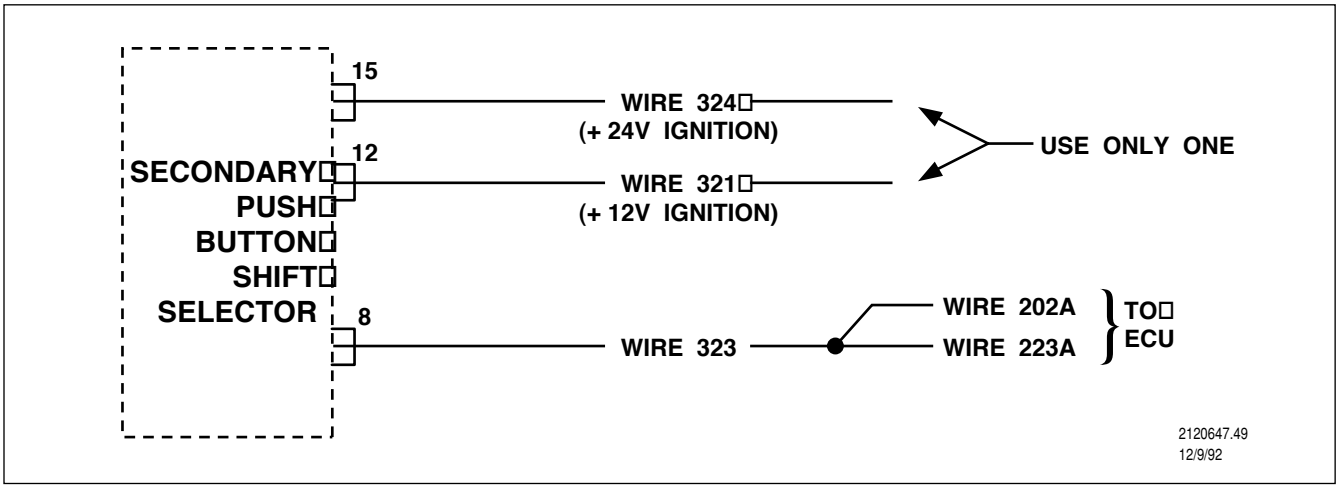

Secondary shift selector power is supplied to the shift selector from the vehicle master switch and directly from the battery positive terminal.

- Wire 323 should be connected directly to the battery positive terminal (or to ECU power, wires 202A and 223A).
- Wire 324 should be used on 24-volt systems. Power to this wire should be supplied through the vehicle master switch.
- Wire 321 should be used on 12-volt systems. Power to this wire should be supplied through the vehicle master switch.

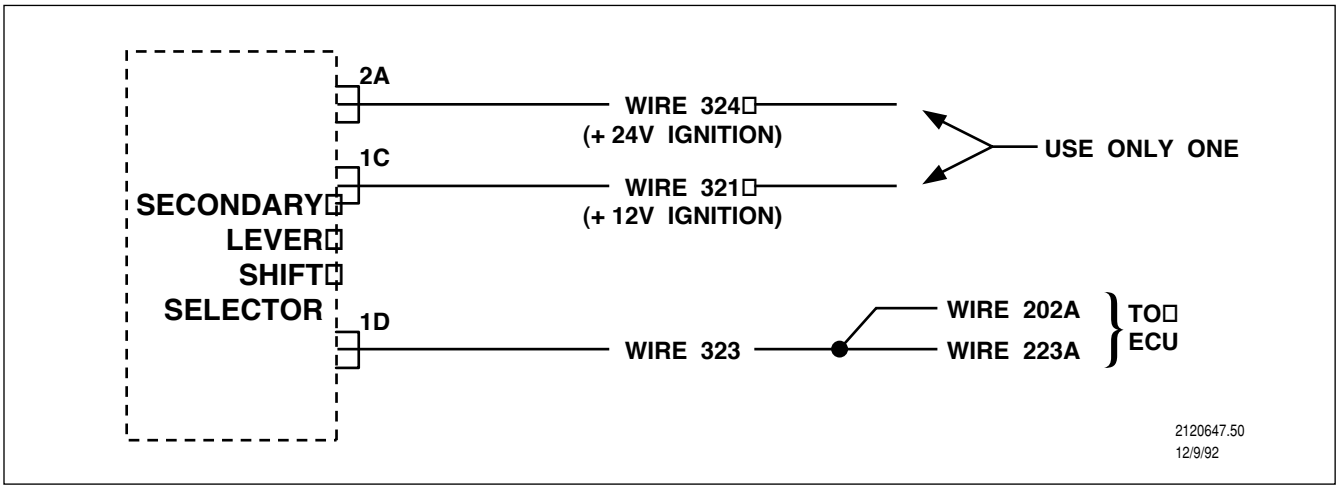

COPYRIGHT 1994 GENERAL MOTORS CORP.

OPTIONAL SECONDARY HARNESS INTERFACE

Secondary Shift Selector Neutral Start Provision - Wire 322

CAUTION: Connecting wires 231 and/or 322 directly to power causes damage to the ECU.

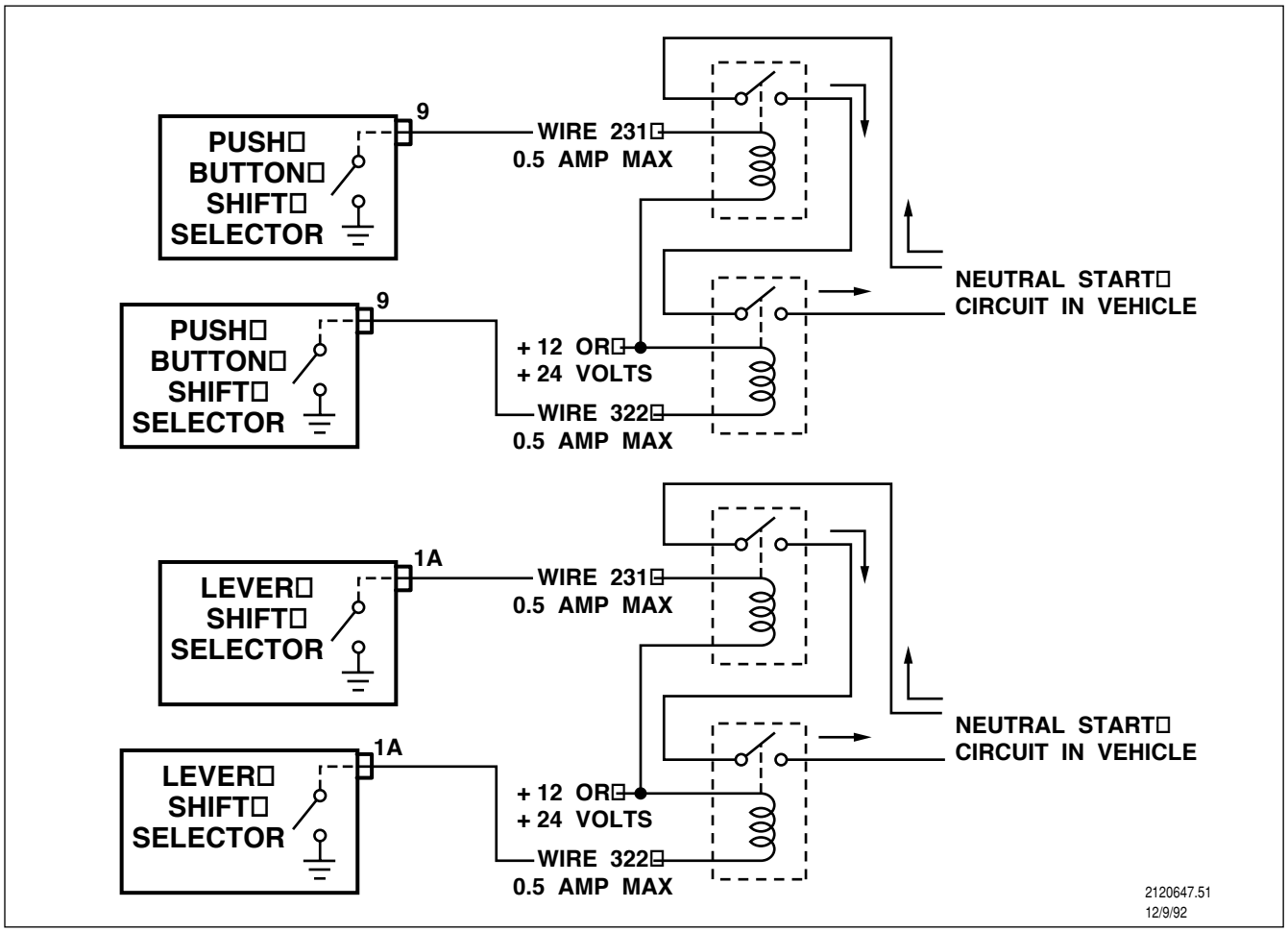

When a secondary shift selector is used, the neutral start circuit should include a second relay activated by the secondary shift selector.

- When the selector is placed in Neutral, wire 322 goes from open to ground. This energizes the relay's activation circuit, closing the relay for the neutral start circuit.
- The relay power circuit must be connected in series to the primary neutral start circuit. This prevents the vehicle from starting if either shift selector is not in Neutral.

COPYRIGHT 1994 GENERAL MOTORS CORP.

TROUBLE CODES

Trouble codes are generated and stored in the ECU memory when the Electronic Control self-diagnostics sense system problems. They can also be generated during system installation and initial operation. Trouble codes fall into one of two categories - soft or hard.

Soft codes do not cause inhibited transmission operation, but they might make the Check Transmission light come on, if the vehicle is equipped with one. Soft codes are stored in memory and indicate potential system problems.

Hard codes cause the Do Not Shift light (and the Check Transmission light, if equipped) to come on. Hard codes indicate a problem that can be potentially damaging or dangerous. When hard codes exist, they're logged in memory and transmission operation is inhibited to limit potential damage.

To retrieve codes using the ProLink diagnostic tester:

1. Connect the ProLink to the Electronic Control DDL.
2. Select the transmission type from the Main Menu.
3. Press Function to enter the Function Selections Menu.
4. Scroll until Diagnostic Codes appears, then press Enter.

The display will list any diagnostic codes stored in memory.

To clear codes using the ProLink diagnostic tester:

1. Turn the vehicle off.
2. Connect the ProLink to the DDL connector.
3. Start the vehicle.
4. Make sure the vehicle parking brake and service brake are applied, then move the shift selector from neutral to reverse, then back to neutral.

To retrieve codes without the ProLink (the installation must include a Check Transmission light):

1. Start the vehicle and run the engine at idle with the shift selector in neutral.
2. Place and hold the Electronic Control test switch in the on position.
3. The Check Transmission light will flash the most important diagnostic code if one is present (***Example:*** flash-pause-flash-flash-flash indicates Code 13).

NOTE: The Check Transmission light not will flash if no codes are present. There is no Code 25 for No Codes as in DDEC.

To clear codes without the ProLink:

1. Turn the vehicle off.
2. Place the Electronic Control diagnostic test switch in the on position.
3. Restart the vehicle.
4. Make sure the park brake and service brake are applied, then shift from neutral to reverse, then back to neutral.

COPYRIGHT 1994 GENERAL MOTORS CORP.

TROUBLESHOOTING - TROUBLE CODES PRESENT

INTRODUCTION

The Electronic Control's self-diagnostic feature provides troubleshooting information in the form of trouble codes. Trouble codes identify general problem areas and provide a starting point for system troubleshooting.

NOTE: This manual's Self-Diagnostics section provides detailed trouble code information, including code accessing and clearing procedures. Review this section before proceeding.

WHAT TO CHECK FIRST

Before spending a lot of time troubleshooting, check these simple items that can cause a wide variety of trouble codes:

- Make sure the shifter is in the appropriate range.
- Check the transmission oil level.
- Make sure the vehicle's batteries are properly connected and charged.
- Make sure wiring harness connections are correct and secure.
- Check related OEM equipment for proper installation and operation.
- Check for proper electronic option operation and vehicle interface wiring.

Once the above items are repaired or found to be okay:

- Clear codes from the system.
- Road test the vehicle.
- Check for code re-occurrence.

If the code still exists, begin troubleshooting procedures. If the code no longer exists, the problem may be intermittent (refer to this manual's Troubleshooting - Intermittent Trouble Codes section).

TROUBLESHOOTING STEPS

Specific troubleshooting steps for each trouble code are contained in Appendix A of this manual. This information includes:

- A description of what the code means, and possible system reactions to the code.
- Potential non-electronic causes of the code (if applicable).
- Potential electronic causes of the code.
- Detailed, isolated wiring schematics of circuits, components and connectors related to the suspect area.
- Troubleshooting steps, starting with the easiest, most common sense items to check.

For each existing trouble code, refer to the appropriate chart in Appendix A. Use the code description to understand what the code means. Next, check for potential non-electronic causes, if applicable. Use the summary of potential electronic causes as an overview of the troubleshooting steps. Finally, use the schematics, charts and Troubleshooting Steps to isolate problems.

Troubleshooting steps generally consist of component, circuit and wire checks using a digital volt-ohmmeter. An understanding of basic electricity and electrical checks is critical to successful troubleshooting.

COPYRIGHT 1994 GENERAL MOTORS CORP.

TROUBLESHOOTING - TROUBLE CODES PRESENT

Code	Description
12	Low Lube Pressure
13	Low Battery Voltage
14	Forward Pressure Switch
15	Reverse Pressure Switch
21	Throttle Sensor
22	Speed Sensor
23	Primary Shift Selector
24	Oil Temperature
31	Secondary Shift Selector
32	Direction Signals
33	Temperature Sensor
34	PROM Check
41	J Solenoid/Circuitry
42	F Solenoid/Circuitry
43	D Solenoid/Circuitry
44	C Solenoid/Circuitry
45	B Solenoid/Circuitry
46	A Solenoid/Circuitry
51	G (Lockup) Solenoid/Circuitry
52	E (Trim Boost) Solenoid/Circuitry
53	H (Neutral) Solenoid/Circuitry
54	Latching Solenoid Chain
61/63	G Solenoid/Circuitry
62	F Solenoid/Circuitry
66	Transmission Engine Communication Link (TECL)
69	Software Error

COPYRIGHT 1994 GENERAL MOTORS CORP.

Wire And Circuit Check Procedures

Wire and circuit checks help locate the source of electrical problems.

- Resistance checks are used to determine circuit and component resistances.
- Continuity checks determine whether a circuit is open, closed, or shorted to another wire or ground.

These checks require the use of a high impedance digital volt-ohmmeter and, sometimes, a jumper wire set.

CAUTION: Refer to the volt-ohmmeter manufacturer's operating instructions to avoid possible meter and system damage.

CAUTION: Never insert volt-ohmmeter test leads directly into electronic control connector terminals. This spreads the terminal and creates bad connections. Always use the appropriate jumper lead from the approved jumper wire set (special tool number J34521).

Resistance Checks

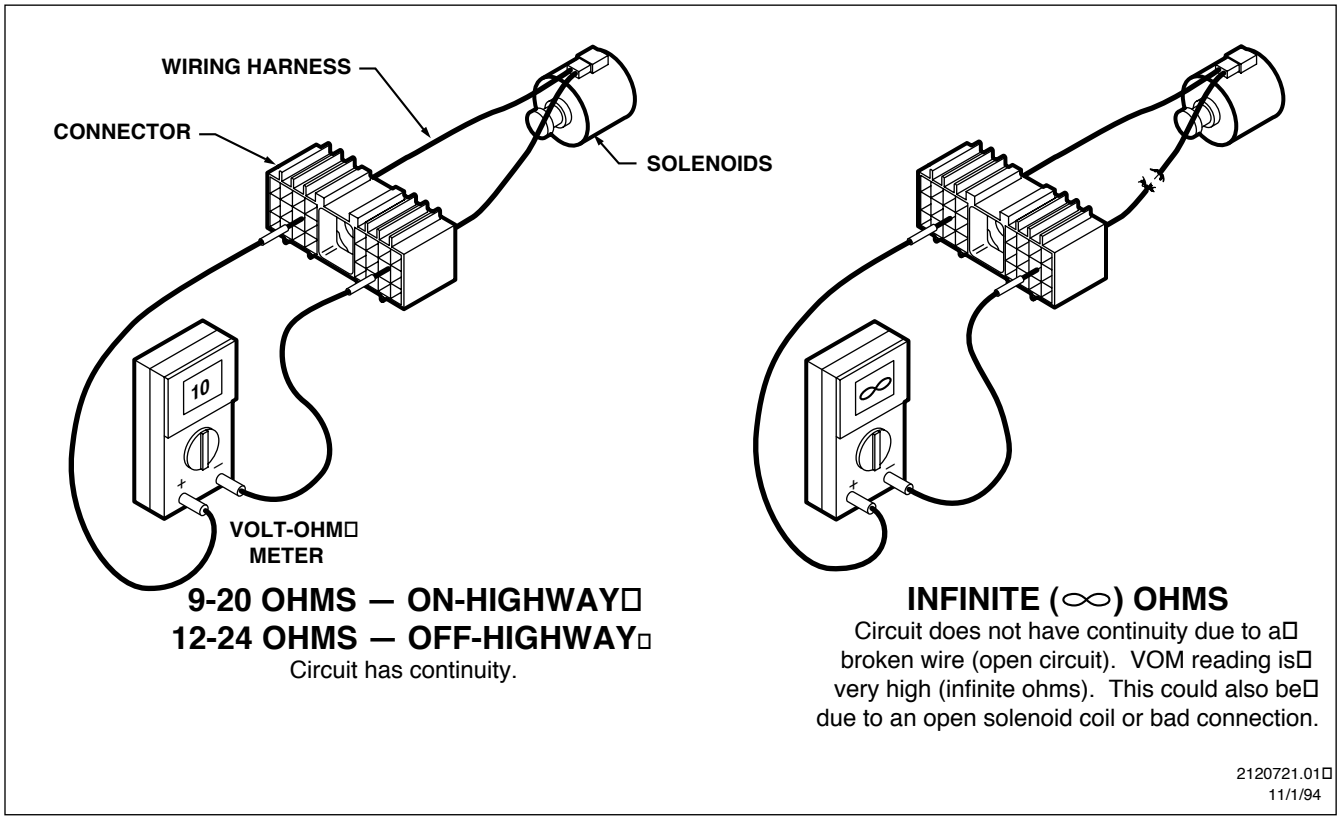

To check resistance, the circuit or component must be de-energized. An ohmmeter lead should be placed on each side of the tested circuit. Isolate the circuit or component. If several components are connected together, the resistance reading may not be accurate.

Resistance is an important factor for electronic control operation, and it can also be a critical troubleshooting measurement. One way the ECU monitors circuit status is by reading the circuit's resistance. When trouble codes exist, circuit or component resistances can be checked and compared to design specifications.

COPYRIGHT 1994 GENERAL MOTORS CORP.

Continuity Checks

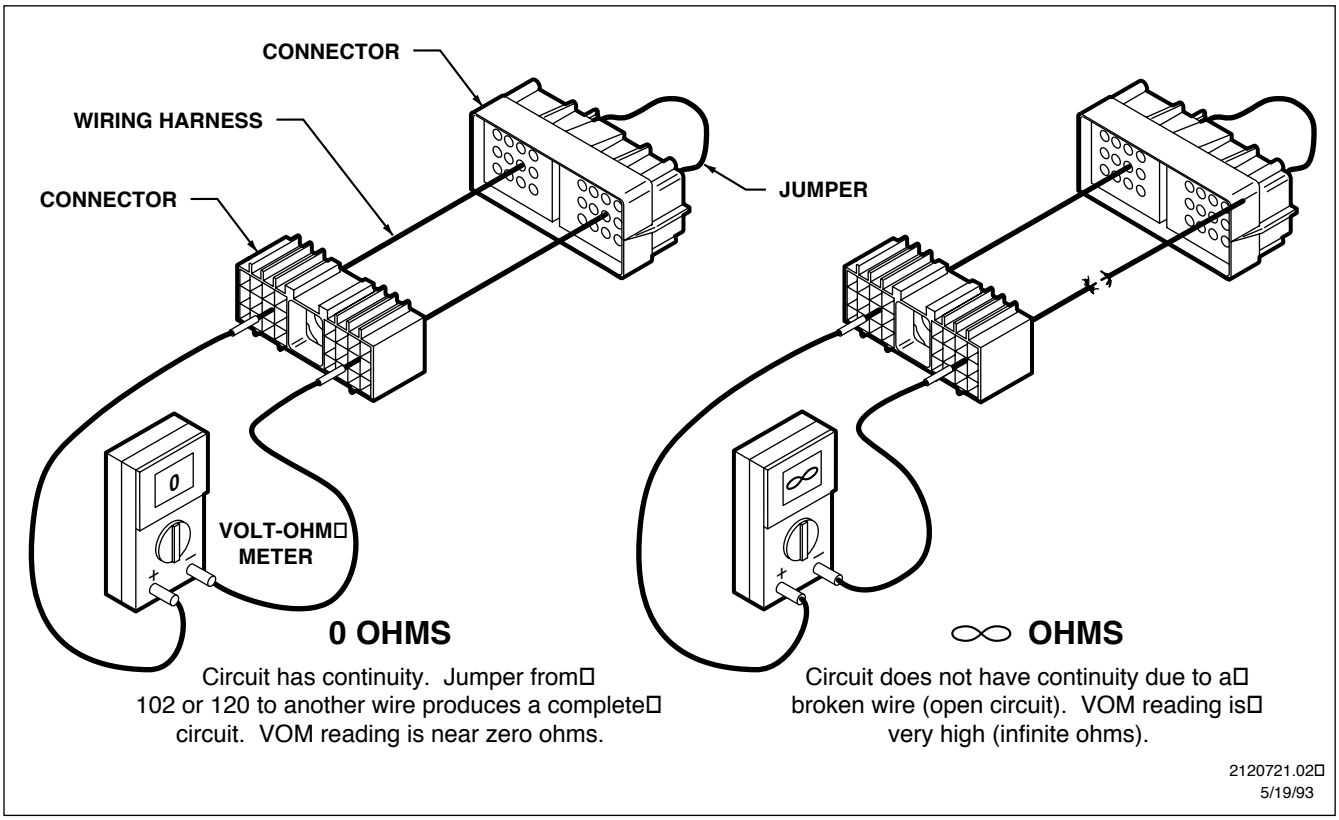

Continuity checks are performed on de-energized circuits, just like resistance checks. An ohmmeter lead should be placed on each side of the tested circuit.

Continuity checks are similar to resistance checks, but specific resistance readings are not as critical. Continuity indicates the presence of a complete (closed) circuit, but the resistance of the circuit (to a point) is not important. Continuity is indicated by minimal resistance readings. Circuits with infinite resistance are open - no continuity exists.

Jumper wires can simplify harness check procedures. Since most harnesses are long, it's difficult to place ohmmeter leads on each harness end and check for continuity. Jumper wires can be used to create circuits and isolate potential problems.

COPYRIGHT 1994 GENERAL MOTORS CORP.

Checking For Shorts

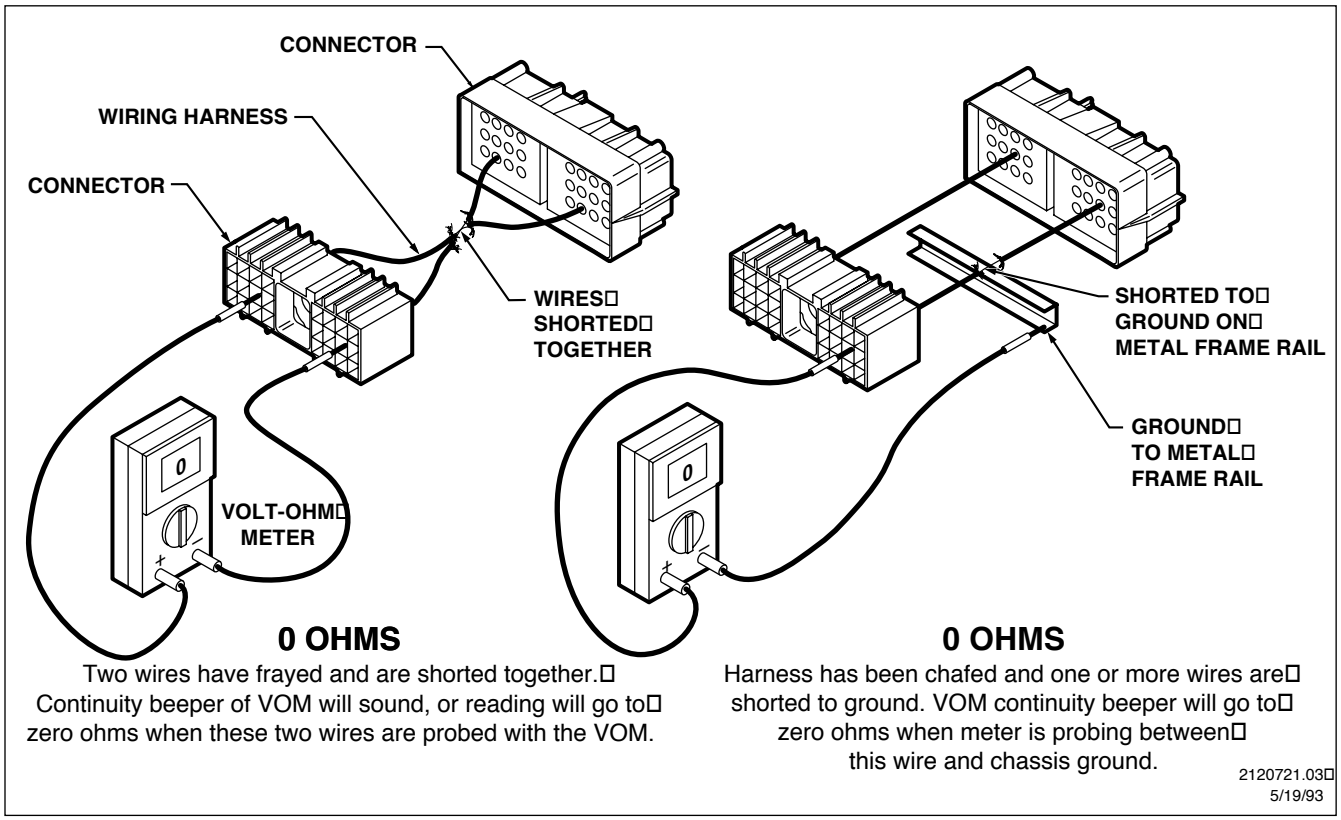

Continuity checks are also used to identify shorts in a circuit. When a circuit's wire is not insulated against an alternate path of current flow, the circuit is said to be "shorted."

For example, if a circuit has two wires running right against each other (like a wiring harness) and both wires' insulation broke at the same spot, the conductors would short together. This causes current to flow from one wire directly to the other wire, bypassing the rest of the circuit. Shorts between wires, or from a wire to ground, can cause continuity to exist where it should not.

COPYRIGHT 1994 GENERAL MOTORS CORP.

TROUBLESHOOTING - INTERMITTENT TROUBLE CODES

Intermittent codes are the result of conditions which are not always present. When conditions causing the code exist, the code is logged in memory. The code stays until it's manually cleared.

Use the code number to identify the general area of concern. For instance, if Code 21 intermittently appears, focus on the throttle position sensor circuit and check for:

- Dirty, damaged harness connectors and terminals.
- Terminals not fully seated in connectors.
- Damaged harnesses (due to poor routing, chafing, excessive heat, tight bends, etc.).
- Improperly mounted components.
- Poor connector seals (where applicable).
- Exposed harness wires.
- Accessories or components creating Electro-Magnetic Interference (EMI).

To locate the cause of intermittent codes, it sometimes helps to use the volt-ohmmeter on the suspect component or circuit and simulate operating conditions. Wiggle, pull, bump, and bend the component or wire while watching the meter.

Use the applicable Troubleshooting Steps in Appendix A as a guide for checking potential problem areas.

COPYRIGHT 1994 GENERAL MOTORS CORP.

TROUBLESHOOTING - NO TROUBLE CODES PRESENT

If the transmission is not performing properly and no codes are generated, start with the same basic items checked when trouble codes are present, including:

- Oil level.
- Range selection.
- Batteries.
- Electrical connections.
- Component installation.

Check these additional items to determine if the problem is caused by a vehicle system other than the Electronic Control:

- Is the ECU receiving proper voltage and ground?
- Is the engine properly tuned?
- Is fuel flow to the engine adequate?
- Is air flow to the radiator and transmission cooler unrestricted?
- Is the parking brake properly connected?
- Are there signs of leaking oil under the vehicle, and where does it originate?
- Are there any other obvious concerns about the vehicle or transmission?

NOTE: Always consider programmed options that might affect vehicle operation. For instance, if a vehicle programmed with Bed Hoist Interlock will not go into Reverse, the interlock switch might be open, preventing Reverse without setting a code.

After these checks are made, refer to this manual's Appendix B, Troubleshooting Steps - No Trouble Codes. These charts address specific vehicle complaints, probable causes and remedies. It may be necessary to refer to the transmission's specific Service Manual or Parts Catalog for more information.

COPYRIGHT 1994 GENERAL MOTORS CORP.

APPENDIX A — TROUBLESHOOTING STEPS - TROUBLE CODES PRESENT

The following pages include detailed troubleshooting information for each trouble code. Codes are listed in numerical order. A thorough understanding of Electronic Control components and operation is necessary for successful troubleshooting.

NOTE: Refer to sections 1 through 5 in this manual for important, detailed operational and preliminary troubleshooting information.

TROUBLESHOOTING PRECAUTIONS

CAUTION: Make sure the engine and ignition are always off before any harness connectors are disconnected or connected. Removing or installing connectors when the system is on can cause damage and set inadvertent codes.

CAUTION: When disconnecting connectors, don't pull on wires.

CAUTION: When welding on electronically-controlled vehicles:

- Remove the ECU connectors from the ECU.
- Don't connect welding cables to electronic components.
- Don't weld on electronic components.
- Protect electronic components from heat, sparks, impact, etc.
- Remove components, if necessary.

CAUTION: Do not jump start the vehicle using arc welding equipment.

CAUTION: Be careful not to damage terminals by probing directly with ohmmeter test leads. Always use the appropriate jumper lead from the approved jumper wire set (special tool J34521).

NOTE: Watch carefully for damaged or dirty connector terminals. This can cause poor or intermittent connections.

COPYRIGHT 1994 GENERAL MOTORS CORP.

TROUBLE CODE 12 - LOW LUBE PRESSURE/LOW OIL LEVEL (ON-HIGHWAY ONLY)

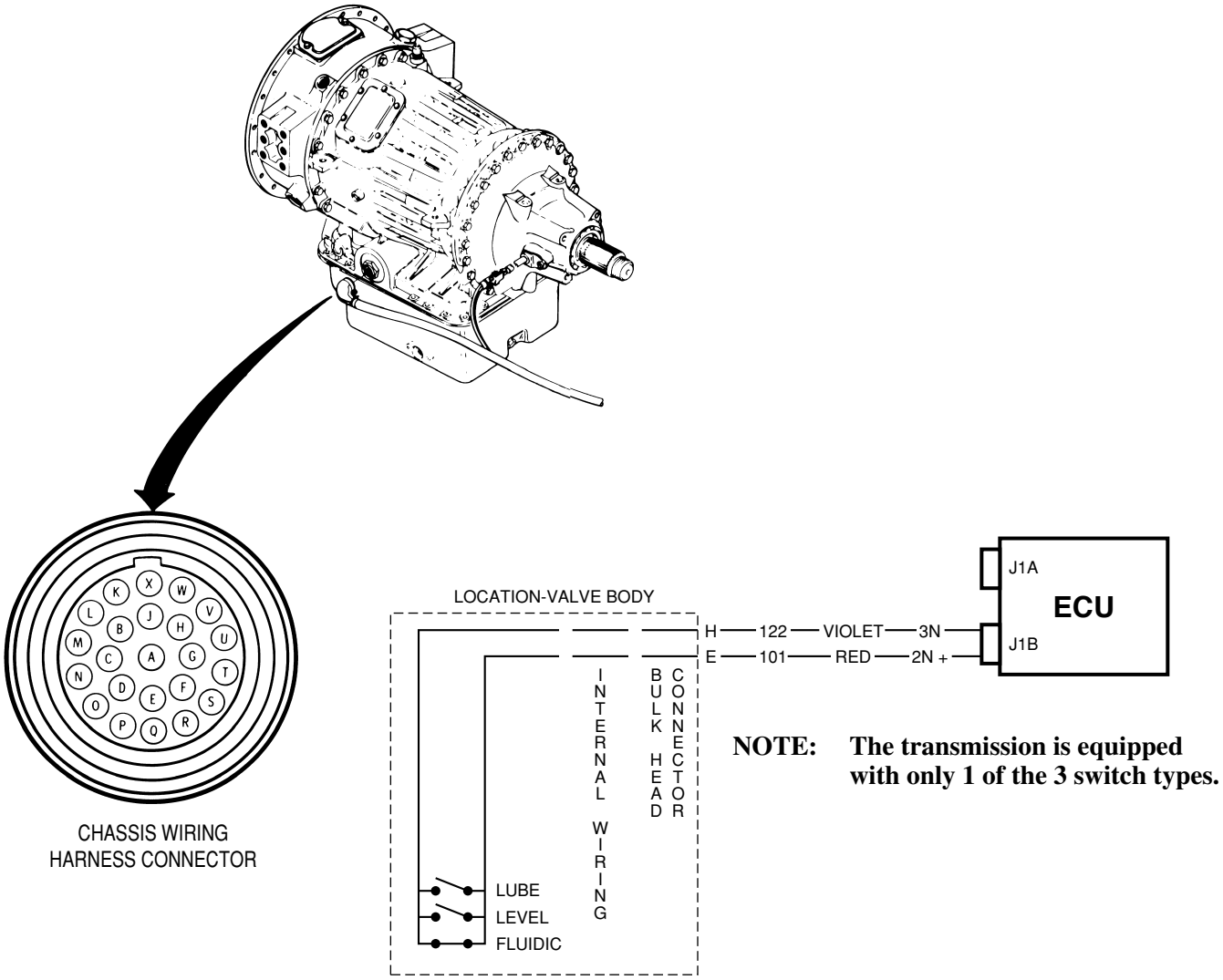

NOTE: The transmission is equipped with only 1 of the 3 switch types.

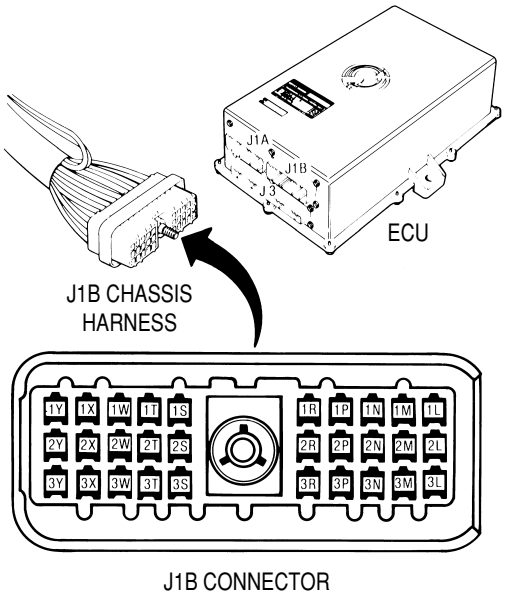

COPYRIGHT 1994 GENERAL MOTORS CORP.

TROUBLE CODE 12 - LOW LUBE PRESSURE/LOW OIL LEVEL (ON-HIGHWAY ONLY)

This code indicates that the ECU senses a low lube pressure or low oil level signal. The type of signal depends on which oil pressure or level switch the transmission uses.

Some potential non-electronic causes include:

- Low transmission oil level.
- Low oil pressure (caused by clogged filters, a worn charging pump, faulty main pressure regulator, etc.).

If necessary, verify that the transmission's hydraulic system is functioning properly by performing pressure tests. Refer to the appropriate Allison Transmission Service Manual for pressure testing procedures.

Some potential electronic control causes include:

- Opens or shorts in chassis harness wires 122 and 101.
- Opens or shorts in the electro-hydraulic valve body circuit between terminals H and E.
- Faulty transmission oil pressure or level switch.
- Faulty ECU.

TROUBLESHOOTING STEPS

1. Determine which type of oil pressure or level switch the transmission uses. Refer to ECIS and the appropriate Parts Manual to determine which switch the transmission uses.
   a. The transmission will be equipped with only one type of switch - Lube Pressure, Low Oil Level/Pressure Sensor or Fluidic Oil Level Sensor.
2. Remove the chassis wiring harness connector (J1B) from the ECU.
3. Use an ohmmeter to check for continuity between terminals 3N and 2N in the J1B connector. Record your results.
4. Make sure the vehicle's parking brake is applied, chock the vehicle's wheels, and start the engine. With the transmission at normal operating temperature, check for continuity between terminals 3N and 2N in the J1B connector. Record your results.

NOTE: Starting the engine with the J1B connector disconnected may create codes. Clear all codes prior to road testing the vehicle.

5. Refer to the Switch Continuity Chart to determine whether your continuity readings are correct.

COPYRIGHT 1994 GENERAL MOTORS CORP.

TROUBLE CODE 12 - LOW LUBE PRESSURE/LOW OIL LEVEL (ON-HIGHWAY ONLY)

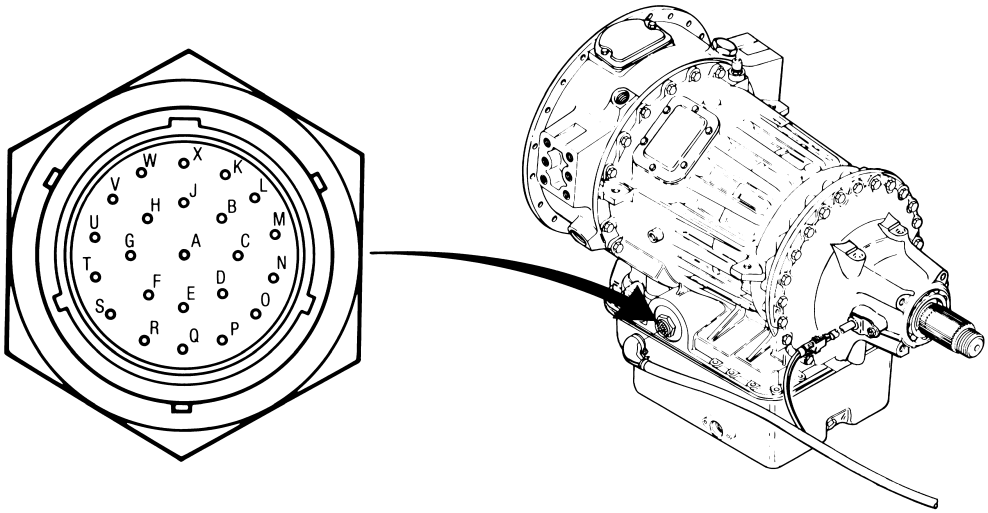

Switch Type	Continuity Engine Running	Continuity Engine Stopped	Code Info
Lube Pressure Switch	Yes (Switch Closed)	No (Switch Open)	Open circuit generates code
Low Oil Level/ Pressure Sensor	No (Switch Open)	No (Switch Closed)	Closed circuit generates code
Fluidic Oil Level Sensor	Yes (Switch Closed)	Yes (Switch Closed)	Open circuit generates code

COPYRIGHT 1994 GENERAL MOTORS CORP.

TROUBLE CODE 12 - LOW LUBE PRESSURE/LOW OIL LEVEL (ON-HIGHWAY ONLY)

6. If continuity readings are incorrect, check the chassis wiring harness.
   a. Check chassis wires 122 and 101 for opens, shorts to each other, shorts to other wires and shorts to ground.
   b. Check terminals 3N and 2N for damage, dirt or corrosion.
   c. Check terminals H and E at the bulkhead connector for damage, dirt or corrosion.

Isolate and repair problems as needed.

7. If continuity readings are incorrect and the chassis harness is okay, check the bulkhead connector and internal wiring harness.
   a. Disconnect the switch to isolate the internal wiring harness.
   b. Check the internal wiring harness (between terminals H and E) for opens, shorts to each other, shorts to other wires and shorts to ground.

Isolate and repair problems as needed.

8. If continuity readings are incorrect and the chassis harness, bulkhead connector and internal wiring harness are okay, check the switch.
   a. Remove or isolate the switch.
   b. Use an ohmmeter to check the switch's continuity with no pressure present.
      1) Lube Pressure Switches should show no continuity.
      2) Low Oil Level/Pressure Sensors should show no continuity.
      3) Fluidic Oil Level Sensors should show continuity.
   c. Apply 6 to 12 psi of air pressure to the switch and check continuity.
      1) Lube Pressure Switches should show continuity.
      2) Low Oil Level/Pressure Sensors should show continuity.
         a) Check the bi-metal strip carefully for damage and proper operation.
      3) Fluidic Oil Level Sensors should show no continuity.

If continuity readings are incorrect, replace the switch.

9. If continuity readings are correct, and possible mechanical causes have been checked, replace the ECU. If replacing the ECU fixes the problem, verify the old ECU is "bad" by reinstalling it, road testing the vehicle, and checking for codes.

COPYRIGHT 1994 GENERAL MOTORS CORP.

TROUBLE CODE 13 - LOW BATTERY VOLTAGE

Option 1

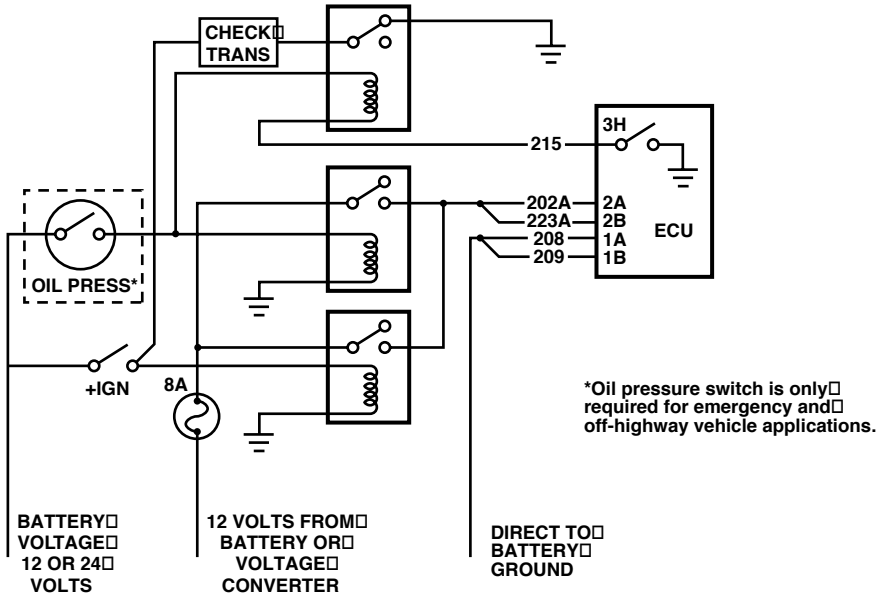

Option 2

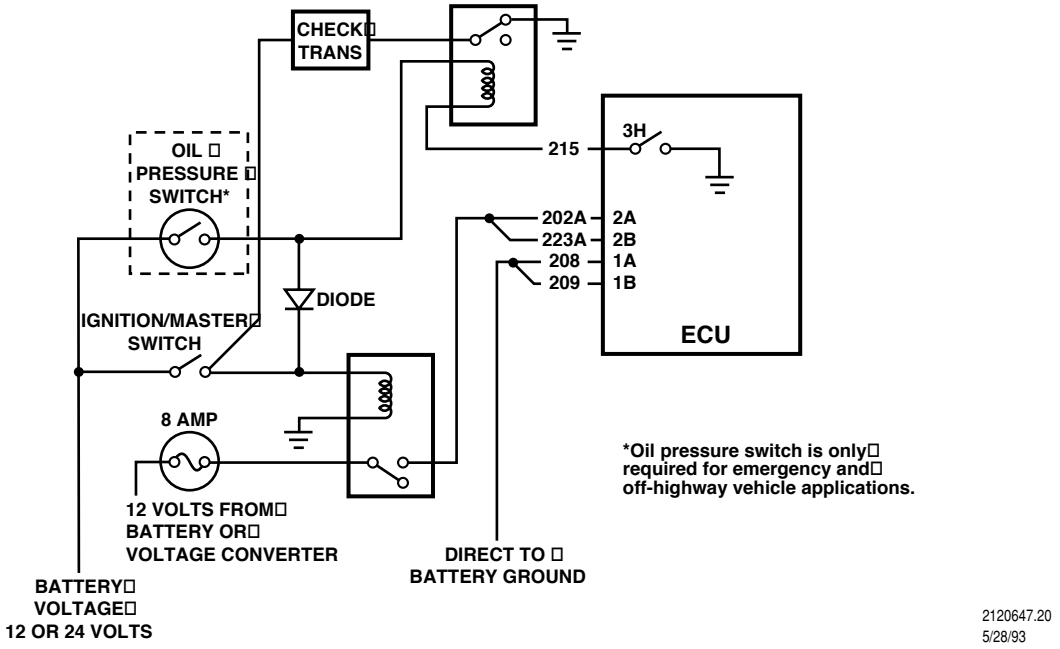

These are the two recommended interface options. Your vehicle wiring may vary.

COPYRIGHT 1994 GENERAL MOTORS CORP.

TROUBLE CODE 13 - LOW BATTERY VOLTAGE

This code indicates that the ECU senses insufficient voltage.

Some potential non-electronic control causes include:

- Bad batteries.
- Faulty vehicle charging system.
- Bad battery cable connections.
- Faulty power supply.
- Vehicle components or accessories causing excessive electrical system drain.

Check these items and make repairs as needed before troubleshooting the electronic control.

Some potential electronic control causes include:

- Opens or shorts in cab harness wires 202A, 223A, 208 and 209.
- Faulty vehicle interface circuitry for wires 202A, 223A, 208 and 209.
- Non-dedicated ECU power or ground wiring (ECU power or ground shared by another component rather than directly wired to the power source).
- Faulty ECU.

NOTE: Wires designated with a letter suffix (202A, for example) are spliced. When checking for shorts to other wires, refer to this manual's detailed wiring schematics to determine which terminals should show continuity.

TROUBLESHOOTING STEPS

1. Remove the cab wiring harness connector (J1A) from the ECU.

2. Check for sufficient positive voltage at J1A terminals 2A and 2B.

   a. Connect one voltmeter lead to the negative side of the battery or a known good ground, and the other lead to terminal 2A. If voltage is low (see Electronic Control Voltage Requirements Chart), check wire 202A and its related circuitry for opens and shorts. If a power supply or converter is used, check it carefully for proper operation.

   b. Connect one voltmeter lead to the negative side of the battery or a known good ground, and the other lead to terminal 2B. If voltage is low, check wire 223A and its related circuitry for opens and shorts. If a power supply or converter is used, check it carefully for proper operation.

Isolate and repair problems as needed.

COPYRIGHT 1994 GENERAL MOTORS CORP.

TROUBLE CODE 13 - LOW BATTERY VOLTAGE

Electronic Control Voltage Requirements

Minimum	10 Volts
Maximum Continuous	16 Volts
Maximum Intermittent	19 Volts

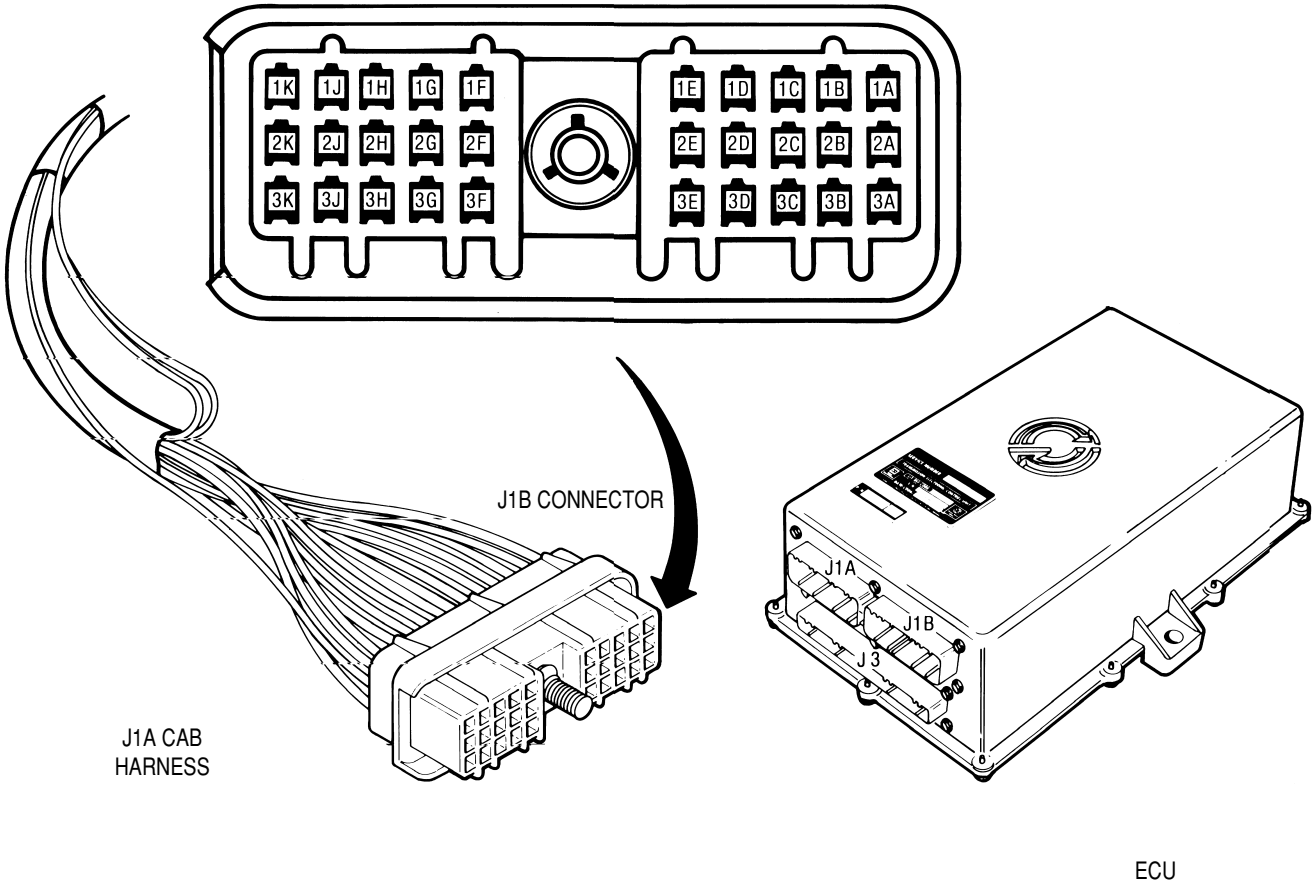

COPYRIGHT 1994 GENERAL MOTORS CORP.

TROUBLE CODE 13 - LOW BATTERY VOLTAGE

3. Check for sufficient ground at J1A terminals 1A and 1B.
   a. Connect one voltmeter lead to the positive side of the battery or a known good positive voltage source, and the other lead to terminal 1A. If voltage is low, check wire 208 for opens and shorts. If a power supply or converter is used, check it carefully for proper operation.
   b. Connect one voltmeter lead to the positive side of the battery or a known good positive voltage source, and the other lead to terminal 1B. If voltage is low, check wire 209 for opens and shorts. If a power supply or converter is used, check it carefully for proper operation.

Isolate and repair problems as needed.

4. If battery voltage to the ECU is okay, and the vehicle's batteries, charging system, and electrical accessories are okay, replace the ECU. If replacing the ECU fixes the problem, verify the old ECU is "bad" by reinstalling it, road testing the vehicle, and checking for codes.

COPYRIGHT 1994 GENERAL MOTORS CORP.

TROUBLE CODE 14 - FORWARD PRESSURE SWITCH (ON-HIGHWAY ONLY)

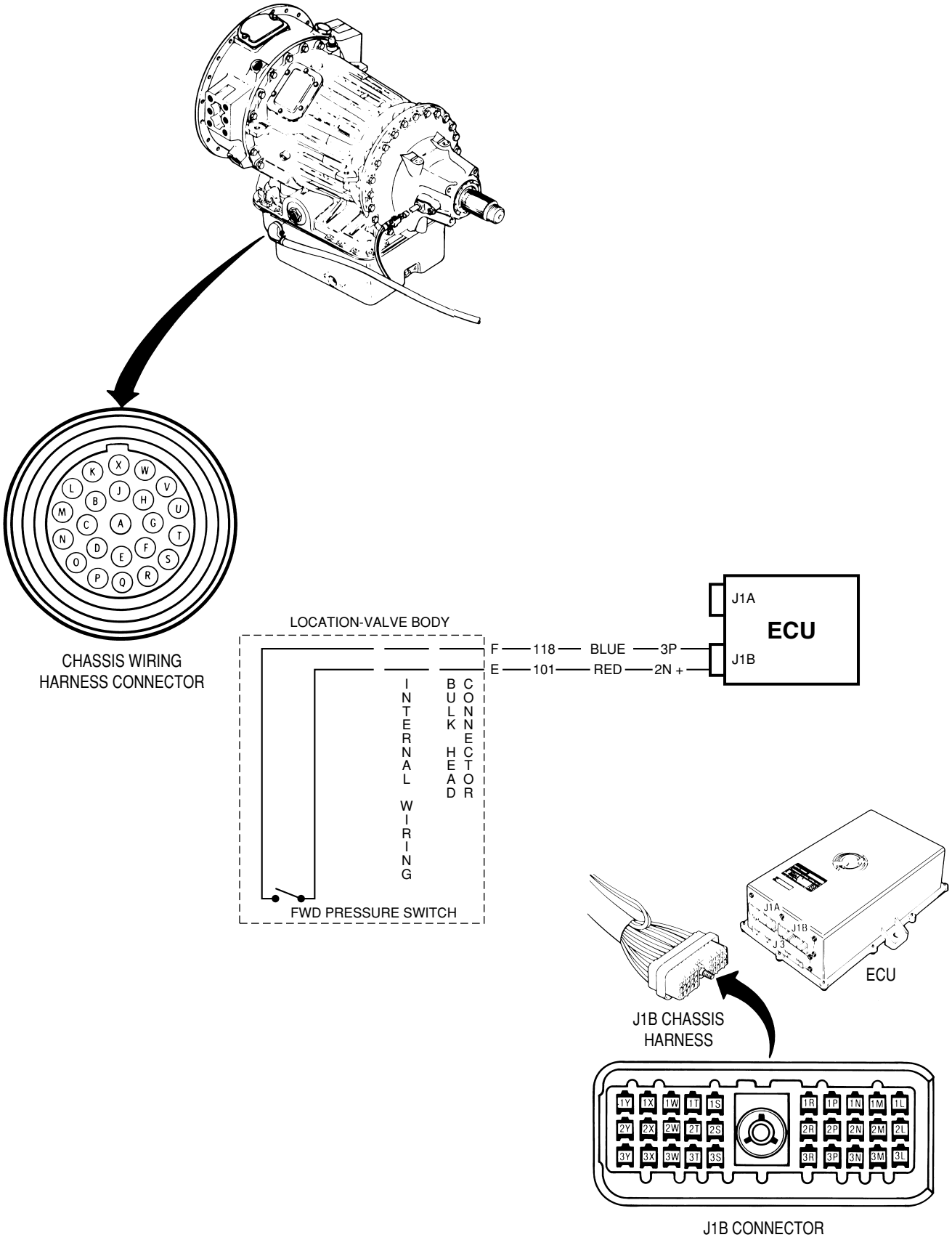

COPYRIGHT 1994 GENERAL MOTORS CORP.

TROUBLE CODE 14 - FORWARD PRESSURE SWITCH (ON-HIGHWAY ONLY)

This code means that the ECU is receiving signals from the forward and reverse pressure switches when the transmission is in reverse, or the ECU is not receiving a signal from the forward pressure switch when the transmission is in forward and throttle position is greater than a preset percentage.

Some potential non-electronic causes include:

- Internal hydraulic problems sending or inhibiting pressure to the forward or reverse pressure switches at the wrong time (usually accompanied by faulty transmission performance).

If necessary, verify that the transmission's hydraulic system is functioning properly by performing pressure tests. Refer to the appropriate Allison Transmission Service Manual for pressure testing procedures.

Some potential electronic control causes include:

- Opens or shorts in chassis harness wires 118 and 101.
- Opens or shorts in the electro-hydraulic valve body circuit between terminals F and E.
- Faulty forward pressure switch.
- Faulty ECU.

NOTE: It's common for a Code 32 to be stored when Code 14 is present.

TROUBLESHOOTING STEPS

1. Verify the presence of Code 14 by clearing the ECU diagnostic memory, then road testing the vehicle. Operate the vehicle at a minimum of 60% full throttle during the road test.
   a. Re-check for codes. If Code 14 is present, continue with the troubleshooting steps.
   b. If Code 14 is not present, the problem may be intermittent.
2. Remove the chassis harness connector (J1B) from the ECU, and remove the bulkhead connector from the transmission.
3. Check chassis harness wires 118 and 101 for opens, shorts to each other, shorts to other wires and shorts to ground.

Isolate and repair problems as needed.

COPYRIGHT 1994 GENERAL MOTORS CORP.

TROUBLE CODE 14 - FORWARD PRESSURE SWITCH (ON-HIGHWAY ONLY)

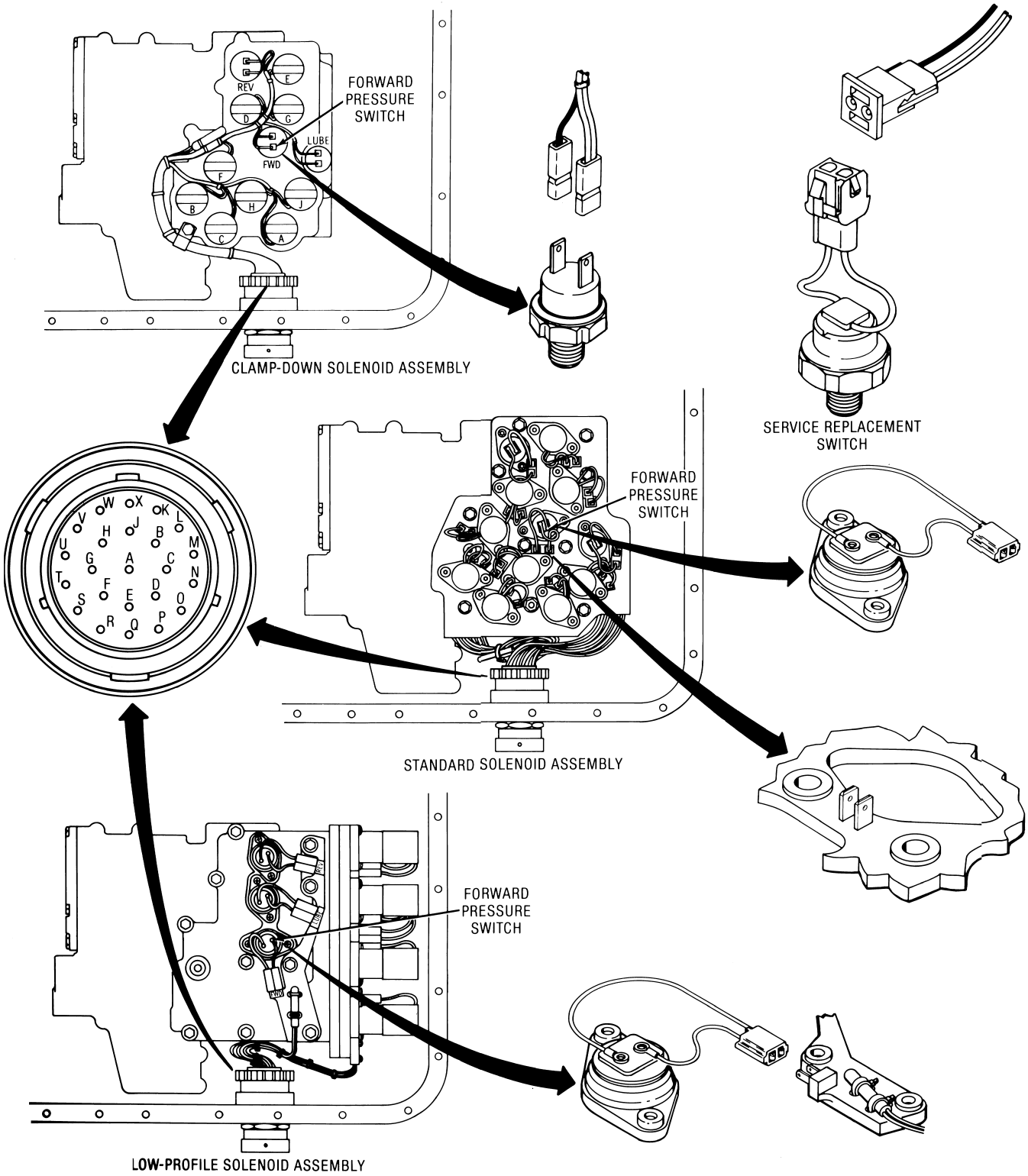

COPYRIGHT 1994 GENERAL MOTORS CORP.

TROUBLE CODE 14 - FORWARD PRESSURE SWITCH (ON-HIGHWAY ONLY)

4. If the chassis harness is okay, check the internal wiring harness.
   a. Leave the chassis harness unplugged from the bulkhead connector and disconnect the internal wiring harness from the forward pressure switch.
   b. Check the internal wiring harness wires between the switch and terminals F and E for opens, shorts to each other, shorts to other wires and shorts to ground.

Isolate and repair problems as needed.

5. If the internal wiring harness is okay, check the forward pressure switch.
   a. Remove the forward pressure switch.
   b. Check switch continuity with no pressure present (the switch is normally open - no continuity should exist).
   c. Check continuity while applying 25 to 35 psi of air pressure to the switch (the switch should close and show 0 ohms resistance - continuity should exist).
      1) Make sure the switch is not closing at low pressure. The switch should remain open until 25 psi of air is applied.

Replace the switch, if necessary.

6. If no problems are found, replace the ECU. If replacing the ECU fixes the problem, verify the old ECU is “bad” by reinstalling it, road testing the vehicle, and checking for codes.

COPYRIGHT 1994 GENERAL MOTORS CORP.

TROUBLE CODE 15 - REVERSE DIRECTION SWITCH (ON-HIGHWAY ONLY)

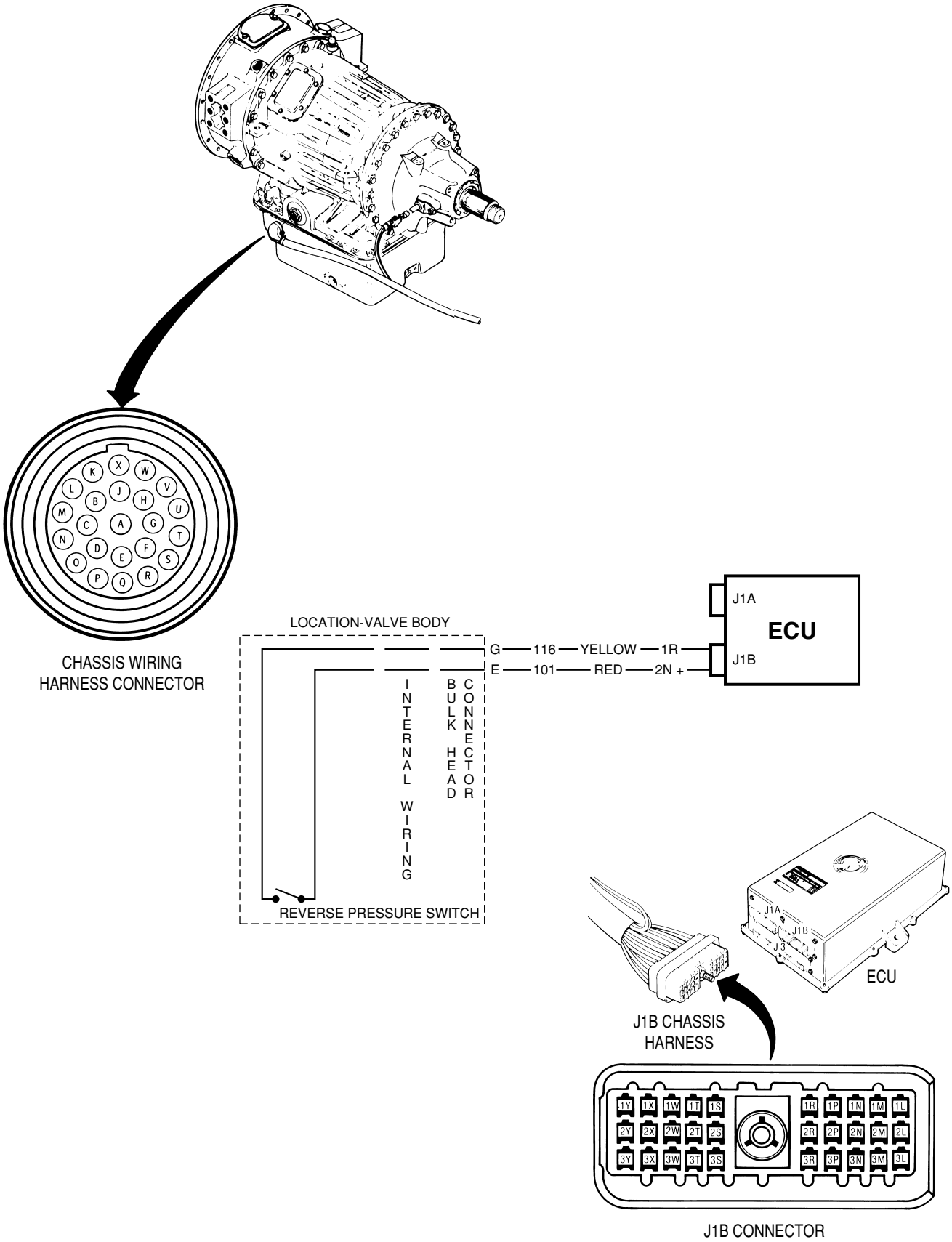

COPYRIGHT 1994 GENERAL MOTORS CORP.

TROUBLE CODE 15 - REVERSE DIRECTION SWITCH (ON-HIGHWAY ONLY)

This code means that the ECU is receiving signals from the forward and reverse pressure switches when the transmission is in forward, or the ECU is not receiving a signal from the reverse pressure switch when the transmission is in reverse and throttle position is greater than a preset percentage.

Some potential non-electronic causes include:

- Internal hydraulic problems sending or inhibiting pressure to the forward or reverse pressure switches at the wrong time (usually accompanied by faulty transmission performance).

If necessary, verify that the transmission's hydraulic system is functioning properly by performing pressure tests. Refer to the appropriate Allison Transmission Service Manual for pressure testing procedures.

Some potential electronic control causes include:

- Opens or shorts in chassis harness wires 116 and 101.
- Opens or shorts in the electro-hydraulic valve body circuit between terminals G and E.
- Faulty reverse pressure switch.
- Faulty ECU.

NOTE: It's common for a Code 32 to be stored when Code 15 is present.

TROUBLESHOOTING STEPS

1. Verify the presence of Code 15 by clearing the ECU diagnostic memory, then road testing the vehicle. Operate the vehicle at a minimum of 60% full throttle in reverse during the road test.
   a. Re-check for codes. If Code 15 is present, continue with the troubleshooting steps.
   b. If Code 15 is not present, the problem may be intermittent.
2. Remove the chassis harness connector (J1B) from the ECU, and remove the bulkhead connector from the transmission.
3. Check chassis harness wires 116 and 101 for opens, shorts to each other, shorts to other wires and shorts to ground. Isolate and repair problems as needed.

COPYRIGHT 1994 GENERAL MOTORS CORP.

TROUBLE CODE 15 - REVERSE DIRECTION SWITCH (ON-HIGHWAY ONLY)

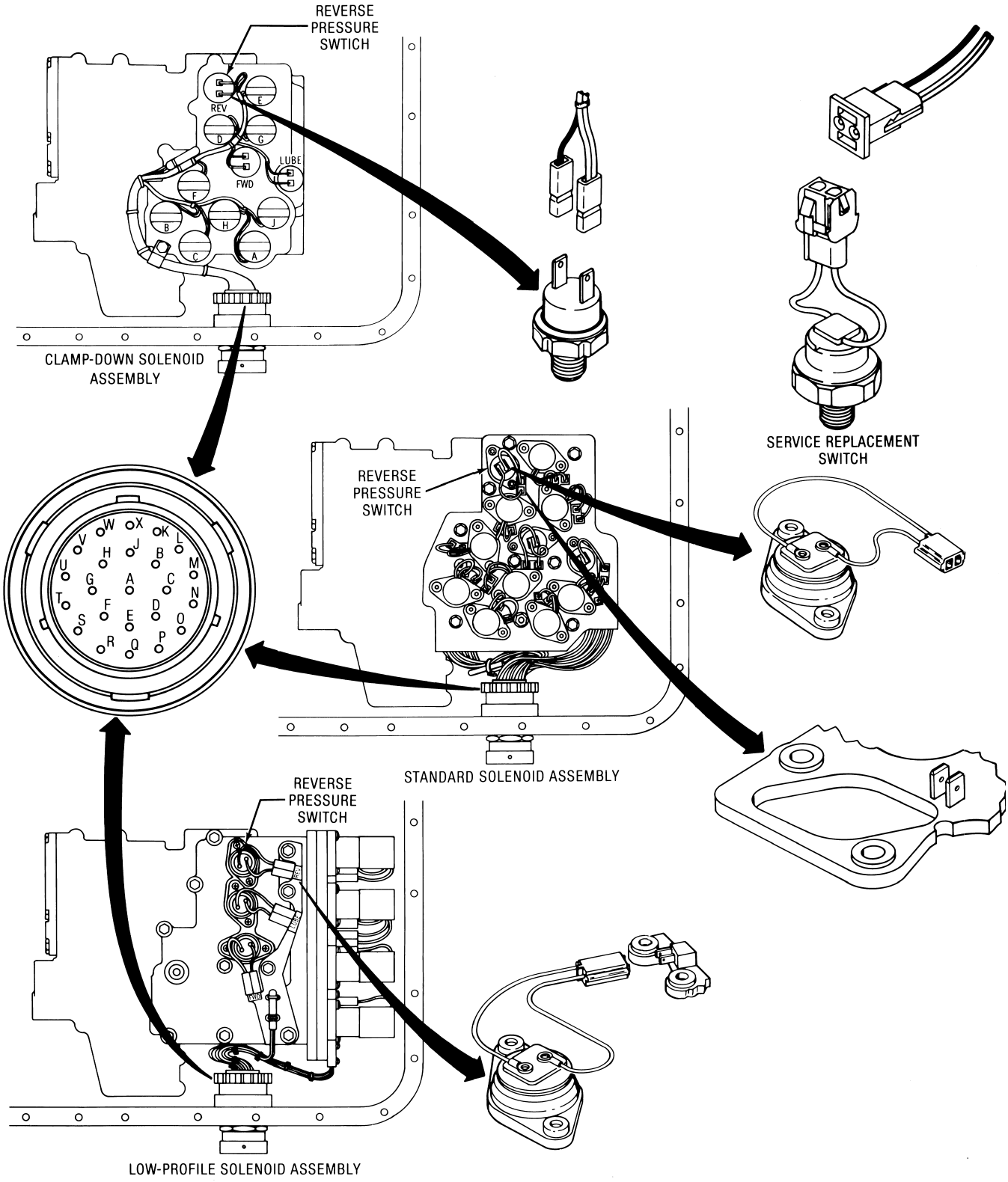

COPYRIGHT 1994 GENERAL MOTORS CORP.

TROUBLE CODE 15 - REVERSE DIRECTION SWITCH (ON-HIGHWAY ONLY)

4. If the chassis harness is okay, check the internal wiring harness.
   a. Leave the chassis harness unplugged from the bulkhead connector and disconnect the internal wiring harness from the reverse pressure switch.
   b. Check the internal wiring harness wires between the switch and terminals G and E for opens, shorts to each other, shorts to other wires and shorts to ground.

Isolate and repair problems as needed.

5. If the internal wiring harness is okay, check the reverse pressure switch.
   a. Remove the reverse pressure switch.
   b. Check switch continuity with no pressure present (the switch is normally open - no continuity should exist).
   c. Check continuity while applying 25 to 35 psi of air pressure to the switch (the switch should close and show 0 ohms resistance - continuity should exist).
      1) Make sure the switch is not closing at low pressure. The switch should remain open until 25 psi of air is applied.

Replace the switch, if necessary.

6. If no problems are found, replace the ECU. If replacing the ECU fixes the problem, verify the old ECU is “bad” by reinstalling it, road testing the vehicle, and checking for codes.

COPYRIGHT 1994 GENERAL MOTORS CORP.

TROUBLE CODE 21 - THROTTLE POSITION SENSOR

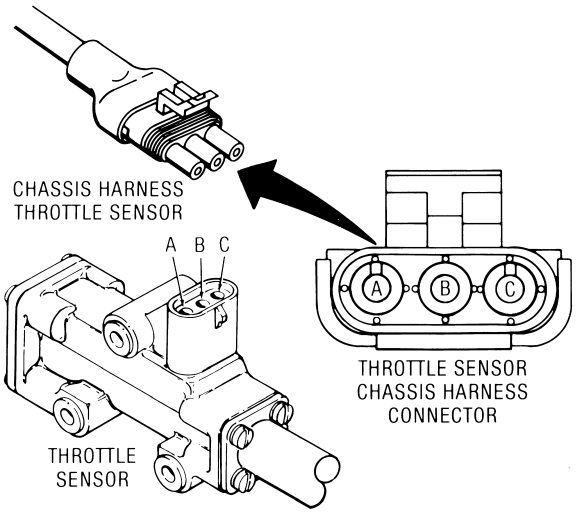

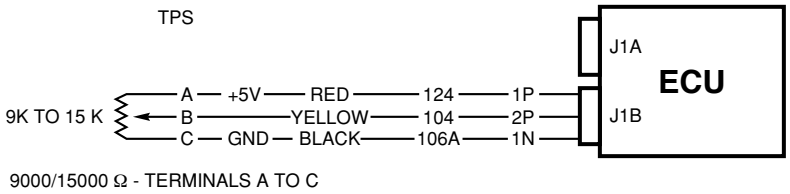

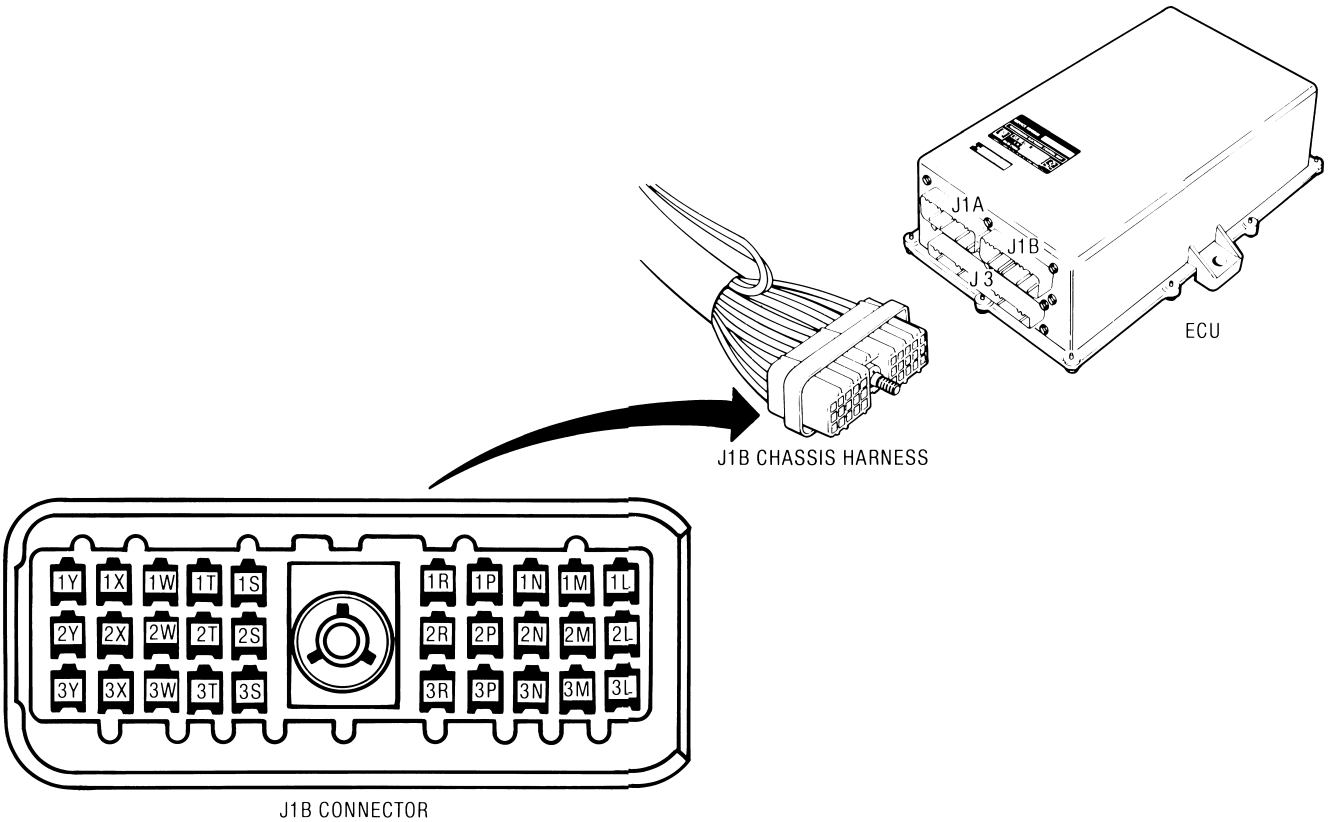

COPYRIGHT 1994 GENERAL MOTORS CORP.

TROUBLE CODE 21 - THROTTLE POSITION SENSOR

This code indicates that the ECU is receiving an incorrect signal from the throttle position sensor or its related circuits. This code is set if throttle counts are in either of the error zones.

When an extreme stroke condition is detected, a trouble code is logged in the ECU's memory. The throttle percentage is set to 100% or 0%, depending on the situation, so you may get either closed throttle shift points or full throttle shift points.

Before troubleshooting:

- Cycle the vehicle's master/ignition switch "on" and "off" several times to allow the throttle sensor to self-adjust. Clear the code and check for re-occurrence.
- Check throttle sensor linkage for proper installation, operation, wear, binding, etc.
- Inspect the throttle sensor cable for proper installation, binding or damage.
- Check the throttle sensor cable for proper adjustment.

NOTE: If the vehicle is equipped with DDEC II, check the OEM-supplied interface module for proper installation and calibration.

Some potential electronic control causes include:

- Faulty throttle position sensor.
- Opens or shorts in chassis harness wires 124, 104 and 106A.
- Faulty ECU.

NOTE: Wires designated with a letter suffix (106A, for example) are spliced. When checking for shorts to other wires, refer to this manual's detailed wiring schematics to determine which terminals should show continuity.

TROUBLESHOOTING STEPS

1. Check the throttle position sensor.
   a. With the chassis harness disconnected, check resistance between throttle position sensor terminals A and C. Resistance should be 9000 to 15,000 ohms.
   b. Connect the ohmmeter leads to throttle sensor terminals A and B. Stroke the sensor very slowly from closed throttle, to full throttle, back to closed throttle.
      1) Watch for a smooth transition while stroking the throttle. Small, quick changes may not be seen with a digital meter. An analog (needle type) meter can be used for a more accurate check.

COPYRIGHT 1994 GENERAL MOTORS CORP.

TROUBLE CODE 21 - THROTTLE POSITION SENSOR

TPS Counts

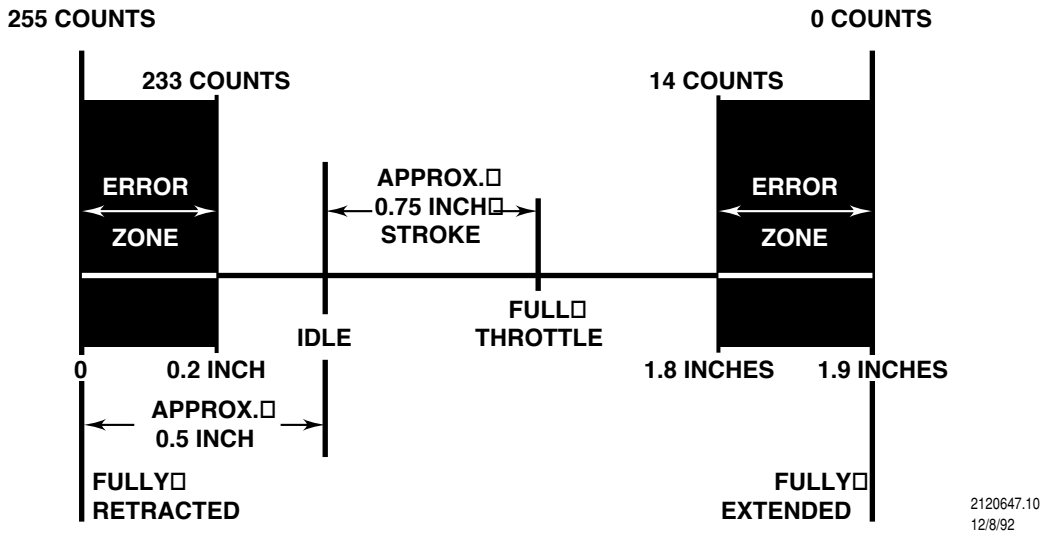

TPS Adjustment

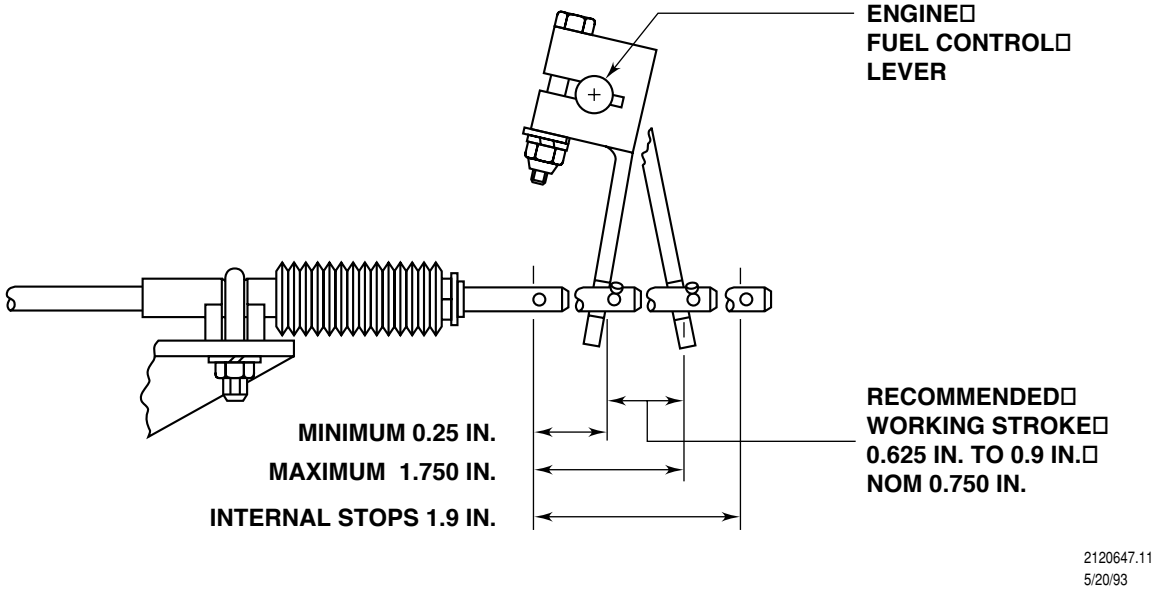

COPYRIGHT 1994 GENERAL MOTORS CORP.

TROUBLE CODE 22 - SPEED SENSOR

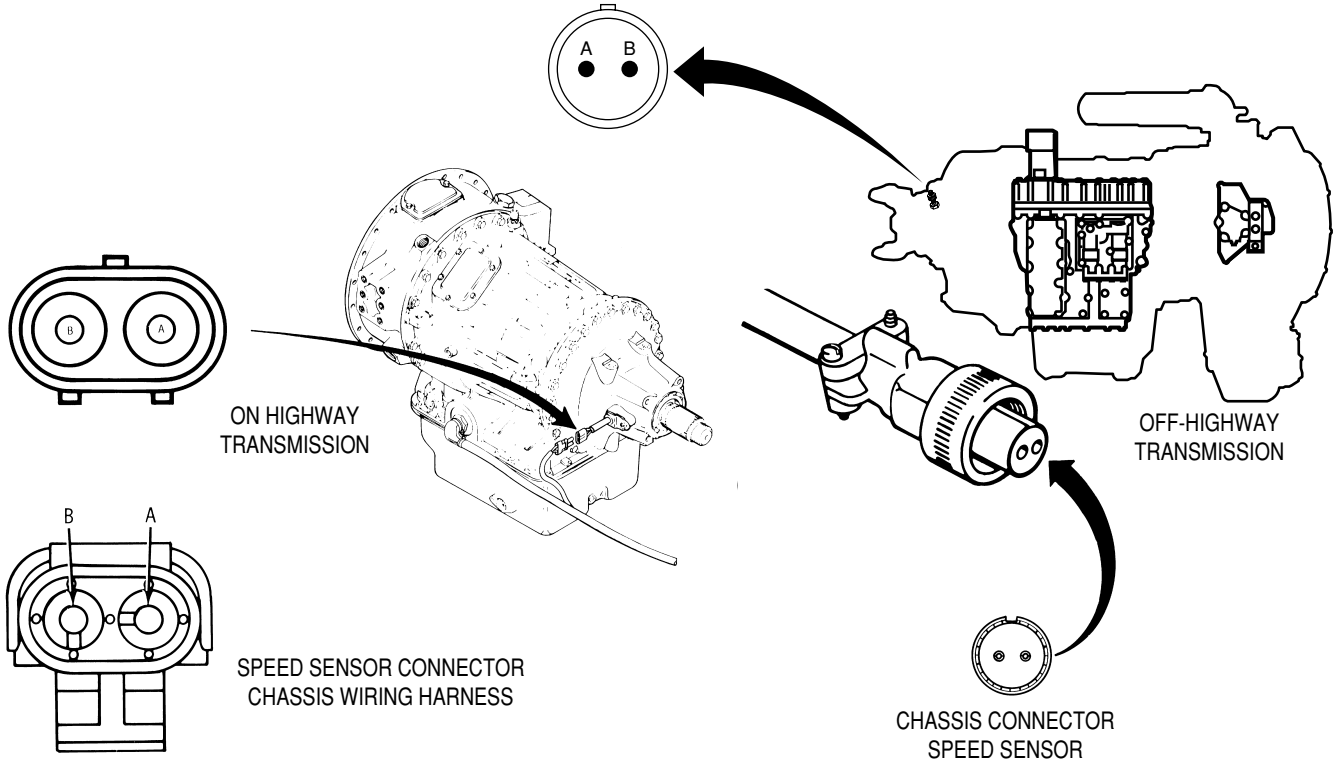

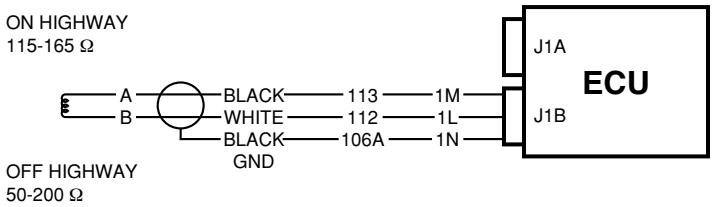

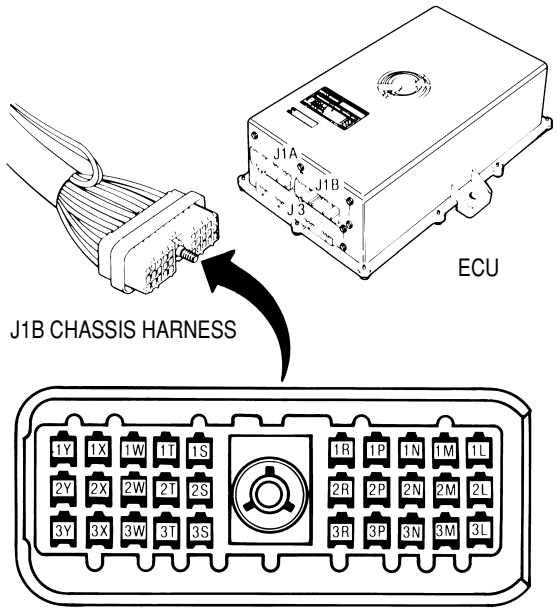

COPYRIGHT 1994 GENERAL MOTORS CORP.

TROUBLE CODE 23 - PRIMARY SHIFT SELECTOR

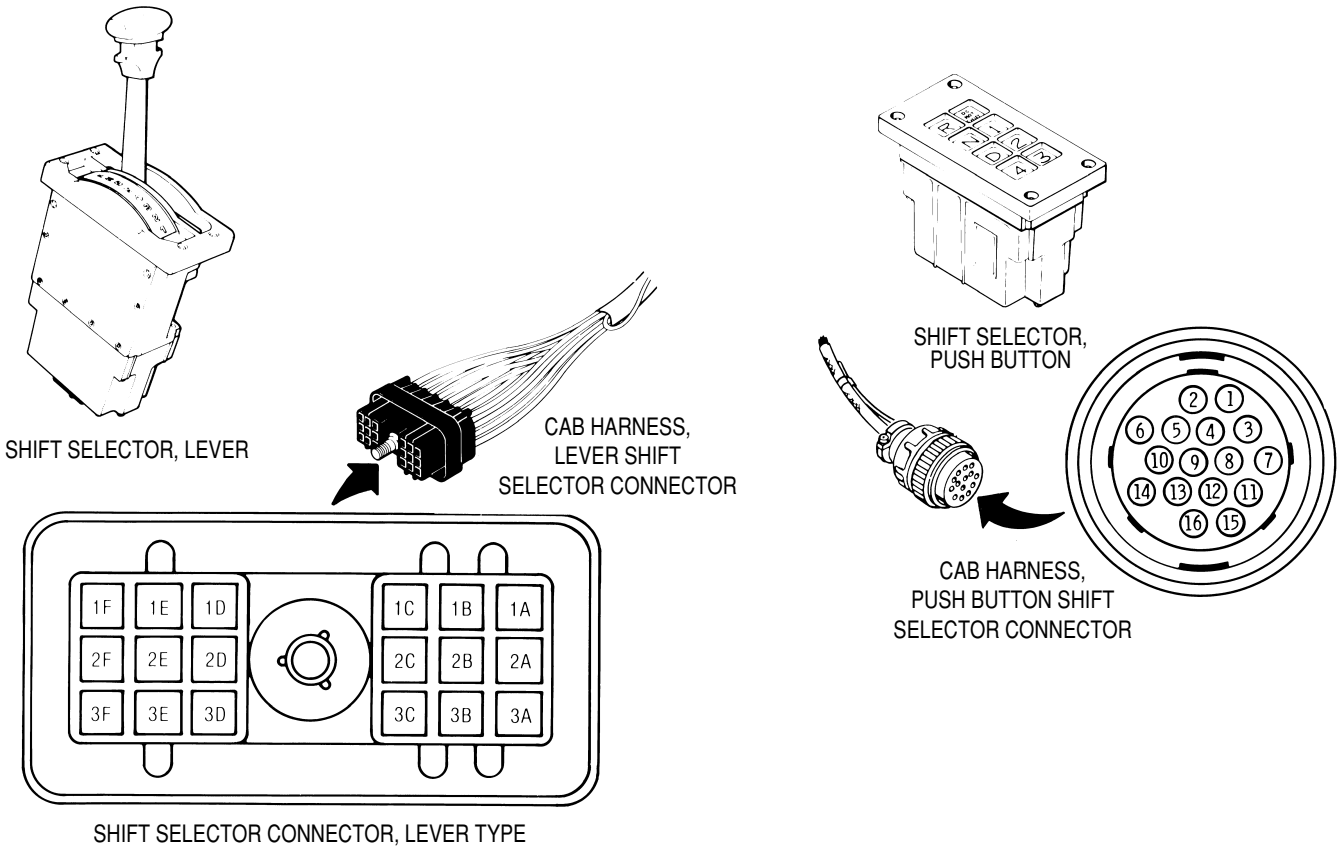

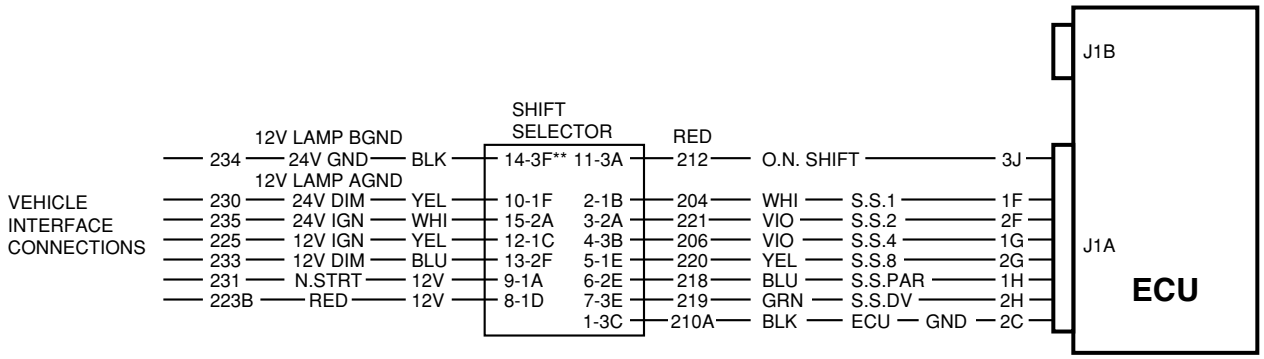

*PUSH BUTTON TERMINALS
**LEVER SELECTOR TERMINALS

COPYRIGHT 1994 GENERAL MOTORS CORP.

TROUBLE CODE 23 - PRIMARY SHIFT SELECTOR

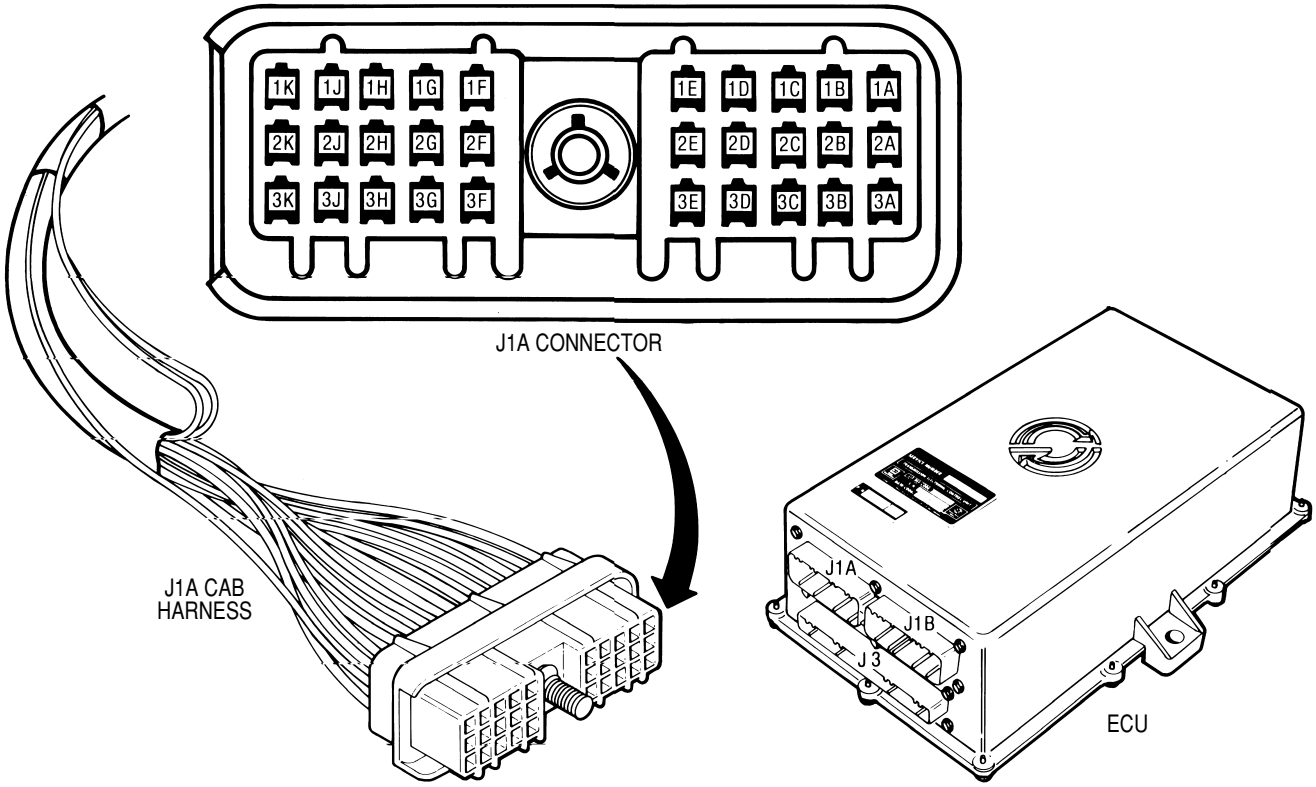

COPYRIGHT 1994 GENERAL MOTORS CORP.

TROUBLE CODE 24 - TRANSMISSION OIL TEMPERATURE

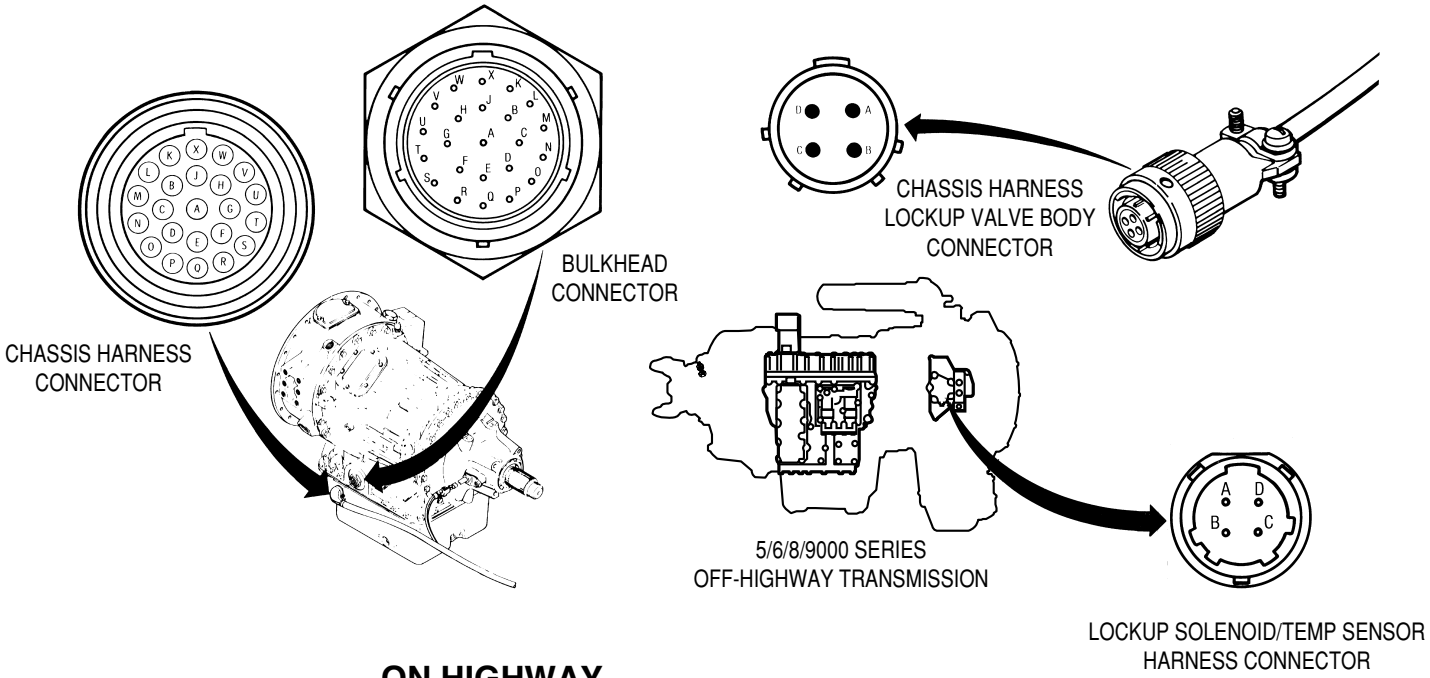

ON HIGHWAY

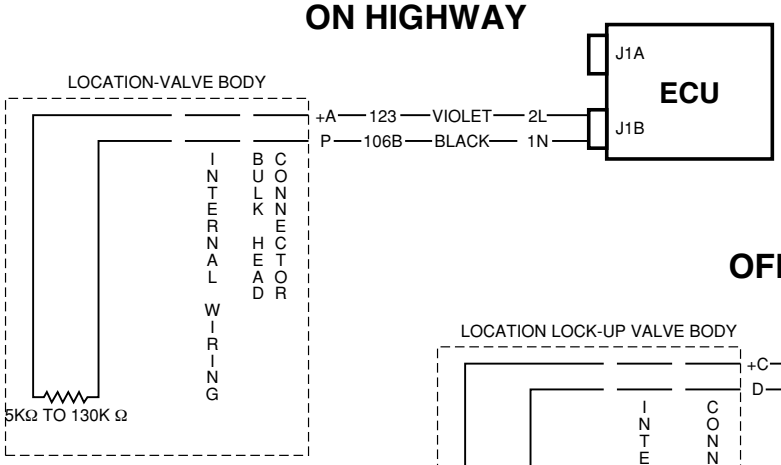

OFF HIGHWAY

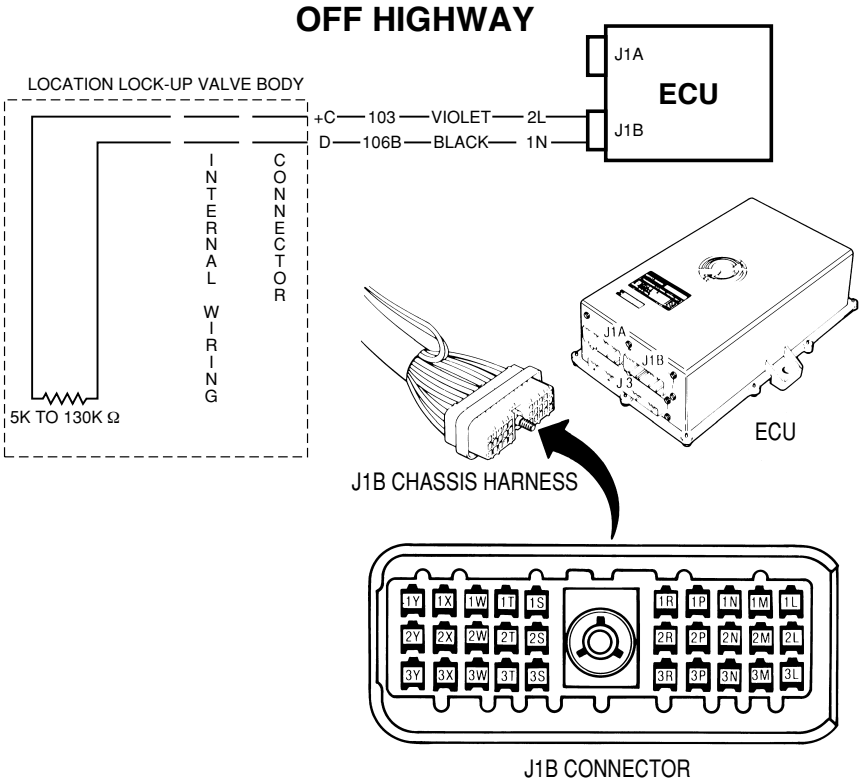

COPYRIGHT 1994 GENERAL MOTORS CORP.

TROUBLE CODE 24 - TRANSMISSION OIL TEMPERATURE

Temperature Sensor Plot

Resistance vs Temperature Characteristics for Oil Temperature Sensor

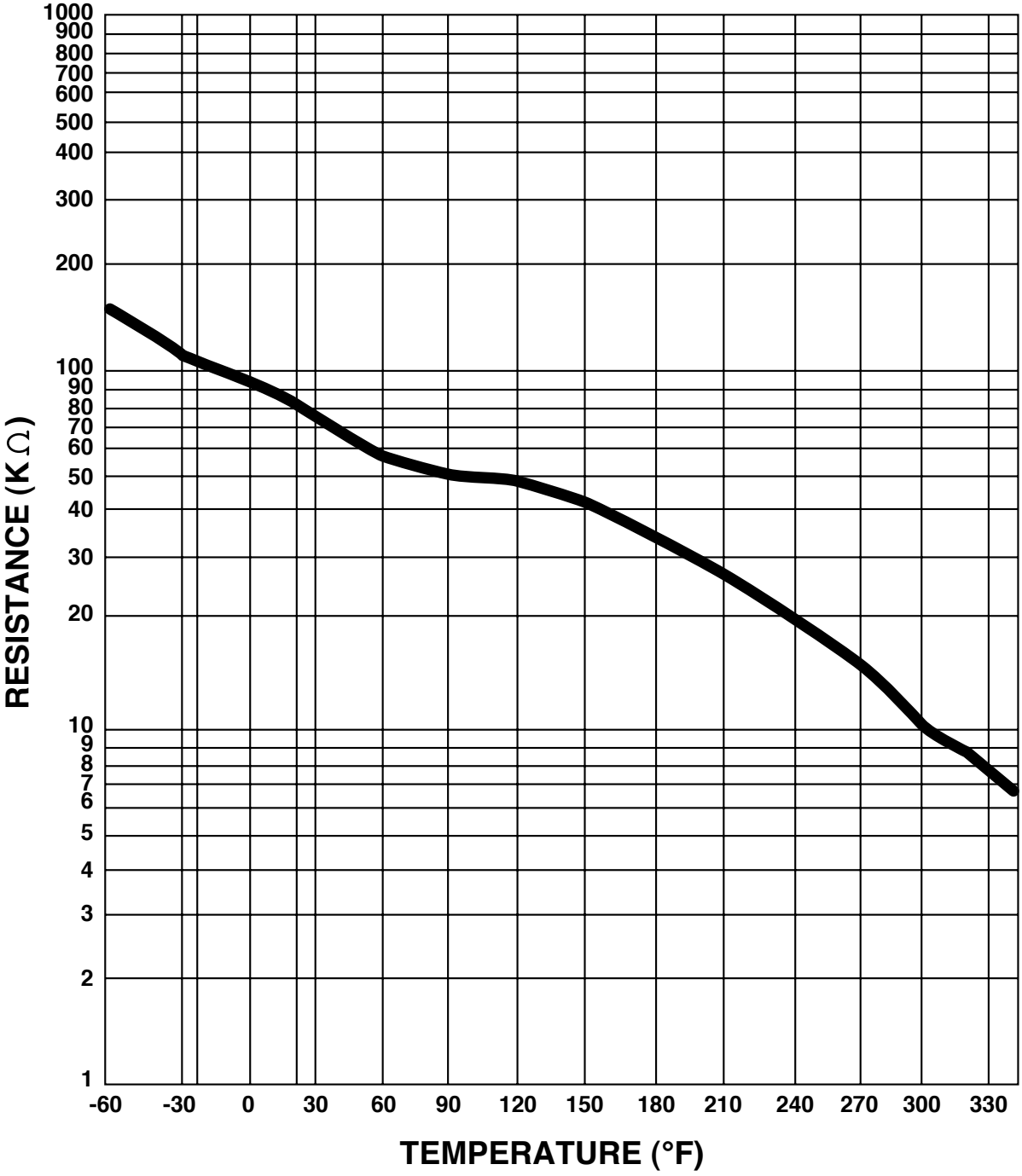

COPYRIGHT 1994 GENERAL MOTORS CORP.

TROUBLE CODE 31 - SECONDARY SHIFT SELECTOR

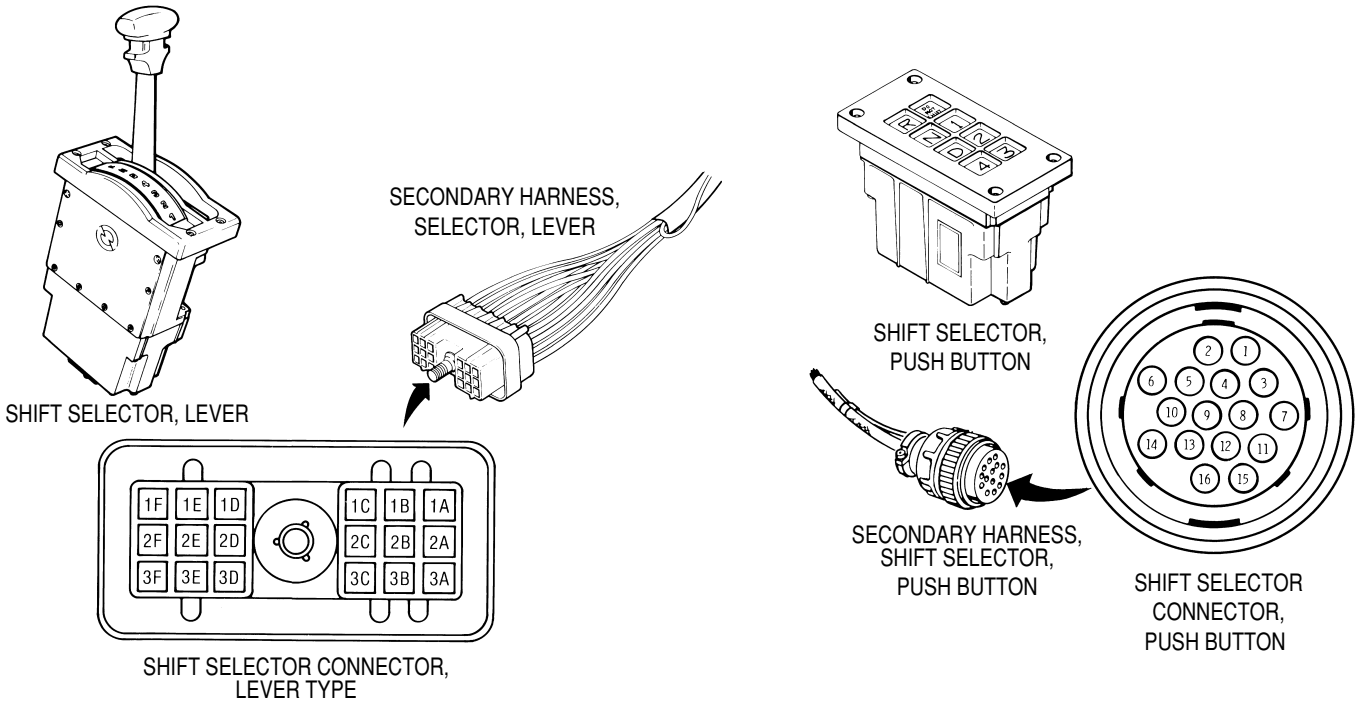

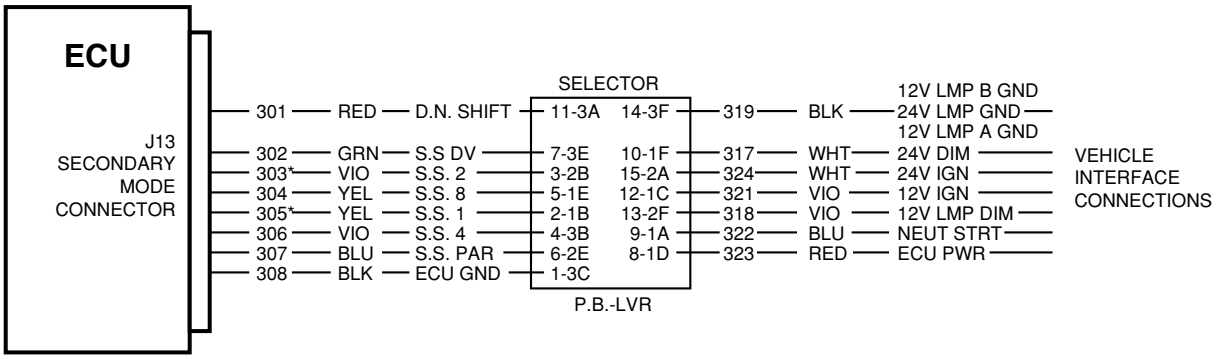

COPYRIGHT 1994 GENERAL MOTORS CORP.

TROUBLE CODE 31 - SECONDARY SHIFT SELECTOR

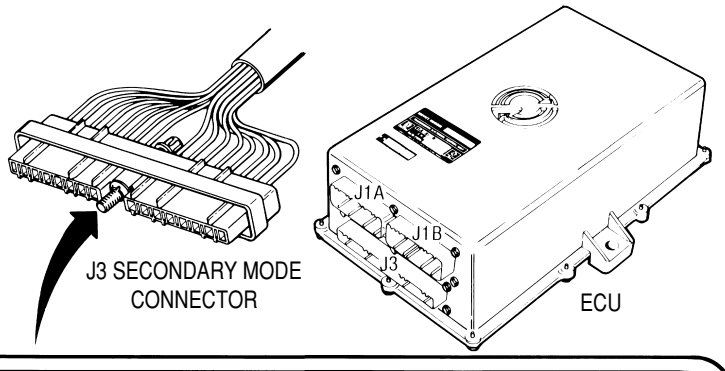

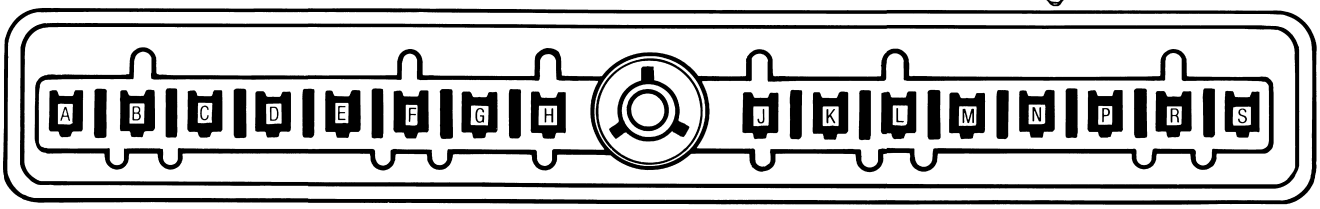

J3 SECONDARY CONNECTOR

COPYRIGHT 1994 GENERAL MOTORS CORP.

TROUBLE CODE 32 - WRONG DIRECTION SIGNAL (ON-HIGHWAY ONLY)

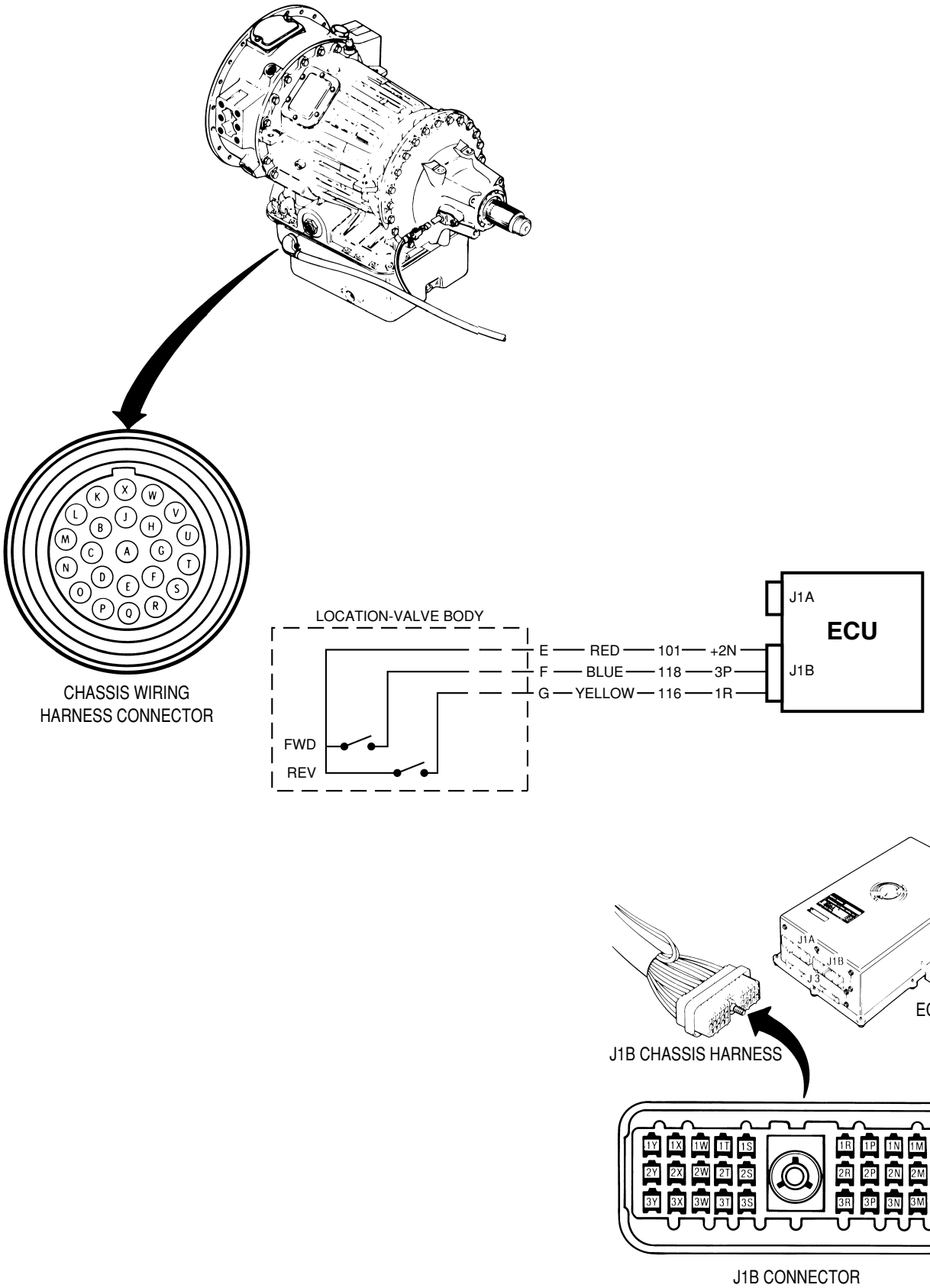

COPYRIGHT 1994 GENERAL MOTORS CORP.

TROUBLE CODE 32 - WRONG DIRECTION SIGNAL (ON-HIGHWAY ONLY)

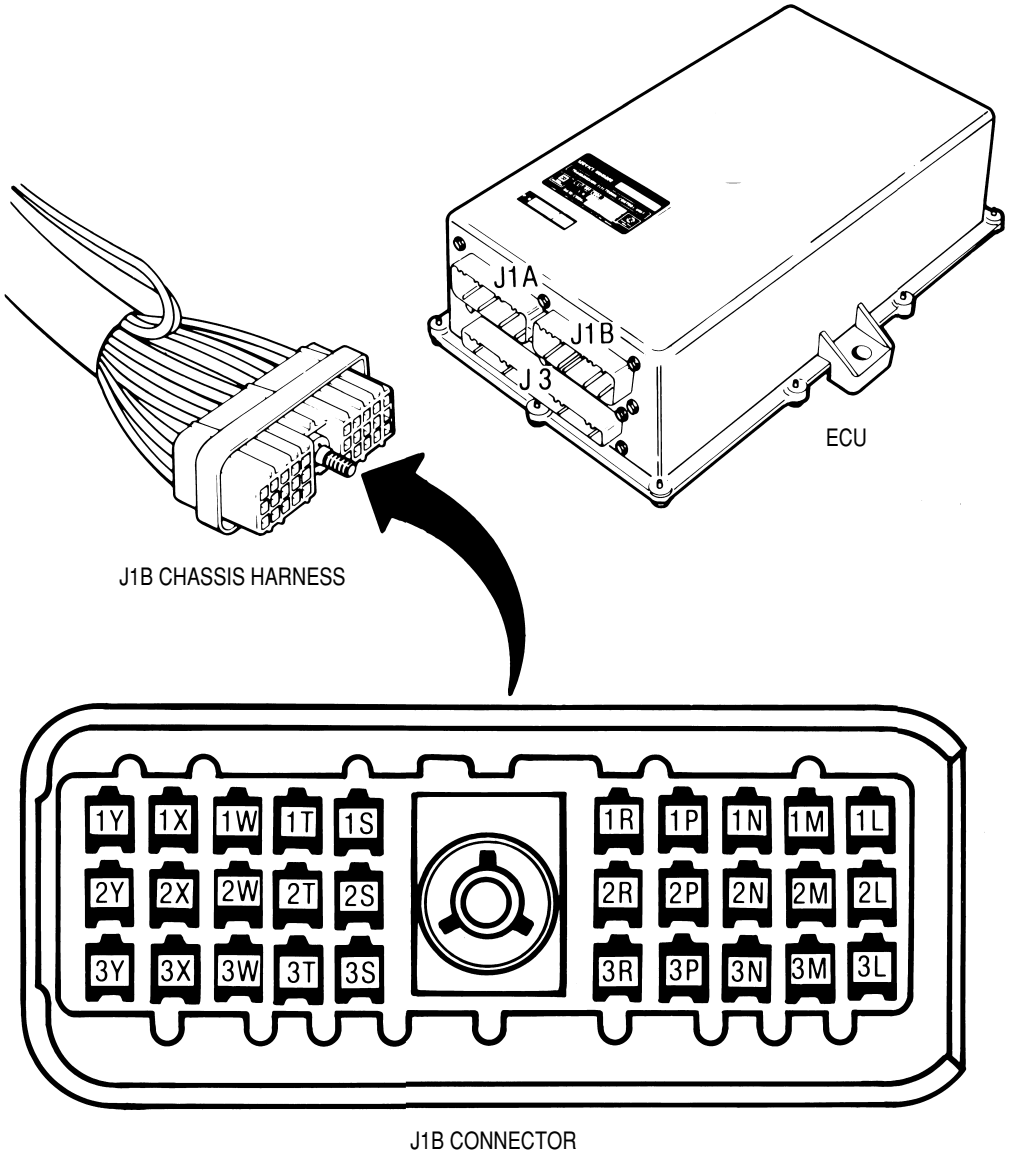

COPYRIGHT 1994 GENERAL MOTORS CORP.

TROUBLE CODE 33 - TEMPERATURE SENSOR

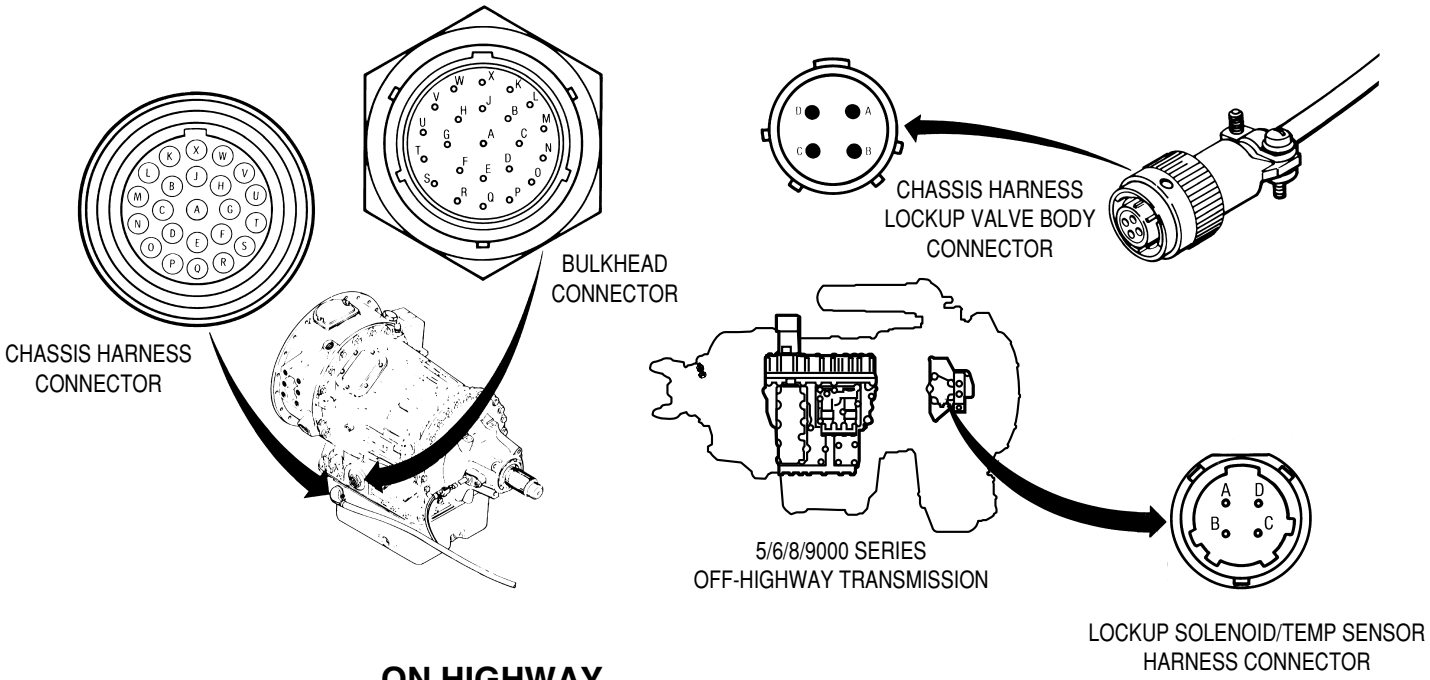

ON HIGHWAY

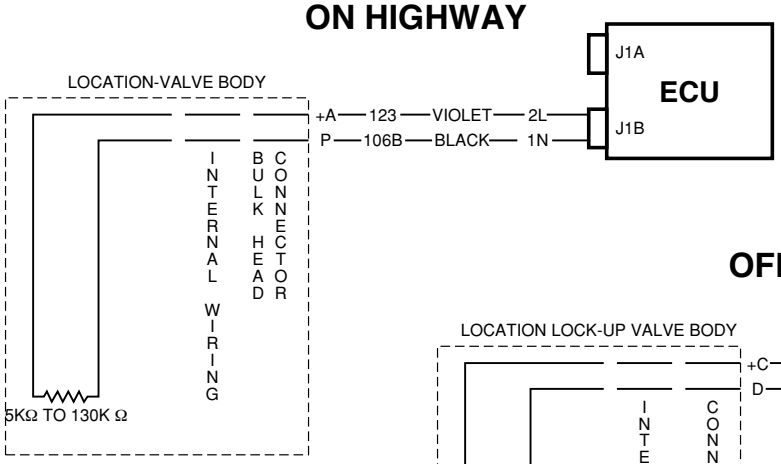

OFF HIGHWAY

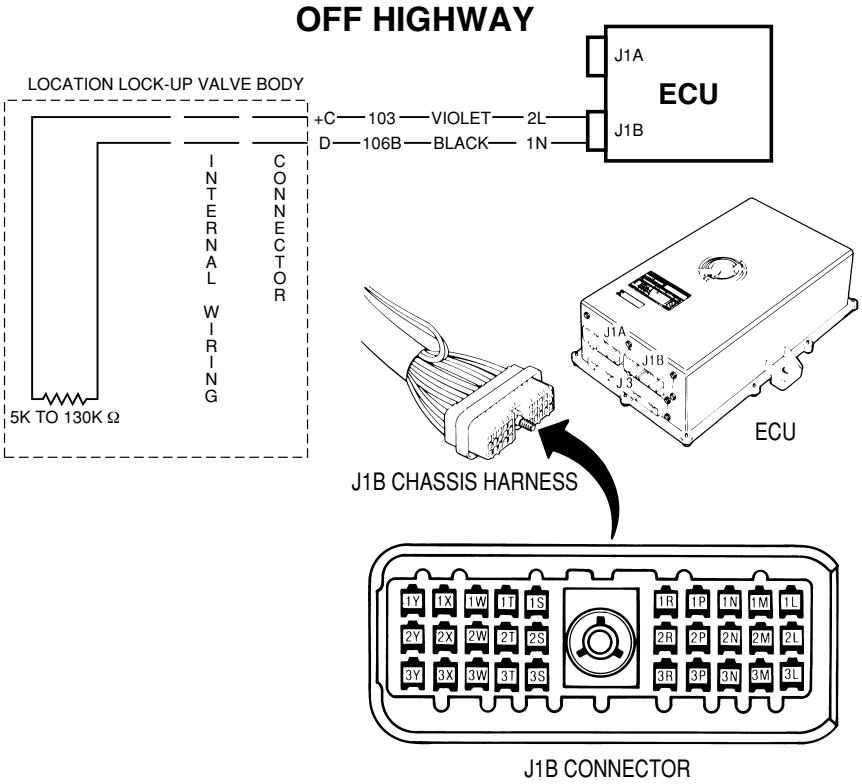

COPYRIGHT 1994 GENERAL MOTORS CORP.

TROUBLE CODE 33 - TEMPERATURE SENSOR

This code means that the ECU has received signals that the transmission oil temperature is either too hot or too cold. This code is set if the oil temperature is greater than 350 degrees F (204 C) or below -100 degrees F (-73 C). Code 33 may sometimes erase a previously set Code 24.

NOTE: All temperatures stated here are subject to PROM calibration.

Some potential non-electronic control causes include:

- Elevated transmission oil temperature caused by restricted flow through the oil cooler circuit, internal component failure, etc.
- An overheating engine.

Check these items and make repairs as needed before troubleshooting the electronic control.

Some potential electronic control causes include:

- Opens or shorts in on-highway chassis harness wires 123 and 106B.
- Opens or shorts in off-highway chassis harness wires 103 and 106B.
- Opens or shorts in the on-highway electro-hydraulic valve body circuit between terminals A and P.
- Opens or shorts in the off-highway electro-hydraulic valve body circuit between terminals C and D.
- Faulty temperature sensor.
- Faulty ECU.

TROUBLESHOOTING STEPS

1. Check the chassis wiring harness for opens and shorts.
   a. For on-highway transmissions, remove the J1B connector from the ECU and remove the bulkhead connector from the transmission. Check wires 123 and 106B for opens, shorts to each other, shorts to other wires and shorts to ground.
   b. For off-highway transmissions, remove the J1B connector from the ECU and remove the chassis harness connector from the lockup valve body. Check wires 103 and 106B for opens, shorts to each other, shorts to other wires and shorts to ground.

Isolate and repair problems as needed.

COPYRIGHT 1994 GENERAL MOTORS CORP.

TROUBLE CODE 33 - TEMPERATURE SENSOR

Temperature Sensor Plot

Resistance vs Temperature Characteristics for Oil Temperature Sensor

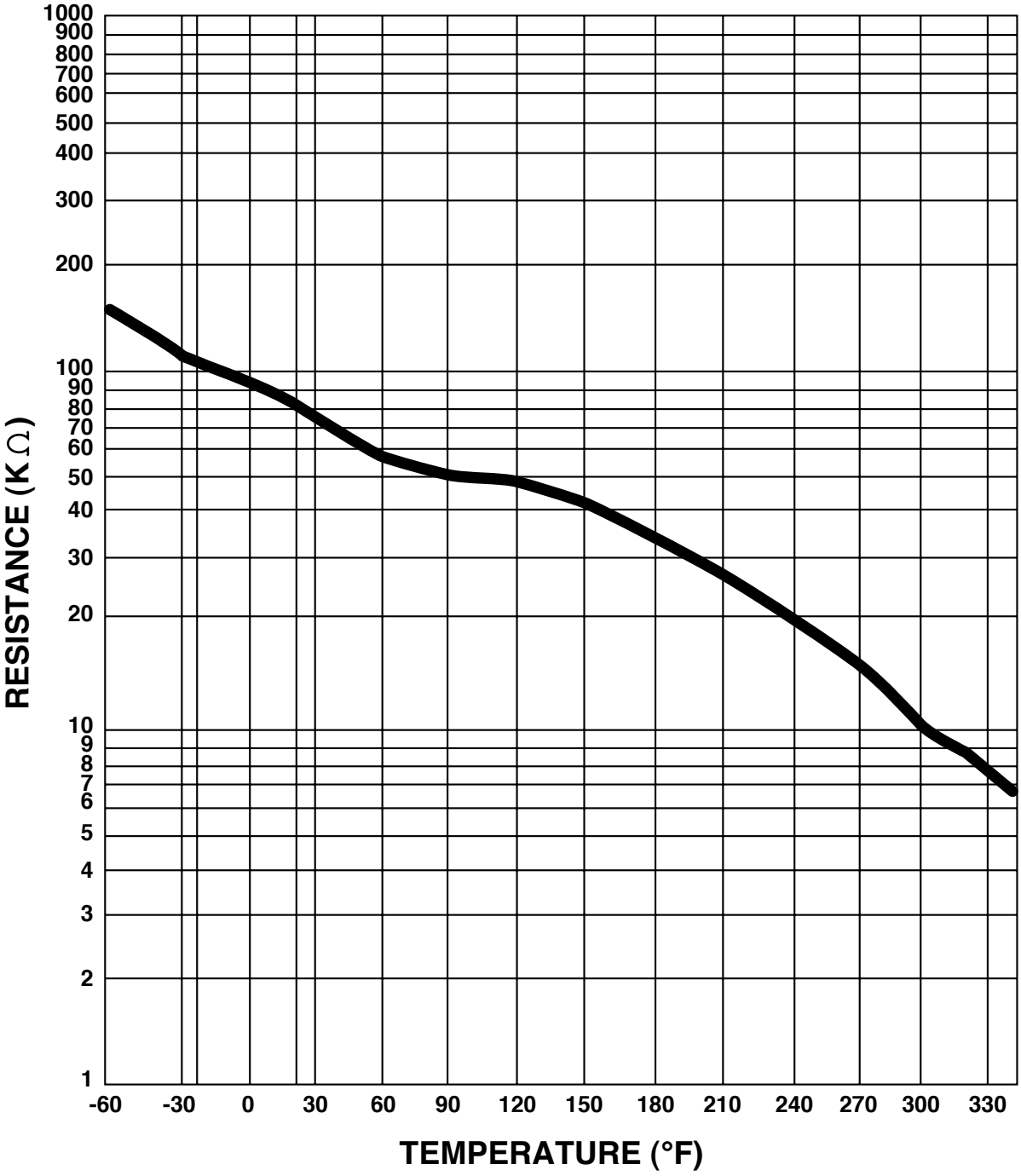

COPYRIGHT 1994 GENERAL MOTORS CORP.

TROUBLE CODE 33 - TEMPERATURE SENSOR

2. If the chassis wiring harness is okay, check the temperature sensor.
   a. For on-highway transmissions, check resistance between bulkhead terminals A and P. Check temperature sensor resistance at varying sump temperatures. Resistance should always be between 5000 and 130,000 ohms.
   b. For off-highway transmissions, check resistance between lockup valve body terminals C and D. Check temperature sensor resistance at varying sump temperatures. Resistance should always be between 5000 and 130,000 ohms.
3. If the chassis wiring harness and temperature sensor are okay, and transmission sump oil temperatures are within normal operating limits, replace the ECU. If replacing the ECU fixes the problem, verify the old ECU is “bad” by reinstalling it, road testing the vehicle, and checking for codes.

COPYRIGHT 1994 GENERAL MOTORS CORP.

TROUBLE CODE 34 - PROM CHECK

ONLY AUTHORIZED WARRANTY OUTLETS ARE PERMITTED TO OPEN THE PROM ACCESS COVER. WARRANTY MAY BE VOID IF OPENED BY UNAUTHORIZED PERSONNEL.

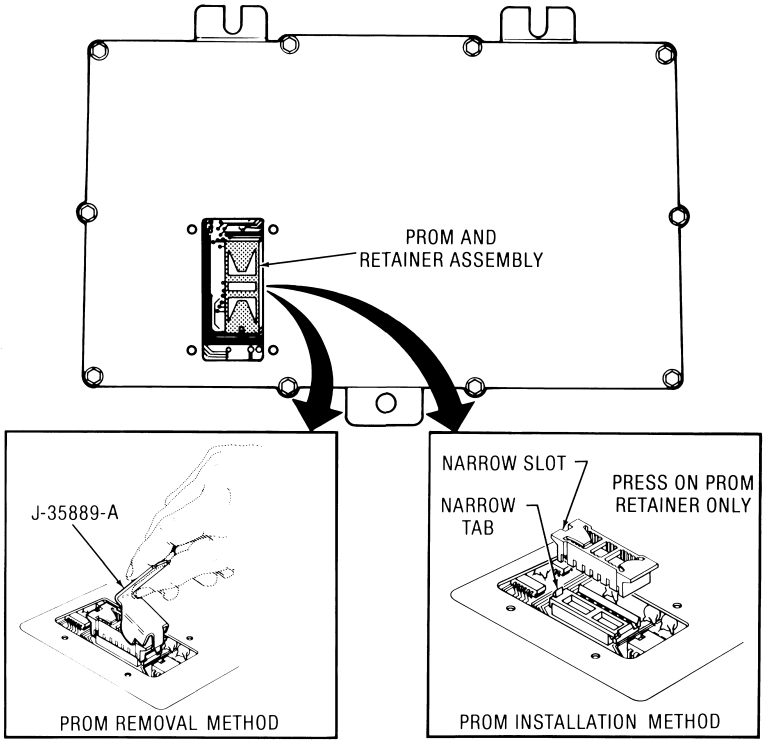

CAUTION: If the PROM removal tool is not used, the socket in the ECU can be damaged and an ECU replacement would be required.

Using PROM removal tool J 35889-A, the retainer and PROM should lift easily from the PROM socket. Tool J 35889-A is available in every service PROM kit.

- Engage one end of the PROM retainer with the hook end of the tool.
- Press on the vertical bar end of the tool and rock the engaged end of the PROM retainer up as far as possible.
- Engage the opposite end of the PROM retainer in the same manner and rock this end up as far as possible.
- Repeat this procedure until the PROM retainer and PROM are free of the PROM socket.

COPYRIGHT 1994 GENERAL MOTORS CORP.

TROUBLE CODE 34 - PROM CHECK

This code means that the ECU has sensed a problem with the PROM.

Some potential causes include:

- Faulty PROM.
- Improperly installed PROM.
- Mis-matched PROM and ECU.
- Faulty ECU.

TROUBLESHOOTING STEPS

1. Make sure the PROM is properly installed.
   a. Make sure the PROM is properly indexed.
   b. Make sure the PROM is fully seated in the ECU's socket.
2. If the PROM is properly installed, use ECIS to ensure the PROM is correct for the ECU and vehicle application.
3. If the PROM is properly installed and correct for the application, replace the PROM. If replacing the PROM fixes the problem, verify the old PROM is "bad" by reinstalling it, road testing the vehicle, and checking for codes.
4. If the problem still exists, replace the ECU. If replacing the ECU fixes the problem, verify the old ECU is "bad" by reinstalling it, road testing the vehicle, and checking for codes.

COPYRIGHT 1994 GENERAL MOTORS CORP.

TROUBLE CODE 41 - J SOLENOID (ON-HIGHWAY), A SOLENOID (OFF-HIGHWAY)

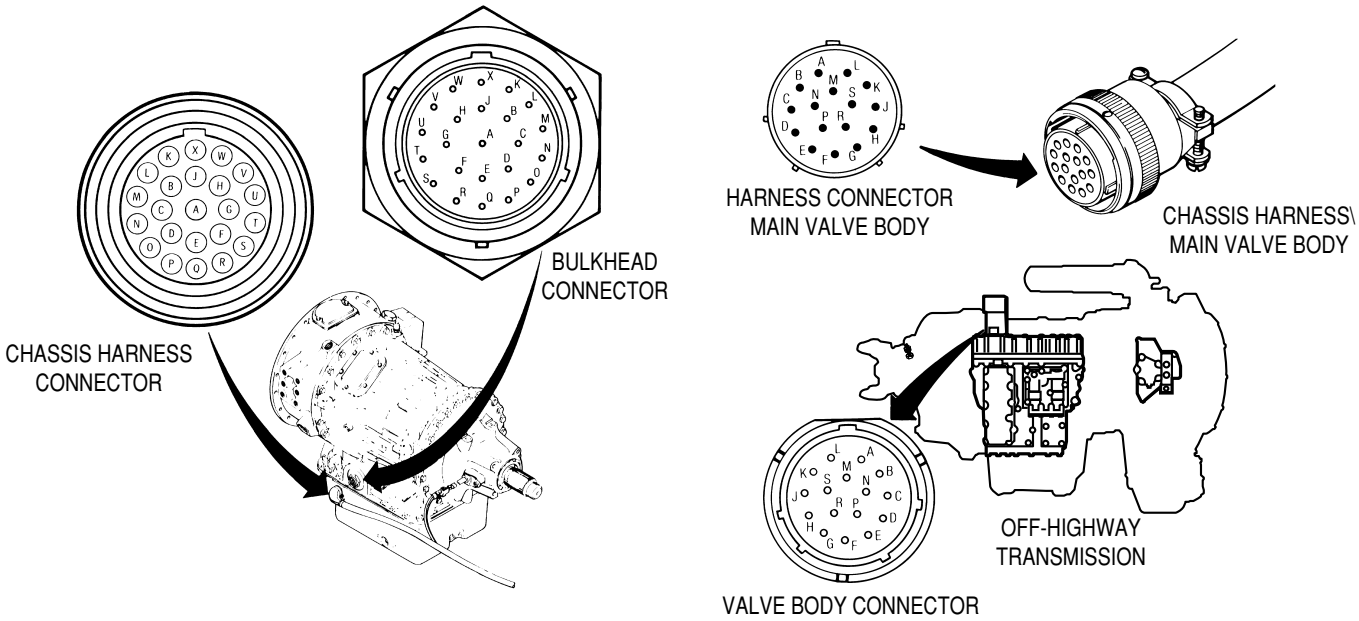

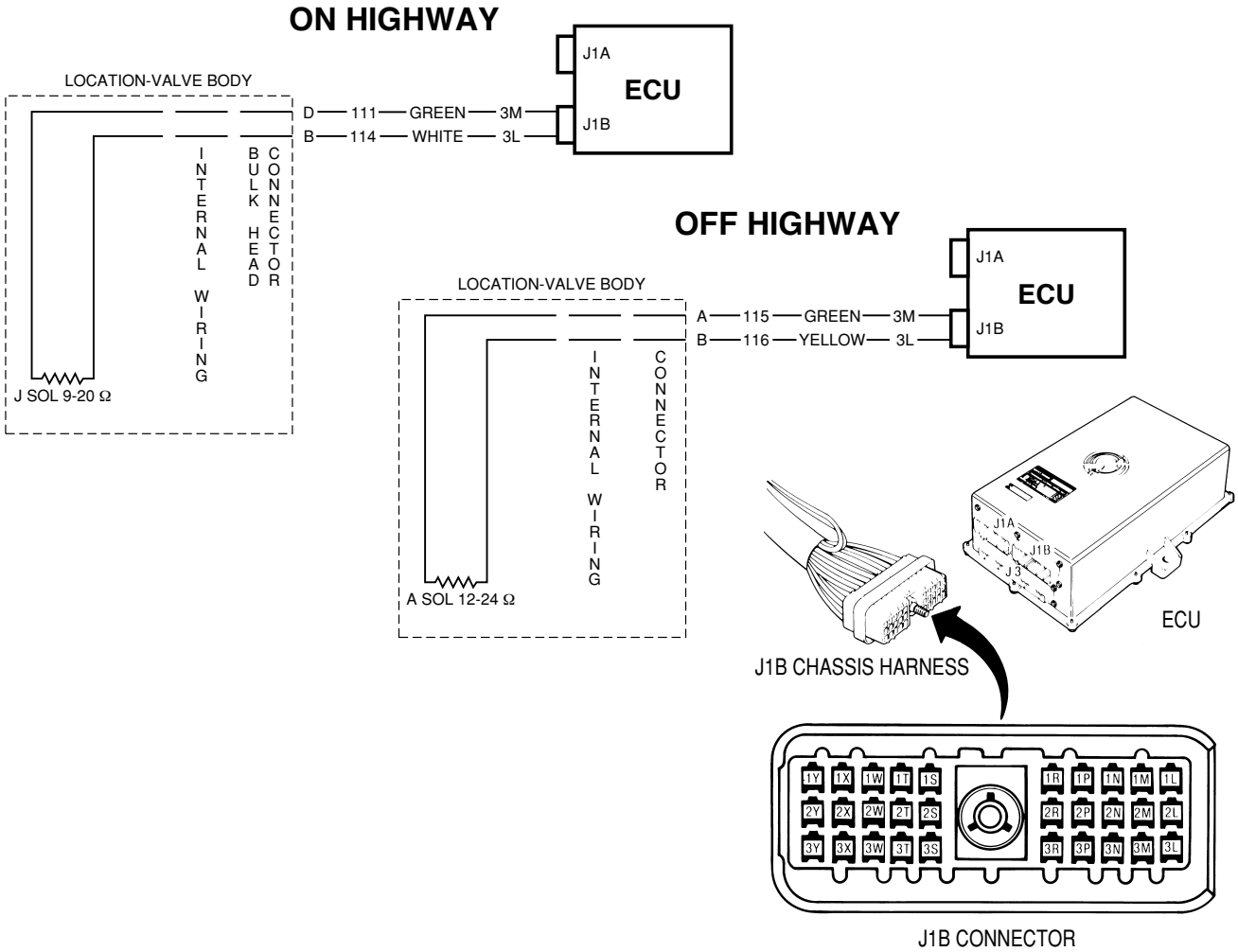

COPYRIGHT 1994 GENERAL MOTORS CORP.

TROUBLE CODE 41 - J SOLENOID (ON-HIGHWAY), A SOLENOID (OFF-HIGHWAY)

This code means that the ECU has received improper signals from the J solenoid circuit (on-highway) or A solenoid circuit (off-highway). Solenoid J (on-highway) controls the flow of main pressure to the top of the neutral-range valve. Solenoid A (off-highway) controls the flow of main pressure under the 1-2 shift valve during lock-in-range electrical failure.

Some potential causes include:

- Opens or shorts in on-highway chassis harness wires 111 and 114.
- Opens or shorts in off-highway chassis harness wires 115 and 116.
- Opens or shorts in the on-highway electro-hydraulic valve body circuit between terminals D and B.
- Opens or shorts in the off-highway electro-hydraulic valve body circuit between terminals A and B.
- Faulty solenoid(s).
- Problems with related solenoid circuits.
- Faulty ECU.

TROUBLESHOOTING STEPS

1. Check the solenoid circuit's resistance.
   a. Remove the J1B connector from the ECU.
   b. For on-highway transmissions, connect ohmmeter leads to J1B terminals 3M and 3L. J solenoid circuit resistance should be between 9 and 20 ohms.
   c. For off-highway transmissions, connect ohmmeter leads to J1B terminals 3M and 3L. A solenoid circuit resistance should be between 12 and 24 ohms.

If readings are correct, proceed to Troubleshooting Step 4.

2. If resistance readings are incorrect, check the chassis wiring harness.
   a. Remove the J1B connector from the ECU, and remove the bulkhead connector from the transmission.
   b. For on-highway transmissions, check wires 111 and 114 for opens, shorts to each other, shorts to other wires and shorts to ground.
   c. For off-highway transmissions, check wires 115 and 116 for opens, shorts to each other, shorts to other wires and shorts to ground.

Isolate and repair problems as needed.

COPYRIGHT 1994 GENERAL MOTORS CORP.

TROUBLE CODE 41 - J SOLENOID (ON-HIGHWAY), A SOLENOID (OFF-HIGHWAY)

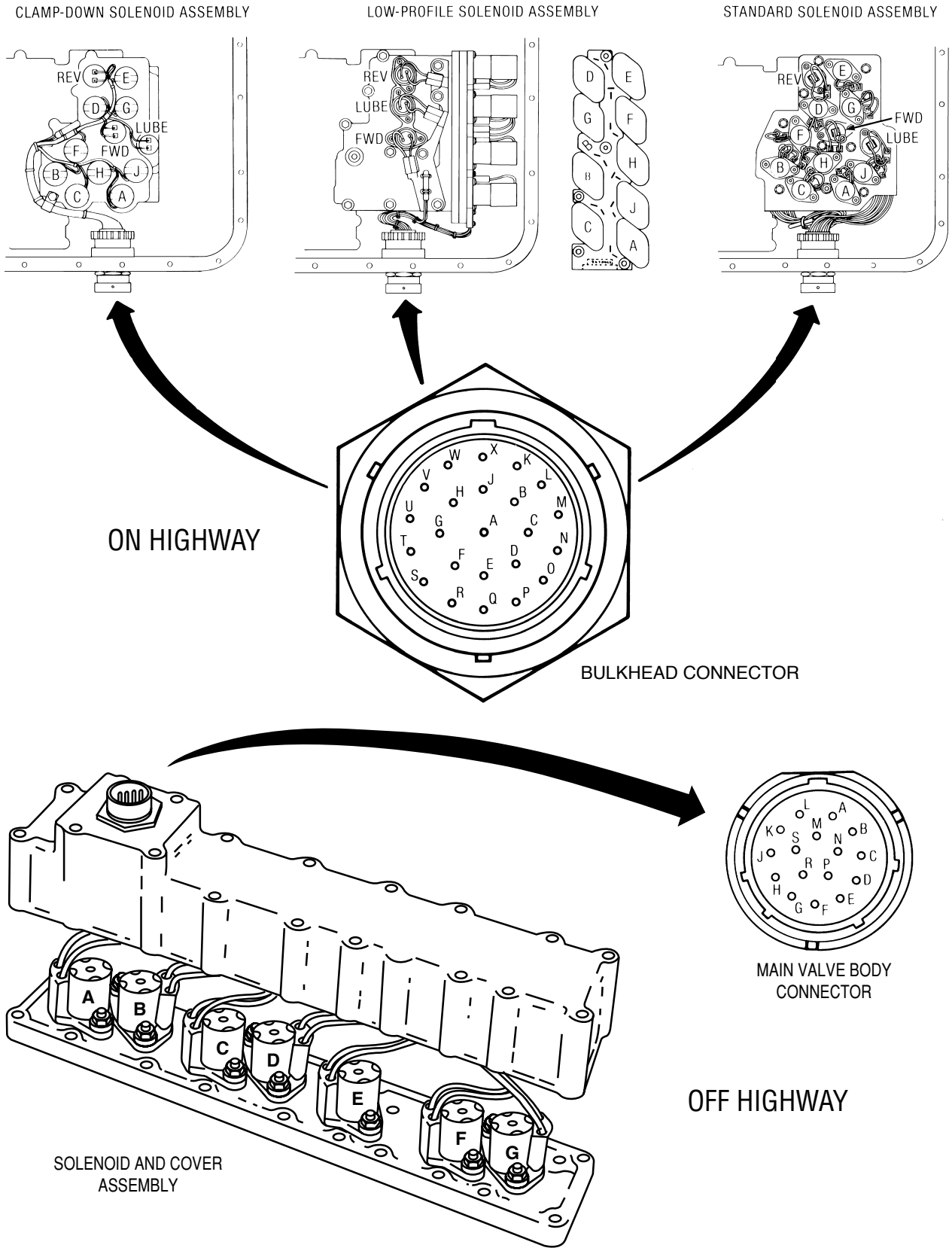

COPYRIGHT 1994 GENERAL MOTORS CORP.

TROUBLE CODE 41 - J SOLENOID (ON-HIGHWAY), A SOLENOID (OFF-HIGHWAY)

3. If the chassis wiring harness is okay, check the internal components and circuits.
   a. For on-highway transmissions, check resistance between bulkhead terminals D and B. Resistance should be between 9 and 20 ohms.
   b. For off-highway transmissions, check resistance between bulkhead terminals A and B. Resistance should be between 12 and 24 ohms.
   c. If resistance readings are incorrect, determine whether the problem is in the internal wiring harness or the solenoid.
      1) Remove the electrical connector from solenoid J (on-highway) or solenoid A (off-highway).
      2) Use an ohmmeter to check the solenoid's internal resistance.
      3) If solenoid resistance is incorrect, replace the solenoid.
      4) If solenoid resistance is okay (9-20 ohms for on-highway, 12-24 ohms for off-highway), check the solenoid circuit's internal wiring harness wires for opens, shorts to each other, shorts to other wires and shorts to ground. Isolate and repair problems as needed.
4. If the solenoid's circuit resistance is okay, check related solenoid circuits for problems.
   a. Refer to Troubleshooting Steps for Codes 42, 43, 44, 45 and 46. Isolate and repair problems as needed.
5. If the solenoid's circuit resistance is okay, and related solenoid circuits are okay, replace the ECU. If replacing the ECU fixes the problem, verify the old ECU is "bad" by reinstalling it, road testing the vehicle, and checking for codes.

COPYRIGHT 1994 GENERAL MOTORS CORP.

TROUBLE CODE 42 - F SOLENOID (ON-HIGHWAY), B SOLENOID (OFF-HIGHWAY)

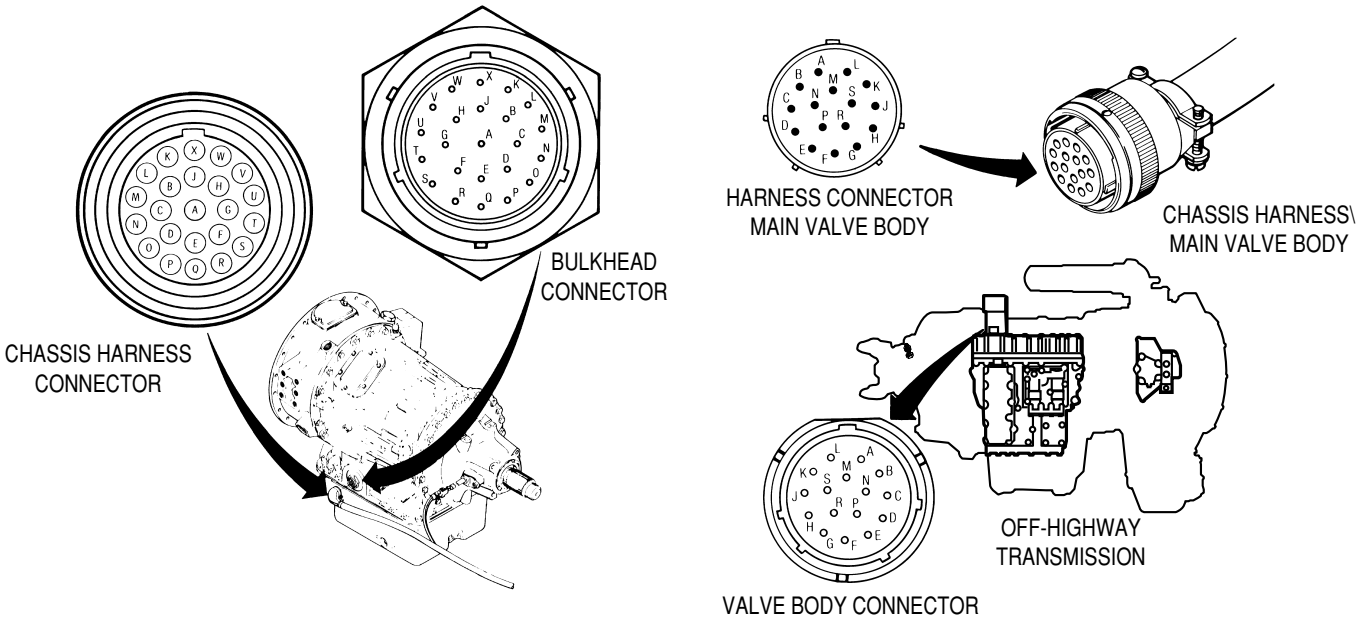

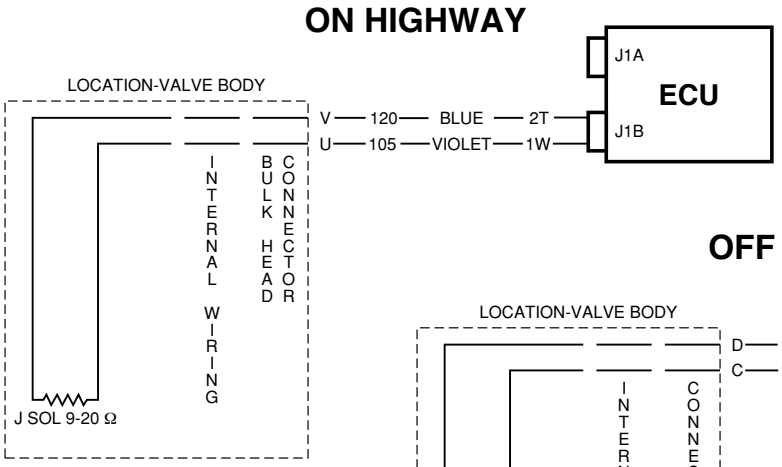

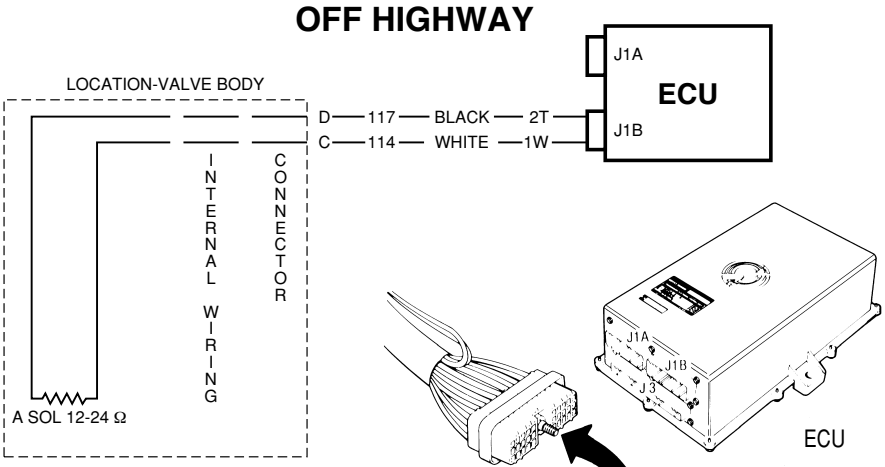

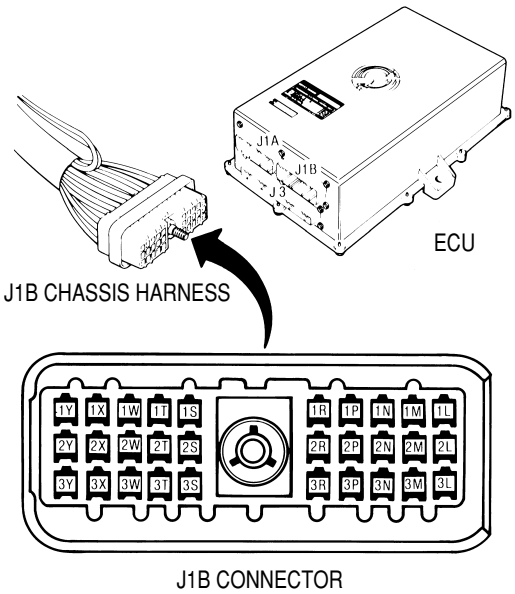

COPYRIGHT 1994 GENERAL MOTORS CORP.

TROUBLE CODE 42 - F SOLENOID (ON-HIGHWAY), B SOLENOID (OFF-HIGHWAY)

This code means that the ECU has received improper signals from the F solenoid circuit (on-highway) or B solenoid circuit (off-highway). Solenoid F (on-highway) controls main pressure flow to the bottom of the forward-reverse valve. Solenoid B (off-highway) controls the reverse shift valve.

Some potential causes include:

- Opens or shorts in on-highway chassis harness wires 120 and 105.
- Opens or shorts in off-highway chassis harness wires 117 and 114.
- Opens or shorts in the on-highway electro-hydraulic valve body circuit between terminals V and U.
- Opens or shorts in the off-highway electro-hydraulic valve body circuit between terminals D and C.
- Faulty solenoid(s).
- Problems with related solenoid circuits.
- Faulty ECU.

TROUBLESHOOTING STEPS

1. Check the solenoid circuit's resistance.
   a. Remove the J1B connector from the ECU.
   b. For on-highway transmissions, connect ohmmeter leads to J1B terminals 2T and 1W. F solenoid circuit resistance should be between 9 and 20 ohms.
   c. For off-highway transmissions, connect ohmmeter leads to J1B terminals 2T and 1W. B solenoid circuit resistance should be between 12 and 24 ohms.

If readings are correct, proceed to Troubleshooting Step 4.

2. If resistance readings are incorrect, check the chassis wiring harness.
   a. Remove the J1B connector from the ECU, and remove the bulkhead connector from the transmission.
   b. For on-highway transmissions, check wires 120 and 105 for opens, shorts to each other, shorts to other wires and shorts to ground.
   c. For off-highway transmissions, check wires 117 and 114 for opens, shorts to each other, shorts to other wires and shorts to ground.

Isolate and repair problems as needed.

COPYRIGHT 1994 GENERAL MOTORS CORP.

TROUBLE CODE 42 - F SOLENOID (ON-HIGHWAY), B SOLENOID (OFF-HIGHWAY)

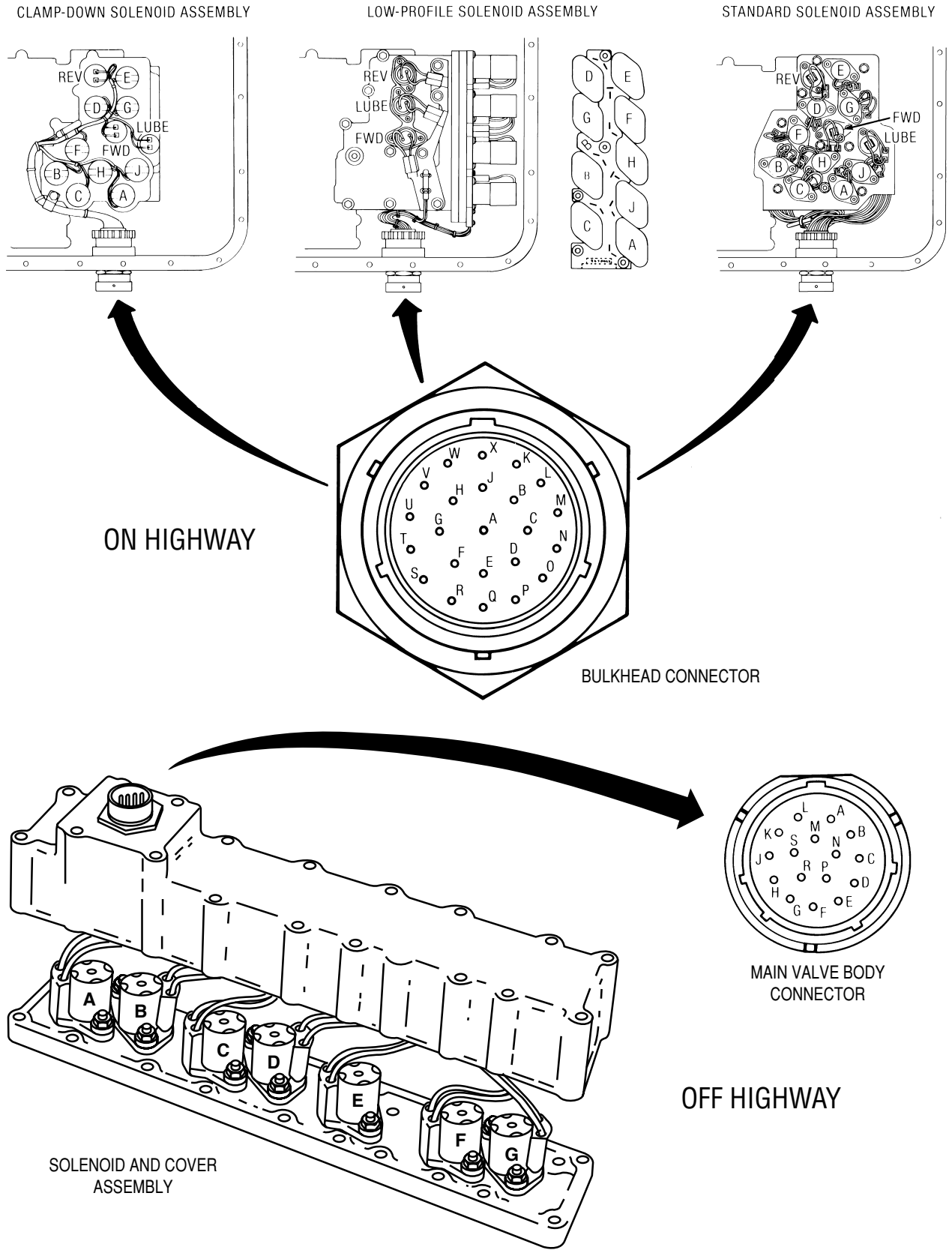

COPYRIGHT 1994 GENERAL MOTORS CORP.

TROUBLE CODE 42 - F SOLENOID (ON-HIGHWAY), B SOLENOID (OFF-HIGHWAY)

3. If the chassis wiring harness is okay, check the internal components and circuits.
   a. For on-highway transmissions, check resistance between bulkhead terminals V and U. Resistance should be between 9 and 20 ohms.
   b. For off-highway transmissions, check resistance between bulkhead terminals D and C. Resistance should be between 12 and 24 ohms.
   c. If resistance readings are incorrect, determine whether the problem is in the internal wiring harness or the solenoid.
      1) Remove the electrical connector from solenoid F (on-highway) or solenoid B (off-highway).
      2) Use an ohmmeter to check the solenoid's internal resistance.
      3) If solenoid resistance is incorrect, replace the solenoid.
      4) If solenoid resistance is okay (9-20 ohms for on-highway, 12-24 ohms for off-highway), check the solenoid circuit's internal wiring harness wires for opens, shorts to each other, shorts to other wires and shorts to ground. Isolate and repair problems as needed.
4. If the solenoid's circuit resistance is okay, check related solenoid circuits for problems.
   a. Refer to Troubleshooting Steps for Codes 41, 43, 44, 45 and 46. Isolate and repair problems as needed.
5. If the solenoid's circuit resistance is okay, and related solenoid circuits are okay, replace the ECU. If replacing the ECU fixes the problem, verify the old ECU is "bad" by reinstalling it, road testing the vehicle, and checking for codes.

COPYRIGHT 1994 GENERAL MOTORS CORP.

TROUBLE CODE 43 - D SOLENOID (ON-HIGHWAY), C SOLENOID (OFF-HIGHWAY)

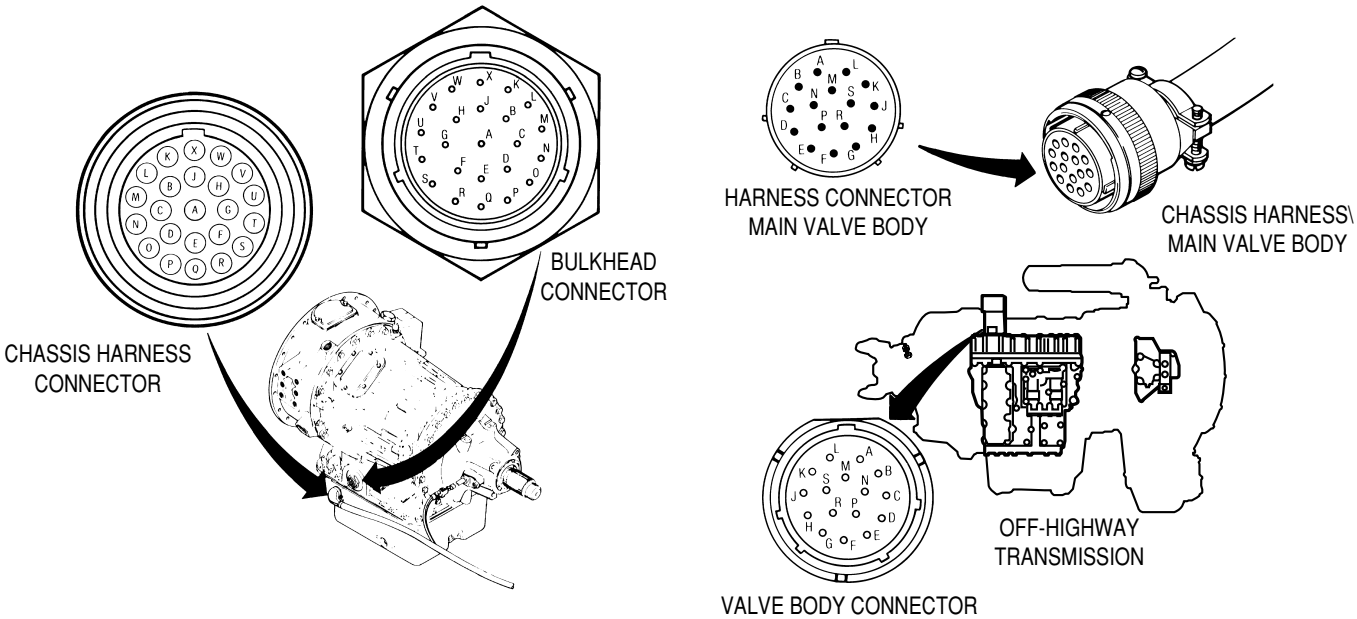

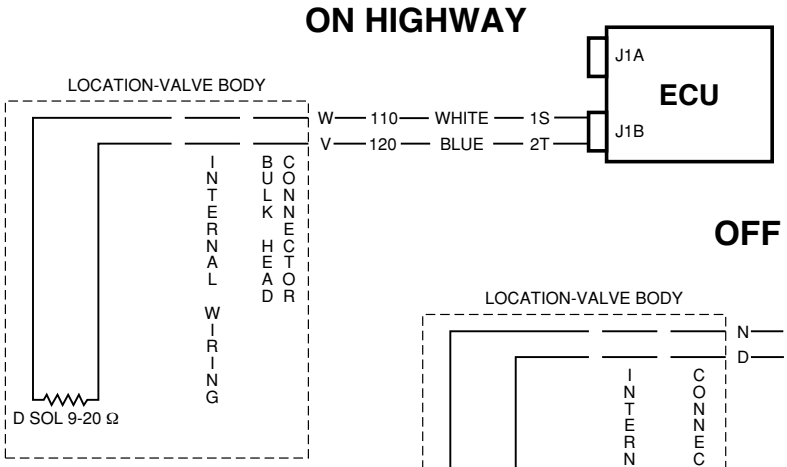

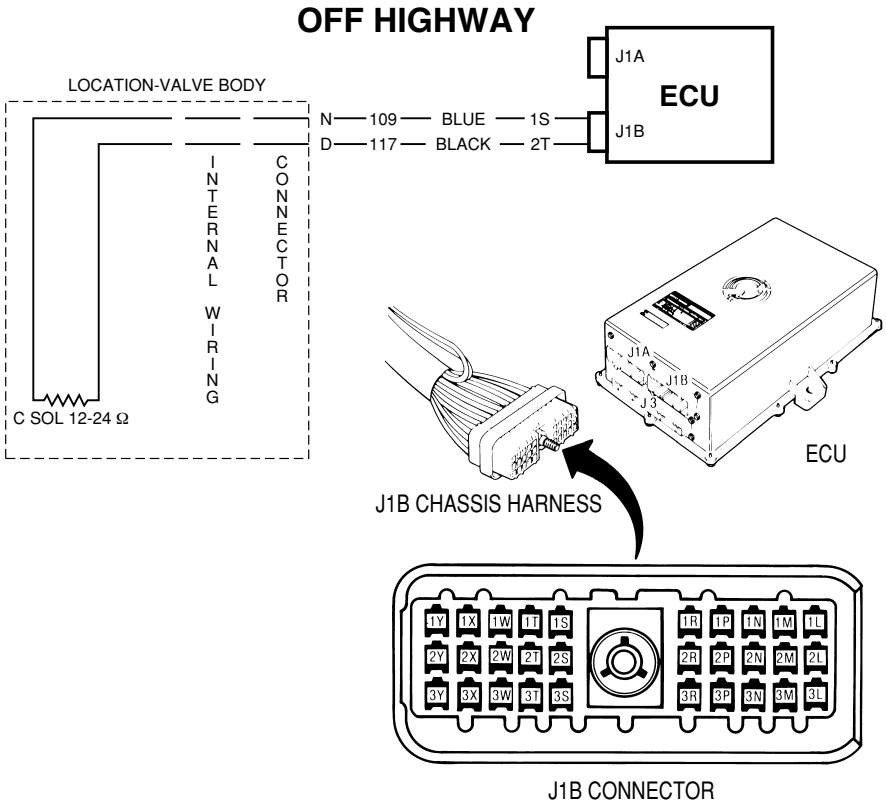

COPYRIGHT 1994 GENERAL MOTORS CORP.

TROUBLE CODE 43 - D SOLENOID (ON-HIGHWAY), C SOLENOID (OFF-HIGHWAY)

This code means that the ECU has received improper signals from the D solenoid circuit (on-highway) or C solenoid circuit (off-highway). Solenoid D (on-highway) controls the 3-4 shift valve. Solenoid C (off-highway) controls the 1-2 shift valve.

Some potential causes include:

- Opens or shorts in on-highway chassis harness wires 110 and 120.
- Opens or shorts in off-highway chassis harness wires 109 and 117.
- Opens or shorts in the on-highway electro-hydraulic valve body circuit between terminals W and V.
- Opens or shorts in the off-highway electro-hydraulic valve body circuit between terminals N and D.
- Faulty solenoid(s).
- Problems with related solenoid circuits.
- Faulty ECU.

TROUBLESHOOTING STEPS

1. Check the solenoid circuit's resistance.
   a. Remove the J1B connector from the ECU.
   b. For on-highway transmissions, connect ohmmeter leads to J1B terminals 1S and 2T. D solenoid circuit resistance should be between 9 and 20 ohms.
   c. For off-highway transmissions, connect ohmmeter leads to J1B terminals 1S and 2T. C solenoid circuit resistance should be between 12 and 24 ohms.

If readings are correct, proceed to Troubleshooting Step 4.

2. If resistance readings are incorrect, check the chassis wiring harness.
   a. Remove the J1B connector from the ECU, and remove the bulkhead connector from the transmission.
   b. For on-highway transmissions, check wires 110 and 120 for opens, shorts to each other, shorts to other wires and shorts to ground.
   c. For off-highway transmissions, check wires 109 and 117 for opens, shorts to each other, shorts to other wires and shorts to ground.

Isolate and repair problems as needed.

COPYRIGHT 1994 GENERAL MOTORS CORP.

TROUBLE CODE 43 - D SOLENOID (ON-HIGHWAY), C SOLENOID (OFF-HIGHWAY)

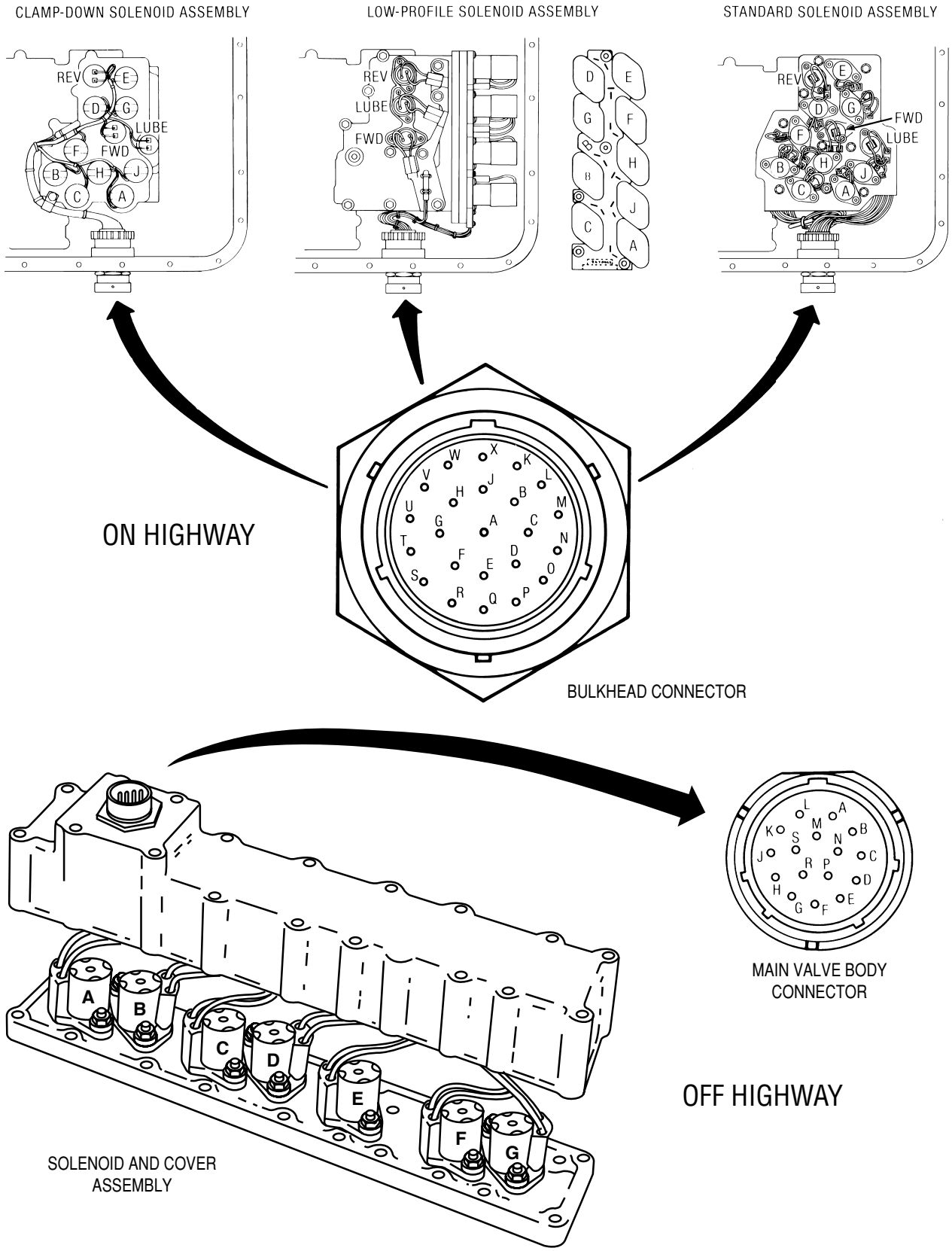

COPYRIGHT 1994 GENERAL MOTORS CORP.

TROUBLE CODE 43 - D SOLENOID (ON-HIGHWAY), C SOLENOID (OFF-HIGHWAY)

3. If the chassis wiring harness is okay, check the internal components and circuits.
   a. For on-highway transmissions, check resistance between bulkhead terminals W and V. Resistance should be between 9 and 20 ohms.
   b. For off-highway transmissions, check resistance between bulkhead terminals N and D. Resistance should be between 12 and 24 ohms.
   c. If resistance readings are incorrect, determine whether the problem is in the internal wiring harness or the solenoid.
      1) Remove the electrical connector from solenoid D (on-highway) or solenoid C (off-highway).
      2) Use an ohmmeter to check the solenoid's internal resistance.
      3) If solenoid resistance is incorrect, replace the solenoid.
      4) If solenoid resistance is okay (9-20 ohms for on-highway, 12-24 ohms for off-highway), check the solenoid circuit's internal wiring harness wires for opens, shorts to each other, shorts to other wires and shorts to ground. Isolate and repair problems as needed.
4. If the solenoid's circuit resistance is okay, check related solenoid circuits for problems.
   a. Refer to Troubleshooting Steps for Codes 41, 42, 44, 45 and 46. Isolate and repair problems as needed.
5. If the solenoid's circuit resistance is okay, and related solenoid circuits are okay, replace the ECU. If replacing the ECU fixes the problem, verify the old ECU is "bad" by reinstalling it, road testing the vehicle, and checking for codes.

COPYRIGHT 1994 GENERAL MOTORS CORP.

TROUBLE CODE 44 - C SOLENOID (ON-HIGHWAY), D SOLENOID (OFF-HIGHWAY)

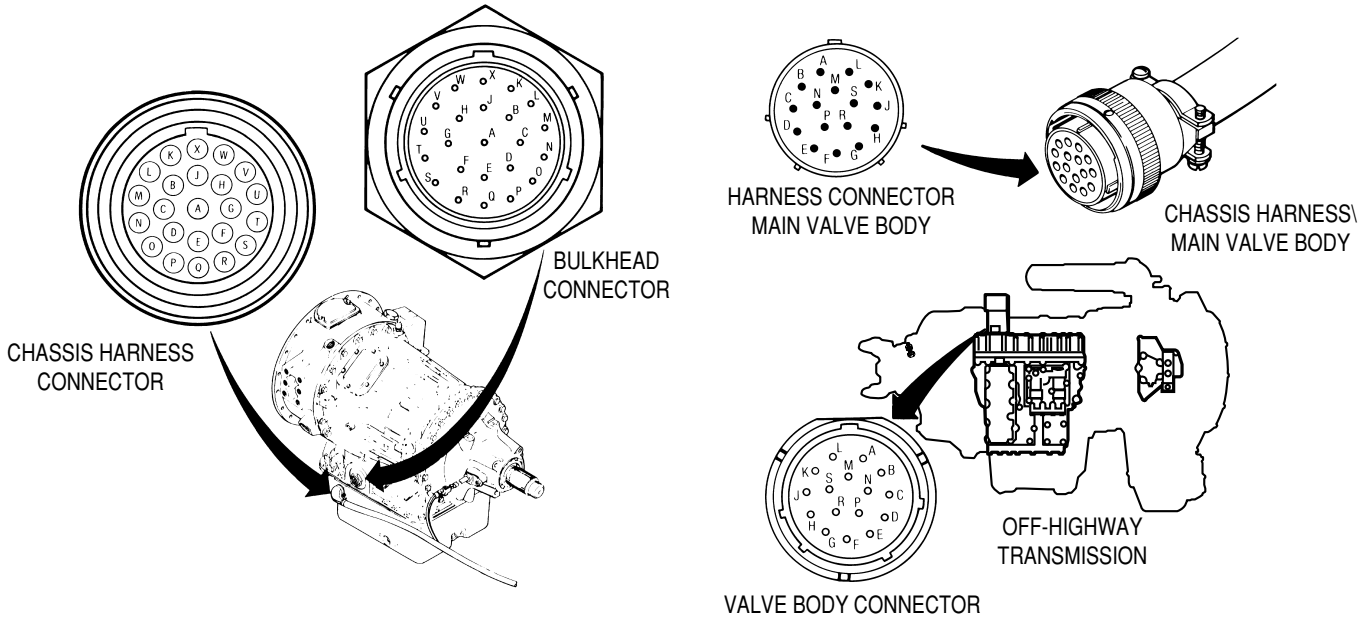

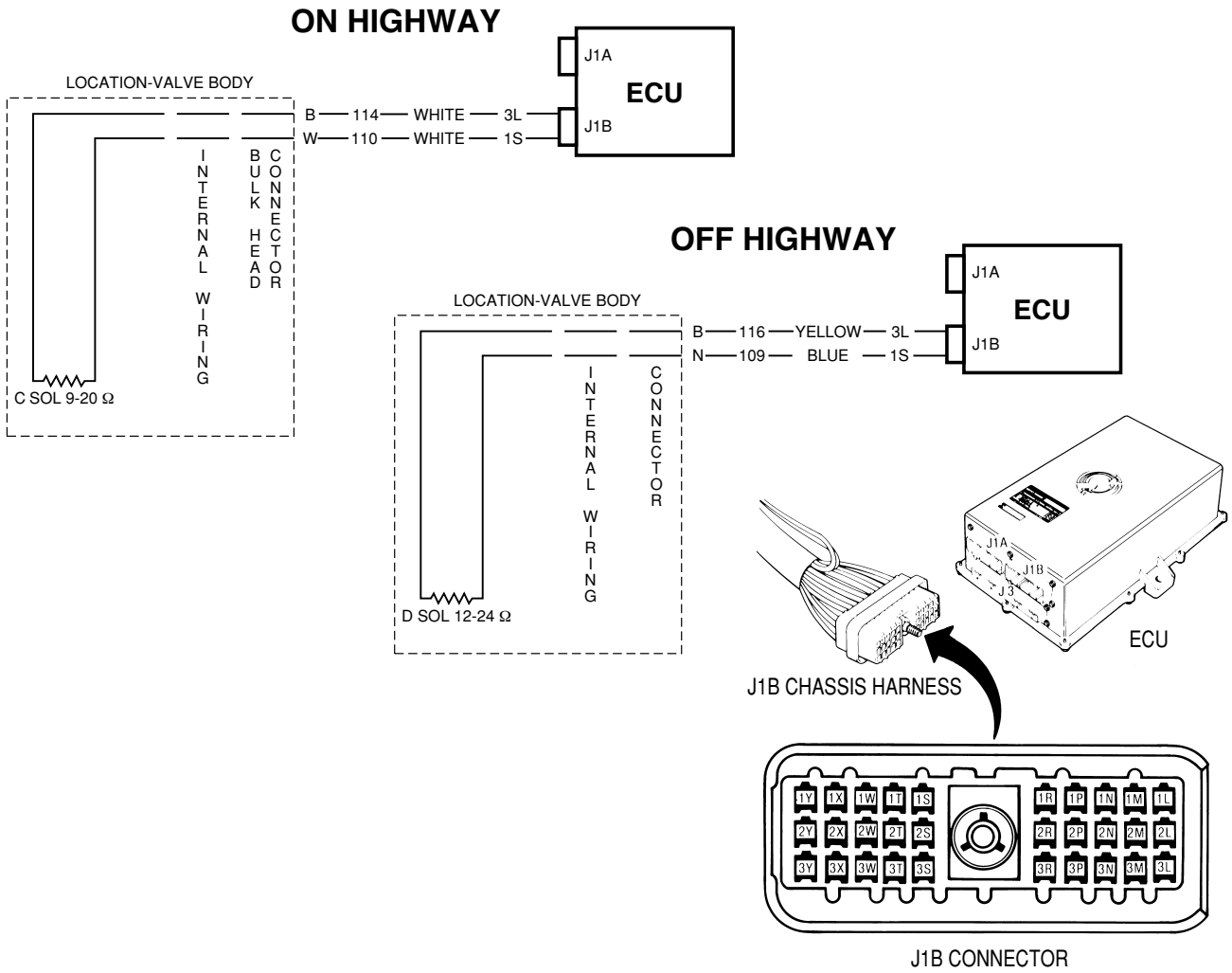

COPYRIGHT 1994 GENERAL MOTORS CORP.

TROUBLE CODE 44 - C SOLENOID (ON-HIGHWAY), D SOLENOID (OFF-HIGHWAY)

This code means that the ECU has received improper signals from the C solenoid circuit (on-highway) or D solenoid circuit (off-highway). Solenoid C (on-highway) controls the 2-3 shift valve. Solenoid D (off-highway) controls the 3-4 shift valve.

Some potential causes include:

- Opens or shorts in on-highway chassis harness wires 114 and 110.
- Opens or shorts in off-highway chassis harness wires 116 and 109.
- Opens or shorts in the on-highway electro-hydraulic valve body circuit between terminals B and W.
- Opens or shorts in the off-highway electro-hydraulic valve body circuit between terminals B and N.
- Faulty solenoid(s).
- Problems with related solenoid circuits.
- Faulty ECU.

TROUBLESHOOTING STEPS

1. Check the solenoid circuit's resistance.
   a. Remove the J1B connector from the ECU.
   b. For on-highway transmissions, connect ohmmeter leads to J1B terminals 3L and 1S. C solenoid circuit resistance should be between 9 and 20 ohms.
   c. For off-highway transmissions, connect ohmmeter leads to J1B terminals 3L and 1S. D solenoid circuit resistance should be between 12 and 24 ohms.

If readings are correct, proceed to Troubleshooting Step 4.

2. If resistance readings are incorrect, check the chassis wiring harness.
   a. Remove the J1B connector from the ECU, and remove the bulkhead connector from the transmission.
   b. For on-highway transmissions, check wires 114 and 110 for opens, shorts to each other, shorts to other wires and shorts to ground.
   c. For off-highway transmissions, check wires 116 and 109 for opens, shorts to each other, shorts to other wires and shorts to ground.

Isolate and repair problems as needed.

COPYRIGHT 1994 GENERAL MOTORS CORP.

TROUBLE CODE 44 - C SOLENOID (ON-HIGHWAY), D SOLENOID (OFF-HIGHWAY)

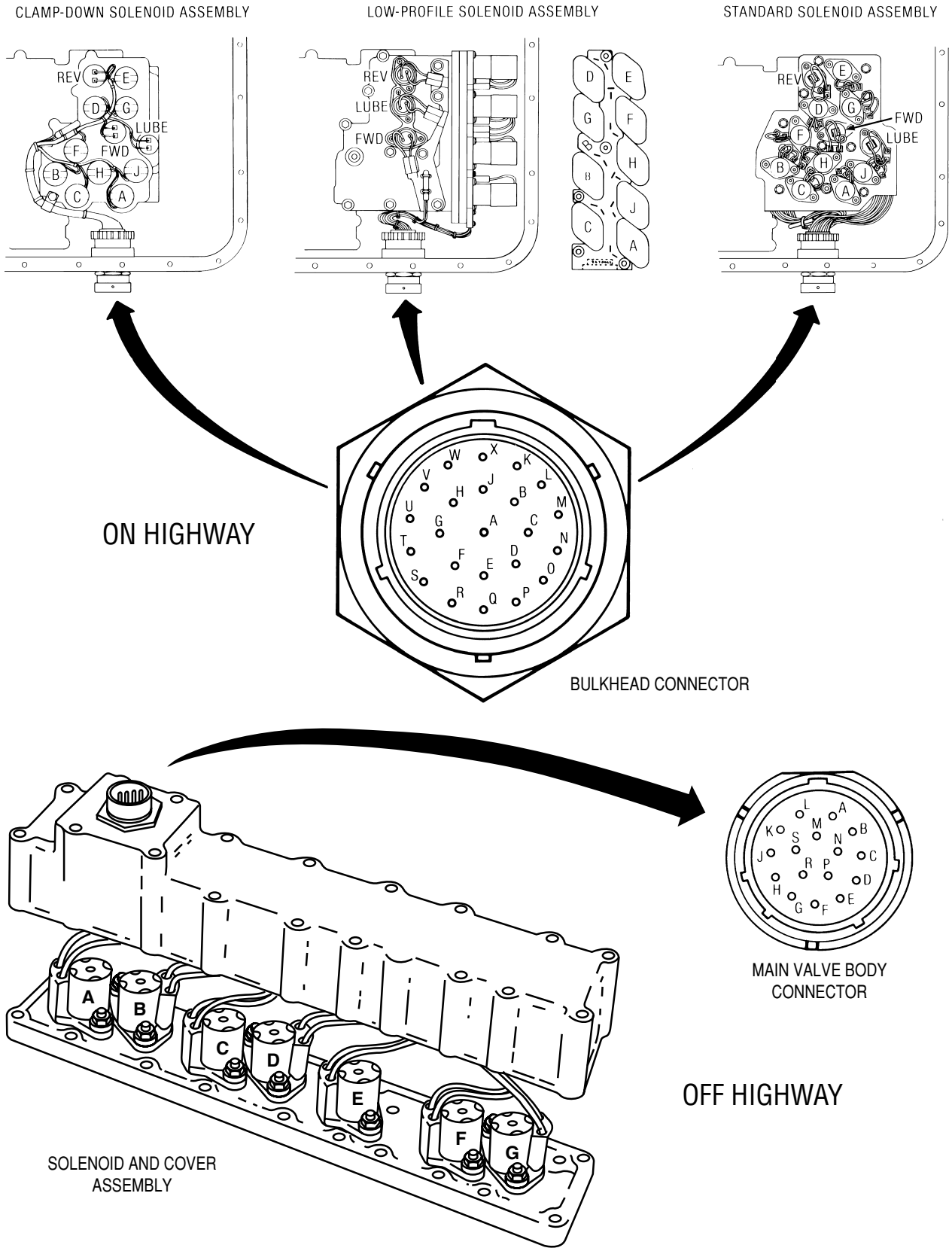

COPYRIGHT 1994 GENERAL MOTORS CORP.

TROUBLE CODE 44 - C SOLENOID (ON-HIGHWAY), D SOLENOID (OFF-HIGHWAY)

3. If the chassis wiring harness is okay, check the internal components and circuits.
   a. For on-highway transmissions, check resistance between bulkhead terminals B and W. Resistance should be between 9 and 20 ohms.
   b. For off-highway transmissions, check resistance between bulkhead terminals B and N. Resistance should be between 12 and 24 ohms.
   c. If resistance readings are incorrect, determine whether the problem is in the internal wiring harness or the solenoid.
      1) Remove the electrical connector from solenoid C (on-highway) or solenoid D (off-highway).
      2) Use an ohmmeter to check the solenoid's internal resistance.
      3) If solenoid resistance is incorrect, replace the solenoid.
      4) If solenoid resistance is okay (9-20 ohms for on-highway, 12-24 ohms for off-highway), check the solenoid circuit's internal wiring harness wires for opens, shorts to each other, shorts to other wires and shorts to ground. Isolate and repair problems as needed.
4. If the solenoid's circuit resistance is okay, check related solenoid circuits for problems.
   a. Refer to Troubleshooting Steps for Codes 41, 42, 43, 45 and 46. Isolate and repair problems as needed.
5. If the solenoid's circuit resistance is okay, and related solenoid circuits are okay, replace the ECU. If replacing the ECU fixes the problem, verify the old ECU is "bad" by reinstalling it, road testing the vehicle, and checking for codes.

COPYRIGHT 1994 GENERAL MOTORS CORP.

TROUBLE CODE 45 - B SOLENOID (ON-HIGHWAY), E SOLENOID (OFF-HIGHWAY)

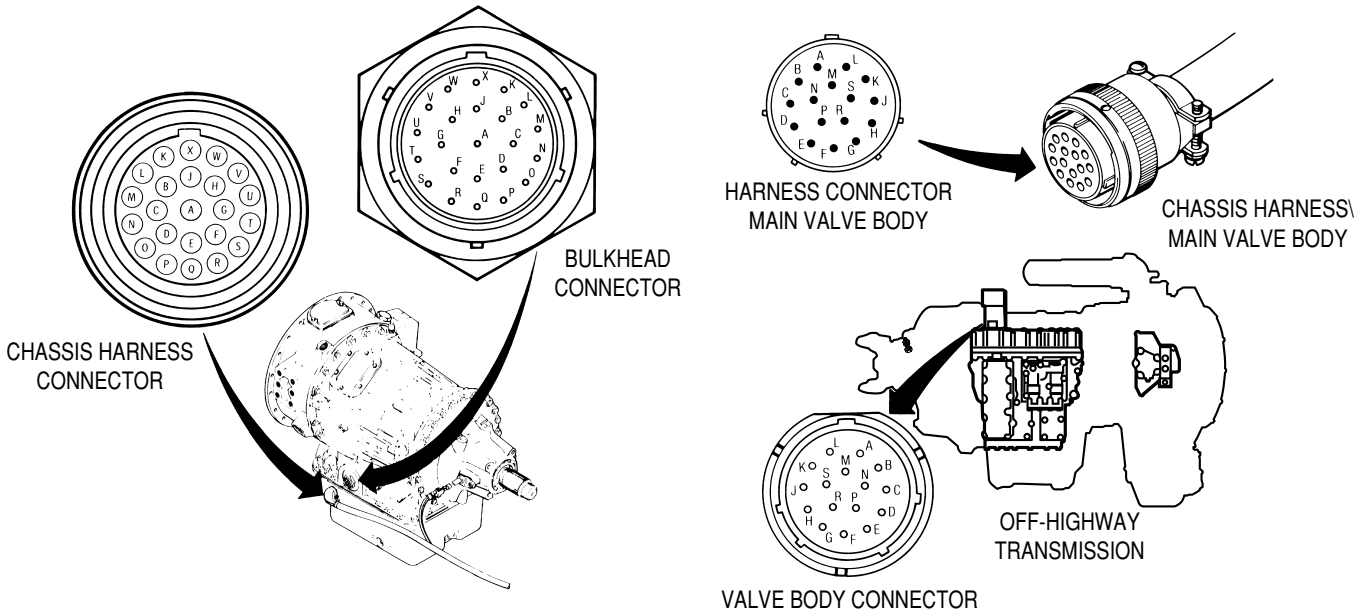

ON HIGHWAY

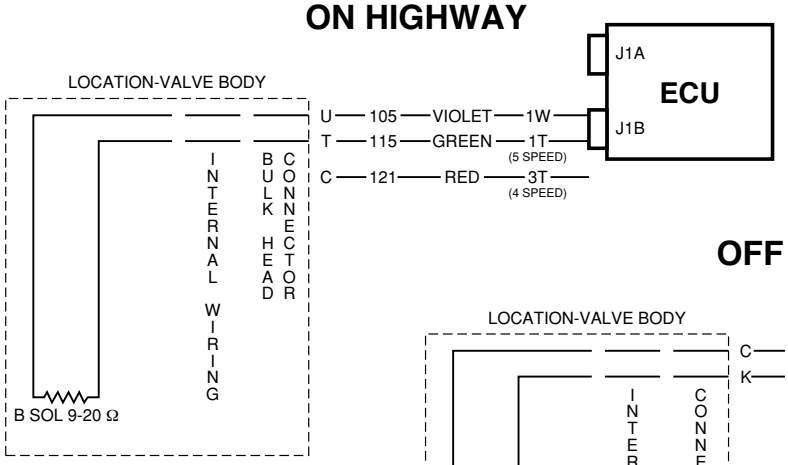

OFF HIGHWAY

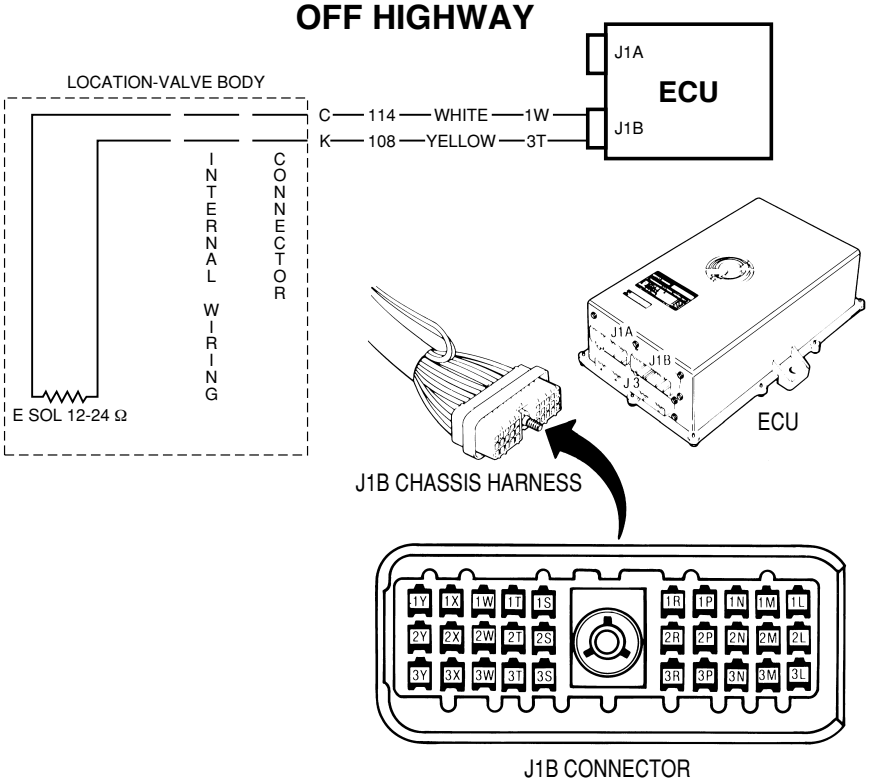

COPYRIGHT 1994 GENERAL MOTORS CORP.

TROUBLE CODE 45 - B SOLENOID (ON-HIGHWAY), E SOLENOID (OFF-HIGHWAY)

This code means that the ECU has received improper signals from the B solenoid circuit (on-highway) or E solenoid circuit (off-highway). Solenoid B (on-highway) controls the 1-2 shift valve. Solenoid E (off-highway) controls the 5-6 shift valve.

Some potential causes include:

- Opens or shorts in on-highway chassis harness wires 105 and 115 (five speed models), or 105 and 121 (four speeds).
- Opens or shorts in off-highway chassis harness wires 114 and 108.
- Opens or shorts in the on-highway electro-hydraulic valve body circuit between terminals U and T (five speed models), or U and C (four speeds).
- Opens or shorts in the off-highway electro-hydraulic valve body circuit between terminals C and K.
- Faulty solenoid(s).
- Problems with related solenoid circuits.
- Faulty ECU.

TROUBLESHOOTING STEPS

1. Check the solenoid circuit's resistance.
   a. Remove the J1B connector from the ECU.
   b. For on-highway transmissions, connect ohmmeter leads to J1B terminals 1W and 1T (five speed models) or terminals 1W and 3T (four speed models). B solenoid circuit resistance should be between 9 and 20 ohms.
   c. For off-highway transmissions, connect ohmmeter leads to J1B terminals 1W and 3T. E solenoid circuit resistance should be between 12 and 24 ohms.

If readings are correct, proceed to Troubleshooting Step 4.

2. If resistance readings are incorrect, check the chassis wiring harness.
   a. Remove the J1B connector from the ECU, and remove the bulkhead connector from the transmission.
   b. For on-highway transmissions, check wires 105 and 115 (five speed models) or 105 and 121 (four speed models) for opens, shorts to each other, shorts to other wires and shorts to ground.
   c. For off-highway transmissions, check wires 114 and 108 for opens, shorts to each other, shorts to other wires and shorts to ground.

Isolate and repair problems as needed.

COPYRIGHT 1994 GENERAL MOTORS CORP.

TROUBLE CODE 45 - B SOLENOID (ON-HIGHWAY), E SOLENOID (OFF-HIGHWAY)

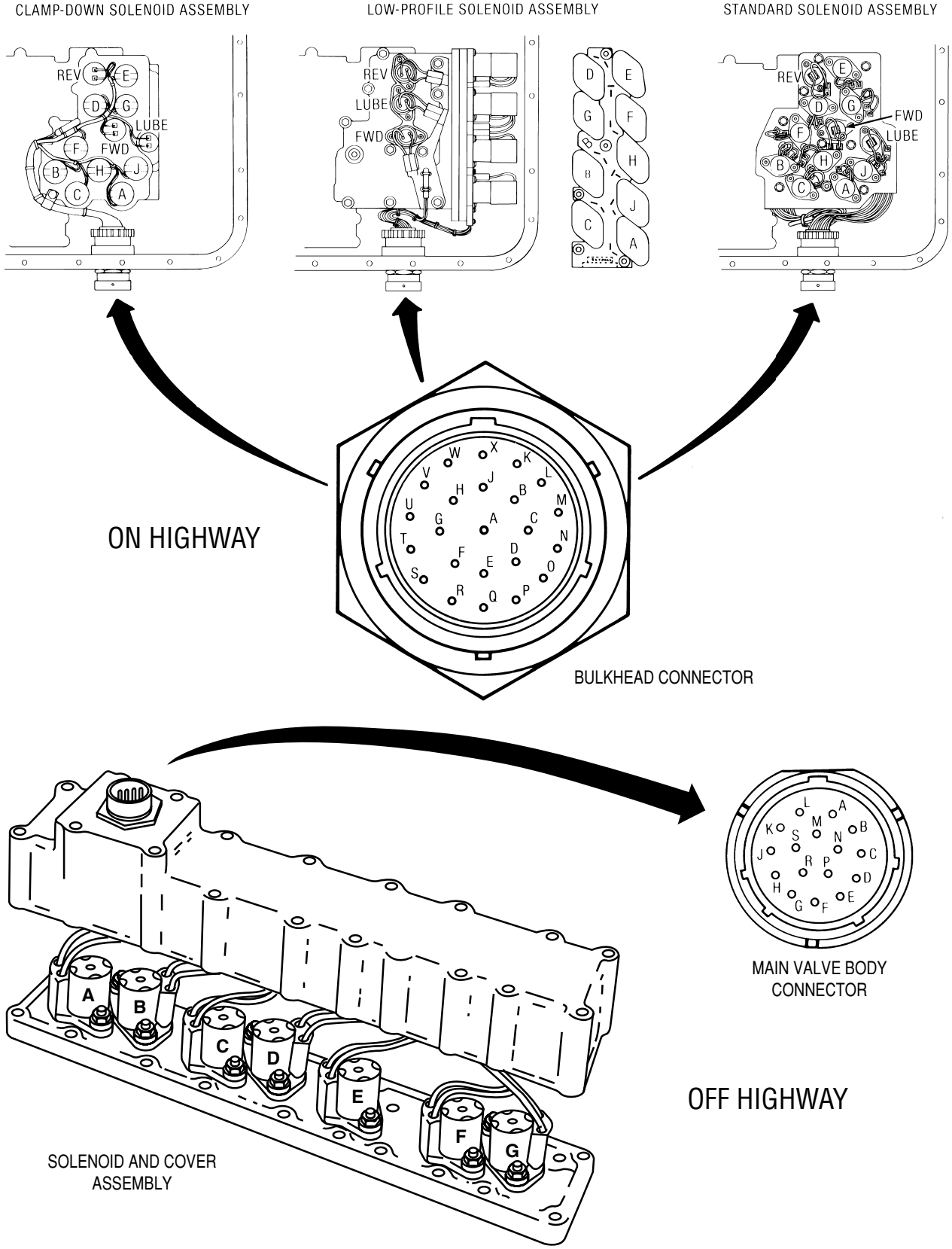

COPYRIGHT 1994 GENERAL MOTORS CORP.

TROUBLE CODE 45 - B SOLENOID (ON-HIGHWAY), E SOLENOID (OFF-HIGHWAY)

3. If the chassis wiring harness is okay, check the internal components and circuits.
   a. For on-highway transmissions, check resistance between bulkhead terminals U and T (five speed models) or U and C (four speed models). Resistance should be between 9 and 20 ohms.
   b. For off-highway transmissions, check resistance between bulkhead terminals C and K. Resistance should be between 12 and 24 ohms.
   c. If resistance readings are incorrect, determine whether the problem is in the internal wiring harness or the solenoid.
      1) Remove the electrical connector from solenoid B (on-highway) or solenoid E (off-highway).
      2) Use an ohmmeter to check the solenoid's internal resistance.
      3) If solenoid resistance is incorrect, replace the solenoid.
      4) If solenoid resistance is okay (9-20 ohms for on-highway, 12-24 ohms for off-highway), check the solenoid circuit's internal wiring harness wires for opens, shorts to each other, shorts to other wires and shorts to ground. Isolate and repair problems as needed.
4. If the solenoid's circuit resistance is okay, check related solenoid circuits for problems.
   a. Refer to Troubleshooting Steps for Codes 41, 42, 43, 44 and 46. Isolate and repair problems as needed.
5. If the solenoid's circuit resistance is okay, and related solenoid circuits are okay, replace the ECU. If replacing the ECU fixes the problem, verify the old ECU is "bad" by reinstalling it, road testing the vehicle, and checking for codes.

COPYRIGHT 1994 GENERAL MOTORS CORP.

TROUBLE CODE 46 - A SOLENOID (ON-HIGHWAY ONLY)

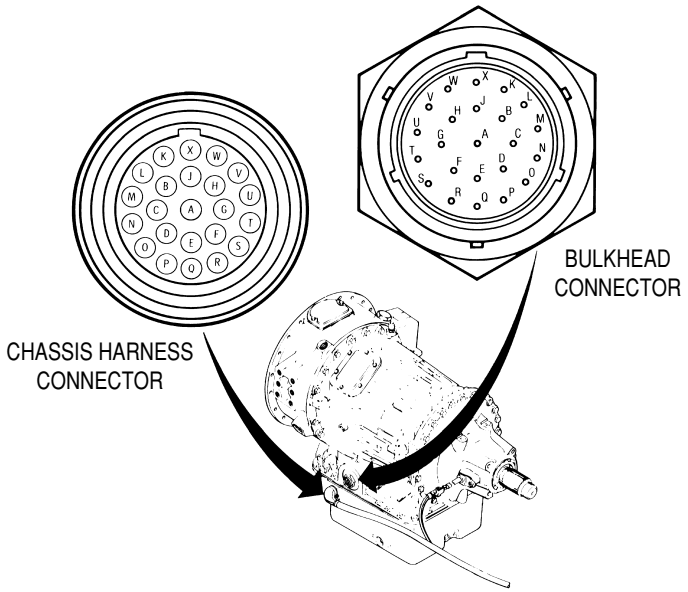

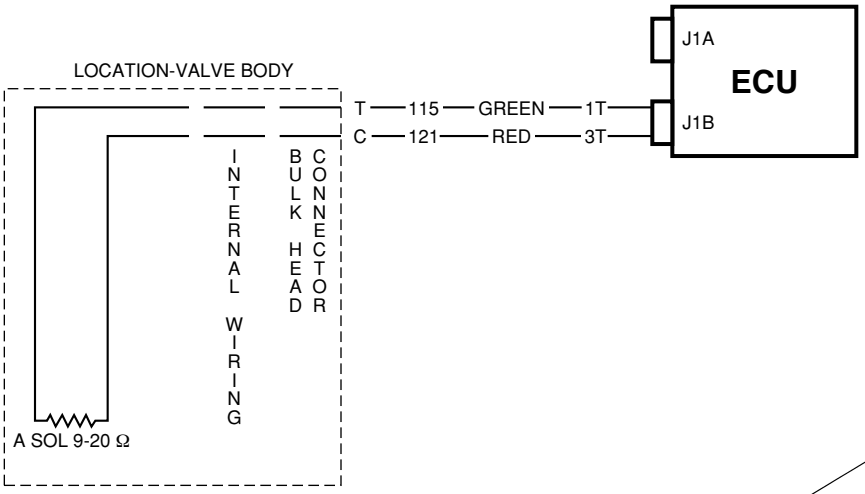

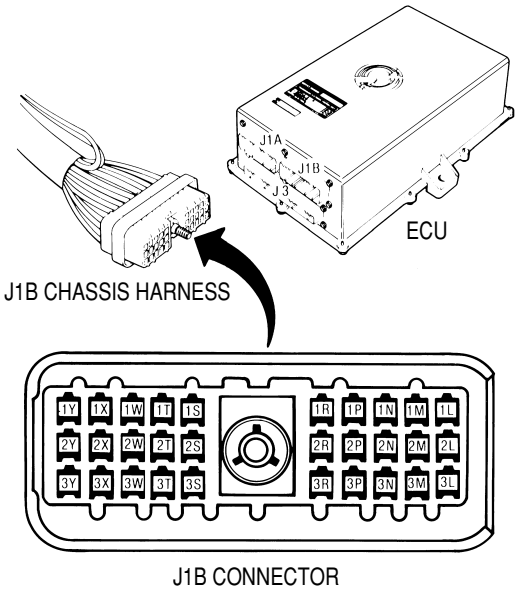

COPYRIGHT 1994 GENERAL MOTORS CORP.

TROUBLE CODE 46 - A SOLENOID (ON-HIGHWAY ONLY)

This code means that the ECU has received improper signals from the A solenoid circuit. Solenoid A controls the low-1 shift valve.

Some potential causes include:

- Opens or shorts in chassis harness wires 115 and 121.
- Opens or shorts in the electro-hydraulic valve body circuit between terminals T and C.
- Faulty solenoid.
- Problems with related solenoid circuits.
- Faulty ECU.

TROUBLESHOOTING STEPS

1. Check the solenoid circuit's resistance.
   a. Remove the J1B connector from the ECU.
   b. Connect ohmmeter leads to J1B terminals 1T and 3T. Solenoid circuit resistance should be between 9 and 20 ohms.

If readings are correct, proceed to Troubleshooting Step 4.

2. If resistance readings are incorrect, check the chassis wiring harness.
   a. Remove the J1B connector from the ECU, and remove the bulkhead connector from the transmission.
   b. Check wires 115 and 121 for opens, shorts to each other, shorts to other wires and shorts to ground.

Isolate and repair problems as needed.

3. If the chassis wiring harness is okay, check the internal components and circuits.
   a. Check resistance between bulkhead terminals T and C. Resistance should be between 9 and 20 ohms.
   b. If resistance readings are incorrect, determine whether the problem is in the internal wiring harness or the solenoid.
      1) Remove the electrical connector from solenoid A.
      2) Use an ohmmeter to check the solenoid's internal resistance.
      3) If resistance is incorrect, replace the solenoid.
      4) If solenoid resistance is okay (9-20 ohms), check the solenoid circuit's internal wiring harness wires for opens, shorts to each other, shorts to other wires and shorts to ground. Isolate and repair problems as needed.

COPYRIGHT 1994 GENERAL MOTORS CORP.

TROUBLE CODE 46 - A SOLENOID (ON-HIGHWAY ONLY)

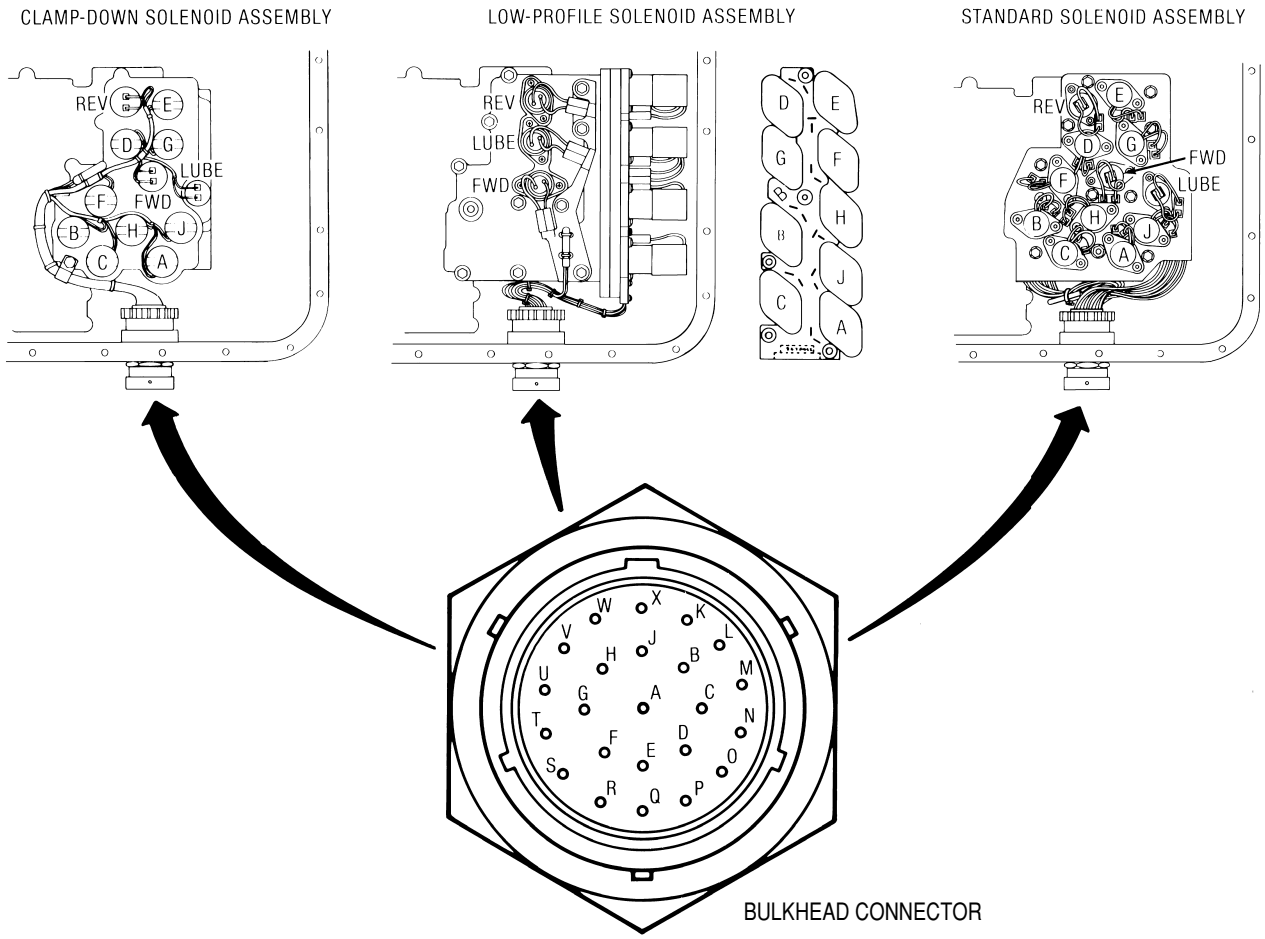

COPYRIGHT 1994 GENERAL MOTORS CORP.

TROUBLE CODE 46 - A SOLENOID (ON-HIGHWAY ONLY)

4. If the solenoid's circuit resistance is okay, check related solenoid circuits for problems.
   a. Refer to Troubleshooting Steps for Codes 41, 42, 43, 44 and 45. Isolate and repair problems as needed.
5. If the solenoid's circuit resistance is okay, and related solenoid circuits are okay, replace the ECU. If replacing the ECU fixes the problem, verify the old ECU is "bad" by reinstalling it, road testing the vehicle, and checking for codes.

COPYRIGHT 1994 GENERAL MOTORS CORP.

TROUBLE CODE 51 - G SOLENOID (ON-HIGHWAY), K SOLENOID (OFF-HIGHWAY)

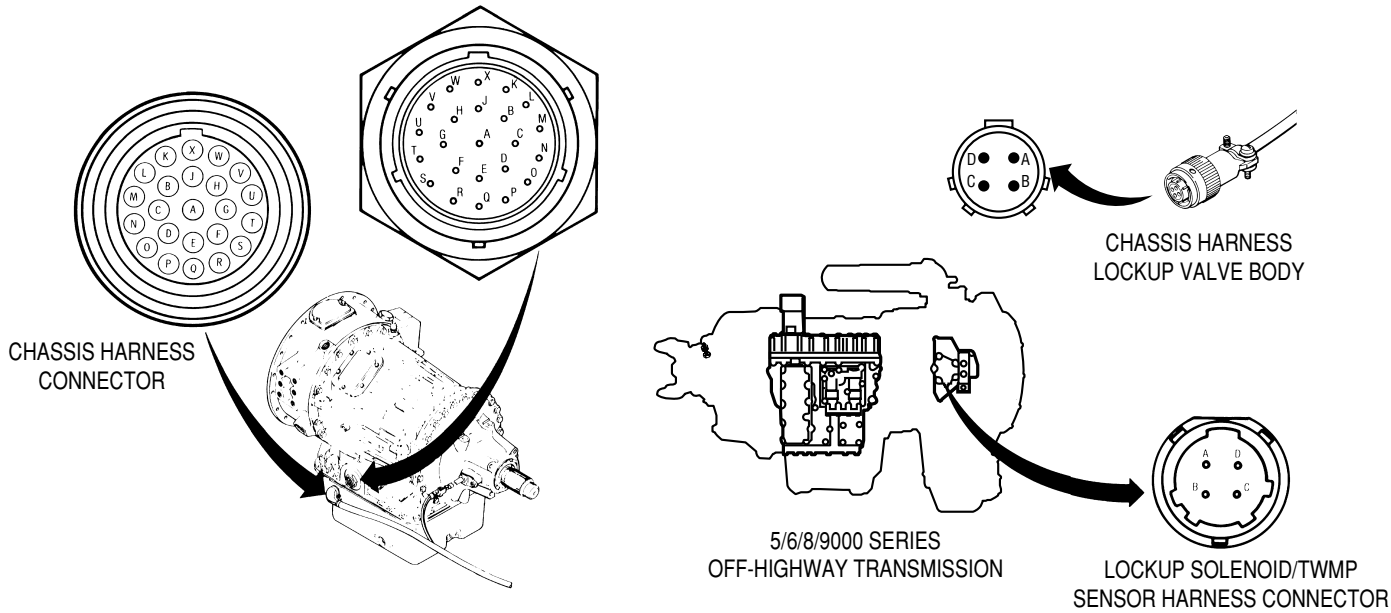

ON HIGHWAY

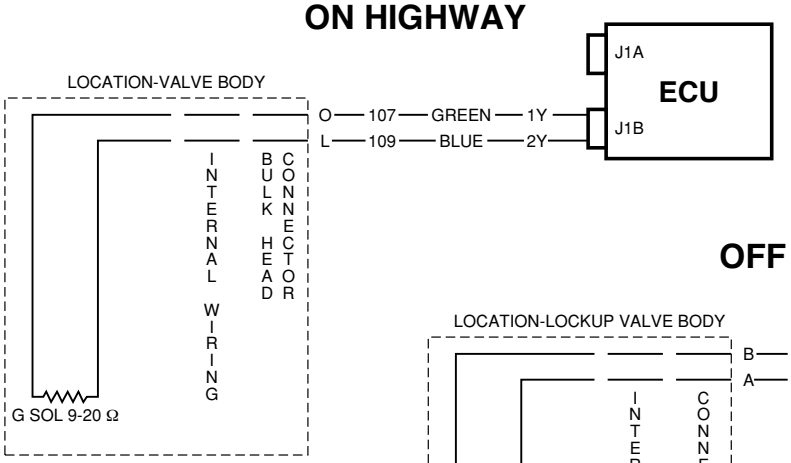

OFF HIGHWAY

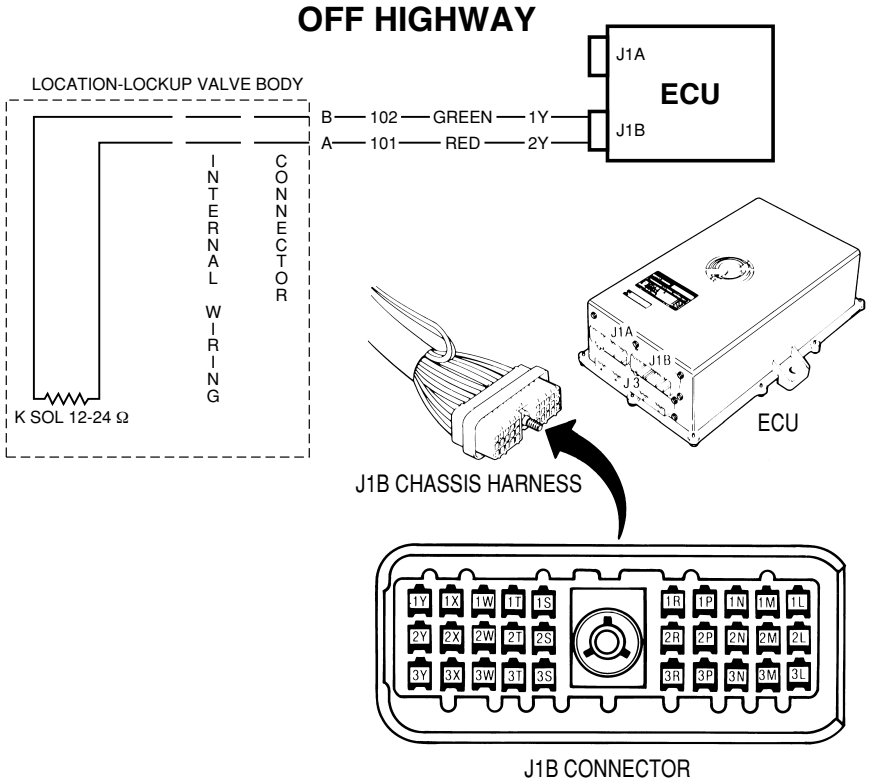

COPYRIGHT 1994 GENERAL MOTORS CORP.

TROUBLE CODE 51 - G SOLENOID (ON-HIGHWAY), K SOLENOID (OFF-HIGHWAY)

This code means that the ECU has received improper signals from the G solenoid circuit (on-highway) or K solenoid circuit (off-highway). Solenoid G (on-highway) controls the lockup relay valve. Solenoid K (off-highway) controls the lockup shift valve.

Some potential causes include:

- Opens or shorts in on-highway chassis harness wires 107 and 109.
- Opens or shorts in off-highway chassis harness wires 102 and 101.
- Opens or shorts in the on-highway electro-hydraulic valve body circuit between terminals O and L.
- Opens or shorts in the off-highway lockup valve body circuit between terminals B and A.
- Faulty solenoid.
- Faulty ECU.

TROUBLESHOOTING STEPS

1. Check the solenoid circuit's resistance.
   a. Remove the J1B connector from the ECU.
   b. For on-highway transmissions, connect ohmmeter leads to J1B terminals 1Y and 2Y. G solenoid circuit resistance should be between 9 and 20 ohms.
   c. For off-highway transmissions, connect ohmmeter leads to J1B terminals 1Y and 2Y. K solenoid circuit resistance should be between 12 and 24 ohms.

If readings are correct, proceed to Troubleshooting Step 4.

2. If resistance readings are incorrect, check the chassis wiring harness.
   a. Remove the J1B connector from the ECU, and remove the bulkhead connector from the transmission (on-highway), or remove the lockup valve body connector from the lock-up valve body (off-highway).
   b. For on-highway transmissions, check wires 107 and 109 for opens, shorts to each other, shorts to other wires and shorts to ground.
   c. For off-highway transmissions, check wires 102 and 101 for opens, shorts to each other, shorts to other wires and shorts to ground.

Isolate and repair problems as needed.

COPYRIGHT 1994 GENERAL MOTORS CORP.

TROUBLE CODE 51 - G SOLENOID (ON-HIGHWAY), K SOLENOID (OFF-HIGHWAY)

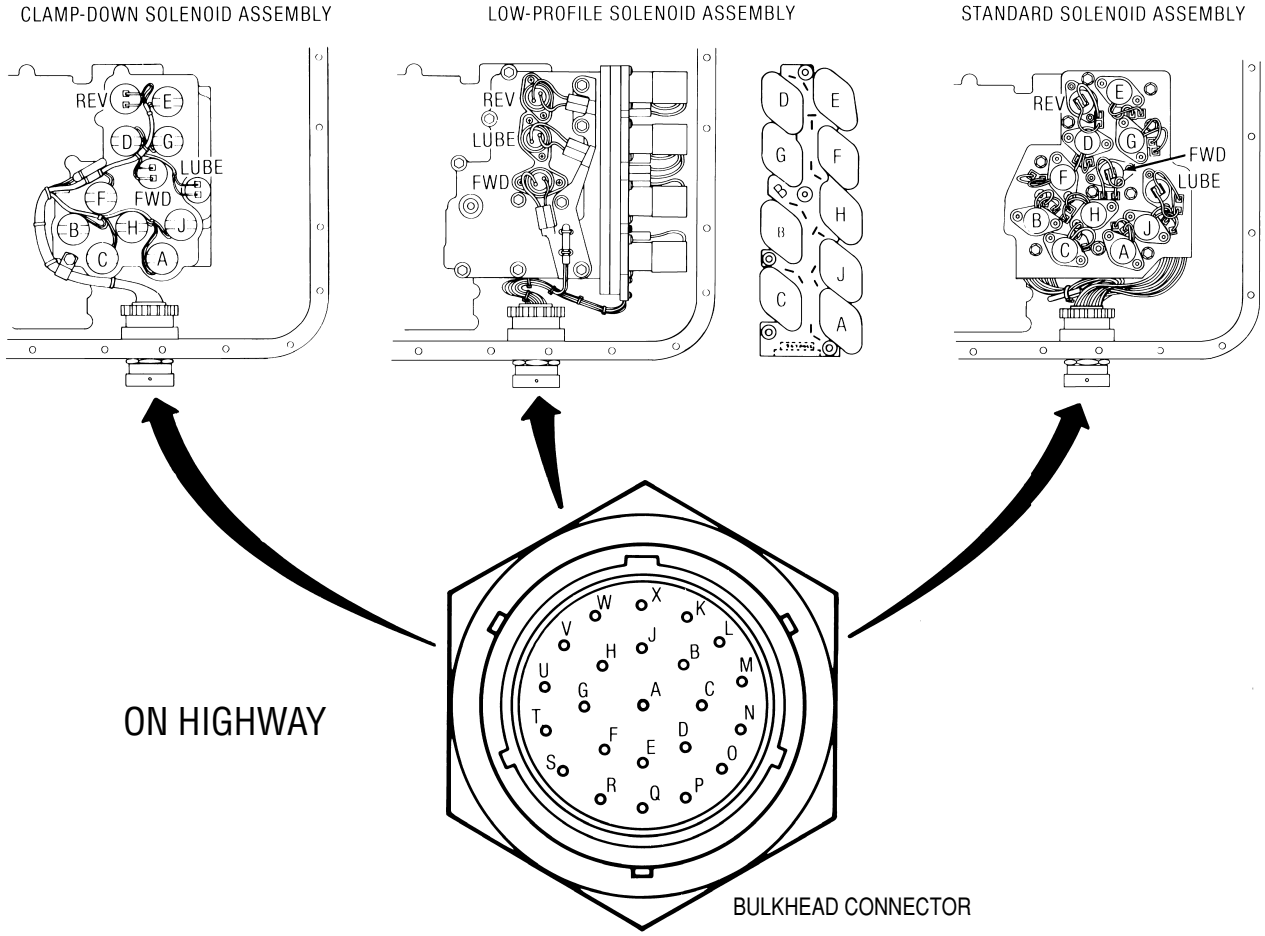

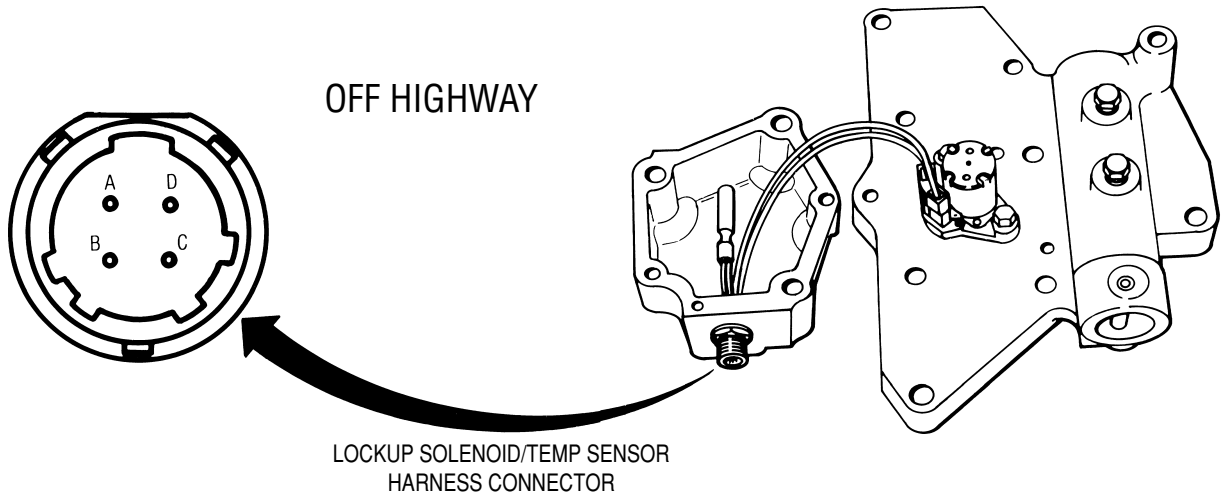

COPYRIGHT 1994 GENERAL MOTORS CORP.

TROUBLE CODE 51 - G SOLENOID (ON-HIGHWAY), K SOLENOID (OFF-HIGHWAY)

3. If the chassis wiring harness is okay, check the internal components and circuits.
   a. For on-highway transmissions, check resistance between bulkhead terminals O and L. Resistance should be between 9 and 20 ohms.
   b. For off-highway transmissions, check resistance between lockup valve body terminals B and A. Resistance should be between 12 and 24 ohms.
   c. If resistance readings are incorrect, determine whether the problem is in the internal wiring harness or the solenoid.
      1) Remove the electrical connector from solenoid G (on-highway) or solenoid K (off-highway).
      2) Use an ohmmeter to check the solenoid's internal resistance.
      3) If solenoid resistance is incorrect, replace the solenoid.
      4) If solenoid resistance is okay (9-20 ohms for on-highway, 12-24 ohms for off-highway), check the solenoid circuit's internal wiring harness wires for opens, shorts to each other, shorts to other wires and shorts to ground. Isolate and repair problems as needed.
4. If the solenoid's circuit resistance is okay, replace the ECU. If replacing the ECU fixes the problem, verify the old ECU is "bad" by reinstalling it, road testing the vehicle, and checking for codes.

COPYRIGHT 1994 GENERAL MOTORS CORP.

TROUBLE CODE 52 - E SOLENOID (ON-HIGHWAY), H OR J SOLENOID (OFF-HIGHWAY)

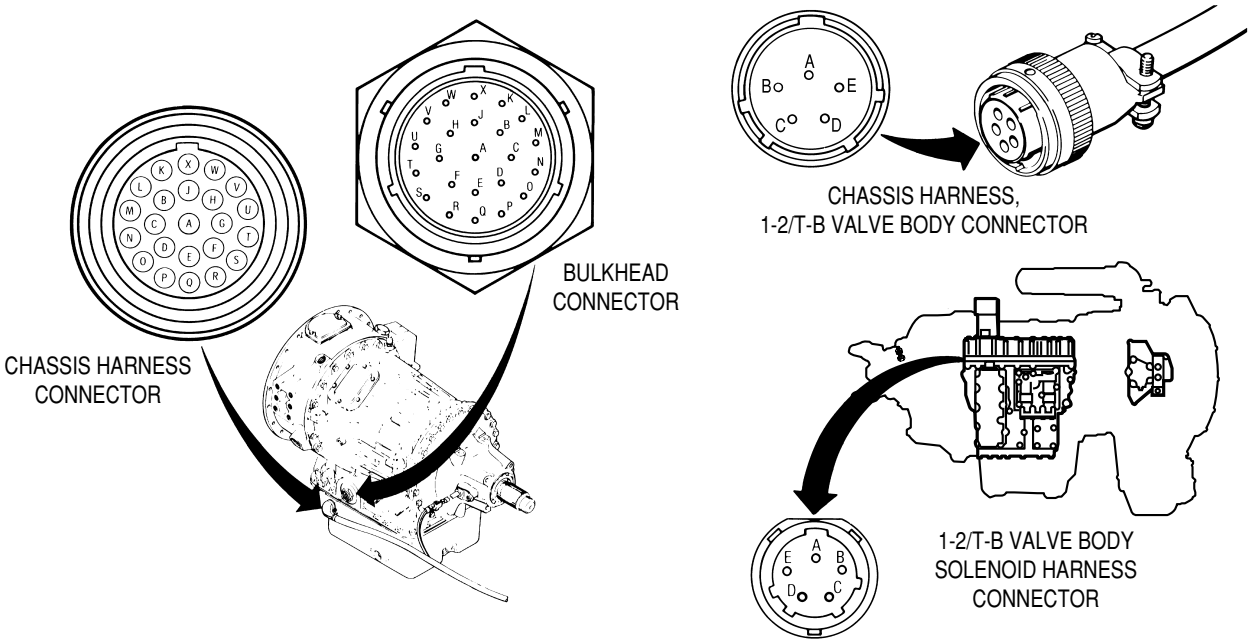

ON HIGHWAY

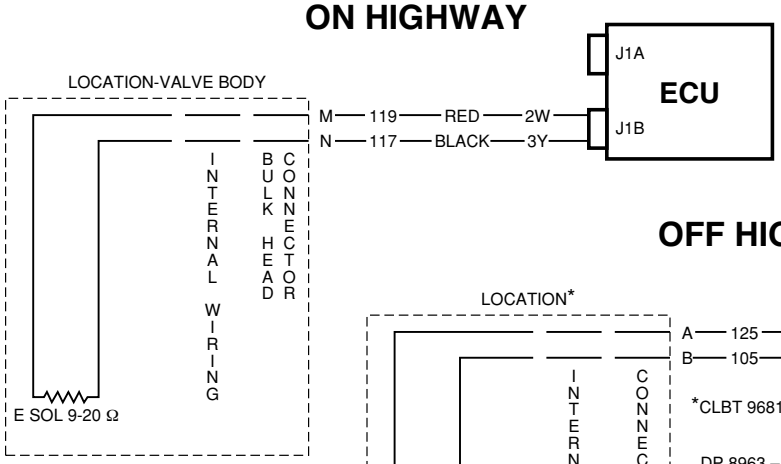

OFF HIGHWAY

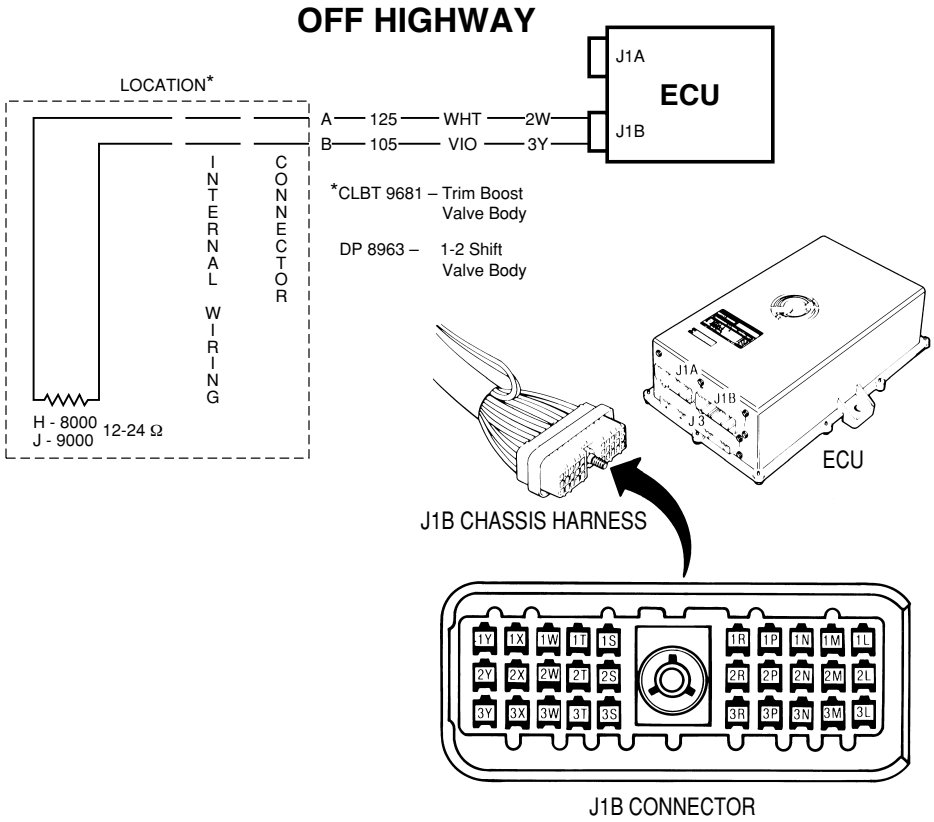

COPYRIGHT 1994 GENERAL MOTORS CORP.

TROUBLE CODE 52 - E SOLENOID (ON-HIGHWAY), H OR J SOLENOID (OFF-HIGHWAY)

This code means that the ECU has received improper signals from the E solenoid circuit (on-highway) or the H or J solenoid (off-highway). Solenoid E (on-highway) controls trimmer regulator valve operation. Solenoid H (off-highway) controls low range operation in DP 8000 series transmissions. Solenoid J controls trimmer regulator operation in CLBT 9000 series transmissions.

Some potential causes include:

- Opens or shorts in on-highway chassis harness wires 119 and 107.
- Opens or shorts in off-highway chassis harness wires 125 and 105.
- Opens or shorts in the on-highway electro-hydraulic valve body circuit between terminals M and N.
- Opens or shorts in the off-highway low-low valve body circuit between terminals A and B.
- Faulty solenoid(s).
- Problems with related solenoid circuits.
- Faulty ECU.

TROUBLESHOOTING STEPS

1. Check the solenoid circuit's resistance.
   a. Remove the J1B connector from the ECU.
   b. For on-highway transmissions, connect ohmmeter leads to J1B terminals 2W and 3Y. E solenoid circuit resistance should be between 9 and 20 ohms.
   c. For off-highway transmissions, connect ohmmeter leads to J1B terminals 2W and 3T. Solenoid circuit resistance (for either solenoid H or J) should be between 12 and 24 ohms.

If readings are correct, proceed to Troubleshooting Step 4.

2. If resistance readings are incorrect, check the chassis wiring harness.
   a. Remove the J1B connector from the ECU, and remove the bulkhead connector from the transmission (on-highway), or remove the low-low valve body bulkhead connector from the low-low valve body (off-highway).
   b. For on-highway transmissions, check wires 119 and 117 for opens, shorts to each other, shorts to other wires and shorts to ground.
   c. For off-highway transmissions, check wires 125 and 105 for opens, shorts to each other, shorts to other wires and shorts to ground.

Isolate and repair problems as needed.

COPYRIGHT 1994 GENERAL MOTORS CORP.

TROUBLE CODE 52 - E SOLENOID (ON-HIGHWAY), H OR J SOLENOID (OFF-HIGHWAY)

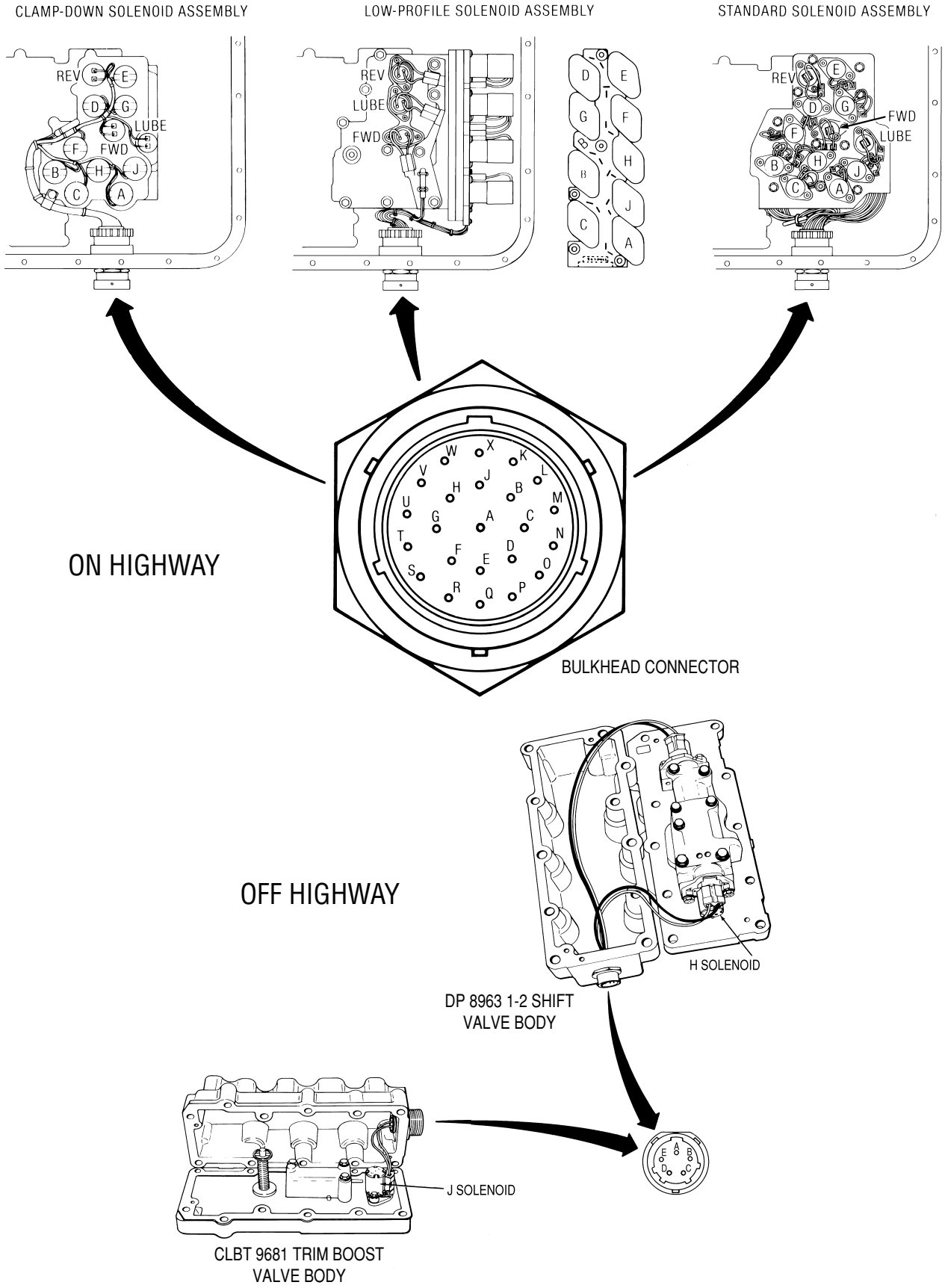

COPYRIGHT 1994 GENERAL MOTORS CORP.

TROUBLE CODE 52 - E SOLENOID (ON-HIGHWAY), H OR J SOLENOID (OFF-HIGHWAY)

3. If the chassis wiring harness is okay, check the internal components and circuits.
   a. For on-highway transmissions, check resistance between bulkhead terminals M and N. Resistance should be between 9 and 20 ohms.
   b. For off-highway transmissions, check resistance between low-low valve body bulkhead terminals A and B. Resistance should be between 12 and 24 ohms.
   c. If resistance readings are incorrect, determine whether the problem is in the internal wiring harness or the solenoid.
      1) Remove the electrical connector from solenoid E (on-highway) or from solenoid H or J (off-highway).
      2) Use an ohmmeter to check the solenoid's internal resistance.
      3) If solenoid resistance is incorrect, replace the solenoid.
      4) If solenoid resistance is okay (9-20 ohms for on-highway, 12-24 ohms for off-highway), check the solenoid circuit's internal wiring harness wires for opens, shorts to each other, shorts to other wires and shorts to ground. Isolate and repair problems as needed.
4. If the solenoid's circuit resistance is okay, check related solenoid circuits for problems.
   a. Refer to Troubleshooting Steps for Code 53. Isolate and repair problems as needed.
5. If the solenoid's circuit resistance is okay, and related solenoid circuits are okay, replace the ECU. If replacing the ECU fixes the problem, verify the old ECU is "bad" by reinstalling it, road testing the vehicle, and checking for codes.

COPYRIGHT 1994 GENERAL MOTORS CORP.

TROUBLE CODE 53 - H SOLENOID (ON-HIGHWAY), I SOLENOID (OFF-HIGHWAY)

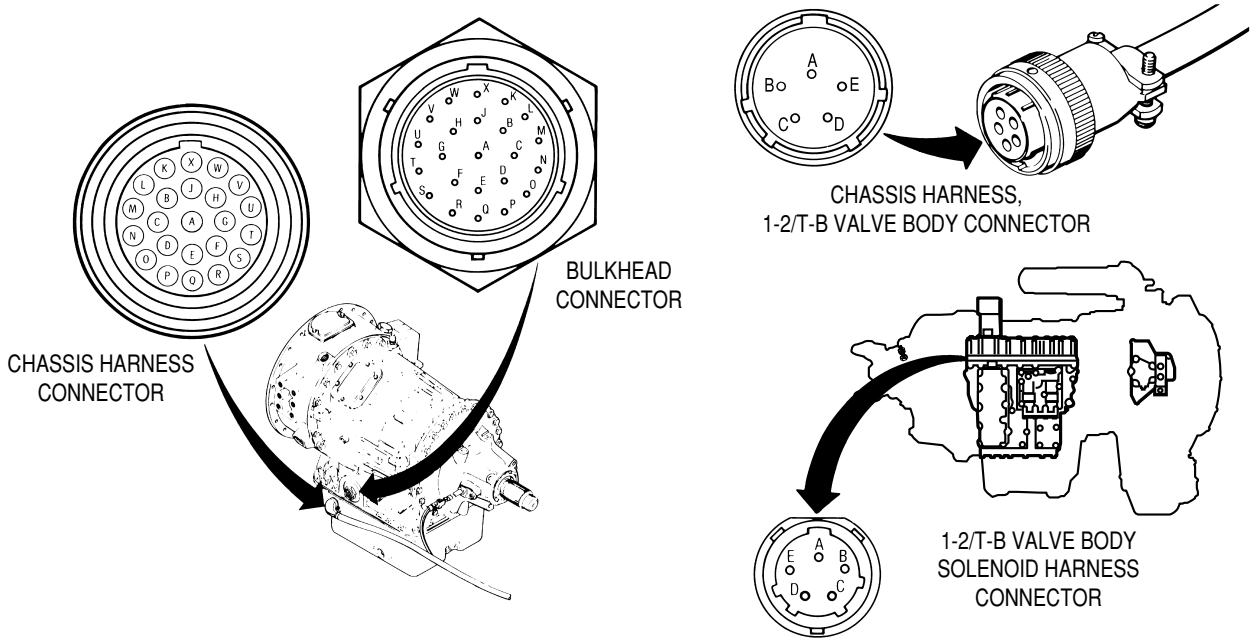

ON HIGHWAY

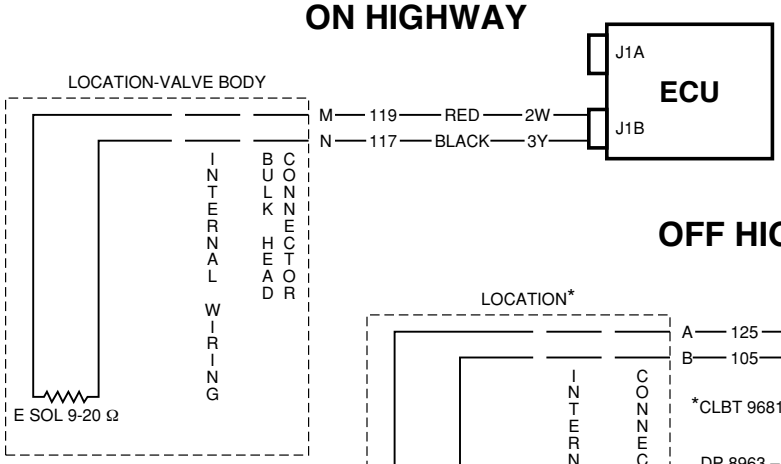

OFF HIGHWAY

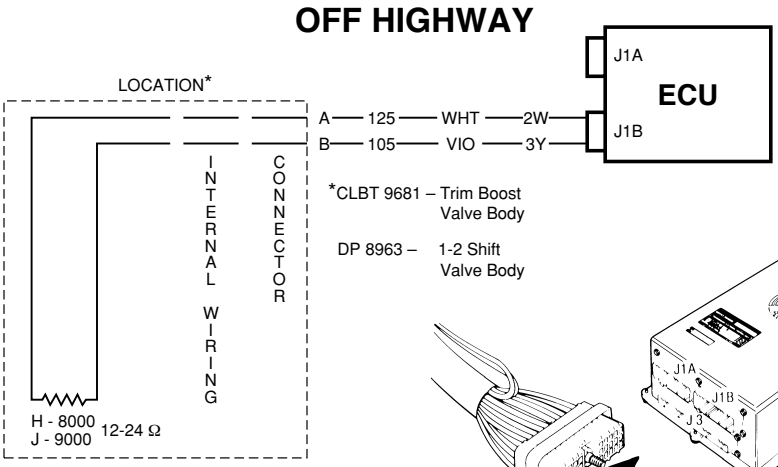

*CLBT 9681 – Trim Boost Valve Body

DP 8963 – 1-2 Shift Valve Body

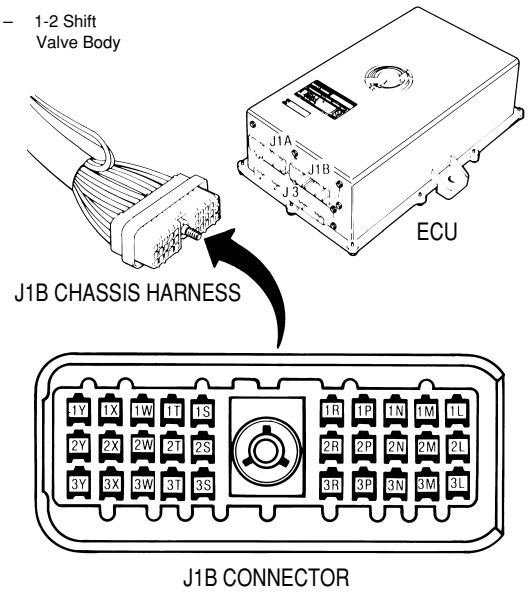

COPYRIGHT 1994 GENERAL MOTORS CORP.

TROUBLE CODE 53 - H SOLENOID (ON-HIGHWAY), I SOLENOID (OFF-HIGHWAY)

This code means that the ECU has received improper signals from the H solenoid circuit (on-highway) or the I solenoid (off-highway). Solenoid H (on-highway) controls main pressure flow to the bottom of the neutral-range valve. Solenoid I (off-highway) controls low range unlock operation in DP 8000 series transmissions.

Some potential causes include:

- Opens or shorts in on-highway chassis harness wires 108 and 117.
- Opens or shorts in off-highway chassis harness wires 107 and 105.
- Opens or shorts in the on-highway electro-hydraulic valve body circuit between terminals K and N.
- Opens or shorts in the off-highway low-low valve body circuit between terminals D and B.
- Faulty solenoid(s).
- Problems with related solenoid circuits.
- Faulty ECU.

TROUBLESHOOTING STEPS

1. Check the solenoid circuit's resistance.
   a. Remove the J1B connector from the ECU.
   b. For on-highway transmissions, connect ohmmeter leads to J1B terminals 2M and 3Y. H solenoid circuit resistance should be between 9 and 20 ohms.
   c. For off-highway transmissions, connect ohmmeter leads to J1B terminals 2M and 3Y. I Solenoid circuit resistance should be between 12 and 24 ohms.

If readings are correct, proceed to Troubleshooting Step 4.

2. If resistance readings are incorrect, check the chassis wiring harness.
   a. Remove the J1B connector from the ECU, and remove the bulkhead connector from the transmission (on-highway), or remove the low-low valve body bulkhead connector from the low-low valve body (off-highway).
   b. For on-highway transmissions, check wires 108 and 117 for opens, shorts to each other, shorts to other wires and shorts to ground.
   c. For off-highway transmissions, check wires 107 and 105 for opens, shorts to each other, shorts to other wires and shorts to ground.

Isolate and repair problems as needed.

COPYRIGHT 1994 GENERAL MOTORS CORP.

TROUBLE CODE 53 - H SOLENOID (ON-HIGHWAY), I SOLENOID (OFF-HIGHWAY)

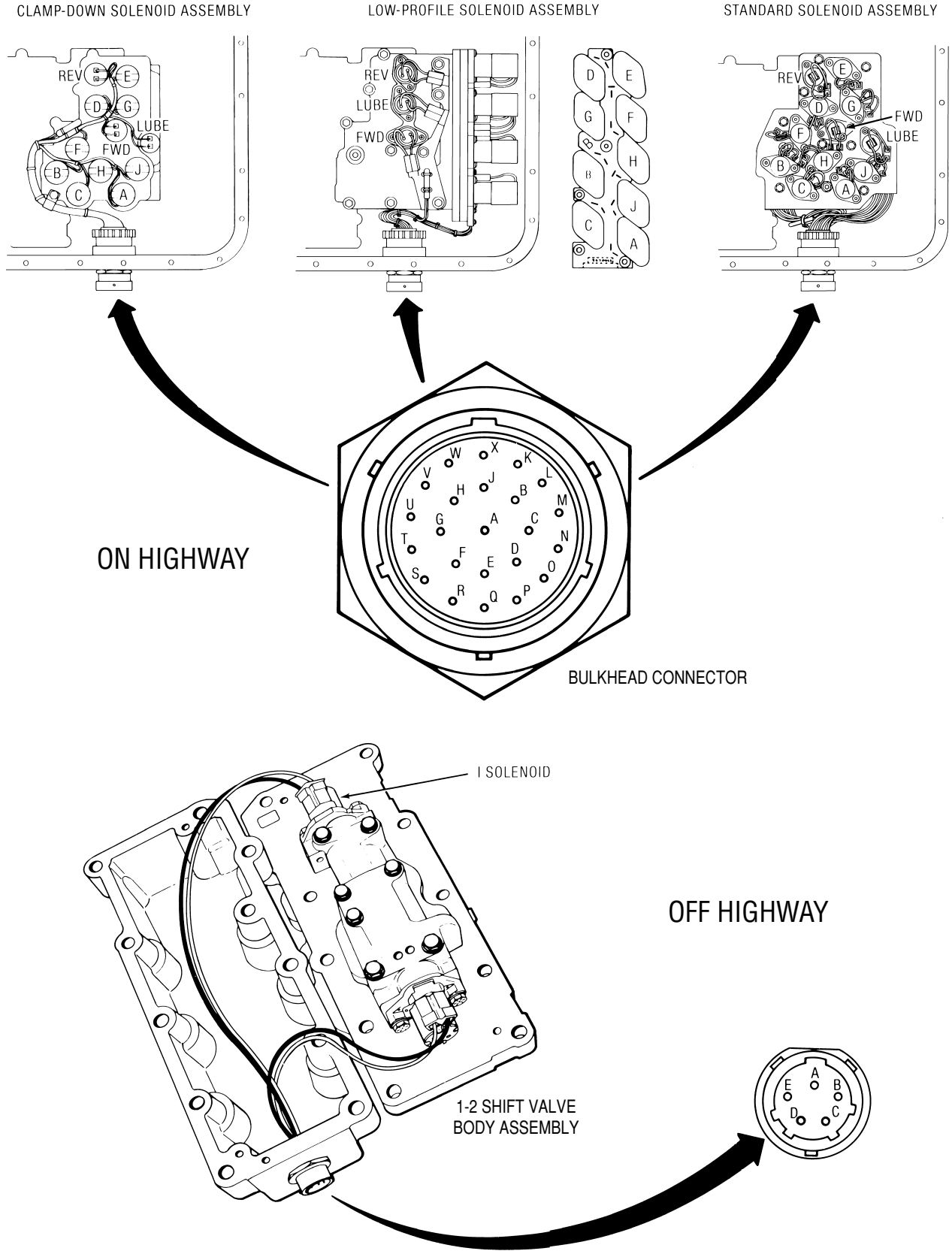

COPYRIGHT 1994 GENERAL MOTORS CORP.

TROUBLE CODE 53 - H SOLENOID (ON-HIGHWAY), I SOLENOID (OFF-HIGHWAY)

3. If the chassis wiring harness is okay, check the internal components and circuits.
   a. For on-highway transmissions, check resistance between bulkhead terminals K and N. Resistance should be between 9 and 20 ohms.
   b. For off-highway transmissions, check resistance between low-low valve body bulkhead terminals D and B. Resistance should be between 12 and 24 ohms.
   c. If resistance readings are incorrect, determine whether the problem is in the internal wiring harness or the solenoid.
      1) Remove the electrical connector from solenoid H (on-highway) or from solenoid I (off-highway).
      2) Use an ohmmeter to check the solenoid's internal resistance.
      3) If solenoid resistance is incorrect, replace the solenoid.
      4) If solenoid resistance is okay (9-20 ohms for on-highway, 12-24 ohms for off-highway), check the solenoid circuit's internal wiring harness wires for opens, shorts to each other, shorts to other wires and shorts to ground. Isolate and repair problems as needed.
4. If the solenoid's circuit resistance is okay, check related solenoid circuits for problems.
   a. Refer to Troubleshooting Steps for Code 52. Isolate and repair problems as needed.
5. If the solenoid's circuit resistance is okay, and related solenoid circuits are okay, replace the ECU. If replacing the ECU fixes the problem, verify the old ECU is "bad" by reinstalling it, road testing the vehicle, and checking for codes.

COPYRIGHT 1994 GENERAL MOTORS CORP.

TROUBLE CODE 54 - LATCHING SOLENOID CHAIN

ON HIGHWAY

* SOL A OMITTED 4 SPEED
SOL A & B OMITTED 3 SPEED

J1B	J1				TRANS		
3M	11	111	GRN		D (+)	J	9-20 Ω
3L	14	114	WHT		B (-)	C	9-20 Ω
1S	10	110	WHT		W (+)	D	9-20 Ω
2T	20	120	BLU		V (-)	F	9-20 Ω
1W	5	105	VIO	NOT USED 3 SPEED	U (+)	B*	9-20 Ω
1T	15	115	GRN	NOT USED 3&4 SPEED	T (-)	A*	9-20 Ω
3T	21	121	RED		C (+)		

CHECK FOR:
RESISTANCE TOO HIGH 3M-3T
ANY WIRE SHORTED TO GROUND

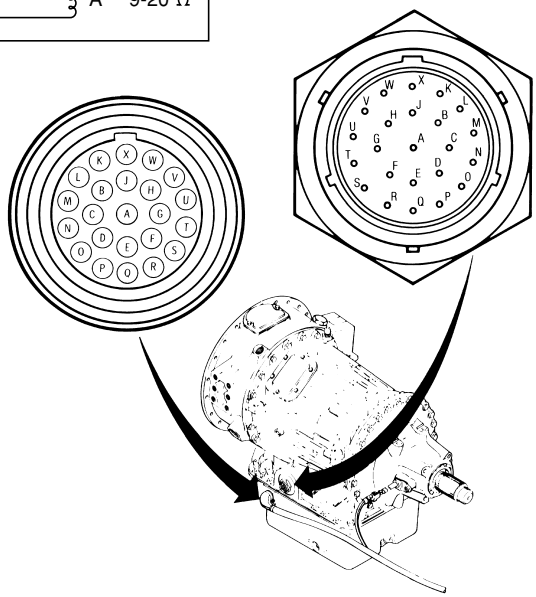

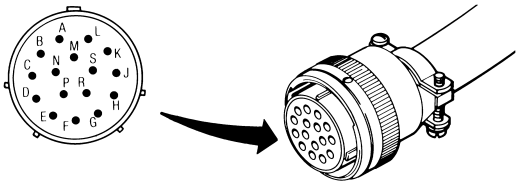

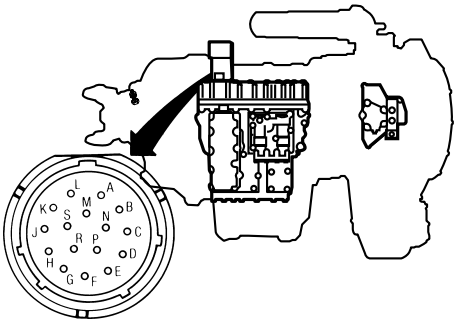

OFF HIGHWAY

* SOL A OMITTED IN
LOCK TO NEUTRAL
VALVE BODY

J1B				MAIN			
3M	115	GRN		A	*	+ - A	12-24 Ω
3L	116	YEL		B, M		- +D	12-24 Ω
1S	109	BLU		N, E		+ -C	12-24 Ω
2T	117	BLK		P, D		- +B	12-24 Ω
1W	114	WHT		C, L		+ -E	12-24 Ω
3T	108	YEL		K			

CHECK FOR:
RESISTANCE TOO HIGH 3M-3T
ANY WIRE SHORTED TO GROUND

COPYRIGHT 1994 GENERAL MOTORS CORP.

TROUBLE CODE 54 - LATCHING SOLENOID CHAIN

This code means that the ECU has received improper signals from the solenoid chain. The solenoids in the on-highway solenoid chain are all latching. The solenoids in the off-highway solenoid chain are non-latching.

Some potential causes include:

- Opens or shorts in on-highway chassis harness wires 111, 114, 110, 120, 105 (if used), 115 (if used), and 121.
- Opens or shorts in off-highway chassis harness wires 115, 116 (if used), 109, 117, 114, and 108.
- Opens or shorts in on-highway electro-hydraulic valve body circuit between terminals D and C.
- Opens or short in off-highway electro-hydraulic valve body circuit between terminals A and K.
- Faulty solenoid(s).
- Faulty ECU.

TROUBLESHOOTING STEPS

1. Check the solenoid chain's resistance.
   a. Remove the J1B connector from the ECU.
   b. For on-highway transmissions, connect ohmmeter leads to J1B terminals 3M and 3T. Latching solenoid chain resistance should be between 36 and 80 ohms (three speed models), 45 and 100 ohms (four speed models) or 54 and 120 ohms (five speed models).
   c. For off-highway transmissions, connect ohmmeter leads to J1B terminals 3M and 3T. Solenoid chain resistance should be between 48 and 96 ohms (lock-in-range models) or 60 and 120 ohms (lock-in-neutral models).

If readings are correct, proceed to Troubleshooting Step 4.

2. If resistance readings are incorrect, check the chassis wiring harness.
   a. Remove the J1B connector from the ECU, and remove the bulkhead connector from the transmission.
   b. For on-highway transmissions, check wires 111, 114, 110, 120, 105 (if used), 115 (if used) and 121 for opens, shorts to each other, shorts to other wires and shorts to ground.
   c. For off-highway transmissions, check wires 115, 116 (if used), 109, 117, 114 and 108 for opens, shorts to each other, shorts to other wires and shorts to ground.

Isolate and repair problems as needed.

COPYRIGHT 1994 GENERAL MOTORS CORP.

TROUBLE CODE 54 - LATCHING SOLENOID CHAIN

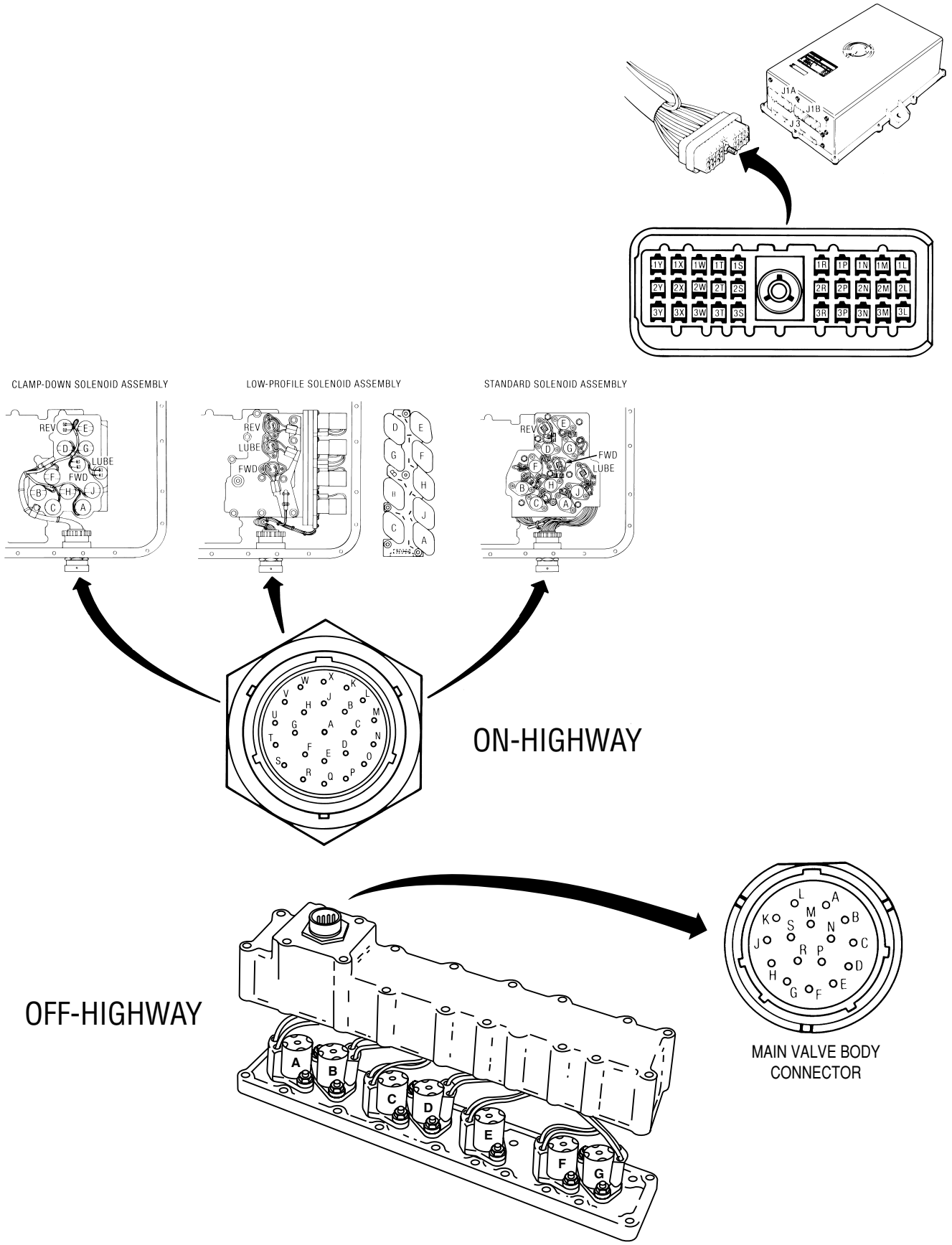

COPYRIGHT 1994 GENERAL MOTORS CORP.

TROUBLE CODE 54 - LATCHING SOLENOID CHAIN

3. If the chassis wiring harness is okay, check the internal components and circuits.
   a. For on-highway transmissions, check resistance between bulkhead terminals D and C. Resistance should be between 36 and 80 ohms (three speed models), 45 and 100 ohms (four speed models) or 54 and 120 ohms (five speed models).
   b. For off-highway transmissions, check resistance between bulkhead terminals A and K. Resistance should be between 48 and 96 ohms (lock-in-range models) or 60 and 120 ohms (lock-in-neutral models).
   c. If resistance readings are incorrect, determine whether the problem is in the internal wiring harness or the solenoids.
      1) Check each solenoid and related internal wiring circuit by following Troubleshooting Steps for Codes 41, 42, 43, 44, 45 and 46. Isolate and repair problems as needed.
4. If the solenoid chain's resistance is okay, check individual solenoids and circuits for problems.
   a. Refer to Troubleshooting Steps for Codes 41, 42, 43, 44, 45 and 46. Isolate and repair problems as needed.
5. If the solenoid chain's resistance is okay, and individual solenoid circuits are okay, replace the ECU. If replacing the ECU fixes the problem, verify the old ECU is "bad" by reinstalling it, road testing the vehicle, and checking for codes.

COPYRIGHT 1994 GENERAL MOTORS CORP.

TROUBLE CODES 61 AND 63 - G SOLENOID (OFF-HIGHWAY ONLY)

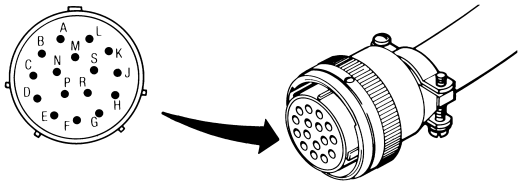

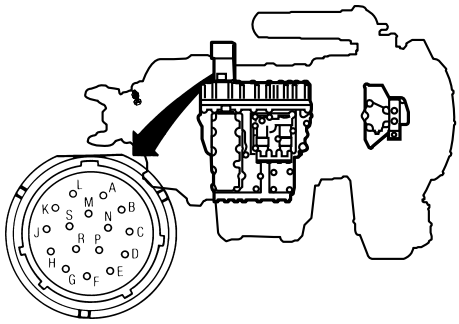

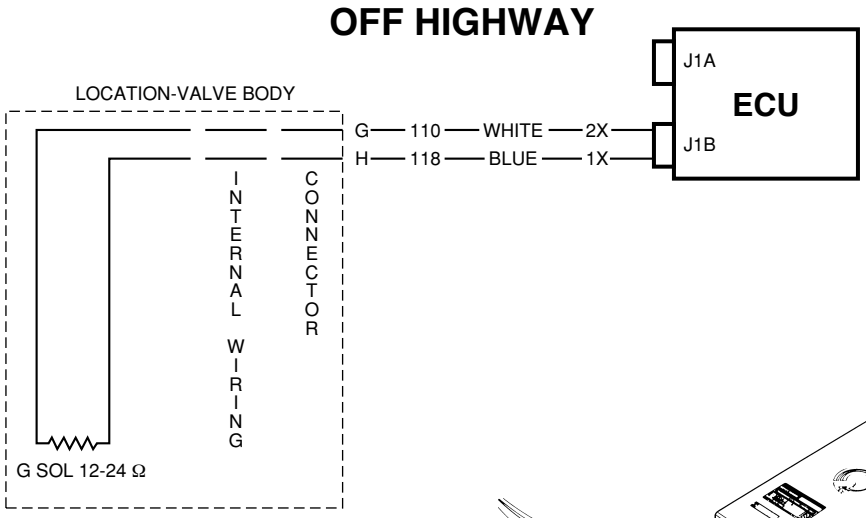

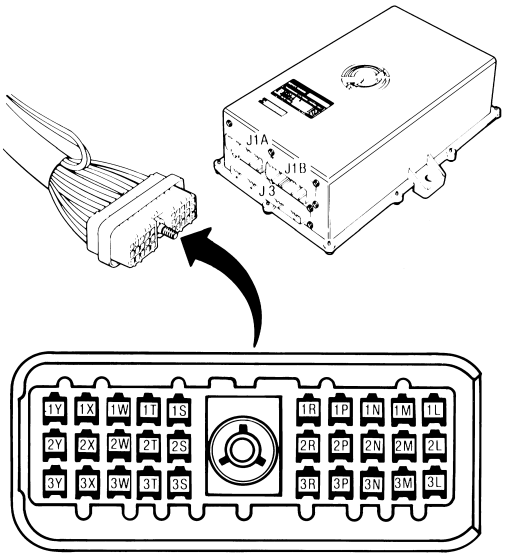

COPYRIGHT 1994 GENERAL MOTORS CORP.

TROUBLE CODES 61 AND 63 - G SOLENOID (OFF-HIGHWAY ONLY)

This code means that the ECU has received improper signals from the G solenoid circuit. Solenoid G controls the flow of main pressure under the splitter shift valve during lock-in-range electrical failure.

Some potential causes include:

- Opens or shorts in chassis harness wires 110 and 118.
- Opens or shorts in electro-hydraulic valve body circuit between terminals G and H.
- Faulty solenoid.
- Faulty ECU.

TROUBLESHOOTING STEPS

1. Check the solenoid circuit's resistance.
   a. Remove the J1B connector from the ECU.
   b. Connect ohmmeter leads to J1B terminals 2X and 1X. Solenoid circuit resistance should be between 12 and 24 ohms.

If readings are correct, proceed to Troubleshooting Step 4.

2. If resistance readings are incorrect, check the chassis wiring harness.
   a. Remove the J1B connector from the ECU, and remove the bulkhead connector from the transmission.
   b. Check wires 110 and 118 for opens, shorts to each other, shorts to other wires and shorts to ground.

Isolate and repair problems as needed.

3. If the chassis wiring harness is okay, check the internal components and circuits.
   a. Check resistance between bulkhead terminals G and H. Resistance should be between 12 and 24 ohms.
   b. If resistance readings are incorrect, determine whether the problem is in the internal wiring harness or the solenoid.
      1) Remove the electrical connector from solenoid G.
      2) Use an ohmmeter to check the solenoid's internal resistance.
      3) If solenoid resistance is incorrect, replace the solenoid.
      4) If solenoid resistance is okay (12-24 ohms), check the solenoid circuit's internal wiring harness wires for opens, shorts to each other, shorts to other wires and shorts to ground. Isolate and repair problems as needed.

COPYRIGHT 1994 GENERAL MOTORS CORP.

TROUBLE CODES 61 AND 63 - G SOLENOID (OFF-HIGHWAY ONLY)

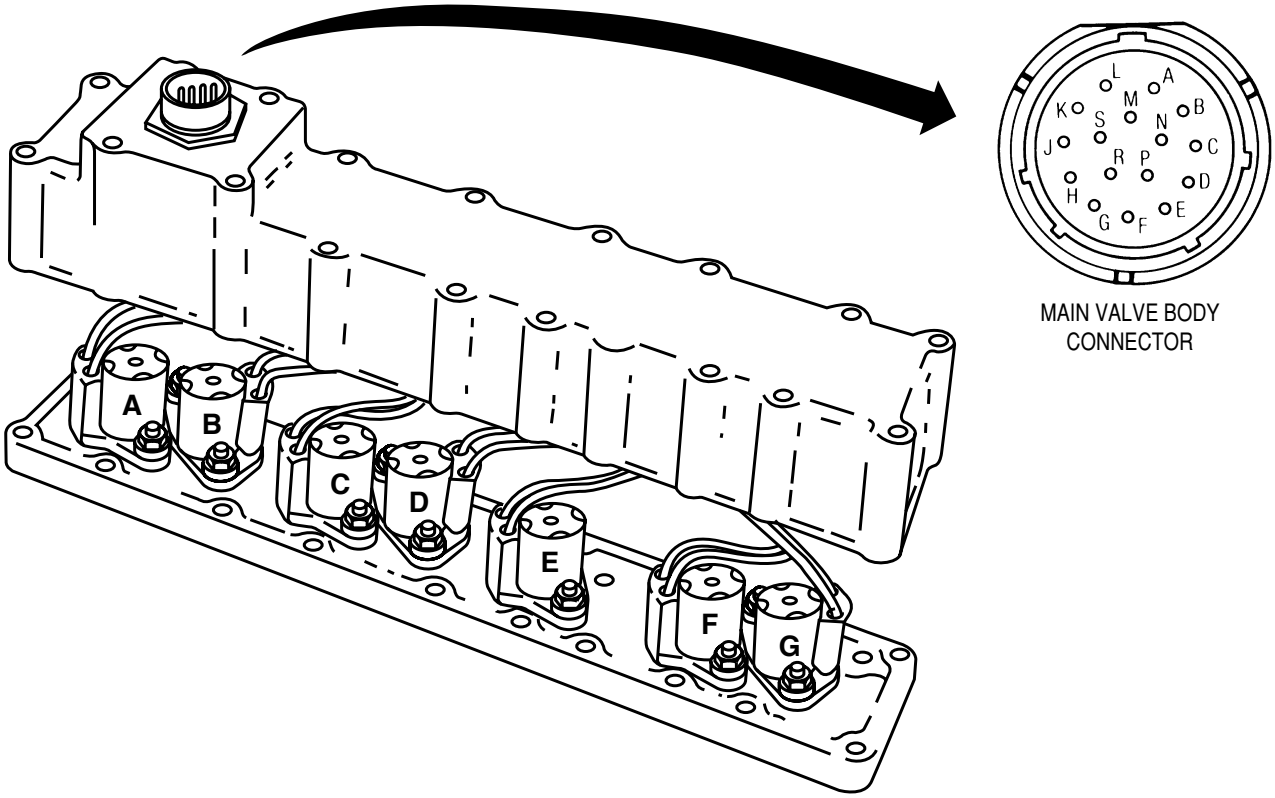

COPYRIGHT 1994 GENERAL MOTORS CORP.

TROUBLE CODES 61 AND 63 - G SOLENOID (OFF-HIGHWAY ONLY)

4. If the solenoid's circuit resistance, chassis wiring harness and internal wiring harness and components are okay, replace the ECU. If replacing the ECU fixes the problem, verify the old ECU is "bad" by reinstalling it, road testing the vehicle, and checking for codes.

COPYRIGHT 1994 GENERAL MOTORS CORP.

TROUBLE CODE 62 - F SOLENOID (OFF-HIGHWAY ONLY)

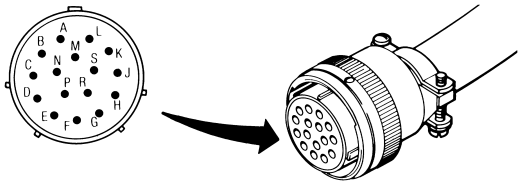

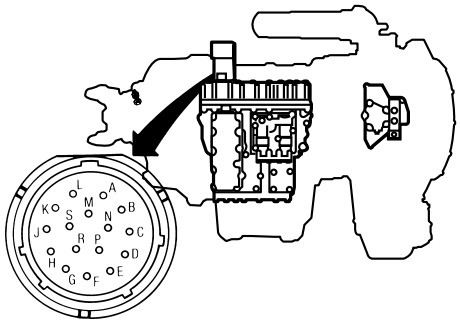

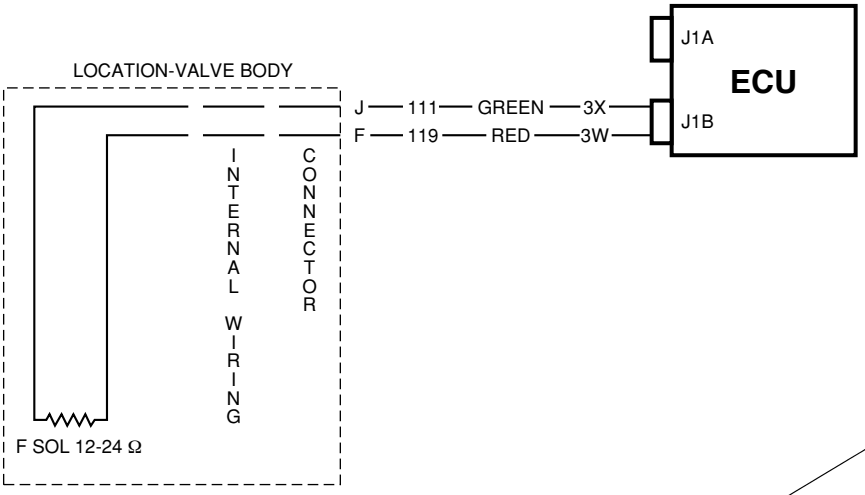

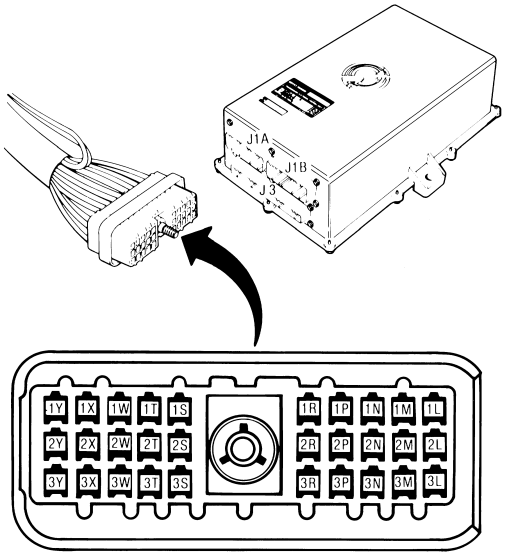

COPYRIGHT 1994 GENERAL MOTORS CORP.

TROUBLE CODE 62 - F SOLENOID (OFF-HIGHWAY ONLY)

This code means that the ECU has received improper signals from the F solenoid circuit. Solenoid F controls the splitter shift valve.

Some potential causes include:

- Opens or shorts in chassis harness wires 111 and 119.
- Opens or shorts in electro-hydraulic valve body circuit between terminals J and F.
- Faulty solenoid.
- Faulty ECU.

TROUBLESHOOTING STEPS

1. Check the solenoid circuit's resistance.
   a. Remove the J1B connector from the ECU.
   b. Connect ohmmeter leads to J1B terminals 3X and 3W. Solenoid circuit resistance should be between 12 and 24 ohms.

If readings are correct, proceed to Troubleshooting Step 4.

2. If resistance readings are incorrect, check the chassis wiring harness.
   a. Remove the J1B connector from the ECU, and remove the bulkhead connector from the transmission.
   b. Check wires 111 and 119 for opens, shorts to each other, shorts to other wires and shorts to ground.

Isolate and repair problems as needed.

3. If the chassis wiring harness is okay, check the internal components and circuits.
   a. Check resistance between bulkhead terminals J and F. Resistance should be between 12 and 24 ohms.
   b. If resistance readings are incorrect, determine whether the problem is in the internal wiring harness or the solenoid.
      1) Remove the electrical connector from solenoid F.
      2) Use an ohmmeter to check the solenoid's internal resistance.
      3) If solenoid resistance is incorrect, replace the solenoid.
      4) If solenoid resistance is okay (12-24 ohms), check the solenoid circuit's internal wiring harness wires for opens, shorts to each other, shorts to other wires and shorts to ground. Isolate and repair problems as needed.

COPYRIGHT 1994 GENERAL MOTORS CORP.

TROUBLE CODE 62 - F SOLENOID (OFF-HIGHWAY ONLY)

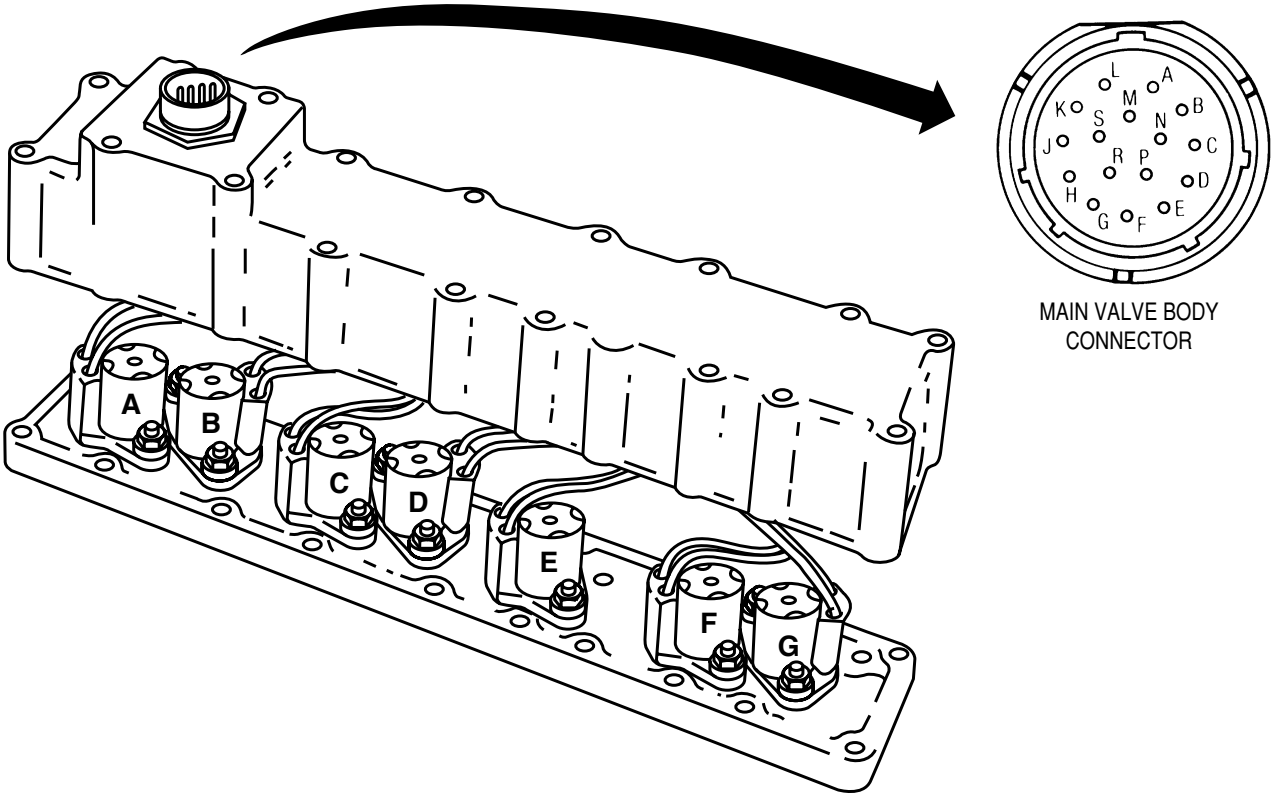

COPYRIGHT 1994 GENERAL MOTORS CORP.

TROUBLE CODE 62 - F SOLENOID (OFF-HIGHWAY ONLY)

4. If the solenoid's circuit resistance, chassis wiring harness and internal wiring harness and components are okay, replace the ECU. If replacing the ECU fixes the problem, verify the old ECU is "bad" by reinstalling it, road testing the vehicle, and checking for codes.

COPYRIGHT 1994 GENERAL MOTORS CORP.

TROUBLE CODE 66 - TRANSMISSION ENGINE COMMUNICATION LINK (TECL)

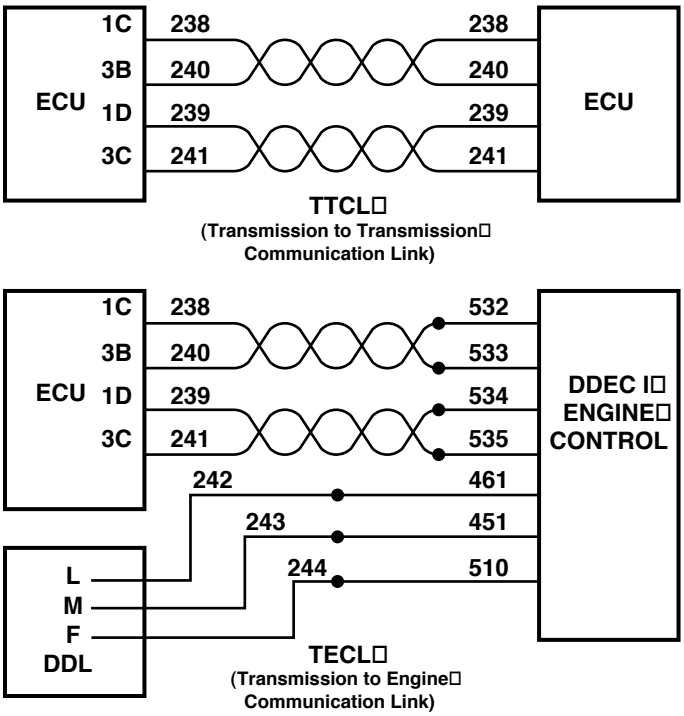

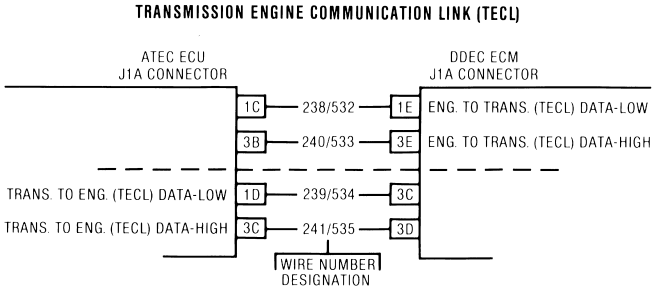

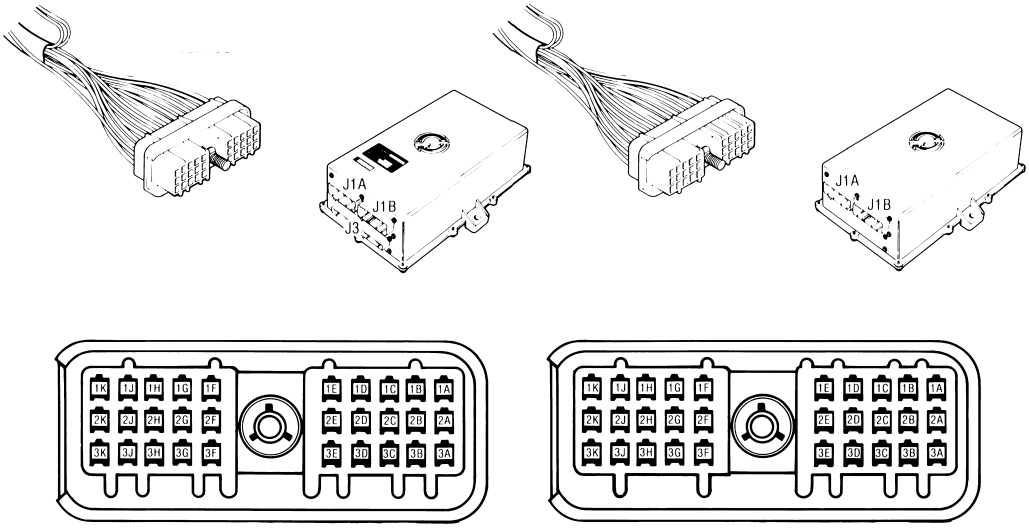

COPYRIGHT 1994 GENERAL MOTORS CORP.

TROUBLE CODE 66 - TRANSMISSION ENGINE COMMUNICATION LINK (TECL)

This code means that the ECU senses a circuit problem with the Bi-Directional Communication Link (BDCL) or Transmission/Engine Communication Link (TECL). BDCL lets two ECUs communicate, and TECL lets the Electronic Control's ECU communicate with DDEC. Before troubleshooting the Electronic Control, verify proper DDEC computer operation (if applicable).

Some potential causes include:

- Improper DDEC computer operation.
- Improper interface connections, opens or shorts in cab harness wires 238, 239, 240, 241, 242, 243 and 244.
- Improper interface connections at TECL/DDEC wires 532, 533, 534, 535, 461, 451 and 510.
- Wrong PROM for the application.
- Faulty ECU.

NOTE: This code is sometimes logged when a Diagnostic Data Reader (DDR) is plugged into the Diagnostic Data Link (DDL). In this instance, no BDCL or TECL problems exist, but the code should be manually cleared using the diagnostic switch.

TROUBLESHOOTING STEPS

1. Remove the cab harness connector (J1A) from the ECU.
   a. If BDCL, remove cab harness connectors from both ECUs.
   b. If TECL, remove the DDEC computer connector that contains the TECL interface wires.
2. Check the cab harness.
   a. For BDCL, check cab harness wires 238, 239, 240 and 241 for opens, shorts to each other, shorts to other wires and shorts to ground.
      1) Make sure wires 238 and 240 are in a twisted pair.
      2) Make sure wires 239 and 241 are in a twisted pair.
   b. For TECL, check cab harness wires 238, 239, 240, 241, 242, 243 and 244 for opens, shorts to each other, shorts to other wires and shorts to ground.
      1) Make sure wires 238 and 240 are in a twisted pair.
      2) Make sure wires 239 and 241 are in a twisted pair.
      3) Check for proper interface connections between the TECL wires and DDEC wires 532, 533, 534, 535, 461, 451 and 510.
         a) If necessary, check wires 532, 533, 534, 535, 461, 451 and 510 for opens, shorts to each other, shorts to other wires and shorts to ground.

Isolate and repair problems as needed.

COPYRIGHT 1994 GENERAL MOTORS CORP.

TROUBLE CODE 66 - TRANSMISSION ENGINE COMMUNICATION LINK (TECL)

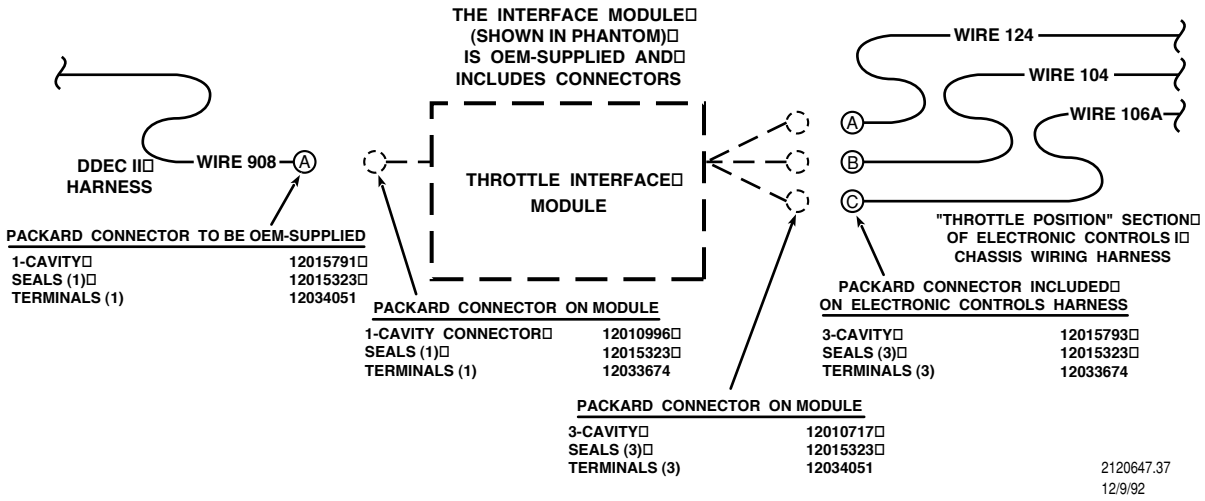

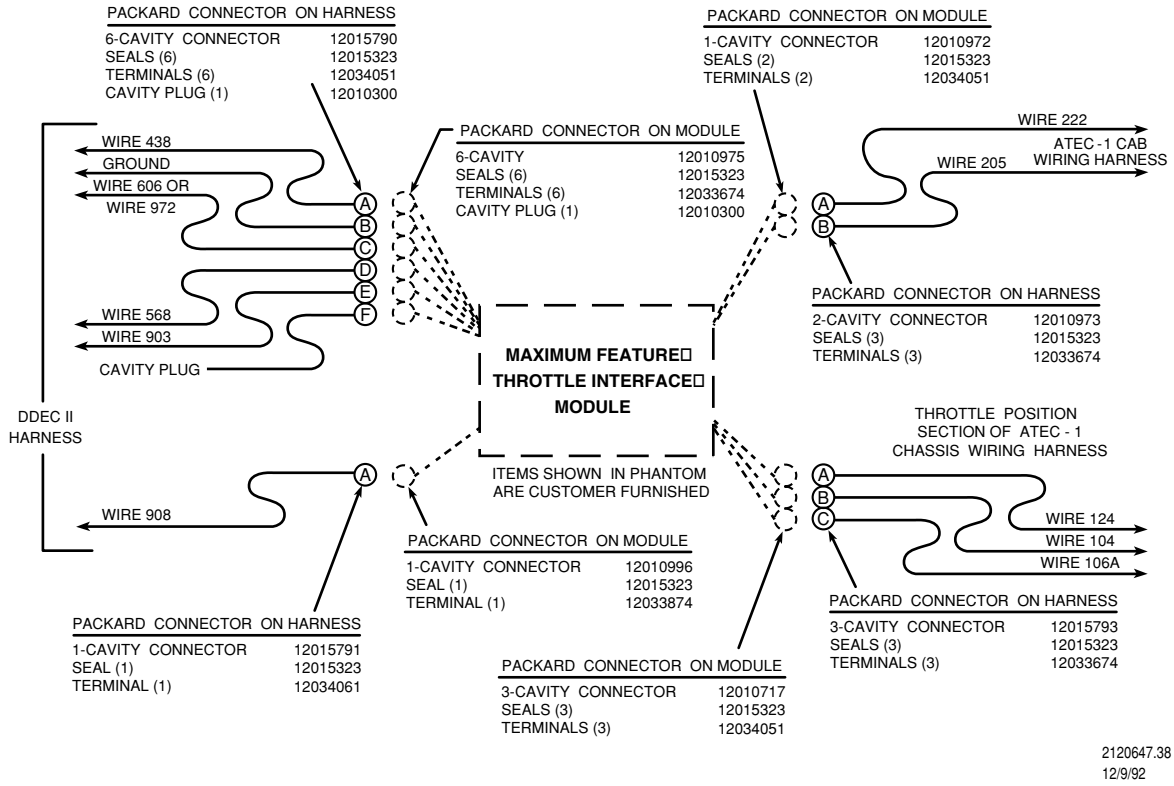

COPYRIGHT 1994 GENERAL MOTORS CORP.

TROUBLE CODE 66 - TRANSMISSION ENGINE COMMUNICATION LINK (TECL)

3. If the cab wiring harness, interface connections and DDEC harness (if applicable) are okay, replace the ECU. If replacing the ECU fixes the problem, verify the old ECU is “bad” by reinstalling it, road testing the vehicle, and checking for codes.

TROUBLE CODE 69 - ECU

This code means that the ECU self-diagnostic system has detected a problem with the ECU itself. If an abnormal condition is sensed by the ECU, the computer turns itself off. The Check Transmission and Do Not Shift lights come on and all shifts are blocked.

A potential cause includes:

- Improper vehicle interface connections.
- Improper ECU mounting.
- Faulty ECU.

TROUBLESHOOTING STEPS

1. Check the ECU for proper mounting.
   a. Connectors should be clean, secure and undamaged.
   b. The ECU should be mounted in a well-ventilated area protected from direct exposure to weather, cleaning sprays, high concentrations of dust and sunlight.
   c. The ECU should not be exposed to water (road splash, etc.).
   d. The ECU should be mounted with its connectors “down” to avoid direct moisture contact on the connectors.

Make corrections to ECU mounting provisions as needed before replacing the ECU.

2. Replace the ECU. If replacing the ECU fixes the problem, verify the old ECU is “bad” by reinstalling it, road testing the vehicle, and checking for codes.

COPYRIGHT 1994 GENERAL MOTORS CORP.

APPENDIX B — TROUBLESHOOTING STEPS - NO TROUBLE CODES

The following pages include detailed troubleshooting information used when trouble codes are not present. A thorough understanding of electronic control components and operation is necessary for successful troubleshooting.

NOTE: Refer to sections 1 through 7 in this manual for important, detailed operational and preliminary troubleshooting information.

Troubleshooting steps are divided into three general categories:

- Electronic Complaints
- Hydraulic Complaints
- Output Retarder Complaints

Use these steps plus the appropriate Service Manual and Parts Catalog to diagnose and repair problems that do not create trouble codes.

COPYRIGHT 1994 GENERAL MOTORS CORP.

CUSTOMER COMPLAINT INDEX

Electronic Complaints

Chart *Page*

1. No CHECK TRANS Light At Ignition B-3
2. DO NOT SHIFT Light Will Not Go Out At Startup B-4
3. CHECK TRANS Light Only - Will Not Go Out At Startup B-5
4. CHECK TRANS Light Goes Out Only When Drive Is Selected At Startup B-6
5. Transmission Will Not Shift To Forward Or Reverse B-7
6. Vehicle Will Not Start (Will Not Crank) B-8
7. Transmission Does Not Shift Properly (Rough Shifts, Late Shifts, Early Shifts, Etc.) B-9
8. Transmission Will Not Make A Specific Shift B-10
9. CHECK TRANS Light Flashes But No Code Present B-11
10. Transmission Will Not Stay In Forward Or Reverse B-12

Hydraulic Complaints

1. Abnormal Automatic Shifts (Rough Shifts, Late Shifts, Early Shifts, Etc.) B-13
2. Abnormal Activities Or Responses B-14
3. Abnormal Stall Speeds B-15
4. Leaking Oil (Output Shaft) B-16
5. Low Pressures B-17
6. Slippage (General) B-18
7. Excessive Flair (Engine Overspeed On Full Throttle Shifts) B-19
8. Overheating In All Ranges B-20
9. Transmission Throws Oil Out Of Fill Tube/Breather B-21
10. Dirty Oil B-22
11. Noise Occurring Intermittently (Buzzing) B-23
12. Vehicle Will Not Push Start B-24

Retarder Complaints

1. Excessive Retarder Response Time B-25
2. Poor Or No Retarder Performance B-26
3. Oil Spewing B-27
4. Transmission Oil Light Illuminated B-28
5. Excessive Retarder Capacity B-29
6. Retarder Not Releasing B-30
7. Harsh Retarder Apply B-31

COPYRIGHT 1994 GENERAL MOTORS CORP.

ELECTRONIC COMPLAINT - CHART 1

PROBLEM	PROBABLE CAUSE	SUGGESTED REMEDY
No CHECK TRANS Light At Ignition	Faulty light bulb	Replace light bulb
	Faulty relay	Replace relay
	Incorrect power to relay	Check power line from ignition switch to relay and repair
	Faulty cab wiring harness	Check wiring between ECU and CHECK TRANS light, and repair where necessary
	Faulty ECU	Replace ECU

COPYRIGHT 1994 GENERAL MOTORS CORP.

ELECTRONIC COMPLAINT - CHART 2

PROBLEM	PROBABLE CAUSE	SUGGESTED REMEDY
DO NOT SHIFT Light Will Not Go Out At Startup		
A. Vehicle Drives Normally	Percent throttle is too high	Adjust throttle position sensor. If necessary, troubleshoot Code 21
	Faulty shift selector	Troubleshoot Codes 23, 31
	Faulty ECU	Replace ECU
	Faulty power relay	Replace relay
	Faulty cab harness	Repair cab harness
B. Vehicle Does Not Drive	Faulty wiring	Repair wiring
	Oil temperature too low	Troubleshoot Codes 24 and 33
	Faulty ECU	Replace ECU

COPYRIGHT 1994 GENERAL MOTORS CORP.

ELECTRONIC COMPLAINT - CHART 3

PROBLEM		PROBABLE CAUSE	SUGGESTED REMEDY
CHECK TRANS Light Only - Will Not Go Out At Startup (DO NOT SHIFT Light Is Out)			
A.	Vehicle Drives Normally	Faulty CHECK TRANS relay	Replace relay
		Faulty cab harness	Repair harness
		Incorrect wiring to CHECK TRANS light	Repair wiring
		Faulty ECU	Replace ECU
		Faulty engine pressure switch	Replace engine oil pressure switch
		Engine oil pressure low	Diagnose and repair cause of problem
B.	Vehicle Does Not Drive	Oil temperature too low	Troubleshoot Codes 24 and 33
		Faulty ECU	Replace ECU

COPYRIGHT 1994 GENERAL MOTORS CORP.

ELECTRONIC COMPLAINT - CHART 4

PROBLEM	PROBABLE CAUSE	SUGGESTED REMEDY
CHECK TRANS Light Goes Out Only When Drive Is Selected At Startup	Percent throttle is incorrect	Check throttle position sensor adjustment. If necessary, troubleshoot Code 21

COPYRIGHT 1994 GENERAL MOTORS CORP.

ELECTRONIC COMPLAINT - CHART 5

PROBLEM	PROBABLE CAUSE	SUGGESTED REMEDY
Transmission Will Not Shift To Forward Or Reverse (Stays In Neutral)	Extremely low oil level	Add oil to proper level
	Oil temperature too low	Troubleshoot Codes 24 and 33
	Voltage too low to ECU	Troubleshoot Code 13
	Faulty throttle position sensor	Troubleshoot Code 21
	Faulty shift selector	Troubleshoot Code 23
	Faulty bulkhead connector terminal connections	Check bulkhead connector for proper continuity between external and internal terminals
	Faulty wiring harnesses	Repair harnesses
	Faulty speed sensor	Troubleshoot Code 22
	Faulty H solenoid circuitry	Troubleshoot Codes 41 through 46
	Faulty F, D or J solenoid circuitry	Troubleshoot Codes 41 through 46
	Hydraulic problems	Refer to Hydraulic Complaint, Chart 2
	Faulty ECU	Replace ECU
	Special input wire 222 open and neutral range inhibit in PROM	Ground wire 222

COPYRIGHT 1994 GENERAL MOTORS CORP.

ELECTRONIC COMPLAINT - CHART 6

PROBLEM	PROBABLE CAUSE	SUGGESTED REMEDY
Vehicle Will Not Start (Will Not Crank)	Dead battery	Recharge battery
	Voltage to shift selector too low	Troubleshoot Code 23
	Faulty starter circuit	Repair vehicle starter circuit
	Faulty neutral start relay	Replace neutral start relay
	Faulty wiring in neutral start circuit	Repair wiring
	Faulty engine oil pressure switch	Check/replace engine oil pressure switch
	Faulty shift selector	Troubleshoot Code 23

COPYRIGHT 1994 GENERAL MOTORS CORP.

ELECTRONIC COMPLAINT - CHART 7

PROBLEM	PROBABLE CAUSE	SUGGESTED REMEDY
Transmission Does Not Shift Properly (Rough Shifts, Late Shifts, Early Shifts, Etc.)	Faulty throttle position sensor circuitry	Troubleshoot Code 21
	Faulty speed sensor circuitry	Troubleshoot Code 22
	Incorrect PROM	Check PROM part number and replace. Troubleshoot Code 34
	Faulty trim boost E solenoid circuitry	Troubleshoot Code 52
	Intermittent problems	Check bulkhead connector and related circuitry for proper continuity
	Crossed wires in harness	Check and repair chassis harness as needed

COPYRIGHT 1994 GENERAL MOTORS CORP.

ELECTRONIC COMPLAINT - CHART 8

PROBLEM	PROBABLE CAUSE	SUGGESTED REMEDY
Transmission Will Not Make A Specific Shift	Extremely low oil level	Add oil to proper level
	Extreme oil temperature	Troubleshoot Codes 24 and 33
	Faulty C solenoid circuitry	Troubleshoot Codes 41 through 46
	Faulty speed sensor circuitry	Troubleshoot Code 22
	Faulty shift selector circuitry	Troubleshoot Code 23
	Hydraulic problem	Refer to Hydraulic Complaint - Chart 2
	Faulty ECU	Replace ECU

COPYRIGHT 1994 GENERAL MOTORS CORP.

ELECTRONIC COMPLAINT - CHART 9

PROBLEM	PROBABLE CAUSE	SUGGESTED REMEDY
CHECK TRANS Light Flashes But No Code Present	Intermittent power to ECU	Check input power to ECU and correct if necessary
	Loose CHECK TRANS relay	Replace CHECK TRANS relay
	Loose wiring to CHECK TRANS light	Repair wiring
	Faulty or incorrect ground wire attachment	Repair ground circuit

COPYRIGHT 1994 GENERAL MOTORS CORP.

ELECTRONIC COMPLAINT - CHART 10

PROBLEM	PROBABLE CAUSE	SUGGESTED REMEDY
Transmission Will Not Stay In Forward Or Reverse (This May Be Normal System Response To Code 14 or 15)	Pressure switch faulty	Replace pressure switch
	Leaking at solenoid assembly	Rebuild solenoid assembly
	Faulty solenoid - leaking	Replace solenoid

COPYRIGHT 1994 GENERAL MOTORS CORP.

HYDRAULIC COMPLAINT - CHART 1

PROBLEM	PROBABLE CAUSE	SUGGESTED REMEDY
Abnormal Automatic Shifts (Rough Shifting, Late Shifts, Early Shifts)	Control valve sticking	Overhaul valve body assembly
	Trimmer valves sticking	Overhaul valve body assembly
	Trim boost regulator sticking	Overhaul valve body assembly
	Engine idle speed too fast (N to D)	Adjust engine idle (refer to vehicle service manual)
	Electronic problems	Refer to Electronic Complaint - Chart 7

COPYRIGHT 1994 GENERAL MOTORS CORP.

HYDRAULIC COMPLAINT - CHART 2

PROBLEM	PROBABLE CAUSE	SUGGESTED REMEDY
Abnormal Activities Or Responses		
A. Excessive Creep In First And Reverse Ranges	Engine idle speed too high	Adjust to correct idle speed (refer to vehicle service manual)
B. No Response To Shift Selector	Main pressure low	Refer to Hydraulic Complaint - Chart 5
	Low oil level	Fill to proper level
	Valves sticking	Overhaul valve body assembly
	Electronic problem	Refer to Electronic Complaint - Chart 5
C. Vehicle Moves Forward In Neutral	Forward clutch failed, dragging, or not released	Rebuild forward clutch (refer to transmission service manual)
D. Vehicle Moves Backward In Neutral	Fourth clutch failed, dragging, or not released	Rebuild fourth clutch (refer to transmission service manual)

COPYRIGHT 1994 GENERAL MOTORS CORP.

HYDRAULIC COMPLAINT - CHART 3

PROBLEM	PROBABLE CAUSE	SUGGESTED REMEDY
Abnormal Stall Speeds		
A. High Stall Speeds	Low oil level	Add oil to proper level
	Clutch pressure low	Refer to Hydraulic Complaint - Chart 5
	Forward clutch slipping (forward)	Rebuild forward clutch (refer to transmission service manual)
	First clutch slipping	Rebuild first clutch
	Fourth clutch slipping (reverse)	Rebuild fourth clutch
B. Low Stall Speeds	Engine not performing efficiently (plugged injectors, high altitude, dirty filters, etc.)	Refer to engine or vehicle service manual
	Lockup clutch partially applied	Rebuild lockup clutch
	Torque converter	Replace or rebuild converter
	Stall speeds of 66% of normal implies freewheeling stator	Replace or rebuild converter
	Incorrect converter	Replace converter
	Transmission too hot	Inspect cooling system components and check oil level
	Higher power engine	Confirm proper engine match

COPYRIGHT 1994 GENERAL MOTORS CORP.

HYDRAULIC COMPLAINT - CHART 4

PROBLEM	PROBABLE CAUSE	SUGGESTED REMEDY
Leaking Oil (Output Shaft)	Faulty or missing seal at output flange	Install new lip-type seal in rear of transmission housing (refer to appropriate service manual)
	Flange worn at seal surface	Replace flange
	Insufficient sealant around seal O.D.	When replacing seal, apply sufficient sealant

COPYRIGHT 1994 GENERAL MOTORS CORP.

HYDRAULIC COMPLAINT - CHART 5

PROBLEM	PROBABLE CAUSE	SUGGESTED REMEDY
Low Pressures		
A. Low Main Pressure In All Ranges	Low oil level	Add oil to proper level
	Oil filter element clogged or faulty	Replace oil filter
	Sealring on oil suction tube leaking or missing	Install new oil filter pickup tube sealring and lubricate the sealring with the same oil as used to refill the transmission
	Valves sticking (trimmers, relays, and main pressure regulator)	Overhaul valve body assembly
	Main pressure regulator valve spring weak	Check spring and replace if necessary
	Control valve body leakage	Replace or rebuild control valve body assembly. Take care when removing and labeling shift springs
	Oil pump worn or damaged	Replace or rebuild oil pump
	Missing priority valve	Replace missing valve
	Incorrect main valve	Replace incorrect valve
B. Low Main Pressure In First Gear, Normal Pressure In Other Forward Ranges	First range circuit of control valve body leaking	Replace or rebuild control valve body
	Excessive leakage at first clutch piston seals	Overhaul transmission; replace seals
C. Low Lubrication Pressure	Low oil level	Refer to Item A, first Suggested Remedy
	Engine idle speed too low	Refer to vehicle service manual
	Excessive internal oil leakage	Check other pressures (above items); also check valve body mounting bolts; lubrication valve seat and spring
	Cooler lines restricted or leaking	Check for kinks, leakage; reroute or replace lines as necessary
	Lubrication valve spring weak	Refer to Item A, sixth Suggested Remedy
	Lubrication valve not seating	Replace lubrication valve

COPYRIGHT 1994 GENERAL MOTORS CORP.

HYDRAULIC COMPLAINT - CHART 6

PROBLEM	PROBABLE CAUSE	SUGGESTED REMEDY
Slippage (General)		
A. Excessive Slippage And Clutch Chatter In Only One Range	Clutch slipping in that range	Overhaul the slipping clutch
	Excessive oil leakage in range piston seals	Overhaul clutch and piston assembly
	Oil leakage in valve components for that particular range	Overhaul control valve body assembly
	Trimmer stuck open	Check trimmer valve for free movement or broken sealring. Overhaul trimmer valve
	Cycling priority valves	Inspect priority valves
	Hydraulically failed solenoid	Overhaul solenoid assembly
B. Slippage In All Forward Ranges	Low oil level	Add oil to proper level
	Clutch main pressure low	See Low Pressures (Chart 5)
	Forward clutch slipping	Rebuild forward clutch (refer to transmission service manual)
	Sealrings on front bearing retainer broken	Replace sealrings
	Hydraulically failed solenoid	Overhaul solenoid assembly

COPYRIGHT 1994 GENERAL MOTORS CORP.

HYDRAULIC COMPLAINT - CHART 7

PROBLEM	PROBABLE CAUSE	SUGGESTED REMEDY
Excessive Flair -Engine Overspeed On Full Throttle Upshifts	Throttle sensor misadjusted	Adjust sensor; if necessary troubleshoot Code 21
	Sticking trimmers	Check trimmer valves and confirm correct springs
	Wrong trimmer springs	Refer to Item 2
	Malfunctioning trim boost circuit	Check trim boost circuitry
	Piston seals leaking or clutch plates slipping in range involved	Overhaul transmission (see applicable transmission service manual)
	Broken sealrings	Replace sealrings
	Forward clutch piston seals or clutch plates slipping (all upshifts)	Overhaul forward clutch and piston assembly

COPYRIGHT 1994 GENERAL MOTORS CORP.

HYDRAULIC COMPLAINT - CHART 8

PROBLEM	PROBABLE CAUSE	SUGGESTED REMEDY
Overheating In All Ranges	Aerated oil - oil too high or low	Adjust oil to proper level; check for defective sealring at suction tube; check for defective pump
	Oil cooler lines restricted/bypass valve stuck open	Remove restrictions, clean or replace lines (refer to vehicle service manual)
	Torque converter	Replace or repair converter assembly
	Cooler flow loss due to internal leakage	Overhaul transmission
	Engine overheat	Correct overheat situation (refer to vehicle service manual)

COPYRIGHT 1994 GENERAL MOTORS CORP.

HYDRAULIC COMPLAINT - CHART 9

PROBLEM	PROBABLE CAUSE	SUGGESTED REMEDY
Transmission Throws Oil Out Of Fill Tube And/Or Breather	Dipstick loose	Tighten cap. Replace if necessary
	Oil level too high	Drain to proper level
	Oil level too low	Add oil to proper level
	Fill tube not vented/plugged	Check for blockage and clean where necessary
	Breather stopped up (clogged)	Clean or replace breather
	Water in oil	Drain and replace oil
	Dipstick gasket worn	Replace gasket or dipstick
	Improper dipstick marking (high oil level)	Replace dipstick

COPYRIGHT 1994 GENERAL MOTORS CORP.

HYDRAULIC COMPLAINT - CHART 10

PROBLEM	PROBABLE CAUSE	SUGGESTED REMEDY
Dirty Oil	Failure to change oil at proper intervals	Change oil and install new filter
	Excessive heat	Refer to Overheating (Chart 8, Item 4)
	Clutch failure	Overhaul transmission
	Damaged oil filter	Replace oil filter
	Engine rear oil seal failed	Replace oil seal

COPYRIGHT 1994 GENERAL MOTORS CORP.

HYDRAULIC COMPLAINT - CHART 11

PROBLEM	PROBABLE CAUSE	SUGGESTED REMEDY
Noise Occurring Intermittently (Buzzing)	Low oil level	Add oil to proper level
	Air leak at oil suction tube (O-ring broken)	Replace oil suction tube seal and filter (refer to transmission service manual)
	Clogged filter	Replace filter
	Aerated oil	Improper oil level; improper or contaminated oil
	Hole in filter	Replace filter

COPYRIGHT 1994 GENERAL MOTORS CORP.

HYDRAULIC COMPLAINT - CHART 12

PROBLEM	PROBABLE CAUSE	SUGGESTED REMEDY
Vehicle Will Not Push Start	Normal operation (no rear push-start pump)	

COPYRIGHT 1994 GENERAL MOTORS CORP.

OUTPUT RETARDER COMPLAINT - CHART 1

PROBLEM	PROBABLE CAUSE	SUGGESTED REMEDY
Excessive Retarder Response Time	Low air pressure in supply tank	Repair supply tank as needed
	Faulty retarder apply air regulator	Repair or replace the regulator as needed
	Leaking or incorrectly sized air lines	Repair leak or install correctly sized lines
	Retarder control valve sticking	Clean or replace valve if damaged. Replace valve body if required
	Pressure regulator valve sticking	Refer to Item 4
	External check valve sticking	Clean or replace check valve assembly
	Charging valve sticking	Refer to Item 4
	Priority valve sticking	Refer to Item 4
	Clutch clearance excessive	Correct clutch clearance per service manual
	Clutch piston seals leaking	Replace leaking seals
	Accumulator piston seals leaking	Replace leaking seals

COPYRIGHT 1994 GENERAL MOTORS CORP.

OUTPUT RETARDER COMPLAINT - CHART 2

PROBLEM	PROBABLE CAUSE	SUGGESTED REMEDY
Poor Or No Retarder Performance	Vehicle retarder on-off switch off	Assure switch is working and on
	No/low air pressure in supply tank	Repair as needed
	Faulty retarder apply pressure regulator	Repair or replace air lines as needed
	Leaking retarder apply air line	Repair or replace air lines as needed
	Faulty retarder/ throttle interlock	Adjust/repair/replace as needed
	Leaking retarder control valve assembly air seal	Replace faulty seal
	Sticking retarder control valve	Clean or replace valve if damaged
	Sticking pressure regulator valve	Refer to Item 6
	Sticking charging valve	Refer to Item 6
	Faulty transmission governor	Service per service manual
	Incorrect clutch or charging valve springs	See parts catalog
	Sticking priority valve	Replace leaking seals
	Leaking clutch piston seals	Replace leaking seals
	Leaking accumulator seals	Replace leaking seals
	Leaking rotor hub seals	Replace leaking seals
	Low transmission main pressure	See Hydraulic Complaint - Chart 5

COPYRIGHT 1994 GENERAL MOTORS CORP.

OUTPUT RETARDER COMPLAINT - CHART 3

PROBLEM	PROBABLE CAUSE	SUGGESTED REMEDY
Oil Spewing	Incorrect oil level	Obtain correct oil level per service manual
	Breather clogged	Clean or replace breather cap assembly and ensure transmission internal breather passage is open
	Leaking retarder valve body air seal	Replace leaking seals
	Failed oil/water heat exchanger (this condition may be indicated by transmission fluid in the cooling fluid)	Repair as needed

COPYRIGHT 1994 GENERAL MOTORS CORP.

OUTPUT RETARDER COMPLAINT - CHART 4

PROBLEM	PROBABLE CAUSE	SUGGESTED REMEDY
Transmission Oil Light Illuminated	Incorrect oil level	Obtain correct oil level per service manual
	Faulty temperature sensor	Troubleshoot Code 33
	Faulty retarder air pressure regulator	Repair or replace as needed
	Sticking retarder control valve	Clean or replace valve. Replace valve body if needed
	Clogged heat exchanger	Disassemble and clean, recore, or replace
	Incorrect size oil/water heat exchanger	Check OEM recommendation
	Clutch clearance insufficient	Adjust clearance per service manual instructions

COPYRIGHT 1994 GENERAL MOTORS CORP.

OUTPUT RETARDER COMPLAINT - CHART 5

PROBLEM	PROBABLE CAUSE	SUGGESTED REMEDY
Excessive Retarder Capacity	Wrong pressure regulator valve spring	See parts catalog
	Pressure regulator valve plug installed backward	Install clutch valve plug per service manual
	Pressure regulator valve plug sticking	Clean or replace plug. Replace valve body if needed
	Pressure regulator valve sticking	Refer to Item 3
	Clutch clearance insufficient	Establish clutch clearance per service manual

COPYRIGHT 1994 GENERAL MOTORS CORP.

OUTPUT RETARDER COMPLAINT - CHART 6

PROBLEM	PROBABLE CAUSE	SUGGESTED REMEDY
Retarder Not Releasing	Faulty retarder air pressure regulator	Repair or replace regulator as needed
	Faulty retarder/throttle interlock	Adjust, repair or replace interlock components
	Sticking retarder control valve	Clean or replace valve. Replace valve body if required

COPYRIGHT 1994 GENERAL MOTORS CORP.

OUTPUT RETARDER COMPLAINT - CHART 7

PROBLEM	PROBABLE CAUSE	SUGGESTED REMEDY
Harsh Retarder Apply	Pressure regulator plug valve incorrectly installed or omitted	Install plug valve correctly (dimple on valve must be toward springs)
	Pressure regulator valve stuck	Clean or replace valve. Replace valve body if required

COPYRIGHT 1994 GENERAL MOTORS CORP.

COPYRIGHT 1994 GENERAL MOTORS CORP.

APPENDIX C — CONNECTOR, TERMINAL, AND WIRE REPAIR

Contents **Page**

Sealed ECU and Lever Shift Selector Connectors C-2

Bolt-Down Solenoid And Pressure Switch Connectors C-5

Diagnostic Data Link (DDL) Connectors C-7

Throttle Position Sensor And On-Highway Speed Sensor Connectors C-9

Push Button Shift Selector Connectors C-13

Transmission Bulkhead And Digital Display Unit (DDU) Connectors C-15

Transmission Engine Communication Link (TECL) Connectors C-17

Off-Highway Speed Sensor And Soldered Cannon Connectors C-19

Repairing A Broken Wire C-22

Repairing A Twisted Shielded Wire C-24

COPYRIGHT 1994 GENERAL MOTORS CORP.

SEALED ECU AND LEVER SHIFT SELECTOR CONNECTORS

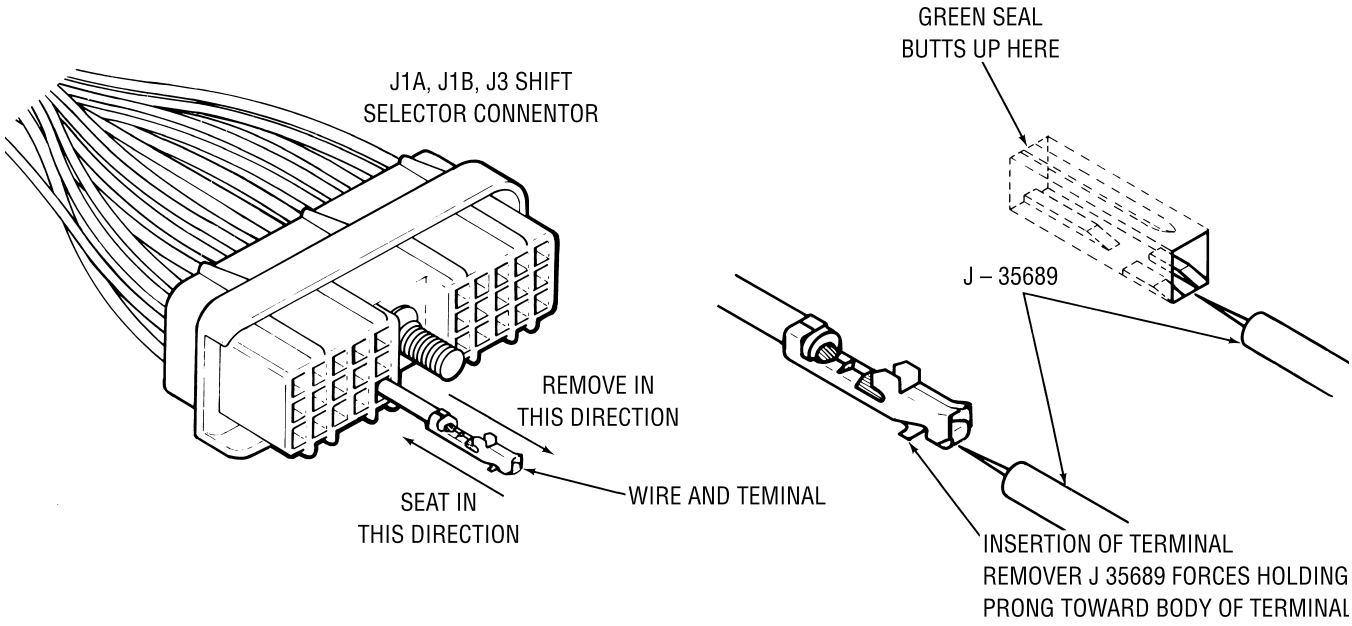

COPYRIGHT 1994 GENERAL MOTORS CORP.

SEALED ECU AND LEVER SHIFT SELECTOR CONNECTORS

Part Numbers

J1A Cab Harness Connector	12034404
J1B Chassis Harness Connector	12034406
J3 Secondary Harness Connector	12034390
Lever Shift Selector Connector	12040921
Terminal	12047680
Sealing Plug	12034413

Special Tools

Remover Tool	J35689
Crimper Tool	J35123

NOTE: These are "pull to seat" terminals. Do not solder crimps.

Procedures

A. Terminal Removal

1. Insert needle end of terminal remover J35689 into the small notch in the cavity of the terminal being removed. Move the holding prong toward the terminal.
2. Push the wire and terminal out of the connector (this is a pull to seat terminal).
3. Pull the terminal as far as necessary from the connector. This will be limited by the number of other wires inserted into the connector and by the distance between the back side of the connector and the beginning of the harness covering.
4. Remove the terminal by cutting the wire as close to the terminal as possible. This minimizes the amount of harness wire used during the repair.

B. Terminal Crimping

1. The wire should be pushed through the proper hole in the seal (green) and out the other side of the connector prior to stripping.
2. Strip approximately 0.148 to 0.167 inch (3.76 to 4.24 mm) insulation from the wire.
3. Push open the terminal holder on crimper tool J35123 and insert a terminal into the opening marked 18-16. Position the terminal so that the crimp ends point up. Release the terminal holder.

COPYRIGHT 1994 GENERAL MOTORS CORP.

SEALED ECU AND LEVER SHIFT SELECTOR CONNECTORS (CONT'D)

4. Slightly close the crimping tool until one click is heard. Do not start to crimp the terminal. Orient the terminal so it is in the same position as it will be when pulled back into the connector.
5. Insert the wire into the terminal until the wire hits the holder. This positions the wire and insulation for the crimp.
6. Squeeze the crimper fully until it opens when released.
7. Open the terminal holder and remove the wire and terminal from the crimping tool.
8. Pull on the terminal to assure the crimp is tight.
9. Position the terminal so that the holding prong aligns with the appropriate notch in the connector cavity.
10. Pull the wire and terminal completely into the cavity. A click should be heard and the terminal should stay in place if the wire is pushed.
11. Plug unused openings in the wire seal with sealing plug part number 12034413.

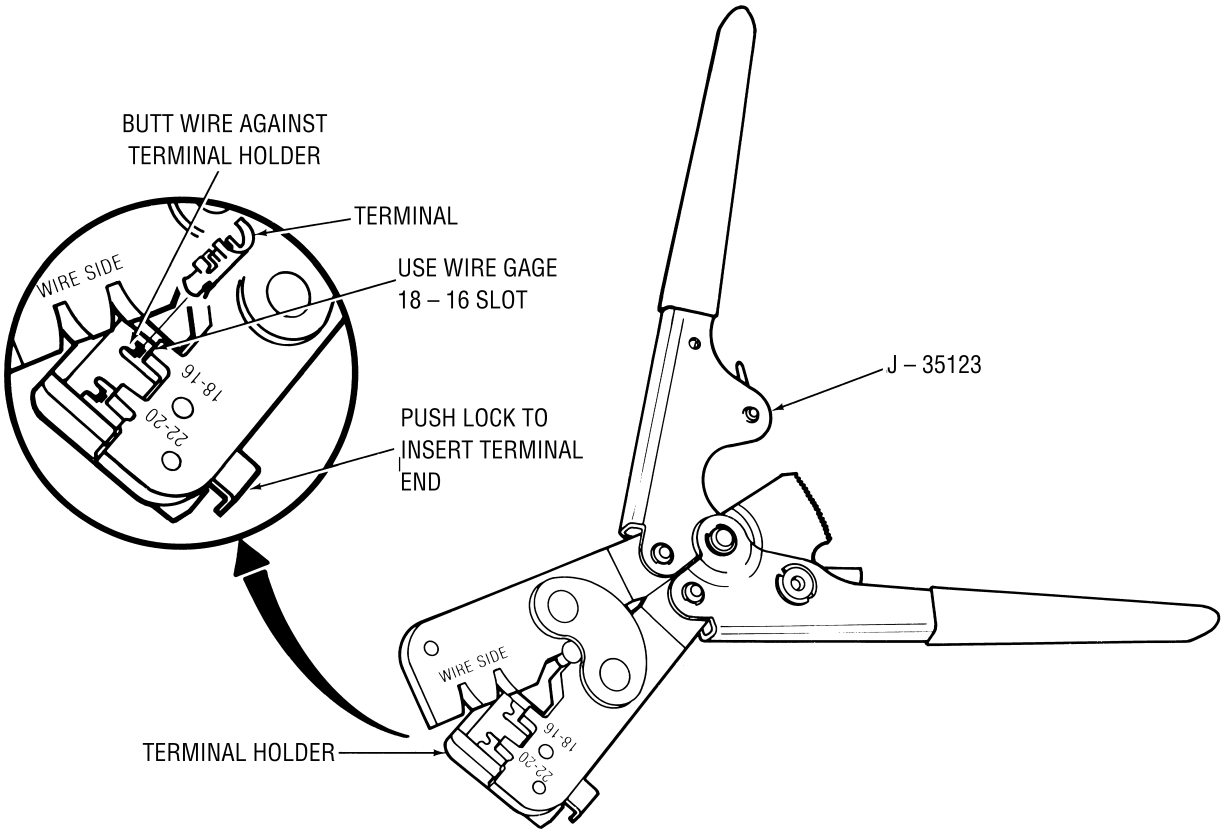

COPYRIGHT 1994 GENERAL MOTORS CORP.

BOLT-DOWN SOLENOID AND PRESSURE SWITCH CONNECTORS

Part Numbers

Latching Solenoid Connector	12059716
Non-Latching Solenoid Connector	12059718
Forward Pressure Switch Connector	12059717
Reverse Pressure Switch Connector	12059717
Lube Pressure Switch Connector	12059719
Terminal	12052410

Special Tools

Crimper Tool	J25563
Remover Tool	J33095

Procedures

A. Terminal Removal

1. Lift the secondary lock from the back end of the connector. Use a small screwdriver or pick in either slot of the secondary lock.

NOTE: Connector 12059717 does not allow access to the secondary lock slots. This connector cannot be serviced and must be replaced.

2. Insert remover tool J33095 into the front (open) end of the connector.
3. Push the terminal holding prong straight and pull the wire and terminal out the back end of the connector.

B. Terminal Crimping

1. Remove the terminal by cutting the wire as close to the terminal as possible. This minimizes the amount of harness wire used during the repair.
2. Strip approximately 0.226 to 0.246 inch (6.0 ± 0.25 mm) of insulation from the wire.
3. Insert the terminal into crimping tool J25563.
4. The “u” shaped portion of the tool should hold the flat area of the terminal. The “m” shaped portion of the tool should close around the open edge of the terminal. Use the small crimping area of the tool.
5. Insert wire so that the stripped portion is in the area to be crimped and the insulated portion is in the other crimping area.

COPYRIGHT 1994 GENERAL MOTORS CORP.

BOLT-DOWN SOLENOID AND PRESSURE SWITCH CONNECTORS (CONT'D)

6. Crimp the stripped section of wire.
7. Remove the terminal from the crimping tool.
8. Use a pair of needle nose pliers to start the bend on the terminal area that crimps around the insulation.
9. Crimp the insulated section of wire using the area behind the crimping tool pivot.
10. Remove the terminal from the crimping tool.
11. Tug on the terminal to assure the crimp is tight.
12. Insert the terminal into the connector with the holding prong toward the connector.
13. The terminal should click into place and not pull out.

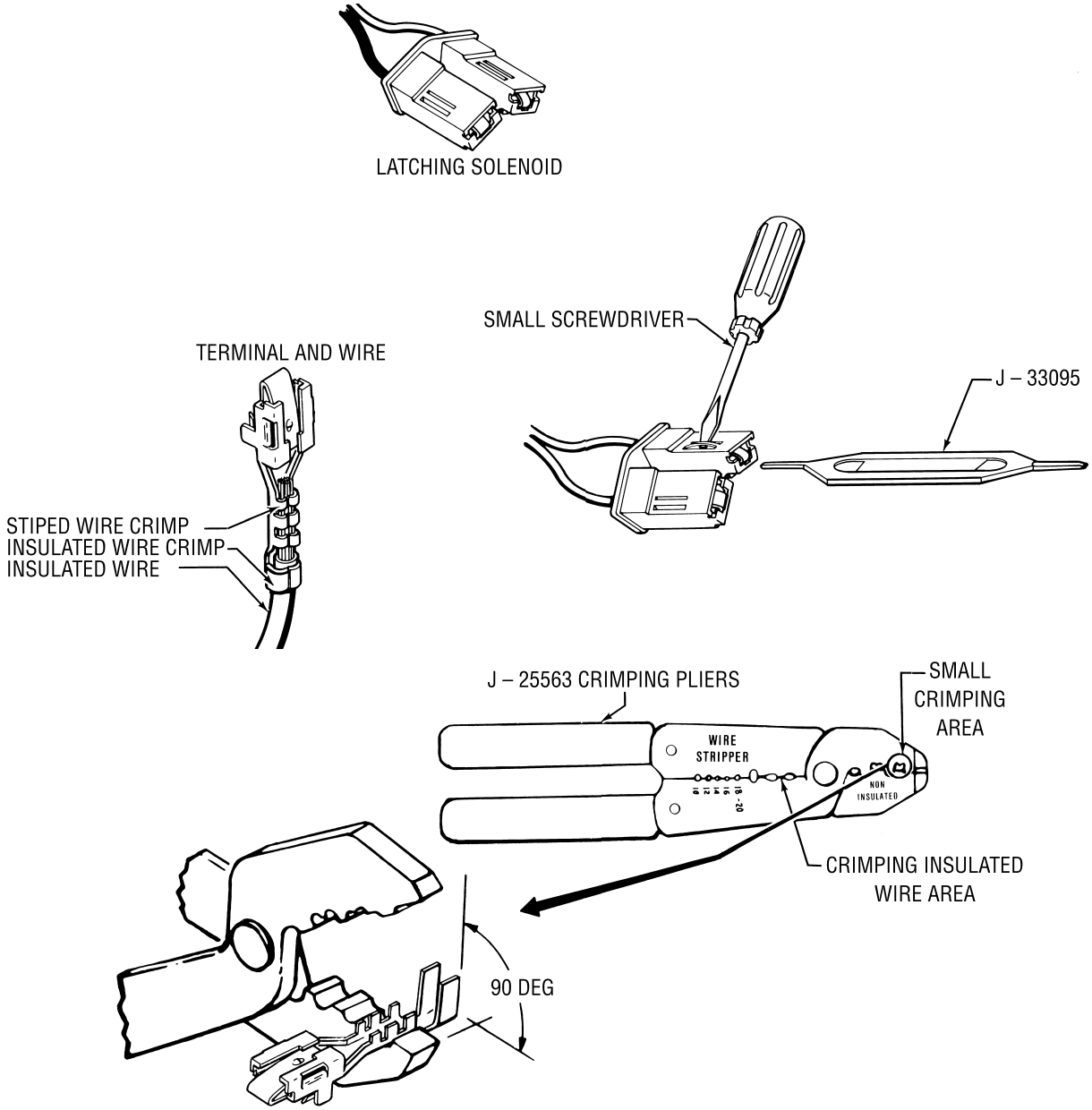

COPYRIGHT 1994 GENERAL MOTORS CORP.

DIAGNOSTIC DATA LINK (DDL) CONNECTOR

Part Numbers

DDL Connector	12020043
Terminal	12015823
Secondary Lock	12020219

Special Tools

Crimper Tool	J25563
Remover Tool	J33095

Procedures

A. Terminal Removal

1. Remove the secondary lock from the back end of the connector. Use a small screwdriver or pick in the slots on each side of the connector.
2. Insert remover tool J33095 into the front (open) end of the connector at the terminal being repaired.
3. Push the terminal holding prong straight and pull the wire and terminal out the back end of the connector. Cut the wire as close to the terminal as possible to minimize wire loss.

B. Terminal Crimping

1. Strip approximately 0.226 to 0.246 inch (6.0 ± 0.25 mm) of insulation from the end of the wire.
2. Insert the terminal into the crimping tool.
3. The “u” shaped portion of the tool should hold the flat area of the terminal. The “m” shaped portion of the tool should close around the open edge of the terminal. Use the small crimping area of the tool.
4. Slightly close the crimping tool to hold the terminal steady.
5. Insert the wire so that the stripped portion is in the area to be crimped and the insulated portion is in the other crimping area.
6. Crimp the stripped section of wire.
7. Remove the terminal from the crimping tool.

COPYRIGHT 1994 GENERAL MOTORS CORP.

DIAGNOSTIC DATA LINK (DDL) CONNECTOR (CONT'D)

8. Use a pair of needle nose pliers to start the crimp around the insulation.
9. Crimp the insulated section of wire using the area behind the crimping tool pivot.
10. Remove the terminal from the crimping tool.
11. Tug on the terminal to assure the crimp is tight.
12. Insert the terminal into the connector with the holding prong toward the center line of the connector.
13. The terminal should click into place and should not pull out.
14. Reinstall the secondary lock.

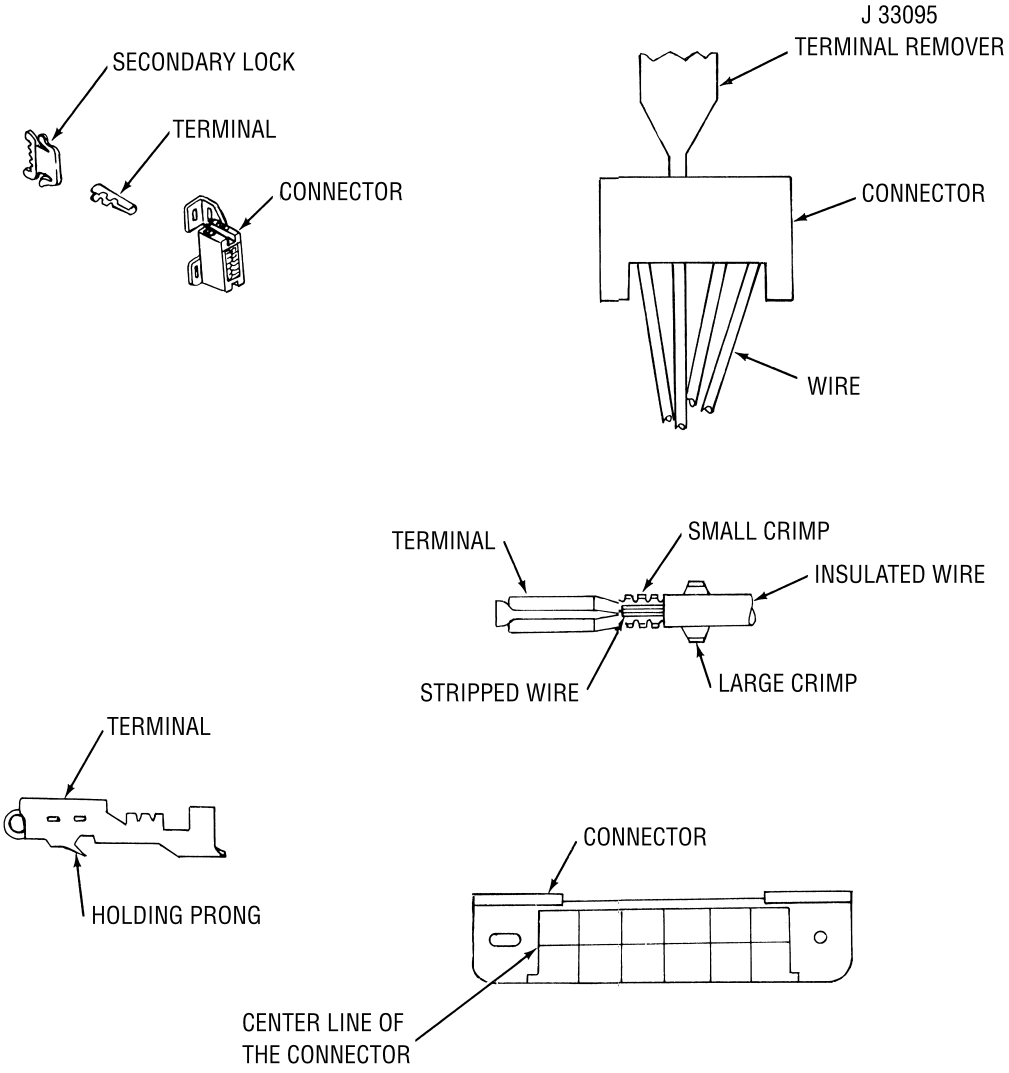

COPYRIGHT 1994 GENERAL MOTORS CORP.

THROTTLE POSITION SENSOR AND ON-HIGHWAY SPEED SENSOR CONNECTORS

Part Numbers

Speed Sensor Connector	12015792
Throttle Sensor Connector	12015793
Speed Sensor Terminal	12034051
Throttle Sensor Terminal	12033674
Wire Seal	12015284

Special Tools

Crimping Tool	J25563
Remover Tool	J28742-A
Alternate Crimping Tool	J35606

Procedures

A. Terminal Removal

1. Unlatch and open the secondary lock on the connector.
2. Insert remover tool J28742-A in the front of the connector, over the terminal. Push the tool over the terminal and pull the terminal out the back of the connector.
3. Cut the wire as close to the terminal as possible to minimize wire loss.

B. Terminal Crimping Using Crimping Tool J25563

1. Place the wire seal on the wire before stripping.
2. Strip approximately 0.226 to 0.246 inch (6.0 ± 0.25 mm) of insulation from the wire.
3. Insert the terminal into the crimping tool.
4. The “u” shaped portion of the tool should hold the flat area of the terminal. The “m” shaped portion of the tool should close around the open edge of the terminal. Use the small crimping area of the tool.
5. Slightly close the crimping tool to hold the terminal steady.
6. Insert wire so that the stripped portion is in the area to be crimped and the insulated portion is in the other crimping area.
7. Crimp the stripped section of the wire.

COPYRIGHT 1994 GENERAL MOTORS CORP.

THROTTLE POSITION SENSOR AND ON-HIGHWAY SPEED SENSOR CONNECTORS (CONT'D)

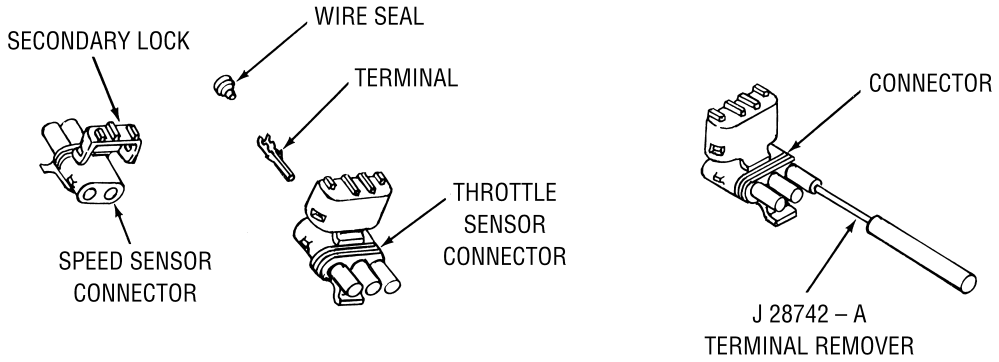

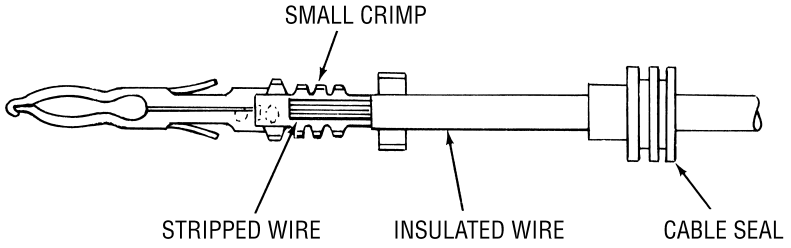

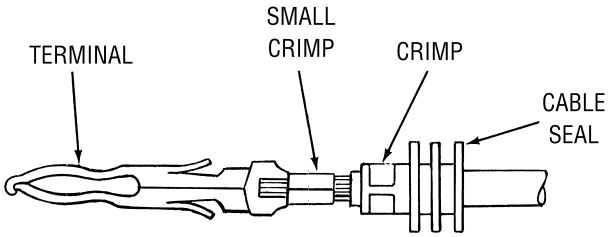

COPYRIGHT 1994 GENERAL MOTORS CORP.

THROTTLE POSITION SENSOR AND ON-HIGHWAY SPEED SENSOR CONNECTORS

8. Remove the terminal from the crimping tool.
9. Push the wire seal into the terminal. The second crimp will wrap around the wire seal. This will seal the insulated area of the wire.
10. Use a pair of needle nose pliers to form the terminal prongs around the wire seal.
11. Tug on the terminal and be sure the crimp is tight.
12. Be sure the second crimp is tight around the wire seal.
13. Insert the terminal into the connector. The terminal should click into place and should not pull out.
14. Secure the secondary lock. Both sides of the connector must be latched.

C. Terminal Crimping Using Crimping Tool J35606

1. Place the wire seal on the wire before stripping.
2. Strip approximately 0.226 to 0.246 inch (6.0 ± 0.25 mm) of insulation from the wire.
3. Insert the terminal into the crimping tool.
4. Position the terminal so the fingers are pointing up from the bottom jaw of the crimper.
5. Slightly close the crimping tool to hold the terminal steady.
6. Slide the wire seal to the edge of the insulation and insert the wire and seal into the terminal.
7. Position the wire and seal and squeeze the crimping tool until it opens when released.
8. Tug on the terminal to make sure the crimp is tight.
9. Make sure the crimp around the seal is tight.
10. Insert the terminal into the connector. The terminal should click into place and should not pull out.
11. Relatch the secondary lock. Both sides must latch.

COPYRIGHT 1994 GENERAL MOTORS CORP.

THROTTLE POSITION SENSOR AND ON-HIGHWAY SPEED SENSOR CONNECTORS (CONT'D)

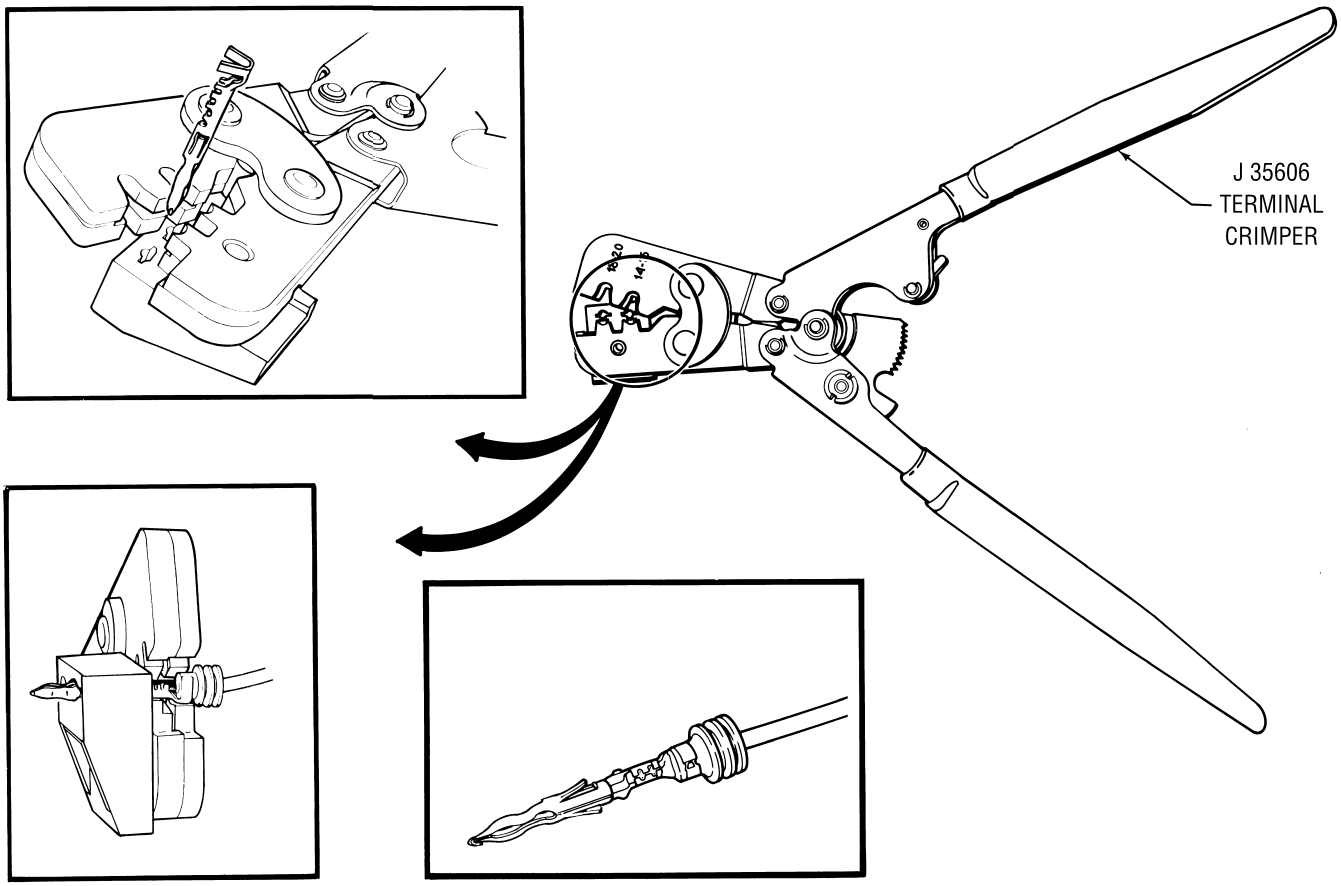

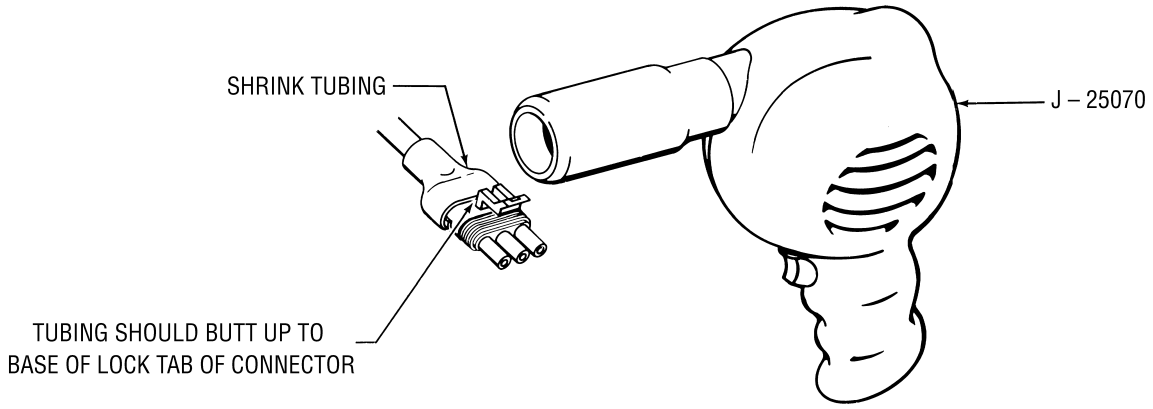

COPYRIGHT 1994 GENERAL MOTORS CORP.

PUSH BUTTON SHIFT SELECTOR CONNECTOR

Part Numbers

Shift Selector Connector	23016193
Terminal	23015204
Cable Clamp	23016490

Special Tools

Crimper Tool	J25563
Remover Tool	J34823

Procedures

A. Terminal Removal

1. Remove the cable clamp from the connector.
2. Insert removal tool J34823 into the top side of the connector, over the terminal being removed.
3. Push down on the plunger end of the tool.
4. Pull the terminal out the bottom of the connector. Cut the wire as close to the terminal as possible to minimize wire loss.

B. Terminal Crimping

1. Strip approximately 0.148 to 0.167 inch (4.0 ± 0.25 mm) of insulation from the end of the wire.
2. Insert the new terminal into crimping J25563.
3. The “u” shaped portion of the tool should hold the flat area of the terminal. The “m” shaped area should close around the open edge of the terminal. Use the small crimping areas of the tool.
4. Slightly close the crimping tool to hold the terminal steady.
5. Insert the wire so that the stripped portion is in the area being crimped and the insulated portion is in the other crimping area.
6. Crimp the stripped section of wire.
7. Remove the terminal from the crimping tool.

COPYRIGHT 1994 GENERAL MOTORS CORP.

PUSH BUTTON SHIFT SELECTOR CONNECTOR (CONT'D)

8. Use a pair of needle nose pliers to start the bend on the terminal area of the insulation crimp.
9. Crimp the insulated section of wire.
10. Remove the terminal from the crimping tool and tug on the terminal to make sure the crimp is tight.
11. Insert the terminal into the connector. The terminal should click into place and should not pull out.
12. Install the cable clamp. Install the two phillips-head screws.

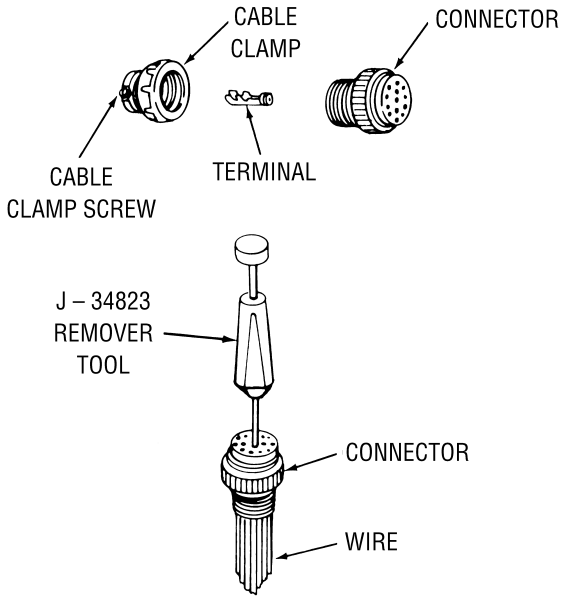

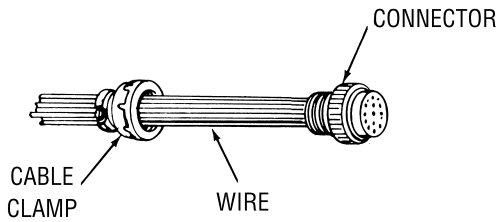

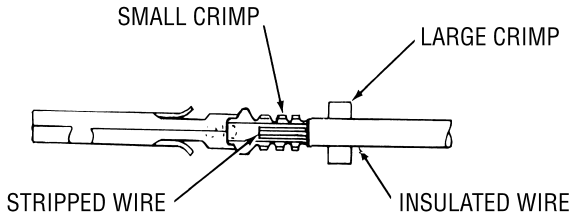

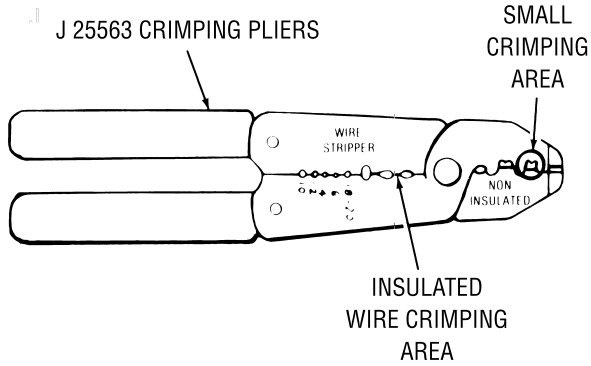

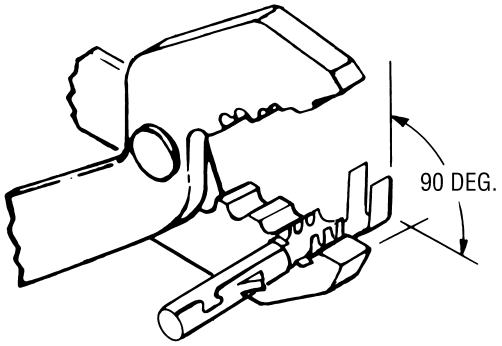

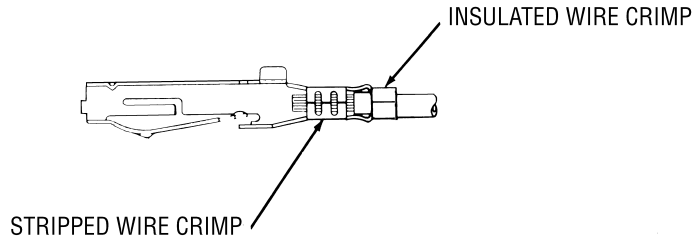

COPYRIGHT 1994 GENERAL MOTORS CORP.

TRANSMISSION BULKHEAD AND DIGITAL DISPLAY UNIT (DDU) CONNECTORS

Part Numbers

Bulkhead Connector	23016498
DDU Connector	23048225
Terminal	23016502
Sealing Plug	23016504

Special Tools

Crimper Tool	J34182
Remover Tool	J34513

Procedures

A. Terminal Removal

1. Slide pin remover J34513, tapered end first, onto the damaged wire.
2. Work the pin remover tool into the connector socket until it locks onto the terminal. Pull the remover tool, terminal and wire from the connector socket.
3. Repeat steps 1 and 2 for each damaged wire or terminal.
4. Cut the wire as close to the terminal as possible to minimize wire loss.

B. Terminal Crimping

1. Strip approximately 0.236 to 0.315 inch (6 to 8 mm) of insulation from the wire.
2. Set wire size indicator on crimping tool J34182 to wire size no. 18. Remove the indicator wire retainer. Lift and rotate the indicator until the wire size is opposite the Sel. No. arrow. Replace the indicator wire retainer.
3. Insert the terminal, long end first, into tool J34182. Close the crimping tool just enough to hold the terminal. Back off the locking not so the adjusting screw is free. Turn the adjusting screw until the top of the terminal is above the crimping hole. Tighten the locking nut against the crimping tool.

COPYRIGHT 1994 GENERAL MOTORS CORP.

TRANSMISSION BULKHEAD AND DIGITAL DISPLAY UNIT (DDU) CONNECTORS (CONT'D)

4. Insert the stripped end of the no. 18 wire into the terminal. Be sure the wire is fully inserted. Squeeze the crimping tool handles together until the ratchet in the crimping tool releases. Remove the wire and terminal from the crimping tool. Tug on the wire to make sure the crimp is tight.
5. Install the terminal into its proper socket in the connector. The terminal will click into position and cannot be removed when properly installed.

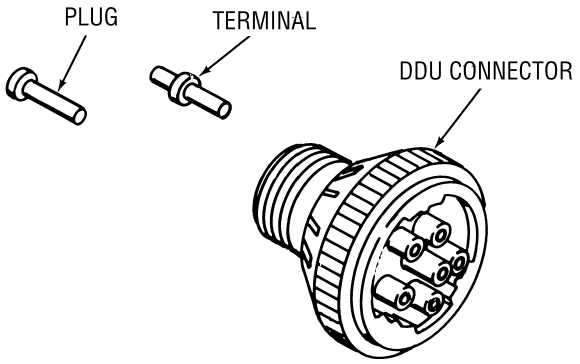

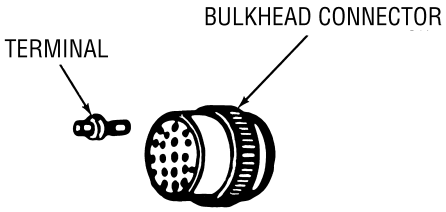

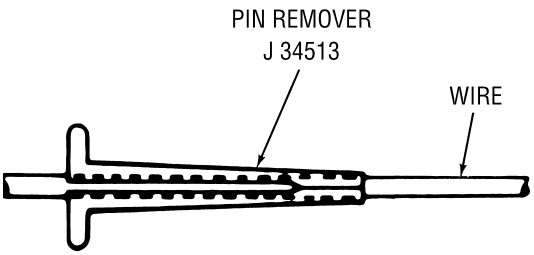

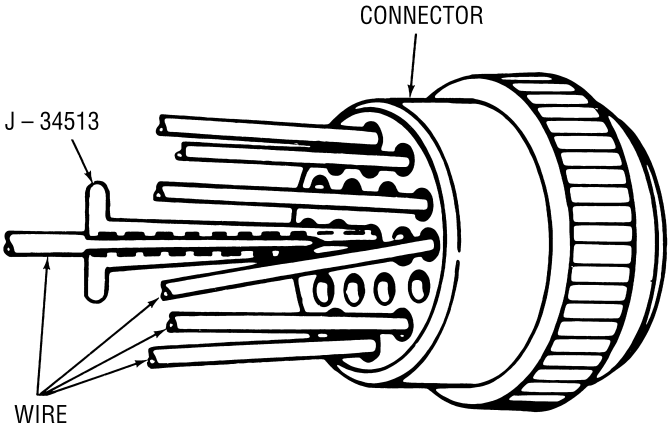

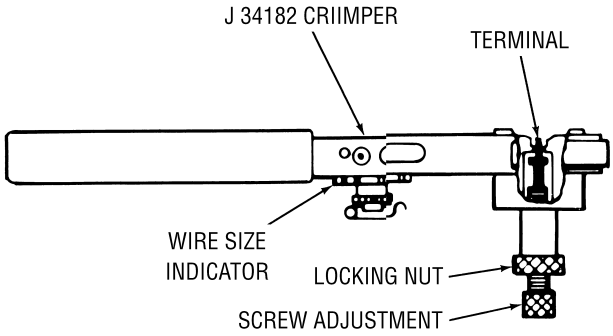

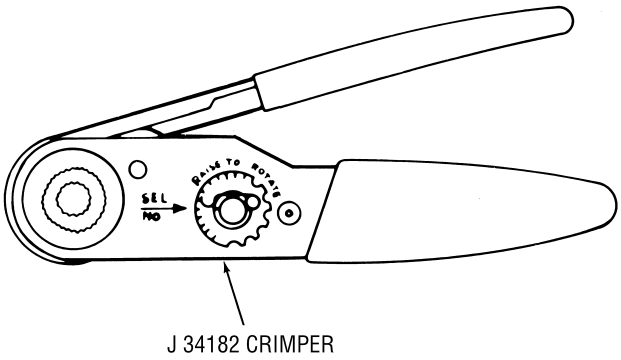

COPYRIGHT 1994 GENERAL MOTORS CORP.

TRANSMISSION ENGINE COMMUNICATION LINK (TECL) CONNECTOR

Part Numbers

TECL Connector	12047938
Terminal	12048074
Secondary Lock	12047936
Wire Seal	12048086

Special Tools

Remover Tool	J35689-A
Crimping Tool	J25563

Procedures

A. Terminal Removal

1. Unlatch and open the secondary lock on the connector.
2. Insert needle end of the remover tool into the small notch between the terminal and the connector. Pry the holding prong against the terminal.
3. Pull on the attached wire and draw the terminal from the back of the connector.
4. Cut the wire as close to the terminal as possible to minimize wire loss.

B. Terminal Crimping

1. Place the wire seal on the wire before stripping.
2. Strip approximately 0.226 to 0.246 inch (6.0 ± 0.25 mm) insulation from the wire.
3. Insert the terminal into the crimping tool.
4. The “u” shaped portion of the tool should hold the flat area of the terminal. The “m” shaped portion of the tool should close around the open edge of the terminal. Use the small crimping area of the tool.
5. Slightly close the crimping tool to hold the terminal steady.
6. Insert the wire so that the stripped portion is in the area to be crimped and the insulated portion is in the other crimping area.
7. Crimp the stripped section of wire.
8. Remove the terminal from the crimping tool.

COPYRIGHT 1994 GENERAL MOTORS CORP.

TRANSMISSION ENGINE COMMUNICATION LINK (TECL) CONNECTOR (CONT'D)

9. Push the wire seal into the terminal. The second crimp will wrap around the wire seal. This will seal the insulated area of wire.
10. Use a pair of needle nose pliers to crimp the insulated area.
11. Tug on the terminal to make sure the crimp is tight.
12. Align the holding prong with the small notch and insert the terminal into the connector. The terminal should click into place and should not pull out.
13. If the terminal size prevents proper installation in the connector, crimp (squeeze) the terminal again 90 degrees from the first crimp. Reinsert the terminal.
14. Secure the secondary lock. Both sides of the connector must latch.

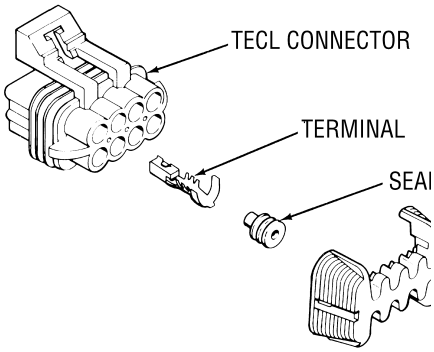

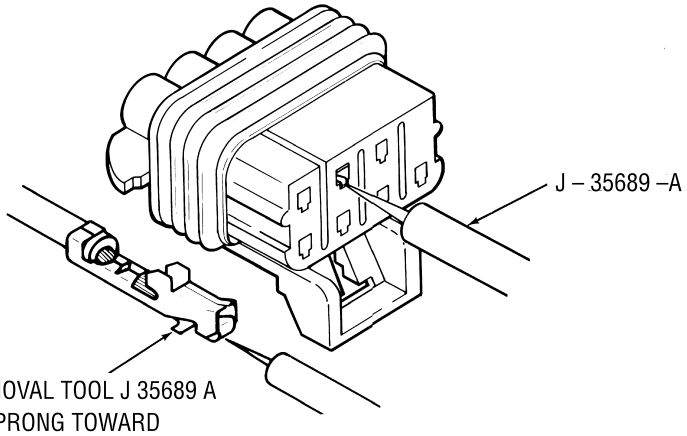

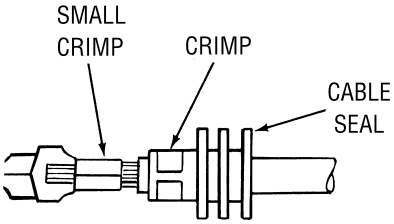

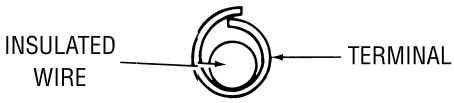

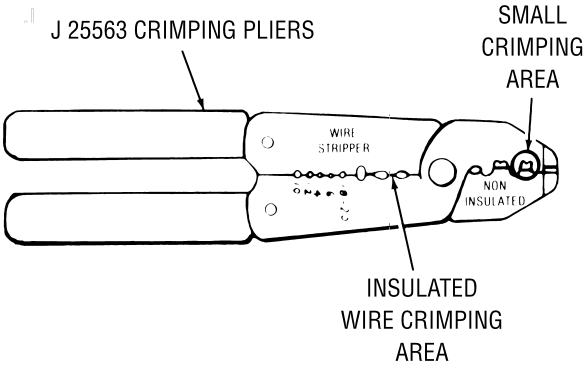

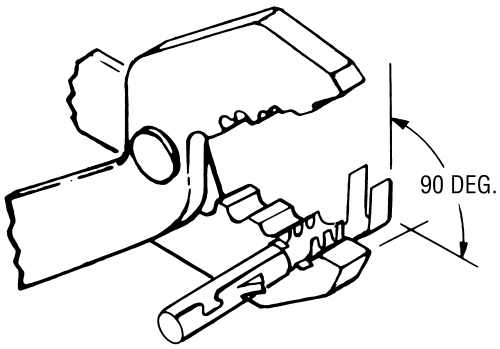

COPYRIGHT 1994 GENERAL MOTORS CORP.

OFF-HIGHWAY SPEED SENSOR AND SOLDERED CANNON CONNECTORS

Part Numbers

Main Connector	23046469
Speed Sensor Pickup Connector	23046470
Lockup Connector	23046471
Trim Boost or Low-Low Connector	23046472
Trim Boost or Low-Low Internal Harness Connector	23046475
Main Internal Harness Connector	23046476
Intermediate Two-Piece Harness Connector, ECU Side	23046587
Intermediate Two-Piece Harness Connector, Transmission Side	23046588

Special Tools

50-70% Tin Resin Core Solder, 18-20 SWG (0.036 to 0.040 Inch)

Pen Type Soldering Iron With Tip No Larger Than 1/8 Inch (Max 60W)

Desoldering Braid

NOTE: Proper solder, equipment, techniques and cleanliness are important to achieve a good solder joint. Before beginning any desoldering or soldering, tin the tip of the soldering iron and be certain all dirt, grease and oil are cleaned from the connector and terminals being soldered. Always heat the piece onto which the solder is to flow. Heating only the solder so it melts without properly heating the piece(s) to be soldered will result in a cold solder joint and intermittent continuity problems. Do not apply too much solder to a stranded wire since the solder will wick up the wire and possibly cause wire breakage at the point where the solder stops. Do not use acid core solder.

Procedures

A. Wire Removal (Desoldering)

1. Unscrew the back shell of the connector. Slide the back shell away from the connector.
2. Use a small screwdriver to lift the grommet away from the connector. Slide the grommet away from the connector far enough to allow access to the terminals and wire ends. This may require some petroleum jelly on the wire insulation and also the movement of some of the harness covering to allow enough clearance between the grommet and connector.
3. Place the desoldering braid (wick) on top of the soldered joint of the terminal cup and wire. Place the soldering iron on top of the desoldering braid and leave in place until solder wicks up the braid and the wire can be removed.

COPYRIGHT 1994 GENERAL MOTORS CORP.

OFF-HIGHWAY SPEED SENSOR AND SOLDERED CANNON CONNECTORS (CONT'D)

4. Repeat as necessary for other wires on the connector.
5. Remove the wire(s) from the grommet.

B. Soldering Wire Into Terminal

NOTE: Wire(s) and terminal(s) should be free of dirt and grease. If a new connector is being installed on a harness, be sure the back shell is in place before wires are inserted through the grommet.

1. Strip approximately .30 (± .030) inch (8.0 ± 0.8 mm) of insulation from the wire.
2. Tin the stripped end of the wire.
3. Insert the wire through the proper grommet position.

NOTE: Use petroleum jelly only if necessary and only on the wire insulation. Any petroleum jelly on the tinned wire must be thoroughly cleaned off the wire or soldering will be impossible.

4. With the connector in a holding fixture at a 45 degree angle, apply heat with the soldering iron to the side of the cup terminal while holding the solder in the cup. Heat the cup until the solder flows. If a new connector is being used, begin soldering at the bottom center connection and work up and out from there.
5. Slowly feed solder into the cup until it is approximately half full. Remove the solder before removing the heat. All solder cups being used should be pre-filled prior to inserting wires.

NOTE: Feed solder slow enough to prevent a gas pocket of flux from forming. This will give a false fill. A false fill can be corrected with additional heat and solder.

NOTE: Total soldering time of steps 6 through 8 should be less than 5 seconds per terminal. If twenty or more terminals are being soldered in one connector, allow the work to cool after half of the terminals are soldered.

6. Start at the lowest cup and apply heat to the side of the cup until solder melts.
7. Insert the wire lead into the cup carefully, noting that the end of the wire is bottomed in the cup with proper insulation clearance (approximately 1/16, or 0.0625, inch).

COPYRIGHT 1994 GENERAL MOTORS CORP.

OFF-HIGHWAY SPEED SENSOR AND SOLDERED CANNON CONNECTORS

8. Maintain heat until the solder has properly flowed in the cup and on the wire. Overheating can cause wicking of the solder in the stranded wire.
9. A good soldered connection will show a minimum amount of solder. Strands of the wire will be clearly outlined in the joint. The joint will be completely covered with solder. The fillets will be a smooth, even contour. The edges will be feathered, and the joint has a bright, smooth, clean appearance. Too little solder is better than too much. If solder wicks up the wire, there will be a possibility of wire breakage at the point where the solder stops.
10. When all connections are soldered and inspected, clean the connector with a contact cleaner to remove the flux residue.
11. Slide the grommet into place and screw the back shell into place. On chassis harness connectors, tighten the clamp on the connector back shell.

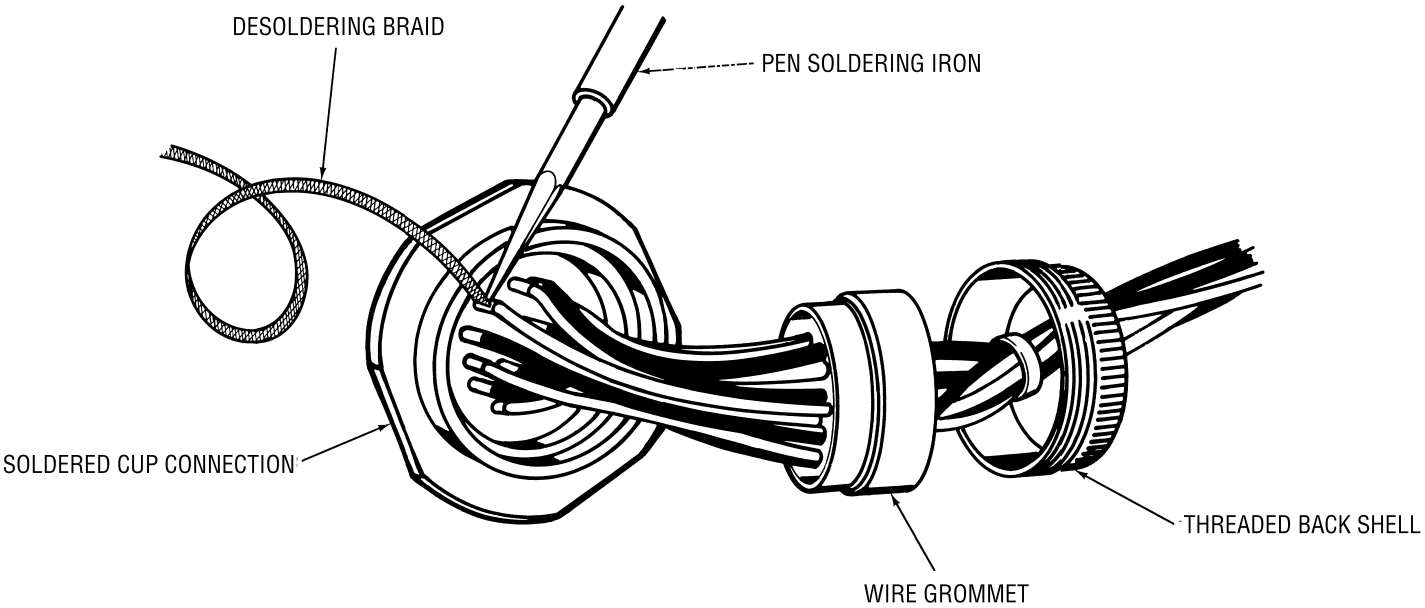

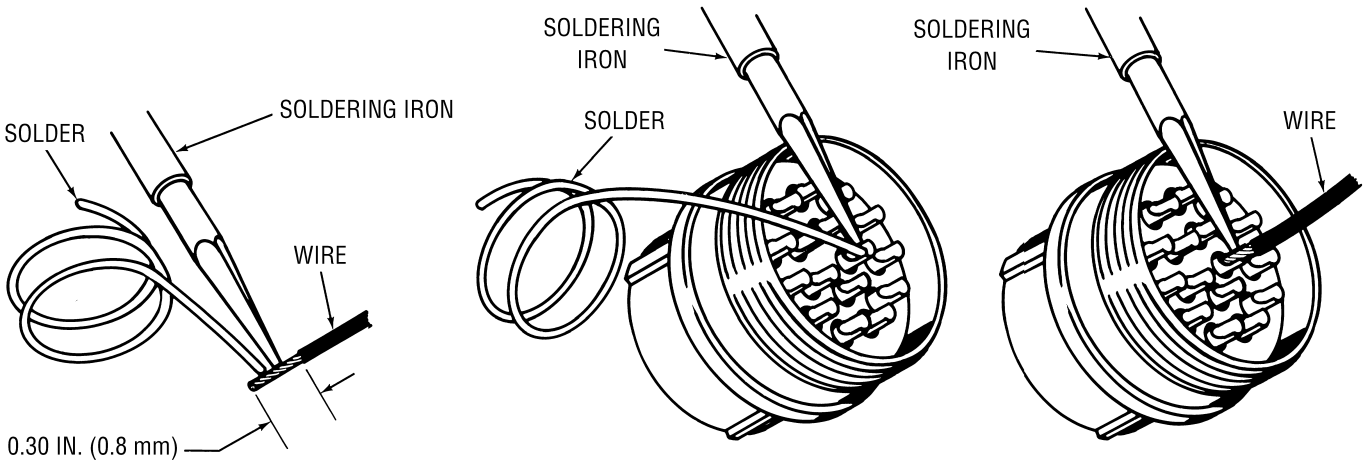

- TINNING STRIPPED WIRE

- SOLDERING IRON ON SIDE OF CUP
- FILL CUP HALF FULL

- SOLDERING IRON ON SIDE OF CUP
- FLOW SOLDER IN CUP
- INSERT WIRE
- MAINTAIN HEAT TO FLOW SOLDER

COPYRIGHT 1994 GENERAL MOTORS CORP.

REPAIRING A BROKEN WIRE

Part Numbers

14 to 16 AWG Splice	23046604
18 to 22 AWG Splice	23046605

Special Tools

Heat Gun	J25070 (or equivalent)
Crimping Tool	Appropriate for pre-insulated splice crimp
Wire Strippers	Applicable to wire size

Procedures

NOTE: Each splice must be properly crimped and then heated to shrink the covering. This protects and insulates the splice. Insulation piercing splice clips should not be used.

1. Locate the damaged wire. Cut the wire to eliminate the damaged area. If necessary, wire can be added to the harness. Use the same size wire and, if possible, use the same color wire. When adding wire, two splices must be installed using the following procedures.
2. Strip 0.3 inch (8.0 mm) of insulation from the ends of both wires being spliced.

3. Insert the wires into the splice crimp barrels.

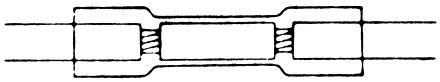

4. Crimp both ends of the splice. Gently pull on the wires to ensure a good crimp.

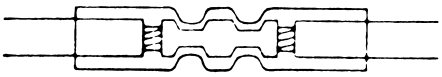

COPYRIGHT 1994 GENERAL MOTORS CORP.

REPAIRING A BROKEN WIRE (CONT'D)

5. Heat the splice with a heat gun until the covering shrinks and adhesive flows from both ends.

6. The splice is now sealed and insulated. Electrical tape is not necessary and should not be used.

COPYRIGHT 1994 GENERAL MOTORS CORP.

REPAIRING A TWISTED SHIELDED WIRE

Part Numbers

14 to 16 AWG Splice	23046604
18 to 22 AWG Splice	23046605

Special Tools

Heat Gun	J25070 (or equivalent)
Crimping Tool	Appropriate for pre-insulated splice crimp
Wire Strippers	Applicable to wire size

Procedures

1. Remove the wire's outer jacket.

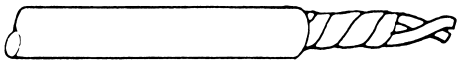

2. Unwrap the aluminum/mylar tape. Do not cut the tape off.

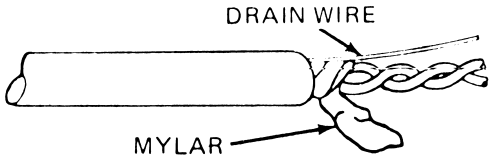

3. Untwist the wires. Cut the wires to eliminate the damaged area. If necessary, wire can be added to the harness. Use the same size wire and, if possible, use the same color wire. When adding wire, two splices must be installed using these procedures. Strip 0.3 inch (8.0 mm) of insulation from each main harness wire being repaired.

NOTE: If the drain wire is damaged, it should be repaired after the main harness wires are repaired. This allows the main harness wires to be re-wrapped with aluminum/mylar tape prior to finishing the repair.

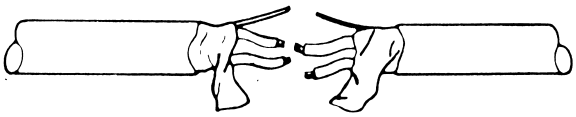

COPYRIGHT 1994 GENERAL MOTORS CORP.

REPAIRING A TWISTED SHIELDED WIRE (CONT'D)

4. Insert the wires into the splice crimp barrels.

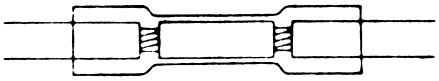

5. Crimp both ends of each splice. Gently pull on the wires to ensure a good crimp.

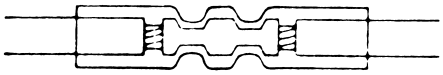

6. Heat each splice with a heat gun until the covering shrinks and adhesive flows from both ends.

7. Re-wrap the main harness wires with the aluminum/mylar tape. If necessary, repair the drain wire using the procedures covered here. When finished, cover the repaired area with electrical tape.

COPYRIGHT 1994 GENERAL MOTORS CORP.

APPENDIX D — ADDITIONAL TERMINAL DESIGNATIONS

Contents **Page**

Diagnostic Data Link (DDL) Connector D-2

Two-Piece Chassis Harness Intermediate Connectors D-3

Amerline Cab Harness Interface Connector D-4

AMP Cab Harness Interface Connector D-5

NOTE: All other connector terminal designations are illustrated in Appendix A, Troubleshooting Steps - Trouble Codes Present.

COPYRIGHT 1994 GENERAL MOTORS CORP.

DIAGNOSTIC DATA LINK (DDL) CONNECTOR

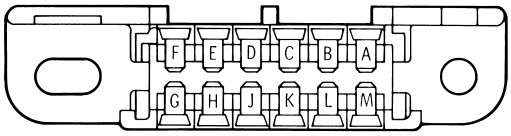

Cavity	Circuit No.	Wire Color	Circuit
A	210	Black	DDL Ground
B	216	Yellow	Enable
C	—	—	Not Used
D	—	—	Not Used
E	207	Blue	Data
F	—	—	Not Used
G	—	—	Not Used
H	202B	Red	12V Power
J	—	—	Not Used
K	—	—	Not Used
L	—	—	Not Used
M	—	—	Not Used
—	236	Yellow	Spare to J1A

COPYRIGHT 1994 GENERAL MOTORS CORP.

TWO-PIECE CHASSIS HARNESS INTERMEDIATE CONNECTORS

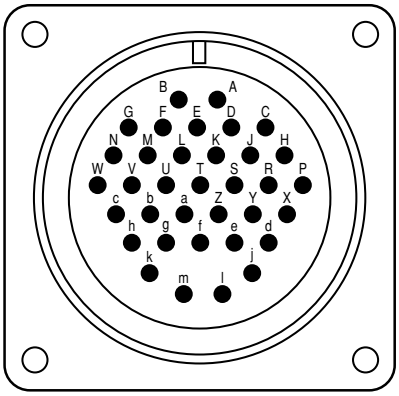

TWO–PIECE CHASSIS HARNESS,
SOCKET CONNECTOR

SOCKET CONNECTOR

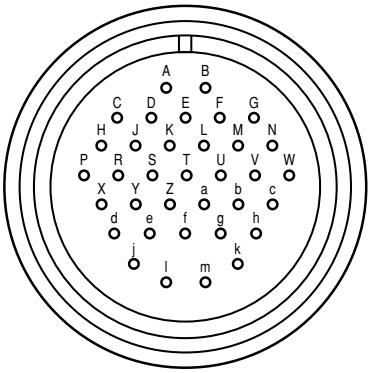

TWO–PIECE CHASSIS HARNESS,
PLUG CONNECTOR

PLUG CONNECTOR

Terminal	Circuit No.	Wire Color	Description
A	101	Red	Solenoid K + Lockup
B	102	Green	Solenoid K - Lockup
C	103	Violet	Temperature Sensor
D	—	—	Plug
E	—	—	Plug
F	105	Violet	Solenoid(s) H- , I-* DP 8000, Solenoid J- CLBT 9000
G	125	White	Solenoid H+ DP 8000, Solenoid J+ CLBT 9000
H	107	Green	Solenoid I+* DP 8000
J	112	White	Speed Sensor — High
K	—	—	Plug
L	—	—	Plug
M	113	Black	Speed Sensor — Low
N	110	White	Solenoid G+*
P	111	Green	Solenoid F+
R	108	Yellow	Sodenoid E-
S	—	—	Plug
T	—	—	Plug
U	—	—	Plug
V	109	Blue	Solenoid D+
W	114	White	Solenoids B+, E+
X	115	Green	Solenoid A+*
Y	116	Yellow	Solenoid(s) A-*, D-
Z	—	—	Plug
a	—	—	Plug
b	117	Black	Solenoids B-, C-
c	118	Blue	Solenoid G-*
d	119	Red	Solenoid F-
e	106	Black	Throttle Sensor/Semperature Sensor Ground
f	—	—	Plug
g	104	Yellow	Throttle Sensor – Out
h	124	Red	Throttle Sensor – High
j	120	Blue	Spare
k	123	—	Speed Sensor Shield
l	121	Red	Spare
m	122	Violet	Spare

*Models with Lock-in-Range.

COPYRIGHT 1994 GENERAL MOTORS CORP.

AMERLINE CAB HARNESS INTERFACE CONNECTOR

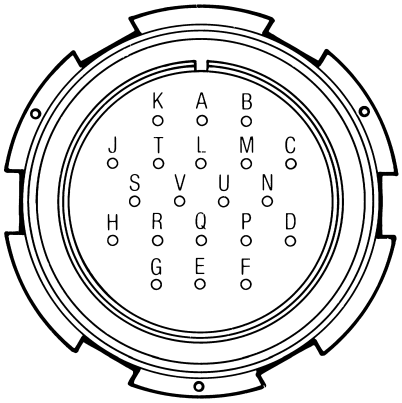

Terminal	Circuit No.	Wire Color*	Circuit
A	223A	Red	12V ECU Power
B	202A	Red	12V ECU Power
C	203	Blue	Cont. Power Memory
D	—	—	—
E	—	—	—
F	225	Violet	12V Ignition to Selector
G	231	Blue	Neutral Start
H	208	Black	Ground – Battery Negative
J	209	Black	Ground – Battery Negative
K	217	Violet	2-Speed Governor
L	211	Yellow	Retarder – In
M	234	Black	Lamp Ground 12V/24V
N	213	Blue	Retarder – Out
P	214	White	Reverse
Q	215	Violet	CHECK TRANS Out
R	216A	Yellow	Test Switch
S	235	White	12V Not Used (24V Ignition)
T	205	Green	Speedometer
U	230	Yellow	12V Selector Lamp Ground (24V Selector Lamp Dimmer)
V	233	Green	12V Selector Lamp Dimmer (24V Not Used)

COPYRIGHT 1994 GENERAL MOTORS CORP.

AMP CAB HARNESS INTERFACE CONNECTOR

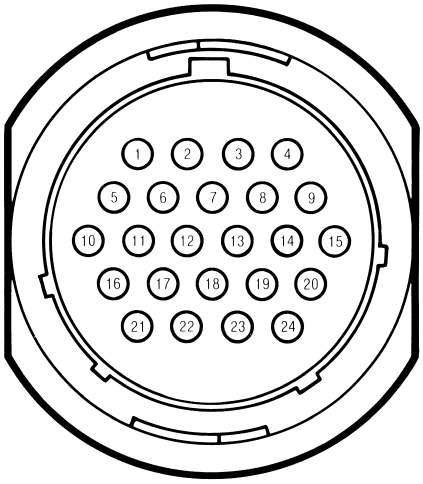

Terminal	Circuit No.	Wire Color*	Circuit
1	223A	Red	12V ECU Power
2	202A	Red	12V ECU Power
3	203	Blue	Cont. Power Memory
4	—	—	—
5	—	—	—
6	225	Violet	12V Ignition to Selector
7	231	Blue	Neutral Start
8	208	Black	Ground – Battery Negative
9	209	Black	Ground – Battery Negative
10	217	Violet	2-Speed Governor
11	211	Yellow	Retarder – In
12	234	Black	Lamp Ground 12V/24V
13	213	Blue	Retarder – Out
14	214	White	Reverse
15	215	Violet	CHECK TRANS Out
16	216A	Yellow	Test Switch
17	235	White	12V Not Used (24V Ignition)
18	205	Green	Speedometer
19	230	Yellow	12V Selector Lamp Ground (24V Selector Lamp Dimmer)
20	233	Green	12V Selector Lamp Dimmer (24V Not Used)
21	—	—	Not Used
22	—	—	Not Used
23	—	—	Not Used
24	—	—	Not Used

COPYRIGHT 1994 GENERAL MOTORS CORP.

APPENDIX E — ELECTRICAL SCHEMATICS

Contents **Page**

MTB 600/HTB 700 4-Speed Electronic Control System - Schematic View E-3

HTB/CLT/CLBT 700 5-Speed Electronic Control System - Schematic View E-4

CLBT 5962/6062 (Lock-to-Neutral) Electronic Control System - Schematic View E-5

CLBT 5962/6062 (Lock-in-Range) Electronic Control System - Schematic View E-6

DP 8963 (Lock-to-Neutral) Electronic Control System - Schematic View E-7

DP 8963 (Lock-in-Range) Electronic Control System - Schematic View E-8

CLBT 9681 (Lock-in-Range) Electronic Control System - Schematic View E-9/E-10

AS00-132 Plus II Wiring Guide (Sheet 1)..... E-11

AS00-132 Plus II Wiring Guide (Sheet 2)..... E-13

AS00-080 Model 5/6/8/9000 Series Plus II Wiring Guide (Sheet 1) E-15

AS00-080 Model 5/6/8/9000 Series Plus II Wiring Guide (Sheet 2) E-17

AS00-134 Plus II Installation Requirements (Sheet 1) E-19

AS00-134 Plus II Installation Requirements (Sheet 2) E-21

AS00-078 Model 5/6/8/9000 Series Plus II Installation Requirements (Sheet 1)..... E-23

AS00-078 Model 5/6/8/9000 Series Plus II Installation Requirements (Sheet 2)..... E-25

COPYRIGHT 1994 GENERAL MOTORS CORP.

APPENDIX E — ELECTRICAL SCHEMATICS

The schematics in this Appendix illustrate the interface connections for the transmission electronic control system. Some wiring schematics are shared by more than one transmission model; therefore, the schematics in this section are grouped according to transmission series.

The *schematic views* are abbreviated schematics that show the beginning and ending connections for each wire within the electronic control system. They are easier to use than the more detailed *wiring guides*, which show the entire diagram and how each wire is traced through the system.

The *installation requirements* drawings show the connections between the electronic control system and other vehicle components. At the end of this section are wiring schematics for the different wiring harnesses—cab, chassis (on and off-highway), and secondary mode.

Contents **Page**

V 731 Transmission:

Schematic View—V 731 3-Speed Electronic Control System E-3

Wiring Guide—Sealed Standard Electronic Control (AS00-081) E-5

Installation Requirements—Sealed Standard Electronic Control (AS00-138 Sheet 1) E-7

Installation Requirements—Sealed Standard Electronic Control (AS00-138 Sheet 2) E-9

MT(B)/HT(B) 600/700 Transmissions:

Schematic View—MTB 600/HTB 700 4-Speed Electronic Control System..... E-11

Schematic View—HTB/CLT/CLBT 700 5-Speed Electronic Control System..... E-12

Wiring Guide—Plus II Electronic Control (AS00-132 Sheet 1)..... E-13

Wiring Guide—Plus II Electronic Control (AS00-132 Sheet 2)..... E-15

Installation Requirements—Plus II Electronic Control (AS00-134 Sheet 1)..... E-17

Installation Requirements—Plus II Electronic Control (AS00-134 Sheet 2)..... E-19

CLBT 5000/6000, DP 8000, CLBT 9000 Off-Highway Transmissions:

NOTE: Off-highway transmissions use two different valve bodies: lock-to-range (standard for most vehicles) and fail-to-neutral (for stationary applications, i.e., drilling and pumping). The following schematic views represent configurations for each valve body type (12-volt systems).

Schematic View—CLBT 5962/6062 Electronic Control System, Lock-in-Range..... E-21

Schematic View—DP 8963 Electronic Control System, Lock-in-Range E-22

Schematic View—CLBT 9681 Electronic Control System, Lock-in-Range E-23

Schematic View—CLBT 5962/6062 Electronic Control System, Lock-to-Neutral E-24

Schematic View—DP 8963 Electronic Control System, Lock-to-Neutral E-25

COPYRIGHT 1994 GENERAL MOTORS CORP.

Contents **Page**

CLBT 5000/6000, DP 8000, CLBT 9000 Off-Highway Transmissions (cont'd):

Wiring Guide—Plus II Electronic Control (AS00-080 Sheet 1) E-27

Wiring Guide—Plus II Electronic Control (AS00-080 Sheet 2) E-29

Installation Requirements—Plus II Electronic Control (AS00-078 Sheet 1) E-31

Installation Requirements—Plus II Electronic Control (AS00-078 Sheet 2) E-33

Harnesses:

Schematic View—Cab Harness E-35

Schematic View—Chassis Harness, On-highway E-36

Schematic View—Chassis Harness, Off-highway E-37

Schematic View—Secondary Harness E-38

Wiring Guide—Sealed Cab Harness (AS00-154) E-39

Wiring Guide—Plus II Chassis Harness, On-Highway (AS00-053) E-41

Wiring Guide—Plus II Chassis Harness, Off-Highway (AS00-079) E-43

Wiring Guide—Plus II Secondary Mode Harness (AS00-155) E-45

COPYRIGHT 1994 GENERAL MOTORS CORP.

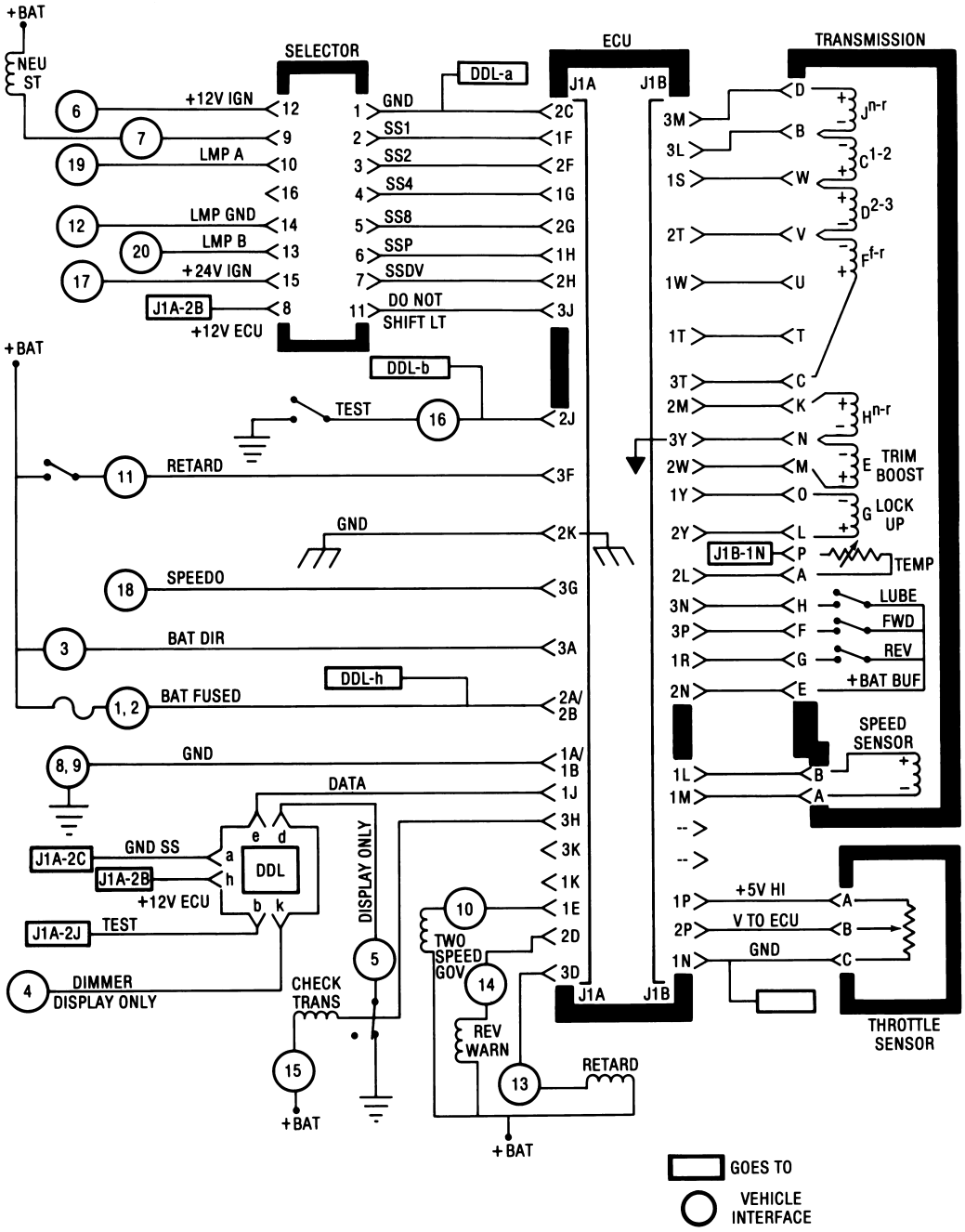

V 731 Transmission Electronic Control System

COPYRIGHT 1994 GENERAL MOTORS CORP.

Wiring Guide

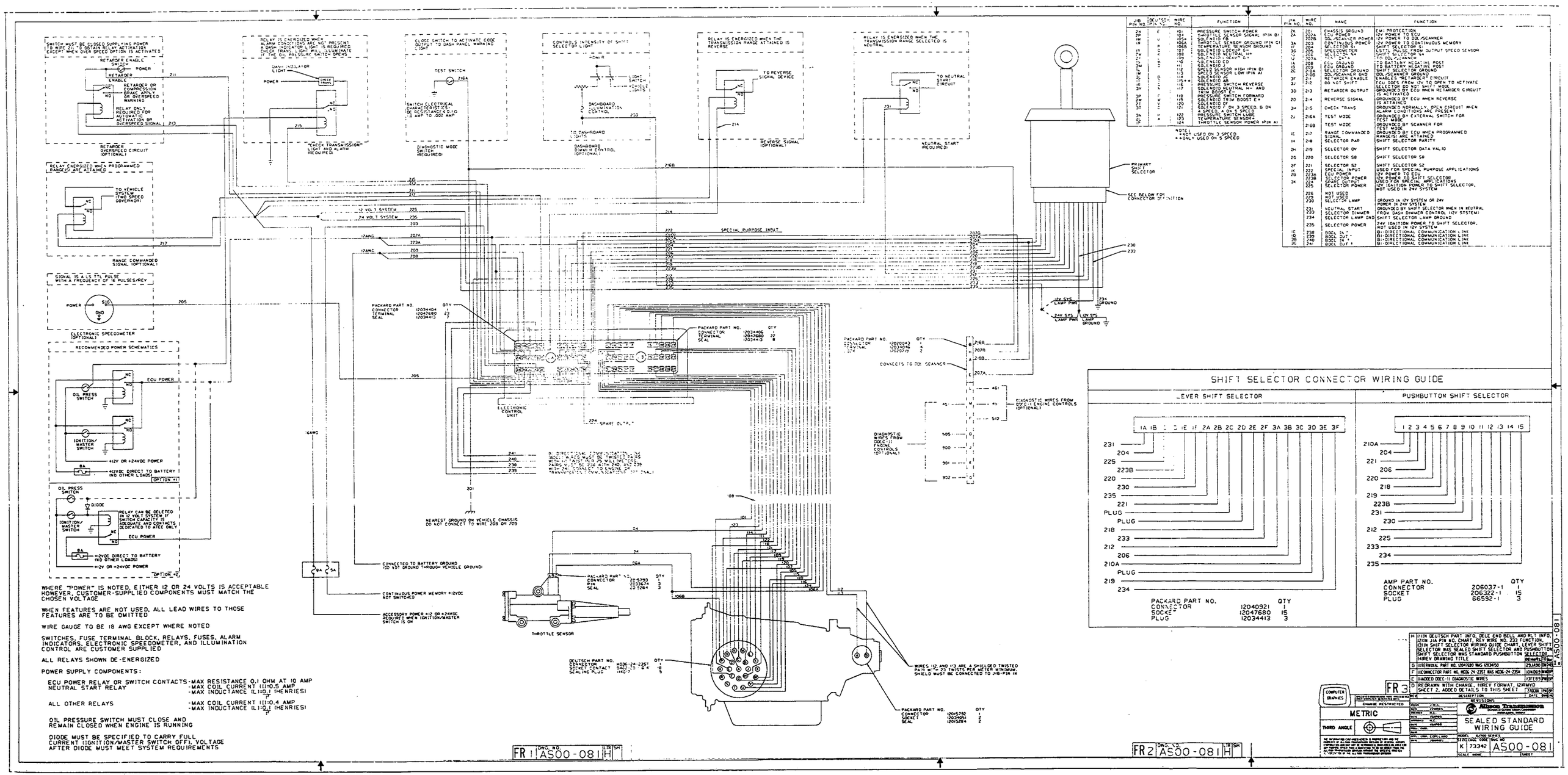

AS00-081 Sealed Standard ATEC

COPYRIGHT 1994 GENERAL MOTORS CORP.

Installation Requirements

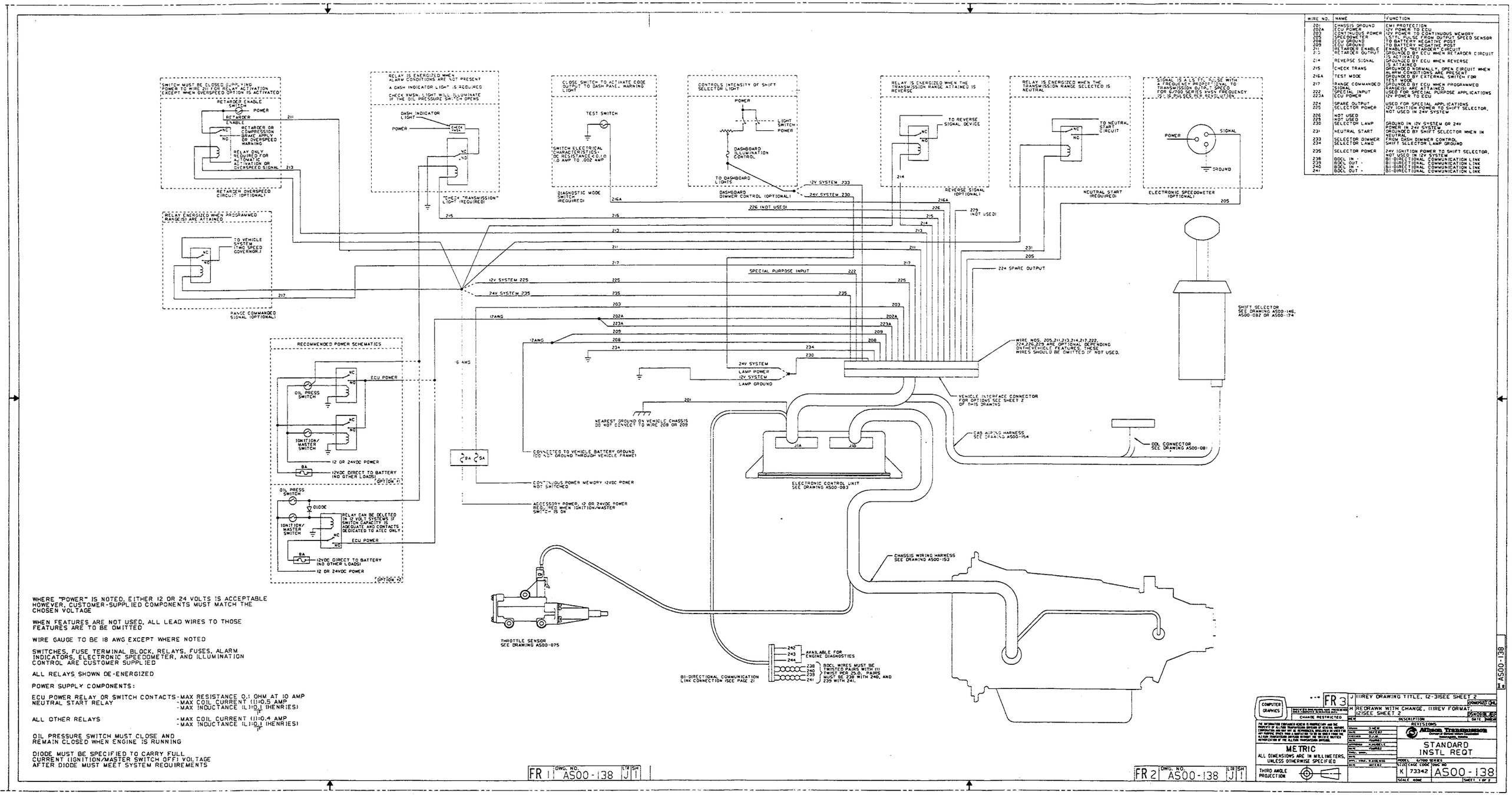

WIRE NO.	NAME	FUNCTION
201	CHASSIS GROUND	EMI PROTECTION
202A	ECU POWER	12V POWER TO ECU
203	CONTINUOUS POWER	12V POWER TO CONTINUOUS MEMORY
205	SPEEDOMETER	LSTTL PULSE FROM OUTPUT SPEED SENSOR
208	ECU GROUND	TO BATTERY NEGATIVE POST
209	ECU GROUND	TO BATTERY NEGATIVE POST
211	RETARDER ENABLE	ENABLES "RETARDER" CIRCUIT
213	RETARDER OUTPUT	GROUNDED BY ECU WHEN RETARDER CIRCUIT IS ACTIVATED
214	REVERSE SIGNAL	GROUNDED BY ECU WHEN REVERSE IS ATTAINED
215	CHECK TRANS	GROUNDED NORMALLY, OPEN CIRCUIT WHEN ALARM CONDITIONS ARE PRESENT
216A	TEST MODE	GROUNDED BY EXTERNAL SWITCH FOR TEST MODE
217	RANGE COMMANDED SIGNAL	GROUNDED BY ECU WHEN PROGRAMMED RANGE(S) ARE ATTAINED
222	SPECIAL INPUT	USED FOR SPECIAL PURPOSE APPLICATIONS
223A	ECU POWER	12V POWER TO ECU
224	SPARE OUTPUT	USED FOR SPECIAL APPLICATIONS
226	SELECTOR OR POWER	12V IGNITION POWER TO SHIFT SELECTOR, NOT USED IN 24V SYSTEM
226	NOT USED	
229	NOT USED	
230	SELECTOR LAMP	GROUND IN 12V SYSTEM OR 24V POWER IN 24V SYSTEM
231	NEUTRAL START	GROUNDED BY SHIFT SELECTOR WHEN IN NEUTRAL
233	SELECTOR DIMMER	FROM DASH DIMMER CONTROL
234	SELECTOR LAMP	SHIFT SELECTOR LAMP GROUND
235	SELECTOR POWER	24V IGNITION POWER TO SHIFT SELECTOR, NOT USED IN 12V SYSTEM
238	BDCL IN +	BI-DIRECTIONAL COMMUNICATION LINK
239	BDCL OUT +	BI-DIRECTIONAL COMMUNICATION LINK
240	BDCL IN -	BI-DIRECTIONAL COMMUNICATION LINK
241	BDCL OUT -	BI-DIRECTIONAL COMMUNICATION LINK

AS00-138 Standard ATEC (Sheet 1)

COPYRIGHT 1994 GENERAL MOTORS CORP.

Installation Requirements

INTERFACE CONNECTORS

AMP INTERFACE CONNECTOR
OPTION #1

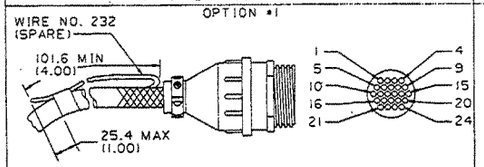

PIN NUMBER	WIRE NUMBER	PIN NUMBER	WIRE NUMBER	PIN NUMBER	WIRE NUMBER
1	223A	9	209	17	235
2	202A	10	217	18	205
3	203	11	211	19	230
4	229	12	234	20	233
5	226	13	213	21	222
6	225	14	214	22	224
7	231	15	215	23	SPARE
8	208	16	216	24	SPARE

CONNECTOR: P/N 206838-2

MATING CONNECTOR : P/N 206837-1
SOCKET : P/N 66101-2
CABLE CLAMP : P/N 206138-1

AMERLINE CONNECTOR
OPTION #2

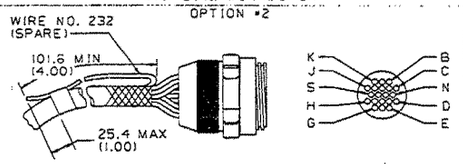

PIN NUMBER	WIRE NUMBER	PIN NUMBER	WIRE NUMBER	PIN NUMBER	WIRE NUMBER
A	223A	H	208	Q	215
B	202A	J	209	R	216A
C	203	K	217	S	235
D	222	L	211	T	205
E	224	M	234	U	230
F	225	N	213	V	233
G	231	P	214		

HARNESS CONNECTOR: P/N 8724641
NUT, COUPLING : P/N 7716634
NUT, GROMMET : P/N 7723309
GROMMET : P/N 7974332

MATING CONNECTOR : P/N 7974634
NUT, GROMMET : P/N 7723309
GROMMET : P/N 7974632

OR MATING CONNECTOR : P/N 7968275

PIGTAIL INTERFACE CONNECTION
OPTION #3

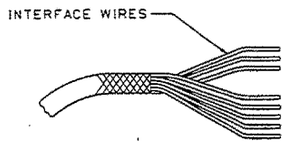

WIRE COLOR	WIRE NUMBER	WIRE COLOR	WIRE NUMBER
RED	202A	VIO	217
BLU	203	RED	222
GRN	205	RED	223A
BLK	208	VIO	225
BLK	209	WHT	229
YEL	211	YEL	230
BLU	213	BLU	231
WHT	214	GRN	234
VIO	215	WHT	235
YEL	216A	WHT	224

ECU POWER AND GROUND WIRES (202A, 223A, 208, 209) SHALL BE 16AWG.
ALL OTHER WIRES SHALL BE 18AWG

WIRE NUMBER IS STAMPED ON WIRES AT REGULAR INTERVALS

BDCL CONNECTION
OPTIONAL

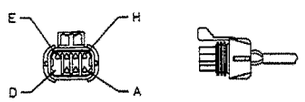

PIN NUMBER	WIRE NUMBER	MATING WIRE FOR DDEC ENGINE CONTROLS	MATING WIRE FOR TRANS.-TRANS. COMMUNICATIONS
A	239	534	238
B	240	533	241
C	243	451	NOT REQUIRED
E	242	461	NOT REQUIRED
F	244	510	NOT REQUIRED
G	238	532	239
H	241	535	240

CONNECTOR			MATING CONNECTOR		
PART	PACKARD P/N	QTY	PART	PACKARD P/N	QTY
CONNECTOR	12047934	1	CONNECTOR	12047933	1
SOCKET	12048074	7	PIN	12045773	7
LOCK	12047936	1	LOCK	12047936	1
SEAL	12048086	7	SEAL	12048086	7

DIMENSIONS IN PARENTHESIS ( ) ARE IN INCHES AND FOR REFERENCE ONLY.

COMPUTER GRAPHICS
SPECIFIED DIMENSIONS HAVE PRECEDENCE OVER COMPUTER GENERATED DATA
CHANGE RESTRICTED

REV	DESCRIPTION	DATE	DRAWN
J	(2)IN PIGTAIL INTERFACE CONNECTION, DELE ALL WIRES ARE 18 AWG AND ADDED ECU POWER NOTE. (3)REV DRAWING TITLE	04NOV92	TOM
H	REDRAWN WITH CHANGE.(1)REV FORMAT	05NOV88	LJBS

REVISIONS

THE INFORMATION CONTAINED HEREIN IS PROPRIETARY AND THE PROPERTY OF ALLISON TRANSMISSION DIVISION OF GENERAL MOTORS CORPORATION AND MAY NOT BE REPRODUCED, DISCLOSED OR USED FOR ANY PURPOSE OTHER THAN A QUOTATION TO OR ON ORDER FROM THE ALLISON TRANSMISSION DIVISION WITHOUT THE SPECIFIC WRITTEN AUTHORIZATION OF THE ALLISON TRANSMISSION DIVISION.

DRAWN	D.NEW	
DATE	06FEB92	
CHECKED	D.J.W.	
DATE	17MAR92	
APPROVED	M.MUSELLE	
DATE	17MAR92	
PROJ. ENGR.		
DATE		
APPL. ENGR.	R.KOENIG	
DATE	18FEB92	

METRIC
ALL DIMENSIONS ARE IN MILLIMETERS, UNLESS OTHERWISE SPECIFIED

THIRD ANGLE PROJECTION

Allison Transmission
Division of General Motors Corporation
Indianapolis, Indiana

STANDARD INSTL REQT

MODEL 6/700 SERIES
SIZE E | CAGE CODE 73342 | DWG NO AS00-138
SCALE NONE | SHEET 2 OF 2

AS00-138

AS00-138 Standard ATEC (Sheet 2)

COPYRIGHT 1994 GENERAL MOTORS CORP.

Schematic View

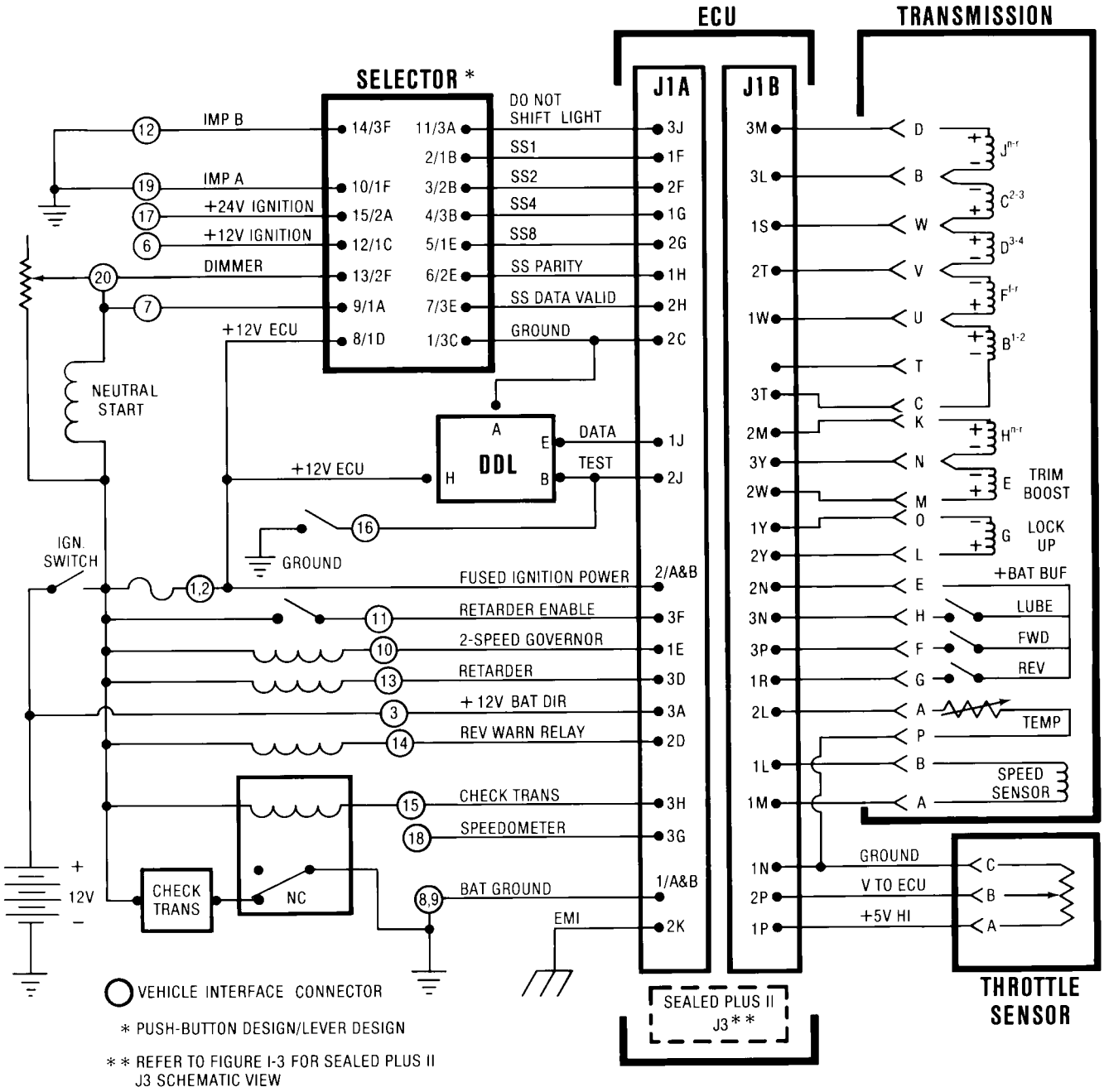

MT(B) 600 or HT(B) 700 4-Speed Transmission Electronic Control System

COPYRIGHT 1994 GENERAL MOTORS CORP.

Schematic View

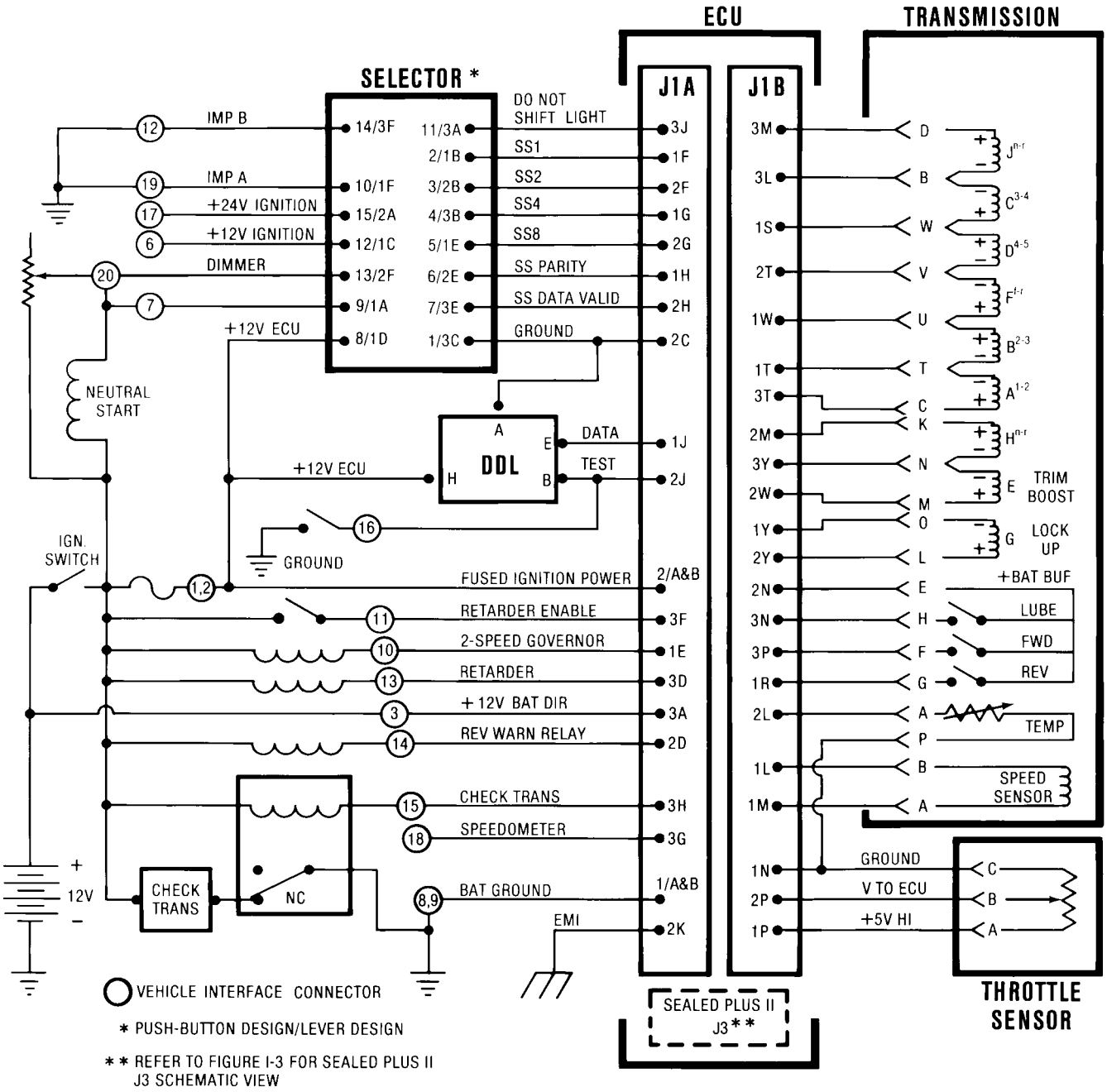

HT(B) or CLT, CLBT 700 5-Speed Transmission Electronic Control System

COPYRIGHT 1994 GENERAL MOTORS CORP.

Wiring Guide

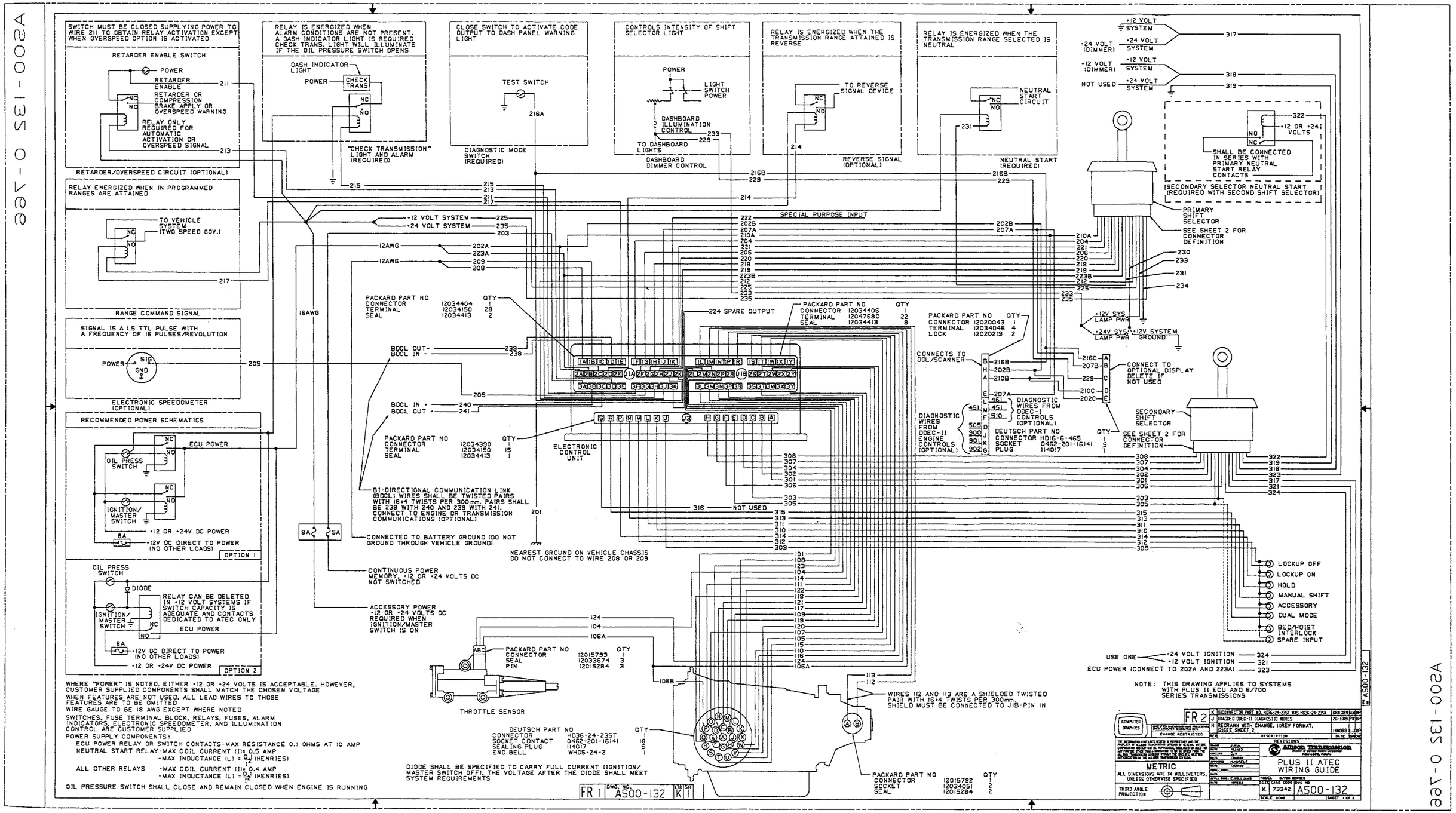

AS00-132 Plus II ATEC (Sheet 1)

COPYRIGHT 1994 GENERAL MOTORS CORP.

Wiring Guide

SHIFT SELECTOR CONNECTOR WIRING GUIDE

SEALED SHIFT SELECTOR

PRIMARY SELECTOR

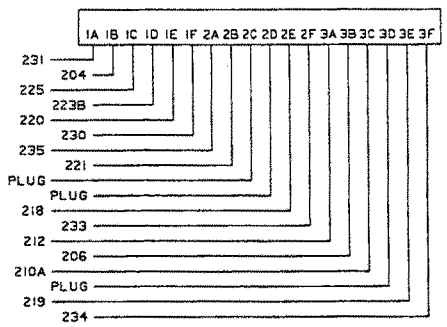

PACKARD PART NO		QTY
CONNECTOR	12040921	1
SOCKET	12047680	15
PLUG	12034413	3

SECONDARY SELECTOR

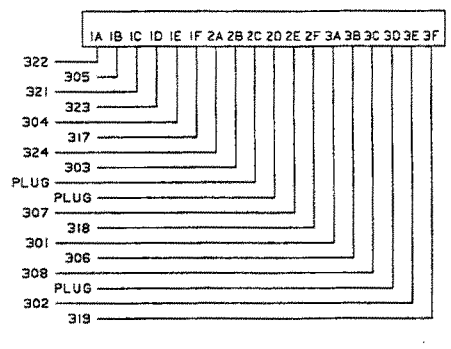

PACKARD PART NO		QTY
CONNECTOR	12040921	1
SOCKET	12047680	15
PLUG	12034413	3

STANDARD PUSHBUTTON SELECTOR

PRIMARY SELECTOR

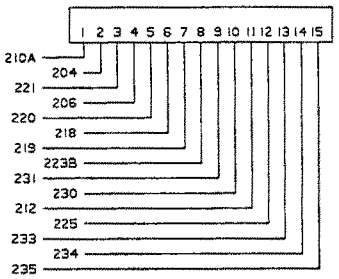

AMP PART NO		QTY
CONNECTOR	206037-1	1
CABLE CLAMP	206322-1	1
SOCKET	66592-1	15

SECONDARY SELECTOR

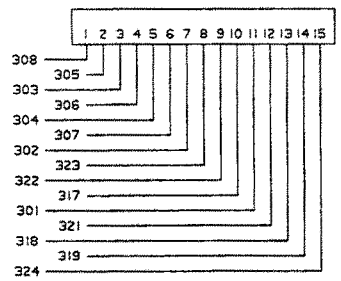

AMP PART NO		QTY
CONNECTOR	206037-1	1
CABLE CLAMP	206322-1	1
SOCKET	66592-1	15

J1B PIN NO.	DEUTSCH PIN NO.	WIRE NO.	FUNCTION
2N	E	101	PRESSURE SWITCH POWER
2P		104	THROTTLE SENSOR SIGNAL (PIN B)
1W	U	105 ♦	SOLENOID FB
1N		106A	THROTTLE SENSOR GROUND (PIN C)
	P	106B	TEMPERATURE SENSOR GROUND
1Y	O	107	SOLENOID LOCKUP G−
2M	K	108	SOLENOID NEUTRAL H+
2Y	L	109	SOLENOID LOCKUP G+
1S	W	110	SOLENOID CD
3M	D	111	SOLENOID J
1L		112	SPEED SENSOR HIGH (PIN B)
1M		113	SPEED SENSOR LOW (PIN A)
3L	B	114	SOLENOID JC
1T	T	115 ♦♦	SOLENOID AB
1R	G	116	PRESSURE SWITCH REVERSE
3Y	N	117	SOLENOID NEUTRAL H− AND TRIM BOOST E−
3P	F	118	PRESSURE SWITCH FORWARD
2W	M	119	SOLENOID TRIM BOOST E+
2T	V	120	SOLENOID DF
3T	C	121	SOLENOID F ON 3 SPEED, B ON 4 SPEED, A ON 5 SPEED
3N	H	122	PRESSURE SWITCH LUBE
2L	A	123	TEMPERATURE SENSOR+
1P		124	THROTTLE SENSOR POWER (PIN A)

♦ NOT USED ON 3 SPEED
♦♦ ONLY USED ON 5 SPEED

J1A PIN NO.	WIRE NO.	NAME	FUNCTION
2K	201	CHASSIS GROUND	EMI PROTECTION
2A	202A	ECU POWER	12V POWER TO ECU
	202B	DDL/SCANNER POWER	12V POWER TO DDL/SCANNER
3A	203	CONTINUOUS POWER	12V POWER TO CONTINUOUS POWER MEMORY
1F	204	SELECTOR S1	PRI SHIFT SELECTOR S1
3G	205	SPEEDOMETER	TTL PULSE FROM OUTPUT SPEED SENSOR
1G	206	SELECTOR S4	PRI SHIFT SELECTOR S4
1J	207A	TEST DATA	TO DDL/SCANNER
1A	208	ECU GROUND	TO BATTERY NEGATIVE POST
1B	209	ECU GROUND	TO BATTERY NEGATIVE POST
2C	210A	SELECTOR GROUND	PRI SHIFT SELECTOR GROUND
	210B	DDL/SCANNER GROUND	DDL/SCANNER GROUND
3F	211	RETARDER ENABLE	ENABLES RETARDER CIRCUIT
3J	212	DO NOT SHIFT	ECU GOES FROM 12V TO OPEN TO ACTIVATE PRI SELECTOR "DO NOT SHIFT" MODE
3D	213	RETARDER OUTPUT	GROUNDED BY ECU WHEN RETARDER CIRCUIT IS ACTIVATED
2D	214	REVERSE SIGNAL	GROUNDED BY ECU WHEN REVERSE IS ATTAINED
3H	215	CHECK TRANS	GROUNDED NORMALLY OPEN CIRCUIT WHEN ALARM CONDITIONS ARE PRESENT
2J	216A	TEST MODE	GROUNDED BY EXTERNAL SWITCH FOR TEST MODE
	216B	TEST MODE	GROUNDED BY SCANNER FOR TEST MODE
1E	217	RANGE COMMAND SIGNAL	GROUNDED BY ECU WHEN PROGRAMMED RANGE(S) ARE ATTAINED
1H	218	SELECTOR PARITY	PRI SHIFT SELECTOR PARITY
2H	219	SELECTOR DV	PRI SHIFT SELECTOR DATA VALID
2G	220	SELECTOR S8	PRI SHIFT SELECTOR S8
2F	221	SELECTOR S2	PRI SHIFT SELECTOR S2
1K	222	SPECIAL INPUT	USED FOR SPECIAL APPLICATIONS
2B	223A	ECU POWER	12V POWER TO ECU
	223B	SELECTOR POWER	12V POWER TO PRI SHIFT SELECTOR
3K	224	SPARE OUTPUT	USED FOR SPECIAL APPLICATIONS
	225	SELECTOR POWER	12V IGNITION POWER TO PRI SHIFT SELECTOR
	230	SELECTOR LAMP	GROUND IN 12V SYSTEM OR 24V POWER IN 24V SYSTEM
	231	NEUTRAL START	GROUNDED BY PRI SHIFT SELECTOR WHEN IN NEUTRAL
	233	SELECTOR DIMMER	FROM DASHBOARD DIMMER CONTROL
	234	SELECTOR LAMP GROUND	PRI SHIFT SELECTOR GROUND (12V AND 24V SYSTEM)
	235	SELECTOR POWER	24V IGNITION POWER TO PRI SHIFT SELECTOR
1C	238	BDCL IN −	BI-DIRECTIONAL COMMUNICATION LINK
1D	239	BDCL OUT −	BI-DIRECTIONAL COMMUNICATION LINK
3B	240	BDCL IN +	BI-DIRECTIONAL COMMUNICATION LINK
3C	241	BDCL OUT +	BI-DIRECTIONAL COMMUNICATION LINK

J3 PIN NO.	WIRE NO.	NAME	FUNCTION
A	301	DO NOT SHIFT	ECU GOES FROM 12V TO OPEN TO ACTIVATE SEC SELECTOR "DO NOT SHIFT" MODE
B	302	SELECTOR DV	SEC SHIFT SELECTOR DATA VALID
C	303	SELECTOR S2 OR SPARE INPUT	SEC SHIFT SELECTOR S2 OR SPARE INPUT WITH NO SEC SHIFT SELECTOR
D	304	SELECTOR S8	SEC SHIFT SELECTOR S8
E	305	SELECTOR S1 OR BED/HOIST INTERLOCK	SEC SHIFT SELECTOR S1 OR BED/HOIST INTERLOCK WITH NO SEC SHIFT SELECTOR
F	306	SELECTOR S4	SEC SHIFT SELECTOR S4
G	307	SELECTOR PARITY	SEC SHIFT SELECTOR PARITY
H	308	SELECTOR GROUND	SEC SHIFT SELECTOR GROUND
J	309	LOGIC RETURN	SEC MODE SWITCHES RETURN
K	310	HOLD	ACTIVATES THE HOLD OPTION
L	311	MANUAL SHIFT MODE	ACTIVATES THE MANUAL SHIFT MODE
M	312	LOCKUP OFF	INHIBITS LOCKUP APPLY
N	313	ACCESSORY	WHEN ACCESSORY AND DUAL MODE ARE ACTIVATED, SEC MODE OPERATION IS ACTIVATED
P	314	LOCKUP ON	HOLDS LOCKUP CLUTCH ON
R	315	DUAL MODE	WHEN DUAL MODE AND ACCESSORY ARE ACTIVATED, SECONDARY MODE OPERATION IS ACTIVATED
S	316	NOT USED	
	317A	GROUND	12V GROUND
	317B	24V DIMMER	24V DIMMER
	318A	12V DIMMER	12V DIMMER
	318B	NOT USED	NOT USED
	319	LAMP SELECTOR GROUND	SEC SHIFT SELECTOR GROUND (12V AND 24V SYSTEM)
	321	SELECTOR POWER	12V IGNITION POWER TO SHIFT SEC SELECTOR
	322	NEUTRAL START	GROUNDED BY SEC SHIFT SELECTOR WHEN IN NEUTRAL
	323	SELECTOR POWER	12V ECU POWER TO SEC SHIFT SELECTOR
	324	SELECTOR POWER	24V IGNITION POWER TO SEC SHIFT SELECTOR

DISPLAY CONNECTOR	WIRE NO.	NAME	FUNCTION
	216C	DISPLAY DISABLE	DISABLES DISPLAY WHEN IN TEST MODE
	207B	DISPLAY DATA	SUPPLIES DATA TO OPTIONAL DISPLAY
	229	DISPLAY DIMMER	FROM DASHBOARD DIMMER CONTROL
	210C	DISPLAY GROUND	PROVIDES GROUND FOR DISPLAY
	202C	DISPLAY POWER	ECU POWER TO DISPLAY

AS00-132

FR2

COMPUTER GRAPHICS

CHANGE RESTRICTED

H REDRAWN WITH CHANGE, 12)REV FORMAT 14N088 LJBP

REV | DESCRIPTION | DATE | DWN

REVISIONS

THE INFORMATION CONTAINED HEREIN IS PROPRIETARY AND THE PROPERTY OF ALLISON TRANSMISSION DIVISION OF GENERAL MOTORS CORPORATION AND MAY NOT BE REPRODUCED, DISCLOSED OR USED FOR ANY PURPOSE OTHER THAN A QUOTATION TO BID OR ORDER FROM THE ALLISON TRANSMISSION DIVISION WITHOUT THE SPECIFIC WRITTEN AUTHORIZATION OF THE ALLISON TRANSMISSION DIVISION.

METRIC
ALL DIMENSIONS ARE IN MILLIMETERS, UNLESS OTHERWISE SPECIFIED

THIRD ANGLE PROJECTION

DRAWN J.W.A. 18JAN93
CHECKED P.J.W. 13APR92
APPROVED K. HUSELID 13APR92
PROJ. ENGR.
APPL. ENGR. K.WILLIAMS 18FEB92

Allison Transmission
Division of General Motors Corporation
INDIANAPOLIS, INDIANA

PLUS II ATEC
WIRING GUIDE

MODEL 6/700 SERIES
SIZE K | CAGE CODE 73342 | DWG NO AS00-132
SCALE NONE | SHEET 2 OF 2

FR1 | DWG. NO. AS00-132 | LTR SH H2

AS00-132 Plus II ATEC (Sheet 2)

COPYRIGHT 1994 GENERAL MOTORS CORP.

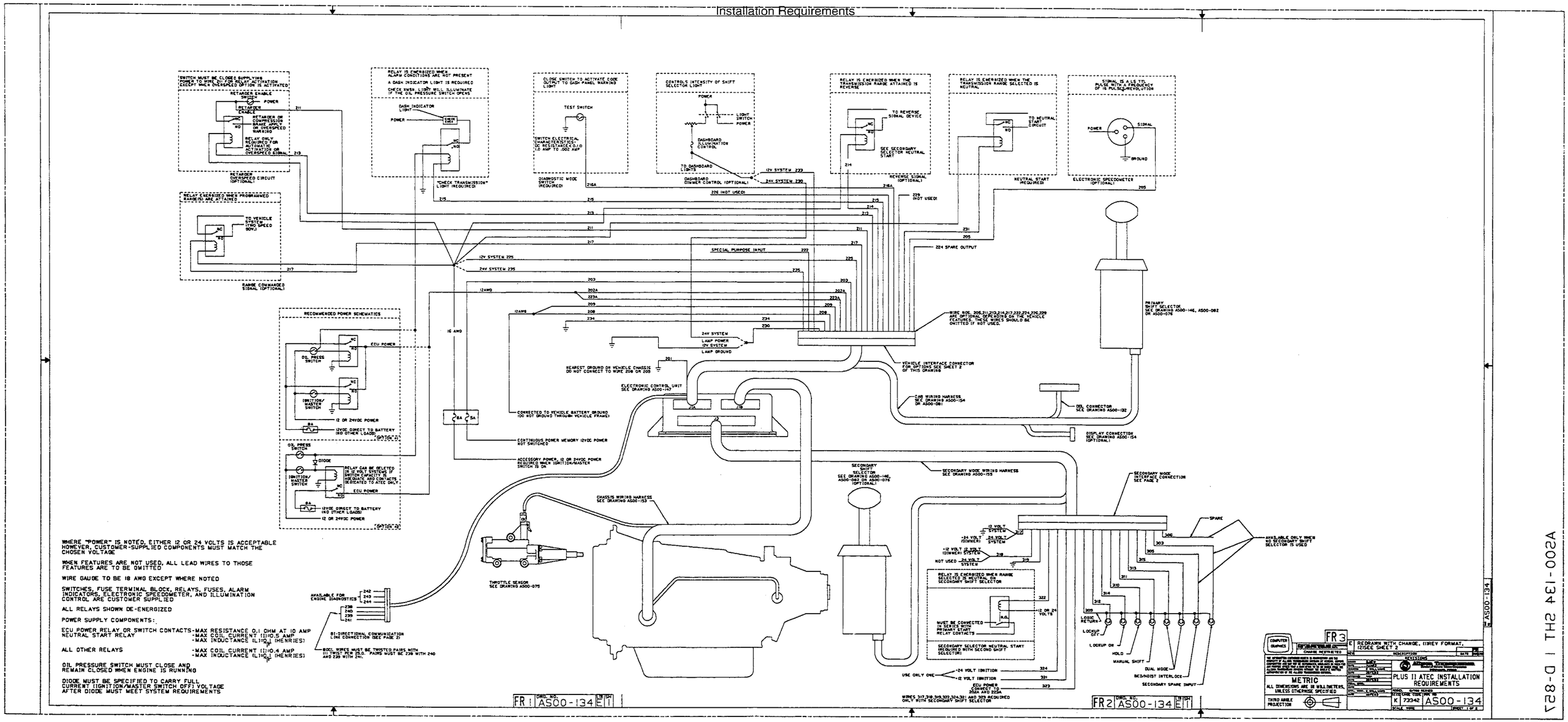

AS00-134 Plus II ATEC (Sheet 1)

COPYRIGHT 1994 GENERAL MOTORS CORP.

Installation Requirements

INTERFACE CONNECTORS

AMP INTERFACE CONNECTOR

OPTION #1

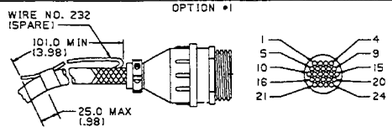

PIN NUMBER	WIRE NUMBER	PIN NUMBER	WIRE NUMBER	PIN NUMBER	WIRE NUMBER
1	223A	9	209	17	235
2	202A	10	217	18	205
3	203	11	211	19	230
4	229	12	234	20	233
5	226	13	213	21	222
6	225	14	214	22	224
7	231	15	215	23	SPARE
8	208	16	216A	24	SPARE

CONNECTOR 206838-2

MATING CONNECTOR 206837-1
SOCKET 66101-2
CABLE CLAMP 206138-1

AMERLINE CONNECTOR

OPTION #2

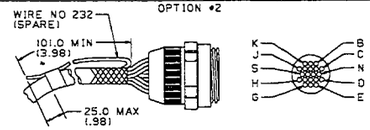

PIN NUMBER	WIRE NUMBER	PIN NUMBER	WIRE NUMBER	PIN NUMBER	WIRE NUMBER
A	223A	H	208	Q	215
B	202A	J	209	R	216A
C	203	K	217	S	235
D	222	L	211	T	205
E	224	M	234	U	230
F	225	N	213	V	233
G	231	P	214		

HARNESS CONNECTOR 8724641
NUT, COUPLING 7716634
NUT, GROMMET 7723309
GROMMET 7974332

MATING CONNECTOR 7974634
NUT, GROMMET 7723309
GROMMET 7974632

OR MATING CONNECTOR 7968275

PIGTAIL CONNECTION

OPTION #3

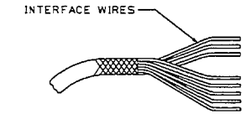

WIRE COLOR	WIRE NUMBER	WIRE COLOR	WIRE NUMBER
RED	202A	VIO	217
BLU	203	RED	222
GRN	205	RED	223A
BLK	208	VIO	225
BLK	209	WHT	229
YEL	211	YEL	230
BLU	213	BLU	231
WHT	214	BLK	234
VIO	215	WHT	235
YEL	216A	WHT	224

WIRE NUMBER IS STAMPED ON WIRES AT REGULAR INTERVALS

ECU POWER AND GROUND WIRES (202A, 223A, 208, 209) SHALL BE 16AWG. ALL OTHER WIRES SHALL BE 18AWG.

WIRE NO.	NAME	FUNCTION
201	CHASSIS GROUND	EMI PROTECTION
202A	ECU POWER	12V POWER TO ECU
203	CONTINUOUS POWER	12V POWER TO CONTINUOUS MEMORY
205	SPEEDOMETER	LSTTL PULSE FROM OUTPUT SPEED SENSOR
208	ECU GROUND	TO BATTERY NEGATIVE POST
209	ECU GROUND	TO BATTERY NEGATIVE POST
211	RETARDER ENABLE	ENABLES "RETARDER" CIRCUIT
213	RETARDER OUTPUT	GROUNDED BY ECU WHEN RETARDER CIRCUIT IS ACTIVATED
214	REVERSE SIGNAL	GROUNDED BY ECU WHEN REVERSE IS ATTAINED
215	CHECK TRANS	GROUNDED NORMALLY, OPEN CIRCUIT WHEN ALARM CONDITIONS ARE PRESENT
216A	TEST MODE	GROUNDED BY EXTERNAL SWITCH FOR TEST MODE
217	RANGE COMMANDED SIGNAL	GROUNDED BY ECU WHEN PROGRAMMED RANGE(S) ARE ATTAINED
233	SPECIAL INPUT	USED FOR SPECIAL PURPOSE APPLICATIONS
233A	ECU POWER	12V POWER TO ECU
224	SPARE OUTPUT	USED FOR SPECIAL APPLICATIONS
225	SELECTOR POWER	12V IGNITION POWER TO SHIFT SELECTOR, NOT USED IN 24V SYSTEM
226	NOT USED	
229	DISPLAY DIMMER	FROM DASH DIMMER CONTROL
230	SELECTOR LAMP	GROUND IN 12V SYSTEM OR 24V POWER IN 24V SYSTEM
231	NEUTRAL START	GROUNDED BY SHIFT SELECTOR WHEN IN NEUTRAL
233	SELECTOR DIMMER	FROM DASH DIMMER CONTROL
234	SELECTOR LAMP GND	SHIFT SELECTOR LAMP GROUND
235	SELECTOR POWER	24V IGNITION POWER TO SHIFT SELECTOR, NOT USED IN 12V SYSTEM
238	BDCL IN -	BI-DIRECTIONAL COMMUNICATION LINK
239	BDCL OUT -	BI-DIRECTIONAL COMMUNICATION LINK
240	BDCL IN +	BI-DIRECTIONAL COMMUNICATION LINK
241	BDCL OUT +	BI-DIRECTIONAL COMMUNICATION LINK
306	SPARE	SPARE WIRE AVAILABLE ONLY IF SECONDARY SELECTOR IS NOT USED
309	LOGIC RETURN	SECONDARY MODE SWITCHES RETURN
310	HOLD	ACTIVATES THE HOLD OPTION
311	MANUAL MODE	ACTIVATES MANUAL SHIFT MODE
312	LOCKUP OFF	INHIBITS LOCKUP APPLY
313	ACCESSORY	WHEN ACCESSORY AND DUAL MODE ARE ACTIVATED, SECONDARY MODE OPERATION IS ACTIVATED
314	LOCKUP ON	HOLDS LOCKUP CLUTCH ON
315	DUAL MODE	WHEN DUAL MODE AND ACCESSORY ARE ACTIVATED, SECONDARY MODE OPERATION IS ACTIVATED
316	NOT USED	
317	SELECTOR LAMP	GROUND IN 12V SYSTEM OR 24V POWER IN 24V SYSTEM
318	SELECTOR DIMMER	12V LAMP DIMMER
319	SELECTOR LAMP GROUND	SHIFT SELECTOR LAMP GROUND
321	2ND SELECTOR POWER	12V IGNITION POWER TO SELECTOR (NOT USED IN 24V SYSTEM)
322	2ND SELECTOR NEUTRAL START	GROUND BY 2ND SHIFT SELECTOR WHEN IN NEUTRAL
323	2ND SELECTOR POWER	12V ECU POWER TO SELECTOR
324	2ND SELECTOR POWER	24V IGNITION POWER TO SELECTOR (NOT USED IN 12V SYSTEM)

DIMENSIONS IN PARENTHESIS ( ) ARE IN INCHES AND FOR REFERENCE ONLY

SECONDARY MODE CONNECTION

AMP CONNECTOR-WITH SECONDARY SHIFT SELECTOR

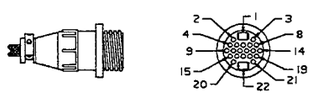

PIN NUMBER	WIRE NUMBER
1	NOT USED
2	310
3	312
4	311
5	313
6	314
7	315
8	309
9	317
10	319
11	318
12	324
13	321
14	323
15	322
16-22	NOT USED

CONNECTOR: 206613-3
PINS: 66099-2
CABLE CLAMP: 206138-1

MATING CONNECTOR: 206612-1
SOCKETS: 66101-2
CABLE CLAMP: 206138-1

AMP CONNECTOR

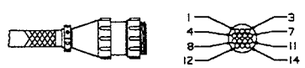

PIN NUMBER	WIRE NUMBER
1	310
2	312
3	311
4	313
5	314
6	315
7	309
11	305
12	303
13	306

CONNECTOR 206044-1

MATING CONNECTOR 206043-3
SOCKETS 66101-2
CABLE CLAMP 206322-1

PIGTAIL CONNECTION

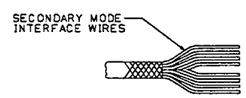

AVAILABLE ONLY IF SECONDARY SELECTOR IS NOT USED

WIRE COLOR	WIRE NUMBER
BLU	310
VIO	312
GRN	311
RED	313
YEL	314
WHT	315
BLK	309
WHT	317
VIO	318
BLK	319
WHT	305
VIO	303
VIO	306
WHT	324
VIO	321
RED	323
BLU	322

AVAILABLE ONLY WITH SECONDARY SHIFT SELECTOR

ALL WIRES ARE 18AWG

BI-DIRECTIONAL CONNECTION (OPTIONAL)

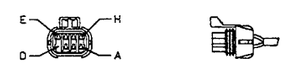

CONNECTOR

PART	PACKARD PART NUMBER	QTY
CONNECTOR	12047934	1
SOCKET	12048074	7
LOCK	12047936	1
SEAL	12048086	7

MATING CONNECTOR

PART	PACKARD PART NUMBER	QTY
CONNECTOR	12047933	1
PIN	12045773	7
LOCK	12047936	1
SEAL	12048086	7

PIN NUMBER	WIRE NUMBER	MATING WIRE FOR DDEC ENGINE CONTROLS	MATING WIRE FOR TRANS.-TRANS. COMMUNICATIONS
A	239	534	238
B	240	533	241
C	243	451	NOT REQUIRED
E	242	461	NOT REQUIRED
F	244	510	NOT REQUIRED
G	238	532	239
H	241	535	240

FR 1 | DWG. NO. AS00-134 | LTR F | SH 2

FR 2

COMPUTER GRAPHICS

CHANGE RESTRICTED

REV	DESCRIPTION	DATE	BY
F	(21)IN PIGTAIL CONNECTION, DELE ALL WIRES ARE 18AWG NOTE AND ADDED ECU POWER AND GROUND NOTE. (31)IN WIRING CHART, DELE WIRE NO 317A AND 318B, REV WIRE NO 319 NAME AND FUNCTION, REV WIRE NO 321 AND 324 FUNCTION		TB
E	REDRAWN WITH CHANGE, (2)REV FORMAT	27DC88	PB

REVISIONS

Allison Transmission
Division of General Motors Corporation
INDIANAPOLIS, INDIANA

METRIC
ALL DIMENSIONS ARE IN MILLIMETERS, UNLESS OTHERWISE SPECIFIED

THIRD ANGLE PROJECTION

PLUS II INSTALLATION REQUIRMENTS

MODEL: 6,700 SERIES

SIZE K | CAGE CODE 73342 | DWG NO AS00-134

SCALE NONE | SHEET 2 OF 2

AS00-134

AS00-134 2HT S D-82A

AS00-134 Plus II ATEC (Sheet 2)

COPYRIGHT 1994 GENERAL MOTORS CORP.

Schematic View

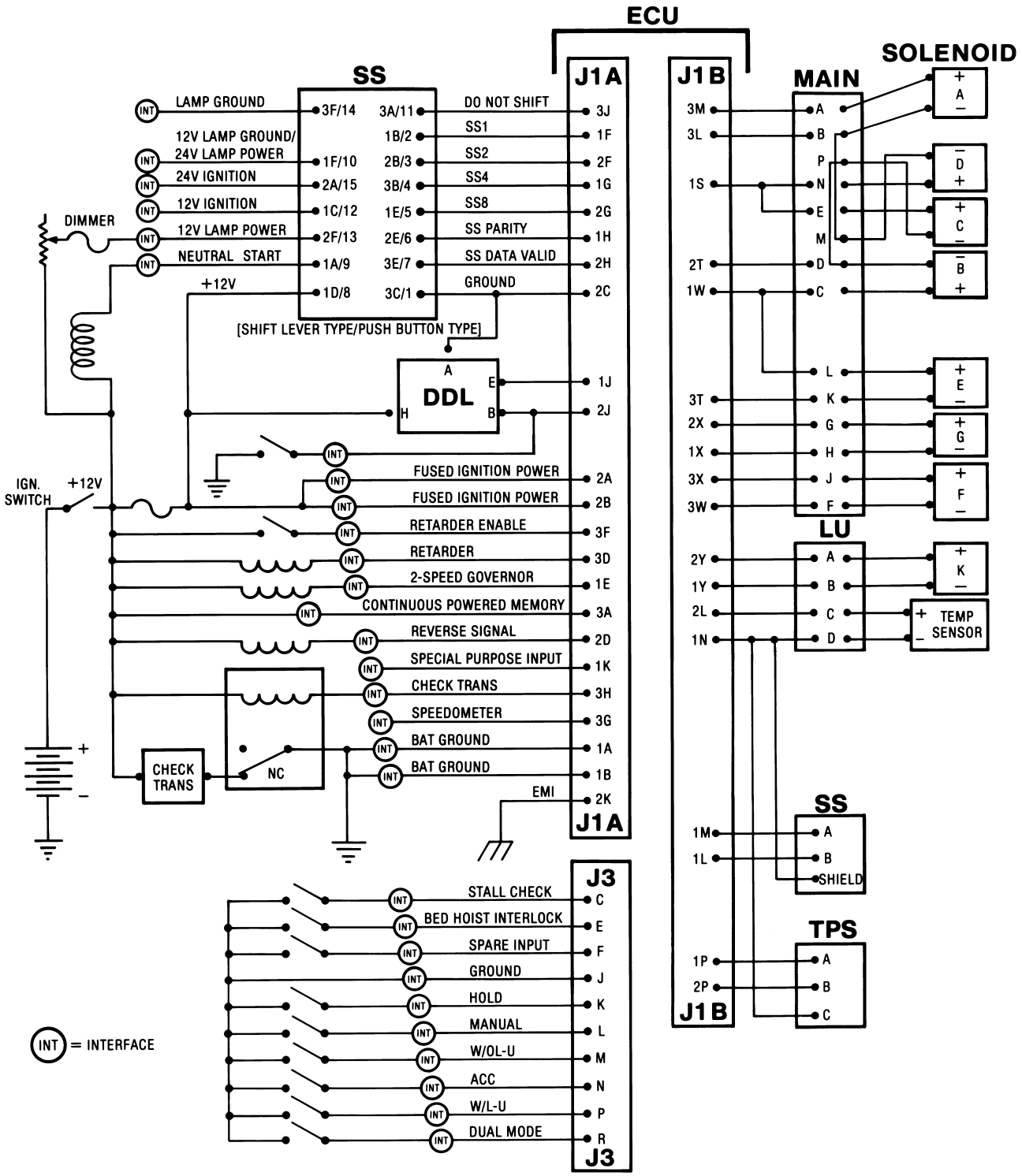

CLBT 5962/6062 Lock-in-Range (12 Volt System)

COPYRIGHT 1994 GENERAL MOTORS CORP.

Schematic View

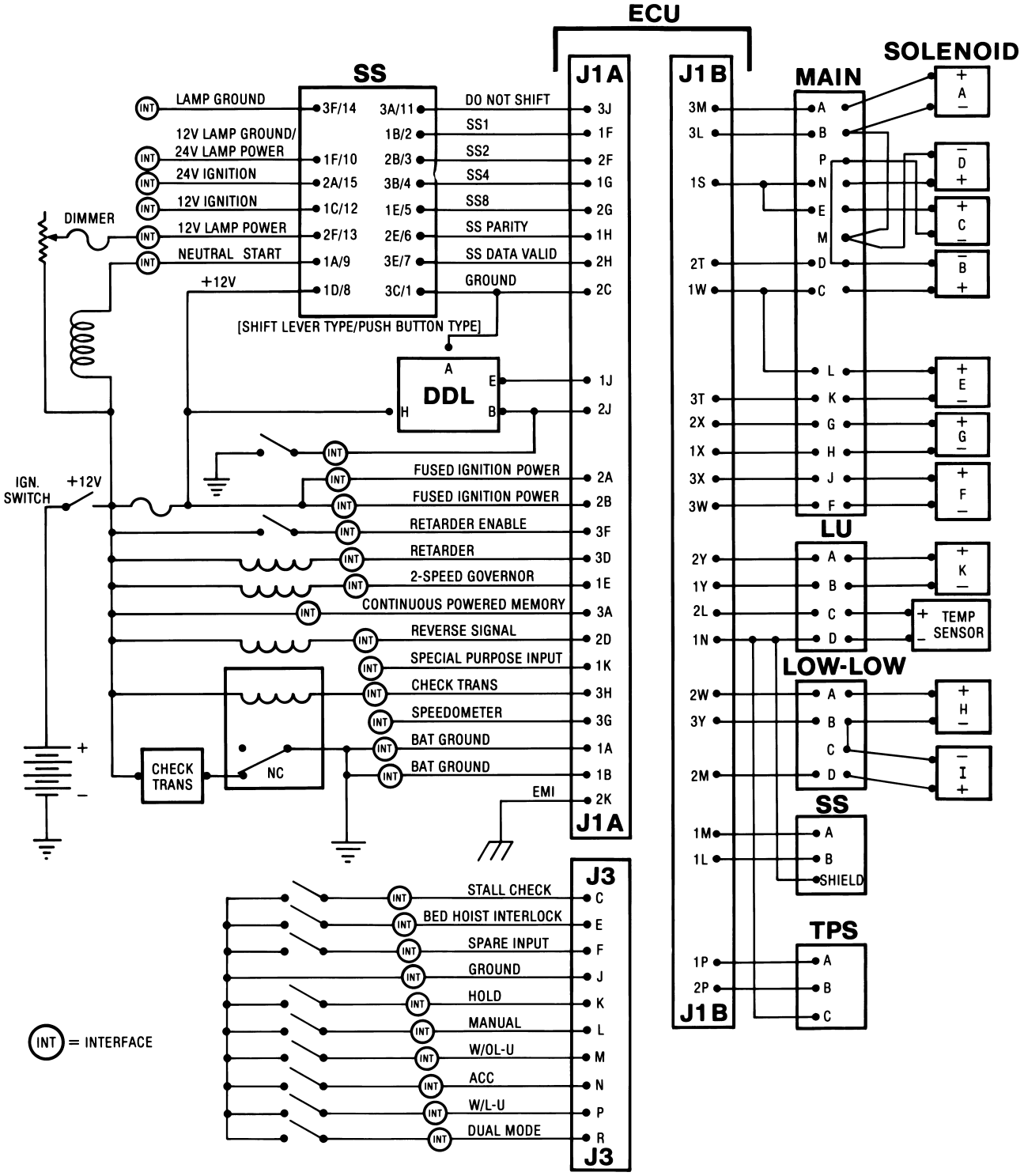

DP 8963 Lock-in-Range (12 Volt System)

COPYRIGHT 1994 GENERAL MOTORS CORP.

Schematic View

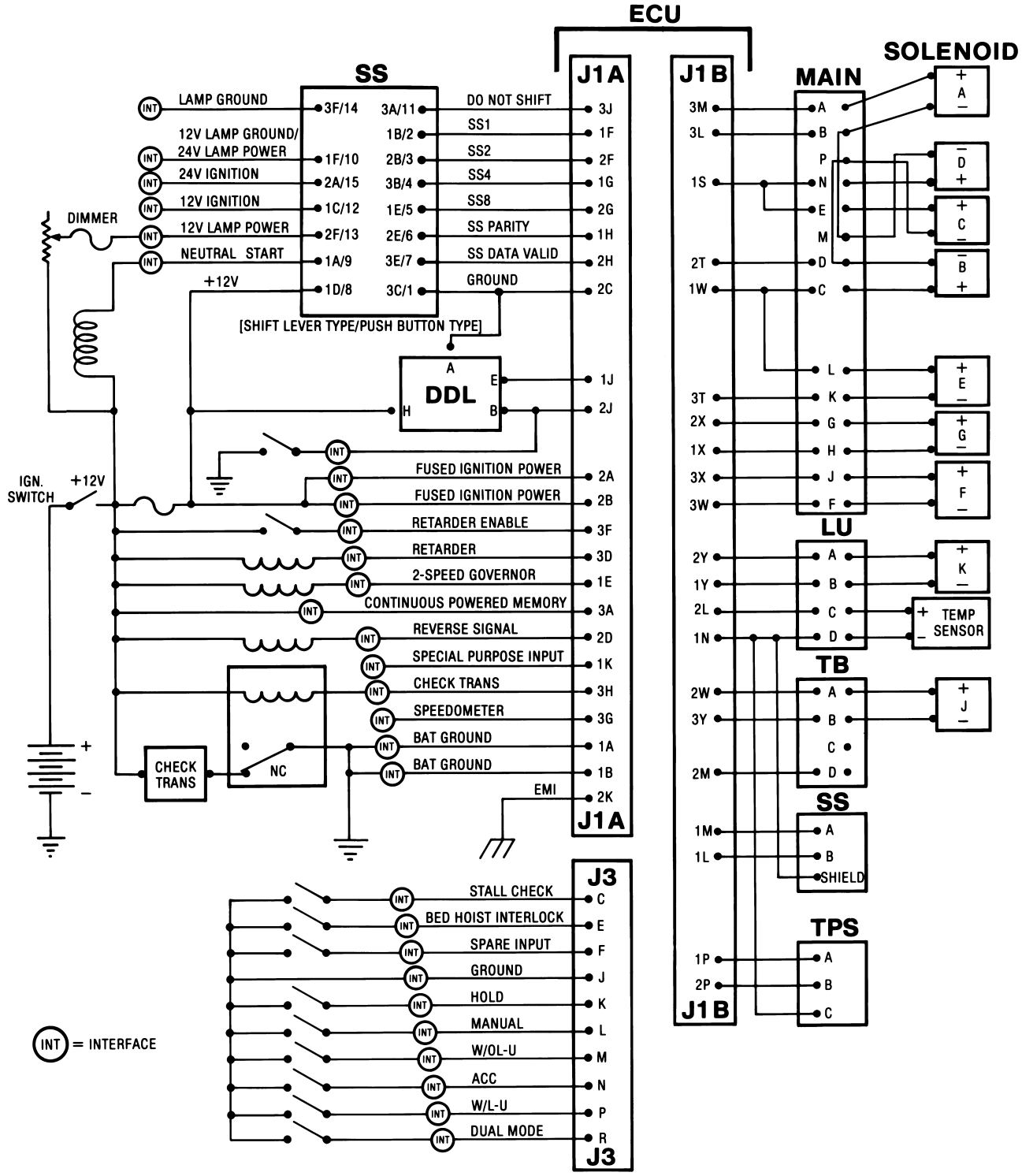

CLBT 9681 Lock-in-Range (12 Volt System)

COPYRIGHT 1994 GENERAL MOTORS CORP.

Schematic View

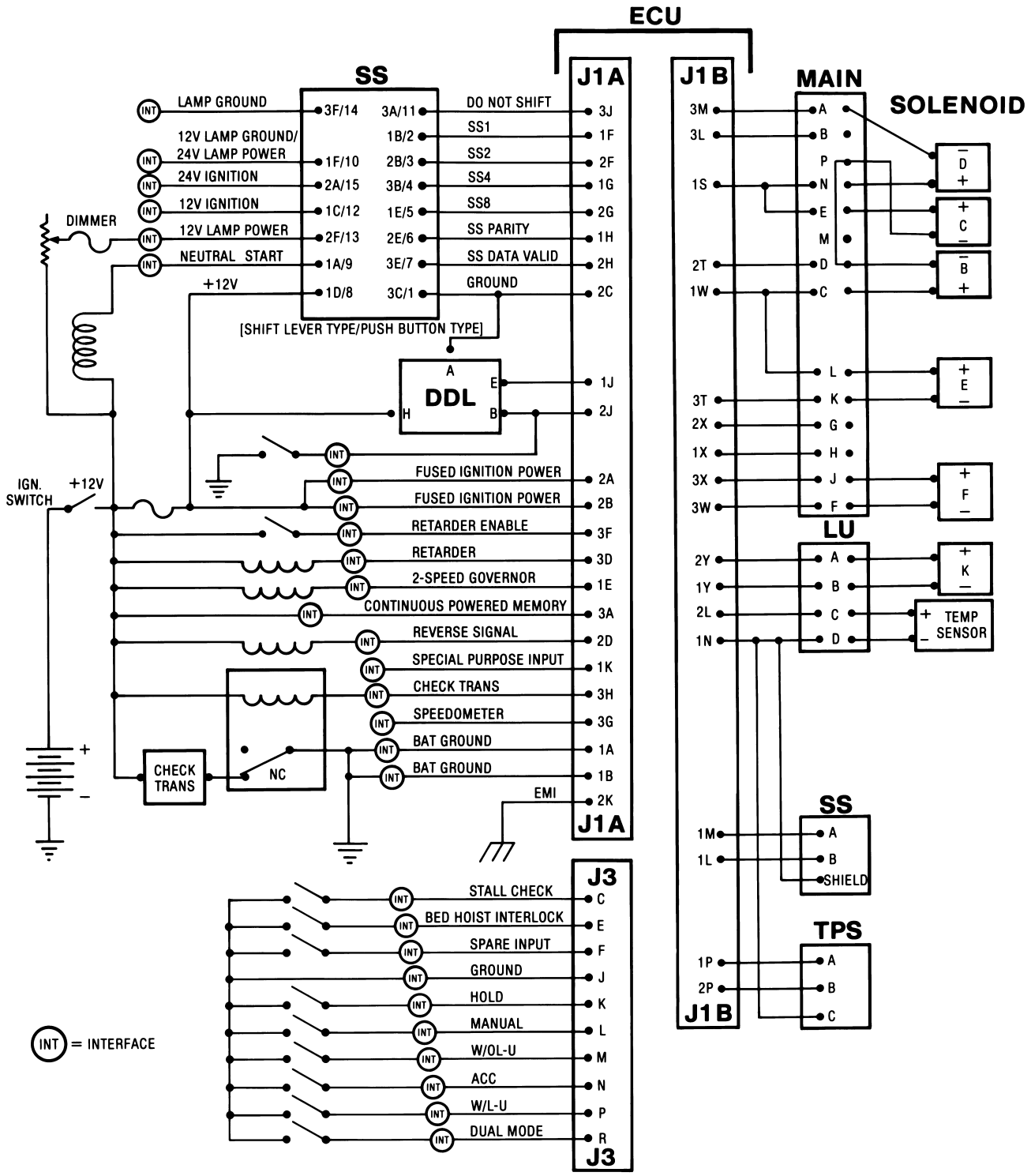

CLBT 5962/6062 Lock-to-Neutral (12 Volt System)

COPYRIGHT 1994 GENERAL MOTORS CORP.

Schematic View

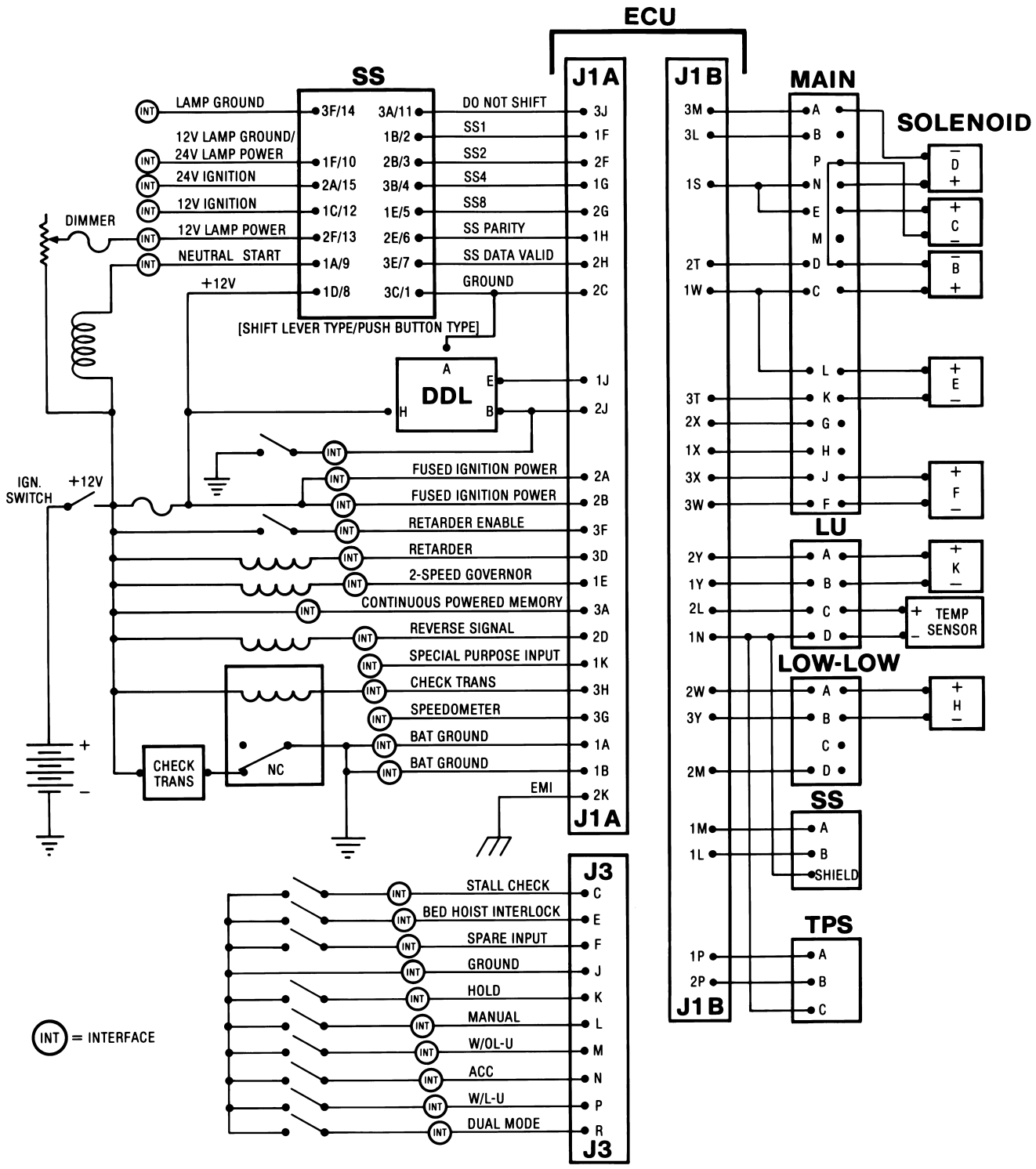

DP 8693 Lock-to-Neutral (12 Volt System)

COPYRIGHT 1994 GENERAL MOTORS CORP.

Wiring Guide

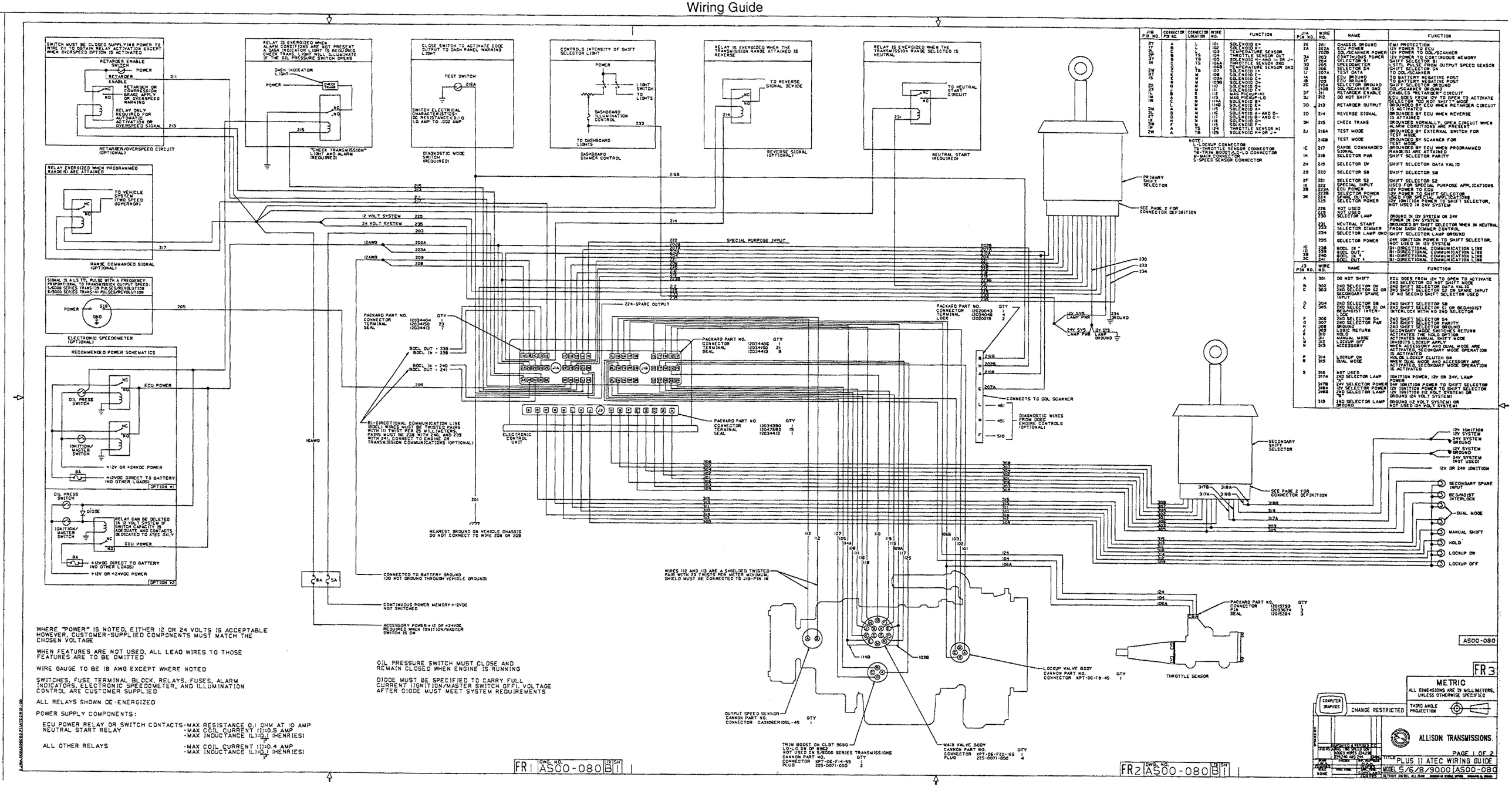

J1B PIN NO.	CONNECTOR PIN NO.	CONNECTOR LOCATION	WIRE NO.	FUNCTION
2V	A	L	101	SOLENOID E+
2U	B	L	102	SOLENOID C+
2S	C	L	103	TEMPERATURE SENSOR
2R	D	TS	104	THROTTLE SENSOR OUT
3V	B	TS	105	SOLENOID H- AND L- OR J-
1H	C	TS	106A	THROTTLE SENSOR GND
	D	TS	106B	TEMPERATURE SENSOR GND
2W	B	M	107	SOLENOID I+
3T	C	M	108	SOLENOID E-
	D	M	109A	SOLENOID D+
	E	M	109B	SOLENOID D-
2X	B	M	110	SOLENOID B+
3S	C	M	111	SOLENOID A+
1L	B	S	112	MAG PICKUP-HI
1M	C	S	113	MAG PICKUP-LO
	D	M	114A	SOLENOID B-
	E	M	114B	SOLENOID E+
3W	B	M	115	SOLENOID A-
3U	C	M	116	SOLENOID A+ AND D-
	D	M	117	SOLENOID B- AND C-
	E	M	118	SOLENOID D-
3W	B	M	119	SOLENOID C-
1P	C	TS	124	THROTTLE SENSOR HI
2W	A	TS	125	SOLENOID H+ OR J+

NOTE:
L-LOCKUP CONNECTOR
TS-THROTTLE SENSOR CONNECTOR
TB-TRIM BOOST/O.S.-LO CONNECTOR
M-MAIN CONNECTOR
S-SPEED SENSOR CONNECTOR

J1A PIN NO.	WIRE NO.	NAME	FUNCTION
2K	201	CHASSIS GROUND	EMI PROTECTION
2A	202A	ECU POWER	12V POWER TO ECU
	202B	DDL/SCANNER POWER	12V POWER TO DDL/SCANNER
3A	203	ECU MEMORY POWER	12V POWER TO CONTINUOUS MEMORY
1F	204	SELECTOR S1	2ND SHIFT SELECTOR S1
3G	205	SPEEDOMETER	LIGHT PULSE FROM OUTPUT SPEED SENSOR
1G	206	SELECTOR S4	SHIFT SELECTOR S4
1J	207A	TEST DATA	TO DDL/SCANNER
1A	208	ECU GROUND	TO BATTERY NEGATIVE POST
1B	209	ECU GROUND	TO BATTERY NEGATIVE POST
2C	210A	SELECTOR GROUND	SHIFT SELECTOR GROUND
	210B	DDL/SCANNER GND	DDL/SCANNER GROUND
3F	211	RETARDER ENABLE	ENABLES "RETARDER" CIRCUIT
3J	212	DO NOT SHIFT	GROUND FROM 12V TO OPEN TO ACTIVATE SELECTOR "DO NOT SHIFT" MODE
3D	213	RETARDER OUTPUT	GROUNDED BY ECU WHEN RETARDER CIRCUIT IS ACTIVATED
2D	214	REVERSE SIGNAL	GROUNDED BY ECU WHEN REVERSE IS ATTAINED
3H	215	CHECK TRANS	GROUNDED NORMALLY. OPEN CIRCUIT WHEN ALARM CONDITIONS ARE PRESENT
2J	216A	TEST MODE	GROUNDED BY EXTERNAL SWITCH FOR TEST MODE
	216B	TEST MODE	GROUNDED BY SCANNER FOR TEST MODE
1C	217	RANGE COMMANDED SIGNAL	GROUNDED BY ECU WHEN PROGRAMMED RANGE(S) ARE ATTAINED
1H	218	SELECTOR PAR	SHIFT SELECTOR PARITY
2H	219	SELECTOR DV	SHIFT SELECTOR DATA VALID
2B	220	SELECTOR S8	SHIFT SELECTOR S8
2F	221	SELECTOR S2	SHIFT SELECTOR S2
1E	222	SPECIAL INPUT	USED FOR SPECIAL PURPOSE APPLICATIONS
2B	223A	ECU POWER	12V POWER TO ECU
	223B	SELECTOR POWER	12V POWER TO SHIFT SELECTOR
3K	224	SPARE OUTPUT	USED FOR SPECIAL APPLICATIONS
	225	SELECTOR POWER	12V IGNITION POWER TO SHIFT SELECTOR, NOT USED IN 24V SYSTEM
	226	NOT USED	
	227	NOT USED	
	228	SELECTOR LAMP	GROUND IN 12V SYSTEM OR 24V POWER IN 24V SYSTEM
	231	NEUTRAL START	GROUNDED BY SHIFT SELECTOR WHEN IN NEUTRAL
	233	SELECTOR DIMMER	FROM DASH DIMMER CONTROL
	234	SELECTOR LAMP GND	SHIFT SELECTOR LAMP GROUND
	235	SELECTOR POWER	24V IGNITION POWER TO SHIFT SELECTOR, NOT USED IN 12V SYSTEM
1K	238	BDCL IN +	BI-DIRECTIONAL COMMUNICATION LINE
1D	239	BDCL OUT +	BI-DIRECTIONAL COMMUNICATION LINE
3E	240	BDCL IN -	BI-DIRECTIONAL COMMUNICATION LINE
3C	241	BDCL OUT -	BI-DIRECTIONAL COMMUNICATION LINE

J3 PIN NO.	WIRE NO.	NAME	FUNCTION
A	301	DO NOT SHIFT	ECU DOES FROM 12V TO OPEN TO ACTIVATE 2ND SELECTOR DO NOT SHIFT MODE
B	302	2ND SELECTOR DV	2ND SHIFT SELECTOR DATA VALID
C	303	2ND SELECTOR S2 OR SECONDARY SPARE INPUT	2ND SHIFT SELECTOR S2 OR SPARE INPUT IF SECONDARY SHIFT SELECTOR USED
D	304	2ND SELECTOR S8	2ND SHIFT SELECTOR S8
E	305	2ND SELECTOR S1 OR BEDHOIST INTERLOCK	2ND SHIFT SELECTOR S1 OR BEDHOIST INTERLOCK WITH NO 2ND SELECTOR
F	306	2ND SELECTOR S4	2ND SHIFT SELECTOR S4
G	307	2ND SELECTOR PAR	2ND SHIFT SELECTOR PARITY
H	308	GROUND	2ND SHIFT SELECTOR GROUND
J	309	LOGIC RETURN	SECONDARY MODE SWITCHES RETURN
K	310	HOLD	ACTIVATES THE HOLD OPTION
L	311	MANUAL MODE	ACTIVATES MANUAL SHIFT MODE
M	312	LOCKUP OFF	INHIBITS LOCKUP APPLY
N	313	ACCESSORY	WHEN ACCESSORY AND DUAL MODE ARE ACTIVATED, SECONDARY MODE OPERATION IS ACTIVATED
P	314	LOCKUP ON	HOLDS LOCKUP CLUTCH ON
R	315	DUAL MODE	WHEN DUAL MODE AND ACCESSORY ARE ACTIVATED, SECONDARY MODE OPERATION IS ACTIVATED
S	316	NOT USED	
	317A	2ND SELECTOR LAMP "S"	IGNITION POWER, 12V OR 24V, LAMP POWER
	317B	24V SELECTOR POWER	24V IGNITION POWER TO SHIFT SELECTOR
	318A	12V SELECTOR POWER	12V IGNITION POWER TO SHIFT SELECTOR
	318B	2ND SELECTOR LAMP "S"	12V IGNITION (12 VOLT SYSTEM) OR GROUND (24 VOLT SYSTEM)
	319	2ND SELECTOR LAMP GROUND	GROUND (12 VOLT SYSTEM) OR NOT USED (24 VOLT SYSTEM)

PACKARD PART NO.		QTY
CONNECTOR	12020043	1
TERMINAL	12034046	4
LOCK	12020219	2

PACKARD PART NO.		QTY
CONNECTOR	12034406	1
TERMINAL	12034150	21
SEAL	12034413	9

PACKARD PART NO.		QTY
CONNECTOR	12034390	1
TERMINAL	12047689	15
SEAL	12034412	1

PACKARD PART NO.		QTY
CONNECTOR	12015783	1
PIN	12033674	3
SEAL	12015284	3

WHERE "POWER" IS NOTED, EITHER 12 OR 24 VOLTS IS ACCEPTABLE HOWEVER, CUSTOMER-SUPPLIED COMPONENTS MUST MATCH THE CHOSEN VOLTAGE

WHEN FEATURES ARE NOT USED, ALL LEAD WIRES TO THOSE FEATURES ARE TO BE OMITTED

WIRE GAUGE TO BE 18 AWG EXCEPT WHERE NOTED

SWITCHES, FUSE TERMINAL BLOCK, RELAYS, FUSES, ALARM INDICATORS, ELECTRONIC SPEEDOMETER, AND ILLUMINATION CONTROL ARE CUSTOMER SUPPLIED

ALL RELAYS SHOWN DE-ENERGIZED

POWER SUPPLY COMPONENTS:

ECU POWER RELAY OR SWITCH CONTACTS - MAX RESISTANCE 0.1 OHM AT 10 AMP
NEUTRAL START RELAY - MAX COIL CURRENT (I)=0.5 AMP - MAX INDUCTANCE (L)=0.1 (HENRIES)

ALL OTHER RELAYS - MAX COIL CURRENT (I)=0.4 AMP - MAX INDUCTANCE (L)=0.1 (HENRIES)

OIL PRESSURE SWITCH MUST CLOSE AND REMAIN CLOSED WHEN ENGINE IS RUNNING

DIODE MUST BE SPECIFIED TO CARRY FULL CURRENT (IGNITION/MASTER SWITCH OFF), VOLTAGE AFTER DIODE MUST MEET SYSTEM REQUIREMENTS

AS00-080 Plus II ATEC (Sheet 1)

COPYRIGHT 1994 GENERAL MOTORS CORP.

Wiring Guide

SHIFT SELECTOR CONNECTOR WIRING GUIDE

SEALED SHIFT SELECTOR

PRIMARY SELECTOR

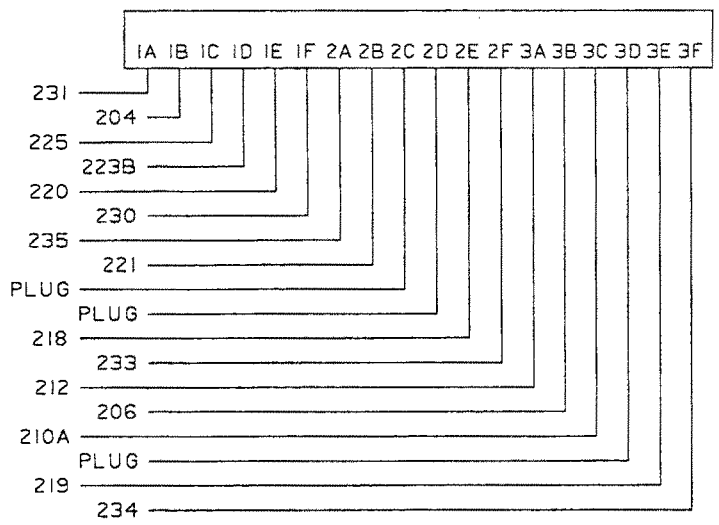

PACKARD PART NO.		QTY
CONNECTOR	12040921	1
SOCKET	12047680	15
PLUG	12034413	3

SECONDARY SELECTOR

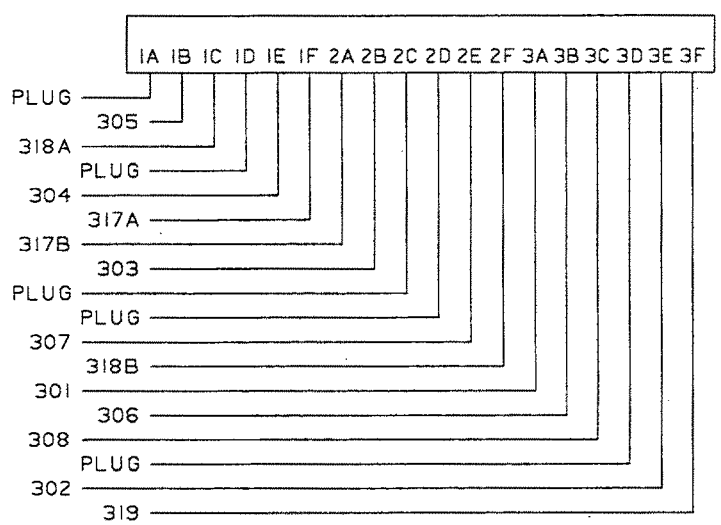

PACKARD PART NO.		QTY
CONNECTOR	12040921	1
SOCKET	12047680	13
PLUG	12034413	5

STANDARD PUSHBUTTON SELECTOR

PRIMARY SELECTOR

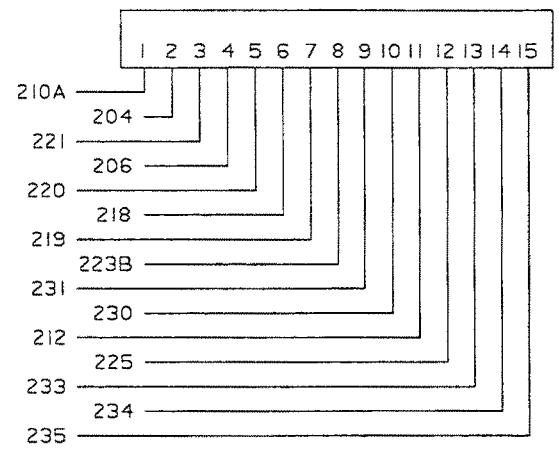

AMP PART NO.		QTY
CONNECTOR	206037-1	1
CABLE CLAMP	206322-1	1
SOCKET	66592-1	16

SECONDARY SELECTOR

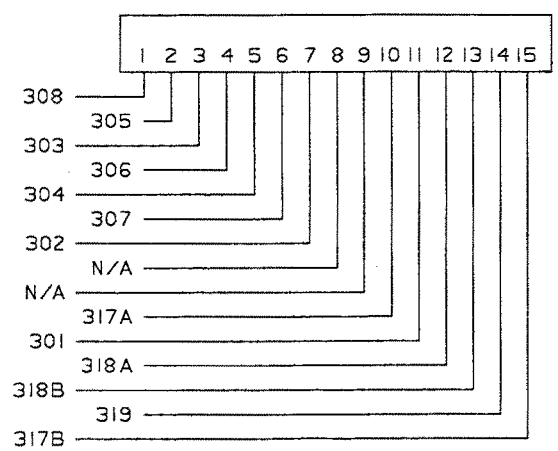

AMP PART NO.		QTY
CONNECTOR	206037-1	1
CABLE CLAMP	206322-1	1
SOCKET	66592-1	16

AS00-080

METRIC
ALL DIMENSIONS ARE IN MILLIMETERS, UNLESS OTHERWISE SPECIFIED

COMPUTER GRAPHICS

CHANGE RESTRICTED

THIRD ANGLE PROJECTION

ALLISON TRANSMISSIONS

PAGE 2 OF 2

DRAWN	CHECKED	CHF. DRAFTSMAN	TITLE PLUS II ATEC WIRING GUIDE
J.W.A. 22MR85		H.A.H. 15APR85	MODEL 5/6/8/9000 SERIES AS00-080
SCALE NONE	PROJ. ENGR.	APPL. ENGR. COPELAND 26MR85	DETROIT DIESEL ALLISON DIVISION OF GENERAL MOTORS INDIANAPOLIS, INDIANA

2.JWA.000AS00080.PLUATEC.WIR.200

AS00-080 Plus II ATEC (Sheet 2)

COPYRIGHT 1994 GENERAL MOTORS CORP.

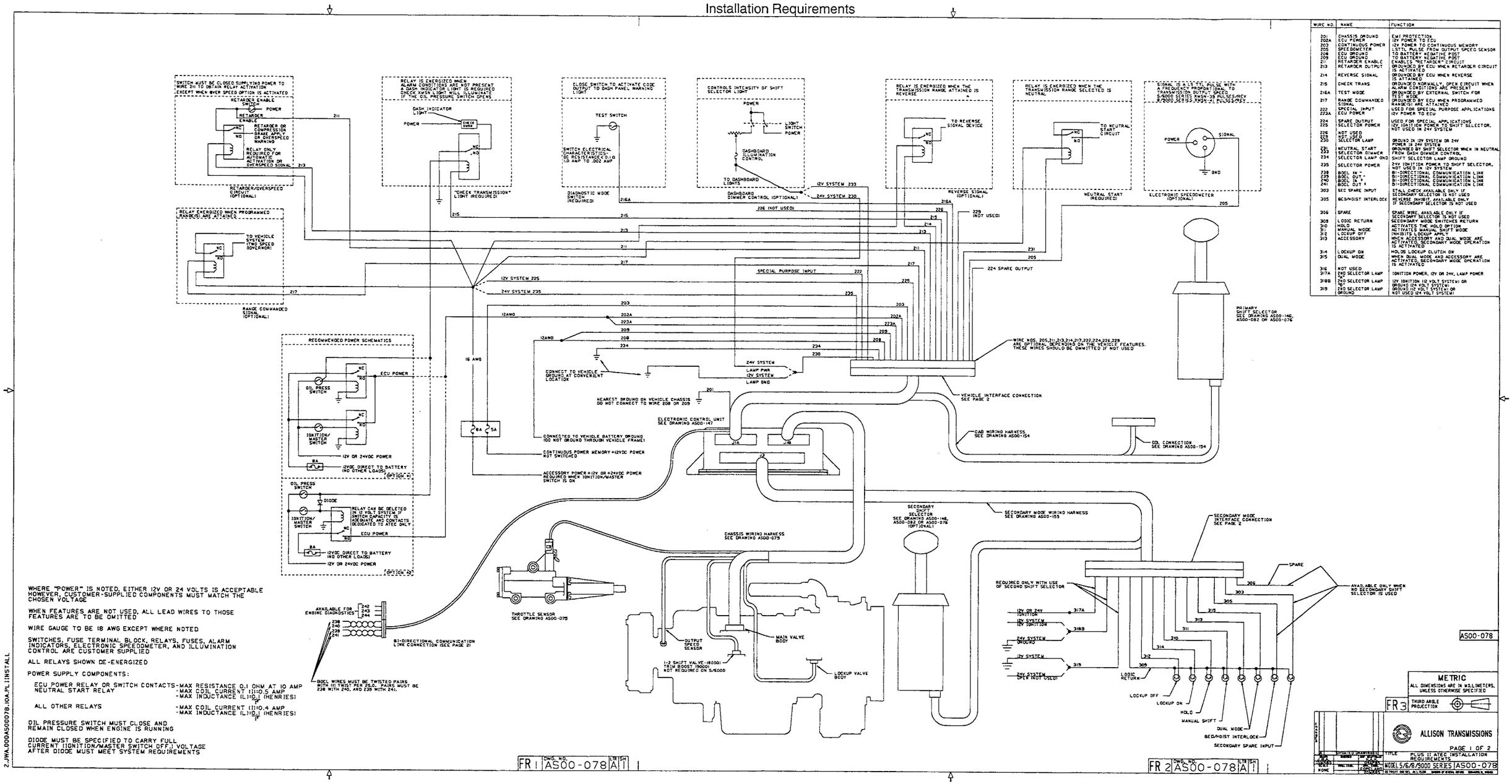

WIRE NO.	NAME	FUNCTION
201	CHASSIS GROUND	EMI PROTECTION
202A	ECU POWER	12V POWER TO ECU
203	CONTINUOUS POWER	12V POWER TO CONTINUOUS MEMORY
205	SPEEDOMETER	LSTTL PULSE FROM OUTPUT SPEED SENSOR
208	ECU GROUND	TO BATTERY NEGATIVE POST
209	ECU GROUND	TO BATTERY NEGATIVE POST
211	RETARDER ENABLE	ENABLES "RETARDER" CIRCUIT
213	RETARDER OUTPUT	GROUNDED BY ECU WHEN RETARDER CIRCUIT IS ACTIVATED
214	REVERSE SIGNAL	GROUNDED BY ECU WHEN REVERSE IS ATTAINED
215	CHECK TRANS	GROUNDED NORMALLY. OPEN CIRCUIT WHEN ALARM CONDITIONS ARE PRESENT
216A	TEST MODE	GROUNDED BY EXTERNAL SWITCH FOR TEST MODE
217	RANGE COMMANDED SIGNAL	GROUNDED BY ECU WHEN PROGRAMMED RANGE(S) ARE ATTAINED
222	SPECIAL INPUT	USED FOR SPECIAL PURPOSE APPLICATIONS
223A	ECU POWER	12V POWER TO ECU
224	SPARE OUTPUT	USED FOR SPECIAL APPLICATIONS
225	SELECTOR POWER	12V IGNITION POWER TO SHIFT SELECTOR. NOT USED IN 24V SYSTEM
226	NOT USED	
229	NOT USED	
230	SELECTOR LAMP	GROUND IN 12V SYSTEM OR 24V POWER IN 24V SYSTEM
231	NEUTRAL START	GROUNDED BY SHIFT SELECTOR WHEN IN NEUTRAL
233	SELECTOR DIMMER	FROM DASH DIMMER CONTROL
234	SELECTOR LAMP GND	SHIFT SELECTOR LAMP GROUND
235	SELECTOR POWER	24V IGNITION POWER TO SHIFT SELECTOR. NOT USED IN 12V SYSTEM
238	DGCL IN -	BI-DIRECTIONAL COMMUNICATION LINK
239	DGCL OUT -	BI-DIRECTIONAL COMMUNICATION LINK
240	DGCL IN +	BI-DIRECTIONAL COMMUNICATION LINK
241	DGCL OUT +	BI-DIRECTIONAL COMMUNICATION LINK
303	SEC SPARE INPUT	STALL CHECK AVAILABLE ONLY IF SECONDARY SELECTOR IS NOT USED
305	BED/HOIST INTERLOCK	REVERSE INHIBIT AVAILABLE ONLY IF SECONDARY SELECTOR IS NOT USED
306	SPARE	SPARE WIRE. AVAILABLE ONLY IF SECONDARY SELECTOR IS NOT USED
309	LOGIC RETURN	SECONDARY MODE SWITCHES RETURN
310	HOLD	ACTIVATES THE HOLD OPTION
311	MANUAL MODE	ACTIVATES MANUAL SHIFT MODE
312	LOCKUP OFF	INHIBITS LOCKUP APPLY
313	ACCESSORY	WHEN ACCESSORY AND DUAL MODE ARE ACTIVATED, SECONDARY MODE OPERATION IS ACTIVATED
314	LOCKUP ON	HOLDS LOCKUP CLUTCH ON
315	DUAL MODE	WHEN DUAL MODE AND ACCESSORY ARE ACTIVATED, SECONDARY MODE OPERATION IS ACTIVATED
316	NOT USED	
317A	2ND SELECTOR LAMP "A"	IGNITION POWER, 12V OR 24V, LAMP POWER
318B	2ND SELECTOR LAMP "B"	12V IGNITION (12 VOLT SYSTEM) OR GROUND (24 VOLT SYSTEM)
319	2ND SELECTOR LAMP GROUND	GROUND (12 VOLT SYSTEM) OR NOT USED (24 VOLT SYSTEM)

AS00-078 Plus II ATEC (Sheet 1)

COPYRIGHT 1994 GENERAL MOTORS CORP.

Installation Requirements

INTERFACE CONNECTORS

AMP INTERFACE CONNECTOR

OPTION #1

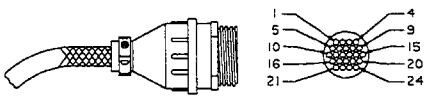

PIN NUMBER	WIRE NUMBER	PIN NUMBER	WIRE NUMBER	PIN NUMBER	WIRE NUMBER
1	223A	9	209	17	235
2	202A	10	217	18	205
3	203	11	211	19	230
4	229	12	234	20	233
5	226	13	213	21	222
6	225	14	214	22	224
7	231	15	215	23	SPARE
8	208	16	216	24	SPARE

CONNECTOR 206838-2

MATING CONNECTOR 206837-1
SOCKET 66101-2
CABLE CLAMP 206138-1

AMERLINE CONNECTOR

OPTION #2

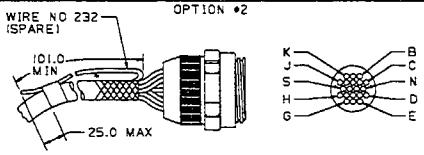

PIN NUMBER	WIRE NUMBER	PIN NUMBER	WIRE NUMBER	PIN NUMBER	WIRE NUMBER
A	223A	H	208	Q	215
B	202A	J	209	R	216A
C	203	K	217	S	235
D	222	L	211	T	205
E	224	M	234	U	230
F	225	N	213	V	233
G	231	P	214		

HARNESS CONNECTOR 8724641
NUT, COUPLING 7716634
NUT, GROMMET 7723309
GROMMET 7974332

MATING CONNECTOR 7974634
NUT, GROMMET 7723309
GROMMET 7974632

OR MATING CONNECTOR 7968275

PIGTAIL CONNECTION

OPTION #3

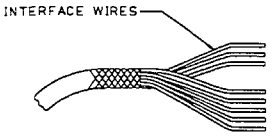

WIRE COLOR	WIRE NUMBER	WIRE COLOR	WIRE NUMBER
RED	202A	VIO	217
BLU	203	RED	222
GRN	205	RED	223A
BLK	208	VIO	225
BLK	209	WHT	229
YEL	211	YEL	230
BLU	213	BLU	231
WHT	214	BLK	234
VIO	215	WHT	235
YEL	216A	WHT	224

WIRE NUMBER IS STAMPED ON WIRES AT REGULAR INTERVALS

ALL WIRES ARE 18AWG

SECONDARY MODE CONNECTION

AMP CONNECTOR

PIN NUMBER	WIRE NUMBER
1	310
2	312
3	311
4	313
5	314
6	315
7	309
8	317A
9	319
10	318B
11	305
12	303
13	306

AVAILABLE ONLY IF SECONDARY SELECTOR IS NOT USED

AVAILABLE ONLY WITH SECONDARY SHIFT SELECTOR

CONNECTOR 206044-1

MATING CONNECTOR 206043-3
SOCKETS 66101-2
CABLE CLAMP 206322-1

PIGTAIL CONNECTION

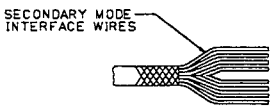

WIRE COLOR	WIRE NUMBER
BLU	310
VIO	312
GRN	311
RED	313
YEL	314
WHT	315
BLK	309
WHT	317A
VIO	318B
BLK	319
WHT	305
VIO	303
VIO	306

AVAILABLE ONLY IF SECONDARY SELECTOR IS NOT USED

AVAILABLE ONLY WITH SECONDARY SHIFT SELECTOR

ALL WIRES ARE 18AWG

BI-DIRECTIONAL CONNECTION (OPTIONAL)

CONNECTOR

PART	PACKARD PART NUMBER	QTY
CONNECTOR	12047934	1
SOCKET	12048074	7
LOCK	12047936	1
SEAL	12048086	7

MATING CONNECTOR

PART	PACKARD PART NUMBER	QTY
CONNECTOR	12047933	1
PIN	12045773	7
LOCK	12047936	1
SEAL	12048086	7

PIN NUMBER	WIRE NUMBER	MATING WIRE FOR DDEC ENGINE CONTROLS	MATING WIRE FOR TRANS.-TRANS. COMMUNICATIONS
A	239	534	238
B	240	533	241
C	243	451	NOT REQUIRED
E	242	461	NOT REQUIRED
F	244	510	NOT REQUIRED
G	238	532	239
H	241	535	240

AS00-078

METRIC
ALL DIMENSIONS ARE IN MILLIMETERS, UNLESS OTHERWISE SPECIFIED

THIRD ANGLE PROJECTION

ALLISON TRANSMISSIONS

PAGE 2 OF 2

TITLE PLUS II ATEC INSTALLATION REQUIREMENTS

MODEL 5/6/8/9000 SERIES AS00-078

DETROIT DIESEL ALLISON

AS00-078 Plus II ATEC (Sheet 2)

COPYRIGHT 1994 GENERAL MOTORS CORP.

CAB CONNECTIONS

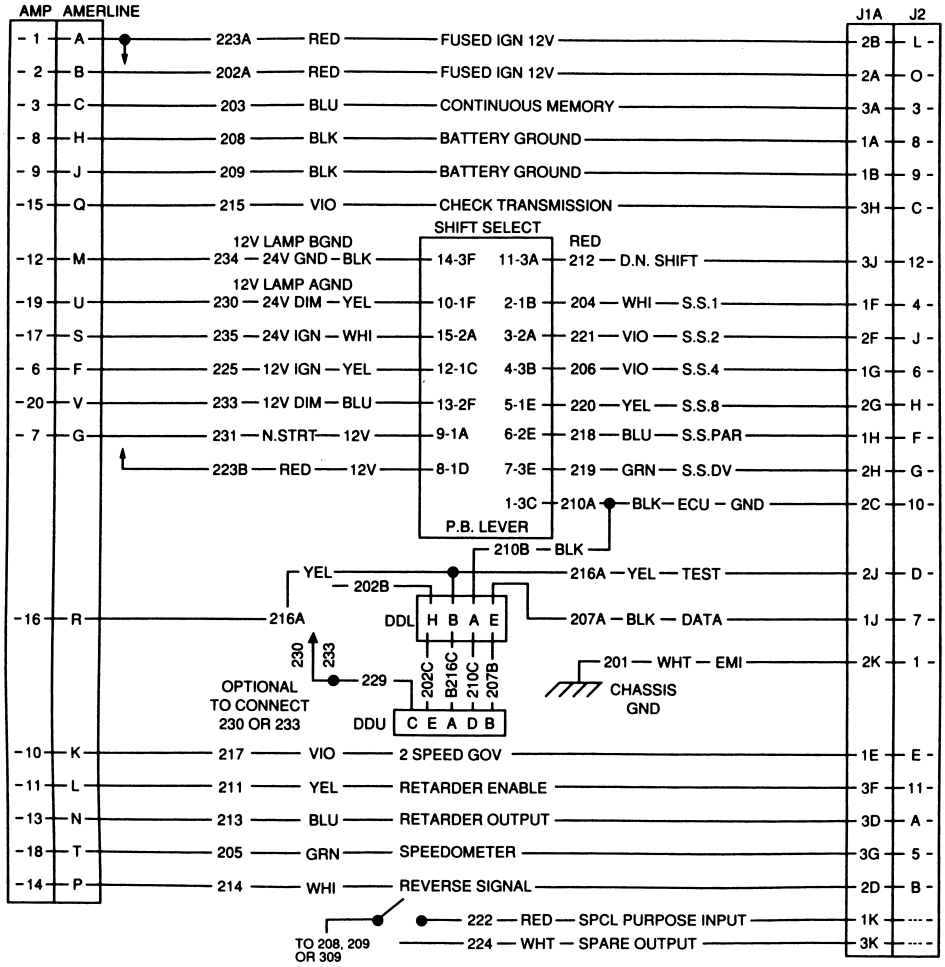

COPYRIGHT 1994 GENERAL MOTORS CORP.

CHASSIS CONNECTIONS ON HIGHWAY

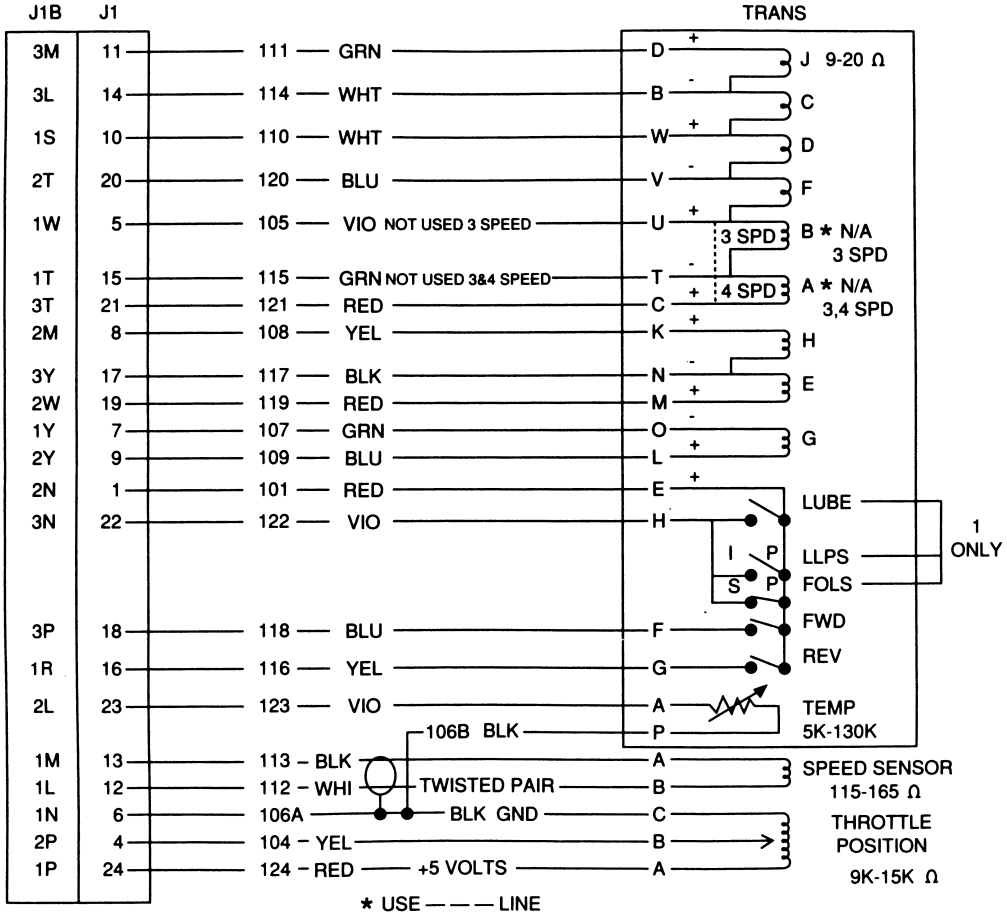

COPYRIGHT 1994 GENERAL MOTORS CORP.

CHASSIS CONNECTIONS OFF HIGHWAY

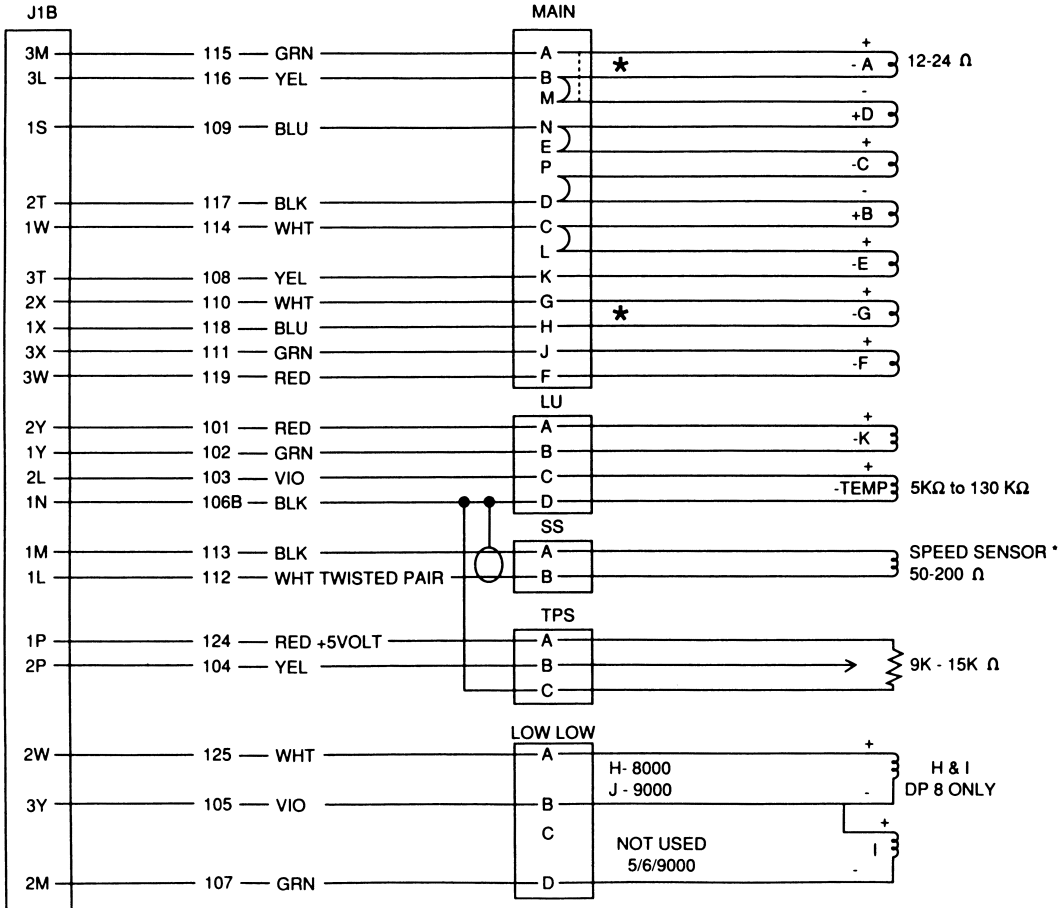

* NOT APPLICABLE LOCK TO NEUTRAL. USE — — — LINE

COPYRIGHT 1994 GENERAL MOTORS CORP.

SECONDARY HARNESS

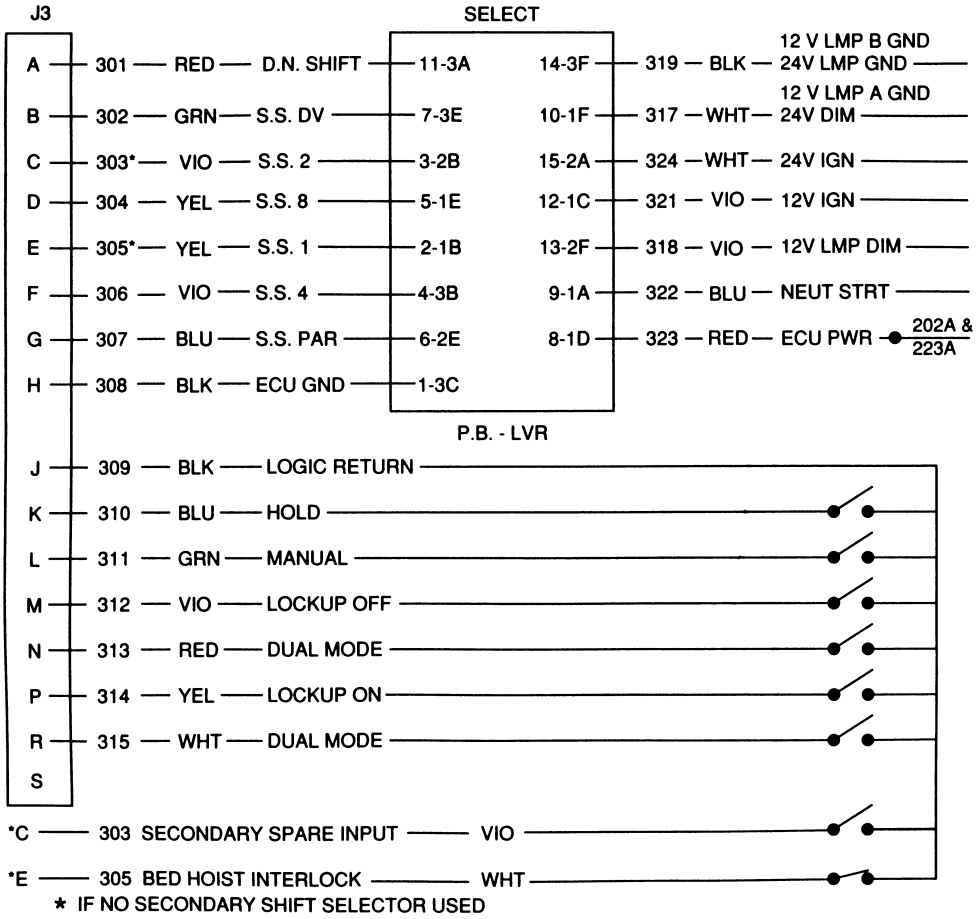

COPYRIGHT 1994 GENERAL MOTORS CORP.

Wiring Guide

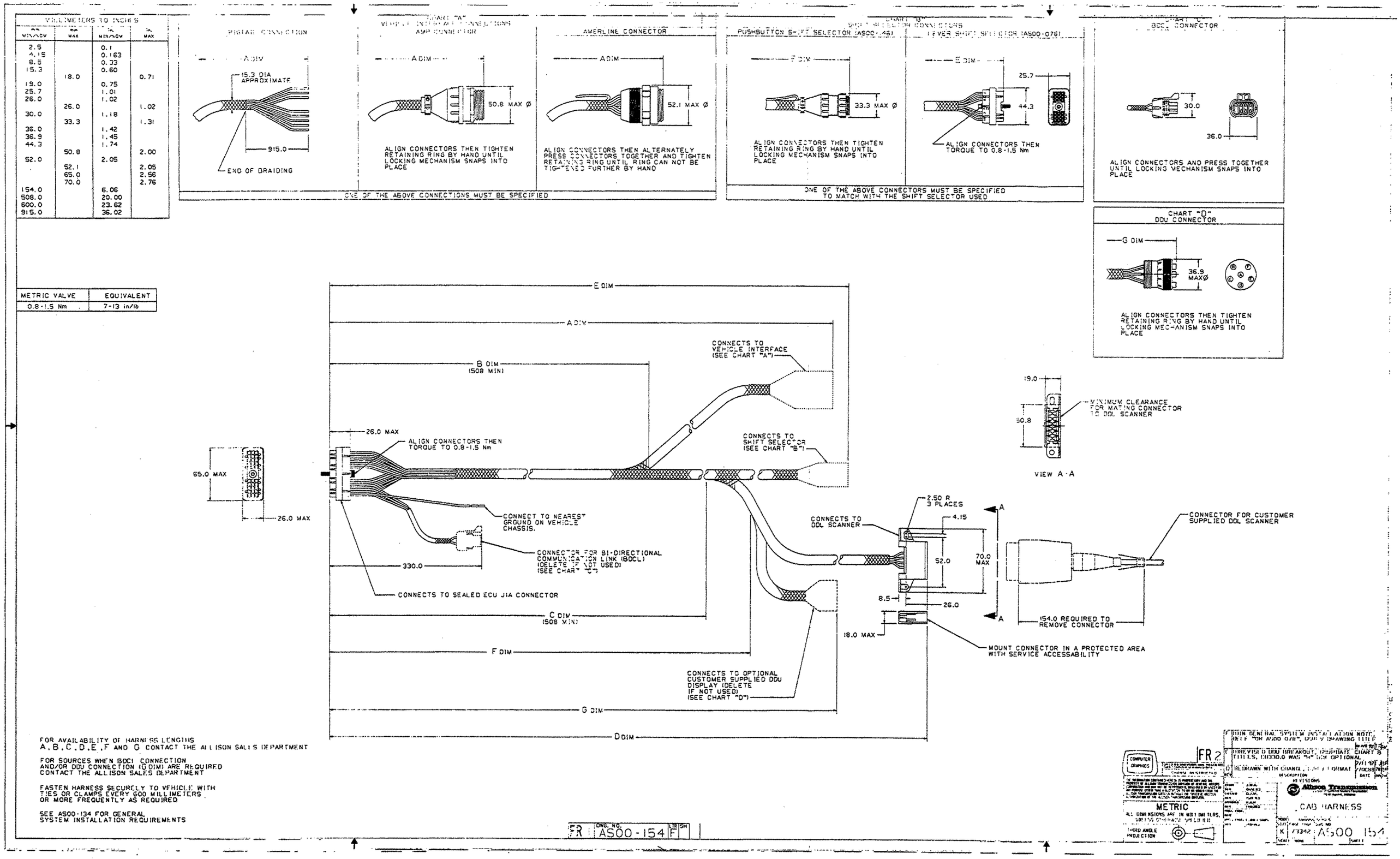

AS00-154 Sealed ATEC Cab Harness

COPYRIGHT 1994 GENERAL MOTORS CORP.

Wiring Guide

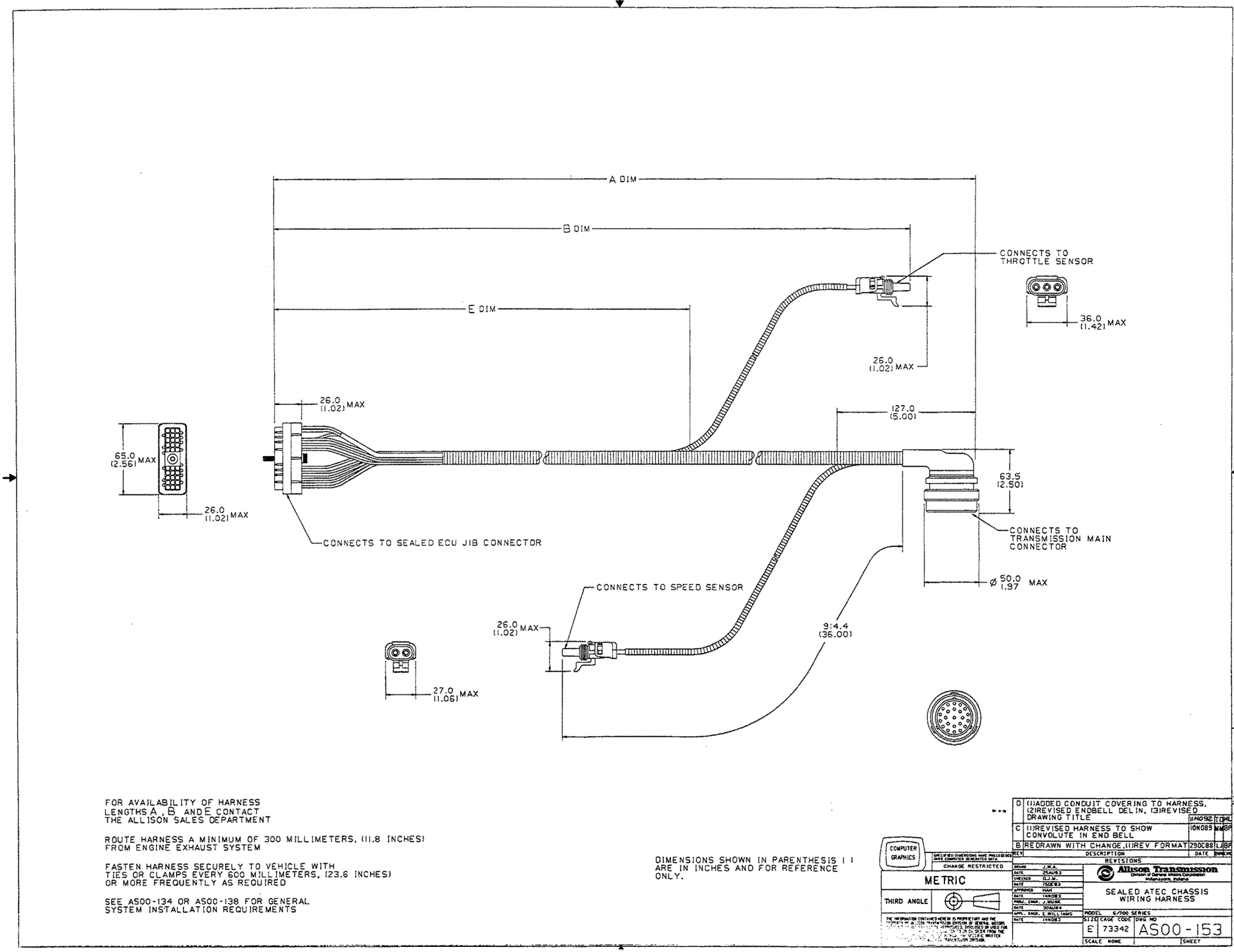

AS00-153 Sealed Electronic Control Chassis Harness (On-Highway)

COPYRIGHT 1994 GENERAL MOTORS CORP.

Wiring Guide

MILLIMETERS TO INCHES			
mm MIN/NOM	mm MAX	in. MIN/NOM	in. MAX
	20.3		.80
	25.4		1.00
	26.0		1.02
	30.5		1.20
	36.0		1.42
	39.4		1.55
127.0		5.00	
203.2	304.8	8.00	12.00
300.0		11.81	
600.0		23.62	
711.2	812.8	28.00	32.00
1016.0	1117.6	40.00	44.00

METRIC VALUES	EQUIVALENTS
0.8-1.5 N·m	7-13 LB IN

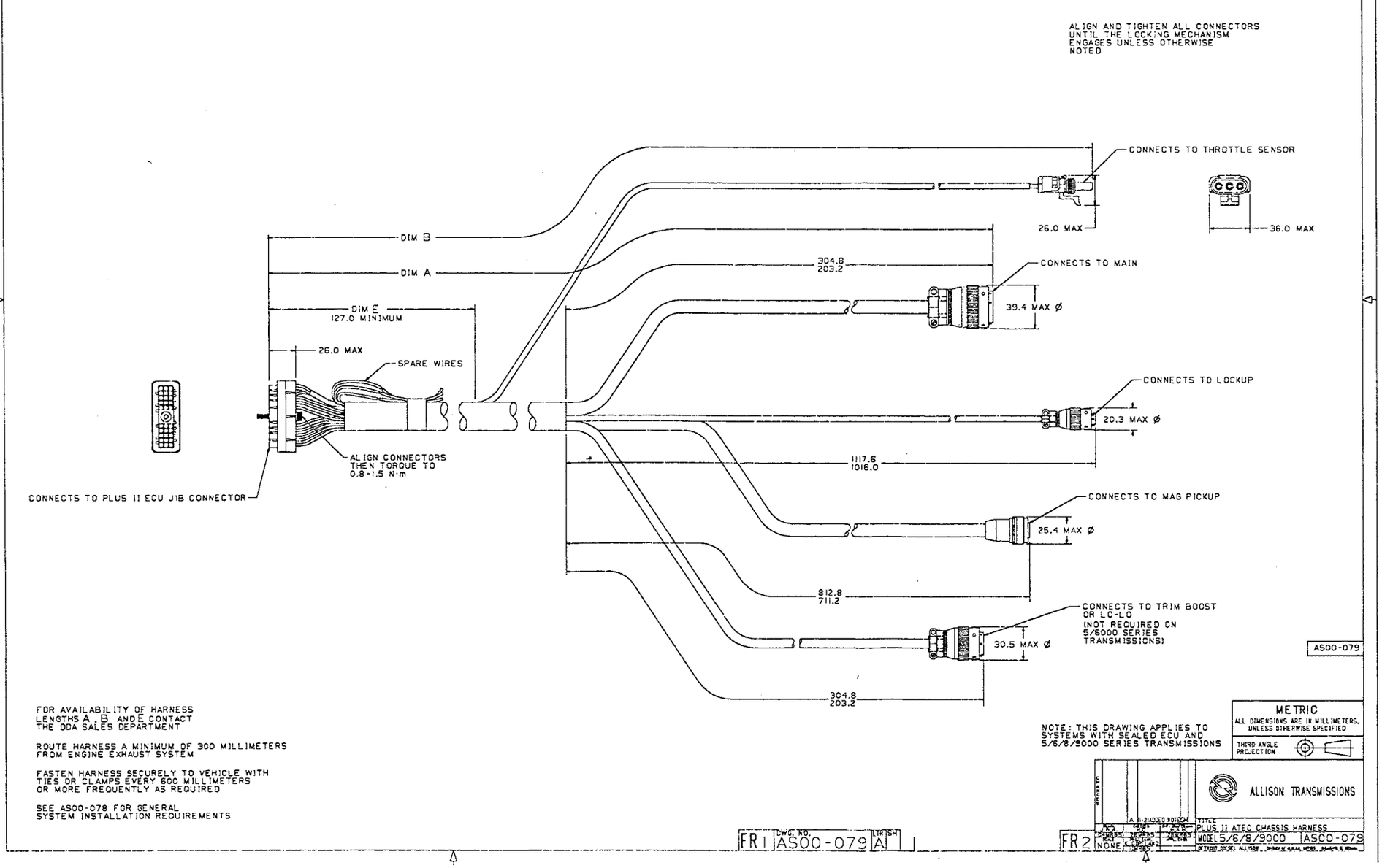

AS00-079 Plus II ATEC Chassis Harness

COPYRIGHT 1994 GENERAL MOTORS CORP.

Wiring Guide

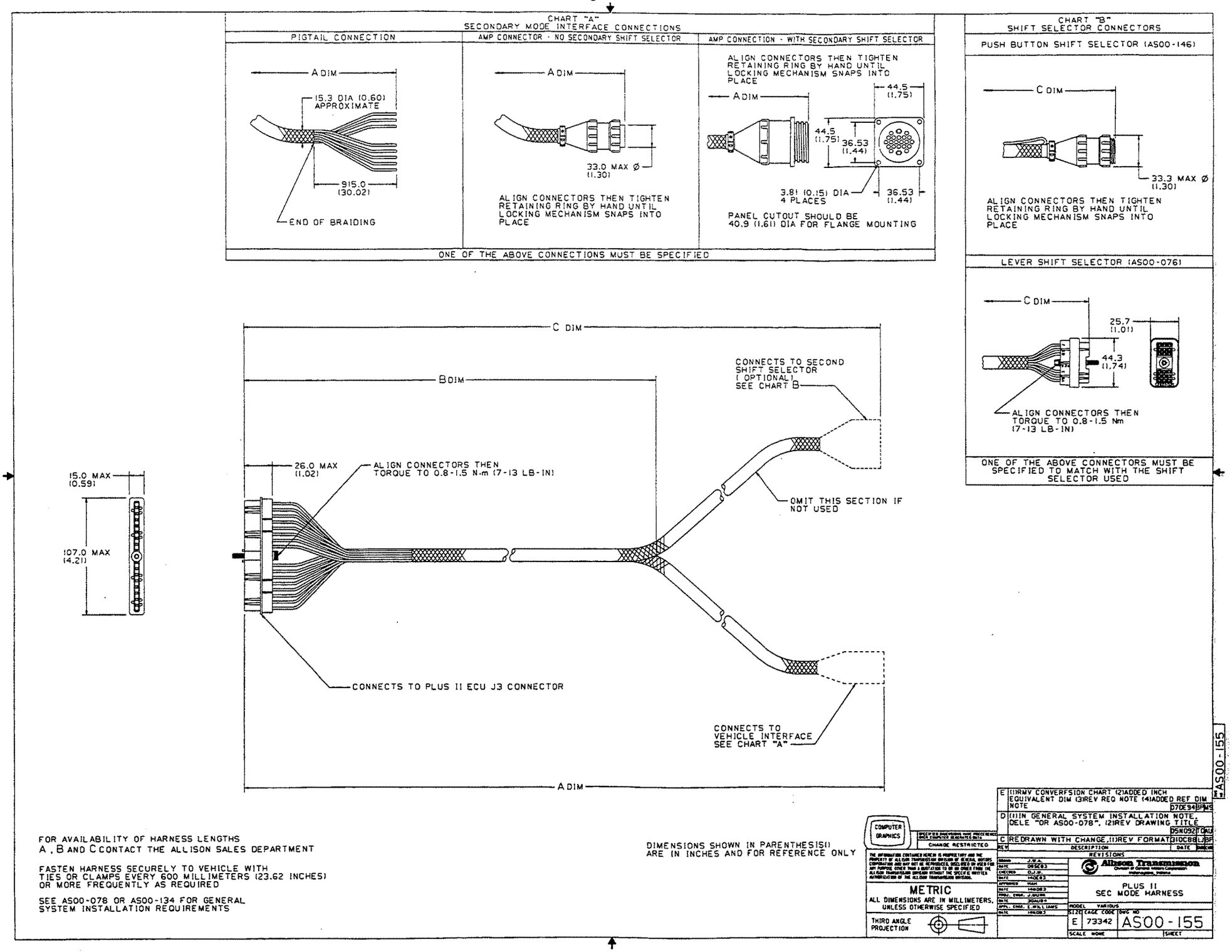

AS00-155, Plus II ATEC Secondary Mode Harness

COPYRIGHT 1994 GENERAL MOTORS CORP.

APPENDIX F — HYDRAULIC SCHEMATICS

Model **Page**

V 731 3-Speed Hydraulic Schematic, Neutral Operation F-3

MT 600 or HT 700 4-Speed Hydraulic Schematic, Neutral Operation..... F-5

HT(B) 700 or CLT, CLBT 700 5-Speed Hydraulic Schematic, Neutral Operation F-7

CLBT 5962/6062 Hydraulic Schematic, Neutral Operation F-9

DP 8963 Hydraulic Schematic, Neutral Operation..... F-11

CLBT 9681 Hydraulic Schematic, Neutral Operation F-13

NOTE: These schematics represent typical on-highway and off-highway applications. Refer to the appropriate Service Manual for specific application schematics.

COPYRIGHT 1994 GENERAL MOTORS CORP.

Hydraulic Schematic

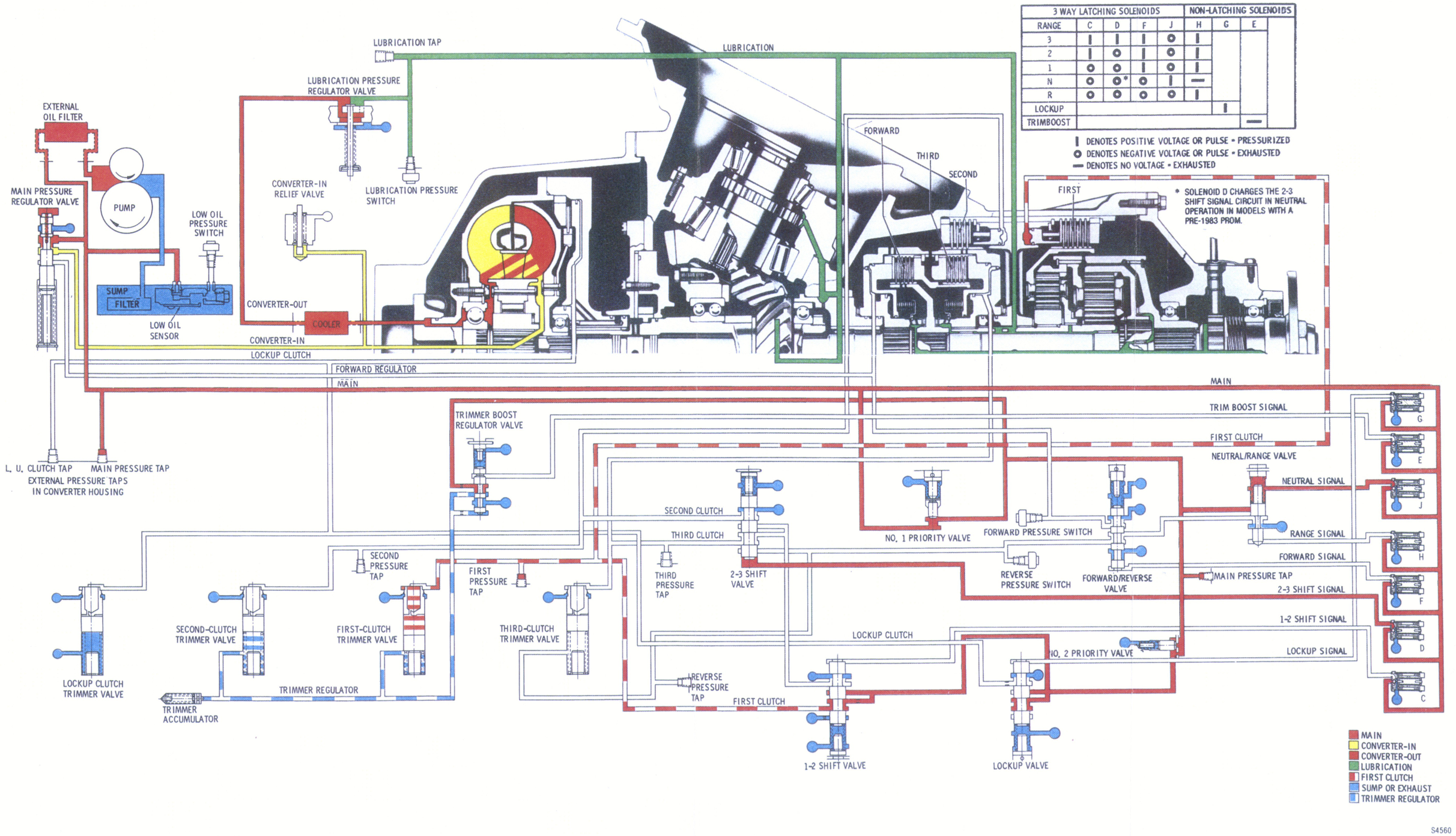

V 731 3-Speed Hydraulic Schematic, Neutral Operation

COPYRIGHT 1994 GENERAL MOTORS CORP.

Hydraulic Schematic

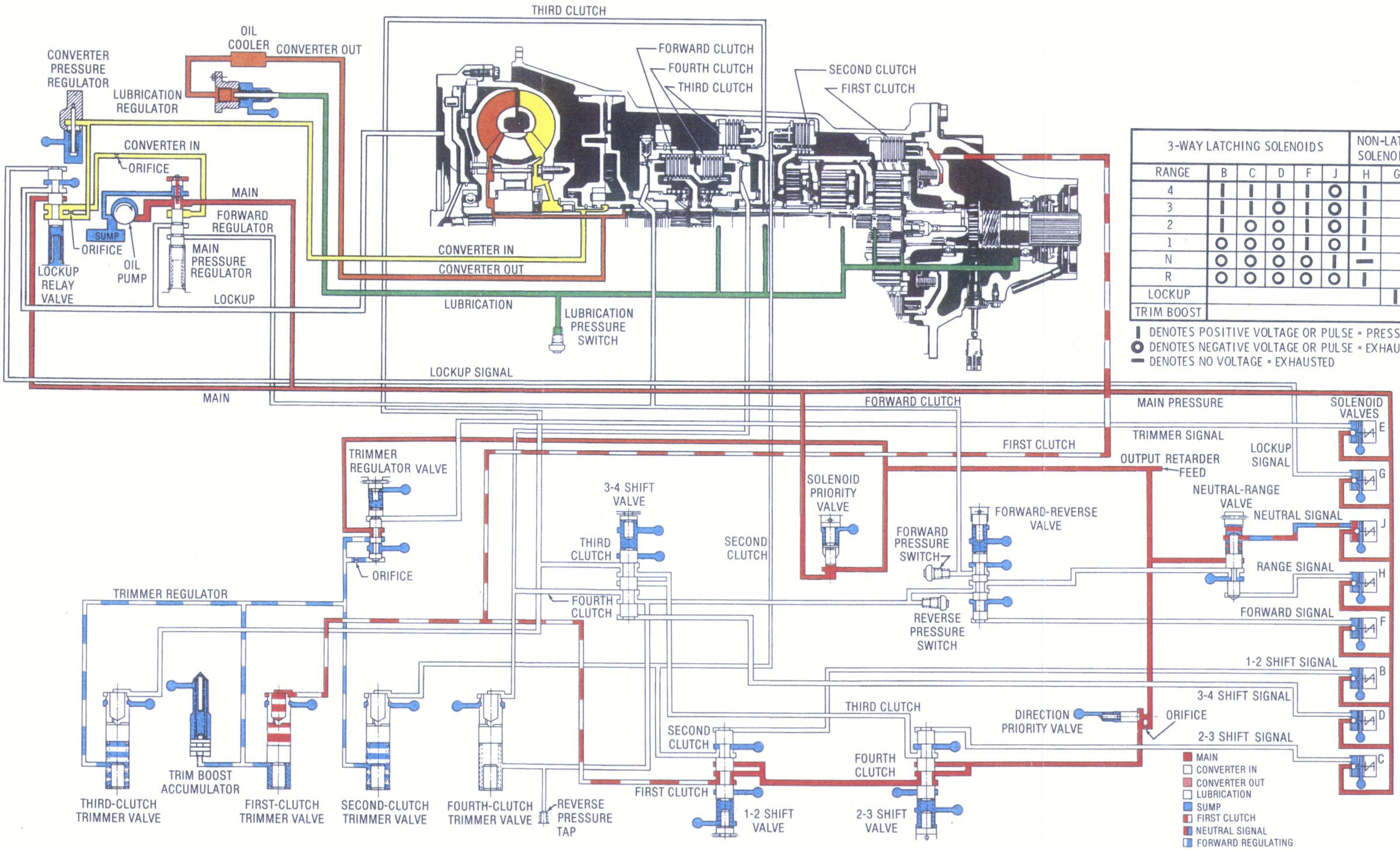

3-WAY LATCHING SOLENOIDS						NON-LATCHING SOLENOIDS		
RANGE	B	C	D	F	J	H	G	E
4	I	I	I	I	O	I		
3	I	I	O	I	O	I		
2	I	O	O	I	O	I		
1	O	O	O	I	O	I		
N	O	O	O	O	I	—		
R	O	O	O	O	O	I		
LOCKUP							I	
TRIM BOOST								—

I DENOTES POSITIVE VOLTAGE OR PULSE = PRESSURIZED
O DENOTES NEGATIVE VOLTAGE OR PULSE = EXHAUSTED
— DENOTES NO VOLTAGE = EXHAUSTED

S5011

MT 600 or HT 700 4-Speed Hydraulic Schematic, Neutral Operation

COPYRIGHT 1994 GENERAL MOTORS CORP.

Hydraulic Schematics

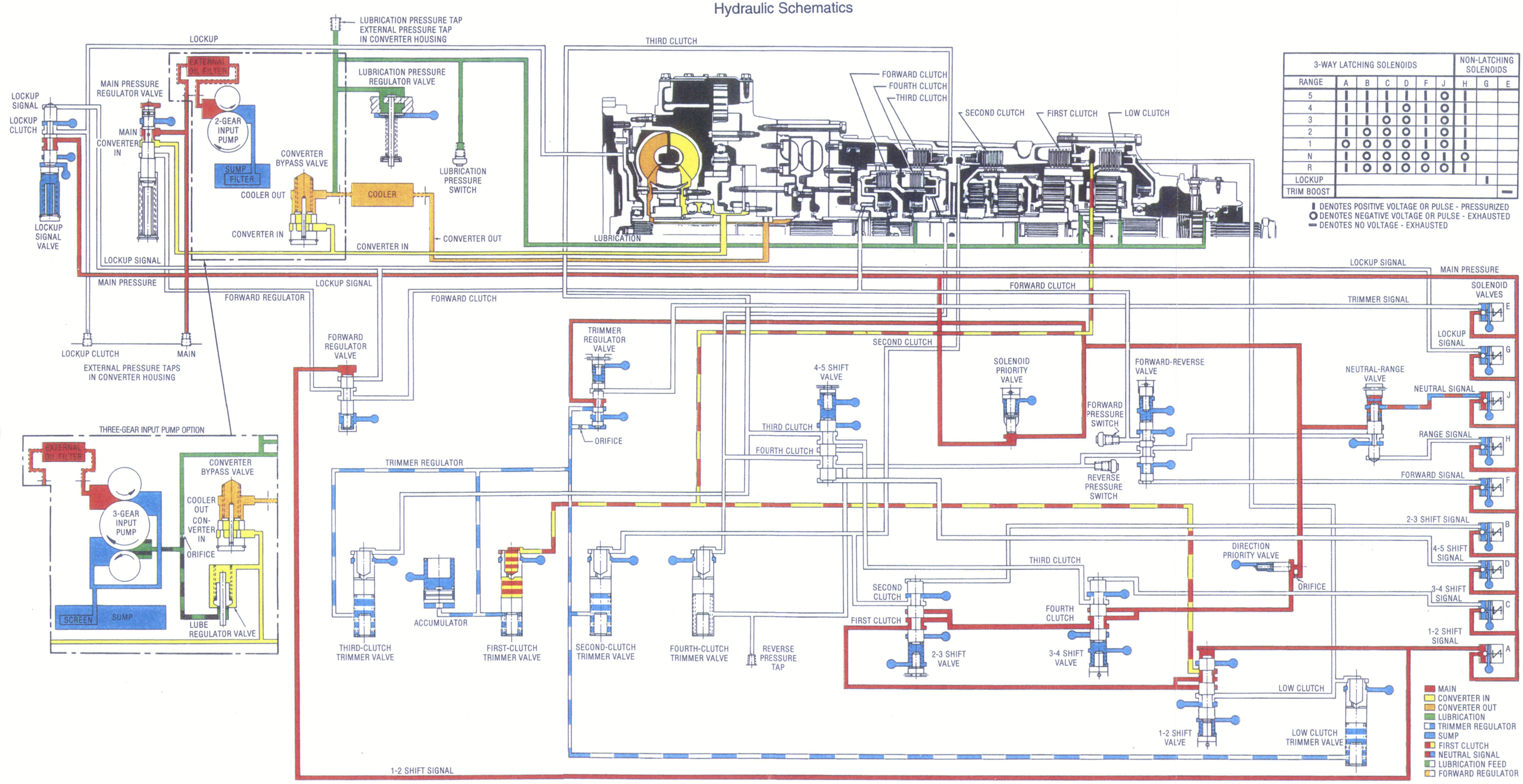

3-WAY LATCHING SOLENOIDS							NON-LATCHING SOLENOIDS		
RANGE	A	B	C	D	F	J	H	G	E
5	I	I	I	I	I	O	I		
4	I	I	I	O	I	O	I		
3	I	I	O	O	I	O	I		
2	I	O	O	O	I	O	I		
1	O	O	O	O	I	O	I		
N	I	O	O	O	O	I	O		
R	I	O	O	O	O	O	I		
LOCKUP								I	
TRIM BOOST									—

I DENOTES POSITIVE VOLTAGE OR PULSE - PRESSURIZED
O DENOTES NEGATIVE VOLTAGE OR PULSE - EXHAUSTED
— DENOTES NO VOLTAGE - EXHAUSTED

S4793

HT(B) 700 or CLT, CLBT 700 5-Speed Hydraulic Schematic, Neutral Operation

COPYRIGHT 1994 GENERAL MOTORS CORP.

Hydraulic Schematics

SHIFT SELECTOR POSITION	SOLENOIDS ENERGIZED	CLUTCHES ENGAGED
6	E, G*	FIFTH-AND-SIXTH, SPLITTER-OVERDRIVE
5	E, F	FIFTH-AND-SIXTH, SPLITTER-DIRECT
4	D, G*	THIRD-AND-FOURTH, SPLITTER-OVERDRIVE
3	D, F	THIRD-AND-FOURTH, SPLITTER-DIRECT
2	C, G*	FIRST-AND-SECOND, SPLITTER-OVERDRIVE
1	C, F	FIRST-AND-SECOND, SPLITTER-DIRECT
N	A*, F	SPLITTER-DIRECT
R	A*, B, F	REVERSE, SPLITTER-DIRECT

NOTE: VALVE POSITIONS SHOWN ARE WITH TRANSMISSION IN NEUTRAL WITH ENGINE RUNNING

*NOT USED IN MODELS WITH LOCK-IN-NEUTRAL

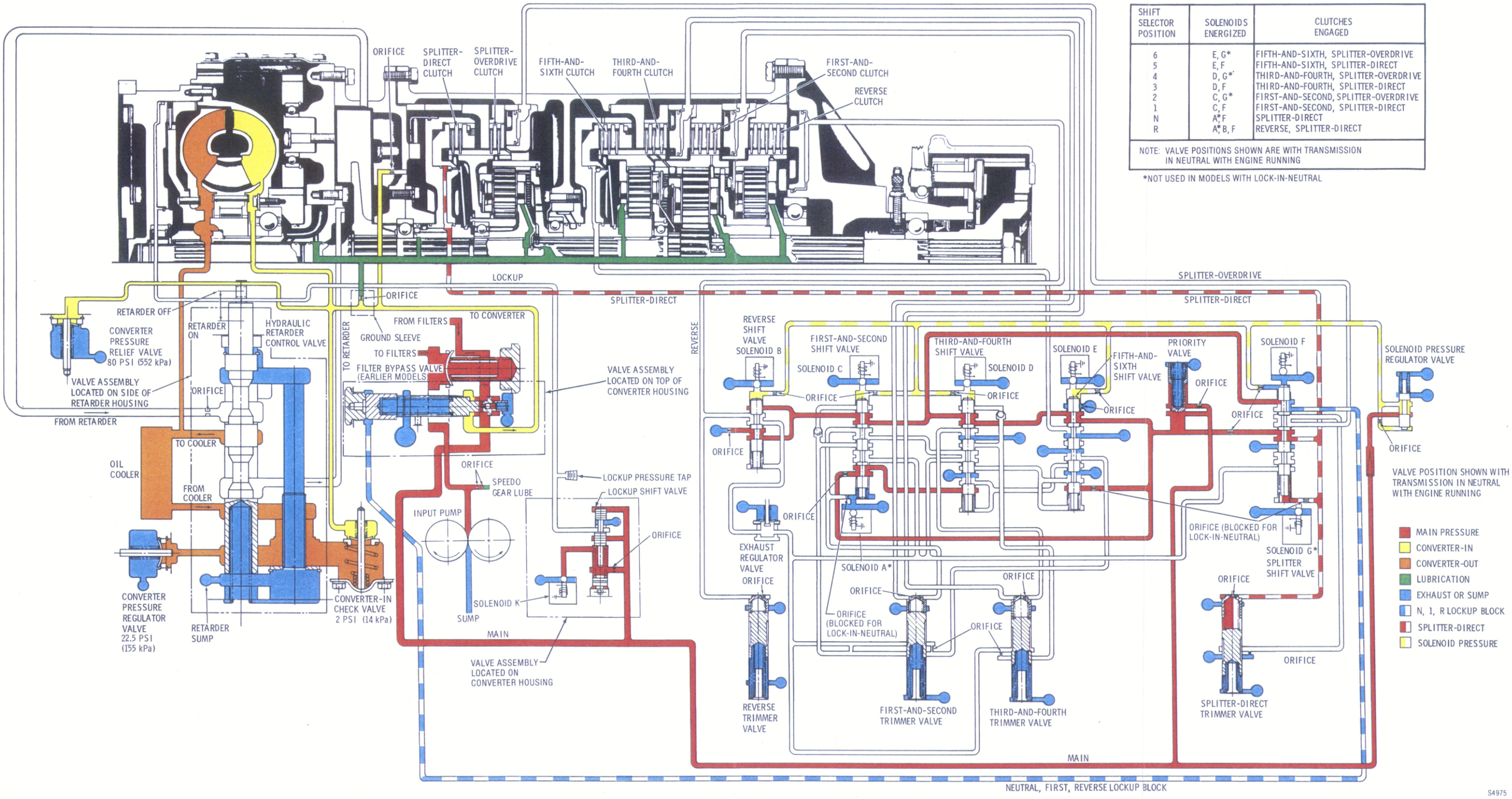

CLBT 5962/6062 Hydraulic Schematic, Neutral Operation

COPYRIGHT 1994 GENERAL MOTORS CORP.

APPENDIX G — SPECIAL TOOLS

Tool Number	Description
J25563	Cutter/Crimper Pliers
J28742-A	Weather Pac II Terminal Remover
J33095	Harness Terminal Remover
J34182	Transmission Pin Connector Crimper
J34513	Transmission Connector Terminal Remover
J34517	Transmission Housing Breakout Cable
J34521	Jumper Wire Set
J34823	AMP Pin Remover
22S1543	Field Modification Kit For Kent-Moore/Aidco Valve Body Test Stand (HTB/CLT, CLBT 700)
22S1554	Cart-Update For Transmission Test Stands (Aidco)
22S1773	Field Modification Kit For Kent-Moore/Aidco Valve Body Test Stand (MTB 600)
53-K055	Update Kit For Hicklin Transmission Test Stand (Hicklin GM Power)
4992	DDL Reader Tool (Micro Processor Systems, Inc.
52270	DDL Monitor (Owatonna Tool Company)
J21757-03	Pressure Switch Wrench (Without Wire Extensions), Clamp-Down Assembly
J25070	Heat Gun
J33884	Pressure Switch Gage Tester
J3384-10	Pressure Switch Gage Tester, Bolt Down Solenoid Adapter Kit
J34029-15	EZ Mini-Hook Test Lead Set
J34520	High Impedance Digital Multimeter Kit
J34525	Display Data Line Scanner (Kent-Moore)
J34988	Torx Bit Set (Bolt Down Solenoid/Pressure Switches)
J35123	Crimping Pliers
J35606	Weather-Pac Terminal Crimper
J35689	Terminal Remover Metri-Pack
J35751	Jumper Wire Kit
J35813	J1A/J1B Breakout Connector
J35814	J3 Breakout Connector
J35980	Off-Highway Transmission Breakout Harness
J35889	PROM Remover
J36105	Pressure Switch Wrench (With Wire Extensions), Clamp-Down Assembly

COPYRIGHT 1994 GENERAL MOTORS CORP.

VENDOR ADDRESSES

Aidco
800 Liberty Street
Adrian, Michigan 49221
Phone: 517-265-7165

Hicklin GM Power Co., Inc.
Interstate Highways 80 & 35
At 2nd Avenue
Des Moines, Iowa 50333
Phone: 515-286-4800

Kent-Moore Heavy Duty Division
Sealed Power Corporation
29784 Little Mack
Roseville, MI 48066-2298
Phone: 313-774-9500

Micro Processor Systems, Inc.
7641 Nineteen Mile Road
Sterling Heights, MI 48078
Phone: 313-731-6410

Owatonna Tool Company
Major Motors Division
655 Eisenhower Drive
Owatonna, Minnesota 55060
Phone: 800-533-0492

Allison Transmission believes these sources and tools to be reliable. There may be additional manufacturers of such tools. Allison Transmission does not endorse, indicate any preference for, or assume any responsibility for the products or tools from these firms, or for any such items which may be available from other sources.

COPYRIGHT 1994 GENERAL MOTORS CORP.

APPENDIX H — DIAGNOSTIC CODE BACKGROUND INFORMATION

Contents **Page**

Diagnostic Codes and System Response H-3

Description of Individual Codes and System Response

Code 12 — Low Lube Pressure/Low Oil Level H-4

Code 13 — Low Battery Voltage. H-4

Code 14 — Forward Direction Signals H-5

Code 15 — Reverse Direction Switch. H-5

Code 21 — Throttle Sensor H-6

Code 22 — Speed Sensor H-7

Code 23 — Primary Shift Selector H-7

Code 24 — Transmission Oil Temperature H-8

Code 31 — Secondary Shift Selector H-9

Code 32 — Wrong Direction. H-9

Code 33 — Oil Temperature Sensor H-10

Code 34 — PROM Check H-10

Code 41 (On-Highway) — Latching Solenoids H-11

Code 41 (Off-Highway) — Solenoid A H-12

Code 42 (On-Highway) — Latching Solenoids H-13

Code 42 (Off-Highway) — Solenoid B. H-14

Code 43 (On-Highway) — Latching Solenoids H-15

Code 43 (Off-Highway) — Solenoid C. H-16

Code 44 (On-Highway) — Latching Solenoids H-17

Code 44 (Off-Highway) — Solenoid D. H-18

Code 45 (On-Highway) — Latching Solenoids H-19

Code 45 (Off-Highway) — Solenoid E. H-20

Code 46 (On-Highway) — Latching Solenoids H-21

COPYRIGHT 1994 GENERAL MOTORS CORP.

Contents **Page**

Code 51 — Non-Latching Solenoids. H-22
Code 51 — (K) Solenoid H-22
Codes 51 and 52 — Non-Latching Solenoids H-23
Code 52 — (H) Solenoid (DP 8000) or (J) Solenoid (CLBT 9000). H-23
Code 53 — Neutral/Range Solenoids H-24
Code 53 — (I) Solenoid (DP 8000). H-24
Code 54 — Latching Solenoid Chain H-25
Code 54 — Solenoid Chain H-25
Code 61 — (G) Solenoid H-26
Code 62 — (F) Solenoid H-26
Code 63 — (G) Solenoid H-27
Code 66 — Transmission Engine Communication Link (TECL) H-27
Code 69 — Computer Malfunction H-28

COPYRIGHT 1994 GENERAL MOTORS CORP.

DIAGNOSTIC CODES AND SYSTEM RESPONSE

Code	Description	DO NOT SHIFT Light	Transmission Response	Clearing CHECK TRANS Light
12	Low fluid pressure/level	Off	Inhibits high gear	Next valid lube
13	Low input voltage: (in neutral)	On	Hold in neutral	Acceptable volts
	(in range)	Off	May not shift	Not turned on
14	Forward pressure switch	Off	Normal operation	Next valid signal
15	Reverse pressure switch	Off	Normal operation	Next valid signal
21	Throttle sensor, in error zone	Off	Full throttle assumed	ECU power off/on
22	Speed sensor	On	Drop LU and hold in gear	ECU power off/on
23	Primary shift selector	Off	Hold in last range*	Next valid range
24	Fluid temperature:			
	Cold (below -32°C)	On	Hold in neutral	Temp above -32°C
	Cool (-32° to -7°C)	Off	Inhibits upshifts	Not turned on
	Hot (above 132°C)	Off	Inhibits high gear	Temp below 132°C
31	Secondary shift selector	Off	Hold in last range*	Next valid range
32	Wrong direction signal	Off	Shift to neutral	Select neutral
33	Temp sensor, in error zone	Off	Normal operation	Next valid temp
34	PROM check	On	Drop LU and hold in gear	ECU power off/on
41	J solenoid (neutral) on test:			
	Below 1200 output rpm	Off	May not shift	ECU power off/on
	Above 1200 output rpm	On	Drop LU and hold in gear	ECU power off/on
42	F solenoid (fwd/rev) on test:			
	Below 1200 output rpm	Off	May not shift	ECU power off/on
	Above 1200 output rpm	On	Drop LU and hold in gear	ECU power off/on
43	D solenoid on test:			
	Below 1200 output rpm	Off	May not shift	ECU power off/on
	Above 1200 output rpm	On	Drop LU and hold in gear	ECU power off/on
44	C solenoid on test:			
	Below 1200 output rpm	Off	May not shift	ECU power off/on
	Above 1200 output rpm	On	Drop LU and hold in gear	ECU power off/on
45	B solenoid on test:			
	Below 1200 output rpm	Off	May not shift	ECU power off/on
	Above 1200 output rpm	On	Drop LU and hold in gear	ECU power off/on
46	A solenoid on test:			
	Below 1200 output rpm	Off	May not shift	ECU power off/on
	Above 1200 output rpm	On	Drop LU and hold in gear	ECU power off/on
51	G solenoid (lockup)	Off	Possible loss of lockup	Valid signal
52	E solenoid (trim boost)	Off	Possible full trim boost	Valid signal
53	H solenoid (neutral): on test	Off	May not shift	ECU power off/on
	Off test	On	Drop LU and hold in gear	ECU power off/on
54	A, B, C, D, F, and J solenoids:			
	Off test	On	Drop LU and hold in gear	ECU power off/on
66	Transmission engine	Off	Fixed throttle assumed	
	Communication link		Fixed engine rpm assumed	Next valid signal
69	Electronic control unit test	On	Drop LU and hold in gear	ECU power off/on

NOTES: (1) For all errors, the CHECK TRANS light will illuminate immediately.
(2) Except for codes 22 and 69, lockup clutch will not be dropped until the retarder or compression brake (if used) shuts off.
(3) Engine restart will usually turn ECU power off/on.

*Shifting may still occur within that gear range.

COPYRIGHT 1994 GENERAL MOTORS CORP.

Code	Description	DO NOT SHIFT Light	Transmission Response	Clearing CHECK TRANS Light
12	Low fluid pressure/level	Off	Inhibits high gear	Next valid lube

CODE 12 — LOW LUBE PRESSURE/LOW OIL LEVEL

A low lube pressure (low oil level) diagnostic code can be set in memory if *all* of the following conditions are satisfied:

1. (2 minutes) have expired since turn on.
2. (7 seconds) have expired since last shift.
3. (7 seconds) have expired since last converter to lockup mode change.
4. (7 seconds) have expired since last lockup to converter mode change.
5. Throttle position is greater than (60%).
6. Transmission is in forward.
7. Turbine speed in each range is greater than (1200 rpm).

When the listed conditions are satisfied and a low pressure (low oil level) condition is sensed, the "CHECK TRANS" light will come on.

The light will go off when conditions 1 through 4 and 6 are satisfied and there is proper lube pressure (oil level) signal.

NOTE: Item in parenthesis may be different per calibration PROM you have.

Code	Description	DO NOT SHIFT Light	Transmission Response	Clearing CHECK TRANS Light
13	Low input voltage: in neutral	On	Hold in neutral	Acceptable volts
	Low input voltage: in range	Off	May not shift	Not turned on

CODE 13 — LOW BATTERY VOLTAGE

There are two situations when a low battery voltage diagnostic code can set in memory.

Transmission is in neutral

When in this situation, the "CHECK TRANS" and "DO NOT SHIFT" lights will come on. If forward or reverse are requested, the shift will not occur.

The light will go off and normal operation will resume if neutral is selected and proper voltage is detected.

Transmission is in reverse or forward

When in this situation and a shift is made, a code will be set in memory — no lights come on.

If satisfactory battery is detected, Code 13 will be cleared from memory.

COPYRIGHT 1994 GENERAL MOTORS CORP.

Code	Description	DO NOT SHIFT Light	Transmission Response	Clearing CHECK TRANS Light
14	Forward pressure switch	Off	Normal operation	Next valid signal

CODE 14 — FORWARD DIRECTION SIGNALS

A forward direction switch diagnostic code can be set in memory if one of the following conditions exists:

1. Both direction signals present in reverse.
2. No direction signals present while in forward and throttle greater than (60%).

If one of the conditions exists, the “CHECK TRANS” light will come on.

The “CHECK TRANS” light will go off when a valid direction signal is detected.

NOTE: Item in parenthesis may be different per calibration PROM you have.

Code	Description	DO NOT SHIFT Light	Transmission Response	Clearing CHECK TRANS Light
15	Reverse pressure switch	Off	Normal operation	Next valid signal

CODE 15 — REVERSE DIRECTION SWITCH

A reverse direction switch diagnostic code can be set in memory if one of the following conditions exist:

1. Both direction signals present in forward.
2. No direction signals present while in reverse and throttle greater than (60%).

If one of the conditions exists, the “CHECK TRANS” light will come on.

The “CHECK TRANS” light will go off when a valid direction signal is detected.

COPYRIGHT 1994 GENERAL MOTORS CORP.

Code	Description	DO NOT SHIFT Light	Transmission Response	Clearing CHECK TRANS Light
21	Throttle sensor, in error zone	Off	Full throttle assumed	ECU power off/on

CODE 21 — THROTTLE SENSOR

A throttle sensor diagnostic code can be set in memory if the throttle counts are in either of the error zones (Figure H-1).

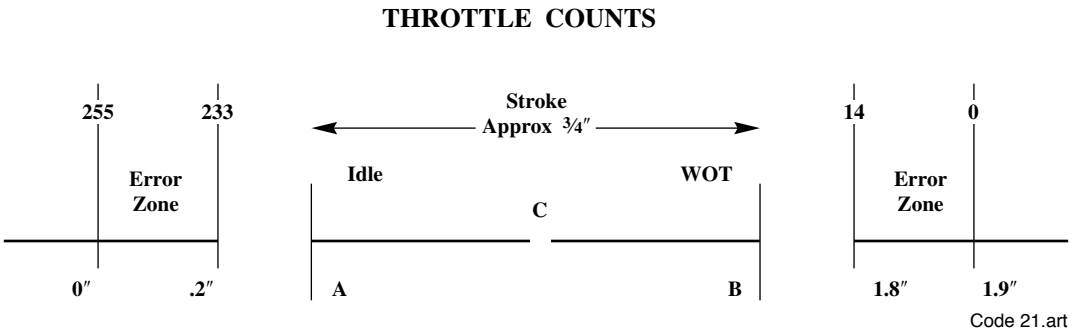

Figure H-1. Stroke of Throttle Sensor

When an extreme stroke condition is detected, the “CHECK TRANS” light comes on. The throttle percent is set to 100% or 0% depending on usage. Therefore, you may get either closed throttle shift points or full throttle shift points when this code is present.

To clear this situation, the input power must be shut off and then back on, and throttle counts proper.

COPYRIGHT 1994 GENERAL MOTORS CORP.

Code	Description	DO NOT SHIFT Light	Transmission Response	Clearing CHECK TRANS Light
22	Speed sensor	On	Drop LU and hold in gear	ECU power off/on

CODE 22 — SPEED SENSOR

A speed sensor diagnostic code can be set in memory if *any* of the following conditions exist:

1. If there is an abnormal problem with speed sensor continuity.
2. Speed in excess of 7680 rpm.
3. Unusually rapid deceleration.

If any of the conditions are present, the “CHECK TRANS” and “DO NOT SHIFT” lights will come on. All shifts will be blocked and lockup will be dropped.

To clear this situation, the input power must be shut off and then back on.

Code	Description	DO NOT SHIFT Light	Transmission Response	Clearing CHECK TRANS Light
23	Primary shift selector	Off	Hold in last range*	Next valid range

CODE 23 — PRIMARY SHIFT SELECTOR

A shift selector diagnostic code can be set in memory if either of the following conditions is not satisfied:

1. The switch coding must match a preset coding.
2. The switch coding must be legitimate.

If either of the conditions is not met, the “CHECK TRANS” light will come on. The last good command from the shift selector will be used.

When conditions 1 and 2 are correct, the “CHECK TRANS” light will go out.

*Shifting may still occur up to and including the range selected.

COPYRIGHT 1994 GENERAL MOTORS CORP.

Code	Description	DO NOT SHIFT Light	Transmission Response	Clearing CHECK TRANS Light
24	Fluid temperature: cold	On	Hold in neutral	Temp above -32°C
	Fluid temperature: cool	Off	Inhibits upshifts	Not turned on
	Fluid temperature: hot	Off	Inhibits high gear (on-highway)	Temp below 132°C
	Fluid temperature: hot	Off	Inhibits high gear (5th, 6th) (off-highway)	Temp below 250°F

CODE 24 — TRANSMISSION OIL TEMPERATURE

Oil temperature which is not within normal operating range [above 20°F (-7°C)] and at or below [270°F (132°C)] will cause three possible effects.

Block shifting operation between [-100°F (-73°C) and -25°F (-32°C)]

1. “CHECK TRANS” and “DO NOT SHIFT” lights are on. Range shifts are blocked, but no code is set.
2. Warming oil above [-25°F (-32°C)] will allow limited shifting.

Limited shifting operation in range of [-25°F (-32°C) and -20°F (-7°C)]

1. A hold is placed on all range changes, but no code is set.
2. Warming oil above [20°F (-7°C)] will allow normal shifting.

Overheat operation between [270°F (132°C) and 350°F (204°C)]

1. “CHECK TRANS” light is on and code is set in memory.
2. Cooling oil to [270°F (132°C)] or below will turn light off.

NOTE: Items in brackets may be different per the calibration PROM that you have.

COPYRIGHT 1994 GENERAL MOTORS CORP.

Code	Description	DO NOT SHIFT Light	Transmission Response	Clearing CHECK TRANS Light
31	Secondary shift selector	Off	Hold in last range*	Next valid range

CODE 31 — SECONDARY SHIFT SELECTOR

A shift selector diagnostic code can be set in memory if either of the following conditions is not satisfied:

1. The switch coding must match a preset coding.
2. The switch coding must be legitimate.

If either of the conditions is not met, the “CHECK TRANS” light will come on. The last good command from the shift selector will be used.

When conditions 1 and 2 are correct, the “CHECK TRANS” light will go out.

*Shifting may still occur up to and including the range selected.

Code	Description	DO NOT SHIFT Light	Transmission Response	Clearing CHECK TRANS Light
32	Wrong direction signal	Off	Shift to neutral	Select neutral

CODE 32 — WRONG DIRECTION

A wrong direction diagnostic code will be set in memory if one of the following conditions exist:

1. If reverse pressure signal in forward range but no forward pressure, after (2 seconds).
2. If forward pressure signal in reverse range but no reverse pressure, after (2 seconds).
3. If forward or reverse or both pressure signals in neutral, after (2 seconds).

If one of the conditions exists, the “CHECK TRANS” light will come on. The transmission will shift to neutral.

This condition will clear when the shift selector is moved to a new direction. If the situation is corrected, the “CHECK TRANS” light will also go off.

COPYRIGHT 1994 GENERAL MOTORS CORP.

Code	Description	DO NOT SHIFT Light	Transmission Response	Clearing CHECK TRANS Light
33	Temp sensor, in error zone	Off	Normal operation	Next valid temp

CODE 33 – OIL TEMPERATURE SENSOR

An oil temperature sensor diagnostic code will be set in memory if the oil temperature is greater than [350° F (204°C)] or less than [-100°F (-73°C)].

If this condition exists, the “CHECK TRANS” light will go out.

NOTE: Items in brackets may be different per the calibration PROM you have.

Code	Description	DO NOT SHIFT Light	Transmission Response	Clearing CHECK TRANS Light
34	PROM check	ON	Drop LU and hold in gear	ECU power off/on

CODE 34 — PROM CHECK

A PROM diagnostic code will be set in memory if either of the following conditions occur:

1. The PROM is not in its socket.
2. The PROM is faulty.

If one of these conditions exists, the “CHECK TRANS” and “DO NOT SHIFT” lights will turn on. Lockup will be dropped and all shifts blocked.

To clear the conditions, the input power must be shut off and turned back on again. If conditions 1 or 2 do not occur, normal operation will then be resumed.

COPYRIGHT 1994 GENERAL MOTORS CORP.

Code	Description	DO NOT SHIFT Light	Transmission Response	Clearing CHECK TRANS Light
On-Highway				
41	J solenoid on test: Below 1200 output rpm	Off	May not shift	ECU power off/on
	Above 1200 output rpm	On	Drop LU and hold in gear	ECU power off/on

CODES 41, 42, 43, 44, 45, 46 — LATCHING SOLENOIDS

A solenoid diagnostic code will be set in memory if one of the following conditions exists:

1. The resistance between the two wires to a solenoid is too high or too low.
2. The resistance is too low between either of the two wires and ground.

If one of the conditions exists at an output speed over 1200 rpm, the “CHECK TRANS” and the “DO NOT SHIFT” lights will come on. Lockup will be dropped and shifting will be blocked.

NOTE: Lockup will be dropped unless the retarder is applied.

If the output speed is below 1200 rpm, shifts are not blocked and the “DO NOT SHIFT” light does not come on. Only the “CHECK TRANS” light comes on.

To clear the conditions, the following must be done:

- To resume normal shifting, reduce output speed below 1200 rpm.
- To clear “CHECK TRANS” light, input power must be shut off and turned back on.

COPYRIGHT 1994 GENERAL MOTORS CORP.

Code	Description	DO NOT SHIFT Light	Transmission Response	Clearing CHECK TRANS Light
Off-Highway				
41	A solenoid on test: Below 500 output rpm	Off	May not shift	ECU power off/on
	Above 500 output rpm	On	Drop LU and hold in gear	ECU power off/on

CODES 41, 42, 43, 44, 45, 61 — SOLENOIDS A, B, C, D, E, G

A solenoid diagnostic code will be set in memory if one of the following conditions exists:

1. Resistance between the two wires to a solenoid is too high or too low.
2. Resistance is too high or too low between either of the two wires and ground.

If one of the conditions exists at an output speed over 500 rpm, the “CHECK TRANS” and the “DO NOT SHIFT” lights will come on. Lockup will be dropped and shifting will be blocked.

NOTE: Lockup will be dropped unless the retarder is applied.

If the output speed is below 500 rpm, shifts are not blocked and the “DO NOT SHIFT” light does not come on. Only the “CHECK TRANS” light comes on.

To clear the conditions, the following must be done:

- To resume normal shifting, reduce output speed below 500 rpm.
- To clear “CHECK TRANS” light, the engine must be shut off and restarted and the conditions must not be present.

COPYRIGHT 1994 GENERAL MOTORS CORP.

Code	Description	DO NOT SHIFT Light	Transmission Response	Clearing CHECK TRANS Light
On-Highway				
42	F solenoid on test: Below 1200 output rpm	Off	May not shift	ECU power off/on
	Above 1200 output rpm	On	Drop LU and hold in gear	ECU power off/on

CODES 41, 42, 43, 44, 45, 46 — LATCHING SOLENOIDS

A solenoid diagnostic code will be set in memory if one of the following conditions exists:

1. The resistance between the two wires to a solenoid is too high or too low.
2. The resistance is too low between either of the two wires and ground.

If one of the conditions exists at an output speed over 1200 rpm, the “CHECK TRANS” and the “DO NOT SHIFT” lights will come on. Lockup will be dropped and shifting will be blocked.

NOTE: Lockup will be dropped unless the retarder is applied.

If the output speed is below 1200 rpm, shifts are not blocked and the “DO NOT SHIFT” light does not come on. Only the “CHECK TRANS” light comes on.

To clear the conditions, the following must be done:

- To resume normal shifting, reduce output speed below 1200 rpm.
- To clear “CHECK TRANS” light, input power must be shut off and turned back on.

COPYRIGHT 1994 GENERAL MOTORS CORP.

Code	Description	DO NOT SHIFT Light	Transmission Response	Clearing CHECK TRANS Light
Off-Highway				
42	B solenoid on test: Below 500 output rpm	Off	May not shift	ECU power off/on
	Above 500 output rpm	On	Drop LU and hold in gear	ECU power off/on

CODES 41, 42, 43, 44, 45, 61 — SOLENOIDS A, B, C, D, E, G

A solenoid diagnostic code will be set in memory if one of the following conditions exists:

1. Resistance between the two wires to a solenoid is too high or too low.
2. The resistance is too high or too low between either of the two wires and ground.

If one of the conditions exists at an output speed over 500 rpm, the “CHECK TRANS” and the “DO NOT SHIFT” lights will come on. Lockup will be dropped and shifting will be blocked.

NOTE: Lockup will be dropped unless the retarder is applied.

If the output speed is below 500 rpm, shifts are not blocked and the “DO NOT SHIFT” light will come on.

To clear the above conditions, the following must be done:

- To resume normal shifting, reduce output speed below 500 rpm.
- To clear “CHECK TRANS” light, the engine must be shut off and restarted and the conditions must not be present.

COPYRIGHT 1994 GENERAL MOTORS CORP.

Code	Description	DO NOT SHIFT Light	Transmission Response	Clearing CHECK TRANS Light
On-Highway				
43	D solenoid on test: Below 1200 output rpm	Off	May not shift	ECU power off/on
	Above 1200 output rpm	On	Drop LU and hold in gear	ECU power off/on

CODES 41, 42, 43, 44, 45, 46 — LATCHING SOLENOIDS

A solenoid diagnostic code will be set in memory if one of the following conditions exists:

1. The resistance between the two wires to a solenoid is too high or too low.
2. The resistance is too low between either of the two wires and ground.

If one of the conditions exists at an output speed over 1200 rpm, the “CHECK TRANS” and the “DO NOT SHIFT” lights will come on. Lockup will be dropped and shifting will be blocked.

NOTE: Lockup will be dropped unless the retarder is applied.

If the output speed is below 1200 rpm, shifts are not blocked and the “DO NOT SHIFT” light does not come on. Only the “CHECK TRANS” light comes on.

To clear the conditions, the following must be done:

- To resume normal shifting, reduce output speed below 1200 rpm.
- To clear “CHECK TRANS” light, input power must be shut off and turned back on.

COPYRIGHT 1994 GENERAL MOTORS CORP.

Code	Description	DO NOT SHIFT Light	Transmission Response	Clearing CHECK TRANS Light
Off-Highway				
43	C solenoid on test: Below 500 output rpm	Off	May not shift	ECU power off/on
	Above 500 output rpm	On	Drop LU and hold in gear	ECU power off/on

CODES 41, 42, 43, 44, 45, 61 — SOLENOIDS A, B, C, D, E, G

A solenoid diagnostic code will be set in memory if one of the following conditions exists:

1. Resistance between the two wires to a solenoid is too high or too low.
2. The resistance is too high or too low between either of the two wires and ground.

If one of the conditions exists at an output speed over 500 rpm, the “CHECK TRANS” and the “DO NOT SHIFT” lights will come on. Lockup will be dropped and shifting will be blocked.

NOTE: Lockup will be dropped unless the retarder is applied.

If the output speed is below 500 rpm, shifts are not blocked and the “DO NOT SHIFT” light will come on.

To clear the above conditions, the following must be done:

- To resume normal shifting, reduce output speed below 500 rpm.
- To clear “CHECK TRANS” light, the engine must be shut off and restarted and the conditions must not be present.

COPYRIGHT 1994 GENERAL MOTORS CORP.

Code	Description	DO NOT SHIFT Light	Transmission Response	Clearing CHECK TRANS Light
On-Highway				
44	C solenoid on test: Below 1200 output rpm	Off	May not shift	ECU power off/on
	Above 1200 output rpm	On	Drop LU and hold in gear	ECU power off/on

CODES 41, 42, 43, 44, 45, 46 — LATCHING SOLENOIDS

A solenoid diagnostic code will be set in memory if one of the following conditions exists:

1. The resistance between the two wires to a solenoid is too high or too low.
2. The resistance is too low between either of the two wires and ground.

If one of the conditions exist at an output speed over 1200 rpm, the “CHECK TRANS” and the “DO NOT SHIFT” lights will come on. Lockup will be dropped and shifting will be blocked.

NOTE: Lockup will be dropped unless the retarder is applied.

If the output speed is below 1200 rpm, shifts are not blocked and the “DO NOT SHIFT” light does not come on. Only the “CHECK TRANS” light comes on.

To clear the conditions, the following must be done:

- To resume normal shifting, reduce output speed below 1200 rpm.
- To clear “CHECK TRANS” light, input power must be shut off and turned back on.

COPYRIGHT 1994 GENERAL MOTORS CORP.

Code	Description	DO NOT SHIFT Light	Transmission Response	Clearing CHECK TRANS Light
Off-Highway				
44	D solenoid on test: Below 500 output rpm	Off	May not shift	ECU power off/on
	Above 500 output rpm	On	Drop LU and hold in gear	ECU power off/on

CODES 41, 42, 43, 44, 45, 61 — SOLENOIDS A, B, C, D, E, G

A solenoid diagnostic code will be set in memory if one of the following conditions exists:

1. Resistance between the two wires to a solenoid is too high or too low.
2. The resistance is too high or too low between either of the two wires and ground.

If one of the above conditions exists at an output speed over 500 rpm, the “CHECK TRANS” and the “DO NOT SHIFT” lights will come on. Lockup will be dropped and shifting will be locked.

NOTE: Lockup will be dropped unless the retarder is applied.

If the output speed is below 500 rpm, shifts are not blocked and the “DO NOT SHIFT” light will come on.

To clear the above conditions, the following must be done:

- To resume normal shifting, reduce output speed below 500 rpm.
- To clear “CHECK TRANS” light, the engine must be shut off and restarted and the conditions must not be present.

COPYRIGHT 1994 GENERAL MOTORS CORP.

Code	Description	DO NOT SHIFT Light	Transmission Response	Clearing CHECK TRANS Light
On-Highway				
45	B solenoid on test: Below 1200 output rpm	Off	May not shift	ECU power off/on
	Above 1200 output rpm	On	Drop LU and hold in gear	ECU power off/on

CODES 41, 42, 43, 44, 45, 46 — LATCHING SOLENOIDS

A solenoid diagnostic code will be set in memory if one of the following conditions exists:

1. The resistance between the two wires to a solenoid is too high or too low.
2. The resistance is too high or too low between either of the two wires and ground.

If one of the conditions exist at an output speed over 1200 rpm, the “CHECK TRANS” and the “DO NOT SHIFT” lights will come on. Lockup will be dropped and shifting will be blocked.

NOTE: Lockup will be dropped unless the retarder is applied.

If the output speed is below 1200 rpm, shifts are not blocked and the “DO NOT SHIFT” light does not come on. Only the “CHECK TRANS” light comes on.

To clear the conditions, the following must be done:

- To resume normal shifting, reduce output speed below 1200 rpm.
- To clear “CHECK TRANS” light, input power must be shut off and turned back on.

COPYRIGHT 1994 GENERAL MOTORS CORP.

Code	Description	DO NOT SHIFT Light	Transmission Response	Clearing CHECK TRANS Light
Off-Highway				
45	E solenoid on test: Below 500 output rpm	Off	May not shift	ECU power off/on
	Above 500 output rpm	On	Drop LU and hold in gear	ECU power off/on

CODES 41, 42, 43, 44, 45, 61 — SOLENOIDS A, B, C, D, E, G

A solenoid diagnostic code will be set in memory if one of the following conditions exists:

1. Resistance between the two wires to a solenoid is too high or too low.
2. The resistance is too high or too low between either of the two wires and ground.

If one of the above conditions exists at an output speed over 500 rpm, the “CHECK TRANS” and the “DO NOT SHIFT” lights will come on. Lockup will be dropped and shifting will be blocked.

NOTE: Lockup will be dropped unless the retarder is applied.

If the output speed is below 500 rpm, shifts are not blocked and the “DO NOT SHIFT” light will come on.

To clear the above conditions, the following must be done:

- To resume normal shifting, reduce output speed below 500 rpm.
- To clear “CHECK TRANS” light, the engine must be shut off and restarted and the conditions must not be present.

COPYRIGHT 1994 GENERAL MOTORS CORP.

Code	Description	DO NOT SHIFT Light	Transmission Response	Clearing CHECK TRANS Light
On-Highway				
46	A solenoid on test: Below 1200 output rpm	Off	May not shift	ECU power off/on
	Above 1200 output rpm	On	Drop LU and hold in gear	ECU power off/on

CODES 41, 42, 43, 44, 45, 46 — LATCHING SOLENOIDS

A solenoid diagnostic code will be set in memory if one of the following conditions exists:

1. The resistance between the two wires to a solenoid is too high or too low.
2. The resistance is too high or too low between either of the two wires and ground.

If one of the conditions exist at an output speed over 1200 rpm, the “CHECK TRANS” and the “DO NOT SHIFT” lights will come on. Lockup will be dropped and shifting will be blocked.

NOTE: Lockup will be dropped unless the retarder is applied.

If the output speed is below 1200 rpm, shifts are not blocked and the “DO NOT SHIFT” light does not come on. Only the “CHECK TRANS” light comes on.

To clear the conditions, the following must be done:

- To resume normal shifting, reduce output speed below 1200 rpm.
- To clear “CHECK TRANS” light, input power must be shut off and turned back on.

COPYRIGHT 1994 GENERAL MOTORS CORP.

Code	Description	DO NOT SHIFT Light	Transmission Response	Clearing CHECK TRANS Light
On-Highway				
51	G solenoid	Off	Possible loss of lockup	Valid signal

CODE 51 — NON-LATCHING SOLENOIDS

A non-latching solenoid diagnostic code will be set in memory if one of the following conditions exists:

1. The resistance between the two wires to a solenoid is too high or too low.
2. The resistance is too low between either of the two wires and ground.

If one of the conditions exists, the “CHECK TRANS” light will come on.

The “CHECK TRANS” light will go out when conditions 1 and 2 are eliminated.

Code	Description	DO NOT SHIFT Light	Transmission Response	Clearing CHECK TRANS Light
Off-Highway				
51	K solenoid	Off	Possible loss of lockup	Valid signal

CODE 51 — (K) SOLENOID

A solenoid diagnostic code will be set in memory if one of the following exists:

1. Resistance in the circuit across the solenoid is too high or too low.
2. One of the two wires going to the solenoid is in contact with an external voltage.
3. One of the two wires going to the solenoid is shorted to ground.
4. Internal ECU switching problem.

If one of the above conditions exists, the “CHECK TRANS” light will come on.

The “CHECK TRANS” light will go out when the condition is corrected.

COPYRIGHT 1994 GENERAL MOTORS CORP.

Code	Description	DO NOT SHIFT Light	Transmission Response	Clearing CHECK TRANS Light
On-Highway				
52	E solenoid	Off	Possible full trim boost	Valid signal

CODES 51 AND 52 — NON-LATCHING SOLENOIDS

A non-latching solenoid diagnostic code will be set in memory if one of the following conditions exists:

1. The resistance between the two wires to a solenoid is too high or too low.
2. The resistance is too low between either of the two wires and ground.

If one of the conditions exists, the “CHECK TRANS” light will come on.

The “CHECK TRANS” light will go out when conditions 1 and 2 are eliminated.

Code	Description	DO NOT SHIFT Light	Transmission Response	Clearing CHECK TRANS Light
Off-Highway				
52	H or J solenoid	Off	Possible full trim boost	Valid signal

CODE 52 — (H) SOLENOID (DP 8000) OR (J) SOLENOID (CLBT 9000)

A solenoid diagnostic code will be set in memory if one of the following conditions exists:

1. Resistance in the circuit across the solenoid is too high or too low.
2. One of the two wires going to the solenoid is in contact with an external voltage.

If one of the conditions exists, the “CHECK TRANS” light will come on.

The “CHECK TRANS” light will go out when the condition is corrected.

COPYRIGHT 1994 GENERAL MOTORS CORP.

Code	Description	DO NOT SHIFT Light	Transmission Response	Clearing CHECK TRANS Light
On-Highway				
53	H solenoid: On test	Off	May not shift	ECU power off/on
	Off test	On	Drop LU and hold in gear	ECU power off/on

CODE 53 — NEUTRAL/RANGE SOLENOIDS

There are two situations where a neutral range solenoid diagnostic code will be set in memory.

During a test when the solenoid is on, the voltage should be above a pre-set low voltage figure.

If this condition is not met, the "CHECK TRANS" light will come on and you *may not* be able to shift.

To clear the condition, the input power must be shut off and then back on.

Code	Description	DO NOT SHIFT Light	Transmission Response	Clearing CHECK TRANS Light
Off-Highway				
53	I solenoid: On test	Off	May not shift	ECU power off/on
	Off test	On	Drop LU and hold in gear	ECU power off/on

CODE 53 (I) SOLENOID (DP 8000)

There are two situations where a solenoid diagnostic code will be set in memory.

Resistance on the solenoid circuit is too high or the circuit is in contact with an external voltage source.

If this condition is met, the "CHECK TRANS" and "DO NOT SHIFT" lights will come on. All shifts will be blocked.

To clear the above condition, the engine must be shut off and restarted and the condition must not be present.

Resistance on the solenoid circuit is too low

If this condition is met, the "CHECK TRANS" light will come on and you *may not* be able to shift.

To clear the above condition, the engine must be shut off and restarted and the condition must not be present.

COPYRIGHT 1994 GENERAL MOTORS CORP.

Code	Description	DO NOT SHIFT Light	Transmission Response	Clearing CHECK TRANS Light
On-Highway				
54	A, B, C, D, F, & J solenoids Off test	On	Drop LU and hold in gear	ECU power off/on

CODE 54 — LATCHING SOLENOID CHAIN

A latching solenoid chain diagnostic code will be set in memory if the voltage across the solenoid chain does not equal a pre-set voltage figure.

If this condition is present, the “CHECK TRANS” and the “DO NOT SHIFT” lights will come on. Lockup will be dropped and all shifts will be blocked.

NOTE: Lockup will be dropped unless the retarder is applied.

To clear this situation, the input power must be shut off and back on again.

Code	Description	DO NOT SHIFT Light	Transmission Response	Clearing CHECK TRANS Light
Off-Highway				
54	A, B, C, D, E solenoids Off test	On	Drop LU and hold in gear	ECU power off/on

CODE 54 — SOLENOID CHAIN

A solenoid diagnostic code will be set in memory if the voltage across the solenoid chain does not equal a pre-set voltage figure.

If this condition is present, the “CHECK TRANS” and the “DO NOT SHIFT” lights will come on. Lockup will be dropped and all shifts will be blocked.

NOTE: Lockup will be dropped unless the retarder is applied.

To clear this situation, the engine must be shut off and restarted and the condition must not be present.

COPYRIGHT 1994 GENERAL MOTORS CORP.

Code	Description	DO NOT SHIFT Light	Transmission Response	Clearing CHECK TRANS Light
Off-Highway				
61	G solenoid on test: Below 500 output rpm	Off	May not shift	ECU power off/on
	Above 500 output rpm	On	Drop LU and hold in gear	ECU power off/on

CODE 61 — (G) SOLENOID

A solenoid diagnostic code will be set in memory if the voltage across the solenoid does not equal a pre-set voltage figure.

If this condition is present, the “CHECK TRANS” and the “DO NOT SHIFT” lights will come on. Lockup will be dropped and all shifts will be blocked.

NOTE: Lockup will be dropped unless retarder is applied.

To clear this situation, the engine must be shut off and restarted and the condition must not be present.

Code	Description	DO NOT SHIFT Light	Transmission Response	Clearing CHECK TRANS Light
Off-Highway				
62	F solenoid: Off test	On	Hold in gear	ECU power off/on
	On test, below 500 rpm On test, above 500 rpm	Off On	May not shift Hold in gear	ECU power off/on ECU power off/on

CODE 62 — (F) SOLENOID

A solenoid diagnostic code will be set in memory if one of the following conditions is met:

1. Resistance in the circuit across the solenoid is too low.
2. Internal ECU switching problem.
3. One of the two wires going to the solenoid is shortened to ground.
4. Resistance in the circuit across the solenoid is too high.

If conditions 1 and 2 are met, the “CHECK TRANS” light will be turned on.

If conditions 3 and 4 are met, the “CHECK TRANS” and “DO NOT SHIFT” lights will be turned on.

To clear this situation, the engine must be shut off and restarted and the condition must not be present.

COPYRIGHT 1994 GENERAL MOTORS CORP.

Code	Description	DO NOT SHIFT Light	Transmission Response	Clearing CHECK TRANS Light
Off-Highway				
63	G solenoid on test	On	Drop LU and hold in gear	ECU power off/on

CODE 63 — (G) SOLENOID

A solenoid diagnostic code will be set in memory if the voltage across the solenoid does not equal a pre-set voltage figure.

If this condition is present, the “CHECK TRANS” and the “DO NOT SHIFT” lights will come on. Lockup will be dropped and all shifts will be blocked.

NOTE: Lockup will be dropped unless retarder is applied.

To clear this situation, the engine must be shut off and restarted and the condition must not be present.

Code	Description	DO NOT SHIFT Light	Transmission Response	Clearing CHECK TRANS Light
66	Transmission engine communication link	Off	Fixed throttle assumed Fixed engine rpm assumed	Next valid signal

CODE 66 — TRANSMISSION ENGINE COMMUNICATION LINK (TECL)

A TECL code will be set in the absence of input signals from the DDEC ECM.

This condition will turn on the “CHECK TRANS” light and assume a calibrated throttle sensor setting and shift points. This calibrated throttle sensor setting will provide shift points between closed throttle and full throttle.

When the signal is restored, the “CHECK TRANS” light will be turned off and normal throttle sensor readings resumed. The Code 66 will be retained in memory until cleared.

COPYRIGHT 1994 GENERAL MOTORS CORP.

Code	Description	DO NOT SHIFT Light	Transmission Response	Clearing CHECK TRANS Light
69	Electronic control unit test	On	Drop LU and hold in gear	ECU power off/on

CODE 69 — COMPUTER MALFUNCTION

A computer malfunction diagnostic code will be set in memory if the computer locates an abnormal condition within itself.

If an abnormal condition is found, the computer turns itself off. The “CHECK TRANS” and “DO NOT SHIFT” lights come on and all shifts are blocked.

To clear, the input power must be shut off and back on again, and the condition must not be present.

COPYRIGHT 1994 GENERAL MOTORS CORP.