https://truckmanualshub.com/

Kenworth Heavy Duty Body Builder Manual 2012

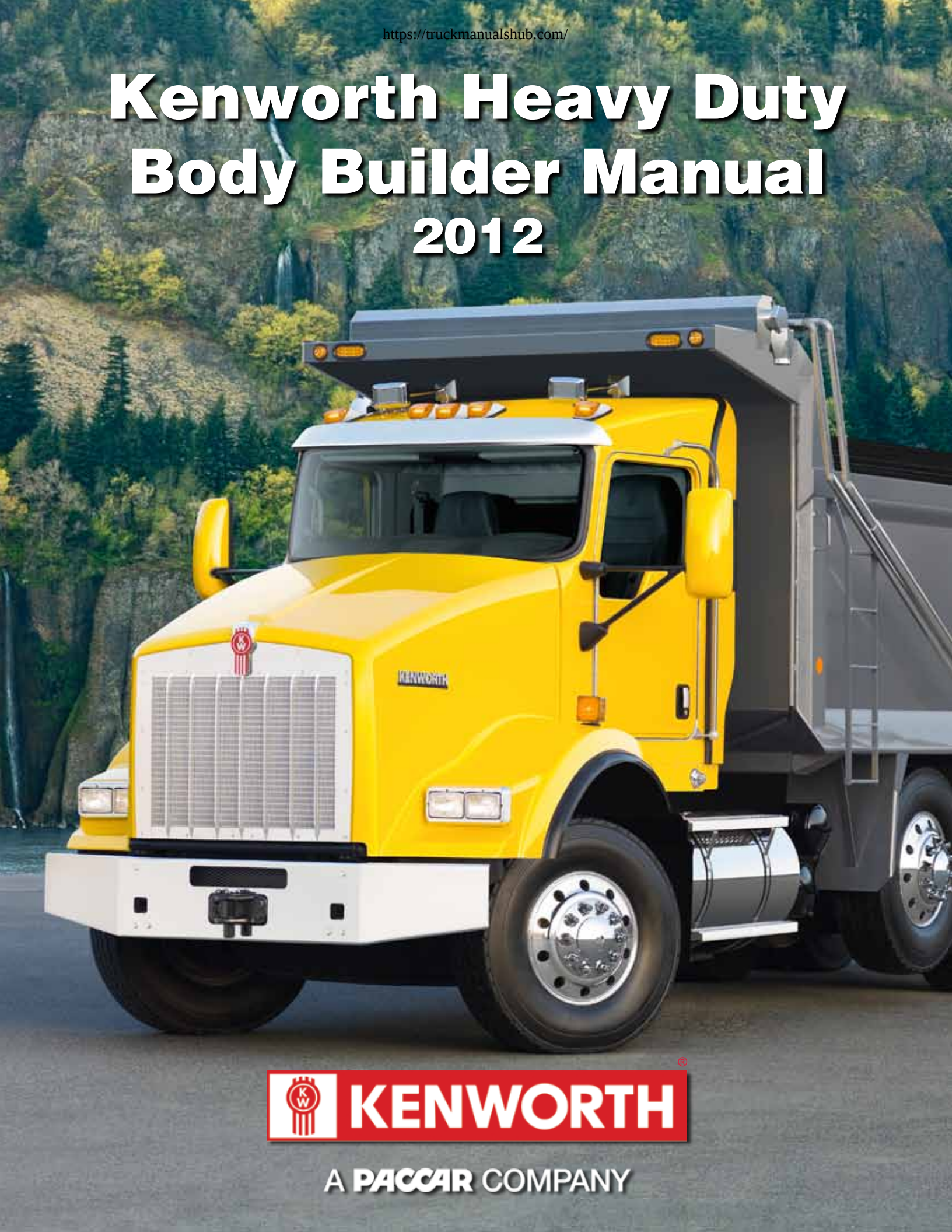

KENWORTH®

A PACCAR COMPANY

https://truckmanualshub.com/

This page intentionally left blank.

https://truckmanualshub.com/

Kenworth Heavy Duty Body Builder Manual

KENWORTH®

A PACCAR COMPANY

Body Builder Manual Contents

https://truckmanualshub.com/

SECTION 1: INTRODUCTION **1-1**

SECTION 2: SAFETY AND COMPLIANCE **2-1**
SAFETY SIGNALS . . . 2-1
FEDERAL MOTOR VEHICLE SAFETYSTANDARDS COMPLIANCE . . . 2-2

SECTION 3: DIMENSIONS **3-1**
DIMENSIONS . . . 3-1
ABBREVIATIONS . . . 3-1
TURNING RADIUS . . . 3-1
OVERALL DIMENSIONS . . . 3-5
T800 . . . 3-5
T800 WITH SPLIT FENDERS . . . 3-6
T800 SHORT HOOD . . . 3-7
T800 WITH FEPTO (FRONT ENGINE POWER TAKE OFF) . . . 3-8
T800 WIDE HOOD . . . 3-9
W900S . . . 3-10
W900B . . . 3-11
W900L . . . 3-12
C500 . . . 3-13
EXTENDED DAY CAB . . . 3-14
38” AEROCAB . . . 3-15
RIDE HEIGHTS . . . 3-16
REAR SUSPENSION LAYOUTS . . . 3-18
AG400L TANDEM . . . 3-19
AG400 TANDEM . . . 3-20
AG460 TANDEM . . . 3-21
AG690 TRIDEM . . . 3-22
REYCO 79KB SINGLE REAR AXLE . . . 3-23
REYCO 102 TANDEM REAR AXLE . . . 3-24
NEWAY AD 123 SINGLE REAR AXLE . . . 3-25
NEWAY AD 246 TANDEM SUSPENSION . . . 3-26
NEWAY AD 369 TRIDEM SUSPENSION . . . 3-27
HENDRICKSON PRIMAAX TANDEM SUSPENSION . . . 3-28
HENDRICKSON PRIMAAX TRIDEM SUSPENSION . . . 3-29
HENDRICKSON HMX TANDEM SUSPENSION . . . 3-30
HENDRICKSON RT TANDEM SUSPENSION . . . 3-31
CHALMERS 856-46 TANDEM SUSPENSION . . . 3-32
PUSHER AXLES . . . 3-34
AXLE TRACK AND TIRE WIDTH . . . 3-36
PTO CLEARANCES . . . 3-40

SECTION 4: EXHAUST & AFTERTREATMENT **4-1**
EXHAUST AND AFTER-TREATMENT INFORMATION . . . 4-1
GENERAL GUIDELINES FOR DEF SYSTEM . . . 4-3
INSTALLATION REQUIREMENTS AND DIMENSIONS FOR DEF SYSTEM . . . 4-3
MEASUREMENT REFERENCE POINTS . . . 4-4
GENERAL EXHAUST INFORMATION . . . 4-10
EXHAUST INFORMATION . . . 4-23

SECTION 5: FRAME LAYOUTS **5-1**
FRAME LAYOUTS . . . 5-1
FRAME LAYOUT INDEX . . . 5-4

https://truckmanualshub.com/

SECTION 6: BODY MOUNTING **6-1**
FRAME INFORMATION 6-1
CRITICAL CLEARANCES 6-3
BODY MOUNTING USING BRACKETS 6-4
MOUNTING HOLES 6-6
BODY MOUNTING USING U–BOLTS 6-7

SECTION 7: FRAME MODIFICATIONS **7-1**
FRAME MODIFICATIONS 7-1
DRILLING RAILS 7-1
MODIFYING FRAME LENGTH 7-2
CHANGING WHEELBASE 7-3
CROSSMEMBERS 7-5
WELDING 7-6
TORQUE REQUIREMENTS 7-7

SECTION 8: ELECTRICAL **8-1**
ELECTRICAL 8-1
ACCESSING GAUGES AND SWITCHES 8-9
TELLTALE SYMBOLS 8-17
SPARE RELAYS BODY BUILDER INSTALLED(FOR LOADS EXCEEDING 20 AMPS) . . . 8-23
ADDITIONAL SPARE CIRCUITS 8-25
REMOTE PTO/THROTTLE HARNESS 8-27
MULTIFUNCTION TURN SIGNAL STALK, CHASSIS NODE & CHASSIS LOAD CENTER . 8-28
CHASSIS LOAD CENTER DIMENSIONS 8-30
2010 ELECTRICAL HARDWARE 8-31
TRAILER CABLE CONNECTIONS 8-35
BENDIX ELECTRONIC STABILITY PROGRAM 8-37
FACTORY INSTALLED SNOW PLOW LIGHT WIRING 8-38

SECTION 9: ROUTING **9-1**
ROUTING 9-1
ROUTING REQUIREMENTS 9-2

APPENDIX A: VEHICLE IDENTIFICATION **A-1**
VEHICLE IDENTIFICATION NUMBER A-1
VEHICLE IDENTIFICATION LABELS A-2
COMPONENT IDENTIFICATION A-3

Figures

https://truckmanualshub.com/

FIGURE 2-1: INCOMPLETE VEHICLE CERTIFICATION DOCUMENT 2-2
FIGURE 2-2: LOCATIONS OF CERTIFICATION LABELS - DRIVER'S DOOR AND FRAME 2-2
FIGURE 2-3:VWEST COAST MIRROR OAT SENSOR, ... 2-6
FIGURE 2-4: AERODYNAMIC MIRROR OAT SENSOR LOCATION 2-7
FIGURE 2-5: INSTRUMENT CLUSTER FOR T4/T6/T8/W9/C5 2-7
FIGURE 3-1: PROSPECTER TURN CIRCLE ANALYSIS. 3-4
FIGURE 4-1: MEASUREMENT LOCATION OF DEF SUPPLY MODULE (PUMP) 4-4
FIGURE 4-2: MEASUREMENT LOCATION OF DEF DOSING MODULE (INJECTOR) . . . 4-4
FIGURE 4-3: ORIENTATION OF DOSING MODULE 4-5
FIGURE 4-4: RH UNDER CAB EXHAUST WITH SMALL, MEDIUM, OR LARGE TANKS. . . 4-5
FIGURE 4-5: HORIZONTAL EXHAUST WITH SMALL, MEDIUM, OR LARGE TANKS. . . . 4-6
FIGURE 4-6: VERTICAL EXHAUST WITH SMALL, MEDIUM, OR LARGE TANKS. 4-6
FIGURE 4-7: RH UNDER CAB EXHAUST WITH CLEAR BACK OF CAB TANK. 4-7
FIGURE 4-8: VERTICAL WITH CLEAR BACK OF CAB TANK 4-8
FIGURE 4-9: ROUTING DEF LINES AND DEF TRAP 4-9
FIGURE 4-10: SUPPLY MODULE ALLOWED CLOCKING ANGLES 4-9
FIGURE 4-11: ISOMETRIC VIEW OF RIGHT HAND UNDER DPF AND SCR WITH SINGLE SOC TAILPIPE 4-11
FIGURE 4-12: TOP VIEW OF RIGHT HAND UNDER DPF AND SCR WITH SINGLE SOC TAILPIPE 4-11
FIGURE 4-13: RIGHT VIEW OF RIGHT HAND UNDER DPF AND SCR WITH SINGLE SOC TAILPIPE 4-12
FIGURE 4-14: BACK VIEW OF RIGHT HAND UNDER DPF AND SCR WITH SINGLE SOC TAILPIPE 4-12
FIGURE 4-15: ISOMETRIC VIEW OF RIGHT HAND UNDER DPF AND SCR WITH DUAL SOC TAILPIPES 4-13
FIGURE 4-16: TOP VIEW OF RIGHT HAND UNDER DPF AND SCR WITH DUAL SOC TAILPIPES 4-13
FIGURE 4-17: RIGHT VIEW OF RIGHT HAND UNDER DPF AND SCR WITH DUAL SOC TAILPIPES 4-14
FIGURE 4-18: BACK VIEW OF RIGHT HAND UNDER DPF AND SCR WITH DUAL SOC TAILPIPES 4-14
FIGURE 4-19: ISOMETRIC VIEW OF RIGHT HAND UNDER DPF AND SCR ON AEROCAB WITH SINGLE SOC TAILPIPE 4-15
FIGURE 4-20: TOP VIEW OF RIGHT HAND UNDER DPF AND SCR ON AEROCAB WITH SINGLE SOC TAILPIPE 4-15
FIGURE 4-21: RIGHT VIEW OF RIGHT HAND UNDER DPF AND SCR ON AEROCAB WITH SINGLE SOC TAILPIPE 4-16
FIGURE 4-22: BACK VIEW OF RIGHT HAND UNDER DPF AND SCR ON AEROCAB WITH SINGLE SOC TAILPIPE 4-16
FIGURE 4-23: ISOMETRIC VIEW OF RIGHT HAND UNDER DPF AND SCR ON AEROCAB WITH DUAL SOC TAILPIPES 4-17
FIGURE 4-24: TOP VIEW OF RIGHT HAND UNDER DPF AND SCR ON AEROCAB WITH DUAL SOC TAILPIPES 4-17
FIGURE 4-25: RIGHT VIEW OF RIGHT HAND UNDER DPF AND SCR ON AEROCAB WITH DUAL SOC TAILPIPES 4-18
FIGURE 4-26: BACK VIEW OF RIGHT HAND UNDER DPF AND SCR ON AEROCAB WITH DUAL SOC TAILPIPES 4-18
FIGURE 4-27: ISOMETRIC VIEW OF HORIZONTAL DPF AND SCR WITH HORIZONTAL TAILPIPE 4-19
FIGURE 4-28: TOP VIEW OF HORIZONTAL DPF AND SCR WITH HORIZONTAL TAILPIPE 4-19
FIGURE 4-29: RIGHT VIEW OF HORIZONTAL DPF AND SCR WITH HORIZONTAL TAILPIPE 4-20

https://truckmanualshub.com/

FIGURE 4-30: BACK VIEW OF HORIZONTAL DPF AND SCR WITH HORIZONTAL TAILPIPE . . . 4-20
FIGURE 4-31: ISOMETRIC VIEW OF VERTICAL DPF AND SCR . . . 4-21
FIGURE 4-32: TOP VIEW OF VERTICAL DPF AND SCR . . . 4-21
FIGURE 4-33: RIGHT VIEW OF VERTICAL DPF AND SCR . . . 4-22
FIGURE 4-34: BACK VIEW OF VERTICAL DPF AND SCR . . . 4-22
FIGURE 5-1: DEF TANKS SYSTEMS. . . . 5-3
FIGURE 6-1: ISOMETRIC VIEW OF T800 FEPTO FRONT END WITH 66” BUMPER SETTING . . . 6-1
FIGURE 6-2: T800 FEPTO FRONT END WITH 66” BUMPER SETTING . . . 6-2
FIGURE 6-3: ISOMETRIC VIEW OF T800 FEPTO FRONT END WITH 73” BUMPER SETTING . . . 6-2
FIGURE 6-4: T800 FEPTO FRONT END WITH 73” BUMPER SETTING . . . 6-2
FIGURE 6-5: MINIMUM CLEARANCE BETWEEN TOP OF REAR TIRES AND BODY STRUCTURE OVERHANG. . . . 6-3
FIGURE 6-6: MINIMUM BACK OF CAB CLEARANCE . . . 6-4
FIGURE 6-7: SPACER BETWEEN FRAME SILL AND BODY RAIL - RUBBER OR PLASTIC 6-5
FIGURE 6-8: HIGH COMPRESSION SPRING . . . 6-5
FIGURE 6-9: RUBBER SPACER BETWEEN BRACKETSBETWEEN THE MOUNTING BOLT AND UPPER BRACKET . . . 6-5
FIGURE 6-10: CROSSMEMBER-GUSSET HOLE PATTERN REQUIREMENTS. [INCH (MM)] . . . 6-6
FIGURE 6-11: ACCEPTABLE U-BOLT MOUNTING WITH WOOD AND FABRICATED SPACERS [INCH (MM)]. . . . 6-7
FIGURE 6-12: CLEARANCE SPACE FOR AIR LINES AND CABLES . . . 6-8
FIGURE 6-13: EXAMPLE OF FISHPLATE BRACKET AT REAR END OF BODY, USED WITH U-BOLTS . . . 6-9
FIGURE 7-1: DETAIL OF FRAME EXTENSION AND JOINT WELDING . . . 7-2
FIGURE 7-2: FRAME INSERT . . . 7-3
FIGURE 7-3: COMPARISON OF ORIGINAL, SHORTENED, AND EXTENDED WHEELBASES. . . . 7-4
FIGURE 7-4: CROSSMEMBER ADDED WHEN DISTANCE EXCEEDS 60 INCHES (1524 MM) . . . 7-5
FIGURE 8-1: KENWORTH B-CAB DASH. . . . 8-2
FIGURE 8-2: DIESEL EXHAUST FLUID GAUGE. . . . 8-2
FIGURE 8-3: MULTIPLEXED INSTRUMENTATION BLOCK DIAGRAM. . . . 8-3
FIGURE 8-4: CECU LOCATION. . . . 8-4
FIGURE 8-5: INSTRUMENT CLUSTER COMPONENTS . . . 8-5
FIGURE 8-6: CVSG GAUGES . . . 8-6
FIGURE 8-7: FIREWALL AIR JUNCTION BLOCK (VIEW FROM INSIDE OF CAB) . . . 8-7
FIGURE 8-8: AIR FILTER RESTRICTION SENSOR ON FIREWALL AIR JUNCTION BLOCK (VIEW FROM ENGINE). . . . 8-7
FIGURE 8-9: FUEL FILTER RESTRICTION PRESSURE GAUGE SENSOR LOCATION (TYPICAL) . . . 8-8
FIGURE 8-10: TELLTALE SYMBOL STANDARD CARDS . . . 8-17
FIGURE 8-11: BLANK TELLTALE CARD . . . 8-18
FIGURE 8-12: TELLTALE ICONS . . . 8-19
FIGURE 8-13: KENWORTH SPARE SWITCHES . . . 8-20
FIGURE 8-14: SPARE SWITCH HARNESS . . . 8-21
FIGURE 8-15: SPECIALTY SWITCHES . . . 8-22
FIGURE 8-16: SPARE RELAY CONNECTORS. . . . 8-23
FIGURE 8-17: SPARE RELAY HARNESSES . . . 8-24
FIGURE 8-18: SPARE BULLET CONNECTORS . . . 8-25

Tables

https://truckmanualshub.com/

FIGURE 8-19: SPARE PIGTAIL CONNECTOR 8-26
FIGURE 8-21: CHASSIS POWER DISTRIBUTION CENTER DIMENSIONS 8-30
FIGURE 8-22: DAYCAB HARDWARE LOCATIONS 8-31
FIGURE 8-23: AEROCAB STANDARD HARDWARE LOCATIONS. 8-31
FIGURE 8-25: CHASSIS NODE DIMENSIONS 8-32
FIGURE 8-25: SAE J560 TRAILER CONNECTOR 8-35
FIGURE 8-26: ISO 3731 TRAILER CONNECTOR 8-35
FIGURE 8-27: JUNCTION BOX. 8-36
FIGURE 8-31: SNOW PLOW ICON. 8-38
FIGURE 8-32: 8-38
FIGURE 9-1: CLAMP AND BUTTERFLY CLAMP 9-1
FIGURE 9-2: BUTTERFLY TIE 9-1
FIGURE 9-3: TIE STRAP 9-1
FIGURE 9-4: HEAVY DUTY (HD) MOUNT. 9-2
FIGURE 9-5: DEFINITION OF MEASUREMENTS.. 9-4
FIGURE A-1: VEHICLE IDENTIFICATION NUMBER (VIN). A-1
FIGURE A-2: DRIVERS DOOR AND DOOR FRAME LABELS A-2
FIGURE A-3: FRONT AXLE IDENTIFICATION A-3
FIGURE A-4: REAR AXLE IDENTIFICATION A-4

https://truckmanualshub.com/

Tables

TABLE 3-1: ABBREVIATIONS USED 3-1
TABLE 3-2: TURNING RADIUS 3-1
TABLE 3-3: RIDE HEIGHTS 3-17
TABLE 3-4: REAR SUSPENSION OPTIONS 3-19
TABLE 3-18: AXLE WIDTH CALCULATION 3-36
TABLE 3-19: GROUND CLEARANCE FOR FUEL TANKS 3-38
TABLE 3-20: GROUND CLEARANCE FOR BATTERY BOXES 3-39
TABLE 5-1: ABBREVIATIONS 5-1
TABLE 5-2: FUEL TANK OVERALL LENGTH (IN) 5-2
TABLE 5-3: BATTERY BOX CENTERFRAME LENGTHS (IN) 5-2
TABLE 5-4: DEF TANKS SYSTEMS 5-3
TABLE 6-1: SINGLE STEEL RAILS 6-1
TABLE 6-2: INSERTED STEEL RAILS 6-1
TABLE 7-1: CUSTOMARY GRADE 8 UNF OR UNC. 7-7
TABLE 7-2: U.S. CUSTOMARY – GRADE 8. METRIC CLASS 10.9 7-7
TABLE 8-1: TELLTALES POSITION AND COLOR 8-18
TABLE 8-3: CHASSIS NODE GUIDELINE 8-28
TABLE 8-4: WIRE NUMBER GENERAL CATEGORIES 8-33
TABLE 8-6: SAE J560 CONNECTOR 8-34
TABLE 8-7: ISO 3731 CONNECTOR 8-35
TABLE 9-1: EXHAUST – SYSTEM CLEARANCE 9-4
TABLE A-1: MODEL YEAR (CODE) DESIGNATIONS. A-1

https://truckmanualshub.com/

This page intentionally left blank.

https://truckmanualshub.com/

Section 1
Introduction

This manual was created to provide body builders with appropriate information and guidelines useful in the body planning and installation process. This information will be helpful when installing bodies or other associated equipment.

This manual contains appropriate dimensional information, guidelines for mounting bodies, guidelines for modifying frames, electrical wiring information, and other information useful in the body installation process. This manual is specific to chassis with 2010 engines.

The Body Builder Manual can be very useful when specifying a vehicle, particularly when the body builder is involved in the vehicle definition and ordering process. Early in the process, professional body builders can often contribute valuable information that reduces the ultimate cost of the body installation.

In the interest of continuing product development, Kenworth reserves the right to change specifications or products at any time without prior notice. It is the responsibility of the user to ensure that he is working with the latest released information. Check Kenworth.com for the latest released version.

If you require additional information or reference materials, please contact your local Kenworth dealer.

https://truckmanualshub.com/

This page intentionally left blank.

https://truckmanualshub.com/

SAFETY SIGNALS

We've put a number of alerting messages in this book. Please read and follow them. They are there for your protection and information. These alerting messages can help you avoid injury to yourself or others and help prevent costly damage to the vehicle.

Key symbols and "signal words" are used to indicate what kind of message is going to follow. Pay special attention to comments prefaced by "WARNING", "CAUTION", and "NOTE." Please don't ignore any of these alerts.

Warnings, cautions, and notes

WARNING

When you see this word and symbol, the message that follows is especially vital. It signals a **potentially hazardous situation** which, if not avoided, could result in death or serious injury. This message will tell you what the hazard is, what can happen if you don't heed the warning, and how to avoid it.

Example:

WARNING! Be sure to use a circuit breaker designed to meet liftgate amperage requirements. An incorrectly specified circuit breaker could result in a electrical overload or fire situation. Follow the liftgate installation instructions and use a circuit breaker with the recommended capacity.

CAUTION

Signals a **potentially hazardous situation** which, if not avoided, could result in minor or moderate injury or damage to the vehicle.

Example:

CAUTION: Never use a torch to make a hole in the rail. Use the appropriate drill bit.

NOTE

Provides general information: for example, the note could warn you on how to avoid damaging your vehicle or how to drive the vehicle more efficiently.

Example:

Note: Be sure to provide maintenance access to the battery box and fuel tank fill neck.

Please take the time to read these messages when you see them, and remember:

WARNING
Indicates a potentially hazardous situation which, if not avoided, could result in death or serious injury.

CAUTION
Signals a potentially hazardous situation which, if not avoided, could result in minor or moderate injury or damage to the vehicle.

NOTE
Useful information that is related to the topic being discussed.

https://truckmanualshub.com/

FEDERAL MOTOR VEHICLE SAFETY STANDARDS COMPLIANCE

As an Original Equipment Manufacturer (OEM), Kenworth Truck Co. ensures that our products comply with all applicable U.S. or Canadian Federal Motor Vehicle Safety Standards. However, the fact that this vehicle has no fifth wheel and that a Body Builder (Intermediate or Final Stage Manufacturer) will be doing additional modifications means that the vehicle was incomplete when it left the build plant. See next section and Appendix A for additional information.

Incomplete Vehicle Certification

An Incomplete Vehicle Document is shipped with the vehicle, certifying that the vehicle is not complete. See Figure 2–1. In addition, affixed to the driver's side door frame or edge is an Incomplete Vehicle Certification label. See Figure 2–2. For further information on Vehicle Certification and Identification, see APPENDIX A "VEHICLE IDENTIFICATION."

NOTE

These documents list the U.S. or Canadian Federal Motor Vehicle Safety Standard regulations that the vehicle complied with when it left the build plant. You should be aware that if you add, modify or alter any of the components or systems covered by these regulations, it is your responsibility as the Intermediate or Final Stage Manufacturer to ensure that the complete vehicle is in compliance with the particular regulations upon completion of the modifications.

FIGURE 2-1. Incomplete Vehicle Certification Document

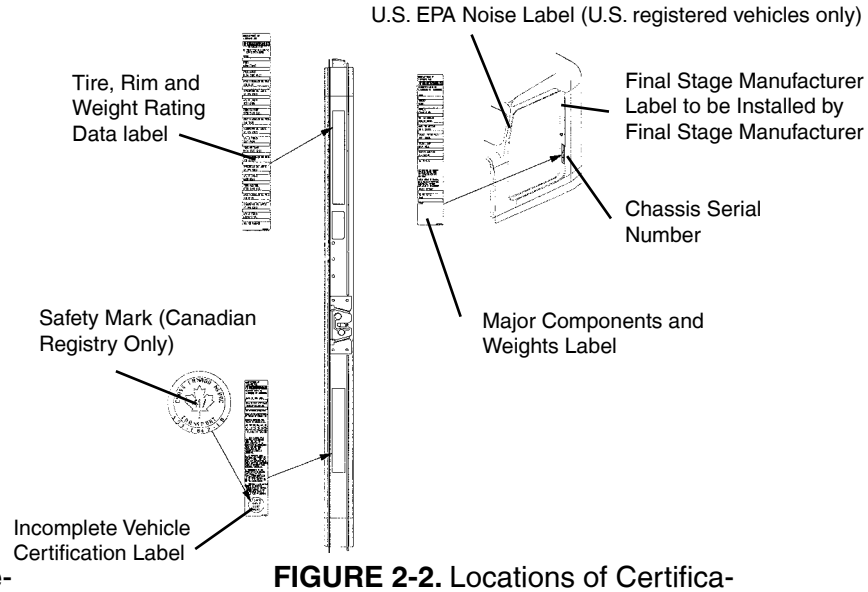

FIGURE 2-2. Locations of Certification Labels - Driver's Door and Frame

As the Intermediate or Final Stage Manufacturer, you should retain the Incomplete Vehicle Document for your records. In addition, you should record and retain the manufacturer and serial number of the tires on the vehicle. Upon completion of the vehicle (installation of the body and any other modifications), you should affix your certification label to the vehicle as required by Federal law. This tag identifies you as the "Intermediate or Final Stage Manufacturer" and certifies that the vehicle complies with Federal Motor Vehicle Safety Standards. (See Figure 2–2.) Be advised that regulations affecting the intermediate and final stage manufacturer may change without notice. Ensure you are referencing the most updated copy of the regulation during the certification and documentation processes.

In part, if the final stage manufacturer can complete and certify the vehicle within the instruction in the incomplete vehicle document (IVD) the certification label would need a statement that reads, "This vehicle has been completed in accordance with the prior manufacturers, IVD where applicable. This vehicle conforms to all applicable Federal Motor Vehicle Safety Standards [and Bumper and Theft Prevention Standards if applicable] in effect in (month, year)."

However, if the vehicle can not be completed and certified with in the guidance provided in the IVD, the final stage manufacturer must ensure the vehicle conforms to all applicable Federal Motor Vehicle Safety Standards (FMVSS). The final stage manufactures certification label would need a statement that reads, "This vehicle conforms to all applicable Federal Motor Vehicle Safety Standards [and Bumper and Theft Prevention Standards if applicable] in effect in (month, year)."

https://truckmanualshub.com/

These statements are just part of the changes to the new certification regulation. Please refer to the Feb 15, 2005 final rule for all of the details related to this regulation. You can contact NTEA Technical Services Department at 1-800-441-NTEA for a copy of the final rule (DocID 101760).

For Canadian final stage manufacturers see:

http://www.gazette.gc.ca/archives/p2/2002/2002-02-13/html/sor-dors55-eng.html; and
http://www.tc.gc.ca/acts-regulations/regulations/crc-c1038/menu.htm for the regulations.

Or contact:

Transport Canada
Tower C, Place de Ville, 330 Sparks Street
Ottawa, Ontario K1A 0N5
(613) 990-2309
TTY: 1-888-675-6863

Noise and Emissions Requirements

NOTE

This truck may be equipped with specific emissions control components/systems* in order to meet applicable Federal and California noise and exhaust emissions requirements. Tampering with these emissions control components/systems* is against the rules that are established by the U.S Code of Federal Regulations, Environment Canada Regulations and California Air Resources Board (CARB). These emissions control components/systems* may only be replaced with original equipment parts.

Modifying (i.e. altering, substituting, relocating) any of the emissions control components/systems defined above will affect the noise and emissions performance/certification. If modifications are required, they must first be approved by the engine manufacturer. Unapproved modifications could negatively effect emissions performance/certification. There is no guarantee that proposed modifications will be approved.

Contact the engine manufacturer for any requirements and restrictions **prior** to any modifications.

- For Cummins Contact 1-800-DIESELS or your local Cummins distributor. Reference AEB 21.102.

It is possible to relocate the DEF tank, however the relocation requirements need to be followed. Any variance from the relocation requirements may cause the emissions control components/systems to operate improperly potentially resulting in engine de-rate. See page 4-3 for relocation requirements.

NOTE

Some 2010 engine emissions certified vehicles will be equipped with an On-Board Diagnostics (OBD) system. The OBD system is designed to detect malfunctions of any engine or vehicle component that may increase exhaust emissions or interfere with the proper performance of the OBD system itself.

The OBD system consists of computer program on one or more of the vehicle's Electronic Control Units (ECUs). This program uses information from the control system and from additional sensors to detect malfunctions. When a malfunction is detected, information is stored in the ECU(s) for diagnostic purposes. A Malfunction Indicator Light (MIL) is illuminated in the dash to alert the driver of the need for service of an emission-related component or system.

https://truckmanualshub.com/

To ensure compliance to emissions regulations, the final configuration of certain features of the completed vehicle must meet specific requirements. This section describes requirements relevant for only the most common or critical modifications done by body builders. For a complete description of acceptable modifications, see the application guidance available from the manufacturer of the engine installed in the chassis.

Fuel System

The following are highlights of some of the more common or critical aspects of this system.

The overall system restriction may not exceed the restriction limitations set forth by the engine manufacturer for both supply and return.

- Ensure that fuel lines are not pinched or can potentially be damaged when installed between body and frame
- Fuel lines must be routed and secured without dips or sags
- There must be easy access to filter(s) and fill cap
- The tank vent may not obstructed
- Added accessories (heaters, generators) cannot introduce air into system
- Fuel tank must be located so that the full level is not above cylinder head
- “Ultra Low Sulfur Fuel Only” labels must be present on the dash and fuel fill
- Modification of the pressure side secondary filter and plumbing is not allowed without engine manufacturer approval
- Body installation of fuel tank or routing of lines must not cause significant increase in fuel temperature
- Fuel hoses shall meet or exceed OEM supplied hose material construction specifications

Compressed Air System

The following are highlights of some of the more common or critical aspects of this system.

- Air system modification must meet applicable FMVSS regulations
- Compressed Air tank may not be modified (exception – addition or removal of fittings or relocation of the tank)
- Added devices or bodywork may not interfere with or rub air lines
- Air supply to the engine doser may not be restricted or disconnected
- Air lines should be routed, protected from heat, and properly secured to prevent damage from other components
- Care should be taken so that air lines do not rub against other components
- Care should be taken to protect the air system from heat sources.

Exhaust and Exhaust After-treatment System

The following are highlights of some of the more common or critical aspects of this system.

- The following after-treatment and exhaust system components may not be modified:
    - DPF assembly
    - SCR Catalyst assembly
    - Exhaust pipes between the engine and after-treatment devices (DPF, SCR Catalyst) and between after-treatment devices

https://truckmanualshub.com/

  - NO_x Sensor
- The following modifications may only be done within the guidelines of the “DEF System Relocation Guide.”
  - Modifications to Diesel Exhaust Fluid (DEF) throttle, suction, or pressure lines
  - Modification or relocation of the DEF tank
  - Modification of coolant lines to and from the DEF tank
- All DEF and coolant lines should be routed, protected, and properly secured to prevent damage during vehicle operation or other components
- If relocation of the DCU or ACM is necessary, use existing frame brackets and mount inside of frame flanges where necessary. Do not extend the harnesses
- The DPF, the SCR catalyst, or their mounting may not be modified
- The NO_x sensor may not been relocated or altered in any way
- Exhaust pipes used for tailpipes/stacks must be properly sized, and must prevent water from entering
- Ensure adequate clearance between the exhaust and body panels, hoses, and wire harnesses
- The body in the vicinity of the DPF must be able to withstand temperatures up to 400°C (750°F)
- Do not add thermal insulation to the external surface of the DPF
- The SCR water drain hole may not be blocked
- Allow adequate clearance (25mm (1 inch)) for servicing the DPF sensors, wiring, and clamped joints
- Drainage may not come in contact with the DPF, SCR catalyst, sensors or wiring
- Allow sufficient clearance for removing sensors from DPF. Thermistors require four inches. Other sensors require one inch
- Wiring should be routed, protected from heat, and properly secured to prevent damage from other components
- The exhaust system from an auxiliary power unit (APU) must not be connected to any part of the vehicle after-treatment system or vehicle tail pipe.

Cooling System

The following are highlights of some of the more common or critical aspects of this system.

- Modifications to the design or locations of fill or vent lines, heater or defroster core, and surge tank are not recommended
- With the exception of post-thermostat installation, additional accessories plumbed into the engine cooling system are not permitted, at the risk of voiding vehicle warranty
- Coolant level sensor tampering will void warranty
- When installing auxiliary equipment in front of the vehicle, or additional heat exchangers, ensure that adequate air flow is available to the vehicle cooling system. Refer to engine manufacturer application guidelines for further detail
- When installing FEPTO drivelines, the lower radiator anti-recirculation seal must be retained with FEPTO driveline clearance modification only
- Changes made to cooling fan circuit and controls are not allowed, with the exception of AC minimum fan on time parameter

https://truckmanualshub.com/

- See owner's manual for appropriate winter front usage

Electrical System

The following are highlights of some of the more common or critical aspects of this system.

- Electrical harnesses providing battery power and electronic control signals to engine and emissions control/ vehicle OBD components including datalinks may not be spliced. These emissions control/vehicle OBD components include the following:
  - throttle pedal
  - vehicle speed sensor
  - after-treatment wiring
- If the alternator or battery is substituted, it must meet the requirements of the engine manufacture's guidelines. This includes alternator ground voltage drop and alternator ground cable effectiveness. See the engine manufacture's guidelines for recommended test procedure. Additionally the maximum voltage differential and the peak-peak voltage differential between the engine ECM block ground stud and battery negative terminal may not exceed 500 mV under any combination of loads or operating conditions.
- Installation of aftermarket transfer-cases must address the vehicle speed sensor position. The standard position of the speed sensor is at the transmission tail shaft. When a transfer-case is added it is best to relocate the sensor to the axle side output shaft of the transfer-case. This is typically accomplished by adding a tone wheel into the driveline yoke assembly.
- Wiring extensions for the after-treatment wiring are available for relocating the DEF tank from your dealer via Paccar Parts. For relocation of DEF tank, refer to the after-treatment section of this manual.
- The emission system requires an accurate Outside Air Temperature (OAT) reading in order to properly run its control algorithms. The OAT sensor is located in the driver's side mirror assembly on Kenworth trucks and is shown in the figures below. If the body builder needs to modify the mirror assembly in any way, it is important the OAT sensor stay positioned on the mirror assembly. Running the vehicle without the OAT sensor connected will cause the MIL lamp to illuminate. If needed, a replacement sensor can be ordered from your Kenworth dealer.

FIGURE 2-3: West Coast Mirror OAT sensor, located in overmold on mirror harness.

https://truckmanualshub.com/

FIGURE 2-4: Aerodynamic Mirror OAT Sensor Location

- Coolant Sensor considerations are given in the Cooling section above
- The OBD/Diagnostic connector port is located below the dash to the left of the steering wheel. This connector and its location may not be changed.
- Vehicles using EPA 2010 compliant engines must be equipped with a Malfunction Indicator Lamp (MIL) lamp. This lamp is required to be an engine outline symbol as defined by ISO (International Standards Organization). The figure below shows the instrument cluster and MIL lamp position. Note this lamp location is fixed with respect to the controls and its location may not be changed if you are updating the warning lamp cards.

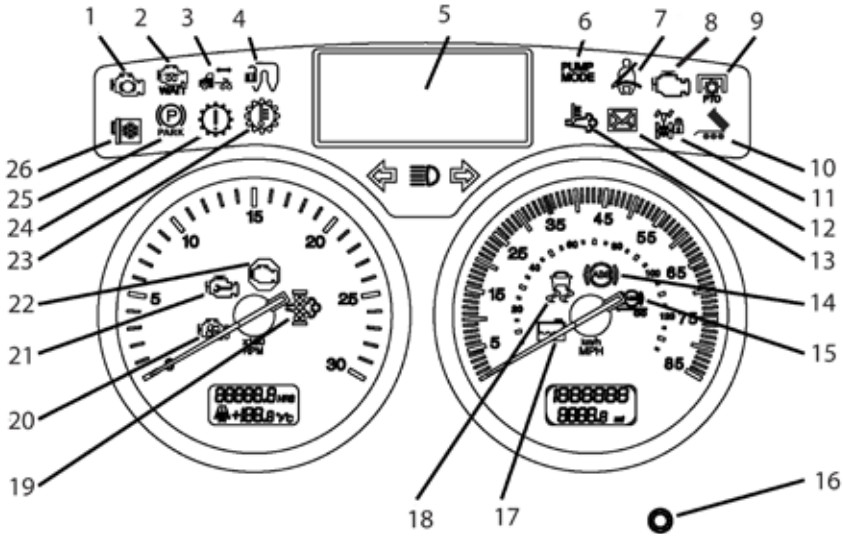

FIGURE 2-5: Instrument Cluster for T4/T6/T8/W9/C5 used with EPA2010 Emission compliant engines. The Check Engine lamp is symbol 21 and the MIL is symbol 8.

- In addition to the sensors and lamps above, the emission system also depends on signals from the exhaust DPF (Diesel Particulate Filter), SCR (Selective Catalytic Reduction), and NOx sensor. Wiring between these devices, the Dosing Control Unit (DCU) and engine ECM should not be tampered with or altered in any way.

https://truckmanualshub.com/

Air Intake System

The following are highlights of some of the more common or critical aspects of this system.

- The air intake screen may not be blocked, either fully or partially
- Modification to the air intake system may not restrict airflow. For example, pipe diameter may not be reduced
- All sensors must be retained in existing locations
- To retain system seal, proper clamp torque must be used. Refer to service manual for proper clamp torque

Charge Air Cooler System

The following are highlights of some of the more common or critical aspects of this system.

- The Charge Air Cooler may not be modified
- The installation of engine overspeed shutdown devices must not introduce restriction in the intake system
- All plumbing associated with the charge air cooler may not be modified

https://truckmanualshub.com/

DIMENSIONS

This section has been designed to provide enough information to successfully layout chassis in the body planning process. Optional equipment may not be depicted. Please contact your local Kenworth dealer if more dimensional information is desired.

ABBREVIATIONS

Throughout this section, and in other sections as well, abbreviations are used to describe certain characteristics on your vehicle. The chart below lists the abbreviated terms used.

TABLE 3-1. Abbreviations Used

CA	BACK OF CAB TO CENTERLINE OF REAR AXLE OR CENTERLINE OF TANDEMS ON TANDEM SUSPENSION
EOF	FRAME RAIL OVERHANG BEHIND REAR AXLE – MEASURED FROM THE CENTERLINE OF TANDEMS
FS	FRONT SUSPENSION HEIGHT
RS	REAR SUSPENSION HEIGHT
WB	WHEELBASE
SOC	SIDE OF CAB
BOC	BACK OF CAB

TURNING RADIUS

Approximate turning radius specifications are listed in the following tables as a general guide. It is important to note that optional components may alter the results.

TABLE 3-2. Turning Radius

Model	Steering Gear	Front Axle	Front Wheel	Front Tire	Rear Suspension	Wheel Base (in.)	Est Curb to Curb Turning Radius (ft)
T800 T800W T800SH	Single TAS 65	Dana Spicer E-1202I 12K	Accuride 28487 22.5 X 8.25	Bridgestone R287 295/75R22.5	Tandem 52” Axle Spacing	181	28
						193	29.5
						201	30.5
						213	32
						220	33
						232	34.5
						240	35.5
						252	37
						260	38
						272	39.5
						280	40.5
						291	42
						303	43.5
						323	46
						331	47

TABLE 3-2 CONTINUES ON NEXT PAGE…

https://truckmanualshub.com/

TABLE 3-2 CONTINUED

Model	Steering Gear	Front Axle	Front Wheel	Front Tire	Rear Suspension	Wheel Base (in.)	Est Curb to Curb Turning Radius (ft)
T800 T800W T800SH	Dual TAS 65	Dana Spicer D2000 20K Standard Track	Alcoa 82365 22.5 X 12.25	Bridgestone M844 425/65R22.5	Tandem 52” Axle Spacing	181	31.5
						193	33.5
						201	34.5
						213	36.5
						220	37.5
						232	39
						240	40
						252	42
						260	43
						272	45
						280	46
						291	47.5
						303	49.5
						323	52.5
						331	53.5
W900S	Dual TAS 65	Dana Spicer D2000 20K Standard Track	Alcoa 82365 22.5 X 12.25	Bridgestone M844 425/65R22.5	Tandem 52” Axle Spacing	181	33
						193	35
						201	36
						213	38
						220	39
						232	41
						240	42
						252	44
						260	45
						272	47
						280	48.5
						291	50
						303	52
						323	55
						331	56
W900B	Dual TAS 65	Dana Spicer D2000 20K Standard Track	Alcoa 82365 22.5 X 12.25	Bridgestone M844 425/65R22.5	Tandem 52” Axle Spacing	181	37
						193	39
						201	40.5
						213	42.5
						220	44
						232	46
						240	47.5
						252	49.5
						260	51
						272	53
						280	54.5
						291	56.5
						303	58.5
						323	62
						331	63

TABLE 3-2 CONTINUES ON NEXT PAGE…

https://truckmanualshub.com/

TABLE 3-2 CONTINUED

Model	Steering Gear	Front Axle	Front Wheel	Front Tire	Rear Suspension	Wheel Base (in.)	Est Curb to Curb Turning Radius (ft)
T800 T800W T800SH	Dual TAS 65	Dana Spicer D2000 20K Standard Track	Alcoa 82364 22.5 X 12.25	Bridgestone M844 425/65R22.5	Tandem 52” Axle Spacing	181	33
						193	35
						201	36
						213	38
						220	39
						232	41
						240	42
						252	44
						260	45
						272	47
						280	48
						291	50
						303	52
						323	55
						331	56
W900S	Dual TAS 65	Dana Spicer D2000 20K Standard Track	Alcoa 82364 22.5 X 12.25	Bridgestone M844 425/65R22.5	Tandem 52” Axle Spacing	181	45
						193	49
						201	50
						213	52
						220	54
						232	56
						240	58
						252	61
						260	62
						272	65
						280	67
						291	69
						303	72
						323	76
						331	78
W900B	Dual TAS 65	Dana Spicer D2000 20K Standard Track	Alcoa 82364 22.5 X 12.25	Bridgestone M844 425/65R22.5	Tandem 52” Axle Spacing	181	45
						193	48
						201	50
						213	52
						220	54
						232	56
						240	58
						252	60
						260	62
						272	65
						280	67
						291	69
						303	72
						323	76
						331	78

https://truckmanualshub.com/

Prospector Turn Circle Analysis:

Please see Figure 3-2 as an example of Kenworth's turn circle calculation made in Prospector for your specific chassis. Your local Kenworth dealer can provide this information to you.

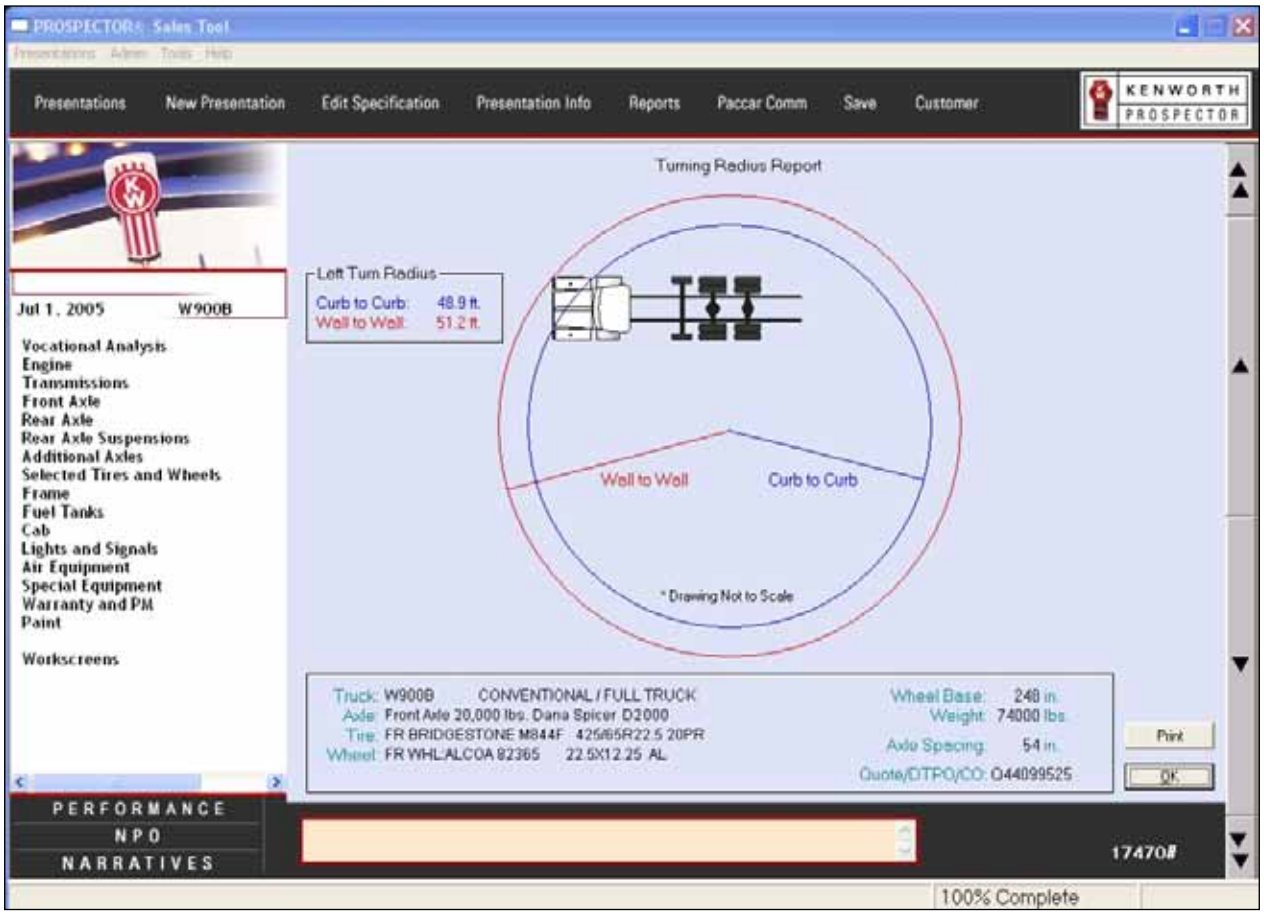

FIGURE 3-1. Prospecter Turn Circle Analysis

Please consult your local Kenworth Dealer for this information, as it is chassis specific.

https://truckmanualshub.com/

OVERALL DIMENSIONS

This section includes drawings and charts of the following Class 8 models: T800, T800 with Split Fenders, T800 Short Hood, T800 with FEPTO, T800 Wide Hood, W900S, W900B, C500 and W900L. The Extended Day Cab and 38” AeroCab are also included.

On the pages that follow, detail drawings show particular views of each vehicle, all dimensions are in inches (in). They illustrate important measurements critical to designing bodies of all types. See the “Contents” at the beginning of the manual to locate the drawing that you need.

Note: To determine overall height please locate the chart Table 3-3 on page 3-16 and add that value to the height. All heights are given from the bottom of the frame rail.

Kenworth also offers .dxf files and frame layouts of ordered chassis four weeks prior to build. Please speak with your salesman to request this feature when specifying your chassis.

T800

The following drawings are of a standard T800, shown with standard chassis components.

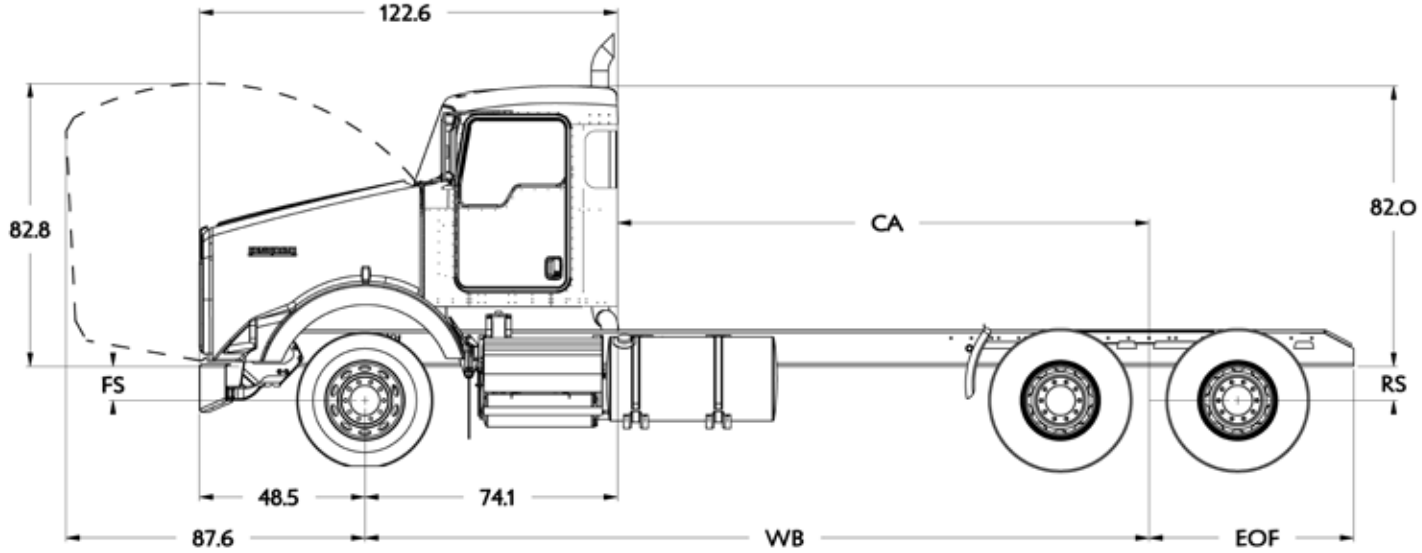

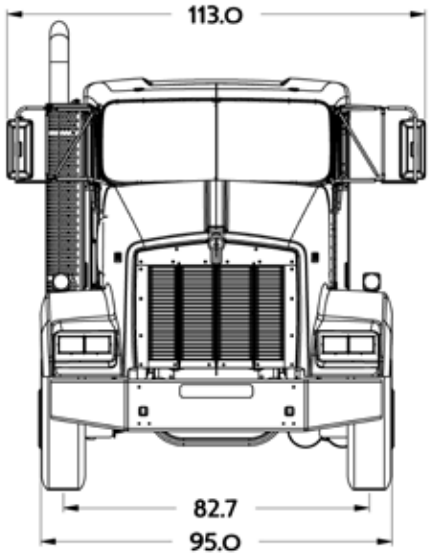

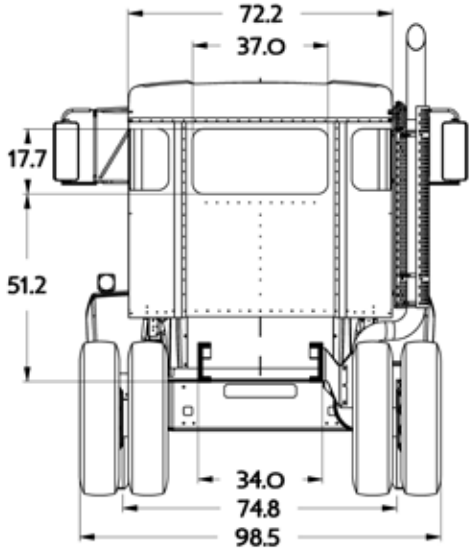

https://truckmanualshub.com/

T800 WITH SPLIT FENDERS

The following drawings are of a standard T800 with the optional of the Split Fender hood, shown with standard chassis components.

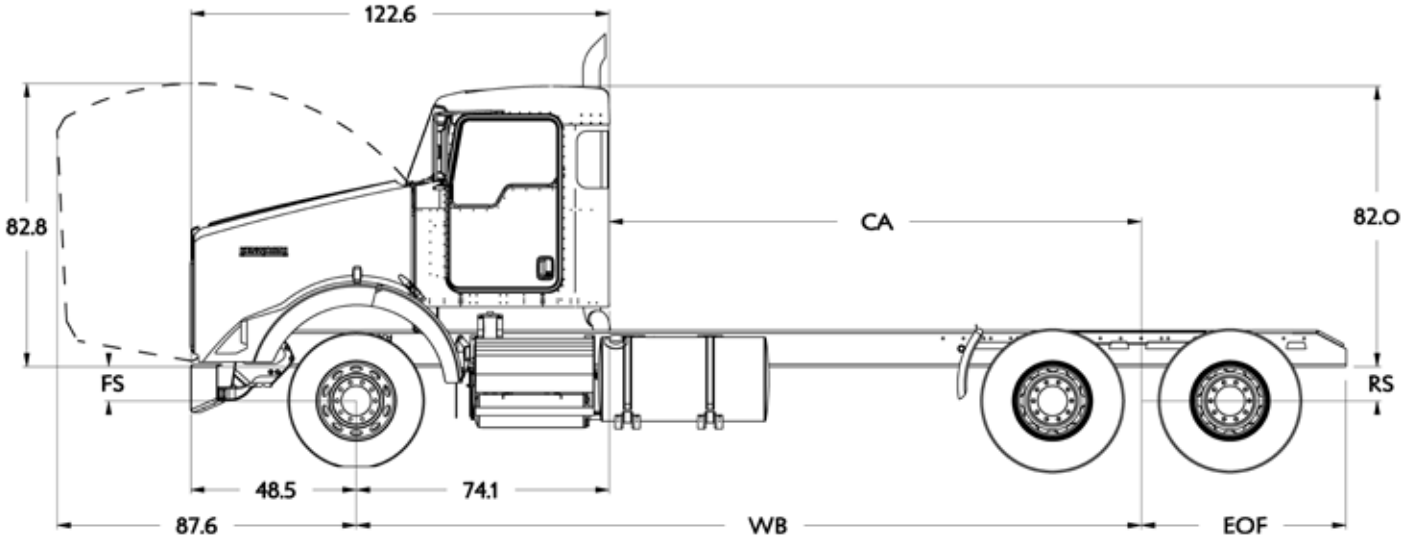

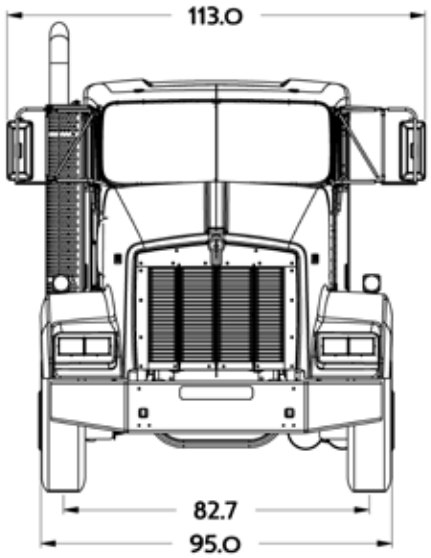

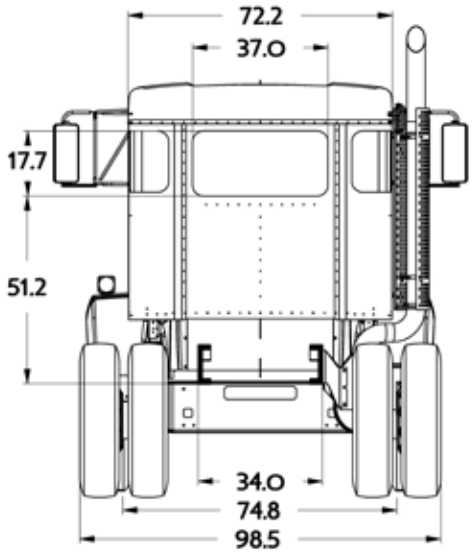

https://truckmanualshub.com/

T800 SHORT HOOD

The following drawings are of a T800 Short Hood, shown with standard chassis components.

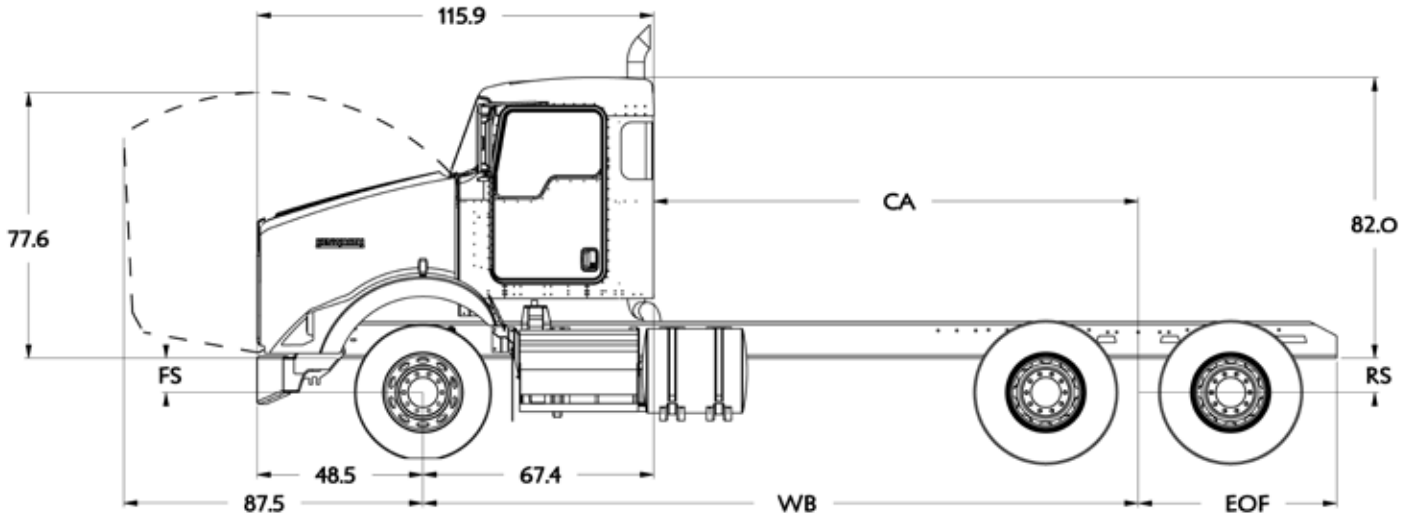

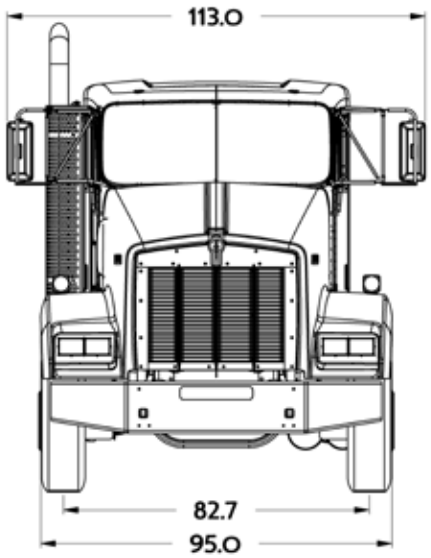

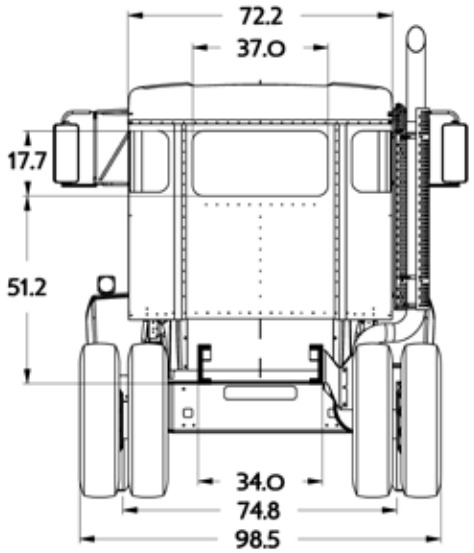

https://truckmanualshub.com/

T800 WITH FEPTO (FRONT ENGINE POWER TAKE OFF)

The following drawings are of a T800 with the optional FEPTO package. Note the extended frame rails.

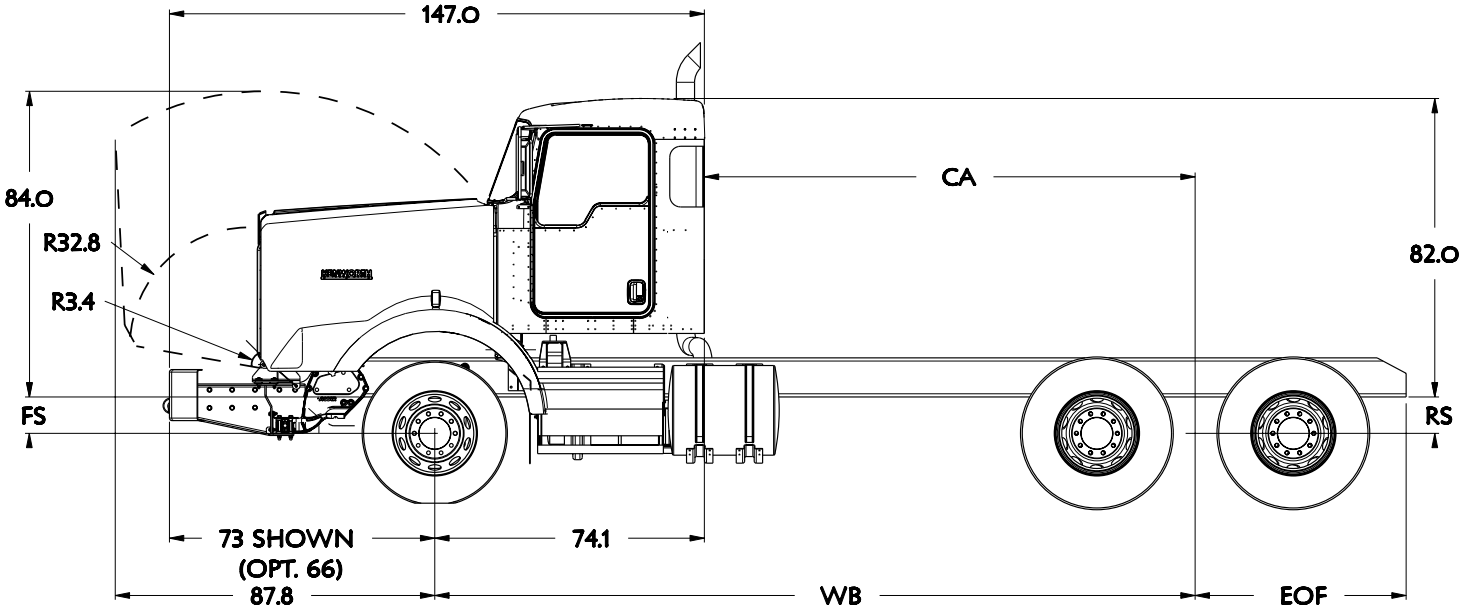

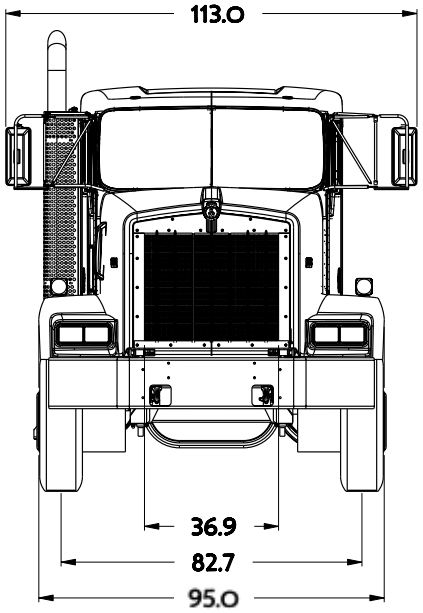

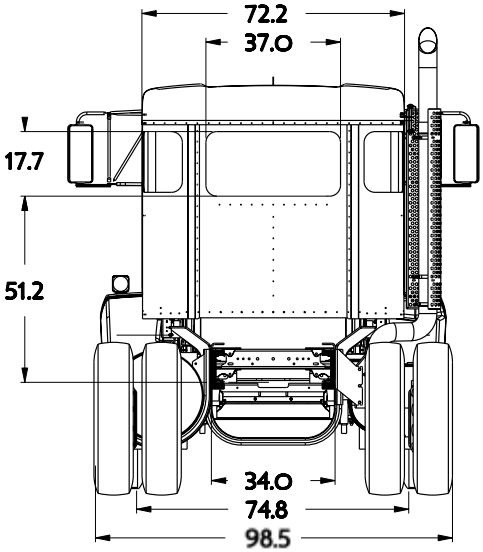

https://truckmanualshub.com/

T800 WIDE HOOD

The following drawings are of a T800 Wide Hood, which allows for the 1780 square inch radiator.

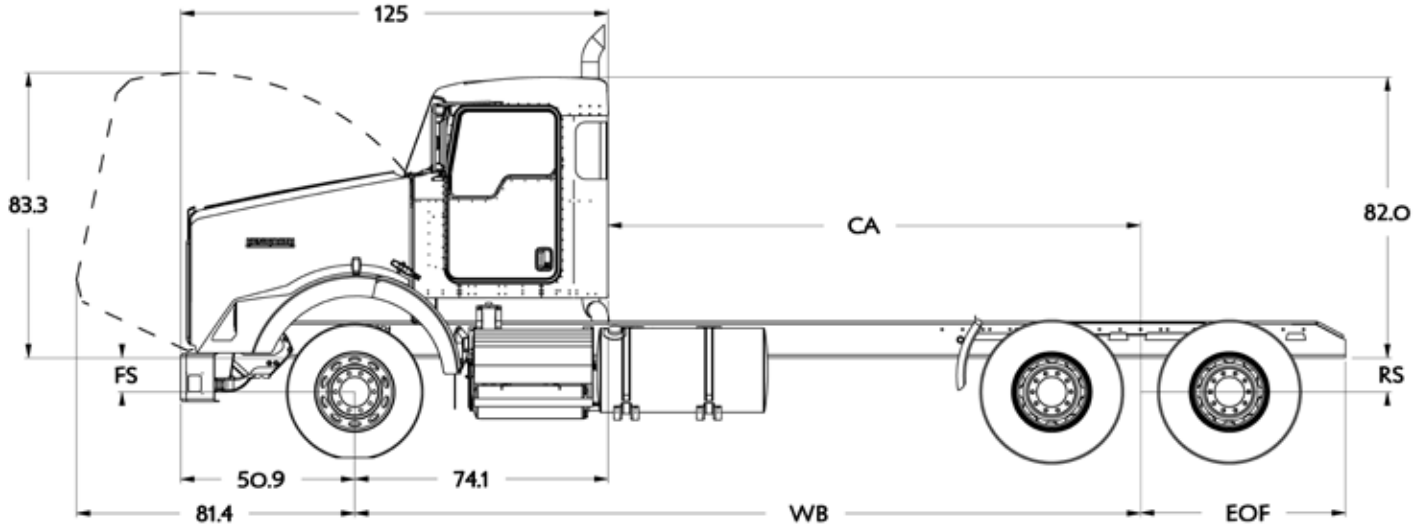

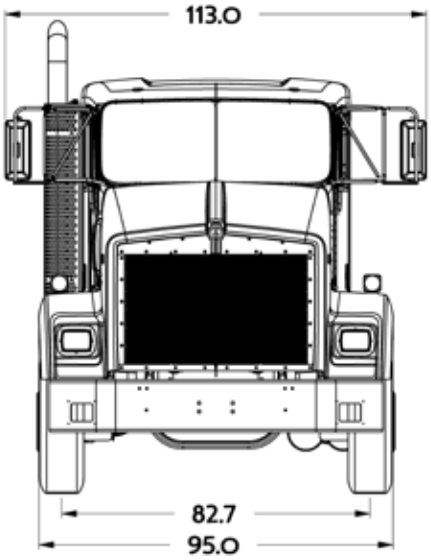

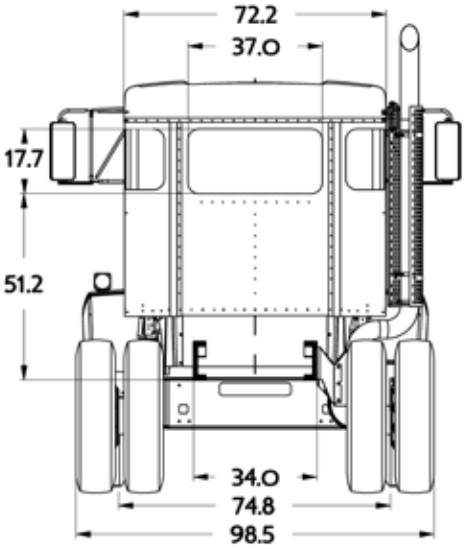

https://truckmanualshub.com/

W900S

The following drawings are of the W900 Sloped Hood chassis, shown with some optional components.

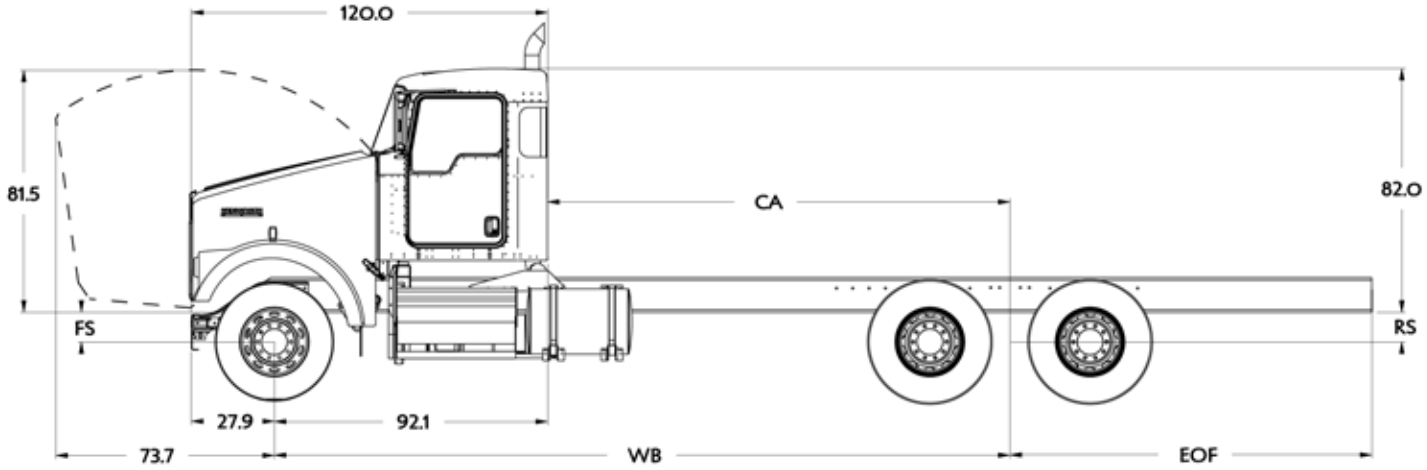

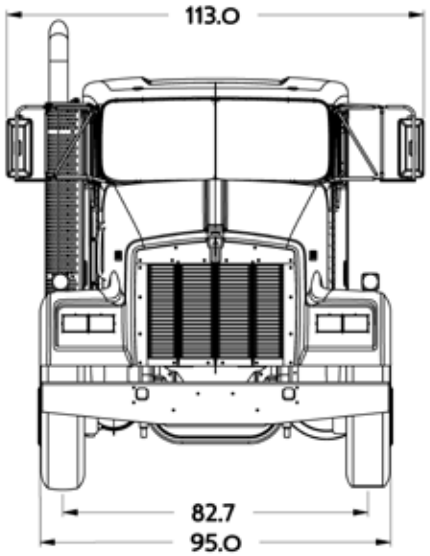

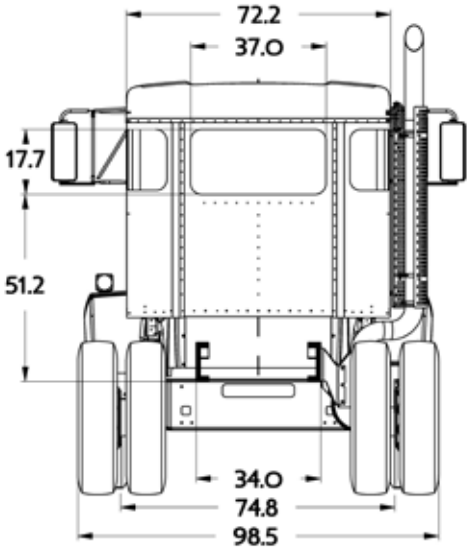

https://truckmanualshub.com/

W900B

The following drawings are of the W900B Straight Hood chassis, shown with standard chassis components.

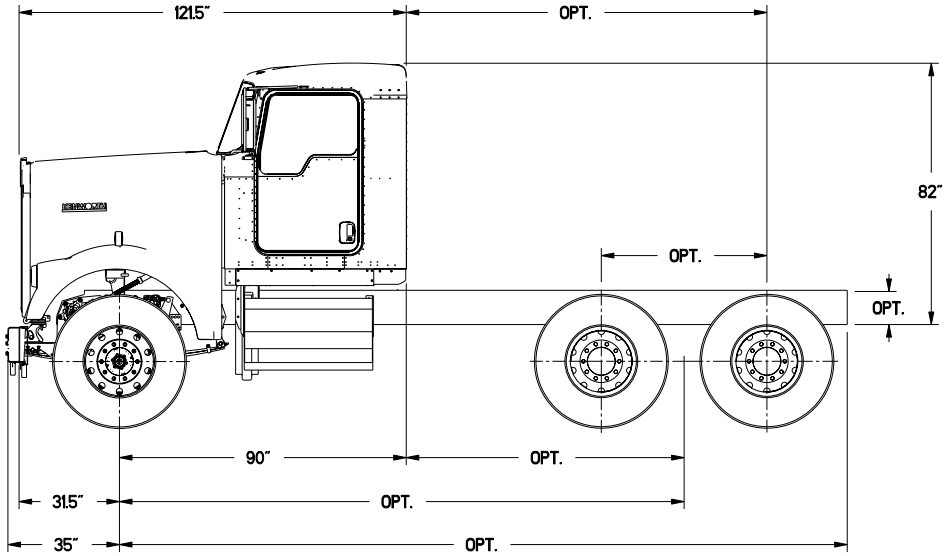

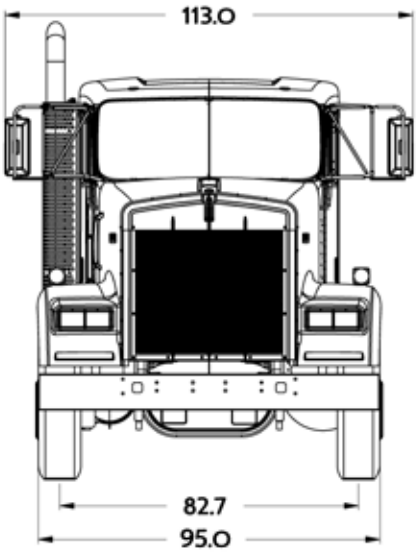

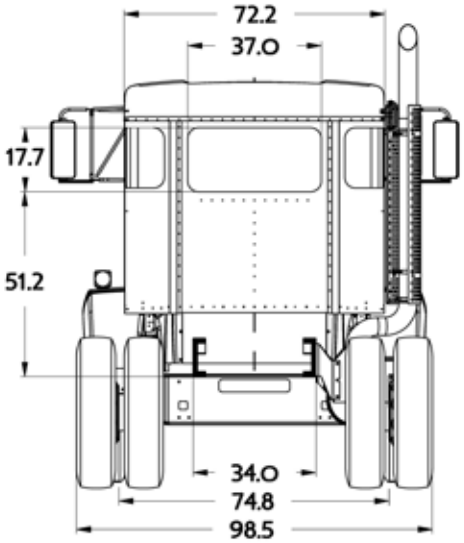

https://truckmanualshub.com/

W900L

The following drawings are of the W900L, shown with standard chassis components.

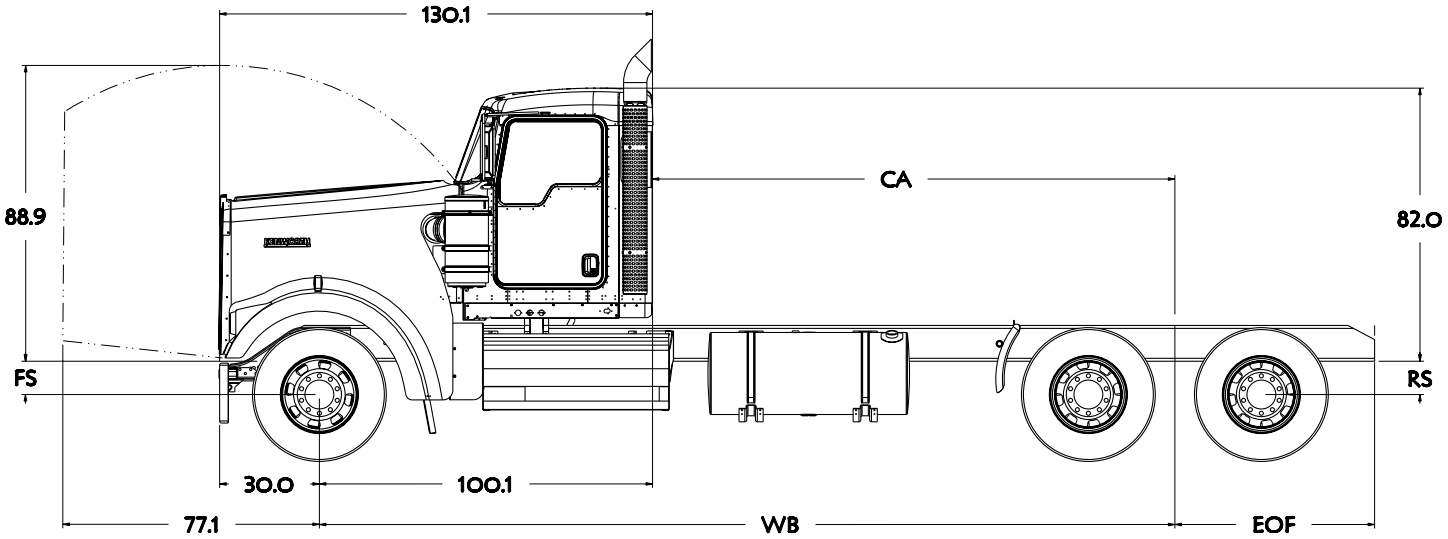

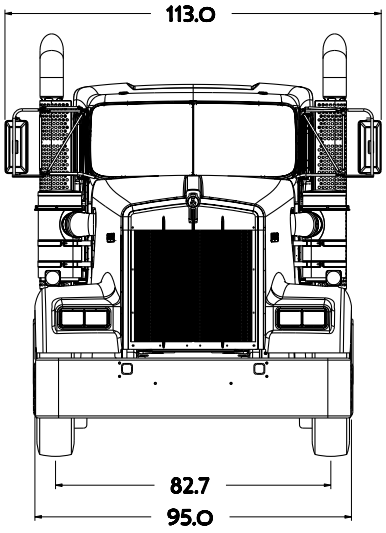

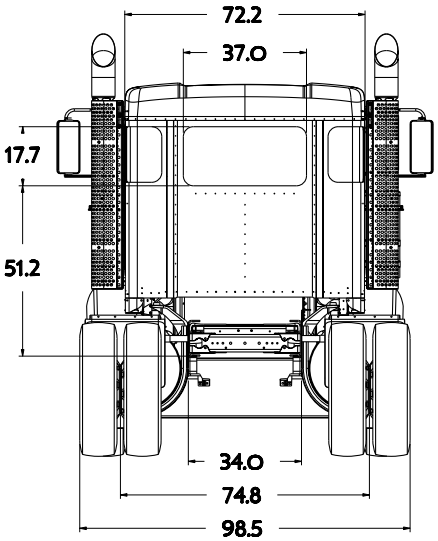

https://truckmanualshub.com/

C500

The following drawings are of the C500, shown with standard chassis components. Shown with optional wheels and tires.

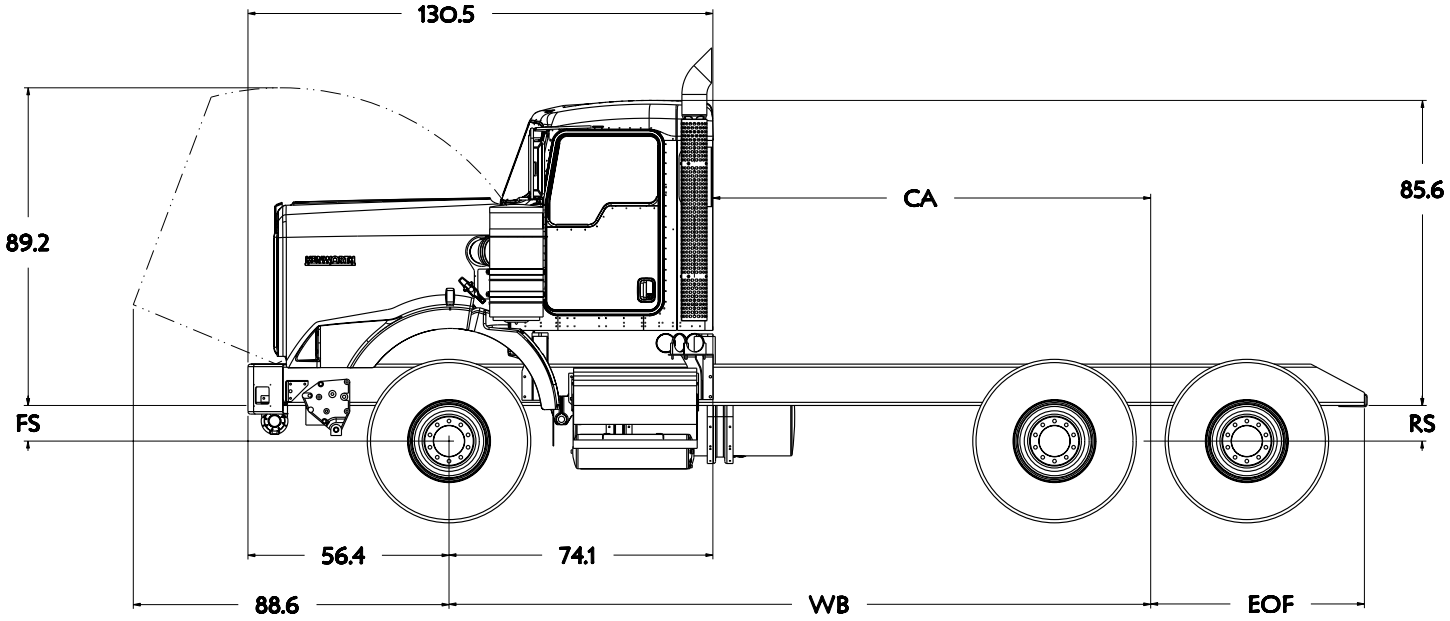

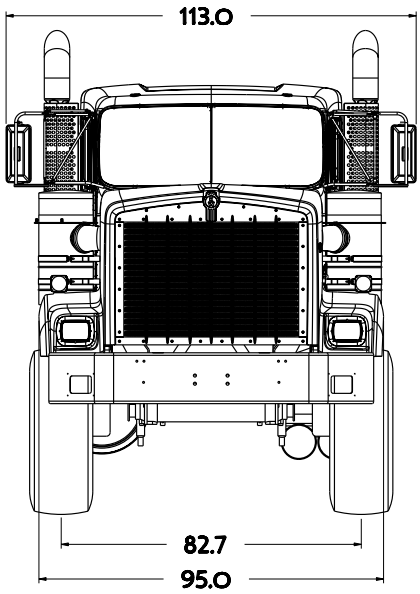

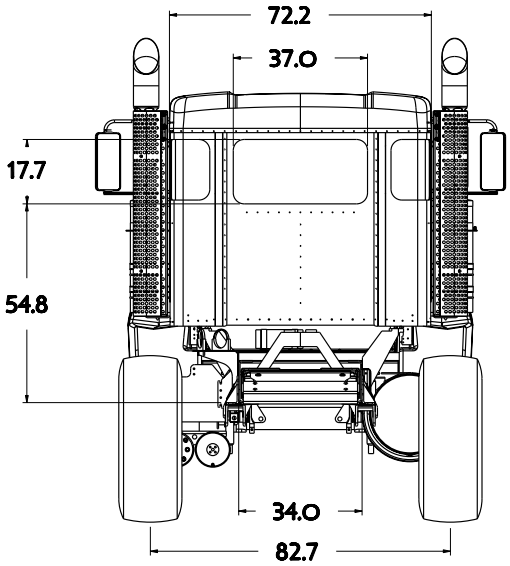

https://truckmanualshub.com/

EXTENDED DAY CAB

The Extended Day Cab is shown on a standard T800 chassis. It is important to note that the Extended Day will increase any of the models bumper to back of cab dimension and front axle to back of cab dimension by 5.7”. The height (from the bottom of the frame rail) will be 86.9” across the models.

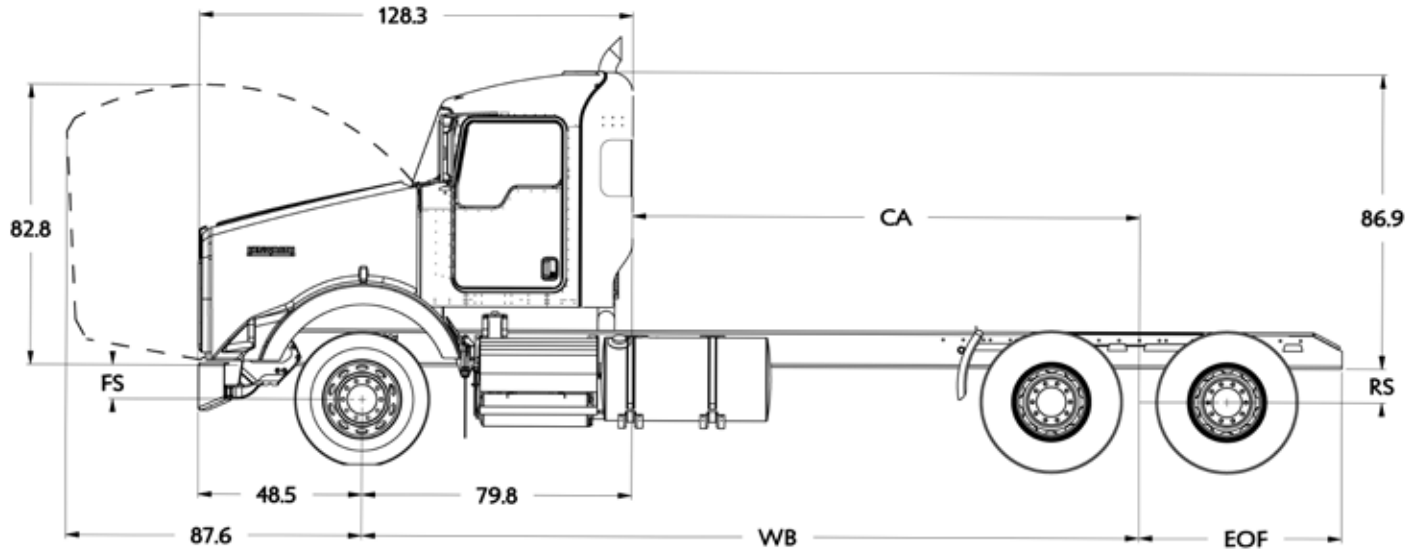

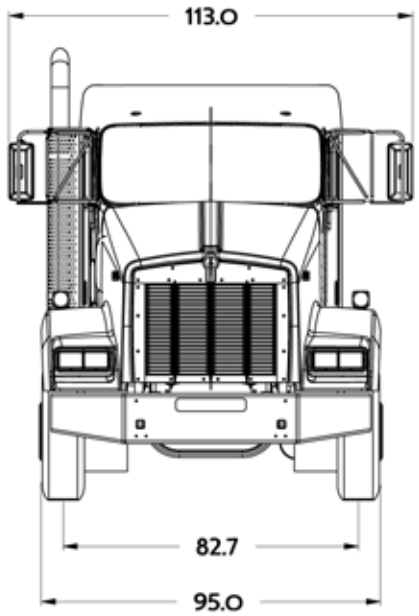

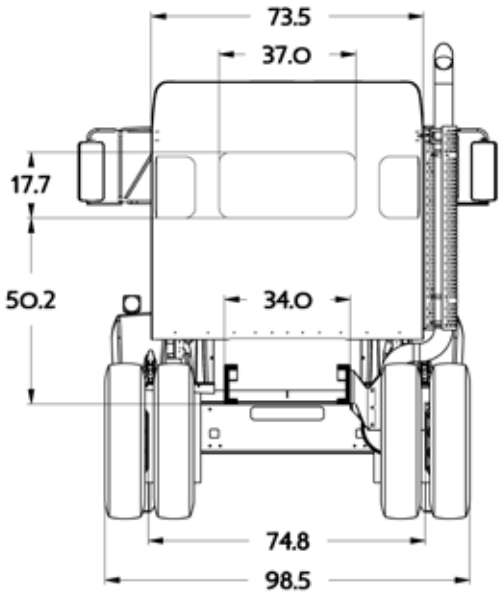

https://truckmanualshub.com/

38” AEROCAB

The 38” Aerocab is shown on a standard T800 chassis. It is important to note that the 38” will increase any of the models bumper to back of cab dimension and front axle to back of cab dimension by 28”. The height (from the bottom of the frame rail) will be 93.2” across the models.

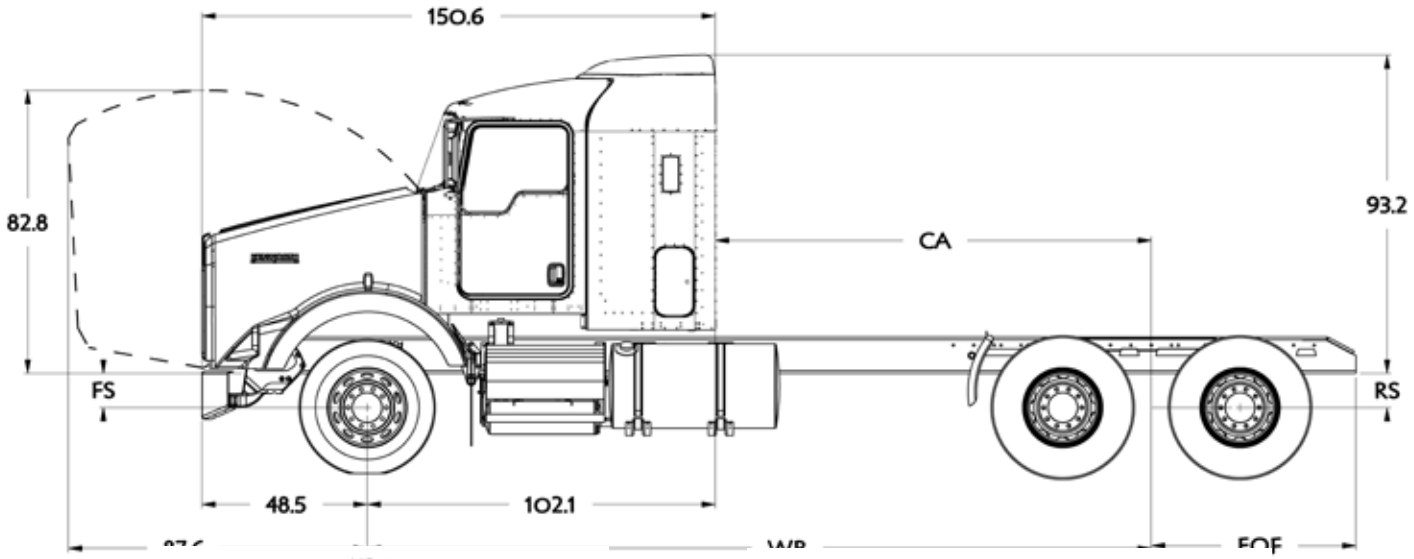

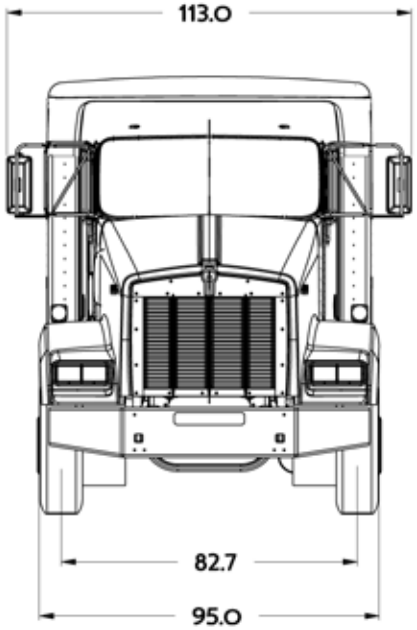

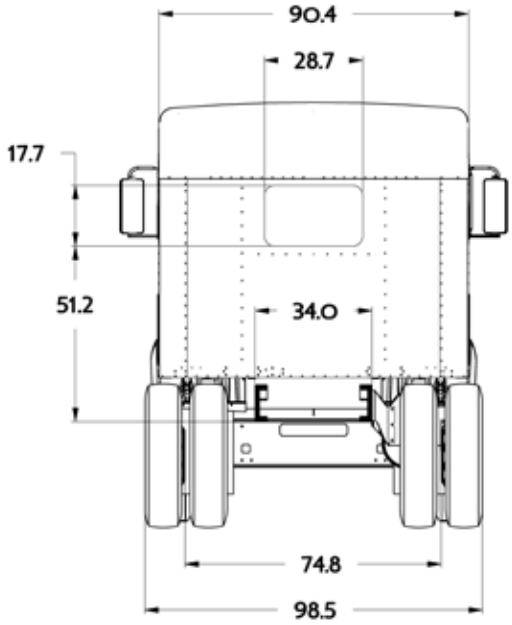

https://truckmanualshub.com/

RIDE HEIGHTS

The front (FS) and rear (RS) suspension ride heights are provided as a basic tool to determine the overall height of the cab, height of exhaust components, and frame heights. The heights are all calculated from the centerlines of the axles, please be sure to include the tire radius dimension to determine overall height. Note: the frame rail height itself will not affect the overall height as all components are located from the bottom of the frame rail.

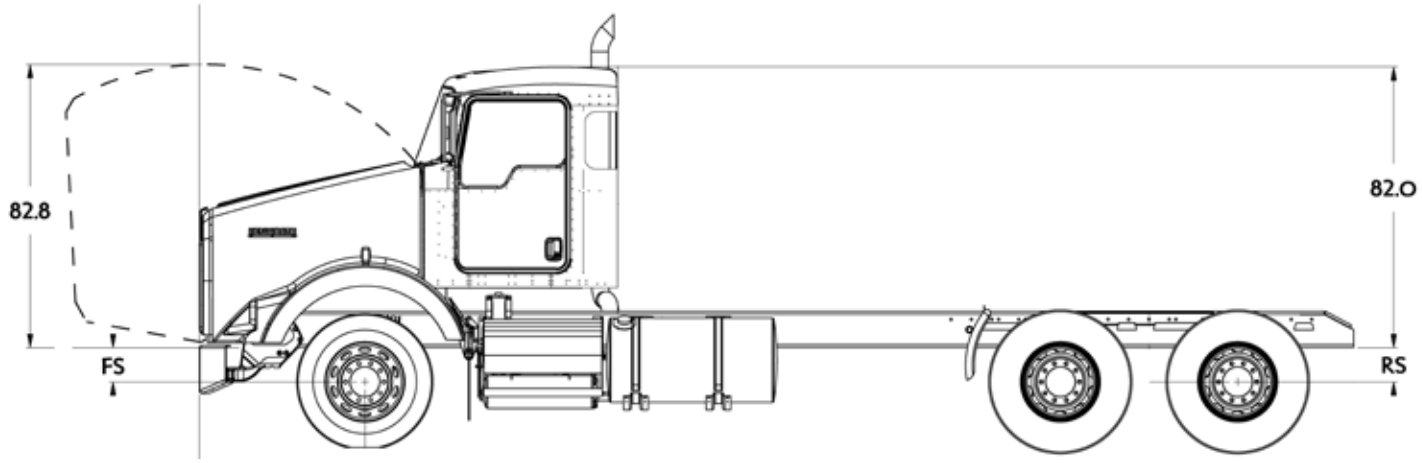

TABLE 3-3. Ride Heights. To calculate the frame height use the following formulas:

Front Frame Height = FS + 1/2 Front Tire Diameter
Rear Frame Height = RS + 1/2 Rear Tire Diameter

Front Suspension (T800/T800SHW900B)

Front Suspension (FS)	Laden:	Unladen:
12K Taperleaf	10.3”	11.5”
13.2K Taperleaf	10.3”	11.5”
14.6K Taperleaf	10.3”	11.7”
16K Taperleaf	10.6”	12.3”
20K Taperleaf	10.4”	11.9”
22K Multi-stage Taperleaf	10.7”	12.7”

https://truckmanualshub.com/

Front Suspension (W900L)

Front Suspension (FS)	Laden:	Unladen:
12K Taperleaf	11.5”	12.4”
13.2K Taperleaf	11.1”	12.4”
14.6K Taperleaf	10.3”	11.7”
16K Taperleaf	10.3”	13.9”
18K Taperleaf	10.7”	13,6”

Rear Suspension (All Models). Common Rear Suspensions are shown here, for detailed suspensions please use the Rear suspension layouts on pages 3-18 to 3-33.

Rear Suspension	Laden:	Unladen:
Kenworth AG400L	8.5”	8.5”
Kenworth AG400	9”	9”
Kenworth AG460	10.5”	10.5”
Kenworth AG690 Tridem	10.5”	10.5”
Reyco 79KB 23K Rating	8.3”	10.8”
Reyco 102 38K Rating	9.2”	10.8”
Chalmers 854-40-L-HS 40K Rating	9.6”	11”
Chalmers 854-46-H 46K Rating	10.1”	12.4”
Chalmers 854-50-H-HS 50K Rating	10.8”	12.5”
Chalmers 865-65-XL 65K Rating	13”	15.7”
Hend HMX400 16.5” Saddle	9.5”	10.6”
Hend HMX400 17.5” Saddle	10.5”	11.6”
Hend HMX460 46K 16.5” Saddle	9.5”	10.6”
Hend HMX460 46K 17.5” Saddle	10.5”	11.6”
Hendrickson Primaax 46K Rating	10”	10”
Hendrickson RT463 46K Rating	10”	11.1”
Hend RT523 52K 6” Saddle	9.9”	11”
Neway AD246 46K Rating	10”	10”
Neway AD369 69K Rating	10”	10”
Neway AD369 Tridem	10”	10”

https://truckmanualshub.com/

REAR SUSPENSION LAYOUTS

The rear suspension layouts are provided as a tool to help layout bodies prior to arrival. The applicable dimensions are shown. Be sure to check the axle spacing that is shown, as alternate spacings may exist and could change some of the dimensions. The dimensions shown below are the most typical installations, in special cases some hole locations will move. If you are planning on using the holes shown for your body installation, please confirm with your local KW dealer that the drawing below will be the installation used on your specific truck. Ensure that proper torque is used to reinstall any suspension components. See Tables 7-1 and 7-2 on page 7-7.

It would be a good idea in this case to order the frame layout of your chassis along with your truck order. This can be done on any Kenworth truck, and will be provided 4 weeks ahead of the build schedule.

If there are hole locations that are not detailed please work with your local Kenworth Dealer to request that information.

Additionally optional axle spacings are shown in the charts, if you would like details on the frame drilling with optional spacings, please contact your local Kenworth dealer.

NOTE: Actual axle spacing can depart from nominal due to axle slant requirements. Final axle spacing can vary by more than an inch from nominal in some cases. If precise axle spacing is critical due to body installation or state/local regulatory requirements please contact Kenworth Applications/technical Support for assistance.

https://truckmanualshub.com/

AG400L TANDEM

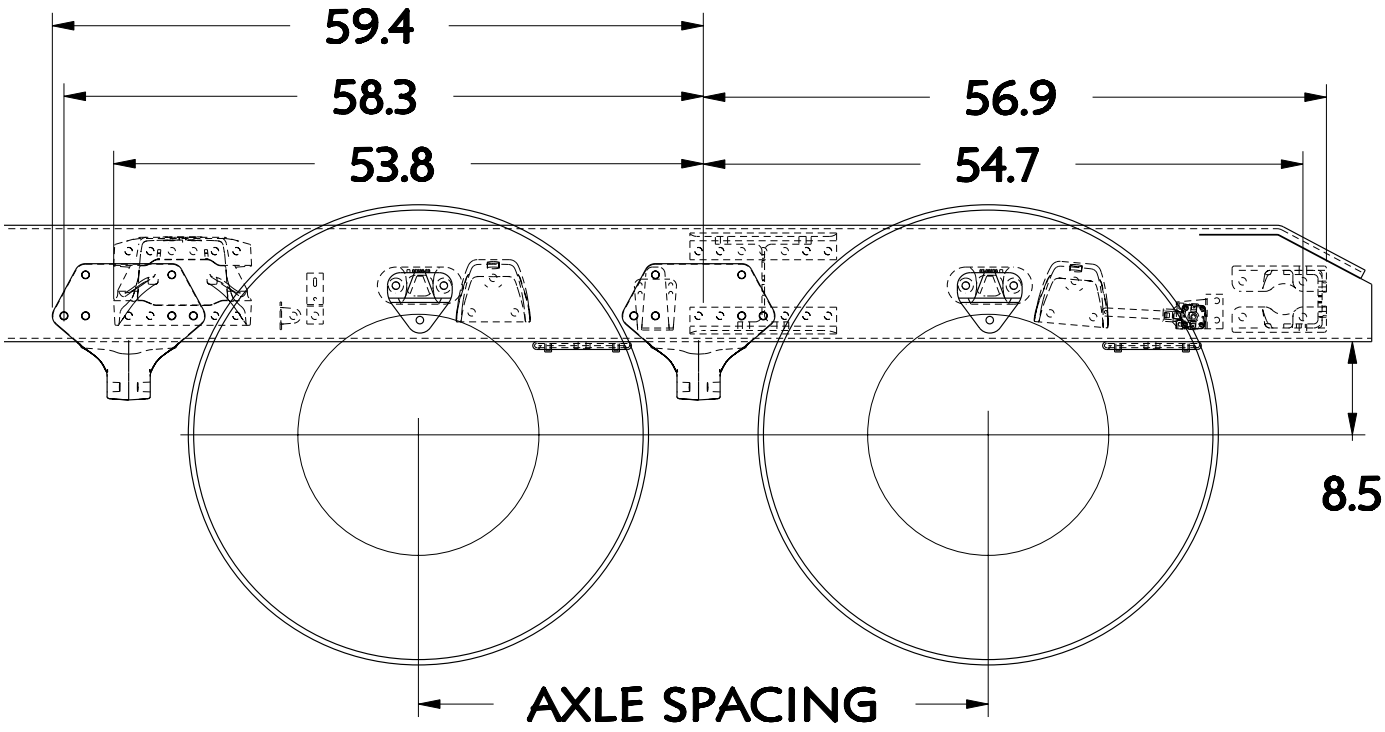

AG400L Suspensions

TABLE 3-4. Rear Suspension Options

Suspension Type	Rating	Axle Spacing	Laden Ride Height	Unladen Ride Height
AG400L Tandem	40K	52"	8.5"	8.5"
AG400L Tandem	40K	54"	8.5"	8.5"

NOTE: Actual axle spacing can depart from nominal due to axle slant requirements. Final axle spacing can vary by more than an inch from nominal in some cases. If precise axle spacing is critical due to body installation or state/local regulatory requirements please contact Kenworth Applications/technical Support for assistance.

https://truckmanualshub.com/

AG400 TANDEM

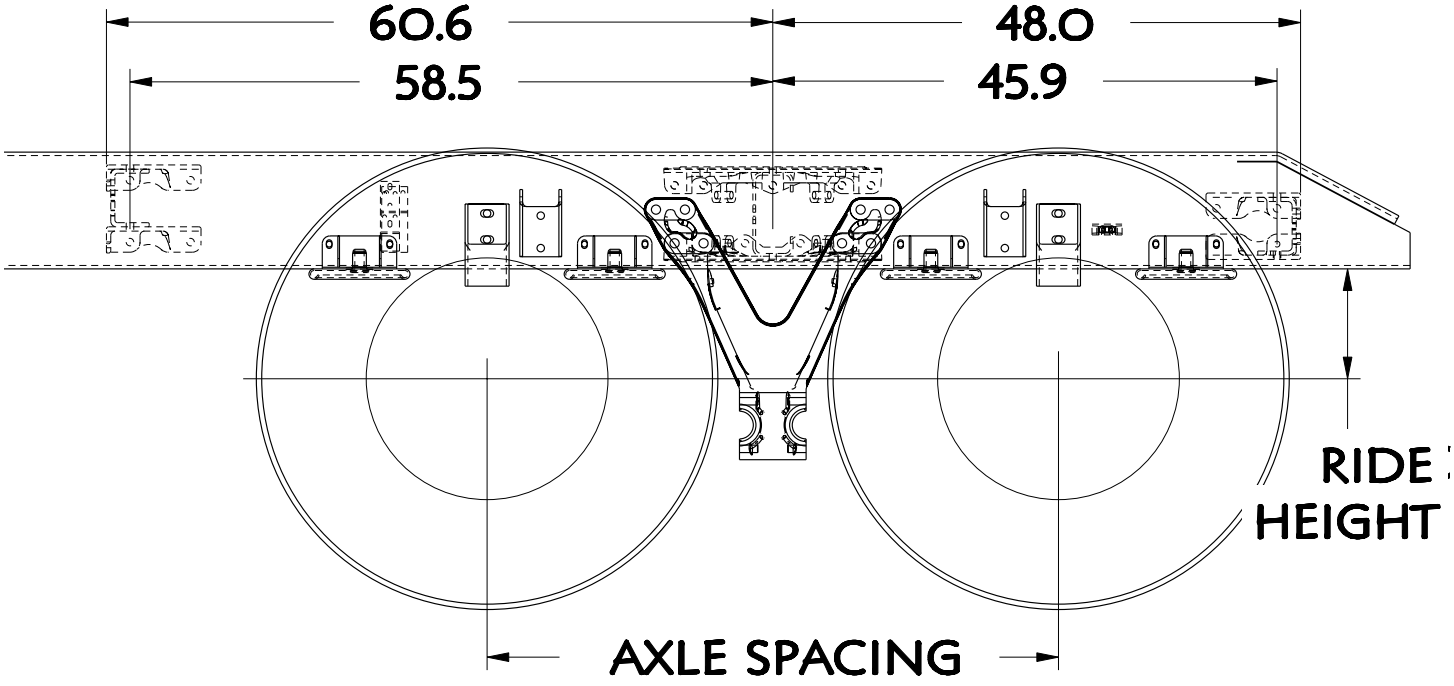

AG400 Suspensions

TABLE 3-5. Rear Suspension Options

Suspension Type	Rating	Axle Spacing	Laden Ride Height	Unladen Ride Height
AG400 Tandem	40K	52"	9"	9"
AG400 Tandem	40K	54"	9"	9"

NOTE: Actual axle spacing can depart from nominal due to axle slant requirements. Final axle spacing can vary by more than an inch from nominal in some cases. If precise axle spacing is critical due to body installation or state/local regulatory requirements please contact Kenworth Applications/technical Support for assistance.

https://truckmanualshub.com/

AG460 TANDEM

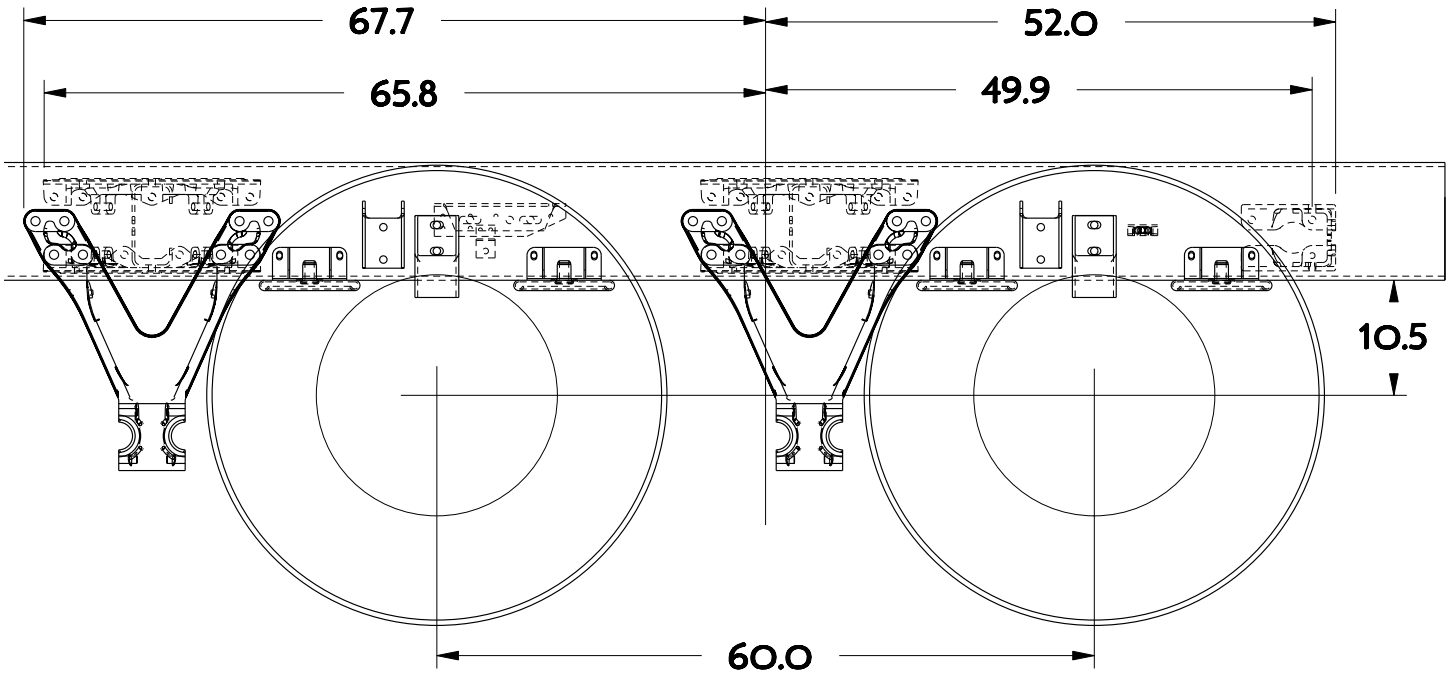

AG460 Suspensions

TABLE 3-6. Rear Suspension Options

Suspension Type	Rating	Axle Spacing	Laden Ride Height	Unladen Ride Height
AG460 Tandem 60" Spacing	46K	60"	10"	10"

NOTE: Actual axle spacing can depart from nominal due to axle slant requirements. Final axle spacing can vary by more than an inch from nominal in some cases. If precise axle spacing is critical due to body installation or state/local regulatory requirements please contact Kenworth Applications/technical Support for assistance.

https://truckmanualshub.com/

AG690 TRIDEM

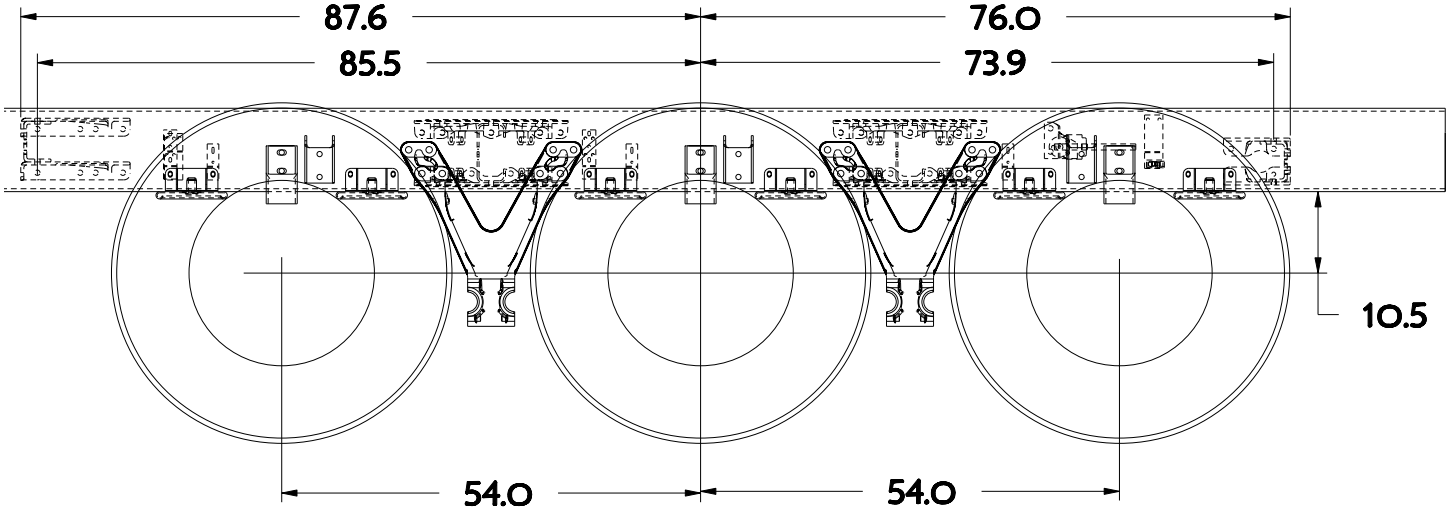

AG690 Tridem Suspension

TABLE 3-7. Rear Suspension Options

Suspension Type	Rating	Axle Spacing	Laden Ride Height	Unladen Ride Height
AG690 Tridem	69K	108" (54" + 54")	10"	10"

NOTE: Actual axle spacing can depart from nominal due to axle slant requirements. Final axle spacing can vary by more than an inch from nominal in some cases. If precise axle spacing is critical due to body installation or state/local regulatory requirements please contact Kenworth Applications/technical Support for assistance.

https://truckmanualshub.com/

REYCO 79KB SINGLE REAR AXLE

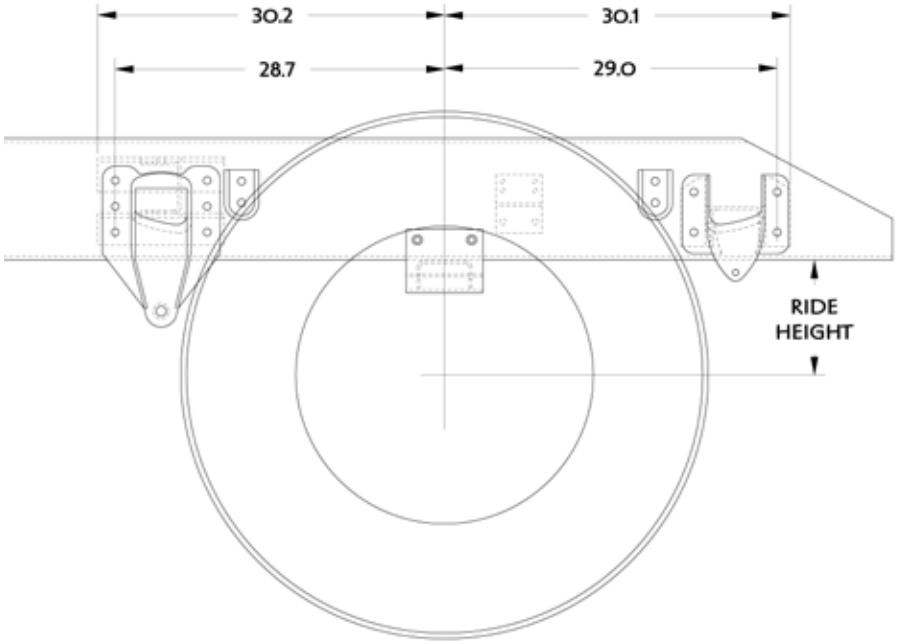

Optional Reyco 79KB Suspensions

TABLE 3-8. Rear Suspension Options

Suspension Type	Rating	Axle Spacing	Laden Ride Height	Unladen Ride Height
Reyco 79KB single	20K	-	8.3”	10.8”
Reyco 79KB single	23K	-	8.3”	10.8”
Reyco 79KB single	26K	-	8.2”	11.3”
Reyco 79KB single	31K	-	9.6”	12.2”

https://truckmanualshub.com/

REYCO 102 TANDEM REAR AXLE

Shown with a 52” Axle Spacing

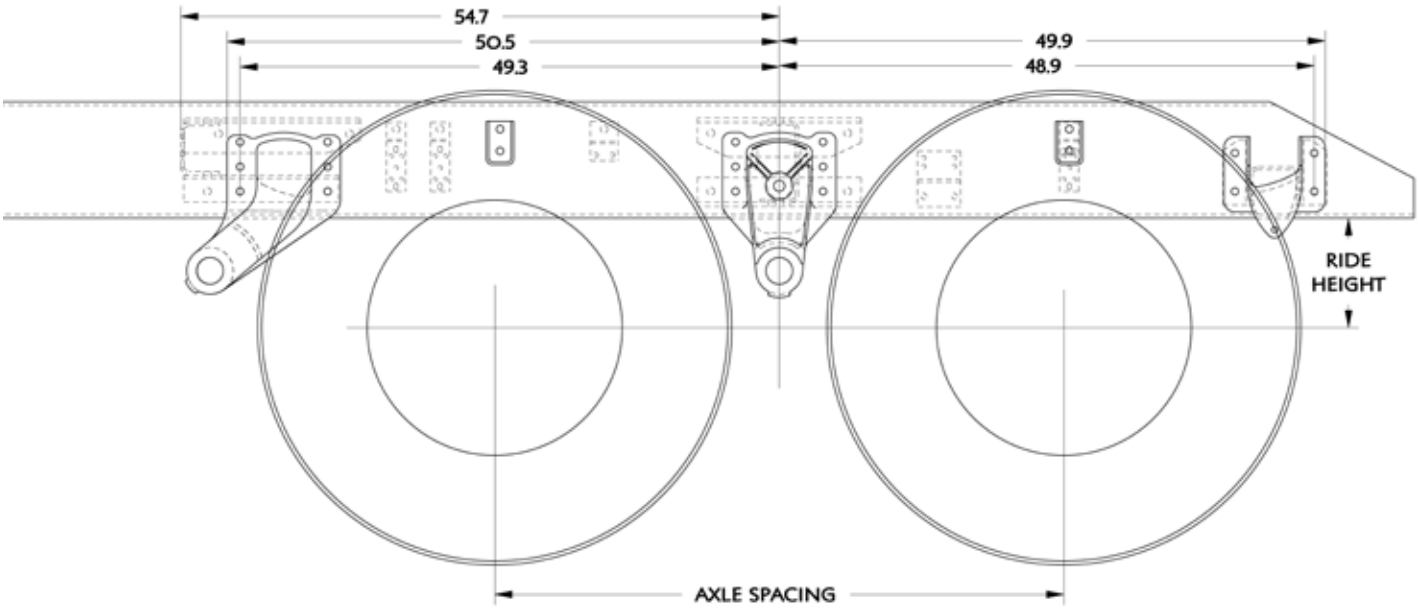

Reyco 102 Suspension Data

TABLE 3-9. Rear Suspension Options

Suspension Type	Rating	Axle Spacing	Laden Ride Height	Unladen Ride Height
Reyco 102 Tandem	38K	52”	9.2”	10.8”

NOTE: Actual axle spacing can depart from nominal due to axle slant requirements. Final axle spacing can vary by more than an inch from nominal in some cases. If precise axle spacing is critical due to body installation or state/local regulatory requirements please contact Kenworth Applications/technical Support for assistance.

https://truckmanualshub.com/

NEWAY ADZ 123 SINGLE REAR AXLE

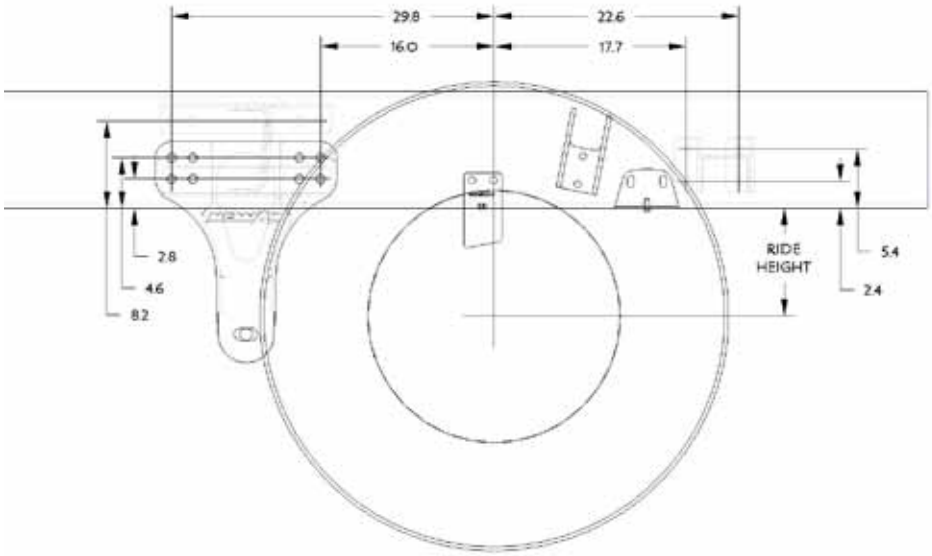

Optional Neway AD Single Suspensions

TABLE 3-10. Rear Suspension Options

Suspension Type	Rating	Axle Spacing	Laden Ride Height	Unladen Ride Height
Neway AD123 single	23K	-	10”	10”
Neway AD126 single	26K	-	10”	10”

https://truckmanualshub.com/

NEWAY ADZ 246 TANDEM SUSPENSION

Shown with a 54” Axle Spacing

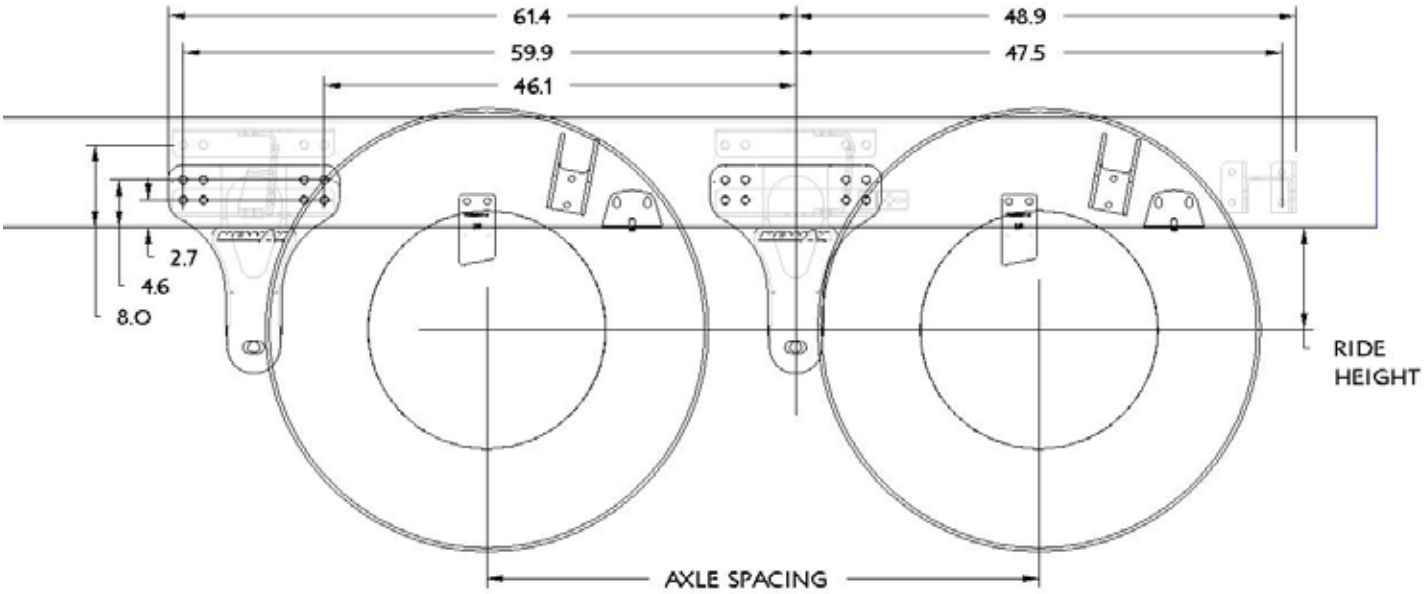

Optional Neway AD Tandem Suspensions

TABLE 3-11. Rear Suspension Options

Suspension Type	Rating	Axle Spacing	Laden Ride Height	Unladen Ride Height
Neway AD246 tandem	46K	54”	10”	10”
Neway AD246 tandem	46K	60”	10”	10”
Neway AD246 tandem	46K	72”	10”	10”
Neway AD252 tandem	52K	54”	10”	10”
Neway AD252 tandem	52K	60”	10”	10”
Neway AD252 tandem	52K	72”	10”	10”
Neway AD252 tandem	52K	60”	12”	12”

NOTE: Actual axle spacing can depart from nominal due to axle slant requirements. Final axle spacing can vary by more than an inch from nominal in some cases. If precise axle spacing is critical due to body installation or state/local regulatory requirements please contact Kenworth Applications/technical Support for assistance.

https://truckmanualshub.com/

NEWAY ADZ 369 TRIDEM SUSPENSION

Shown with 54” Axle Spacings

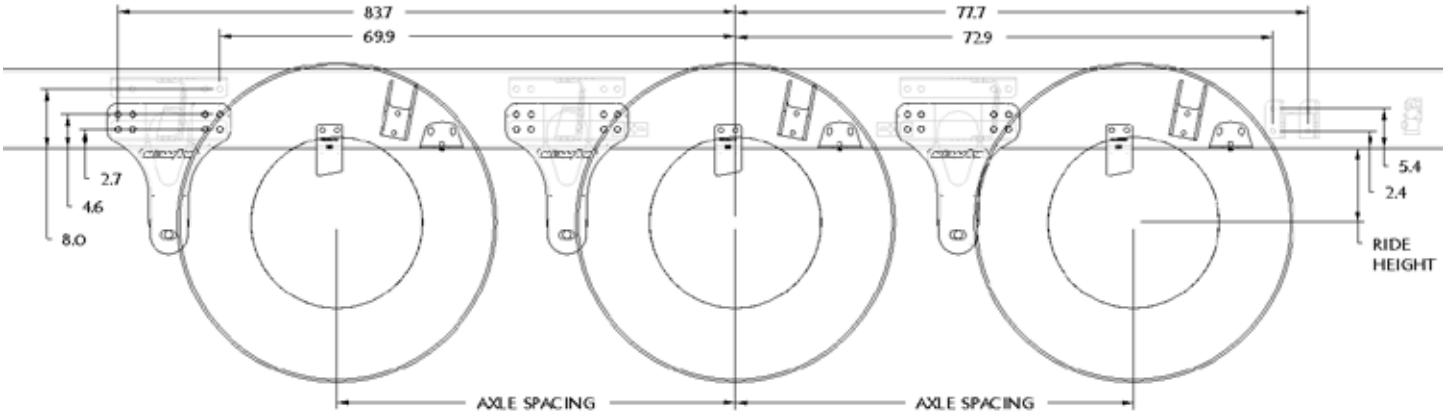

Optional Neway AD Tridem Suspensions

TABLE 3-12. Rear Suspension Options

Suspension Type	Rating	Axle Spacing	Laden Ride Height	Unladen Ride Height
Neway AD369 tridem	69K	54”	10”	10”
Neway AD369 tridem	69K	60”	10”	10”
Neway AD369 tridem	69K	60”	12”	12”

NOTE: Actual axle spacing can depart from nominal due to axle slant requirements. Final axle spacing can vary by more than an inch from nominal in some cases. If precise axle spacing is critical due to body installation or state/local regulatory requirements please contact Kenworth Applications/technical Support for assistance.

https://truckmanualshub.com/

HENDRICKSON PRIMAAX EX TANDEM SUSPENSION

Shown with 54” Axle Spacings

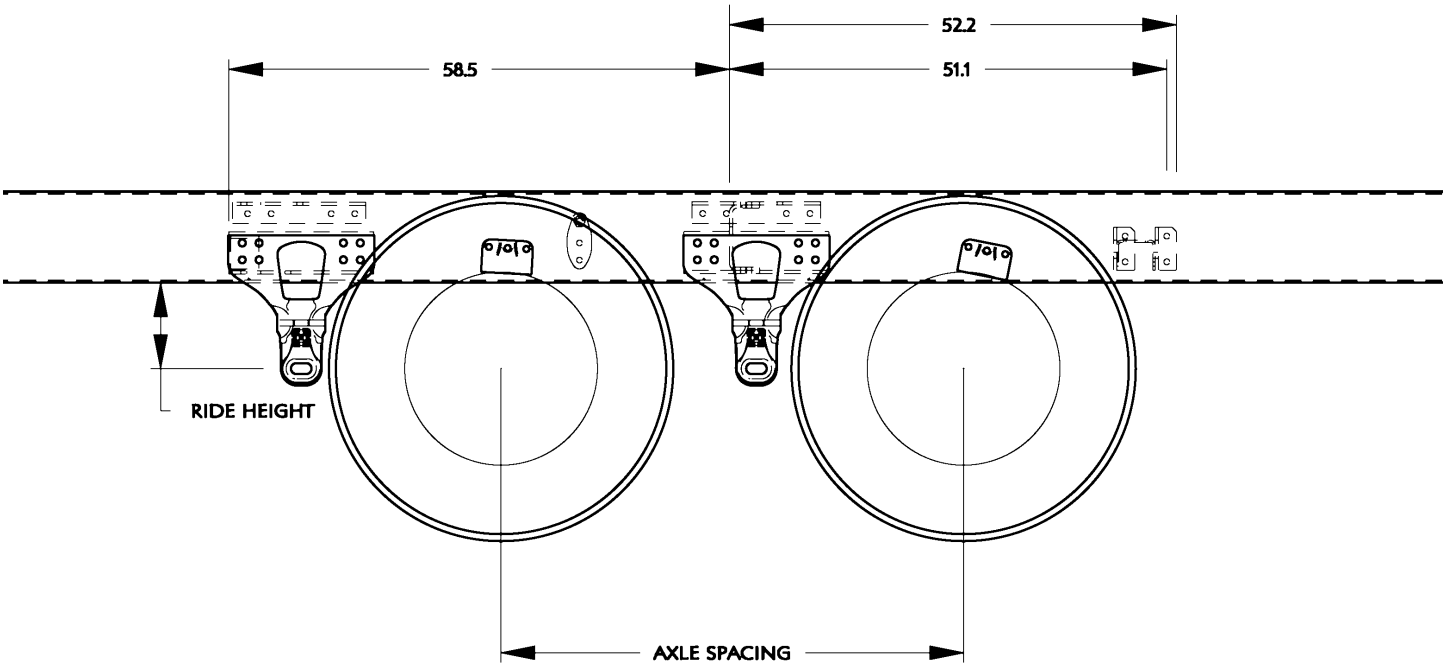

Optional Hendrickson Primaax EX Tandem Suspensions

TABLE 3-13. Rear Suspension Options

Suspension Type	Rating	Axle Spacing	Laden Ride Height	Unladen Ride Height
Hendrickson Primaax Tandem	46K	54”	10”	10”
Hendrickson Primaax Tandem	46K	60”	10”	10”
Hendrickson Primaax Tandem	46K	72”	10”	10”

NOTE: Actual axle spacing can depart from nominal due to axle slant requirements. Final axle spacing can vary by more than an inch from nominal in some cases. If precise axle spacing is critical due to body installation or state/local regulatory requirements please contact Kenworth Applications/technical Support for assistance.

https://truckmanualshub.com/

HENDRICKSON PRIMAAX EX TRIDEM SUSPENSION

Shown with 54” Axle Spacings

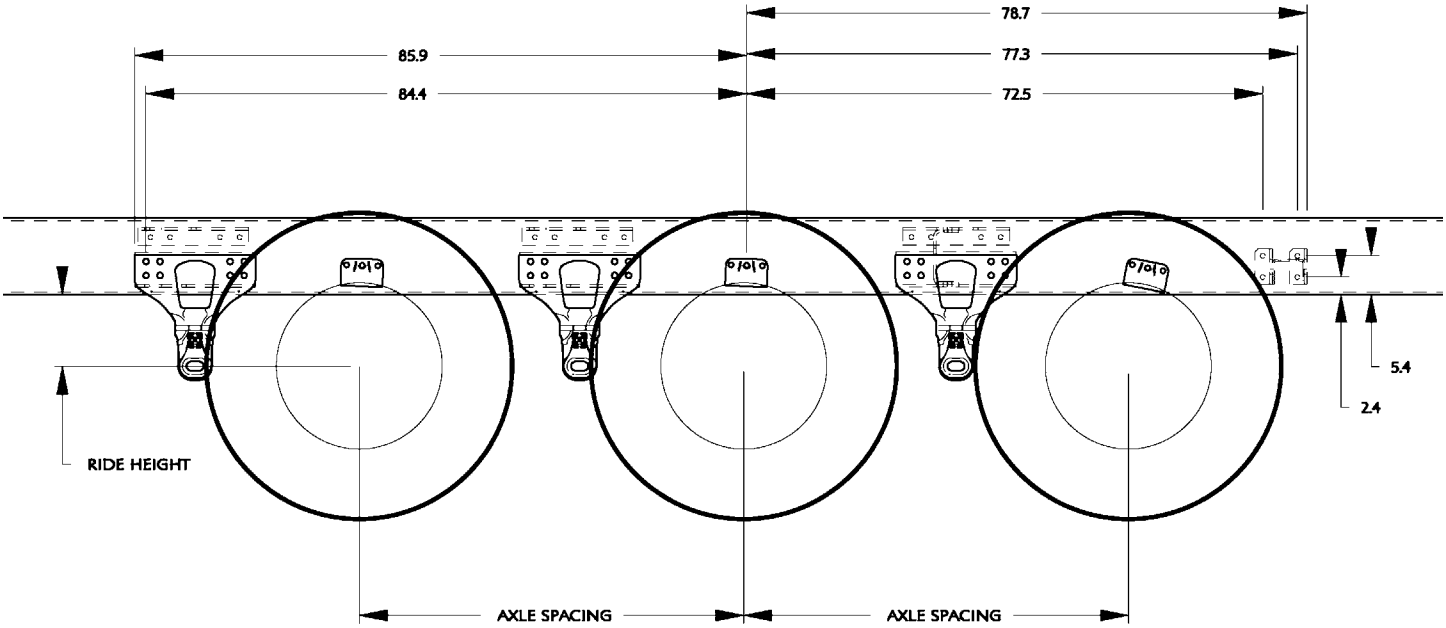

Optional Hendrickson Primaax EX Tridem Suspensions

TABLE 3-14. Rear Suspension Options

Suspension Type	Rating	Axle Spacing	Laden Ride Height	Unladen Ride Height
Hendrickson Primaax Tridem	69K	54”	10”	10”
Hendrickson Primaax Tridem	69K	60”	10”	10”

NOTE: Actual axle spacing can depart from nominal due to axle slant requirements. Final axle spacing can vary by more than an inch from nominal in some cases. If precise axle spacing is critical due to body installation or state/local regulatory requirements please contact Kenworth Applications/technical Support for assistance.

https://truckmanualshub.com/

HENDRICKSON HMX TANDEM SUSPENSION

Shown with 54” Axle Spacing

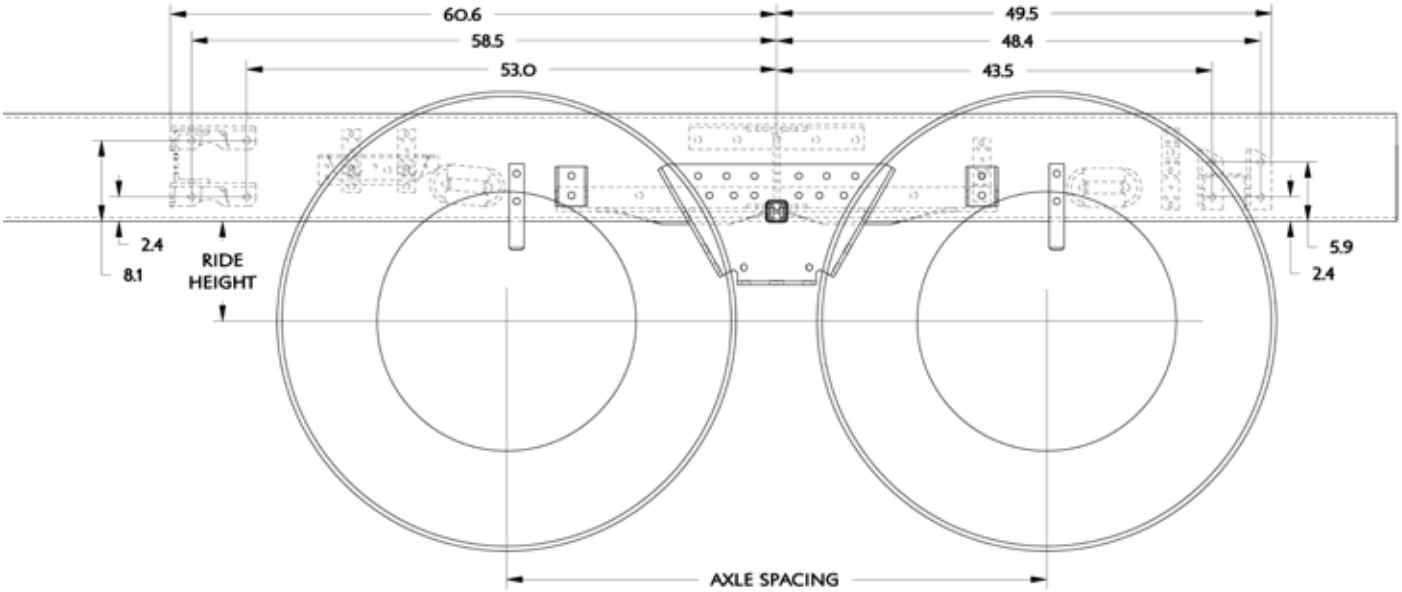

Optional Hendrickson HMX Tandem Suspensions

TABLE 3-15. Rear Suspension Options

Suspension Type	Rating	Axle Spacing	Laden Ride Height	Unladen Ride Height
Hendrickson HMX400 16.5” saddle	40K	54”	9.5”	10.6”
Hendrickson HMX400 17.5” saddle	40K	54”	10.5”	11.6”
Hendrickson HMX460 16.5” saddle	46K	54”	9.5”	10.6”
Hendrickson HMX460 17.5” saddle	46K	54”	10.5”	11.6”

NOTE: Actual axle spacing can depart from nominal due to axle slant requirements. Final axle spacing can vary by more than an inch from nominal in some cases. If precise axle spacing is critical due to body installation or state/local regulatory requirements please contact Kenworth Applications/technical Support for assistance.

https://truckmanualshub.com/

HENDRICKSON RT TANDEM SUSPENSION

Shown with a 54” Axle Spacing Without Track Rods

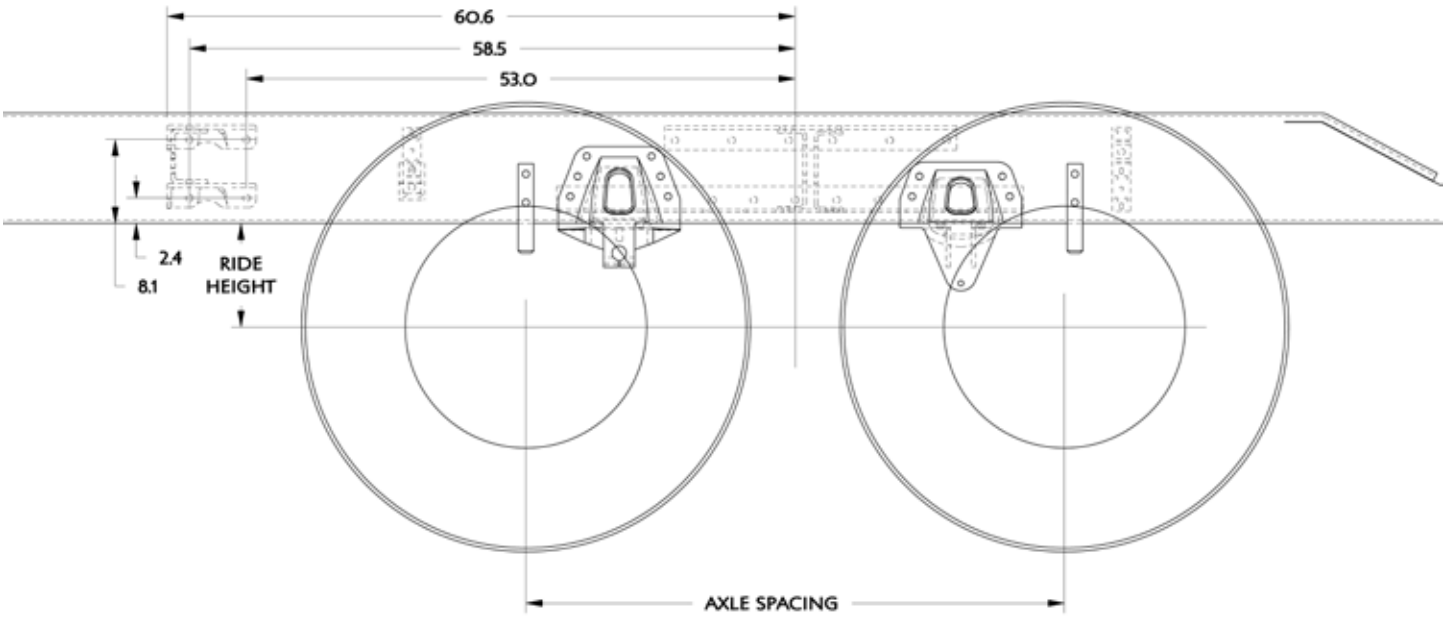

Optional Hendrickson RT Tandem Suspensions

TABLE 3-16. Rear Suspension Options

Suspension Type	Rating	Axle Spacing	Laden Ride Height	Unladen Ride Height
Hendrickson RT463 6” saddle	46K	52”	10.0”	11.1”
Hendrickson RT463 6” saddle	46K	54”	10.0”	11.1”
Hendrickson RT463 7.19” saddle	46K	54”	11.2”	12.5”
Hendrickson RT463 7.94” saddle	46K	54”	11.9”	13.3”
Hendrickson RT463 6” saddle	46K	60”	10.0”	11.1”
Hendrickson RT463 7.94” saddle	46K	60”	11.9”	13.0”
Hendrickson RTE463 7.19” saddle	46K	52”	10.5”	11.6”
Hendrickson RT523 6” saddle	52K	52”	9.9”	11.0”
Hendrickson RT523 6” saddle	52K	54”	9.9”	11.0”
Hendrickson RT523 7.19” saddle	52K	54”	11.1”	12.2”
Hendrickson RT523 11” saddle	52K	54”	14.9”	16.0”
Hendrickson RT523 6” saddle	52K	60”	9.9”	11.0”
Hendrickson RT523 7.19” saddle	52K	60”	11.1”	12.2”

NOTE: Actual axle spacing can depart from nominal due to axle slant requirements. Final axle spacing can vary by more than an inch from nominal in some cases. If precise axle spacing is critical due to body installation or state/local regulatory requirements please contact Kenworth Applications/technical Support for assistance.

https://truckmanualshub.com/

CHALMERS 856-46 TANDEM SUSPENSION

Shown with a 54” Axle Spacing

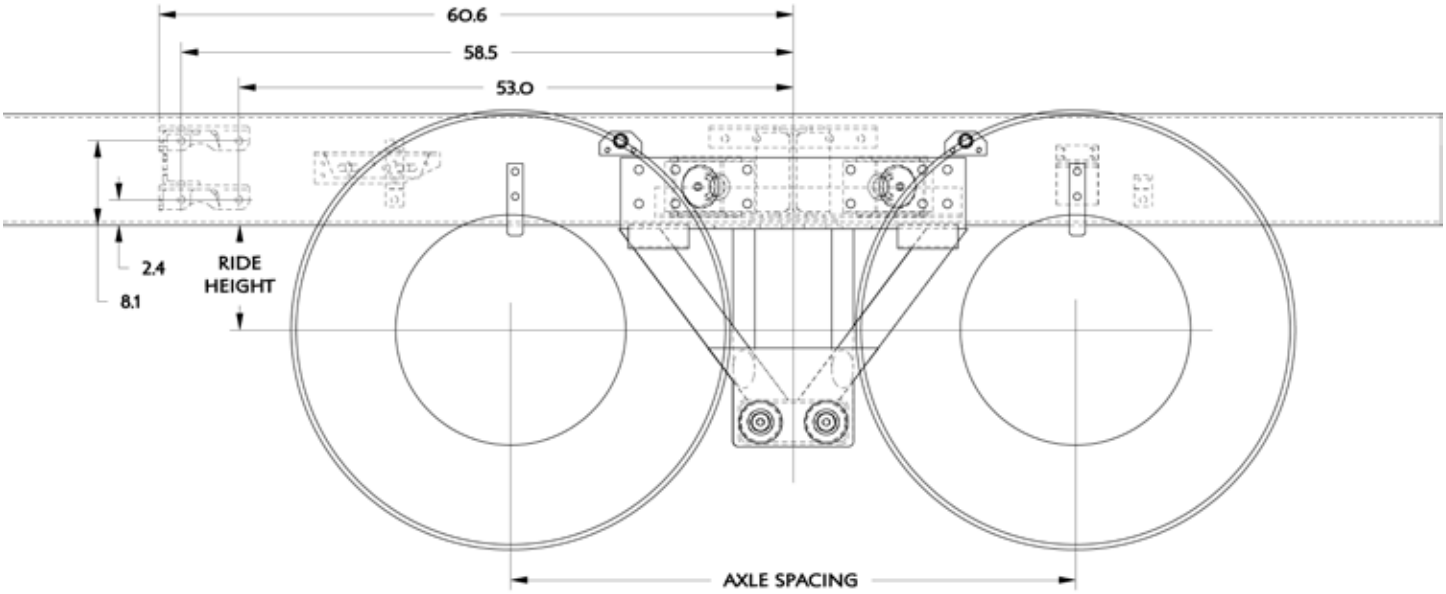

Optional Chalmers Tandem Suspensions

TABLE 3-17. Rear Suspension Options

Suspension Type	Rating	Axle Spacing	Laden Ride Height	Unladen Ride Height
Chalmers 854-40-L	40K	54”	8.9”	11.1”
Chalmers 854-40-L-HS	40K	54”	9.6”	11.1”
Chalmers 854-40-H	40K	54”	10.2”	12.4”
Chalmers 854-40-H-HS	40K	54”	10.9”	12.4”
Chalmers 854-46-L	46K	54”	8.9”	11.3”
Chalmers 854-46-L-HS	46K	54”	9.6”	11.3”
Chalmers 854-46-H	46K	54”	10.1”	12.5”
Chalmers 854-46-H-HS	46K	54”	10.9”	12.5”
Chalmers 854-46-XXH-HS	46K	54”	15.6”	17.3”
Chalmers 854-46-XXXH-HS	46K	54”	17.1”	18.8”
Chalmers 854-50-L	50K	54”	8.9”	11.3”

TABLE 3-17 CONTINUES ON NEXT PAGE…

https://truckmanualshub.com/

TABLE 3-17 CONTINUED

Suspension Type	Rating	Axle Spacing	Laden Ride Height	Unladen Ride Height
Chalmers 854-50-L-HS	50K	54”	9.6”	11.3”
Chalmers 854-50-H	50K	54”	10.1”	12.5”
Chalmers 854-50-H-HS	50K	54”	10.9”	12.5”
Chalmers 854-50-XXH	50K	54”	15.5”	17.3”
Chalmers 854-52-L-HS	52K	54”	9.6”	11.3”
Chalmers 854-52-H-HS	52K	54”	10.9”	12.5”
Chalmers 860-40-L	40K	60”	8.9”	11.1”
Chalmers 860-40-H	40K	60”	10.2”	12.4”
Chalmers 860-46-L	46K	60”	8.9”	11.3”
Chalmers 860-46-L-HS	46K	60”	9.6”	11.3”
Chalmers 860-46-H	46K	60”	10.1”	12.5”
Chalmers 860-46-H-HS	46K	60”	10.9”	12.5”
Chalmers 860-46-XXH-HS	46K	60”	15.6”	17.3”
Chalmers 860-50-L	50K	60”	8.9”	11.3”
Chalmers 860-50-L-HS	50K	60”	9.6”	11.3”
Chalmers 860-50-H	50K	60”	10.1”	12.5”
Chalmers 860-50-H-HS	50K	60”	10.9”	12.5”
Chalmers 860-50-XH	50K	60”	12.1”	14.6”
Chalmers 860-52-H	52K	60”	10.9”	12.5”
Chalmers 860-52-XXH	52K	60”	15.6”	17.6”
Chalmers 872-46-H	46K	72”	10.1”	12.5”
Chalmers 872-46-H-HS	46K	72”	11.0”	12.5”
Chalmers 872-50-H-HS	50K	72”	11.0”	12.5”

NOTE: Actual axle spacing can depart from nominal due to axle slant requirements. Final axle spacing can vary by more than an inch from nominal in some cases. If precise axle spacing is critical due to body installation or state/local regulatory requirements please contact Kenworth Applications/technical Support for assistance.

https://truckmanualshub.com/

PUSHER AXLES

The rear pusher axle layouts are provided as a tool to help layout bodies prior to arrival. The applicable dimensions are shown. When using the pusher layouts to determine available frame space please be aware that clearances required are not shown. For information that may not be detailed in these drawings work with your local Kenworth Dealer to request that information.

Watson & Chalin Super Lite 8K Steerable Pusher

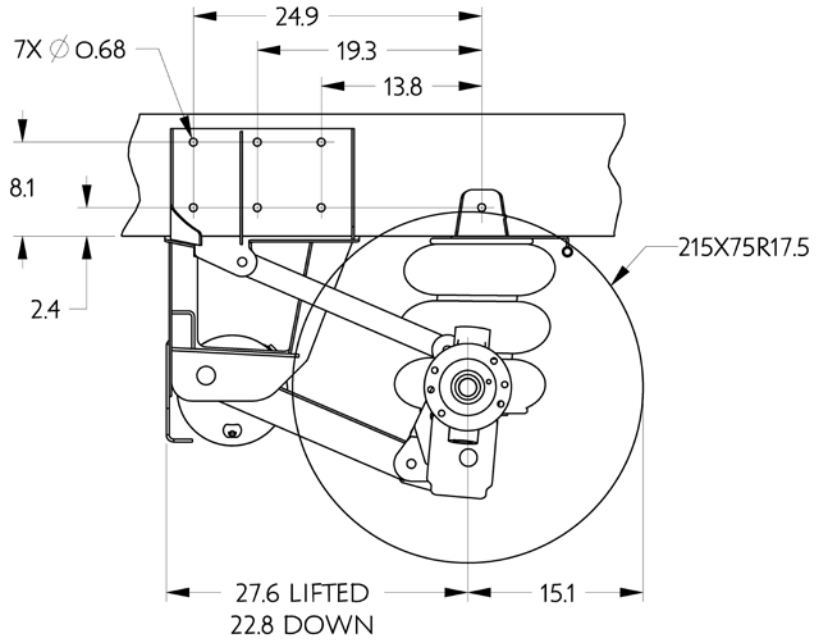

Watson & Chalin Tru Track Alumilite 13.2K Steerable Pusher

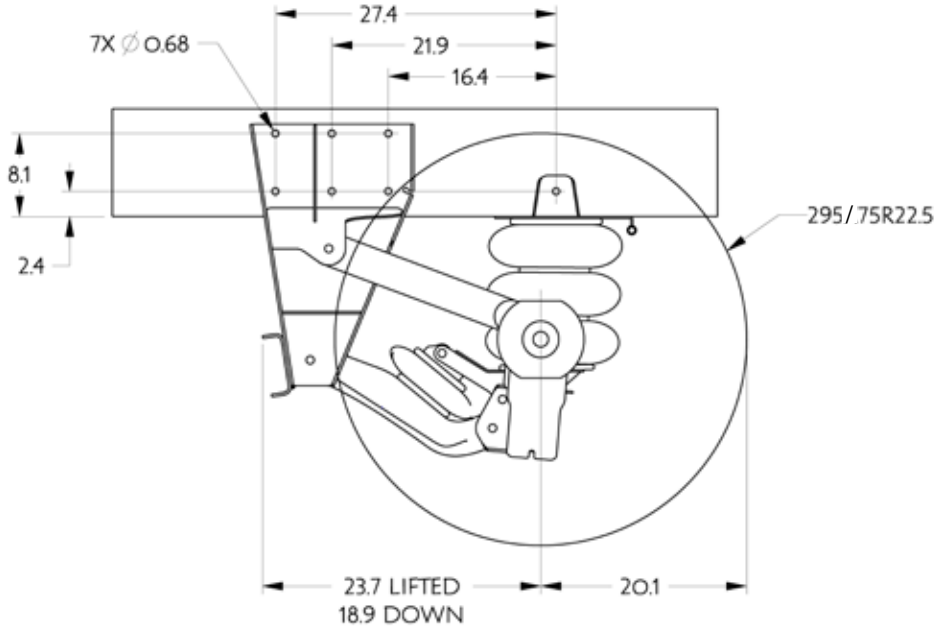

https://truckmanualshub.com/

Watson & Chalin Tru Track 20K Steerable Pusher

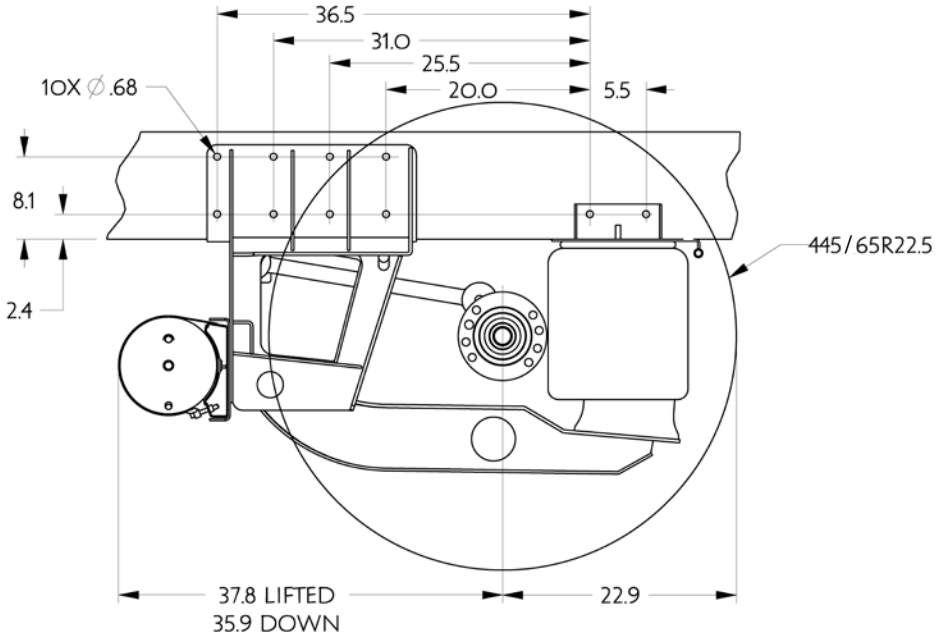

Watson & Chalin Atlas 22.5K Non-Steerable Pusher

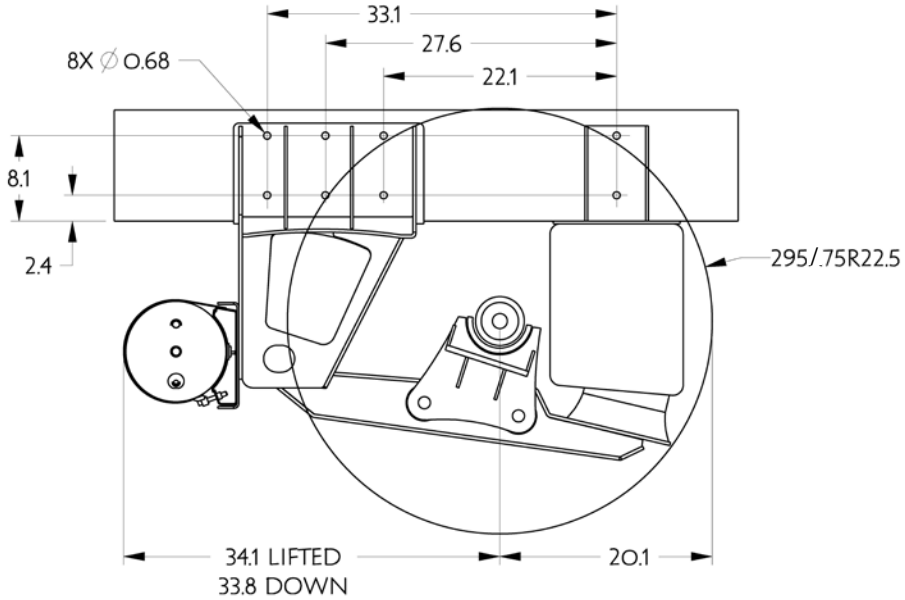

https://truckmanualshub.com/

AXLE TRACK AND TIRE WIDTH

The dimensions provided in this section are representative of some typical product combinations. The purpose this section is to demonstrate some of the typical dimensions.

- Axle Track: The distance between the dual tire centerlines on a dual tire arrangement or the distance between the tire centerlines on a single tire arrangement.
- Width: The distance over the outermost tire sidewall to sidewall.

These dimensions may be significant to the following:

- Appearance relative to other tires and chassis mounted equipment.
- Load carrying capacity. Different wheel disc offset can have a positive or negative impact on the axle carrying capacity of the axle.

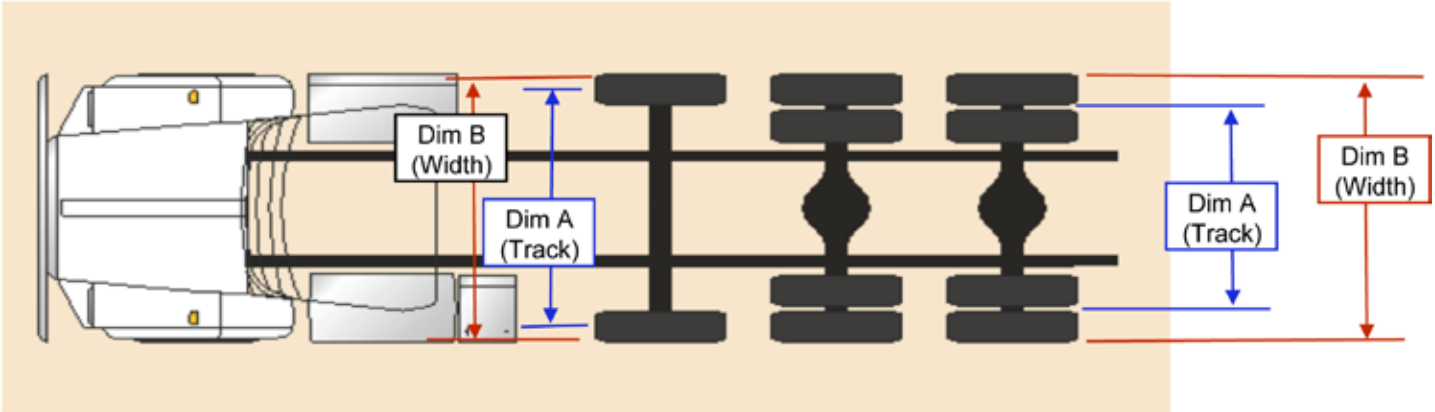

TABLE 3-18. Axle Width Calculation.

Axle - Drive	Wheel	Tire	Configuration	Track Dim "A"	Overall Width Dim "B:
Dana Spicer D46-170(H)(P) 46K Dual	Alcoa 88367 22.5X8.25	BR M726EL 11R22.5	4-4	73.3"	97.8"
Dana Spicer D46-170(H)(P) 46K Dual	Alcoa 98364 24.5X8.25	BR M726EL 11R24.5	4-4	73.6"	98.0"
Dana Spicer D46-170W(H)(P) 46K Dual Wide Track	Alcoa 88367 22.5X8.25	BR M726EL 11R22.5	4-4	79.2"	103.7"
Dana Spicer D46-170W(H)(P) 46K Dual Wide Track	Alcoa 98364 24.5X8.25	BR M726EL 11R24.5	4-4	79.5"	103.9"
Dana Spicer D46-170(H)(P) 46K Dual	Alcoa 82360 22.5X12.25	BR M844F 425/65R22.5	2-4	72.7	88.9"
Dana Spicer D46-170W(H)(P) 46K Dual Wide Track	Alcoa 82360 22.5X12.25	BR M844F 425/65R22.5	2-4	78.7"	94.9"

TABLE 3-18 CONTINUES ON NEXT PAGE…

https://truckmanualshub.com/

TABLE 3-18 CONTINUED

Axle - Steer	Wheel	Tire	Brake Drum Type	Track Dim "A"	Overall Width Dim "B:
Dana Spicer E-1322I 13.2K	Alcoa 98364 24.5X8.25	BR R250F 11R24.5	CAST	80.2"	91.0"
Dana Spicer E-1322W 13.2K	Alcoa 98364 24.5X8.25	BR R250F 11R24.5	CAST	82.2"	93.0"
Dana Spicer D2000 20K	Alcoa 82365 24.5X12.25	BR M844F 425/65R22.5	CAST	86.5"	102.7"
Dana Spicer D2000 20K	Alcoa 82364 24.5X12.25	BR M844F 425/65R22.5	CAST	82.6"	98.8"

Axle - Pusher Non-Steerable	Wheel	Tire	Wheel Orientation	Track Dim "A"	Overall Width Dim "B:
NS PSHR: WCAL ATLAS Std Track (72.5") **16K GAWR**	Alcoa 82365 24.5X12.25	BR M844F 425/65R22.5	Default- Same as RR	79.4"	95.6"
NS PSHR: WCAL ATLAS **Wide** Track (77.5")	Alcoa 82365 24.5X12.25	BR M844F 425/65R22.5	Option Same as FR	71.1"	87.3"

https://truckmanualshub.com/

GROUND CLEARANCE

This information is provided as a reference, not all optional equipment is included. In order to calculate the height on your specific chassis, please use the ride height information provided on page 3-14. For comparison the FS value shown is 11.4” unladen and 10.4” laden.

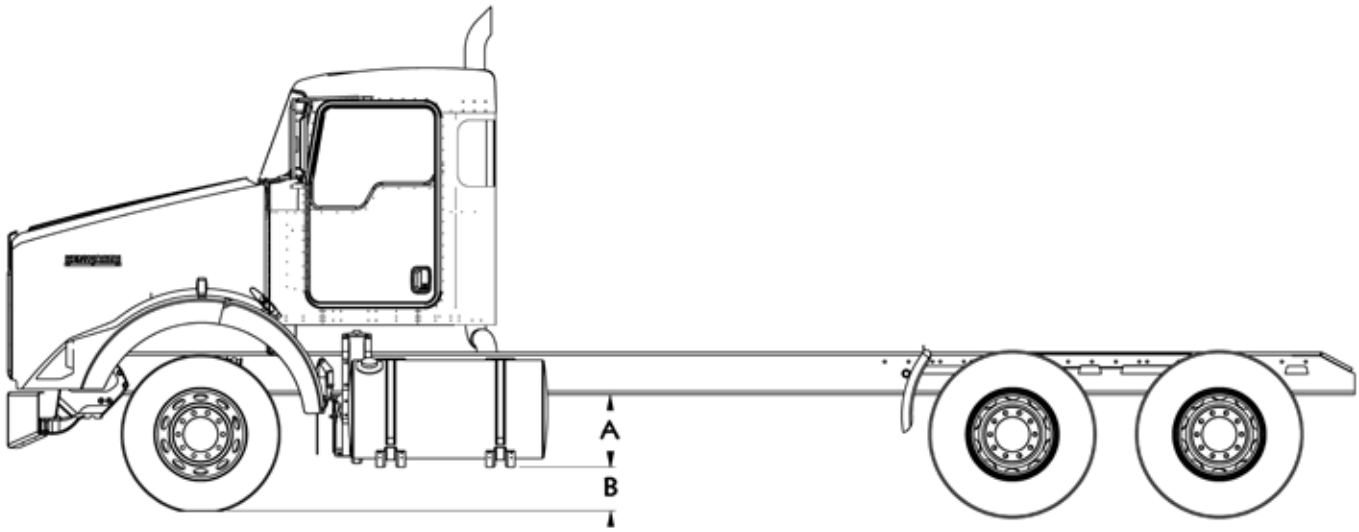

TABLE 3-19. Ground Clearance for Fuel Tanks

Front Suspension	Front Tires	Rear Suspension	Rear Tires	Fuel Tank Size	Component	Dimension “A” Distance from Bottom of Frame Rail (in)	Dimension “B” Ground Clearance (in)	
							Unladen	Laden
20K Taperleaf Spring	M844F 425/65R22.5	Hendrickson HMX 460 17.5” Saddle Height	M711 11R24.5	22” Diameter	Fuel Tank	16.3	17.2	14.9
					DEF Tank	15.3	18.2	15.9
				24.5” Diameter	Fuel Tank	18.2	15.3	13
					DEF Tank	15.8	17.7	15.4
				28.5” Diameter	Fuel Tank	21.4	12	9.7
					DEF Tank	17.2	16.2	13.9

https://truckmanualshub.com/

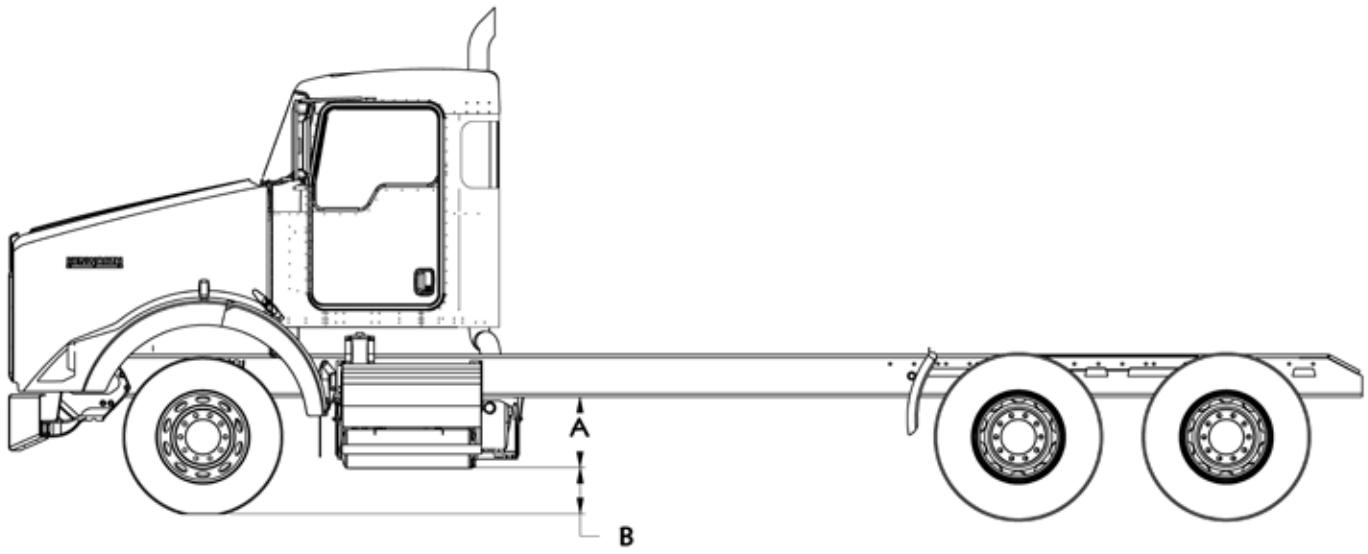

TABLE 3-20. Ground Clearance for Battery Boxes

Front Suspension	Front Tires	Rear Suspension	Rear Tires	Component	Dimension "A" Distance from Bottom of Frame Rail (in)	Dimension "B" Ground Clearance (in)	
						Unladen	Laden
20K Taper-leaf Spring	M844F 425/65R22.5 Tires	Hendrickson HMX 460 17.5" Saddle Height	M711 11R24.5	Battery Box with Air Tanks	17.3	16.2	13.9
				Vocational Battery Box with Air Tanks	17.8	15.7	13.4
				DPF[1] Box	15.6	17.8	15.5

[1] Dimensions shown are for daycabs with high route exhaust. Sleeper ground clearance is reduced by 1.3 inches.

https://truckmanualshub.com/

PTO CLEARANCES

The following visuals are provided to help aid in determining PTO locations and clearances. For specific dimensions please work through your local Kenworth dealer. Note: Installations depict multiple PTOs.

In order to ensure the PTO area remains clear of air equipment, electrical and emissions equipment, Kenworth recommends always ordering PTO controls, even when installing the PTO aftermarket. Kenworth does offer a variety of factory installed PTOs. Contact your local dealer for assistance.

Manual Transmission:

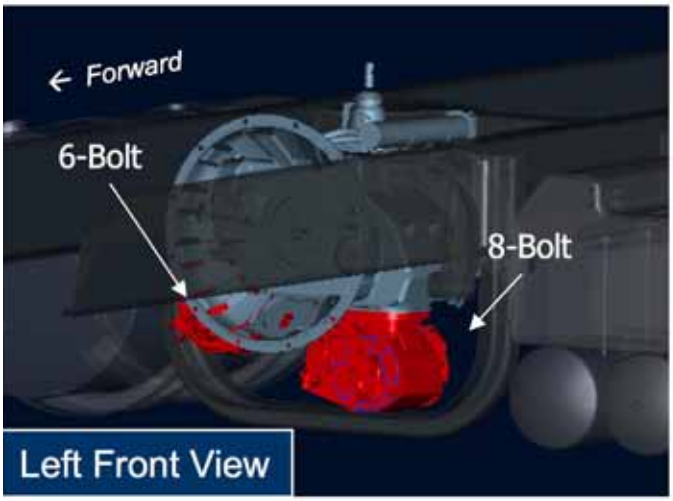

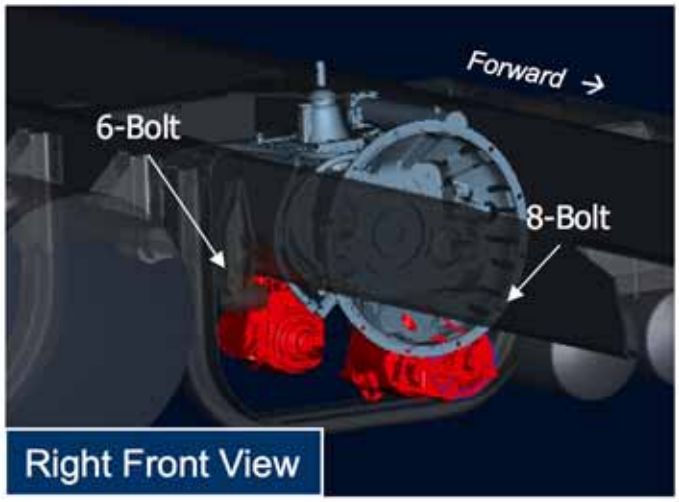

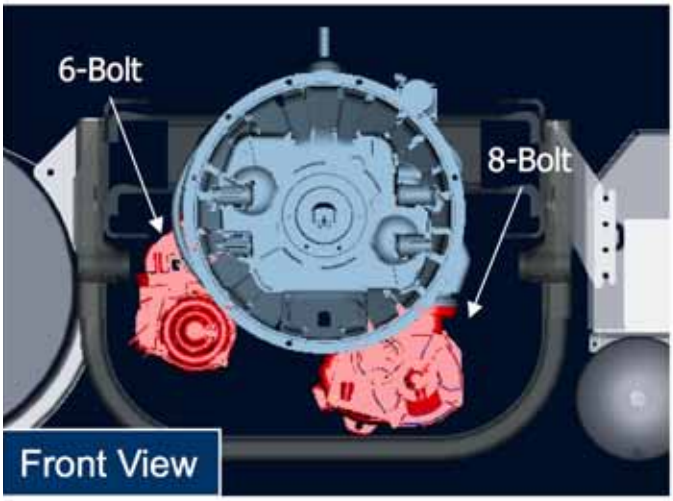

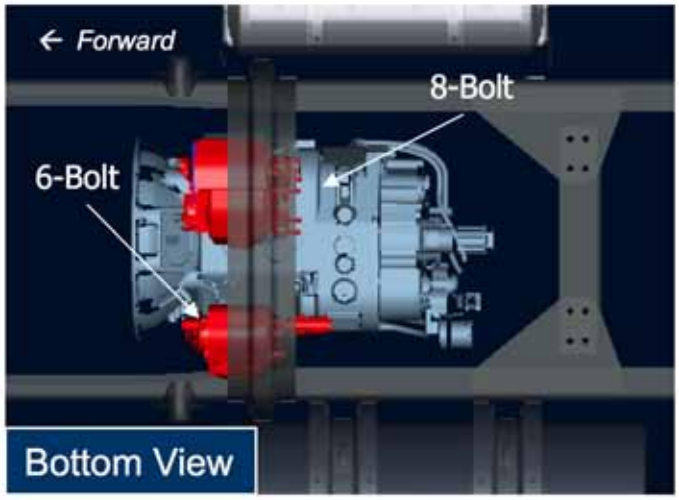

https://truckmanualshub.com/

Allison Transmission:

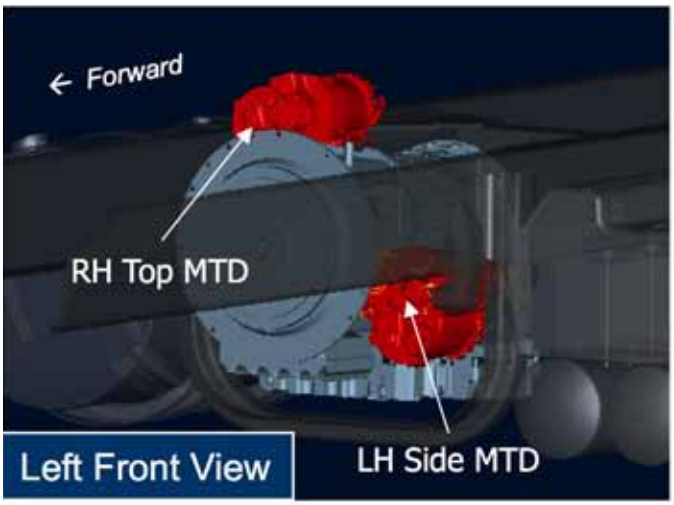

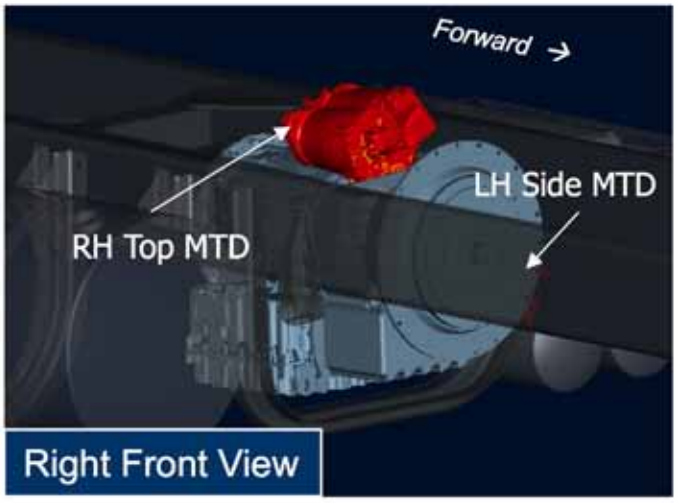

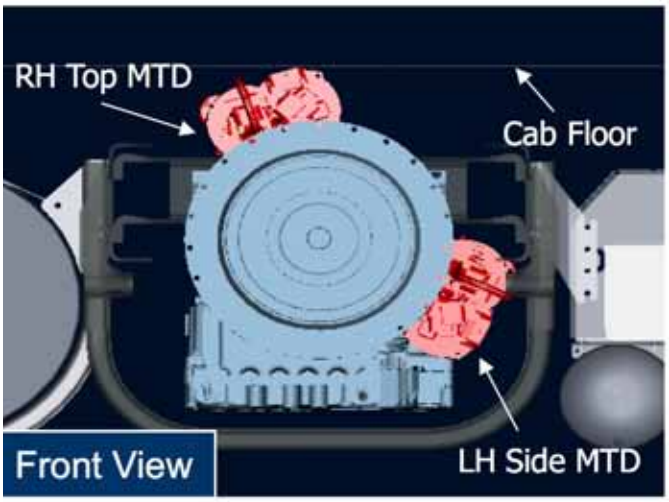

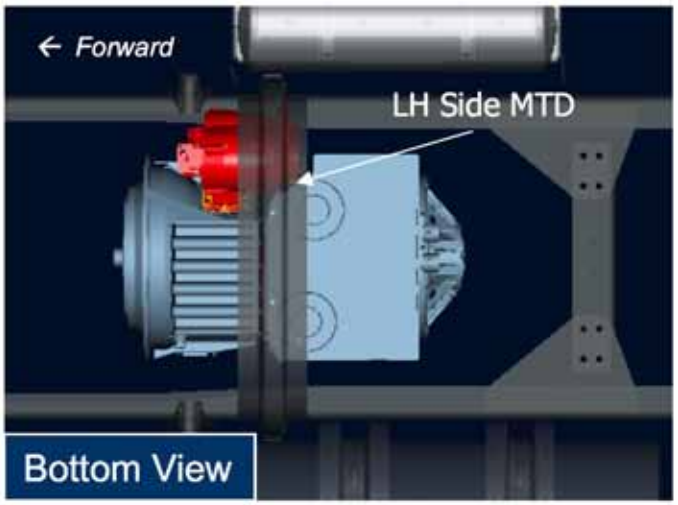

https://truckmanualshub.com/

This page intentionally left blank.

https://truckmanualshub.com/

EXHAUST AND AFTER-TREATMENT INFORMATION

The following section is designed to give you information regarding the exhaust and after-treatment systems on Kenworth chassis.

All Kenworth's equipped with 2010 emission level engines will utilize Selective Catalyst Reduction (SCR). SCR is a process in which Diesel Exhaust Fluid (DEF) is injected into the exhaust down stream of the engine. DEF is converted to ammonia by the heat of the exhaust system. Inside of the SCR canister a catalyst causes a chemical reaction to occur between the ammonia and NOx, turning it into water and nitrogen. For more information on the specific details of how SCR works, please contact your local Kenworth dealer.

DEF System Schematic:

On most Kenworth chassis the DEF Supply Module (or pump) is integrated into the DEF tank. Kenworth does not allow relocation of this pump. The following schematic details how the DEF lines route to the after-treatment system.

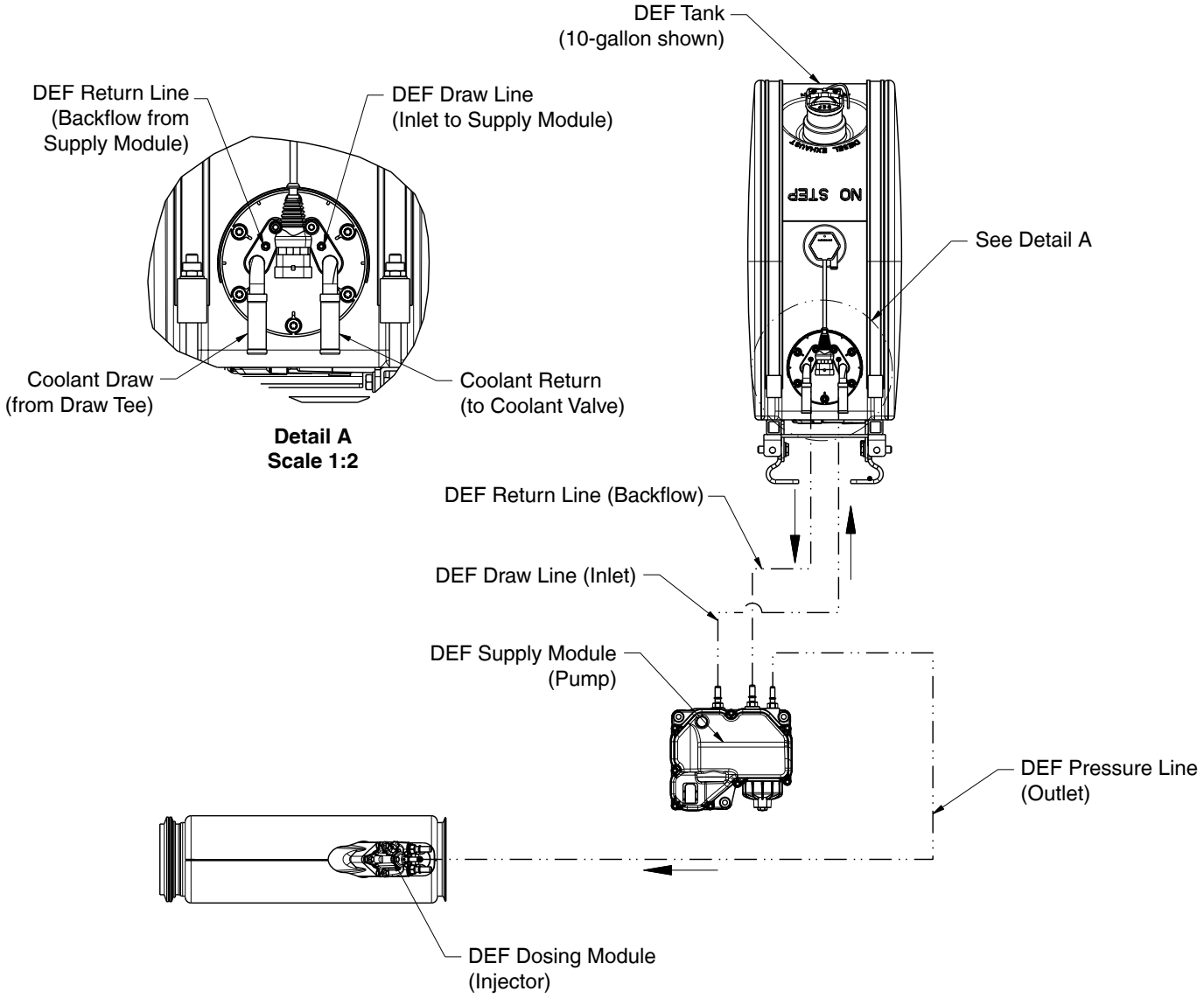

https://truckmanualshub.com/

DEF will freeze at approximately 11° F. In order to keep DEF from freezing all tanks will be heated with engine coolant. The following schematic shows the routing of these lines. The coolant lines that run to and from the SCR system must not be tampered with, or used for a source of heat and/or cooling for other components on the chassis. It is critical that the system is not compromised in any manner.

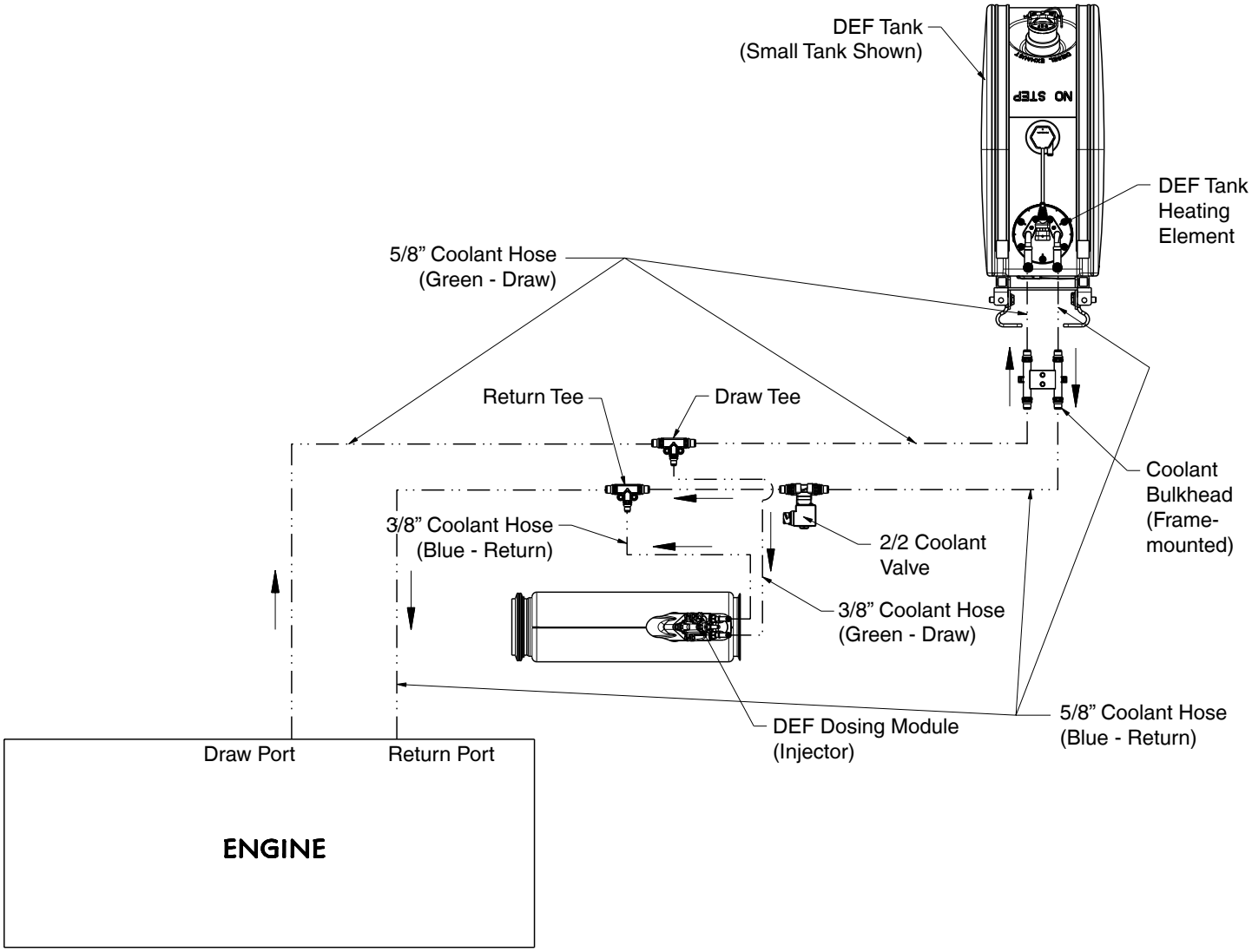

https://truckmanualshub.com/

GENERAL GUIDELINES FOR DEF SYSTEM

The installation of the DEF tank is a critical component of the SCR system. While Kenworth does not recommended relocating the DEF tank, there are applications and body installations that will require it. The guidelines below must be strictly followed by any entity relocating the tank. Failure to follow the guidelines completely and accurately may result in engine shutdown situations.

Kenworth offers a variety of DEF tank sizes to meet every application. The DEF tank volume is regulated by the E.P.A. Kenworth advises against modifying the tank volume after the truck has been delivered from the factory.

- Total DEF capacity **must** meet or exceed 6% of the usable fuel capacity on the truck. The calculation to determine DEF capacity is:

  Minimum DEF Tank Volume = Useable Fuel Capacity (gal) x 0.06

  Example: For a truck with 200 useable gallons of fuel, the equation is
  DEF required = 200 x 0.06 = 12 gallons or more of DEF.

PACCAR-approved DEF hoses are required when retrofitting for system to function properly. The use of unapproved hoses for DEF lines will void warranty and may cause engine shutdown situations. The DEF pump (or Supply Module) can not be relocated from the DEF tank.

INSTALLATION REQUIREMENTS AND DIMENSIONS FOR DEF SYSTEM

When relocating any DEF system components, the locations must meet the guidelines below. Failure to comply may result in non-conformance to EPA standards and engine shutdown.

DEF piping relative heights: In order to ensure proper functionality of DEF system, the height differences in the guidelines below must be followed during line routing and component placement.

With all relocating procedures, general clearances and routing guidelines must be followed. See section 9 of this manual for general routing guidelines.

When relocating the components the maximum pressure DEF hose length, from Supply module to Dosing Module, is 3 meters (118”).

Maintain a minimum of 3” clearance to shielded exhaust components when routing DEF lines to prevent possible melting.

If the DEF tank is relocated the coolant lines will need to be modified. During this process if the tank is moved forward on the chassis (ie closer to the engine) it is necessary to remove excess coolant lines and maintain the original routing path. If the tank is moved rearward on the chassis the additional length of cooling line required to complete the installation must be installed in a straight section of the existing coolant routing lines. This process will minimizes the change in coolant flow by minimizing changes in restrictions. Changes in restriction are added with excessive line length and bends. Work with your local Kenworth dealer if you are unsure about the coolant line modifications.

https://truckmanualshub.com/

MEASUREMENT REFERENCE POINTS

For the all relocation procedures, the measurement points will referenced in the guidelines are taken from the following specific points:

Supply Module: The supply module is commonly called a pump. The measurement point on the supply module is the top of the DEF fluid pressure line. See Figure 4-1.

FIGURE 4-1: Measurement Location of DEF Supply Module (Pump)

Dosing Module: The dosing module is commonly called an injector, this injector is located on the SCR mixing pipe which is between the DPF and SCR canister. The measurement point on the dosing module is the top of the DEF fluid pressure line. See Figure 4-2.

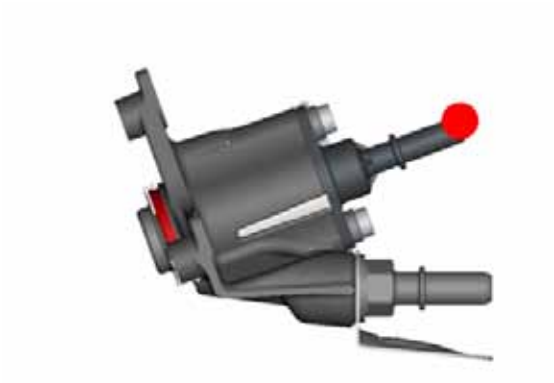

FIGURE 4-2: Measurement Location of DEF Dosing Module (Injector)

The following relocation guidelines are dependant on exhaust configuration and DEF tank type and location.

The Dosing Module should not ever need to be relocated, however if it is removed for any reason, it is critical that the module be reinstalled at the correct orientation. Figure 4-3 below illustrates the correct installation orientations. The angle references the vertical plane.

https://truckmanualshub.com/

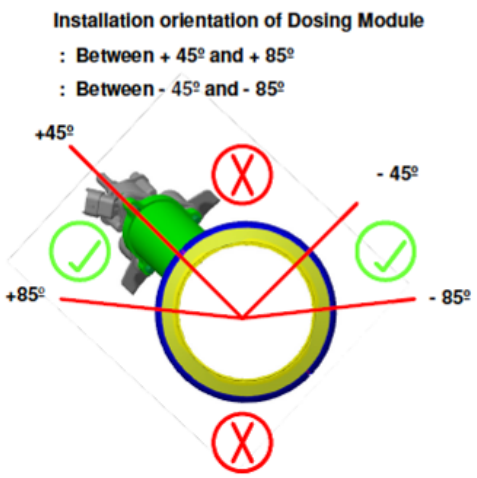

FIGURE 4-3: Orientation of Dosing Module

Right Hand Under DPF and SCR with Small, Medium, or Large DEF Tanks

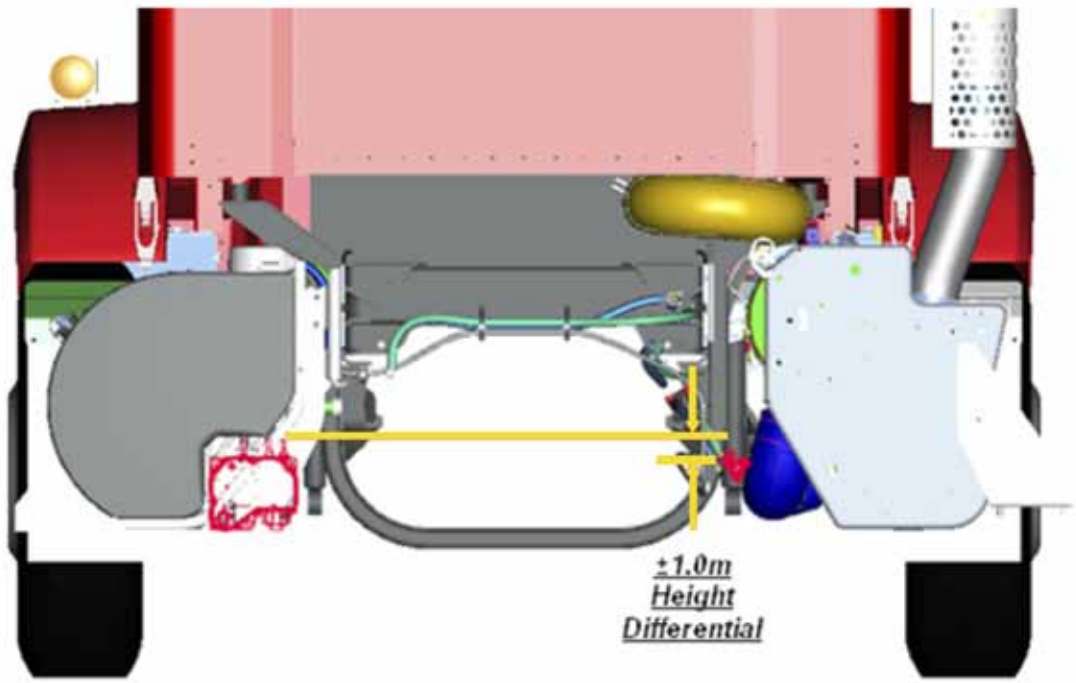

FIGURE 4-4: RH Under Cab Exhaust with Small, Medium, or Large Tanks.

The height differential between the supply module and dosing module can not exceed one meter. The supply module is integrated into the DEF tank assembly, separation of the module from the tank is not allowed.

When relocating the components the maximum pressure DEF hose length, from Supply module to Dosing Module, is 3 meters (118”).

DEF Pressure hose must include a “trap” in the routing if Dosing Module is below the highest point of the Supply Module (See Figure 4-9 on page 4-9).

https://truckmanualshub.com/

Horizontal (Crossover) DPF and SCR with Small, Medium, or Large DEF Tanks

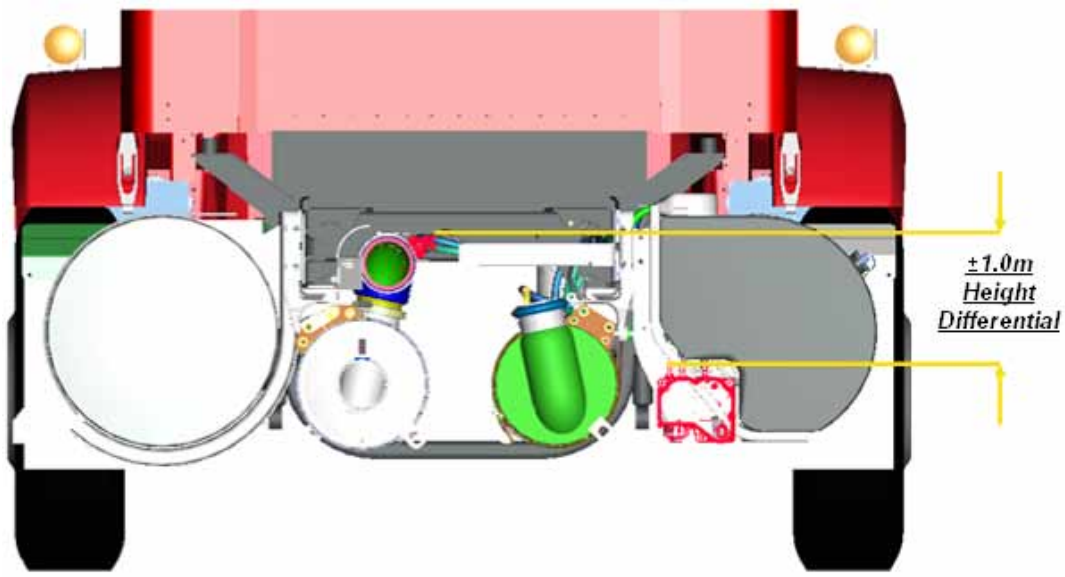

FIGURE 4-5: Horizontal Exhaust with Small, Medium, or Large Tanks.

The height differential between the supply module and dosing module can not exceed one meter. The supply module is integrated into the DEF tank assembly, separation of the module from the tank is not allowed.

When relocating the components the maximum pressure DEF hose length, from Supply module to Dosing Module, is 3 meters (118”).

Vertical DPF and SCR with Small, Medium, or Large DEF Tanks

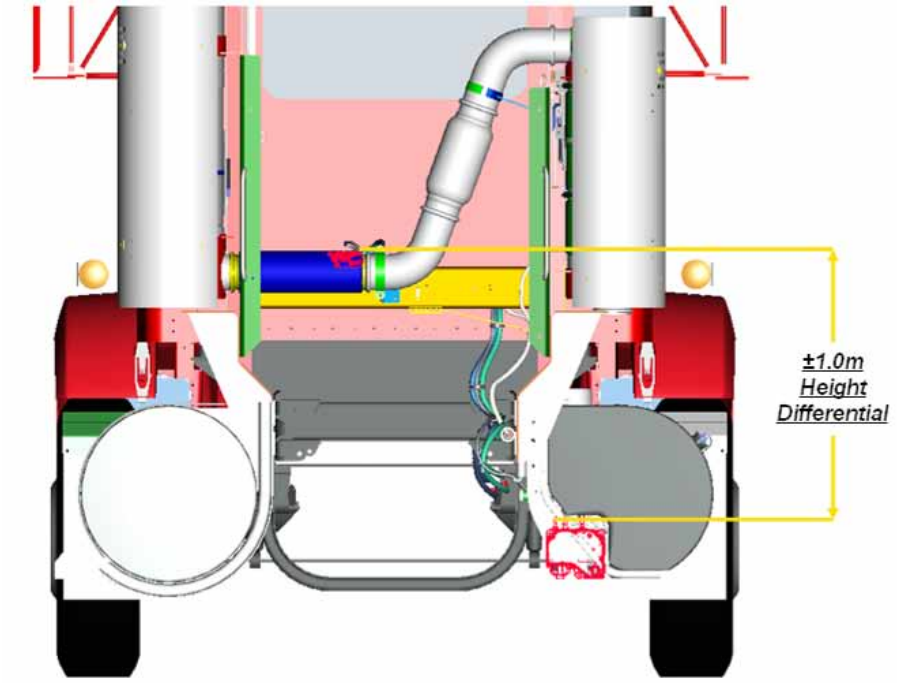

FIGURE 4-6: Vertical Exhaust with Small, Medium, or Large Tanks.

https://truckmanualshub.com/

The height differential between the supply module and dosing module can not exceed one meter. The supply module is integrated into the DEF tank assembly, separation of the module from the tank is not allowed.

When relocating the components the maximum pressure DEF hose length, from Supply module to Dosing Module, is 3 meters (118”).

Right Hand Under DPF and SCR with Clear Back of Cab DEF Tank

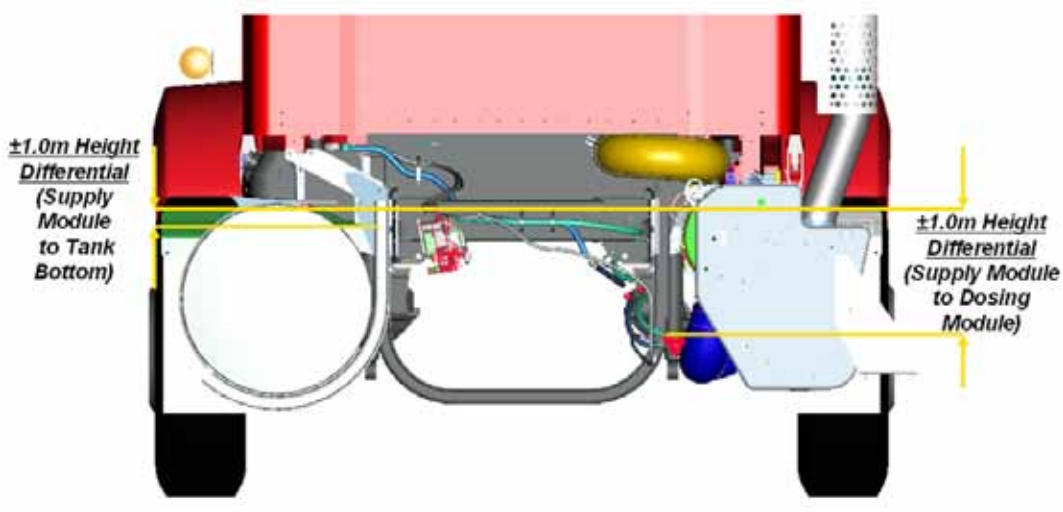

FIGURE 4-7: RH Under Cab Exhaust with Clear Back of Cab Tank.

The installation and design of the Clear Back of Cab (CBOC) tank is highly integrated into the chassis and cooling system. Kenworth does not allow relocation of this tank, only relocation of the supply module.

The height differential between the supply module and dosing module can not exceed one meter. The CBOC tank does not have an integrated supply module. The standard KW installation is a supply module located inside of the frame rail. When relocating either the supply module or the tank, the maximum height differential between the supply module and the bottom of the tank is one meter. The maximum line length is 2 meters between supply module and DEF tank sending unit.

When relocating the components the maximum pressure DEF hose length, from Supply module to Dosing Module, is 3 meters (118”).

DEF Pressure hose must include a “trap” in the routing if Dosing Module is below the highest point of the Supply Module (See Figure 4-9 on page 4-9).

https://truckmanualshub.com/

Vertical DPF and SCR with Clear Back of Cab DEF Tank

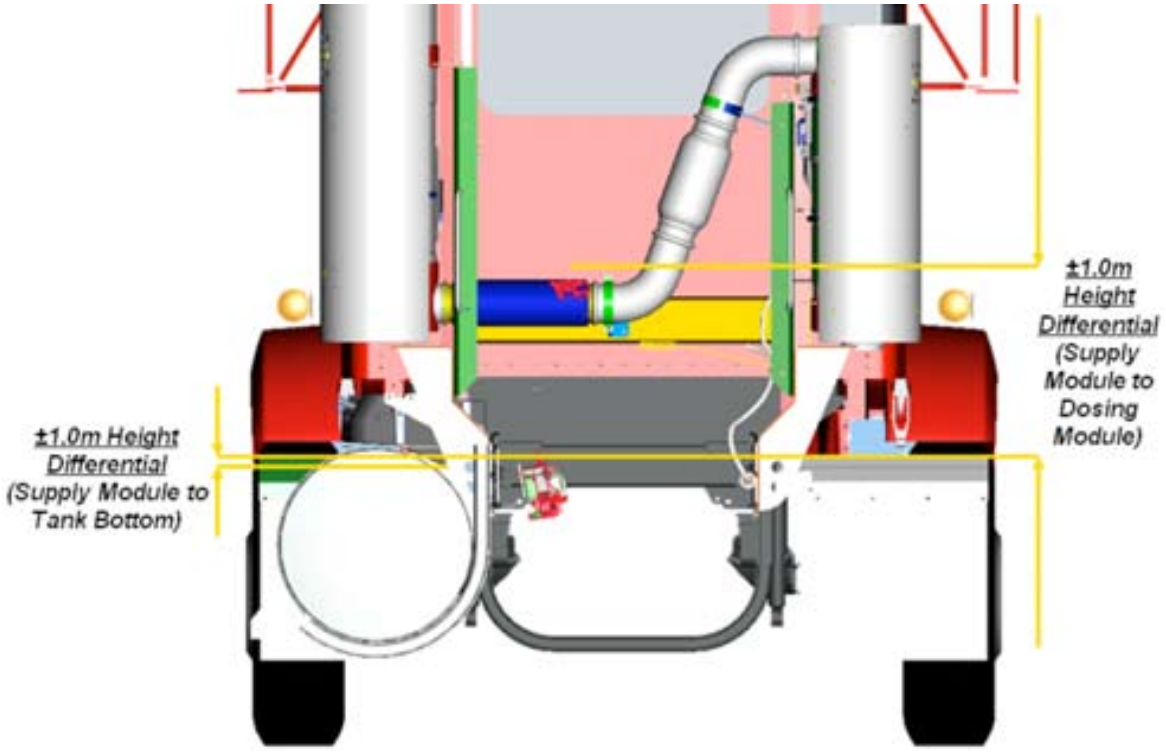

FIGURE 4-8: Vertical with Clear Back of Cab Tank

The installation and design of the Clear Back of Cab (CBOC) tank is highly integrated into the chassis and cooling system. Kenworth does not allow relocation of this tank, only relocation of the supply module.

The height differential between the supply module and dosing module can not exceed one meter. The Clear Back of Cab (CBOC) tank does not have an integrated supply module. The standard KW installation is a supply module located inside of the frame rail. When relocating either the supply module or the tank, the maximum height differential between the supply module and the bottom of the tank is one meter. The maximum line length is 2 meters between supply module and DEF tank sending unit.

When relocating the components the maximum pressure DEF hose length, from Supply module to Dosing Module, is 3 meters (118”).

Routing to the Dosing Module (Injector)

It is important for the function of the dosing module to ensure that the dosing module is not routed downstream of DEF lines or components. If this is unavoidable (for example on RH under exhaust systems) a routing trap must be installed. A minimum of 12” of line length must be routed below the dosing module, in order to catch any leftover DEF when system is purged.

https://truckmanualshub.com/

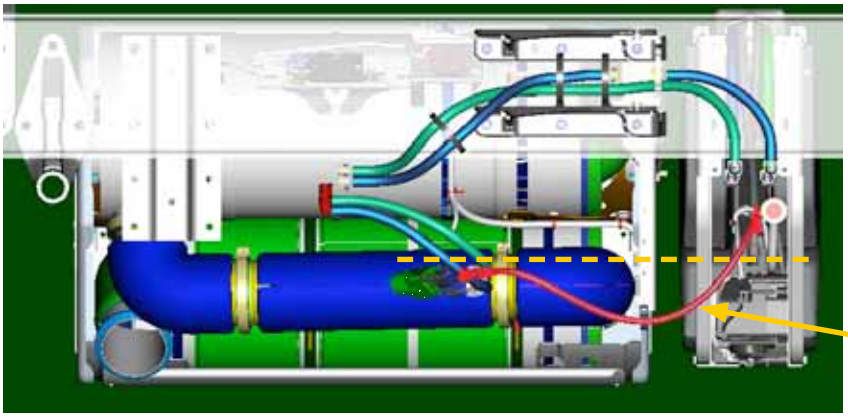

FIGURE 4-9: Routing DEF Lines and DEF Trap

Clear Back of Cab Supply Module

The CBOC Supply Module (or Pump) standard mounting location is inside of the frame rail back of cab. Body builders may need to relocate this component, and should follow the location and length restrictions above. Additionally the mounting and the orientation of the Supply Module must not exceed 45° (from vertical) in two directions as shown in Figure 4-10 below.

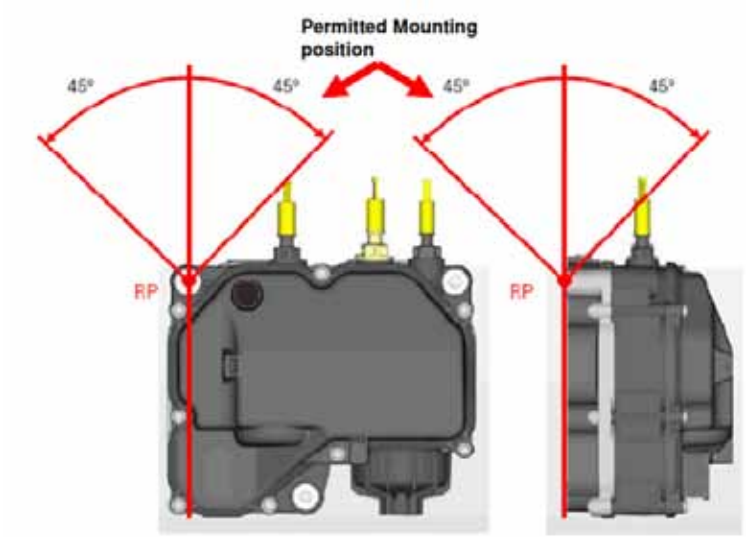

FIGURE 4-10: Supply Module Allowed Clocking Angles

https://truckmanualshub.com/

GENERAL EXHAUST INFORMATION

Kenworth will offer three main DPF and SCR exhaust systems on heavy duty chassis in 2010. A Right Hand Under DPF and SCR system, in which both canisters are located underneath the cab access step. A horizontal system with both the DPF and SCR located horizontally with a cross over pipe in the frame, and an Independent DPF and SCR located vertically back of cab on stanchion brackets.

RH Under DPF and SCR

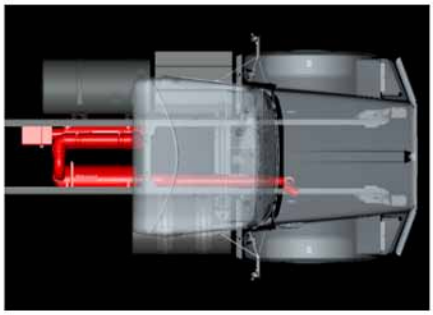

Horizontal DPF and SCR

Independent Back of Cab

The following images depict the typical exhaust routings for each system, and can be used to determine exhaust routing paths for systems you choose. Dimensional information can be found in Section 5 of this manual.

Body Builders must not modify (including altering, substituting, and relocating) the DPF and SCR canisters. The exhaust piping after it exits the SCR canister may be modified, however using smaller diameter piping or piping with numerous bends is not recommend as the backpressure requirements of the system may be exceeded.

https://truckmanualshub.com/

Right Hand Under DPF and SCR on Daycab with Single Side of Cab Tailpipe

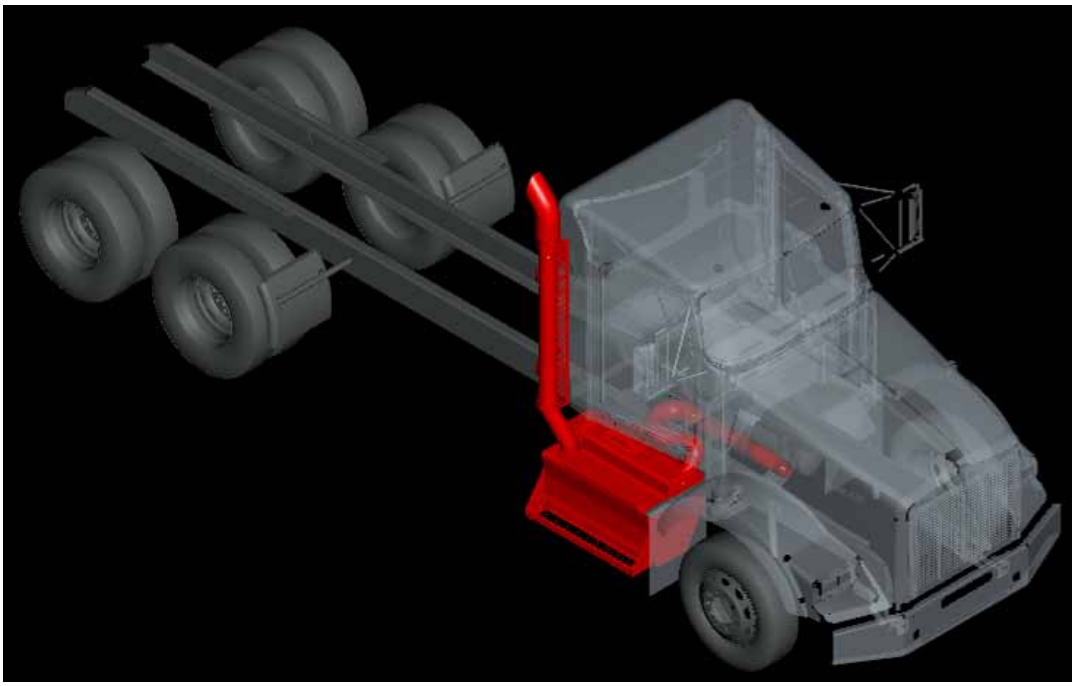

FIGURE 4-11: Isometric View of Right Hand Under DPF and SCR with Single SOC Tailpipe

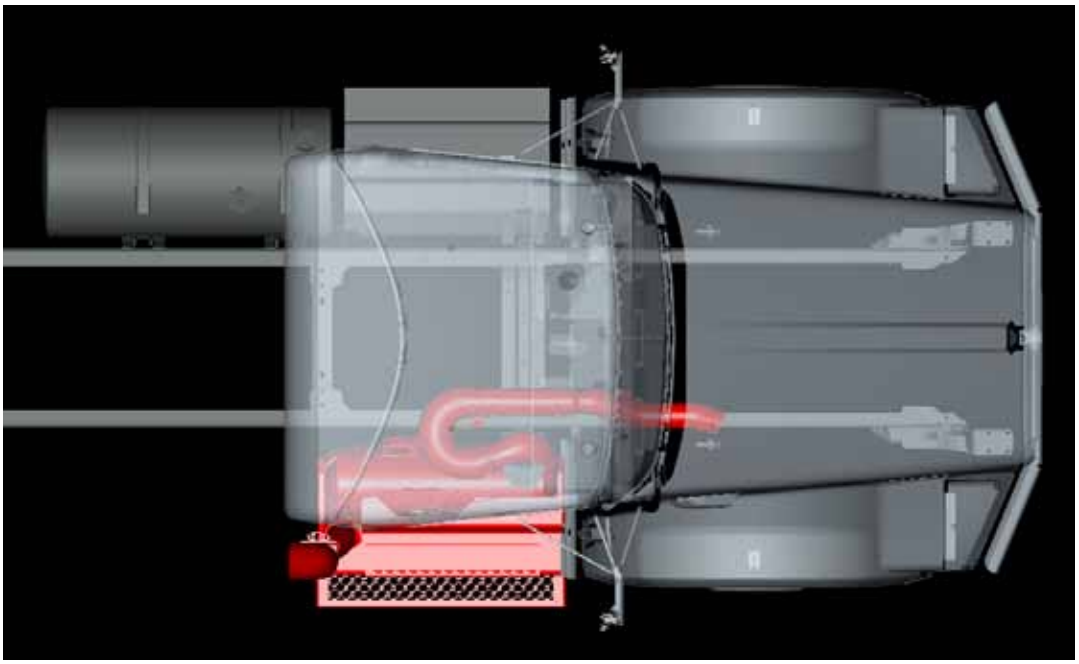

FIGURE 4-12: Top View of Right Hand Under DPF and SCR with Single SOC Tailpipe

https://truckmanualshub.com/

FIGURE 4-13: Right View of Right Hand Under DPF and SCR with Single SOC Tailpipe

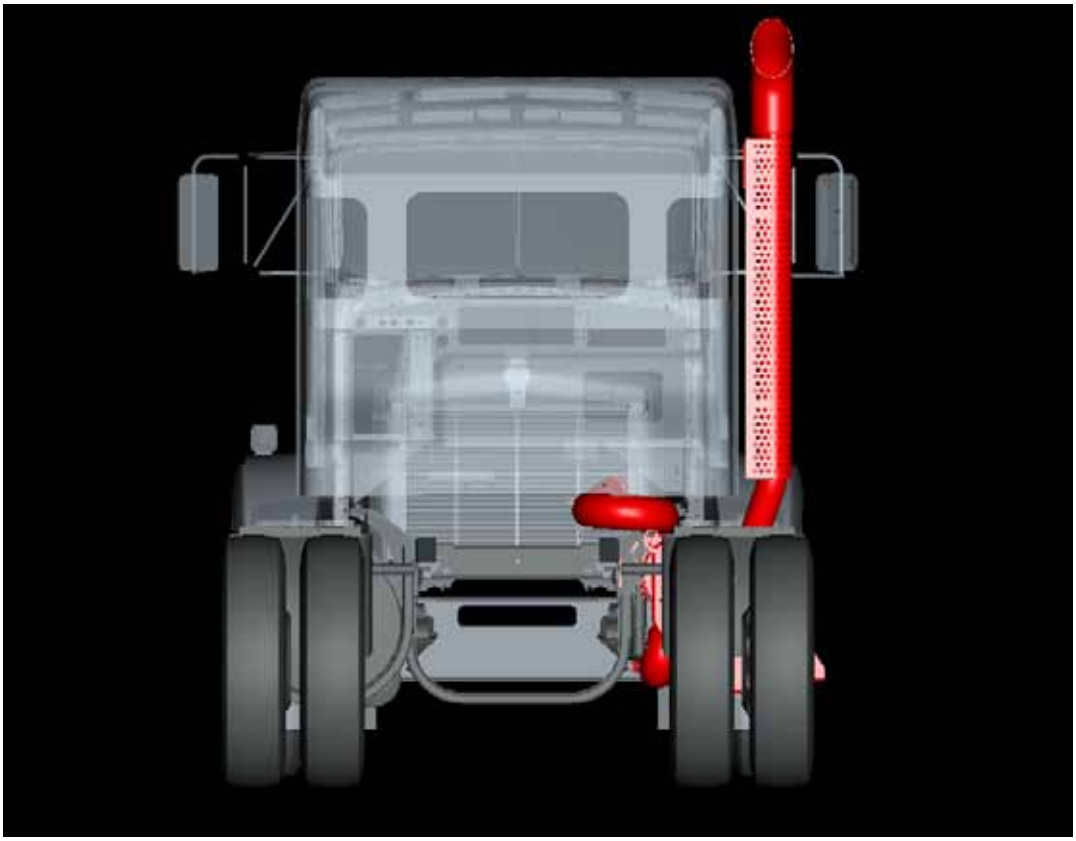

FIGURE 4-14: Back View of Right Hand Under DPF and SCR with Single SOC Tailpipe

https://truckmanualshub.com/

Right Hand Under DPF and SCR on Daycab with Dual Side of Cab Tailpipes

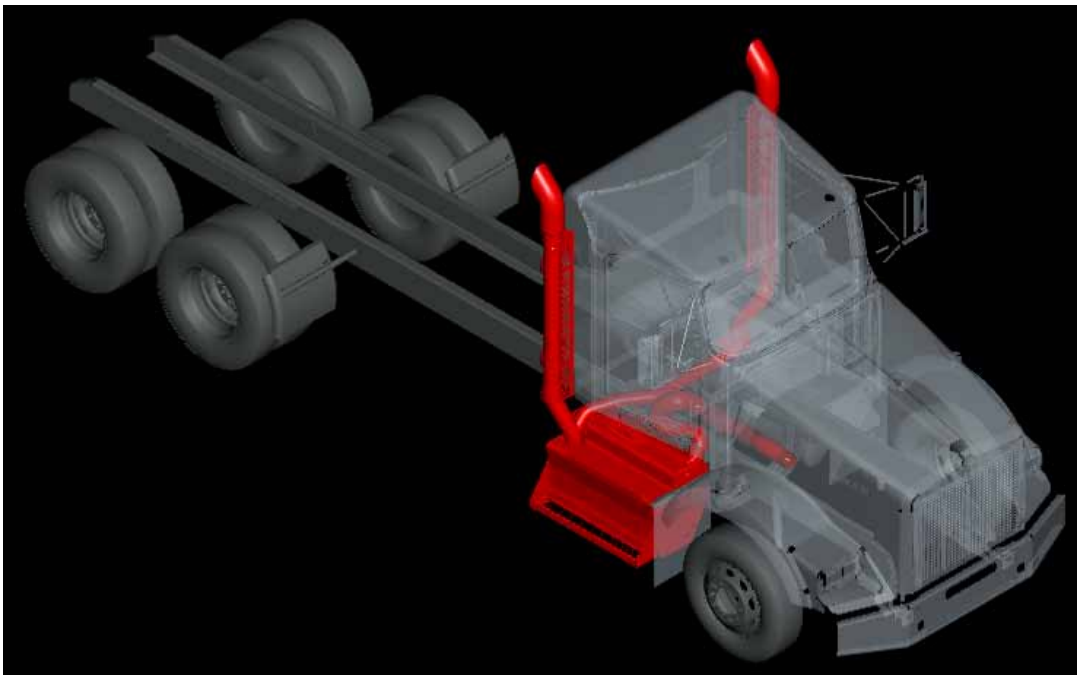

FIGURE 4-15: Isometric View of Right Hand Under DPF and SCR with Dual SOC Tailpipes

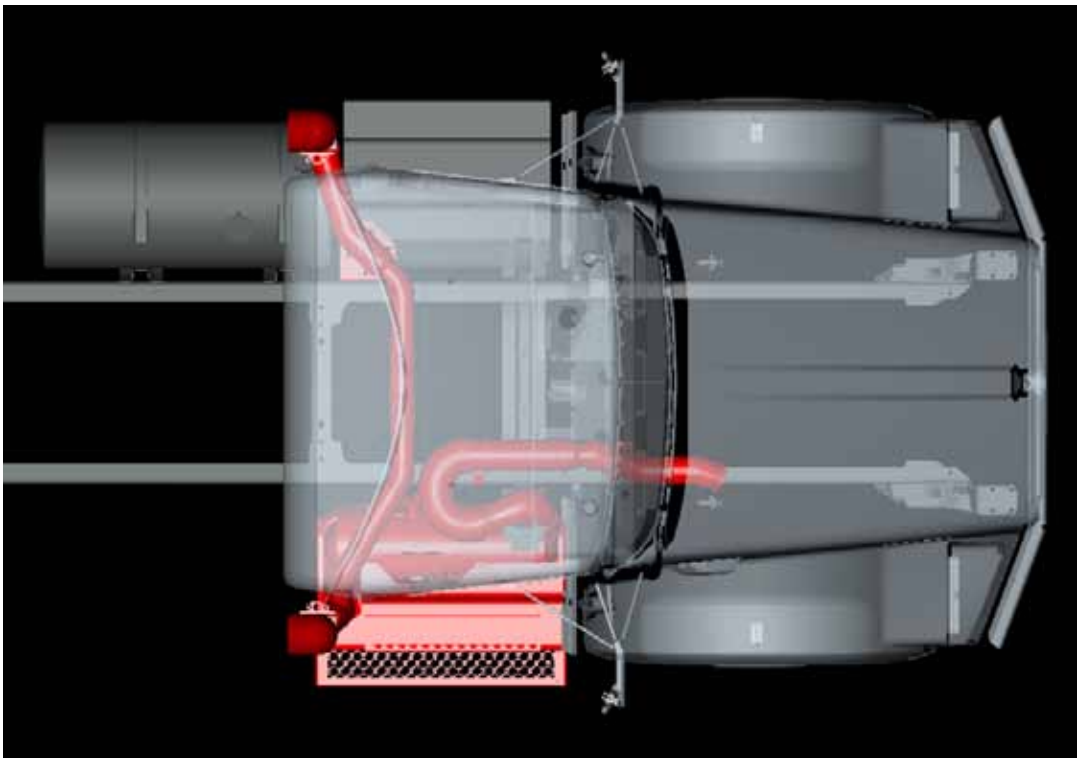

FIGURE 4-16: Top View of Right Hand Under DPF and SCR with Dual SOC Tailpipes

https://truckmanualshub.com/

FIGURE 4-17: Right View of Right Hand Under DPF and SCR with Dual SOC Tailpipes

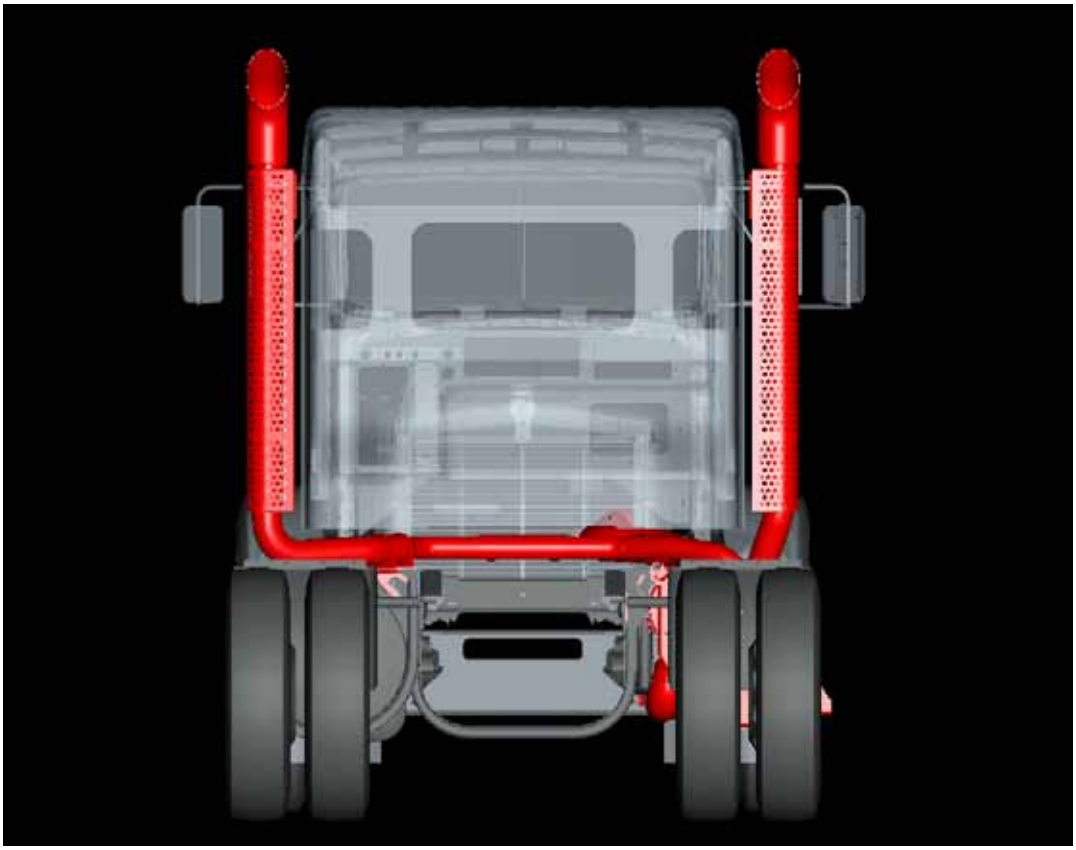

FIGURE 4-18: Back View of Right Hand Under DPF and SCR with Dual SOC Tailpipes

https://truckmanualshub.com/

Right Hand Under DPF and SCR on Aerocabs with Single Side of Cab Tailpipe

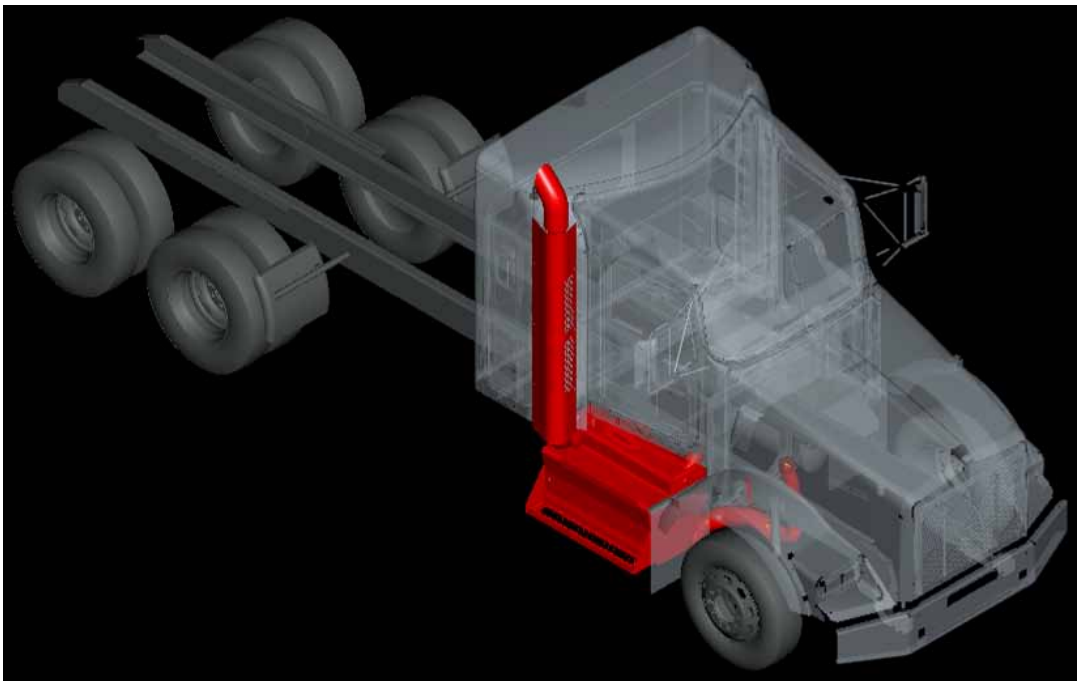

FIGURE 4-19: Isometric View of Right Hand Under DPF and SCR on Aerocab with Single SOC Tailpipe

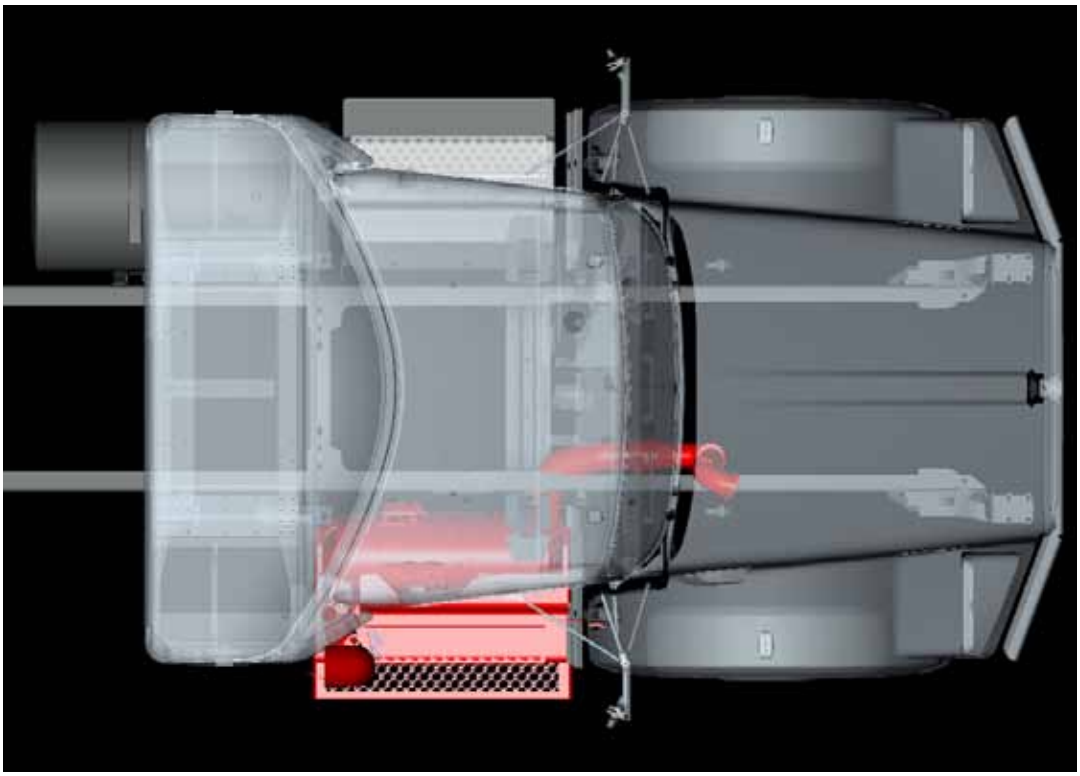

FIGURE 4-20: Top View of Right Hand Under DPF and SCR on Aerocab with Single SOC Tailpipe

https://truckmanualshub.com/

FIGURE 4-21: Right View of Right Hand Under DPF and SCR on Aerocab with Single SOC Tailpipe

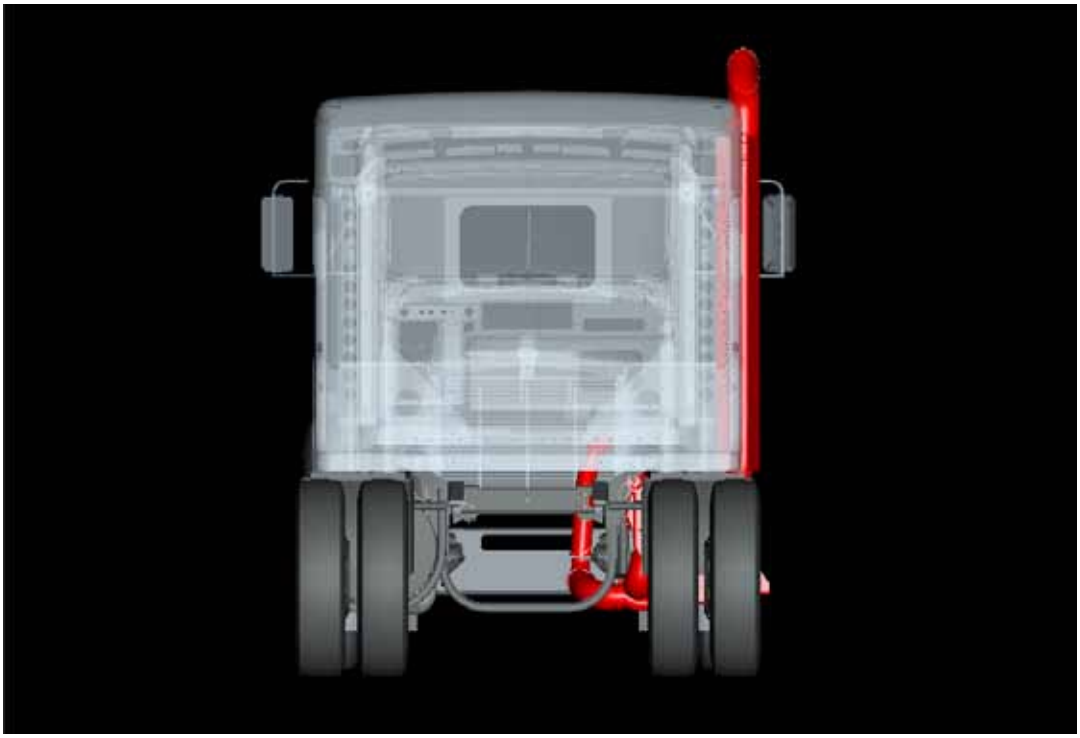

FIGURE 4-22: Back View of Right Hand Under DPF and SCR on Aerocab with Single SOC Tailpipe

https://truckmanualshub.com/

Right Hand Under DPF and SCR on Aerocabs with Dual Side of Cab Tailpipes

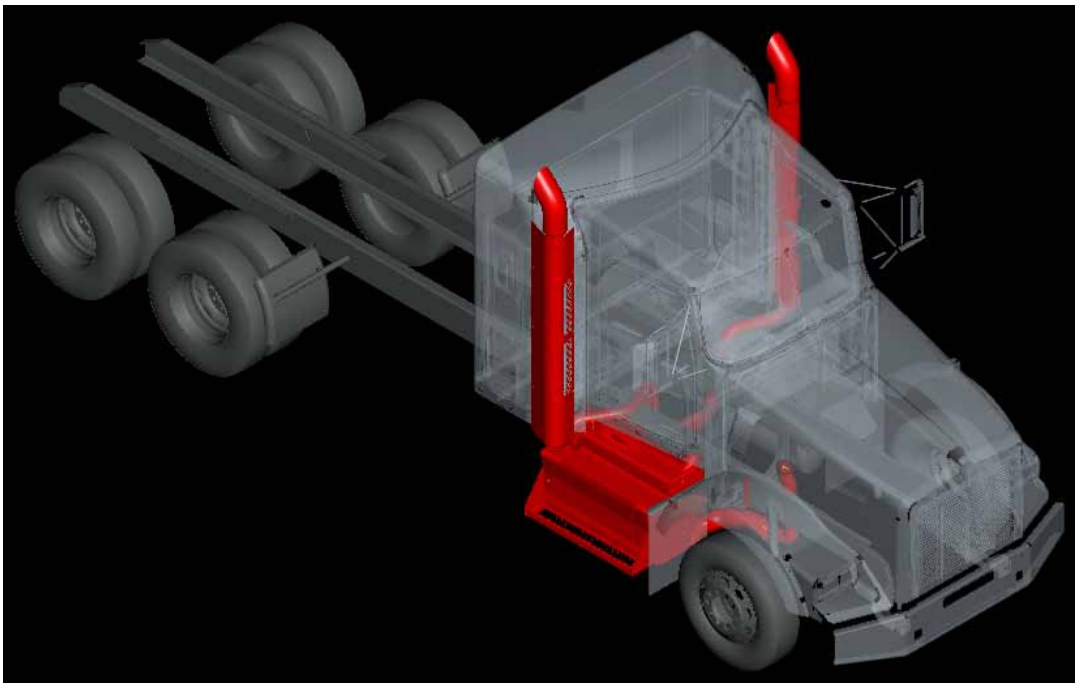

FIGURE 4-23: Isometric View of Right Hand Under DPF and SCR on Aerocab with Dual SOC Tailpipes

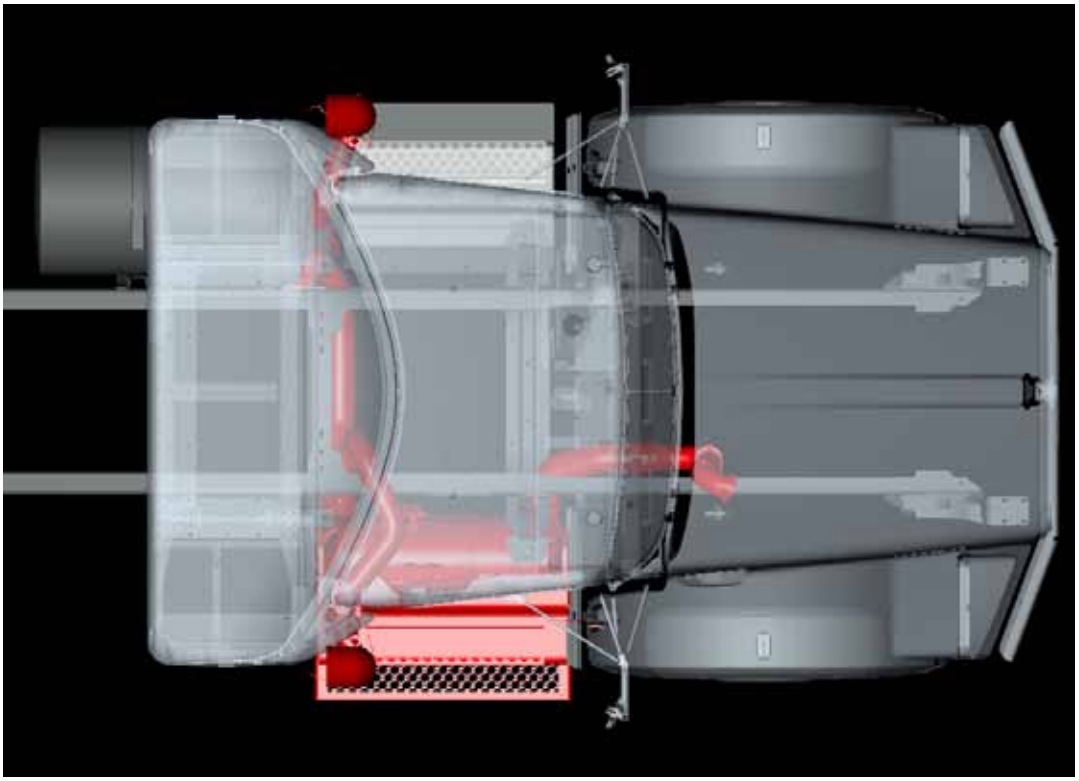

FIGURE 4-24: Top View of Right Hand Under DPF and SCR on Aerocab with Dual SOC Tailpipes

https://truckmanualshub.com/

FIGURE 4-25: Right View of Right Hand Under DPF and SCR on Aerocab with Dual SOC Tailpipes

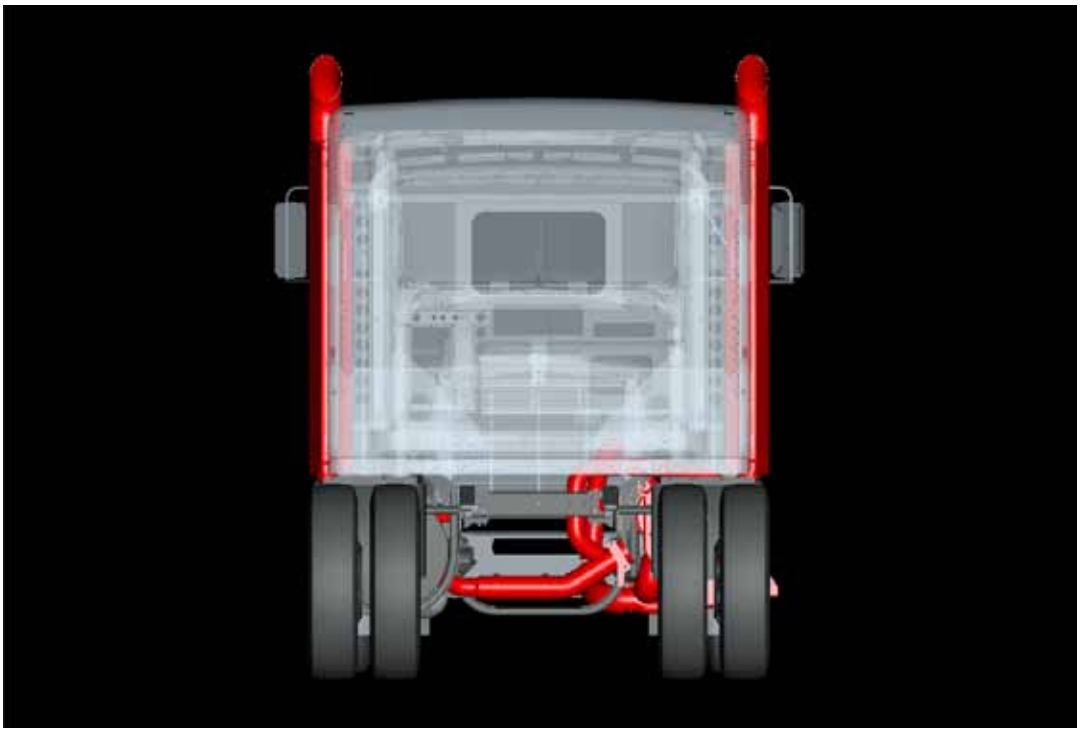

FIGURE 4-26: Back View of Right Hand Under DPF and SCR on Aerocab with Dual SOC Tailpipes

https://truckmanualshub.com/

Horizontal DPF and SCR with Horizontal Tailpipe

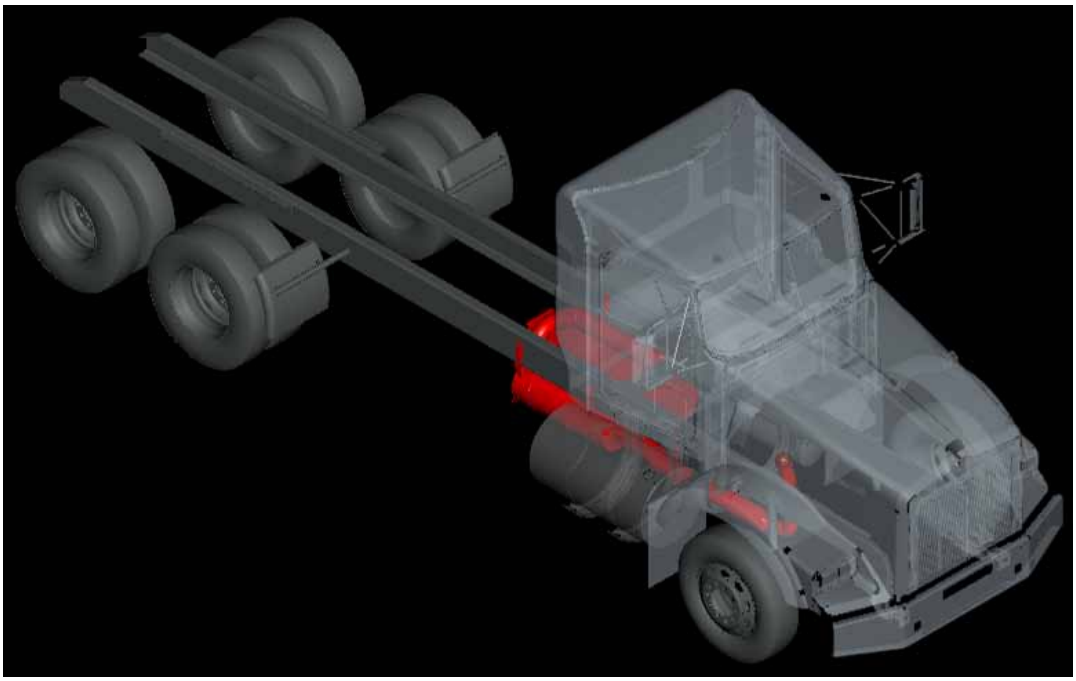

FIGURE 4-27: Isometric View of Horizontal DPF and SCR with Horizontal Tailpipe

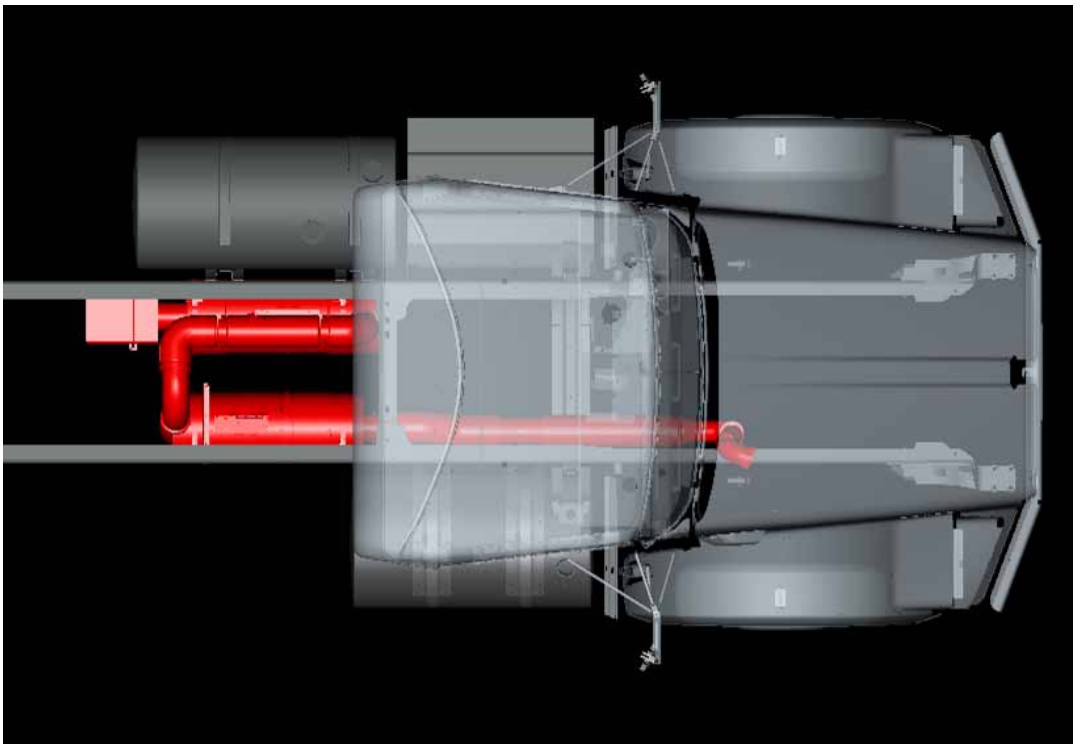

FIGURE 4-28: Top View of Horizontal DPF and SCR with Horizontal Tailpipe

https://truckmanualshub.com/

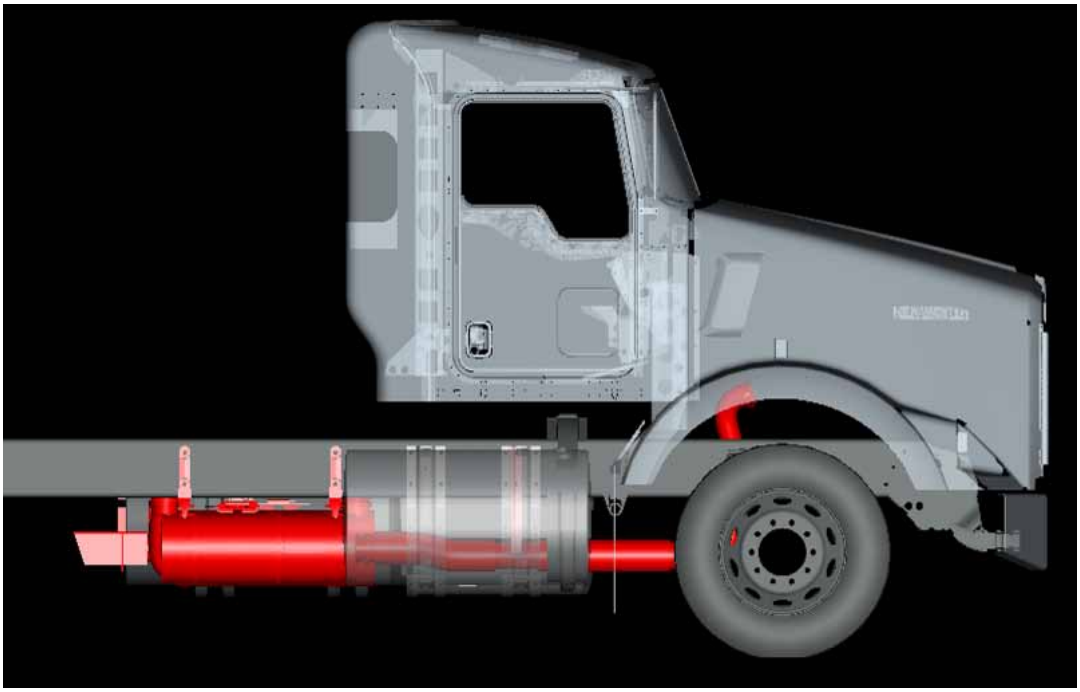

FIGURE 4-29: Right View of Horizontal DPF and SCR with Horizontal Tailpipe

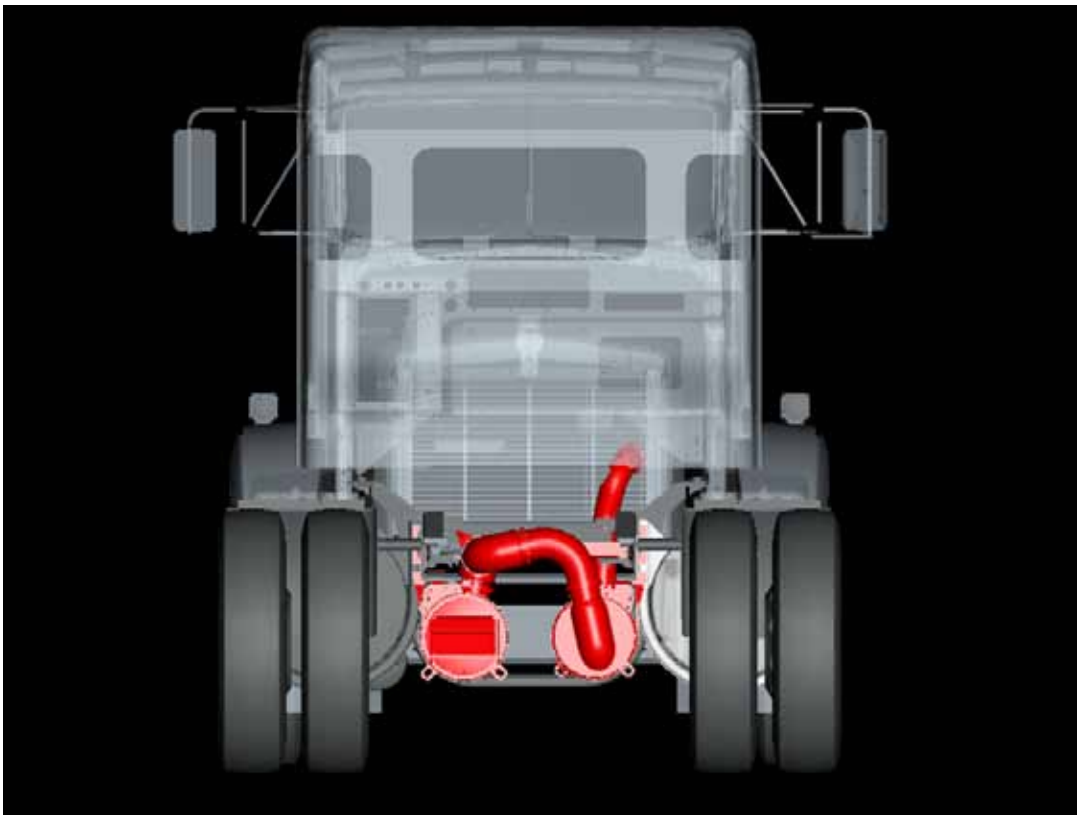

FIGURE 4-30: Back View of Horizontal DPF and SCR with Horizontal Tailpipe

https://truckmanualshub.com/

Vertical Independent DPF and SCR with Horizontal Tailpipe

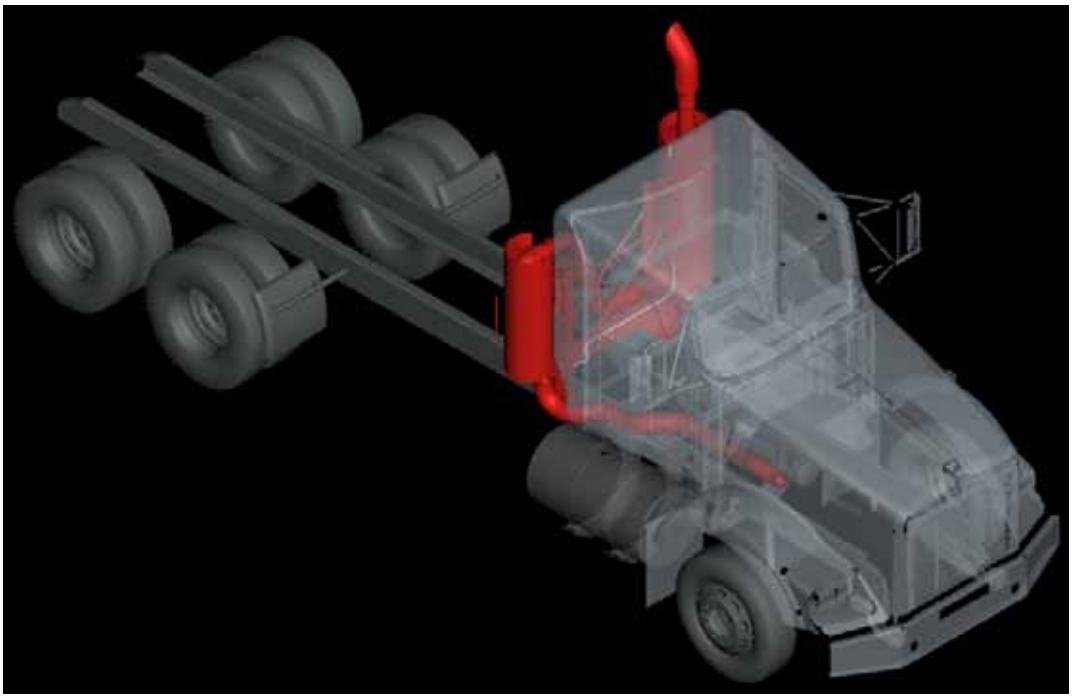

FIGURE 4-31: Isometric View of Vertical DPF and SCR

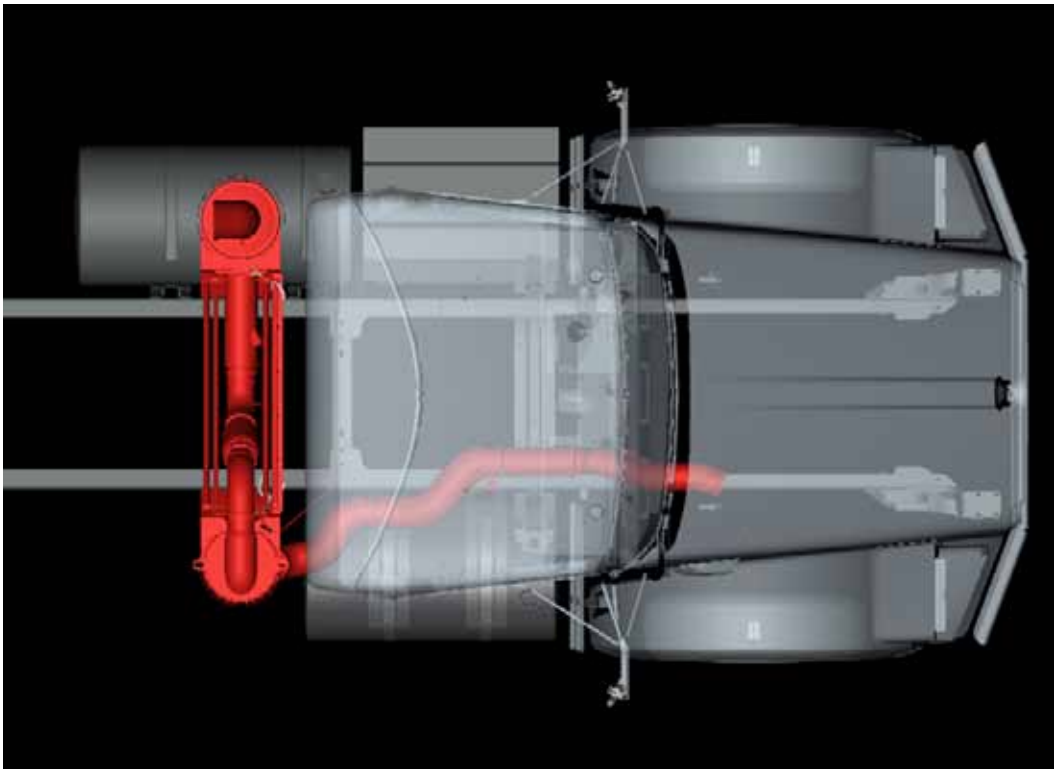

FIGURE 4-32: Top View of Vertical DPF and SCR

https://truckmanualshub.com/

FIGURE 4-33: Right View of Vertical DPF and SCR

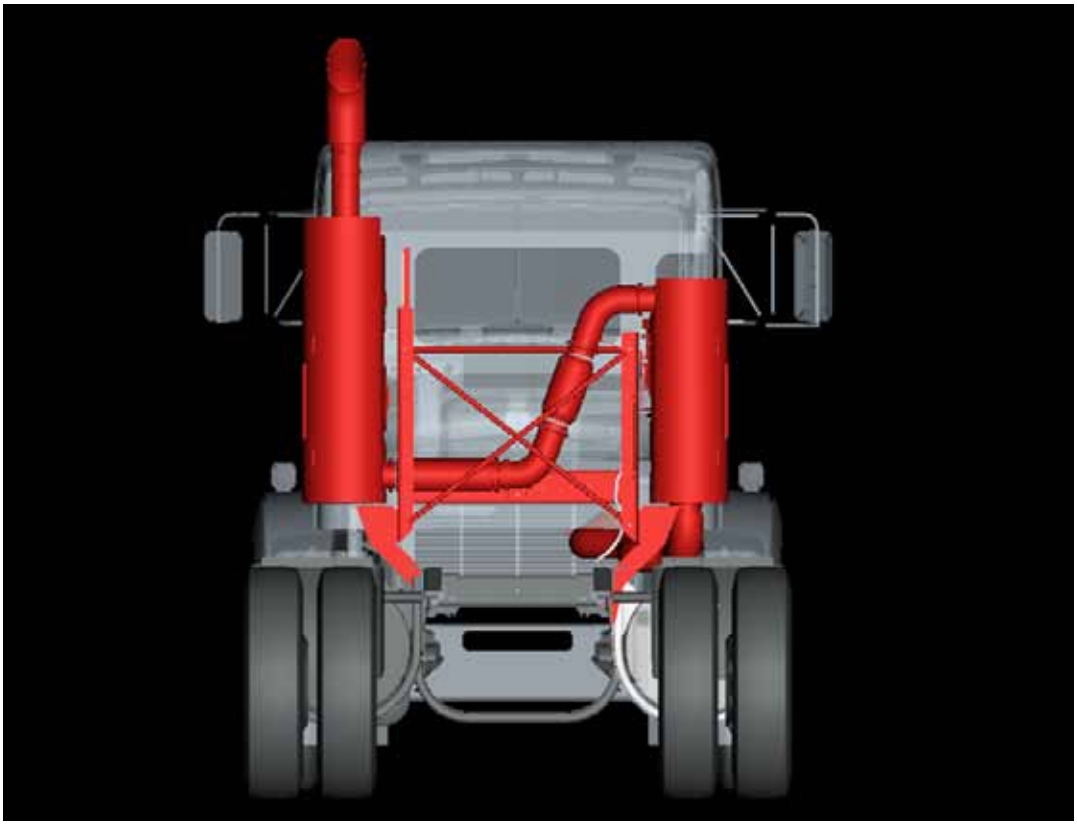

FIGURE 4-34: Back View of Vertical DPF and SCR

https://truckmanualshub.com/

EXHAUST INFORMATION

This section includes information on how to calculate tailpipe heights, and reference information for PTO clearance. Optional equipment is not shown.

Tailpipe Stack Height Calculation

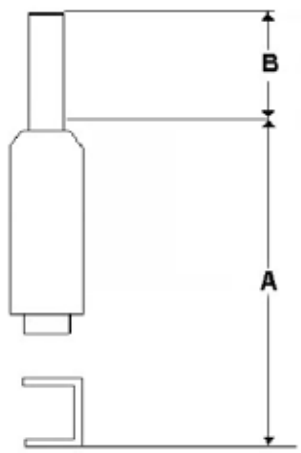

Dimension A		
Tailpipes side of Aerocab, RH under DPF	75.0”	
Tailpipes independent back of sleeper, RH under DPF	75.0”	
DPF mounted independent back of cab or sleeper	Cummins (not ISL) 78.0”	Cummins ISL 75.0”
Tailpipes side of cab mount, DPF RH under	68.5”	
Tailpipes back of cab mount, w/ side extenders, DPF RH under		
Tailpipes back of cab mount, w/o side extenders, DPF RH under	68.0”	

DIMENSION “B” IS THE TAILPIPE LENGTH.

For approximate unladen stack height (12,000 pound springs) use the following frame heights:

Tire Size	Top of Rail
11R24.5	43.5”
11R22.5	42.5”
285/75R24.5	42”
295/75R22.5	41.5”

*Use Prospector frame heights for more accurate results.

Sample: Tailpipe height 13’6”	=	Desired overall stack height	=	162.0”
	(–)	Prospector frame height	(–)	43.5”
	(+)	Frame rail depth	(+)	10.6”
	(–)	Dimension ‘A’ from chart	(–)	68.6”
	=	Tail pipe length	=	60.5”

https://truckmanualshub.com/

This page intentionally left blank.

https://truckmanualshub.com/

FRAME LAYOUTS

The dimensions in the frame layout section are intended to aid in layout of the chassis, and to help determine the best possible combination of fuel tanks, battery boxes, the diesel particulate filter (DPF), SCR canister, and Diesel Exhaust Fluid (DEF) tank. For your application, the layouts focus on the under cab area, with appropriate dimensional information included for pertinent back of cab components. Not all optional equipment is included in this section. Additional components may be placed on the rail behind components shown. The Back of Cab components are shown primarily for reference. For more specific requirements please work with your local Kenworth Dealer. Please read the instructions carefully.

The following dimensions are consistent across the entire section to aid in the comparison of one layout option versus another.

TABLE 5-1.

B = Battery box
D = DEF tank
E = Exhaust
F1 = Fuel Tank RHS
F2 = Fuel Tank LHS
T = Tool Box

The layouts are organized by type, specifically the arrangement of under cab components. The visual index that follows will give you a quick overview of the layouts that are included. Using the index locate the layout that you are interested in, then turn to the specified pages. The charts that follow are then model specific. It is important that the correct chart is used for accurate dimensional information.

Visual Index

Symbol	Description
	RHUC DPF/SCR
	Horizontal DPF/SCR
	Vertical DPF/SCR
	Parallel Battery Box, Standard Length
	In Cab Battery Box

Symbol	Description
	Cantilever Battery Box
	Tool Box
	DEF Tank
	Clear BOC DEF Tank
	Fuel Tank

https://truckmanualshub.com/

COMMON OPTIONAL COMPONENTS

The frame layouts that follow contain the minimum frame requirements to be operational (fuel tanks, battery box, and after-treatment components). All layouts are shown with standard length battery boxes unless otherwise noted. Dimensions for these components have been provided below to help complete the frame layout for chassis with more fuel tanks, additional tool boxes, etc.

TABLE 5-2. Fuel Tank Overall Length (in)

Fuel Tank Overall Length (in)			
	Fuel Tank Diameter		
Gallons	**22”**	**24.5”**	**28.5”**
45	N/A	23.0	N/A
56	35.6	N/A	N/A
60	38.0	30.6	N/A
75	47.3	38.5	28.7
90	N/A	45.5	34.3
100	62.2	50.0	N/A
105	N/A	N/A	38.8
110	N/A	55.0	N/A
120	74.3	60.6	45.8
135	N/A	67.2	50.9
150	N/A	74.5	56.2
177	N/A	N/A	66.1

TABLE 5-3. Battery Box Centerframe Lengths (in)

Battery Box Centerframe Lengths (in)							
	T800	**T8SH**	**W9B**	**W9L**	**W9S**	**T660**	**T700**
Parallel Short	34.8	34.8	40.4	40.4	40.4	35.0	28.7
Parallel Extended	42.0	42.0	50.0	50.0	50.0	N/A	N/A
Parallel BOC	34.8	34.8	34.8	34.8	34.8	34.8	N/A
Cantilever	17.8	17.8	17.8	17.8	17.8	17.8	N/A
Vocational	15.2	15.2	15.2	15.2	15.2	N/A	N/A

https://truckmanualshub.com/

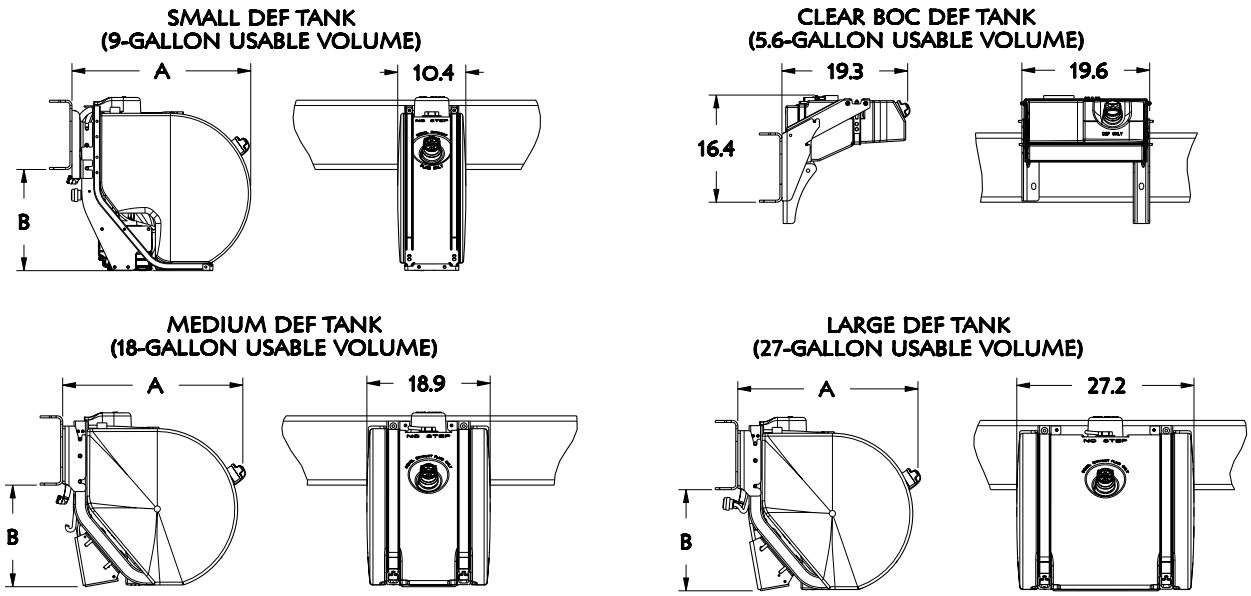

FIGURE 5-1. DEF Tank Dimensions.

TABLE 5-4. DEF Tanks Systems

Description	Usable Volume, Gallons	Fuel Tank Diameter	A	B
Small DEF Tank	9	22”	27.4	15.3
		24.5”	27.4	15.8
		28.5”	28.6	17.2
Medium DEF Tank	18	22”	27.7	15.0
		24.5”	27.7	15.5
		28.5”	29.5	17.0
Large DEF Tank	27	22”	27.7	15.0
		24.5”	27.7	15.5
		28.5”	29.5	17.0

Acronyms Index

Throughout the Frame Layout section you will see these acronyms. They are defined here to help you decode the layouts.

BOC	Back Of Cab
BOS	Back Of Sleeper
CBOC	Clear Back Of Cab
DEF	Diesel Exhaust Fluid
DSOAC	Dual Side Of AeroCab

DSOC	Dual Side Of Cab
LHUC	Left Hand Under Cab
RHUC	Right Hand Under Cab
SOAC	Side Of AeroCab
SOC	Side Of Cab

https://truckmanualshub.com/

FRAME LAYOUT INDEX

Day Cab Chassis Layout Options

D1 is used with RHUC DPF/SCR, LHUC fuel tank, RH BOC DEF tank, and LH BOC cantilever battery box. Charts located on pages 5-9 through 5-13.

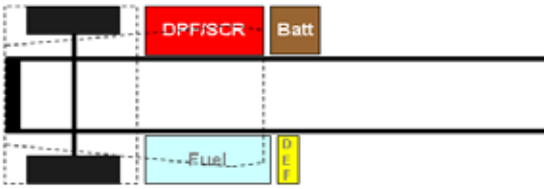

D2 is used with RHUC DPF/SCR, LHUC fuel tank, RH BOC cantilever battery box, and LH BOC DEF tank. Charts located on pages 5-14 through 5-18.

D3 is used with RHUC DPF/SCR, LHUC battery box, RH BOC DEF tank, and LH BOC fuel tank. Charts located on pages 5-19 through 5-23.

D4 is used with RHUC DPF/SCR, LHUC battery box, LH BOC DEF tank, and RH BOC fuel tank. Charts located on pages 5-24 through 5-28.

D5 is used with RHUC DPF/SCR, LHUC fuel tank, RH BOC DEF tank, and in cab battery box. Charts located on pages 5-29 through 5-33.

https://truckmanualshub.com/

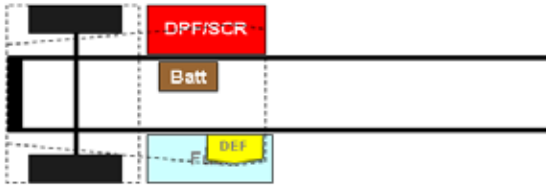

D6 is used with RHUC DPF/SCR, LHUC fuel tank, Clear BOC DEF tank, and in cab battery box. Charts located on pages 5-34 through 5-38.

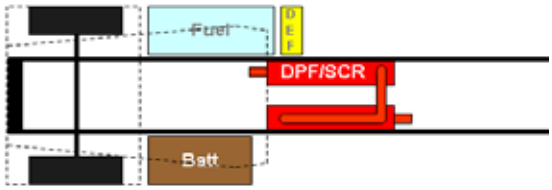

D7 is used with horizontal DPF/SCR, RHUC fuel tank, LHUC battery box, and RH BOC DEF tank. Charts located on pages 5-39 through 5-40.

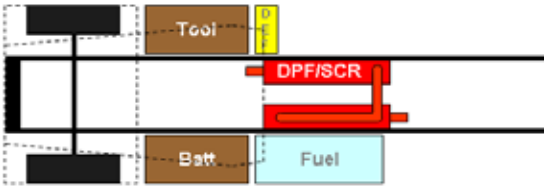

D8 is used with horizontal DPF/SCR, RHUC tool box, LHUC battery box, RH BOC DEF tank, and LH BOC fuel tank. Charts located on pages 5-41 through 5-42.

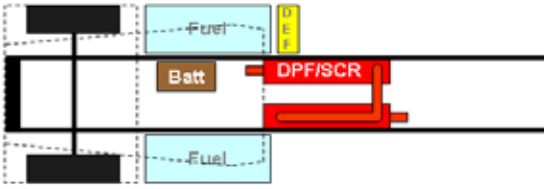

D9 is used with horizontal DPF/SCR, RHUC & LHUC fuel tanks, RH BOC DEF tank, and in cab battery box. Charts located on pages 5-43 through 5-44.

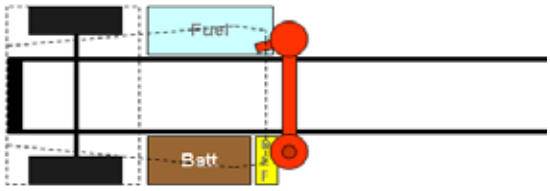

D10 is used with Vertical-Vertical DPF/SCR, LH vertical tailpipe, RHUC fuel tank, LHUC battery box, and LH BOC DEF tank. Charts located on pages 5-45 through 5-49.

https://truckmanualshub.com/

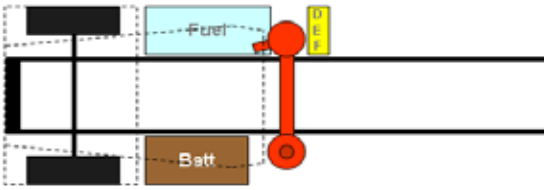

D11 is used with Vertical-Vertical DPF/SCR, LH vertical tailpipe, RHUC fuel tank, LHUC battery box, and RH BOC DEF tank. Charts located on pages 5-50 through 5-54.

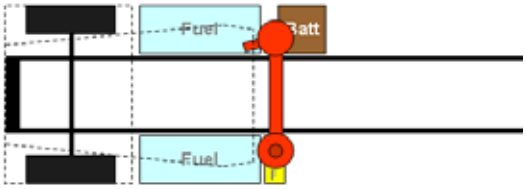

D12 is used with Vertical-Vertical DPF/SCR, LH vertical tailpipe, LHUC & RHUC fuel tanks, RH BOC cantilever battery box, and LH BOC DEF tank. Charts located on pages 5-55 through 5-59.

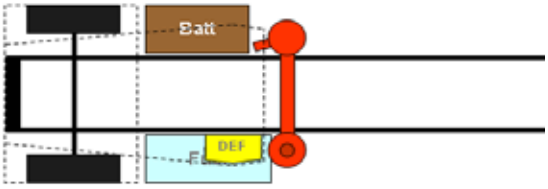

D13 is used with Vertical-Vertical DPF/SCR, LH vertical tailpipe, LHUC fuel tank, RHUC battery box, and Clear BOC DEF tank. Charts located on pages 5-60 through 5-64.

https://truckmanualshub.com/

Sleeper Chassis Layout Options

S1 is used with 38” AeroCab or 42” Modular sleeper with RHUC DPF/SCR, LHUC fuel tank, RH BOC DEF tank, and LH BOC cantilever battery box. Charts located on pages 5-65 through 5-72.

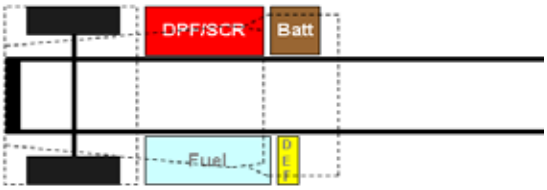

S2 is used with 38” AeroCab or 42” Modular sleeper with RHUC DPF/SCR, LHUC fuel tank, LH BOC DEF tank, and RH BOC cantilever battery box. Charts located on pages 5-73 through 5-80.

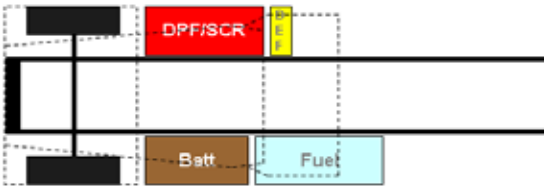

S3 is used with 38” AeroCab or 42” Modular sleeper with RHUC DPF/SCR, LHUC battery box, RH BOC DEF tank, and LH BOC fuel tank. Charts located on pages 5-81 through 5-88.

S4 is used with 38” AeroCab or 42” Modular sleeper with RHUC DPF/SCR, LHUC battery box, LH BOC DEF tank, and RH BOC fuel tank. Charts located on pages 5-89 through 5-96.

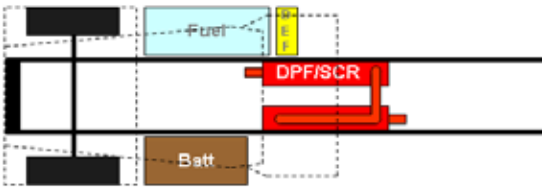

S5 is used with 38” AeroCab or 42” Modular sleeper with horizontal DPF/SCR, RHUC fuel tank, LHUC battery box, and RH BOC DEF tank. Charts located on pages 5-97 through 5-100.

https://truckmanualshub.com/

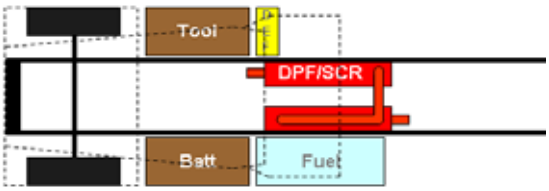

S6 is used with 38” AeroCab or 42” Modular sleeper with horizontal DPF/SCR, RHUC tool box, LHUC battery box, RH BOC DEF tank, and LH BOC fuel tank. Charts located on pages 5-101 through 5-104.

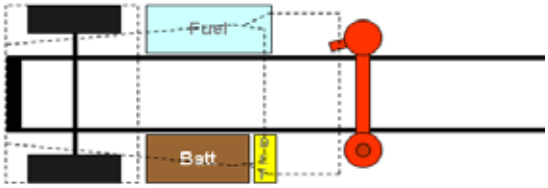

S7 is used with 38” AeroCab or 42” Modular sleeper with Vertical-Vertical DPF/SCR, LH vertical tailpipe, RHUC fuel tank, LHUC battery box, and LH BOC DEF tank. Charts located on pages 5-105 through 5-108.

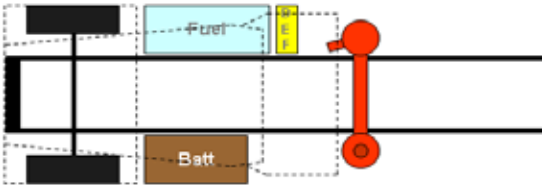

S8 is used with 38” AeroCab or 42” Modular sleeper with Vertical-Vertical DPF/SCR, LH vertical tailpipe, RHUC fuel tank, LHUC battery box, and RH BOC DEF tank. Charts located on pages 5-109 through 5-112.

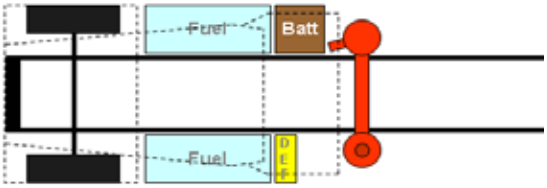

S9 is used with 38” AeroCab or 42” Modular sleeper with Vertical-Vertical DPF/SCR, LH vertical tailpipe, RHUC & LHUC fuel tanks, LH BOC DEF tank and RH BOC cantilever battery box. Charts located on pages 5-113 through 5-116.

https://truckmanualshub.com/

D1A—Use with the following models: T800SH

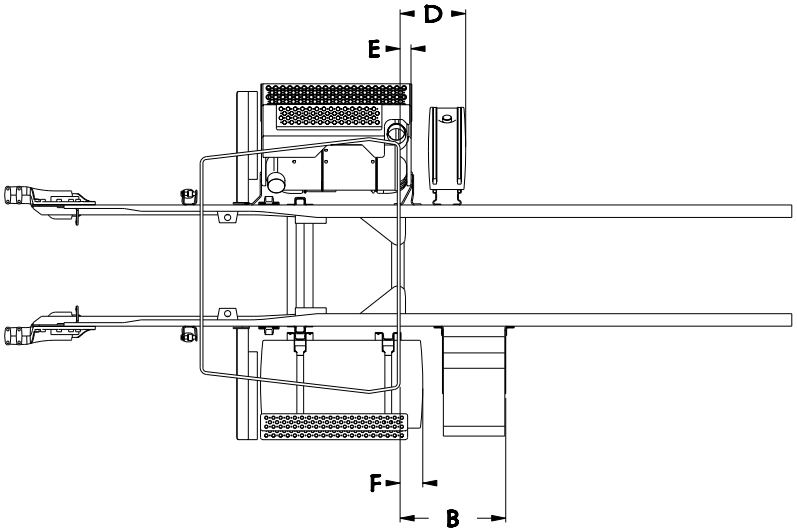

Dimension E (BOC to DPF/SCR)* = 3.1in

TABLE 5-5.

T8SH							
Fuel Tank Size			Dimension F BOC to Fuel Tank, Daycab* (in)	Dimension B BOC to Battery Box, Daycab* (in)	Dimension D BOC to DEF Tank, Daycab* (in)		
					DEF Tank Size		
Diameter	Gallons	Length (in)			Small	Medium	Large
22” Diameter Tank	56	35.5	-3.7	17.0	18.4	28.2	32.9
	60	38.0	-1.2	19.5			
	75	47.3	8.1	28.8			
	100	62.2	23.0	43.7			
	120	74.2	35.0	55.7			
24.5” Diameter Tank	60	30.5	-8.7	12.0			
	75	38.5	-0.7	20.0			
	90	45.5	6.3	27.0			
	100	50.0	10.8	31.5			
	110	54.9	15.7	36.4			
	120	60.5	21.3	42.0			
	135	67.2	28.0	48.7			
	150	74.5	35.3	56.0			
28.5” Diameter Tank	75	28.7	-10.5	10.2			
	90	34.2	-5.0	15.7			
	105	38.8	-0.4	20.3			
	120	45.8	6.6	27.3			
	135	50.8	11.6	32.3			
	150	56.2	17.0	37.7			
	177	66.1	26.9	47.6			

*Subtract 5.7 inches for the extended Daycab.
NOTE: DIMENSION “B” IS CALCULATED USING A CANTILEVER SIZED BATTERY BOX. OPTIONAL BOXES WILL AFFECT THIS DIMENSION.

https://truckmanualshub.com/

D1B—Use with the following models: T800B and C500B

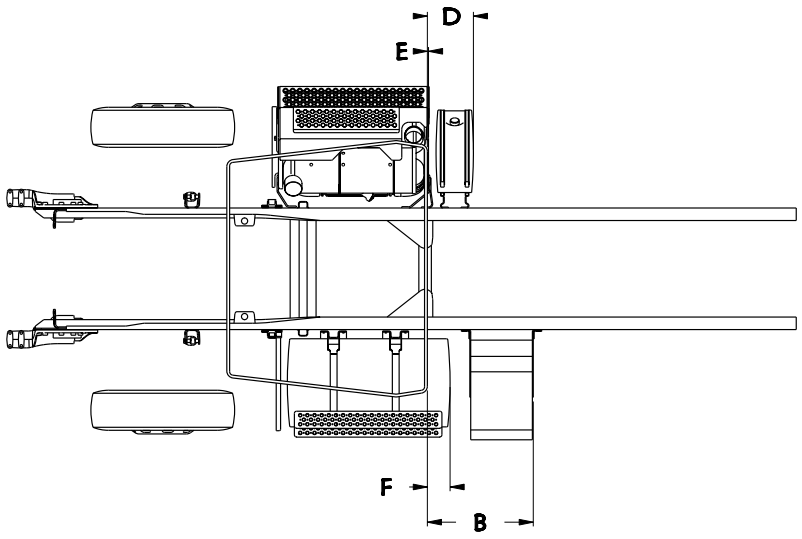

Dimension E (BOC to DPF/SCR)* = 0.3in

TABLE 5-6.

T8B & C5B							
Fuel Tank Size			Dimension F BOC to Fuel Tank, Daycab* (in)	Dimension B BOC to Battery Box, Daycab* (in)	Dimension D BOC to DEF Tank, Daycab* (in)		
					DEF Tank Size		
Diameter	Gallons	Length (in)			Small	Medium	Large
22” Diameter Tank	56	35.5	-3.5	17.2	12.9	22.7	30.7
	60	38.0	-1.1	19.6			
	75	47.3	8.2	28.9			
	100	62.2	23.1	43.8			
	120	74.2	35.1	55.8			
24.5” Diameter Tank	60	30.5	-8.6	12.1			
	75	38.5	-0.6	20.1			
	90	45.5	6.4	27.1			
	100	50.0	10.9	31.6			
	110	54.9	15.8	36.5			
	120	60.5	21.4	42.1			
	135	67.2	28.1	48.8			
	150	74.5	35.4	56.1			
28.5” Diameter Tank	75	28.7	-10.4	10.3			
	90	34.2	-4.9	15.8			
	105	38.8	-0.3	20.4			
	120	45.8	6.7	27.4			
	135	50.8	11.7	32.4			
	150	56.2	17.1	37.8			
	177	66.1	27.0	47.7			

*Subtract 5.7 inches for the extended Daycab.
NOTE: DIMENSION “B” IS CALCULATED USING A CANTILEVER SIZED BATTERY BOX. OPTIONAL BOXES WILL AFFECT THIS DIMENSION.

https://truckmanualshub.com/

D1C—Use with the following models: W900S

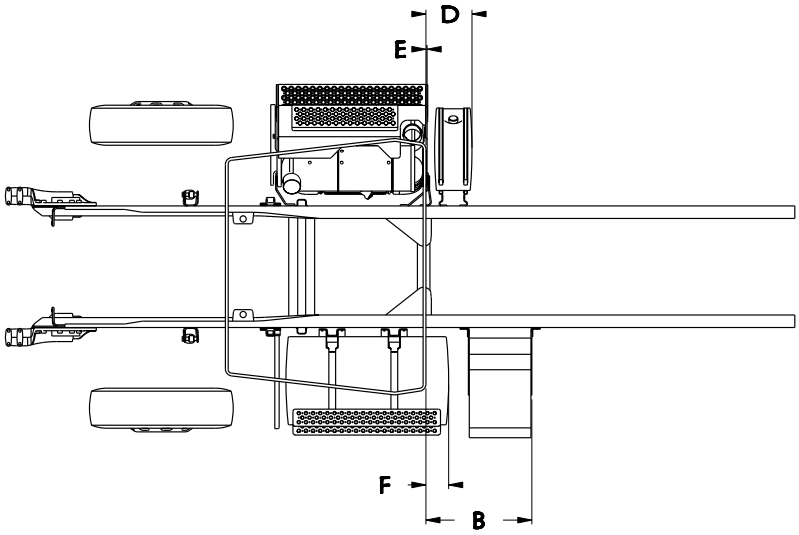

Dimension E (BOC to DPF/SCR)* = 0.3in

TABLE 5-7.

W9S							
Fuel Tank Size			Dimension F BOC to Fuel Tank, Daycab* (in)	Dimension B BOC to Battery Box, Daycab* (in)	Dimension D BOC to DEF Tank, Daycab* (in)		
					DEF Tank Size		
Diameter	Gallons	Length (in)			Small	Medium	Large
22” Diameter Tank	56	35.5	-14.8	5.9	12.9	22.6	30.7
	60	38.0	-12.3	8.4			
	75	47.3	-3.0	17.7			
	100	62.2	11.9	32.6			
	120	74.2	23.9	44.6			
24.5” Diameter Tank	75	38.5	-11.8	8.9			
	90	45.5	-4.8	15.9			
	100	50.0	-0.3	20.4			
	110	54.9	4.6	25.3			
	120	60.5	10.2	30.9			
	135	67.2	16.9	37.6			
	150	74.5	24.2	44.9			
28.5” Diameter Tank	90	34.2	-16.1	4.6			
	105	38.8	-11.5	9.2			
	120	45.8	-4.5	16.2			
	135	50.8	0.5	21.2			
	150	56.2	5.9	26.6			
	177	66.1	15.8	36.5			

*Subtract 5.7 inches for the extended Daycab.

NOTE: DIMENSION “B” IS CALCULATED USING A CANTILEVER SIZED BATTERY BOX. OPTIONAL BOXES WILL AFFECT THIS DIMENSION.

https://truckmanualshub.com/

D1D—Use with the following models: W900B

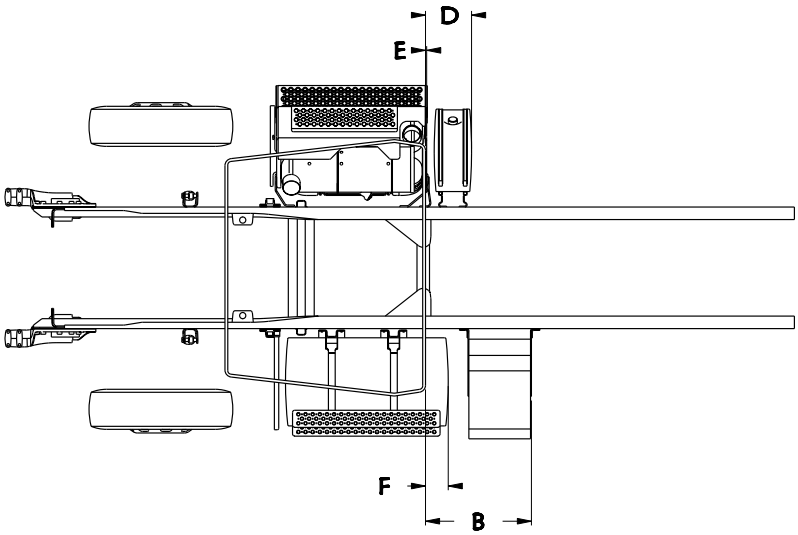

Dimension E (BOC to DPF/SCR)* = 0.3in

TABLE 5-8.

W9B							
Fuel Tank Size			Dimension F BOC to Fuel Tank, Daycab* (in)	Dimension B BOC to Battery Box, Daycab* (in)	Dimension D BOC to DEF Tank, Daycab* (in)		
					DEF Tank Size		
Diameter	Gallons	Length (in)			Small	Medium	Large
22” Diameter Tank	56	35.5	-14.9	5.8	12.9	22.6	30.7
	60	38.0	-17.7	3.0			
	75	47.3	-8.4	12.3			
	100	62.2	6.5	27.2			
	120	74.2	18.5	39.2			
24.5” Diameter Tank	75	38.5	-11.9	8.8			
	90	45.5	-10.2	10.5			
	100	50.0	-5.7	15.0			
	110	54.9	-0.8	19.9			
	120	60.5	4.8	25.5			
	135	67.2	11.5	32.2			
	150	74.5	18.8	39.5			
28.5” Diameter Tank	90	34.2	-15.4	5.3			
	105	38.8	-11.6	9.1			
	120	45.8	-9.9	10.8			
	135	50.8	-2.2	18.5			
	150	56.2	0.5	21.2			
	177	66.1	12.8	33.5			

*Subtract 5.7 inches for the extended Daycab.

NOTE: DIMENSION “B” IS CALCULATED USING A CANTILEVER SIZED BATTERY BOX. OPTIONAL BOXES WILL AFFECT THIS DIMENSION.

https://truckmanualshub.com/

D1E—Use with the following models: W900L

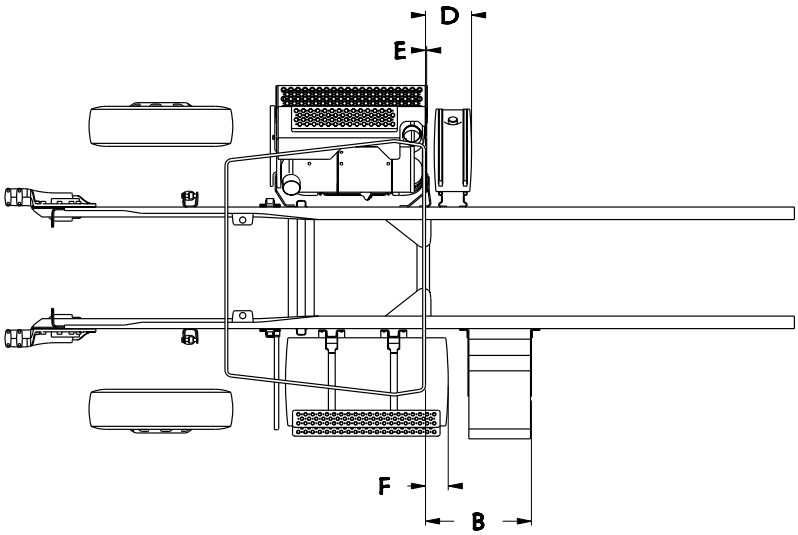

Dimension E (BOC to DPF/SCR)* = 0.3in

TABLE 5-9.

W9L							
Fuel Tank Size			Dimension F BOC to Fuel Tank, Daycab* (in)	Dimension B BOC to Battery Box, Daycab* (in)	Dimension D BOC to DEF Tank, Daycab* (in)		
					DEF Tank Size		
Diameter	Gallons	Length (in)			Small	Medium	Large
22” Diameter Tank	56	35.5	-13.9	6.8	12.9	22.6	30.7
	60	38.0	-11.4	9.3			
	75	47.3	-2.1	18.6			
	100	62.2	12.8	33.5			
	120	74.2	24.8	45.5			
24.5” Diameter Tank	75	38.5	-10.9	9.8			
	90	45.5	-3.9	16.8			
	100	50.0	0.6	21.3			
	110	54.9	5.5	26.2			
	120	60.5	11.1	31.8			
	135	67.2	17.8	38.5			
	150	74.5	25.1	45.8			
28.5” Diameter Tank	90	34.2	-15.2	5.5			
	105	38.8	-10.6	10.1			
	120	45.8	-3.6	17.1			
	135	50.8	1.4	22.1			
	150	56.2	6.8	27.5			
	177	66.1	16.7	37.4			

*Subtract 5.7 inches for the extended Daycab.

NOTE: DIMENSION “B” IS CALCULATED USING A CANTILEVER SIZED BATTERY BOX. OPTIONAL BOXES WILL AFFECT THIS DIMENSION.

https://truckmanualshub.com/

D2A—Use with the following models: T800SH

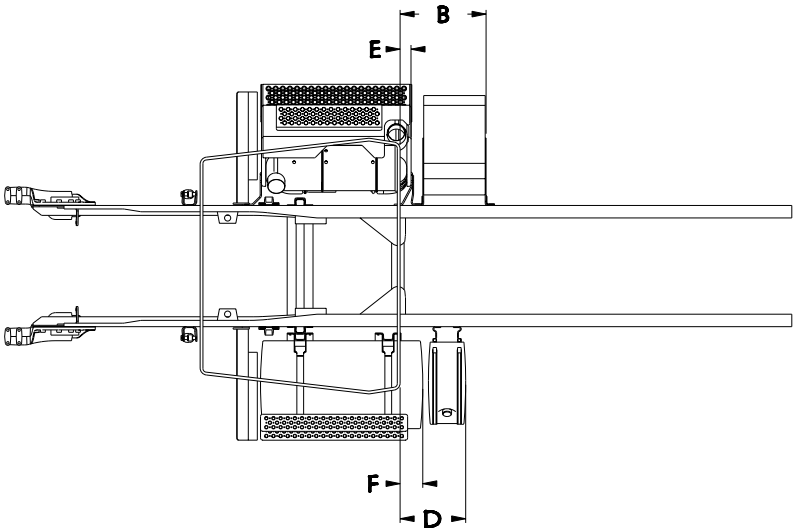

Dimension E (BOC to DPF/SCR)* = 3.1in
Dimension B (BOC to Cantilever Battery Box)* = 24.5in

TABLE 5-10.

T8SH						
Fuel Tank Size			Dimension F BOC to Fuel Tank, Daycab* (in)	Dimension D BOC to DEF Tank* (in)		
				DEF Tank Size		
Diameter	Gallons	Length (in)		Small	Medium	Large
22” Diameter Tank	56	35.5	-3.7	7.4	17.1	25.2
	60	38.0	-1.2	10.1	19.3	27.4
	75	47.3	8.1	23.9	28.2	36.2
	100	62.2	23.0	34.9	44.7	52.8
	120	74.2	35.0	46.0	55.7	63.8
24.5” Diameter Tank	60	30.5	-8.7	7.4	17.1	19.7
	75	38.5	-0.7	12.9	19.3	27.4
	90	45.5	6.3	18.4	28.2	36.2
	100	50.0	10.8	23.9	30.9	39.0
	110	54.9	15.7	29.4	36.4	44.5
	120	60.5	21.3	34.9	42.0	50.0
	135	67.2	28.0	40.5	50.2	55.5
	150	74.5	35.3	48.7	55.7	63.8
28.5” Diameter Tank	75	28.7	-10.5	1.9	11.6	19.7
	90	34.2	-5.0	7.4	17.1	25.2
	105	38.8	-0.4	12.9	22.7	30.7
	120	45.8	6.6	18.4	28.2	36.2
	135	50.8	11.6	23.9	30.9	39.0
	150	56.2	17.0	29.4	36.4	44.5
	177	66.1	26.9	-	47.5	55.5

*Subtract 5.7 inches for the extended Daycab.
NOTE: DIMENSION “B” IS CALCULATED USING A CANTILEVER SIZED BATTERY BOX. OPTIONAL BOXES WILL AFFECT THIS DIMENSION.

https://truckmanualshub.com/

D2B—Use with the following models: T800B and C500B

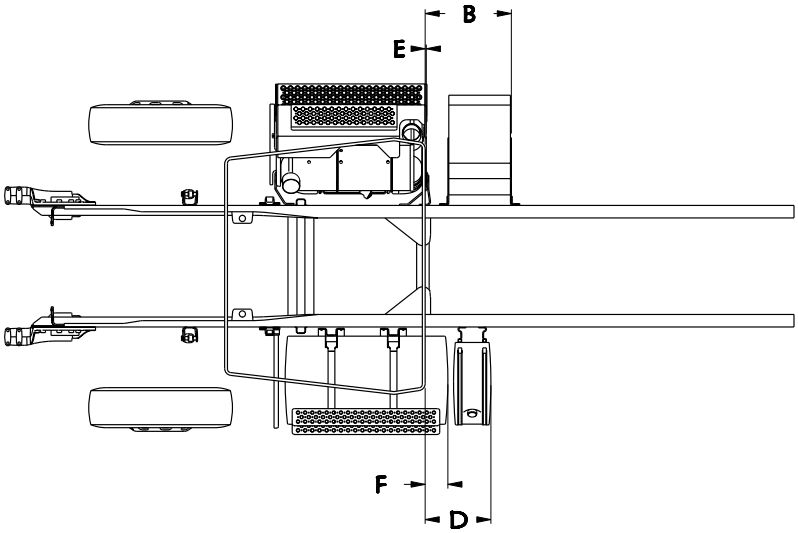

Dimension E (BOC to DPF/SCR)* = 0.3in
Dimension B (BOC to Cantilever Battery Box)* = 21.7in

TABLE 5-11.

T8B & C5B						
Fuel Tank Size			Dimension F BOC to Fuel Tank, Daycab* (in)	Dimension D BOC to DEF Tank* (in)		
				DEF Tank Size		
Diameter	Gallons	Length (in)		Small	Medium	Large
22” Diameter Tank	56	35.5	-3.5	7.4	17.1	25.2
	60	38.0	-1.1	10.1	19.3	27.4
	75	47.3	8.2	23.9	28.2	36.2
	100	62.2	23.1	34.9	44.7	52.8
	120	74.2	35.1	46.0	55.7	63.8
24.5” Diameter Tank	60	30.5	-8.6	7.4	17.1	19.7
	75	38.5	-0.6	12.9	19.3	27.4
	90	45.5	6.4	18.4	28.2	36.2
	100	50.0	10.9	23.9	30.9	39.0
	110	54.9	15.8	29.4	39.2	44.5
	120	60.5	21.4	34.9	44.7	50.0
	135	67.2	28.1	40.4	50.2	55.5
	150	74.5	35.4	48.7	55.7	63.8
28.5” Diameter Tank	75	28.7	-10.4	1.9	11.6	19.7
	90	34.2	-4.9	7.4	17.1	25.2
	105	38.8	-0.3	12.9	22.7	30.7
	120	45.8	6.7	18.4	28.2	36.2
	135	50.8	11.7	23.9	30.9	39.0
	150	56.2	17.1	29.4	36.4	44.5
	177	66.1	27.0	-	47.5	55.5

*Subtract 5.7 inches for the extended Daycab.
NOTE: DIMENSION “B” IS CALCULATED USING A CANTILEVER SIZED BATTERY BOX. OPTIONAL BOXES WILL AFFECT THIS DIMENSION.

https://truckmanualshub.com/

D2C—Use with the following models: W900S

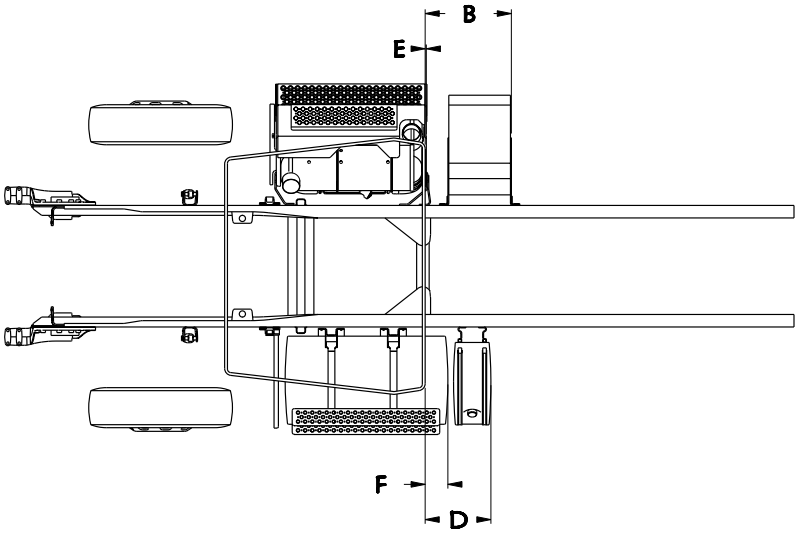

Dimension E (BOC to DPF/SCR)* = 0.3in
Dimension B (BOC to Cantilever Battery Box)* = 21.7in

TABLE 5-12.

W9S						
Fuel Tank Size			Dimension F BOC to Fuel Tank, Daycab* (in)	Dimension D BOC to DEF Tank* (in)		
				DEF Tank Size		
Diameter	Gallons	Length (in)		Small	Medium	Large
22” Diameter Tank	56	35.5	-14.8	1.9	6.1	14.2
	60	38.0	-12.3	1.9	11.6	19.7
	75	47.3	-3.0	12.9	17.1	25.2
	100	62.2	11.9	23.9	33.7	41.7
	120	74.2	23.9	34.9	44.7	52.8
24.5” Diameter Tank	75	38.5	-11.8	1.9	11.6	19.7
	90	45.5	-4.8	7.4	17.1	25.2
	100	50.0	-0.3	12.9	19.3	27.4
	110	54.9	4.6	18.4	24.8	32.9
	120	60.5	10.2	23.9	30.3	38.4
	135	67.2	16.9	29.4	39.2	47.3
	150	74.5	24.2	34.9	44.7	52.8
28.5” Diameter Tank	90	34.2	-16.1	-3.7	6.1	14.2
	105	38.8	-11.5	1.9	11.6	19.7
	120	45.8	-4.5	7.4	17.1	25.2
	135	50.8	0.5	12.9	22.6	30.7
	150	56.2	5.9	18.4	28.2	36.2
	177	66.1	15.8	-	35.8	43.9

*Subtract 5.7 inches for the extended Daycab.
NOTE: DIMENSION “B” IS CALCULATED USING A CANTILEVER SIZED BATTERY BOX. OPTIONAL BOXES WILL AFFECT THIS DIMENSION.

https://truckmanualshub.com/

D2D—Use with the following models: W900B

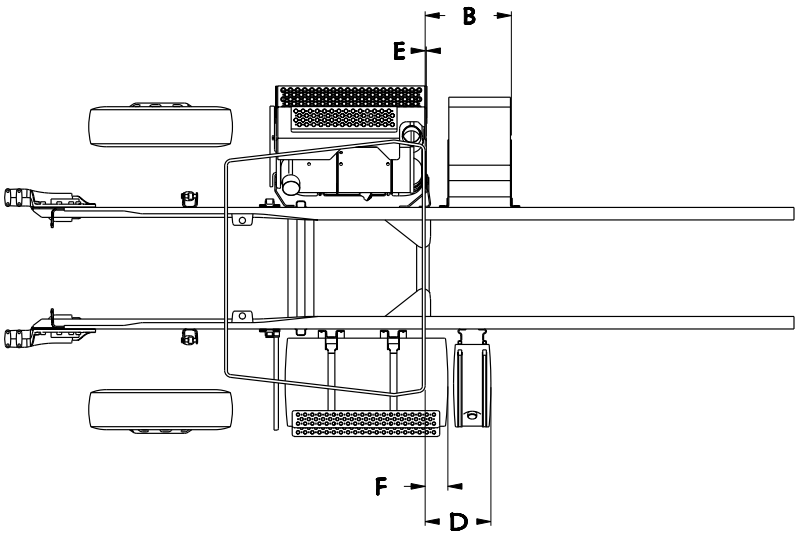

Dimension E (BOC to DPF/SCR)* = 0.3in
Dimension B (BOC to Cantilever Battery Box)* = 21.7in

TABLE 5-13.

W9B						
Fuel Tank Size			Dimension F BOC to Fuel Tank, Daycab* (in)	Dimension D BOC to DEF Tank* (in)		
				DEF Tank Size		
Diameter	Gallons	Length (in)		Small	Medium	Large
22” Diameter Tank	56	35.5	-14.9	-3.7	6.1	14.2
	60	38.0	-17.7	-3.7	11.6	19.7
	75	47.3	-8.4	7.4	11.6	19.7
	100	62.2	6.5	18.4	28.1	36.2
	120	74.2	18.5	29.4	39.2	47.2
24.5” Diameter Tank	75	38.5	-11.9	-3.7	11.6	19.7
	90	45.5	-10.2	1.9	11.6	19.7
	100	50.0	-5.7	7.4	17.1	25.2
	110	54.9	-0.8	12.9	19.3	27.4
	120	60.5	4.8	18.4	24.8	32.9
	135	67.2	11.5	23.9	33.7	41.7
	150	74.5	18.8	29.4	39.2	47.2
28.5” Diameter Tank	90	34.2	-15.4	-3.7	6.1	14.2
	105	38.8	-11.6	1.9	11.6	19.7
	120	45.8	-9.9	1.9	11.6	19.7
	135	50.8	-2.2	12.9	17.1	25.2
	150	56.2	0.5	10.1	22.6	30.7
	177	66.1	12.8	23.9	30.3	38.4

*Subtract 5.7 inches for the extended Daycab.
NOTE: DIMENSION “B” IS CALCULATED USING A CANTILEVER SIZED BATTERY BOX. OPTIONAL BOXES WILL AFFECT THIS DIMENSION.

https://truckmanualshub.com/

D2E—Use with the following models: W900L

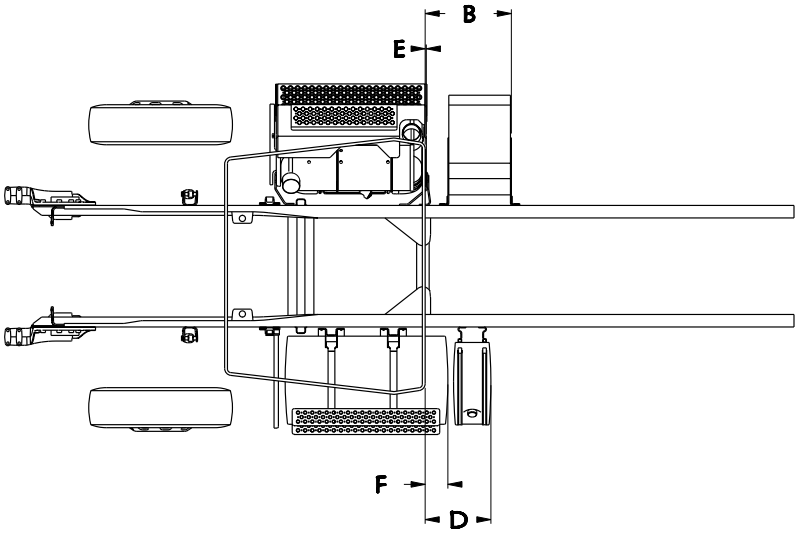

Dimension E (BOC to DPF/SCR)* = 0.3in
Dimension B (BOC to Cantilever Battery Box)* = 21.7in

TABLE 5-14.

W9L						
Fuel Tank Size			Dimension F BOC to Fuel Tank, Daycab* (in)	Dimension D BOC to DEF Tank* (in)		
				DEF Tank Size		
Diameter	Gallons	Length (in)		Small	Medium	Large
22” Diameter Tank	56	35.5	-13.9	1.9	6.1	14.2
	60	38.0	-11.4	1.9	11.6	19.7
	75	47.3	-2.1	7.4	17.1	25.2
	100	62.2	12.8	23.9	33.7	41.7
	120	74.2	24.8	37.7	44.7	52.8
24.5” Diameter Tank	75	38.5	-10.9	1.9	11.6	19.7
	90	45.5	-3.9	7.4	17.1	25.2
	100	50.0	0.6	12.9	22.6	30.7
	110	54.9	5.5	18.4	24.8	32.9
	120	60.5	11.1	23.9	30.3	38.4
	135	67.2	17.8	29.4	39.2	47.2
	150	74.5	25.1	37.7	44.7	52.8
28.5” Diameter Tank	90	34.2	-15.2	1.9	6.1	14.2
	105	38.8	-10.6	7.4	11.6	19.7
	120	45.8	-3.6	12.9	17.1	25.2
	135	50.8	1.4	18.4	22.6	30.7
	150	56.2	6.8	29.4	28.1	36.2
	177	66.1	16.7	-	39.2	47.2

*Subtract 5.7 inches for the extended Daycab.
NOTE: DIMENSION “B” IS CALCULATED USING A CANTILEVER SIZED BATTERY BOX. OPTIONAL BOXES WILL AFFECT THIS DIMENSION.

https://truckmanualshub.com/

D3A—Use with the following models: T800SH

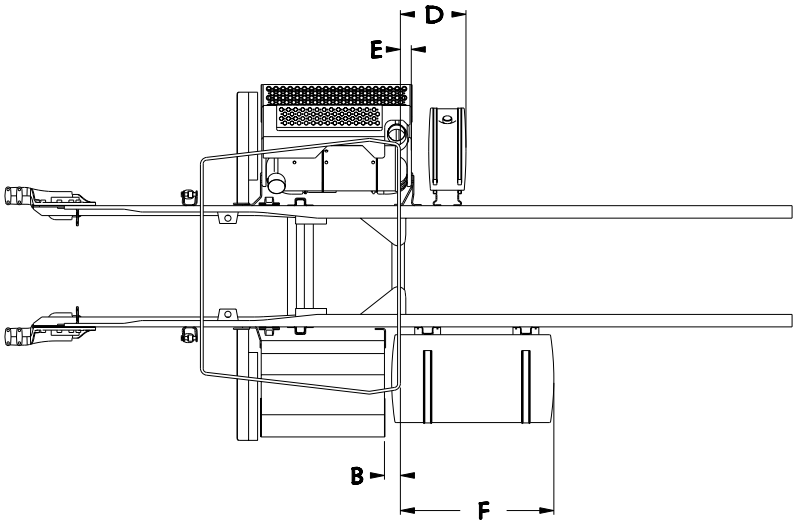

Dimension E (BOC to DPF/SCR)* = 3.1in
Dimension B (BOC to Battery Box)* = -4.5in

TABLE 5-15.

T8SH						
Fuel Tank Size			Dimension F BOC to Fuel Tank, Daycab* (in)	Dimension D BOC to DEF Tank, Daycab* (in)		
				DEF Tank Size		
Diameter	Gallons	Length (in)		Small	Medium	Large
22” Diameter Tank	56	35.5	33.0	18.4	28.2	32.9
	60	38.0	35.5			
	75	47.3	44.8			
	100	62.2	59.7			
	120	74.2	71.7			
24.5” Diameter Tank	60	30.5	28.0			
	75	38.5	36.0			
	90	45.5	43.0			
	100	50.0	47.5			
	110	54.9	52.4			
	120	60.5	58.0			
	135	67.2	64.7			
	150	74.5	72.0			
28.5” Diameter Tank	75	28.7	26.2			
	90	34.2	31.7			
	105	38.8	36.3			
	120	45.8	43.3			
	135	50.8	48.3			
	150	56.2	53.7			
	177	66.1	63.6			

*Subtract 5.7 inches for the extended Daycab.
NOTE: DIMENSIONS “B” AND “F” ARE CALCULATED USING A STANDARD BATTERY BOX. OPTIONAL EXTENDED BOXES WILL CHANGE DIMENSIONS “B” AND “F”

https://truckmanualshub.com/

D3B——Use with the following models: T800B and C500B

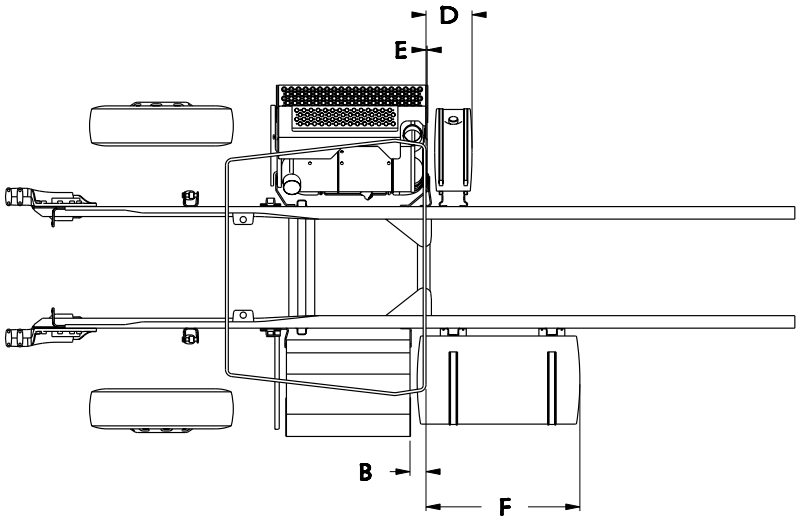

Dimension E (BOC to DPF/SCR)* = 0.3in
Dimension B (BOC to Battery Box)* = -4.5in

TABLE 5-16.

T8B & C5B						
Fuel Tank Size			Dimension F BOC to Fuel Tank, Daycab* (in)	Dimension D BOC to DEF Tank, Daycab* (in)		
				DEF Tank Size		
Diameter	Gallons	Length (in)		Small	Medium	Large
22” Diameter Tank	56	35.5	33.0	12.9	22.7	30.7
	60	38.0	35.5			
	75	47.3	44.8			
	100	62.2	59.7			
	120	74.2	71.7			
24.5” Diameter Tank	60	30.5	28.0			
	75	38.5	36.0			
	90	45.5	43.0			
	100	50.0	47.5			
	110	54.9	52.4			
	120	60.5	58.0			
	135	67.2	64.7			
	150	74.5	72.0			
28.5” Diameter Tank	75	28.7	26.2			
	90	34.2	31.7			
	105	38.8	36.3			
	120	45.8	43.3			
	135	50.8	48.3			
	150	56.2	53.7			
	177	66.1	63.6			

*Subtract 5.7 inches for the extended Daycab.
NOTE: DIMENSIONS “B” AND “F” ARE CALCULATED USING A STANDARD BATTERY BOX. OPTIONAL EXTENDED BOXES WILL CHANGE DIMENSIONS “B” AND “F”

https://truckmanualshub.com/

D3C—Use with the following models: W900S

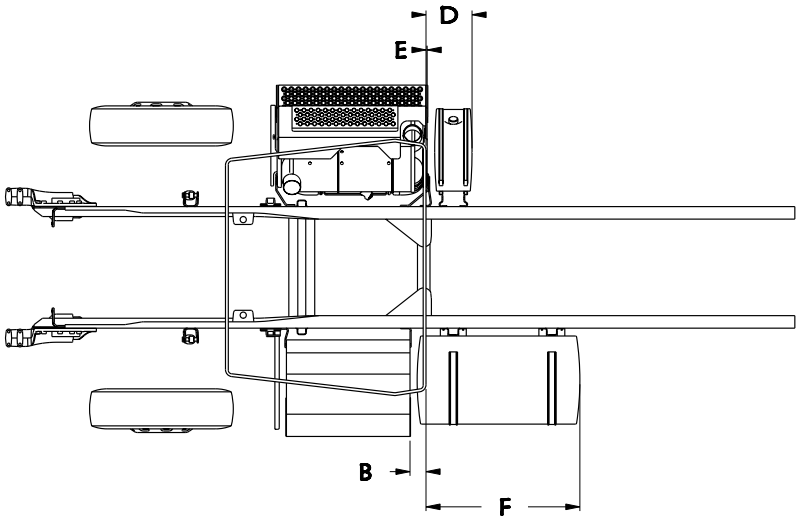

Dimension E (BOC to DPF/SCR)* = 0.3in
Dimension B (BOC to Battery Box)* = -10.6in

TABLE 5-17.

W9S						
Fuel Tank Size			Dimension F BOC to Fuel Tank, Daycab* (in)	Dimension D BOC to DEF Tank, Daycab* (in)		
				DEF Tank Size		
Diameter	Gallons	Length (in)		Small	Medium	Large
22” Diameter Tank	56	35.5	26.9	12.9	22.6	30.7
	60	38.0	29.4			
	75	47.3	38.7			
	100	62.2	53.6			
	120	74.2	65.6			
24.5 Diameter Tank	75	38.5	29.9			
	90	45.5	36.9			
	100	50.0	41.4			
	110	54.9	46.3			
	120	60.5	51.9			
	135	67.2	58.6			
	150	74.5	65.9			
28.5” Diameter Tank	90	34.2	25.6			
	105	38.8	30.2			
	120	45.8	37.2			
	135	50.8	42.2			
	150	56.2	47.6			
	177	66.1	57.5			

*Subtract 5.7 inches for the extended Daycab.
NOTE: DIMENSIONS “B” AND “F” ARE CALCULATED USING A STANDARD BATTERY BOX. OPTIONAL EXTENDED BOXES WILL CHANGE DIMENSIONS “B” AND “F”

https://truckmanualshub.com/

D3D—Use with the following models: W900B

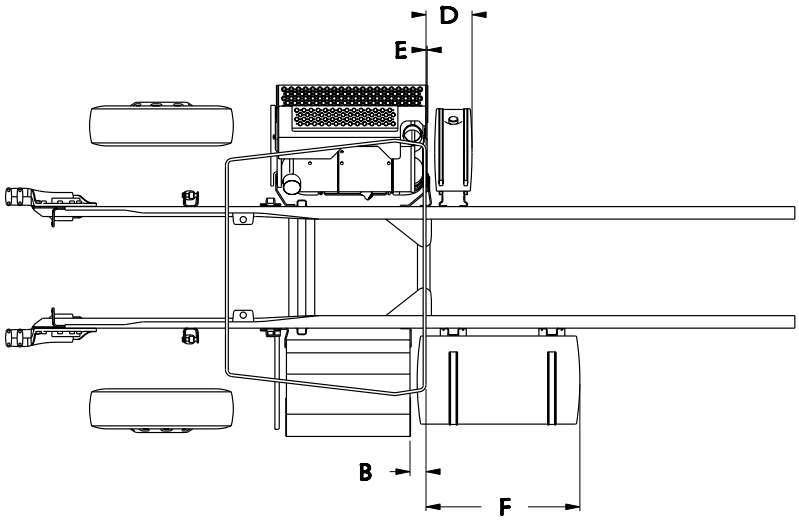

Dimension E (BOC to DPF/SCR)* = 0.3in
Dimension B (BOC to Battery Box)* = -10.6in

TABLE 5-18.

W9B						
Fuel Tank Size			Dimension F BOC to Fuel Tank, Daycab* (in)	Dimension D BOC to DEF Tank, Daycab* (in)		
				DEF Tank Size		
Diameter	Gallons	Length (in)		Small	Medium	Large
22” Diameter Tank	56	35.5	26.9	12.9	22.6	30.7
	60	38.0	29.4			
	75	47.3	38.7			
	100	62.2	53.6			
	120	74.2	65.6			
24.5” Diameter Tank	75	38.5	29.9			
	90	45.5	36.9			
	100	50.0	41.4			
	110	54.9	46.3			
	120	60.5	51.9			
	135	67.2	58.6			
	150	74.5	65.9			
28.5” Diameter Tank	90	34.2	25.6			
	105	38.8	30.2			
	120	45.8	37.2			
	135	50.8	42.2			
	150	56.2	47.6			
	177	66.1	57.5			

*Subtract 5.7 inches for the extended Daycab.
NOTE: DIMENSIONS “B” AND “F” ARE CALCULATED USING A STANDARD BATTERY BOX. OPTIONAL EXTENDED BOXES WILL CHANGE DIMENSIONS “B” AND “F”

https://truckmanualshub.com/

D3E—Use with the following models: W900L

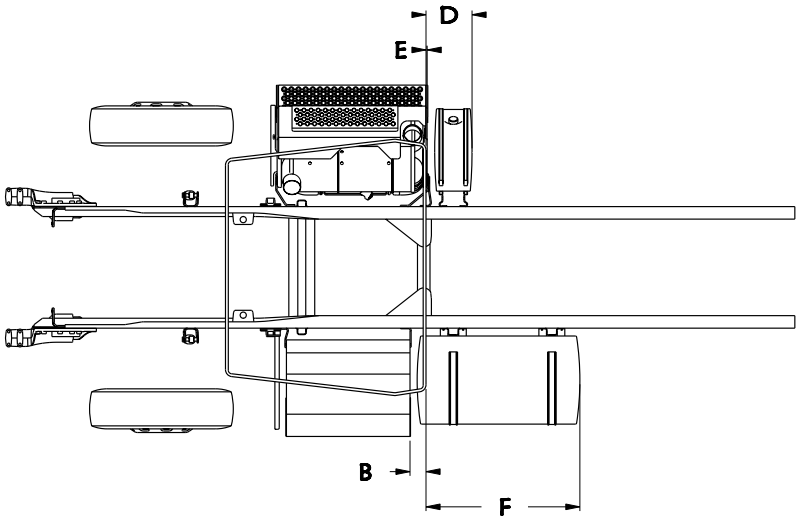

Dimension E (BOC to DPF/SCR)* = 0.3in
Dimension B (BOC to Battery Box)* = -10.6in

TABLE 5-19.

W9L						
Fuel Tank Size			Dimension F BOC to Fuel Tank, Daycab* (in)	Dimension D BOC to DEF Tank, Daycab* (in)		
				DEF Tank Size		
Diameter	Gallons	Length (in)		Small	Medium	Large
22” Diameter Tank	56	35.5	26.8	12.9	22.6	30.7
	60	38.0	29.3			
	75	47.3	38.6			
	100	62.2	53.5			
	120	74.2	65.5			
24.5” Diameter Tank	75	38.5	29.8			
	90	45.5	36.8			
	100	50.0	41.3			
	110	54.9	46.2			
	120	60.5	51.8			
	135	67.2	58.5			
	150	74.5	65.8			
28.5” Diameter Tank	90	34.2	25.5			
	105	38.8	30.1			
	120	45.8	37.1			
	135	50.8	42.1			
	150	56.2	47.5			
	177	66.1	57.4			

*Subtract 5.7 inches for the extended Daycab.
NOTE: DIMENSIONS “B” AND “F” ARE CALCULATED USING A STANDARD BATTERY BOX. OPTIONAL EXTENDED BOXES WILL CHANGE DIMENSIONS “B” AND “F”

https://truckmanualshub.com/

D4A—Use with the following models: T800SH

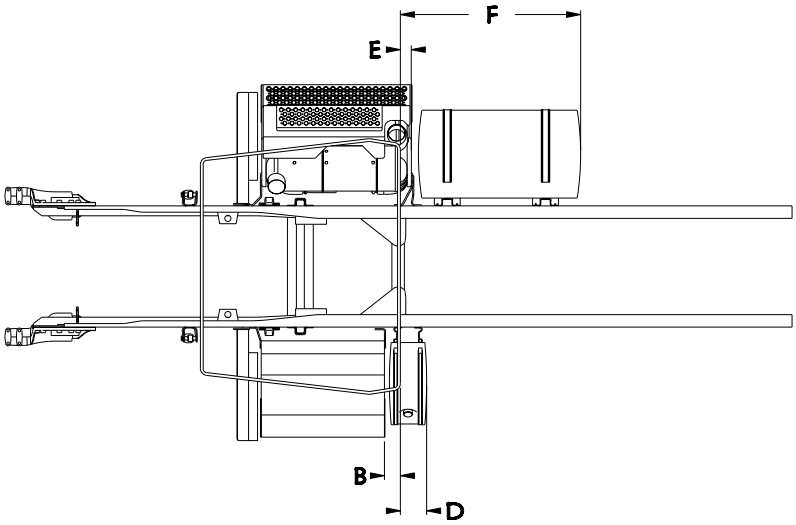

Dimension E (BOC to DPF/SCR)* = 3.1in
Dimension B (BOC to Battery Box)* = -4.5in

TABLE 5-20.

T8SH						
Fuel Tank Size			Dimension F BOC to Fuel Tank, Daycab* (in)	Dimension D BOC to DEF Tank, Daycab* (in)		
				DEF Tank Size		
Diameter	Gallons	Length (in)		Small	Medium	Large
22” Diameter Tank	56	35.5	41.3	7.4	17.1	25.2
	60	38.0	43.8			
	75	47.3	53.1			
	100	62.2	68.0			
	120	74.2	80.0			
24.5” Diameter Tank	60	30.5	36.3			
	75	38.5	44.3			
	90	45.5	51.3			
	100	50.0	55.8			
	110	54.9	60.7			
	120	60.5	66.3			
	135	67.2	73.0			
	150	74.5	80.3			
28.5” Diameter Tank	75	28.7	34.5			
	90	34.2	40.0			
	105	38.8	44.6			
	120	45.8	51.6			
	135	50.8	56.6			
	150	56.2	62.0			
	177	66.1	71.9			

*Subtract 5.7 inches for the extended Daycab.
NOTE: DIMENSIONS “B” AND “D” ARE CALCULATED USING A STANDARD BATTERY BOX. OPTIONAL EXTENDED BOXES WILL CHANGE DIMENSIONS “B” AND “D”

https://truckmanualshub.com/

D4B—Use with the following models: T800B and C500B

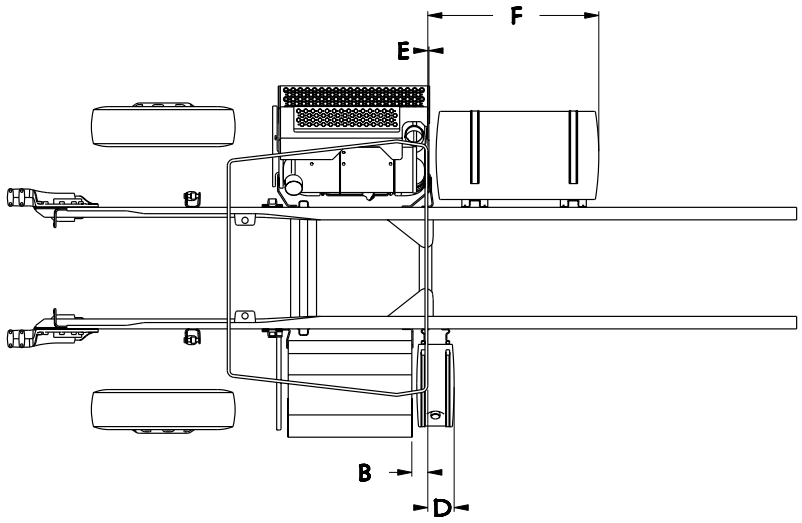

Dimension E (BOC to DPF/SCR)* = 0.3in
Dimension B (BOC to Battery Box)* = -4.5in

TABLE 5-21.

T8B & C5B						
Fuel Tank Size			Dimension F BOC to Fuel Tank, Daycab* (in)	Dimension D BOC to DEF Tank, Daycab* (in)		
				DEF Tank Size		
Diameter	Gallons	Length (in)		Small	Medium	Large
22” Diameter Tank	56	35.5	38.5	7.4	17.1	25.2
	60	38.0	41.0			
	75	47.3	50.3			
	100	62.2	65.2			
	120	74.2	77.2			
24.5” Diameter Tank	60	30.5	33.5			
	75	38.5	41.5			
	90	45.5	48.5			
	100	50.0	53.0			
	110	54.9	57.9			
	120	60.5	63.5			
	135	67.2	70.2			
	150	74.5	77.5			
28.5” Diameter Tank	75	28.7	31.7			
	90	34.2	37.2			
	105	38.8	41.8			
	120	45.8	48.8			
	135	50.8	53.8			
	150	56.2	59.2			
	177	66.1	69.1			

*Subtract 5.7 inches for the extended Daycab.
NOTE: DIMENSIONS “B” AND “D” ARE CALCULATED USING A STANDARD BATTERY BOX. OPTIONAL EXTENDED BOXES WILL CHANGE DIMENSIONS “B” AND “D”

https://truckmanualshub.com/

D4C—Use with the following models: W900S

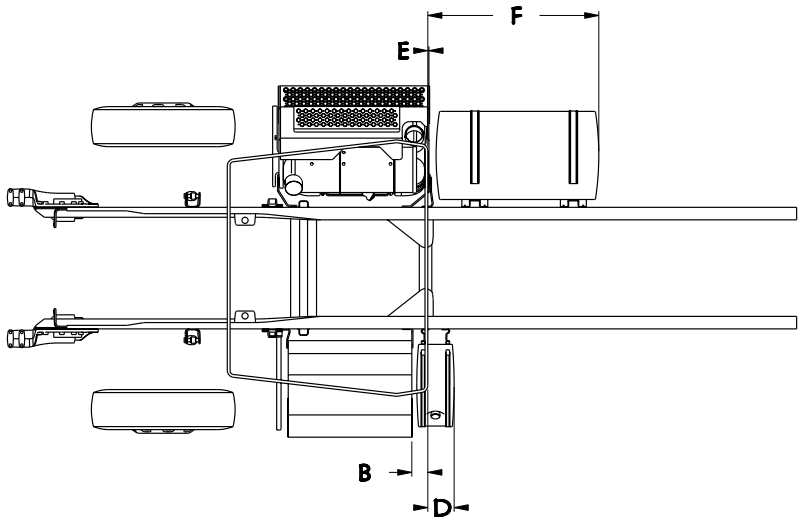

Dimension E (BOC to DPF/SCR)* = 0.3in
Dimension B (BOC to Battery Box)* = -10.6in

TABLE 5-22.

W9S						
Fuel Tank Size			Dimension F BOC to Fuel Tank, Daycab* (in)	Dimension D BOC to DEF Tank, Daycab* (in)		
				DEF Tank Size		
Diameter	Gallons	Length (in)		Small	Medium	Large
22” Diameter Tank	56	35.5	38.5	1.9	11.6	19.7
	60	38.0	41.0			
	75	47.3	50.3			
	100	62.2	65.2			
	120	74.2	77.2			
24.5” Diameter Tank	75	38.5	41.5			
	90	45.5	48.5			
	100	50.0	53.0			
	110	54.9	57.9			
	120	60.5	63.5			
	135	67.2	70.2			
	150	74.5	77.5			
28.5” Diameter Tank	90	34.2	37.2			
	105	38.8	41.8			
	120	45.8	48.8			
	135	50.8	53.8			
	150	56.2	59.2			
	177	66.1	69.1			

*Subtract 5.7 inches for the extended Daycab.
NOTE: DIMENSIONS “B” AND “D” ARE CALCULATED USING A STANDARD BATTERY BOX. OPTIONAL EXTENDED BOXES WILL CHANGE DIMENSIONS “B” AND “D”

https://truckmanualshub.com/

D4D—Use with the following models: W900B

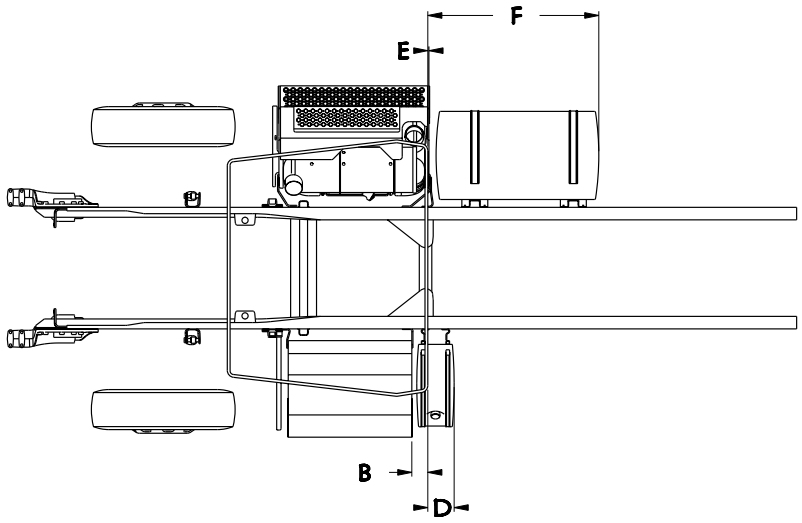

Dimension E (BOC to DPF/SCR)* = 0.3in
Dimension B (BOC to Battery Box)* = -10.6in

TABLE 5-23.

W9B						
Fuel Tank Size			Dimension F BOC to Fuel Tank, Daycab* (in)	Dimension D BOC to DEF Tank, Daycab* (in)		
				DEF Tank Size		
Diameter	Gallons	Length (in)		Small	Medium	Large
22” Diameter Tank	56	35.5	38.5	1.9	11.6	19.7
	60	38.0	41.0			
	75	47.3	50.3			
	100	62.2	65.2			
	120	74.2	77.2			
24.5” Diameter Tank	60	30.5	33.5			
	75	38.5	41.5			
	90	45.5	48.5			
	100	50.0	53.0			
	110	54.9	57.9			
	120	60.5	63.5			
	135	67.2	70.2			
	150	74.5	77.5			
28.5” Diameter Tank	75	28.7	31.7			
	90	34.2	37.2			
	105	38.8	41.8			
	120	45.8	48.8			
	135	50.8	53.8			
	150	56.2	59.2			
	177	66.1	69.1			

*Subtract 5.7 inches for the extended Daycab.
NOTE: DIMENSIONS “B” AND “D” ARE CALCULATED USING A STANDARD BATTERY BOX. OPTIONAL EXTENDED BOXES WILL CHANGE DIMENSIONS “B” AND “D”

https://truckmanualshub.com/

D4E—Use with the following models: W900L

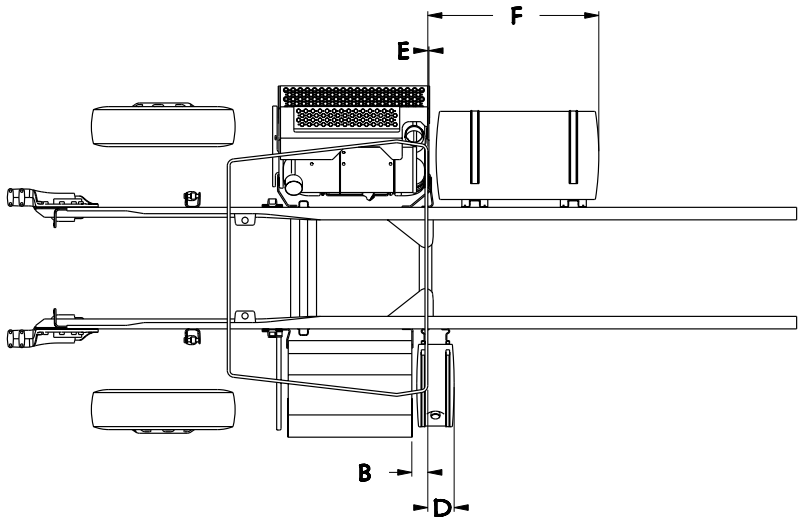

Dimension E (BOC to DPF/SCR)* = 0.3in
Dimension B (BOC to Battery Box)* = -10.6in

TABLE 5-24.

W9L						
Fuel Tank Size			Dimension F BOC to Fuel Tank, Daycab* (in)	Dimension D BOC to DEF Tank, Daycab* (in)		
				DEF Tank Size		
Diameter	Gallons	Length (in)		Small	Medium	Large
22” Diameter Tank	56	35.5	38.5	1.9	11.6	19.7
	60	38.0	41.0			
	75	47.3	50.3			
	100	62.2	65.2			
	120	74.2	77.2			
24.5” Diameter Tank	60	30.5	33.5			
	75	38.5	41.5			
	90	45.5	48.5			
	100	50.0	53.0			
	110	54.9	57.9			
	120	60.5	63.5			
	135	67.2	70.2			
	150	74.5	77.5			
28.5” Diameter Tank	75	28.7	31.7			
	90	34.2	37.2			
	105	38.8	41.8			
	120	45.8	48.8			
	135	50.8	53.8			
	150	56.2	59.2			
	177	66.1	69.1			

*Subtract 5.7 inches for the extended Daycab.
NOTE: DIMENSIONS “B” AND “D” ARE CALCULATED USING A STANDARD BATTERY BOX. OPTIONAL EXTENDED BOXES WILL CHANGE DIMENSIONS “B” AND “D”

https://truckmanualshub.com/

D5A—Use with the following models: T800SH and In-cab battery box.

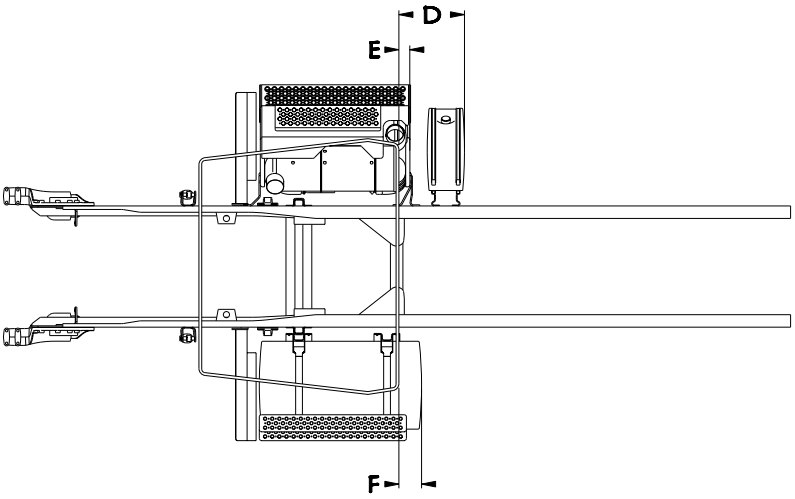

Dimension E (BOC to DPF/SCR)* = 3.1in

TABLE 5-25.

T8SH						
Fuel Tank Size			Dimension F BOC to Fuel Tank, Daycab* (in)	Dimension D BOC to DEF Tank, Daycab* (in)		
				DEF Tank Size		
Diameter	Gallons	Length (in)		Small	Medium	Large
22” Diameter Tank	56	35.5	-3.7	18.4	28.2	32.9
	60	38.0	-1.2			
	75	47.3	8.1			
	100	62.2	23.0			
	120	74.2	35.0			
24.5” Diameter Tank	60	30.5	-8.7			
	75	38.5	-0.7			
	90	45.5	6.3			
	100	50.0	10.8			
	110	54.9	15.7			
	120	60.5	21.3			
	135	67.2	28.0			
	150	74.5	35.3			
28.5” Diameter Tank	75	28.7	-10.5			
	90	34.2	-5.0			
	105	38.8	-0.4			
	120	45.8	6.6			
	135	50.8	11.6			
	150	56.2	17.0			
	177	66.1	26.9			

*Subtract 5.7 inches for the extended Daycab.

https://truckmanualshub.com/

D5B—Use with the following models: T800B and C500B and In-cab battery box.

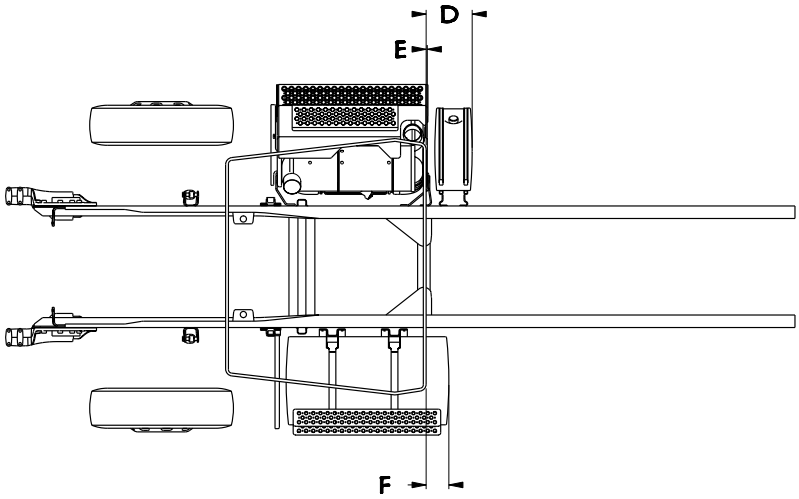

Dimension E (BOC to DPF/SCR)* = 0.3in

TABLE 5-26.

T8B & C5B						
Fuel Tank Size			Dimension F BOC to Fuel Tank, Daycab* (in)	Dimension D BOC to DEF Tank, Daycab* (in)		
				DEF Tank Size		
Diameter	Gallons	Length (in)		Small	Medium	Large
22” Diameter Tank	56	35.5	-3.5	12.9	22.7	30.7
	60	38.0	-1.1			
	75	47.3	8.2			
	100	62.2	23.1			
	120	74.2	35.1			
24.5” Diameter Tank	60	30.5	-8.6			
	75	38.5	-0.6			
	90	45.5	6.4			
	100	50.0	10.9			
	110	54.9	15.8			
	120	60.5	21.4			
	135	67.2	28.1			
	150	74.5	35.4			
28.5” Diameter Tank	75	28.7	-10.4			
	90	34.2	-4.9			
	105	38.8	-0.3			
	120	45.8	6.7			
	135	50.8	11.7			
	150	56.2	17.1			
	177	66.1	27.0			

*Subtract 5.7 inches for the extended Daycab.

https://truckmanualshub.com/

D5C—Use with the following models: W900S and In-cab battery box.

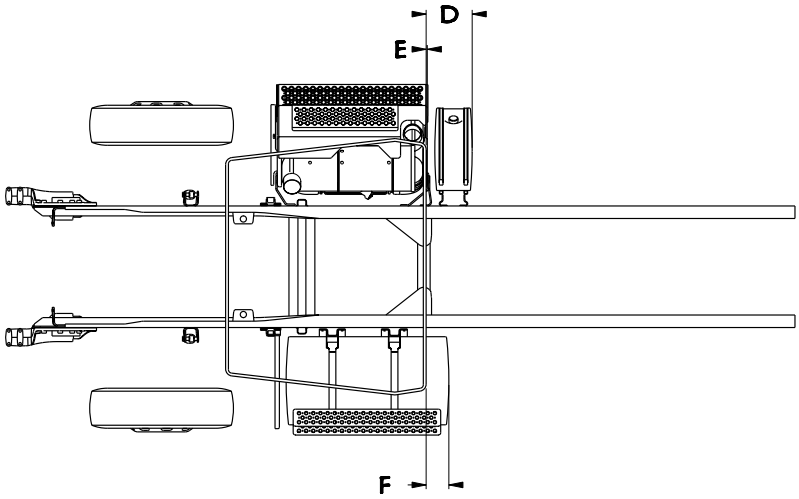

Dimension E (BOC to DPF/SCR)* = 0.3in

TABLE 5-27.

W9S						
Fuel Tank Size			Dimension F BOC to Fuel Tank, Daycab* (in)	Dimension D BOC to DEF Tank, Daycab* (in)		
				DEF Tank Size		
Diameter	Gallons	Length (in)		Small	Medium	Large
22” Diameter Tank	56	35.5	-14.8	12.9	22.6	30.7
	60	38.0	-12.3			
	75	47.3	-3.0			
	100	62.2	11.9			
	120	74.2	23.9			
24.5” Diameter Tank	75	38.5	-11.8			
	90	45.5	-4.8			
	100	50.0	-0.3			
	110	54.9	4.6			
	120	60.5	10.2			
	135	67.2	16.9			
	150	74.5	24.2			
28.5” Diameter Tank	90	34.2	-16.1			
	105	38.8	-11.5			
	120	45.8	-4.5			
	135	50.8	0.5			
	150	56.2	5.9			
	177	66.1	15.8			

*Subtract 5.7 inches for the extended Daycab.

https://truckmanualshub.com/

D5D—Use with the following models: W900B and In-cab battery box.

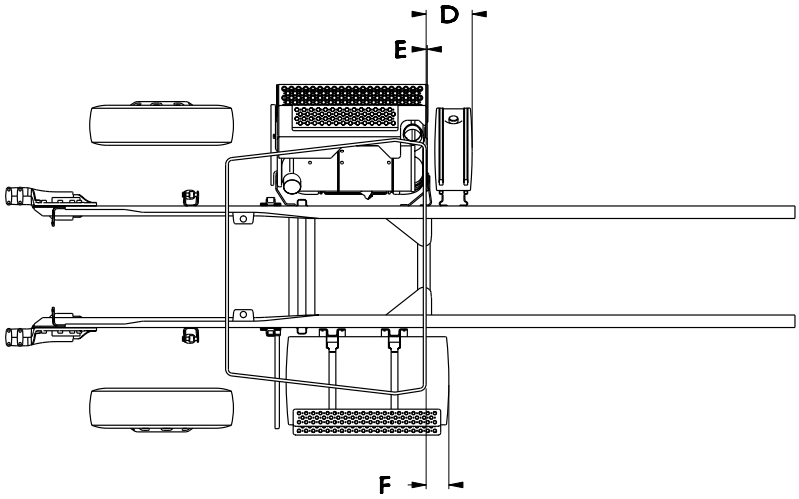

Dimension E (BOC to DPF/SCR)* = 0.3in

TABLE 5-28.

W9B						
Fuel Tank Size			Dimension F BOC to Fuel Tank, Daycab* (in)	Dimension D BOC to DEF Tank, Daycab* (in)		
				DEF Tank Size		
Diameter	Gallons	Length (in)		Small	Medium	Large
22” Diameter Tank	56	35.5	-14.9	12.9	22.6	30.7
	60	38.0	-17.7			
	75	47.3	-8.4			
	100	62.2	6.5			
	120	74.2	18.5			
24.5” Diameter Tank	75	38.5	-11.9			
	90	45.5	-10.2			
	100	50.0	-5.7			
	110	54.9	-0.8			
	120	60.5	4.8			
	135	67.2	11.5			
	150	74.5	18.8			
28.5” Diameter Tank	90	34.2	-15.4			
	105	38.8	-11.6			
	120	45.8	-9.9			
	135	50.8	-2.2			
	150	56.2	0.5			
	177	66.1	12.8			

*Subtract 5.7 inches for the extended Daycab.

https://truckmanualshub.com/

D5E—Use with the following models: W900L and In-cab battery box.

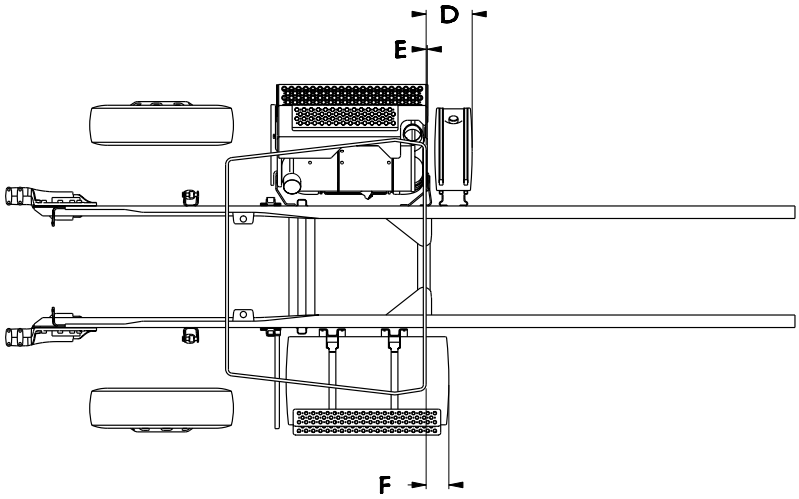

Dimension E (BOC to DPF/SCR)* = 0.3in

TABLE 5-29.

W9L						
Fuel Tank Size			Dimension F BOC to Fuel Tank, Daycab* (in)	Dimension D BOC to DEF Tank, Daycab* (in)		
				DEF Tank Size		
Diameter	Gallons	Length (in)		Small	Medium	Large
22” Diameter Tank	56	35.5	-13.9	12.9	22.6	30.7
	60	38.0	-11.4			
	75	47.3	-2.1			
	100	62.2	12.8			
	120	74.2	24.8			
24.5” Diameter Tank	75	38.5	-10.9			
	90	45.5	-3.9			
	100	50.0	0.6			
	110	54.9	5.5			
	120	60.5	11.1			
	135	67.2	17.8			
	150	74.5	25.1			
28.5” Diameter Tank	90	34.2	-15.2			
	105	38.8	-10.6			
	120	45.8	-3.6			
	135	50.8	1.4			
	150	56.2	6.8			
	177	66.1	16.7			

*Subtract 5.7 inches for the extended Daycab.

https://truckmanualshub.com/

D6A—Use with the following models: T800SH and In-cab battery box.

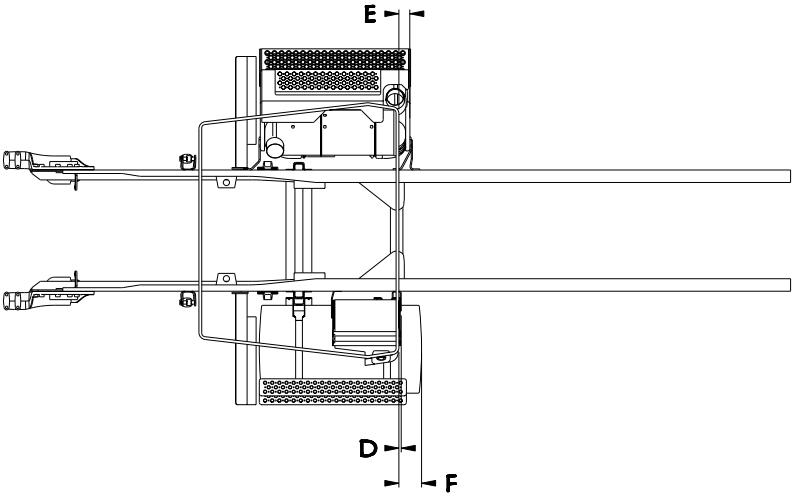

Dimension E (BOC to DPF/SCR)* = 3.1in
Dimension D (BOC to DEF tank)* = 1.0in

TABLE 5-30.

T8SH			
Fuel Tank Size			Dimension F BOC to Fuel Tank, Daycab* (in)
Diameter	Gallons	Length (in)	
22” Diameter Tank	56	35.5	-3.7
	60	38.0	-1.2
	75	47.3	8.1
	100	62.2	23.0
	120	74.2	35.0
24.5” Diameter Tank	60	30.5	-8.7
	75	38.5	-0.7
	90	45.5	6.3
	100	50.0	10.8

*Subtract 5.7 inches for the extended Daycab.

https://truckmanualshub.com/

D6B—Use with the following models: T800B and C500B and In-cab battery box.

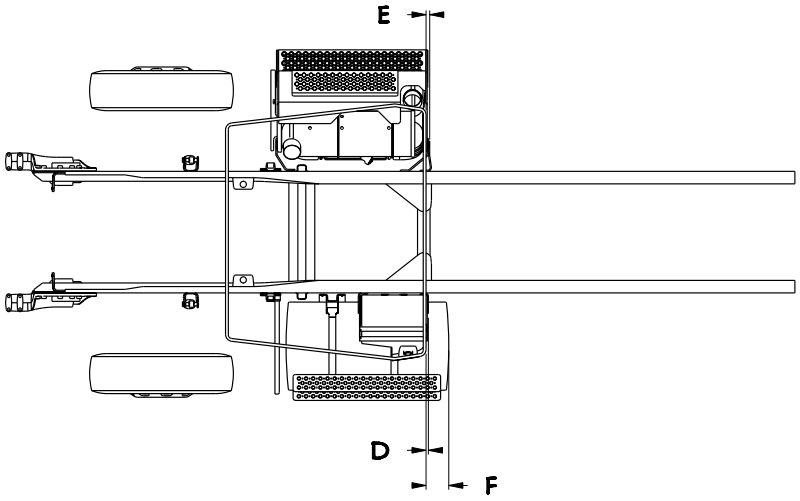

Dimension E (BOC to DPF/SCR)* = 0.3in
Dimension D (BOC to DEF tank)* = 1.0in

TABLE 5-31.

T8B & C5B			
Fuel Tank Size			Dimension F BOC to Fuel Tank, Daycab* (in)
Diameter	Gallons	Length (in)	
22” Diameter Tank	56	35.5	-3.5
	60	38.0	-1.1
	75	47.3	8.2
	100	62.2	23.1
	120	74.2	35.1
24.5” Diameter Tank	60	30.5	-8.6
	75	38.5	-0.6
	90	45.5	6.4
	100	50.0	10.9

*Subtract 5.7 inches for the extended Daycab.

https://truckmanualshub.com/

D6C—Use with the following models: W900S and In-cab battery box.

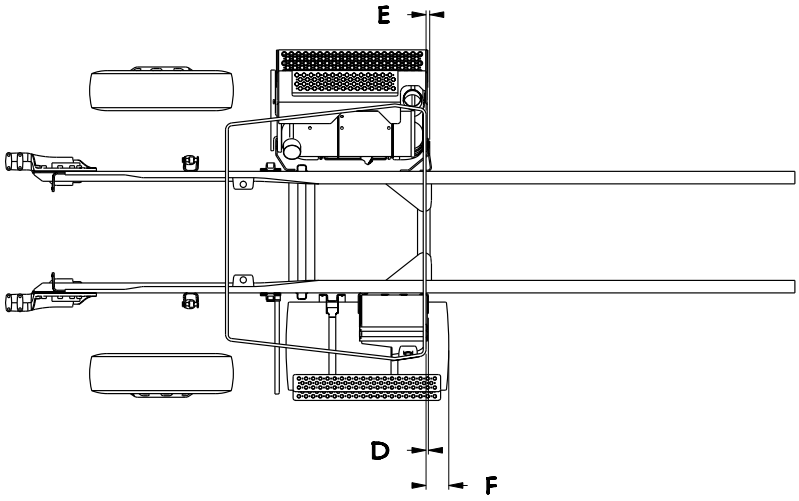

Dimension E (BOC to DPF/SCR)* = 0.3in
Dimension D (BOC to DEF tank)* = 1.0in

TABLE 5-32.

W9S			
Fuel Tank Size			Dimension F BOC to Fuel Tank, Daycab* (in)
Diameter	Gallons	Length (in)	
22” Diameter Tank	56	35.5	-14.8
	60	38.0	-12.3
	75	47.3	-3.0
	100	62.2	11.9
	120	74.2	23.9
24.5” Diameter Tank	75	38.5	-11.8
	90	45.5	-4.8
	100	50.0	-0.3

*Subtract 5.7 inches for the extended Daycab.

https://truckmanualshub.com/

D6D—Use with the following models: W900B and In-cab battery box.

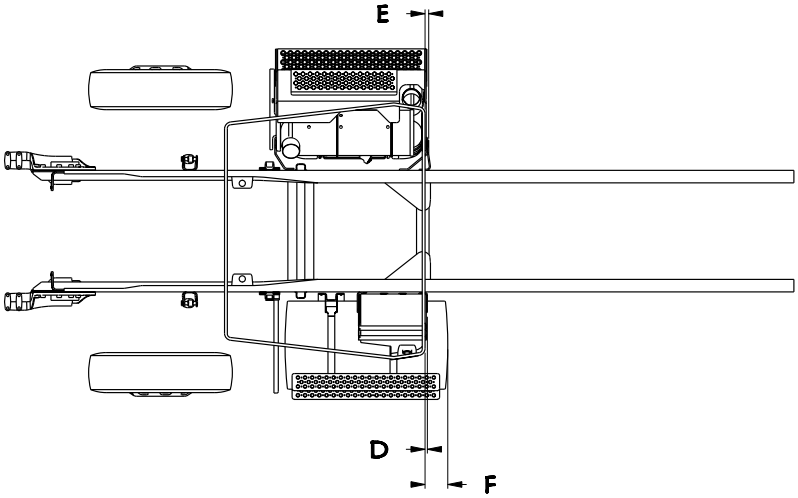

Dimension E (BOC to DPF/SCR)* = 0.3in
Dimension D (BOC to DEF tank)* = 1.0in

TABLE 5-33.

W9B			
Fuel Tank Size			Dimension F BOC to Fuel Tank, Daycab* (in)
Diameter	Gallons	Length (in)	
22” Diameter Tank	56	35.5	-14.9
	60	38.0	-17.7
	75	47.3	-8.4
	100	62.2	6.5
	120	74.2	18.5
24.5” Diameter Tank	75	38.5	-11.9
	90	45.5	-10.2
	100	50.0	-5.7

*Subtract 5.7 inches for the extended Daycab.

https://truckmanualshub.com/

D6E—Use with the following models: W900L and In-cab battery box.

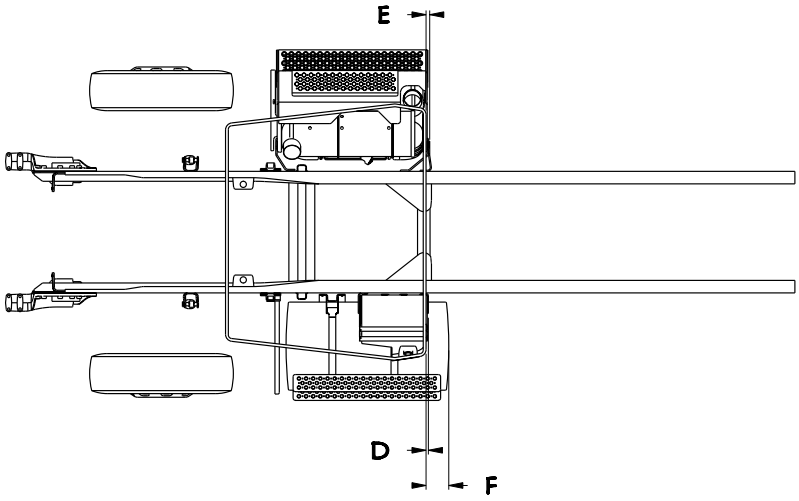

Dimension E (BOC to DPF/SCR)* = 0.3in
Dimension D (BOC to DEF tank)* = 1.0in

TABLE 5-34.

W9L			
Fuel Tank Size			Dimension F BOC to Fuel Tank, Daycab* (in)
Diameter	Gallons	Length (in)	
22” Diameter Tank	56	35.5	-13.9
	60	38.0	-11.4
	75	47.3	-2.1
	100	62.2	12.8
	120	74.2	24.8
24.5” Diameter Tank	75	38.5	-10.9
	90	45.5	-3.9
	100	50.0	0.6

*Subtract 5.7 inches for the extended Daycab.

https://truckmanualshub.com/

D7A—Use with the following models: T800SH

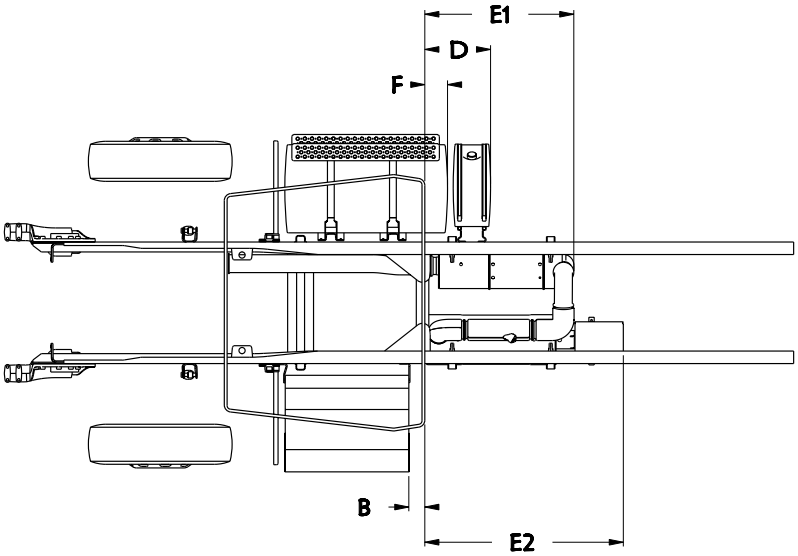

Dimension B (BOC to Battery Box)* = -4.5in
Dimension E1 (BOC to DPF/SCR)* = 53.6in
Dimension E2 (BOC to Diffuser)* = 67.4in

TABLE 5-35.

T8SH					
Fuel Tank Size			Dimension F BOC to Fuel Tank, Daycab* (in)	Dimension D BOC to DEF Tank,* (in) DEF Tank Size	
Diameter	Gallons	Length (in)		Small	Medium
22” Diameter Tank	56	35.5	-3.7	7.4	17.1
	60	38.0	-1.2	12.9	42.0
	75	47.3	8.1	32.2	42.0
	100	62.2	23.0	34.9	45.7
	120	74.2	35.0	47.0	73.1
24.5” Diameter Tank	60	30.5	-8.7	7.4	11.6
	75	38.5	-0.7	12.9	19.3
	90	45.5	6.3	18.4	42.0
	100	50.0	10.8	32.2	42.0
	110	54.9	15.7	32.2	42.2
	120	60.5	21.3	34.9	42.0
	135	67.2	28.0	39.7	48.1
	150	74.5	35.3	46.0	73.1
28.5” Diameter Tank	75	28.7	-10.5	1.9	11.6
	90	34.2	-5.0	7.4	17.1
	105	38.8	-0.4	12.9	20.5
	120	45.8	6.6	18.4	42.0
	135	50.8	11.6	32.2	42.0
	150	56.2	17.0	32.2	42.0
	177	66.1	26.9	-	48.1

*Subtract 5.7 inches for the extended Daycab.
NOTE: DIMENSION “B” IS CALCULATED USING A STANDARD BATTERY BOX. OPTIONAL EXTENDED BOXES WILL CHANGE DIMENSION “B”

https://truckmanualshub.com/

D7B—Use with the following models: T800B

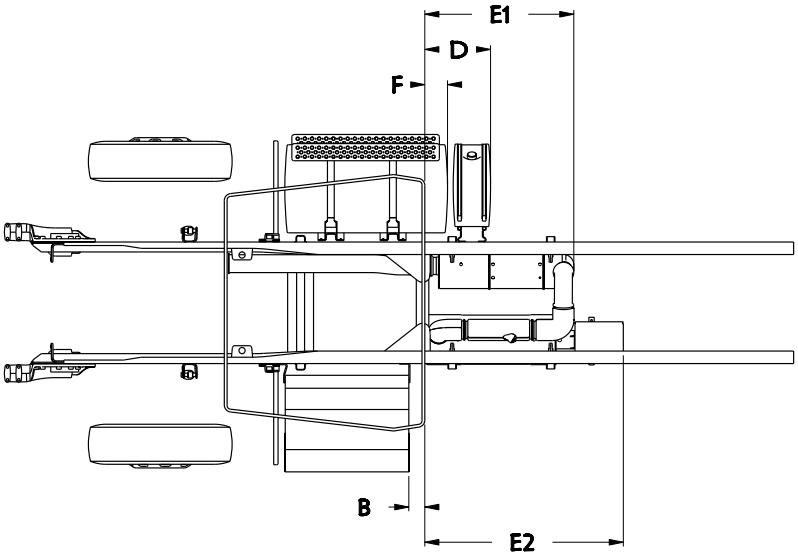

Dimension B (BOC to Battery Box)* = -4.5in
Dimension E1 (BOC to DPF/SCR)* = 53.6in
Dimension E2 (BOC to Diffuser)* = 67.4in

TABLE 5-36.

T8B					
Fuel Tank Size			Dimension F BOC to Fuel Tank, Daycab* (in)	Dimension D BOC to DEF Tank,* (in) DEF Tank Size	
Diameter	Gallons	Length (in)		Small	Medium
22” Diameter Tank	56	35.5	-3.5	7.4	17.1
	60	38.0	-1.1	12.9	41.9
	75	47.3	8.2	32.2	41.9
	100	62.2	23.1	34.9	45.7
	120	74.2	35.1	47.0	73.1
24.5” Diameter Tank	60	30.5	-8.6	1.9	11.6
	75	38.5	-0.6	12.9	20.5
	90	45.5	6.4	18.4	41.9
	100	50.0	10.9	32.2	41.9
	110	54.9	15.8	32.2	41.9
	120	60.5	21.4	34.9	41.9
	135	67.2	28.1	39.7	48.0
	150	74.5	35.4	66.7	73.1
28.5” Diameter Tank	75	28.7	-10.4	1.9	11.6
	90	34.2	-4.9	7.4	17.1
	105	38.8	-0.3	12.9	20.5
	120	45.8	6.7	18.4	41.9
	135	50.8	11.7	32.2	41.9
	150	56.2	17.1	32.2	41.9
	177	66.1	27.0	-	48.0

*Subtract 5.7 inches for the extended Daycab.
NOTE: DIMENSION “B” IS CALCULATED USING A STANDARD BATTERY BOX. OPTIONAL EXTENDED BOXES WILL CHANGE DIMENSION “B”

https://truckmanualshub.com/

D8A—Use with the following models: T800SH

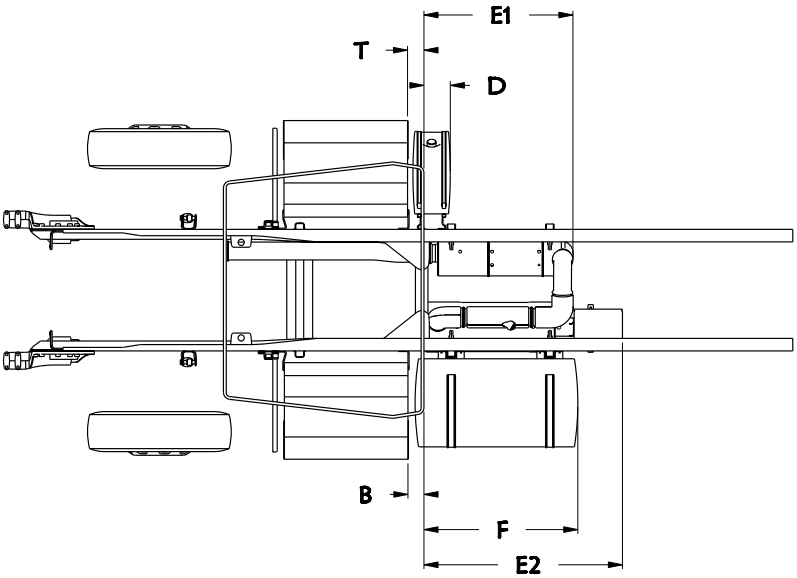

Dimension B (BOC to Battery Box)* = -4.5in
Dimension T (BOC to Tool Box)* = -4.5in
Dimension E1 (BOC to DPF/SCR)* = 53.6in
Dimension E2 (BOC to Diffuser)* = 67.4in

TABLE 5-37.

T8SH					
Fuel Tank Size			Dimension F BOC to Fuel Tank, Daycab* (in)	Dimension D BOC to DEF Tank,* (in) DEF Tank Size	
Diameter	Gallons	Length (in)		Small	Medium
22” Diameter Tank	56	35.5	33.0	7.4	17.1
	60	38.0	35.5		
	75	47.3	44.8		
	100	62.2	59.7		
	120	74.2	71.7		
24.5” Diameter Tank	60	30.5	28.0		
	75	38.5	36.0		
	90	45.5	43.0		
	100	50.0	47.5		
	110	54.9	52.4		
	120	60.5	58.0		
	135	67.2	64.7		
	150	74.5	72.0		
28.5” Diameter Tank	75	28.7	26.2		
	90	34.2	31.7		
	105	38.8	36.3		
	120	45.8	43.3		
	135	50.8	48.3		
	150	56.2	53.7		
	177	66.1	63.6		

*Subtract 5.7 inches for the extended Daycab.
NOTE: DIMENSIONS “B” AND “F” ARE CALCULATED USING A STANDARD BATTERY BOX. OPTIONAL EXTENDED BOXES WILL CHANGE DIMENSIONS “B” AND “F”

https://truckmanualshub.com/

D8B—Use with the following models: T800B

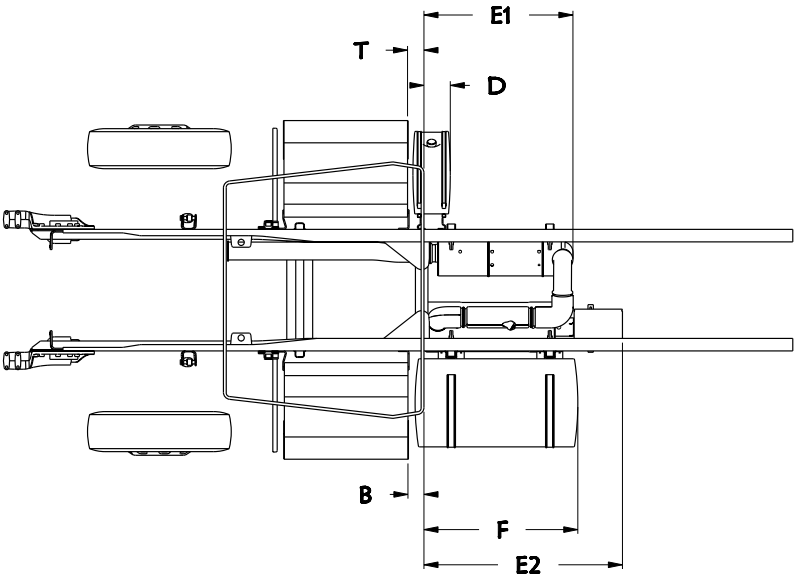

Dimension B (BOC to Battery Box)* = -4.5in
Dimension T (BOC to Tool Box)* = -4.5in

Dimension E1 (BOC to DPF/SCR)* = 53.6in
Dimension E2 (BOC to Diffuser)* = 67.4in.

TABLE 5-38.

T8B					
Fuel Tank Size			Dimension F BOC to Fuel Tank, Daycab* (in)	Dimension D BOC to DEF Tank,* (in) DEF Tank Size	
Diameter	Gallons	Length (in)		Small	Medium
22” Diameter Tank	56	35.5	33.0	7.4	17.1
	60	38.0	35.5		
	75	47.3	44.8		
	100	62.2	59.7		
	120	74.2	71.7		
24.5” Diameter Tank	60	30.5	28.0		
	75	38.5	36.0		
	90	45.5	43.0		
	100	50.0	47.5		
	110	54.9	52.4		
	120	60.5	58.0		
	135	67.2	64.7		
	150	74.5	72.0		
28.5” Diameter Tank	75	28.7	26.2		
	90	34.2	31.7		
	105	38.8	36.3		
	120	45.8	43.3		
	135	50.8	48.3		
	150	56.2	53.7		
	177	66.1	63.6		

*Subtract 5.7 inches for the extended Daycab.
NOTE: DIMENSIONS “B” AND “F” ARE CALCULATED USING A STANDARD BATTERY BOX. OPTIONAL EXTENDED BOXES WILL CHANGE DIMENSIONS “B” AND “F”

https://truckmanualshub.com/

D9A—Use with the following models: T800SH and In-cab battery box.

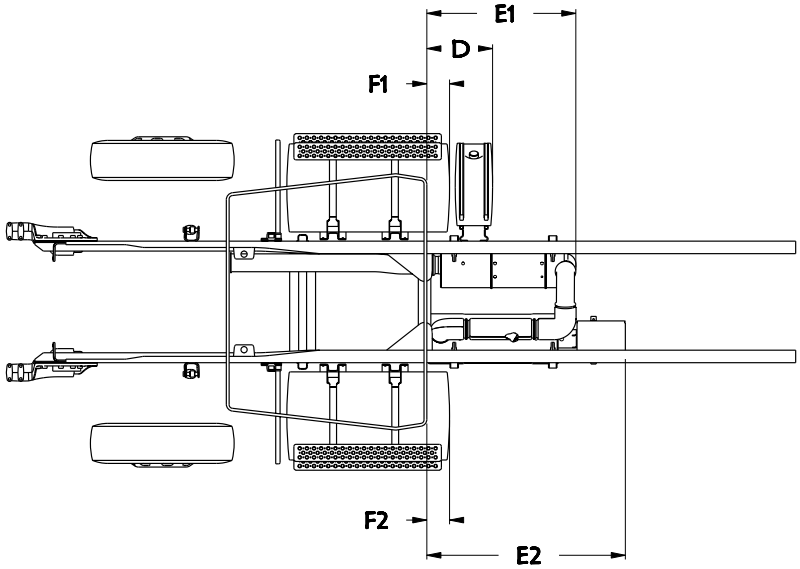

Dimension E1 (BOC to DPF/SCR)* = 53.6in
Dimension E2 (BOC to Diffuser)* = 67.4in

TABLE 5-39.

T8SH					
Fuel Tank Size			Dimension F1 & F2 BOC to Fuel Tank, Daycab* (in)	Dimension D BOC to DEF Tank,* (in)	
				DEF Tank Size	
Diameter	Gallons	Length (in)		Small	Medium
22” Diameter Tank	56	35.5	-3.7	7.4	17.1
	60	38.0	-1.2	12.9	42.0
	75	47.3	8.1	32.2	42.0
	100	62.2	23.0	34.9	45.7
	120	74.2	35.0	47.0	73.1
24.5” Diameter Tank	60	30.5	-8.7	7.4	11.6
	75	38.5	-0.7	12.9	20.5
	90	45.5	6.3	18.4	42.0
	100	50.0	10.8	32.2	42.0
	110	54.9	15.7	32.2	42.0
	120	60.5	21.3	34.9	42.0
	135	67.2	28.0	39.7	48.1
	150	74.5	35.3	46.0	73.1
28.5” Diameter Tank	75	28.7	-10.5	1.9	11.6
	90	34.2	-5.0	7.4	17.1
	105	38.8	-0.4	12.9	20.5
	120	45.8	6.6	18.4	42.0
	135	50.8	11.6	32.2	42.0
	150	56.2	17.0	32.2	42.0
	177	66.1	26.9	-	48.1

*Subtract 5.7 inches for the extended Daycab.

https://truckmanualshub.com/

D9B—Use with the following models: T800B and In-cab battery box.

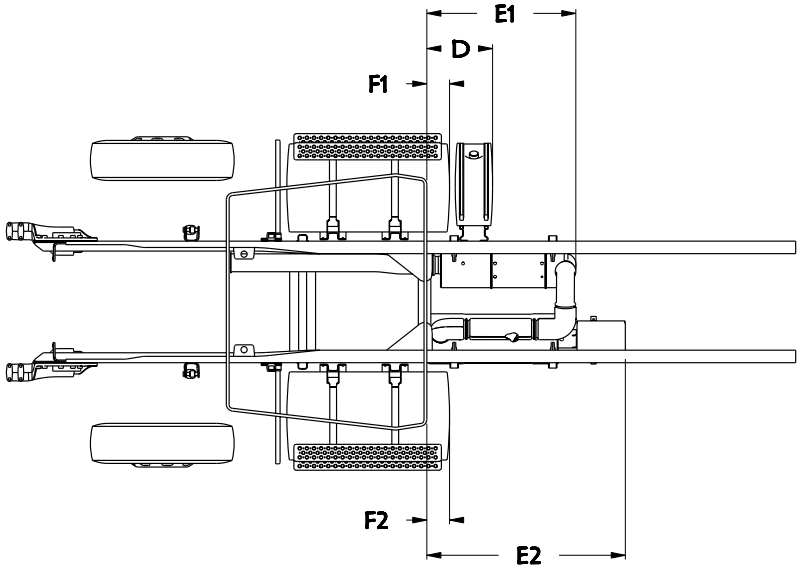

Dimension E1 (BOC to DPF/SCR)* = 53.6in
Dimension E2 (BOC to Diffuser)* = 67.4in

TABLE 5-40.

T8B					
Fuel Tank Size			Dimension F1 & F2 BOC to Fuel Tank, Daycab* (in)	Dimension D BOC to DEF Tank,* (in)	
				DEF Tank Size	
Diameter	Gallons	Length (in)		Small	Medium
22” Diameter Tank	56	35.5	-3.5	7.4	17.1
	60	38.0	-1.1	12.9	41.9
	75	47.3	8.2	32.2	41.9
	100	62.2	23.1	34.9	45.7
	120	74.2	35.1	47.0	73.1
24.5” Diameter Tank	60	30.5	-8.6	1.9	11.6
	75	38.5	-0.6	12.9	20.5
	90	45.5	6.4	18.4	41.9
	100	50.0	10.9	32.2	41.9
	110	54.9	15.8	32.2	41.9
	120	60.5	21.4	34.9	41.9
	135	67.2	28.1	39.7	48.0
	150	74.5	35.4	66.7	73.1
28.5” Diameter Tank	75	28.7	-10.4	1.9	11.6
	90	34.2	-4.9	7.4	17.1
	105	38.8	-0.3	12.9	20.5
	120	45.8	6.7	18.4	41.9
	135	50.8	11.7	32.2	41.9
	150	56.2	17.1	32.2	41.9
	177	66.1	27.0	-	48.0

*Subtract 5.7 inches for the extended Daycab.

https://truckmanualshub.com/

D10A—Use with the following models: T800SH

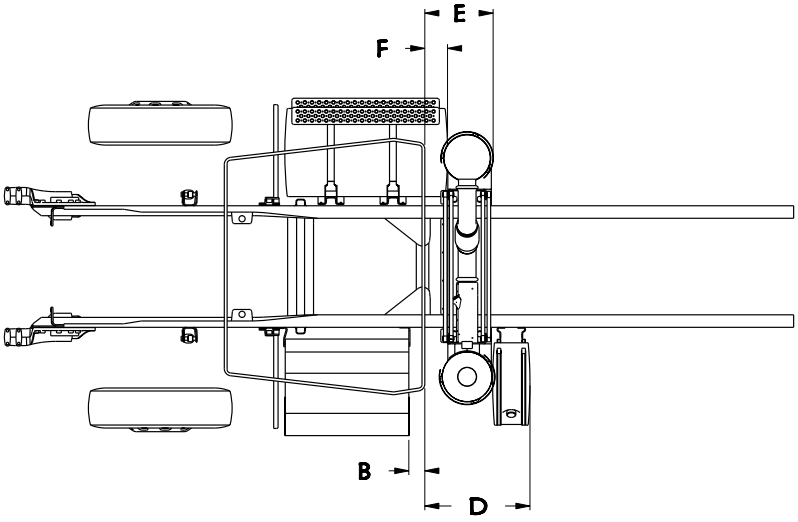

Dimension B (BOC to Battery Box)* = -4.5in
Dimension E (BOC to DPF/SCR) = 19.6in

TABLE 5-41.

T8SH								
Fuel Tank Size			Dimension F BOC to Fuel Tank, Daycab (in)	Dimension D BOC to DEF Tank, Daycab (in)		Dimension F BOC to Fuel Tank, Ext. Daycab (in)	Dimension D BOC to DEF Tank, Ext. Daycab (in)	
				DEF Tank Size			DEF Tank Size	
Diameter	Gallons	Length (in)		Small	Medium		Small	Medium
22” Diameter Tank	56	35.5	-3.7	7.4	39.2	-9.4	1.7	39.0
	60	38.0	-1.2			-6.9		
	75	47.3	8.1			2.4		
	100	62.2	23.0			17.3		
	120	74.2	35.0			29.3		
24.5” Diameter Tank	60	30.5	-8.7			-14.4		
	75	38.5	-0.7			-6.4		
	90	45.5	6.3			0.6		
	100	50.0	10.8			5.1		
	110	54.9	15.7			10.0		
	120	60.5	21.3			15.6		
	135	67.2	28.0			22.3		
	150	74.5	35.3			29.6		
28.5” Diameter Tank	75	28.7	-10.5			-16.2		
	90	34.2	-5.0			-10.7		
	105	38.8	-0.4			-6.1		
	120	45.8	6.6			0.9		
	135	50.8	11.6			5.9		
	150	56.2	17.0			11.3		
	177	66.1	26.9			21.2		

*Subtract 5.7 inches for the extended Daycab.
NOTE: DIMENSIONS “B” AND “D” ARE CALCULATED USING A STANDARD BATTERY BOX. OPTIONAL EXTENDED BOXES WILL CHANGE DIMENSIONS “B” AND “D”

https://truckmanualshub.com/

D10B—Use with the following models: T800B and C500B

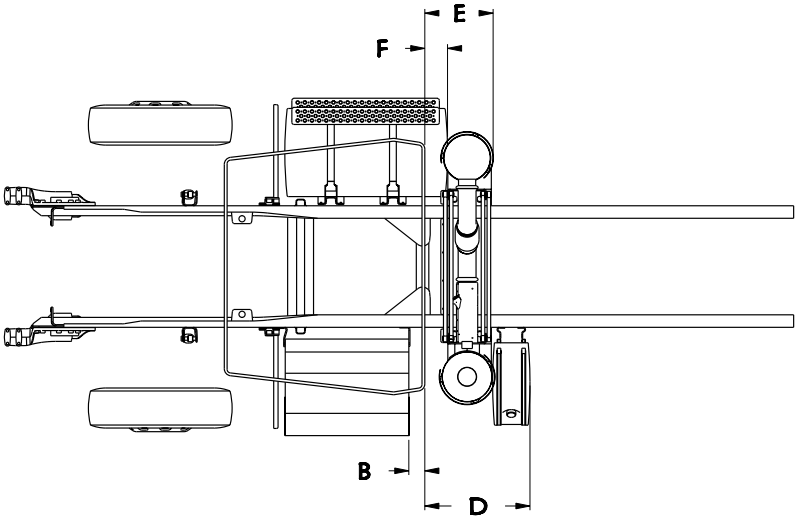

Dimension B (BOC to Battery Box)* = -4.5in
Dimension E (BOC to DPF/SCR) = 19.6in

TABLE 5-42.

T8B & C5B								
Fuel Tank Size			Dimension F BOC to Fuel Tank, Daycab (in)	Dimension D BOC to DEF Tank, Daycab (in)		Dimension F BOC to Fuel Tank, Ext. Daycab (in)	Dimension D BOC to DEF Tank, Ext. Daycab (in)	
				DEF Tank Size			DEF Tank Size	
Diameter	Gallons	Length (in)		Small	Medium		Small	Medium
22” Diameter Tank	56	35.5	-3.5	7.4	39.2	-9.2	1.7	39.0
	60	38.0	-1.1			-6.8		
	75	47.3	8.2			2.5		
	100	62.2	23.1			17.4		
	120	74.2	35.1			29.4		
24.5” Diameter Tank	60	30.5	-8.6			-14.3		
	75	38.5	-0.6			-6.3		
	90	45.5	6.4			0.7		
	100	50.0	10.9			5.2		
	110	54.9	15.8			10.1		
	120	60.5	21.4			15.7		
	135	67.2	28.1			22.4		
	150	74.5	35.4			29.7		
28.5” Diameter Tank	75	28.7	-10.4			-16.1		
	90	34.2	-4.9			-10.6		
	105	38.8	-0.3			-6.0		
	120	45.8	6.7			1.0		
	135	50.8	11.7			6.0		
	150	56.2	17.1			11.4		
	177	66.1	27.0			21.3		

*Subtract 5.7 inches for the extended Daycab.
NOTE: DIMENSIONS “B” AND “D” ARE CALCULATED USING A STANDARD BATTERY BOX. OPTIONAL EXTENDED BOXES WILL CHANGE DIMENSIONS “B” AND “D”

https://truckmanualshub.com/

D10C—Use with the following models: W900S

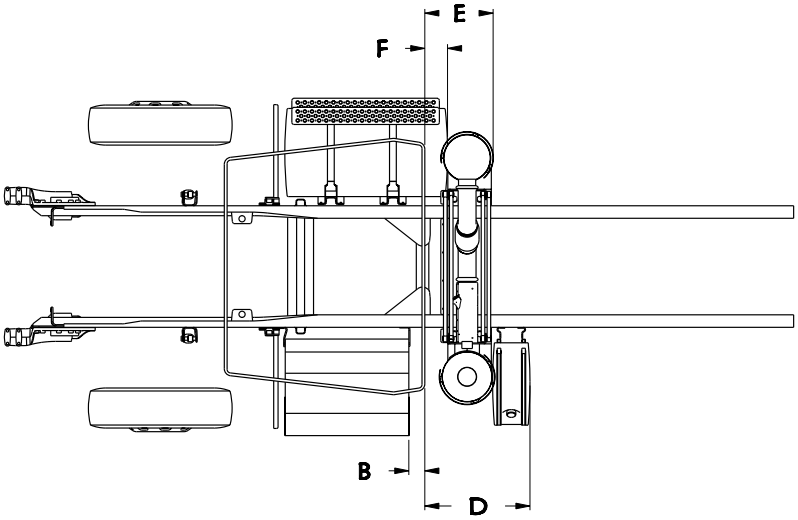

Dimension B (BOC to Battery Box)* = -10.6in
Dimension E (BOC to DPF/SCR) = 19.6in

TABLE 5-43.

W9S								
Fuel Tank Size			Dimension F BOC to Fuel Tank, Daycab (in)	Dimension D BOC to DEF Tank, Daycab (in)		Dimension F BOC to Fuel Tank, Ext. Daycab (in)	Dimension D BOC to DEF Tank, Ext. Daycab (in)	
				DEF Tank Size			DEF Tank Size	
Diameter	Gallons	Length (in)		Small	Medium		Small	Medium
22” Diameter Tank	56	35.5	-14.8	1.9	39.2	-20.5	-3.8	5.9
	60	38.0	-12.3			-18.0		
	75	47.3	-3.0			-8.7		
	100	62.2	11.9			6.2		
	120	74.2	23.9			18.2		
24.5” Diameter Tank	75	38.5	-11.8			-17.5		
	90	45.5	-4.8			-10.5		
	100	50.0	-0.3			-6.0		
	110	54.9	4.6			-1.1		
	120	60.5	10.2			4.5		
	135	67.2	16.9			11.2		
	150	74.5	24.2			18.5		
28.5” Diameter Tank	90	34.2	-16.1			-21.8		
	105	38.8	-11.5			-17.2		
	120	45.8	-4.5			-10.2		
	135	50.8	0.5			-5.2		
	150	56.2	5.9			0.2		
	177	66.1	15.8			10.1		

*Subtract 5.7 inches for the extended Daycab.
NOTE: DIMENSIONS “B” AND “D” ARE CALCULATED USING A STANDARD BATTERY BOX. OPTIONAL EXTENDED BOXES WILL CHANGE DIMENSIONS “B” AND “D”

https://truckmanualshub.com/

D10D—Use with the following models: W900B

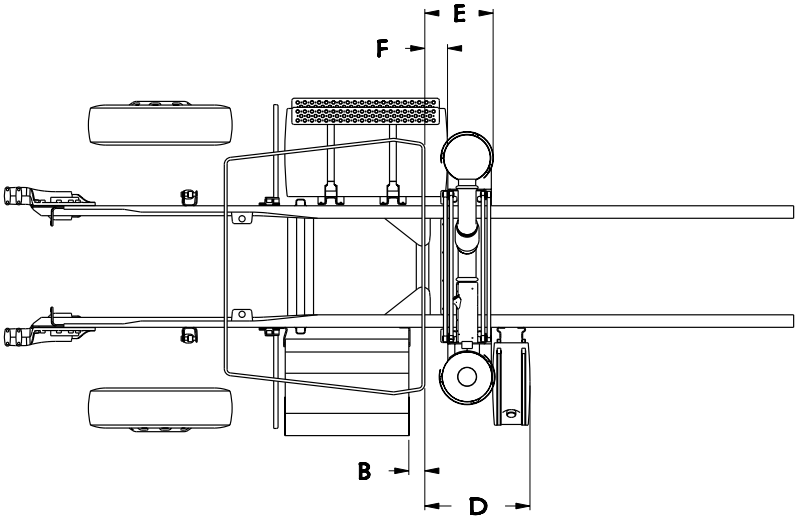

Dimension B (BOC to Battery Box)* = -10.6in
Dimension E (BOC to DPF/SCR) = 19.6in

TABLE 5-44.

W9B								
Fuel Tank Size			Dimension F BOC to Fuel Tank, Daycab (in)	Dimension D BOC to DEF Tank, Daycab (in)		Dimension F BOC to Fuel Tank, Ext. Daycab (in)	Dimension D BOC to DEF Tank, Ext. Daycab (in)	
				DEF Tank Size			DEF Tank Size	
Diameter	Gallons	Length (in)		Small	Medium		Small	Medium
22” Diameter Tank	56	35.5	-14.9	1.9	39.2	-20.6	-3.8	5.9
	60	38.0	-17.7			-23.4		
	75	47.3	-8.4			-14.1		
	100	62.2	6.5			0.8		
	120	74.2	18.5			12.8		
24.5” Diameter Tank	75	38.5	-11.9			-17.6		
	90	45.5	-10.2			-15.9		
	100	50.0	-5.7			-11.4		
	110	54.9	-0.8			-6.5		
	120	60.5	4.8			-0.9		
	135	67.2	11.5			5.8		
	150	74.5	18.8			13.1		
28.5” Diameter Tank	90	34.2	-15.4			-21.1		
	105	38.8	-11.6			-17.3		
	120	45.8	-9.9			-15.6		
	135	50.8	-2.2			-7.9		
	150	56.2	0.5			-5.2		
	177	66.1	12.8			7.1		

*Subtract 5.7 inches for the extended Daycab.
NOTE: DIMENSIONS “B” AND “D” ARE CALCULATED USING A STANDARD BATTERY BOX. OPTIONAL EXTENDED BOXES WILL CHANGE DIMENSIONS “B” AND “D”

https://truckmanualshub.com/

D10E—Use with the following models: W900L

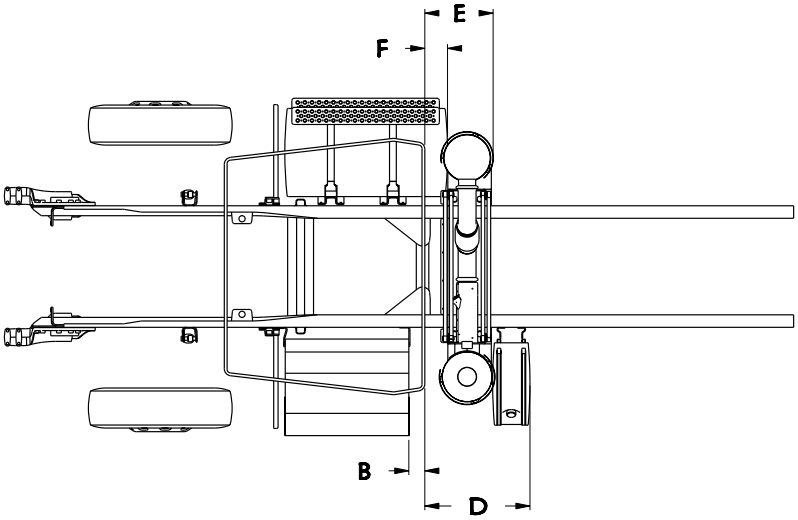

Dimension B (BOC to Battery Box)* = -10.6in
Dimension E (BOC to DPF/SCR) = 19.6in

TABLE 5-45.

W9L								
Fuel Tank Size			Dimension F BOC to Fuel Tank, Daycab (in)	Dimension D BOC to DEF Tank, Daycab (in)		Dimension F BOC to Fuel Tank, Ext. Daycab (in)	Dimension D BOC to DEF Tank, Ext. Daycab (in)	
				DEF Tank Size			DEF Tank Size	
Diameter	Gallons	Length (in)		Small	Medium		Small	Medium
22” Diameter Tank	56	35.5	-13.9	1.9	39.2	-19.6	-3.8	5.9
	60	38.0	-11.4			-17.1		
	75	47.3	-2.1			-7.8		
	100	62.2	12.8			7.1		
	120	74.2	24.8			19.1		
24.5” Diameter Tank	75	38.5	-10.9			-16.6		
	90	45.5	-3.9			-9.6		
	100	50.0	0.6			-5.1		
	110	54.9	5.5			-0.2		
	120	60.5	11.1			5.4		
	135	67.2	17.8			12.1		
	150	74.5	25.1			19.4		
28.5” Diameter Tank	90	34.2	-15.2			-20.9		
	105	38.8	-10.6			-16.3		
	120	45.8	-3.6			-9.3		
	135	50.8	1.4			-4.3		
	150	56.2	6.8			1.1		
	177	66.1	16.7			11.0		

*Subtract 5.7 inches for the extended Daycab.
NOTE: DIMENSIONS “B” AND “D” ARE CALCULATED USING A STANDARD BATTERY BOX. OPTIONAL EXTENDED BOXES WILL CHANGE DIMENSIONS “B” AND “D”

https://truckmanualshub.com/

D11A—Use with the following models: T800SH

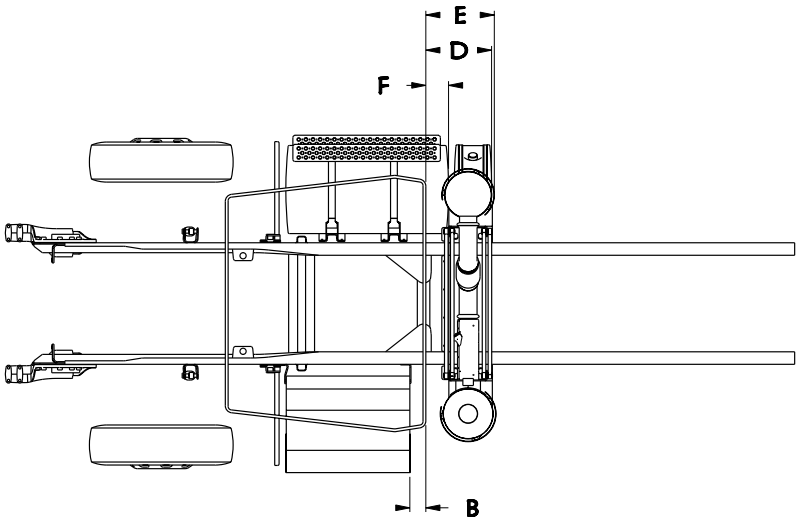

Dimension B (BOC to Battery Box)* = -4.5in
Dimension E (BOC to DPF/SCR) = 19.6in

TABLE 5-46.

T8SH								
Fuel Tank Size			Dimension F BOC to Fuel Tank, Daycab (in)	Dimension D BOC to DEF Tank, Daycab (in)		Dimension F BOC to Fuel Tank, Ext. Daycab (in)	Dimension D BOC to DEF Tank, Ext. Daycab (in)	
				DEF Tank Size			DEF Tank Size	
Diameter	Gallons	Length (in)		Small	Medium		Small	Medium
22” Diameter Tank	56	35.5	-3.7	18.4	39.2	-9.4	18.2	39.0
	60	38.0	-1.2	18.4	39.2	-6.9	18.2	39.0
	75	47.3	8.1	29.4	39.2	2.4	18.2	39.0
	100	62.2	23.0	34.9	42.6	17.3	29.2	36.9
	120	74.2	35.0	46.0	55.7	29.3	40.3	50.0
24.5” Diameter Tank	60	30.5	-8.7	18.4	39.2	-14.4	18.2	39.0
	75	38.5	-0.7	18.4	39.2	-6.4	18.2	39.0
	90	45.5	6.3	18.4	39.2	0.6	18.2	39.0
	100	50.0	10.8	29.4	39.2	5.1	18.2	39.0
	110	54.9	15.7	29.4	39.2	10.0	29.2	39.0
	120	60.5	21.3	34.9	42.6	15.6	29.2	36.9
	135	67.2	28.0	40.5	55.7	22.3	34.8	50.0
	150	74.5	35.3	46.0	55.7	29.6	40.3	50.0
28.5” Diameter Tank	75	28.7	-10.5	18.4	39.2	-16.2	18.2	39.0
	90	34.2	-5.0	18.4	39.2	-10.7	18.2	39.0
	105	38.8	-0.4	18.4	39.2	-6.1	18.2	39.0
	120	45.8	6.6	18.4	39.2	0.9	18.2	39.0
	135	50.8	11.6	29.4	39.2	5.9	18.2	39.0
	150	56.2	17.0	29.4	42.6	11.3	29.2	36.9
	177	66.1	26.9	-	55.7	21.2	-	50.0

*Subtract 5.7 inches for the extended Daycab.
NOTE: DIMENSION “B” IS CALCULATED USING A STANDARD BATTERY BOX. OPTIONAL EXTENDED BOXES WILL CHANGE DIMENSION “B”

https://truckmanualshub.com/

D11B—Use with the following models: T800B and C500B

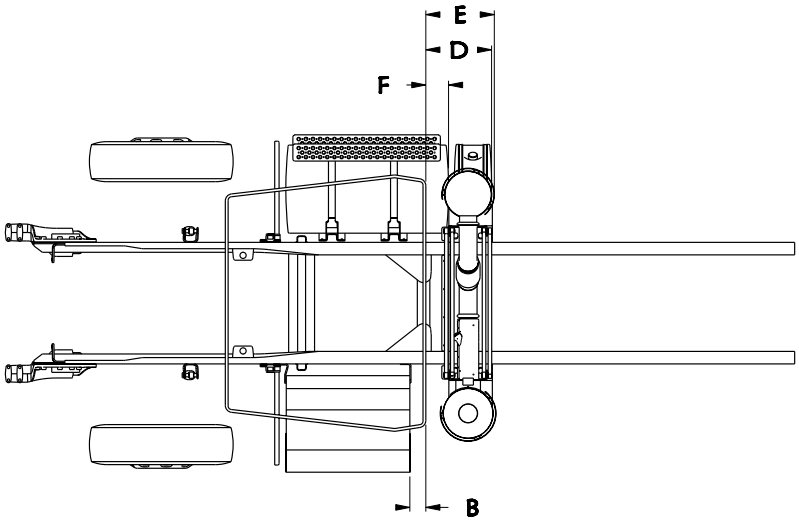

Dimension B (BOC to Battery Box)* = -4.5in (T8)
Dimension E (BOC to DPF/SCR) = 19.6in

TABLE 5-47.

T8B & C5B								
Fuel Tank Size			Dimension F BOC to Fuel Tank, Daycab (in)	Dimension D BOC to DEF Tank, Daycab (in)		Dimension F BOC to Fuel Tank, Ext. Daycab (in)	Dimension D BOC to DEF Tank, Ext. Daycab (in)	
				DEF Tank Size			DEF Tank Size	
Diameter	Gallons	Length (in)		Small	Medium		Small	Medium
22” Diameter Tank	56	35.5	-3.5	18.4	39.2	-9.2	18.2	39.0
	60	38.0	-1.1	18.4	39.2	-6.8	18.2	39.0
	75	47.3	8.2	29.4	39.2	2.5	18.2	39.0
	100	62.2	23.1	34.9	42.6	17.4	29.2	36.9
	120	74.2	35.1	46.0	55.7	29.4	40.3	50.0
24.5” Diameter Tank	60	30.5	-8.6	18.4	39.2	-14.3	18.2	39.0
	75	38.5	-0.6	18.4	39.2	-6.3	18.2	39.0
	90	45.5	6.4	18.4	39.2	0.7	18.2	39.0
	100	50.0	10.9	29.4	39.2	5.2	18.2	39.0
	110	54.9	15.8	29.4	39.2	10.1	29.2	39.0
	120	60.5	21.4	34.9	42.6	15.7	29.2	36.9
	135	67.2	28.1	40.4	55.7	22.4	34.8	50.0
	150	74.5	35.4	46.0	55.7	29.7	40.3	50.0
28.5” Diameter Tank	75	28.7	-10.4	18.4	39.2	-16.1	18.2	39.0
	90	34.2	-4.9	18.4	39.2	-10.6	18.2	39.0
	105	38.8	-0.3	18.4	39.2	-6.0	18.2	39.0
	120	45.8	6.7	18.4	39.2	1.0	18.2	39.0
	135	50.8	11.7	29.4	39.2	6.0	18.2	39.0
	150	56.2	17.1	29.4	42.6	11.4	29.2	36.9
	177	66.1	27.0	-	55.7	21.3	-	50.0

*Subtract 5.7 inches for the extended Daycab.
NOTE: DIMENSION “B” IS CALCULATED USING A STANDARD BATTERY BOX. OPTIONAL EXTENDED BOXES WILL CHANGE DIMENSION “B”

https://truckmanualshub.com/

D11C—Use with the following models: W900S

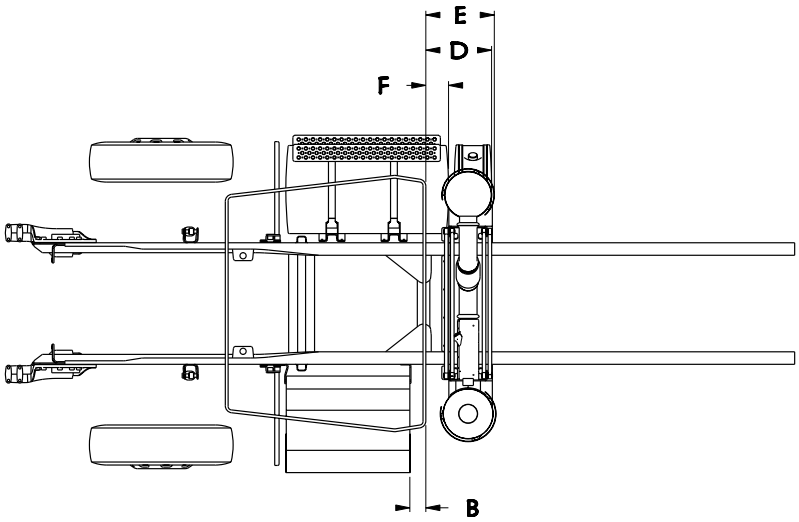

Dimension B (BOC to Battery Box)* = -10.6in
Dimension E (BOC to DPF/SCR) = 19.6in

TABLE 5-48.

W9S								
Fuel Tank Size			Dimension F BOC to Fuel Tank, Daycab (in)	Dimension D BOC to DEF Tank, Daycab (in)		Dimension F BOC to Fuel Tank, Ext. Daycab (in)	Dimension D BOC to DEF Tank, Ext. Daycab (in)	
				DEF Tank Size			DEF Tank Size	
Diameter	Gallons	Length (in)		Small	Medium		Small	Medium
22” Diameter Tank	56	35.5	-14.8	18.4	39.2	-20.5	18.2	39.0
	60	38.0	-12.3	18.4	39.2	-18.0	18.2	39.0
	75	47.3	-3.0	18.4	39.2	-8.7	18.2	39.0
	100	62.2	11.9	29.4	39.2	6.2	18.2	39.0
	120	74.2	23.9	34.9	44.7	18.2	29.2	39.0
24.5” Diameter Tank	75	38.5	-11.8	18.4	39.2	-17.5	18.2	39.0
	90	45.5	-4.8	18.4	39.2	-10.5	18.2	39.0
	100	50.0	-0.3	18.4	39.2	-6.0	18.2	39.0
	110	54.9	4.6	18.4	39.2	-1.1	18.2	39.0
	120	60.5	10.2	29.4	39.2	4.5	18.2	39.0
	135	67.2	16.9	29.4	39.2	11.2	29.2	39.0
	150	74.5	24.2	34.9	44.7	18.5	29.2	39.0
28.5” Diameter Tank	90	34.2	-16.1	18.4	39.2	-21.8	18.2	39.0
	105	38.8	-11.5	18.4	39.2	-17.2	18.2	39.0
	120	45.8	-4.5	18.4	39.2	-10.2	18.2	39.0
	135	50.8	0.5	18.4	39.2	-5.2	18.2	39.0
	150	56.2	5.9	18.4	39.2	0.2	18.2	39.0
	177	66.1	15.8	-	35.8	10.1	-	39.0

*Subtract 5.7 inches for the extended Daycab.
NOTE: DIMENSION “B” IS CALCULATED USING A STANDARD BATTERY BOX. OPTIONAL EXTENDED BOXES WILL CHANGE DIMENSION “B”

https://truckmanualshub.com/

D11D—Use with the following models: W900B

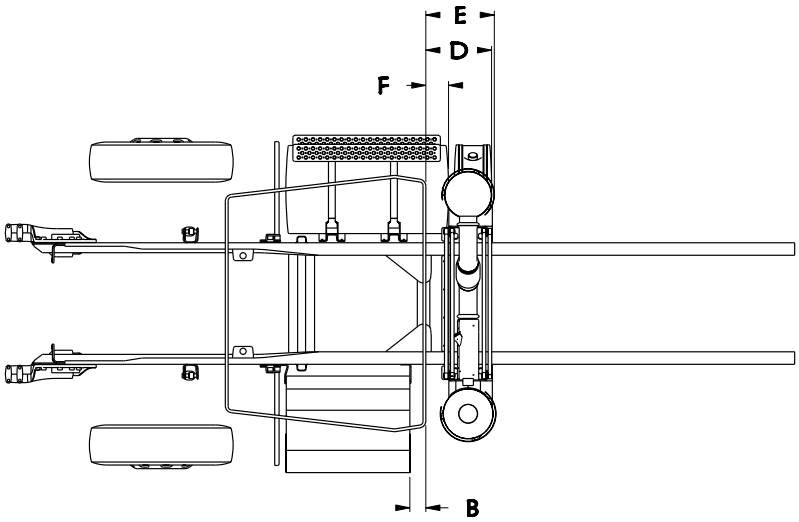

Dimension B (BOC to Battery Box)* = -10.6in
Dimension E (BOC to DPF/SCR) = 19.6in

TABLE 5-49.

W9B								
Fuel Tank Size			Dimension F BOC to Fuel Tank, Daycab (in)	Dimension D BOC to DEF Tank, Daycab (in)		Dimension F BOC to Fuel Tank, Ext. Daycab (in)	Dimension D BOC to DEF Tank, Ext. Daycab (in)	
				DEF Tank Size			DEF Tank Size	
Diameter	Gallons	Length (in)		Small	Medium		Small	Medium
22” Diameter Tank	56	35.5	-14.9	16.4	39.2	-20.6	16.2	39.0
	60	38.0	-17.7	16.4	39.2	-23.4	16.2	39.0
	75	47.3	-8.4	16.4	39.2	-14.1	16.2	39.0
	100	62.2	6.5	16.4	39.2	0.8	16.2	39.0
	120	74.2	18.5	29.4	39.2	12.8	27.2	39.0
24.5” Diameter Tank	75	38.5	-11.9	16.4	39.2	-17.6	16.2	39.0
	90	45.5	-10.2	16.4	39.2	-15.9	16.2	39.0
	100	50.0	-5.7	16.4	39.2	-11.4	16.2	39.0
	110	54.9	-0.8	16.4	39.2	-6.5	16.2	39.0
	120	60.5	4.8	16.4	39.2	-0.9	16.2	39.0
	135	67.2	11.5	27.4	39.2	5.8	18.2	39.0
	150	74.5	18.8	29.4	39.2	13.1	27.2	39.0
28.5” Diameter Tank	90	34.2	-15.4	16.4	39.2	-21.1	16.2	39.0
	105	38.8	-11.6	16.4	39.2	-17.3	16.2	39.0
	120	45.8	-9.9	16.4	39.2	-15.6	16.2	39.0
	135	50.8	-2.2	16.4	39.2	-7.9	16.2	39.0
	150	56.2	0.5	16.4	39.2	-5.2	16.2	39.0
	177	66.1	12.8	16.4	39.2	7.1	16.2	39.0

*Subtract 5.7 inches for the extended Daycab.
NOTE: DIMENSION “B” IS CALCULATED USING A STANDARD BATTERY BOX. OPTIONAL EXTENDED BOXES WILL CHANGE DIMENSION “B”

https://truckmanualshub.com/

D11E—Use with the following models: W900L

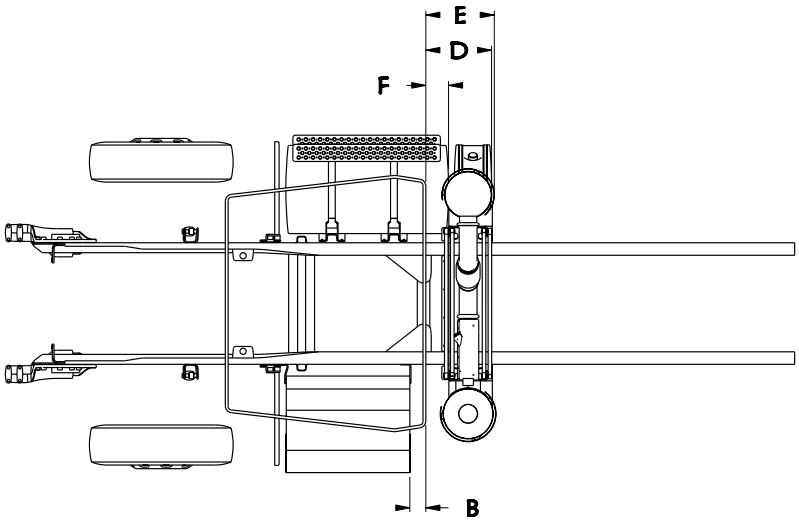

Dimension B (BOC to Battery Box)* = -10.6in
Dimension E (BOC to DPF/SCR) = 19.6in

TABLE 5-50.

W9L								
Fuel Tank Size			Dimension F BOC to Fuel Tank, Daycab (in)	Dimension D BOC to DEF Tank, Daycab (in)		Dimension F BOC to Fuel Tank, Ext. Daycab (in)	Dimension D BOC to DEF Tank, Ext. Daycab (in)	
				DEF Tank Size			DEF Tank Size	
Diameter	Gallons	Length (in)		Small	Medium		Small	Medium
22” Diameter Tank	56	35.5	-13.9	18.4	39.2	-19.6	18.2	39.0
	60	38.0	-11.4	18.4	39.2	-17.1	18.2	39.0
	75	47.3	-2.1	18.4	39.2	-7.8	18.2	39.0
	100	62.2	12.8	29.4	39.2	7.1	18.2	39.0
	120	74.2	24.8	37.7	44.7	19.1	32.3	39.0
24.5” Diameter Tank	75	38.5	-10.9	18.4	39.2	-16.6	18.2	39.0
	90	45.5	-3.9	18.4	39.2	-9.6	18.2	39.0
	100	50.0	0.6	18.4	39.2	-5.1	18.2	39.0
	110	54.9	5.5	18.4	39.2	-0.2	18.2	39.0
	120	60.5	11.1	29.4	39.2	5.4	18.2	39.0
	135	67.2	17.8	29.4	39.2	12.1	34.9	39.0
	150	74.5	25.1	37.7	44.7	19.4	32.3	39.0
28.5” Diameter Tank	90	34.2	-15.2	18.4	39.2	-20.9	18.2	39.0
	105	38.8	-10.6	18.4	39.2	-16.3	18.2	39.0
	120	45.8	-3.6	18.4	39.2	-9.3	18.2	39.0
	135	50.8	1.4	18.4	39.2	-4.3	18.2	39.0
	150	56.2	6.8	18.4	39.2	1.1	18.2	39.0
	177	66.1	16.7	29.4	39.2	11.0	34.9	39.0

*Subtract 5.7 inches for the extended Daycab.
NOTE: DIMENSION “B” IS CALCULATED USING A STANDARD BATTERY BOX. OPTIONAL EXTENDED BOXES WILL CHANGE DIMENSION “B”

https://truckmanualshub.com/

D12A—Use with the following models: T800SH

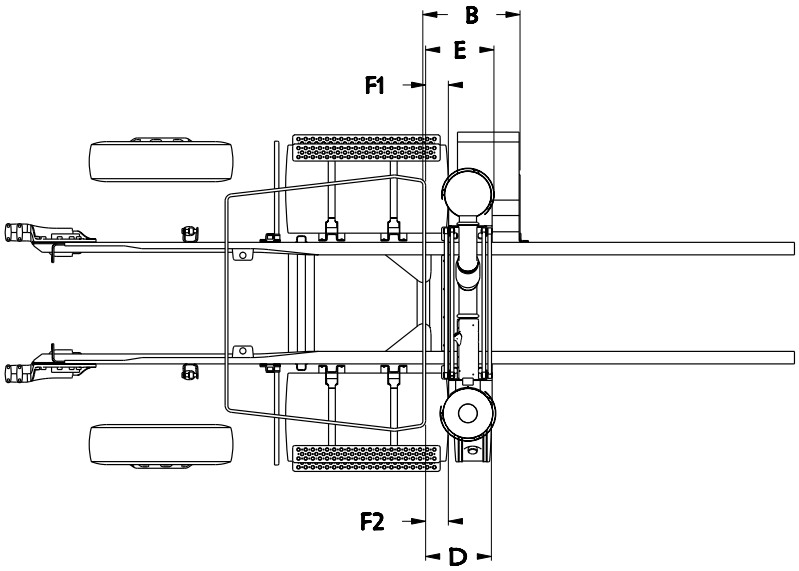

Dimension E (BOC to DPF/SCR) = 19.6in

TABLE 5-51.

T8SH										
Fuel Tank Size			Dimension F1 & F2 BOC to Fuel Tank, Daycab (in)	Dimension B BOC to Battery Box, Daycab (in)	Dimension D BOC to DEF Tank, Daycab (in)		Dimension F1 & F2 BOC to Fuel Tank, Ext. Daycab (in)	Dimension B BOC to Battery Box, Ext Daycab (in)	Dimension D BOC to DEF Tank, Ext. Daycab (in)	
					DEF Tank Size				DEF Tank Size	
Diameter	Gallons	Length (in)			Small	Medium			Small	Medium
22” Diameter Tank	56	35.5	-3.7	24.1	7.4	39.2	-9.4	24.1	1.7	39.0
	60	38.0	-1.2	24.1	18.4	39.2	-6.9	24.1	4.4	39.0
	75	47.3	8.1	29.6	29.4	39.2	2.4	24.1	18.2	39.0
	100	62.2	23.0	43.7	34.9	44.7	17.3	29.3	29.2	39.0
	120	74.2	35.0	55.7	46.0	55.7	29.3	50.0	40.3	50.0
24.5” Diameter Tank	60	30.5	-8.7	24.1	1.9	39.2	-14.4	24.1	-3.8	39.0
	75	38.5	-0.7	24.1	18.4	39.2	-6.4	24.1	4.4	39.0
	90	45.5	6.3	29.6	18.4	39.2	0.6	29.6	18.2	39.0
	100	50.0	10.8	35.1	29.4	39.2	5.1	29.6	18.2	39.0
	110	54.9	15.7	36.4	29.4	39.2	10.0	35.1	29.2	39.0
	120	60.5	21.3	42.0	34.9	42.0	15.6	35.1	29.2	39.0
	135	67.2	28.0	48.7	40.5	47.5	22.3	43.0	34.8	41.8
	150	74.5	35.3	56.0	46.0	55.7	29.6	50.3	40.2	50.0
28.5” Diameter Tank	75	28.7	-10.5	24.1	1.9	39.0	-16.2	24.1	-3.8	39.2
	90	34.2	-5.0	24.1	7.4	39.0	-10.7	24.1	1.7	39.2
	105	38.8	-0.4	24.1	18.4	39.0	-6.1	24.1	7.2	39.2
	120	45.8	6.6	29.6	18.4	39.0	0.9	29.3	18.2	39.2
	135	50.8	11.6	35.1	23.9	39.0	5.9	35.1	18.2	39.2
	150	56.2	17.0	37.7	29.4	36.4	11.3	35.1	29.2	30.7
	177	66.1	26.9	47.6	-	47.5	21.2	41.9	-	41.8

NOTE: DIMENSION “B” IS CALCULATED USING A CANTILEVER SIZED BATTERY BOX. OPTIONAL BOXES WILL AFFECT THIS DIMENSION.

https://truckmanualshub.com/

D12B—Use with the following models: T800B and C500B

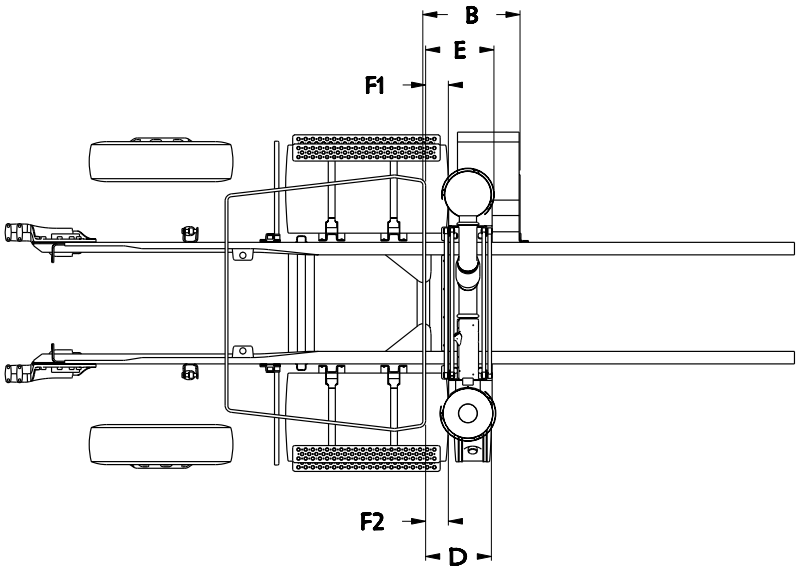

Dimension E (BOC to DPF/SCR) = 19.6in

TABLE 5-52.

T8B & C5B										
Fuel Tank Size			Dimension F1 & F2 BOC to Fuel Tank, Daycab (in)	Dimension B BOC to Battery Box, Daycab (in)	Dimension D BOC to DEF Tank, Daycab (in)		Dimension F1 & F2 BOC to Fuel Tank, Ext. Daycab (in)	Dimension B BOC to Battery Box, Ext Daycab (in)	Dimension D BOC to DEF Tank, Ext. Daycab (in)	
					DEF Tank Size				DEF Tank Size	
Diameter	Gallons	Length (in)			Small	Medium			Small	Medium
22” Diameter Tank	56	35.5	-3.5	24.1	7.4	39.2	-9.2	24.1	1.7	39.0
	60	38.0	-1.1	24.1	18.4	39.2	-6.8	24.1	4.4	39.0
	75	47.3	8.2	29.6	29.4	39.2	2.5	24.1	18.2	39.0
	100	62.2	23.1	43.8	34.9	44.7	17.4	29.3	29.2	39.0
	120	74.2	35.1	55.8	46.0	55.7	29.4	50.1	40.3	50.0
24.5” Diameter Tank	60	30.5	-8.6	24.1	1.9	39.2	-14.3	24.1	-3.8	39.0
	75	38.5	-0.6	24.1	18.4	39.2	-6.3	24.1	4.4	39.0
	90	45.5	6.4	29.6	18.4	39.2	0.7	29.6	18.2	39.0
	100	50.0	10.9	35.1	29.4	39.2	5.2	29.6	18.2	39.0
	110	54.9	15.8	36.5	29.4	39.2	10.1	35.1	29.2	39.0
	120	60.5	21.4	42.1	34.9	42.0	15.7	35.1	29.2	39.0
	135	67.2	28.1	48.8	40.4	47.5	22.4	43.1	34.8	41.8
	150	74.5	35.4	56.1	46.0	55.7	29.7	50.4	40.2	50.0
28.5” Diameter Tank	75	28.7	-10.4	24.1	1.9	39.0	-16.1	24.1	-3.8	39.2
	90	34.2	-4.9	24.1	7.4	39.0	-10.6	24.1	1.7	39.2
	105	38.8	-0.3	24.1	18.4	39.0	-6.0	24.1	7.2	39.2
	120	45.8	6.7	29.6	18.4	39.0	1.0	29.3	18.2	39.2
	135	50.8	11.7	35.1	23.9	39.0	6.0	35.1	18.2	39.2
	150	56.2	17.1	37.8	29.4	36.4	11.4	35.1	29.2	30.7
	177	66.1	27.0	47.7	-	47.5	21.3	42.0	-	41.8

NOTE: DIMENSION “B” IS CALCULATED USING A CANTILEVER SIZED BATTERY BOX. OPTIONAL BOXES WILL AFFECT THIS DIMENSION.

https://truckmanualshub.com/

D12C—Use with the following models: W900S

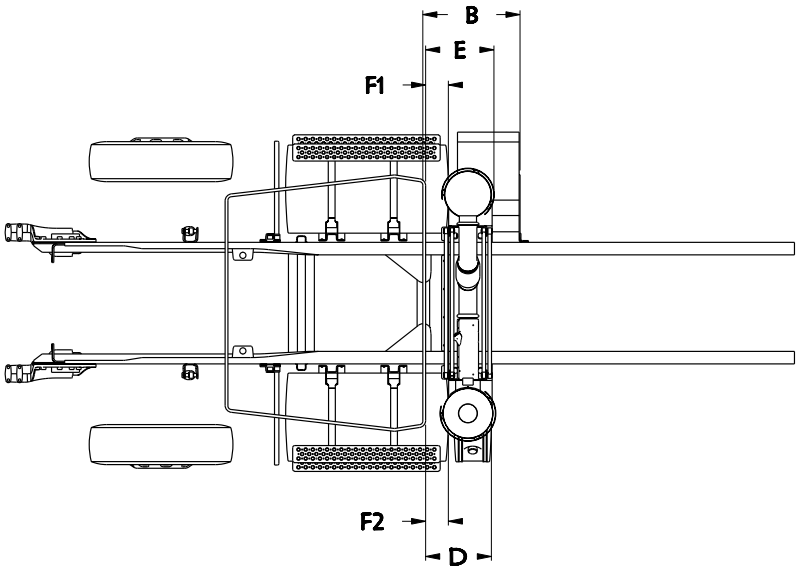

Dimension E (BOC to DPF/SCR) = 19.6in

TABLE 5-53.

W9S										
Fuel Tank Size			Dimension F1 & F2 BOC to Fuel Tank, Daycab (in)	Dimension B BOC to Battery Box, Daycab (in)	Dimension D BOC to DEF Tank, Daycab (in)		Dimension F1 & F2 BOC to Fuel Tank, Ext. Daycab (in)	Dimension B BOC to Battery Box, Ext Daycab (in)	Dimension D BOC to DEF Tank, Ext. Daycab (in)	
					DEF Tank Size				DEF Tank Size	
Diameter	Gallons	Length (in)			Small	Medium			Small	Medium
22” Diameter Tank	56	35.5	-14.8	20.9	-3.7	6.1	-20.5	20.9	-9.4	0.4
	60	38.0	-12.3	20.9	1.9	35.8	-18.0	20.9	-3.8	5.9
	75	47.3	-3.0	20.9	18.4	35.8	-8.7	20.9	7.2	39.0
	100	62.2	11.9	37.4	29.4	35.8	6.2	31.9	18.2	39.0
	120	74.2	23.9	44.6	34.9	44.7	18.2	38.9	29.2	39.0
24.5” Diameter Tank	75	38.5	-11.8	20.9	1.9	35.8	-17.5	20.9	-3.8	5.9
	90	45.5	-4.8	20.9	7.4	35.8	-10.5	20.9	1.7	39.0
	100	50.0	-0.3	20.9	18.4	35.8	-6.0	20.9	7.2	39.0
	110	54.9	4.6	26.4	18.4	35.8	-1.1	20.9	18.2	39.0
	120	60.5	10.2	31.9	29.4	35.8	4.5	26.4	18.2	39.0
	135	67.2	16.9	37.6	29.4	39.2	11.2	31.9	29.2	39.0
	150	74.5	24.2	44.9	34.9	44.7	18.5	39.2	29.2	39.0
28.5” Diameter Tank	90	34.2	-16.1	20.9	-3.7	6.1	-21.8	20.9	-9.4	0.4
	105	38.8	-11.5	20.9	1.9	35.8	-17.2	20.9	-3.8	5.9
	120	45.8	-4.5	20.9	7.4	35.8	-10.2	20.9	1.7	39.0
	135	50.8	0.5	20.9	18.4	35.8	-5.2	20.9	7.2	39.0
	150	56.2	5.9	31.9	18.4	35.8	0.2	26.4	18.2	39.0
	177	66.1	15.8	37.4	-	35.8	10.1	31.9	-	39.0

NOTE: DIMENSION “B” IS CALCULATED USING A CANTILEVER SIZED BATTERY BOX. OPTIONAL BOXES WILL AFFECT THIS DIMENSION.

https://truckmanualshub.com/

D12D—Use with the following models: W900B

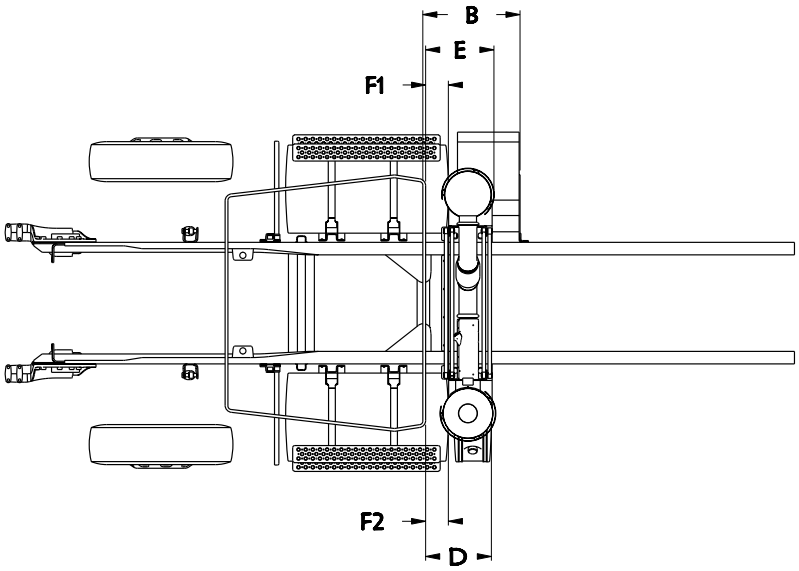

Dimension E (BOC to DPF/SCR) = 19.6in

TABLE 5-54.

W9B										
Fuel Tank Size			Dimension F1 & F2 BOC to Fuel Tank, Daycab (in)	Dimension B BOC to Battery Box, Daycab (in)	Dimension D BOC to DEF Tank, Daycab (in)		Dimension F1 & F2 BOC to Fuel Tank, Ext. Daycab (in)	Dimension B BOC to Battery Box, Ext Daycab (in)	Dimension D BOC to DEF Tank, Ext. Daycab (in)	
					DEF Tank Size				DEF Tank Size	
Diameter	Gallons	Length (in)			Small	Medium			Small	Medium
22” Diameter Tank	56	35.5	-14.9	20.9	-3.7	6.1	-20.6	20.9	-9.4	0.4
	60	38.0	-17.7	20.9	-3.7	39.2	-23.4	20.9	-9.4	5.9
	75	47.3	-8.4	20.9	7.4	39.2	-14.1	20.9	1.7	5.9
	100	62.2	6.5	31.9	18.4	39.2	0.8	26.4	18.2	39.0
	120	74.2	18.5	39.2	29.4	39.2	12.8	37.4	29.2	39.0
24.5” Diameter Tank	75	38.5	-11.9	20.9	-3.7	39.2	-17.6	20.9	-9.4	5.9
	90	45.5	-10.2	20.9	1.9	39.2	-15.9	20.9	-3.8	5.9
	100	50.0	-5.7	20.9	7.4	39.2	-11.4	20.9	1.7	39.0
	110	54.9	-0.8	20.9	18.4	39.2	-6.5	20.9	7.2	39.0
	120	60.5	4.8	26.4	18.4	39.2	-0.9	20.9	18.2	39.0
	135	67.2	11.5	37.4	29.4	39.2	5.8	26.4	18.2	39.0
	150	74.5	18.8	39.5	29.4	39.2	13.1	37.4	29.2	39.0
28.5” Diameter Tank	90	34.2	-15.4	20.9	-3.7	6.1	-21.1	20.9	-9.4	0.4
	105	38.8	-11.6	20.9	1.9	39.2	-17.3	20.9	-3.8	5.9
	120	45.8	-9.9	20.9	1.9	39.2	-15.6	20.9	-3.8	5.9
	135	50.8	-2.2	20.9	18.4	39.2	-7.9	20.9	7.2	39.0
	150	56.2	0.5	26.4	18.4	39.2	-5.2	20.9	7.2	39.0
	177	66.1	12.8	37.4	29.4	39.2	7.1	31.9	18.2	39.0

NOTE: DIMENSION “B” IS CALCULATED USING A CANTILEVER SIZED BATTERY BOX. OPTIONAL BOXES WILL AFFECT THIS DIMENSION.

https://truckmanualshub.com/

D12E—Use with the following models: W900L

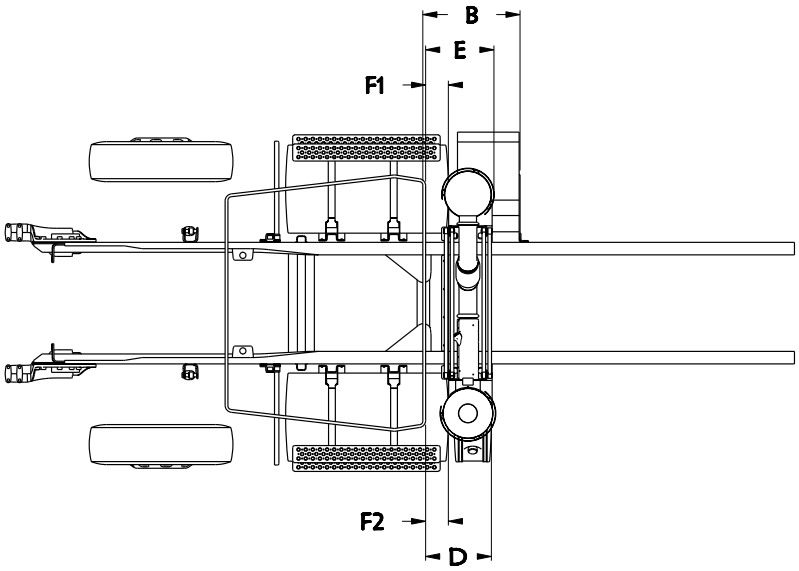

Dimension E (BOC to DPF/SCR) = 19.6in

TABLE 5-55.

W9L										
Fuel Tank Size			Dimension F1 & F2 BOC to Fuel Tank, Daycab (in)	Dimension B BOC to Battery Box, Daycab (in)	Dimension D BOC to DEF Tank, Daycab (in)		Dimension F1 & F2 BOC to Fuel Tank, Ext. Daycab (in)	Dimension B BOC to Battery Box, Ext Daycab (in)	Dimension D BOC to DEF Tank, Ext. Daycab (in)	
					DEF Tank Size				DEF Tank Size	
Diameter	Gallons	Length (in)			Small	Medium			Small	Medium
22” Diameter Tank	56	35.5	-13.9	20.9	1.9	6.1	-19.6	20.9	-3.8	0.4
	60	38.0	-11.4	20.9	1.9	39.2	-17.1	20.9	-3.8	5.9
	75	47.3	-2.1	20.9	7.4	39.2	-7.8	20.9	1.7	39.0
	100	62.2	12.8	37.4	29.4	39.2	7.1	31.9	18.2	39.0
	120	74.2	24.8	45.5	37.7	44.7	19.1	39.8	32.0	39.0
24.5” Diameter Tank	75	38.5	-10.9	20.9	1.9	39.2	-16.6	20.9	-3.8	5.9
	90	45.5	-3.9	20.9	7.4	39.2	-9.6	20.9	1.7	39.0
	100	50.0	0.6	20.9	18.4	39.2	-5.1	20.9	7.2	39.0
	110	54.9	5.5	26.4	18.4	39.2	-0.2	20.9	18.2	39.0
	120	60.5	11.1	31.9	29.4	39.2	5.4	26.4	18.2	39.0
	135	67.2	17.8	38.5	29.4	39.2	12.1	37.4	29.2	39.0
	150	74.5	25.1	45.8	37.7	44.7	19.4	40.1	32.0	39.0
28.5” Diameter Tank	90	34.2	-15.2	20.9	-3.7	6.4	-20.9	20.9	-9.4	0.4
	105	38.8	-10.6	20.9	1.9	39.2	-16.3	20.9	-1.8	5.9
	120	45.8	-3.6	20.9	7.4	39.2	-9.3	20.9	1.7	39.0
	135	50.8	1.4	26.4	18.4	39.2	-4.3	20.9	7.2	39.0
	150	56.2	6.8	31.9	18.4	39.2	1.1	26.4	18.2	39.0
	177	66.1	16.7	37.4	29.4	39.2	11.0	31.9	23.7	39.0

NOTE: DIMENSION “B” IS CALCULATED USING A CANTILEVER SIZED BATTERY BOX. OPTIONAL BOXES WILL AFFECT THIS DIMENSION.

https://truckmanualshub.com/

D13A—Use with the following models: T800SH

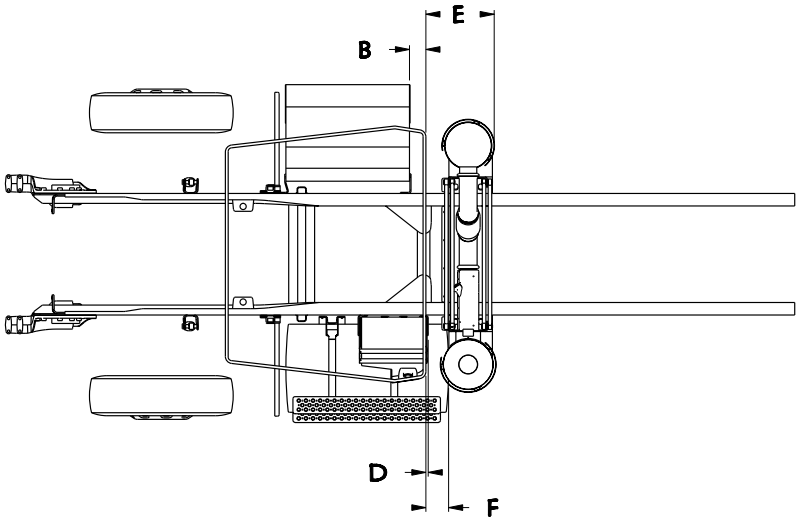

Dimension B (BOC To Battery Box)* = -4.5in
Dimension E (BOC to DPF/SCR) = 19.6in
Dimension D (BOC to DEF tank)* = 1.0in

TABLE 5-56.

T8SH				
Fuel Tank Size			Dimension F BOC to Fuel Tank, Daycab (in)	Dimension F BOC to Fuel Tank, Extended Daycab (in)
Diameter	Gallons	Length (in)		
22” Diameter Tank	56	35.5	-3.7	-9.4
	60	38.0	-1.2	-6.9
	75	47.3	8.1	2.4
	100	62.2	23.0	17.3
	120	74.2	35.0	29.3
24.5” Diameter Tank	60	30.5	-8.7	-14.4
	75	38.5	-0.7	-6.4
	90	45.5	6.3	0.6
	100	50.0	10.8	5.1

*Subtract 5.7 inches for the extended Daycab.
NOTE: DIMENSION “B” IS CALCULATED USING A STANDARD BATTERY BOX. OPTIONAL EXTENDED BOXES WILL CHANGE DIMENSION “B”

https://truckmanualshub.com/

D13B—Use with the following models: T800B and C500B

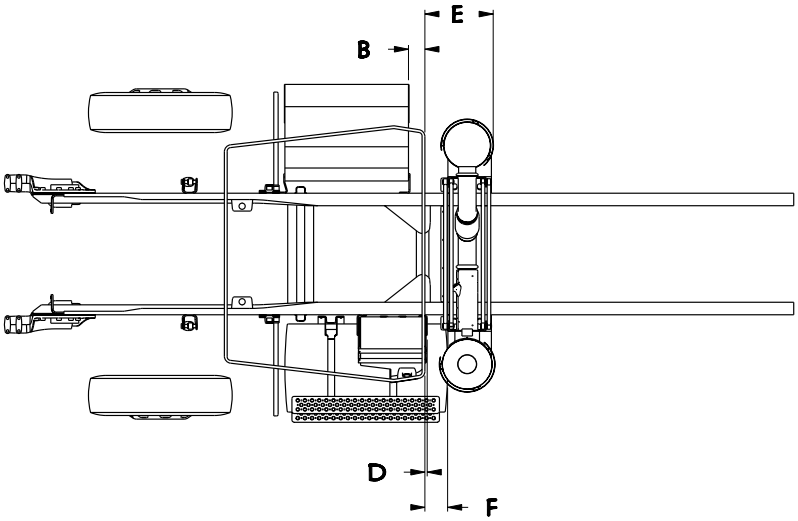

Dimension B (BOC To Battery Box)* = -4.5in
Dimension E (BOC to DPF/SCR) = 19.6in
Dimension D (BOC to DEF tank)* = 1.0in

TABLE 5-57.

T8B & C5B				
Fuel Tank Size			Dimension F BOC to Fuel Tank, Daycab (in)	Dimension F BOC to Fuel Tank, Extended Daycab (in)
Diameter	Gallons	Length (in)		
22” Diameter Tank	56	35.5	-3.5	-9.2
	60	38.0	-1.1	-6.8
	75	47.3	8.2	2.5
	100	62.2	23.1	17.4
	120	74.2	35.1	29.4
24.5” Diameter Tank	60	30.5	-8.6	-14.3
	75	38.5	-0.6	-6.3
	90	45.5	6.4	0.7
	100	50.0	10.9	5.2

*Subtract 5.7 inches for the extended Daycab.
NOTE: DIMENSION “B” IS CALCULATED USING A STANDARD BATTERY BOX. OPTIONAL EXTENDED BOXES WILL CHANGE DIMENSION “B”

https://truckmanualshub.com/

D13C—Use with the following models: W900S

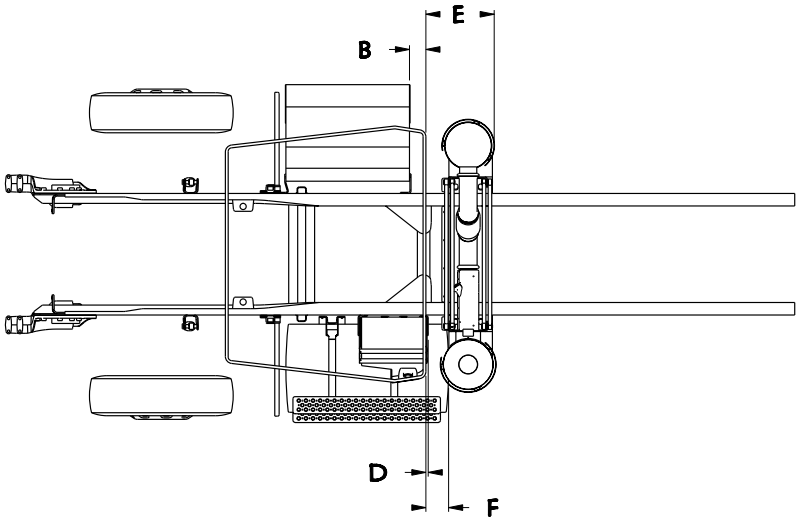

Dimension B (BOC To Battery Box)* = -10.6in
Dimension E (BOC to DPF/SCR) = 19.6in
Dimension D (BOC to DEF tank)* = 1.0in

TABLE 5-58.

W9S				
Fuel Tank Size			Dimension F BOC to Fuel Tank, Daycab (in)	Dimension F BOC to Fuel Tank, Extended Daycab (in)
Diameter	Gallons	Length (in)		
22” Diameter Tank	56	35.5	-14.8	-20.5
	60	38.0	-12.3	-18.0
	75	47.3	-3.0	-8.7
	100	62.2	11.9	6.2
	120	74.2	23.9	18.2
24.5” Diameter Tank	75	38.5	-11.8	-17.5
	90	45.5	-4.8	-10.5
	100	50.0	-0.3	-6.0

*Subtract 5.7 inches for the extended Daycab.
NOTE: DIMENSION “B” IS CALCULATED USING A STANDARD BATTERY BOX. OPTIONAL EXTENDED BOXES WILL CHANGE DIMENSION “B”

https://truckmanualshub.com/

D13D—Use with the following models: W900B

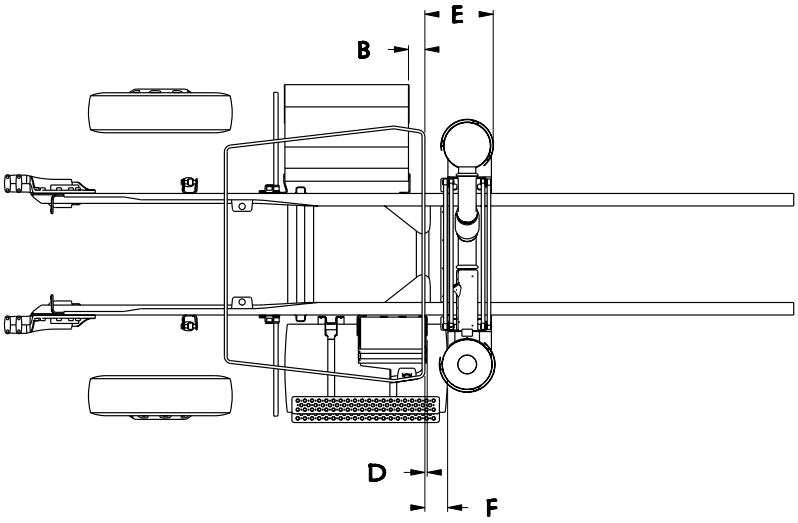

Dimension B (BOC To Battery Box)* = -10.6in
Dimension E (BOC to DPF/SCR) = 19.6in
Dimension D (BOC to DEF tank)* = 1.0in

TABLE 5-59.

W9B				
Fuel Tank Size			Dimension F BOC to Fuel Tank, Daycab (in)	Dimension F BOC to Fuel Tank, Extended Daycab (in)
Diameter	Gallons	Length (in)		
22” Diameter Tank	56	35.5	-14.9	-20.6
	60	38.0	-17.7	-23.4
	75	47.3	-8.4	-14.1
	100	62.2	6.5	0.8
	120	74.2	18.5	12.8
24.5” Diameter Tank	75	38.5	-11.9	-17.6
	90	45.5	-10.2	-15.9
	100	50.0	-5.7	-11.4

*Subtract 5.7 inches for the extended Daycab.
NOTE: DIMENSION “B” IS CALCULATED USING A STANDARD BATTERY BOX. OPTIONAL EXTENDED BOXES WILL CHANGE DIMENSION “B”

https://truckmanualshub.com/

D13E—Use with the following models: W900L

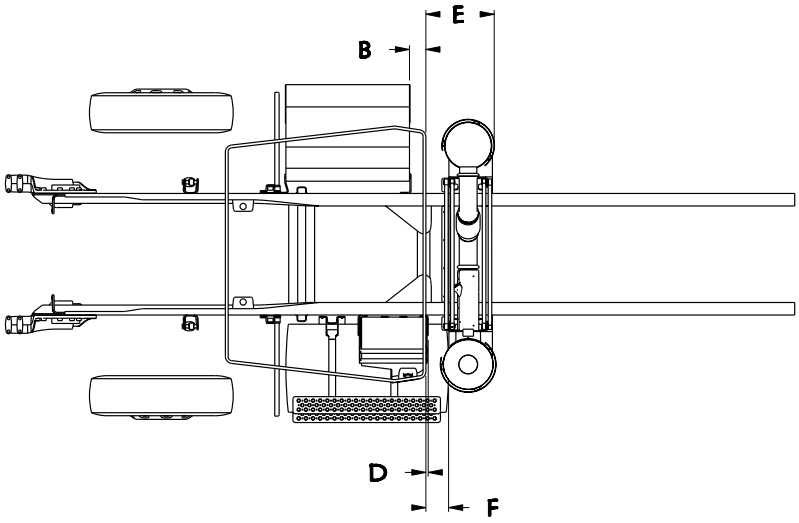

Dimension B (BOC To Battery Box)* = -10.6in
Dimension E (BOC to DPF/SCR) = 19.6in
Dimension D (BOC to DEF tank)* = 1.0in

TABLE 5-60.

W9L				
Fuel Tank Size			Dimension F BOC to Fuel Tank, Daycab (in)	Dimension F BOC to Fuel Tank, Extended Daycab (in)
Diameter	Gallons	Length (in)		
22” Diameter Tank	56	35.5	-13.9	-19.6
	60	38.0	-11.4	-17.1
	75	47.3	-2.1	-7.8
	100	62.2	12.8	7.1
	120	74.2	24.8	19.1
24.5” Diameter Tank	75	38.5	-10.9	-16.6
	90	45.5	-3.9	-9.6
	100	50.0	0.6	-5.1

*Subtract 5.7 inches for the extended Daycab.
NOTE: DIMENSION “B” IS CALCULATED USING A STANDARD BATTERY BOX. OPTIONAL EXTENDED BOXES WILL CHANGE DIMENSION “B”

https://truckmanualshub.com/

S1A—Use with the following models: T800SH 38”

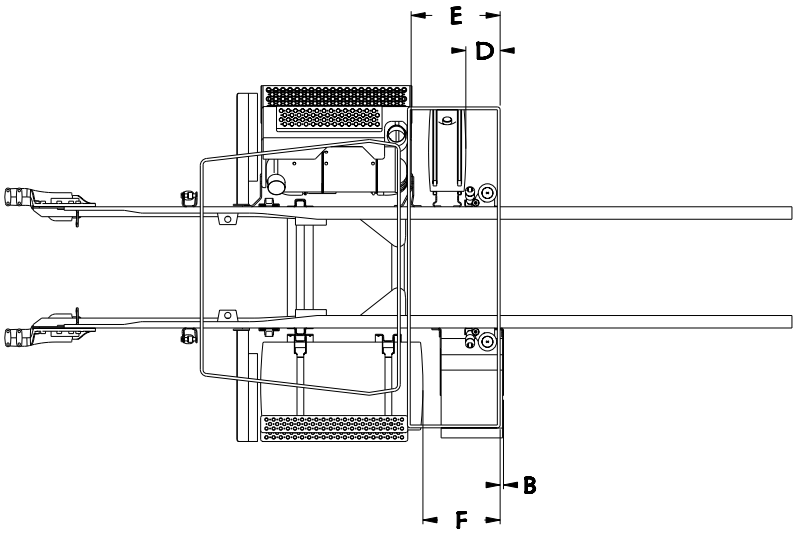

Dimension E (BOS to DPF/SCR) = -24.9in.

TABLE 5-61.

T8SH 38”							
Fuel Tank Size			Dimension F BOS to Fuel Tank (in)	Dimension B BOS to Battery Box (in)	Dimension D BOS to DEF Tank (in)		
					DEF Tank Size		
Diameter	Gallons	Length (in)			Small	Medium	Large
22” Diameter Tank	56	35.5	-31.7	0.9	-9.6	17.0	35.8
	60	38.0	-29.2	0.9			
	75	47.3	-19.9	0.9			
	100	62.2	-5.0	18.4			
	120	74.2	7.0	27.7			
24.5” Diameter Tank	60	30.5	-36.7	-16.0			
	75	38.5	-28.7	0.9			
	90	45.5	-21.7	0.9			
	100	50.0	-17.2	18.4			
	110	54.9	-12.3	18.4			
	120	60.5	-6.7	18.4			
	135	67.2	0.0	18.4			
	150	74.5	7.3	28.0			
28.5” Diameter Tank	75	28.7	-38.5	-17.8			
	90	34.2	-33.0	0.9			
	105	38.8	-28.4	0.9			
	120	45.8	-21.4	0.9			
	135	50.8	-16.4	18.4			
	150	56.2	-11.0	18.4			
	177	66.1	-1.1	18.4			

NOTE: DIMENSION “B” IS CALCULATED USING A CANTILEVER SIZED BATTERY BOX. OPTIONAL BOXES WILL AFFECT THIS DIMENSION.

https://truckmanualshub.com/

S1B—Use with the following models: T800SH 42”

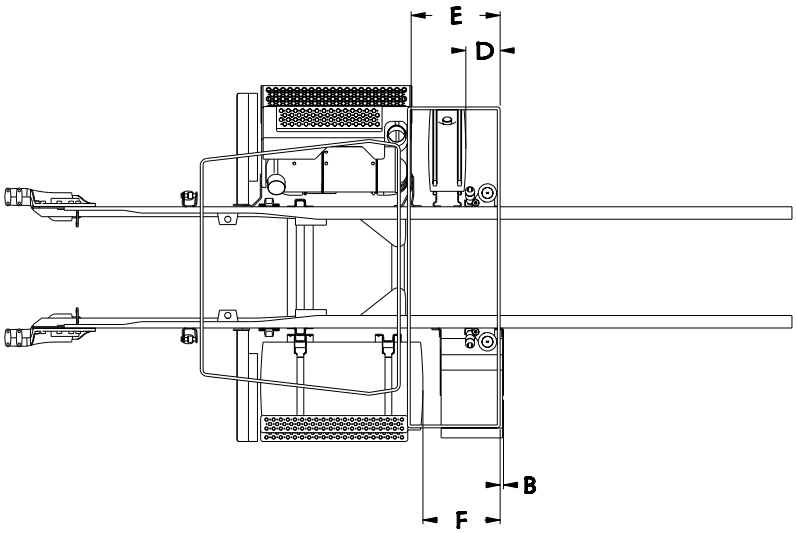

Dimension E (BOS to DPF/SCR) = -40.9in

TABLE 5-62.

T8SH 42”							
Fuel Tank Size			Dimension F BOS to Fuel Tank (in)	Dimension B BOS to Battery Box (in)	Dimension D BOS to DEF Tank (in)		
					DEF Tank Size		
Diameter	Gallons	Length (in)			Small	Medium	Large
22” Diameter Tank	56	35.5	-47.7	-27.0	-25.6	-19.2	-11.1
	60	38.0	-45.2	-24.5			
	75	47.3	-35.9	-15.2			
	100	62.2	-21.0	-0.3			
	120	74.2	-9.0	11.7			
24.5” Diameter Tank	60	30.5	-52.7	-32.0			
	75	38.5	-44.7	-24.0			
	90	45.5	-37.7	-17.0			
	100	50.0	-33.2	-12.5			
	110	54.9	-28.3	-7.6			
	120	60.5	-22.7	-2.0			
	135	67.2	-16.0	4.7			
	150	74.5	-8.7	12.0			
28.5” Diameter Tank	75	28.7	-54.5	-33.8			
	90	34.2	-49.0	-28.3			
	105	38.8	-44.4	-23.7			
	120	45.8	-37.4	-16.7			
	135	50.8	-32.4	-11.7			
	150	56.2	-27.0	-6.3			
	177	66.1	-17.1	3.6			

NOTE: DIMENSION “B” IS CALCULATED USING A CANTILEVER SIZED BATTERY BOX. OPTIONAL BOXES WILL AFFECT THIS DIMENSION.

https://truckmanualshub.com/

S1C—Use with the following models: T800B and C500B 38”

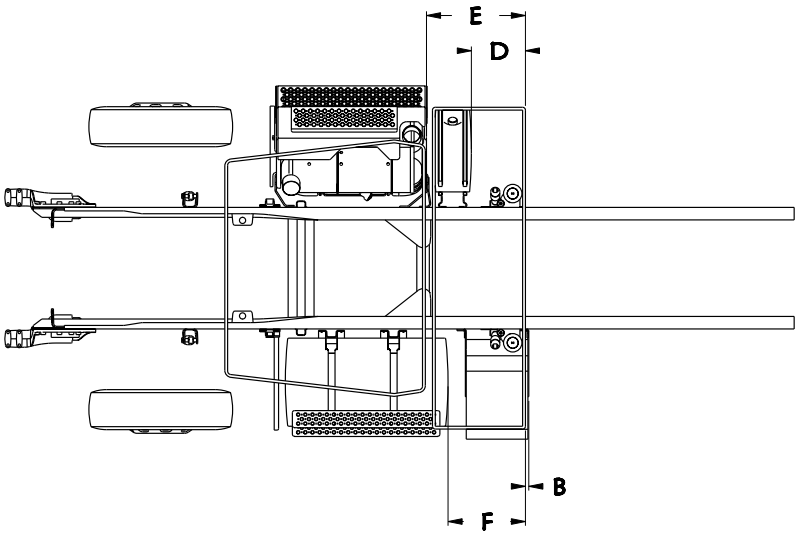

Dimension E (BOS to DPF/SCR) = -26.2in

TABLE 5-63.

T8B & C5B 38”							
Fuel Tank Size			Dimension F BOS to Fuel Tank (in)	Dimension B BOS to Battery Box (in)	Dimension D BOS to DEF Tank (in)		
					DEF Tank Size		
Diameter	Gallons	Length (in)			Small	Medium	Large
22” Diameter Tank	56	35.5	-31.5	0.9	-12.3	17.0	35.8
	60	38.0	-29.1	0.9			
	75	47.3	-19.8	0.9			
	100	62.2	-4.9	18.4			
	120	74.2	7.1	27.8			
24.5” Diameter Tank	60	30.5	-36.6	-15.9			
	75	38.5	-28.6	0.9			
	90	45.5	-21.6	0.9			
	100	50.0	-17.1	18.4			
	110	54.9	-12.2	18.4			
	120	60.5	-6.6	18.4			
	135	67.2	0.1	18.4			
	150	74.5	7.4	28.1			
28.5” Diameter Tank	75	28.7	-38.4	-17.7			
	90	34.2	-32.9	0.9			
	105	38.8	-28.3	0.9			
	120	45.8	-21.3	0.9			
	135	50.8	-16.3	18.4			
	150	56.2	-10.9	18.4			
	177	66.1	-1.0	18.4			

NOTE: DIMENSION “B” IS CALCULATED USING A CANTILEVER SIZED BATTERY BOX. OPTIONAL BOXES WILL AFFECT THIS DIMENSION.

https://truckmanualshub.com/

S1D—Use with the following models: T800B and C500B 42”

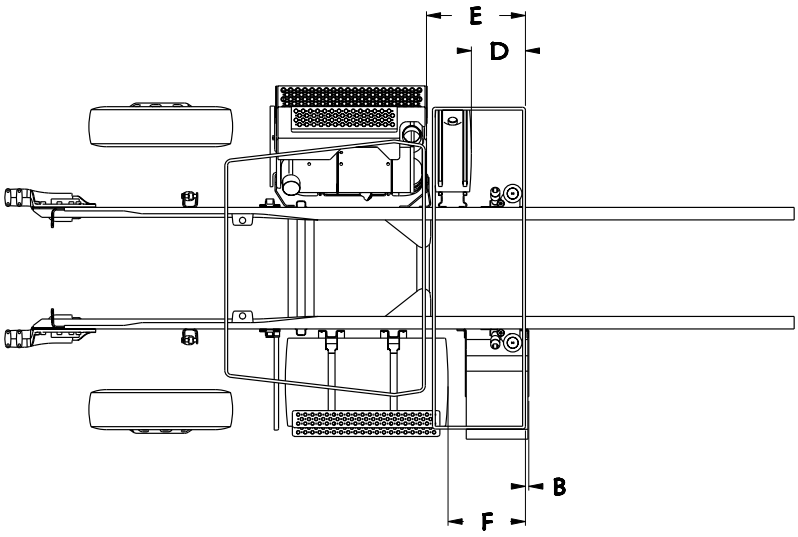

Dimension E (BOS to DPF/SCR) = -43.7in

TABLE 5-64.

T8B & C5B 42”							
Fuel Tank Size			Dimension F BOS to Fuel Tank (in)	Dimension B BOS to Battery Box (in)	Dimension D BOS to DEF Tank (in)		
					DEF Tank Size		
Diameter	Gallons	Length (in)			Small	Medium	Large
22” Diameter Tank	56	35.5	-47.5	-26.8	-31.1	-21.3	-13.3
	60	38.0	-45.1	-24.4			
	75	47.3	-35.8	-15.1			
	100	62.2	-20.9	-0.2			
	120	74.2	-8.9	11.8			
24.5” Diameter Tank	60	30.5	-52.6	-31.9			
	75	38.5	-44.6	-23.9			
	90	45.5	-37.6	-16.9			
	100	50.0	-33.1	-12.4			
	110	54.9	-28.2	-7.5			
	120	60.5	-22.6	-1.9			
	135	67.2	-15.9	4.8			
	150	74.5	-8.6	12.1			
28.5” Diameter Tank	75	28.7	-54.4	-33.7			
	90	34.2	-48.9	-28.2			
	105	38.8	-44.3	-23.6			
	120	45.8	-37.3	-16.6			
	135	50.8	-32.3	-11.6			
	150	56.2	-26.9	-6.2			
	177	66.1	-17.0	3.7			

NOTE: DIMENSION “B” IS CALCULATED USING A CANTILEVER SIZED BATTERY BOX. OPTIONAL BOXES WILL AFFECT THIS DIMENSION.

https://truckmanualshub.com/

S1E—Use with the following models: W900B 38”

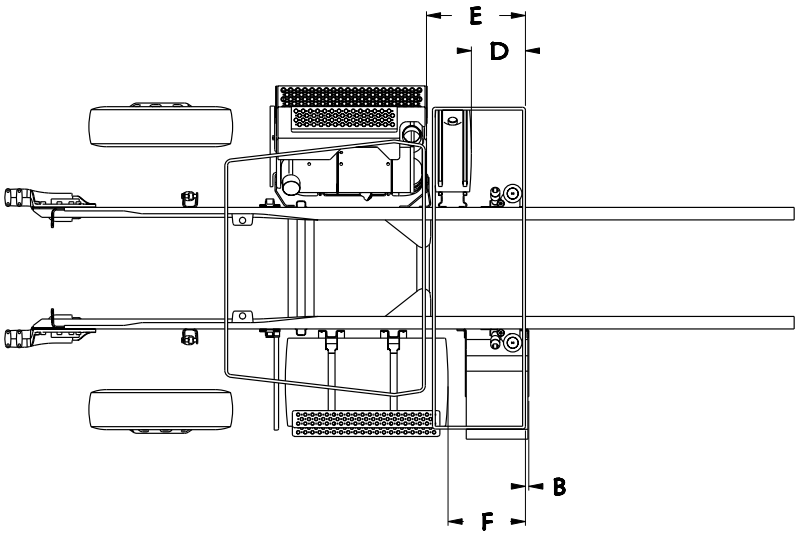

Dimension E (BOS to DPF/SCR) = -27.7in

TABLE 5-65.

W900B 38”							
Fuel Tank Size			Dimension F BOS to Fuel Tank (in)	Dimension B BOS to Battery Box (in)	Dimension D BOS to DEF Tank (in)		
					DEF Tank Size		
Diameter	Gallons	Length (in)			Small	Medium	Large
22” Diameter Tank	56	35.5	-42.9	-22.2	-15.1	17.0	35.8
	60	38.0	-45.7	-25.0			
	75	47.3	-36.4	-15.7			
	100	62.2	-21.5	0.9			
	120	74.2	-9.5	18.4			
24.5” Diameter Tank	75	38.5	-39.9	-19.2			
	90	45.5	-38.2	-17.5			
	100	50.0	-33.7	-13.0			
	110	54.9	-28.8	0.9			
	120	60.5	-23.2	0.9			
	135	67.2	-16.5	18.4			
	150	74.5	-9.2	18.4			
28.5” Diameter Tank	90	34.2	-43.4	-22.7			
	105	38.8	-39.6	-18.9			
	120	45.8	-37.9	-17.2			
	135	50.8	-30.2	0.9			
	150	56.2	-27.5	0.9			
	177	66.1	-15.2	18.4			

NOTE: DIMENSION “B” IS CALCULATED USING A CANTILEVER SIZED BATTERY BOX. OPTIONAL BOXES WILL AFFECT THIS DIMENSION.

https://truckmanualshub.com/

S1F—Use with the following models: W900B 42”

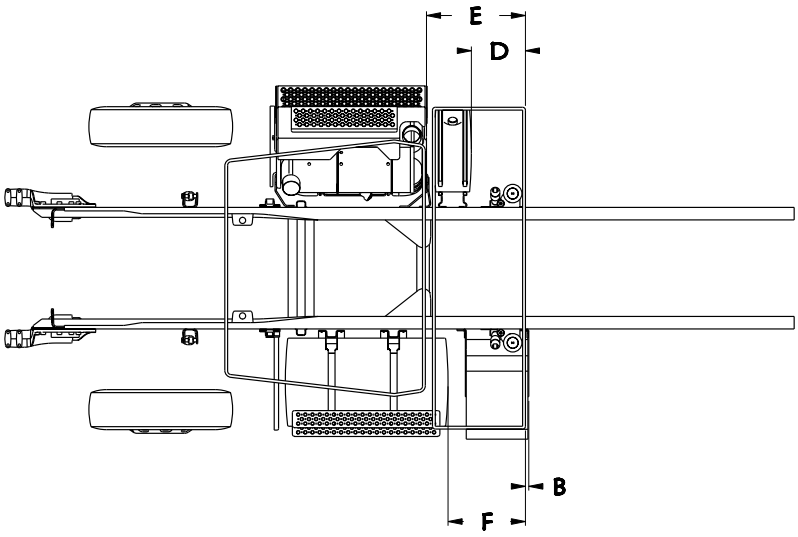

Dimension E (BOS to DPF/SCR) = -43.7in

TABLE 5-56.

W900B 42”							
Fuel Tank Size			Dimension F BOS to Fuel Tank (in)	Dimension B BOS to Battery Box (in)	Dimension D BOS to DEF Tank (in)		
					DEF Tank Size		
Diameter	Gallons	Length (in)			Small	Medium	Large
22” Diameter Tank	56	35.5	-58.9	-38.2	-31.1	-21.4	-13.3
	60	38.0	-61.7	-41.0			
	75	47.3	-52.4	-31.7			
	100	62.2	-37.5	-16.8			
	120	74.2	-25.5	-4.8			
24.5” Diameter Tank	75	38.5	-55.9	-35.2			
	90	45.5	-54.2	-33.5			
	100	50.0	-49.7	-29.0			
	110	54.9	-44.8	-24.1			
	120	60.5	-39.2	-18.5			
	135	67.2	-32.5	-11.8			
	150	74.5	-25.2	-4.5			
28.5” Diameter Tank	90	34.2	-59.4	-38.7			
	105	38.8	-55.6	-34.9			
	120	45.8	-53.9	-33.2			
	135	50.8	-46.2	-25.5			
	150	56.2	-43.5	-22.8			
	177	66.1	-31.2	-10.5			

NOTE: DIMENSION “B” IS CALCULATED USING A CANTILEVER SIZED BATTERY BOX. OPTIONAL BOXES WILL AFFECT THIS DIMENSION.

https://truckmanualshub.com/

S1G—Use with the following models: W900L 38”

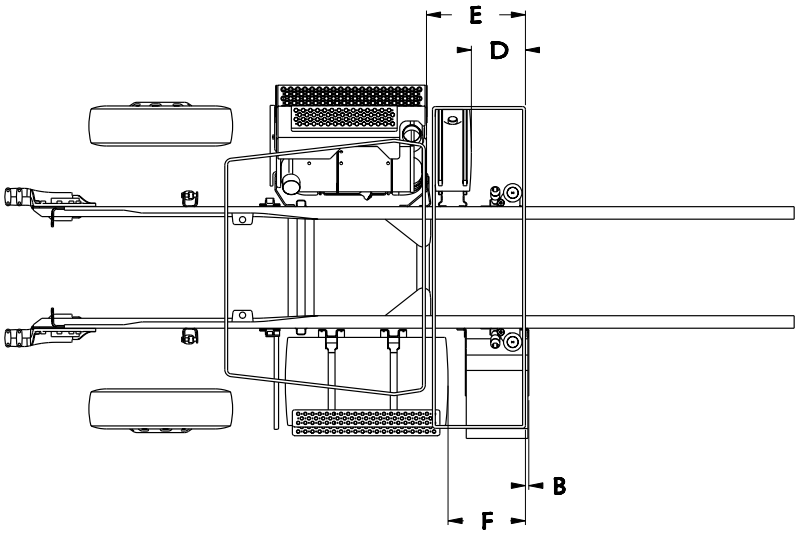

Dimension E (BOS to DPF/SCR) = -27.7in

TABLE 5-57.

W900L 38”							
Fuel Tank Size			Dimension F BOS to Fuel Tank (in)	Dimension B BOS to Battery Box (in)	Dimension D BOS to DEF Tank (in)		
					DEF Tank Size		
Diameter	Gallons	Length (in)			Small	Medium	Large
22” Diameter Tank	56	35.5	-41.9	-21.2	-15.1	17.0	35.8
	60	38.0	-39.4	-18.7			
	75	47.3	-30.1	0.9			
	100	62.2	-15.2	18.4			
	120	74.2	-3.2	18.4			
24.5” Diameter Tank	75	38.5	-38.9	-18.2			
	90	45.5	-31.9	0.9			
	100	50.0	-27.4	0.9			
	110	54.9	-22.5	0.9			
	120	60.5	-16.9	18.4			
	135	67.2	-10.2	18.4			
	150	74.5	-2.9	18.4			
28.5” Diameter Tank	90	34.2	-43.2	-22.5			
	105	38.8	-38.6	-17.9			
	120	45.8	-31.6	0.9			
	135	50.8	-26.6	0.9			
	150	56.2	-21.2	0.9			
	177	66.1	-11.3	18.4			

NOTE: DIMENSION “B” IS CALCULATED USING A CANTILEVER SIZED BATTERY BOX. OPTIONAL BOXES WILL AFFECT THIS DIMENSION.

https://truckmanualshub.com/

S1H—Use with the following models: W900L 42”

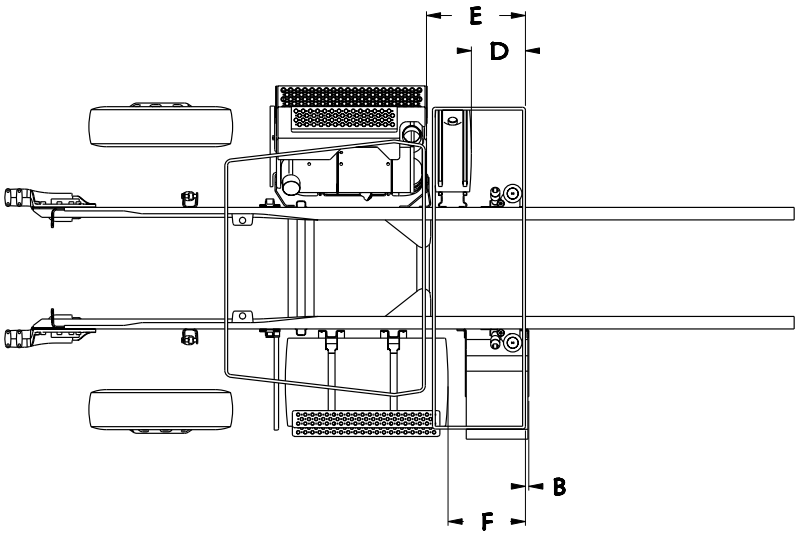

Dimension E (BOS to DPF/SCR) = -43.7in

TABLE 5-58.

W900L 42”							
Fuel Tank Size			Dimension F BOS to Fuel Tank (in)	Dimension B BOS to Battery Box (in)	Dimension D BOS to DEF Tank (in)		
					DEF Tank Size		
Diameter	Gallons	Length (in)			Small	Medium	Large
22” Diameter Tank	56	35.5	-57.9	-37.2	-31.1	-21.4	-13.3
	60	38.0	-55.4	-34.7			
	75	47.3	-46.1	-25.4			
	100	62.2	-31.2	-10.5			
	120	74.2	-19.2	1.5			
24.5” Diameter Tank	75	38.5	-54.9	-34.2			
	90	45.5	-47.9	-27.2			
	100	50.0	-43.4	-22.7			
	110	54.9	-38.5	-17.8			
	120	60.5	-32.9	-12.2			
	135	67.2	-26.2	-5.5			
	150	74.5	-18.9	1.8			
28.5” Diameter Tank	90	34.2	-59.2	-38.5			
	105	38.8	-54.6	-33.9			
	120	45.8	-47.6	-26.9			
	135	50.8	-42.6	-21.9			
	150	56.2	-37.2	-16.5			
	177	66.1	-27.3	-6.6			

NOTE: DIMENSION “B” IS CALCULATED USING A CANTILEVER SIZED BATTERY BOX. OPTIONAL BOXES WILL AFFECT THIS DIMENSION.

https://truckmanualshub.com/

S2A—Use with the following models: T800SH 38”

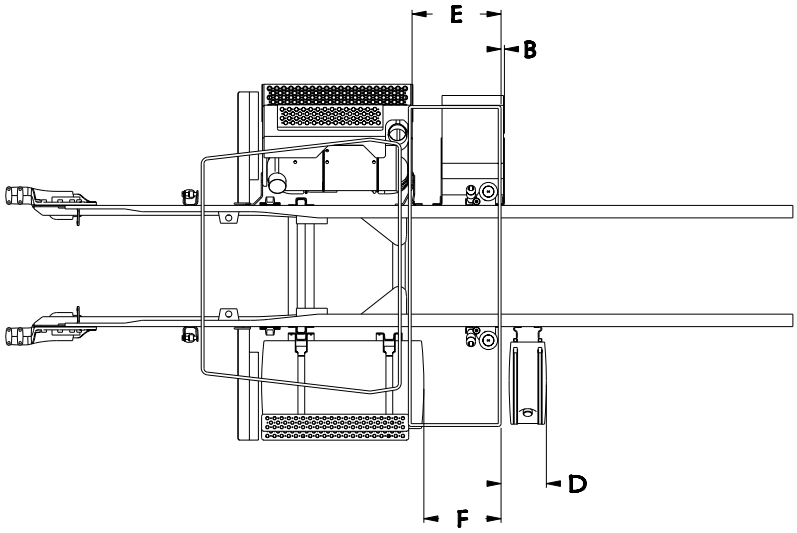

Dimension E (BOS to DPF/SCR) = -24.9in
Dimension B (BOS to Cantilever Battery Box) = 0.9in

TABLE 5-59.

T8SH 38”						
Fuel Tank Size			Dimension F BOS to Fuel Tank (in)	Dimension D BOS to DEF Tank (in)		
				DEF Tank Size		
Diameter	Gallons	Length (in)		Small	Medium	Large
22” Diameter Tank	56	35.5	-31.7	-20.6	-10.9	35.8
	60	38.0	-29.2	-15.1	17.0	35.8
	75	47.3	-19.9	12.7	17.0	35.8
	100	62.2	-5.0	12.7	17.0	35.8
	120	74.2	7.0	18.0	27.7	35.8
24.5” Diameter Tank	60	30.5	-36.7	-26.1	-16.4	35.8
	75	38.5	-28.7	-15.1	17.0	35.8
	90	45.5	-21.7	12.7	17.0	35.8
	100	50.0	-17.2	12.7	17.0	35.8
	110	54.9	-12.3	12.7	17.0	35.8
	120	60.5	-6.7	12.7	17.0	35.8
	135	67.2	0.0	12.7	19.5	27.5
	150	74.5	7.3	18.0	27.7	35.8
28.5” Diameter Tank	75	28.7	-38.5	-26.1	-16.4	35.8
	90	34.2	-33.0	-20.6	-10.9	35.8
	105	38.8	-28.4	-15.1	17.0	35.8
	120	45.8	-21.4	12.7.	17.0	35.8
	135	50.8	-16.4	12.7	17.0	35.8
	150	56.2	-11.0	12.7	17.0	35.8
	177	66.1	-1.1	-	19.5	27.5

NOTE: DIMENSION “B” IS CALCULATED USING A CANTILEVER SIZED BATTERY BOX. OPTIONAL BOXES WILL AFFECT THIS DIMENSION.

https://truckmanualshub.com/

S2B—Use with the following models: T800SH 42”

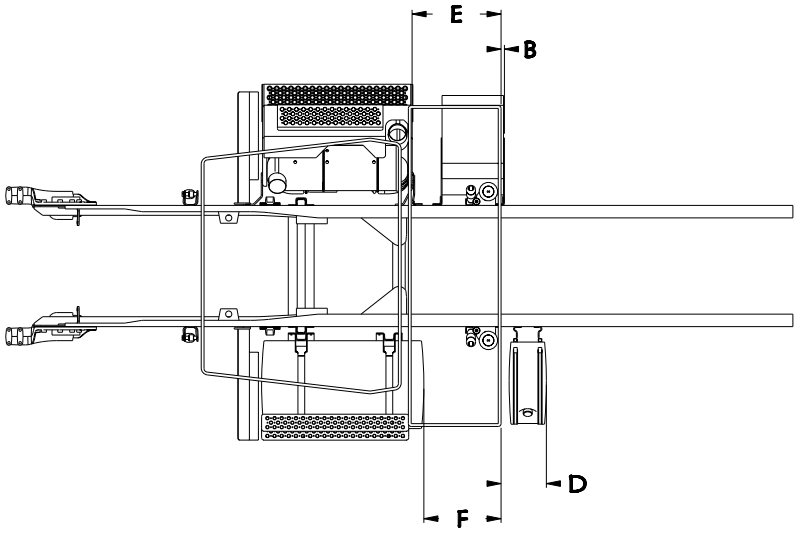

Dimension E (BOS to DPF/SCR) = -40.9in
Dimension B (BOS to Cantilever Battery Box) = -19.5in

TABLE 5-60.

T8SH 42”						
Fuel Tank Size			Dimension F BOS to Fuel Tank (in)	Dimension D BOS to DEF Tank (in)		
				DEF Tank Size		
Diameter	Gallons	Length (in)		Small	Medium	Large
22” Diameter Tank	56	35.5	-47.7	-36.6	-26.9	-18.8
	60	38.0	-45.2	-33.9	-24.7	-16.6
	75	47.3	-35.9	-20.1	-15.8	-7.8
	100	62.2	-21.0	-9.1	0.7	8.8
	120	74.2	-9.0	2.0	11.7	19.8
24.5” Diameter Tank	60	30.5	-52.7	-42.1	-32.4	-24.3
	75	38.5	-44.7	-33.9	-24.7	-16.6
	90	45.5	-37.7	-25.6	-15.8	-7.8
	100	50.0	-33.2	-20.1	-13.1	-5.0
	110	54.9	-28.3	-14.6	-7.6	0.5
	120	60.5	-22.7	-9.1	-2.0	6.0
	135	67.2	-16.0	-3.5	3.5	11.5
	150	74.5	-8.7	2.0	11.7	19.8
28.5” Diameter Tank	75	28.7	-54.5	-42.1	-32.4	-24.3
	90	34.2	-49.0	-36.6	-26.9	-18.8
	105	38.8	-44.4	-31.1	-21.3	-13.3
	120	45.8	-37.4	-25.6	-15.8	-7.8
	135	50.8	-32.4	-20.1	-13.1	-5.0
	150	56.2	-27.0	-14.6	-7.6	0.5
	177	66.1	-17.1	-	3.5	11.5

NOTE: DIMENSION “B” IS CALCULATED USING A CANTILEVER SIZED BATTERY BOX. OPTIONAL BOXES WILL AFFECT THIS DIMENSION.

https://truckmanualshub.com/

S2C—Use with the following models: T800B and C500B 38”

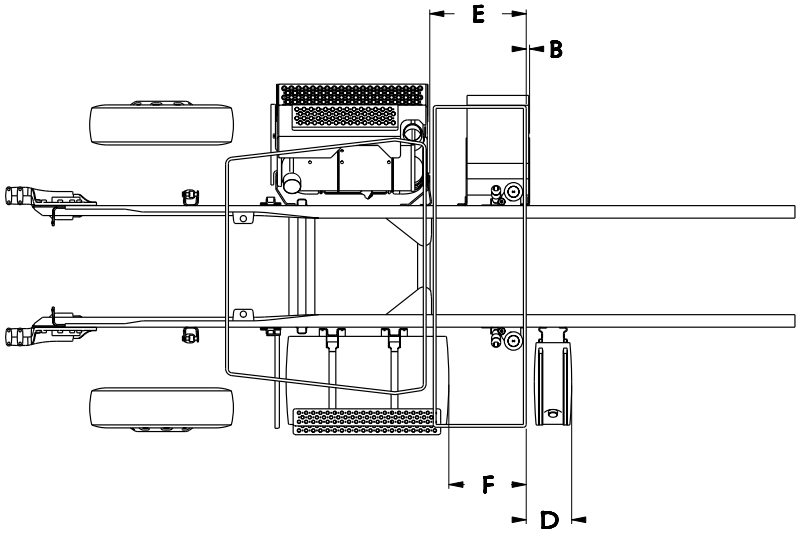

Dimension E (BOS to DPF/SCR) = -26.2in
Dimension B (BOS to Cantilever Battery Box) = 0.9in

TABLE 5-61.

T8B & C5B 38”						
Fuel Tank Size			Dimension F BOS to Fuel Tank (in)	Dimension D BOS to DEF Tank (in)		
				DEF Tank Size		
Diameter	Gallons	Length (in)		Small	Medium	Large
22” Diameter Tank	56	35.5	-31.5	-20.6	-10.9	35.8
	60	38.0	-29.1	-15.1	17.0	35.8
	75	47.3	-19.8	12.7	17.0	35.8
	100	62.2	-4.9	12.7	17.0	35.8
	120	74.2	7.1	18.0	27.7	35.8
24.5” Diameter Tank	60	30.5	-36.6	-26.1	-16.4	35.8
	75	38.5	-28.6	-15.1	17.0	35.8
	90	45.5	-21.6	12.7	17.0	35.8
	100	50.0	-17.1	12.7	17.0	35.8
	110	54.9	-12.2	12.7	17.0	35.8
	120	60.5	-6.6	12.7	17.0	35.8
	135	67.2	0.1	12.7	19.5	27.5
	150	74.5	7.4	18.0	27.7	35.8
28.5” Diameter Tank	75	28.7	-38.4	-26.1	-16.4	35.8
	90	34.2	-32.9	-20.6	-10.9	35.8
	105	38.8	-28.3	-15.1	17.0	35.8
	120	45.8	-21.3	12.7	17.0	35.8
	135	50.8	-16.3	12.7	17.0	35.8
	150	56.2	-10.9	12.7	17.0	35.8
	177	66.1	-1.0	-	19.5	27.5

NOTE: DIMENSION “B” IS CALCULATED USING A CANTILEVER SIZED BATTERY BOX. OPTIONAL BOXES WILL AFFECT THIS DIMENSION.

https://truckmanualshub.com/

S2D—Use with the following models: T800B and C500B 42”

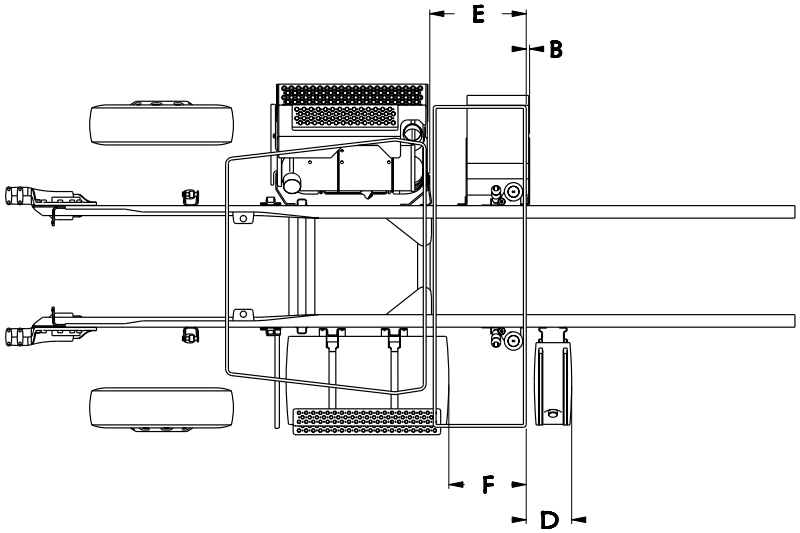

Dimension E (BOS to DPF/SCR) = -43.7in
Dimension B (BOS to Cantilever Battery Box) = -22.3in

TABLE 5-62.

T8B & C5B 42”						
Fuel Tank Size			Dimension F BOS to Fuel Tank (in)	Dimension D BOS to DEF Tank (in)		
				DEF Tank Size		
Diameter	Gallons	Length (in)		Small	Medium	Large
22” Diameter Tank	56	35.5	-47.5	-36.6	-26.9	-18.8
	60	38.0	-45.1	-33.9	-24.7	-16.6
	75	47.3	-35.8	-20.1	-15.8	-7.8
	100	62.2	-20.9	-9.1	0.7	8.8
	120	74.2	-8.9	2.0	11.7	19.8
24.5” Diameter Tank	60	30.5	-52.6	-42.1	-32.4	-24.3
	75	38.5	-44.6	-33.9	-24.7	-16.6
	90	45.5	-37.6	-25.6	-15.8	-7.8
	100	50.0	-33.1	-20.1	-13.1	-5.0
	110	54.9	-28.2	-14.6	-7.6	0.5
	120	60.5	-22.6	-9.1	-2.1	6.0
	135	67.2	-15.9	-3.6	3.5	11.5
	150	74.5	-8.6	2.0	11.7	19.8
28.5” Diameter Tank	75	28.7	-54.4	-42.1	-32.4	-24.3
	90	34.2	-48.9	-36.6	-26.9	-18.8
	105	38.8	-44.3	-31.1	-21.3	-13.3
	120	45.8	-37.3	-25.6	-15.8	-7.8
	135	50.8	-32.3	-20.1	-13.1	-5.0
	150	56.2	-26.9	-14.6	-7.6	0.5
	177	66.1	-17.0	-	3.5	11.5

NOTE: DIMENSION “B” IS CALCULATED USING A CANTILEVER SIZED BATTERY BOX. OPTIONAL BOXES WILL AFFECT THIS DIMENSION.

https://truckmanualshub.com/

S2E—Use with the following models: W900B 38”

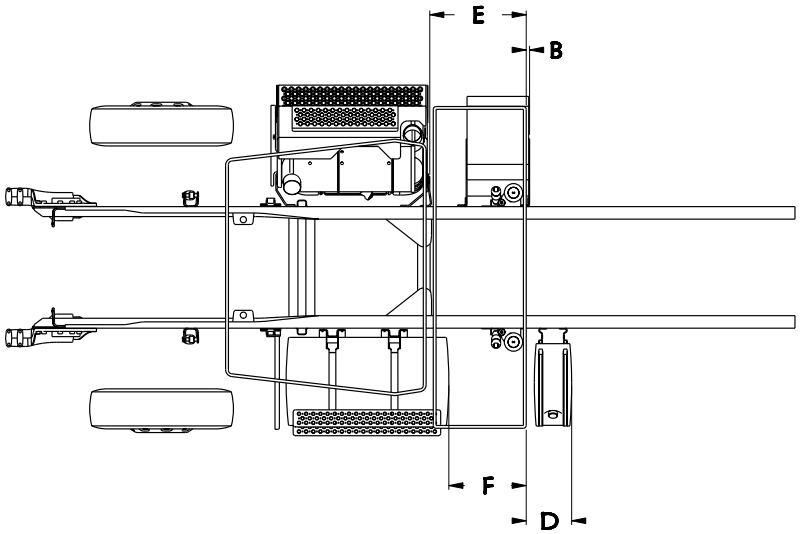

Dimension E (BOS to DPF/SCR) = -27.7in
Dimension B (BOS to Cantilever Battery Box) = 0.9in

TABLE 5-63.

W900B 38”						
Fuel Tank Size			Dimension F BOS to Fuel Tank (in)	Dimension D BOS to DEF Tank (in)		
				DEF Tank Size		
Diameter	Gallons	Length (in)		Small	Medium	Large
22” Diameter Tank	56	35.5	-42.9	-31.7	-21.9	-13.8
	60	38.0	-45.7	-31.7	-16.4	35.8
	75	47.3	-36.4	-20.6	-16.4	35.8
	100	62.2	-21.5	10.0	17.0	35.8
	120	74.2	-9.5	10.0	17.0	35.8
24.5” Diameter Tank	75	38.5	-39.9	-31.7	-16.4	35.8
	90	45.5	-38.2	-26.1	-16.4	35.8
	100	50.0	-33.7	-20.6	-10.9	35.8
	110	54.9	-28.8	-15.1	17.0	35.8
	120	60.5	-23.2	10.0	17.0	35.8
	135	67.2	-16.5	10.0	17.0	35.8
	150	74.5	-9.2	10.0	17.0	35.8
28.5” Diameter Tank	90	34.2	-43.4	-31.7	-21.9	-13.8
	105	38.8	-39.6	-26.1	-16.4	35.8
	120	45.8	-37.9	-26.1	-16.4	35.8
	135	50.8	-30.2	-15.1	-10.9	35.8
	150	56.2	-27.5	-15.1	17.0	35.8
	177	66.1	-15.2	-	17.0	35.8

NOTE: DIMENSION “B” IS CALCULATED USING A CANTILEVER SIZED BATTERY BOX. OPTIONAL BOXES WILL AFFECT THIS DIMENSION.

https://truckmanualshub.com/

S2F—Use with the following models: W900B 42”

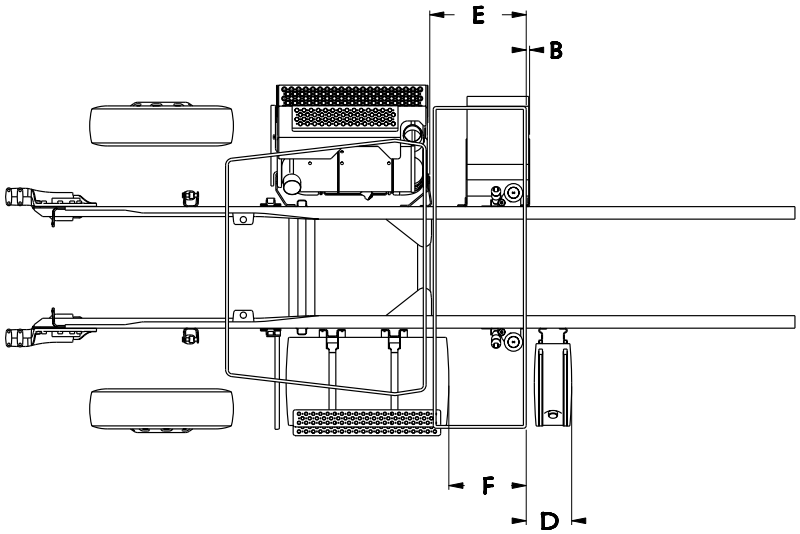

Dimension E (BOS to DPF/SCR) = -43.7in
Dimension B (BOS to Cantilever Battery Box) = -22.3in

TABLE 5-64.

W900B 42”						
Fuel Tank Size			Dimension F BOS to Fuel Tank (in)	Dimension D BOS to DEF Tank (in)		
				DEF Tank Size		
Diameter	Gallons	Length (in)		Small	Medium	Large
22” Diameter Tank	56	35.5	-58.9	-47.7	-37.9	-29.8
	60	38.0	-61.7	-47.7	-32.4	-24.3
	75	47.3	-52.4	-36.6	-32.4	-24.3
	100	62.2	-37.5	-25.6	-15.9	-7.8
	120	74.2	-25.5	-14.6	-4.8	3.2
24.5” Diameter Tank	75	38.5	-55.9	-47.7	-32.4	-24.3
	90	45.5	-54.2	-42.1	-32.4	-24.3
	100	50.0	-49.7	-36.6	-26.9	-18.8
	110	54.9	-44.8	-31.1	-24.7	-16.6
	120	60.5	-39.2	-25.6	-19.2	-11.1
	135	67.2	-32.5	-20.1	-10.3	-2.3
	150	74.5	-25.2	-14.6	-4.8	3.2
28.5” Diameter Tank	90	34.2	-59.4	-47.7	-37.9	-29.8
	105	38.8	-55.6	-42.1	-32.4	-24.3
	120	45.8	-53.9	-42.1	-32.4	-24.3
	135	50.8	-46.2	-31.1	-26.9	-18.8
	150	56.2	-43.5	-33.9	-21.4	-13.3
	177	66.1	-31.2	-	-13.7	-5.6

NOTE: DIMENSION “B” IS CALCULATED USING A CANTILEVER SIZED BATTERY BOX. OPTIONAL BOXES WILL AFFECT THIS DIMENSION.

https://truckmanualshub.com/

S2G—Use with the following models: W900L 38”

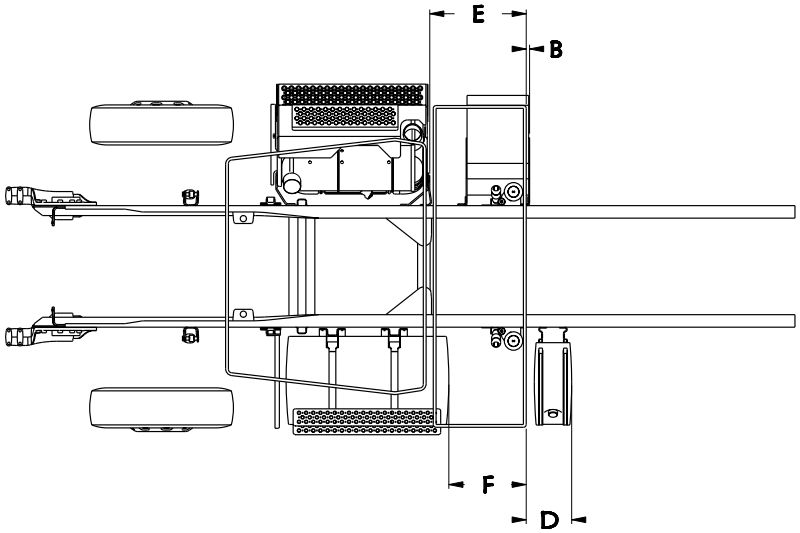

Dimension E (BOS to DPF/SCR) = -27.7in
Dimension B (BOS to Cantilever Battery Box) = 0.9in

TABLE 5-65.

W900L 38”						
Fuel Tank Size			Dimension F BOS to Fuel Tank (in)	Dimension D BOS to DEF Tank (in)		
				DEF Tank Size		
Diameter	Gallons	Length (in)		Small	Medium	Large
22” Diameter Tank	56	35.5	-41.9	-26.1	-21.9	-13.8
	60	38.0	-39.4	-26.1	-16.4	35.8
	75	47.3	-30.1	-20.6	-10.9	35.8
	100	62.2	-15.2	10.0	17.0	35.8
	120	74.2	-3.2	10.0	17.0	35.8
24.5” Diameter Tank	75	38.5	-38.9	-26.1	-16.4	35.8
	90	45.5	-31.9	-20.6	-10.9	35.8
	100	50.0	-27.4	-15.1	17.0	35.8
	110	54.9	-22.5	10.0	17.0	35.8
	120	60.5	-16.9	10.0	17.0	35.8
	135	67.2	-10.2	10.0	17.0	35.8
	150	74.5	-2.9	10.0	17.0	35.8
28.5” Diameter Tank	90	34.2	-43.2	-31.7	-21.9	-13.8
	105	38.8	-38.6	-26.1	-16.4	35.8
	120	45.8	-31.6	-20.6	-10.9	35.8
	135	50.8	-26.6	-15.1	17.0	35.8
	150	56.2	-21.2	10.0	17.0	35.8
	177	66.1	-11.3	-	17.0	35.8

NOTE: DIMENSION “B” IS CALCULATED USING A CANTILEVER SIZED BATTERY BOX. OPTIONAL BOXES WILL AFFECT THIS DIMENSION.

https://truckmanualshub.com/

S2H—Use with the following models: W900L 42”

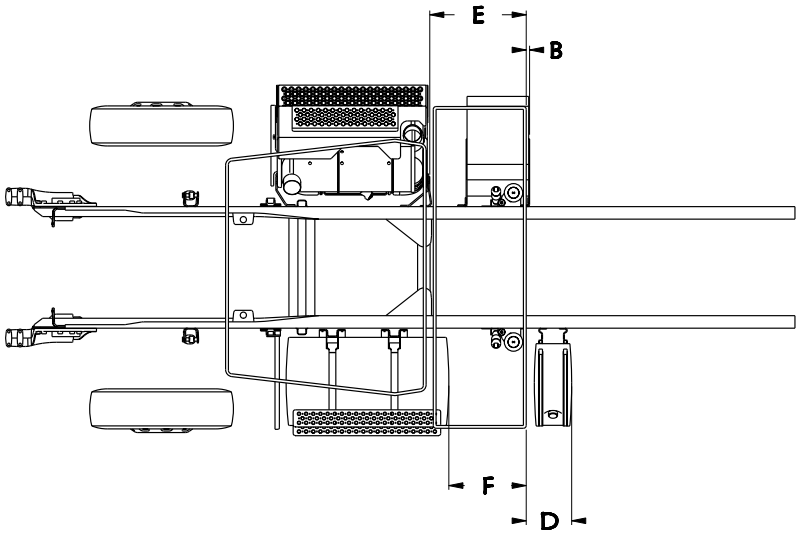

Dimension E (BOS to DPF/SCR) = -43.7in
Dimension B (BOS to Cantilever Battery Box) = -22.3in

TABLE 5-66.

W900L 42”						
Fuel Tank Size			Dimension F BOS to Fuel Tank (in)	Dimension D BOS to DEF Tank (in)		
				DEF Tank Size		
Diameter	Gallons	Length (in)		Small	Medium	Large
22” Diameter Tank	56	35.5	-57.9	-42.1	-37.9	-29.8
	60	38.0	-55.4	-42.1	-32.4	-24.3
	75	47.3	-46.1	-36.6	-26.9	-18.8
	100	62.2	-31.2	-20.1	-10.3	-2.3
	120	74.2	-19.2	-6.3	0.7	8.8
24.5” Diameter Tank	75	38.5	-54.9	-42.1	-32.4	-24.3
	90	45.5	-47.9	-36.6	-26.9	-18.8
	100	50.0	-43.4	-31.1	-21.4	-13.3
	110	54.9	-38.5	-25.6	-19.2	-11.1
	120	60.5	-32.9	-20.1	-13.7	-5.6
	135	67.2	-26.2	-14.6	-4.8	3.2
	150	74.5	-18.9	-6.3	0.7	8.8
28.5” Diameter Tank	90	34.2	-59.2	-42.1	-37.9	-29.8
	105	38.8	-54.6	-36.6	-32.4	-24.3
	120	45.8	-47.6	-31.1	-26.9	-18.8
	135	50.8	-42.6	-25.6	-21.4	-13.3
	150	56.2	-37.2	-14.6	-15.9	-7.8
	177	66.1	-27.3	-	-4.8	3.2

NOTE: DIMENSION “B” IS CALCULATED USING A CANTILEVER SIZED BATTERY BOX. OPTIONAL BOXES WILL AFFECT THIS DIMENSION.

https://truckmanualshub.com/

S3A—Use with the following models: T800SH 38”

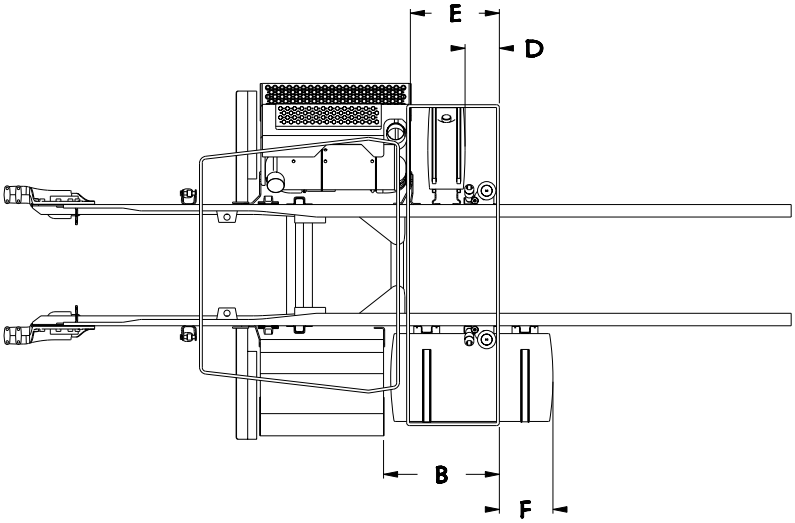

Dimension E (BOS to DPF/SCR) = -24.9in
Dimension B (BOS to Battery Box) = -32.5in

TABLE 5-67.

T8SH 38”						
Fuel Tank Size			Dimension F BOS to Fuel Tank (in)	Dimension D BOS to DEF Tank (in)		
				DEF Tank Size		
Diameter	Gallons	Length (in)		Small	Medium	Large
22” Diameter Tank	56	35.5	5.0	-9.6	17.0	35.8
	60	38.0	7.5			
	75	47.3	16.8			
	100	62.2	31.7			
	120	74.2	43.7			
24.5” Diameter Tank	60	30.5	0.0			
	75	38.5	8.0			
	90	45.5	15.0			
	100	50.0	19.5			
	110	54.9	24.4			
	120	60.5	30.0			
	135	67.2	36.7			
	150	74.5	44.0			
28.5” Diameter Tank	75	28.7	-1.8			
	90	34.2	3.7			
	105	38.8	8.3			
	120	45.8	15.3			
	135	50.8	20.3			
	150	56.2	25.7			
	177	66.1	35.6			

NOTE: DIMENSIONS “B” AND “F” ARE CALCULATED USING A STANDARD BATTERY BOX. OPTIONAL EXTENDED BOXES WILL CHANGE DIMENSIONS “B” AND “F”

https://truckmanualshub.com/

S3B—Use with the following models: T800SH 42”

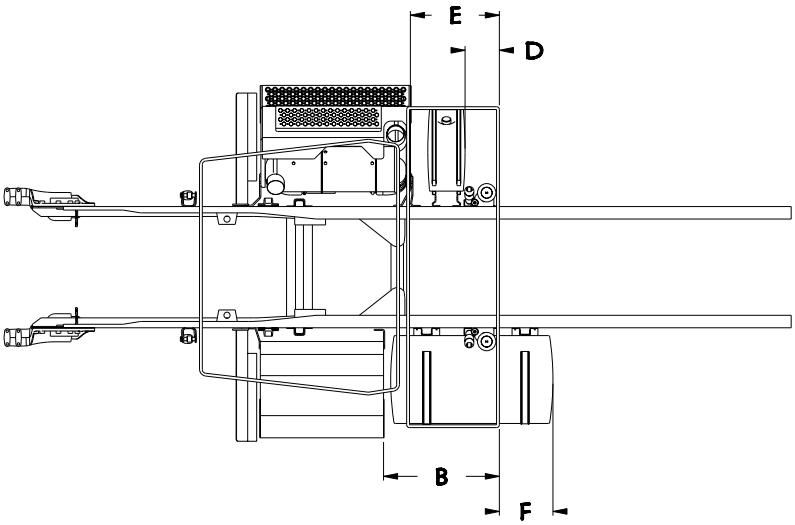

Dimension E (BOS to DPF/SCR) = -40.9in
Dimension B (BOS to Battery Box) = -48.5in

TABLE 5-68.

T8SH 42”						
Fuel Tank Size			Dimension F BOS to Fuel Tank (in)	Dimension D BOS to DEF Tank (in)		
				DEF Tank Size		
Diameter	Gallons	Length (in)		Small	Medium	Large
22” Diameter Tank	56	35.5	-11.0	-25.6	-19.2	-11.1
	60	38.0	-8.5			
	75	47.3	0.8			
	100	62.2	15.7			
	120	74.2	27.7			
24.5” Diameter Tank	60	30.5	-16.0			
	75	38.5	-8.0			
	90	45.5	-1.0			
	100	50.0	3.5			
	110	54.9	8.4			
	120	60.5	14.0			
	135	67.2	20.7			
	150	74.5	28.0			
28.5” Diameter Tank	75	28.7	-17.8			
	90	34.2	-12.3			
	105	38.8	-7.7			
	120	45.8	-0.7			
	135	50.8	4.3			
	150	56.2	9.7			
	177	66.1	19.6			

NOTE: DIMENSIONS “B” AND “F” ARE CALCULATED USING A STANDARD BATTERY BOX. OPTIONAL EXTENDED BOXES WILL CHANGE DIMENSIONS “B” AND “F”

https://truckmanualshub.com/

S3C—Use with the following models: T800B and C500B 38”

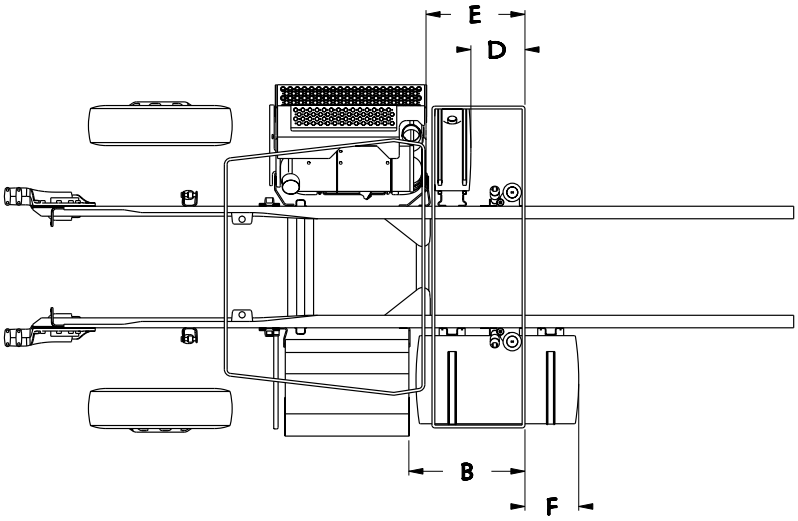

Dimension E (BOS to DPF/SCR) = -26.2in
Dimension B (BOS to Battery Box) = -32.5in

TABLE 5-69.

T8B & C5B 38”						
Fuel Tank Size			Dimension F BOS to Fuel Tank (in)	Dimension D BOS to DEF Tank (in)		
				DEF Tank Size		
Diameter	Gallons	Length (in)		Small	Medium	Large
22” Diameter Tank	56	35.5	5.0	-12.3	17.0	35.8
	60	38.0	7.5			
	75	47.3	16.8			
	100	62.2	31.7			
	120	74.2	43.7			
24.5” Diameter Tank	60	30.5	0.0			
	75	38.5	8.0			
	90	45.5	15.0			
	100	50.0	19.5			
	110	54.9	24.4			
	120	60.5	30.0			
	135	67.2	36.7			
	150	74.5	44.0			
28.5” Diameter Tank	75	28.7	-1.8			
	90	34.2	3.7			
	105	38.8	8.3			
	120	45.8	15.3			
	135	50.8	20.3			
	150	56.2	25.7			
	177	66.1	35.6			

NOTE: DIMENSIONS “B” AND “F” ARE CALCULATED USING A STANDARD BATTERY BOX. OPTIONAL EXTENDED BOXES WILL CHANGE DIMENSIONS “B” AND “F”

https://truckmanualshub.com/

S3D—Use with the following models: T800B and C500B 42”

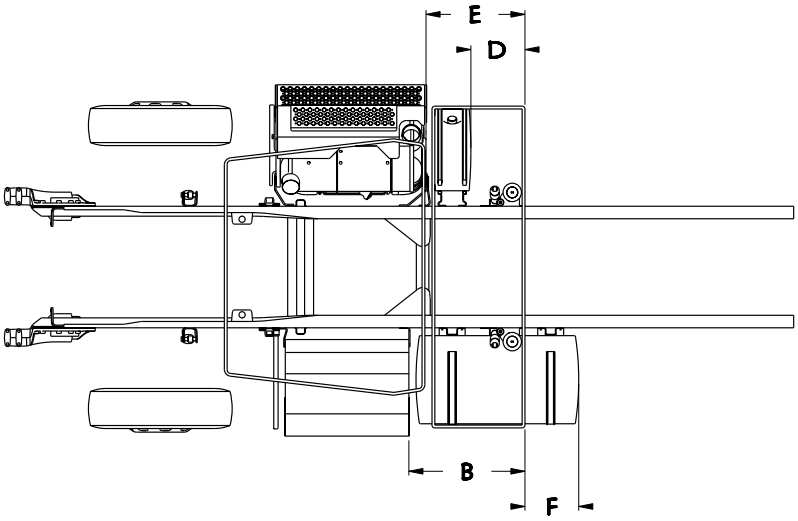

Dimension E (BOS to DPF/SCR) = -43.7in
Dimension B (BOS to Battery Box) = -48.5in

TABLE 5-70.

T8B & C5B 42”						
Fuel Tank Size			Dimension F BOS to Fuel Tank (in)	Dimension D BOS to DEF Tank (in)		
				DEF Tank Size		
Diameter	Gallons	Length (in)		Small	Medium	Large
22” Diameter Tank	56	35.5	-11.0	-31.1	-21.3	-13.3
	60	38.0	-8.5			
	75	47.3	0.8			
	100	62.2	15.7			
	120	74.2	27.7			
24.5” Diameter Tank	60	30.5	-16.0			
	75	38.5	-8.0			
	90	45.5	-1.0			
	100	50.0	3.5			
	110	54.9	8.4			
	120	60.5	14.0			
	135	67.2	20.7			
	150	74.5	28.0			
28.5” Diameter Tank	75	28.7	-17.8			
	90	34.2	-12.3			
	105	38.8	-7.7			
	120	45.8	-0.7			
	135	50.8	4.3			
	150	56.2	9.7			
	177	66.1	19.6			

NOTE: DIMENSIONS “B” AND “F” ARE CALCULATED USING A STANDARD BATTERY BOX. OPTIONAL EXTENDED BOXES WILL CHANGE DIMENSIONS “B” AND “F”

https://truckmanualshub.com/

S3E—Use with the following models: W900B 38”

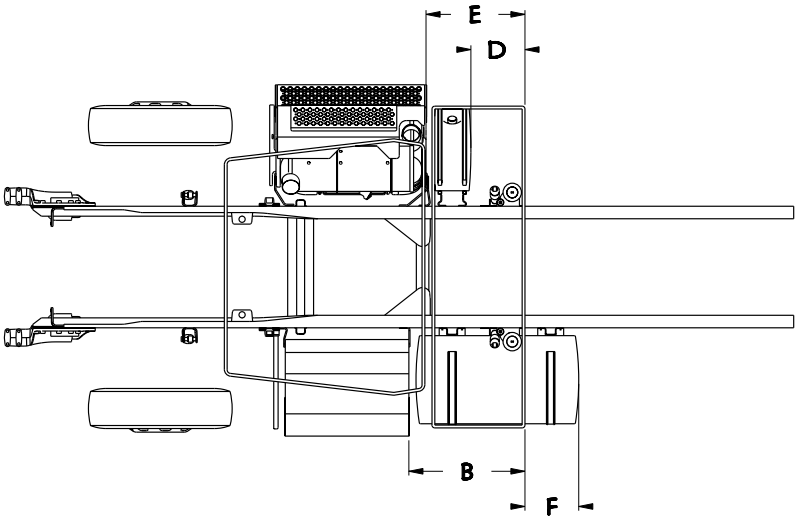

Dimension E (BOS to DPF/SCR) = -27.7in
Dimension B (BOS to Battery Box) = -38.6in

TABLE 5-71.

W9B 38”						
Fuel Tank Size			Dimension F BOS to Fuel Tank (in)	Dimension D BOS to DEF Tank (in)		
				DEF Tank Size		
Diameter	Gallons	Length (in)		Small	Medium	Large
22” Diameter Tank	56	35.5	-1.1	-15.1	17.0	35.8
	60	38.0	1.4			
	75	47.3	10.7			
	100	62.2	25.6			
	120	74.2	37.6			
24.5” Diameter Tank	75	38.5	1.9			
	90	45.5	8.9			
	100	50.0	13.4			
	110	54.9	18.3			
	120	60.5	23.9			
	135	67.2	30.6			
	150	74.5	37.9			
28.5” Diameter Tank	90	34.2	-2.4			
	105	38.8	2.2			
	120	45.8	9.2			
	135	50.8	14.2			
	150	56.2	19.6			
	177	66.1	29.5			

NOTE: DIMENSIONS “B” AND “F” ARE CALCULATED USING A STANDARD BATTERY BOX. OPTIONAL EXTENDED BOXES WILL CHANGE DIMENSIONS “B” AND “F”

https://truckmanualshub.com/

S3F—Use with the following models: W900B 42”

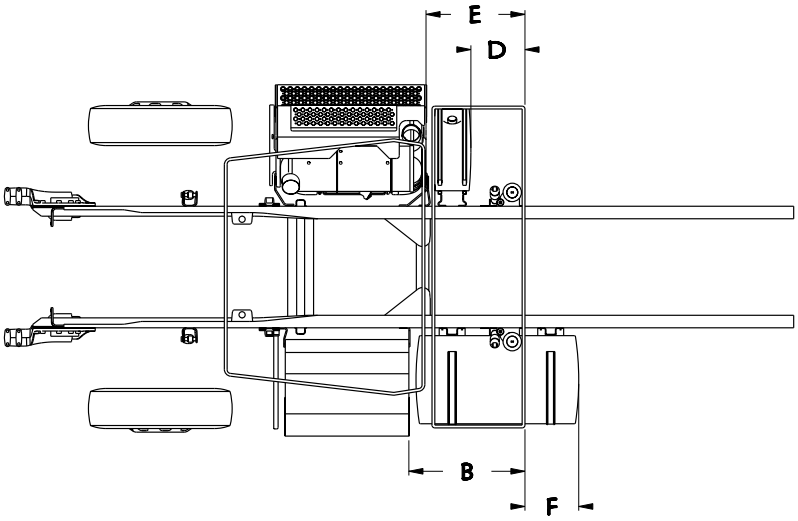

Dimension E (BOS to DPF/SCR) = -43.7in
Dimension B (BOS to Battery Box) = -54.6in

TABLE 5-72.

W9B 42”						
Fuel Tank Size			Dimension F BOS to Fuel Tank (in)	Dimension D BOS to DEF Tank (in)		
				DEF Tank Size		
Diameter	Gallons	Length (in)		Small	Medium	Large
22” Diameter Tank	56	35.5	-17.1	-31.1	-21.4	-13.3
	60	38.0	-14.6			
	75	47.3	-5.3			
	100	62.2	9.6			
	120	74.2	21.6			
24.5” Diameter Tank	75	38.5	-14.1			
	90	45.5	-7.1			
	100	50.0	-2.6			
	110	54.9	2.3			
	120	60.5	7.9			
	135	67.2	14.6			
	150	74.5	21.9			
28.5” Diameter Tank	90	34.2	-18.4			
	105	38.8	-13.8			
	120	45.8	-6.8			
	135	50.8	-1.8			
	150	56.2	3.6			
	177	66.1	13.5			

NOTE: DIMENSIONS “B” AND “F” ARE CALCULATED USING A STANDARD BATTERY BOX. OPTIONAL EXTENDED BOXES WILL CHANGE DIMENSIONS “B” AND “F”

https://truckmanualshub.com/

S3G—Use with the following models: W900L 38”

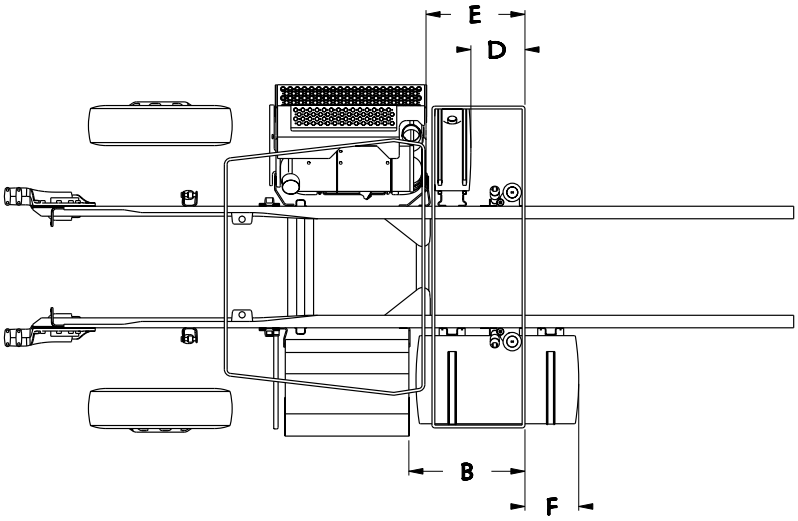

Dimension E (BOS to DPF/SCR) = -27.7in
Dimension B (BOS to Battery Box) = -38.6in

TABLE 5-73.

W9L 38”						
Fuel Tank Size			Dimension F BOS to Fuel Tank (in)	Dimension D BOS to DEF Tank (in)		
				DEF Tank Size		
Diameter	Gallons	Length (in)		Small	Medium	Large
22” Diameter Tank	56	35.5	-1.2	-15.1	17.0	35.8
	60	38.0	1.3			
	75	47.3	10.6			
	100	62.2	25.5			
	120	74.2	37.5			
24.5” Diameter Tank	75	38.5	1.8			
	90	45.5	8.8			
	100	50.0	13.3			
	110	54.9	18.2			
	120	60.5	23.8			
	135	67.2	30.5			
	150	74.5	37.8			
28.5” Diameter Tank	90	34.2	-2.5			
	105	38.8	2.1			
	120	45.8	9.1			
	135	50.8	14.1			
	150	56.2	19.5			
	177	66.1	29.4			

NOTE: DIMENSIONS “B” AND “F” ARE CALCULATED USING A STANDARD BATTERY BOX. OPTIONAL EXTENDED BOXES WILL CHANGE DIMENSIONS “B” AND “F”

https://truckmanualshub.com/

S3H—Use with the following models: W900L 42”

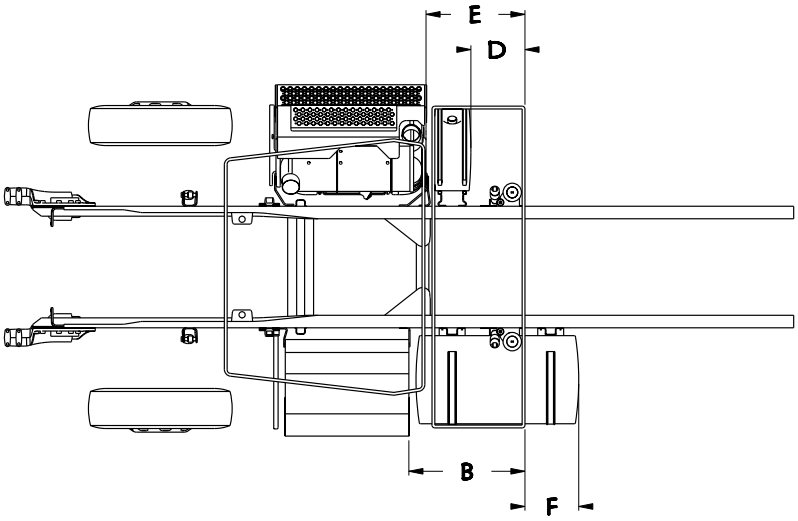

Dimension E (BOS to DPF/SCR) = -43.7in
Dimension B (BOS to Battery Box) = -54.6in

TABLE 5-74.

W9L 42”						
Fuel Tank Size			Dimension F BOS to Fuel Tank (in)	Dimension D BOS to DEF Tank (in)		
				DEF Tank Size		
Diameter	Gallons	Length (in)		Small	Medium	Large
22” Diameter Tank	56	35.5	-17.2	-31.1	-21.4	-13.3
	60	38.0	-14.7			
	75	47.3	-5.4			
	100	62.2	9.5			
	120	74.2	21.5			
24.5” Diameter Tank	75	38.5	-14.2			
	90	45.5	-7.2			
	100	50.0	-2.7			
	110	54.9	2.2			
	120	60.5	7.8			
	135	67.2	14.5			
	150	74.5	21.8			
28.5” Diameter Tank	90	34.2	-18.5			
	105	38.8	-13.9			
	120	45.8	-6.9			
	135	50.8	-1.9			
	150	56.2	3.5			
	177	66.1	13.4			

NOTE: DIMENSIONS “B” AND “F” ARE CALCULATED USING A STANDARD BATTERY BOX. OPTIONAL EXTENDED BOXES WILL CHANGE DIMENSIONS “B” AND “F”

https://truckmanualshub.com/

S4A—Use with the following models: T800SH 38”

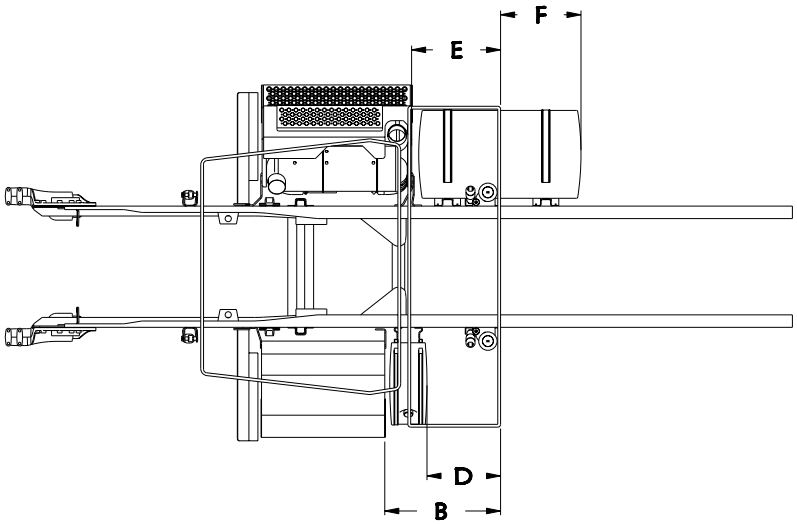

Dimension E (BOS to DPF/SCR) = -24.9in
Dimension B (BOS to Battery Box) = -32.5in

TABLE 5-75.

T8SH 38”						
Fuel Tank Size			Dimension F BOS to Fuel Tank (in)	Dimension D BOS to DEF Tank (in)		
				DEF Tank Size		
Diameter	Gallons	Length (in)		Small	Medium	Large
22” Diameter Tank	56	35.5	13.3	-20.6	-10.9	35.8
	60	38.0	15.8			
	75	47.3	25.1			
	100	62.2	40.0			
	120	74.2	52.0			
24.5” Diameter Tank	60	30.5	8.3			
	75	38.5	16.3			
	90	45.5	23.3			
	100	50.0	27.8			
	110	54.9	32.7			
	120	60.5	38.3			
	135	67.2	45.0			
	150	74.5	52.3			
28.5” Diameter Tank	75	28.7	6.5			
	90	34.2	12.0			
	105	38.8	16.6			
	120	45.8	23.6			
	135	50.8	28.6			
	150	56.2	34.0			
	177	66.1	43.9			

NOTE: DIMENSIONS “B” AND “D” ARE CALCULATED USING A STANDARD BATTERY BOX. OPTIONAL EXTENDED BOXES WILL CHANGE DIMENSIONS “B” AND “D”

https://truckmanualshub.com/

S4B—Use with the following models: T800SH 42”

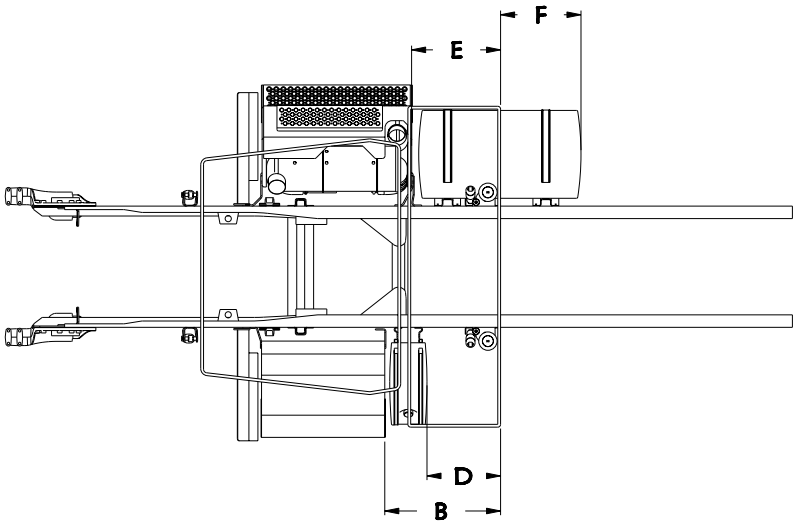

Dimension E (BOS to DPF/SCR) = -40.9in
Dimension B (BOS to Battery Box) = -48.5in

TABLE 5-76.

T8SH 42”						
Fuel Tank Size			Dimension F BOS to Fuel Tank (in)	Dimension D BOS to DEF Tank (in)		
				DEF Tank Size		
Diameter	Gallons	Length (in)		Small	Medium	Large
22” Diameter Tank	56	35.5	-2.7	-36.6	-26.9	-18.8
	60	38.0	-0.2			
	75	47.3	9.1			
	100	62.2	24.0			
	120	74.2	36.0			
24.5” Diameter Tank	60	30.5	-7.7			
	75	38.5	0.3			
	90	45.5	7.3			
	100	50.0	11.8			
	110	54.9	16.7			
	120	60.5	22.3			
	135	67.2	29.0			
	150	74.5	36.3			
28.5” Diameter Tank	75	28.7	-9.5			
	90	34.2	-4.0			
	105	38.8	0.6			
	120	45.8	7.6			
	135	50.8	12.6			
	150	56.2	18.0			
	177	66.1	27.9			

NOTE: DIMENSIONS “B” AND “D” ARE CALCULATED USING A STANDARD BATTERY BOX. OPTIONAL EXTENDED BOXES WILL CHANGE DIMENSIONS “B” AND “D”

https://truckmanualshub.com/

S4C—Use with the following models: T800B and C500B 38”

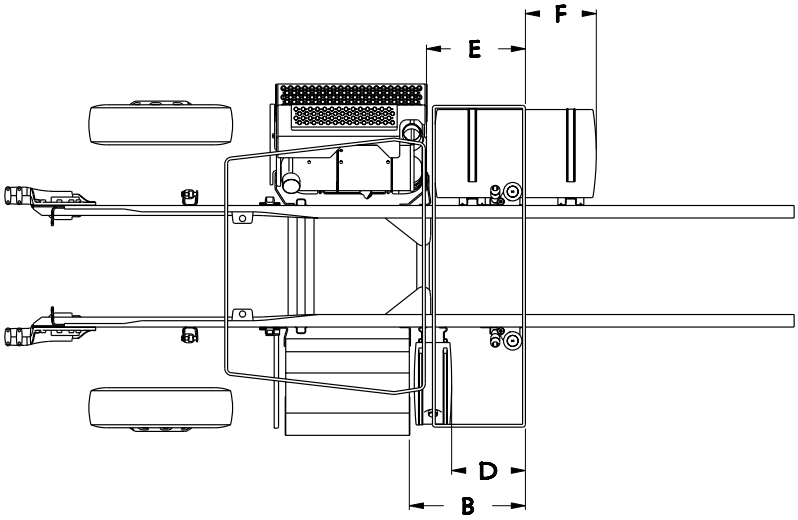

Dimension E (BOS to DPF/SCR) = -26.2in
Dimension B (BOS to Battery Box) = -32.5in

TABLE 5-77.

T8B & C5B 38”						
Fuel Tank Size			Dimension F BOS to Fuel Tank (in)	Dimension D BOS to DEF Tank (in)		
				DEF Tank Size		
Diameter	Gallons	Length (in)		Small	Medium	Large
22” Diameter Tank	56	35.5	10.5	-20.6	-10.9	35.8
	60	38.0	13.0			
	75	47.3	22.3			
	100	62.2	37.2			
	120	74.2	49.2			
24.5” Diameter Tank	60	30.5	5.5			
	75	38.5	13.5			
	90	45.5	20.5			
	100	50.0	25.0			
	110	54.9	29.9			
	120	60.5	35.5			
	135	67.2	42.2			
	150	74.5	49.5			
28.5” Diameter Tank	75	28.7	3.7			
	90	34.2	9.2			
	105	38.8	13.8			
	120	45.8	20.8			
	135	50.8	25.8			
	150	56.2	31.2			
	177	66.1	41.1			

NOTE: DIMENSIONS “B” AND “D” ARE CALCULATED USING A STANDARD BATTERY BOX. OPTIONAL EXTENDED BOXES WILL CHANGE DIMENSIONS “B” AND “D”

https://truckmanualshub.com/

S4D—Use with the following models: T800B and C500B 42”

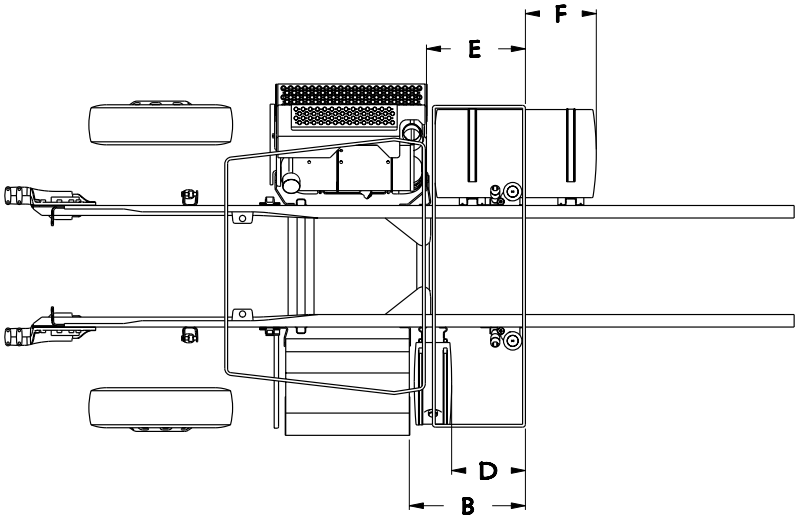

Dimension E (BOS to DPF/SCR) = -43.7in
Dimension B (BOS to Battery Box) = -48.5in

TABLE 5-78.

T8B & C5B 42”						
Fuel Tank Size			Dimension F BOS to Fuel Tank (in)	Dimension D BOS to DEF Tank (in)		
				DEF Tank Size		
Diameter	Gallons	Length (in)		Small	Medium	Large
22” Diameter Tank	56	35.5	-5.5	-36.6	-26.9	-18.8
	60	38.0	-3.0			
	75	47.3	6.3			
	100	62.2	21.2			
	120	74.2	33.2			
24.5” Diameter Tank	60	30.5	-10.5			
	75	38.5	-2.5			
	90	45.5	4.5			
	100	50.0	9.0			
	110	54.9	13.9			
	120	60.5	19.5			
	135	67.2	26.2			
	150	74.5	33.5			
28.5” Diameter Tank	75	28.7	-12.3			
	90	34.2	-6.8			
	105	38.8	-2.2			
	120	45.8	4.8			
	135	50.8	9.8			
	150	56.2	15.2			
	177	66.1	25.1			

NOTE: DIMENSIONS “B” AND “D” ARE CALCULATED USING A STANDARD BATTERY BOX. OPTIONAL EXTENDED BOXES WILL CHANGE DIMENSIONS “B” AND “D”

https://truckmanualshub.com/

S4E—Use with the following models: W900B 38”

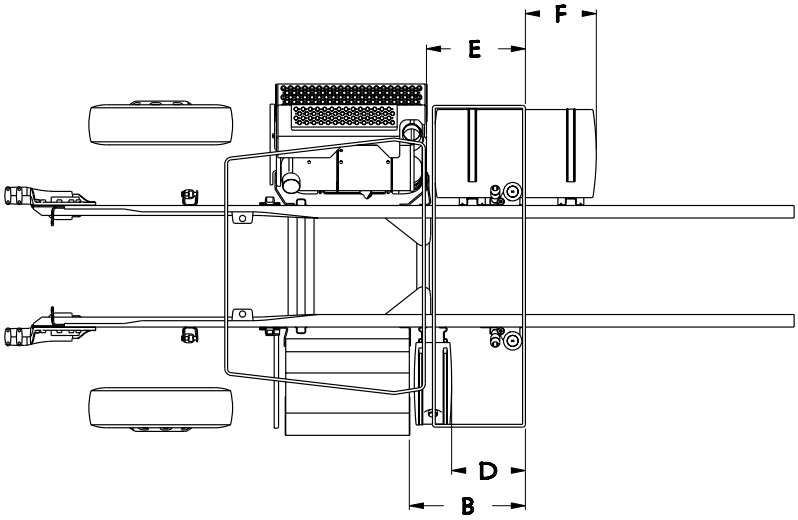

Dimension E (BOS to DPF/SCR) = -27.7in
Dimension B (BOS to Battery Box) = -38.6in

TABLE 5-79.

W900B 38”						
Fuel Tank Size			Dimension F BOS to Fuel Tank (in)	Dimension D BOS to DEF Tank (in)		
				DEF Tank Size		
Diameter	Gallons	Length (in)		Small	Medium	Large
22” Diameter Tank	56	35.5	10.5	-26.1	-16.4	35.8
	60	38.0	13.0			
	75	47.3	22.3			
	100	62.2	37.2			
	120	74.2	49.2			
24.5” Diameter Tank	75	38.5	5.5			
	90	45.5	13.5			
	100	50.0	20.5			
	110	54.9	25.0			
	120	60.5	29.9			
	135	67.2	35.5			
	150	74.5	42.2			
28.5” Diameter Tank	90	34.2	49.5			
	105	38.8	3.7			
	120	45.8	9.2			
	135	50.8	13.8			
	150	56.2	20.8			
	177	66.1	25.8			

NOTE: DIMENSIONS “B” AND “D” ARE CALCULATED USING A STANDARD BATTERY BOX. OPTIONAL EXTENDED BOXES WILL CHANGE DIMENSIONS “B” AND “D”

https://truckmanualshub.com/

S4F—Use with the following models: W900B 42”

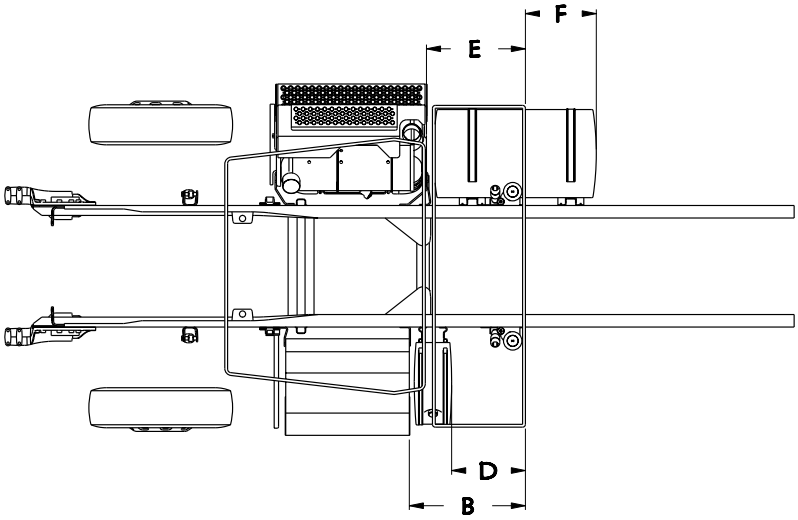

Dimension E (BOS to DPF/SCR) = -43.7in
Dimension B (BOS to Battery Box) = -54.6in

TABLE 5-80.

W900B 42”						
Fuel Tank Size			Dimension F BOS to Fuel Tank (in)	Dimension D BOS to DEF Tank (in)		
				DEF Tank Size		
Diameter	Gallons	Length (in)		Small	Medium	Large
22” Diameter Tank	56	35.5	-5.5	-42.1	-32.4	-24.3
	60	38.0	-3.0			
	75	47.3	6.3			
	100	62.2	21.2			
	120	74.2	33.2			
24.5” Diameter Tank	75	38.5	-10.5			
	90	45.5	-2.5			
	100	50.0	4.5			
	110	54.9	9.0			
	120	60.5	13.9			
	135	67.2	19.5			
	150	74.5	26.2			
28.5” Diameter Tank	90	34.2	33.5			
	105	38.8	-12.3			
	120	45.8	-6.8			
	135	50.8	-2.2			
	150	56.2	4.8			
	177	66.1	9.8			

NOTE: DIMENSIONS “B” AND “D” ARE CALCULATED USING A STANDARD BATTERY BOX. OPTIONAL EXTENDED BOXES WILL CHANGE DIMENSIONS “B” AND “D”

https://truckmanualshub.com/

S4G—Use with the following models: W900L 38”

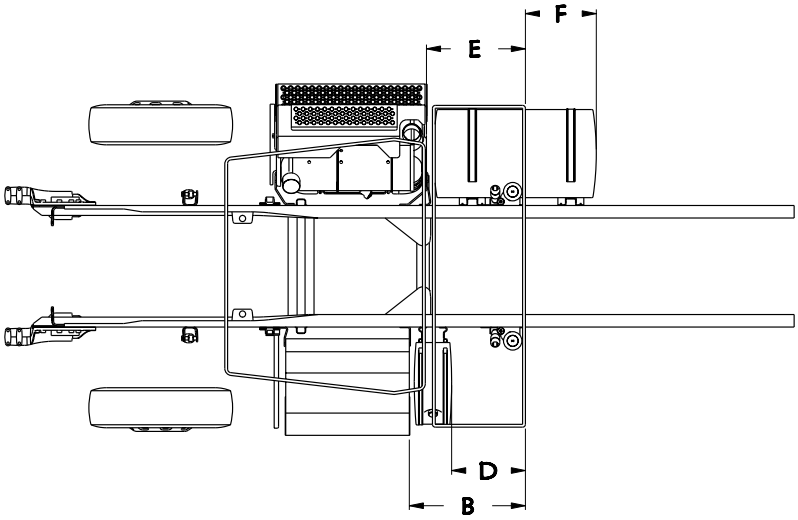

Dimension E (BOS to DPF/SCR) = -27.7in
Dimension B (BOS to Battery Box) = -38.6in

TABLE 5-81.

W900L 38”						
Fuel Tank Size			Dimension F BOS to Fuel Tank (in)	Dimension D BOS to DEF Tank (in)		
				DEF Tank Size		
Diameter	Gallons	Length (in)		Small	Medium	Large
22” Diameter Tank	56	35.5	-1.2	-26.1	-16.4	35.8
	60	38.0	1.3			
	75	47.3	10.6			
	100	62.2	25.5			
	120	74.2	37.5			
24.5” Diameter Tank	75	38.5	1.8			
	90	45.5	8.8			
	100	50.0	13.3			
	110	54.9	18.2			
	120	60.5	23.8			
	135	67.2	30.5			
	150	74.5	37.8			
28.5” Diameter Tank	90	34.2	-2.5			
	105	38.8	2.1			
	120	45.8	9.1			
	135	50.8	14.1			
	150	56.2	19.5			
	177	66.1	29.4			

NOTE: DIMENSIONS “B” AND “D” ARE CALCULATED USING A STANDARD BATTERY BOX. OPTIONAL EXTENDED BOXES WILL CHANGE DIMENSIONS “B” AND “D”

https://truckmanualshub.com/

S4H—Use with the following models: W900L 42”

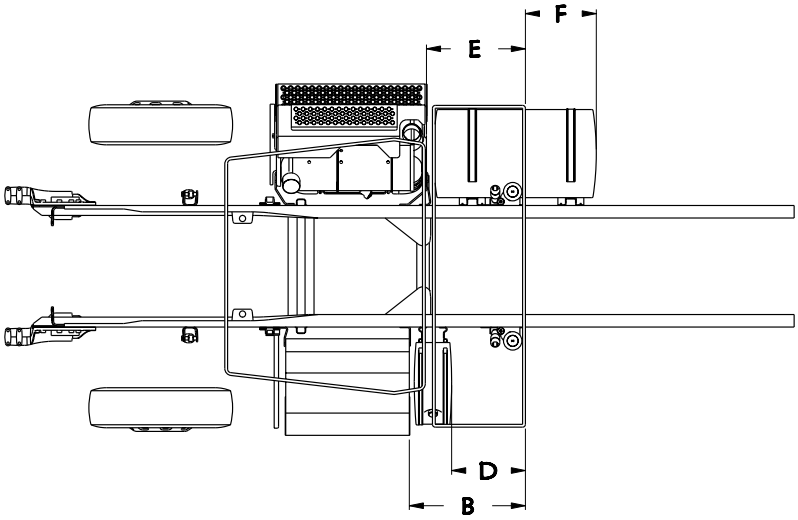

Dimension E (BOS to DPF/SCR) = -43.7in
Dimension B (BOS to Battery Box) = -54.6in

TABLE 5-82.

W900L 42”						
Fuel Tank Size			Dimension F BOS to Fuel Tank (in)	Dimension D BOS to DEF Tank (in)		
				DEF Tank Size		
Diameter	Gallons	Length (in)		Small	Medium	Large
22” Diameter Tank	56	35.5	-5.5	-42.1	-32.4	-24.3
	60	38.0	-3.0			
	75	47.3	6.3			
	100	62.2	21.2			
	120	74.2	33.2			
24.5” Diameter Tank	75	38.5	-10.5			
	90	45.5	-2.5			
	100	50.0	4.5			
	110	54.9	9.0			
	120	60.5	13.9			
	135	67.2	19.5			
	150	74.5	26.2			
28.5” Diameter Tank	90	34.2	33.5			
	105	38.8	-12.3			
	120	45.8	-6.8			
	135	50.8	-2.2			
	150	56.2	4.8			
	177	66.1	9.8			

NOTE: DIMENSIONS “B” AND “D” ARE CALCULATED USING A STANDARD BATTERY BOX. OPTIONAL EXTENDED BOXES WILL CHANGE DIMENSIONS “B” AND “D”

https://truckmanualshub.com/

S5A—Use with the following models: T800SH 38”

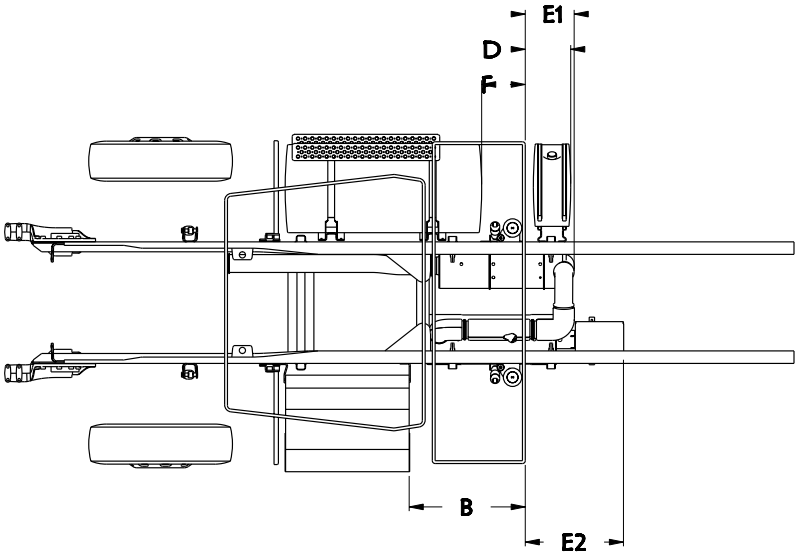

Dimension B (BOS to Battery Box) = -32.5in
Dimension E1 (BOS to DPF/SCR) = 13.6in
Dimension E2 (BOS to Diffuser) = 27.5in

TABLE 5-83.

T8SH 38”						
Fuel Tank Size			Dimension F BOS to Fuel Tank (in)	Dimension D BOS to DEF Tank (in)		
				DEF Tank Size		
Diameter	Gallons	Length (in)		Small	Medium	Large
22” Diameter Tank	56	35.5	-31.7	-20.6	-8.1	35.8
	60	38.0	-29.2	-15.1	-8.1	35.8
	75	47.3	-19.9	12.7	27.7	35.8
	100	62.2	-5.0	12.7	27.7	35.8
	120	74.2	7.0	18.0	27.7	35.8
24.5” Diameter Tank	60	30.5	-36.7	-26.1	-8.1	35.8
	75	38.5	-28.7	-15.1	-8.1	35.8
	90	45.5	-21.7	12.7	27.7	35.8
	100	50.0	-17.2	12.7	27.7	35.8
	110	54.9	-12.3	12.7	27.7	35.8
	120	60.5	-6.7	12.7	27.7	35.8
	135	67.2	0.0	12.5	27.7	35.8
	150	74.5	7.3	18.0	27.7	35.8
28.5” Diameter Tank	75	28.7	-38.5	-26.1	-8.1	35.8
	90	34.2	-33.0	-20.6	-8.1	35.8
	105	38.8	-28.4	-15.1	27.7	35.8
	120	45.8	-21.4	12.7	27.7	35.8
	135	50.8	-16.4	12.7	27.7	35.8
	150	56.2	-11.0	12.7	27.7	35.8
	177	66.1	-1.1	-	27.7	26.6

NOTE: DIMENSION “B” IS CALCULATED USING A STANDARD BATTERY BOX. OPTIONAL EXTENDED BOXES WILL CHANGE DIMENSION “B”

https://truckmanualshub.com/

S5B—Use with the following models: T800SH 42”

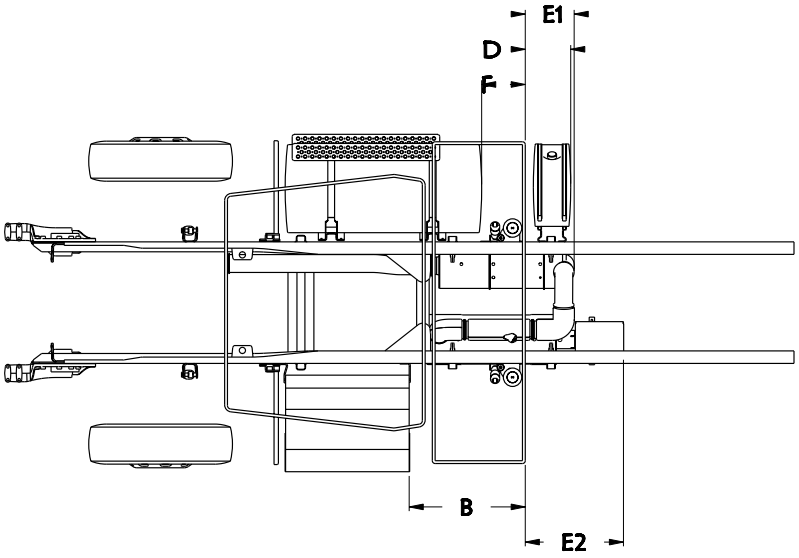

Dimension B (BOS to Battery Box) = -48.5in
Dimension E1 (BOS to DPF/SCR) = 11.4in
Dimension E2 (BOS to Diffuser) = 25.2in

TABLE 5-84.

T8SH 42”					
Fuel Tank Size			Dimension F BOS to Fuel Tank (in)	Dimension D BOS to DEF Tank (in)	
				DEF Tank Size	
Diameter	Gallons	Length (in)		Small	Medium
22” Diameter Tank	56	35.5	-47.7	-36.6	-26.9
	60	38.0	-45.2	-31.1	-2.0
	75	47.3	-35.9	-11.8	-2.0
	100	62.2	-21.0	-9.1	1.7
	120	74.2	-9.0	3.0	29.1
24.5” Diameter Tank	60	30.5	-52.7	-36.6	-32.4
	75	38.5	-44.7	-31.1	-23.5
	90	45.5	-37.7	-25.6	-2.0
	100	50.0	-33.2	-11.8	-2.0
	110	54.9	-28.3	-11.8	-2.0
	120	60.5	-22.7	-9.1	-2.0
	135	67.2	-16.0	-4.3	4.1
	150	74.5	-8.7	2.0	29.1
28.5” Diameter Tank	75	28.7	-54.5	-42.1	-32.4
	90	34.2	-49.0	-36.6	-26.9
	105	38.8	-44.4	-31.1	-23.5
	120	45.8	-37.4	-25.6	-2.0
	135	50.8	-32.4	-11.8	-2.0
	150	56.2	-27.0	-11.8	-2.0
	177	66.1	-17.1	-	4.1

NOTE: DIMENSION “B” IS CALCULATED USING A STANDARD BATTERY BOX. OPTIONAL EXTENDED BOXES WILL CHANGE DIMENSION “B”

https://truckmanualshub.com/

S5C—Use with the following models: T800B 38”

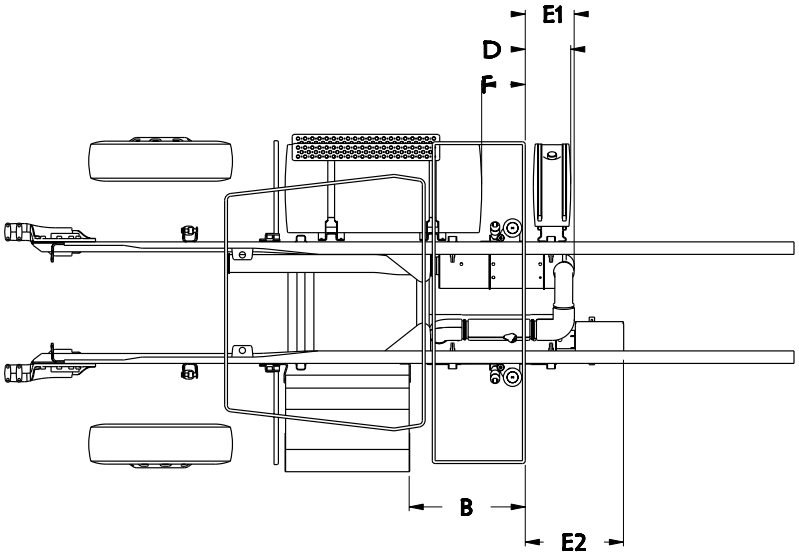

Dimension B (BOS to Battery Box) = -32.5in
Dimension E1 (BOS to DPF/SCR) = 13.6in
Dimension E2 (BOS to Diffuser) = 27.5in

TABLE 5-85.

T8B 38”						
Fuel Tank Size			Dimension F BOS to Fuel Tank (in)	Dimension D BOS to DEF Tank (in)		
				DEF Tank Size		
Diameter	Gallons	Length (in)		Small	Medium	Large
22” Diameter Tank	56	35.5	-31.5	-20.6	-8.1	35.8
	60	38.0	-29.1	-15.1	-8.1	35.8
	75	47.3	-19.8	12.7	27.7	35.8
	100	62.2	-4.9	12.7	27.7	35.8
	120	74.2	7.1	18.0	27.7	35.8
24.5” Diameter Tank	60	30.5	-36.6	-26.1	-8.1	35.8
	75	38.5	-28.6	-15.1	-8.1	35.8
	90	45.5	-21.6	12.7	27.7	35.8
	100	50.0	-17.1	12.7	27.7	35.8
	110	54.9	-12.2	12.7	27.7	35.8
	120	60.5	-6.6	12.7	27.7	35.8
	135	67.2	0.1	12.4	27.7	35.8
	150	74.5	7.4	18.0	27.7	35.8
28.5” Diameter Tank	75	28.7	-38.4	-26.1	-8.1	35.8
	90	34.2	-32.9	-20.6	-8.1	35.8
	105	38.8	-28.3	-15.1	27.7	35.8
	120	45.8	-21.3	12.7	27.7	35.8
	135	50.8	-16.3	12.7	27.7	35.8
	150	56.2	-10.9	12.7	27.7	35.8
	177	66.1	-1.0	-	27.7	26.5

NOTE: DIMENSION “B” IS CALCULATED USING A STANDARD BATTERY BOX. OPTIONAL EXTENDED BOXES WILL CHANGE DIMENSION “B”

https://truckmanualshub.com/

S5D—Use with the following models: T800B 42”

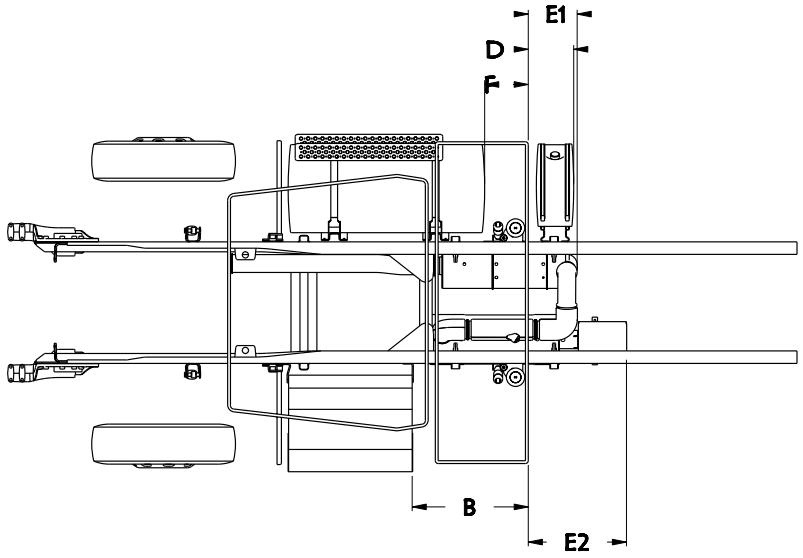

Dimension B (BOS to Battery Box) = -48.5in
Dimension E1 (BOS to DPF/SCR) = 11.4in
Dimension E2 (BOS to Diffuser) = 25.2in

TABLE 5-86.

T8B 42”					
Fuel Tank Size			Dimension F BOS to Fuel Tank (in)	Dimension D BOS to DEF Tank (in)	
				DEF Tank Size	
Diameter	Gallons	Length (in)		Small	Medium
22” Diameter Tank	56	35.5	-47.5	-36.6	-26.9
	60	38.0	-45.1	-31.1	-2.1
	75	47.3	-35.8	-11.8	-2.1
	100	62.2	-20.9	-9.1	1.7
	120	74.2	-8.9	3.1	29.1
24.5” Diameter Tank	60	30.5	-52.6	-42.1	-32.4
	75	38.5	-44.6	-31.1	-23.5
	90	45.5	-37.6	-25.6	-2.1
	100	50.0	-33.1	-11.8	-2.1
	110	54.9	-28.2	-11.8	-2.1
	120	60.5	-22.6	-9.1	-2.1
	135	67.2	-15.9	-4.3	4.0
	150	74.5	-8.6	22.7	29.1
28.5” Diameter Tank	75	28.7	-54.4	-42.1	-32.4
	90	34.2	-48.9	-36.6	-26.9
	105	38.8	-44.3	-31.1	-23.5
	120	45.8	-37.3	-25.6	-2.1
	135	50.8	-32.3	-11.8	-2.1
	150	56.2	-26.9	-11.8	-2.1
	177	66.1	-17.0	-	4.0

NOTE: DIMENSION “B” IS CALCULATED USING A STANDARD BATTERY BOX. OPTIONAL EXTENDED BOXES WILL CHANGE DIMENSION “B”

https://truckmanualshub.com/

S6A—Use with the following models: T800SH 38”

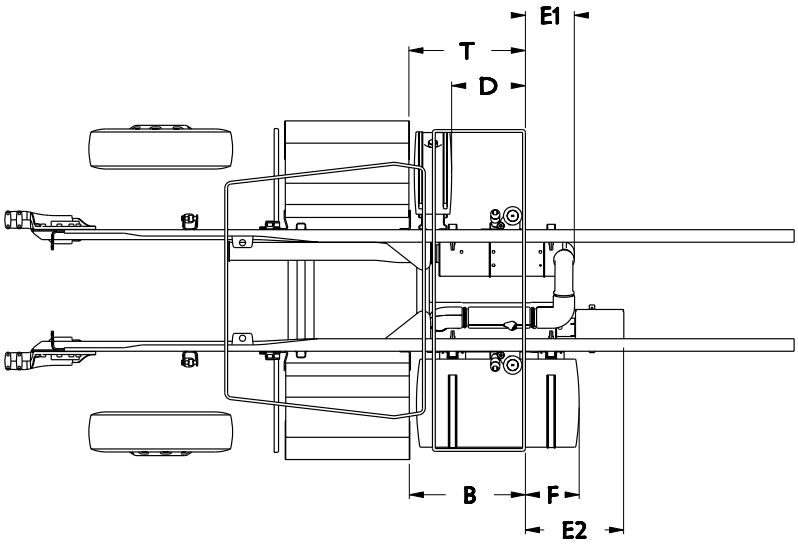

Dimension B (BOS to Battery Box) = -32.5in
Dimension E1 (BOS to DPF/SCR) = 13.6in
Dimension E2 (BOS to Diffuser) = 27.5in

TABLE 5-87.

T8SH 38”						
Fuel Tank Size			Dimension F BOS to Fuel Tank (in)	Dimension D BOS to DEF Tank (in)		
				DEF Tank Size		
Diameter	Gallons	Length (in)		Small	Medium	Large
22” Diameter Tank	56	35.5	5.0	-20.6	-8.1	35.8
	60	38.0	7.5			
	75	47.3	16.8			
	100	62.2	31.7			
	120	74.2	43.7			
24.5” Diameter Tank	60	30.5	0.0			
	75	38.5	8.0			
	90	45.5	15.0			
	100	50.0	19.5			
	110	54.9	24.4			
	120	60.5	30.0			
	135	67.2	36.7			
	150	74.5	44.0			
28.5” Diameter Tank	75	28.7	-1.8			
	90	34.2	3.7			
	105	38.8	8.3			
	120	45.8	15.3			
	135	50.8	20.3			
	150	56.2	25.7			
	177	66.1	35.6			

NOTE: DIMENSIONS “B” AND “F” ARE CALCULATED USING A STANDARD BATTERY BOX. OPTIONAL EXTENDED BOXES WILL CHANGE DIMENSIONS “B” AND “F”

https://truckmanualshub.com/

S6B—Use with the following models: T800SH 42”

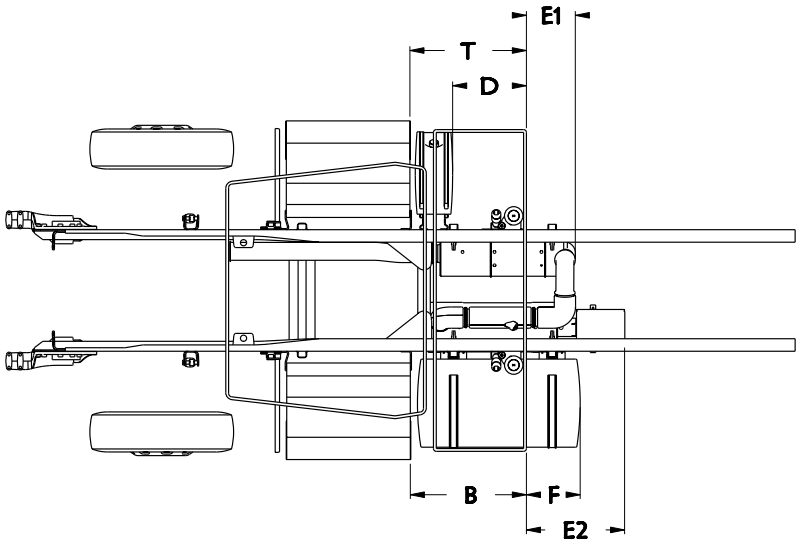

Dimension B (BOS to Battery Box) = -48.5in
Dimension E1 (BOS to DPF/SCR) = 11.4in
Dimension E2 (BOS to Diffuser) = 25.2in

TABLE 5-88.

T8SH 42”					
Fuel Tank Size			Dimension F BOS to Fuel Tank (in)	Dimension D BOS to DEF Tank (in)	
				DEF Tank Size	
Diameter	Gallons	Length (in)		Small	Medium
22” Diameter Tank	56	35.5	-11.0	-36.6	-26.9
	60	38.0	-8.5		
	75	47.3	0.8		
	100	62.2	15.7		
	120	74.2	27.7		
24.5” Diameter Tank	60	30.5	-16.0		
	75	38.5	-8.0		
	90	45.5	-1.0		
	100	50.0	3.5		
	110	54.9	8.4		
	120	60.5	14.0		
	135	67.2	20.7		
	150	74.5	28.0		
28.5” Diameter Tank	75	28.7	-17.8		
	90	34.2	-12.3		
	105	38.8	-7.7		
	120	45.8	-0.7		
	135	50.8	4.3		
	150	56.2	9.7		
	177	66.1	19.6		

NOTE: DIMENSIONS “B” AND “F” ARE CALCULATED USING A STANDARD BATTERY BOX. OPTIONAL EXTENDED BOXES WILL CHANGE DIMENSIONS “B” AND “F”

https://truckmanualshub.com/

S6C—Use with the following models: T800B 38”

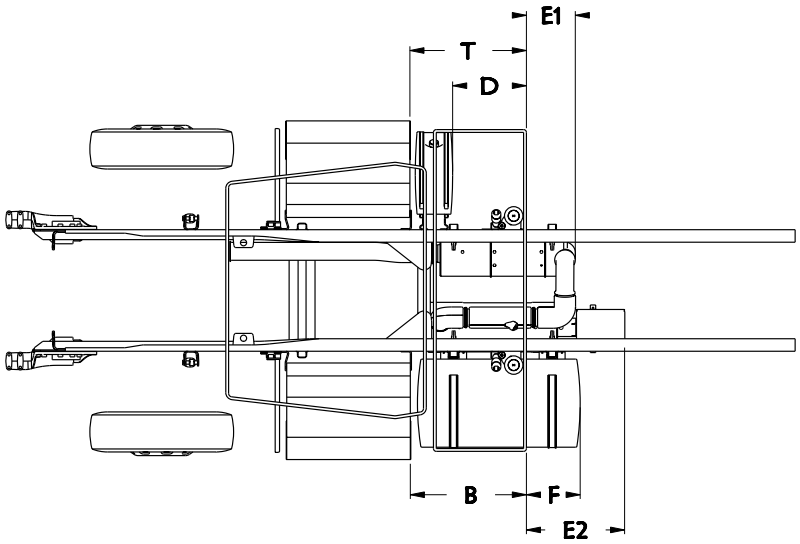

Dimension B (BOS to Battery Box) = -32.5in
Dimension E1 (BOS to DPF/SCR) = 13.6in
Dimension E2 (BOS to Diffuser) = 27.5in

TABLE 5-89.

T8B 38”						
Fuel Tank Size			Dimension F BOS to Fuel Tank (in)	Dimension D BOS to DEF Tank (in)		
				DEF Tank Size		
Diameter	Gallons	Length (in)		Small	Medium	Large
22” Diameter Tank	56	35.5	5.0	-20.6	-8.1	35.8
	60	38.0	7.5			
	75	47.3	16.8			
	100	62.2	31.7			
	120	74.2	43.7			
24.5” Diameter Tank	60	30.5	0.0			
	75	38.5	8.0			
	90	45.5	15.0			
	100	50.0	19.5			
	110	54.9	24.4			
	120	60.5	30.0			
	135	67.2	36.7			
	150	74.5	44.0			
28.5” Diameter Tank	75	28.7	-1.8			
	90	34.2	3.7			
	105	38.8	8.3			
	120	45.8	15.3			
	135	50.8	20.3			
	150	56.2	25.7			
	177	66.1	35.6			

NOTE: DIMENSIONS “B” AND “F” ARE CALCULATED USING A STANDARD BATTERY BOX. OPTIONAL EXTENDED BOXES WILL CHANGE DIMENSIONS “B” AND “F”

https://truckmanualshub.com/

S6D—Use with the following models: T800B 42”

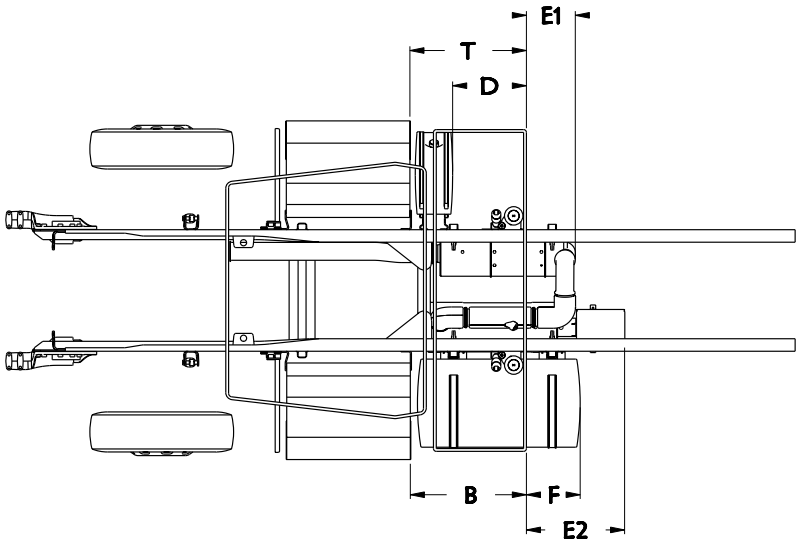

Dimension B (BOS to Battery Box) = -48.5in
Dimension E1 (BOS to DPF/SCR) = 11.4in
Dimension E2 (BOS to Diffuser) = 25.2in

TABLE 5-90.

T8B 42”					
Fuel Tank Size			Dimension F BOS to Fuel Tank (in)	Dimension D BOS to DEF Tank (in)	
				DEF Tank Size	
Diameter	Gallons	Length (in)		Small	Medium
22” Diameter Tank	56	35.5	-11.0	-36.6	-26.9
	60	38.0	-8.5		
	75	47.3	0.8		
	100	62.2	15.7		
	120	74.2	27.7		
24.5” Diameter Tank	60	30.5	-16.0		
	75	38.5	-8.0		
	90	45.5	-1.0		
	100	50.0	3.5		
	110	54.9	8.4		
	120	60.5	14.0		
	135	67.2	20.7		
	150	74.5	28.0		
28.5” Diameter Tank	75	28.7	-17.8		
	90	34.2	-12.3		
	105	38.8	-7.7		
	120	45.8	-0.7		
	135	50.8	4.3		
	150	56.2	9.7		
	177	66.1	19.6		

NOTE: DIMENSIONS “B” AND “F” ARE CALCULATED USING A STANDARD BATTERY BOX. OPTIONAL EXTENDED BOXES WILL CHANGE DIMENSIONS “B” AND “F”

https://truckmanualshub.com/

S7A—Use with the following models: T800SH 38”

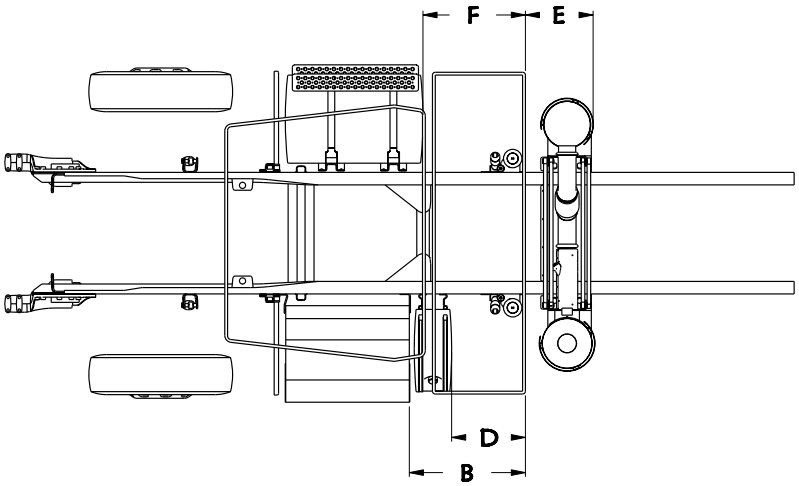

Dimension B (BOS to Battery Box) = -32.5in
Dimension E (BOS to DPF/SCR) = 19.6in

TABLE 5-91.

T8SH 38”					
Fuel Tank Size			Dimension F BOS to Fuel Tank (in)	Dimension D BOS to DEF Tank (in)	
				DEF Tank Size	
Diameter	Gallons	Length (in)		Small	Medium
22” Diameter Tank	56	35.5	-31.7	-20.6	-10.9
	60	38.0	-29.2		
	75	47.3	-19.9		
	100	62.2	-5.0		
	120	74.2	7.0		
24.5” Diameter Tank	60	30.5	-36.7		
	75	38.5	-28.7		
	90	45.5	-21.7		
	100	50.0	-17.2		
	110	54.9	-12.3		
	120	60.5	-6.7		
	135	67.2	0.0		
	150	74.5	7.3		
28.5” Diameter Tank	75	28.7	-38.5		
	90	34.2	-33.0		
	105	38.8	-28.4		
	120	45.8	-21.4		
	135	50.8	-16.4		
	150	56.2	-11.0		
	177	66.1	-1.1		

NOTE: DIMENSIONS “B” AND “D” ARE CALCULATED USING A STANDARD BATTERY BOX. OPTIONAL EXTENDED BOXES WILL CHANGE DIMENSIONS “B” AND “D”

https://truckmanualshub.com/

S7B—Use with the following models: T800SH 42”

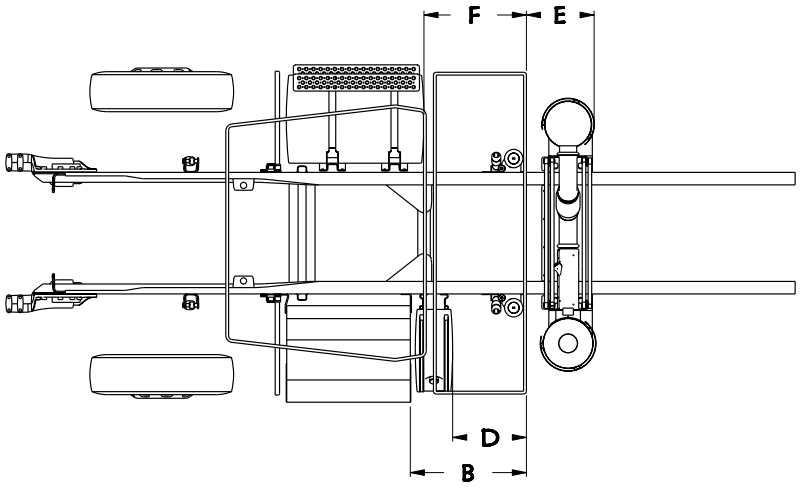

Dimension B (BOS to Battery Box) = -48.5in
Dimension E (BOS to DPF/SCR) = 19.6in

TABLE 5-92.

T8SH 42”					
Fuel Tank Size			Dimension F BOS to Fuel Tank (in)	Dimension D BOS to DEF Tank (in)	
				DEF Tank Size	
Diameter	Gallons	Length (in)		Small	Medium
22” Diameter Tank	56	35.5	-47.7	-36.6	-26.9
	60	38.0	-45.2		
	75	47.3	-35.9		
	100	62.2	-21.0		
	120	74.2	-9.0		
24.5” Diameter Tank	60	30.5	-52.7		
	75	38.5	-44.7		
	90	45.5	-37.7		
	100	50.0	-33.2		
	110	54.9	-28.3		
	120	60.5	-22.7		
	135	67.2	-16.0		
	150	74.5	-8.7		
28.5” Diameter Tank	75	28.7	-54.5		
	90	34.2	-49.0		
	105	38.8	-44.4		
	120	45.8	-37.4		
	135	50.8	-32.4		
	150	56.2	-27.0		
	177	66.1	-17.1		

NOTE: DIMENSIONS “B” AND “D” ARE CALCULATED USING A STANDARD BATTERY BOX. OPTIONAL EXTENDED BOXES WILL CHANGE DIMENSIONS “B” AND “D”

https://truckmanualshub.com/

S7C—Use with the following models: T800B and C500B 38”

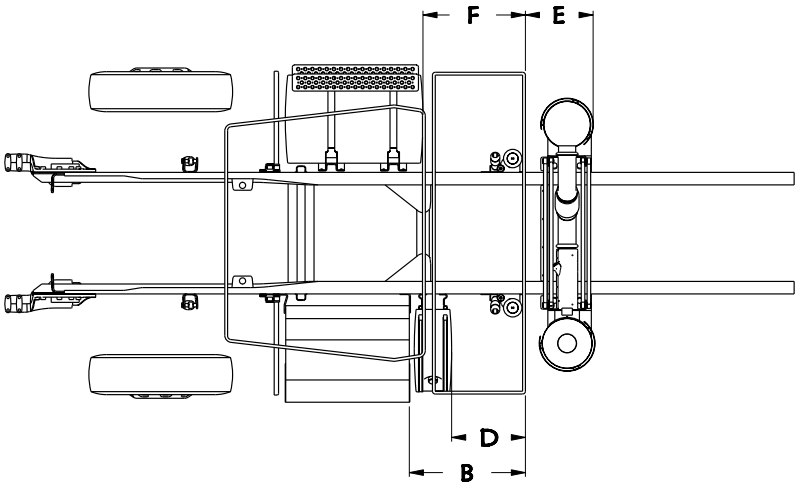

Dimension B (BOS to Battery Box) = -32.5in
Dimension E (BOS to DPF/SCR) = 19.6in

TABLE 5-93.

T8B and C5B 38”					
Fuel Tank Size			Dimension F BOS to Fuel Tank (in)	Dimension D BOS to DEF Tank (in)	
				DEF Tank Size	
Diameter	Gallons	Length (in)		Small	Medium
22” Diameter Tank	56	35.5	-31.5	-20.6	-10.9
	60	38.0	-29.1		
	75	47.3	-19.8		
	100	62.2	-4.9		
	120	74.2	7.1		
24.5” Diameter Tank	60	30.5	-36.6		
	75	38.5	-28.6		
	90	45.5	-21.6		
	100	50.0	-17.1		
	110	54.9	-12.2		
	120	60.5	-6.6		
	135	67.2	0.1		
	150	74.5	7.4		
28.5” Diameter Tank	75	28.7	-38.4		
	90	34.2	-32.9		
	105	38.8	-28.3		
	120	45.8	-21.3		
	135	50.8	-16.3		
	150	56.2	-10.9		
	177	66.1	-1.0		

NOTE: DIMENSIONS “B” AND “D” ARE CALCULATED USING A STANDARD BATTERY BOX. OPTIONAL EXTENDED BOXES WILL CHANGE DIMENSIONS “B” AND “D”

https://truckmanualshub.com/

S7D—Use with the following models: T800B and C500B 42”

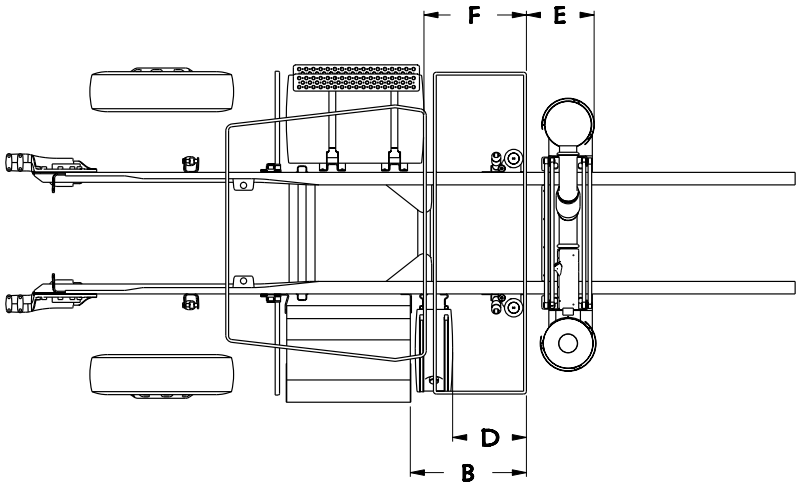

Dimension B (BOS to Battery Box) = -48.5in
Dimension E (BOS to DPF/SCR) = 19.6in

TABLE 5-94.

T8B and C5B 42”					
Fuel Tank Size			Dimension F BOS to Fuel Tank (in)	Dimension D BOS to DEF Tank (in)	
				DEF Tank Size	
Diameter	Gallons	Length (in)		Small	Medium
22” Diameter Tank	56	35.5	-47.7	-36.6	-26.9
	60	38.0	-45.2		
	75	47.3	-35.9		
	100	62.2	-21.0		
	120	74.2	-9.0		
24.5” Diameter Tank	60	30.5	-52.7		
	75	38.5	-44.7		
	90	45.5	-37.7		
	100	50.0	-33.2		
	110	54.9	-28.3		
	120	60.5	-22.7		
	135	67.2	-16.0		
	150	74.5	-8.7		
28.5” Diameter Tank	75	28.7	-54.5		
	90	34.2	-49.0		
	105	38.8	-44.4		
	120	45.8	-37.4		
	135	50.8	-32.4		
	150	56.2	-27.0		
	177	66.1	-17.1		

NOTE: DIMENSIONS “B” AND “D” ARE CALCULATED USING A STANDARD BATTERY BOX. OPTIONAL EXTENDED BOXES WILL CHANGE DIMENSIONS “B” AND “D”

https://truckmanualshub.com/

S8A—Use with the following models: T800SH 38”

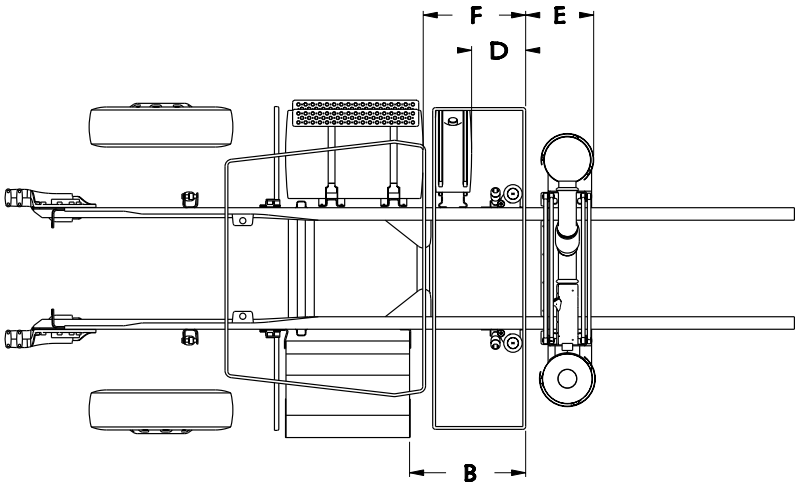

Dimension B (BOS to Battery Box) = -32.5in
Dimension E (BOS to DPF/SCR) = 19.6in

TABLE 5-95.

T8SH 38”					
Fuel Tank Size			Dimension F BOS to Fuel Tank (in)	Dimension D BOS to DEF Tank (in)	
				DEF Tank Size	
Diameter	Gallons	Length (in)		Small	Medium
22” Diameter Tank	56	35.5	-31.7	-20.6	-9.4
	60	38.0	-29.2	-17.9	-9.4
	75	47.3	-19.9	29.3	39.0
	100	62.2	-5.0	29.3	39.0
	120	74.2	7.0	29.3	39.0
24.5” Diameter Tank	60	30.5	-36.7	-26.1	-9.4
	75	38.5	-28.7	-17.9	-9.4
	90	45.5	-21.7	29.3	39.0
	100	50.0	-17.2	29.3	39.0
	110	54.9	-12.3	29.3	39.0
	120	60.5	-6.7	29.3	39.0
	135	67.2	0.0	29.3	39.0
	150	74.5	7.3	29.3	39.0
28.5” Diameter Tank	75	28.7	-38.5	-26.1	-9.4
	90	34.2	-33.0	-20.6	-9.4
	105	38.8	-28.4	-15.1	39.0
	120	45.8	-21.4	29.3	39.0
	135	50.8	-16.4	29.3	39.0
	150	56.2	-11.0	29.3	39.0
	177	66.1	-1.1	-	39.0

NOTE: DIMENSION “B” IS CALCULATED USING A STANDARD BATTERY BOX. OPTIONAL EXTENDED BOXES WILL CHANGE DIMENSION “B”

https://truckmanualshub.com/

S8B—Use with the following models: T800SH 42”

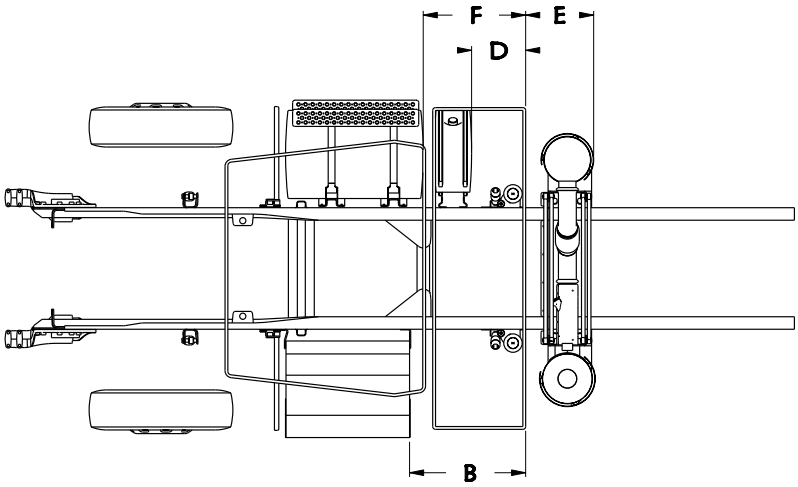

Dimension B (BOS to Battery Box) = -48.5in
Dimension E (BOS to DPF/SCR) = 19.6in

TABLE 5-96.

T8SH 42”					
Fuel Tank Size			Dimension F BOS to Fuel Tank (in)	Dimension D BOS to DEF Tank (in)	
				DEF Tank Size	
Diameter	Gallons	Length (in)		Small	Medium
22” Diameter Tank	56	35.5	-47.7	-36.6	-25.4
	60	38.0	-45.2	-33.9	-25.4
	75	47.3	-35.9	-20.1	-15.8
	100	62.2	-21.0	-9.1	36.9
	120	74.2	-9.0	2.0	36.9
24.5” Diameter Tank	60	30.5	-52.7	-42.1	-25.4
	75	38.5	-44.7	-33.9	-25.4
	90	45.5	-37.7	-25.6	-15.8
	100	50.0	-33.2	-20.1	-13.1
	110	54.9	-28.3	-14.6	-8.2
	120	60.5	-22.7	-9.1	36.9
	135	67.2	-16.0	-3.5	36.9
	150	74.5	-8.7	2.0	36.9
28.5” Diameter Tank	75	28.7	-54.5	-42.1	-25.4
	90	34.2	-49.0	-36.6	-25.4
	105	38.8	-44.4	-31.1	-15.5
	120	45.8	-37.4	-25.6	-15.5
	135	50.8	-32.4	-20.1	-13.1
	150	56.2	-27.0	-14.6	36.9
	177	66.1	-17.1	-	36.9

NOTE: DIMENSION “B” IS CALCULATED USING A STANDARD BATTERY BOX. OPTIONAL EXTENDED BOXES WILL CHANGE DIMENSION “B”

https://truckmanualshub.com/

S8C—Use with the following models: T800B and C500B 38”

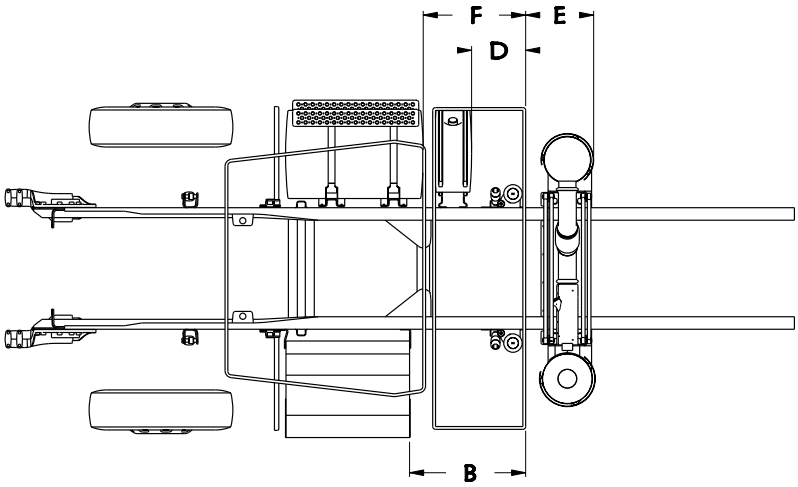

Dimension B (BOS to Battery Box) = -32.5in
Dimension E (BOS to DPF/SCR) = 19.6in

TABLE 5-97.

T8B & C5B 38”					
Fuel Tank Size			Dimension F BOS to Fuel Tank (in)	Dimension D BOS to DEF Tank (in)	
				DEF Tank Size	
Diameter	Gallons	Length (in)		Small	Medium
22” Diameter Tank	56	35.5	-31.5	-20.6	-9.4
	60	38.0	-29.1	-17.9	-9.4
	75	47.3	-19.8	29.3	39.0
	100	62.2	-4.9	29.3	39.0
	120	74.2	7.1	29.3	39.0
24.5” Diameter Tank	60	30.5	-36.6	-26.1	-9.4
	75	38.5	-28.6	-17.9	-9.4
	90	45.5	-21.6	29.3	39.0
	100	50.0	-17.1	29.3	39.0
	110	54.9	-12.2	29.3	39.0
	120	60.5	-6.6	29.3	39.0
	135	67.2	0.1	29.3	39.0
	150	74.5	7.4	29.3	39.0
28.5” Diameter Tank	75	28.7	-38.4	-26.1	-9.4
	90	34.2	-32.9	-20.6	-9.4
	105	38.8	-28.3	-15.1	39.0
	120	45.8	-21.3	29.3	39.0
	135	50.8	-16.3	29.3	39.0
	150	56.2	-10.9	29.3	39.0
	177	66.1	-1.0	-	39.0

NOTE: DIMENSION “B” IS CALCULATED USING A STANDARD BATTERY BOX. OPTIONAL EXTENDED BOXES WILL CHANGE DIMENSION “B”

https://truckmanualshub.com/

S8D—Use with the following models: T800B and C500B 42”

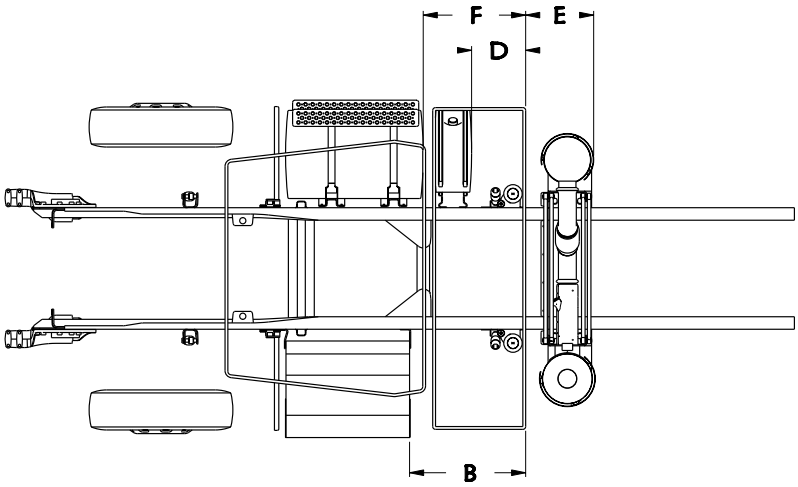

Dimension B (BOS to Battery Box) = -48.5in
Dimension E (BOS to DPF/SCR) = 19.6in

TABLE 5-98.

T8B & C5B 42”					
Fuel Tank Size			Dimension F BOS to Fuel Tank (in)	Dimension D BOS to DEF Tank (in)	
				DEF Tank Size	
Diameter	Gallons	Length (in)		Small	Medium
22” Diameter Tank	56	35.5	-47.5	-36.6	-25.4
	60	38.0	-45.1	-33.9	-25.4
	75	47.3	-35.8	-20.1	-15.8
	100	62.2	-20.9	-9.1	36.9
	120	74.2	-8.9	2.0	36.9
24.5” Diameter Tank	60	30.5	-52.6	-42.1	-25.4
	75	38.5	-44.6	-33.9	-25.4
	90	45.5	-37.6	-25.6	-15.8
	100	50.0	-33.1	-20.1	-13.1
	110	54.9	-28.2	-14.6	-8.2
	120	60.5	-22.6	-9.1	36.9
	135	67.2	-15.9	-3.5	36.9
	150	74.5	-8.6	2.0	36.9
28.5” Diameter Tank	75	28.7	-54.4	-42.1	-25.4
	90	34.2	-48.9	-36.6	-25.4
	105	38.8	-44.3	-31.1	-15.5
	120	45.8	-37.3	-25.6	-15.5
	135	50.8	-32.3	-20.1	-13.1
	150	56.2	-26.9	-14.6	36.9
	177	66.1	-17.0	-	36.9

NOTE: DIMENSION “B” IS CALCULATED USING A STANDARD BATTERY BOX. OPTIONAL EXTENDED BOXES WILL CHANGE DIMENSION “B”

https://truckmanualshub.com/

S9A—Use with the following models: T800SH 38”

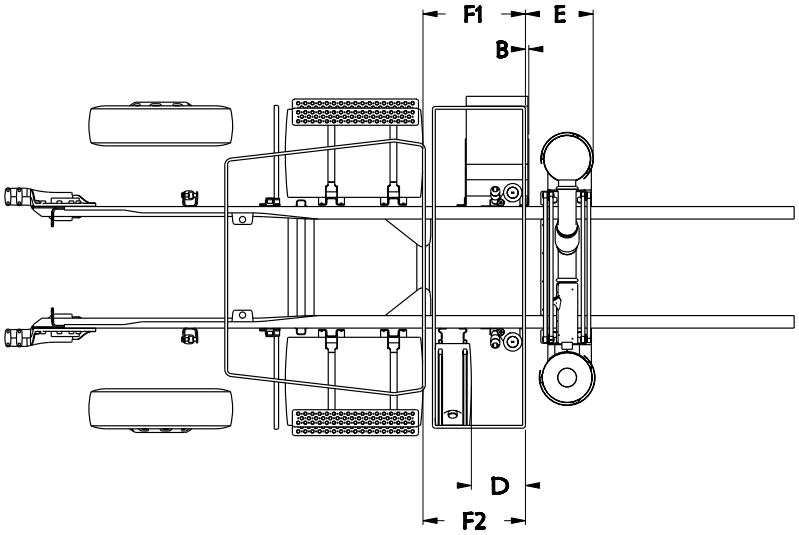

Dimension E (BOS to DPF/SCR) = 19.6in

TABLE 5-99.

T8SH 38”						
Fuel Tank Size			Dimension F1 & F2 BOS to Fuel Tank (in)	Dimension B BOS to Battery Box (in)	Dimension D BOS to DEF Tank (in)	
					DEF Tank Size	
Diameter	Gallons	Length (in)			Small	Medium
22” Diameter Tank	56	35.5	-31.7	0.9	-20.6	-10.9
	60	38.0	-29.2	0.9	-17.9	39.0
	75	47.3	-19.9	0.9	18.2	39.0
	100	62.2	-5.0	37.1	18.2	39.0
	120	74.2	7.0	37.1	18.2	39.0
24.5” Diameter Tank	60	30.5	-36.7	-16.0	-26.1	-16.4
	75	38.5	-28.7	0.9	-17.9	39.0
	90	45.5	-21.7	0.9	18.2	39.0
	100	50.0	-17.2	37.1	18.2	39.0
	110	54.9	-12.3	37.1	18.2	39.0
	120	60.5	-6.7	37.1	18.2	39.0
	135	67.2	0.0	37.1	18.2	39.0
	150	74.5	7.3	37.1	18.2	39.0
28.5” Diameter Tank	75	28.7	-38.5	-17.8	-26.1	-16.4
	90	34.2	-33.0	0.9	-20.6	10.9
	105	38.8	-28.4	0.9	-15.1	39.0
	120	45.8	-21.4	0.9	18.2	39.0
	135	50.8	-16.4	37.1	18.2	39.0
	150	56.2	-11.0	37.1	18.2	39.0
	177	66.1	-1.1	37.1	-	39.0

NOTE: DIMENSION “B” IS CALCULATED USING A CANTILEVER SIZED BATTERY BOX. OPTIONAL BOXES WILL AFFECT THIS DIMENSION.

https://truckmanualshub.com/

S9B—Use with the following models: T800SH 42”

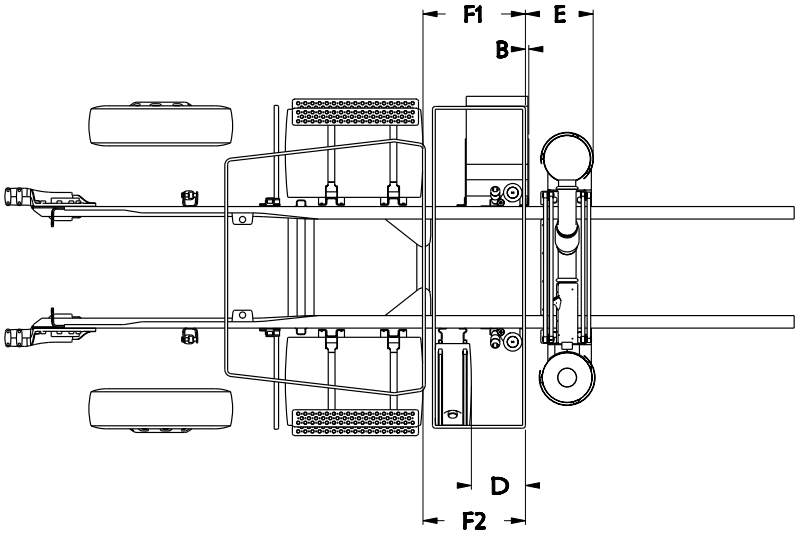

Dimension E (BOS to DPF/SCR) = 19.6in

TABLE 5-100.

T8SH 42”						
Fuel Tank Size			Dimension F1 & F2 BOS to Fuel Tank (in)	Dimension B BOS to Battery Box (in)	Dimension D BOS to DEF Tank (in)	
					DEF Tank Size	
Diameter	Gallons	Length (in)			Small	Medium
22” Diameter Tank	56	35.5	-47.7	-27.0	-36.6	-26.9
	60	38.0	-45.2	-24.5	-33.9	-24.7
	75	47.3	-35.9	-15.2	-20.1	-15.8
	100	62.2	-21.0	-0.3	-9.1	36.9
	120	74.2	-9.0	35.2	2.0	36.9
24.5” Diameter Tank	60	30.5	-52.7	-32.0	-42.1	-32.4
	75	38.5	-44.7	-24.0	-33.9	-24.7
	90	45.5	-37.7	-17.0	-25.6	-15.8
	100	50.0	-33.2	-12.5	-20.1	-13.1
	110	54.9	-28.3	-7.6	-14.6	-7.6
	120	60.5	-22.7	-2.0	-9.1	36.9
	135	67.2	-16.0	35.2	-3.5	36.9
	150	74.5	-8.7	35.2	2.0	36.9
28.5” Diameter Tank	75	28.7	-54.5	-33.8	-42.1	-32.4
	90	34.2	-49.0	-28.3	-36.6	-26.9
	105	38.8	-44.4	-23.7	-31.1	-21.3
	120	45.8	-37.4	-16.7	-25.6	-15.8
	135	50.8	-32.4	-11.7	-20.1	-13.1
	150	56.2	-27.0	-6.3	-14.6	-7.6
	177	66.1	-17.1	35.2	-	36.9

NOTE: DIMENSION “B” IS CALCULATED USING A CANTILEVER SIZED BATTERY BOX. OPTIONAL BOXES WILL AFFECT THIS DIMENSION.

https://truckmanualshub.com/

S9C—Use with the following models: T800B and C500B 38”

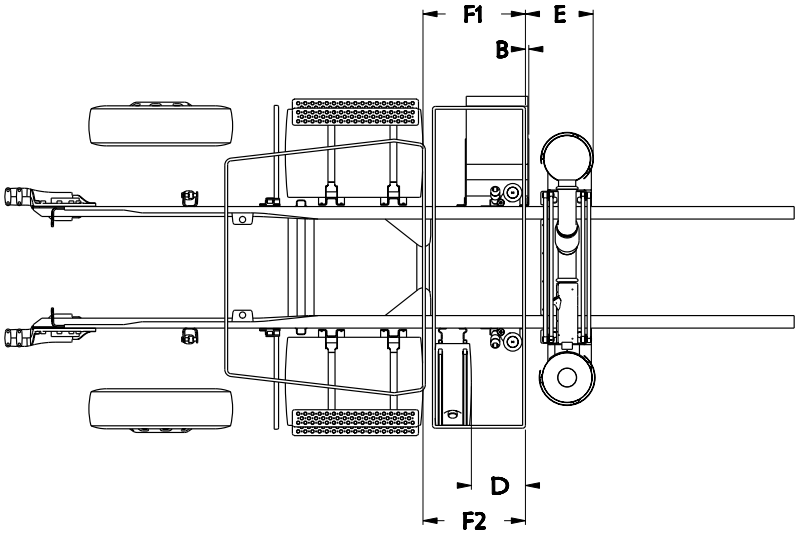

Dimension E (BOS to DPF/SCR) = 19.6in

TABLE 5-101.

T8B & C5B 38”						
Fuel Tank Size			Dimension F1 & F2 BOS to Fuel Tank (in)	Dimension B BOS to Battery Box (in)	Dimension D BOS to DEF Tank (in)	
					DEF Tank Size	
Diameter	Gallons	Length (in)			Small	Medium
22” Diameter Tank	56	35.5	-31.5	0.9	-20.6	-9.4
	60	38.0	-29.1	0.9	-17.9	-9.4
	75	47.3	-19.8	0.9	18.2	39.0
	100	62.2	-4.9	37.1	18.2	39.0
	120	74.2	7.1	37.1	18.2	39.0
24.5” Diameter Tank	60	30.5	-36.6	-15.9	-26.1	-9.4
	75	38.5	-28.6	0.9	-17.9	-9.4
	90	45.5	-21.6	0.9	18.2	39.0
	100	50.0	-17.1	37.1	18.2	39.0
	110	54.9	-12.2	37.1	18.2	39.0
	120	60.5	-6.6	37.1	18.2	39.0
	135	67.2	0.1	37.1	18.2	39.0
	150	74.5	7.4	37.1	18.2	39.0
28.5” Diameter Tank	75	28.7	-38.4	-17.7	-26.1	-9.4
	90	34.2	-32.9	0.9	-20.6	-9.4
	105	38.8	-28.3	0.9	-15.1	39.0
	120	45.8	-21.3	0.9	18.2	39.0
	135	50.8	-16.3	37.1	18.2	39.0
	150	56.2	-10.9	37.1	18.2	39.0
	177	66.1	-1.0	37.1	-	39.0

NOTE: DIMENSION “B” IS CALCULATED USING A CANTILEVER SIZED BATTERY BOX. OPTIONAL BOXES WILL AFFECT THIS DIMENSION.

https://truckmanualshub.com/

S9D—Use with the following models: T800B and C500B 42”

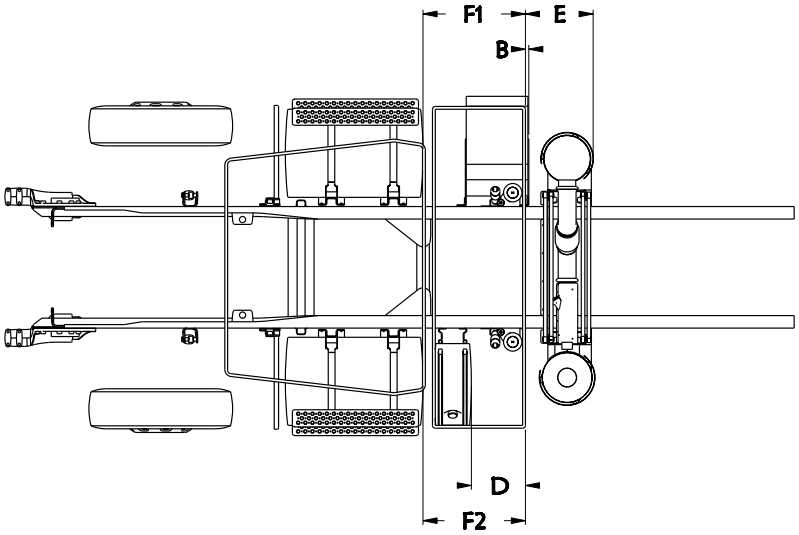

Dimension E (BOS to DPF/SCR) = 19.6in

TABLE 5-102.

T8B & C5B 42”						
Fuel Tank Size			Dimension F1 & F2 BOS to Fuel Tank (in)	Dimension B BOS to Battery Box (in)	Dimension D BOS to DEF Tank (in)	
					DEF Tank Size	
Diameter	Gallons	Length (in)			Small	Medium
22” Diameter Tank	56	35.5	-47.5	-26.8	-36.6	-25.4
	60	38.0	-45.1	-24.4	-33.9	-25.4
	75	47.3	-35.8	-15.1	-20.1	-15.8
	100	62.2	-20.9	-0.2	-9.1	36.9
	120	74.2	-8.9	35.2	2.0	36.9
24.5” Diameter Tank	60	30.5	-52.6	-31.9	-42.1	-25.4
	75	38.5	-44.6	-23.9	-33.9	-25.4
	90	45.5	-37.6	-16.9	-25.6	-15.8
	100	50.0	-33.1	-12.4	-20.1	-13.1
	110	54.9	-28.2	-7.5	-14.6	-8.2
	120	60.5	-22.6	-1.9	-9.1	36.9
	135	67.2	-15.9	35.2	-3.6	36.9
	150	74.5	-8.6	35.2	2.0	36.9
28.5” Diameter Tank	75	28.7	-54.4	-33.7	-42.1	-25.4
	90	34.2	-48.9	-28.2	-36.6	-25.4
	105	38.8	-44.3	-23.6	-31.1	-15.8
	120	45.8	-37.3	-16.6	-25.6	-15.8
	135	50.8	-32.3	-11.6	-20.1	-13.1
	150	56.2	-26.9	-6.2	-14.6	36.9
	177	66.1	-17.0	35.2	-	36.9

NOTE: DIMENSION “B” IS CALCULATED USING A CANTILEVER SIZED BATTERY BOX. OPTIONAL BOXES WILL AFFECT THIS DIMENSION.

https://truckmanualshub.com/

FRAME INFORMATION

Frame information provided is per rail, some specifications are written for RBM requirements per pair of rails. Make sure to know the requirement before deciding on the frame rail.

TABLE 6-1. Single Steel Rails

Rail Height		Flange Width		Web Thickness	Section Modulus	RBM (in lbs)	Weight (lbs/in)
H		W		T	S	R	W
10 - 5/8”	x	3 -1/2”	x	5/16”	14.80	1,776,000	2.90
10 - 3/4”	x	3 -1/2”	x	3/8”	17.80	2,132,000	3.46
10 -11/16”	x	3 -1/2”	x	1/2”	22.35	2,683,000	4.53
11- 5/8”	x	3 -7/8”	x	3/8”	21.43	2,572,000	3.80

TABLE 6-2. Inserted Steel Rails

Rail Height	Insert Material	Section Modulus	RBM (in lbs)	Weight (lbs/in)
10 - 5/8”	Single 9-7/8”x 2-7/8” x 1/4”	24.37	2,925,000	4.96
10 - 3/4”	Single 9-7/8”x 2-7/8” x 1/4”	27.33	3,280,000	5.53
11- 5/8”	Single 10-3/4” x 3-1/2” x 1/4”	39.20	4,704,000	7.28
11- 5/8”	Double (one 10-3/4” x 3-1/2” x 1/4” and one 9-7/8”x 2-7/8” x 1/4”)	48.77	5,853,000	9.33

The T800 FEPTO front frame extensions are reinforced parent frame rails with an RBM value of 1.88M in-lbs per side (for an approximate total of 3.76M for both rails).

The figures below are designed to help install front end equipment, for more detailed information please work directly with your Kenworth dealer.

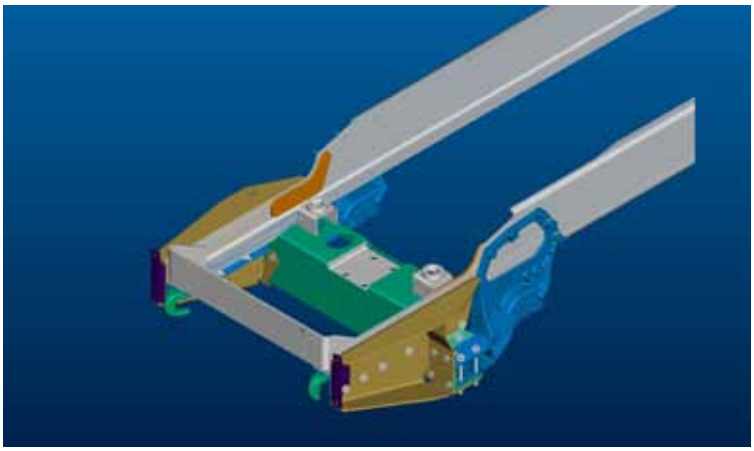

FIGURE 6-1: Isometric View of T800 FEPTO front end with 66” Bumper Setting

https://truckmanualshub.com/

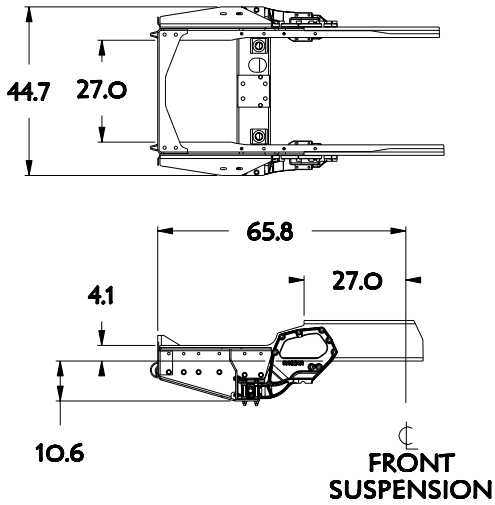

FIGURE 6-2: T800 FEPTO front end with 66” Bumper Setting

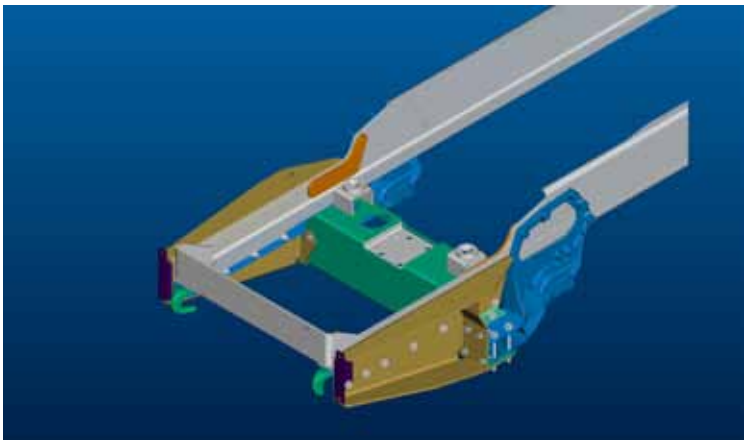

FIGURE 6-3: Isometric View of T800 FEPTO front end with 73” Bumper Setting

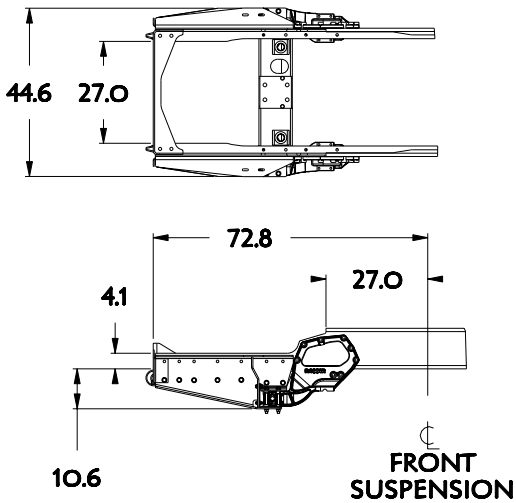

FIGURE 6-4: T800 FEPTO front end with 73” Bumper Setting

https://truckmanualshub.com/

CRITICAL CLEARANCES

Rear Wheels and Cab

CAUTION:

Insufficient clearance between rear tires and body structure could cause damage to the body during suspension movement. Allow at least 8 inches clearance (See Figure 6–5.)

Normal suspension movement could cause contact between the tires and the body. To prevent this, mount the body so that the minimum clearance between the top of the tire and the bottom of the body is 8 inches (203 mm). This should be measured with the body empty. See Figure 6–5.

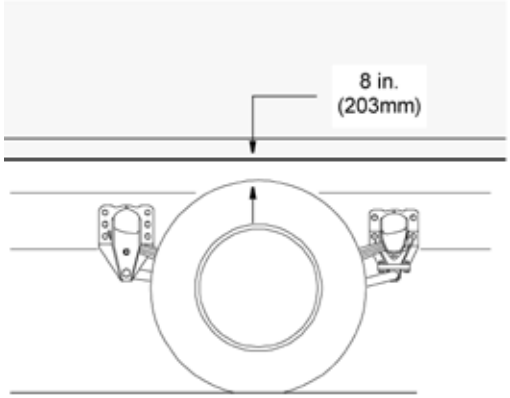

FIGURE 6-5. Minimum Clearance Between Top Of Rear Tires And Body Structure Overhang.

CAUTION:

Maintain adequate clearance between back of cab and the front (leading edge) of mounted body. See Figure 6–6.

Note:

Be sure to provide maintenance access to battery box and fuel tank fill neck.

https://truckmanualshub.com/

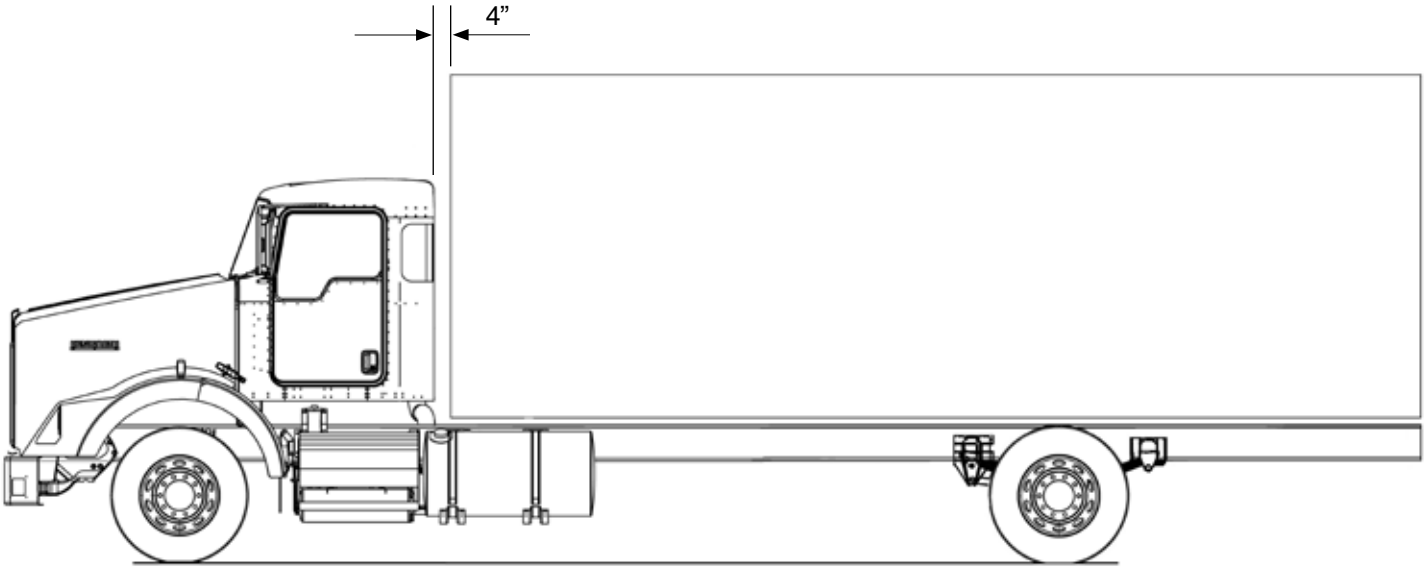

FIGURE 6-6. Minimum Back of Cab Clearance

WARNING: **If the frame rail flanges are modified or damaged, the rail could fail prematurely and cause an accident. When mounting a body to the chassis, DO NOT drill holes in the upper or lower flange of the frame rail. Mount the body using body mounting brackets or U–bolts.**

BODY MOUNTING USING BRACKETS

CAUTION: **Always install a spacer between the body subframe and the top flange of the frame rail. Failure to do so could result in corrosion due to dissimilar materials.**

Installation of a spacer between the body subframe and the top flange of the frame rail will help prevent premature wear of the components due to chafing or corrosion.

https://truckmanualshub.com/

Frame Sill

If the body is mounted to the frame with brackets, we recommend that the frame sill spacer be made from a strip of rubber or plastic (delrin or nylon). These materials will not undergo large dimensional changes during periods of high or low humidity. The strip will be less likely to fall out during extreme relative motion between body and chassis. See Figure 6–7.

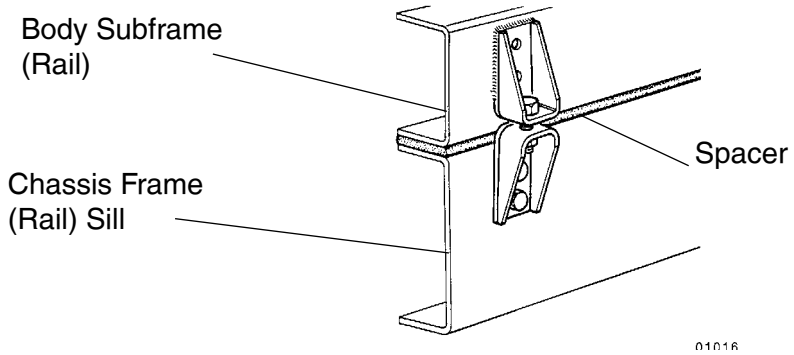

FIGURE 6-7. Spacer Between Frame Sill and Body Rail - Rubber or Plastic

Brackets

When mounting a body to the chassis with brackets, we recommend designs that offer limited amount of relative movement, bolted securely but not too rigid. Brackets should allow for slight movement between the body and the chassis. For instance, Figure 6–8 shows a high compression spring between the bolt and the bracket.

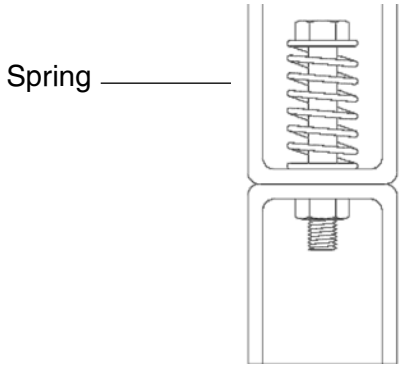

FIGURE 6-8. High Compression Spring Between the Mounting Bolt and Upper Bracket

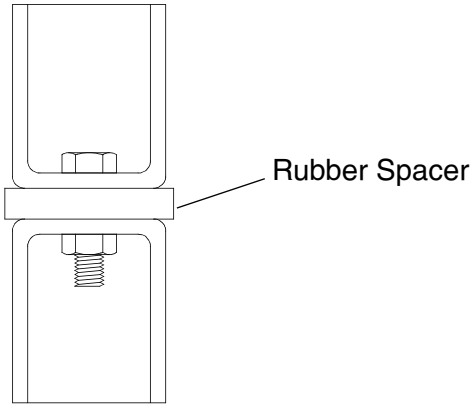

FIGURE 6-9. Rubber Spacer Between Brackets

Another possibility is mounting a rubber spacer between the brackets. See Figure 6–9.

These designs will allow relative movement between the body and the chassis during extreme frame racking situations. Extreme frame racking, and mountings that are too rigid, could cause damage to the body. This is particularly true with tanker installations.

https://truckmanualshub.com/

MOUNTING HOLES

When installing the lower bracket on frame rails the mounting holes in the chassis frame bracket and frame rail must comply with the general spacing and location guidelines illustrated in Figure 6–10. The hole diameter should not exceed the bolt diameter by more than .060 inches (1.5 mm).

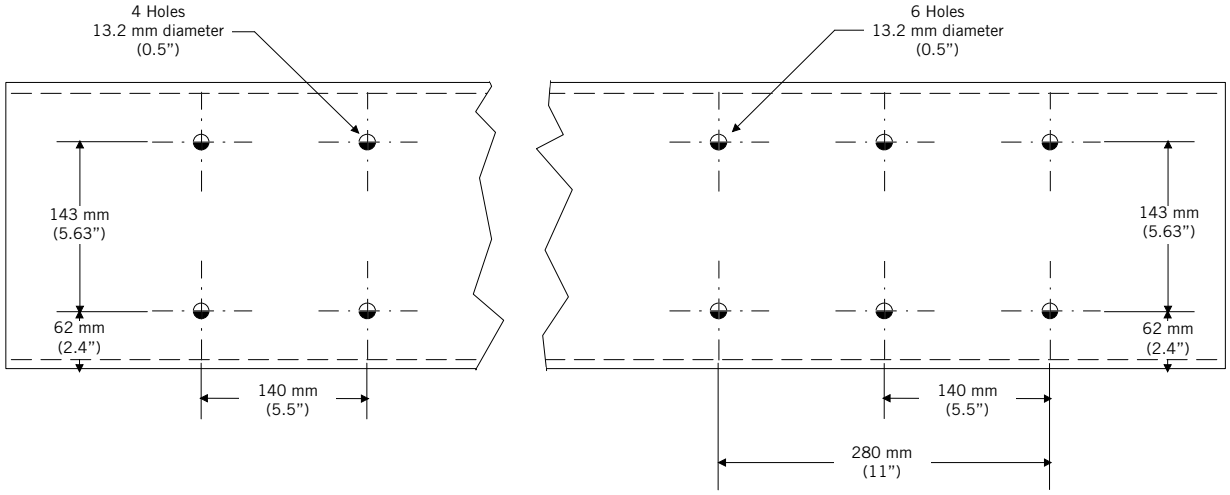

FIGURE 6-10. Crossmember-Gusset Hole Pattern Requirements. [inch (mm)]

Frame Drilling

WARNING:

When mounting a body to the chassis, DO NOT drill holes in the upper or lower flange of the frame rail. If the frame rail flanges are modified or damaged, the rail could fail prematurely and cause an accident. Mount the body using body mounting brackets or U–bolts.

CAUTION:

Use care when drilling the frame web so the wires and air lines routed inside the rail are not damaged, Failure to do so could cause an inoperable electrical or air system circuit.

WARNING:

Do not drill closely spaced holes in the frame rail. Hole centers of two adjacent holes should be spaced no less than twice the diameter of the largest hole. Closer spacing could induce a failure between the holes.

https://truckmanualshub.com/

BODY MOUNTING USING U–BOLTS

Spacers

If the body is mounted to the frame with U–bolts, use a hardwood sill (minimum 1/2 inch (12 mm) thick) between the frame rail and body frame to protect the top surface of the rail flange.

WARNING: **Do not allow the frame rails or flanges to deform when tightening the U–bolts. It will weaken the frame and could cause an accident. Use suitable spacers made of steel or hardwood on the inside of the frame rail to prevent collapse of the frame flanges.**

Use a hardwood spacer between the bottom flange and the U–bolt to prevent the U–bolt from notching the frame flange. See Figure 6–11.

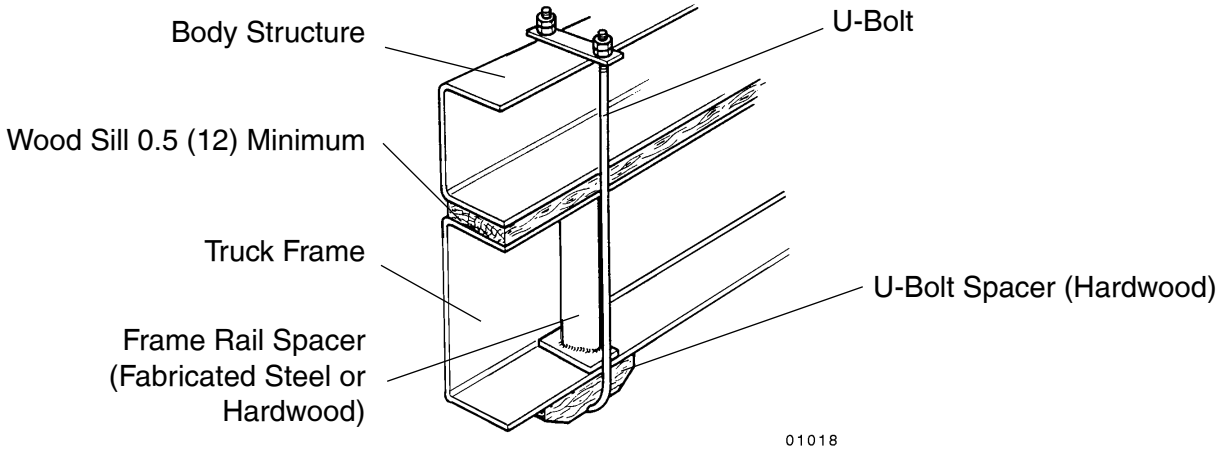

FIGURE 6-11. Acceptable U-Bolt Mounting with Wood and Fabricated Spacers [inch (mm)]

WARNING: **Do not allow spacers and other body mounting parts to interfere with brake lines, fuel lines, or wiring harnesses routed inside the frame rail. Crimped or damaged brake lines, fuel lines, or wiring could result in loss of braking, fuel leaks, electrical overload or a fire. Carefully inspect the installation to ensure adequate clearances for air brake lines, fuel lines, and wiring. See Figure 6–12.**

CAUTION: **Mount U–bolts so they do not chafe on frame rail. Failure to do so could result in premature wear of the U-bolt or frame rail.**

https://truckmanualshub.com/

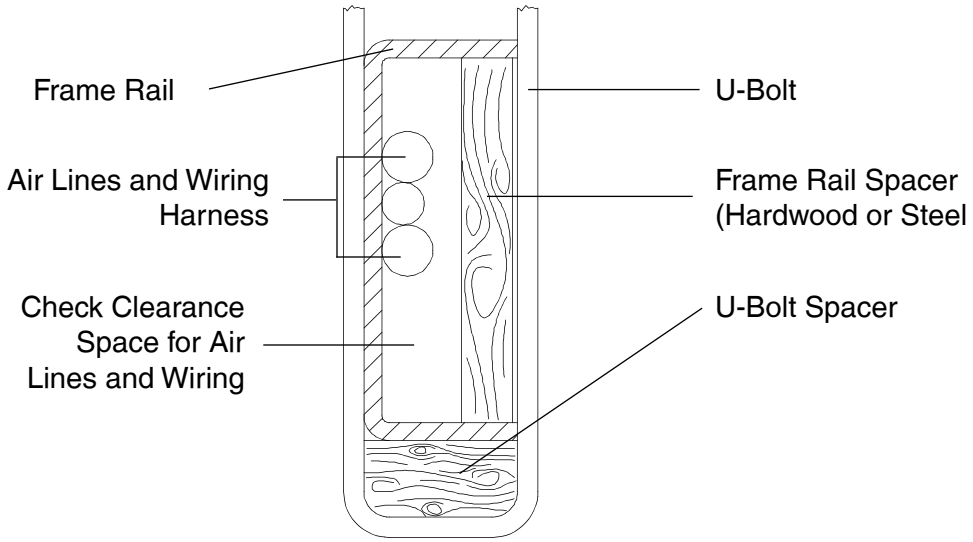

FIGURE 6-12. Clearance Space for Air Lines and Cables

WARNING:

Do not notch frame rail flanges to force a U–bolt fit. Notched or damaged frame flanges could result in premature frame failure. Use a larger size U–bolt. Use a hardwood spacer as shown in Figure 6-11.

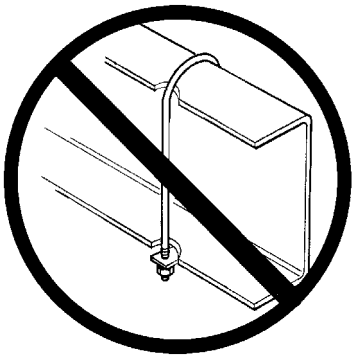

https://truckmanualshub.com/

Rear Body Mount

When U–bolts are used to mount a body we recommend that the last body attachment be made with a “fishplate” bracket. See Figure 6–13. This provides a firm attaching point and helps prevent any relative fore or aft movement between the body and frame.

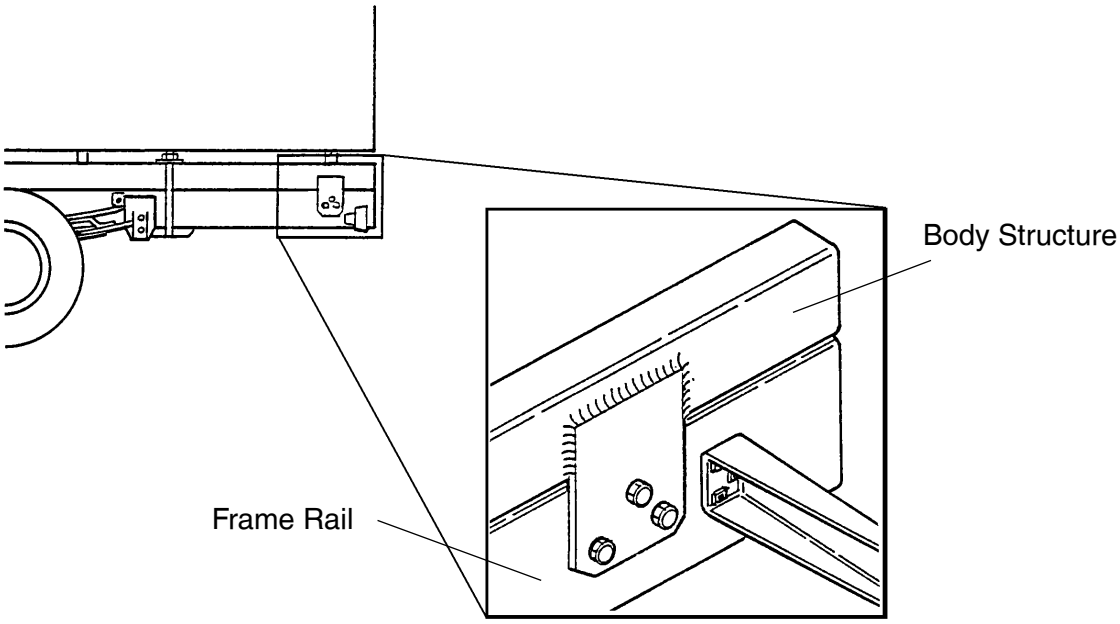

FIGURE 6-13. Example of Fishplate Bracket at Rear End of Body, used with U-Bolts

https://truckmanualshub.com/

This page intentionally left blank.

https://truckmanualshub.com/

FRAME MODIFICATIONS

Introduction

Kenworth offers customer specified wheelbases. So, in most cases frame modifications to produce a certain wheelbase should not be necessary.

However, some installations may require slight modifications, while other installations will require extensive modifications. Sometimes an existing dealer stock chassis may need to have the wheelbase changed to better fit a customer's application. The modifications may be as simple as shortening or lengthening the frame cutoff, or they may be as complex as changing the wheelbase.

DRILLING RAILS

Location and Hole Pattern

If holes need to be drilled to attach anything to the rail, see SECTION 6 "BODY MOUNTING" for more information. Follow the general spacing and hole location guidelines on Page 6–5, Figure 6–6.

WARNING!

When mounting a body to the chassis, DO NOT drill holes in the upper or lower flange of the frame rail. If the frame rail flanges are modified or damaged, the rail could fail prematurely and cause an accident. Mount the body using body mounting brackets or U–bolts.

WARNING!

Do not drill closely spare holes in the web of the frame. Hole centers of two adjacent holes should be spaced no less than twice the diameter of the largest hole. Closer spacing could induce a failure between the holes.

CAUTION:

An appropriately sized bolt and nut must be installed and torqued properly in all unused frame holes. Failure to do so could result in frame crack initiation around the hole.

CAUTION:

Use care when drilling the frame web so the wires and air lines routed inside the rail are not damaged, Failure to do so could cause an inoperable electrical or air system circuit.

CAUTION:

Never use a torch to make holes in the rail. Use the appropriate diameter drill bit. Heat from a torch will affect the material properties of the frame rail and could result in frame rail cracks.

CAUTION:

Hole diameter should not exceed the bolt diameter by more than .060 inches (1.5 mm). Oversized holes could result in excessive frame wear around the hole.

https://truckmanualshub.com/

MODIFYING FRAME LENGTH

The frame cutoff after the rear axle can be shortened to match a particular body length. Using a torch is acceptable; however, heat from a torch will affect the material characteristics of the frame rail. The affected material will normally be confined to within 1 to 2 inches (25 to 50 mm) of the flame cut and may not adversely affect the strength of the chassis or body installation.

The frame cutoff can be lengthened by adding frame extenders.

When extending 10.5” frame rails, the additional sections can be welded to the existing rails. The joint should be welded and reinforced as illustrated in Figure 7–1.

Note:

See page 7-6 for more information on welding frames.

Frame Insert

A frame insert must be added after welding a frame rail extension to compensate for lost strength. The insert should be of the same material as the frame member, or of steel, and at least equal to the frame rail in thickness. Attachment of the insert to the frame should be made with Ream-Fit heat-treated bolts, 5/8 in. (16 mm) dia. or the next larger size. Both the reinforcement and frame holes should be reamed to provide a fit of from .001 in. to .003 in. (.025 to .076 mm) clearance. Do not weld reinforcing members. The insert should span a distance of at least 24 in. (610 mm) on either side of the joint to insure an even distribution of stresses. Cut the ends of the insert at 45° as shown in Figure 7–2 unless the insert extends to the end of the frame.

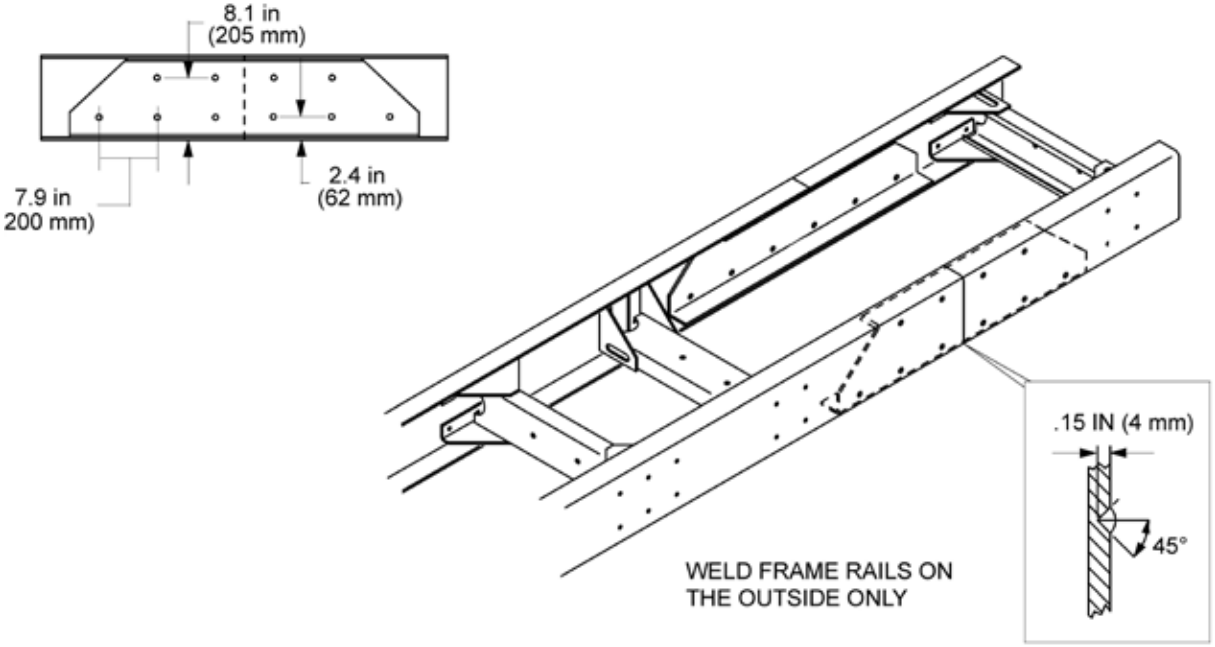

FIGURE 7-1. Detail of Frame Extension and Joint Welding

https://truckmanualshub.com/

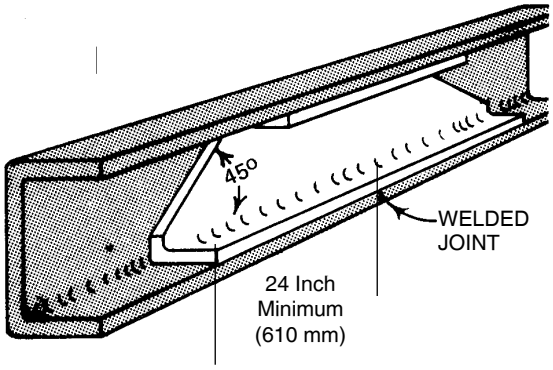

FIGURE 7-2. Frame Insert

Where possible, use existing bolt holes to attach the insert to the frame. Bolt holes must not be located closer to the frame flanges than the present bolt pattern.

If the insert is placed in a section of the main frame where few bolts are located, additional bolts are required. Use the following guideline for locating additional bolt holes.

CHANGING WHEELBASE

We do not recommend modifying the wheelbase. Occasionally, however, a chassis wheelbase will need to be reduced or lengthened. When this needs to be done there are a few guidelines that should to be considered.

WARNING!

When changing the wheelbase, be sure to follow the driveline manufacturer's recommendations for driveline length or angle changes. Incorrectly modified drivelines can fail prematurely due to excessive vibration.

Before changing the wheelbase the driveline angles of the proposed wheelbase need to be examined to ensure that no harmful vibrations are created. Consult the driveline manufacturer for appropriate recommendations.

WARNING!

When changing the wheelbase, a continuous blank frame insert/outsert must be added in the area of the new rear suspension mounting bolts. All new mounting holes must pass through the original rail and the insert/outsert. Failure to do so could cause excessive stress in the original rail due to additional holes.

Before the rear suspension is relocated, check the new location of the spring hanger brackets. The new holes for the spring hanger brackets must not overlap existing holes and should not come any closer than 2 inches (50 mm) to existing holes in the frame.

WARNING!

When relocating a suspension bracket, do not mount it on the extended (added) section of a frame rail. The suspension loading could result in premature failure of the added section splice. This could cause an accident. Use care when planning the wheelbase so that the rear suspension bracket is always mounted on the original rail section. See Figure 7–3.

https://truckmanualshub.com/

When reducing the wheelbase, we recommend that the suspension be moved forward and relocated on the original rail. The rail behind the suspension can then be cut to achieve the desired frame cutoff. See Figure 7–3.

WARNING! **Do not drill new holes any closer than 2 inches (50 mm) to existing holes. Frame drilling affects the strength of the rails.**

Before the rear suspension is relocated, check the new location of the spring hanger brackets. The new holes for the spring hanger brackets must not overlap existing holes and should not come any closer than 2 inches (50 mm) to existing holes.

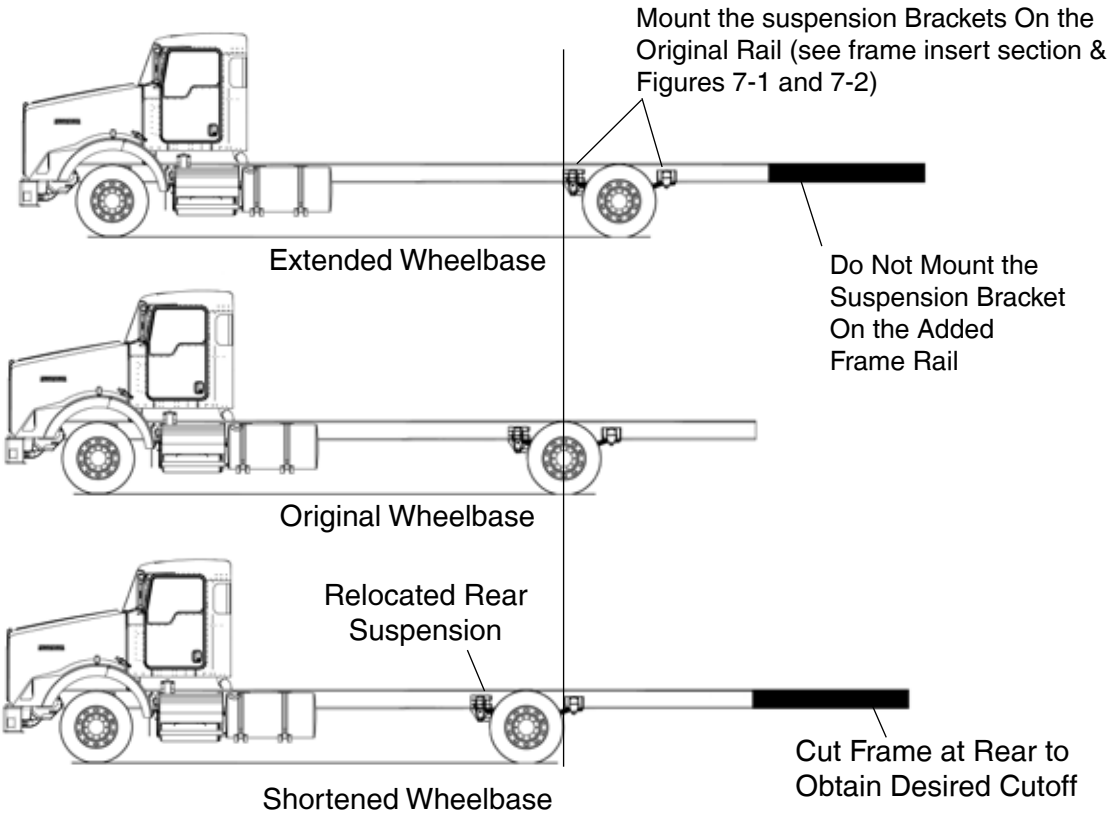

FIGURE 7-3. Comparison of Original, Shortened, and Extended Wheelbases.

https://truckmanualshub.com/

CROSSMEMBERS

After changing a wheelbase, an additional crossmember may be required to maintain the original frame strength. The maximum allowable distance between adjacent crossmembers is 60 inches (1524 mm). If the distance between adjacent crossmembers exceeds this dimension, add a crossmember between them. See Figure 7–4.

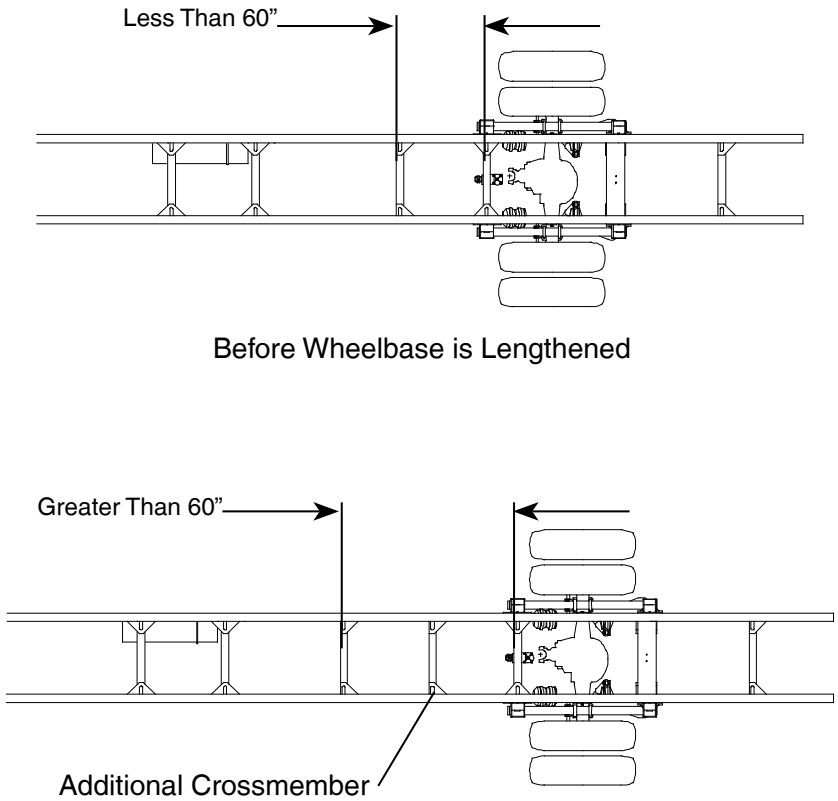

FIGURE 7-4. Crossmember Added When Distance Exceeds 60 Inches (1524 mm)

https://truckmanualshub.com/

WELDING

Kenworth DOES NOT recommend frame welding. The high heat of welding nullifies the special heat treatment of the rails, greatly reducing the tensile strength of the frame rail. If a frame member becomes cracked from overloading, fatigue, surface damage or a collision, the only permanent repair is to replace the damaged frame member with a new part.

The following information is provided (for temporary emergency repair). Prior to welding a cracked frame rail, the area should be beveled (V'd out) to allow for a better weld. To prevent spreading of the crack, a 7 to 9 mm (1/4 in. to 3/8 in.) dia. hole should be drilled at the end of the crack. Widen the crack along its full length by using two hack saw blades together. When welding steel frames use the shielded arc method. When welding aluminum frames use either the tungsten inert gas (TIG) or consumable electrode method. Be sure to obtain full weld penetration along the entire length of the crack.

Precautions

CAUTION: **Before welding, disconnect the negative terminal battery cable.**

CAUTION: **Before welding, disconnect the alternator terminals. Failure to do so could result in damage to the voltage regulator and/or alternator.**

CAUTION: **To prevent damage to electrical equipment, disconnect battery cables before arc-welding on a truck, and be sure that the welding ground lead is connected to the frame. Bearings and other parts will be damaged if current must pass through them in order to complete the circuit.**

Welding Precautions: All Electronic Engines

Before welding on vehicles with electronic engines, the following precautions should be observed.

1. Disconnect all electrical connections to the vehicle batteries.
2. Disconnect all ECM connectors.
3. Do no use the ECM or engine ground stud for the ground of the welding probe.
4. Ensure that the ground connection for the welder is as close to the weld point as possible. This ensures maximum weld current and minimum risk to damage electrical components on the vehicle.
5. Turn off key.

Note: Bosch ABS and Wabco ABS: Disconnect ECU.

https://truckmanualshub.com/

TORQUE REQUIREMENTS

TABLE 7-1. Customary Grade 8 UNF or UNC.

Fastener	Torque	
Size	Nm	Lb.-Ft
5/16	22–30	16–22
3/8	41–54	30–40
7/16	75–88	55–65
1/2	109–122	80–90
9/16	156–190	115-140
5/8	224–265	165–195
3/4	394–462	290–340
7/8	517–626	380–460
1	952–1129	800–830
1-1/8	1346–1591	990–1170
1-1/4	1877–2217	1380–1630

Torque values apply to fasteners with clean threads, lightly libricated, with hardened steel washers, and nylon-insert nuts.

TABLE 7-2. U.S. Customary – Grade 8. Metric Class 10.9

	Torque	
Fastener	Nm	Lb-Ft
M6	9–15	7–11
M8	23–31	17–23
M10	33–43	24–32
M12	75–101	55–75
M14	134–164	99–121
M16	163–217	120–160
M20	352–460	260–340

https://truckmanualshub.com/

This page intentionally left blank.

https://truckmanualshub.com/

ELECTRICAL

Information in this section will cover the following topics:

- Overview of Kenworth's 2010 multiplex instrumentation
- Access instructions for the dash, gauges, and switches.
- Wiring instructions for alarm and telltale (warning lights)
- Reconfiguring telltale cards
- Spare Switches (standard and adding)
- Spare Relays
- Multifunction turn signal stalk, chassis load center, chassis node
- Remote PTO/Throttle harness
- Electrical wire number and color
- Trailer cable connections
- Bendix electronic stability program (ESP)
- After-treatment Control Modules
- Factory Installed Snow Plow Lights

MULTIPLEX INSTRUMENTATION

Kenworth utilizes Multiplex instrumentation and wiring to continuously improve our quality and the capability of our trucks. Multiplexing utilizes the industry standard Society of Automotive Engineering (SAE) J1939 data bus to send multiple signals over a single twisted pair of wires instead of individual wires for each function. The advantages are fewer wires, sensors, and connections that provide greater consistency, improved reliability and the ability to use ESA to troubleshoot the instrumentation. The following information is provided to increase your awareness about the Kenworth product, it may be useful in installing telltales (warning lights) and gauges and coordination with other installed equipment.

WARNING!

Don't cut or tap into green/yellow twisted pairs. Only use "T" connectors, and only add approved J1939 components with validated software.

https://truckmanualshub.com/

INTERIOR IDENTIFICATION

Kenworth began production of this interior in 2005. Chassis with this new interior can be identified by appearance, see Figure 8-1. All dashes that resemble the following picture will utilize multiplex wiring.

FIGURE 8-1. Kenworth B-Cab Dash

A 2010 Chassis can quickly be identified by the presence of the Diesel Exhaust Fluid “DEF” gauge. See Figure 8-2.

FIGURE 8-2. Diesel Exhaust Fluid Gauge

Note:

The information contained in this manual is specific to chassis with 2010 engines. For pre-2010 engines please work with your local Kenworth dealer.

https://truckmanualshub.com/

Data Bus Communication

The multiplexed instrumentation system uses several different data links to transmit input/output data from other systems to the Cab Electronic Control Unit (CECU), and ultimately to the Central Instrument Cluster and CVSG Gauges. See Figure 8-3, Multiplexed Instrumentation Block Diagram on page 8-3.

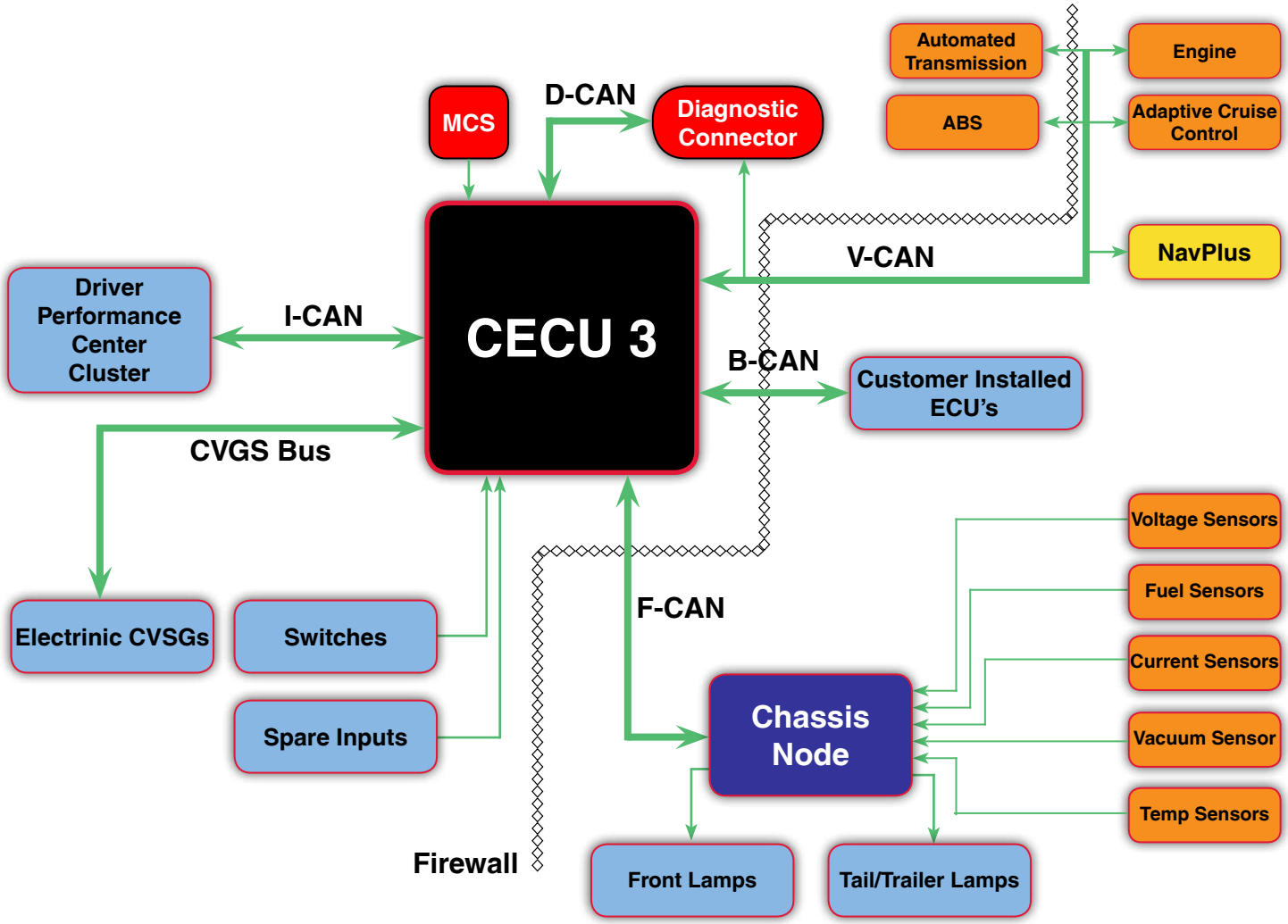

FIGURE 8-3. Multiplexed Instrumentation Block Diagram.

- V-CAN = Vehicle Controller Area Network
  The V-CAN, also referred to as the J1939, is used to transmit data between the transmission, ABS system, engine, etc. to the Cab Electronic Control Unit (CECU).
- B-CAN = Body Builder Controller Area Network.
  the B-Can provided the body builder access to J1939 data at a convenient back of cab harness location. This optional harness is available on all models.
- I-CAN = Instrumentation Controller Area Network
  The I-CAN provides data link communication from the Cab Electronic Control Unit (CECU) to the Central Instrument Cluster.
- F-CAN = Frame Controller Area Network
  The F-CAN provides a data link communication from the Cab Electronic Control Unit (CECU) to the Chassis Node to control lighting functions.
- CVSG Bus
  The CVSG bus is a private data bus used to transmit data from the Cab Electronic Control Unit (CECU) to the individual 2-inch gauges. A series of "daisy chained" jumper harnesses link each gauge to one another.

https://truckmanualshub.com/

Functional Description

Cab Electronic Control Unit (CECU)

The heart of the multiplexed instrumentation system is the Cab Electronic Control Unit (CECU). The CECU is located behind the center console. See Figure 8-4.

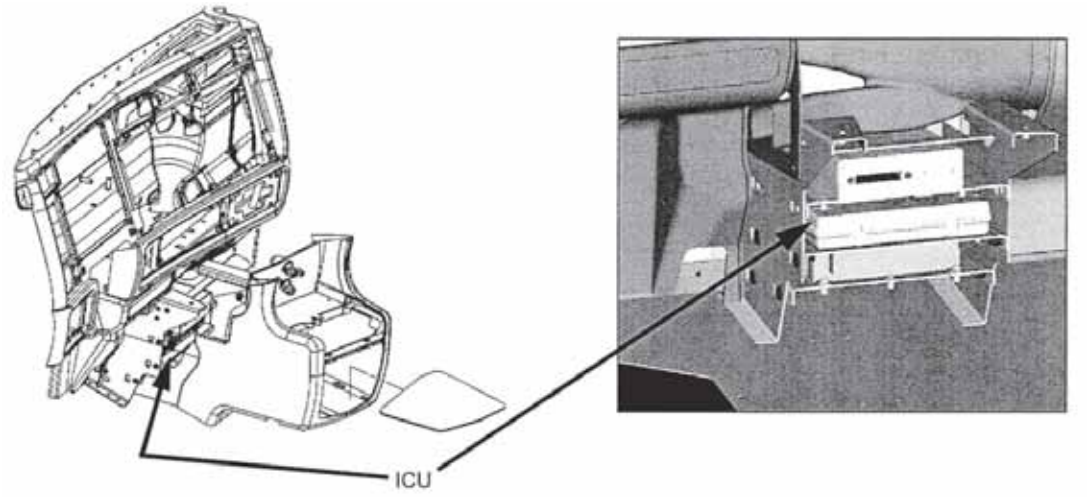

FIGURE 8-4. CECU Location.

Vehicle component inputs are sent to the CECU through the J1939 data bus or conventional wiring. The CECU interprets the various inputs and monitors/controls the functions for each input through the CECU software. Output signals from the CECU provide data for the gauges, warning lamps, audible alarms, and displays inside the cluster.

Central Instrument Cluster

The central instrument cluster includes the speedometer (including odometer and trip meter) and tachometer (including engine hour meter and outside temperature display), plus pre-installed standard and/or editable warning light symbols called “telltale” cards.

Each “telltale” card slides into the left and right sides of the cluster. The standard cards cover most warning light requirements; editable cards can be used for less common components that also require warning lights.

The central instrument cluster receives input data from the CECU via the “I-CAN” (see Figure 8-3) data bus. When the ignition key is first turned ON, the cluster will perform a calibration “power on self-test”. Please see pages 8-18 through 8-20 for more detailed information.

Power On Self-Test

- Ignition key turned ON
- The speedometer and tachometer gauge pointers move from pointing at zero, counter-clockwise to their mechanical limit (approx. -8°), stay there for one second and go back to pointing at zero
- At the same time, all LED indicators and telltales are switched on together, and then switched off together
- A “Warning” sound sequence is also activated five times without break

The warning lamps in the cluster are all activated by the CECU, except for Telltale Position 5 (usually Refrigerator) and Position 11 (editable) which are wired directly to the cluster. The CECU receives direct wire inputs for all warning lamps with the exception of the Low Coolant Level warning and the Traction Control/Stability Control lamp. These lamp inputs are received via the J1939 (Vehicle CAN) data link. The CECU typically receives the Trailer ABS warnings via the J1939 (Vehicle CAN) data link, however it can also be direct wired to the CECU from the ABS unit on the trailer, if required. See Figure 8-5 below.

https://truckmanualshub.com/

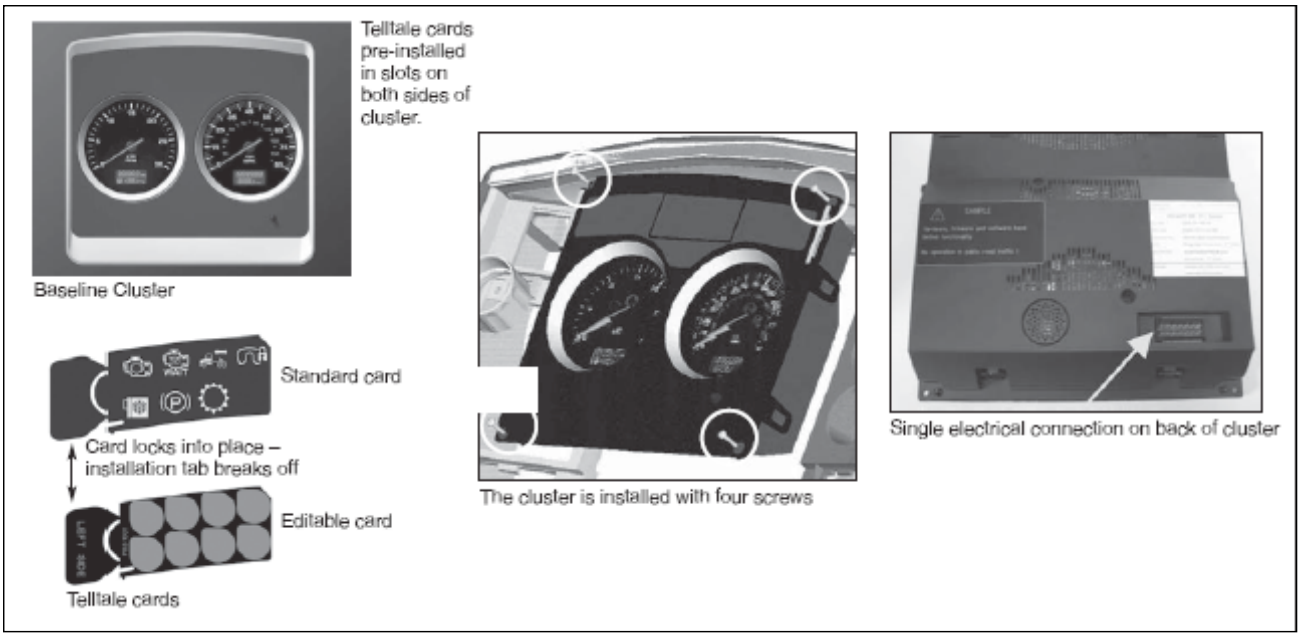

FIGURE 8-5. Instrument Cluster Components

CVSG Gauges

The right and left instrument panel gauges used with the multiplexed instrumentation are commonly referred to as Commercial Vehicle Smart Gauges (CVSG). Like the central instrument cluster, the 2-inch gauges also receive input data directly from the CECU. CVSG's are electronic and mechanical. The electronic CVSG's receive digital data from the CECU via the CVSG data bus. The mechanical gauges (i.e. suspension air pressure, etc.) are driven directly from the air pressure. Both types of gauges receive backlighting signals from the CECU via a 4-wire "daisy chained" jumper harness that links one gauge to another.

When the ignition key is first turned ON, all the electronic 2-inch gauges will perform a calibration "power on self-test".

Note: The mechanical CVSG do not perform a power on self-test.

Power On Self-Test

- Ignition key turned ON
- The gauge pointers move from pointing at zero, counter-clockwise to their mechanical limit (approx. -5°), stay there for one second and go back to pointing at zero
- At the same time, all LED indicators are switched on together, and then switched off together

Additional CVSG gauge information body builders should be aware of:

- The CECU sends 2-inch electronic gauges information over a data link (blue wire) between the CECU and the gauge
- 2-inch electronic gauges get their power from the CECU
- Yellow = Power wire (9-16 volts)
- White = Ground (return) wire

https://truckmanualshub.com/

- 4-way jumper harnesses link each 2-inch gauge together.

Pin #	Color	Function
1	Blue	Data, backlighting for Electronic Gauges
2	Brown	Backlighting for Mechanical Gauges
3	White	Ground (Return)
4	Yellow	Power

- Backlighting for 2-inch electronic gauges is sent from the CECU to the gauges via the data link (blue wire).
- Optional mechanical gauge (i.e. air suspension) needles are driven mechanically with air pressure. There is no red warning lamp and the backlighting is powered through the brown wire from the CECU (a pulse-width modulated signal). The 4-way jumper harness is still used to pass all 4 circuits through the gauge to the next gauge in the chain.
- Specialty CVSG gauges (i.e. clock, PTO hour meter) are stand alone gauges and are independent of the CECU.
- Gauges can be relocated to any position in the dash. To relocate a gauge unhook the connector at the back and move it to the desired position. Plug the jumper wire in. (See Figure 8-6 for instructions on physically moving the gauge). The connector will require a firm pull to remove it. When reinstalling the connector ensure that it is fully inserted. Both connector sockets on the rear of the gauge are the same, either one can be used.

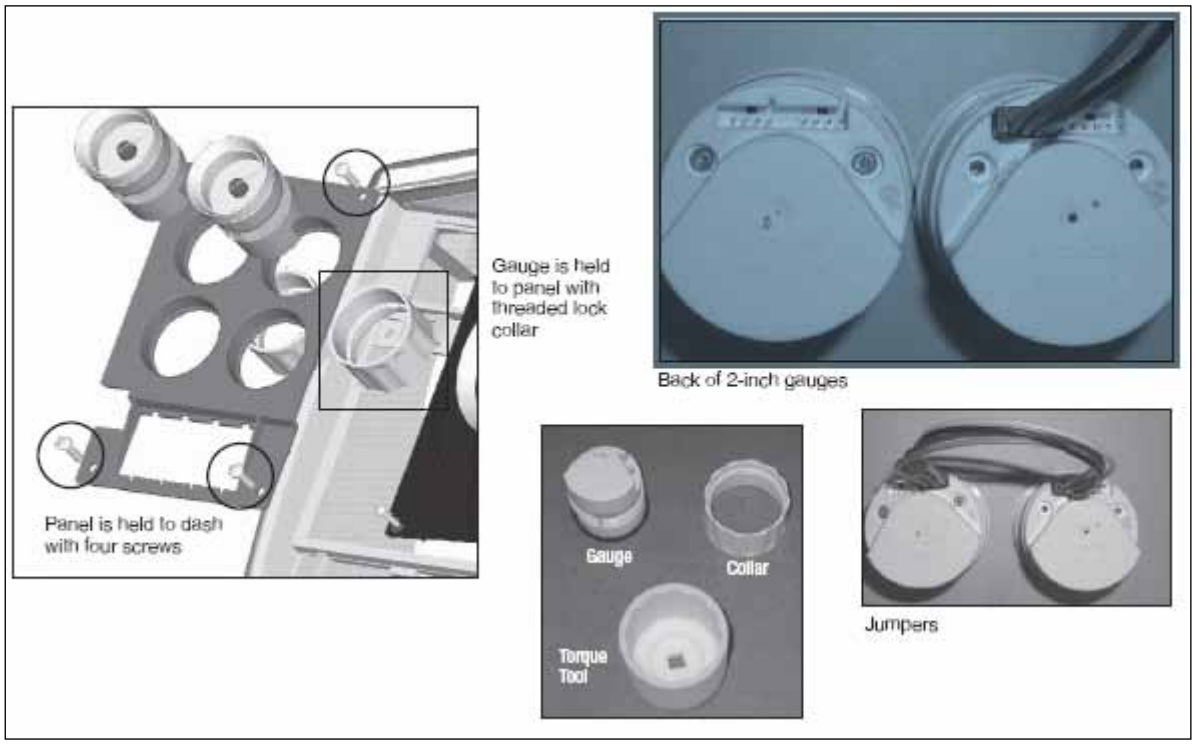

FIGURE 8-6. CVSG Gauges

https://truckmanualshub.com/

Sensors

Kenworth's chassis contain standard connectors in the wiring harnesses for gauges even when they were not specified on a particular chassis. This allows you to easily locate connectors to add gauges. To add an electronic gauge install the sensor (available from your local Kenworth dealer) in the noted location, plug in the wiring harness, and then install the gauge in the dash. The gauge will then need to be activated. Your local Kenworth dealer can easily activate the gauge using Kenworth's Electronic Service Analyst (ESA).

The following diagrams show the location of sensors on the firewall junction block. This is to aid in locating these sensors. The primary air sensor is located on the primary air block, the Secondary Air Sensor is located on the secondary air block, the Application Air Sensor is located by the brake application block. See Figure 8-7.

The Air Filter Restriction Sensor is located near the brake application sensor, see Figure 8-8.

The Fuel Filter Restriction Sensor is located near the fuel filter, see Figure 8-9.

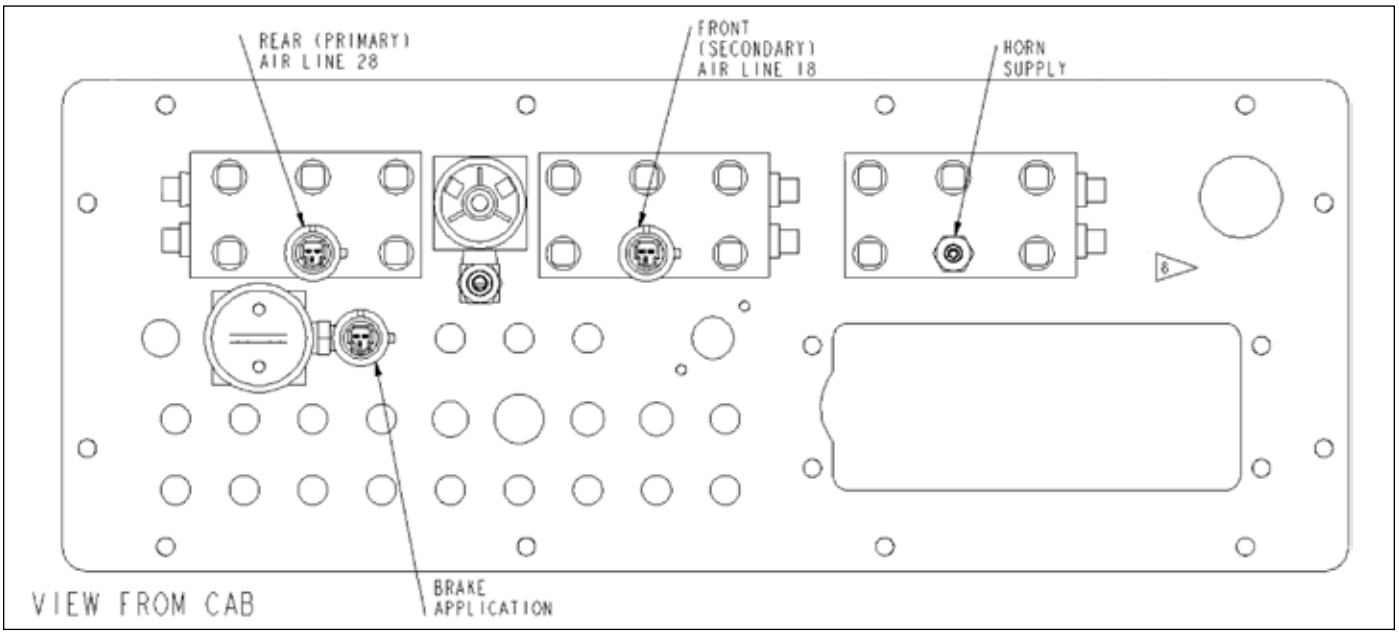

FIGURE 8-7. Firewall Air Junction Block (View from inside of cab)

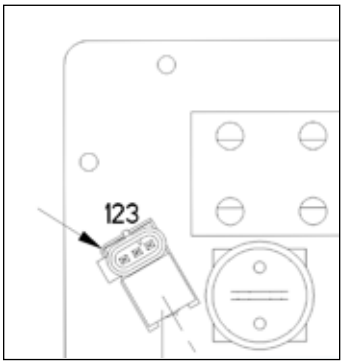

FIGURE 8-8. Air Filter Restriction Sensor on Firewall Air Junction Block (view from engine)

https://truckmanualshub.com/

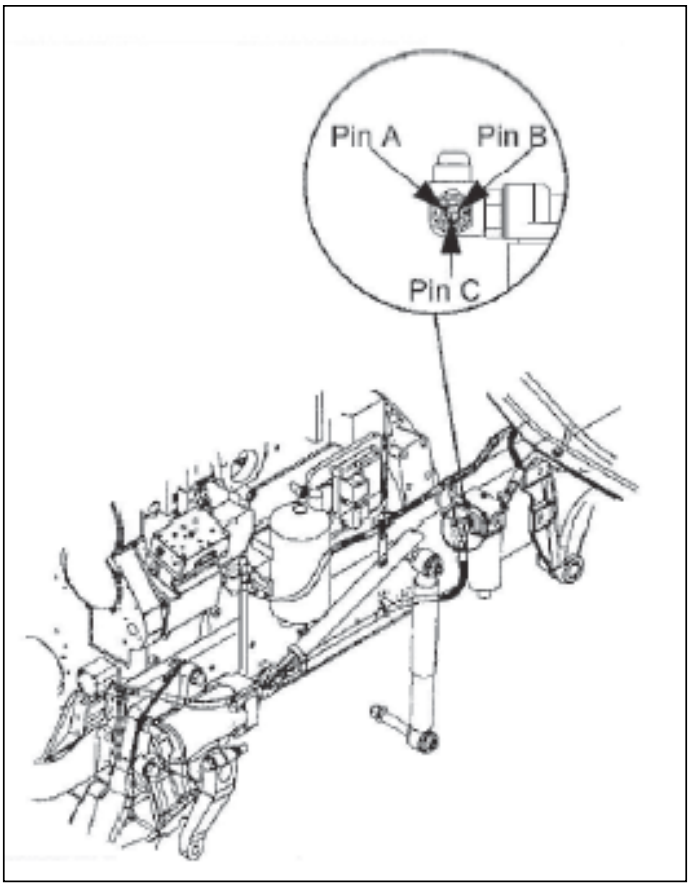

FIGURE 8-9. Fuel Filter Restriction Pressure Gauge Sensor Location (typical)

https://truckmanualshub.com/

ACCESSING GAUGES AND SWITCHES

In order to access and install components described later on in the manual, you will need to know how to correctly remove the dash panels without causing damage.

1. Remove trim bezel by prying upward at one of the four pry points. Carefully pry the remaining clips.

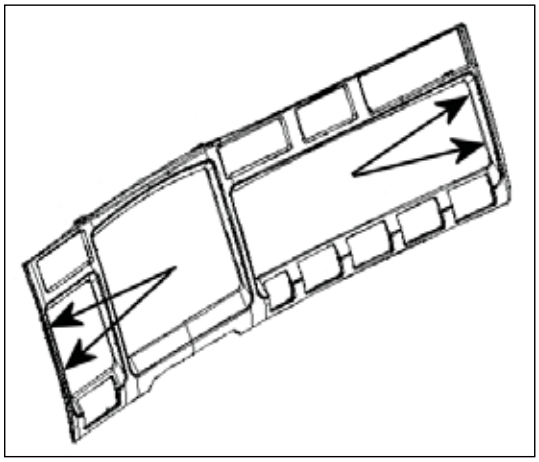

SPEEDO AND TACH PANEL

2. Remove (4) screws to remove Speedo - Tach panel.

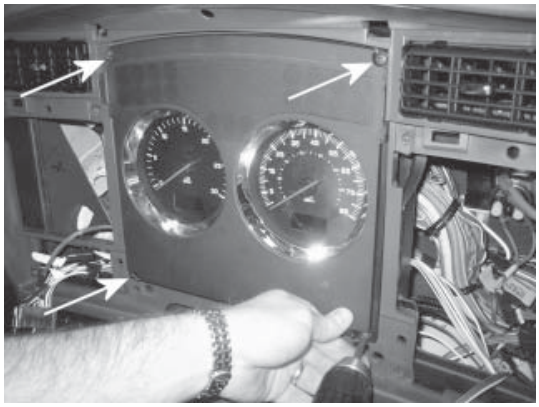

https://truckmanualshub.com/

3. Unclip harness and remove Speedo - Tach panel.

ACCESSING RIGHT HAND GAUGE & SWITCH PANEL

4. Remove (7) screws to remove right gauge panel.

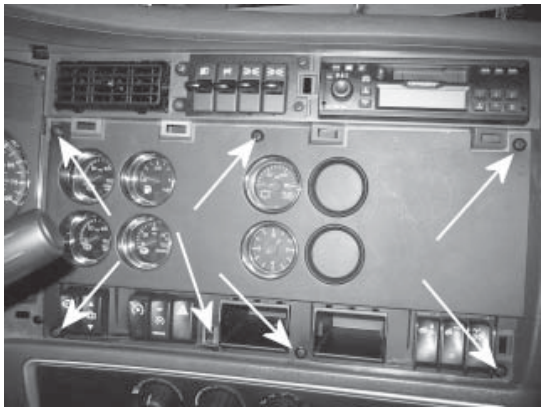

5. Unclip leads to gauges, effort is required to separate the friction lock.

https://truckmanualshub.com/

6. Pinch to unlock connector and remove right gauge panel.

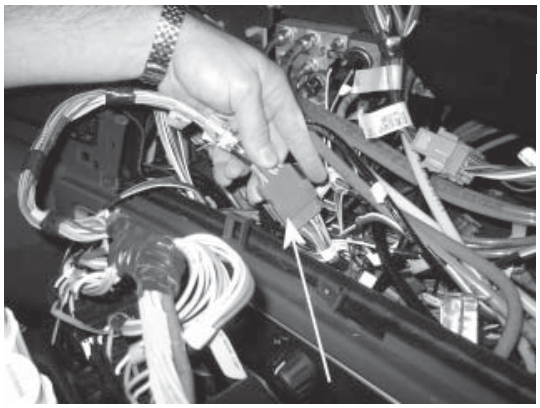

7. Unscrew gauge collar to remove gauge.

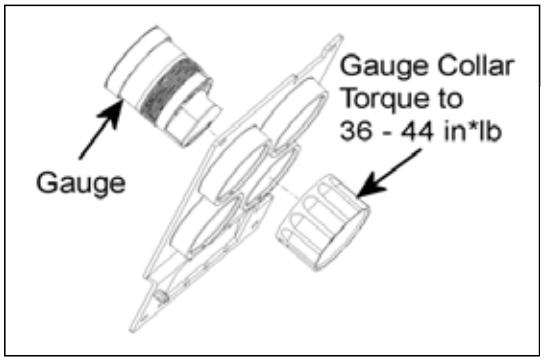

8. To remove switches, push both tabs down...

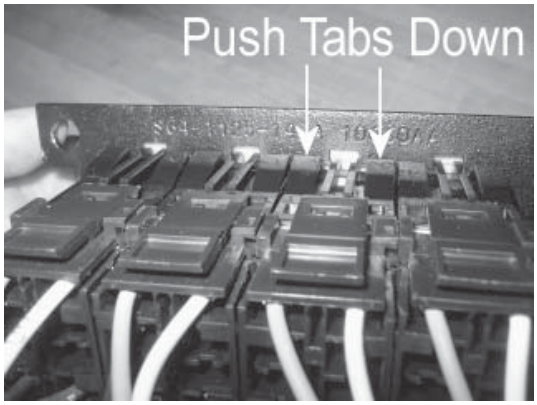

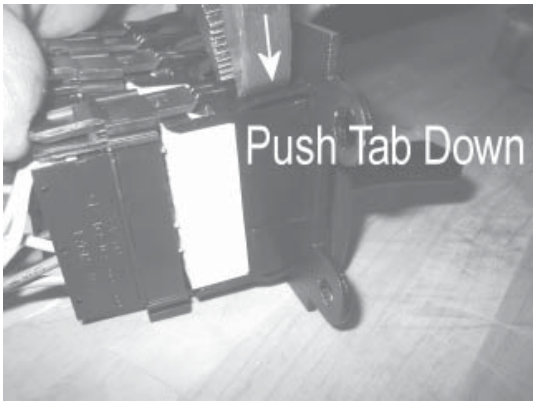

...and then push switch out of plate on top side...

https://truckmanualshub.com/

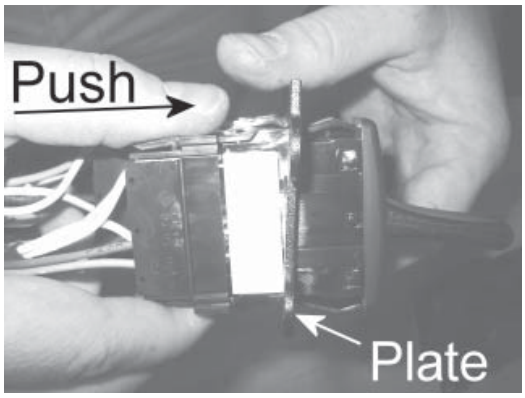

...then flip over and do the same on the bottom side.

9. Push down to unhook connector from switch.

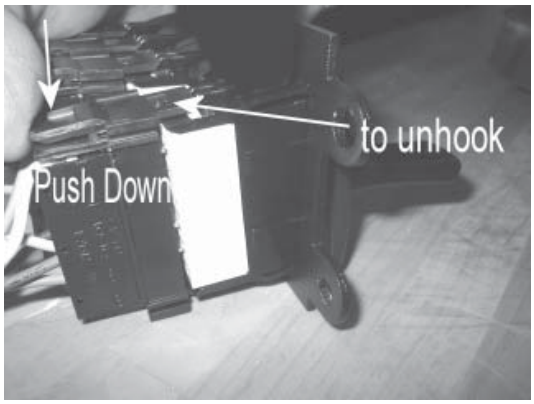

ACCESSING LEFT HAND GAUGE & SWITCH PANEL

10. Remove (4) screws to remove left gauge panel.

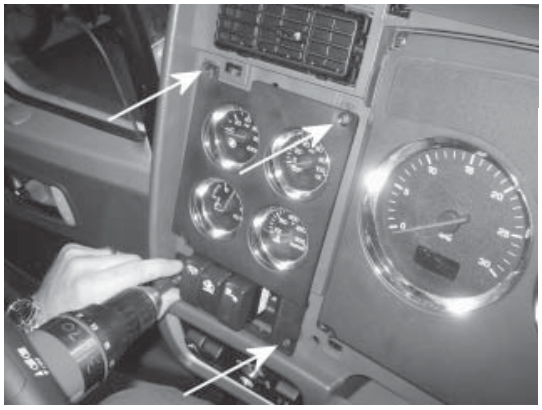

https://truckmanualshub.com/

11. Pinch to unlock connectors from switches.

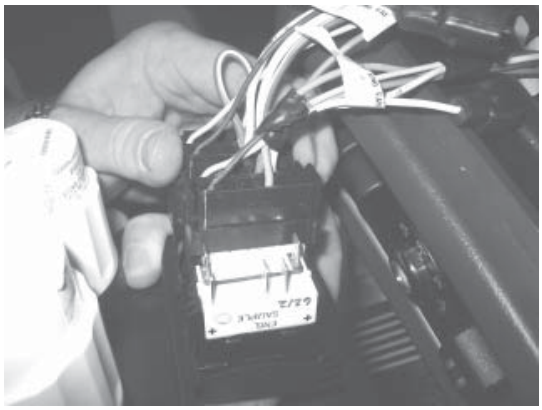

12. Unclip harness and remove left gauge panel.

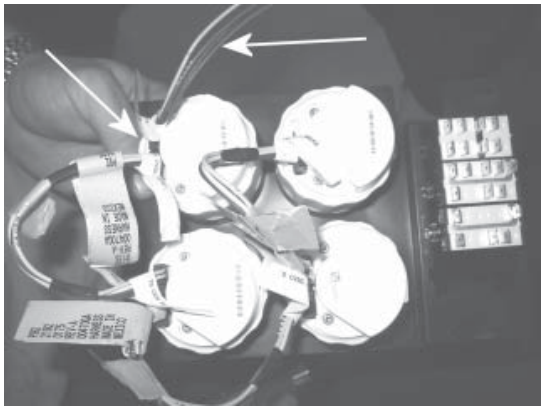

13. Unscrew gauge collar to remove gauge.

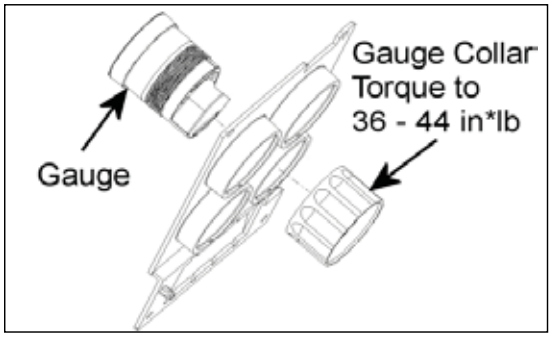

14. To remove switches, push both tabs down...

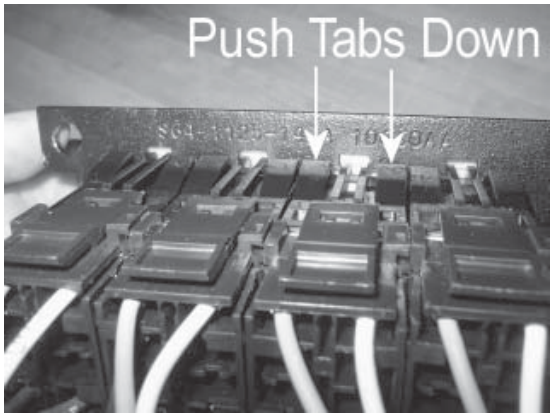

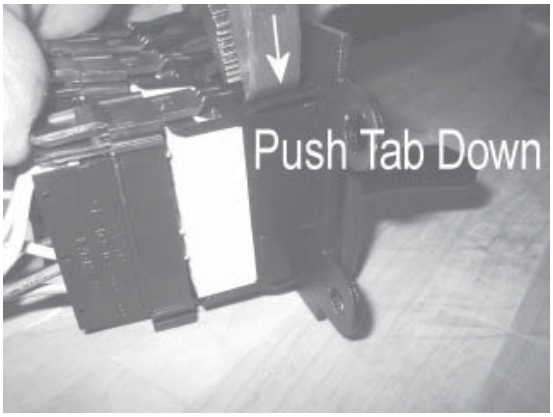

https://truckmanualshub.com/

...and then push switch out of plate on top side...

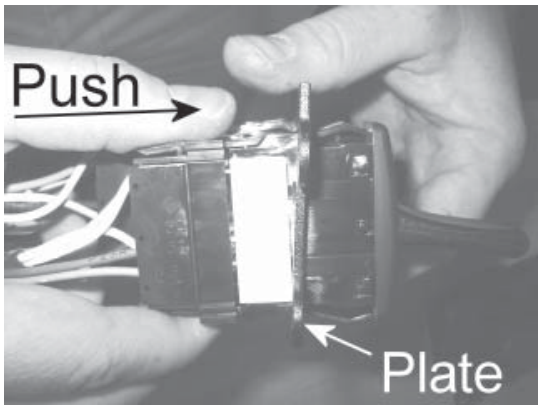

...then flip over and do the same on the bottom side.

15. Push down to unhook connector from switch.

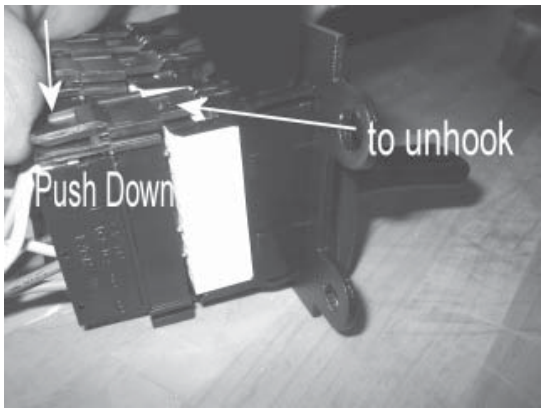

ACCESSING SWITCHES IN THE UPPER DASH

16. Remove (4) screws to remove Upper Switch Cluster.

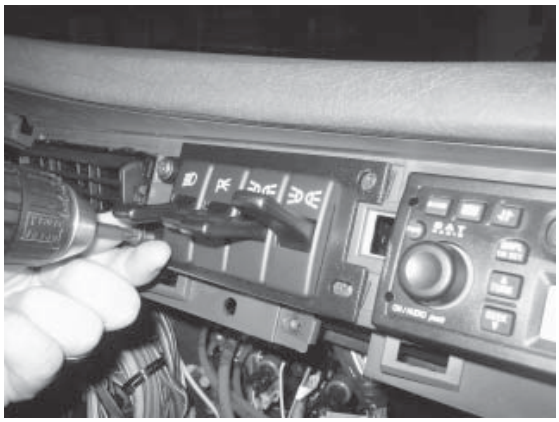

https://truckmanualshub.com/

17. Pinch to unlock connector and remove Upper Switch Cluster

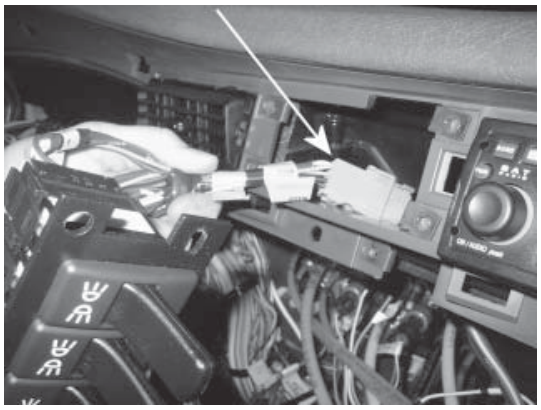

18. To remove switches push both tabs down...

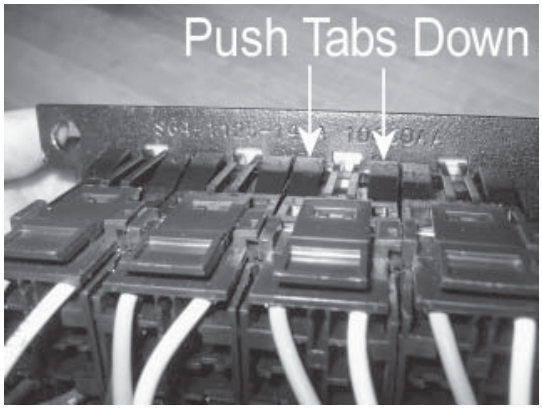

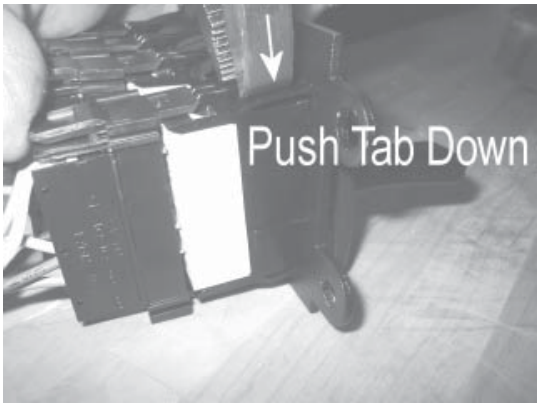

...and then push switch out of plate on top side...

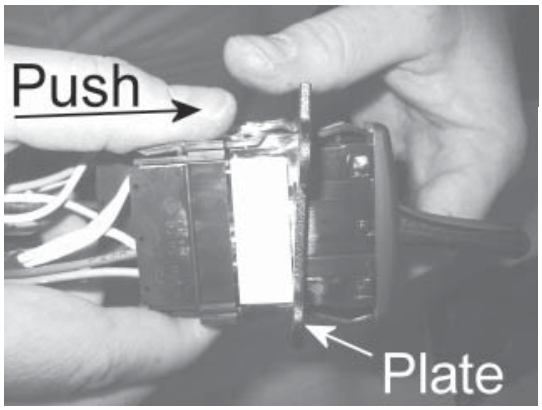

...then flip over and do the same on the bottom side.

https://truckmanualshub.com/

19. Push down to unhook connector from switch

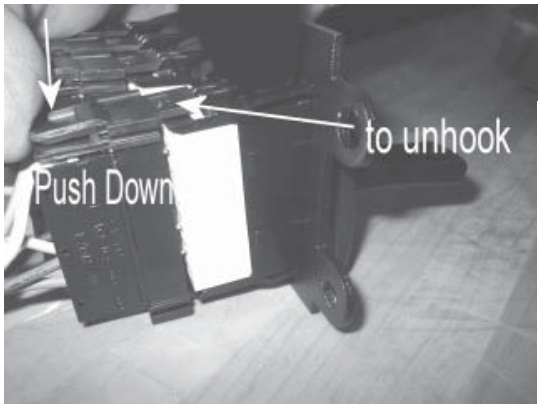

ACCESSING SWITCHES IN THE KEY SWITCH PANEL

20. Insert key into the ignition switch, turn to ACC and pull. The tabs which hold the trim piece to the dash will release. The switches can be serviced by following steps 18 & 19.

https://truckmanualshub.com/

TELLTALE SYMBOLS

Kenworth's interior allows Body Builders to customize the dash telltale symbols (warning lights). The editable telltale symbols are located on removable cards inside the baseline cluster. This section will describe how to replace and insert editable cards, as well as how to activate the telltale lights.

Note the numbers 1 – 16 on Figure 8-10. These are how the positions are identified in table 8-1 and on the instrument panel harness breakouts for the "editable" telltales behind the right hand cluster.

To remove the editable cards follow steps 1-3 in the instructions for accessing gauges and switches (page 8-9). Remove the rubber access cover on the side of the cluster by pulling by hand. The access cards have a positive lock. To remove the card pry upwards on the lock with a small screwdriver and pull the card out with pliers. See Figure 8-10 below that details the cards. To reinstall a card slide it in either by hand or with pliers. New cards will come with the installation tab (as shown in the figure). After installing the card simply break off the tab by bending.

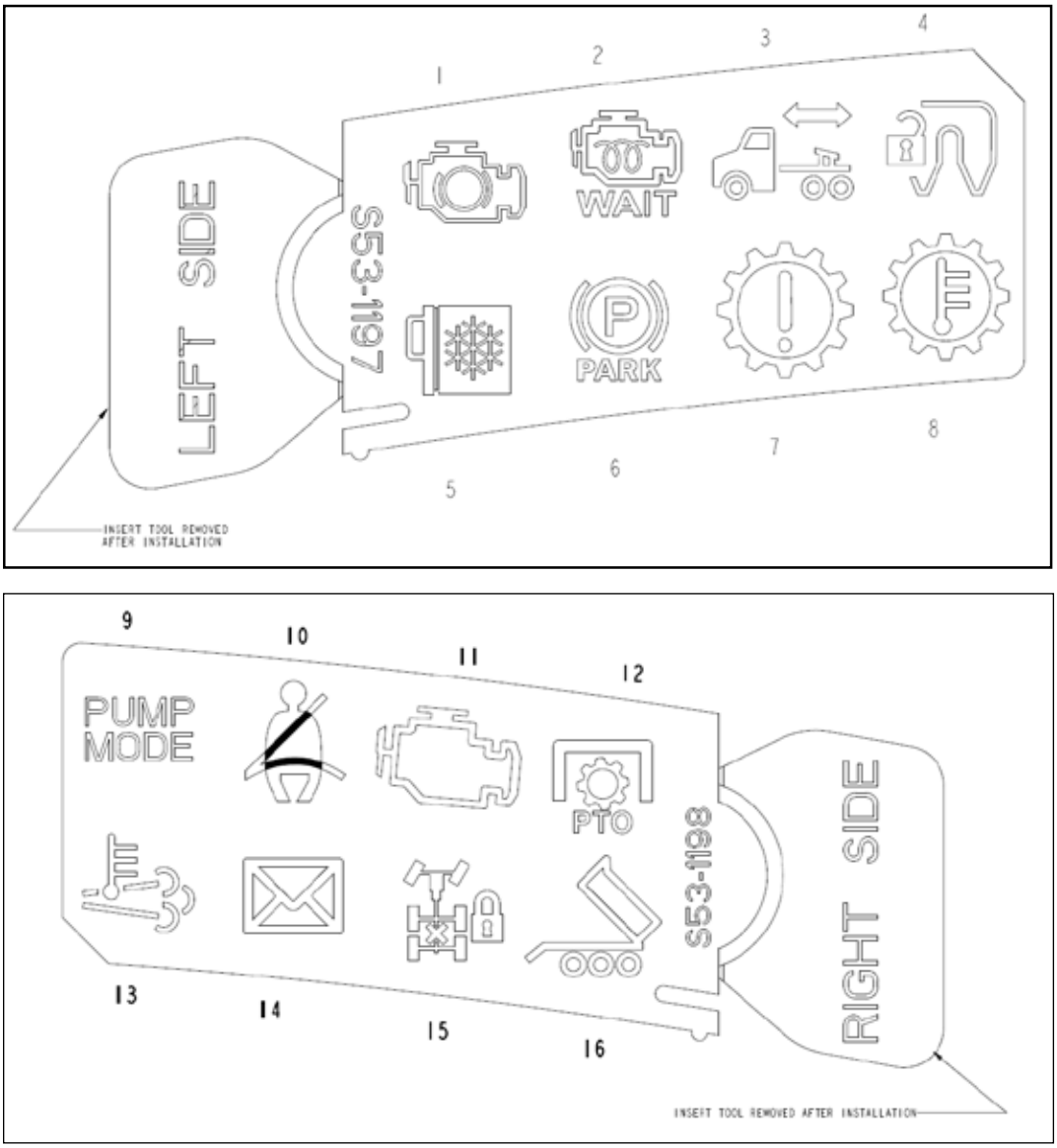

FIGURE 8-10. Telltale Symbol Standard Cards

https://truckmanualshub.com/

TABLE 8-1. Telltales Position and Color

Position	Standard Function	Light Color	Editable or Fixed?
1	Engine Retarder	Green	Fixed
2	Wait To Start	Yellow	Fixed
3	Fifth Wheel Slide	Red	Fixed
4	King Pin Lock	Red	Editable
5	Refrigerator	Green	Fixed
6	Park Brake	Red	Fixed
7	Check Transmission	Red	Editable
8	Transmission Temp	Yellow	Editable
9	Pump Mode	Green	Editable
10	Fasten Seatbelt	Red	Fixed
11	Malfunction Indicator Lamp	Yellow	Fixed
12	PTO	Yellow	Editable
13	Exhaust Temp Warning	Yellow	Fixed
14	Message Waiting	Green	Editable
15	Trans Axle Lock	Green	Fixed
16	Trailer Body Up	Red	Fixed

Note:

Only the positions labeled as “editable” in the chart above can be changed. You must apply the standard icons on the editable card on all the positions that read “fixed”.

The wait to start and malfunction indicator lamp are part of the emission control system. They must not be removed or altered.

In order to activate the editable lights (either on the standard card or the editable card) locate the wiring connections on pigtail connectors behind the right hand side gauge panel. The wires will be labeled and tagged with position numbers. For example for position 12 the breakout label will be yellow and have the following text: “TELLTALE POS 12”. The color of the tag corresponds to the color of the light. When these circuits are either grounded or powered the light in the dash will turn on.

All cards come with standard editable telltale lights, even if the chassis you have was not ordered with related components.

The standard cards are shown above (in Figure 8-9). Editable cards are also available from your local Kenworth dealer. The left side editable card is shown in Figure 8-11 below.

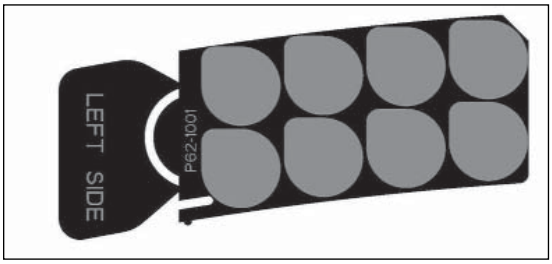

FIGURE 8-11. Blank Telltale Card

https://truckmanualshub.com/

Your local Kenworth dealer will also sell a sheet of telltale light icons to install on the editable card. The symbols that are available are shown in Figure 8-12 below.

FIGURE 8-12. Telltale Icons

The telltales can then be peeled off of the sheet and applied directly to the card. The color of the telltale is controlled by the light, all of the icons are clear. Please see TABLE 8-1 to determine the position and color of the telltales. (Positions are shown on Figure 8-9)

https://truckmanualshub.com/

ALARMS

There are four spare Alarm female ¼” slide connector breakouts behind the speedo-tach cluster near the speedo-tach connector labeled:

- Alarm 1A
- Alarm 1B
- Alarm 1C
- Alarm 2

When these circuits are either grounded or powered an alarm sound in the dash will turn on. Alarm 1 and Alarm 2 have two different tones.

SPARE SWITCHES FACTORY INSTALLED

Kenworth provides the option of coding for up to 5 spare switches with standard fuse locations in the central electrical panel. These switches receive power from the Accessory bus. Switches 1 – 3 are fused by separate 15A circuit protection devices (fuse or circuit breaker). Switches 4 & 5 share a common 20A circuit protection device. The location of these circuit protection devices are labeled on the central electrical panel cover. For example “SPARE SW #1” is the label for spare switch #1.

These switches will be connected to backlighting, power and ground. A male ¼” slide connector breakout is taped back to the harness. This is the switched power output, connect this to power your load.

SPARE SWITCHES BODY BUILDER INSTALLED

You can purchase additional spare switches from your local Kenworth dealer. Part number P27-1023-007 for single throw. See Figure 8-13. These switches are rated to 20A. If you need to switch more then 20A see the next section about spare relays.

To connect to these switches you can use harness P92-2552 available from you local Kenworth Dealer. See Figure 8-14. This harness will allow you to connect to instrument backlighting, spare power and a male ¼” slide connector breakout is taped back to the harness. This is the switched power output, connect this to power your load.

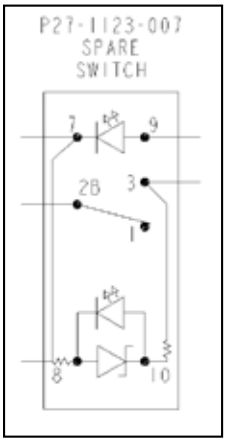

FIGURE 8-13. Kenworth Spare Switches

https://truckmanualshub.com/

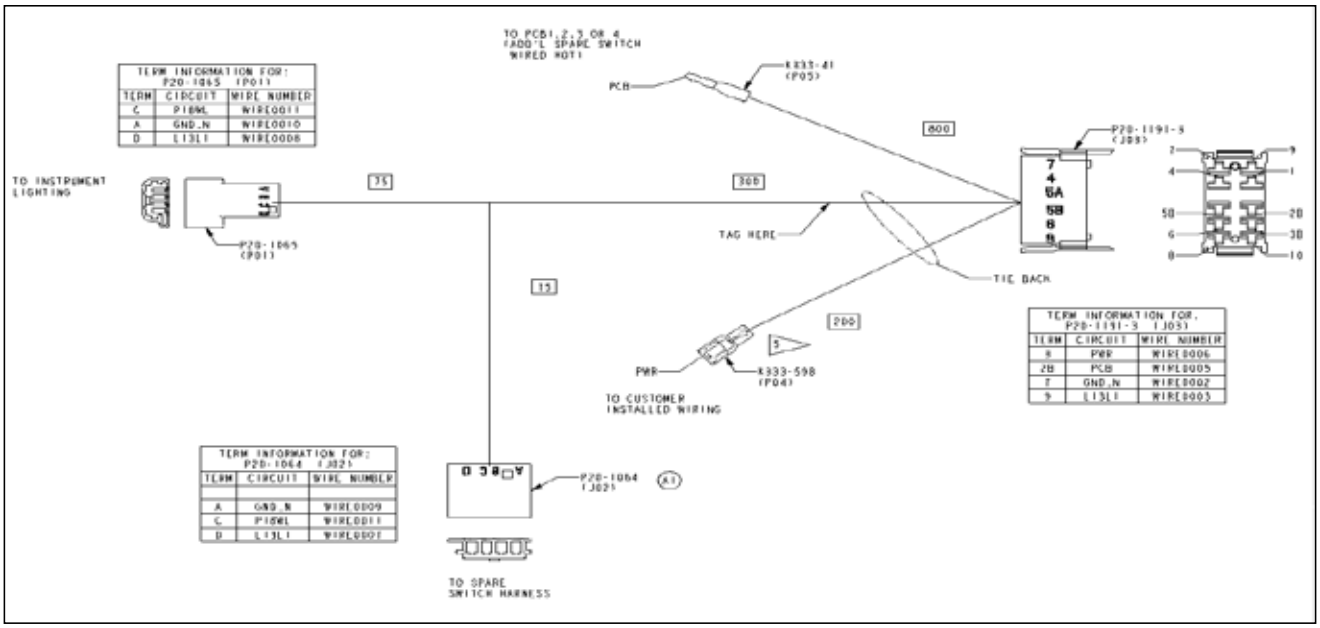

FIGURE 8-14. Spare Switch Harness

Kenworth also offers flat panel inserts that can be easily modified or removed to add switches or gauges. The small panel is 5” x 5” and the large panel is 7.5” x 5”. To add these to a chassis order work with your local Kenworth dealer.

Kenworth offers a variety of pre-labeled switches. See Figure 8-15 below for details of all switches offered, and the switch diagram. Please note, when switching relay coils, only use P27-1123-XXX switches.

https://truckmanualshub.com/

P27-1040-01
HEADLAMP

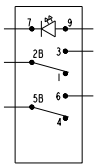

P27-1040-01	
SYMBOL	PTC145
CONTACT PLATING	NONE
STYLE	LONG TOGGLE
INDICATOR COLOR	NONE

P27-1040-02
PARKLAMPS

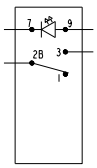

P27-1040-02	
SYMBOL	PTC151
CONTACT PLATING	NONE
STYLE	SHORT TOGGLE
INDICATOR COLOR	NONE

P27-1040-03
MARKER/CLEAR/ID

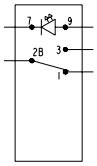

P27-1040-03	
SYMBOL	PTC150
CONTACT PLATING	NONE
STYLE	LONG TOGGLE
INDICATOR COLOR	NONE

P27-1040-05
MARKER/CLEAR/ID
CAB SEP SWITCH

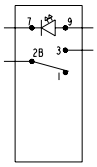

P27-1040-05	
SYMBOL	PTC150
CONTACT PLATING	NONE
STYLE	SHORT TOGGLE
INDICATOR COLOR	NONE

P27-1040-06
MARKER/CLEAR/ID
TRAILER SEP SW

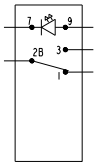

P27-1040-06	
SYMBOL	PTC444
CONTACT PLATING	NONE
STYLE	LONG TOGGLE
INDICATOR COLOR	NONE

P27-1040-07
SPARE
SWITCH

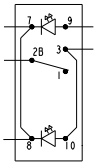

P27-1040-07	
SYMBOL	TEXT SPARE
CONTACT PLATING	NONE
STYLE	ROCKER
INDICATOR COLOR	GREEN

P27-1040-08
FOG LAMPS
UPPER SW PANEL

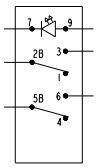

P27-1040-08	
SYMBOL	PTC152
CONTACT PLATING	NONE
STYLE	SHORT TOGGLE
INDICATOR COLOR	NONE

P27-1040-09
FOG LAMPS
CENTER SW PANEL

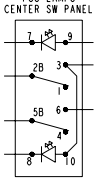

P27-1040-09	
SYMBOL	PTC152
CONTACT PLATING	NONE
STYLE	ROCKER
INDICATOR COLOR	GREEN

P27-1040-10
DOME LAMP

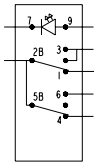

P27-1040-10	
SYMBOL	PTC169
CONTACT PLATING	NONE
STYLE	ROCKER
INDICATOR COLOR	NONE

P27-1040-11
FLOOD LAMPS
CAB MOUNTED

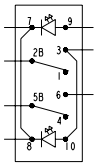

P27-1040-11	
SYMBOL	PTC158
CONTACT PLATING	NONE
STYLE	ROCKER
INDICATOR COLOR	GREEN

P27-1040-12
ISO 3731 SPARE
FLOOD LAMPS

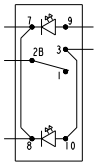

P27-1040-12	
SYMBOL	PTC442
CONTACT PLATING	NONE
STYLE	ROCKER
INDICATOR COLOR	AMBER

P27-1123-007
SPARE
SWITCH

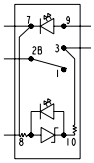

P27-1123-007 SPST		
UP	MIDDLE	DOWN
ON	NONE	OFF
2B-3	-	-
TEXT SPARE		
CONTACT PLATING	NONE	
STYLE	ROCKER	
INDICATOR COLOR	GREEN	
PROTECTION	INDICATOR	

P27-1123-024
TRAILER
HOTLINE

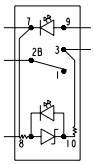

P27-1123-024 SPST		
UP	MIDDLE	DOWN
ON	NONE	OFF
2B-3	-	-
PTC456		
CONTACT PLATING	NONE	
STYLE	ROCKER	
INDICATOR COLOR	GREEN	
PROTECTION	INDICATOR	

P27-1123-036
PTO

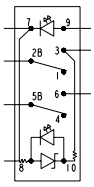

P27-1123-036 DPST		
UP	MIDDLE	DOWN
ON	NONE	OFF
2B-3 5B-6	-	-
PTC267		
CONTACT PLATING	NONE	
STYLE	ROCKER	
INDICATOR COLOR	AMBER	
PROTECTION	INDICATOR	

P27-1123-039
THIRD AXLE
LIFT

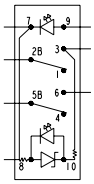

P27-1123-039 DPST		
UP	MIDDLE	DOWN
ON	NONE	OFF
2B-3 5B-6	-	-
PTC452		
CONTACT PLATING	NONE	
STYLE	ROCKER	
INDICATOR COLOR	GREEN	
PROTECTION	INDICATOR	

P27-1123-040
TRAILER AIR
SUSPENSION

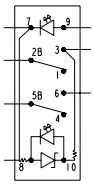

P27-1123-040 DPST		
UP	MIDDLE	DOWN
ON	NONE	OFF
2B-3 5B-6	-	-
PTC459		
CONTACT PLATING	NONE	
STYLE	ROCKER	
INDICATOR COLOR	RED	
PROTECTION	INDICATOR	

P27-1123-042
TRAILER
BELLY DUMP

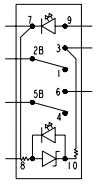

P27-1123-042 DPST		
UP	MIDDLE	DOWN
ON	NONE	OFF
2B-3 5B-6	-	-
PTC454		
CONTACT PLATING	NONE	
STYLE	ROCKER	
INDICATOR COLOR	RED	
PROTECTION	INDICATOR	

P27-1123-045
REAR TRAILER
DUMPGATE

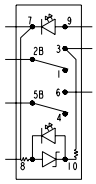

P27-1123-045 DPST		
UP	MIDDLE	DOWN
ON	NONE	OFF
2B-3 5B-6	-	-
PTC455		
CONTACT PLATING	NONE	
STYLE	ROCKER	
INDICATOR COLOR	RED	
PROTECTION	INDICATOR	

P27-1123-047
FRONT TRAILER
DUMPGATE

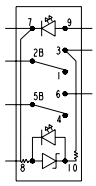

P27-1123-047 DPST		
UP	MIDDLE	DOWN
ON	NONE	OFF
2B-3 5B-6	-	-
PTC453		
CONTACT PLATING	NONE	
STYLE	ROCKER	
INDICATOR COLOR	RED	
PROTECTION	INDICATOR	

P27-1123-054
TRAILER
SPARE

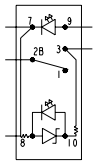

P27-1123-054 SPST		
UP	MIDDLE	DOWN
ON	NONE	OFF
2B-3	-	-
TEXT TRLR SPARE		
CONTACT PLATING	NONE	
STYLE	ROCKER	
INDICATOR COLOR	GREEN	
PROTECTION	INDICATOR	

P27-1123-055
FRONT AXLE
ENGAGEMENT

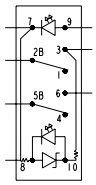

P27-1123-055 DPST		
UP	MIDDLE	DOWN
ON	NONE	OFF
2B-3 5B-6	-	-
PTC316		
CONTACT PLATING	NONE	
STYLE	ROCKER	
INDICATOR COLOR	AMBER	
PROTECTION	INDICATOR	

FIGURE 8-15. Specialty Switches

https://truckmanualshub.com/

SPARE RELAYS BODY BUILDER INSTALLED (For loads exceeding 20 amps)

There are two spare relay locations in the central electrical panel. To access these relays there are two spare relay breakouts behind the LH gauge cluster labeled, “SPARE RELAY #1, and SPARE RELAY #2” To connect to these relays you can use one of two harnesses also available from you local Kenworth Part Department. P92-1947-1, -3 for accessing the normally OPEN contact of the relay (87) or P92-1947-2, -4 for accessing the normally closed contact of the relay (87a). See Figure 8-17.

1. Remove the LH gauge panel above ignition key switch.
2. From behind the gauge panel, locate one of the spare relay connectors not currently used. See Figure 8-16.

FIGURE 8-16. Spare Relay Connectors

3. Plug one end of a spare relay harness (P92-1947-X) into the appropriate spare relay circuit connector.
4. The breakout labeled “SWITCH” should be connected to a switch. By grounding this circuit the relay will be activated. (coil will energize)
5. The breakout labeled “COMMON” should be connected to power. The -3 & -4 versions allow you to connect directly to one of the 18 available spare power breakouts. See ADDITIONAL SPARE CIRCUITS section.
6. The breakout labeled “NORMALLY OPEN” or “NORMALLY CLOSED” is the switched power from the relay.
7. Insert a K301-179 relay in the central electrical panel corresponding to the breakout use.

https://truckmanualshub.com/

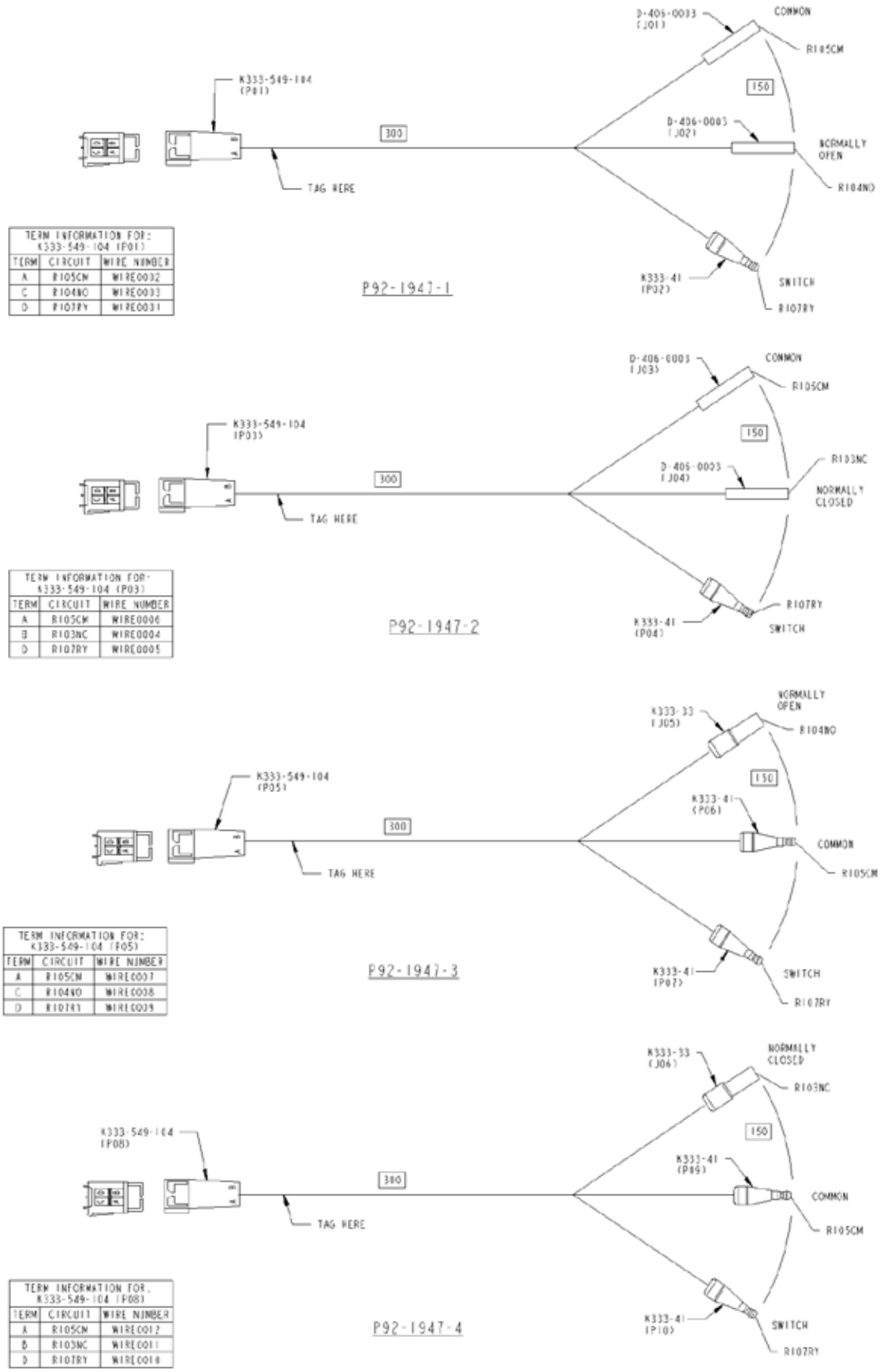

TERM INFORMATION FOR: K333-549-104 (P01)		
TERM	CIRCUIT	WIRE NUMBER
A	R105CM	WIRE0032
C	R104NO	WIRE0033
D	R107RY	WIRE0031

TERM INFORMATION FOR: K333-549-104 (P03)		
TERM	CIRCUIT	WIRE NUMBER
A	R105CM	WIRE0006
B	R103NC	WIRE0004
D	R107RY	WIRE0005

TERM INFORMATION FOR: K333-549-104 (P05)		
TERM	CIRCUIT	WIRE NUMBER
A	R105CM	WIRE0007
C	R104NO	WIRE0008
D	R107RY	WIRE0009

TERM INFORMATION FOR: K333-549-104 (P08)		
TERM	CIRCUIT	WIRE NUMBER
A	R105CM	WIRE0012
B	R103NC	WIRE0011
D	R107RY	WIRE0010

FIGURE 8-17. Spare Relay Harnesses

https://truckmanualshub.com/

ADDITIONAL SPARE CIRCUITS

If you just need spare power wire into one of 18 spare circuits we provide.

WARNING!

Do not install an electrical circuit that requires more amperage (electrical capacity) than what is available in the specific chassis circuit. An overloaded circuit could cause a fire.

Compare the amperage requirements of the new circuit to the electrical current capacity of the existing chassis circuit before adding the body or other equipment.

The central electrical panel (CEP) has a total of 18 spare circuits (2 of which can be connected to spare relays on the CEP).

They include:

- 8 spare battery circuits
- 2 spare low voltage disconnect circuits
- 4 spare accessory circuits
- 4 spare ignition circuits

Note:

Some spare circuits may be used with factory installed options. For specific chassis questions please work with your Kenworth Dealer.

Spare Circuit Bullet Connectors

1. Remove the LH gauge panel above ignition key switch.
2. From behind the gauge panel, locate one of the 18 spare BATT, LVD, ACC, or IGN bullet connectors not currently being used. See Figure 8-18.

FIGURE 8-18. Spare Bullet Connectors

https://truckmanualshub.com/

3. Plug one end of a K333-127-2 pigtail harness into the appropriate spare circuit bullet connector. See Figure 8-19.

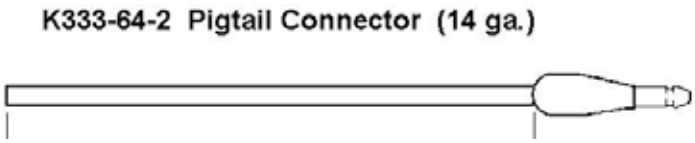

FIGURE 8-19. Spare Pigtail Connector

4. Connect the other end of the pigtail harness to the accessory.
5. Install the correct rated fuse, or circuit breaker for the gauge of wire going to your accessory, into the fuse socket that corresponds to the spare circuit selected in step 2.

https://truckmanualshub.com/

REMOTE PTO/THROTTLE HARNESS

This option provides a connection from the engine ECU for remote control of engine throttle and PTOs. Options that extend the wiring to the end of frame also exist, however controls are not provided. A 12-pin Deutsch connector (Deutsch P/N DT06-12SA-P012) is included. See Table 8-2 below for wiring harness connector pin outs.

If customers need PTO controls (electrical connection between the PTO switch and engine), recommend the factory utilize sales codes to install PTO controls.

Adding Electrical Options

WARNING!

Follow the engine manufacturer's guidelines for use of these circuits. See your engine manufacturer to verify that the engine is programmed correctly for the intended applications. Failure to properly program the engine or wire these circuits could cause an accident.

TABLE 8-2. 2010 PACCAR MX

Mating View	Contact	Function	Circuit No.	Common with Cummins	Corresponding Body Builder Harness Circuit Number
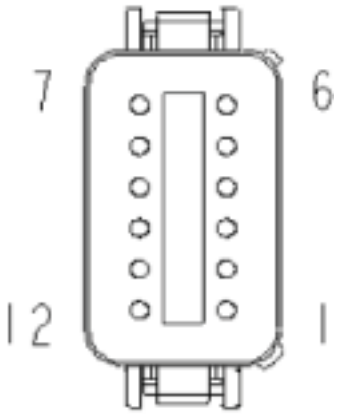	1	REMOTE PTO RESUME	GRA3513		K982-YL
	2	REMOTE PTO SET	GRA3512		K980-PK
	3	COMMON RTN #1 (SWITCH)	GRN4500		H795-PK
	4	REMOTE THROTTLE SIGNAL	BLU3144	Y	G845-PU
	5	PTO ON / OFF	GRA3511	Y	K999-GN
	6				GRA3143
	7	IGNITION POWER	ORN1229	Y	ORN1299
	8	GROUND	WHT1513	Y	WHT1513
	9				G841-GN
	10	POWER SUPPLY (5V)	VIO4500		G844-PK
	11	COMMON (+12VDC)/ ENGINE SYSTEM POWER	YEL3511		993-BR
	12				E718-PK

https://truckmanualshub.com/

FIGURE 8-20. 2010 PACCAR MX Routing Diagram

The location of the remote PTO throttle harness pin out connection can be found on the MX engine as noted in the diagrams below. It is from this location that the optional remote throttle chassis harness is installed. If engine specified from the factory does not include the factory installed body builder harness, the remote PTO throttle harness is capped off.

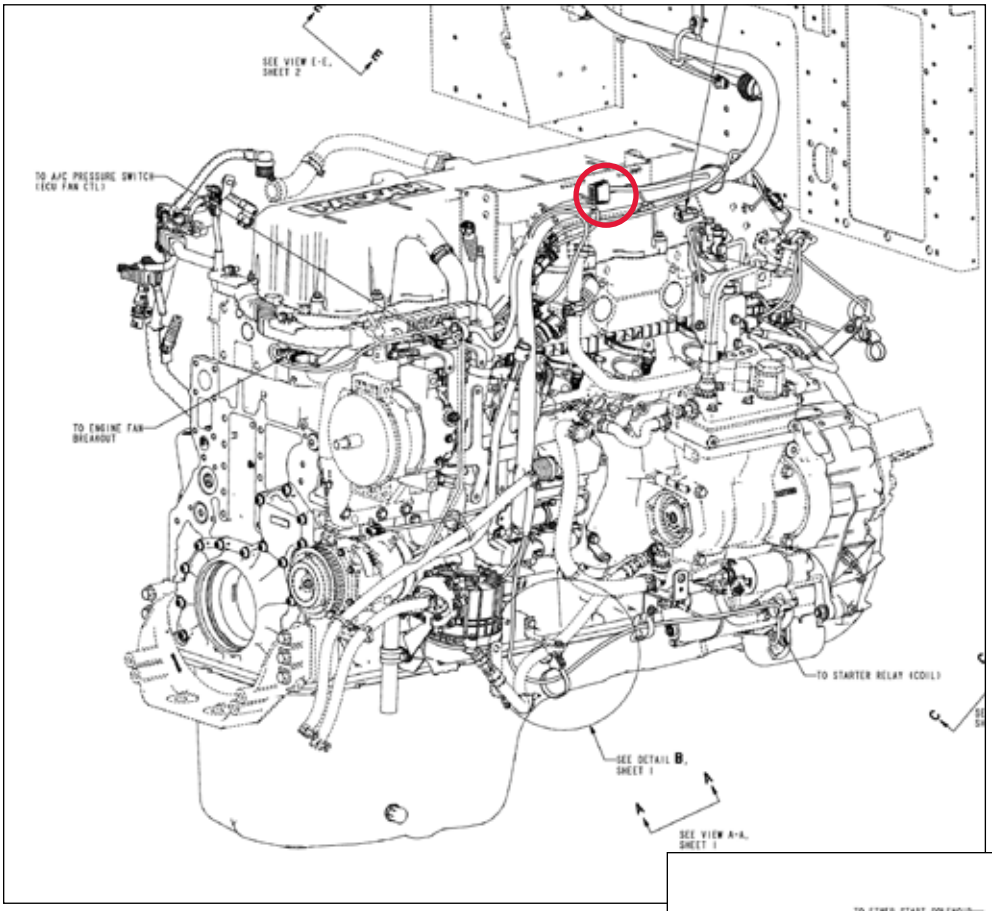

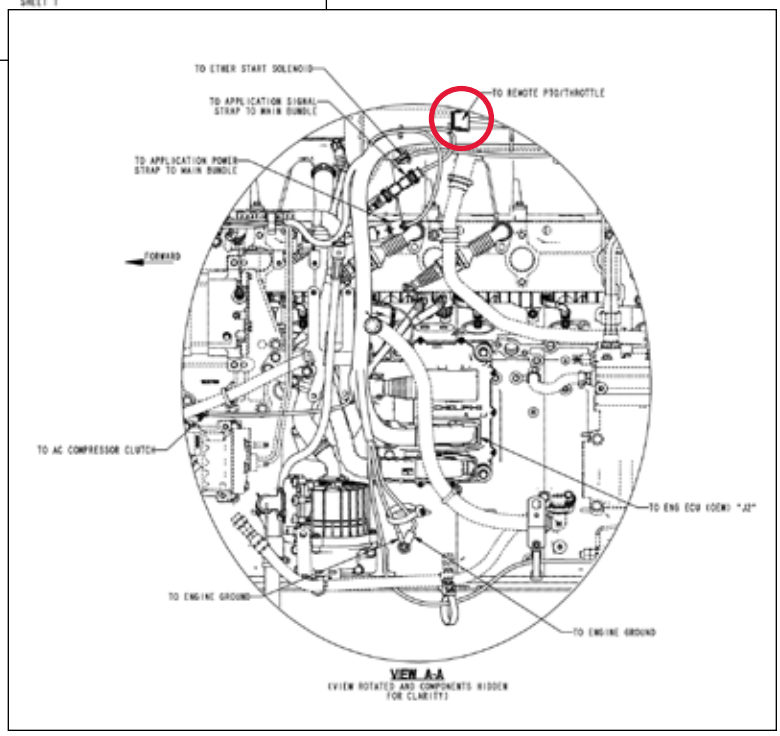

https://truckmanualshub.com/

REMOTE PTO/THROTTLE HARNESS

This option provides a connection from the engine ECU for remote control of engine throttle and PTOs. Options that extend the wiring to the end of frame also exist, however controls are not provided. A 12-pin Deutsch connector (Deutsch P/N DT06-12SA-P012) is included. See Table 8-3 below for wiring harness connector pin outs.

If customers need PTO controls (electrical connection between the PTO switch and engine), recommend the factory utilize sales codes to install PTO controls.

Adding Electrical Options

WARNING!

Follow the engine manufacturer's guidelines for use of these circuits. See your engine manufacturer to verify that the engine is programmed correctly for the intended applications. Failure to properly program the engine or wire these circuits could cause an accident.

TABLE 8-3. 2010 Cummins ISX15, ISX12, ISL, PX-8

Mating View	Contact	Function	Circuit No.	Common with MX	Corresponding Body Builder Harness Circuit Number
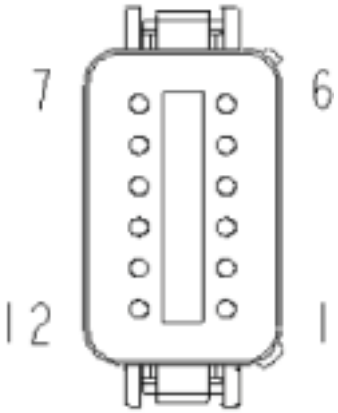	1	PTO RESUME	GRA3163		K982-YL
	2	PTO SET	GRA3162		K980-PK
	3	COMMON RTN #1 (SWITCH)	GRN3115		H795-PK
	4	REMOTE THROTTLE SIGNAL	BLU3144	Y	G845-PU
	5	PTO ON / OFF	GRA3511	Y	K999-GN
	6	REMOTE THROTTLE ENABLE	GRA3162		GRA3143
	7	SWITCHED POWER (IGN)	ORN1229	Y	ORN1299
	8	GROUND	WHT1513	Y	WHT1513
	9	TORQUE LIMIT SWITCH	GRA3149		G841-GN
	10	REMOTE THROTTLE SUPPLY (5V)	VIO3144		G844-PK
	11	REMOTE THROTTLE RETURN	GRN3144		993-BR
	12	REMOTE THROTTLE ON/OFF	GRA3143		E718-PK

https://truckmanualshub.com/

FIGURE 8-21. 2010 Cummins ISX15 Routing Diagram

The location of the optional multi-function engine connector is noted below. The remote PTO throttle harness pin out connection will only be installed if the multi-funtion engine connector is ordered. It can be found on the ISX15 engine as noted in the diagrams below. It is from this location the remote throttle chassis harness is installed. If the engine specified from the factory includes the optional factory installed body builder harness, the remote PTO throttle harness is capped off.

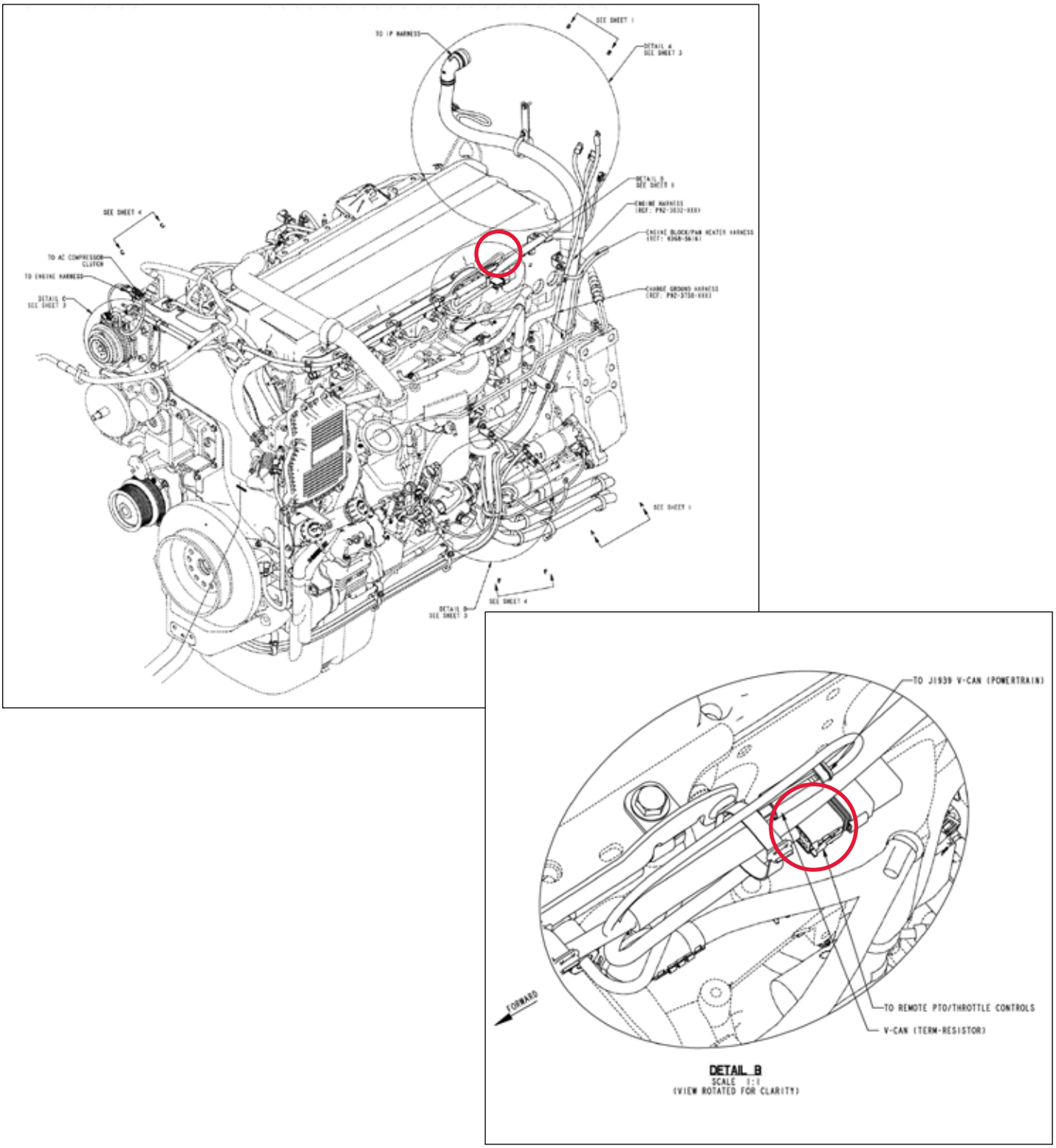

https://truckmanualshub.com/

FIGURE 8-22. 2010 Cummins ISX12 Routing Diagram

The location of the remote PTO throttle harness pin out connection can be found on the ISX12 engine as noted in the diagrams below. It is from this location the remote throttle chassis harness is installed. If the engine specified from the factory does not include the factory installed body builder harness, the remote PTO throttle harness is capped off.

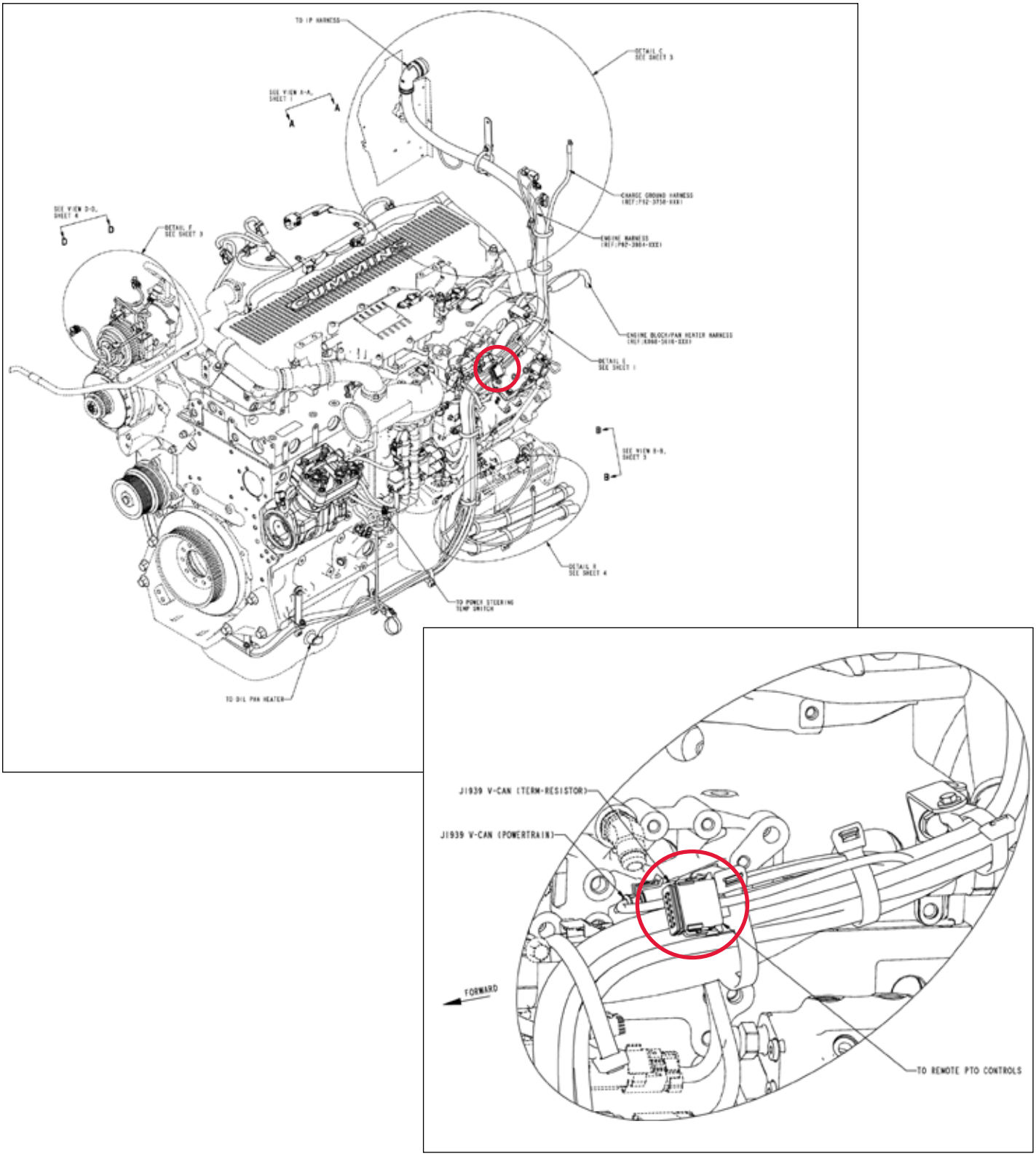

https://truckmanualshub.com/

FIGURE 8-23. 2010 Cummins ISL/PX-8 Routing Diagram

The location of the remote PTO throttle harness pin out connection can be found on the ISL/PX-8 engine as noted in the diagrams below. It is from this location the remote throttle chassis harness is installed. If the engine specified from the factory does not include the factory installed body builder harness, the remote PTO throttle harness is capped off.

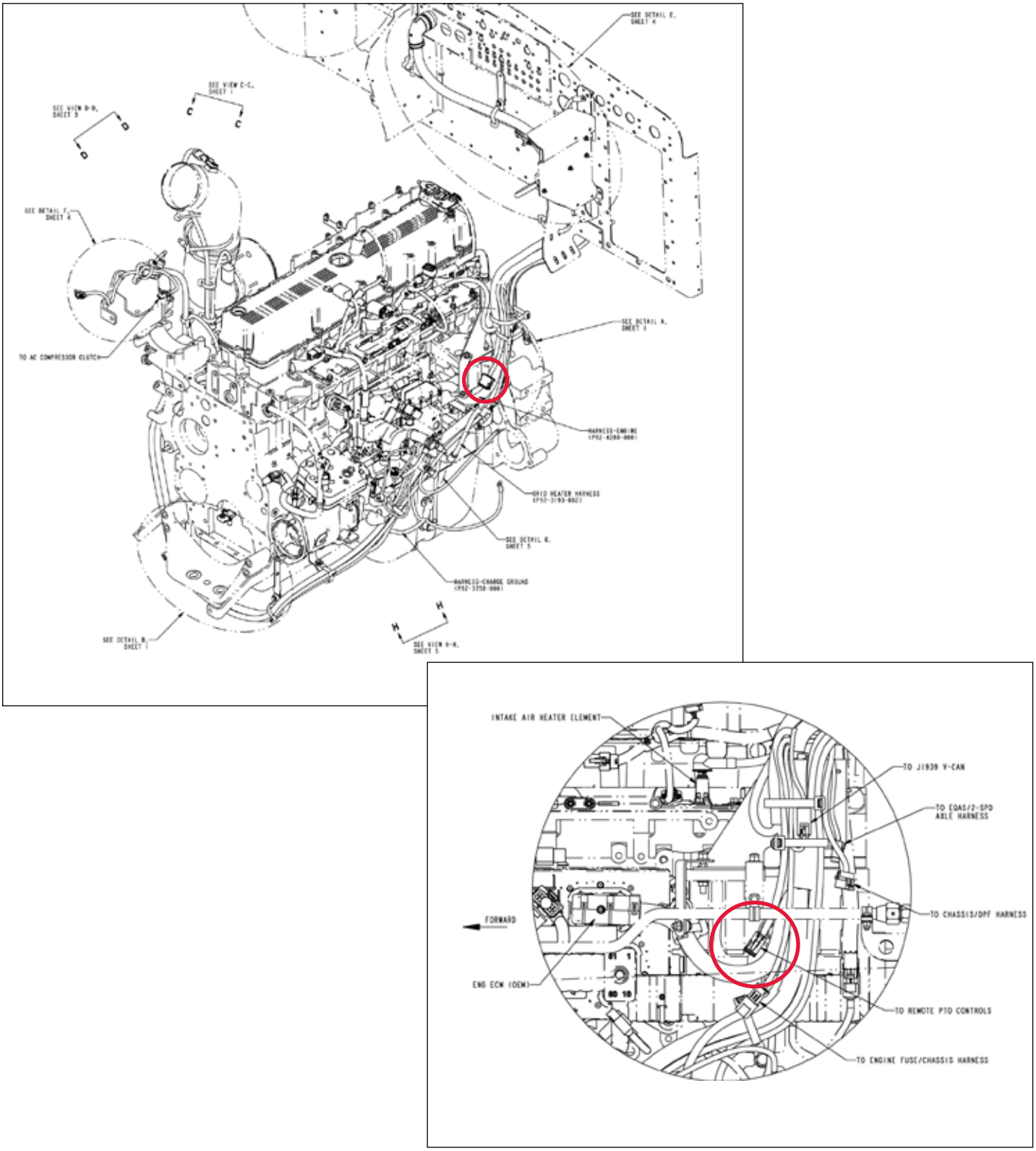

https://truckmanualshub.com/

MULTIFUNCTION TURN SIGNAL STALK, CHASSIS NODE & CHASSIS LOAD CENTER

Kenworth introduced the chassis node and chassis load center with 2010 emissions. The information that follows covers the functions of the chassis node, along with guidelines for installing additional lights on the chassis.

Exterior Lighting Circuit Limits

The multifunction turn signal stalk communicates to the CECU inside the cab which sends information to the Chassis Node over the F-CAN bus. The Chassis Node then activates the load requested, drawing power from the chassis PDC. The Chassis Node is designed to operate within specific current limits for

- Headlamps
- Fog lamps
- Vehicle stop/turn signal lamps
- Trailer turn/vehicle forward side facing turn signal lamps
- Back Up Alarm
- Windshield Washer Pump

If the current limits for any of these circuits are exceeded, the Chassis Node will default to a protection mode, causing the lamps to not function properly but still providing sufficient lighting for safe operation of the vehicle. See TABLE 6-3 for load limits.

The vehicle can exceed current ratings on a particular circuit in two ways

- Installing too many lamps on a circuit
- Using bulbs of excessive wattage

The following table is a recommended guideline to avoid exceeding the current limits of the Chassis Node. The Chassis Node receives power from the chassis PDC, see Figure 8-24.

TABLE 8-4. Chassis Node Guideline

Chassis Load Center Name	Function	Chassis Node Circuit	Chassis Node Pin	Current Limit
CN1	Left Head Lamp*	G1	A04	15.4
CN2	Right Head Lamp*	G2	A16	15.4
CN3	Front Turn Lamps	G3	B01	15.6
CN4	Rear Turn/Stop Lamps	G4	B10	15.6
CN5	Left Turn Trailer	G5	B19	15.6
CN6	Right Turn Trailer	G6	C19	15.6
CN7	Fog or DRL Lamps	G7	B18	15.6
CN8	Back Up Alarm/Windshield Washer Pump/ Electric-Over-Air	G8	C15	16.6

*A maximum wattage of 65W should not be exceeded for either low or high beam headlamps.

https://truckmanualshub.com/

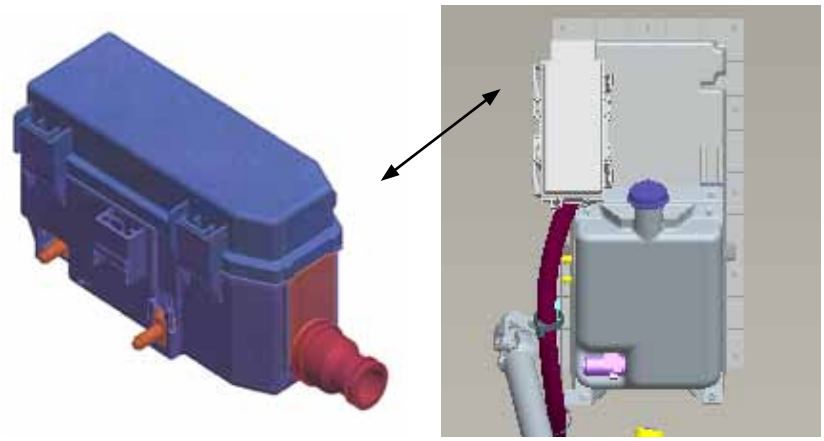

FIGURE 8-24. Chassis Power Distribution Center Mounting Above Washer Bottle

https://truckmanualshub.com/

CHASSIS LOAD CENTER DIMENSIONS

The chassis load center is mounted on the firewall near the washer bottle. Do not relocate the chassis load center. See Figure 8-25.

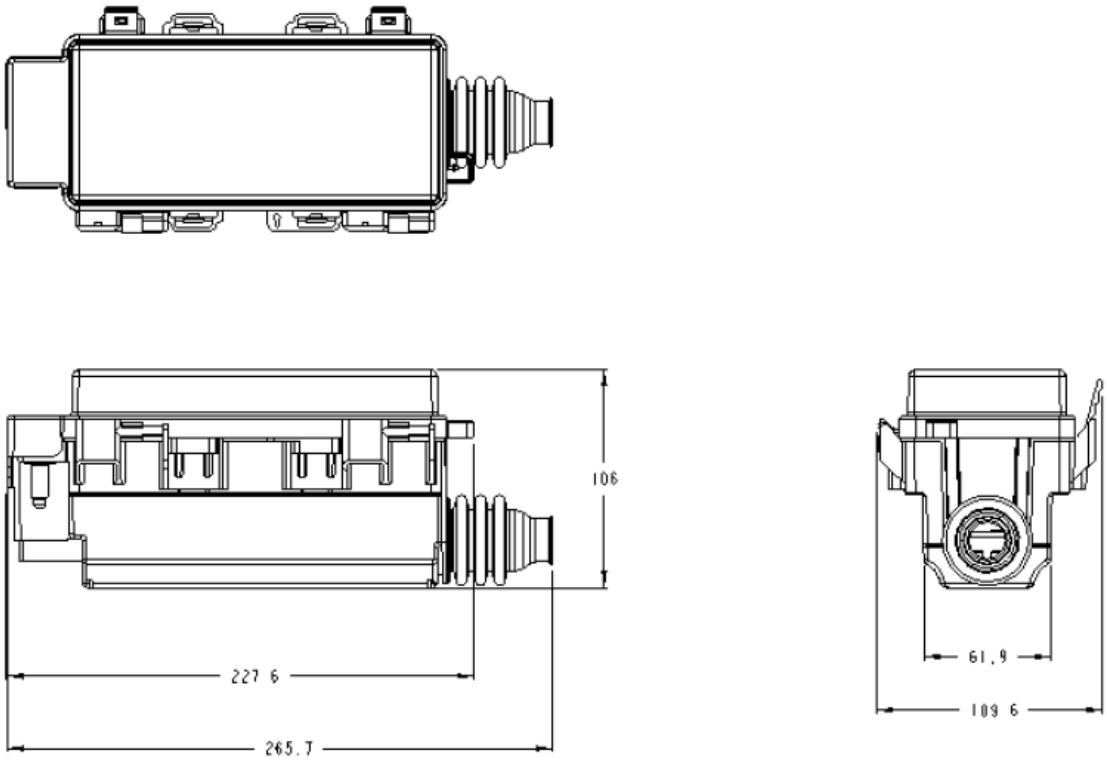

FIGURE 8-25. Chassis Power Distribution Center Dimensions

https://truckmanualshub.com/

2010 ELECTRICAL HARDWARE

Kenworth incorporated new electrical hardware to enhance the truck capabilities and performance. The locations of the hardware are shown here for reference. The chassis node is mounted above the LH frame rail under the cab on Day Cabs or Extended Day Cabs. For chassis equipped with sleepers, the chassis node is mounted inside the LH frame rail at the back of cab. Al alternate location inside of the LH frame rail in the transmission area is only used on 38” Aerocabs specified with horizontal exhaust. Do not relocate the chassis node.

The dosing control unit (DCU) and after-treatment control module (ACM) are shown for reference only. Not all chassis will be equipped with both DCUs and ACMs. If the locations of these components are critical to body installation, please work with your local Kenworth dealer. Do not relocate either of these modules.

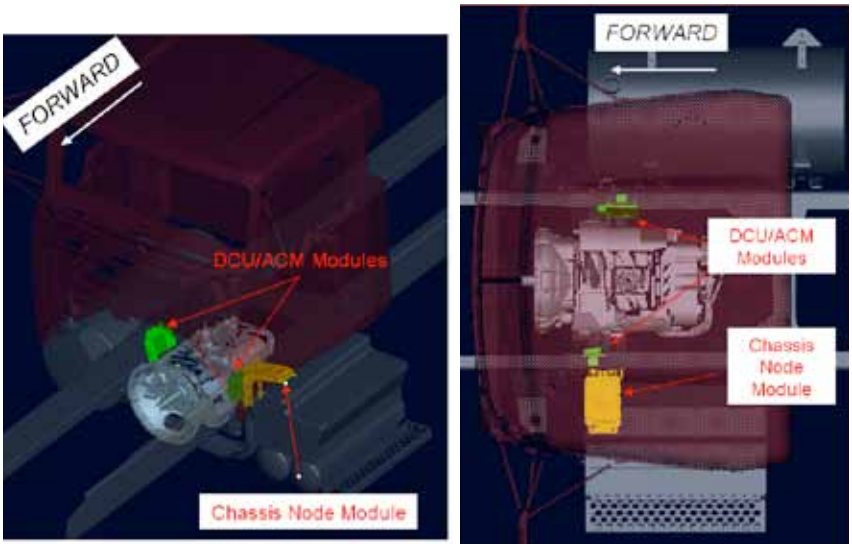

FIGURE 8-26. Daycab Hardware Locations

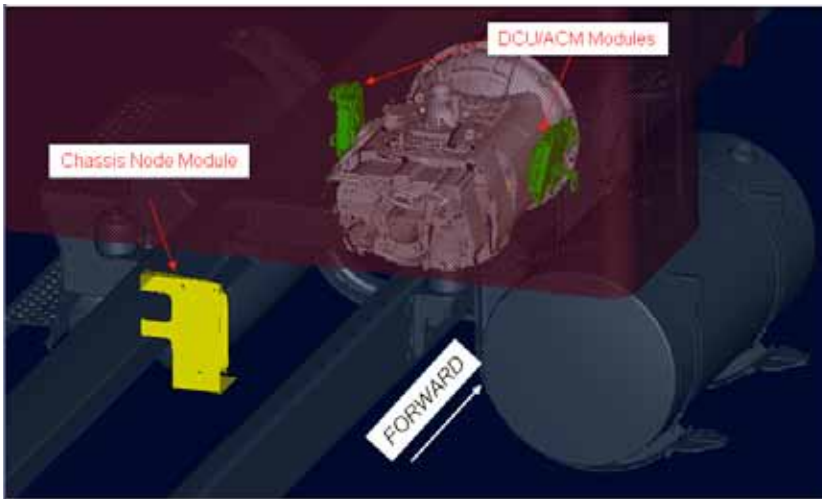

FIGURE 8-27. Aerocab Standard Hardware Locations

https://truckmanualshub.com/

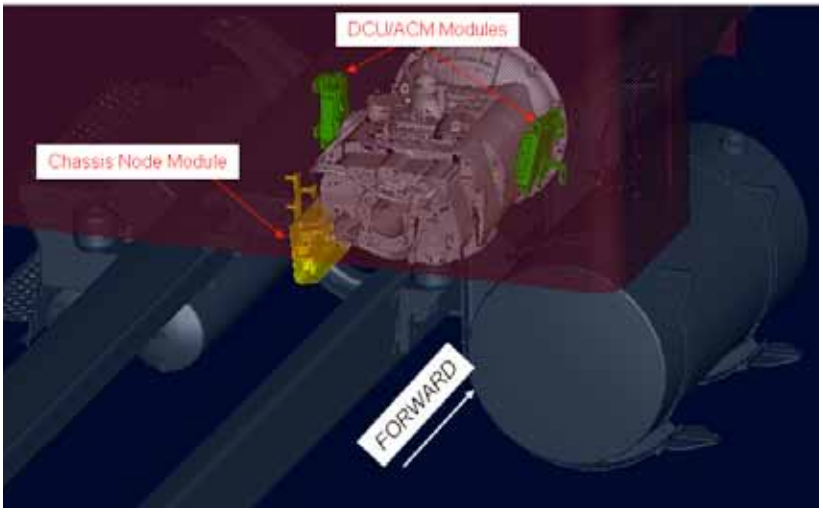

FIGURE 8-28. Aerocab Alternate Hardware Location.

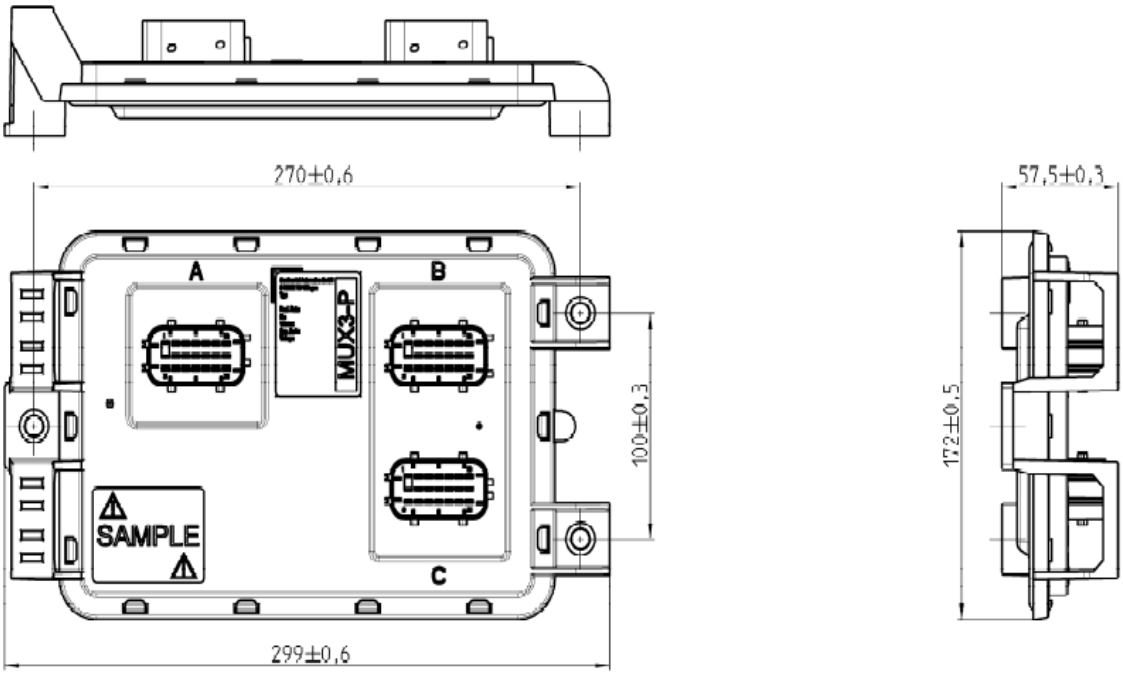

FIGURE 8-29. Chassis Node Dimensions

https://truckmanualshub.com/

ELECTRICAL WIRE NUMBER AND COLOR

GENERAL WIRE LABELS

Kenworth introduced a new electrical wire numbering system in 2007. This wire number system uses only 10 different colors and only one striped wire color. These colors determine a circuits FUNCTION as follows:

R/W	Direct Battery Power
RED	Protected Battery Power
ORG	IGN/ACC/Start Power
YEL	Activated Power
BRN	Indicator Illumination, Backlighting
BLK	Load Return
GRY	Control
VIO	Reference Voltage
BLU	Sensor Signal
GRN	Sensor common not connected to GND
WHT	Ground

Each wire has at a minimum a 7 character label, the first three characters are the circuits color as listed above, the remaining four are numerical which relate to the load the wire services. See TABLE 6-4 for the general categories.

TABLE 8-5. Wire Number General Categories

To identify similarly labeled wires a suffix can be added.

For example: YEL2950-1 would be a yellow wire indicating it is activated power. The 2950 indicates the load, in this case fog lamps, the -1 is a suffix used to differentiate similarly labeled circuit.

https://truckmanualshub.com/

DATA BUS WIRE COLORS

Data Bus wiring has its own color scheme as follows:

- Data-bus high-side wires
  - VIO – J1587 & J1708
  - ORG – J1922
  - YEL – J1939
  - RED – OEM
  - GRY – CAN
  - BLU – Single-wire bus
- Data-bus low-side wires
  - GRN – All Data-bus low-side wires

TRAILER/BODY BUILDER WIRE COLORS

Trailer Wires have their own wiring scheme as follows:

TABLE 8-6. Trailer Wire Colors

Color	Circuit
White	Ground
Black	Clearance ID Marker lamps
Yellow	Left turn lamps
Red	Stop lamps
Light green	Right turn lamps
Brown	Tail lamps
Light blue	ABS power Auxiliary

To identify specific circuits contact your local Kenworth Dealer.

https://truckmanualshub.com/

TRAILER CABLE CONNECTIONS

Kenworth offers many different trailer connection options. The SAE J560 connector is shown in Figure 8-30, the ISO 3731 connector is shown in Figure 8-31.

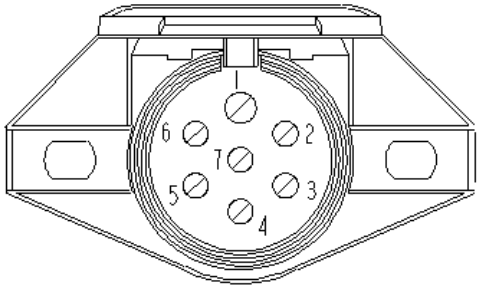

FIGURE 8-30: SAE J560 Trailer Connector

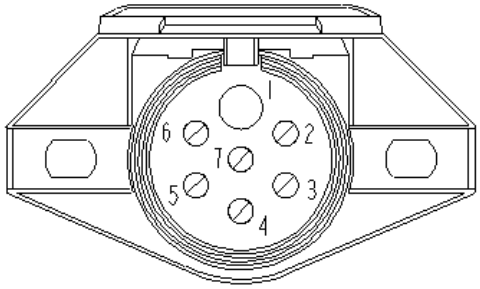

FIGURE 8-31: ISO 3731 Trailer Connector

There are three basic configurations for trailer connections, they are detailed below. Work with your local Kenworth dealer to identify which setup will be ideal for your intended application. Your local dealer can also identify and provide the wiring diagrams for any chassis that has been built.

For the configurations below the following circuits will be dedicated pin locations:

TABLE 8-7: SAE J560 Connector

SAE J560 Connector	
Pin	**Circuit**
1	Ground
2	Marker Lamp Trailer
3	Left Turn Trailer
4	Stop Lamp Trailer
5	Right Turn Trailer
6	Tail Lamp Trailer
7	Trailer ABS Power or Trailer Hotline

TABLE 8-8: ISO 3731 Connector

ISO 3731 Connector	
Pin	**Circuit**
1	Ground
2	Optional Switched Circuit
3	Trailer ABS Warning Lamp
4	Optional Switched Circuit
5	-
6	-
7	Trailer ABS Power

Below is a description of how the cab ABS and trailer ABS control units interface to turn on the trailer ABS warning lamp. When there is no direct connection the Power Line Carrier (PLC) is used to transmit the signal. PLC defines that the trailer and cab ABS controllers are communicating via signals transmitted on their power circuits.

1. J560 with Full Truck &/or Tractor Kit:

   This option provides a single SAE J560 connector at the noted location(s).

   – Trailer ABS power is on pin 7 of the SAE J560 connector.

   – Trailer ABS signal is on pin 7 of the SAE J560 via “PLC for trucks”

   – Ground is on pin 1 of the SAE J560 connector.

2. J560 & ISO 3731 with Full Truck &/or Tractor Kit:

   This option provides two connectors: a SAE J560 and an ISO 3731 connector at the noted location(s):

   – Trailer ABS power is on pin 7 of the SAE J560 & ISO 3731 connectors.

   – Trailer ABS signal is on pin 7 of the SAE J560 & ISO 3731 via “PLC for trucks”

https://truckmanualshub.com/

– Trailer ABS warning lamp circuit is on pin 3 of the ISO 3731 connector.

– Ground is on pin 1 of the SAE J560 & ISO 3731 connectors.

3. J560 Hotline & ISO 3731 with Full Truck &/or Tractor Kit:

   This option provides two connectors: a SAE J560 and a ISO 3731 connector at the noted location(s)

   – Trailer ABS power is on pin 7 of the ISO 3731 connector.

   – Trailer ABS signal is on pin 7 of the ISO 3731 via “PLC for trucks”

   – Trailer ABS warning lamp circuit is on pin 3 of the ISO 3731 connector.

   – Trailer Hotline is provided on pin 7 of the SAE J560 connector. This may be either battery powered or switched.

   – Ground is on pin 1 of both the SAE J560 & ISO 3731 connectors.

Note:

Kenworth provides option variations within the above combinations. This may include up to (2) spare circuits on pins 2 & 4 of the ISO 3731 connector which may or may not be switched.

In addition to these configurations an optional junction box is available mounted either behind the cab or at the end of frame. See Figure 8-32.

FIGURE 8-32. Junction Box

Circuits provided inside the junction box are:

- Ground, Circuit code: WHT1512 (8AWG)
- Tail Lamp Trailer, Circuit code: YEL2421 (12AWG)
- Marker Lamp Trailer, Circuit code: YEL9130 (12AWG)
- Left Turn Trailer, Circuit code: YEL9111 (12AWG)
- Stop Lamp Trailer, Circuit code: YEL9120 (8AWG)
- Right Turn Trailer, Circuit code: YEL9112 (12AWG)
- ABS Power (switched), Circuit code: ORN5100 (8AWG)

These circuits terminated with ring terminals attached to one side of a terminal strip. To connect to the circuits use a ring terminal for a #10 screw.

https://truckmanualshub.com/

BENDIX ELECTRONIC STABILITY PROGRAM

Kenworth is offering Bendix Electronic Stability Program (ESP) as a pre-wire option on specific Bendix approved full truck configurations. Work with your local Kenworth dealer to determine if ESP is approved for your application. The Kenworth pre-wire option includes all the Bendix ESP system components installed and tested, but because Kenworth is the incomplete vehicle manufacturer the ESP system cannot receive final verification until the body is installed. ESP functionality will be disabled when the vehicle leaves the Kenworth manufacturing facility. (The ESP system will be programmed with configuration specific information provided to Kenworth on the sales order – this data includes the Body Type, Body Builder, and Body Information.) To demonstrate that the ESP system has been tested and disabled, the ESP/ATC warning lamp will illuminate solidly and remain on after the truck has been driven at speeds greater than 30 miles per hour. The Body Builder / Final Stage Manufacturer is responsible for certifying that the Bendix ESP is functioning properly after the body is installed.

Bendix will provide training and software that are required to enable the ESP pre-wire system. For the ESP system to function properly, the body builder must install the body specified on the Kenworth Sales Order and not make any changes to any of the main chassis components (wheelbase, front/rear axle, front/rear suspension, steering gear, front/rear brakes, add/remove axle or lift axles, etc.). Please contact Bendix Commercial Vehicle Systems LLC if any questions exist.

After the ESP system has been enabled, the ESP warning labels must be applied to the chassis. The warning labels are shipped loose with the chassis along with an installation drawing. Remove the label on the dash that says “Replace When ESP is Enabled” and replace it with the ESP dash warning label. Apply the remaining warning labels in conjunction with the warning label installation drawing.

Please notify Kenworth or Bendix if there are any changes to the body configurations that have been certified in the ESP program. In order to approve configurations for ESP, a validation test at Bendix is required.

https://truckmanualshub.com/

FACTORY INSTALLED SNOW PLOW LIGHT WIRING

This options provides the ability to switch between operating lights mounted on a snow plow versus the standard lights on the hood. A switch is mounted in the dash to allow the operator to select the mode. See Figure 8-31 for the snow plow switch icon. Circuits provided to the body builder are:

- Park Lamp, Circuit code: YEL2411
- RH Turn, Circuit code: YEL2312
- LH Turn, Circuit code: YEL2311
- Ground, Circuit code: WHT2000
- RH High Beam, Circuit code: YEL2122
- LH High Beam, Circuit code: YEL2121
- LH Low Beam, Circuit code: YEL2111
- RH Low Beam, Circuit code: YEL2112

These 8 circuits are coiled up inside the forward LH rail, the breakout length is 5 meters in length. A relay module containing four relays is mounted under the hood near the washer bottle. See Figure 8-33.

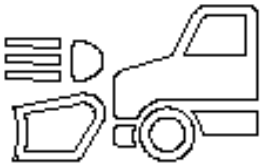

FIGURE 8-33. Snow plow icon

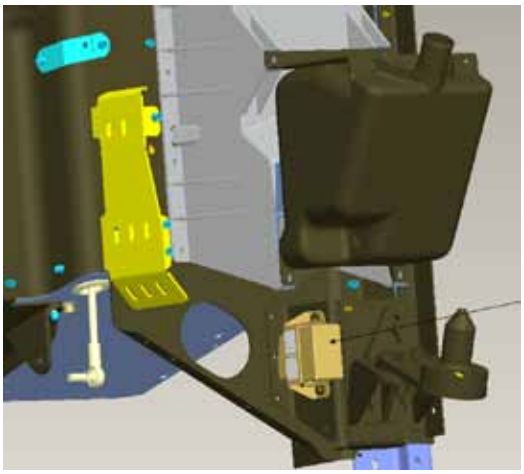

FIGURE 8-34.

https://truckmanualshub.com/

NAVPLUS HEAD UNIT INFORMATION

For aftermarket installation of cameras for display on the NavPlus screen, or replacement parts, you will need to be familiar with the pin outs in the back of the head unit.

FIGURE 8-35. PACCAR Head Unit

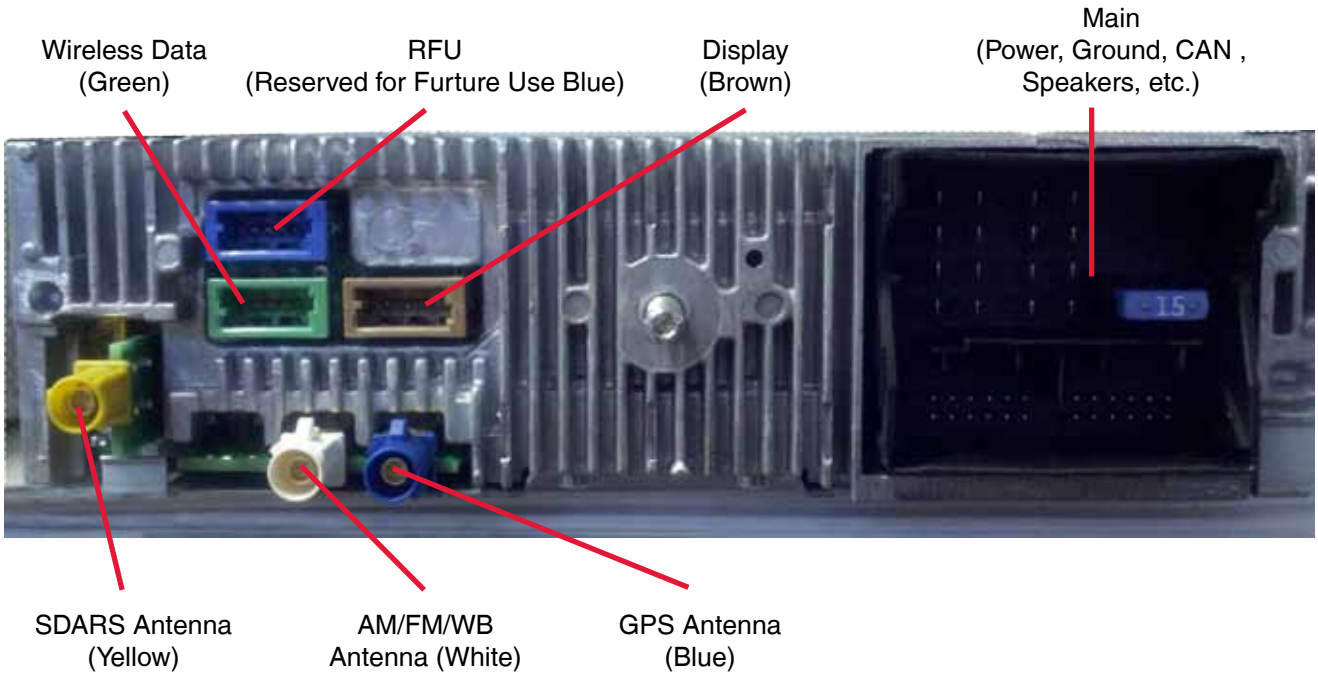

https://truckmanualshub.com/

FIGURE 8-36. Connector Pin outs

1 Rear Right Speaker +
2 Front Right Speaker +
3 Front Left Speaker +
4 Rear Left Speaker +
5 Rear Right Speaker –
6 Front Right Speaker –
7 Front Left Speaker –
8 Rear Left Speaker –
9 Key On Signal
10 Not Used
11 Not Used
12 Battery +
13 Not Used
14 Not Used
15 Ground
16 Ground

1 Video In 1 +
2 Video In 2 +
3 Not Used
4 Video In 3 +
5 Video In 4 +
6 Not Used
7 Video In 1 +
8 Video In 2 +
9 Not Used
10 Video In 3 +
11 Video In 4 +
12 Not Used

Fuse

Connector information:
TYCO MQS Socket Housing
Part number 12141768-2
Mating Connector: P20-6221

1 Not Used
2 Not Used
3 Not Used
4 Not Used
5 CAN High
6 Not Used
7 Not Used+
8 Not Used
9 Not Used
10 Not Used
11 CAN Low
12 Not Used

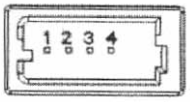

USB Connector – Color Coding: Green
1 USB2 5V
2 USB2-DM I/O
3 USB2-DP I/O
4 GROUND

Video Connector – Color Coding: Brown
1 TFT Power (12V)
2 Ground
3 LVDS+ I/O
4 LVDSP3

Aux in Connector – Color Coding: Blue
1 A12 AUX REF I
2 A12 AUX L I
3 A12 AUX R I
4 WAKE UP I/O

https://truckmanualshub.com/

This page intentionally left blank.

https://truckmanualshub.com/

ROUTING

Introduction

This section specifies the general requirements for securing hoses and electrical wires to present an orderly appearance, facilitate inspection and maintenance, and prevent potential damage to these lines.

Definitions

Bundle: Two or more air, electrical, fuel, or other lines tied together to form a unitized assembly.

Clamp: A cushioned rigid or semi-rigid, anti-chafing device for containing the bundle and securing it to the frame or other structural support. Standard clamps have a black elastomer lining. High temperature clamps (e.g., those used with compressor discharge hose) have a white or red elastomer lining (most applications for these are called out in the bills of material). An assembly of two clamps fastened together to separate components is referred to as a “butterfly” clamp. Note: the metal portion of clamps shall be stainless steel or otherwise made capable, through plating or other means, of passing a 200 hour salt spray test per ASTM B117 without rusting.

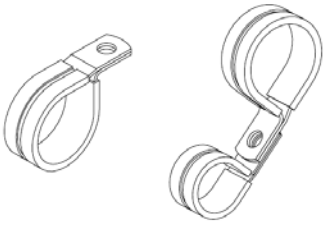

FIGURE 9-1. Clamp and Butterfly Clamp

Butterfly Tie: A tough plastic (nylon or equivalent) locking dual clamp tie strap used to separate bundles or single lines, hoses, etc. These straps must be UV stable. (Tyton DCT11)

FIGURE 9-2. Butterfly Tie

Tie Strap: A tough plastic (nylon, or equivalent) locking strap used to tie the lines in a bundle together between clamps or to otherwise secure hoses and wires as noted below. These straps must be UV stable.

FIGURE 9-3. Tie Strap

Heavy Duty (HD) Mount: A black rigid device used for securing a tie strap to the frame or other structural support. Mounts are made of impact modified, heat stabilized UV resistant nylon capable of continuous operation between temperatures 220°F (150°) and -40°F (-40°).

https://truckmanualshub.com/

Note: **Heavy duty tie straps 0.50in (12.7mm) wide (Tyton T255ROHIR or similar) shall be used whenever HD mounts are specified, although 0.25in (6.4mm) tie straps may be used in some specified applications.**

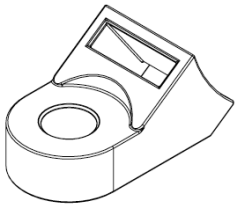

FIGURE 9-4. Heavy Duty (HD) Mount.

Excess of material: More than 3 inches of slack for every 14 inch section of hose routing, except for air conditioner hoses. See section 4.1.3 for air conditioner hose requirements.

Shortness of material: Less than 1 inch of slack on a 14 inch section of hose routing.

ROUTING REQUIREMENTS

Wiring

Electrical ground wire terminals must be securely attached and the complete terminal surface must contact a clean bare metal surface. See R414-558 for grounding wire connection practice. Apply electrical contact corrosion inhibitor Nyogel 759G grease (made by William F. Nye, Inc., New Bedford, MA) per R414-558.

Don't bend wires or use tie straps within 3 inches (75 mm) of (connected) wire connectors or plugs.

Wires in Bundles

Electrical wires (other than the exceptions covered below) running parallel with air or coolant hose bundles, may be included in the bundle if they are isolated from the hoses with a covering of convoluted plastic tubing.

EXCEPTIONS:

Battery cables (including jump start cables) may be bundled with or tied to the charging wire harness. They shall **not** be bundled with or tied directly to any other components, including hoses, wires, or bundles. They shall be separated from other routed components using butterfly ties at intervals not exceeding 14 inches (356 mm). Battery strap (W84-1000) tie down shall be used without exception to secure battery cables to frame mounted or other major component (e.g. engine, tmsn, etc.) mounted standoffs at intervals not exceeding 14 inches (356 mm). The (positive) battery cable shall be covered with convoluted plastic tubing from terminal to terminal.

110/220 volt wires for engine heaters, oil pan heaters, transmission oil heaters and battery pad warmers, shall **not** be included in any hose/wire bundle with a fuel hose. Individual heater wires not in a bundle shall be separated from other components by using butterfly clamps or butterfly ties at intervals not exceeding 14 inches (356 mm). Heater wires with a secondary covering shall be covered with convoluted tubing whether they are in bundles or not.

https://truckmanualshub.com/

Wires Crossing other Components

Electrical wires crossing over other components, such as lines, bolt heads, fittings, engine components lifting eyes, engine block, cylinder head, etc., close enough to rub shall be isolated with a covering of convoluted tubing **and** separated from the component by using butterfly clamps, butterfly ties, or plastic sheathing. 110/220 volt engine heater wiring shall be installed with butterfly ties or butterfly clamps

Piping

Use no street elbows in air brake, water, fuel, or hydraulic systems unless specified on the piping diagram and the build instructions.

Use no elbows in the air brake system unless specified on the air piping diagram and the build instructions.

Hoses Crossing Components

Hoses crossing over other components close enough to rub shall be protected with a secured covering of convoluted plastic tubing (KW part number K344-813), another section of hose, or plastic sheathing (KW part number K213-1312). The usage of butterfly ties, or butterfly clamps are also recommended.

Air Compressor Discharge Hoses

Wires or hoses shall not be tied to the high temperature air compressor discharge hose. Hoses and wires may be routed across the air compressor discharge hose at a distance of 18 inches (457 mm) or greater from the compressor discharge port. In this case the crossing hoses and wires shall be “butterfly” clamped to the air compressor discharge hose and covered with convoluted tubing at the clamp point (use high temperature clamps on the compressor hose).

Bundles

HD mount and tie strap, or clamp shall be located at intervals not to exceed 14 inches (356 mm) along the bundle.

Regular tie straps shall be located at intervals not to exceed 7 inches (178 mm) between HD mount or clamps. Extra tie straps may be used as needed to contain the hoses and wires in the bundle.

Routing of Wires and Hoses near Moving Components

Wires and Hoses shall be routed away from moving components, such as fans, shackle links, drivelines, steering linkages, etc. so that there is at least 0.5 inches (12.7 mm) clearance when the component is operating at its **maximum** travel limits.

A minimum clearance of 1.0 inchs (25.4) shall be maintained between steering axle tires (and associated rotating parts) in all positions and routed components, such as hoses, oil lines, wires, pipes, etc.

https://truckmanualshub.com/

Routing of Wires and Hoses near Exhaust System

TABLE 9-1. Exhaust – System Clearance

Description	Shielded	Unshielded
Coolant hoses, HVAC hoses and tubing, and electrical wires within 15” of the turbo and/or over 15” from the turbo	2” minimum	3” minimum
Fuel hoses		
within 15” of the turbo	n/a	4” minimum
over 15” from the turbo	2” minimum	3” minimum
Fuel tanks and hydraulic tanks		
crossing tank	n/a	2” minimum
parallel to tank	n/a	2” minimum
end of tank	n/a	1” minimum
aluminum/ceramic-coated exhaust pipe crossing tank	n/a	1.5” minimum
Air hose		
nylon	3” minimum	8” minimum
wire braid	2” minimum	3” minimum

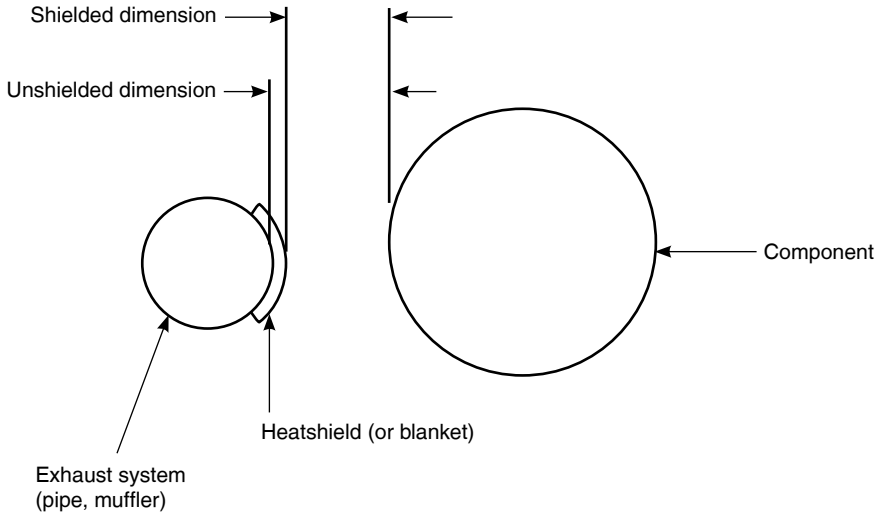

FIGURE 9-5. Definition of measurements.

https://truckmanualshub.com/

VEHICLE IDENTIFICATION NUMBER

A 17–character number (numeral and letter combination) forms the Vehicle Identification Number (VIN) which includes the Chassis Number. It contains among other information, the model year (4), assembly plant (5), and vehicle serial number (6). See Figure A–1.

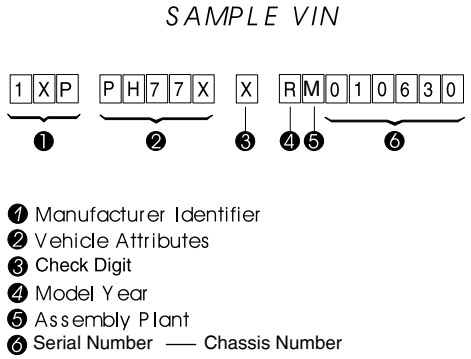

FIGURE A-1. Vehicle Identification Number (VIN).

The model year (4) is designated by an alphanumeric code in the tenth character position in the VIN. See Table A-1 and Figure A–1.

Code	Year
5	2005
6	2006
7	2007
8	2008
9	2009

Code	Year
A	2010
B	2011
C	2012
D	2013
E	2014

TABLE A-1. Model Year (Code) Designations.

VIN Location

The VIN is marked on the Incomplete Vehicle Certification Label (on trucks). It is located either on the driver's door edge or door frame. See Figure A–2.

Chassis Number Locations

The Chassis Number comprises the last six characters of the VIN.

- The vehicle chassis number is shown in multiple locations.
- Left side of cab, lower right corner of door frame: stamped plate.
- Tire, Rim, and Weight Rating Data label.
- Major Components and Weights label.
- Noise Emission label.
- Paint Identification label.

https://truckmanualshub.com/

VEHICLE IDENTIFICATION LABELS

Vehicle Identification Labels are located on the driver's side door edge or on either the driver's or passenger's side door frames. See Figure A-2. Labels include Vehicle Certification, Components and Weights, Tire/Rim and Weight Rating Data, Noise Emissions, and Paint Identification. Quantity and location of labels may differ based on Complete/Incomplete vehicle, and Single/Dual certification.

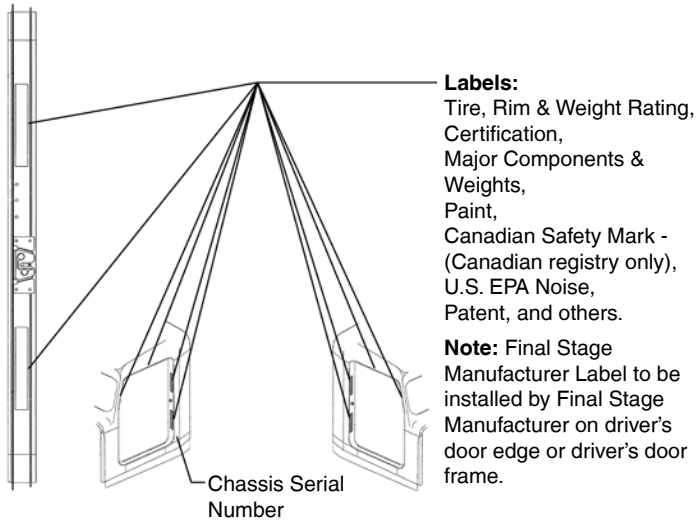

FIGURE A-2. Drivers Door and Door Frame Labels

Tire/Rim and Weight Rating Data Label

The Tire/Rim and Weight Rating Data Label is used in conjunction with the Incomplete Vehicle Certification Label on Incomplete Vehicles. It contains chassis serial number and the following information:

- GVWR — Gross Vehicle Weight Rating
- GAWR FRONT and REAR — Gross Axle Weight Ratings for Front and Rear Axle
- TIRE/RIM SIZES AND INFLATION PRESSURES — Tire/Rim Sizes and Cold Pressure Minimums

Note: **GVWR is the TOTAL WEIGHT the vehicle is designed to carry. This includes the weight of the empty vehicle, loading platform, occupants, fuel, and any load.**

Incomplete Vehicle Certification Label

The Incomplete Vehicle Certification Label contains the chassis VIN, date of manufacture, and listing of applicable motor vehicle safety standards.

Components and Weights Label

The Major Components and Weights Label includes chassis weight and gross weight information, as well as model and serial numbers for the vehicle, engine, transmission, and axles.

https://truckmanualshub.com/

Noise Emission Label

The Noise Emission Label contains the chassis serial number, date of manufacture, and information regarding US noise emission regulations. This label is not provided on Canadian registered vehicles.

Paint Identification Label

The Paint Identification Label contains the paint colors used by the factory to paint the truck. It lists frame, wheels, cab interior and exterior colors. This label is located either underneath the dash to the left of the steering column support, inside the glovebox, or on the passenger's door frame.

COMPONENT IDENTIFICATION

Each of the following components has their own identification label.

Engine Identification

The engine serial number is stamped on a plate located on the left front of the engine. For further information, please refer to the Engine Operation and Maintenance Manual (included in the glove compartment of each vehicle).

Transmission Identification

The transmission identification number is stamped on a tag affixed to the right forward side of the transmission case. It includes among other specifications the transmission model, serial, and part number.

Front Axle Identification

The front axle has a identification tag located on the front axle beam. It includes the axle model, part number and serial number.

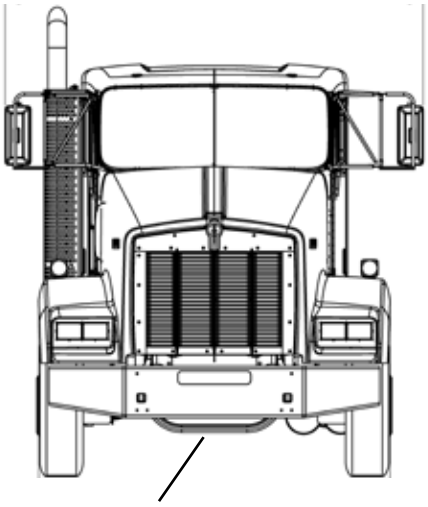

FIGURE A-3. Front Axle Identification

https://truckmanualshub.com/

Rear Axle Identification

The rear axle identification numbering system includes two labels or stamps.

1. Axle Housing Number Tag, located on the left forward side of the housing arm. This tag identifies the axle housing.

2. Axle Differential Carrier Identification, located on the top side of the differential carrier. The following information is either stamped, or marked with a metal tag: Model No., Carrier Production Assembly No., Carrier Assembly Serial No., Gear Ratio, Axle Specifications Number and OEM part number and country of origin.

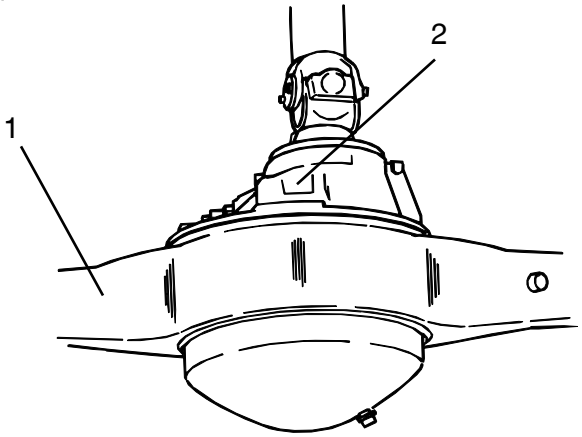

FIGURE A-4. Rear Axle Identification

Note:

Illustrated identification tag locations are typical. Actual locations may vary by axle manufacturer and with single versus tandem axles.

https://truckmanualshub.com/

This page intentionally left blank.

https://truckmanualshub.com/

KENWORTH®

A PACCAR COMPANY

Kenworth Truck Company
P.O. Box 1000
Kirkland, WA 98083
(425) 828-5000

08/12