https://truckmanualshub.com/

Operation & Maintenance Manual

EEAM024400

D65EX-15E0
D65PX-15E0

BULLDOZER

SERIAL NUMBER
D65EX-15E0 - 69001 and up
D65PX-15E0 - 69001 and up

WARNING

Unsafe use of this machine may cause serious injury or death. Operators and maintenance personnel must read this manual before operating or maintaining this machine. This manual should be kept inside the cab for reference and periodically reviewed by all personnel who will come into contact with the machine.

KOMATSU

https://truckmanualshub.com/

https://truckmanualshub.com/

FOREWORD

https://truckmanualshub.com/

BEFORE READING THIS MANUAL

This manual gives details of the operation and methods of inspection and maintenance for this machine that must be obeyed in order to use the machine safely. Most accidents are caused by the failure to follow fundamental safety rules for the operation and maintenance of machines.

Read, understand and follow all precautions and warnings in this manual and on the machine before performing operation and maintenance. Failure to do so may result in serious injury or death.

Komatsu cannot predict every circumstance that might involve a potential hazard when the machine is used. Therefore, the safety messages in this manual and on the machine may not include all possible safety precautions. If you carry out any operation, inspection, or maintenance under conditions that are not described in this manual, understand that it is your responsibility to take the necessary precautions to ensure safety. In no event should you or others engage in the prohibited uses or actions described in this manual. Improper operation and maintenance of the machine can be hazardous and could result in serious injury or death.

If you sell the machine, be sure to give this manual to the new owner together with the machine.

Always keep this Operation and Maintenance Manual in the location shown on the right so that all relevant personnel can read it at any time.

Operation and Maintenance Manual Storing Place

For a machine with a cab, a pocket is provided on the inside of both right and left doors.

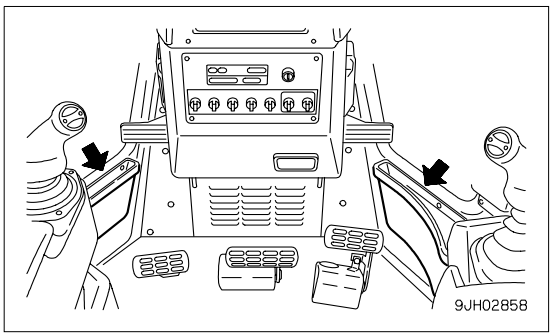

For a machine with a ROPS canopy, a pocket is provided at the end of the floor.

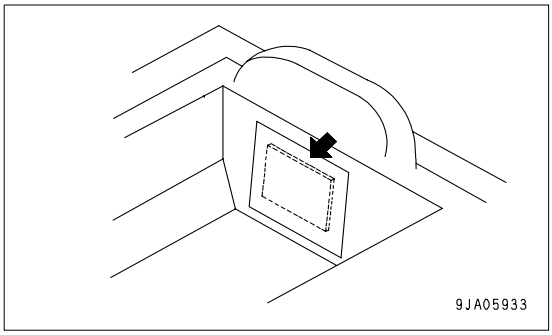

If this manual is lost or damaged, contact your distributor immediately to arrange for its replacement. For details regarding the machine serial No. you will need to provide your Komatsu distributor, see “TABLE TO ENTER SERIAL NO. AND DISTRIBUTOR (1-13)“.

This manual uses the international units (SI) for units of measurement. For reference, units that have been used in the past are given in ( ).

https://truckmanualshub.com/

The explanations, values, and illustrations in this manual have been prepared based on the latest information available as of the date of its publication. Continuing improvements in the design of this machine may lead to additional changes that are not reflected in this manual. Consult Komatsu or your Komatsu distributor for the latest available information concerning your machine or with questions regarding information contained in this manual.

- The numbers in circles in the illustrations correspond to the numbers in ( ) in the text.
  (For example:① → (1))

Komatsu delivers machines that comply with all applicable regulations and standards of the country to which it has been shipped. If this machine has been purchased in another country, it may lack certain safety devices and specifications that are necessary for use in your country. If there is any question about whether your product complies with the applicable standards and regulations of your country, consult Komatsu or your Komatsu distributor before operating the machine.

https://truckmanualshub.com/

IMPORTANT SAFETY INFORMATION

To enable you to use the machine safely, and to prevent injury to operators, service personnel or bystanders, the precautions and warnings included in this manual and the safety signs attached to the machine must always be followed.

To identify important safety messages in the manual and on the machine labels, the following signal words are used.

The “Safety Alert Symbol“ identifies important safety messages on machines, in manuals, and elsewhere. When you see this symbol, be alert to the risk of personal injury or death. Follow the instructions in the safety message.

DANGER	This signal word indicates an imminently hazardous situation which, if not avoided, will result in death or serious injury
WARNING	This signal word indicates a potentially hazardous situation which, if not avoided, could result in death or serious injury.
CAUTION	This signal word indicates a potentially hazardous situation exists which, if not avoided, may result in minor or moderate injury.

The following signal words are used to alert you to information that must be followed to avoid damage to the machine.

NOTICE	This precaution is given where the machine may be damaged or the service life reduced if the precaution is not followed.
REMARKS	This word is used for information that is useful to know.

https://truckmanualshub.com/

Noise emission levels

Two labels indicating the machine noise level are affixed on the machine.

- Sound pressure level at the operator's station, measured according to ISO6396 (Dynamic test method, simulated working cycle)

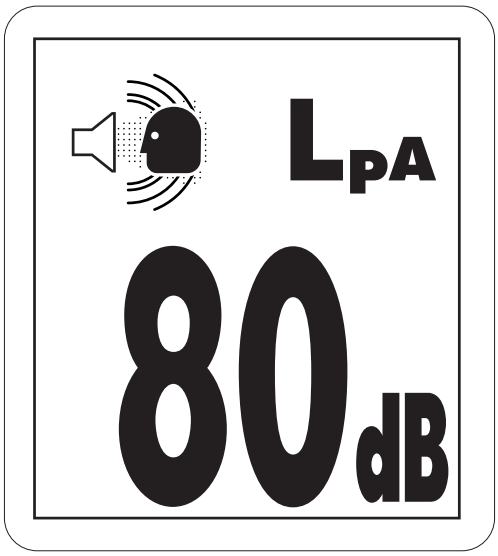

- Sound power level emitted by the machine, measured according to ISO 6395 (Dynamic test method, simulated working cycle). This is the guaranteed value as specified in European directive 2000/14/EC.

Vibration levels

When used for its intended purpose, levels of vibration for the earth-moving machine transmitted from the operator’s seat are lower than or equal to the tested vibrations for the relative machinery class in compliance with ISO 7096.

- If equipped with air suspension seat

The actual acceleration value for the hands and arms is less than or equal to 2.5 m/s². The actual acceleration value for the body is less than or equal to 0.5 m/s².

- If equipped with mechanical suspension seat

The actual acceleration value for the hands and arms is less than or equal to 2.5 m/s².
D65EX-15 : the actual acceleration value for the body is 0.63 m/s².
D65EXL-15, D65PX-15 : the actual acceleration value for the body is 0.68 m/s².

https://truckmanualshub.com/

These values were determined using a representative machine and measured during the typical operating condition indicated below according to the measurement procedures that are defined in the standards ISO 2631/1 and ISO 5349.

Operating condition:

(WHEEL LOADER:) V-shape loading

(HYDRAULIC EXCAVATORS:) Excavating (Digging-loading-rotating-unloading-rotating)

(TRACTOR DOZER:) Dozing and spreading material through forward/reversing motion

(Rigid/Articulate dumper:) Work cycle (including waiting, travelling, loading, travelling with load, unloading, and travelling without load)

Guide to Reduce Vibration Levels on Machine

The following guides can help an operator of this machine to reduce the whole body vibration levels:

1. Use the correct equipment and attachments.

2. Maintain the machine according to this manual
   - Tire pressures (for wheeled machines), tension of crawler (for crawler machines)
   - Brake and steering systems
   - Controls, hydraulic system and linkages

3. Keep the terrain where the machine is working and traveling in good condition
   - Remove any large rocks or obstacles
   - Fill any ditches and holes
   - Site manager should provide machine operators with machine and schedule time to maintain terrain conditions

4. Use a seat that meets ISO 7096 and keep the seat maintained and adjusted
   - Adjust the seat and suspension for the weight and size of the operator
   - Wear seat belt
   - Inspect and maintain the seat suspension and adjustment mechanisms

5. Steer, brake, accelerate, shift gears (for wheeled machines), and move the attachment levers and pedals slowly so that the machine moves smoothly

6. Adjust the machine speed and travel path to minimize the vibration level
   - When pushing with bucket or blade, avoid sudden loading; load gradually
   - Drive around obstacles and rough terrain conditions
   - Slow down when it is necessary to go over rough terrain
   - Make the curve radius of traveling path as large as possible
   - Travel at low speed when traveling around sharp curves

7. Minimize vibrations for long work cycle or long distance traveling
   - Reduce speed to prevent bounce
   - Transport machines long distances between worksites

https://truckmanualshub.com/

8. The following guidelines can be effective to minimize risks of low back pain
   - Operate the machine only when you are in good health.
   - Provide breaks to reduce long periods of sitting in the same posture
   - Do not jump down from the cab or machine
   - Do not repeatedly handle and lift loads.

https://truckmanualshub.com/

INTENDED USE

USE OF MACHINE

This Komatsu machine is designed to be used mainly for the following work:

- Dozing
- Smoothing
- Cutting into hard or frozen ground or ditching
- Felling trees, removing stumps

See the section “WORK POSSIBLE USING BULLDOZER (3-88)“ for further details.

GENERAL VIEW AND DIRECTIONS OF MACHINE

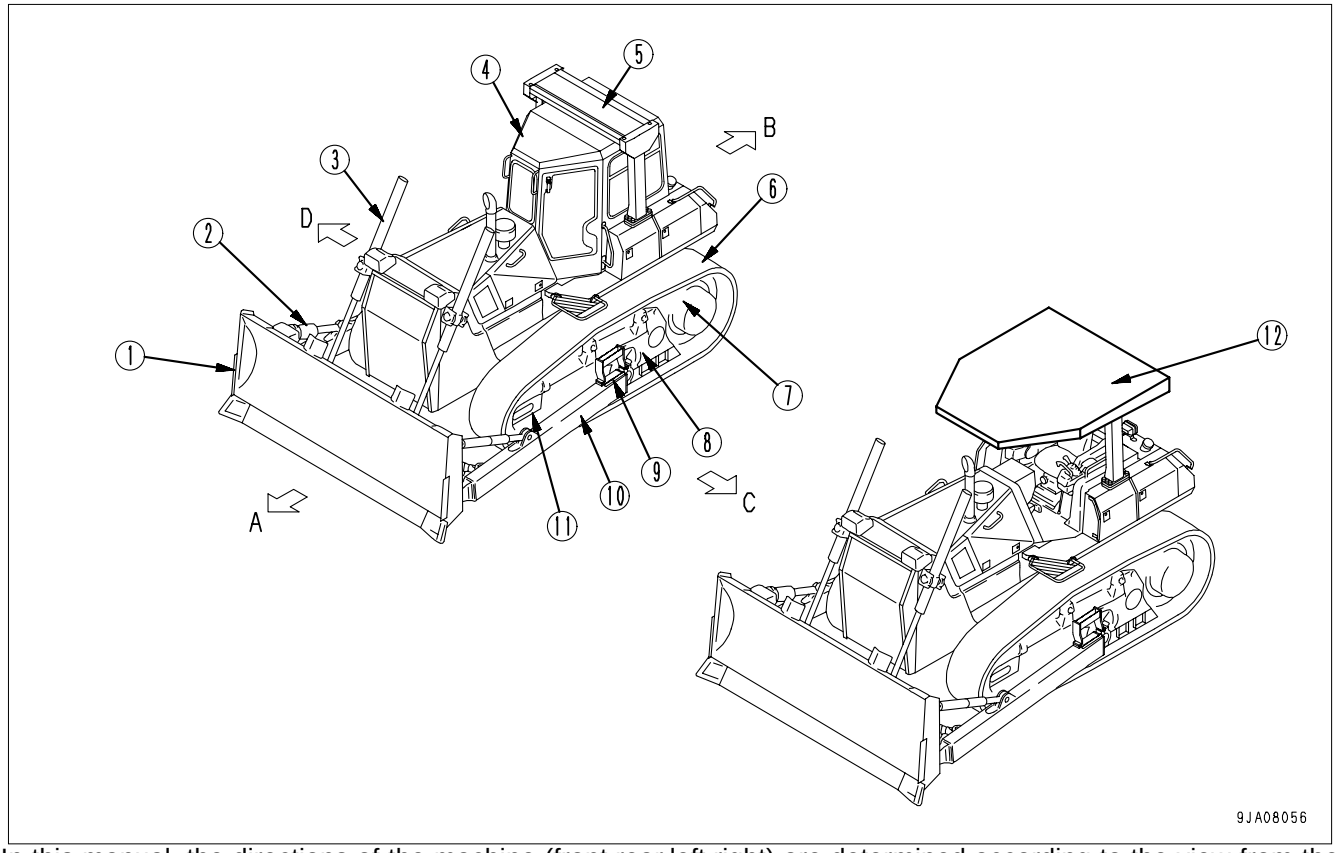

In this manual, the directions of the machine (front,rear,left,right) are determined according to the view from the operator's seat in the direction of travel (front) of the machine.

(1)	Blade	(7)	Sprocket
(2)	Tilt cylinder	(8)	Track frame
(3)	Lift cylinder	(9)	Step
(4)	Cab	(10)	Frame
(5)	ROPS guard	(11)	Idler
(6)	Track shoe	(12)	ROPS canopy
(A)	Front	(C)	Left
(B)	Rear	(D)	Right

https://truckmanualshub.com/

VISIBILITY FROM OPERATOR'S SEAT

The visibility standards (ISO 5006) for this machine require a view shown in the diagram below.

PROXIMITY VISIBILITY

The figure bellows shows a front visibility from the machine at a spot 1.0 m away from the side and 1.5 m above the ground. Shaded area (A) in the figure shows an area whose view is blocked by part of the machine. Operate the machine, fully aware that the machine has a portion that an operator cannot see.

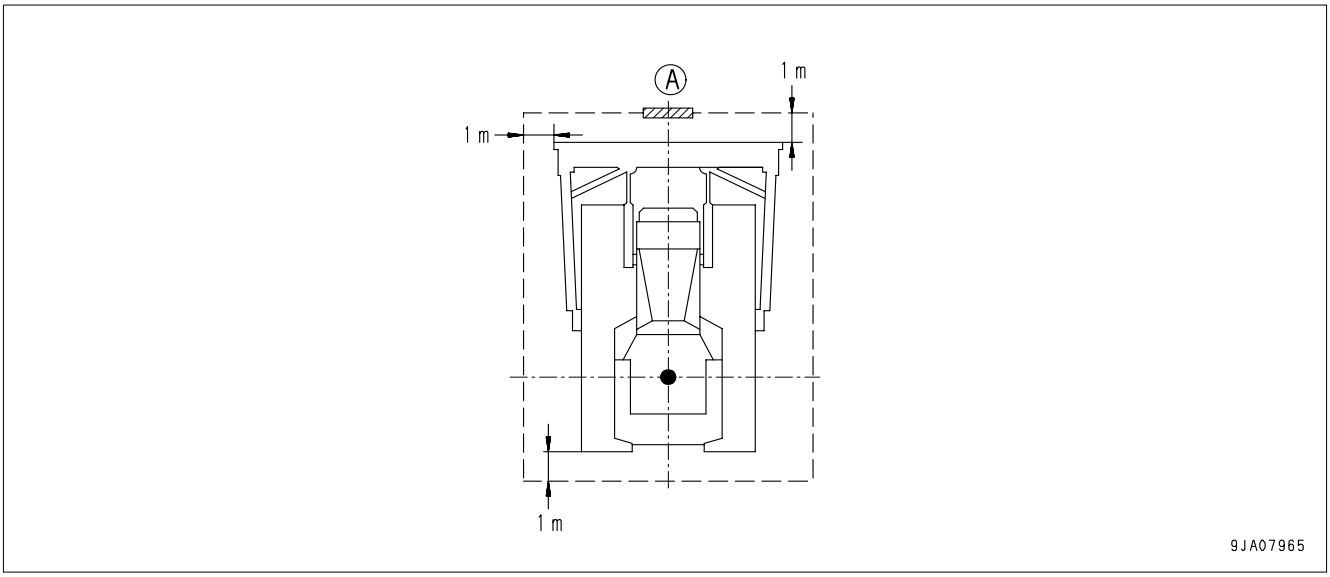

12M CIRCUMFERENCE VISIBILITY

The figure below shows a visibility from the machine within a circle of 12 m in radius. Shaded area (B) in the figure shows an area whose view is blocked by part of the machine. Operate the machine, fully aware that the machine has a portion that an operator cannot see.

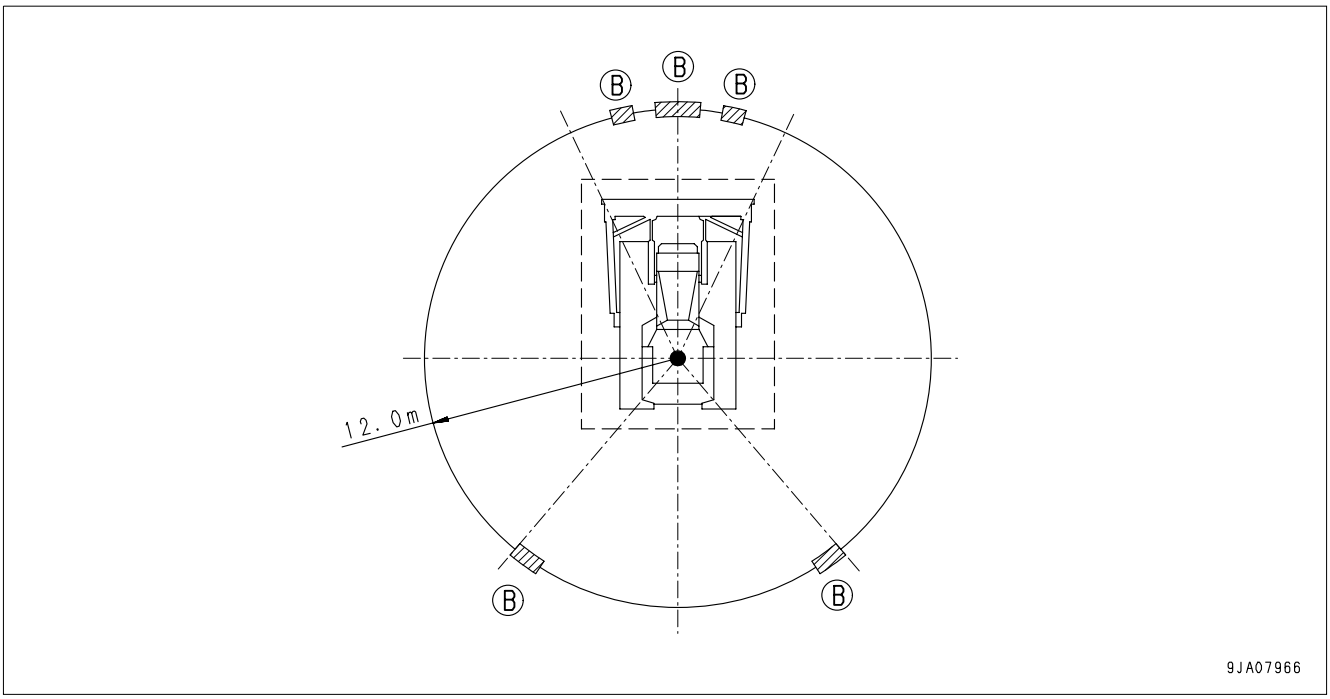

https://truckmanualshub.com/

BREAKING-IN THE NEW MACHINE

NOTICE
Your Komatsu machine has been thoroughly adjusted and tested before shipment from the factory. However, operating the machine under full load before breaking the machine in can adversely affect the performance and shorten the machine life.
Be sure to break in the machine for the initial 100 hours (as indicated on the service meter).

Make sure that you fully understand the content of this manual, and pay careful attention to the following points when breaking in the machine.

- Run the engine at idle for 15 seconds after starting it. During this time, do not operate the control levers or fuel control dial.
- Idle the engine for 5 minutes after starting it up.
- Avoid operation with heavy loads or at high speeds.
- Immediately after starting the engine, avoid sudden starts, sudden acceleration, unnecessary sudden stops, and sudden changes in direction.

https://truckmanualshub.com/

LOCATION OF PLATES, TABLE TO ENTER SERIAL NO. AND DISTRIBUTOR

When ordering replacement parts, please inform your Komatsu distributor of the following.

PRODUCT IDENTIFICATION NUMBER (PIN)/MACHINE SERIAL NO. PLATE

This is at the front bottom right of the operator's seat.

The design of the nameplate differs according to the territory.

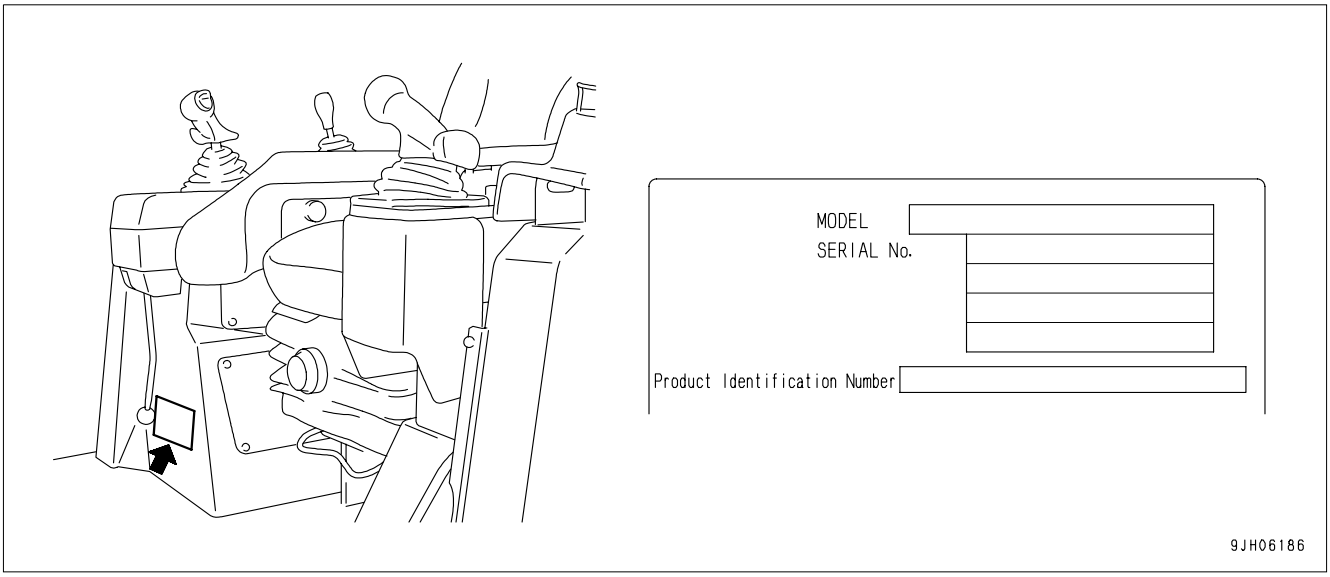

ENGINE SERIAL NO. PLATE POSITION

The engine serial No. plate is located on the side of the engine front cover on the left side of the machine.

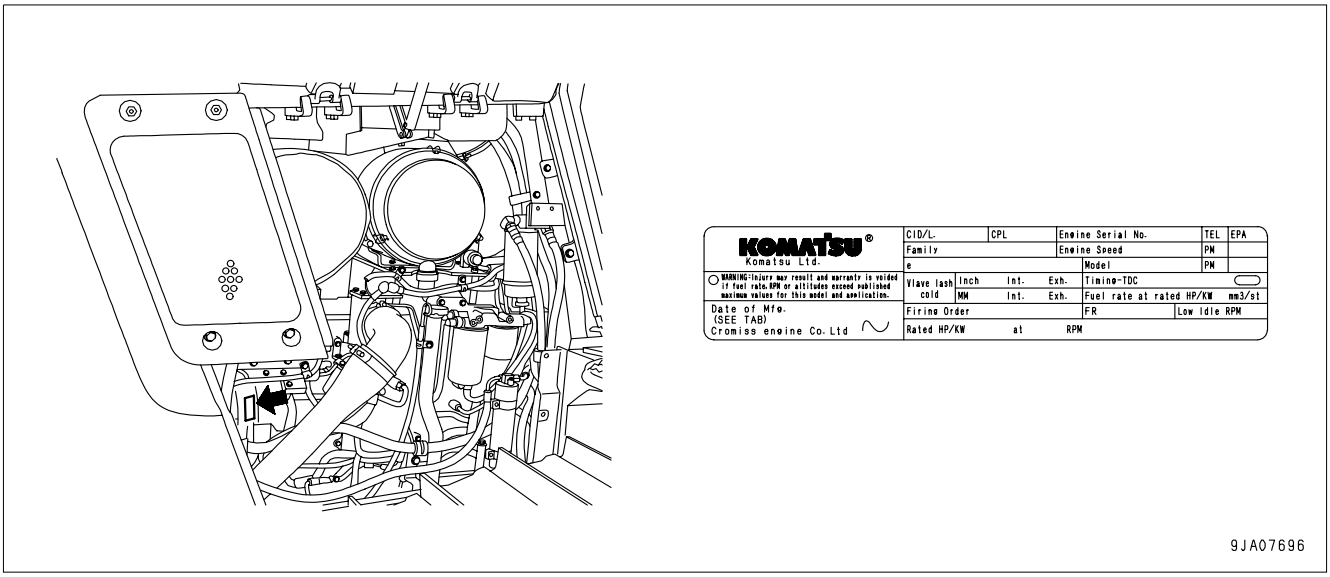

https://truckmanualshub.com/

ADDITIONAL EPA NAMEPLATE

The additional EPA nameplate is located on top of the engine head cover on the left side of the machine.

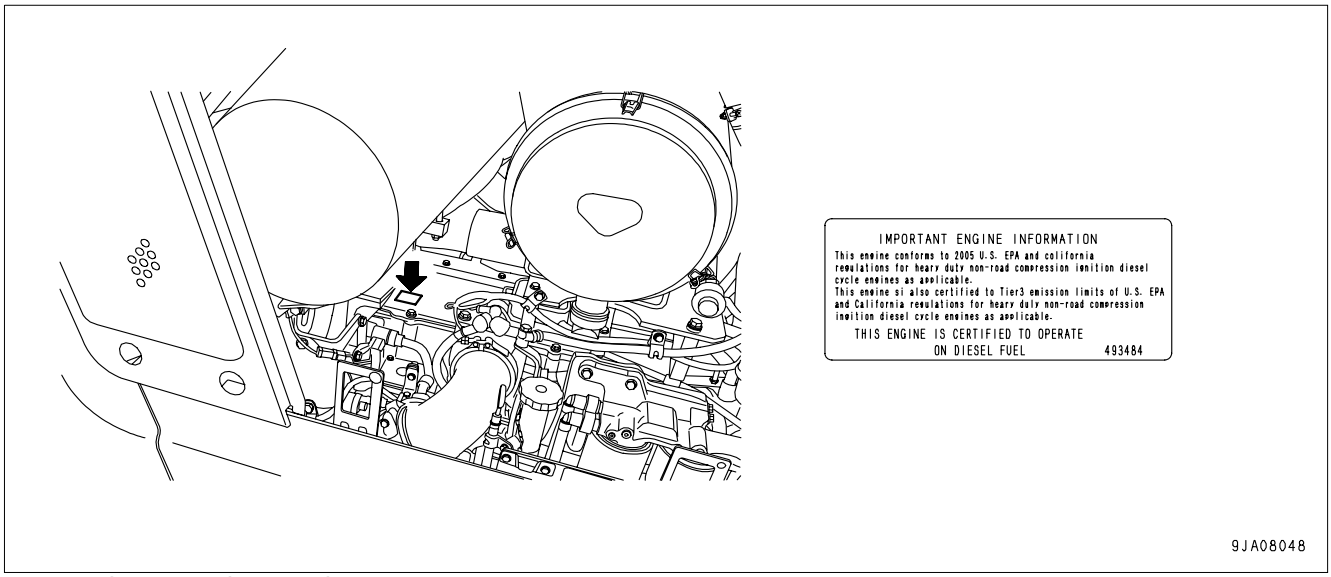

EPA: Environmental Protection Agency, U.S.A.

SERVICE METER POSITION

The service meter is provided at the lower part of the monitor panel.

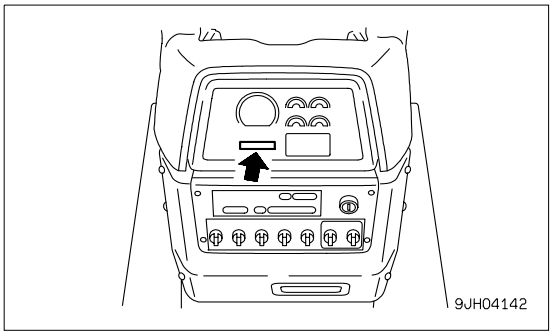

https://truckmanualshub.com/

TABLE TO ENTER SERIAL NO. AND DISTRIBUTOR

Machine serial No.	
Engine serial No.	
Product Identification Number (PIN)	
Manufacturers name: Address:	KOMATSU LTD. 3-6 Akasaka Minato-ku, 101 Tokyo Japan
Distributor Address Phone Service personnel for your machine:	

https://truckmanualshub.com/

MACHINE SERIAL NUMBER PLATE

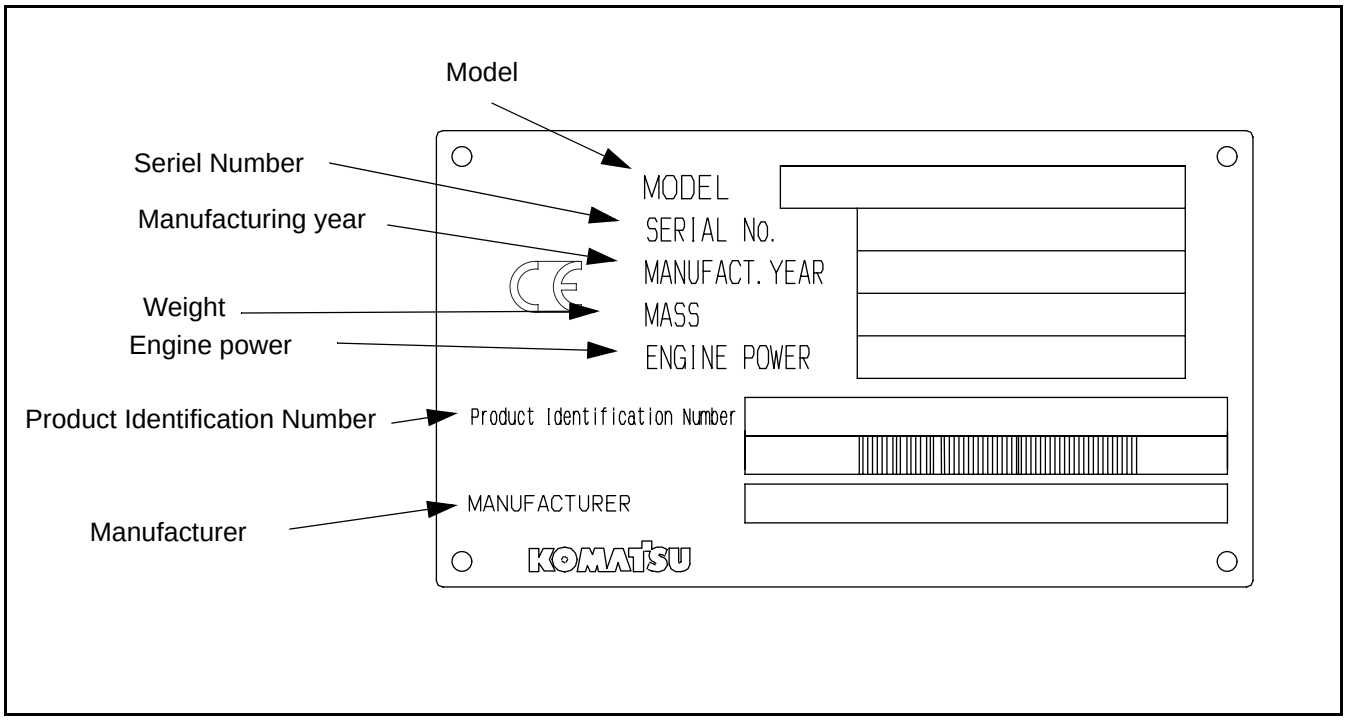

https://truckmanualshub.com/

CONTENTS

FOREWORD

BEFORE READING THIS MANUAL 1-2

IMPORTANT SAFETY INFORMATION 1-4
- Noise emission levels 1-5
- Vibration levels 1-5
  - Guide to Reduce Vibration Levels on Machine 1-6

INTENDED USE 1-8
- USE OF MACHINE 1-8
- GENERAL VIEW AND DIRECTIONS OF MACHINE 1-8
- VISIBILITY FROM OPERATOR'S SEAT 1-9
  - PROXIMITY VISIBILITY 1-9
  - 12M CIRCUMFERENCE VISIBILITY 1-9
- BREAKING-IN THE NEW MACHINE 1-10

LOCATION OF PLATES, TABLE TO ENTER SERIAL NO. AND DISTRIBUTOR 1-11
- PRODUCT IDENTIFICATION NUMBER (PIN)/MACHINE SERIAL NO. PLATE 1-11
- ENGINE SERIAL NO. PLATE POSITION 1-11
- ADDITIONAL EPA NAMEPLATE 1-12
- SERVICE METER POSITION 1-12
- TABLE TO ENTER SERIAL NO. AND DISTRIBUTOR 1-13
- MACHINE SERIAL NUMBER PLATE 1-14

SAFETY

IMPORTANT SAFETY INFORMATION 2-2

SAFETY LABELS 2-4
- POSITION FOR ATTACHING SAFETY LABELS 2-5
- SAFETY LABELS 2-5

PRECAUTIONS COMMON TO OPERATION AND MAINTENANCE 2-10

PRECAUTIONS DURING OPERATION 2-17

PRECAUTIONS FOR MAINTENANCE 2-23

PRECAUTIONS FOR MACHINE 2-29

OPERATION

GENERAL VIEW 3-2
- GENERAL VIEW OF MACHINE 3-2

https://truckmanualshub.com/

GENERAL VIEW OF CONTROLS AND GAUGES 3-3

EXPLANATION OF COMPONENTS 3-6
FRONT PANEL 3-6
CHECK MONITOR SYSTEM 3-7
EMERGENCY CAUTION ITEMS 3-8
CAUTION ITEMS 3-10
METER GROUP 3-12
LAMPS 3-16
SWITCHES 3-18
METHOD OF USING MAINTENANCE MODE 3-22
SWITCHES 3-29
CONTROL LEVERS AND PEDALS 3-33
CIRCUIT BREAKER 3-41
FUSE 3-41
FUSIBLE LINK 3-43
ELECTRIC POWER TAKE-OUT ADAPTER 3-43
MACHINE EQUIPPED WITH CAB 3-43
MACHINE EQUIPPED WITH ROPS CANOPY 3-44
DOOR - OPEN LOCK 3-44
SASH GLASS INTERMEDIATE LOCK 3-45
DOOR POCKET 3-45
OPENING AND CLOSING ENGINE SIDE COVER 3-46
ASHTRAY 3-46
CUP HOLDER 3-47
TOOL BOX 3-47
SHOVEL HOLDER 3-47
AIR CONDITIONER, HANDLING 3-48
GENERAL LOCATIONS AND FUNCTION OF CONTROL PANEL 3-48
METHOD OF OPERATION 3-50
PRECAUTIONS WHEN USING 3-51
SET SO THAT COLD AIR DOES NOT DIRECTLY BLOW ONTO THE GLASS SURFACE 3-51
INSPECTION DURING OFF-SEASON 3-51
PROCEDURE FOR REPLACING RECEIVER 3-51
CHECK COMPRESSOR BELT TENSION AND REFRIGERANT (GAS) LEVEL 3-52
CLEANING AIR FILTER 3-52

OPERATION 3-53
CHECK BEFORE STARTING ENGINE, ADJUST 3-53
WALK-AROUND CHECK 3-53
CHECK BEFORE STARTING 3-54
ADJUSTMENT 3-62
OPERATION AND CHECK BEFORE STARTING ENGINE 3-66
STARTING ENGINE 3-68
NORMAL STARTING 3-68
STARTING IN COLD WEATHER 3-70
OPERATIONS AND CHECKS AFTER STARTING ENGINE 3-73
WARMING UP OPERATIONS 3-73

https://truckmanualshub.com/

STARTING IN COLD WEATHER 3-74
STOPPING ENGINE 3-75
MACHINE OPERATION 3-77
MOVING MACHINE 3-77
STOPPING MACHINE 3-79
SHIFTING GEARS 3-79
GEARSHIFTING OPERATION 3-80
GEARSHIFTING OPERATION USING PRESET MODE FUNCTION 3-80
AUTO DOWN SHIFT OPERATION 3-82
SHIFTING BETWEEN FORWARD AND REVERSE 3-83
STEERING MACHINE 3-85
NORMAL TURNING 3-85
PRECAUTIONS FOR OPERATION 3-86
PAY ATTENTION TO GAUGES 3-86
PERMISSIBLE WATER DEPTH 3-86
PRECAUTIONS WHEN TRAVELING UP OR DOWN HILLS 3-86
PRECAUTIONS ON SLOPES 3-87
METHOD OF USING BRAKES 3-87
IT IS PROHIBITED TO KEEP THE DOOR OPEN DURING OPERATIONS 3-87
IT IS PROHIBITED TO MODIFY THE CAB GLASS IN ANY WAY THAT WILL OBSTRUCT THE VIEW 3-87
PRECAUTIONS FOR BLIND SPOTS CAUSED BY CAB AND ROPS STRUCTURES 3-88
WORK POSSIBLE USING BULLDOZER 3-88
DOZING 3-88
SMOOTHING 3-89
CUTTING INTO HARD OR FROZEN GROUND OR DITCHING 3-89
FELLING TREES, REMOVING STUMPS 3-89
ADJUSTING POSTURE OF WORK EQUIPMENT 3-90
ADJUST ANGLE OF BLADE EDGE 3-90
ADJUSTING SHIMS IN ASSEMBLING WORK EQUIPMENT 3-91
ADJUSTING TENSION OF CENTER BRACE 3-91
ADJUST AMOUNT OF TILT 3-92
METHOD OF ANGLING BLADE 3-93
PARKING MACHINE 3-94
CHECK AFTER FINISHING WORK 3-95
BEFORE STOPPING ENGINE 3-95
AFTER STOPPING ENGINE 3-95
LOCKING 3-96
TIPS FOR LONGER UNDERCARRIAGE LIFE 3-96
OPERATION METHOD 3-96
INSPECTION AND ADJUSTMENT 3-97
INSPECTION AND REPAIR 3-97

TRANSPORTATION 3-100
TRANSPORTATION MEANS 3-100
REMOVING CAB 3-100
PRECAUTIONS WHEN REMOVING WORK EQUIPMENT 3-100
PRECAUTIONS WHEN REMOVING ROPS 3-101

https://truckmanualshub.com/

LOADING, UNLOADING WORK 3-102
LIFTING MACHINE 3-105
TRAVELING ON ROADS 3-107

COLD WEATHER OPERATION 3-108
PRECAUTIONS FOR LOW TEMPERATURE 3-108
AFTER COMPLETION OF WORK 3-109
AFTER COLD WEATHER 3-109

LONG-TERM STORAGE 3-110
BEFORE STORAGE 3-110
DURING STORAGE 3-110
AFTER STORAGE 3-110

TROUBLESHOOTING 3-111
AFTER RUNNING OUT OF FUEL 3-111
PROCEDURE FOR BLEEDING AIR 3-111
METHOD OF TOWING MACHINE 3-112
IF BATTERY IS DISCHARGED 3-113
REMOVE AND INSTALL BATTERY 3-114
PRECAUTIONS FOR BATTERY CHARGING 3-114
STARTING ENGINE WITH BOOSTER CABLE 3-115
OTHER TROUBLE 3-117
ELECTRICAL SYSTEM 3-117
MONITOR PANEL 3-118
CHASSIS 3-119
ENGINE 3-121

MAINTENANCE

GUIDE TO MAINTENANCE 4-2

OUTLINE OF SERVICE 4-5
HANDLING OIL, FUEL, COOLANT, AND PERFORMING OIL CLINIC 4-5
OIL 4-5
FUEL 4-6
COOLANT AND WATER FOR DILUTION 4-6
GREASE 4-7
CARRYING OUT KOWA (Komatsu Oil Wear Analysis) 4-7
STORING OIL AND FUEL 4-8
FILTERS 4-8
RELATING TO ELECTRIC SYSTEM 4-8
HANDLING HYDRAULIC SYSTEM 4-9

WEAR PARTS LIST 4-10
WEAR PARTS LIST 4-10

RECOMMENDED FUEL, COOLANT, AND LUBRICANT 4-12

https://truckmanualshub.com/

USE OF FUEL, COOLANT AND LUBRICANTS ACCORDING TO AMBIENT TEMPERATURE 4-13
RECOMMENDED BRANDS, RECOMMENDED QUALITY FOR PRODUCTS OTHER THAN KOMATSU GENUINE OIL 4-15

STANDARD TIGHTENING TORQUES FOR BOLTS AND NUTS 4-16
TORQUE LIST 4-16

PERIODIC REPLACEMENT OF SAFETY CRITICAL PARTS 4-17
SAFETY CRITICAL PARTS 4-17

MAINTENANCE SCHEDULE CHART 4-19
MAINTENANCE SCHEDULE CHART 4-19
WHEN REQUIRED 4-19
CHECK BEFORE STARTING 4-19
EVERY 50 HOURS SERVICE 4-19
EVERY 250 HOURS SERVICE 4-19
EVERY 500 HOURS SERVICE 4-19
EVERY 1000 HOURS SERVICE 4-19
EVERY 2000 HOURS SERVICE 4-20
EVERY 4000 HOURS SERVICE 4-20
EVERY 8000 HOURS SERVICE 4-20

SERVICE PROCEDURE 4-21
WHEN REQUIRED 4-21
CHECK, CLEAN AND REPLACE AIR CLEANER ELEMENT 4-21
CLEAN INSIDE OF COOLING SYSTEM 4-24
CHECK TRACK SHOE TENSION, ADJUST 4-27
CHECK AND TIGHTEN TRACK SHOE BOLTS 4-29
REVERSE AND REPLACE END BITS AND CUTTING EDGES 4-30
CLEANING AND INSPECTION OF FINS OF RADIATOR, OIL COOLER, CONDENSER AND AFTER-COOLER 4-32
CHECK, ADJUST AIR CONDITIONER 4-35
GREASE DOOR HINGE 4-36
CHECK DOOR LOCK STRIKER 4-37
REPLACE DOOR DAMPER 4-37
CHECK DOOR LATCH 4-37
CHECK WINDOW WASHER FLUID LEVEL, ADD FLUID 4-38
REPLACE WIPER BLADE 4-39
CHECK IDLER OIL LEVEL, ADD OIL 4-40
ADJUST IDLER CLEARANCE 4-40
LUBRICATING UNIVERSAL JOINT 4-41
PROCEDURE FOR BLEEDING AIR IN HYDRAULIC SYSTEM 4-42
CHECK BEFORE STARTING 4-43
EVERY 50 HOURS SERVICE 4-43
DRAIN WATER, SEDIMENT FROM FUEL TANK 4-43
EVERY 250 HOURS SERVICE 4-44
LUBRICATING 4-44
GREASE EQUALIZER BAR SIDE PIN 4-45
GREASE EQUALIZER BAR CENTER PIN 4-46

https://truckmanualshub.com/

CHECK OIL LEVEL IN FINAL DRIVE CASE, ADD OIL 4-46
CHECK OIL LEVEL IN HYDRAULIC TANK, ADD OIL 4-47
CHECK LEVEL OF BATTERY ELECTROLYTE 4-48
CHECK, CLEAN ADDITIONAL FUEL STRAINER 4-49
CHECK BRAKE PERFORMANCE 4-50
CLEAN AIR CONDITIONER AIR FILTER (FRESH/RECIRC FILTER) 4-51
EVERY 500 HOURS SERVICE 4-52
CHANGE OIL IN ENGINE OIL PAN, REPLACE ENGINE OIL FILTER CARTRIDGE 4-52
REPLACE POWER TRAIN OIL FILTER ELEMENT 4-54
REPLACE FUEL PRE-FILTER CARTRIDGE 4-54
EVERY 1000 HOURS SERVICE 4-57
REPLACE FUEL MAIN FILTER CARTRIDGE 4-57
CHANGE OIL IN POWER TRAIN CASE, CLEAN STRAINERS (POWER TRAIN PUMP STRAINER, SCAVENGING PUMP STRAINER) 4-60
CHECK OIL LEVEL IN DAMPER CASE, ADD OIL 4-62
CHANGE OIL IN FINAL DRIVE CASE 4-63
CLEAN BREATHER 4-63
REPLACE CORROSION RESISTOR CARTRIDGE 4-64
CHECK FOR LOOSE ROPS MOUNT BOLTS 4-64
INSPECTION OF AFTER-COOLER CIRCUIT FOR LOOSENED BOLTS AND NUTS 4-64
EVERY 2000 HOURS SERVICE 4-65
CHANGE OIL IN HYDRAULIC TANK, REPLACE OIL FILTER ELEMENT 4-65
REPLACE HYDRAULIC TANK BREATHER ELEMENT 4-66
CHECKING CHARGE PRESSURE OF NITROGEN GAS IN ACCUMULATOR (FOR CONTROL CIRCUIT) 4-66
CHANGE OIL IN DAMPER CASE 4-69
CHECK VIBRATION DAMPER 4-70
CHECK ENGINE VALVE CLEARANCE, ADJUST 4-70
EVERY 4000 HOURS SERVICE 4-71
REPLACE ACCUMULATOR (FOR CONTROL CIRCUIT) 4-71
CHECK WATER PUMP 4-71
CHECKING FOR LOOSENESS OF HIGH-PRESSURE CLAMP, HARDENING OF RUBBER 4-72
CHECKING FOR MISSING FUEL SPRAY PREVENTION CAP, HARDENING OF RUBBER 4-73
EVERY 8000 HOURS SERVICE 4-74
REPLACE HIGH-PRESSURE PIPING CLAMP 4-74
REPLACE FUEL SPLAY PREVENTION CAPS 4-74

SPECIFICATIONS

SPECIFICATIONS 5-2

ATTACHMENTS, OPTIONS

GENERAL PRECAUTIONS 6-2
PRECAUTIONS RELATED TO SAFETY 6-2

https://truckmanualshub.com/

HANDLING HYDRAULIC RIPPER 6-3
GENERAL VIEW 6-3
EXPLANATION OF COMPONENTS 6-4
OPERATION 6-5
CHECK BEFORE STARTING ENGINE, ADJUST 6-5
PRECAUTIONS WHEN OPERATING 6-5
ADJUSTING POSTURE OF WORK EQUIPMENT 6-5
TROUBLESHOOTING 6-7
OTHER TROUBLE 6-7
MAINTENANCE 6-7
EVERY 250 HOURS SERVICE 6-7
SPECIFICATIONS 6-8

AIR SUSPENSION SEAT 6-9

DELUXE SEAT 6-12

HEADREST 6-14

EQUIPPING FIRE EXTINGUISHER AND FIRST-AID KIT 6-15

INDEX

COLOPHON

https://truckmanualshub.com/

https://truckmanualshub.com/

SAFETY

⚠ WARNING

Please read and make sure that you fully understand the precautions discribed in this manual and the safety labels on the machine. When operating or servicing the machine, always follow these precaustions strictly.

https://truckmanualshub.com/

IMPORTANT SAFETY INFORMATION

SAFETY LABELS 2-4
POSITION FOR ATTACHING SAFETY LABELS 2-5
SAFETY LABELS 2-5

PRECAUTIONS COMMON TO OPERATION AND MAINTENANCE 2-10
FOR SAFE OPERATION 2-10
KNOW YOUR EQUIPMENT 2-10
PREPARE FOR SAFE OPERATION 2-10
CLOTHING AND PERSONAL PROTECTIVE ITEMS 2-11
FIRE EXTINGUISHER AND FIRST AID KIT 2-11
KEEP THE MACHINE CLEAN 2-11
IF ABNORMALITIES ARE FOUND 2-11
HANDRAILS AND STEPS 2-12
MOUNTING AND DISMOUNTING 2-12
INSIDE OPERATOR'S COMPARTMENT 2-12
PRECAUTIONS WHEN STANDING UP FROM OPERATOR'S SEAT 2-13
PRECAUTIONS WHEN LEAVING THE MACHINE 2-13
EMERGENCY ESCAPE FROM OPERATOR'S CAB 2-13
FIRE PREVENTION 2-14
ACTION IF FIRE OCCURS 2-15
BATTERY HAZARD PREVENTION 2-15
PRECAUTIONS RELATED TO VENTILATION OF EXHAUST GAS 2-16
BE CAREFUL ABOUT ASBESTOS DUST 2-16

PRECAUTIONS DURING OPERATION 2-17
EXAMINATION AND CONFIRMATION OF WORKSITE 2-17
WORKING ON LOOSE GROUND 2-17
DO NOT GO NEAR HIGH-VOLTAGE CABLES 2-17
ENSURE GOOD VISIBILTY 2-18
CONFIRMATION OF MARK 2-18
PRECAUTION FOR WARNING TAG 2-18
CHECK BEFORE STARTING ENGINE,ADJUST 2-18
PRECAUTIONS WHEN STARTING 2-19
STARTING WITH BOOSTER CABLES 2-19
CHECK BEFORE STARTING OPERATION 2-20
PRECAUTIONS WHEN TRAVELING IN FORWARD OR REVERSE 2-20
PRECAUTIONS WHEN TRAVELING 2-21
PRECAUTIONS FOR ACCUMULATED SNOW, AND ICE 2-21
SHIPPING 2-21
WHEN TOWING 2-22

PRECAUTIONS FOR MAINTENANCE 2-23
UNAUTHORIZED MODIFICATION 2-23
WARNING TAG 2-23
KEEP WORK PLACE FOR MAINTENANCE CLEAN AND TIDY 2-23
REPAIR WELDING 2-23
USE CAUTION WHEN FUELING 2-23
PERSONAL MAINTENANCE 2-23
PROPER TOOLS 2-24
SELECTION WORK PLACE FOR MAINTENANCE 2-24
STOP ENGINE BEFORE CARRYING OUT INSPECTION AND MAINTENANCE 2-24
TWO WORKERS FOR INSPECTION AND MAINTENANCE WHEN ENGINE IS RUNNING 2-25
WORK UNDER THE MACHINE 2-25
PRECAUTIONS WHEN USING HAMMER 2-26

https://truckmanualshub.com/

PREVENTION BURNS FROM HOT WATER 2-26
PREVENTION BURNS FROM HOT OIL 2-26
COMPRESSED AIR 2-26
HANDLING HIGH-PRESSURE HOSES, PIPING 2-26
PRECAUTIONS WITH HIGH-PRESSURE OIL 2-27
PRECAUTIONS WHEN USING HIGH-PRESSURE GREASE TO ADJUST TRACK TENSION 2-27
DO NOT DISASSEMBLE RECOIL SPRING 2-27
ACCUMULATOR 2-28
MAINTENANCE OF AIR CONDITIONER 2-28
WASTE MATERIALS 2-28

PRECAUTIONS FOR MACHINE 2-29
PRECAUTIONS WHEN USING ROPS (Roll Over Protective Structure) 2-29

https://truckmanualshub.com/

SAFETY LABELS

The following safety labels are used on this machine.

- Make sure that you fully understand the location and content of each safety label, together with the means of avoiding the danger shown.

- To ensure that the contents of safety labels can be read properly, be sure that they are in the correct place and always keep them clean. When cleaning the labels, do not use organic solvents or gasoline. They may cause the labels to peel off.

- If the labels are damaged, lost, or cannot be read properly, contact your Komatsu distributor immediately regarding their replacement. For details concerning the part numbers for the labels, see this manual or the actual label.

- There are also other labels on the machine in addition to the safety labels. Handle those labels in the same way.

https://truckmanualshub.com/

POSITION FOR ATTACHING SAFETY LABELS

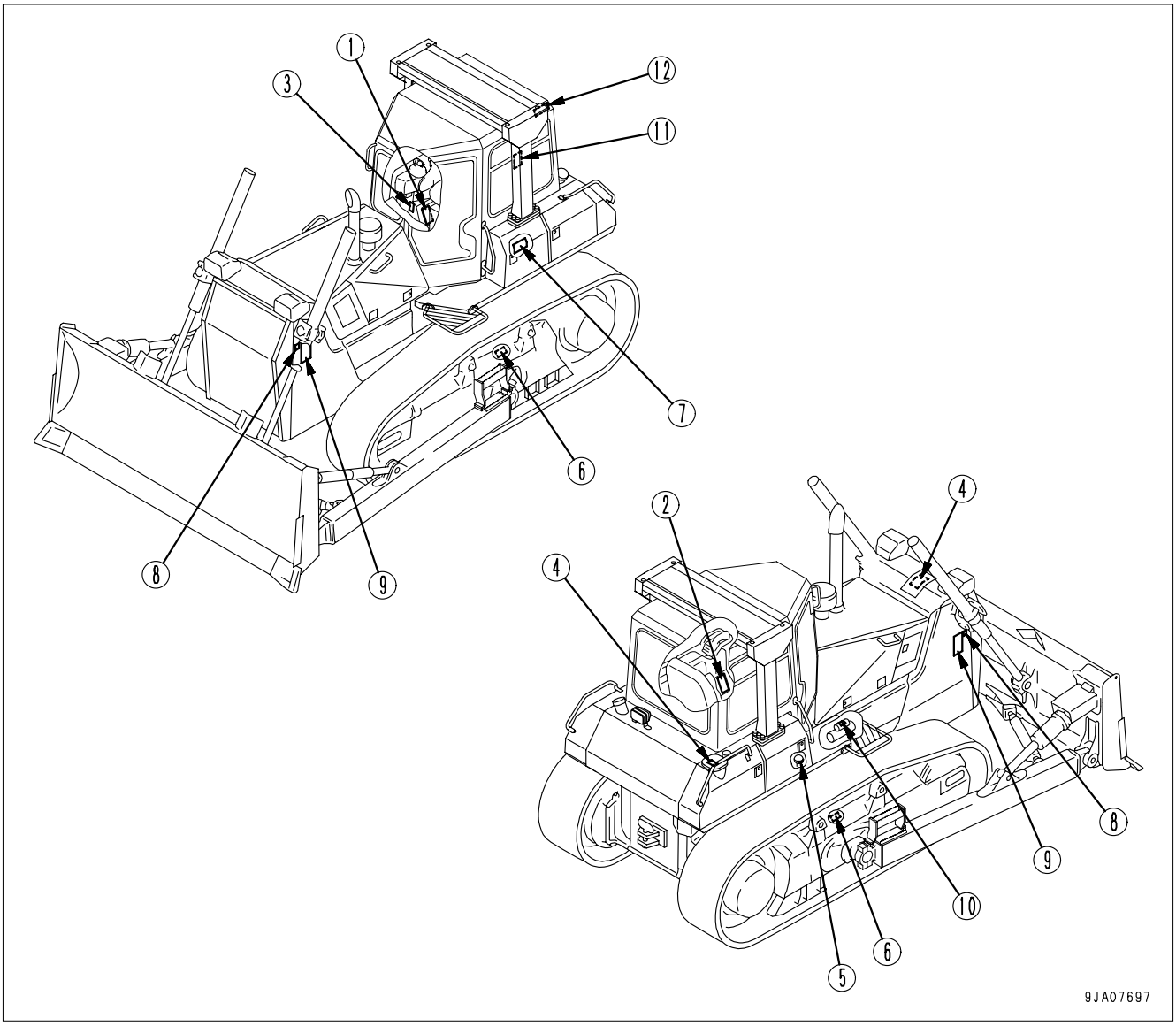

SAFETY LABELS

(1) Caution before operating or maintaining machine

(09651-A0641)

- Warning!

- Read manual before operation, maintaince, disassembly, assembly and transportation.

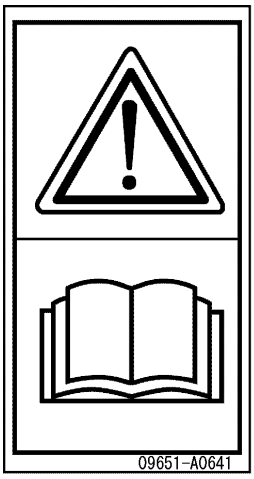

https://truckmanualshub.com/

(2) Caution before moving in reverse (09802-B0750)

(3) Caution for leaving operator's seat (09654-B0641)

- Sign indicates a hazard of unexpected moving of stopped machine.
- Lower working device to ground, move safety lever to lock position and take engine key with you before leaving machine.

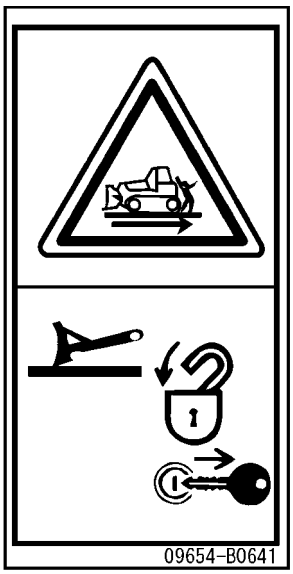

(4) Caution with high-temperature coolant, hydraulic oil

(09653-A0481)

- Never remove the cap when the engine is at operating (high) temperature. Stream or high temperature oil blowing up from the radiator or hydraulic tank, will cause personal injury and / or burns.
- Never remove the radiator or hydraulic tank oil filler when cooling water or hydraulic oil is at high temperatures.

https://truckmanualshub.com/

(5) Caution for accumulator (09659-A057B)

- There is the hazard of explotion causing injury.
- Do not disassemble the accumulator, make holes in it, weld it, cut it, hit it, roll it or bring it near flame.

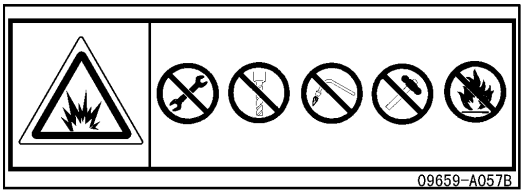

(6) Caution for adjusting track tension (09657-A0881)

The safety label is attached to the rear side of the track adjustment window cover.

- Sign indicates a hazzard of flying plug from track adjuster that could cause injury.
- Read the manual and adjusting track for safe and proper handling.

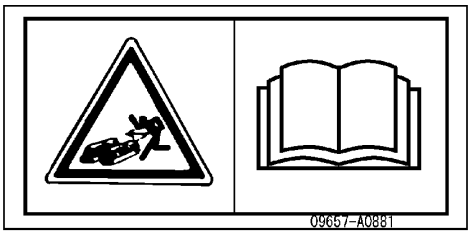

(7) Caution for battery cable (09808-A0881)

- Sign indicates an electric hazzard from handling the cable.
- Read the operation and maintenance manual and carrying out the correct method when handling.

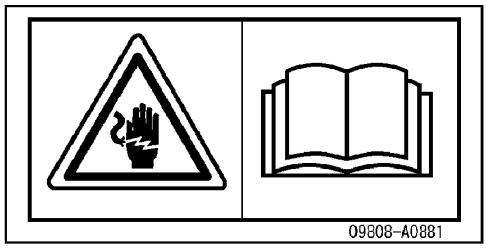

(8) Stop rotation during inspection and maintenance

(09667-A0481)

- Sign indicates a hazard of rotating parts, such as belt.
- Turn off before inspection and maintenance.

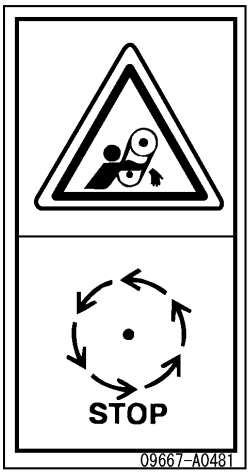

https://truckmanualshub.com/

(9) Caution for approach when machine moving

(09806-B1201)

- Sign indicates a hazard of being run over by moving equipment.
- Keep a safe distance from equipment when it is moving.

(10) Prohibition of jump start (09842-A0481)

- Start the engine only after sitting down in the operator's seat.
- Do not attempt to start the engine by short-circuiting the engine starting circuit. Such an act may cause a serious bodily injury or fire.

(11) Caution for ROPS (09620-B2000)

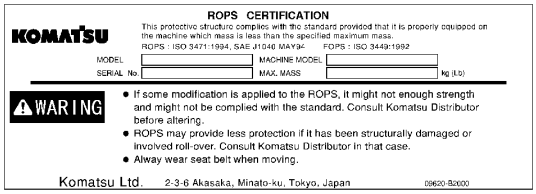

ROPS CERTIFICATION

This protective structure complies with the standard provided that is properly equipped on the machine which mass is less than the specified maximum mass.

1. MODEL	3. FOPS LEVEL No.	5. MAX. MASS kg (Lb)
2. MACHINE MODEL	4. SERIAL NO.	

WARNING

- If some modification is applied to the ROPS. It might not enough strength and might not be complied with the standard. Consult Komatsu Distributor before altering.
- ROPS may provide less protection if it has been structurally damaged or involved roll-over. Consult Komatsu Distributor in that case.

Always wear seat belt when moving.

https://truckmanualshub.com/

(12) Caution for FOPS (09620-C2000)

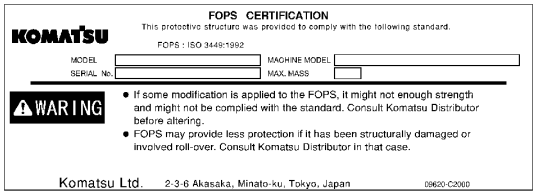

FOPS CERTIFICATION
This protective structure was provided to comply with the following standard.

1. MODEL	2. MACHINE MODEL
3. SERIAL NO.	4. FOPS LEVEL No.

- If some modification is applied to the FOBS. It might not enough strength and might not be complied with the standard. Consult Komatsu Distributor before altering.
- FOBS may provide less protection if it has been structurally damaged or involved roll-over. Consult Komatsu Distributor in that case.
- Always wear seat belt when moving.

https://truckmanualshub.com/

PRECAUTIONS COMMON TO OPERATION AND MAINTENANCE

Improper operation and maintenance can cause serious injury or death. Read the manual and safety labels before operating or servicing the machine. Follow all warnings and instructions.

FOR SAFE OPERATION

For safe operation of this machine, you must be a qualified and authorized operator. To be qualified, you must understand the written instructions supplied by the manufacturer, have training including actual operation of this machine and know the safety rules and regulations for the job site.

On the job, an operator must not use drugs or alcohol which can impair his alertness or coordination. An operator on prescription or over-the-counter drugs needs medical advice regarding whether or not he/she can safely operate the machine.

KNOW YOUR EQUIPMENT

Know your machine. Know how to operate all equipment on your machine. Know the purpose of the controls, gauges and indicators. Know the rated load capacity, speed range, braking and steering characteristics, turning radius and operating clearances. Keep in mind that rain, snow, ice, loose gravel, soft ground, etc. change the operating capabilities of your machine.

Study the Manual before starting the machine. If there is something in the Manual you do not understand, ask your supervisor to explain it to you.

PREPARE FOR SAFE OPERATION

- **Check the Safety Equipment**

  To protect you and others around you, your machine may be equipped with the following safety equipment. See that each item is securely in place and in operating condition.

  - Rollover Protection
  - Falling Object Protection
  - Lights
  - Horn
  - Mirrors
  - Windshield Wipers & Washers (machine equipped with cab)

  Never remove or disconnect any safety device.

- **Check the machine conditions**

  Before operating the machine, check the machine and make sure that it is in a good condition. Never start the machine operation until after a defect, if any, is completely removed.

  - Check the machine for any damaged and missing parts, and if necessary, make necessary repairs.
  - If any of the trunnions, seals, bushings and bearings is found defective, replace it with a new one.
  - Check the service brake and parking brake to see if they work normally.
  - Check all the cooling systems

  Before checking the radiator cooling water level, make sure that the cooling water temperature has sufficiently cooled off.

https://truckmanualshub.com/

CLOTHING AND PERSONAL PROTECTIVE ITEMS

To avoid the risk of injury:

- Do not wear jewelry while in operation. You may catch on the control lever or a protruding part and fall off.
- Do not wear loose clothes while in operation. You may catch on the control lever or any other lever, causing the machine to make an unexpected move.
- Always wear a hard hat and safety shoes. In addition, depending on the nature of the work, wear safety glasses, mask, ear mufflers, safety belt, or other protective equipment.
- Do not let your hair extend outside your hard hat. It could get caught in rotating parts.

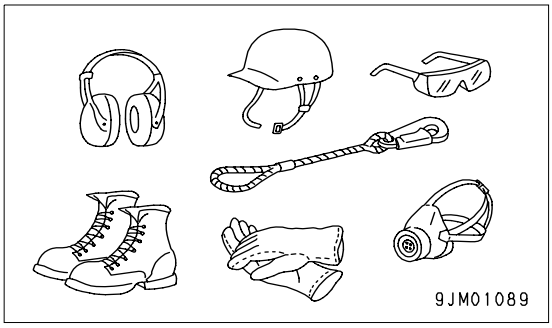

FIRE EXTINGUISHER AND FIRST AID KIT

- Make sure that a fire extinguisher is provided in case of fire. Quick extinguishing of a fire can reduce the damage to the machine and avoid risk of personal injury.

  Check the fire extinguisher periodically and make sure that you fully understand the method of use.
- Make sure that a first aid kit is provided in case of injury. If immediate action is taken in case of injury, the extent of the injury can be reduced. Keep the first aid kit in the specified place, check the contents periodically, and replace any items that have been used or are missing.

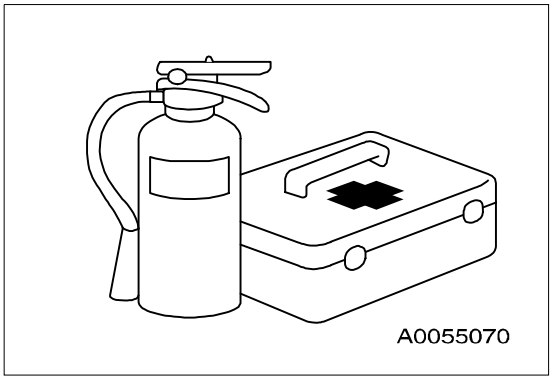

KEEP THE MACHINE CLEAN

To avoid the risk of injury:

- If there is mud or oil stuck to the machine, you may slip and fall when getting on or off the machine, wipe off any mud or oil stuck to the machine, and always keep the machine clean.
- If water gets into the electrical system, the electrical equipment may malfunction or not work properly. If it malfunctions, there is danger of the machine moving unexpectedly, leading to serious personal injury or death. When cleaning the machine, do not to wash the electrical system (sensors, connectors) with water or steam.

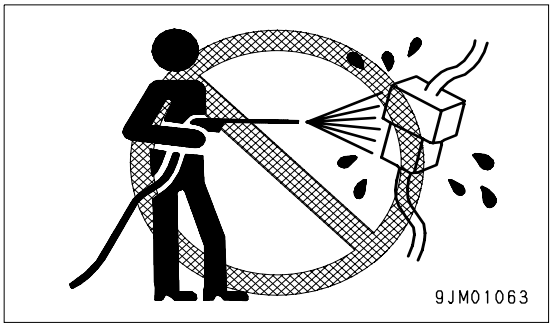

IF ABNORMALITIES ARE FOUND

During operation, inspection or maintenance, if any abnormality is noticed (noise, vibration, smell, wrong display by gauges, smoke, oil leakage, or abnormal displays on the gauges, warning devices or monitors), stop the machine on flat ground and report the problem immediately to the jobsite supervisor. If the machine continues to be operated without repairing the problem, it may lead to serious personal injury or death.

https://truckmanualshub.com/

HANDRAILS AND STEPS

To avoid risk of injury when getting on or off the machine.

- When getting on or off the machine, always face the machine and maintain three- point contact (both feet and one hand or one foot and both hands) with the handrails, steps (and also track shoes) to ensure that you support yourself securely.
- Always check the handrails and steps for oil, grease, or mud. Wipe them clean before using.
- Repair any damage and tighten any loose bolts.
- Never get on or off the machine while holding tools in your hand.
- When getting on or off the machine, never hold any control lever, as it can move.

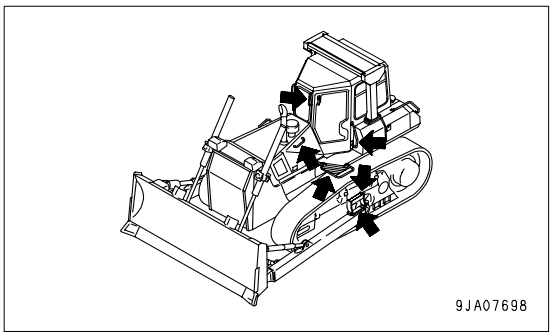

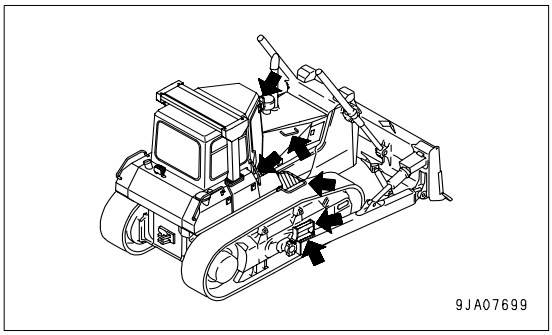

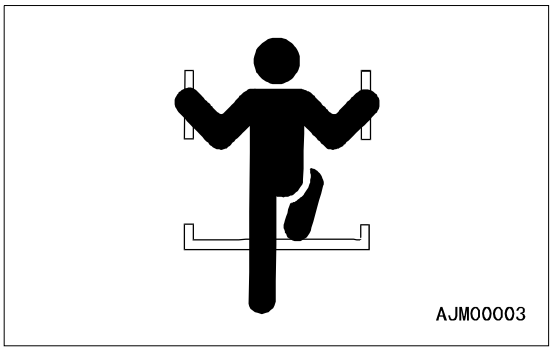

MOUNTING AND DISMOUNTING

- Never jump onto the machine. There is danger that your feet will slip, and you will fall and be seriously injured.
- Never jump off the machine. There is danger that you will break a bone or suffer other serious injury when landing.
- Never get on or off a moving machine. You may be unable to support yourself with the handrail or steps, and fall from the machine, suffering injury. Even if the machine starts off with no operator on it, do not jump on the machine and try to stop it.

INSIDE OPERATOR'S COMPARTMENT

- When entering the operator's compartment, always wipe off all mud and oil from the soles of your shoes. If you try to operate the pedals with mud or oil on the soles of your shoes, your foot may slip and the machine may move unexpectedly, causing serious personal injury to yourself or others.
- Do not leave tools or a machine parts lying around inside the operator's compartment. If tools or parts get into the equipment, it may obstruct operation and cause the machine to move unexpectedly, resulting in serious personal injury.
- Do not stick suction pads to the window glass. Suction pads act as a lens and may cause fire.
- Do not use a cell phone when driving or operating the machine. This may lead to mistakes in operation, which could serious personal injury to yourself or others.

https://truckmanualshub.com/

- Do not bring any dangerous items, such as explosives or items that may ignite, into the operator's compartment.

PRECAUTIONS WHEN STANDING UP FROM OPERATOR'S SEAT

When standing up from the operator's seat, always lower the work equipment to the ground, operate work equipment lock lever (1) and parking brake lever (2) to the LOCK (L) position and stop the engine.

If you accidentally touch any of the work equipment levers when it is not securely locked, the machine may suddenly move and cause a serious injury or death.

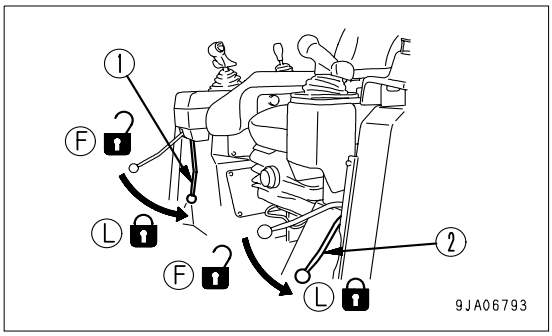

PRECAUTIONS WHEN LEAVING THE MACHINE

If the correct procedures are not followed when stopping the machine, the machine may suddenly move off with no operator on it. This may lead to serious personal injury. Always observe the following precautions strictly.

- Before leaving the operator's compartment, lower the work equipment to the ground, operate work equipment lock lever (1) and parking brake lever (2) to the LOCK (L) position and then stop the engine.
- Remove the key from the starting switch.
- Lock all the doors of the operator's compartment.
- Take the key with you and leave it in the specified place.

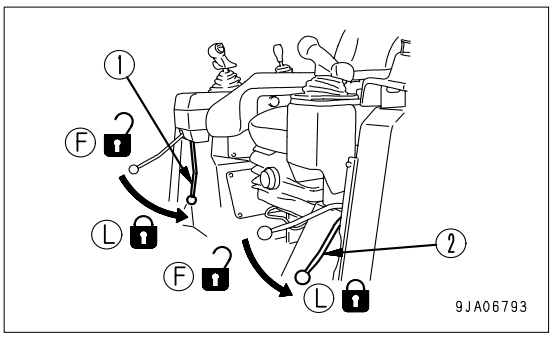

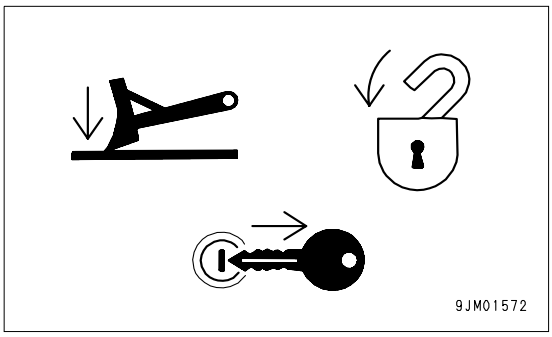

EMERGENCY ESCAPE FROM OPERATOR'S CAB

There are doors on the left and right sides of the operator's compartment. If the door on one side will not open, escape through the door on the opposite side. If you do not escape quickly during an emergency, you may suffer serious injury.

https://truckmanualshub.com/

FIRE PREVENTION

- **Fire coming from fuel, oil, antifreeze, window washer fluid**

  Fuel, oil, antifreeze, and window washer fluid will ignite if brought close to a flame, so there is danger of fire. Always obey the following.

  - Do not smoke or use any flame near fuel, oil, antifreeze, or window washer fluid.
  - Always stop the engine before adding fuel or oil.
  - When adding fuel, oil, antifreeze, or window washer fluid, stay in the area and observe carefully that nothing is spilled.
  - After adding fuel or oil, tighten all the caps securely to prevent the fuel or oil from flowing out.
  - Do not spill oil on hot surfaces or components of the electrical system.
  - After adding fuel or oil, wipe up any spilled fuel or oil with a cloth.
  - Put fuel-soaked or oily cloths and other flammable materials in the specified container and keep the container in a place where there is no danger of the contents igniting.
  - Use non-flammable flushing oil when washing parts. Do not use fuel or gasoline or any other fluid that may ignite.
  - Do not weld or use a gas cutter on pipes or tubes containing flammable fluids.
  - Store fuel and oil in a place where there is good ventilation.
  - Store fuel and oil in the specified place, do not store more than the specified storage limit, and do not let any unauthorized person enter the area.
  - When carrying out grinder operations or welding operations on the machine, move any flammable substances to a place where there is no danger of them igniting.

A0055020

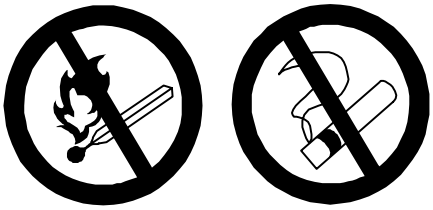

A0055040

- **Fire coming from accumulated or spilled flammable substances**

  Remove dry leaves, wood chips, paper, or other flammable substances that may accumulate on the engine compartment.

- **Fire coming from electric wiring**
  - Clean all the electric wiring connectors and tighten the connections securely.
  - Check starting that there are no loose or damaged electric wires and tighten any loose connectors or wiring clamps.
  - Repair or replace any damage wiring.

https://truckmanualshub.com/

- **Fire coming from hydraulic line**

  Fix the cushions of the piping, guards, tubes, and hoses securely.

- **Explosion caused by lighting equipment**

  Use explosion-proof lighting equipment when inspecting the fuel, oil, battery fluid, window washer fluid, or coolant. When using the machine as the power source for the lighting equipment, see “CIGARETTE LIGHTER (3-32)“.

ACTION IF FIRE OCCURS

- Turn the starting switch OFF, stop the engine, and remove the key.
- Leave the operator's compartment through the door in the direction of safety, and use the handrail and steps to escape from the machine.
- Do not jump off the machine. There is the danger of falling and suffering serious injury.

BATTERY HAZARD PREVENTION

- **Danger of battery exploding**

  When the battery is being charged, flammable hydrogen gas is generated from the poles. If the gas ignites, it may explode and cause serious injury or fire. Therefore:

  - Do not use or charge the battery if the battery electrolyte is below the LOWER LEVEL mark. Always carry out periodic inspection of the battery electrolyte level, and add distilled water to the UPPER LEVEL mark.
  - Do not smoke or bring any flame close to the battery.
  - Remove the battery from the machine, take it to a well-ventilated place, remove the battery caps, then carry out the charging. After charging, tighten the battery caps securely.

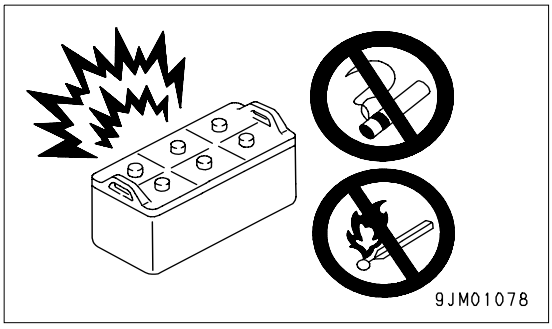

- **Danger from dilute sulphuric acid**

  The battery electrolyte includes dilute sulphuric acid. If dilute sulphuric acid gets on your skin or in your eyes, you may suffer serious injury. When handling the battery, always do as follows.

  - When handling the battery, always wear safety glasses and rubber gloves.
  - If battery electrolyte gets into your eyes, immediately wash your eyes with large amounts of fresh water for at least 15 minutes, and be sure to wash behind your eyelids. After that, get medical attention immediately.
  - If battery electrolyte gets on your skin or clothes, wash it off immediately with large amounts of water. When doing this, do not use any alkaline fluid as a neutralizer. If you suffer any chemical burn, get medical attention immediately.

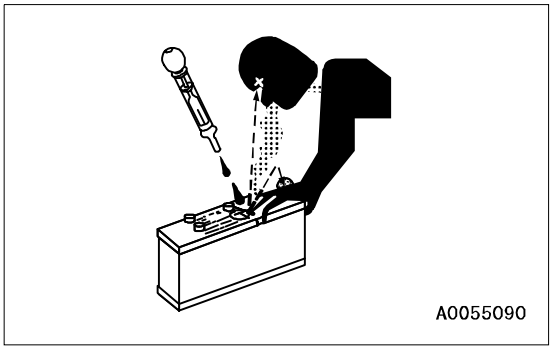

https://truckmanualshub.com/

- **Danger of sparks**

  If sparks are generated, they may fly and cause serious personal injury. Always obey the following.

  - Do not short-circuit the battery terminals through contact with metallic objects, such as tools, across the terminals.
  - Do not leave tools lying around.
  - When removing the battery terminals, remove the ground terminal (negative (-) terminal) first, then remove the positive (+) terminal.
  - When installing, install the positive (+) terminal first, then install the ground terminal.
  - Tighten the battery terminals securely.
  - Secure the battery firmly in the specified position.

PRECAUTIONS RELATED TO VENTILATION OF EXHAUST GAS

The engine exhaust gas contains substances that may damage your health or even cause death. Start or operate the engine in a place where there is good ventilation. If the engine or machine must be operated inside a building or under ground, where the ventilation is poor, take steps to ensure that the engine exhaust gas is removed and that ample fresh air is brought in.

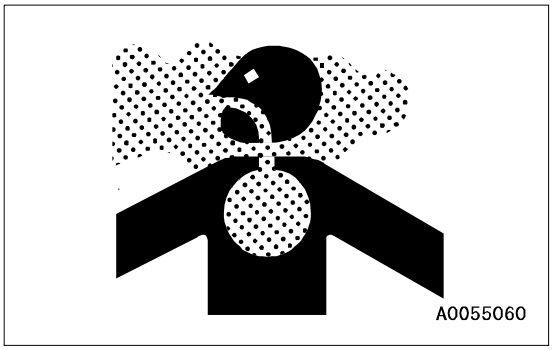

BE CAREFUL ABOUT ASBESTOS DUST

If you breathe in air containing asbestos dust, there is danger that that you contract lung cancer or mesothelioma. Inhaled asbestos dust does not cause these diseases immediately, but it usually takes ten- odd years for the symptom to appear. Just for that reason, you have to be cautious particularly about asbestos. In the building demolition work or industrial wastes disposal work, keep to the rules and regulations that provide for working conditions in such workplaces. If you use non- genuine parts, there is a risk that they contain asbestos, so use only Komatsu genuine parts. This machine does use any parts that contain asbestos.

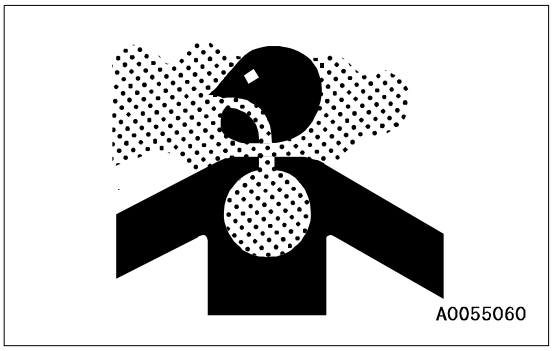

https://truckmanualshub.com/

PRECAUTIONS DURING OPERATION

EXAMINATION AND CONFIRMATION OF WORKSITE

Before starting operations, check first if there is any danger on the jobsite. If you do not understand the dangers of the jobsite before starting operations, the machine may tip over, or the ground may collapse, or rocks may fall, causing injury to the operator. Always:

- Check the terrain and condition of the ground at the worksite, and determine the safest method of operation. Do not operate where there is a hazard of landslides or falling rocks.
- Prevent any unauthorized person from entering the operating area.
- Before operating in shallow water or on soft ground, check the depth of the water, speed of the current, and the firmness and shape of the ground. Avoid any area where there is any obstruction to travel operations.
- Maintain the travel path on the jobsite so that there is no obstruction to travel operations.

WORKING ON LOOSE GROUND

- Do not operate close to cliffs, road shoulders, or deep ditches where the ground may be soft. There is danger that the ground may collapse under the weight or vibration of the machine, causing the machine to tip over or fall, and resulting in injury to the operator. In particular, be careful when carrying out operations after rain, after explosives have been used, after earthquakes, or in other cases where the ground may easily collapse.
- The ground on embankments or close to ditches may collapse under the weight or vibration of the machine, causing the machine to tip over or fall, and resulting in injury to the operator. Take action to ensure that the ground is safe before starting operations.

DO NOT GO NEAR HIGH-VOLTAGE CABLES

Electrocution can result from contacting or approaching underground or overhead power cables. Never approach overhead power lines with any part of your machine. Use extreme caution.

- Before starting work in the vicinity of electric cables, inform the local power company of the work to be performed, and ask them to take the necessary steps to ensure safety.
- Know your margin of safety. If possible, have power to the lines disconnected. If not possible, request a signal person for guidance to maintain at least minimum distance required by law from the overhead lines.
- To prepare for any possible emergencies, wear rubber shoes and gloves. Lay a rubber sheet on top of the seat, and be careful not to touch the chassis with any exposed part of your body.
- When carrying out operations near high voltage cables, do not let anyone near the machine.
- If the machine should come too close or touch the electric cable, to prevent electric shock, the operator should not leave the operator's compartment until it has been confirmed that the electricity has been shut off.

  Also, do not let anyone near the machine.

Voltage of Cables	Safety Distance
100V - 200V	Over 2 m
6,600V	Over 2 m
22,000V	Over 3 m
66,000V	Over 4 m
154,000V	Over 5 m
187,000V	Over 6 m
275,000V	Over 7 m
500,000V	Over 11 m

https://truckmanualshub.com/

ENSURE GOOD VISIBILTY

When the machine is run or operated in a jobsite of low visibility, there is always a possibility that an operator gets injured or causes a serious bodily injury, because they cannot see an obstacle around the machine or check the conditions at the jobsite. Under such circumstances, therefore, strictly adhere to the following instructions.

- If the visibility at the jobsite is not good enough, post a signal person at an appropriate spot, and instruct the operator to take heed of the signs and follow a signal from the signal person.
- Limit a signal person only to one.
- Instruct the operator to turn on the working lamp and headlamps of the machine in a dark spot. Install lighting equipment additionally, if necessary, so that the jobsite can be brightly illuminated.
- When fog, snow, rain or dust hinders the visibility, stop the work.

CONFIRMATION OF MARK

On soft road shoulders or ground, set up signs to inform of the condition. If the operator does not know the condition of the jobsite, the machine may tip over or fall, resulting in injury to the operator. Make sure that all operation personnel understand the meanings of all the signs.

PRECAUTION FOR WARNING TAG

When a warning sign of “DON'T OPERATE“ is hung to a control lever, it means the machine is now under repairs or maintenance. Should you operate the machine, ignoring the warning sign, someone else may get caught up in a rotating part or pinched in a mobile portion of the machine, leading to a personal injury. Follow the warning sign and do not start up the engine or touch a control lever.

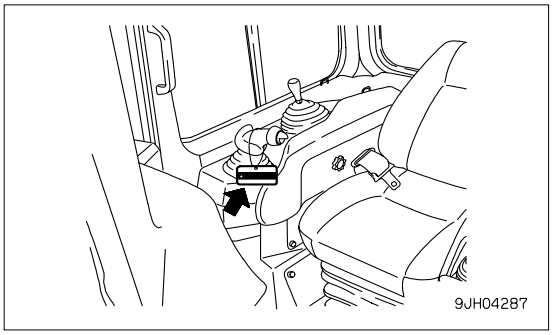

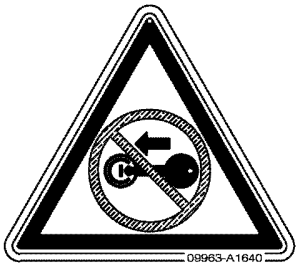

CHECK BEFORE STARTING ENGINE,ADJUST

Before starting the engine, carry out the following checks to confirm that there is no problem with operating the machine. If the checks are not carried out properly, there is danger that it may cause serious personal injury or damage to the machine during operation.

- Wipe the dust and smudge off the windshield and window panes (when the machine is equipped with an operator's cab) so that the visibility is not lowered during the operation.
- Be sure to carry out “WALK-AROUND CHECK (3-53)“.
- Wipe the dust and smudge off the working light lens.
- Check that a mobile part like the brake pedal is free of accumulated dirt or a foreign material and works properly.

https://truckmanualshub.com/

- Adjust the operator's seat so that it is easy to see to the front, and check that there is no damage or wear to the seatbelt or seatbelt mounts.
- Check that the gauges work normally and that the control levers are in the neutral position.
- Before starting up the engine, check that the work equipment lock lever is in the LOCK position.
- Adjust the mirrors so that the rear of the machine can be seen clearly from the operator's seat
- Check that there are no persons or obstacles above, below, or in the area around the machine.

PRECAUTIONS WHEN STARTING

- When starting the engine, always sit in the operator's seat. If you do not sit in the operator's seat, it will be impossible to stop operations if a problem occurs. There is danger that this may lead to serious personal injury.
- Before starting the engine, sound the horn to give a warning. If there is anyone in the area around the machine, there is danger of serious injury when the machine moves.
- Do not attempt to start the engine by short-circuiting the engine starting circuit. Such an act may cause a serious bodily injury or fire.

STARTING WITH BOOSTER CABLES

If the method of connecting the booster cables is mistaken, the battery may explode and cause serious personal injury, so always do as follows.

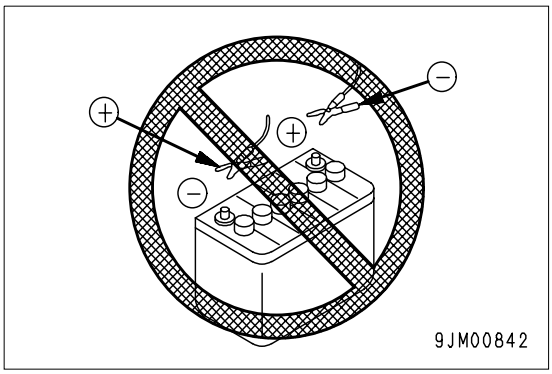

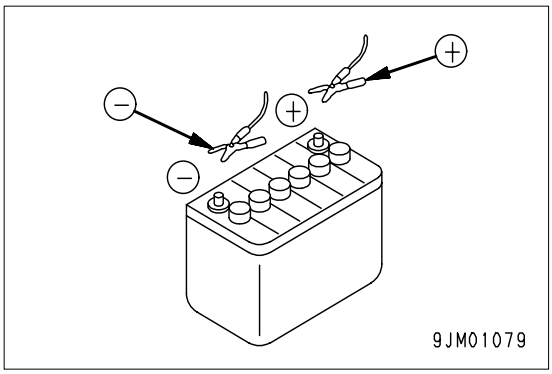

- Always wear safety goggles and rubber gloves when starting the engine with booster cable.
- When connecting a normal machine to a problem machine with booster cables, always use a normal machine with the same battery voltage as the problem machine.
- When starting with a booster cable, carry out the starting operation with two workers (one worker sitting in the operator's seat and the other working with the battery).
- When starting from another machine, do not allow the two machines to touch.
- When connecting the booster cables, turn the starting switch OFF position for both the normal machine and problem machine. There is a hazard that the machine will move when the power is connected.
- Be sure to connect the positive (+) cable first when installing the booster cables. Disconnect the negative (-) cable (ground side) first when removing them.
- When removing the booster cables, be careful not to let the booster cable clips touch each other or to let the clips touch the machine.
- For details of the starting procedure when using booster cables, see “STARTING ENGINE WITH BOOSTER CABLE (3-115)“ in the OPERATION section.

https://truckmanualshub.com/

CHECK BEFORE STARTING OPERATION

Before starting the engine, carry out the “CHECK BEFORE STARTING (3-54)“ to confirm that there is no problem with operating the machine. If this check is not carried out properly, there is danger that it may lead to damage during operation or may lead to serious personal injury. When carrying out the checks, stop the machine in a wide area where there are no obstacles, pay careful attention to the surrounding area, and operate slowly. Do not allow any person to enter the area around the machine. If any problem is found, always repair the problem.

PRECAUTIONS WHEN TRAVELING IN FORWARD OR REVERSE

- Operate the machine, being properly seated in the operator's seat without fail. Otherwise, you may not be able to freely operate the machine in case of emergency, causing a serious personal injury.
- Do not allow anyone else to ride the machine with you. As there is no passenger seat provided, there is danger that he or she may be seriously injured, when the machine tips over during the operation.
- Always wear the seatbelt. There is danger that you may be thrown out of the operator's seat and suffer serious injury when the brakes are applied suddenly.
- If people are around the machine in the jobsite, there is danger that they may get hit by or involved in the traveling machine. Be sure to carry out the following instructions before starting up the machine.
  - Make sure that there is nobody around the machine and that there is no obstacle in the traveling path.
  - Blow a horn to warn people in the vicinity.
  - Check that the backup alarm (a reverse travel warning buzzer) keeps beeping normally, while the machine is traveling in the reverse direction.
  - If the visibility in the reverse direction is restricted, post a signalman at an appropriate location.

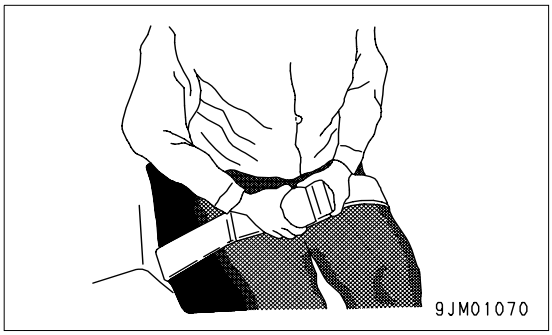

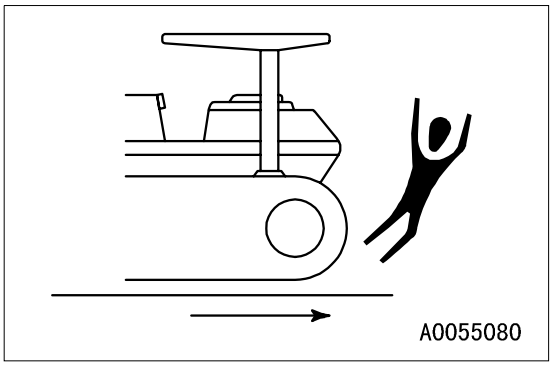

https://truckmanualshub.com/

PRECAUTIONS WHEN TRAVELING

- To avoid accidents caused by coming in contact with people, structures, and other machines, always maintain the proper distance when traveling.
- When traveling the machine on a flat land, hold the work equipment at height (A) of 40 cm to 50 cm above the ground. If that height is not maintained between the work equipment and the ground, the work equipment may get stuck in the ground and tip over.
- Do not attempt to climb over an obstacle. The machine could roll over in the right or left direction. If the machine climbs over an obstacle only with a track shoe on either side, it can result in an overturn.
- When operating the machine near a bluff in the dozing work, do not push the front blade up to the edge of the bluff. If the blade is taken close to the edge, the bluff may collapse under the machine and it rolls down.
- When traveling through a rough terrain, maintain a low speed, and avoid a sudden sharp turn. Otherwise, the work equipment may get caught up in the ground, causing the machine to tip over.

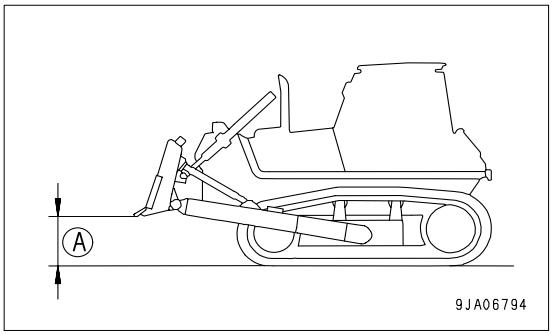

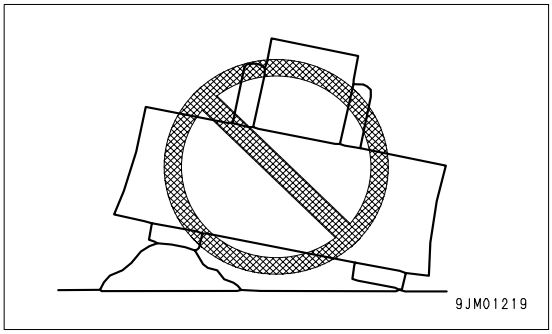

PRECAUTIONS FOR ACCUMULATED SNOW, AND ICE

In a snowy or frozen jobsite, there is danger that the machine can skid, roll over or fall off during the operation or traveling, causing a serious personal injury. Therefore, adhere to the following instructions without fail.

- Avoid abrupt operation of the machine during the work.
- Do not enter areas where the snow is deep. There is danger of driving off the road.
- Do not apply the brake suddenly on slopes. Reduce the speed and use the braking force of the engine together with the foot brake (depress the foot brake repeatedly; do not keep it depressed) to stop the machine.

SHIPPING

When the machine is transported, there is danger of serious personal injury and damage during transportation. Always do as follows.

- The machine weight, transportation height, and overall length differ according to the attachments installed. Confirm the specifications of the machine before transporting it.
- Before deciding on a transportation route, check that the planned route can withstand a combined weight of a trailer and the machine.
- When traveling on public roads, apply to the local authorities to obtain permission to transport the machine.

https://truckmanualshub.com/

WHEN TOWING

For towing, see “METHOD OF TOWING MACHINE (3-112)“.

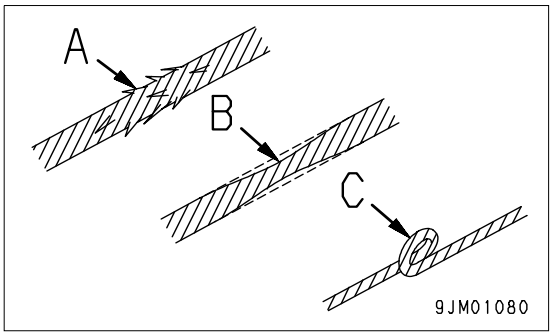

- Always confirm that the wire rope or drawbar used for towing has ample strength for the weight of the machine being towed.
- Never use a wire rope which has cut strands (A), reduced diameter (B), or kinks (C). There is danger that the rope may break during the towing operation.
- Always wear leather gloves when handling wire rope.
- Never tow a machine on a slope.
- During the towing operation, never stand between the towing machine and the machine being towed.
- Move the machine slowly and be sure not to apply any sudden load on the wire rope.
- If the engine stops or the oil pressure in the brake circuit lowers because of a trouble in the hydraulic system, the brake works and the machine cannot move. To move the machine in this case, the oil pressure in the brake circuit must be heightened to the specified level with a special device. Ask your Komatsu distributor.

https://truckmanualshub.com/

PRECAUTIONS FOR MAINTENANCE

UNAUTHORIZED MODIFICATION

If this machine is modified without permission from Komatsu, there is danger that problems may occur with safety and that this may lead to serious personal injury. Modifications may have an adverse effect on items such as machine strength and visibility. Before making any modifications, please consult your Komatsu distributor. Komatsu cannot take any responsibility for accidents, failures, or damage caused by modifications not authorized by Komatsu.

WARNING TAG

If others start the engine or operate the controls when it is being serviced, there is danger that any person carrying out repairs may suffer serious injury. ALWAYS attach the WARNING TAG to the control lever to alert others the machine is in repair.

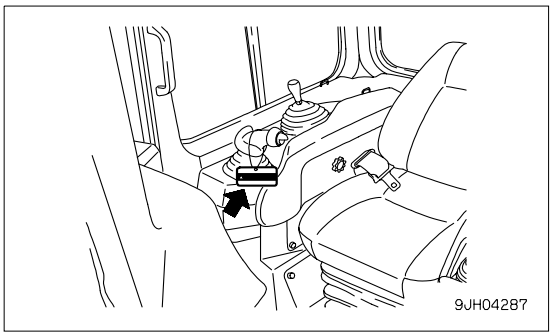

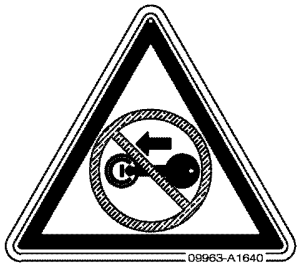

KEEP WORK PLACE FOR MAINTENANCE CLEAN AND TIDY

- Always clean up spilled oil or grease, scattered tools and broken pieces.
- Do not use water or steam to clean the sensors, connectors, or the inside of the operator's compartment.

REPAIR WELDING

Welding operations must always be carried out by a qualified welder and in a place equipped with proper equipment. There is a hazard of gas, fire, or electrocution when carrying out welding, so never allow any unqualified personnel to carry out welding.

USE CAUTION WHEN FUELING

- Never fill the fuel tank while smoking or when near an open flame.
- Never overfill the tank or spill fuel. If fuel is spilled, clean it up immediately.
- Ground the fuel funnel or nozzle against the filler neck to prevent sparks and be sure to replace the fuel tank cap.

PERSONAL MAINTENANCE

Do not allow anyone other than the maintenance personnel near the machine. If necessary, position a guard to keep people out.

https://truckmanualshub.com/

PROPER TOOLS

Always use the correct tools and handle them properly. Using damaged or deformed tools or using tools for the wrong purpose may cause injury.

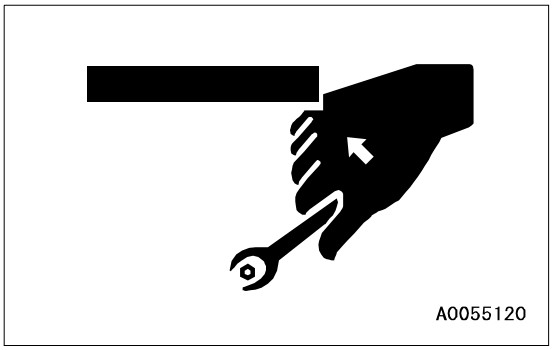

SELECTION WORK PLACE FOR MAINTENANCE

When selecting the place to carry out inspection and maintenance, use flat firm ground that is safe for the operation, with no danger of landslide, falling rocks, or flooding.

STOP ENGINE BEFORE CARRYING OUT INSPECTION AND MAINTENANCE

- Always stop the machine before performing any inspection and maintenance.

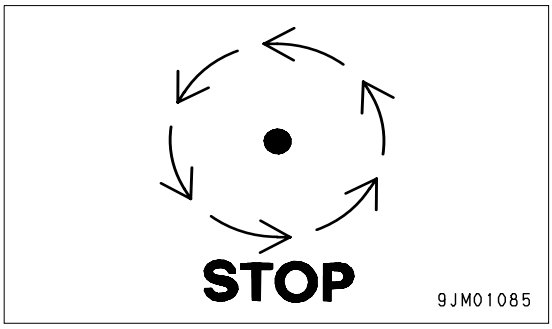

- Lower the work equipment to the ground and stop the engine.
- Operate work equipment lock lever (1) and parking brake lever (2) to the LOCK (L) position.

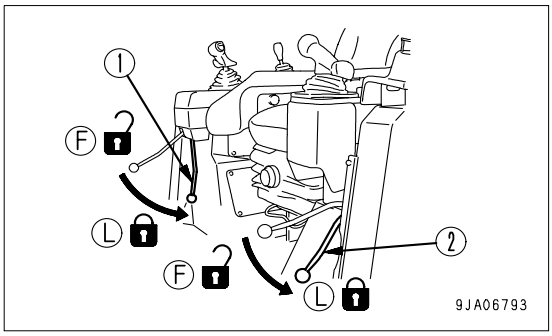

- Use chocks to immobilize the track shoes.

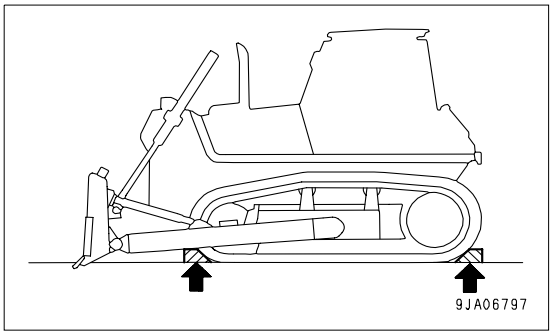

https://truckmanualshub.com/

TWO WORKERS FOR INSPECTION AND MAINTENANCE WHEN ENGINE IS RUNNING

- Lower the work equipment to the ground and stop the engine.
- Operate work equipment lock lever (1) and parking brake lever (2) to the LOCK (L) position.

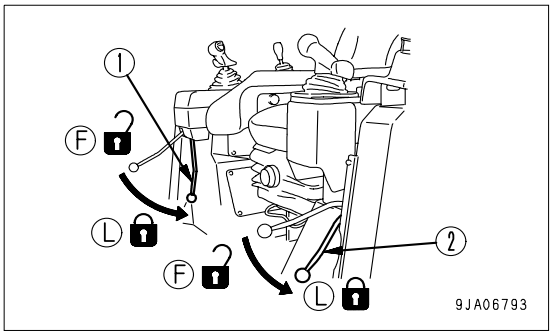

- Keep away from rotating parts.
- Do not touch the control levers except when it is necessary to do so to carry out an inspection or maintenance work.
- Do not drop or insert any tools or parts.

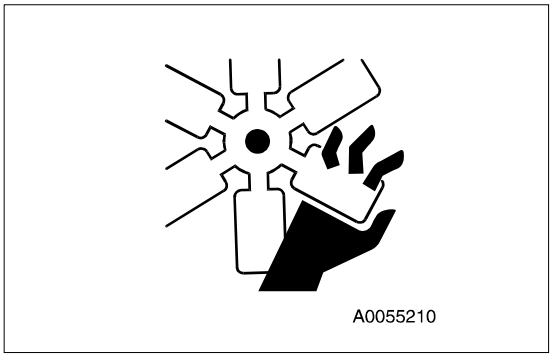

WORK UNDER THE MACHINE

- Whenever it becomes necessary to go under the raised machine or work equipment, be sure to support them with blocks sturdy enough to withstand their weight. If it is neglected to support them, the machine or work equipment may fall off, causing a serious personal injury or death.
- Never use concrete blocks for supports. They can collapse under even light loads.

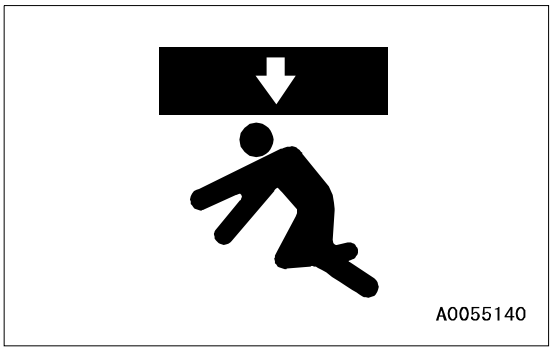

- Make sure the hoists or jacks you use are in good repair and strong enough to handle the weight of the component. Never use jacks with cracked, bent or twisted parts. Never use frayed, twisted or pinched cables. Never use bent or distorted hooks.
- When the track shoe is lifted using the work equipment, do not go under the machine. Otherwise, when it is lowered, there is danger that a serious personal injury or death may be caused.

https://truckmanualshub.com/

PRECAUTIONS WHEN USING HAMMER

In the work using a hammer, there is always a risk that a pin or metal chips are sent flying, causing a serious personal injury. If a flying metal chip gets in your eye, you may lose your eyesight. Adhere to the following instructions in this kind of work.

- Do not allow any person to come close to the worksite.
- Wear protective glasses, gloves and a hard hat.

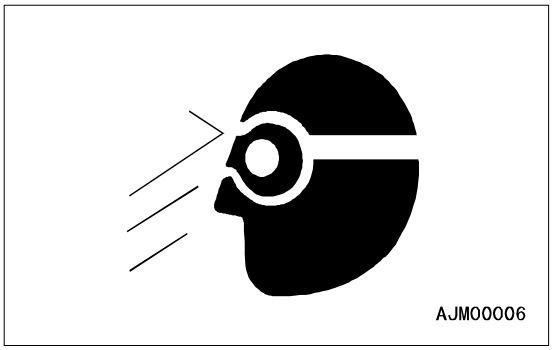

PREVENTION BURNS FROM HOT WATER

Allow the radiator to cool before checking the level. If the radiator cap is opened immediately after the engine is stopped, hot water or steam may spurt out and cause burns.

To prevent burns, when inspecting or draining the coolant, always:

- Check that the temperature has gone down to a point where the radiator cap can be touched with your bare hand.
- Loosen the cap slowly to release the pressure inside the radiator, then take off the cap.

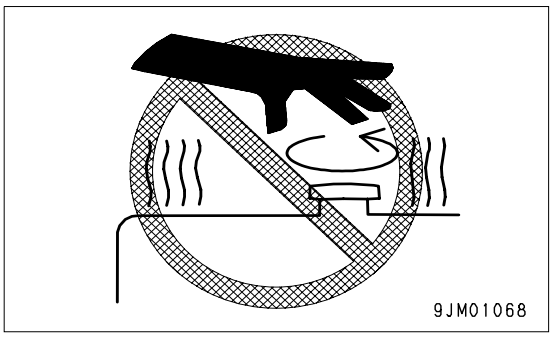

PREVENTION BURNS FROM HOT OIL

Immediately after the engine is stopped, the oil and parts are at high temperature. If you touch the oil or parts immediately after the engine is stopped, you will suffer burns.

- Check that the temperature has gone down to a point where the cap can be touched with your bare hand, then loosen the cap slowly and remove it.
- When removing the oil drain plug, release the internal pressure, then remove the plug.

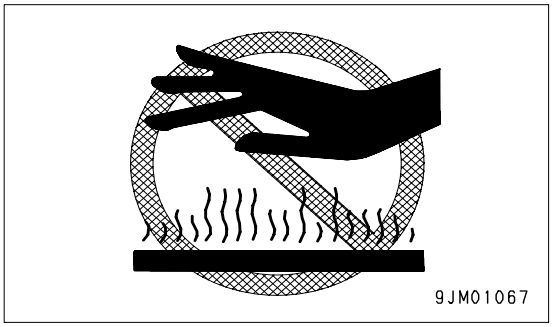

COMPRESSED AIR

- When compressed air is used for cleaning, dirt and dust will fly and may cause serious personal injury.
- When using compressed air to clean the element or radiator, wear safety glasses, anti-dust mask, gloves, and other protective equipment.

HANDLING HIGH-PRESSURE HOSES, PIPING

- Do not bend hoses or hit them with hard objects.
- Do not use any bent or cracked piping, tubes or hoses as they may burst.
- Always repair loose fuel or oil hoses and consult with your Komatsu distributor if there are any damaged hoses or piping.

https://truckmanualshub.com/

PRECAUTIONS WITH HIGH-PRESSURE OIL

Diesel fuel or hydraulic fluid under pressure can penetrate the skin or eyes and cause serious injury, blindness or death. Fluid leaks under pressure may not be visible. Use a piece of cardboard or wood to find leaks but do not use your bare hand.

- Do not forget that the work equipment circuits are always under pressure.
- Do not carry out any inspection or replacement operation before the pressure has been completely removed.
- Check for cracks in the piping and hoses and for swelling in the hoses.
- Always wear safety glasses and leather gloves.
- If you are hit by a jet of high-pressure oil and suffer injury to your skin or eyes, wash the place with clean water, and consult a doctor immediately for medical attention.

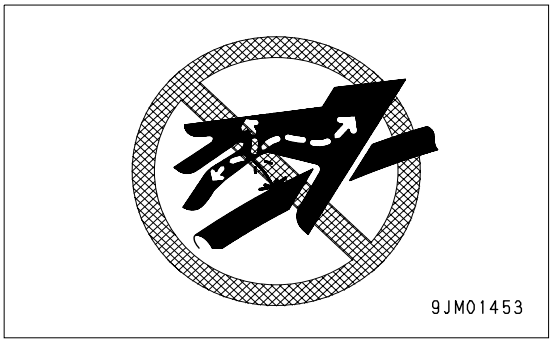

PRECAUTIONS WHEN USING HIGH-PRESSURE GREASE TO ADJUST TRACK TENSION

Grease inside the track shoe tension adjuster is highly pressurized. Do not make an error in the track shoe tension adjustment steps, because a serious personal injury can be caused by an error. Be sure to follow the steps correctly.

- When discharging grease to loosen the track shoe tension, do not loosen plug (1) more than one turn. Otherwise, plug (1) may suddenly spring out.
- Do not bring the face, hand, foot or other part of your body near plug (1).

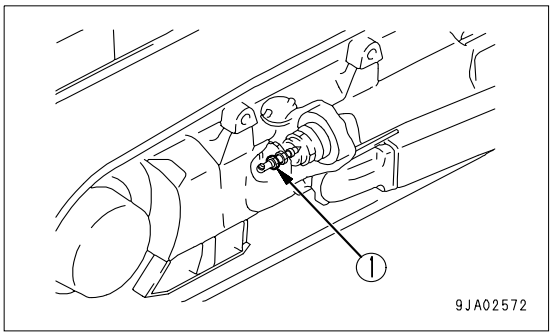

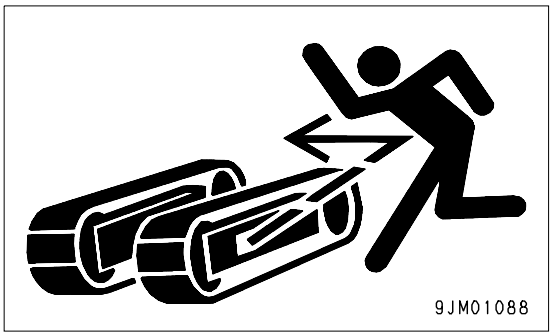

DO NOT DISASSEMBLE RECOIL SPRING

Do not disassemble the recoil spring as a cushion for the front idler. It is built in with a special jig, and if disassembled carelessly, it will be ejected, causing a serious personal injury.

https://truckmanualshub.com/

ACCUMULATOR

The accumulator contains highly pressurized nitrogen gas. A failure to properly handle it can lead to an explosion, causing a serious personal injury.

- Do not remove or disassemble unless necessary.
- Do not bring it near flame or dispose of it in fire.
- Do no make holes in it weld it, or use a cutting torch.
- Do not bear any shock by hammering, rolling or similar activity.
- Ask your Komatsu distributor when sealing gas into the cylinder or replacing gas from it.

MAINTENANCE OF AIR CONDITIONER

- Never touch the refrigerant.
- Never loosen any parts of the refrigerant circuit.
- Do not release any refrigerant to the atmosphere.

WASTE MATERIALS

- Always put oil drained from your machine in containers. Never drain oil directly onto the ground or dump into the sewage system, rivers, the sea, or lakes.
- Obey appropriate laws and regulations when disposing of harmful objects such as oil, fuel, coolant, solvent, filters, and batteries.

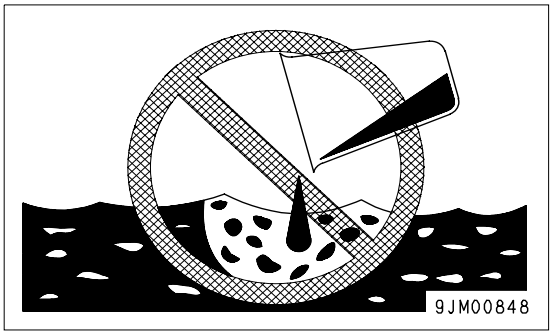

https://truckmanualshub.com/

PRECAUTIONS FOR MACHINE

PRECAUTIONS WHEN USING ROPS (Roll Over Protective Structure)

When the machine rolls over, ROPS built in the operator's cab absorbs the shock energy by supporting the machine's weight. Thus an operator is protected from an accident. If this function is hampered, a ROPS cab can no longer protect an operator from injury. Therefore, adhere to the following instructions.

- Do not modify the ROPS by welding or drilling.
- If the ROPS has been deformed by a falling object or an overturn, either repair or replace it with a new one. For the repairs, call your Komatsu distributor.

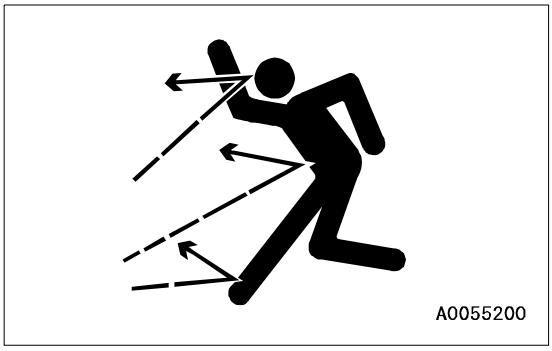

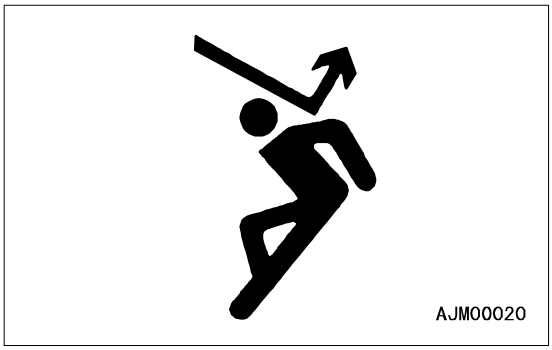

https://truckmanualshub.com/

https://truckmanualshub.com/

OPERATION

⚠ WARNING

Please read and make sure that you understand the SAFETY section before reading this section.

https://truckmanualshub.com/

GENERAL VIEW

GENERAL VIEW OF MACHINE

Machine equipped with ROPS cab

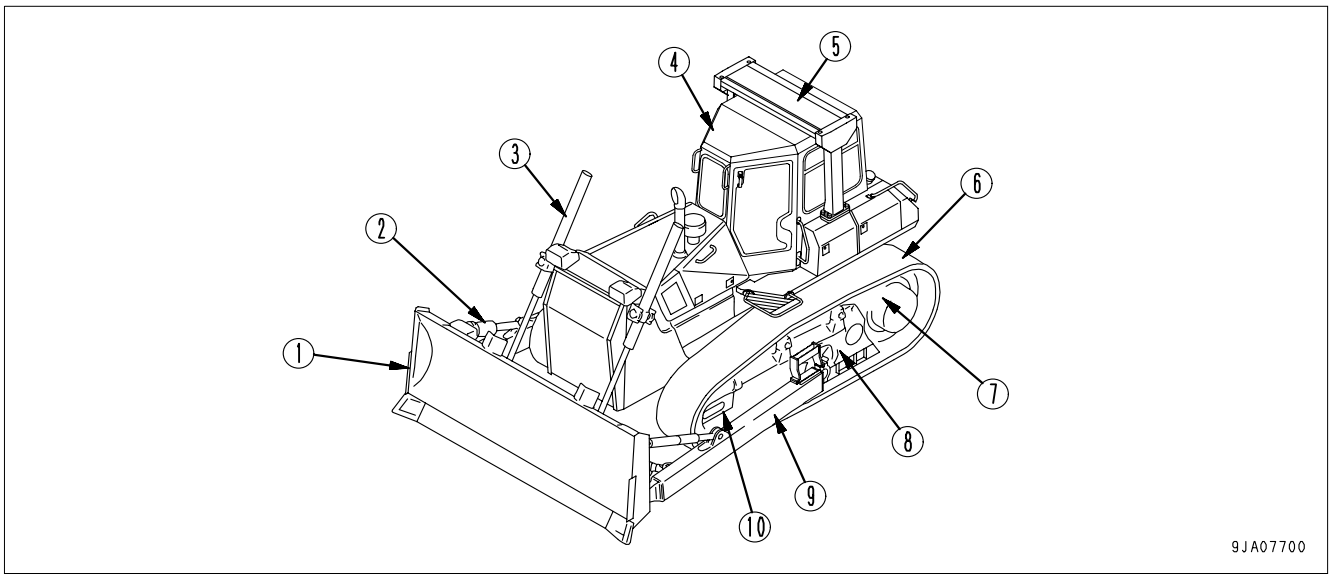

Machine equipped with ROPS canopy

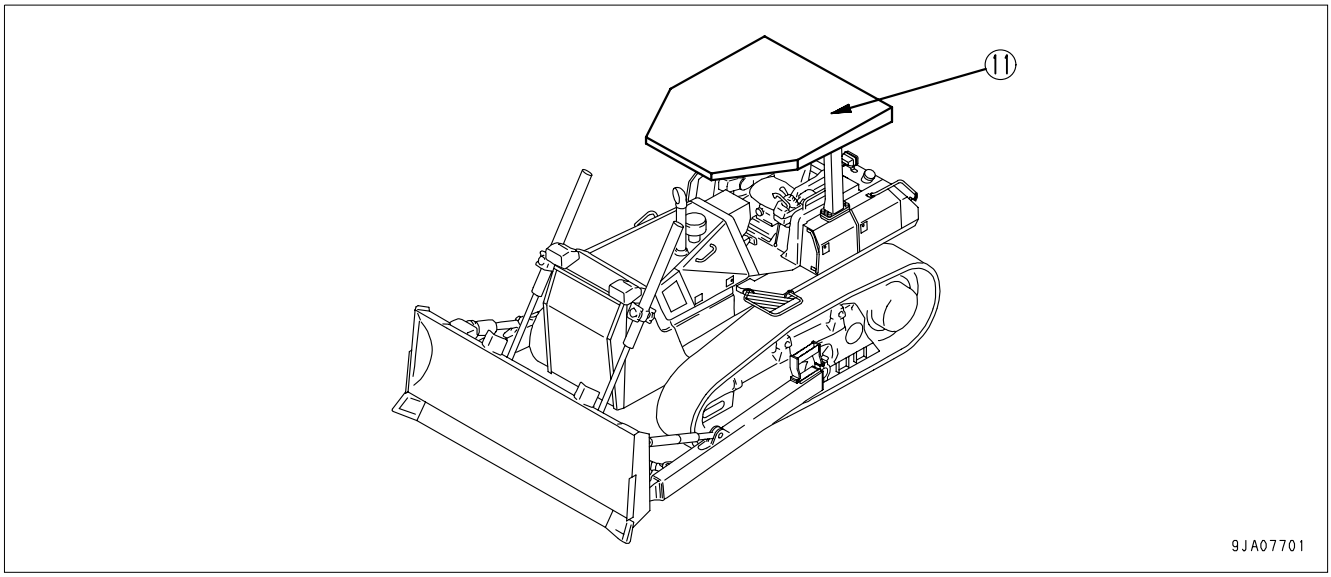

(1) Blade
(2) Tilt cylinder
(3) Lift cylinder
(4) Cab
(5) ROPS guard
(6) Track shoe
(7) Sprocket
(8) Track frame
(9) Frame
(10) Idler
(11) ROPS canopy

https://truckmanualshub.com/

GENERAL VIEW OF CONTROLS AND GAUGES

Machine equipped with cab

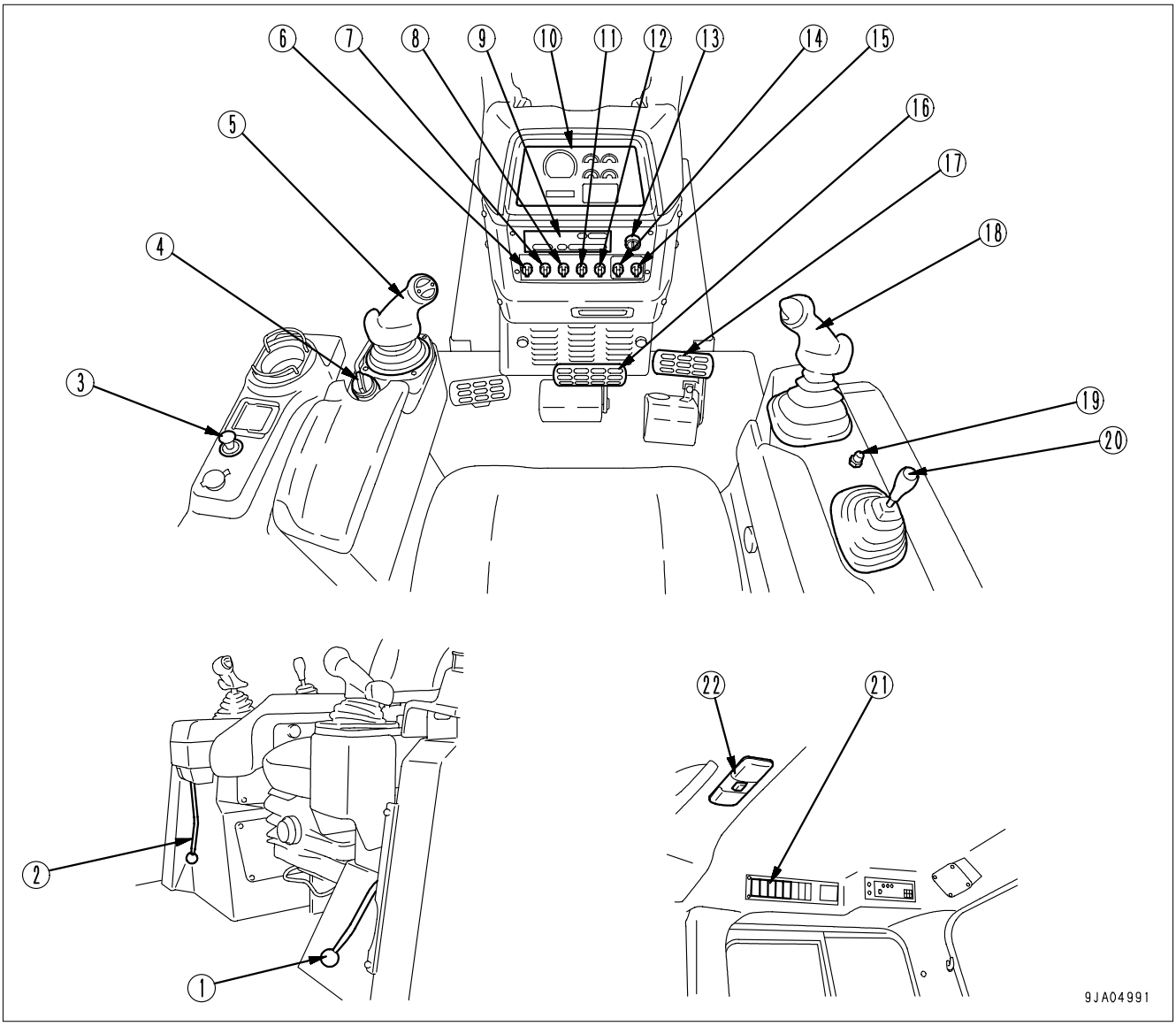

(1) Parking brake lever
(2) Work equipment lock lever
(3) Cigarette lighter
(4) Fuel control dial
(5) Steering, forward-reverse, gear shift lever
(6) Auto shift down switch
(7) Preset mode switch
(8) Head lamp switch
(9) Air conditioner panel or heater panel
(10) Monitor panel
(11) Rear lamp switch
(12) Fan rotation selector switch
(13) Starting switch
(14) Information switch
(15) Buzzer cancel switch
(16) Brake pedal
(17) Decelerator pedal
(18) Blade control lever
(19) Horn switch
(20) Ripper control lever (if equipped)
(21) Wiper switch
(22) Room lamp switch

https://truckmanualshub.com/

Machine equipped with ROPS canopy

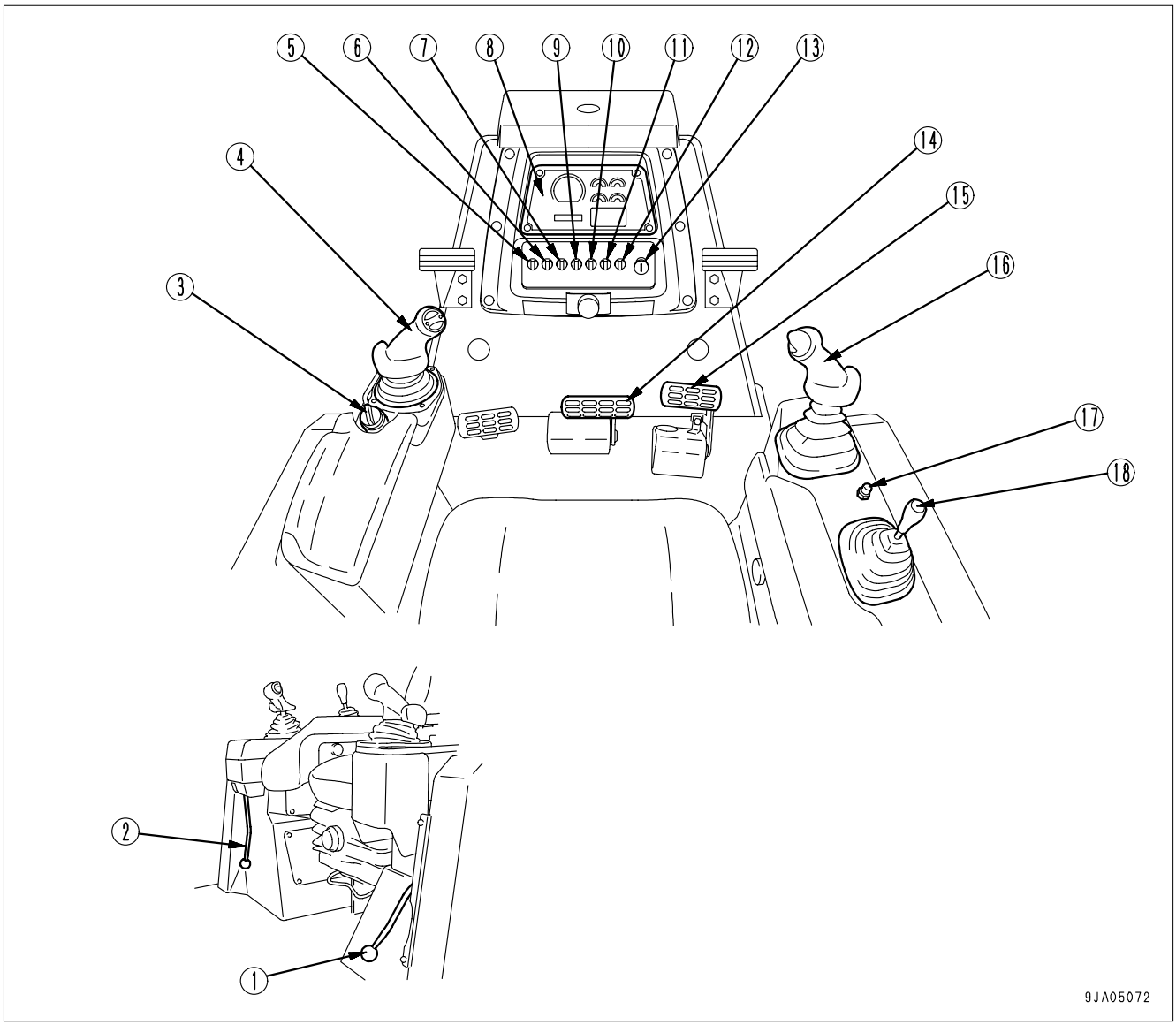

(1) Parking brake lever
(2) Work equipment lock lever
(3) Fuel control dial
(4) Steering, forward-reverse, gear shift lever
(5) Auto shift down switch
(6) Preset mode switch
(7) Head lamp switch
(8) Monitor panel
(9) Rear lamp switch
(10) Fan rotation selector switch
(11) Information switch
(12) Buzzer cancel switch
(13) Starting switch
(14) Brake pedal
(15) Decelerator pedal
(16) Blade control lever
(17) Horn switch
(18) Ripper control lever (if equipped)

https://truckmanualshub.com/

MONITOR PANEL

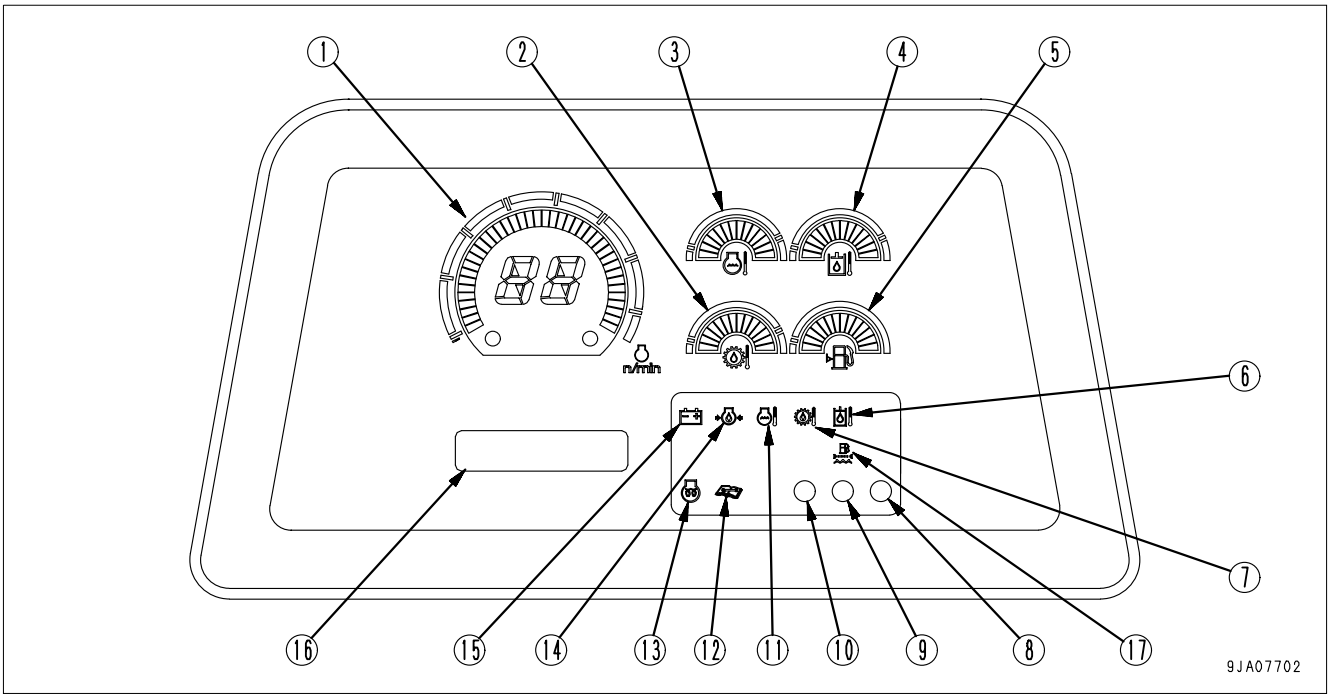

(1) Display panel A (Speed range, Engine speed)
(2) Power train oil temperature gauge
(3) Engine coolant temperature gauge
(4) Hydraulic oil temperature gauge
(5) Fuel level gauge
(6) Hydraulic oil temperature caution lamp
(7) Power train oil temperature caution lamp
(8) Fan operation confirmation lamp
(9) Filter/oil replacement interval lamp
(10) Warning lamp
(11) Engine coolant temperature caution lamp
(12) Maintenance caution lamp
(13) Engine pre-heating pilot lamp
(14) Engine oil pressure caution lamp
(15) Battery charge circuit caution lamp
(16) Display panel B (Multi-information)
(17) Water Separator Lamp

https://truckmanualshub.com/

EXPLANATION OF COMPONENTS

The following is an explanation of devices needed for operating the machine.

To perform suitable operations correctly and safely, it is important to completely understand methods of operating the equipment, and the meanings of the displays.

FRONT PANEL

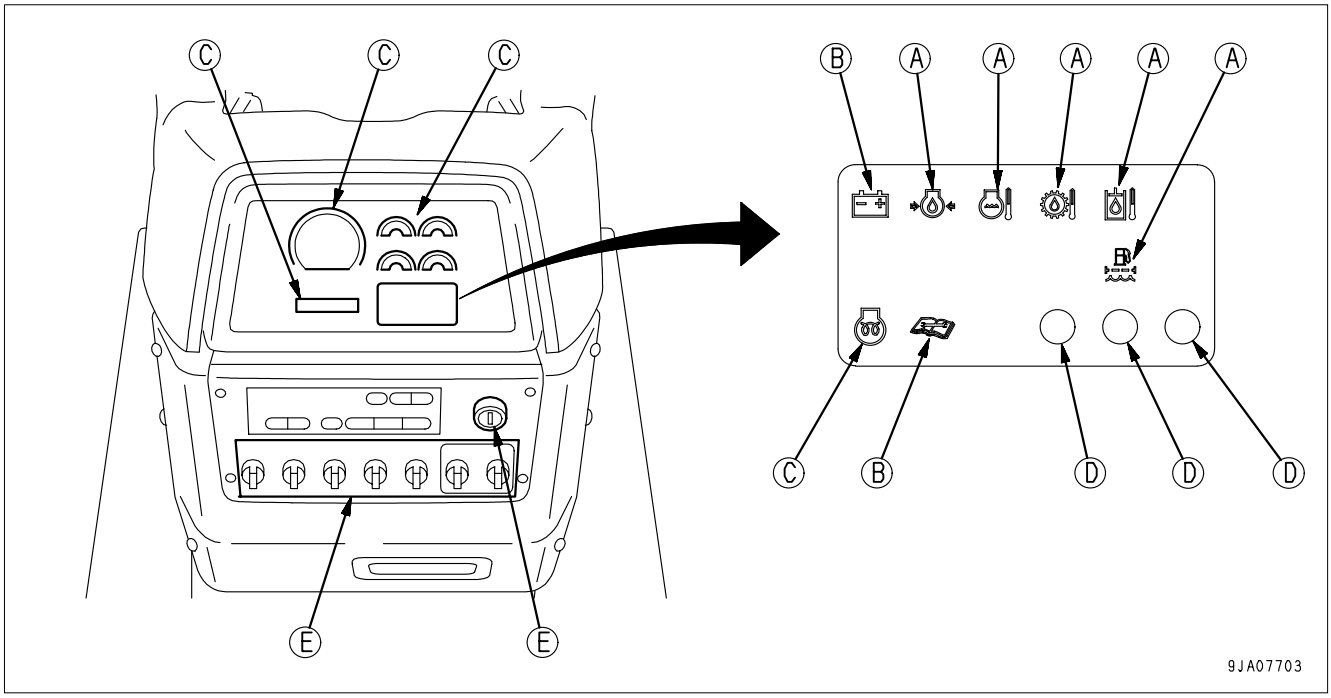

A: Emergency caution items
B: Caution items
C: Meter group
D: Lamp
E: Switch

https://truckmanualshub.com/

CHECK MONITOR SYSTEM

MONITOR SYSTEM

NOTICE

- **Stop the machine on level ground and carry out the monitor check.**
- **Stop the engine, then turn the starting switch to the ON position and check that the lamps light up for approx. 2 seconds. If they do not light up, please ask your Komatsu distributor to carry out inspection.**
- **The monitor check cannot be carried out until at least 5 seconds has passed after the engine was stopped.**

When carrying out the checks before starting, use the monitor system check.

1. Turn the starting switch to the ON position.
2. Check that the monitor liquid-crystal display and the lamps all light up for 2 seconds, that the alarm buzzer sounds for 2 seconds, and that “KOMATSU SYSTEM CHECK“ is displayed for 3 seconds on display panel B (multi-information) (1).
3.
   - After 2 seconds, the current status of the machine is displayed on liquid-crystal display (2).
   - After 2 seconds, the lamp portion (3) goes out.
   - After 3 seconds, the operating mode is displayed on display panel B (multi-information) (1).

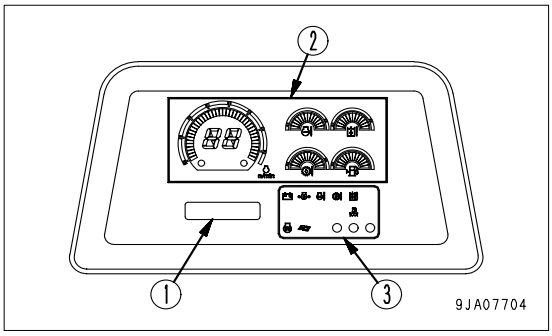

REMARK

The following cases do not indicate any problem.
If the preheating heater is actuated in cold weather, HEAT lamp (4) does not go out until the preheating is completed.
If the oil or filter replacement interval has been reached, maintenance caution lamp (5) or filter oil replacement interval lamp (6) light up or flash for 30 seconds, and the action code is displayed on display panel B (multi-information) (1).

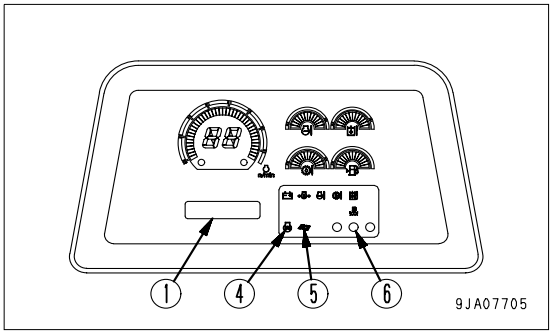

https://truckmanualshub.com/

EMERGENCY CAUTION ITEMS

CAUTION

If any of the caution lamps begins to flash, stop the engine or reduce the engine speed to low idle immediately and check the trouble spot for necessary actions.

These items must be monitored when the engine is running. If there is any problem, the caution lamp for the location of the problem and warning lamp (A) flash, and the alarm buzzer sounds intermittently. Take the necessary action immediately.

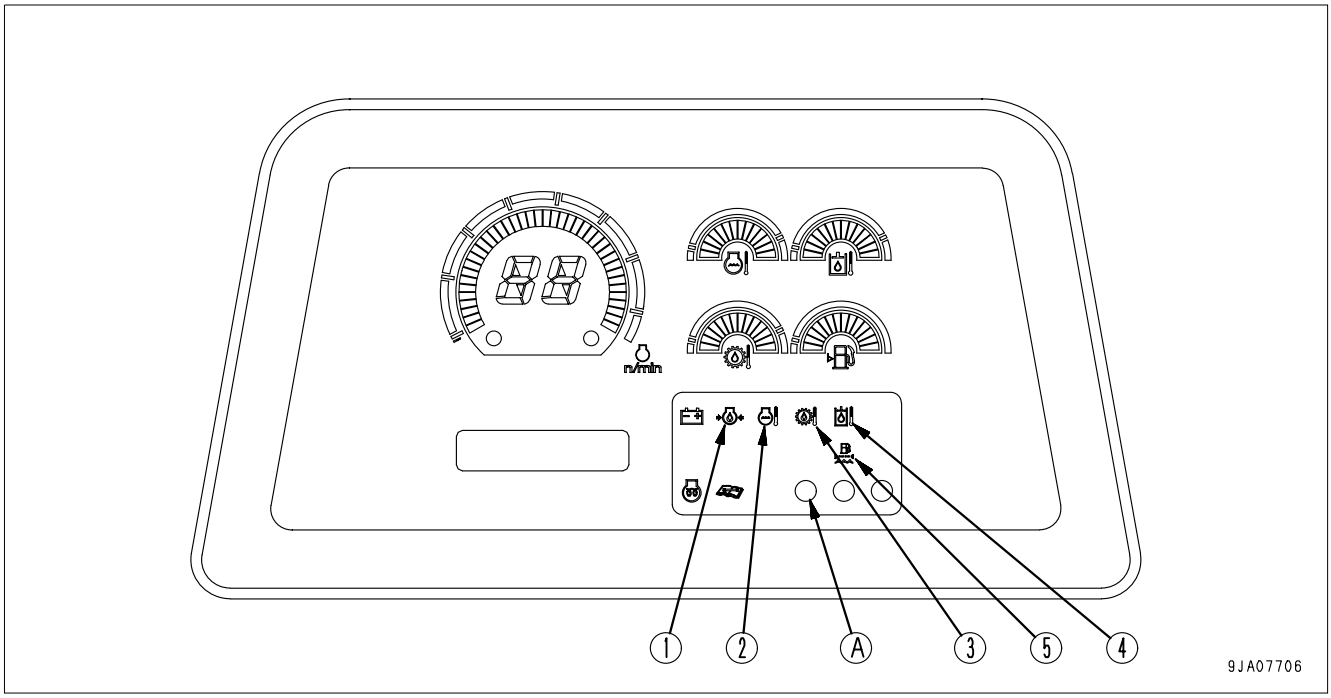

(1) Engine oil pressure caution lamp
(2) Engine coolant temperature caution lamp
(3) Power train oil temperature caution lamp
(4) Hydraulic oil temperature caution lamp
(5) Water Separator Lamp

ENGINE OIL PRESSURE CAUTION LAMP

This lamp (1) indicates low engine oil pressure.

If the monitor lamp flashes, stop the engine and check it immediately.

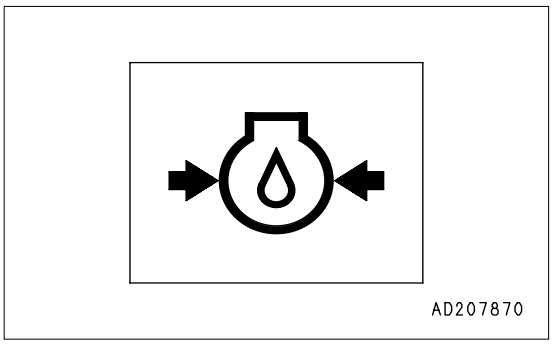

REMARK
The alarm buzzer sounds, when the starting switch is turned to ON immediately after the engine oil has been changed. It does not indicate a problem.

https://truckmanualshub.com/

ENGINE COOLANT TEMPERATURE CAUTION LAMP

This lamp (2) indicates a rise in the coolant temperature.

When the monitor lamp flashes, run the engine at low idle speed until green range of the engine coolant temperature gauge lights.

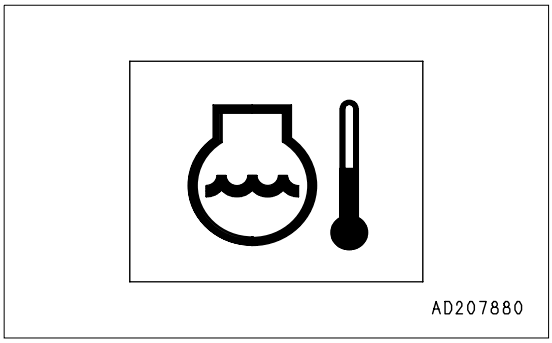

POWER TRAIN OIL TEMPERATURE CAUTION LAMP

This lamp (3) indicates a rise in the oil temperature of the torque converter outlet.

When the monitor lamp flashes, run the engine at the low idling speed until the green range of the power train oil temperature gauge lights.

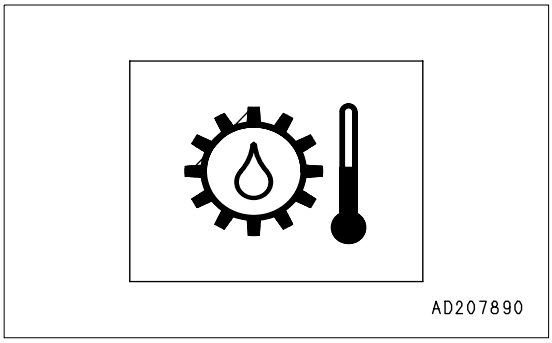

HYDRAULIC OIL TEMPERATURE CAUTION LAMP

Lamp (4) indicates a rise in the hydraulic oil temperature.

When the monitor lamp flashes, stop the machine and run the engine at the low idling speed until oil temperature falls.

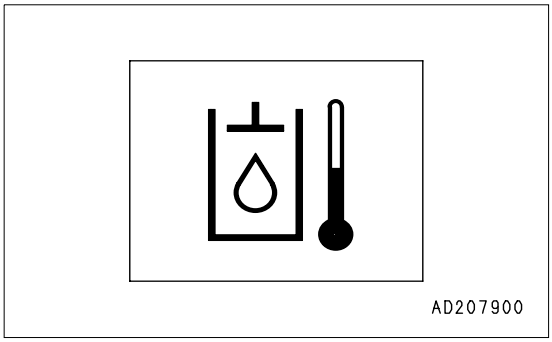

WATER SEPARATOR LAMP

This lamp (5) warns of a rise in the water level in the water separator. When it lights up, drain water from the water separator.

The water separator is located is in one piece with the fuel prefilter and located in the lower part.

For draining water from the water separator, see “CHECK, DRAIN WATER SEPARATOR (3-56)“.

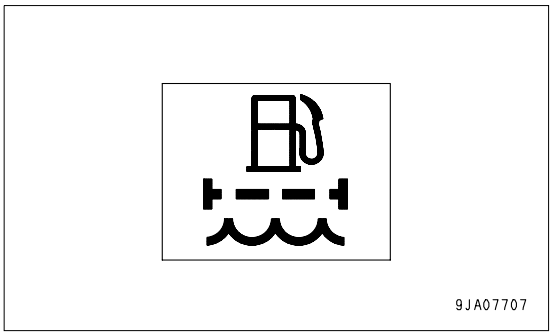

https://truckmanualshub.com/

CAUTION ITEMS

CAUTION

If these caution lamps flash, check and repair the appropriate location as soon as possible.

These are items which need to be observed when the engine is running. If any problem occurs, the item needing immediate repair is displayed. If there is any problem, the problem location on the caution lamp will flash.

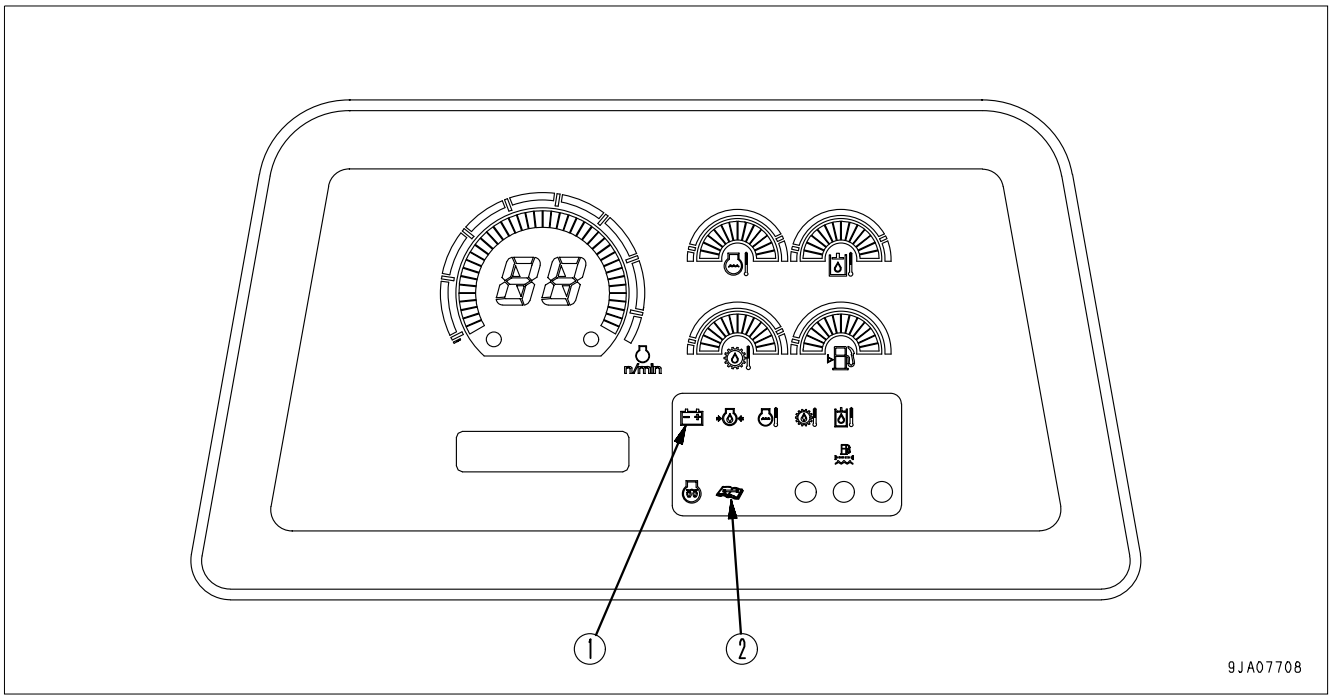

(1) Battery charge circuit caution lamp (2) Maintenance caution lamp

BATTERY CHARGE CIRCUIT CAUTION LAMP

This lamp (1) indicates a problem in the charging system while the engine is running.

If the monitor lamp flashes, check the V-belt tension. If any problem is found, see “OTHER TROUBLE (3-117)“.

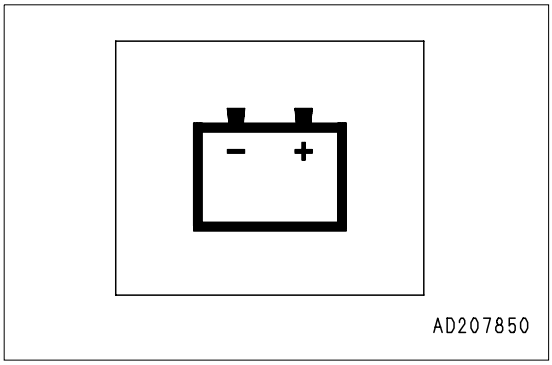

REMARK
This monitor lamp lights when the starting switch is turned to ON immediately after the engine is started or immediately before the engine is stopped. It does not indicate a problem.

https://truckmanualshub.com/

MAINTENANCE CAUTION LAMP

This lamp (2) lights up for approx. 30 seconds after the starting switch is turned to the ON position if the filter or oil replacement interval has been reached.

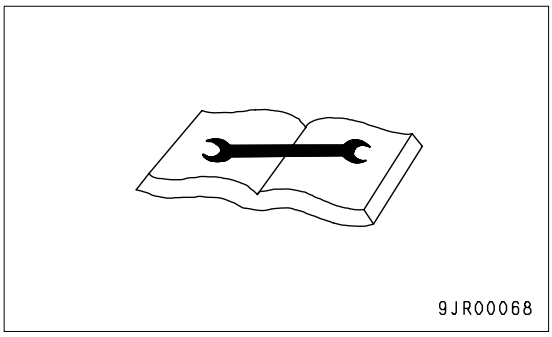

After replacing the indicated filter or oil displayed on display panel B (multi-information), reset the interval. For details, see “METHOD OF USING OIL AND FILTER MAINTENANCE MODE (3-23)“.

The lamp goes out.

REMARK
At the same time, the filter or oil replacement interval lamp also lights up or flashes.

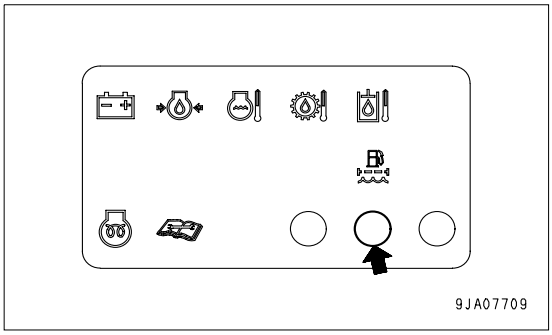

https://truckmanualshub.com/

METER GROUP

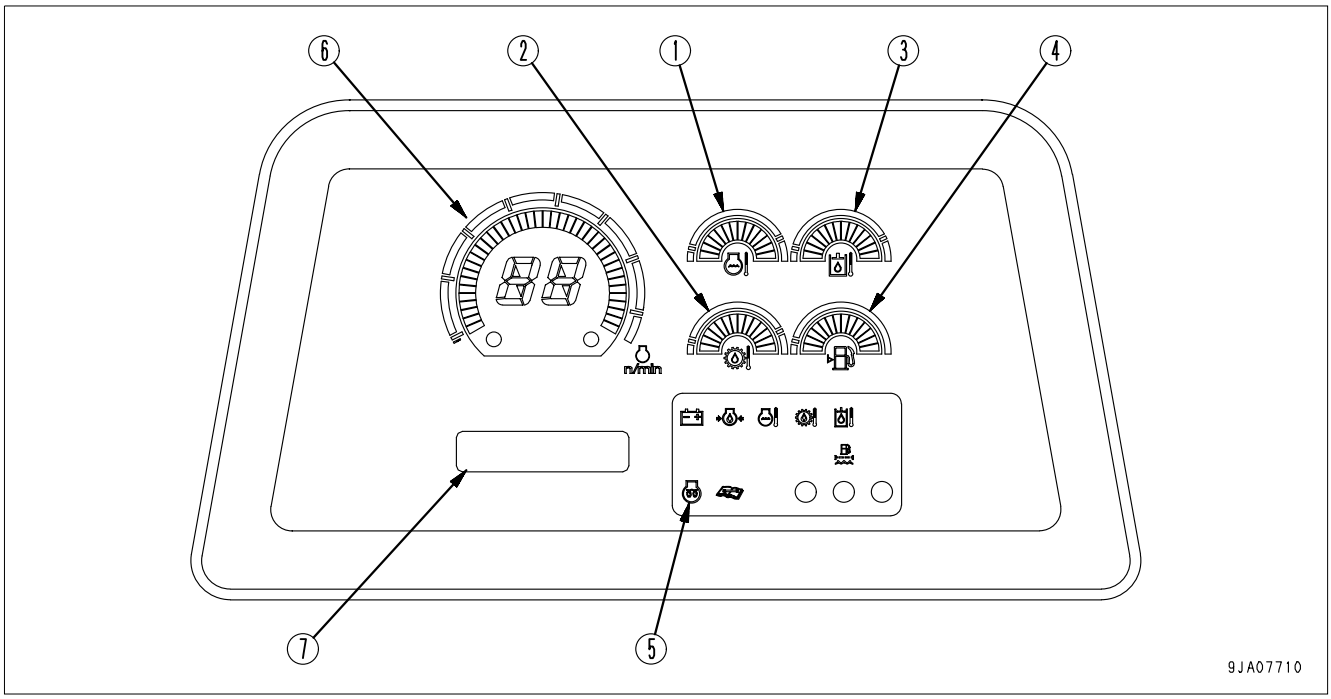

(1) Engine coolant temperature gauge
(2) Power train oil temperature gauge
(3) Hydraulic oil temperature gauge
(4) Fuel leve gauge
(5) Engine pre-heating pilot lamp
(6) Display panel A (Speed range display, Engine speed)
(7) Display panel B (multi-information)

ENGINE COOLANT TEMPERATURE GAUGE

NOTICE
If the coolant temperature gauge often enters red range (C), check the radiator for clogging.

Gauge (1) indicates temperature of the engine coolant.

If the temperature is normal during operation, green range (B) will light.

If red range (C) lights during operation, move the fuel control dial to lower engine speed to approx. 3/4 of the full speed, and run until the coolant temperature enters green range (B).

If red range (C) lights up during operation, and the engine coolant temperature caution lamp flashes and the alarm buzzer sounds, stop the machine, run the engine at low idle, and wait for the coolant temperature to return to green range (B).

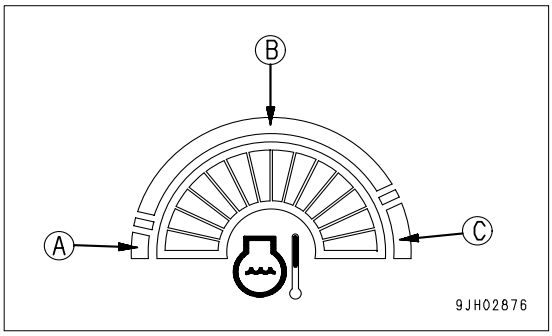

(A): White range

(B): Green range

(C): Red range

https://truckmanualshub.com/

POWER TRAIN OIL TEMPERATURE GAUGE

NOTICE
If the power train oil temperature gauge often enters the red range (C), we recommend you to lower the travel speed one range (for example, F2 → F1) to reduce the load on the power train when operating.

Gauge (2) indicates the torque converter outlet oil temperature.

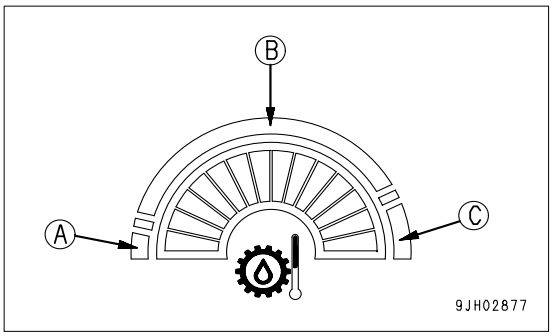

If the temperature is normal during operation, green range (B) will light.

If red range (C) lights up during operation, move the fuel control dial to lower engine speed to approx. 3/4 of the full speed, reduce the load and run until the oil temperature enters green range (B).

If red range (C) lights up during operation, and the power train oil temperature caution lamp flashes and the alarm buzzer sounds, stop the machine, run the engine at low idle, and wait for the oil temperature to go down to green range (B).

(A): White range

(B): Green range

(C): Red range

HYDRAULIC OIL TEMPERATURE GAUGE

Gauge (3) indicates the hydraulic oil temperature.

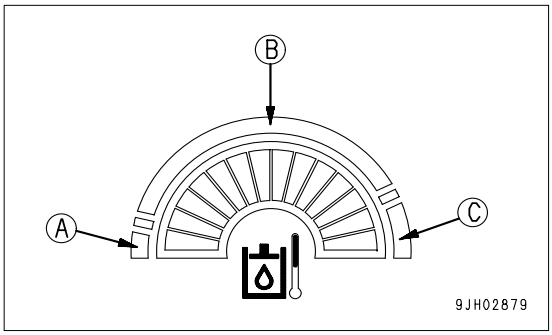

If the temperature is normal during operation, green range (B) will light.

If the red range (C) lights up during operation, move the fuel control lever to lower the engine speed to approx. 3/4 of the full speed, reduce the load and run until the oil temperature enters the green range (B).

(A): White range

(B): Green range

(C): Red range

FUEL LEVEL GAUGE

Gauge (4) fuel level in the fuel tank.

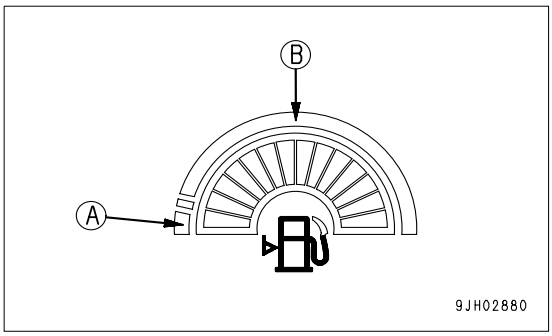

During normal operation, the green range (B) should be lit.

If red range (A) lights up during operation, add fuel immediately. If this is not done, the engine speed will become irrgular or an error display will be shown on the monitor.

(A): Red range

(B): Green range

REMARK
The display is not proportional to the amount of fuel remaining. If only the red range (A) lights up, there is less than 60 liters of fuel remaining.

https://truckmanualshub.com/

ENGINE PRE-HEATING PILOT LAMP

This lamp (5) indicates that the engine is being preheated with an electric heater in cold weather.

When the engine starting switch is turned to the ON position, the engine controller detects the engine coolant temperature and automatically starts to preheat the engine at low temperature.

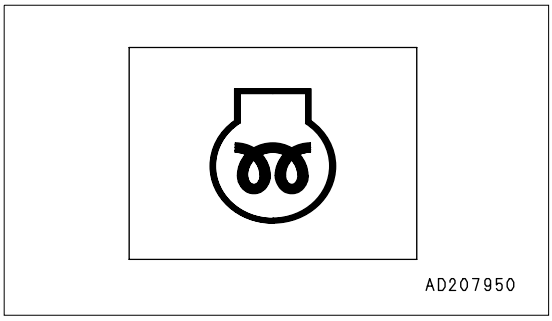

DISPLAY PANEL A (speed range display, engine speed)

Meter (6) displays the transmission speed range being used on the machine and engine speed.

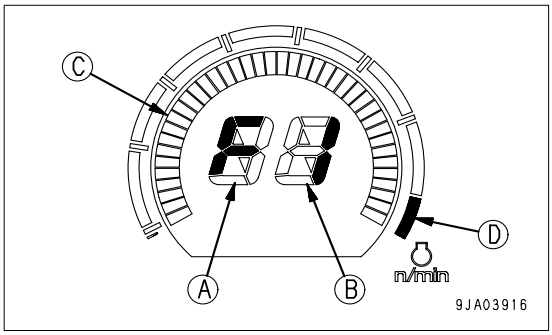

- The travel direction (A) and speed range (B) are displayed in the center of the speed range display.

  (A) F: FORWARD

  R: REVERSE

  N: Neutral

  P: Parking brake lever at LOCK position

  (B) 1: 1st

  2: 2nd

  3: 3rd

Example: F1 is displayed for FORWARD 1st

- Bar graph (C) around the outside of the display shows the engine speed.

  If the bar graph reaches red range (D) during operation, take action to reduce the engine speed. Always keep the bar graph in the green range.

DISPLAY PANEL B (multi-information)

The top and bottom lines in display panel B (multi-information) display information related to the condition of the machine.

The content of the display is divided into “OPERATING MODE“ and “MAINTENANCE MODE“. Use the buzzer cancel switch to switch between the operating mode and maintenance mode.

For details of switching the mode, see “BUZZER CANCEL SWITCH (3-21)“.

OPERATING MODE (default screen)

Use this mode when operating the machine.

REMARK
When the starting switch is turned from the OFF position to the ON position, display panel B (multi-information) always displays the operating mode.

https://truckmanualshub.com/

The following information is displayed by the operating mode.

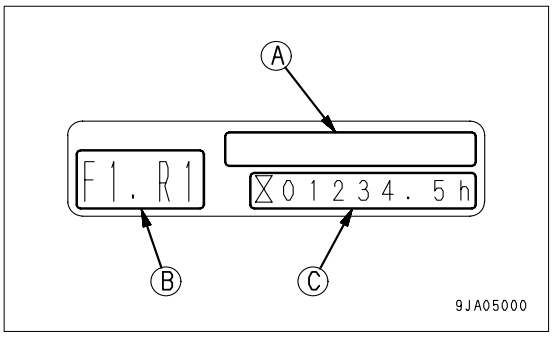

Top line (A): Action code

If any problem occurs on the machine, an action code is displayed. If an action code appears, take the applicable action. For details, see “OTHER TROUBLE (3-117).

This displays various types of filter or oil replacement intervals have been reached.

Bottom line, left (B): Preset mode

When the preset mode switch is ON, the selected preset mode is displayed.

For details of selecting the preset mode, see “GEARSHIFTING OPERATION USING PRESET MODE FUNCTION (3-80)“.

Bottom line, right (C): Service meter or engine speed

Use the information switch to switch the display between the service meter and engine speed. For details of switching the display, see “INFORMATION SWITCH (3-21)“.

Service meter

This displays the total number of hours that the machine has been operated. Use the display to determine the intervals for periodic maintenance.

While the engine is running, the service meter advances, even if the machine is not being operated.

While the engine is running, the hourglass mark at the side of the meter flashes to show that the meter is advancing.

The meter advances 0.1h for every 6 minutes that the engine is running, regardless of the engine speed.

Maintenance mode

This displays various types of information related to maintenance of the machine.

For details, see “METHOD OF USING MAINTENANCE MODE (3-22)“.

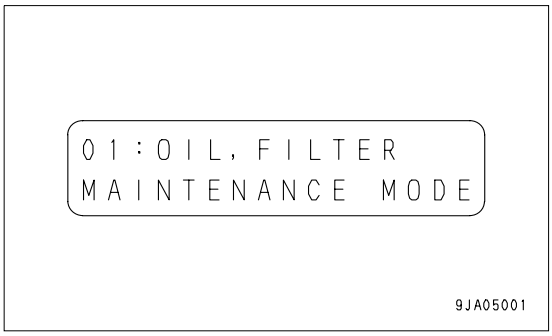

https://truckmanualshub.com/

LAMPS

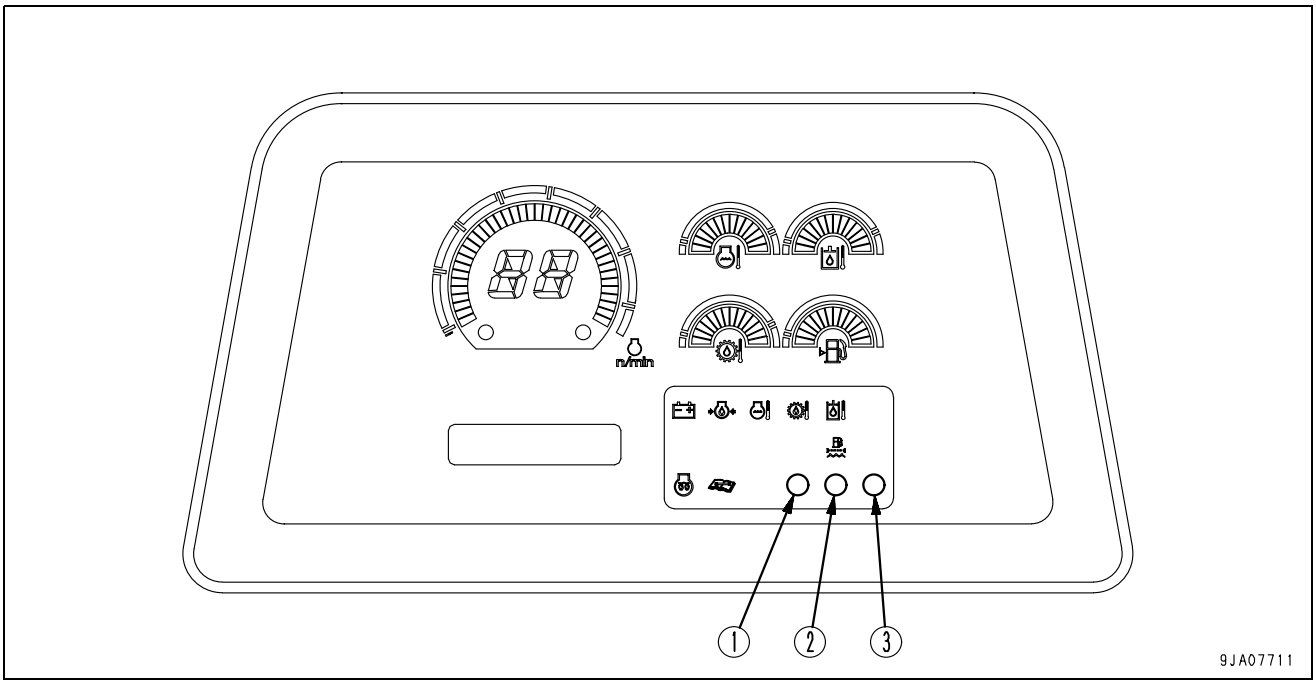

(1) Warning lamp
(2) Filter/oil replacement interval lamp
(3) Fan operation confirmation lamp

WARNING LAMP

(Red)

NOTICE
If alarm buzzer sounds, stop work immediately and perform inspection and maintenance of the appropriate point.

This lamp (1) flashes when the caution lamp flashes and when an action code is displayed on display panel B (multi-information).

When the caution lamp (A) of an emergency warning item flashes, or when the part of an action code is displayed, the alarm buzzer sounds continuously at the same time.

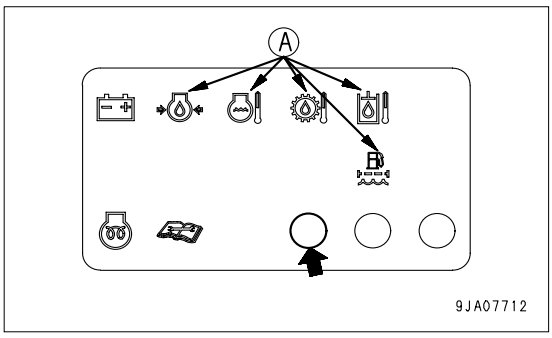

https://truckmanualshub.com/

FILTER/OIL REPLACEMENT INTERVAL LAMP

(Yellow)

If it is time to replace a filter or change the oil, this lamp (2) lights up or flashes for approx. 30 seconds after the starting switch is turned ON.

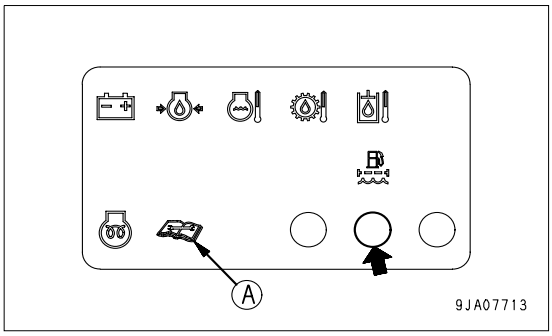

REMARK
This lamp (2) lights up if there is less than 30 hours remaining until replacement, and flashes when the replacement interval has passed.
At the same time, maintenance caution lamp (A) also lights up.

After replacing the indicated filter or oil displayed on display panel B (multi-information), reset the time. For details, see “METHOD OF USING OIL AND FILTER MAINTENANCE MODE (3-23)“.

The lamp goes out or stops flashing.

FAN OPERATION CONFIRMATION LAMP

(Orange)

This lamp (3) lights up or flashes in the following operation, and the fan begins to turn.

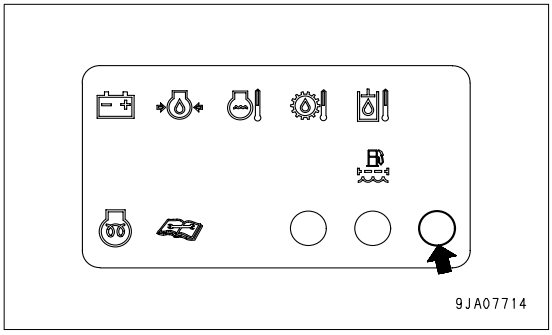

- When the engine starting switch is turned to the ON position, and the engine is started up with this lamp (3) off, the fan turns in the normal direction.
- After the engine starting switch is turned to the ON position, and the fan rotation selector switch is turned to the CLN position, this lamp (3) lights up. If the engine is started up with lamp (3) on, the fan turns in the reverse direction.
- If the fan rotation selector switch is turned to CLN position while the engine is running, this lamp (3) flashes for three seconds, indicating that the fan rotation direction has not changed.

https://truckmanualshub.com/

SWITCHES

Machine equipped with cab

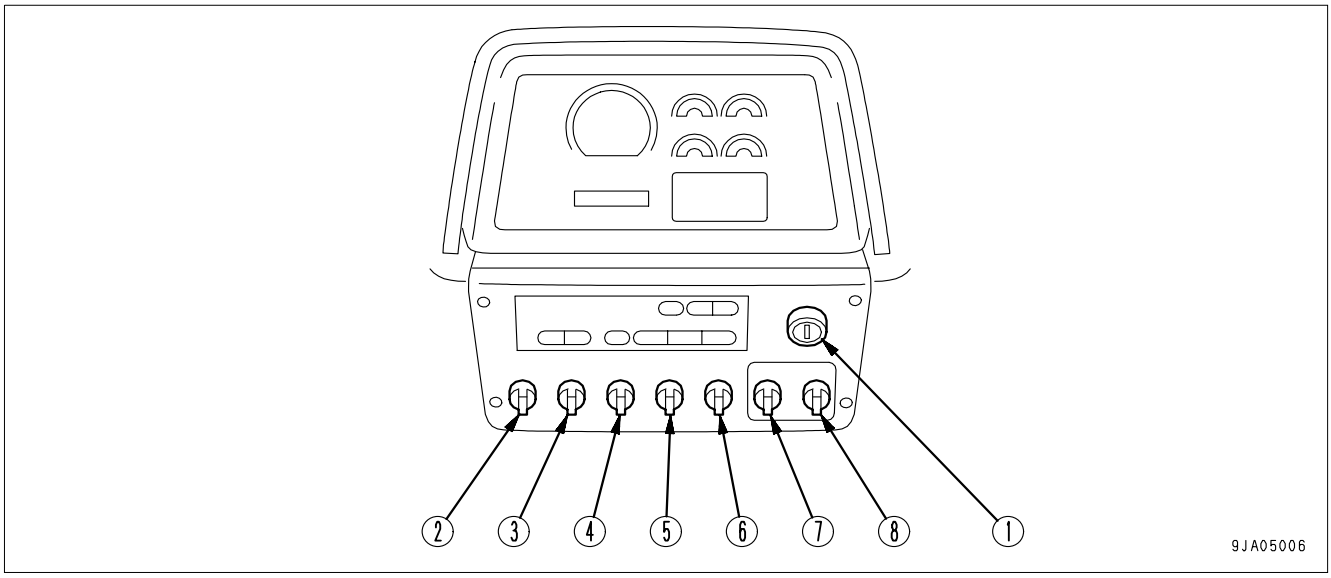

Machine equipped with ROPS canopy

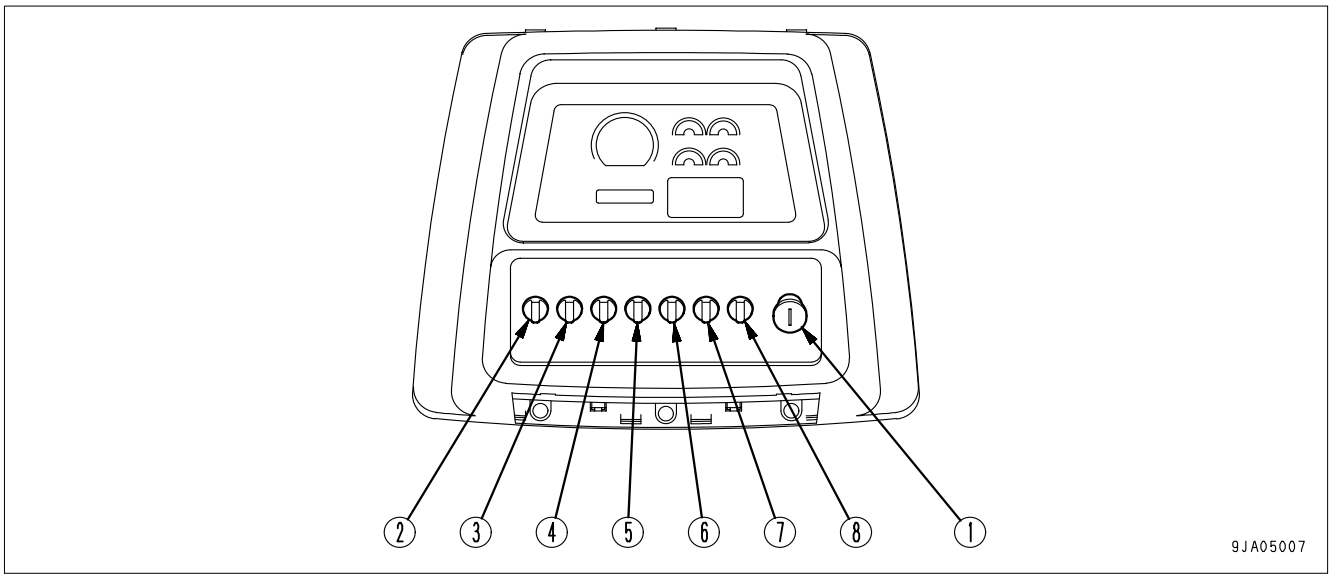

(1) Starting switch
(2) Auto shift down switch
(3) Preset mode switch
(4) Head lamp switch
(5) Rear lamp switch
(6) Fan rotation selector switch
(7) Information switch
(8) Buzzer cancel switch

https://truckmanualshub.com/

STARTING SWITCH

This switch (1) is used to start or stop the engine.

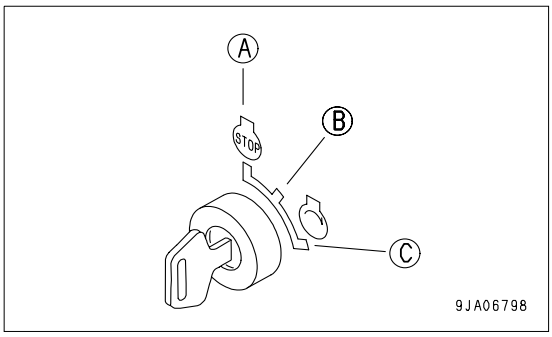

(A): OFF position

At this position, the starting switch key can be inserted and removed. When the switch is turned to this position, all the electric circuits are turned off and the engine stops.

(B): ON position

In this position, electric current flows in the charging and lamp circuits.

Keep the starting switch key at the ON position while the engine is running.

(C): START position

This is the position to start the engine. Hold the key at this position while cranking the engine. Release the key immediately after the engine has been started. The key will return to ON position (B) when released

AUTO SHIFT DOWN SWITCH

This switch (2) is used to actuate the auto shift down function and shift the transmission automatically to a low speed range.

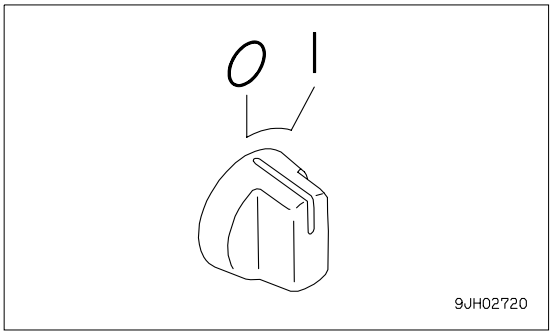

○ (OFF) position: Stopped

I (ON) position: Actuated

For details, see “AUTO DOWN SHIFT OPERATION (3-82)“.

PRESET MODE SWITCH

This switch (3) is used to actuate the preset mode function.

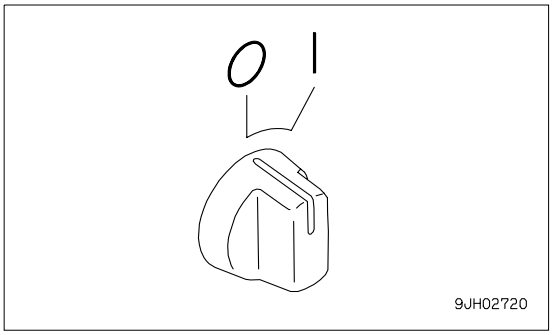

○ (OFF) position: Stopped

I (ON) position: Actuated

For details, see “GEARSHIFTING OPERATION USING PRE-SET MODE FUNCTION (3-80)“.

https://truckmanualshub.com/

HEAD LAMP SWITCH

This switch (4) lights up when the front lamp, and panel lamp light up.

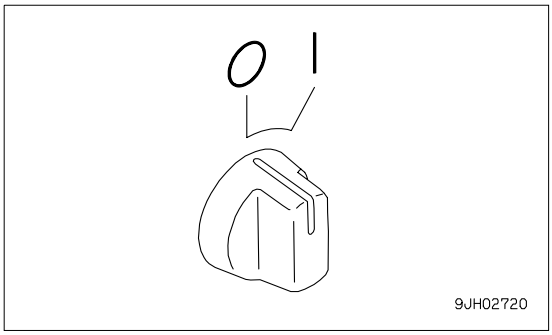

○ (OFF) position: Lights out

I (ON) position: Lights on

REAR LAMP SWITCH

This switch (5) lights up the rear lamps.

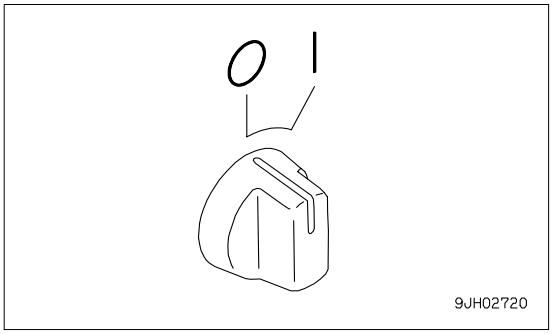

○ (OFF) position: Lights out

I (ON) position: Lights on

FAN ROTATION SELECTOR SWITCH

This switch (6) is used to switch the direction of rotation of the cooling fan.

When it is released from the CLE position, it will automatically return to the ○ position.

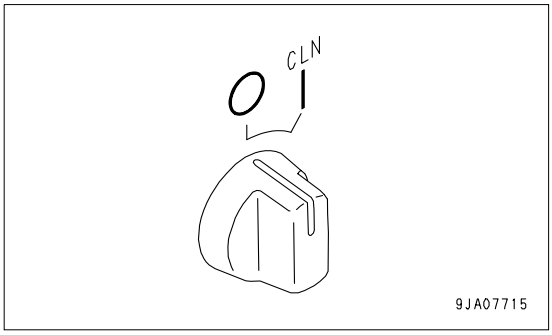

○position : Normal rotation

Use this switch normally with the fan operation confirmation lamp in the OFF condition.

Cooling air is blown out to the front from the radiator mask.

The fan turns in RPM commensurate with the cooling water temperature, thus assuring effective cooling of the engine.

CLN position: Cleaning

Use this switch with the fan operation confirmation lamp in the ON condition.

The fan turns in the reverse direction and at a high speed without any relation to the cooling water temperature.

Use this mode to clean the radiator fins.

For the “ON“ or “OFF“ condition of the fan operation confirmation lamp, see “FAN OPERATION CONFIRMATION LAMP (3-17)“.

https://truckmanualshub.com/

REMARK

The fan rotation direction cannot be changed, even if it is tried when the engine is running.
The fan operation confirmation lamp begins to flash to tell you that the fan rotation direction cannot be changed.
When the fan operation check lamp lights up and the fan is turning in the reverse direction, the machine does not start even if the steering - forward / reverse shifting- gearshift lever is operated to the FORWARD or REVERSE position. This is to protect the radiator. To start the machine, turn the engine starting switch key to the OFF position once and then turn to the ON position once again, after making sure that the fan operation check lamp has gone off.
When the fan is turning to clean the radiator fins, and the engine starting switch is turned to the OFF position, power is not switched off immediately in order to protect the hydraulic circuit.

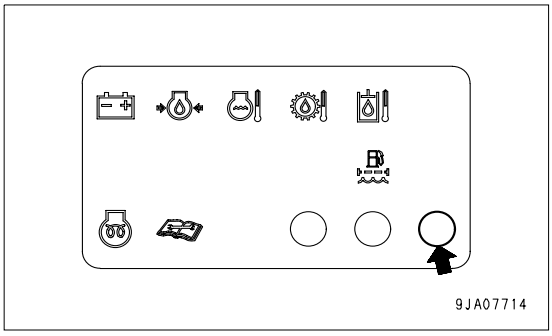

INFORMATION SWITCH

This switch (7) is used to operate display panel B (multi-information).

When the switch is released, it returns automatically to the center position.

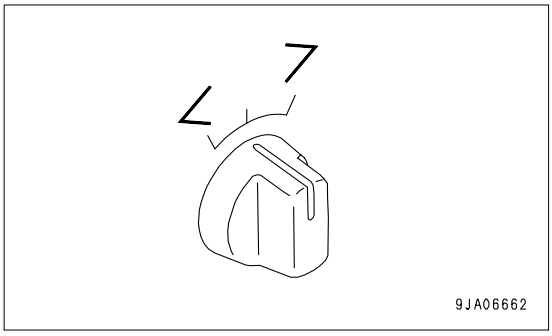

- **When display panel B (multi-information) is in the operation mode**

  turn the switch to < or > to switch the display to service meter or engine speed.

- **When display panel B (multi-information) is in the maintenance mode**

  It is used to move between sub modes, between items, to move the cursor, or to change values.

  For details, see “METHOD OF USING MAINTENANCE MODE (3-22)“.

BUZZER CANCEL SWITCH

This switch (8) is used to operate control panel B (multi-information) or to stop the alarm buzzer.

When the switch is released, it returns automatically to the center position.

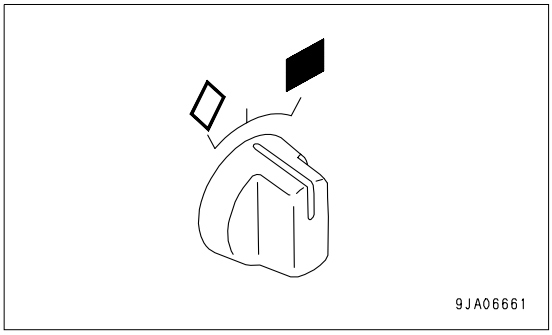

- **When display panel B (multi-information) is in operation mode**
  - When the alarm buzzer is sounding, turn this switch to the left or right to stop the buzzer.
  - If the switch is held at the ◇ position for at least 2.5 seconds, the display switches to the maintenance mode.

https://truckmanualshub.com/

- **When display panel B (multi-information) is in the maintenance mode**

  ■ position: Cancel or reset to operation mode

  ◇ position: Confirms selection or selected item

  For details, see “METHOD OF USING MAINTENANCE MODE (3-22)“.

METHOD OF USING MAINTENANCE MODE

To switch from the operation mode to the maintenance mode, turn the buzzer cancel switch to the ◇ position and hold it there for at least 2.5 seconds. The screen will switch to the maintenance mode.

On the first screen, the oil and filter maintenance mode is displayed.

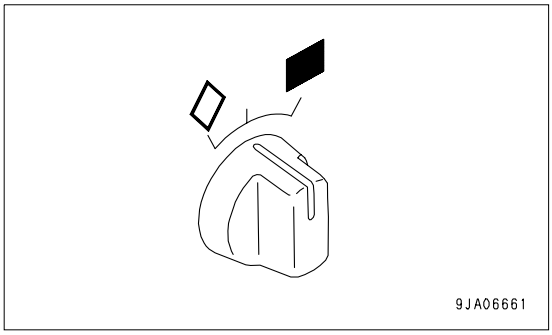

EXPLANATION OF MODES AND OPERATION

The maintenance mode has the following 4 sub modes.

Sub mode	Function	Reference items
Oil/filter maintenance mode	Oil or filter replacement time is displayed	METHOD OF USING OIL AND FILTER MAINTENANCE MODE (3-23)
PM clinic auxiliary mode	The engine RPM and battery voltage are shown.	METHOD OF USING PM CLINIC AUXILIARY MODE (3-25)
Fault code display mode	Fault codes for electronic control related parts are displayed	METHOD OF USING FAULT CODE DISPLAY MODE (3-26)
Adjustment mode	Adjusts monitor brightness, etc.	METHOD OF USING USER ADJUST MODE (3-26)

Use information switch (1) and buzzer cancel switch (2) to operate each mode.

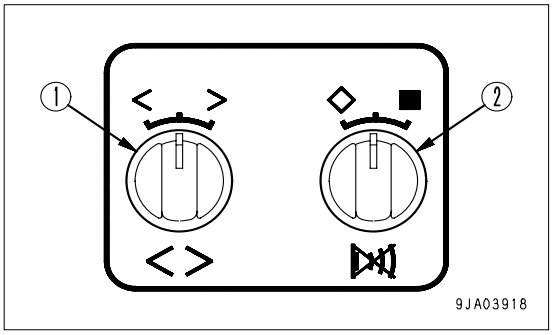

https://truckmanualshub.com/

METHOD OF SELECTING EACH MODE

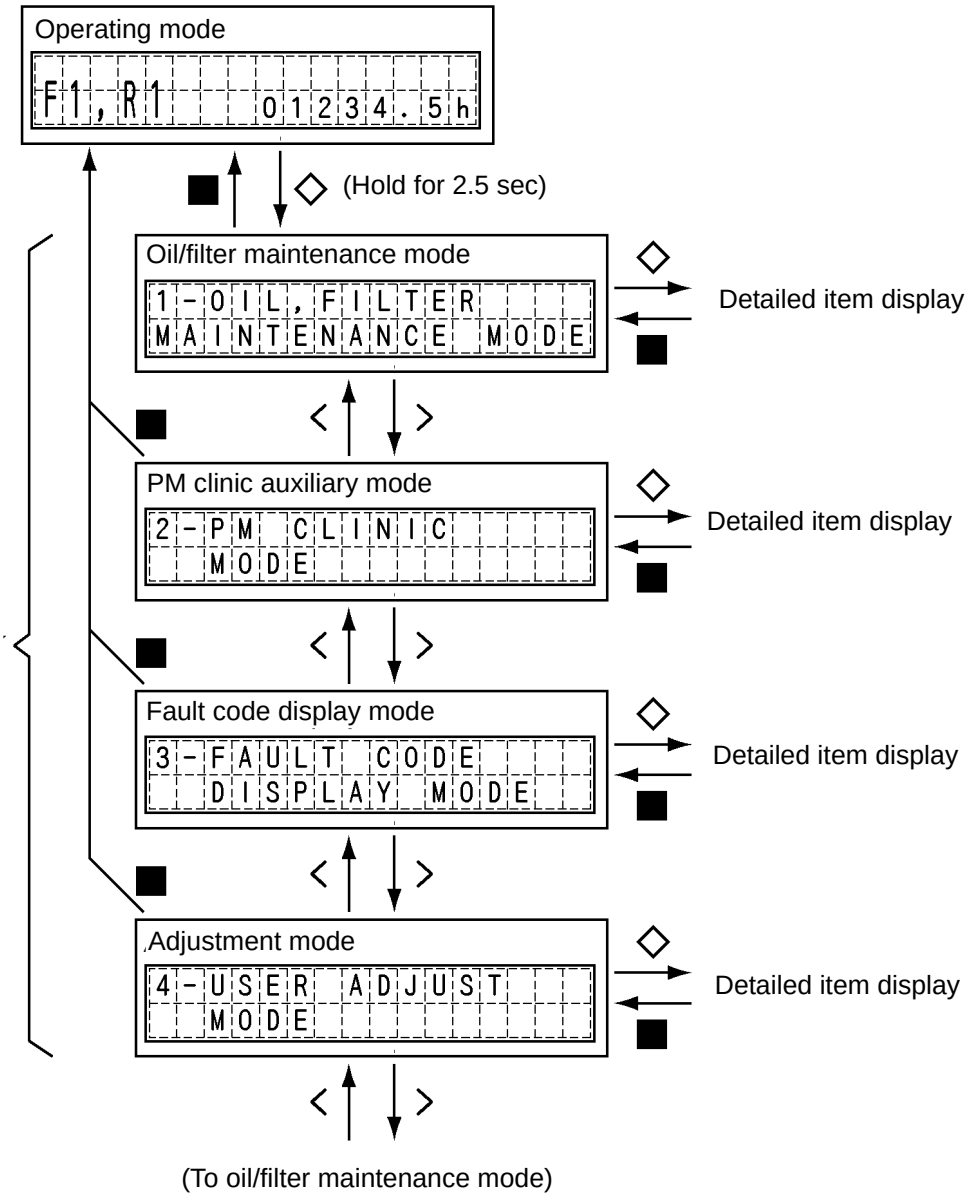

METHOD OF USING OIL AND FILTER MAINTENANCE MODE

NOTICE
This function is only a guideline. If dirty oil or filters are found during daily maintenance, replace them immediately.
If the controllers or monitor panel are replaced, the timer for this function will not work properly. Contact your Komatsu distributor for replacement.

https://truckmanualshub.com/

In the oil and filter maintenance mode, the replacement intervals for oil and filters are displayed on display panel B (multi-information).

(1) The item is displayed.

(2) The time remaining until replacement is displayed.

(3) The quantity of replacements until now is displayed.

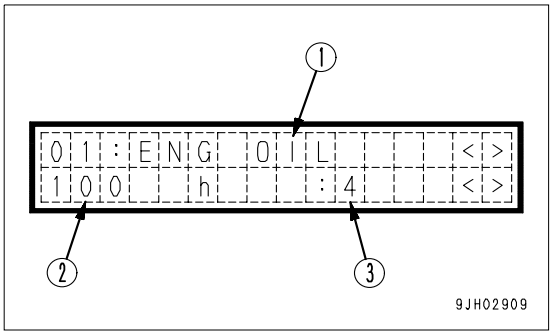

The display items can be displayed in order by operating the information switch to the left or right (<, >).

Code	Display	Maintenance Work Item	Replacement Interval (h)	
			1st Replacement (may not be changed)	2nd Replacement and thereafter (may be changed)
01	ENG OIL	Engine oil	500h (**)	500h (**)
02	ENG FILT	Engine oil filter	500h (**)	500h (**)
03	FUEL FILT	Fuel main filter	1000h	1000h
04	HYD FILT	Hydraulic oil filter	2000h	2000h
06	CORR RES	Corrosion resistor	1000h	1000h
07	DAMP OIL	Damper oil	2000h	2000h
08	FNL OIL	Final drive oil	1000h	1000h
10	HYD OIL	Hydraulic oil	2000h	2000h
12	HSS FILT	HSS charge filter (*)	-	-
19	POWL OIL	Power train oil	1000h	1000h
20	POWL FILT	Power train oil filter	500h	500h
41	F. PRE-FLT	Fuel pre-filter	500h	500h

- The 1st replacement interval may not be changed. If it needs to be changed for some particular reason, treat the 1st maintenance work as has been finished in the maintenance mode, and change the 2nd or subsequent replacement interval.
- The item with an asterisk (*) in the table is shown on the display but not in use in this machine.
- (**) For details about engine oil interval, refer to section, RECOMMENDED FUEL, COOLANT, AND LUBRICANT (4-12)

When the oil or filter has been replaced, select the applicable item, then operate the buzzer cancel switch to ◇.

The screen will ask if you want to display the replacement history.

Operate the information switch to select YES, then operate the buzzer cancel switch to ◇. The replacement quantity will increase by 1, the replacement interval will be reset, and the oil, filter change interval lamp will go out.

When this is done, if the maintenance caution lamp does not go out, there is another item close to the replacement time, so check that item.

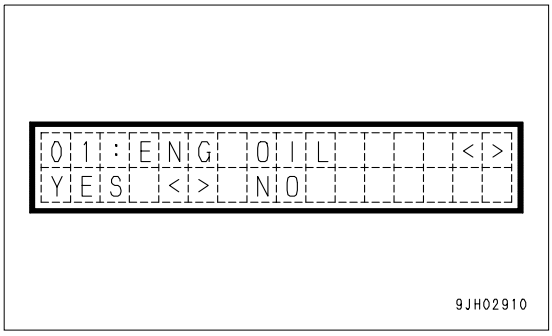

https://truckmanualshub.com/

REMARK
To return to the maintenance mode, operate the buzzer cancel switch to ■.

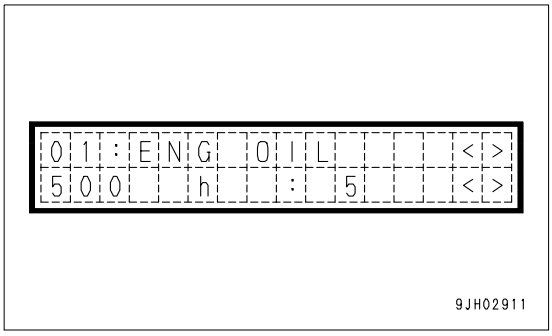

METHOD OF USING PM CLINIC AUXILIARY MODE

⚠ CAUTION

When moving the work equipment or setting the transmission to the travel position for carrying out measurements, check carefully that the situation is safe.

In the PM Clinic auxiliary mode, the engine RPM and battery voltage are shown in display B (multi-information).

Display panel B (Malti-information) displays the item on the top line (1) and the measured value on the bottom line (2).

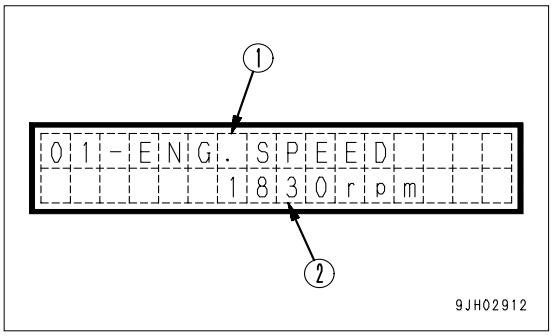

The display items consist of the seven items in the table below.

The items can be selected by operating the information switch (<, >).

Display	Item	Measured value
01-ENG SPEED	Engine rotation speed	Rotation (rpm)
02-COOLANT TEMP.	Engine cooling water temperature	Temperature (°C)
05-BOOST PRESS.	Boost pressure	Pressure (kPa)
06-BOOST TEMP.	Boost temperature	Temperature (°C)
07-T/C TEMP.	Power train oil temperature	Temperature (°C)
08-HYD TEMP.	Work equipment oil temperature	Temperature (°C)
13-BATTERY VOLT.	Battery voltage	Voltage (mV)

REMARK
Items such as the engine speed fluctuate and are difficult to see during the measurement. In such cases, operate the buzzer cancel switch to ◇. This makes it possible to hold the display of the value.
To cancel this mode, operate the buzzer cancel switch again to ◇.
To return to the maintenance mode, operate the buzzer cancel switch to ■.

https://truckmanualshub.com/

METHOD OF USING FAULT CODE DISPLAY MODE

NOTICE
The fault items observed by this function are connected with the electronic control, so even if a fault code is not displayed, there is probably some problem with the machine. If the operator feels any problem with the machine, the machine should be stopped immediately and checked.

When any disconnection or short circuit in any sensor is detected, the location and fault code are displayed by a 6-digit code on display panel B (multi-information). When contacting your Komatsu distributor, inform your distributor of the code at the same time.

If the failure observation function has not determined the condition of the machine, the display is as shown in the diagram on the right.

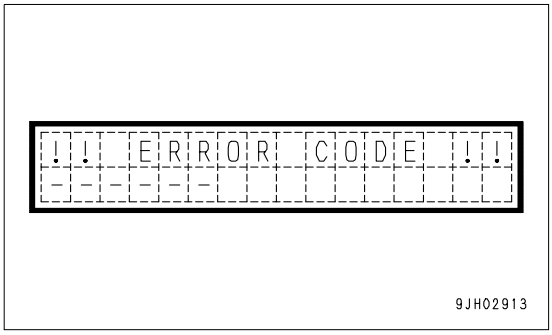

With this function, existing failures can be displayed up to a maximum of 20 items.

If multiple failures are occurring, the display automatically changes every 2 seconds, so check the code (1).

The display is shown repeatedly.

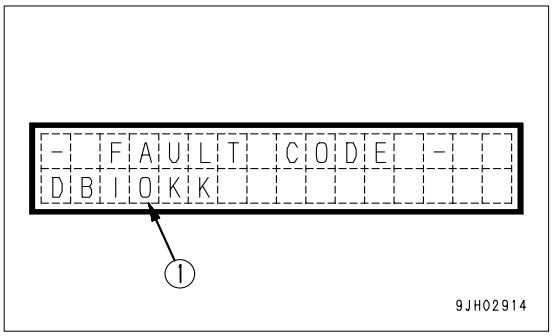

REMARK
To return to the maintenance mode, operate the buzzer cancel switch to ■.

METHOD OF USING USER ADJUST MODE

The adjust mode has functions of changing the intensity of the panel backlight and the contrast of LCD panel. They are shown in display B.

1. Adjusting backlighting of liquid crystal display
2. The diagram on the right is the mode for adjusting the brightness of the backlighting of the liquid crystal panel.

   This display will be switched to the screen brightness adjustment display, if the alarm buzzer cancellation switch is turned to the ◇ position.

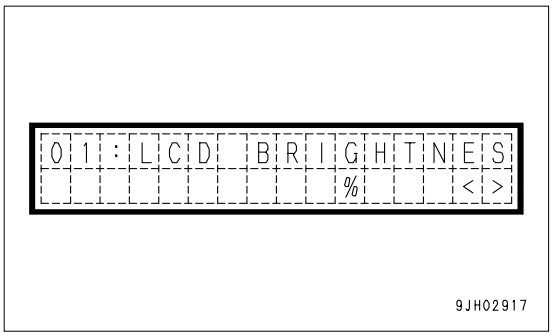

https://truckmanualshub.com/

3. The brightness can be adjusted by operating the information switch.

   The higher the number, the brighter the screen becomes; the lower the number, the darker the screen becomes.

   > position: Number increases

   < position: Number decreases

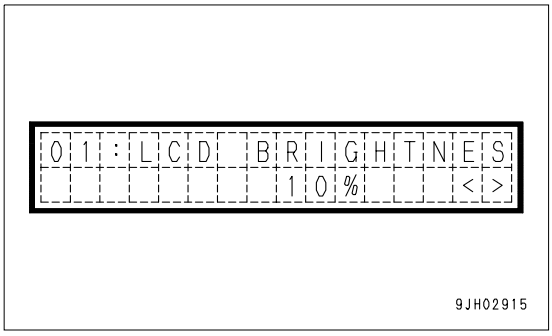

4. The brightness of the backlight for the LCD gauges may be held constant by turning the alarm buzzer cancellation switch to the ◇ position.

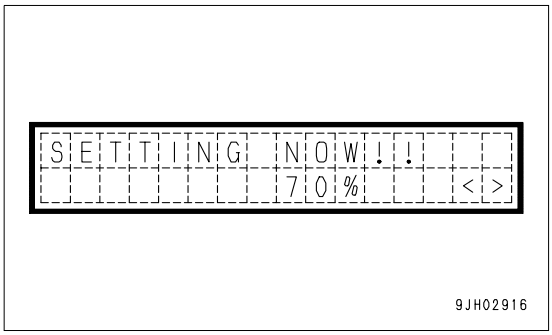

REMARK
To return to the maintenance mode, operate the buzzer cancel switch to ■.
The brightness of the backlighting of the monitor panel differs according to whether the front lamp is lit or not. Entering this mode when the front lamps are lit makes it possible to adjust the brightness when the front lamps are lit. In the same way, entering this mode when the front lamps are not lit makes it possible to adjust the brightness when the front lamps are not lit.

5. Adjusting backlighting of display panel B (multi-information)

6. The diagram on the right is the mode for adjusting the brightness of the backlighting of the display panel B (multi-information).

   On the screen, operate the buzzer cancel switch to ◇ to switch to the screen for adjusting the brightness.

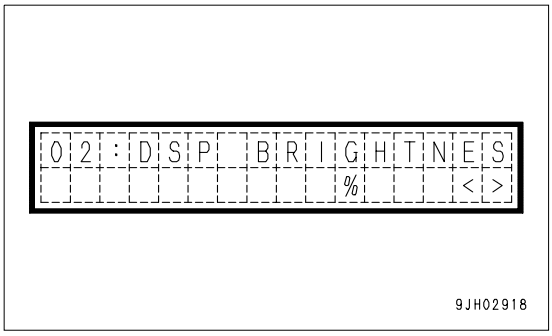

7. The brightness can be adjusted by operating the information switch.

   The higher the number, the brighter the screen becomes; the lower the number, the darker the screen becomes.

   > position: Number increases

   < position: Number decreases

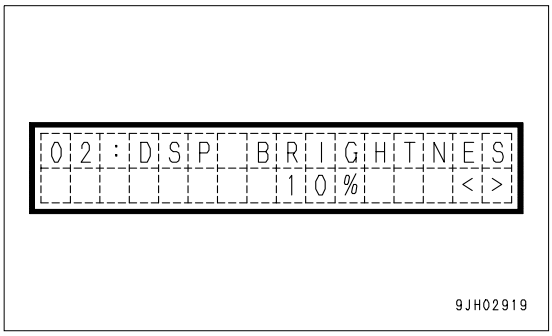

https://truckmanualshub.com/

8. When the buzzer cancel switch is operated to ◇, the brightness of the display panel B (multi-information) backlighting is set.

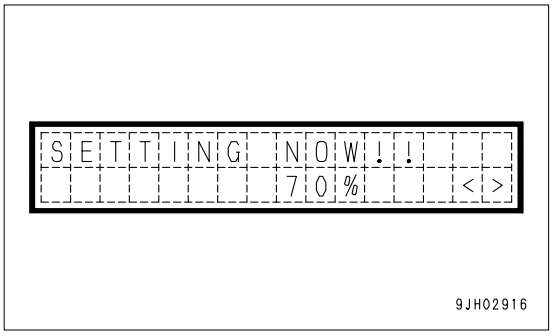

REMARK
To return to the maintenance mode, operate the buzzer cancel switch to ■.
The brightness of the backlighting of the monitor panel differs according to whether the front lamp is lit or not. Entering this mode when the front lamps are lit makes it possible to adjust the brightness when the front lamps are lit. In the same way, entering this mode when the front lamps are not lit makes it possible to adjust the brightness when the front lamps are not lit.

9. Adjusting contrast of liquid crystal display panel B (multi-information)

10. The diagram on the right is the mode for adjusting the contrast of the liquid crystal display panel B (multi-information).

    On this screen, operate the buzzer cancel switch to ◇ to switch to the screen to adjust the contrast.

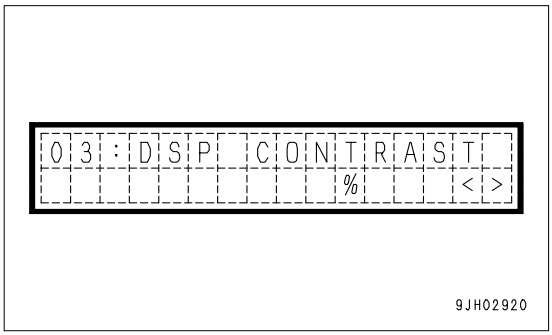

11. The contrast can be adjusted by operating the information switch.

    The higher the number, the deeper the screen becomes; the lower the number, the lighter the screen becomes.

    > position: Number increases

    < position: Number decreases

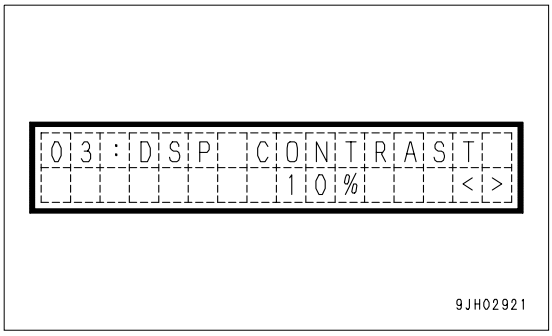

12. When the buzzer cancel switch is operated to ◇, the contrast of the liquid crystal display panel B (multi-information) is set.

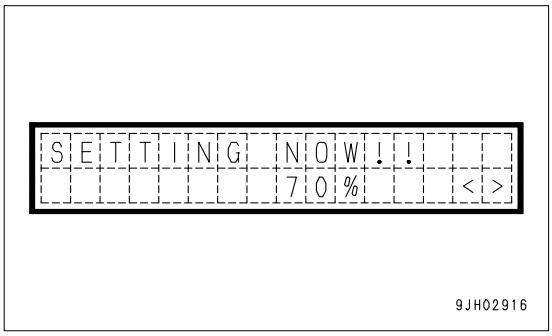

REMARK
To return to the maintenance mode, operate the buzzer cancel switch to ■.

https://truckmanualshub.com/

SWITCHES

Machine equipped with cab

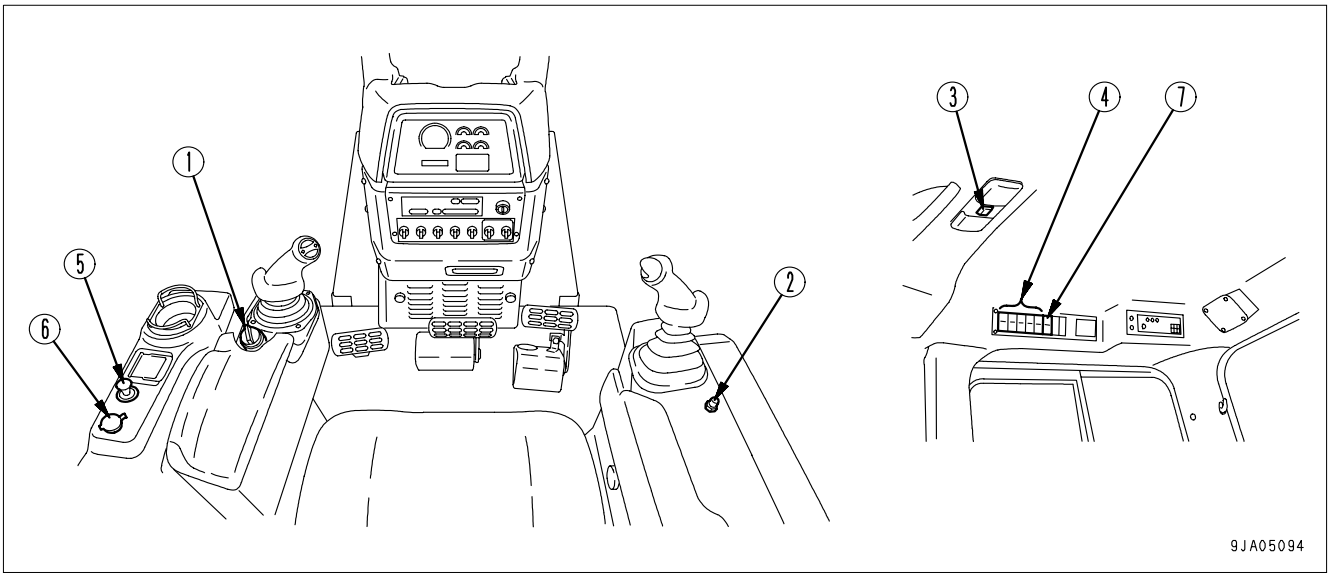

Machine equipped with ROPS canopy

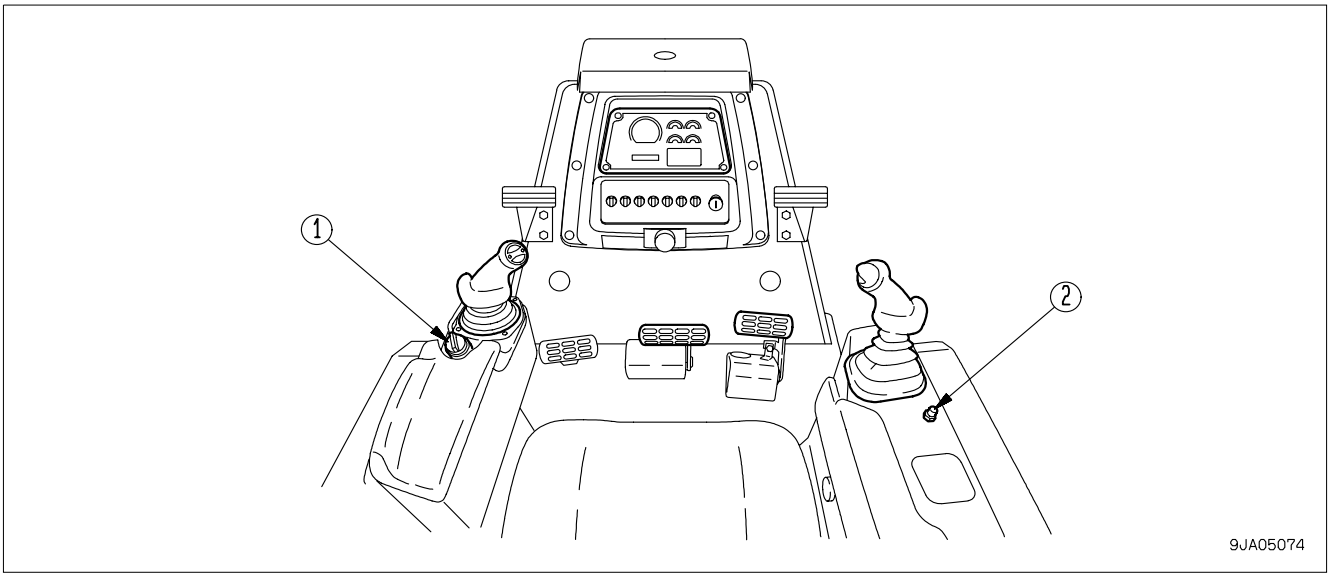

(1) Fuel control dial
(2) Horn switch
(3) Room lamp switch
(4) Wiper switch
(5) Cigarette lighter
(6) Accessory socket
(7) Rear glass heating switch (EU specification)

https://truckmanualshub.com/

FUEL CONTROL DIAL

Dial (1) is used to control the engine speed and output.

(a) Low idling position: Turn fully to the left

(b) High idling position: Turn fully to the right

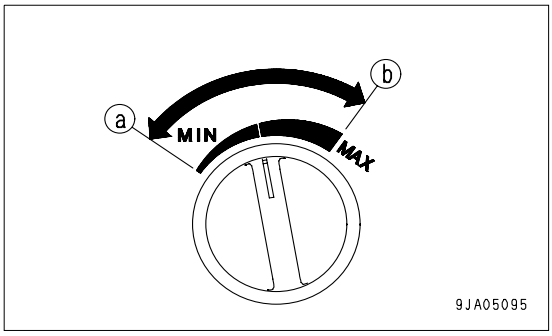

HORN SWITCH

The horn sounds when the button (2) at the rear of the blade control lever at the right side of the operator's seat is pressed.

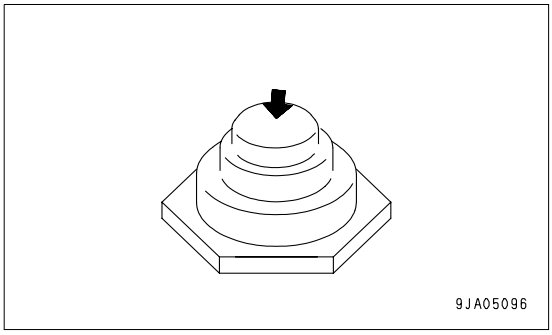

ROOM LAMP SWITCH

This (3) illuminates the room lamp.

(A) ON position: Lamps light up

(B) OFF position: Lamps are out

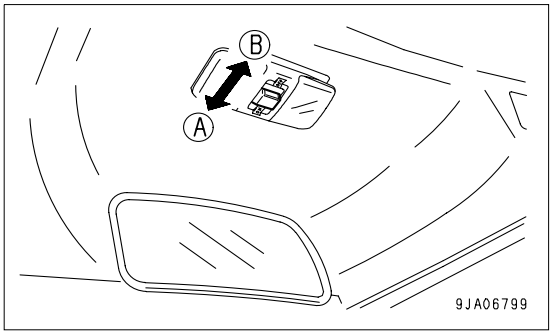

WIPER SWITCH

This (4) activates the wipers.

The wiper switches are as follows:

(A): Left door (LH)

(B): Front window (FF)

(C): Right door (RH)

(D): Rear window (RR)

(E): Wiper intermittent operation switch (INT)

This is also used as the window washer switch.

The switch is operated as follows:

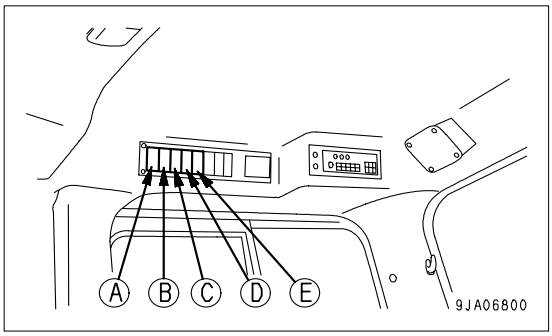

https://truckmanualshub.com/

- Wiper only

  (J) ON position: Wiper is operated

  (K) OFF position: Wiper stops

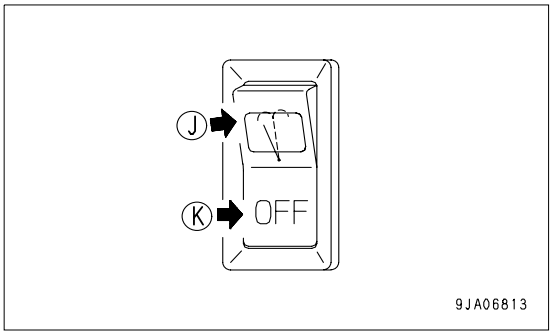

- Wiper and window washer

  If this is kept pressed to the ON position (J) while the wiper is working, water will be sprayed out.

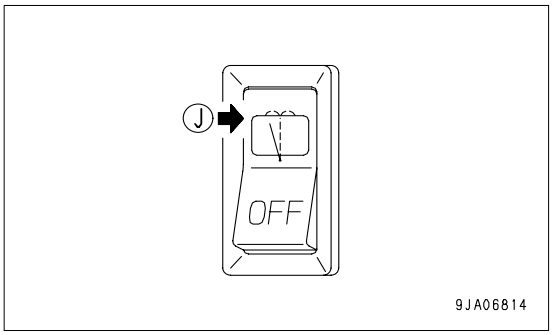

- Only wind washer

  If this is kept to the OFF position (K), water will be sprayed out.

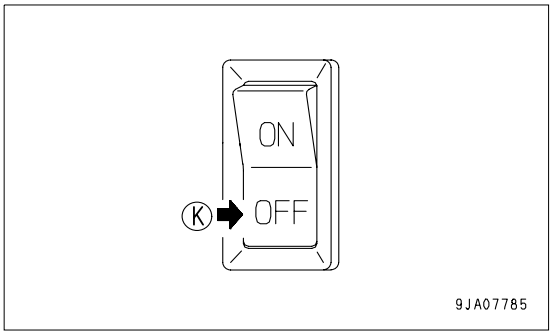

- Wiper intermittent operation switch

  When this switch is turned to the ON position (J) to start the wiper moving, the wiper works once in every four seconds.

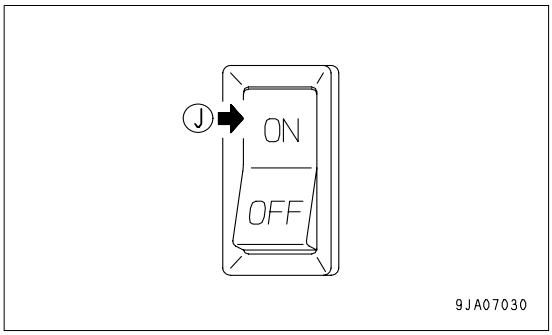

REMARK
When the wiper intermittent operation switch is ON position (J), if the wiper switch for each window is turned ON position (J), the wiper will move intermittently.

https://truckmanualshub.com/

CIGARETTE LIGHTER

This (5) is used to light cigarettes.

When the cigarette lighter is pushed in, it will return to its original position after a few seconds, so take it out to light your cigarette.

If the cigarette lighter is removed, the socket can be used as a power source.

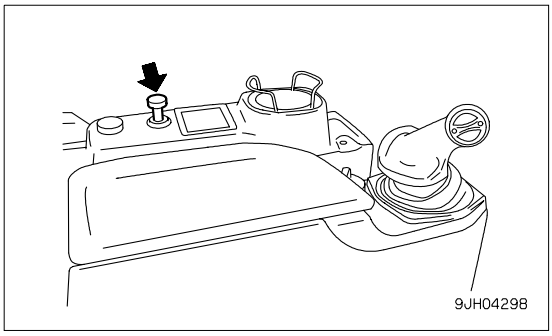

NOTICE
This cigarette lighter is 24V. Do not use it as the power source for 12V equipment. If it is used so, the equipment may fail.
The capacity of the cigarette lighter is 120W (24V x 5A).

ACCESSORY SOCKET

This (6) is used as the power source for a wireless or other 12V equipment.

Accessory socket capacity: 60W (12V x 5A)

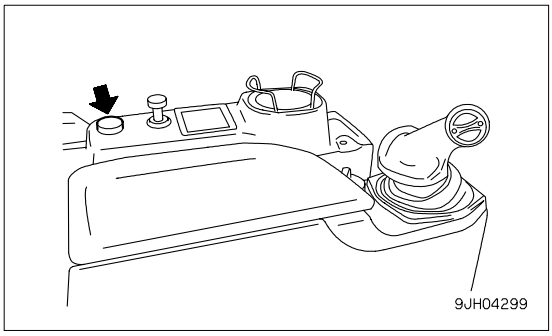

REAR GLASS HEATING SWITCH

This switch (7) is used to actuate the rear glass heater wire defroster in order to remove the mist from the glass.

ON position: Actuated

At the same time, indicator (A) lights up.

OFF position: Stopped

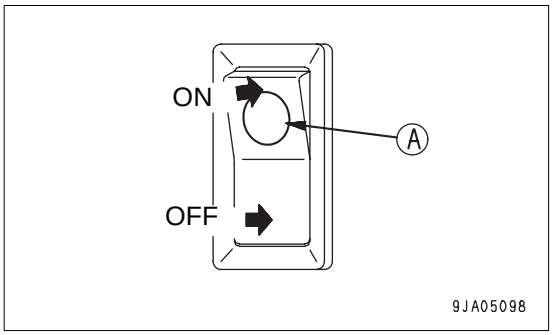

https://truckmanualshub.com/

CONTROL LEVERS AND PEDALS

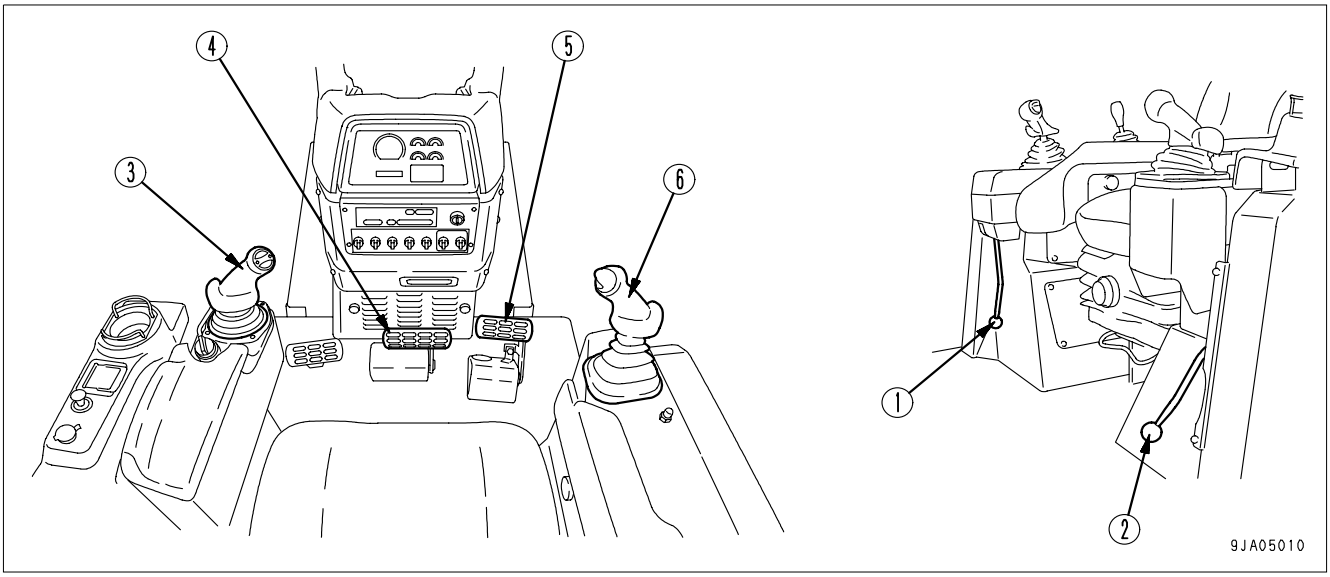

(1) Work equipment lock lever
(2) Parking brake lever
(3) Steering, forward-reverse, gear shift lever
(4) Brake pedal
(5) Decelerator pedal
(6) Blade control lever

WORK EQUIPMENT LOCK LEVER

⚠ WARNING

- **When leaving the operator's compartment, set the work equipment lock lever securely to the LOCK position. If the work equipment lock lever is not at the LOCK position and the control levers are touched by mistake, it may lead to serious personal injury.**
- **If the work equipment lock lever is not set securely to the LOCK position, the work equipment may move and cause serious injury. Check that it is in the position shown in the diagram.**
- **When parking the machine or when carrying out maintenance, always lower the work equipment to the ground, then set the work equipment lock lever to the LOCK position.**

This lever (1) is a lock device for the work equipment control lever.

(L) LOCK position: Work equipment does not move even when work equipment control lever is operated

(F) FREE position: Work equipment moves according to operation of work equipment control lever

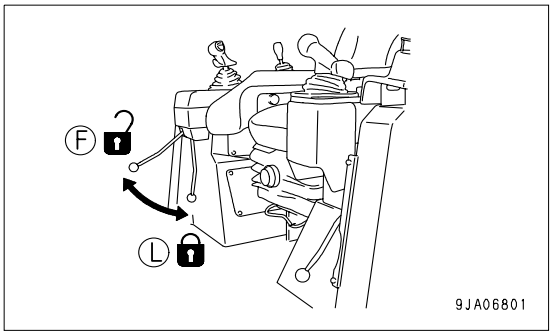

REMARK
When starting the engine, to ensure safety, always set the work equipment lock lever to the LOCK position.

https://truckmanualshub.com/

PARKING BRAKE LEVER

WARNING

- **When parking the machine, always set the parking brake lever in the LOCK position.**
- **If the parking brake lever is operated, the brake is applied, even when the machine is traveling. The machine will suddenly stop, so this is dangerous. For this reason, do not operate the parking brake lever when the machine is moving, except in emergencies.**

This lever (2) is the control lever for the parking brake.

(L) LOCK position: Parking brake is applied

(F) FREE position: Parking brake is released

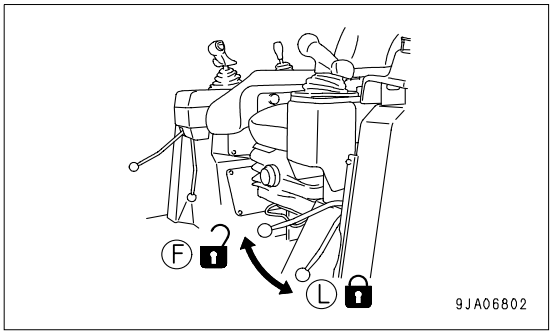

REMARK
Before moving the parking brake lever to the LOCK position, return the steering, forward-reverse, gear shift lever to the NEUTRAL position.
When starting the engine, if the parking brake lever is not in the LOCK position, the limit switch is actuated and it is impossible to start the engine.

STEERING, FORWARD-REVERSE, GEAR SHIFT LEVER

This control lever (3) serves to change forward or reverse direction of machine travel, steer the machine to the right or left, change the traveling speed and make a counter-rotation.

- **Forward-reverse shifting**

Position (A): FORWARD

Position (B): REVERSE

Position (N): NEUTRAL

Operate the lever to the front to travel FORWARD.

Operate the lever to the rear to travel in REVERSE.

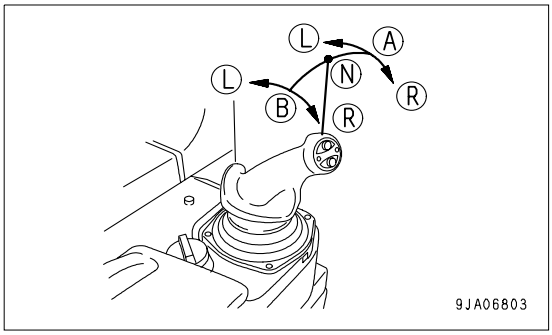

- **Steering**

Position (L): Left turn

Position (R): Right turn

If the lever is set in the forward or reverse travel position and moved to the left or right, the machine will turn in the direction that the lever is moved. The turning radius changes according to the amount that the lever is moved. If the lever is moved fully to the left or right, the turning radius will become smaller.

REMARK
When moving the joystick lever, and the lever is released, it will return to (A) or (B) and the machine will travel in a straight line.

https://truckmanualshub.com/

● Gear shifting

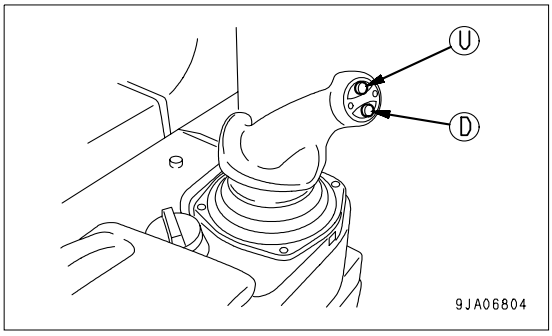

When UP switch (U) or DOWN switch (D) is pushed, the transmission speed will change.

UP switch (U): Each time the switch is pressed, the transmission will up shift one speed.

DOWN switch (D): Each time the switch is pressed, the transmission will down shift one speed.

There are 3 forward and 3 reverse speed ranges.

For details of the maximum speed in each speed range, see “SPECIFICATIONS (5-2)“.

REMARK
The speed range being used is displayed on panel A on the monitor panel according to the gearshift operation.
<Example>
Neutral: N is displayed on the display panel.
FORWARD 2nd: F2 is displayed on the display panel.
REVERSE 3rd: R3 is displayed on the display panel.
When the parking brake lever is locked, P is displayed.
For details of the method of shifting gears according to the shift mode, see the “SHIFTING GEARS (3-79)“. Shift mode selection means that the selected speed range is displayed at the NEUTRAL position (N) before starting.

● Operating counter-rotation turn

⚠ WARNING

When operating the counter-rotation turn, if the load on the left and right is not balanced, the machine may make a pivot turn, so check the ground conditions and be careful not to hit any obstacles when carrying out the operation.

With the lever at the NEUTRAL position (N), move the lever partially in the direction of turn. The left and right tracks will rotate in opposite directions, and the machine will make a slow counterrotation turn. If the lever is operated further, the speed of the counterrotation turn will increase.

(R): Right counterrotation turn

(L): Left counterrotation turn

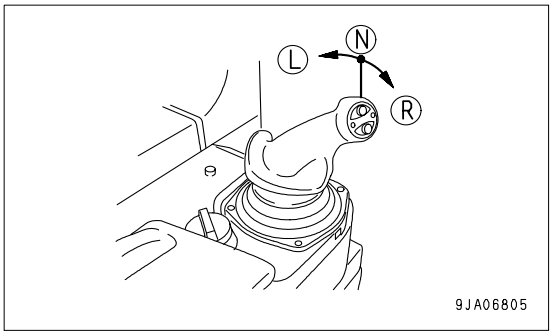

https://truckmanualshub.com/

BRAKE PEDAL

WARNING

Do not place your foot on this pedal unnecessarily.

Depress the pedal (4) to apply the right and left brakes.

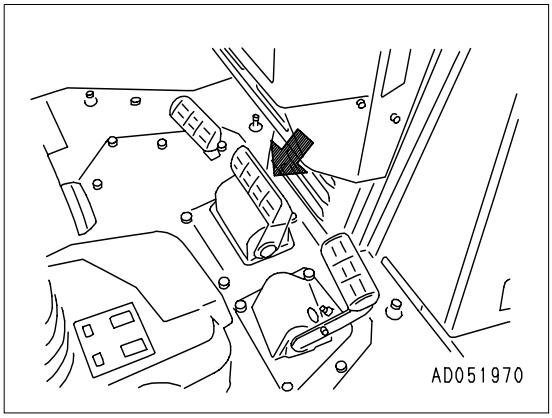

DECELERATOR PEDAL

WARNING

- **Do not place your foot on this pedal unnecessarily.**
- **When passing over the top of a hill or when a load is dumped over a cliff, the load is suddenly reduced, so there is danger that the travel speed will also increase suddenly. To prevent this, depress the decelerator pedal to reduce the travel speed.**

This pedal (5) is used when reducing the engine speed or stopping the machine.

When switching between forward and reverse, or when stopping the machine, use this pedal to reduce speed.

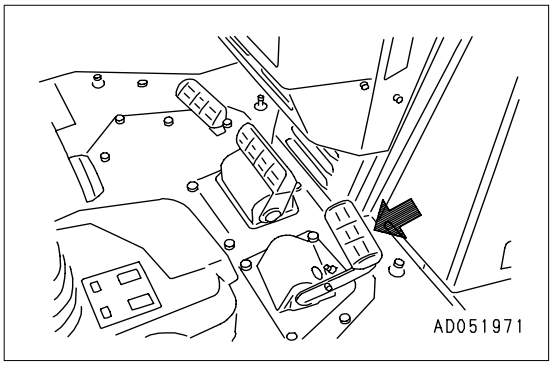

https://truckmanualshub.com/

BLADE CONTROL LEVER

POWER TILTDOZER

This lever (6) is used to lift or tilt the blade.

- Lifting control

(A) RAISE: Blade goes up

(B) HOLD: Blade is stopped and held in this position.

(C) LOWER: Blade goes down

(D) FLOAT: Blade will move freely according to external force.

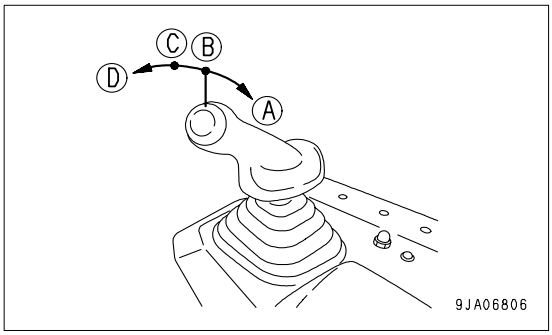

REMARK
If the lever is in the FLOAT position, even when it is released, it does not return to the HOLD position, so return it by hand.
If the engine is stopped when the control lever is in the FLOAT position, the lever is returned automatically to the HOLD position.
In low temperatures, it may take a short time for the blade control lever to be held in the FLOAT position, so hold the lever in position for at least 1 second.

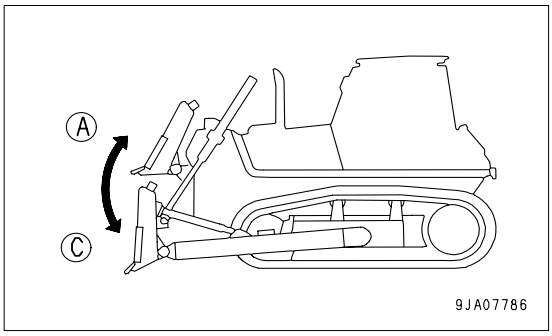

- Tilting control

(B) HOLD: Blade is stopped and held in this position.

(E) LEFT TILT

(F) RIGHT TILT

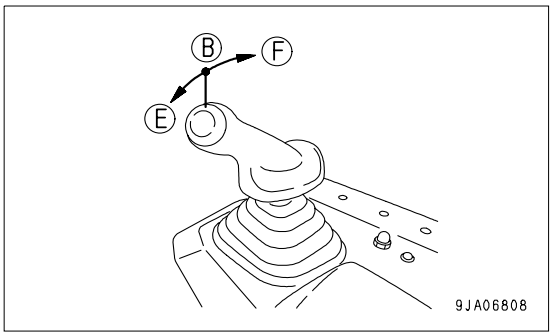

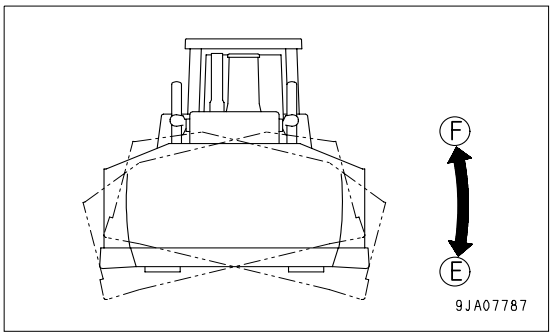

https://truckmanualshub.com/

POWERTILT POWER PITCHDOZER

This lever (6) is used to lift or tilt and pitch the blade.

- Lifting control

(A) RAISE: Blade goes up

(B) HOLD: Blade is stopped and held in this position.

(C) LOWER: Blade goes down

(D) FLOAT: Blade will move freely according to external force.

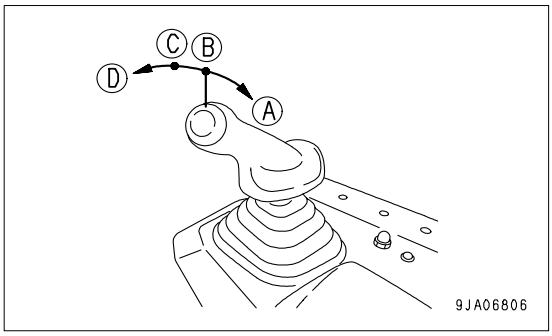

REMARK
If the lever is in the FLOAT position, even when it is released, it does not return to the HOLD position, so return it by hand.
If the engine is stopped when the control lever is in the FLOAT position, the lever is returned automatically to the HOLD position.
In low temperatures, it may take a short time for the blade control lever to be held in the FLOAT position, so hold the lever in position for at least 1 second.

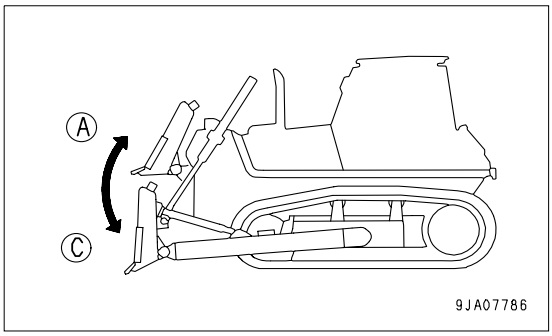

- Tilting control

(B) HOLD: Blade is stopped and held in this position.

(E) LEFT TILT

(F) RIGHT TILT

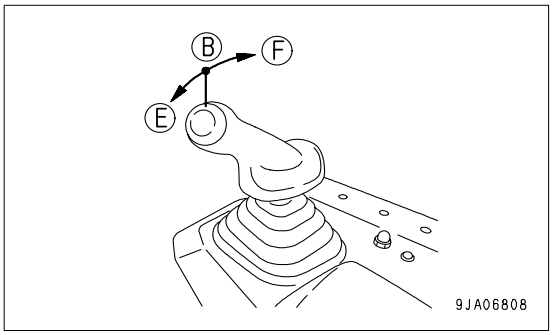

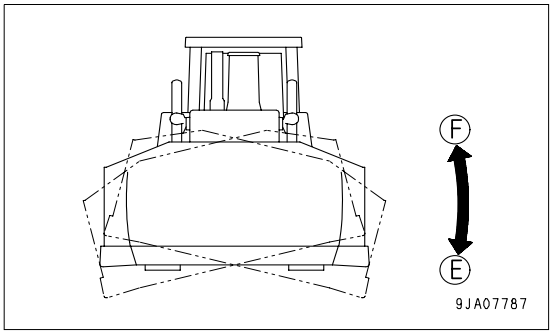

https://truckmanualshub.com/

- Pitch control

After moving the lever to the neutral position without fail, tilt the blade while pressing any of the switches (M) in the center of the knob. Then the angle of the blade edge changes.

(B) Hold: The blade stops and holds a stationary posture.

(G) Rear pitch: Blade edge angle small

(H) Front pitch: Blade edge angle large

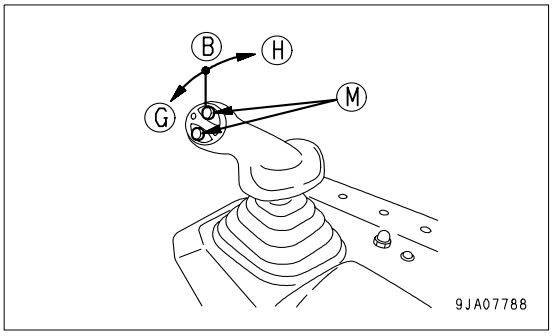

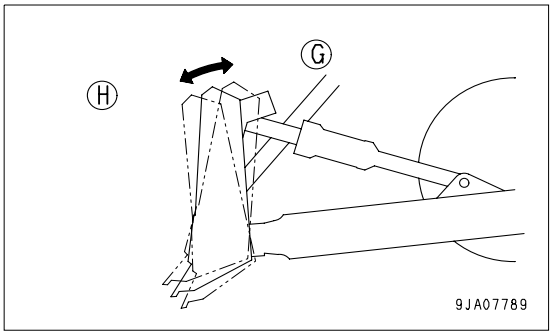

- Precautions when using pitch control

When using the pitch operation, the tilt operation changes as follows.

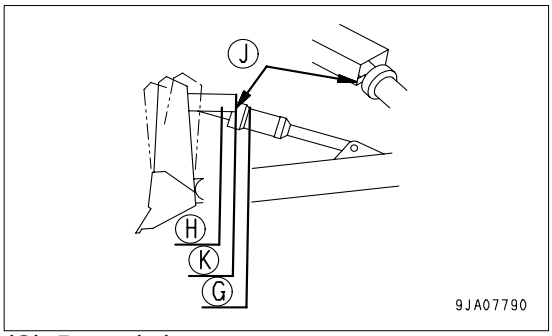

(G) Rear pitch
(H) Front pitch
(J) Pitch gauge
(K) Standard pitch

Pitch condition	Tilt operation	D65EX	D65PX	D65WX
		Amount of tilt		
Max. forward pitch	Only left tilt operation is possible	Max. 870 mm	Max. 890 mm	Max. 820 mm
Forward pitch (H)	Both left and right tilt operations are possible	Compared with standard: LEFT tilt is LARGER RIGHT tilt is SMALLER		
Standard pitch (K)		460 mm (both left and right)	450 mm (both left and right)	410 mm (both left and right)
Rear pitch (G)		Compared with standard: LEFT tilt is SMALLER RIGHT tilt is LARGER		
Max. rear pitch	Only right tilt operation is possible	Max. 870 mm	Max. 890 mm	Max. 820 mm

https://truckmanualshub.com/

ANGLE DOZER

This lever (6) is used to lift or tilt the blade.

- Lifting control

(A) RAISE: Blade goes up

(B) HOLD: Blade is stopped and held in this position.

(C) LOWER: Blade goes down

(D) FLOAT: Blade will move freely according to external force.

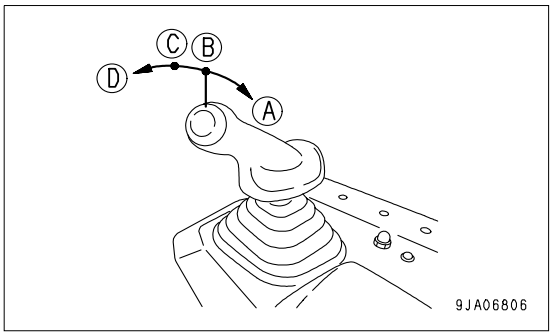

REMARK
If the lever is in the FLOAT position, even when it is released, it does not return to the HOLD position, so return it by hand.
If the engine is stopped when the control lever is in the FLOAT position, the lever is returned automatically to the HOLD position.
In low temperatures, it may take a short time for the blade control lever to be held in the FLOAT position, so hold the lever in position for at least 1 second.

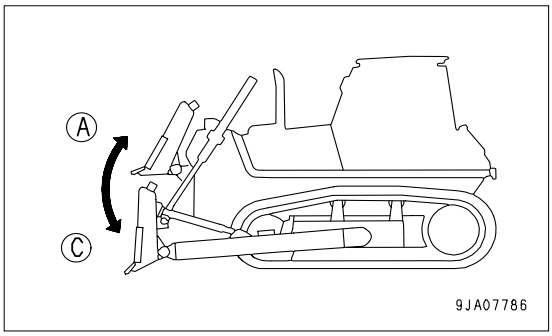

https://truckmanualshub.com/

CIRCUIT BREAKER

NOTICE

- **When resetting the circuit breaker, always turn off the power first (turn the starting switch OFF).**
- **If the reset button for the circuit breaker comes out immediately when it is pushed in, it is necessary to carry out an inspection of the electrical circuit.**

If the starting switch does not work when it is turned to the ON position, the circuit has probably been cut off by the circuit breaker.

Inspect the circuit breaker.

REMARK

The circuit breaker is a device installed in electric circuits where a large current flows. It is installed to protect the electric circuit. It protects the electric components and wiring from damage caused by an abnormal current in the same way as a normal fuse. After repairing and restoring the location of the abnormality, there is no need to replace the breaker. It can be used again.

1. Open the cover at the bottom of the front panel. Circuit breakers (1) and (2) can be seen.

   (Circuit breaker (2) is installed only on machines equipped with an air conditioner.)

2. When the circuit breaker has cut off the circuit, reset button (3) springs out.

   Push reset button (3) in.

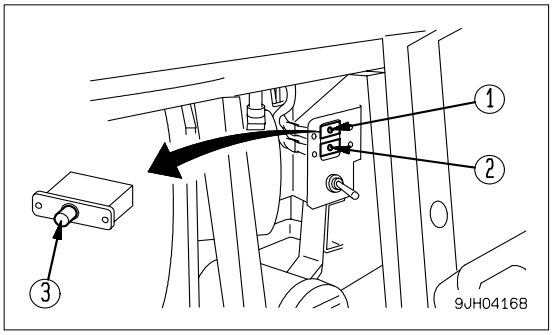

No	Fuse capacity	Circuit
(1)	20A	Starting switch
(2)	20A	Air conditioner

FUSE

NOTICE

Before replacing a fuse, be sure to turn starting switch to the OFF position.

The fuses protect the electrical equipment and wiring from burning out.

If the fuse becomes corroded, or white powder can be seen, or the fuse is loose in the fuse holder, replace the fuse.

Replace the fuse with another of the same capacity.

https://truckmanualshub.com/

- Chassis

Fuse boxes (A) and (B) are installed under the battery cover.

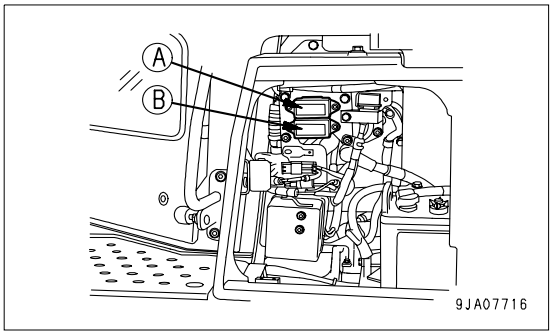

- Cab (machines equipped with cab)

Fuse box (C) is installed in the overhead panel.

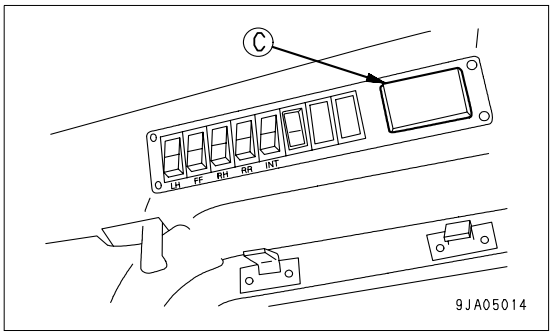

FUSE CAPACITY AND CIRCUIT NAME

Fuse box (A)

NO.	Fuse capacity	Circuit
(1)	20A	Spare power source
(2)	20A	Horn, Ribbon heater, Air suspension seat
(3)	20A	Front lamp, Rear lamp
(4)	20A	Transmission, Steering controller
(5)	5A	Engine controller

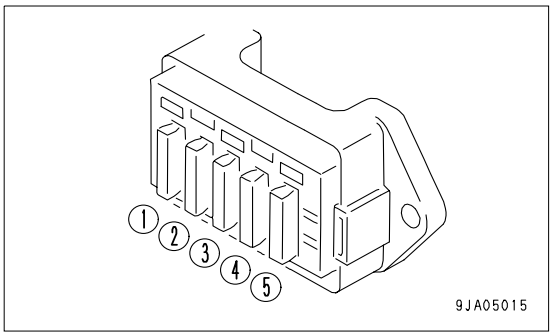

Fuse box (B)

NO.	Fuse capacity	Circuit
(1)	5A	Backup alarm
(2)	15A	Continuous power source
(3)	30A	Truck power source
(4)	30A	Engine power source
(5)	30A	Air conditioner

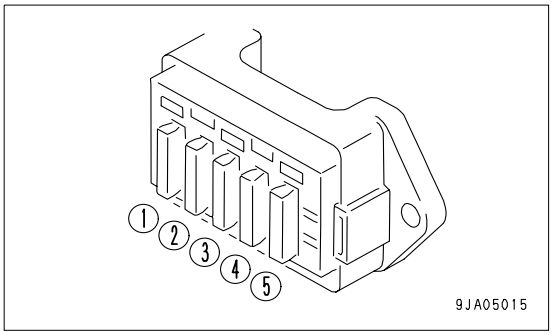

https://truckmanualshub.com/

Fuse box (C)

NO.	Fuse capacity	Circuit
(1)	10A	Radio memory
(2)	20A	Radio,lamp,cigarette lighter
(3)	20A	Heated glass (EU specification)
(4)	10A	Rear wiper
(5)	10A	Front wiper
(6)	10A	Left and right door wiper

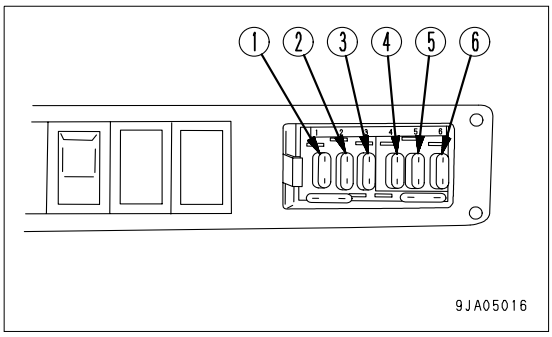

FUSIBLE LINK

If any of the electrical equipment in the operator's cab does not work, a fusible link built in the wiring harness is suspected of disconnection. In that case, check the link and replace it with a new one, if necessary.

REMARK
A fusible link refers to the large-sized fuse wiring installed in the high current flow portion of the circuit to protect electrical components and wiring from burning, similar to an ordinary fuse.

When opening the battery cover on the left side of the truck, you can see fusible link (1) and (2).

Capacity of fusible link (1): 65A

Capacity of fusible link (2): 120A

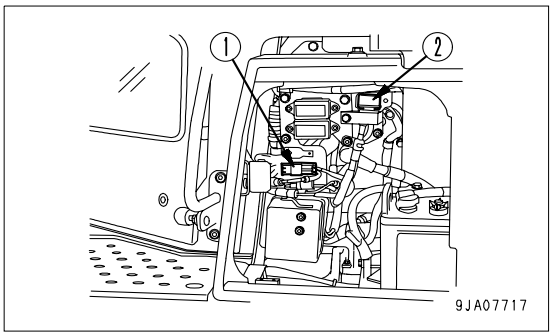

ELECTRIC POWER TAKE-OUT ADAPTER

MACHINE EQUIPPED WITH CAB

NOTICE
The power for the cigarette lighter is 24V. Do not use it as the power source for 12V equipment.

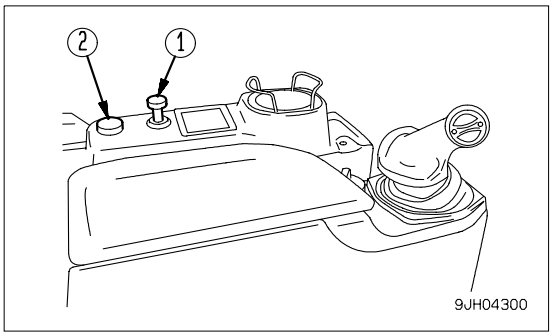

The cigarette lighter socket (1) can be used as a power source for 24V equipment and the accessory socket (2) can be used for 12V equipment.

Capacity of cigarette lighter: 120W (24V x 5A)

Capacity of accessory socket: 60W (12V x 5A)

https://truckmanualshub.com/

MACHINE EQUIPPED WITH ROPS CANOPY

NOTICE

- **Do not use as a power supply for 12V equipment. This will cause failure of the equipment.**
- **When using as a power supply pickup, do not install equipment which exceeds 120W (24V x 5A).**

1. Open the battery cover on the left side of the machine body.
2. There is the connector for the spare power take-off.

   (Connector CN800 (3) can be used.)

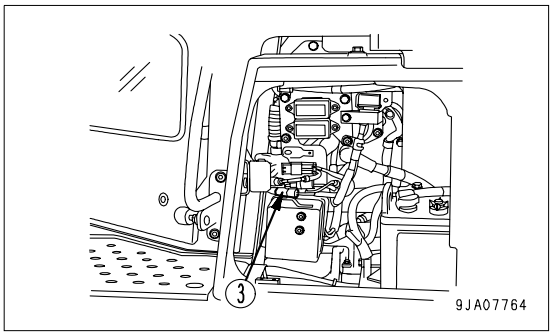

DOOR - OPEN LOCK

(Machine equipped with cab)

Use this when your want to keep the door held open.

1. Push the door against the door catch (1). The door will be held by the door catch.

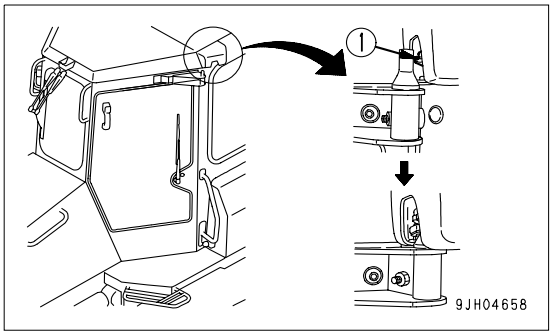

2. To release the door, move lever (2) inside the cab to the front of the cab. This will release the catch.

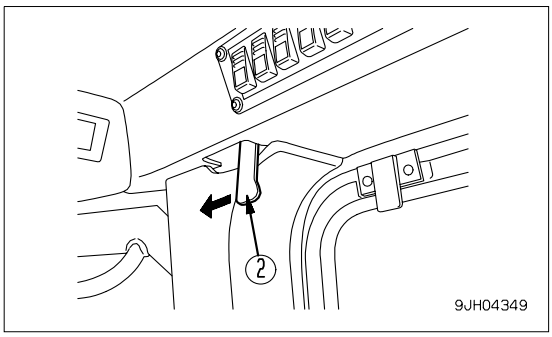

NOTICE

- **When keeping the door open, fix it securely to the catch.**
- **Always close the door when traveling or carrying out operations. Leaving the door open will cause the door to break.**
- **Keep the door locked open securely. The door may swing closed because of the vibration.**

https://truckmanualshub.com/

SASH GLASS INTERMEDIATE LOCK

(Machine equipped with cab)

When working with the cab sash glass open, use this lock to prevent the glass from chattering.

- When the lever is in the FREE position (F), the glass can be opened or closed.
- When the lever is in the LOCK position (L), the glass is held in position.

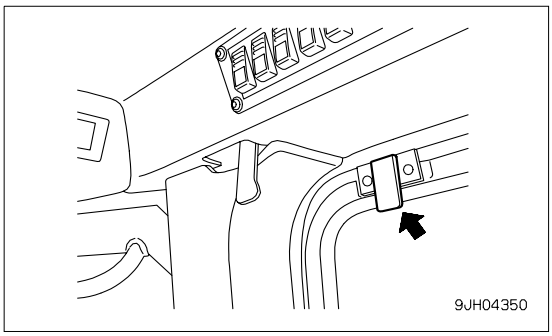

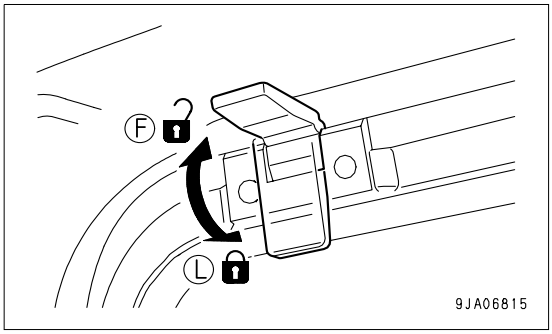

DOOR POCKET

(Machine equipped with cab)

This is inside the left and right doors. Use it for storing the Operation and Maintenance Manual or other things.

Do not put heavy tools or other heavy objects in it.

If the pocket is dirty, turn 4 clips (1), then remove the pocket and rinse it.

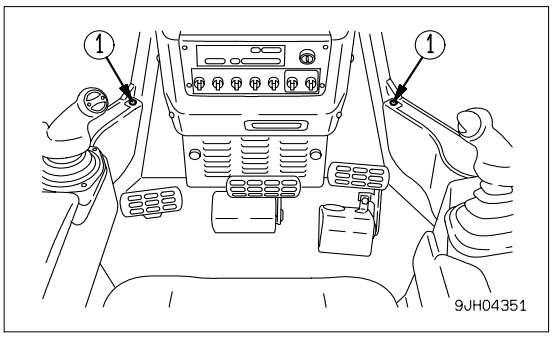

https://truckmanualshub.com/

OPENING AND CLOSING ENGINE SIDE COVER

When opening

Pull door release lever (1) to release the lock, then pull the cover up.

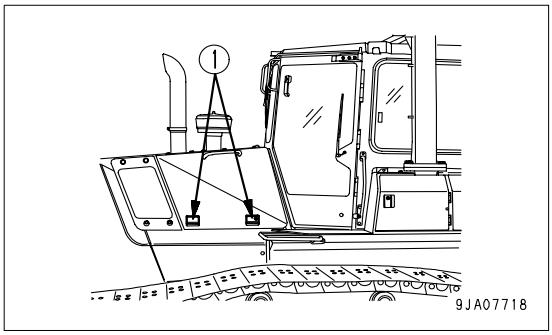

When closing

NOTICE
When closing the cover, always release the gas damper lock first.
If the gas damper lock is not released and any attempt is made to close the cover, the gas damper may break.

Push the orange button in the center of the gas damper (1) to release the lock, then push the cover down.

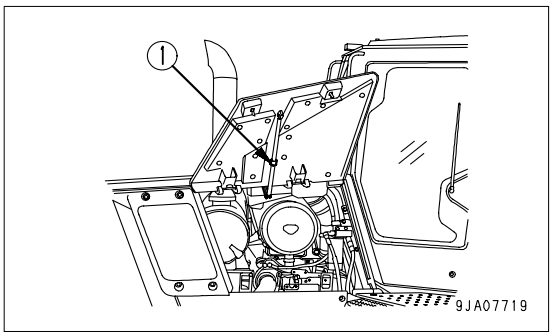

ASHTRAY

This is on the left side of the operator's seat.

Always make sure that you extinguish the cigarette before closing the lid.

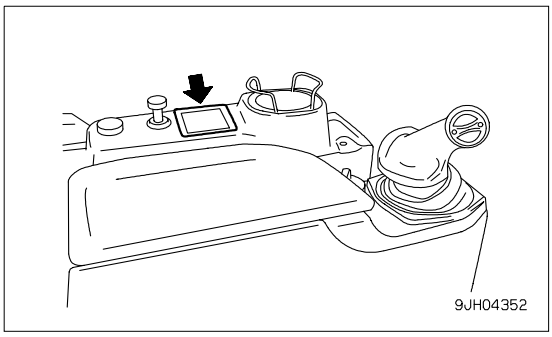

https://truckmanualshub.com/

CUP HOLDER

(If equipped)

This is the place to put cans or cups.

If drinks are put in places other than the cup holder, the can or cup will fall over and make the surrounding area or equipment dirty.

Please make full use of the cup holder.

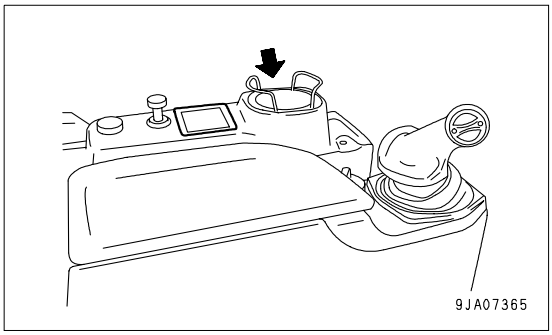

TOOL BOX

The tool box is inside the battery check cover at the rear left.

Keep the tools in this box.

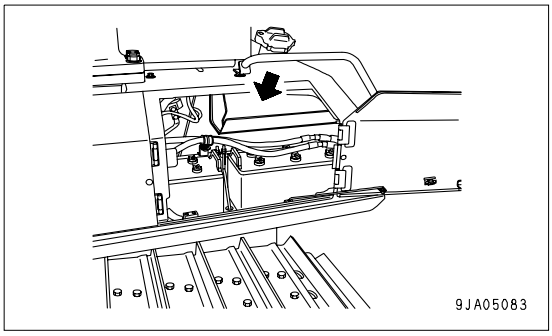

SHOVEL HOLDER

(If equipped)

This can be used for storing a shovel with a rounded blade.

- Method of installing

1. Position the shovel with stopper (1) and holder (2).
2. Tighten the adjustment nut (3) so the shovel does not move.

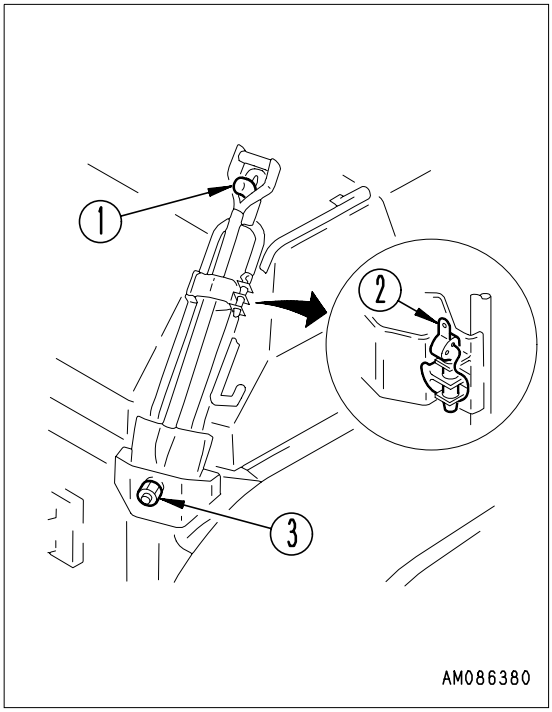

https://truckmanualshub.com/

AIR CONDITIONER, HANDLING

(Machine equipped with cab) (if equipped)

By taking fresh air into the cab through a filter, it is possible to raise the pressure inside the cab. This makes it possible to provide a pleasant working environment even on dusty jobsites.

GENERAL LOCATIONS AND FUNCTION OF CONTROL PANEL

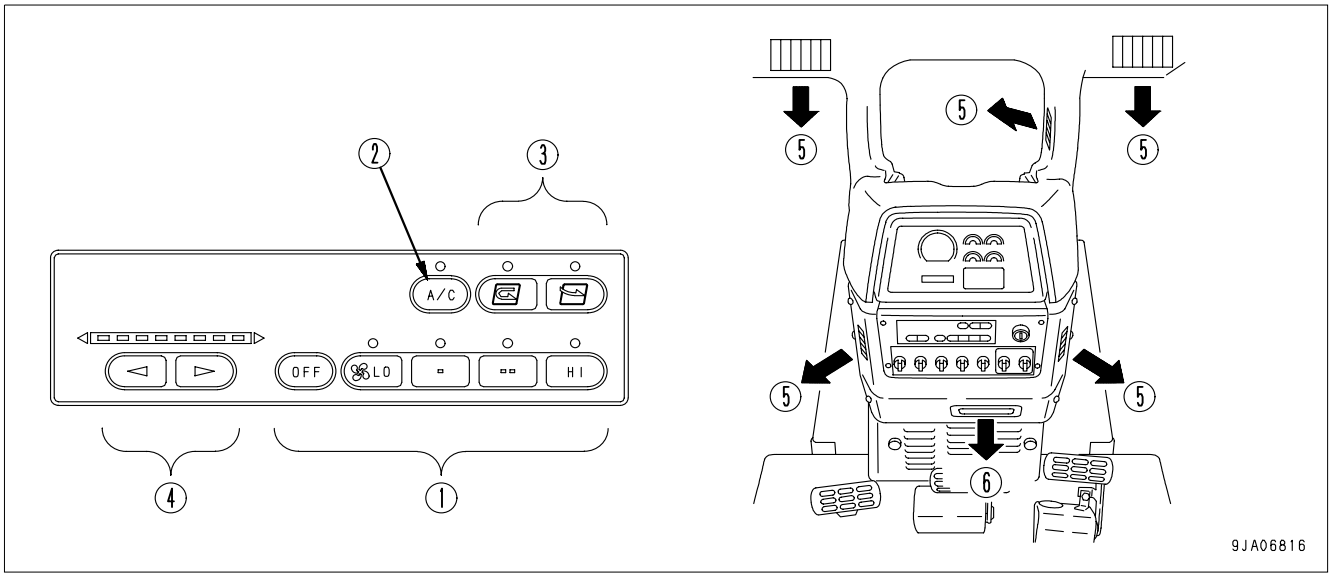

(1) Fan switch
(2) Air conditioner switch
(3) Fresh/recirc selector switch
(5) Defroster
(6) Air flow to foot

FAN SWITCH

This switch (1) can be used to adjust the airflow in four stages.

It also acts as the main switch for the air conditioner. When the OFF switch is pressed, the fan stops.

When the switch is pressed, the indicator lamp above the switch lights up to display the airflow.

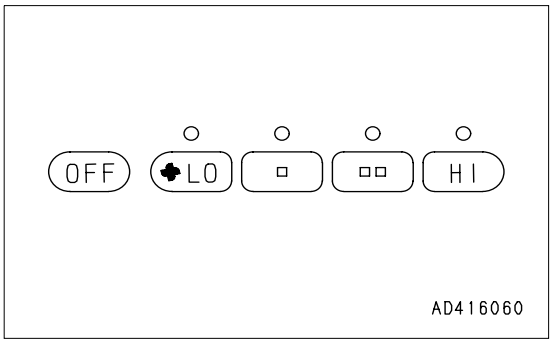

https://truckmanualshub.com/

AIR CONDITIONER SWITCH

This switch (2) is used to start or stop the cooling or dehumidifying function.

When the fan switch is turned ON and the air conditioner switch is pressed, the indicator lamp above the switch lights up. When the switch is pressed again, the switch is turned OFF and the indicator lamp goes out.

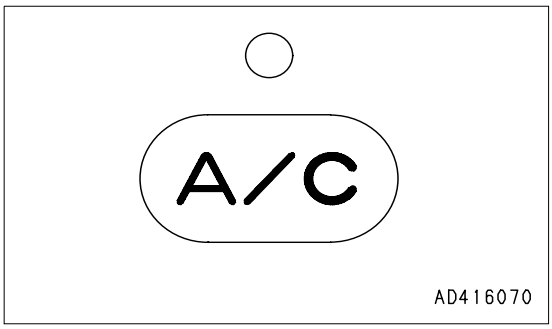

FRESH/RECIRC SELECTOR SWITCH

This switch (3) is used to select between recirculation of the air inside the cab or intake of fresh air from outside.

When the switch is pressed, indicator lamp (A) at the top of the switch lights up.

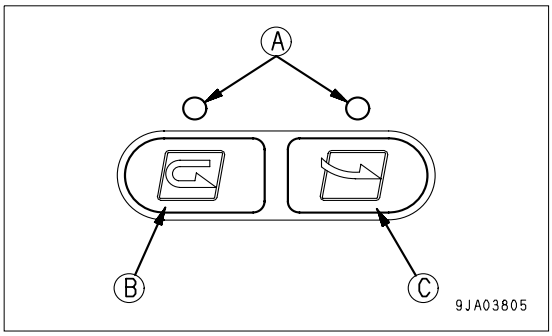

Recirculation of air inside cab

Press this switch (B) to use only the air inside the cab. Use this position to carry out rapid heating or cooling of the cab or when the outside air is dirty.

Intake of fresh air from outside

Press this switch (C) to carry out heating or cooling with fresh air taken in from the outside. Use this position when fresh air is taken in from outside the cab, or when removing the mist from the cab windows.

REMARK
When fresh air is taken into the cab, air pressure in the cab increases, which prevents the dust from entering. When neither heating nor cooling is needed, bring in clean fresh air, with your preferred air flow, to prevent dust from entering the cab.

TEMPERATURE CONTROL SWITCH

The temperature can be adjusted with this switch (4) gradually from low temperature to high temperature.

The temperature level indicator lamps (A) light up to display the temperature of the air coming from the vents.

The more blue lamps on, the lower the temperature is.

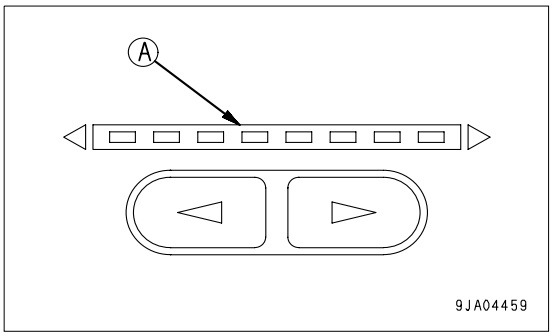

The color of the indicator lamp (A) changes while the switch is being pressed.

When the temperature reaches the desired level, release the switch to set the temperature.

https://truckmanualshub.com/

The settings for each mode are retained in memory even when the starting switch is turned OFF.

However, in the following cases, the settings must be reset.

- When the machine has been out of use for more than 7 days
- When the battery voltage is extremely low
- When there has been abnormal interference from outside
- When the fan switch is turned OFF (the setting is not kept in memory with only the air conditioner switch)

If the air conditioner is used in the FRESH position, the inside of the cab will be pressurized and this will prevent the entry of dust.

The higher the position of the fan switch, the more effective the pressurizing becomes.

METHOD OF OPERATION

Switch Condition of use		Fan switch	Air conditioner switch	Temperature control switch	FRESH/RECIRC selector switch
Cooling	Rapid	HI	ON	All blue	RECIRC
	Normal	HI - LO	ON	More than half are blue	FRESH
Dehumidifying, heating		HI - LO	ON	More than half are red	FRESH
Heating	Rapid	HI	OFF	All red	RECIRC
	Normal	HI - LO	OFF	More than half are red	FRESH
Defroster		HI	ON	More than half are red	FRESH
Vetilation or pressurizing		HI - LO	OFF	All blue	FRESH

When defrosting, set the temperature control switch so that all lamps are red. This will improve defrosting and demisting.

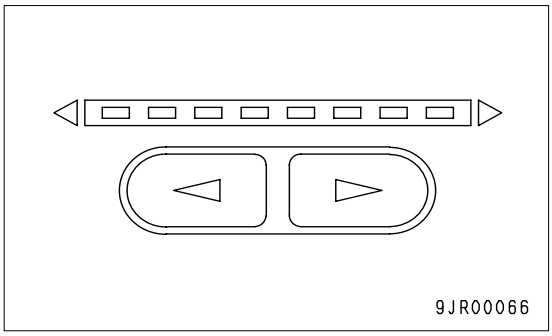

WHEN NOT USING THE AIR CONDITIONER REGULARLY

Run the air conditioner in cooling or dehumidification + heating mode for several minutes from time to time to prevent the loss of the oil film in various parts of the compressor.

REMARK
If the temperature inside the cab is low, the air conditioner may not work. In such cases, use the recirculated air to warm up the inside of the cab, then turn the air conditioner switch on. The air conditioner will be run.

https://truckmanualshub.com/

COOL BOX

When the cooling is being used, this can be used for keeping drinks and other things cool.

When the heating is being used, it can be used to keep things warm.

Do not use the cool box for things which smell or leak water or break easily.

Do not use it as a holder for tools or other small objects.

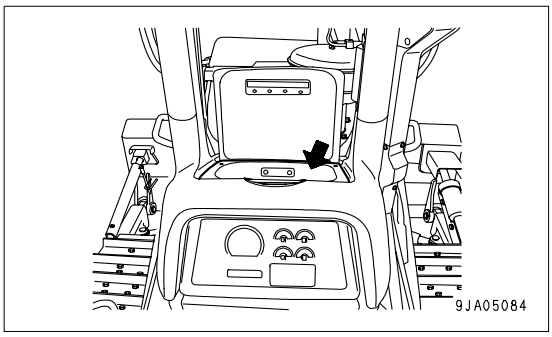

PRECAUTIONS WHEN USING

PRECAUTIONS WHEN USING THE COOLING

- If you smoke when using the air conditioner in the RECIRC mode, your eyes may start to itch or burn. Ventilate the cab ever so often to remove the smoke.
- When using the air conditioner for a long period of time, carry out ventilation process at least once every hour.

When using the air conditioner, it is recommended for health reasons, that it should only feel slightly cooler (5 or 6°C lower than the outside temperature) when you enter the cab.

Therefore, adjust the temperature to a suitable level.

SET SO THAT COLD AIR DOES NOT DIRECTLY BLOW ONTO THE GLASS SURFACE

- If the vents (left and right) in the middle of the dashboard are turned so that cold air blows directly on the cab door glass, moisture may condense on the outside of the cab door glass and reduce the visibility. (This occurs particularly in high temperatures.)

  If this happens, close the louvers of the vent and change the direction to prevent the cold air from blowing directly on the surface of the glass.

INSPECTION DURING OFF-SEASON

Even during the off-season, run the compressor at low speed for several minutes once a week to prevent the loss of the oil film on the lubricated parts of the compressor. (Run the engine at low speed and set the temperature control lever to the central position.)

REMARK
When the ambient temperature is low, if the compressor is suddenly run at high speed, it may cause failure of the compressor. Note that the system is set so that the compressor will not run when the cooler switch is turned on, if the ambient temperature is less than 2 to 6.5°C.

PROCEDURE FOR REPLACING RECEIVER

Replace the receiver once every 2 years.

After replacing the receiver, add compressor oil. Turn the receiver at an angle and measure the oil remaining inside the receiver, then add the same amount of oil (Denso Oil 6) to fill the receiver.

https://truckmanualshub.com/

REMARK
The replacement interval may become shorter depending on the conditions during use.
If the receiver is used when the moisture absorption limit of the desiccant has been exceeded, the refrigerant circuit may become blocked and cause the compressor to break down.

PRECAUTIONS WHEN REPLACING RECEIVER

- If the receiver is left for more than 15 minutes with the blind cover removed, the moisture in the air will be absorbed, and this will reduce the life of the desiccant. If you remove the blind cover, connect the piping quickly, evacuate the system and fill with refrigerant.
- When removing the refrigerant from the refrigerant circuit, release it gradually from the low pressure side to prevent oil from flowing out.

CHECK COMPRESSOR BELT TENSION AND REFRIGERANT (GAS) LEVEL

If the compressor belt is loose, or the refrigerant level is low, cooling is not carried out efficiently.

For details, see “WHEN REQUIRED (4-21)“.

CLEANING AIR FILTER

If the air filter for the FRESH or RECIRC air intake becomes clogged, the cooling or heating capacity will drop.

To prevent this, clean the air filter with compressed air once a week.

For details of the cleaning method, see “WHEN REQUIRED (4-21)“.

https://truckmanualshub.com/

OPERATION

CHECK BEFORE STARTING ENGINE, ADJUST

WALK-AROUND CHECK

Before starting the engine, look around and under the machine to check for loose nuts and bolts, or leakage of oil, fuel, or coolant, and check condition of the work equipment and hydraulic system. Also check for loose wiring, play, and accumulation of dust at places with high temperatures.

⚠ WARNING

- **Leakage of oil or fuel, or accumulation of flammable material around high temperature parts, such as the engine muffler or turbocharger, may cause fire.**
  Check carefully, and if any abnormality is found, repair it or contact your Komatsu distributor.
- **Do not get on or off the machine from the rear. Using this position is dangerous because it is easy to slip and you cannot be seen from the operator's compartment. Always use the handrail and step at the side when getting on or off the machine.**

If the machine is at an angle, reposition it level before checking.

Perform the following inspections and cleaning every day before starting engine for the day's work.

1. Check for damage, wear, play in work equipment, cylinders, linkage, and hoses.

   Check that there are no cracks, excessive wear, or play in the work equipment, cylinders, linkage, or hoses. If any problem is found, repair it.

2. Remove dirt and debris from around the engine, battery, and radiator.

   Check for dirt accumulated around the engine and radiator. Also check for flammable material (dry leaves, twigs, etc.) around the battery, engine muffler, turbocharger, or other high temperature engine parts. If any dirt or flammable materials are found, remove them.

3. Checking engine for leak of water, oil and air

   Check the engine for leak of engine oil, leak of water from the cooling system and leak of air from the suction system. If any leak is found, repair it.

4. Check for oil leakage of oil from power train case, final drive case, hydraulic tank, hoses, and joints

   Check that there is no oil leakage. If any problem is found, repair the place where the oil is leaking.

   Check for leakage of oil from the undercover. Check the ground for traces of oil leakage.

5. Check the undercarriage (track, sprocket, idler, guard) for damage, wear, loose bolts, or leakage of oil from rollers.

   If any problem is found, repair it.

https://truckmanualshub.com/

6. Check for problems in handrails, steps, loose bolts.

   If any problem is found, repair it. Tighten any loose bolts.

7. Check for problems in gauges and monitor

   Check that there is no problem in the gauges and monitor in the operator's cab. If any problem is found, replace the parts. Clean off any dirt on the surface.

8. Check for damage to seat belt and mounting clamps (if equipped)

   Check that there is no abnormality in the seat belt or mounting clamps. If there is any damage, replace with new parts.

CHECK BEFORE STARTING

Always check the items in this section before starting the engine each day.

CHECK OIL LEVEL IN ENGINE OIL PAN, ADD OIL

WARNING

Parts and oil are at high temperature immediately after the engine is stopped and may cause serious burns. Wait for the oil temperature to go down before performing this operation.

1. Open the engine side cover on the left side of the chassis.
2. Remove dipstick (G) and wipe the oil off with a cloth.
3. Fully insert dipstick (G) into filler pipe (F), then remove it.

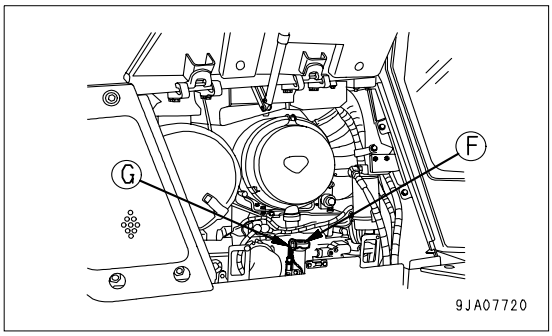

4. The oil level should be between the H and L marks on dipstick (G).

   If the oil level is below the L mark, add oil through oil filler (F).

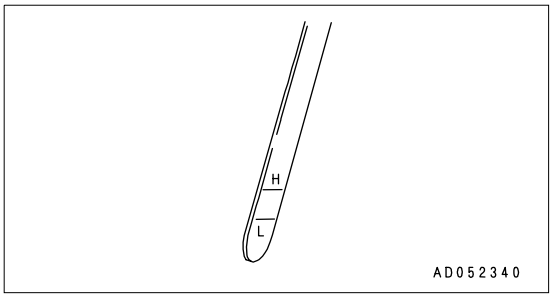

https://truckmanualshub.com/

5. When the oil level is higher than H, remove cover (1) in the underpart of the truck.

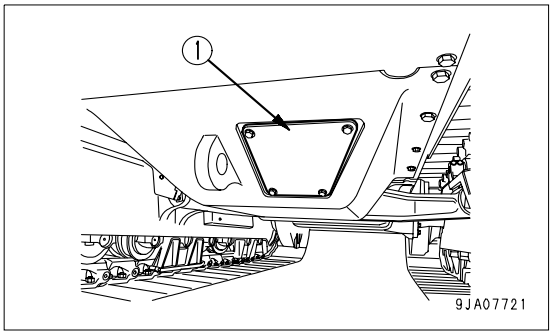

6. Take the end of hose (2) out of the inspection window.
7. Loosen drain plug (P), drain excess oil and check the oil level again.

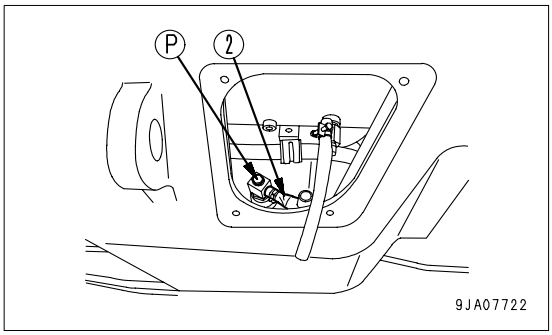

8. If the oil level is correct, tighten the oil filler cap securely and close the engine side cover.

REMARK
If the machine is at an angle, reposition it to level before checking.
When checking the oil level after the engine has been operated, allow the engine to cool for 15 minutes before checking.

CHECK DUST INDICATOR

1. Open engine side cover on the left side of machine.
2. Check if a yellow piston in the display of dust indicator (1) has moved into the red area (7.5 kPa).
3. If the yellow piston has already moved into the red area (7.5 kPa), either clean the filter element or replace it with new one immediately.

   For cleaning the filter element, refer to the section, “CHECK, CLEAN AND REPLACE AIR CLEANER ELEMENT (4-21)“, in this manual.

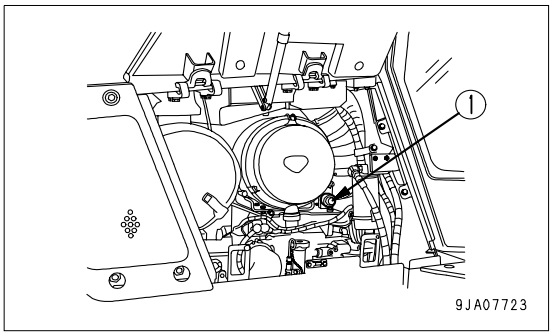

4. After checking, cleaning, and replacing, press the knob of dust indicator (1) to return the yellow piston to its original position.

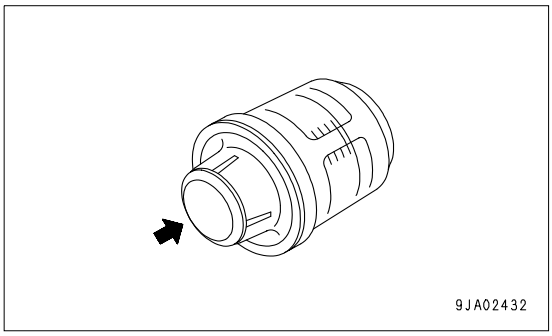

https://truckmanualshub.com/

CHECK, DRAIN WATER SEPARATOR

The water separator serves to separate moisture mixed in the fuel.

1. Open up the engine side cover on the left side of the machine.

   The water separator is in one piece with fuel pre-filter (1) and located in the lower part.

2. Through transparent cap (2), a water level and sediments, if any, can be seen. When water and sediments have accumulated, put a container beneath drain hose (3).

3. Loosen plug (4) to drain water and sediments.

4. When draining is finished, be sure to screw in plug (4).

   Specified tightening torque: 0.2 to 0.45 N·m (0.02 to 0.046 kgf·m)

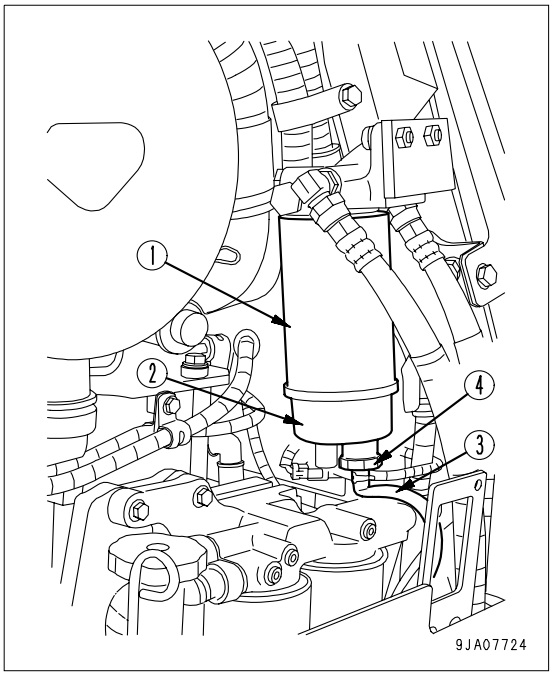

https://truckmanualshub.com/

CHECK COOLANT LEVEL, ADD COOLANT

⚠ WARNING

- **Do not open the radiator cap unless necessary. Wait for the engine to cool down before checking the coolant in the sub-tank.**
- **Immediately after the engine is stopped, the coolant is at a high temperature and the radiator is under high internal pressure. If the cap is removed to check the coolant level in this condition, there is a hazard of burns. Wait for the temperature to go down, then turn the cap slowly to release the pressure before removing it.**

1. Open up inspection cover (1) on the right side of the truck to check if a cooling water level in sub-tank (2) remains within the FULL - LOW range. If not, refill the tank with clean water up to the FULL level through the filler port in sub-tank (2).

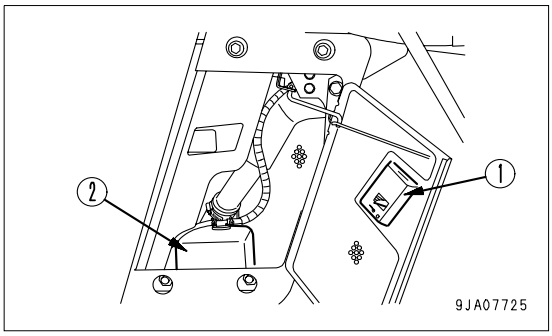

REMARK
In summer, the coolant may overflow from the sub-tank drain hose. This is no problem. It occurs because too much coolant has been added.

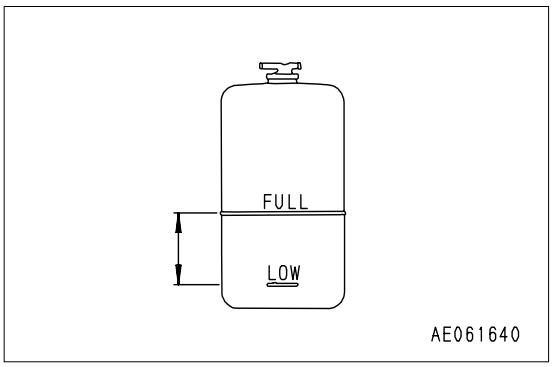

2. After adding coolant, tighten the cap securely.
3. If the sub-tank is empty, check for leakage of coolant, then add it to the radiator and sub-tank.
4. After adding coolant, close the engine side cover.

https://truckmanualshub.com/

CHECK OIL LEVEL IN POWER TRAIN CASE, ADD OIL

WARNING

The parts and oil are at high temperature after the engine is stopped, and may cause serious burns. Wait for the temperature to go down before starting the operation.

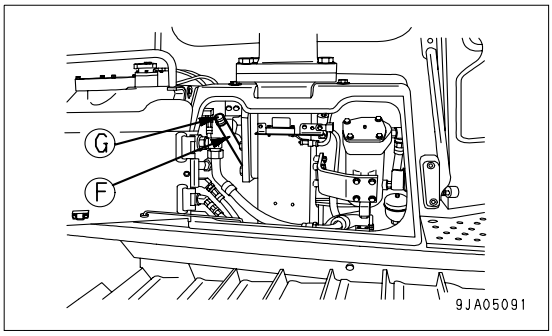

1. Open cover on the right side of the machine.
2. Remove dipstick (G), and wipe the oil off with a cloth.
3. Fully insert dipstick (G) into filler pipe (F), then remove it.
4. The oil level should be between the (H) and (L) marks on dipstick (G).

   If the oil level is below the (L) mark, add oil through oil filler (F).

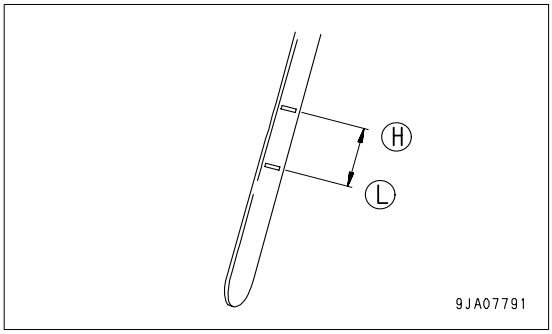

5. If the oil level is above the H mark, remove cover (1) on the bottom of the machine.

   Loosen drain plug (P), drain the excess oil, then check the oil level again.
6. If the oil level is correct, insert dipstick (G) fully into the dipstick guide again.

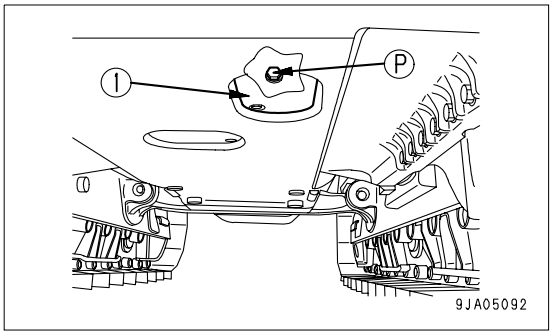

REMARK
If the machine is at an angle, reposition it to level before checking.
When checking the oil level after the engine has been operated, allow the engine to cool for 15 minutes before checking.

CHECK ELECTRIC WIRING

CAUTION

If the circuit breakers are activated and the fuses are blown frequently or there is a trace of short-circuiting in the wirings, check the cause immediately and either correct it by yourself or call your Komatsu distributor for the repair.
Keep the top surface of the battery clean and check the breather hole in the battery cap. If it is clogged with dirt or dust, wash the battery cap to clear the breather hole.

Check that the circuit breakers are in normal condition (with the red button pushed in), that the fuses have no damage and fuses of the specified capacity are in use and that there is no trace of disconnection or short-circuiting in the wirings and no damage in the covers. Moreover check the terminals for loosening and retighten loosened one, if any.
Be particularly careful to check the wiring for the battery, starting motor, and alternator.
In addition, if any flammable material is accumulated around the battery, remove it.

For repairs or investigation of the cause, please contact your Komatsu distributor.

https://truckmanualshub.com/

CHECK BRAKE PEDAL TRAVEL

WARNING

If the brake pedal stroke is not 70 to 90 mm (2.8 to 3.5 in) (below 70 mm or over 90 mm), the brake and steering force is too strong or insufficient. If the stroke is 91 mm or longer, adjust it.

1. Depress the brake pedal all the way until it stops.
2. Check that the distance of travel (A) at the center of the pedal is 70 to 90 mm.
3. When this value exceeds 91 mm, or the brake fails to work, please contact your Komatsu distributor for adjustment.

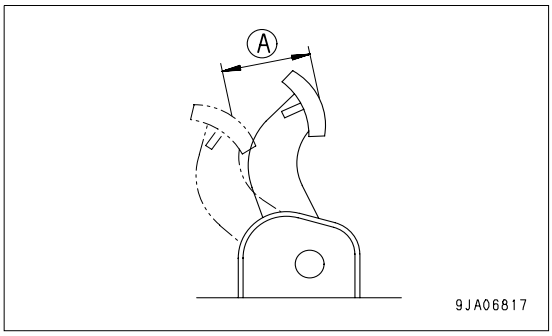

CHECKING WITH MACHINE MONITOR

1. Turn starting switch (1) to the ON position (B).
2. Check that all the monitors and gauges light up for approx. 2 seconds and the alarm buzzer sounds for approx. 2 seconds.

REMARK
If the lamps do not light up, there may be a failure or disconnection in the monitor, please contact your Komatsu distributor.

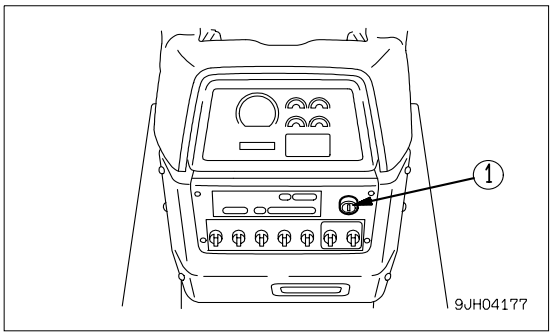

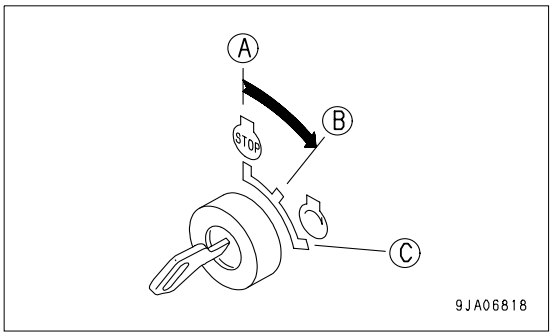

https://truckmanualshub.com/

CHECK FUEL LEVEL, ADD FUEL

WARNING

When adding fuel, never spill the fuel or let it overflow. It will cause fire.
If any fuel has spilled, wipe it up completely. If fuel has spilled over soil or sand, remove that soil or sand.
Fuel is highly flammable and dangerous. Never bring flames near fuel.

1. Turn the engine starting switch to the ON position and check the fuel level gauge (G) on the monitor panel for fuel level.

   After checking, turn the switch back to the OFF position.

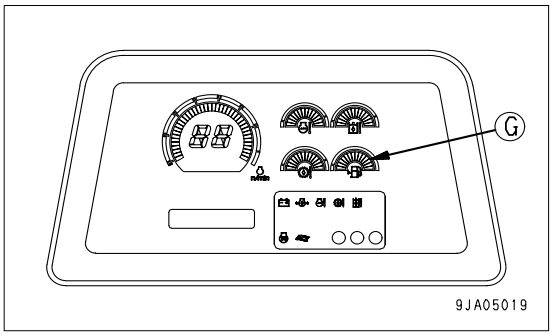

2. After completing work, fill the fuel tank through fuel filler port (F).

   Fuel capacity: 415 liters

3. After adding fuel, tighten the cap securely.

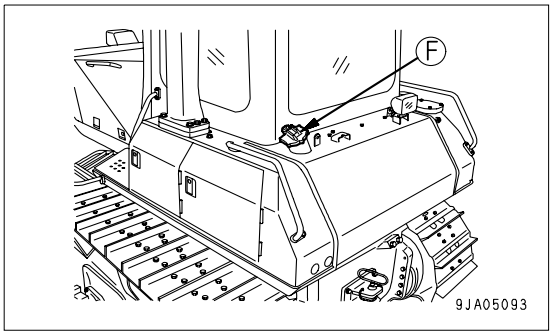

REMARK
When dozing on a grade, make sure there is plenty of fuel in the tank so that the engine fuel line does not become aerated.
If breather hole (1) on the cap is clogged, the pressure in the tank will drop and fuel will not flow.
Clean the hole from time to time.

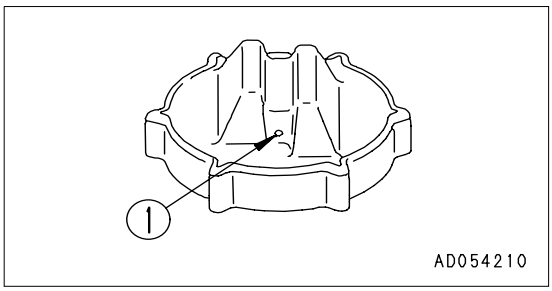

CHECK HORN SOUND

Check that the horn sounds. If it does not sound at all or the sound is extremely feeble, a defect or broken wire is suspected, ask your Komatsu distributor for possible repairs.

1. Turn starting switch to the ON position (B).

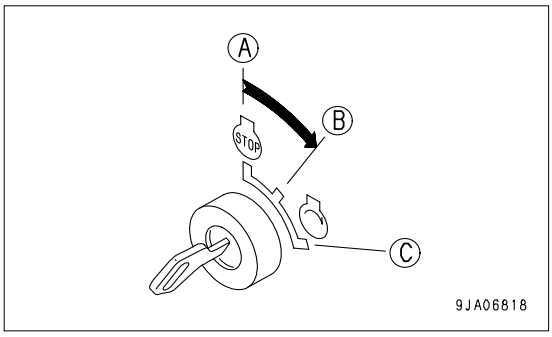

https://truckmanualshub.com/

2. Push the horn switch and check that the horn sounds.

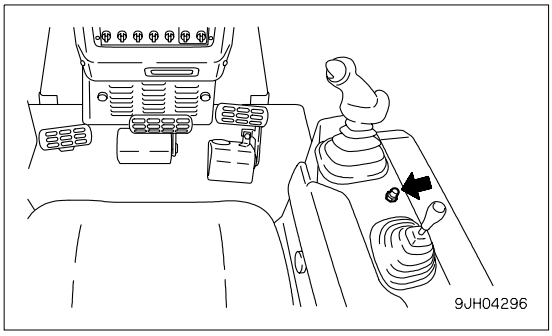

CHECK THAT LAMPS LIGHT UP

Check that the head lamp, rear lamp, additional working lamp (if equipped), and instrument lamp light up normally and they are free from stain and damage.

If the lamps do not light, check for a broken bulb or disconected wire, contact your Komatsu distributor for repairs.

1. Turn starting switch to the ON position (B).

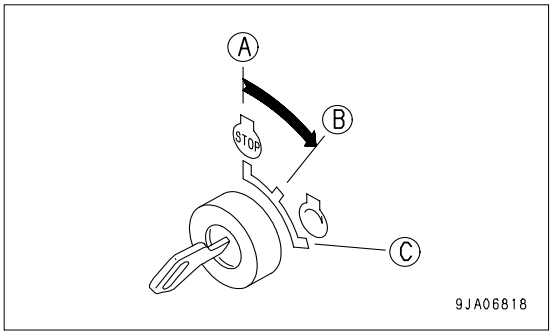

2. Turn the Head lamp and Rear lamp switches to the I position (ON), and check that all the lamps light up.

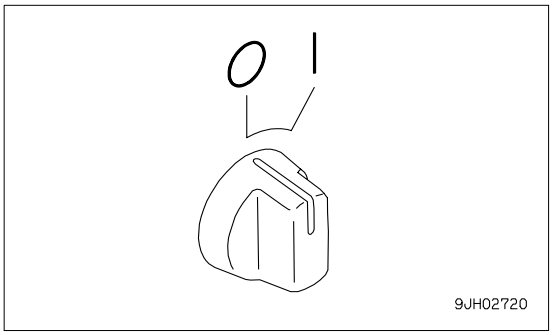

CHECK OF OPERATION OF BACKUP ALARM

Check that the backup alarm sounds normally. If it does not, a defect or broken wire is suspected, ask your Komatsu distributor for possible repairs.

1. Turn starting switch to the ON position (B).

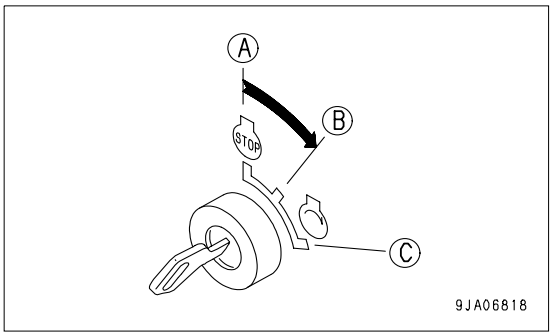

https://truckmanualshub.com/

2. Set the steering, forward-reverse, gear shift lever in the REVERSE position (R).

   The alarm must sound immediately at this time. The alarm keeps sounding until the steering, forward-reverse, gear shift lever is set to the NEUTRAL position (N) or FORWARD position (F).

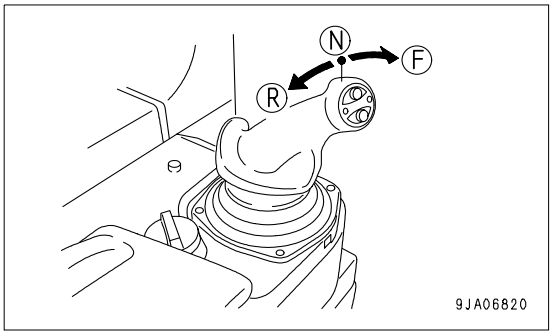

ADJUSTMENT

ADJUST OPERATOR'S SEAT

WARNING

When adjusting the position of the operator's seat, always set the work equipment lock lever to the LOCK position to prevent any accidental contact with the control levers.

- Always adjust the operator's seat before starting each operation or when the operators change shift.
- When adjusting the seat, put your back against the backrest and adjust to a position where the brake pedal can be fully depressed.

(A) Fore-and-aft adjustment

Pull lever (1), set the seat to a position where it is easy to operate, then release the lever.

Fore-aft adjustment: 160 mm (8 stages)

(B) Weight adjustment of seat

Turn knob (2) under the seat to match the weight adjustment scale with your own weight.

The weight can be adjusted to 50 to 120 kg.

REMARK
If you want to make the seat softer, turn the weight adjustment to a lower weight; if you want to make the seat harder, adjust to a higher weight. When operating on uneven surfaces, adjust the seat to a harder setting.

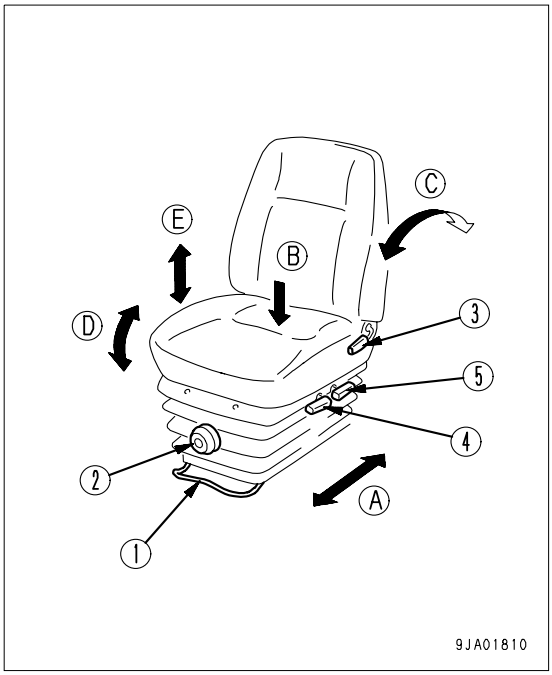

(C) Adjust reclining angle

Pull up lever (3) and set the seat back to a position which is comfortable for operation, then release the lever.

Sit with your back against the seat back when adjusting. If your back is not touching the seat back, the seat back may suddenly move forward.

https://truckmanualshub.com/

REMARK
The seat can be reclined more when the seat is pushed to the front. The amount of reclining decreases as the seat is pushed back, so when moving the seat back, return the seatback to the upright position.

(D) Seat angle adjustment

- Front angle adjustment of seat (5 stages)

To raise the front of the seat, apply your weight to the seatback, while pulling up lever (4).

To lower the front of the seat, apply your weight to the front of the seat, while pulling up lever (4).

- Rear angle adjustment of seat (5 stages)

To raise the rear of the seat, stand up on your feet a little, while pulling up lever (5).

To lower the rear of the seat, apply your weight to the rear of the seat, while pulling up lever (5).

(E) Seat height adjustment

Pull up levers (4) and (5) alternately to adjust the angle of the seat.

Then, release the levers to lock the seat.

(Height adjustment distance: 5 stages, 60 mm)

FASTENING AND REMOVING SEAT BELT

(If equipped)

⚠ WARNING

- **Before fastening the seat belt, check that there is no problem in the securing brackets or belt. If there is any wear or damage, replace.**
- **Even if there appears to be no problem in the seat belt, replace the seat belt once every 3 years. The date of manufacture is woven on the reverse side of the belt.**
- **Adjust and fasten the seat belt before operating the machine.**
- **Always use the seat belt when operating the machine.**
- **Do not use the seat belt with either half of the belt twisted.**

Check that the bolts of the clamp securing the belt to the chassis are not loose. Tighten them if they are loose.

The tightening torque for the mounting bolt is 24.5 ± 4.9 N·m (2.5 ± 0.5 kgf·m).

If the belt surface is scratched or frayed or if the fittings are broken or deformed, replace the seat belt unit.

https://truckmanualshub.com/

FASTENING AND REMOVING SEAT BELT

1. After adjusting the seat position, adjust tether belt (1). Tense the tether belt and install it when there is no one sitting on the seat.
2. Sit on the seat and hold tongue (4) connected to wind-in mechanism (2) and pull out the belt slowly so that the belt will cover your abdomen sufficiently.
3. Insert tongue (4) in buckle (3) until it clicks. The belt is pulled back into wind-in mechanism (2) until it is fitted to your abdomen. The belt is locked under this condition and cannot be extended anymore. Fit the belt to your abdomen without twisting it.

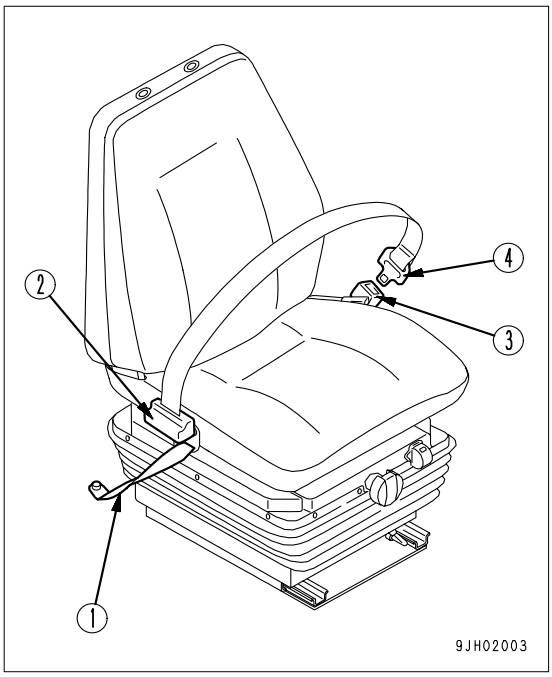

REMARK
If the belt is locked before the tongue is inserted in the buckle, let it return to the wind-in mechanism, then repeat the above procedure from the start.

4. Pull the belt to check that it is securely locked in position.
5. When removing the belt, press the red button on buckle (3).

   The belt will automatically retract.

ADJUST MIRROR

(If equipped)

Loosen nut (1) of the mirror and adjust the mirror to a position where it gives the best view from the operator's seat.

In particular, be sure to adjust the mirror so that people at the rear left or right of the machine can be seen clearly.

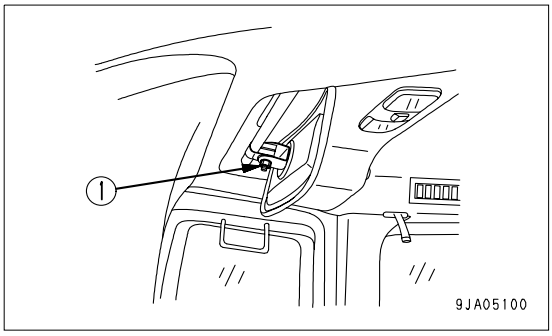

ADJUST LEFT CONSOLE BOX

⚠ WARNING

- **Before adjusting the position of the left console box, always set the parking brake lever to the LOCK position.**
- **After adjusting the position of the left console box, push and pull the console box to the front and rear to check that it is locked and cannot move. If it is not locked properly, the console box may suddenly move during operations, causing misoperation of the steering, forward-reverse, gear shift lever, and resulting in failure.**

The left console box can be adjusted by 90 mm in 9 stages to the front or rear. Adjust it to the most suitable position to match the adjustment of the operator's seat.

https://truckmanualshub.com/

1. Pull up lock lever (2) at the rear of console box (1) at the left side of the operator's seat, and set the lock lever to the FREE position.

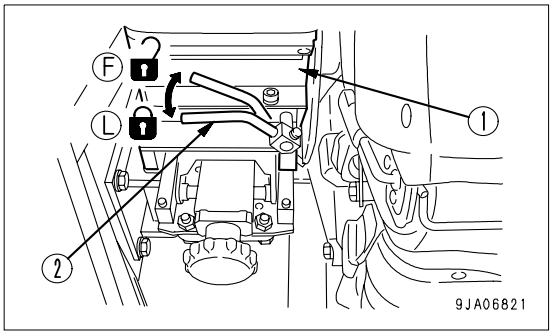

NOTICE
Do not grip the steering, forward-reverse, gear shift lever when removing console box (1). There is danger that the lever may break.

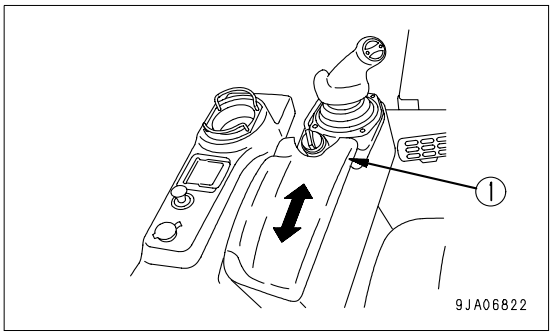

2. With the lock lever (2) pulled up, use your other hand to grip the front of console box (1), then move it to the front or rear with your left and right hands.

3. Move console box (1) to the desired position until a click is heard. Then pull up lock lever (2) and release it. Lock lever (2) automatically returns to LOCK position (L).

ADJUST ARMREST

The height of the armrest on the left and right sides of the operator's seat can be adjusted to 3 positions. After adjusting the operator's seat, adjust the armrest to a suitable height.

ADJUST ARMREST (RIGHT)

Arm rest (1) can be adjusted in three stages; 30 mm upward and 25 mm downward from standard height (B).

1. Loosen knob (2) (2 places).

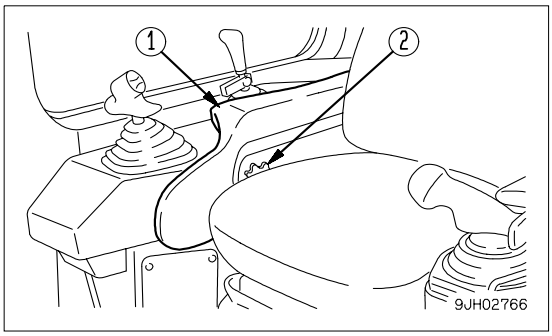

2. Move the armrest on the operator's seat to the front, then align the position of the 3 holes ((A), (B),(C)).
3. Return the armrest to the rear.
4. Tighten knob (2) securely.

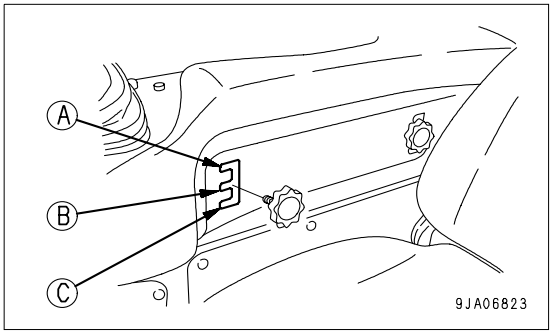

https://truckmanualshub.com/

ADJUST ARMREST (LEFT)

The height of the armrest on the left side of the operator's seat can be adjusted steplessly up and down 60 mm together with the console box.

Turn up/down left adjustment knob (1) to adjust the height.
Turn the knob to adjust as follows.

Turn CLOCKWISE to move DOWN

Turn COUNTERCLOCKWISE to move UP

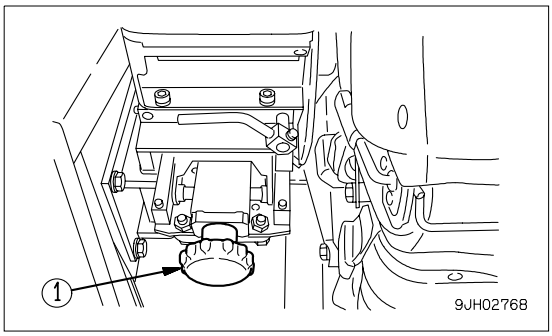

OPERATION AND CHECK BEFORE STARTING ENGINE

WARNING

When starting the engine, check that the parking brake lever and work equipment lock lever are placed securely at the LOCK position.
If the work equipment control lever is touched by accident when the engine is started, the work equipment may move unexpectedly and cause serious injury or damage.

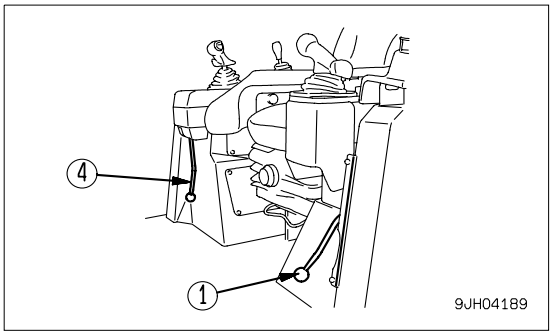

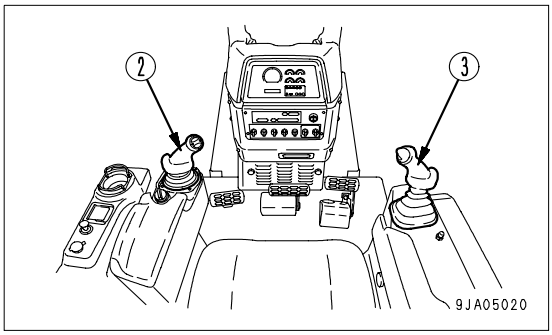

https://truckmanualshub.com/

1. Check that parking brake lever (1) is in the LOCK position (L).

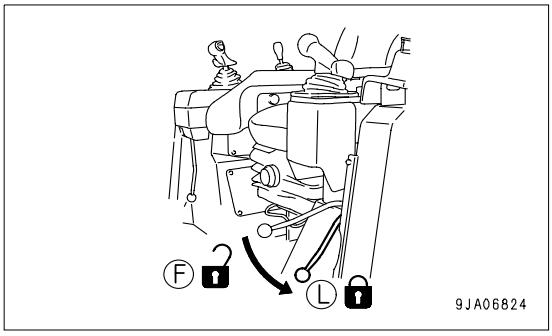

REMARK
If this parking brake lever is not in the LOCK position, the engine will not start.

2. Check that steering, forward-reverse, gear shift lever (2) is in the NEUTRAL position (N).

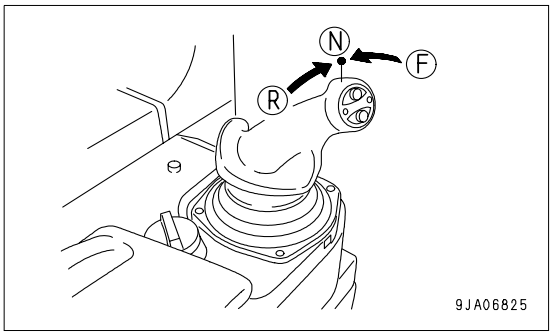

REMARK
The engine cannot be started if steering, forward-reverse, gear shift lever (2) is not in the NEUTRAL position.
If steering, forward-reverse, gear shift lever (2) is in FORWARD or REVERSE, the letter P on display panel A will flash.

3. Check that the blade is lowered to the ground and that blade control lever (3) is in the HOLD position (B).

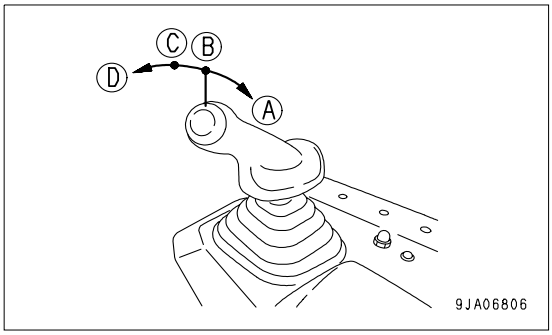

4. Check that the work equipment lock lever (4) is LOCK position (L).

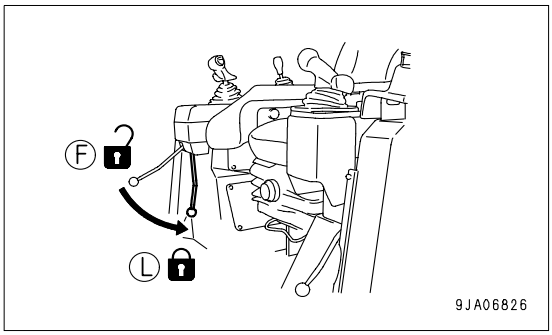

https://truckmanualshub.com/

STARTING ENGINE

NORMAL STARTING

WARNING

- **Sit down in the operator's seat before starting the engine.**
- **Do not attempt to start the engine by short-circuiting the engine starting circuit. Such an act may cause serious bodily injury or fire.**
- **Check that there are no persons or obstacles in the surrounding area, then sound the horn and start the engine.**
- **Exhaust gas is toxic. When starting the engine in confined spaces, be particularly careful to ensure good ventilation.**

NOTICE

- **Do not continue to crank the starting motor continuously for more than 60 seconds under any circumstances. If the engine does not start, wait for at least 2 minutes, then repeat the procedure from Step 2.**
- **Before starting the engine, check that the fuel control dial is at the low idle (MIN) position.**
- **The machine is equipped with a function to automatically warm up engine cooling water temperature more quickly and another function to protect the turbocharger. In a cold weather startup, the engine revolution may not change for several seconds immediately after the startup even if fuel control dial (1) is operated.**
- **If the fuel control dial is in the FULL position, the engine will accelerate suddenly and cause damage to the engine parts, so set it to an intermediate or low speed position.**

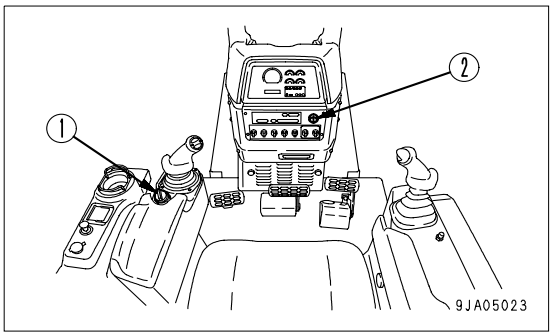

1. Turn fuel control dial (1) from the low idle (MIN) position to a slightly higher speed.

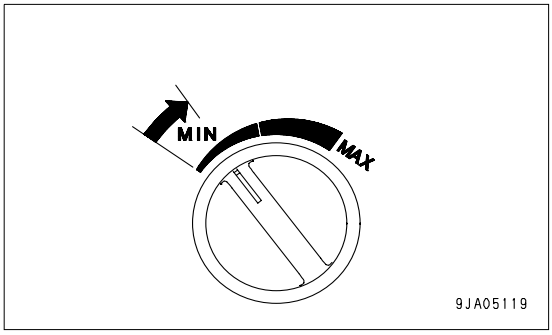

https://truckmanualshub.com/

2. Insert the key into starting switch (2) and turn the key to the START position (C). The engine will start.

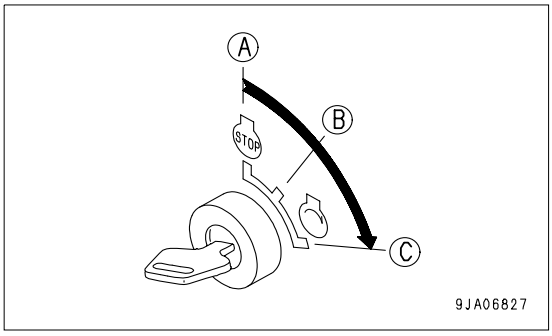

3. When the engine starts, release the key in starting switch (2). The key will return automatically to the ON position (B).

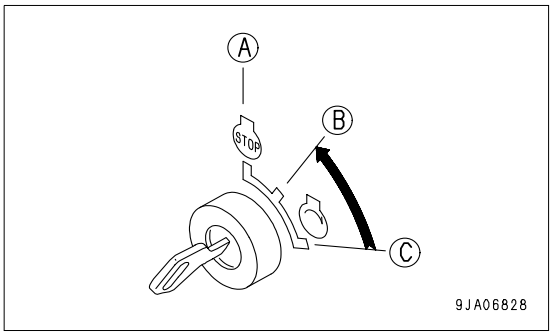

https://truckmanualshub.com/

STARTING IN COLD WEATHER

WARNING

- **Start the engine only after sitting down in the operator's seat.**
- **Do not attempt to start the engine by short-circuiting the engine starting circuit. Such an act may cause a serious bodily injury or fire.**
- **Check that there are no persons or obstacles in the surrounding area, then sound the horn and start the engine.**
- **Never use starting aid fluids as they may cause explosions.**
- **Exhaust gas is toxic. When starting the engine in confined spaces, be particularly careful to ensure good ventilation.**

NOTICE

- **Do not continue to crank the starting motor continuously for more than 60 seconds under any circumstances. If the engine does not start, wait for at least 2 minutes, then repeat the procedure from Step 2.**
- **Before starting the engine, check that the fuel control dial is at the low idle (MIN) position.**
- **The machine is equipped with a function to automatically warm up engine cooling water temperature more quickly and another function to protect the turbocharger. In a cold weather startup, the engine revolution may not change for several seconds immediately after the startup even if fuel control dial (1) is operated.**
- **If the fuel control dial is in the FULL position, the engine will accelerate suddenly and cause damage to the engine parts, so set it to an intermediate or low speed position.**

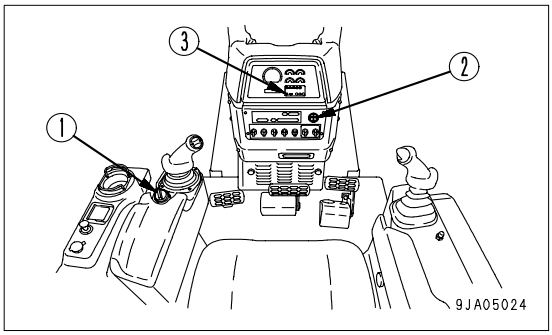

1. Turn fuel control dial (1) to the center position between MIN and MAX position.

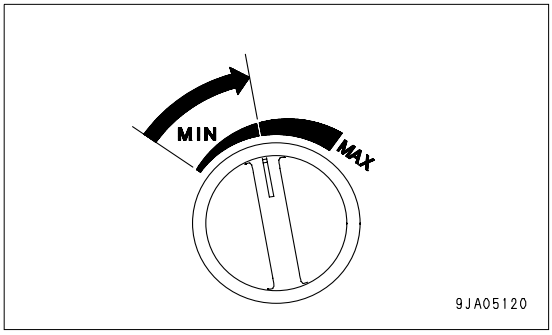

https://truckmanualshub.com/

2. Insert the key into starting switch (2) and turn the key to the ON position (B).

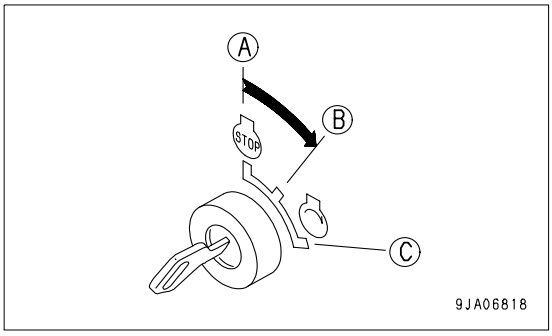

3. Check that engine pre-heating pilot lamp (3) on the monitor panel lights up.
4. Maintain the key in the on position until the pre-heating pilot lamp (3) goes off.

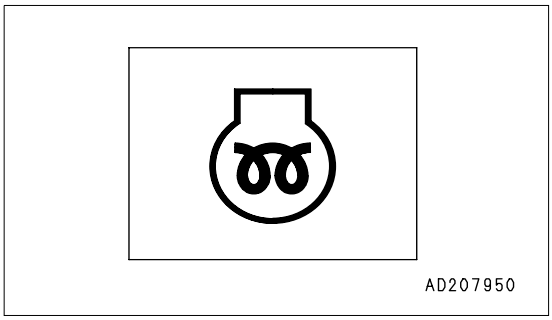

5. When preheating pilot lamp (3) goes off, turn the key of ignition switch (2) to the START position (C) to crank the engine.
   The time that preheating pilot lamp (3) stays on changes according to the ambient temperature as shown in the table below.

Ambient temperature	Pre-heat time
-3°C to -10°C	5 to 15 seconds
-10°C to -20°C	15 to 32 seconds
-20°C to -30°C	32 to 45 seconds

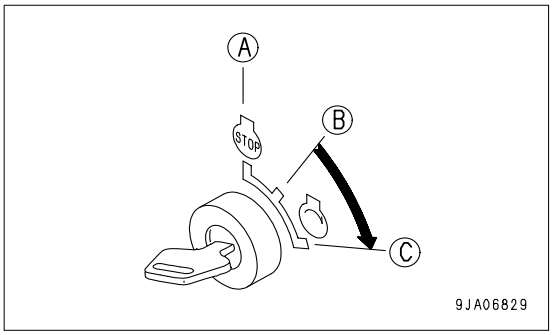

6. When the engine starts, release the key in starting switch (2). The key will return automatically to the ON position (B).

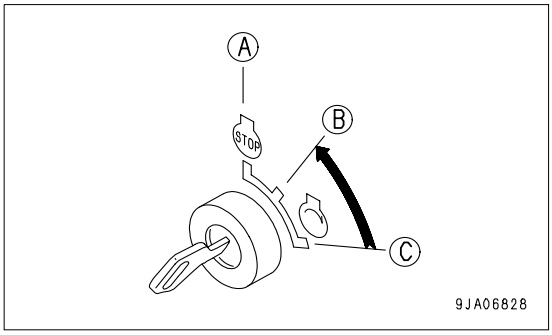

REMARK
Immediately after an engine startup, keep the engine idling, and while the engine is idling, keep the foot off the deceleration pedal and do not operate the work equipment.

7. When the engine rotation stabilizes, return to the low idle (MIN) position of fuel control dial (1) and then carry out the warming-up operation.

https://truckmanualshub.com/

REMARK
Regardless of the ambient temperature, if the key in starting switch (2) is turned from OFF position to left, preheating pilot lamp (3) will light up and preheating will start. (Preheating continues while the starting switch is held at the left.)
For the details of the preheating time, see the table in Step 5.
While preheating is being carried out, the preheating pilot lamp (3) lights up to show that preheating is being carried out.
If the engine does not start with the above operation, wait for about 2 minutes, and repeat steps 3. And 4.
The relationship between the actuation time of the turbo protect function and the engine coolant temperature is as follows.
Even if the fuel control dial is operated within the time given below, the engine speed will not change.

Turbo protect function

The turbo protect function is a function to protect the turbocharger by keeping the engine speed at less than 1000 rpm immediately after the engine is started.

When the turbocharger protection function and engine cooling water auto warming-up function are activated at the same time, the former takes priority over the latter.

- While the turbocharger protection function is in operation, the engine revolution is held at 1000 rpm even if the fuel control dial is set at above 1000 rpm.
- While the turbocharger protection function is in operation, the engine revolution is held at 1000 rpm even if the fuel control dial is operated.
- When the turbo protect function is canceled, the engine speed is set to the speed for the position of the fuel control dial.
- The relationship between the length of time of actuating the turbo protect function and the temperature of the engine coolant is as shown in the next table.

Coolant temperature	Turbo protect time (sec.)
Above 10°C	0
10 to -30°C	Change 0 to 20

Engine Cooling Water Auto Warming-up Function

This is a function to automatically warm up engine cooling water more quickly by raising an engine idling speed.

When the turbocharger protection function and engine cooling water auto warming-up function are activated at the same time, the former takes priority over the latter.

- While the turbocharger protection function is in operation, the engine revolution is held at 1200 rpm even if the fuel control dial is set at any rpm. However, if the fuel control dial is held at the engine full speed (MAX) for more than three seconds, the engine will gradually pick up the speed up to the full idling.
- This function continues to work for a maximum of 10 minutes, or until the engine cooling water temperature reaches 30°C.
- If the deceleration pedal is depressed while this function is in operation, the engine rpm goes down below 1200 rpm.

https://truckmanualshub.com/

OPERATIONS AND CHECKS AFTER STARTING ENGINE

WARNING

- **If there has been any abnormal actuation or trouble, turn the starting switch key to the OFF position.**
- **If the work equipment is operated without warming the machine up sufficiently, the response of the work equipment to the movement of the control lever will be slow and the work equipment may not respond as the operator desires, so always carry out the warming-up operation. Particularly in cold areas, be sure to carry out the warm-up operation completely.**

WARMING UP OPERATIONS

NOTICE
Avoid abrupt acceleration until warm-up run is completed.
Do not run the engine at low idle or high idle for more than 20 minutes.
If it is necessary to run the engine at idle, apply a load or run at a medium speed from time to time.

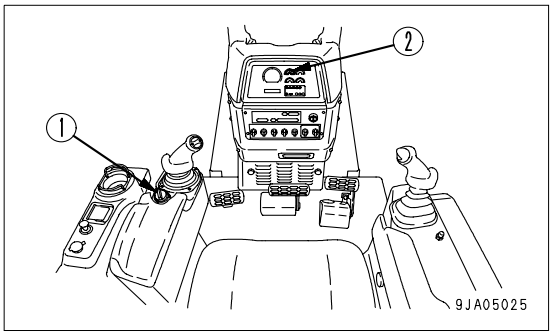

1. Turn fuel control dial (1) to the mid point between the low idling speed (MIN) and full speed (MAX) to start up the engine.

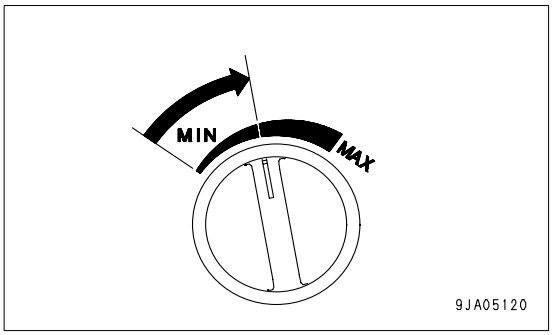

REMARK
The machine holds an engine revolution at 1200 rpm by means of its engine cooling water warming-up function until after the engine cooling water temperature reaches 30°C.
For more details on this function, see “STARTING IN COLD WEATHER (3-70)“.

2. After warm-up is completed, check gauges and caution lamps for proper operation. If any problem is found, repair it.

   Continue to run the engine under a light load until engine coolant temperature gauge indicator (2) is within the green range (B).

   (A): White range

   (B): Green range

   (C): Red range

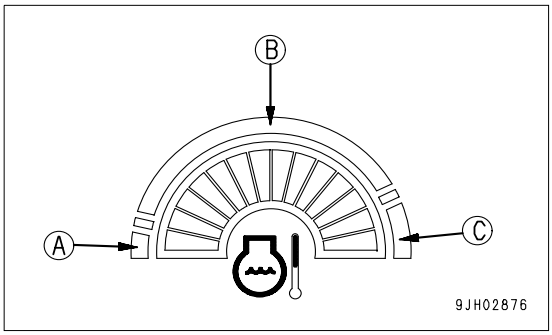

3. Check for abnormal exhaust gas color, noise, or vibration. If any problem is found, contact your Komatsu distributor.

https://truckmanualshub.com/

STARTING IN COLD WEATHER

(Ambient temperature below 10°C)

NOTICE

- **When the hydraulic oil is at a low temperature, do not carry out operations or move the levers suddenly. Always carry out the warm-up operation. This will help to extend the machine life.**
  Do not suddenly accelerate the engine before the warm-up operation is completed.
- **Do not run the engine at low idle or high idle con-tinuously for more than 20 minutes. This will cause leakage of oil from the turbocharger oil supply piping.**
  If it is necessary to run the engine at idle, apply a load from time to time or run the engine at a mid-range speed.

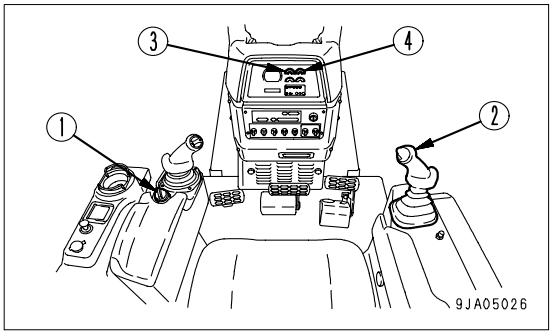

1. Turn fuel control dial (1) to the mid point between the low idling speed (MIN) and full speed (MAX) to start up the engine.

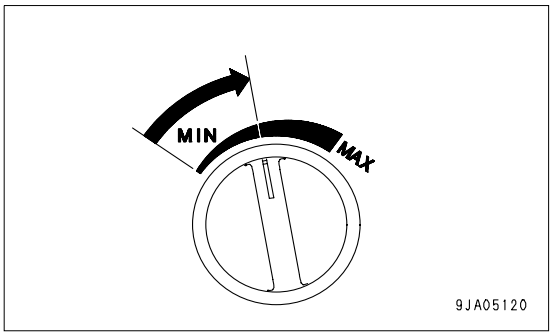

REMARK
The machine holds an engine revolution at 1200 rpm by means of its engine cooling water warming-up function until after the engine cooling water temperature reaches 30°C.
For more details on this function, see “STARTING IN COLD WEATHER (3-70)“.

2. Blade control lever (2) to the full RAISE position, then hold the lever in position, and operate slowly to the left tilt relief and right tilt relief positions for 5 minutes.
3. Then operate blade control lever (2) to the full RAISE position (up to the lever stroke end) and hold it in that position; alternate the right and left TILT relief intermittently; lower the blade to the ground by operating the control lever to the LOWER position; operate the control lever to the FLOAT position (up to the lever stroke end); and alternate right and left TILT relief intermittently for five minutes.
4. Lower the blade to the ground, move the control lever fully to the FLOAT position (lever stroke end) and hold the lever in position for 1 minute. Next, release the lever and check that it stays in the FLOAT position. After waiting for 3 minutes, return the lever to the HOLD position.

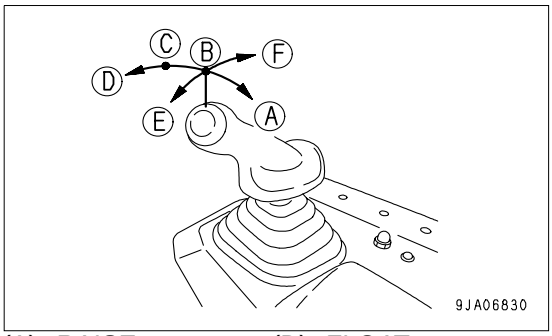

(A) RAISE
(B) HOLD
(C) LOWEW
(D) FLOAT
(E) LEFT TILT
(F) RIGHT TILT

https://truckmanualshub.com/

5. After warm-up run is completed, check gauges and caution lamps for proper operation. If any abnormality is found, repair it.
   - Continue to run the engine at light load until engine coolant temperature gauge indicator (3) and Hydraulic oil temperature gauge (4) fall within the green range (B).

   (A): White range

   (B): Green range

   (C): Red range

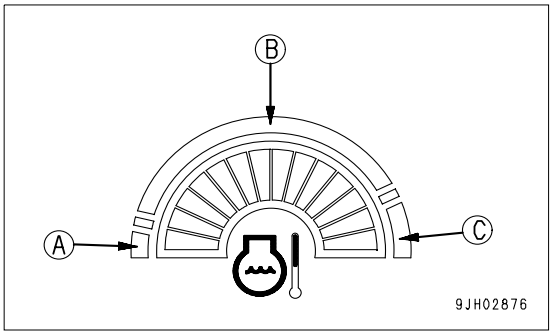

REMARK
If the oil temperature in the power train is not raised properly, it will take longer to accelerate to the maximum speed.

6. Check for abnormal exhaust gas color, noise, or vibration. If any problem is found, contact your Komatsu distributor.

STOPPING ENGINE

NOTICE
If the engine is abruptly stopped before it has cooled down, engine life may be drastically shortened. Do not abruptly stop the engine except for an emergency.
If the engine has overheated, do not stop it abruptly, run it at medium speed allowing the engine to gradually cool down, then stop it.

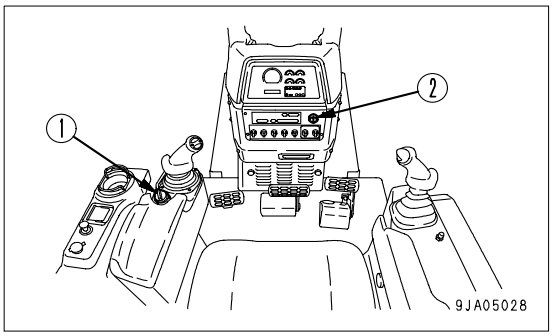

1. Lower the work equipment to the ground.
2. Place fuel control dial (1) in the low idle (MIN) position and run the engine at low idle speed for about 5 minutes to allow it to gradually cool down.

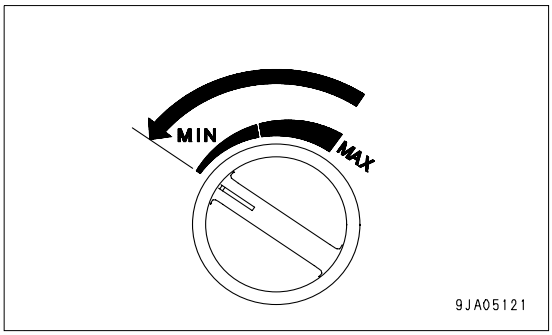

https://truckmanualshub.com/

3. Turn the key in ignition switch (2) to the OFF position (A).

   The engine will stop

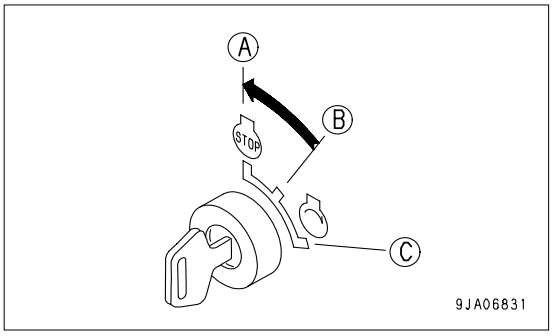

REMARK
When engine starting switch (2) key is turned to the OFF position, the engine stops, but the machine's main power source is not turned off immediately.
This is a time lag provided for the controller to memorize the operation status and then terminate the system. While this process continues, the main power is maintained. The power holding time varies depending on the operation condition.
Also when the cooling fan is used for a cleaning purpose, the machine's main power source is not turned off immediately, even if engine starting switch (2) key is turned to the OFF position.
This time lag is provided to protect the hydraulic circuit, and in this case, the machine's main power is maintained for seven seconds.

4. Remove the key from starting switch (2).

https://truckmanualshub.com/

MACHINE OPERATION

MOVING MACHINE

⚠ WARNING

- **When moving the machine, check that the area around the machine is safe, and sound the horn before moving.**
  Do not allow anyone to enter the area around the machine.
  There is a blind spot at the rear of the machine, so be particularly careful when traveling in reverse.
- **When moving the machine on a slope, always keep brake pedal (7) depressed even after releasing parking break lever (1).**
- **When moving the machine up a steep slope, turn fuel control dial (4) to the max. position, and keep brake pedal (7) and deceleration pedal (5) depressed. Then move joystick (steering, directional, and gearshift lever) (6) from the N position to the direction of travel and release brake pedal (7) slowly. When the travel speed rises, release deceleration pedal (5) slowly.**

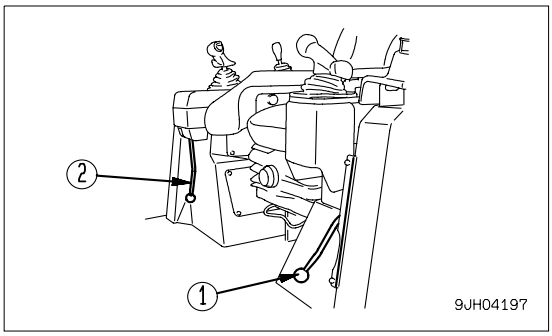

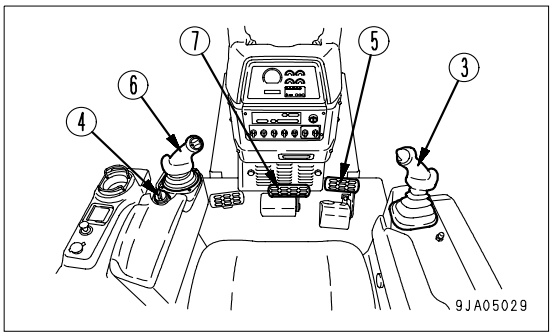

1. Operate parking brake lever (1) to the FREE (F) position.

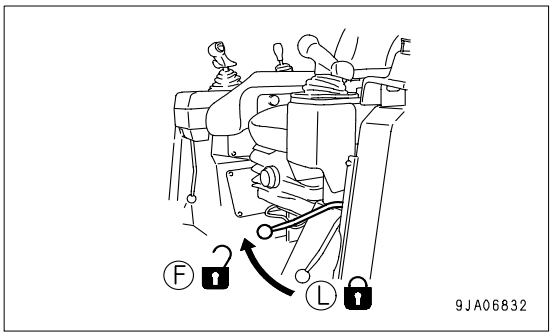

2. Operate work equipment lock lever (2) to the FREE (F) position.

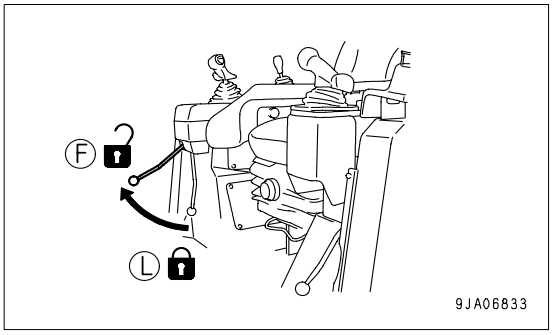

https://truckmanualshub.com/

3. Put blade control lever (2) in the RAISE position (R) to raise the blade 40 to 50 cm off the ground.

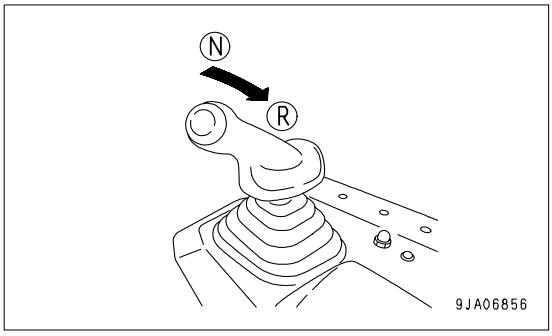

4. Turn fuel control dial (4) to the full speed (MAX) position, and fully depress decelerator pedal (5).

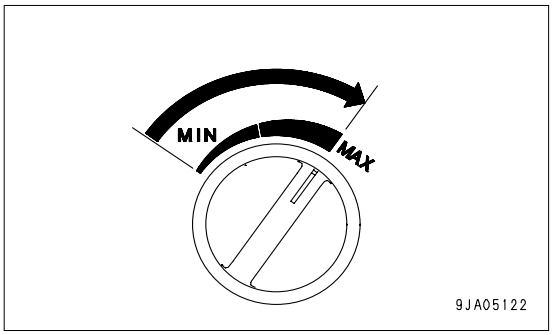

5. Operate steering - forward / reverse shifting - gearshift lever (6) to the FORWARD (F) position or REVERSE (R) position and gradually release deceleration pedal (5).

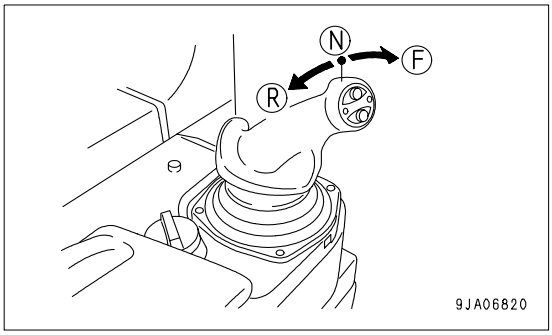

REMARK

Check that the backup alarm buzzer (rear side warning buzzer) properly sounds, when steering - forward / reverse shifting - gearshift lever (6) is operated to the REVERSE (R) position. If it does not, call on your Komatsu distributor for repairs.

https://truckmanualshub.com/

STOPPING MACHINE

⚠ WARNING

Avoid stopping suddenly. Give yourself ample room when stopping.

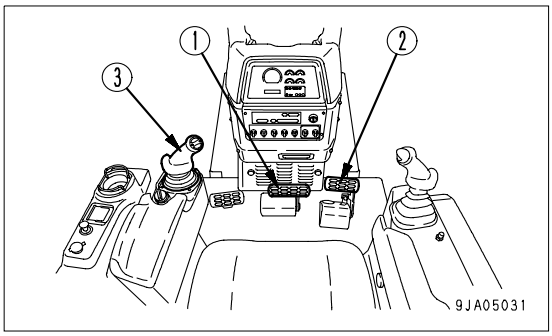

1. Depress brake pedal (1) to stop the machine.

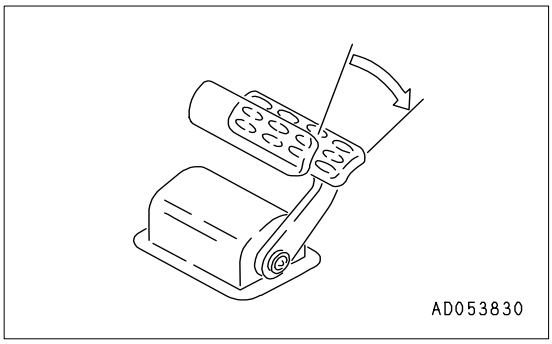

NOTICE
If the brake is depressed when the engine speed or travel speed is high, the brake disc may make a slipping sound. Normally, depress decelerator pedal (2) to reduce the engine speed and travel speed before depressing the brake.

2. Move steering, forward-reverse, gear shift lever (3) to the NEUTRAL position (N), depress brake pedal (1) further, and stop the machine.

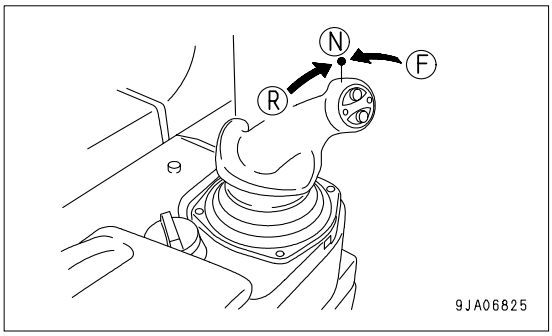

SHIFTING GEARS

The machine does not have to be stopped to shift gears.

1. Move steering, forward-reverse, gear shift lever (1) to the desired gear position to shift gears.

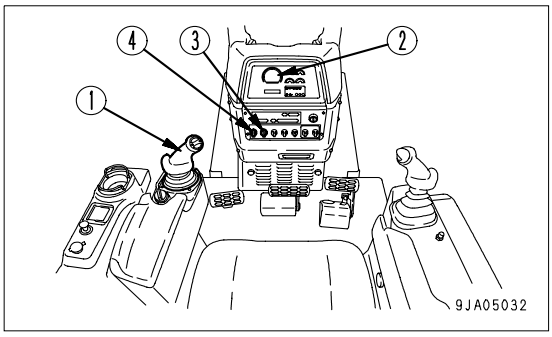

https://truckmanualshub.com/

GEARSHIFTING OPERATION

When UP switch (U) or DOWN switch (D) is pushed, the transmission speed will change.

UP switch (U): Each time the switch is pressed, the transmission will up shift one speed.

DOWN switch (D): Each time the switch is pressed, the transmission will down shift one speed.

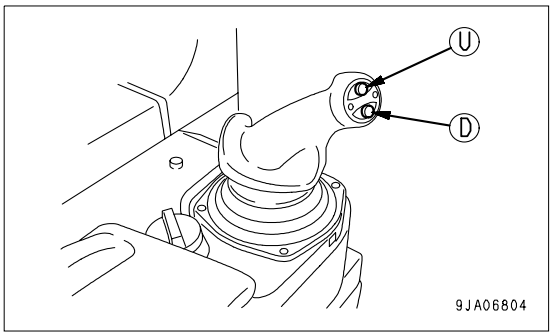

There are 3 forward and 3 reverse speed ranges.

For details of the maximum speed in each speed range, see “SPECIFICATIONS (5-2)“.

REMARK
The present speed range is displayed in the center of display panel A (2).
1st: 1 is displayed
2nd: 2 is displayed
3rd: 3 is displayed
If the machine has failed, the speed range and speed range display may change automatically.

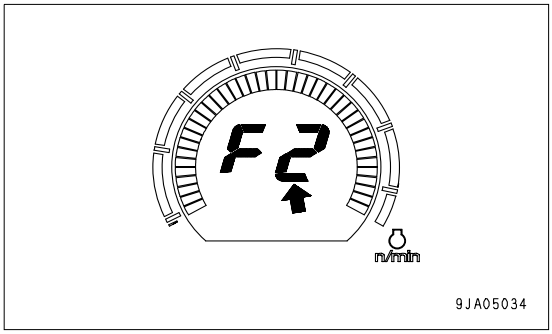

GEARSHIFTING OPERATION USING PRESET MODE FUNCTION

If the preset mode function is used, the speed ranges used when the machine travels in forward and reverse can be preset as desired.

1. Set steering, forward-reverse, gear shift lever (1) to the NEUTRAL position (N).

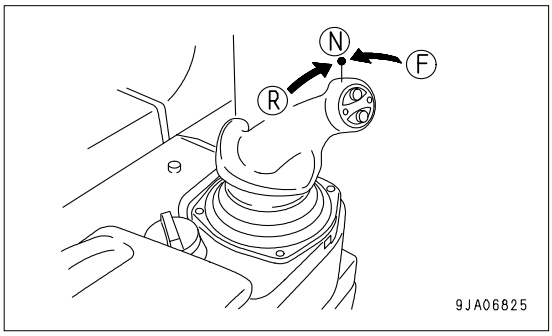

2. When preset mode switch (3) is set to the I position (ON), the function is actuated.

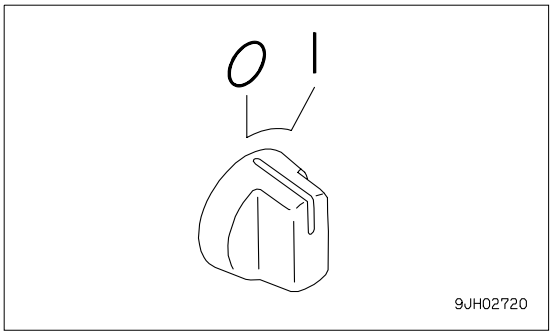

https://truckmanualshub.com/

3. When the preset mode function is actuated, [F1-R1] is displayed at the left side of the bottom line of display panel B (multi-information) on the monitor panel, and the [F1-R1] mode is set.

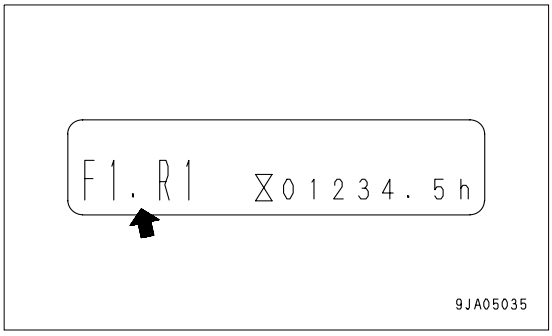

REMARK
When preset mode switch (3) is set to the ON position (a), the default [F1-R1] mode is set.

4. If it is desired to select another mode, press UP switch (U) or DOWN switch (D) on steering, forward-reverse, gear shift lever (1) and display the desired mode on control panel B (multi-information).

   The types of mode and method of selection are as follows.

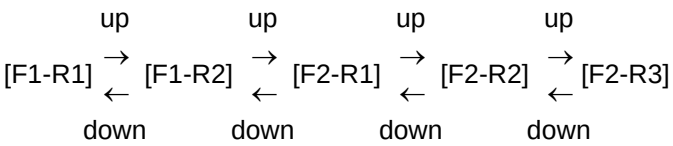

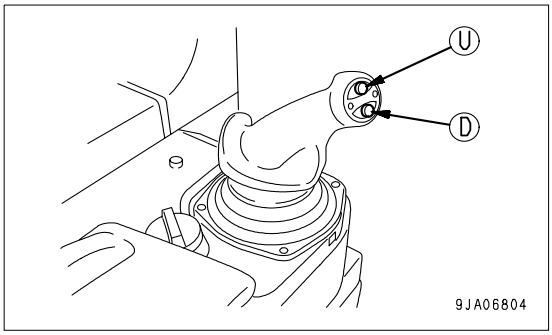

- Example of shift control when [F2-R2] mode is set.

  When steering, forward-reverse, gear shift lever is set to F position, speed range F2 is automatically selected.

  When steering, forward-reverse, gear shift lever is set to R position, speed range R2 is automatically selected.

REMARK
Even when the preset mode function is being actuated, it is possible to select the speed range by operating the UP switch or DOWN switch when the machine is traveling forward or in reverse.
However, the preset mode remains set as it is. If the steering, forward-reverse, gear shift lever is returned to the NEUTRAL position and then operated again to the FORWARD or REVERSE position, the set speed range is selected.
A particular advantage is that when the auto shift down function described below is being actuated, it is possible to save the trouble of shifting up when traveling in reverse after the transmission has shifted down during digging.

https://truckmanualshub.com/

AUTO DOWN SHIFT OPERATION

If the travel speed drops because of the load conditions when traveling, this function automatically down shifts to a lower speed range.

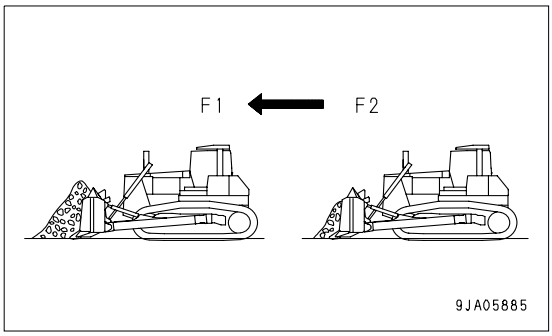

1. The function is actuated when auto shift down switch (4) on the front panel is set to I position (ON).

   ○ (OFF) position: Canceled

   I (ON) position: Actuated

   The transmission is automatically shifted down F2→ F1, F3 → F2, R2 → R1, R3 → R2.

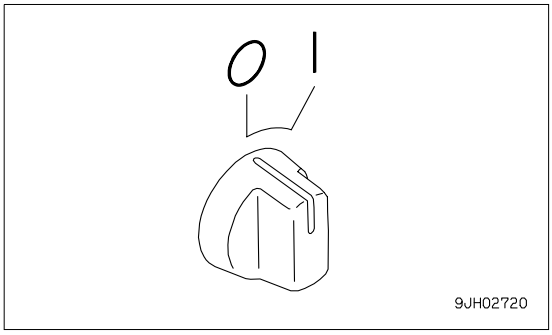

REMARK
While the preset mode is in operation, it is designed the way the machine does not automatically shift up for a safety reason, even after it automatically shifts down.
To shift up, press UP (U) button manually.
However, the preset mode setting remains the same. The machine returns to the set travel speed when the steering - forward / reverse shifting - gearshift lever is once operated to the neutral position and then either to the FORWARD or to the REVERSE position again.

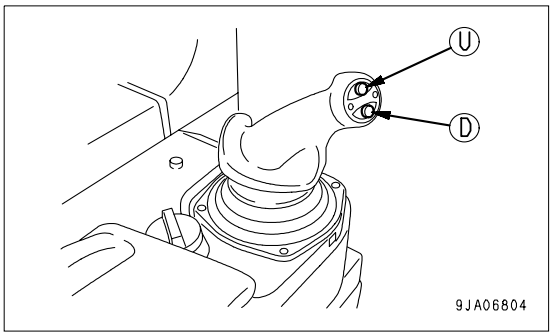

https://truckmanualshub.com/

SHIFTING BETWEEN FORWARD AND REVERSE

WARNING

When switching between FORWARD and REVERSE, first check that the direction of travel is safe.

CAUTION

The travel direction can be changed without stopping the machine. Do not change it while the engine is running at the full speed, however, but depress the decelerator pedal to lower the engine speed before changing the travel direction for safety, comfort, and longer life of the power train.

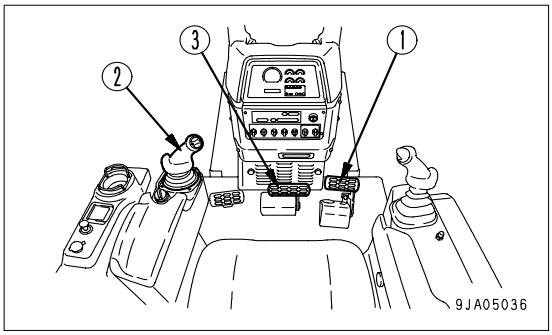

1. Depress decelerator pedal (1) to reduce the engine speed.

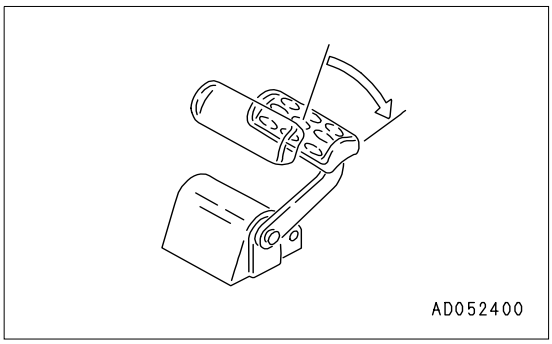

2. Move steering, forward-reverse, gear shift lever (2) to the NEUTRAL position (N), reduce the speed, then depress brake pedal (3) and stop the machine.

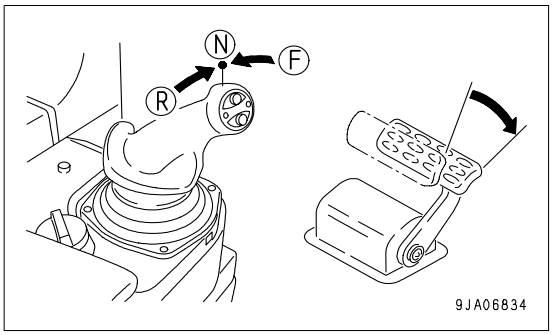

3. After depressing decelerator pedal (1), move steering, forward-reverse, gear shift lever (2) to the desired position.

   Position (F): Forward

   Position (N): Neutral

   Position (R): Reverse

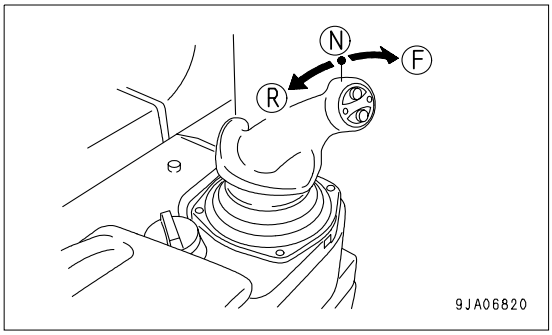

REMARK
Check that the backup alarm buzzer (rear side warning buzzer) properly sounds, when the steering - forward / reverse shifting - gearshift lever is operated to the REVERSE (R) position. If it does not, call on your Komatsu distributor for repairs.

https://truckmanualshub.com/

4. Release decelerator pedal (1) and raise the engine speed.

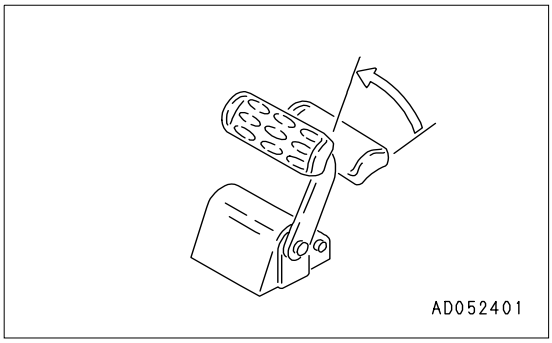

REMARK
If the forward- reverse control lever is shifted when the machine is traveling downhill, a directional change may automatically take place via 1st gear for safety. For example, when the forward- reverse control lever is shifted from F2 to R2, the directional change may take place in the sequence of F2 to R1 to R2.

https://truckmanualshub.com/

STEERING MACHINE

WARNING

- **Avoid as much as possible turning the machine on a slope.**
  The machine will tend to slip sideways. Particular care should be taken on soft or clay soil.
- **Never make a pivot turn at high speed.**

NORMAL TURNING

WARNING

When performing a counterrotation turn, the feeling of operation when your head is facing the rear is different from the feeling if you are facing the front. Never carry out a counterroatation turn while facing the rear.

To turn the machine while traveling, incline steering, forward-reverse, gear shift lever (1) in the direction of the turn.

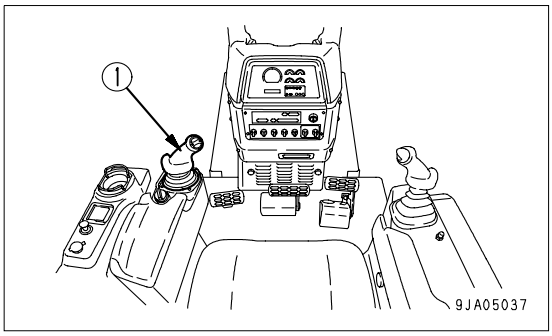

TURNING LEFT WHILE TRAVELING FORWARD

NOTICE
If the lever is moved partially to the forward or reverse position and then is moved in the direction of turn, the machine may carry out a counterrotation turn, so operate the lever fully to the forward or reverse position.

If steering, forward-reverse, gear shift lever (1) is moved to the FORWARD position (F) and moved partially to the left (L), the machine will start to turn gradually. After that, the lever can be moved further towards the end of its travel to set the desired turning radius.

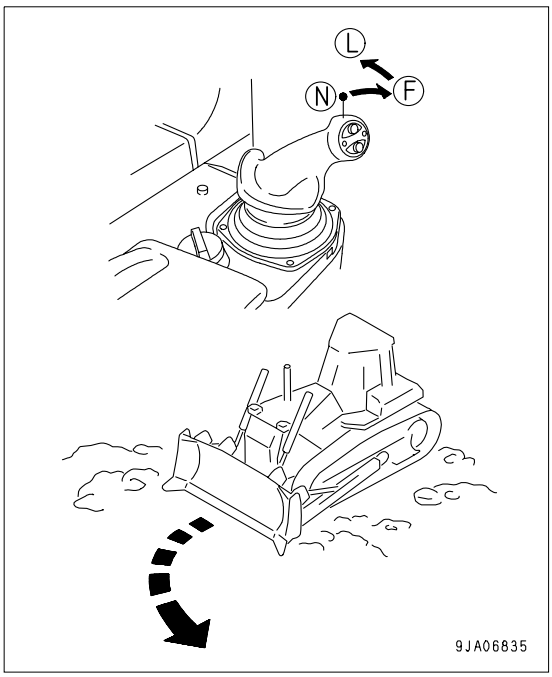

REMARK
To turn gradually to the right while traveling forward, if the steering, forward-reverse, gear shift lever (1) is operated to the FORWARD position (F) and moved slowly to the right, the machine will start to turn gradually. After that, the lever can be moved further towards the end of its travel to set the desired turning radius.

https://truckmanualshub.com/

WHEN MAKING PIVOT TURN TO LEFT WHILE TRAVELING

NOTICE
When carrying out a counterrotation turn, if the load is not equal on the left and right sides, the machine may carry out a pivot turn, so check the ground conditions and be careful not to hit any obstacles.

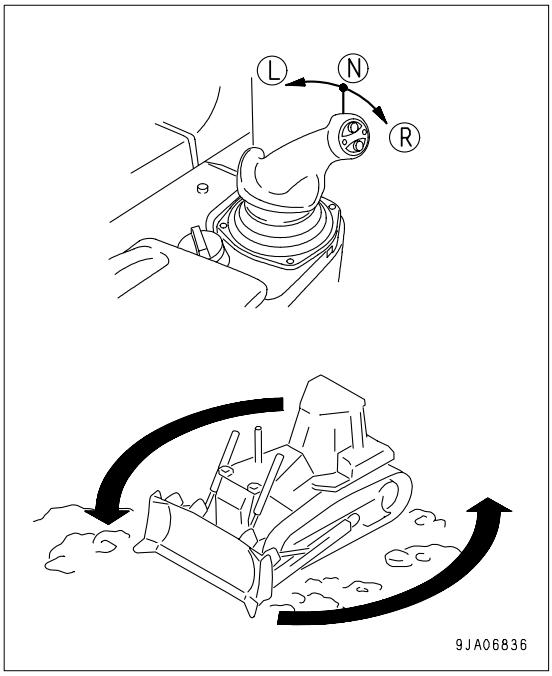

With steering, forward-reverse, gear shift lever (1) in the NEUTRAL position (N), operate the lever partially to the left (L). The left and right tracks will rotate in opposite directions, and the machine will make a slow counterrotation turn. If the lever is moved further, the speed of the counterrotation turn will increase.

REMARK
When making a right counterrotation turn, move the steering, forward-reverse, gear shift lever (1) to the right (R) in the same way.

PRECAUTIONS FOR OPERATION

PAY ATTENTION TO GAUGES

When the red range lights on the power train oil temperature gauge while operating, reduce the load and wait for the temperature to decrease.

PERMISSIBLE WATER DEPTH

When operating in water, always keep the bottom of carrier rollers (1) above the surface of the water. Also, be careful that the engine cooling fan will not come in contact with water. The fan can be damaged.

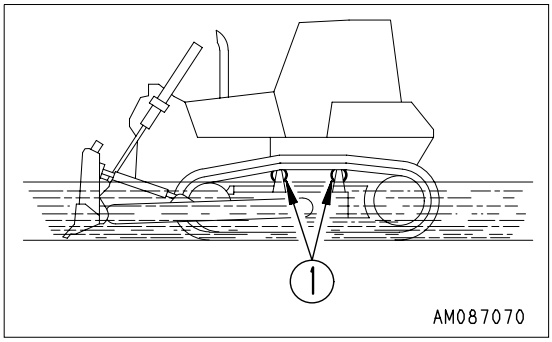

After using the machine in the water for a long time, grease the work equipment and equalizer bar through each grease fitting.

For more details on the lubrication method, see “LUBRICATING (4-44), GREASE EQUALIZER BAR SIDE PIN (4-45) and GREASE EQUALIZER BAR CENTER PIN (4-46)“.

PRECAUTIONS WHEN TRAVELING UP OR DOWN HILLS

METHOD OF USING DECELERATOR PEDAL

When stepping on the decelerator pedal while going uphill, climbing ability will be reduced and the machine will stop.

Furthermore, the engine may stall.

https://truckmanualshub.com/

USE ENGINE AS BRAKE

When going downhill, move steering, forward-reverse, gear shift lever into low speed to run engine at slow speed and travel down slope using the engine as a brake.

Do not move the steering, forward-reverse, gear shift lever to the NEUTRAL position.

When traveling down hills of more than 15°, shift down to 1st speed (R1 or F1).

BRAKING WHEN TRAVELING DOWNHILL

While descending a slope using the engine as a brake, also apply the brakes.

Failure to brake may result in overrunning, causing engine trouble.

PRECAUTIONS ON SLOPES

BE CAREFUL OF FUEL LEVEL

If the fuel level in the fuel tank becomes low when working on slopes, the engine may suck in air because of the angle of the machine or the swaying of the machine. If this makes the engine stop, the braking effect will be reduced, so be careful not to let the fuel level in the fuel tank become too low.

BE CAREFUL OF OIL LEVEL

When operating machine on sloped areas of more than 20°, fill all appropriate components with oil to H level.

PRECAUTIONS WHEN ENGINE STOPS ON SLOPES

If the engine stops while working or traveling on a hill, immediately depress the brake pedal to bring the machine to a complete stop.

METHOD OF USING BRAKES

The following actions cause premature damage to the brakes, so avoid such operations.

- Using emergency brake at full speed
- Using brake with engine running at full speed in first gear (F1, R1) (Machine stall condition)

REMARK
Always depress the decelerator pedal to lower the engine speed before actuating the brakes.

IT IS PROHIBITED TO KEEP THE DOOR OPEN DURING OPERATIONS

(Machine equipped with cab)

Always keep the door closed when traveling or carrying out operations.

If the door is open, there is danger of damage from obstacles or strong vibration.

IT IS PROHIBITED TO MODIFY THE CAB GLASS IN ANY WAY THAT WILL OBSTRUCT THE VIEW

(Machine equipped with cab)

- For safety reasons, do not install anything on the cab glass that will obstruct the view.
- Always keep the glass clean to ensure safety during operations.

https://truckmanualshub.com/

PRECAUTIONS FOR BLIND SPOTS CAUSED BY CAB AND ROPS STRUCTURES

(Machine equipped with cab)

WARNING

The cab structure may cause blind spots.
When operating, always be sure to check carefully that there is no obstacle or worker in the surrounding area.

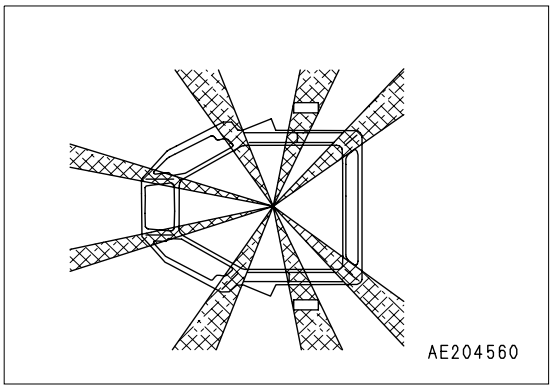

WORK POSSIBLE USING BULLDOZER

In addition to the following, it is possible to further increase the range of applications by using various attachments.

DOZING

A bulldozer digs and transports dirt in a forward direction. Slope excavation can always be most effectively carried out by proceeding from the top downward.

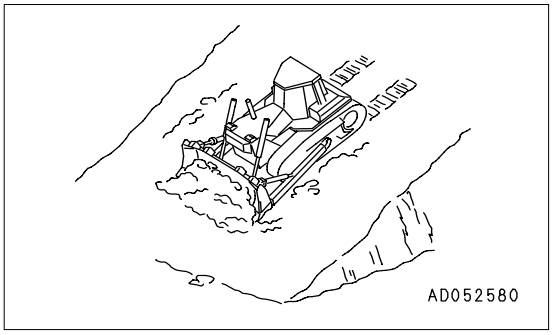

When dozing toward one side only, operate with angled blade (angledozer only).

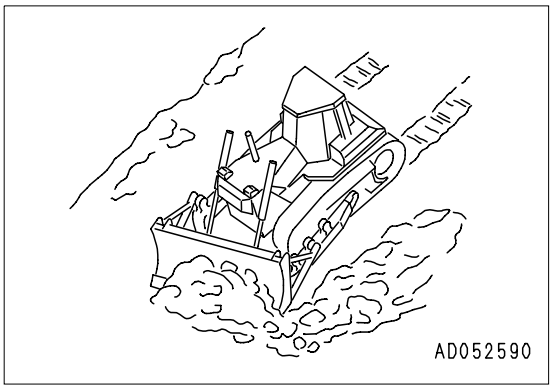

https://truckmanualshub.com/

SMOOTHING

NOTICE
Avoid smoothing on rocky or stony ground. It can damage the blade.

To finish the ground to a flat surface after digging or leveling, put a full load of soil in front of the blade and operate the blade up and down in small movements while traveling forward. Finally, place the blade at FLOAT and travel at low speed in reverse while pulling the blade over the ground surface. Before doing this, hold the lever by hand at the FLOAT position for at least 1 second to make sure that it stays in position. To prevent damage to the blade, be careful not to travel over any stones or rocks.

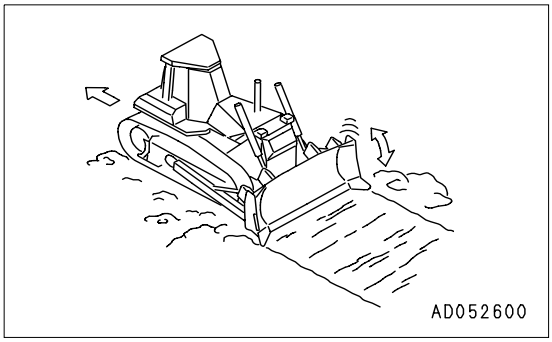

CUTTING INTO HARD OR FROZEN GROUND OR DITCHING

For digging and ditch excavation of hard or frozen ground, tilt the blade. Even hard ground can be dug effectively by a tilted or angled blade.

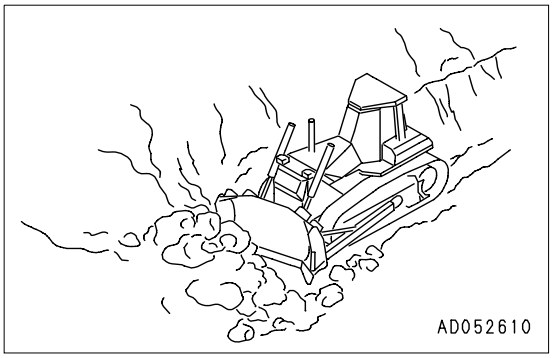

FELLING TREES, REMOVING STUMPS

NOTICE
Do not uproot trees or stumps or fell trees by angling or tilting the blade.

For trees with a diameter of 10 to 30 cm, raise the blade high and push 2 or 3 times to fell the tree.

Next, travel in reverse, and dig the corner of the blade into the ground to cut and dig up the roots.

When doing this, never hit the tree at high speed or apply shock to fell the tree.

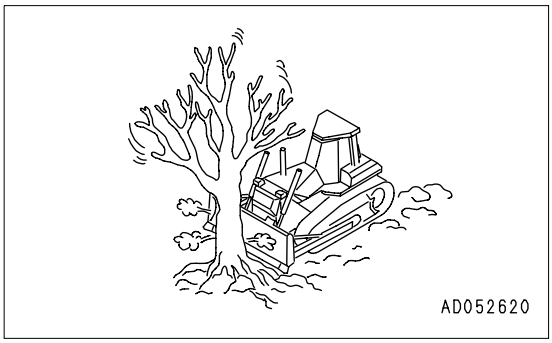

https://truckmanualshub.com/

ADJUSTING POSTURE OF WORK EQUIPMENT

ADJUST ANGLE OF BLADE EDGE

WARNING

It is dangerous if the work equipment moves by mistake when adjusting angle of the blade edge. Set the work equipment in a stable condition, then stop the engine and lock the work equipment securely with the work equipment lock lever.

Blade cutting edge angle (A) can be adjusted to meet soil conditions.

POWER TILTDOZER

Power tiltdozer with screw-adjustable tilt brace.

Turn the brace with bar handle (1) to extend a distance between the joints (B), and then blade cutting edge angle (A) increases. To decrease the angle, shorten the distance.

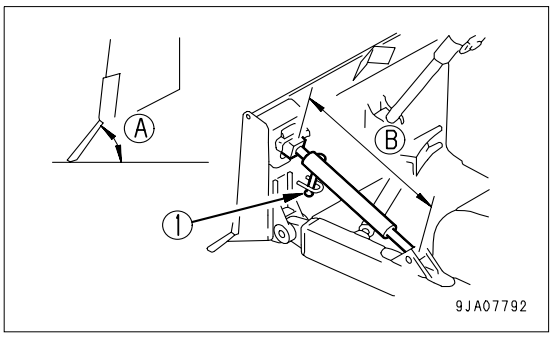

Standard blade cutting edge angle (A) is 55°.

Standard distance between the joints (B) is as shown below.

D65EX: 1150 mm

D65PX: 1146 mm

D65WX: 1150 mm

REMARK
When the machine is installed with a fixed type tilt brace, a blade cutting edge angle cannot be adjusted.
Standard blade cutting edge angle (A) is 55°.
When the blade cutting edge is held at the standard angle, the tilt amount is as shown below.
D65EX: 460 mm
D65PX: 450 mm
D65WX: 410 mm

ANGLEDOZER

The angle of the blade edge of the angledozer cannot be adjusted.

Standard blade cutting edge angle (A) is 55°.

Standard distance between the joints (B) is as shown in the table below.

Model	Standard	Use Range
D65EX	1127mm	1117-1137mm
D65PX	1096mm	1086-1106mm

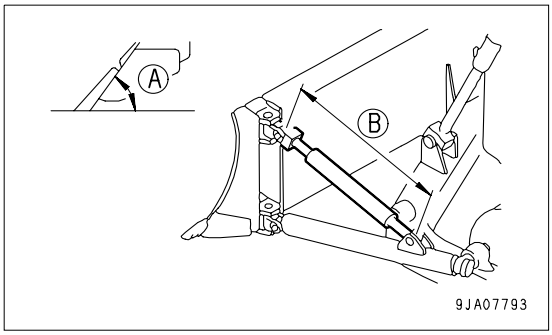

https://truckmanualshub.com/

ADJUSTING SHIMS IN ASSEMBLING WORK EQUIPMENT

1. When assembling the work equipment, adjust an amount of play at each part (C) to the right values shown in the following table.

Shim adjusting position Item		(1) Tilt	(2) Lift	(3) Center	(4) Trunnion
Optimum value	mm	0.2 - 0.5	0.2 - 0.5	0.2 - 0.5	0.2 - 1.0
Thickness of standard shims	mm	5	4	5	10

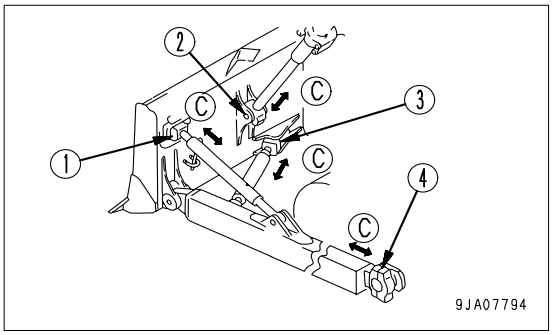

2. After the assembly, grease shim adjusting positions (1) to (3) and check that each part turns smoothly.

ADJUSTING TENSION OF CENTER BRACE

(Power tiltdozer only)

(Powertilt, Power pitch dozer only)

In case the work equipment assembly is disassembled for transportation and reassembled at a worksite, tension of the center brace has to be adjusted anew. Otherwise the bushing at the connecting part of blade and straight frame will likely slip off, allowing sand and dirt to enter the bushing, which eventually leads to premature wear or damage of the bushing. Make this adjustment as follows:

⚠ WARNING

Except when operating the blade in Step 4, always lock the blade control lever securely with the work equipment lock lever.

1. Adjust with shim (2) so that the play of ball joint (1) is 0.2 to 0.5 mm.
2. Loosen bolt (3).
3. Install the blade assembly.
4. Operate the blade control lever to float the blade.
5. Insert bar (4) in the center brace hole and turn the bar to the protruding side. At that time, adjust clearance between the track shoe and frame (D) so that it is equal on the right and left sides.

   Rotating torque: 24.5 to 49 N·m (2.5 to 5 kgf·m) (Blade at FLOAT)

   Standard distance between the joints (B) is as shown below.

   D65EX: 995 mm
   D65PX: 992 mm
   D65WX: 995 mm

6. Tighten bolt (3).

   Tightening torque: 490.3 to 608 N·m (50 to 62 kgf·m)

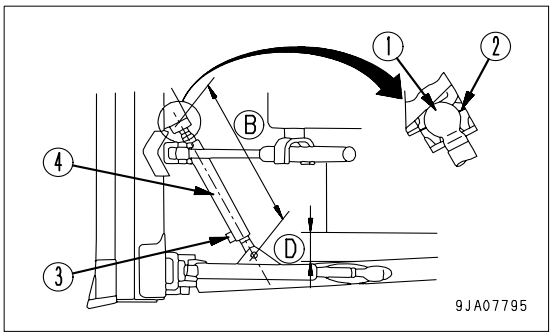

https://truckmanualshub.com/

ADJUST AMOUNT OF TILT

ANGLEDOZER

WARNING

When adjusting the amount of tilt, it is dangerous if the work equipment is moved by mistake. Set the work equipment in a safe condition, then stop the engine and lock the work equipment securely with the work equipment lock lever.

NOTICE
An amount of tilt (A) can be increased to a maximum of 400 mm.
Adjust an amount of tilt (A) within 400 mm.

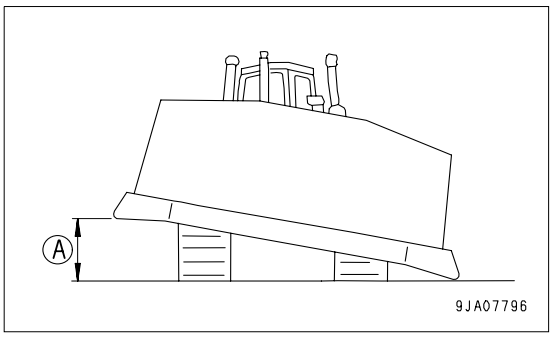

1. Raise the blade up to the height of 400 mm to 500 mm above the ground, and put block (B) beneath the blade edge.

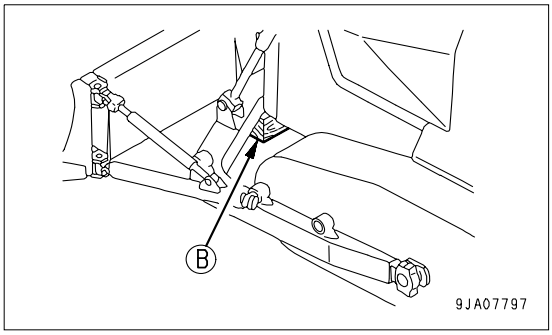

2. Loosen the bolt (1) of the brace, insert a suitable bar into hole (2) of the brace, and turn it.

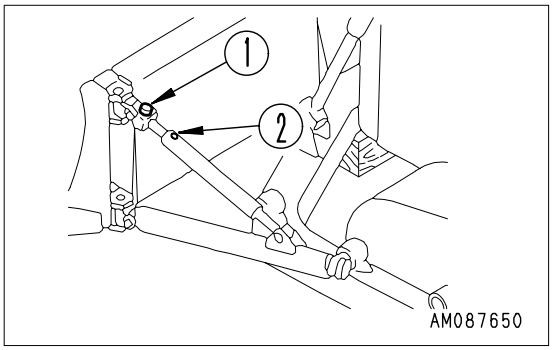

REMARK
When turning the brace with bar, keep the blade above the ground.

Right tilt: Make right side shorter, left side longer

Left tilt: Make left side shorter, right side longer

3. Tighten set bolt (1).

https://truckmanualshub.com/

METHOD OF ANGLING BLADE

Angledozers only

When dozing toward one side only, operate with angled blade.

WARNING

- **When adjusting the amount of angling, it is dangerous if the work equipment is moved by mistake. Set the work equipment in a safe condition, then stop the engine and lock the work equipment securely with the work equipment lock lever.**
- **Be careful when removing arm (2). After arm (2) is removed, the blade can move freely.**

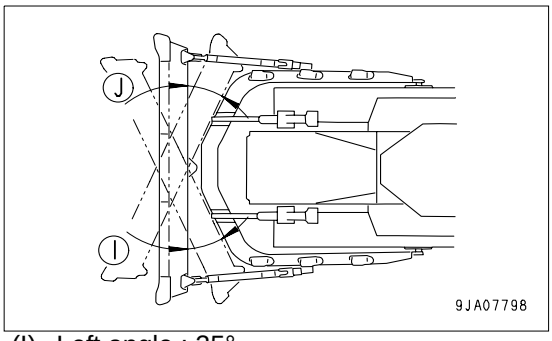

(I) Left angle : 25°
(J) Right angle: 25°

1. Raise the blade up to the height of 400 mm to 500 mm above the ground, and put block (B) beneath the blade edge.

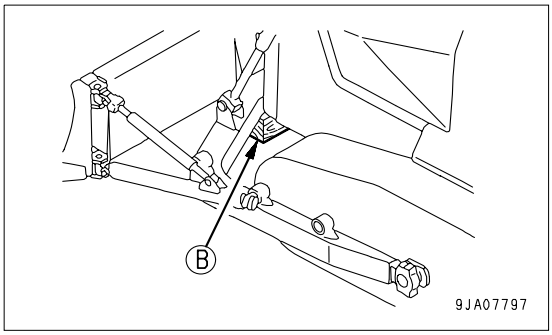

2. Remove pins (1) on the left and right sides, then remove arm (2) from the frame.
3. Insert arm (2) into any desired bracket (C) on the frame (three brackets provided on one side) and fasten it with pin (1) so that it does not slip off.

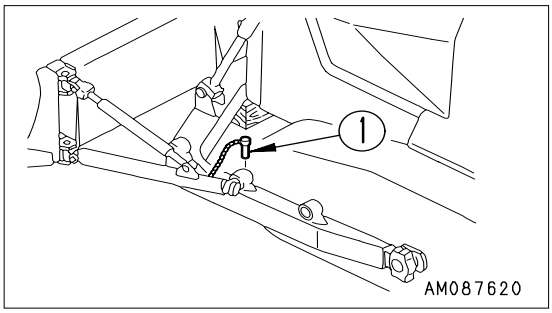

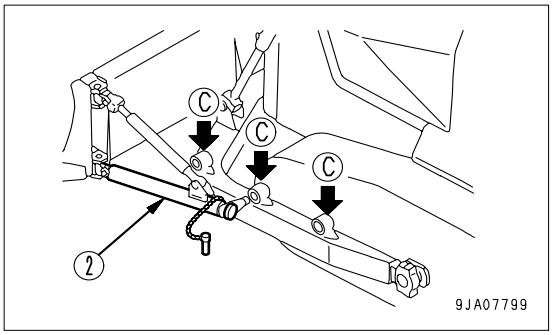

https://truckmanualshub.com/

PARKING MACHINE

WARNING

- **When stopping the machine, select flat hard ground and avoid dangerous places.**
  If it is unavoidably necessary to park the machine on a slope, place the parking brake lever in the LOCK position and insert blocks underneath the track shoes. As an additional safety measure, thrust the blade into the ground.
- **If the work equipment control lever is touched by accident, the work equipment may move suddenly, and this may lead to a serious accident. Before leaving the operator's seat, always operate the work equipment lock lever and parking brake lever to place it securely at the LOCK position.**

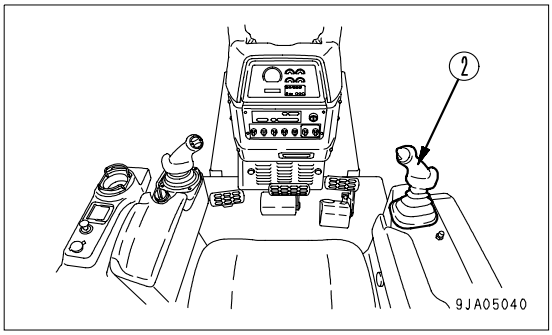

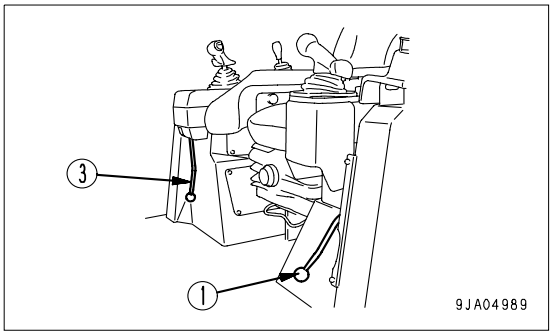

1. Stop the machine. For details, see “STOPPING MACHINE (3-79)“.
2. Set parking brake lever (1) to the LOCK position (L) and apply the parking brake.

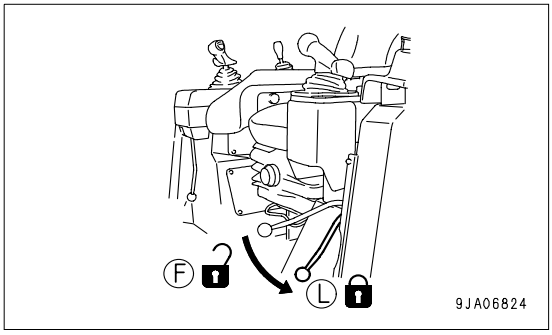

3. Push blade control lever (2) down to position (C) to lower the blade on the ground.

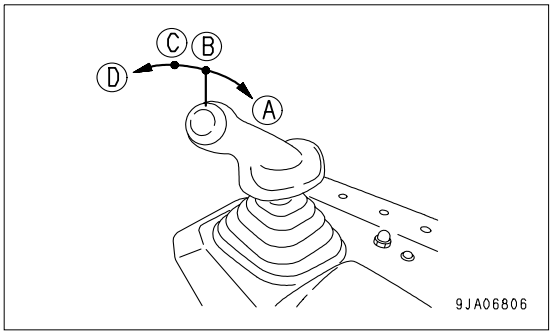

https://truckmanualshub.com/

4. Set work equipment lock leve (3) in the LOCK position (L).

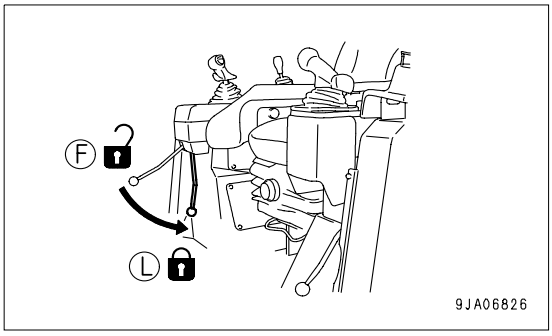

CHECK AFTER FINISHING WORK

BEFORE STOPPING ENGINE

Use the meters and caution lamps to check the engine coolant temperature, engine oil pressure, fuel level, and Power train oil temperature.

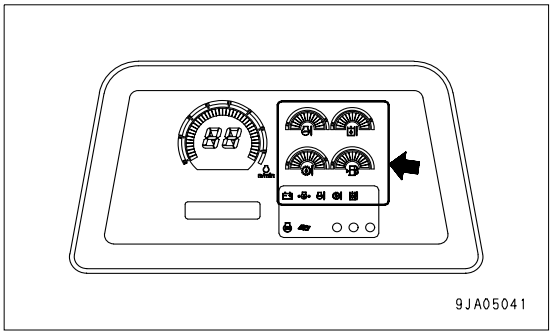

AFTER STOPPING ENGINE

1. Walk around the machine and check the work equipment, machine exterior, and undercarriage, also check for any leakage of oil or coolant. If any problems are found, repair them.
2. Fill the fuel tank.
3. Check the engine compartment for paper and debris. Clean out any paper and debris to avoid a fire hazard.
4. Remove any mud affixed to the undercarriage.

https://truckmanualshub.com/

LOCKING

To prevent vandalism, there are locks in the following places.

Places that can be locked with the starting switch key.

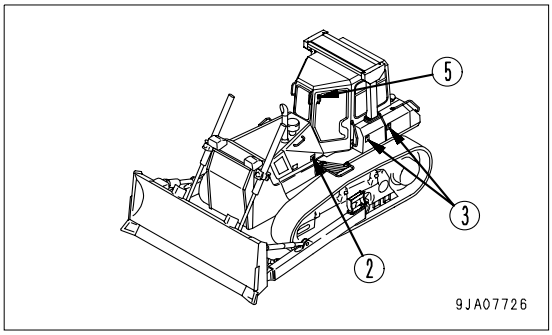

- Top cover at front of chassis (1)
- Right and left engine side covers (2)
- Battery inspection cover (3)
- Inspection cover for fuel tank drain valve(4)
- Cab door opener (5) (Machine equipped with cab)
- Fuel tank filler cap (6)
- Hydraulic tank filler cap (7)
- Power train filter inspection cover (8)
- Engine cooling water sub-tank inspection cover (9)

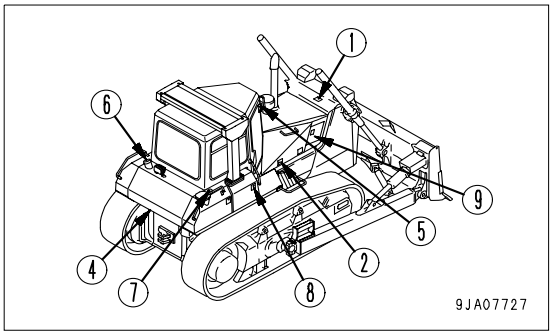

TIPS FOR LONGER UNDERCARRIAGE LIFE

Undercarriage life greatly varies depending on operation method, inspection and maintenance. For most efficient operation, keep the following points in mind.

OPERATION METHOD

- Select the track shoe that best suits the type of soil to be encountered in service.

  Please consult your Komatsu distributor when selecting track shoes.
- Do not allow shoe slipping to occur during operation.

  If shoe slipping occurs, reduce load on the blade until slipping stops.
- Avoid sudden starts, acceleration or stops, unnecessary high speeds and sharp turns.
- Always operate machine in a straight line whenever possible. When making turns, be careful not to allow the machine to stay to one side, so operation in both turning directions can be done properly. Make turns with the largest possible radius.
- Prior to operation, clear boulders and obstacles to prevent machine from riding over them while operating.
- On a slope, operate the machine parallel to the inclination of the slope. Do not operate across the slope. Also when stopping the machine on a slope, the machine should face the top of the slope.
- When ground inclines to the left or right during digging operations, do not continue to dig with the incline. Move the machine back to level ground and start to dig again.

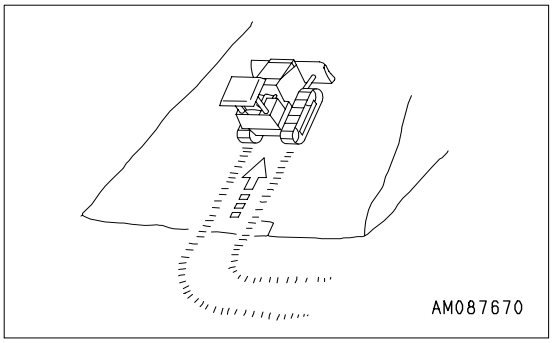

https://truckmanualshub.com/

- Do not force the machine to carry out work that exceeds its working capability. Such work includes cases where the idler or sprocket come off the ground when the machine meets obstacles that resist the power of the machine during dozing or ripping operations.

INSPECTION AND ADJUSTMENT

- Adjust the track shoe tension to an adequate level.

  The track shoe tension can be measured in terms of clearance “a“ between the front idler and carrier rollers as shown in the figure at right. While this clearance is normally 20 mm to 30 mm, increase the tension slightly on a rocky terrain and decrease on the clayish ground.

  An excessively loose track shoe can create an abnormal vibration to the machine during the work or cause the sprocket teeth to wear prematurely.

  (For an inspection and maintenance method, see “CHECK TRACK SHOE TENSION, ADJUST (4-27)“. Referring to that section, carry out an inspection and adjustment of track shoe tension.)

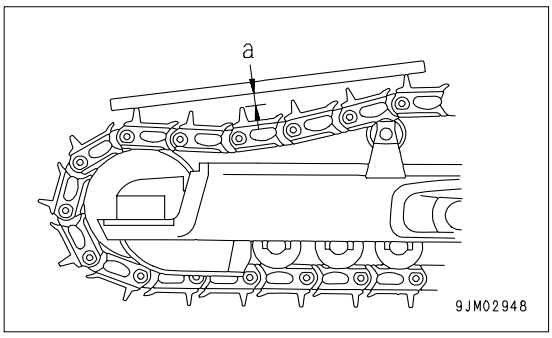

- Check idler rollers for oil leakage as well as for loose bolts and nuts. If any trouble is detected, repair immediately.

- Check a clearance (B) between front idler guide plate (1) and track frame (2). As clearance (B) becomes larger, it can cause the front idler to sway sideways and cause the track shoe to jump off rollers. (For an inspection and maintenance method, see “ADJUST IDLER CLEARANCE (4-40)“.

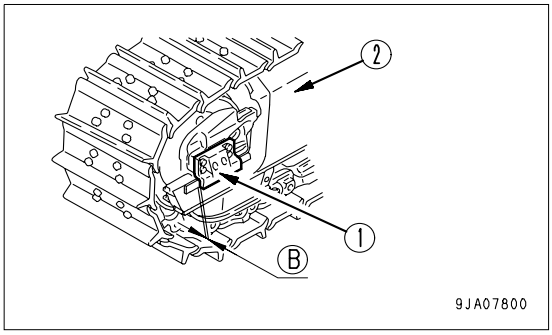

INSPECTION AND REPAIR

Frequent inspection and prompt repair will reduce repair costs.

The following items for inspection will serve as a guide to maintenance service of each undercarriage part. Perform periodical inspection and contact the Komatsu distributor in your area when machine has approached repairable limits and reversing limits.

https://truckmanualshub.com/

MEASURING LINK PITCH

1. Insert a wooden block between track shoe and sprocket to take up the slack in track shoes.

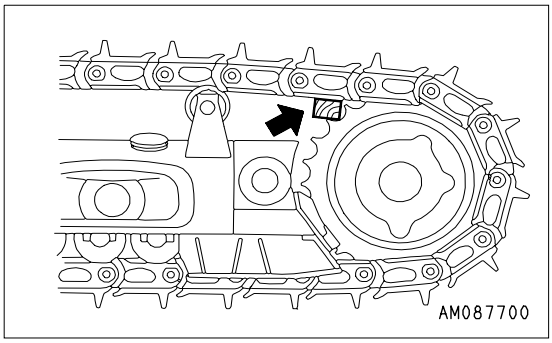

2. Measure the pitch length (L) of 4 links at a straight portion at least 2 links from master pin (A). Divide this measurement by four to obtain the link pitch.
   - Basic link pitch (P): 203 mm
   - Link pitch limit for turning: 206 mm

   There is no link window on the master link.

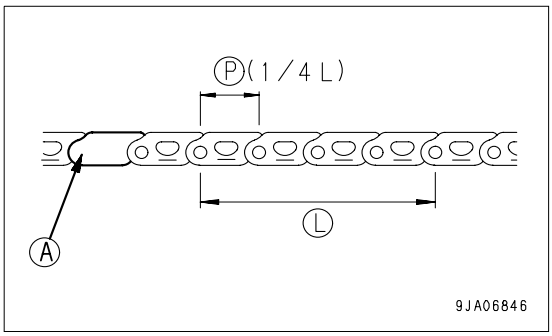

REMARK
The measured value under decimal of link pitch is different from the basic value depending upon the precision of measure or the tolerance of product even if it isn't worn out.
Don't judge it's worn out too soon, do it with the trend of measured value after that.

MEASURING HEIGHT OF GROUSER

(D65EX,D65WX)

After taking up slack in track shoes, measure height at center of shoe as shown below.

- Standard height (h): 65 mm
- Repair limits: 25 mm

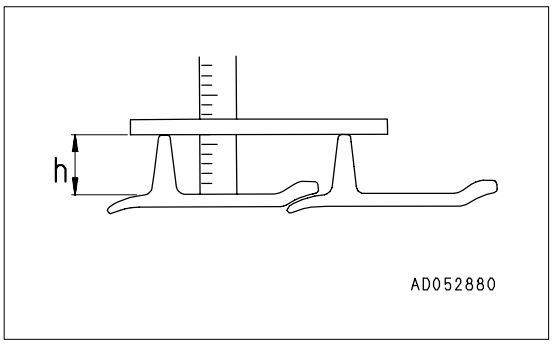

https://truckmanualshub.com/

MEASURING OUTSIDE DIAMETER OF TRACK ROLLER

1. Measure the height (dimension C) of the link tread as shown in the diagram.
2. Stop machine at position where link tread, whose size C has been measured completely, contacts roller tread. Then measure size B.
3. Calculate outside diameter of tread (size A):

   A = (B - C) x 2

   - Standard size (A): 210 mm
   - Repair limits: 172 mm

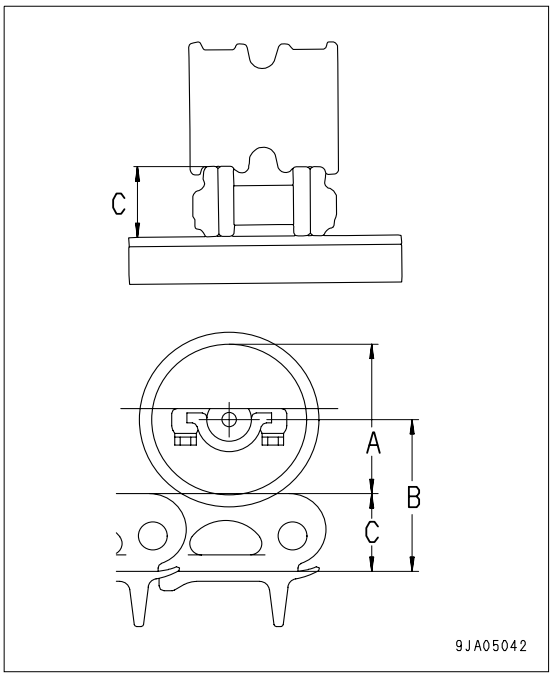

https://truckmanualshub.com/

TRANSPORTATION

When transporting the machine, observe all related laws and regulations, and be careful to assure safety.

TRANSPORTATION MEANS

When transporting the machine, choose the optimum transportation method in reference to the weight and dimensions shown in “SPECIFICATIONS (5-2)“. Note that machine specifications (weight and dimensions) vary depending on the kind of track shoes and blades.

REMOVING CAB

If it is necessary to remove the cab for transportation, there is danger that the seal may be damaged when removing or installing the cab, so please contact your Komatsu distributor.

When installing the cab, please contact your Komatsu distributor, too.

PRECAUTIONS WHEN REMOVING WORK EQUIPMENT

If there is any pressure remaining in the tilt piping after the work equipment has been removed, it may be difficult to remove the quick coupler of the tilt hose, so remove the work equipment as follows.

1. Lower the blade to the ground and set it horizontal to the ground surface.

REMARK
If the blade is tiled, the tilt piping will be under internal pressure, so set the blade horizontal to the ground.

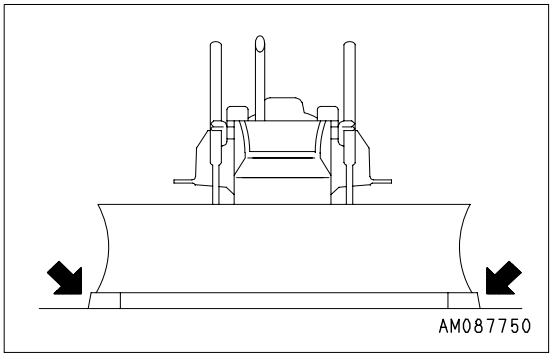

2. Remove the quick coupler (1), then remove the work equipment assembly.

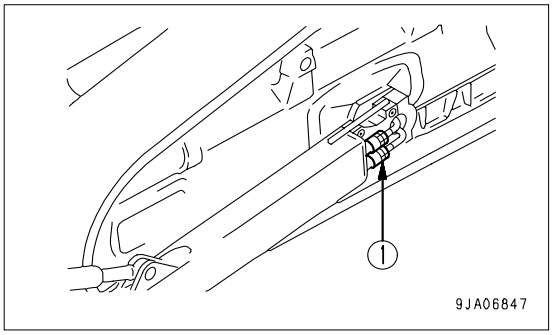

https://truckmanualshub.com/

3. Remove right and left trunnions (2).

   (D65PX,D65WX)

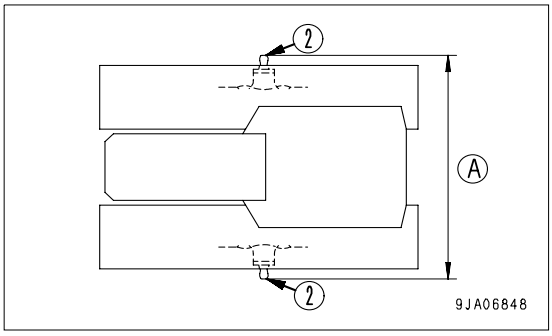

REMARK
If the machine model is D65PX and D65WX, remove right and left trunnions (2).
If the machine model is D65EX, it is not necessary to remove right and left trunnions (2), because the width including them (A) is less than 3.0 m.
If the machine model is D65EX with a 3-m long semi U blade, it is not necessary to remove the work equipment, because the blade width is less than 3.0 m.

4. Tie the tilt hose with a band to prevent it from being damaged.

PRECAUTIONS WHEN REMOVING ROPS

When removing ROPS for transporting the machine, do as follows:

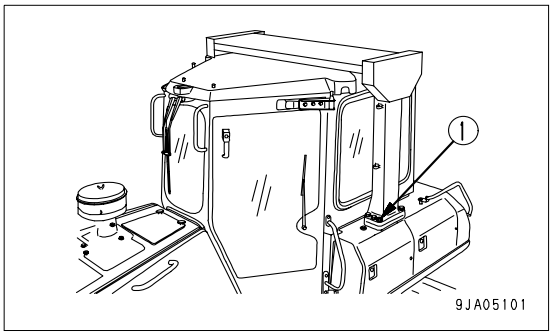

NOTICE
ROPS is an important safety component. Be sure to tighten mounting bolts (1) securely to the specified torque when installing.

Tightening torque: 785 to 980 N·m (80 to 100 kgf·m)

1. Loosen bolts (1) and remove ROPS.

https://truckmanualshub.com/

LOADING, UNLOADING WORK

⚠ WARNING

- **Since loading and unloading of the machine is dangerous, be extremely careful.**
- **When loading or unloading the machine, operate it slowly with the engine speed low and the transmission in the 1st gear.**
- **Use ramps having sufficient width, length, thickness, and strength. Install them securely and set their angle to 15° or less.**
  If the ramps are deflected appreciably, reinforce them with blocks.
- **Perform the loading work of the machine on firm, level ground. Secure sufficient distance between the shoulder of the road and the trailer.**
- **Remove mud from the undercarriage of the machine so that the machine will not slip sideways on the ramps. In addition, remove water, snow, ice, grease, oil, etc. from the ramps.**
- **Never steer the machine on the ramps, since steering on the ramps can cause the machine to tip over. If it is necessary to change the travel direction, return to the ground or to the bed of the trailer, then change the travel direction.**
- **The center of gravity of the machine shifts suddenly at the border between the ramps and trailer, and the machine is unbalanced and becomes dangerous. Accordingly, pass the border slowly.**

When loading or unloading, always use ramps or a platform. Proceed as follows.

LOADING WORK

1. Load and unload on firm level ground only.

   Maintain a safe distance from the edge of a road.

2. Apply the trailer brakes securely and put blocks (1) under the tires to hold the trailer in position. Set gap (3) between ramps (2) to match the distance between the left and right tracks, and keep angle (4) to a maximum of 15°.

   If ramps (2) bend appreciably under the weight of the machine, put wooden block (5) under the ramps to support them.

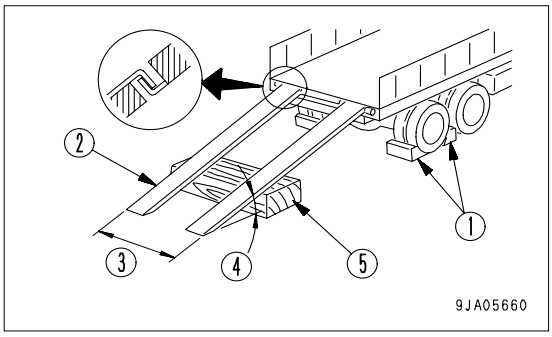

3. Start the engine.

   In a cold weather, carry out an engine warming-up run, referring to the section, “STARTING IN COLD WEATHER (3-74)“, in this manual.

https://truckmanualshub.com/

4. Set parking brake lever to the FREE position (F).
5. Set the transmission in the 1st gear and run the engine at low idle.
6. Set the travel direction toward the ramps and drive slowly.
7. The center of gravity of the machine shifts suddenly at the border between the ramps and trailer, and the machine is unbalanced and becomes dangerous. Accordingly, pass the border slowly.
8. Stop the machine at the specified position on the trailer.

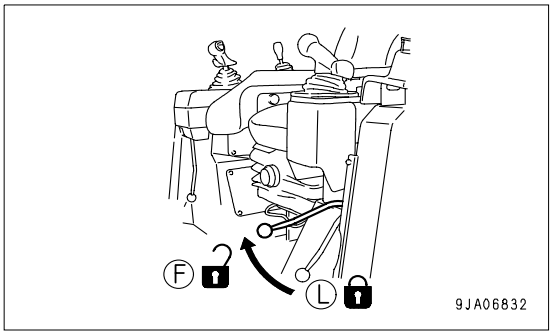

SECURING MACHINE

NOTICE
Be sure to lower the car radio antenna to the stow position (if the machine is equipped with a cab).

Load the machine onto a trailer as follows:

1. Lower the work equipment slowly.

   (When transporting with work equipment installed)
2. Set the work equipment lock lever to the LOCK position (L) securely.

   (When transporting with work equipment installed)

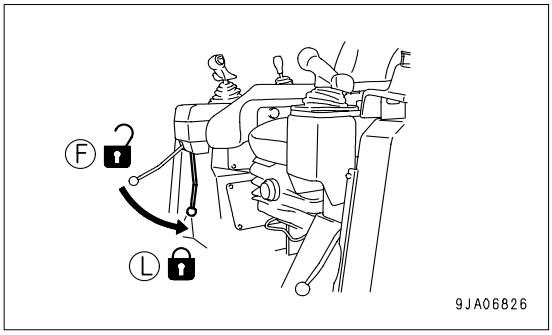

3. Set the parking brake lever to the LOCK position (L) securely.
4. Stop the engine, then remove the key from the starting switch.

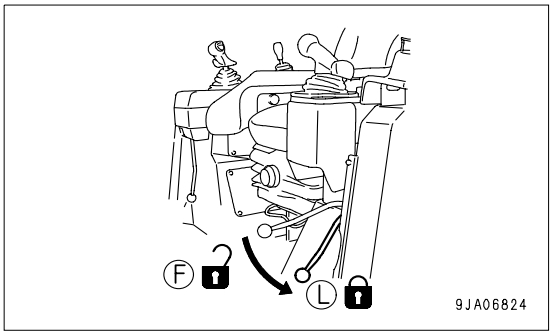

https://truckmanualshub.com/

5. Fix the machine as explained below so that it will not move during transportation.

   In particular, fix the machine securely to prevent it from slipping sideways.

6. Put blocks (1) in front and behind the track shoes of both sides.

7. Set up chain or wire, following (A) or (B).

   - A: Secure chain or wire around the track shoes.
   - B: Secure chain or wire through the holes of track links.

8. Protect the wire from contacting directly with angular parts of the machine, by inserting pads.

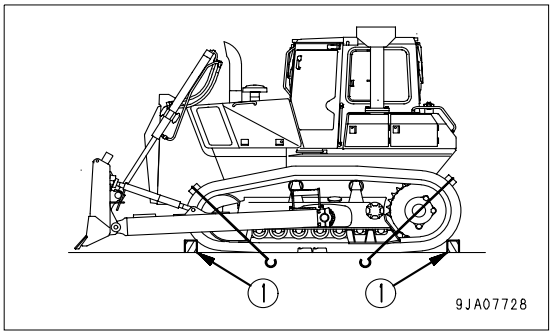

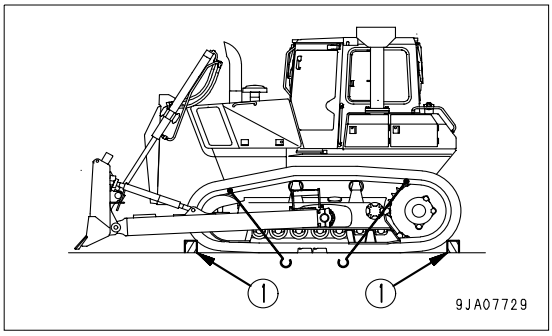

UNLOADING WORK

1. Load and unload on firm level ground only. Maintain a safe distance from the edge of a road.

2. Apply the trailer brakes securely and put blocks (1) under the tires to hold the trailer in position. Set gap (3) between ramps (2) to match the distance between the left and right tracks, and keep angle (4) to a maximum of 15°.

   If ramps (2) bend appreciably under the weight of the machine, put wooden block (5) under the ramps to support them.

3. Remove the chains and wire ropes fastening the machine.

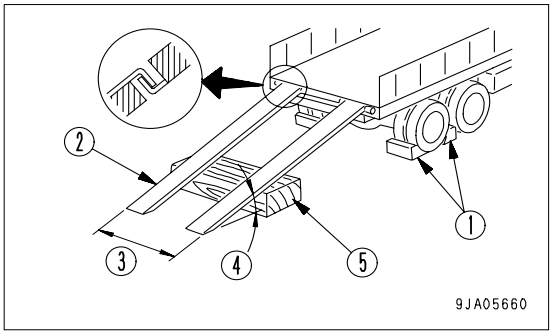

4. Start the engine.

   In a cold weather, carry out an engine warming-up run, referring to the section, “STARTING IN COLD WEATHER (3-74)“, in this manual.

5. Set main work equipment lock lever to FREE position (F), and raise the work equipment.

   (When transporting with work equipment installed)

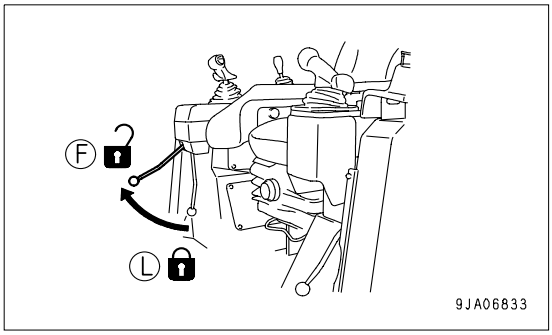

https://truckmanualshub.com/

6. Set parking brake lever to the FREE position (F).
7. Set the transmission in the 1st gear and run the engine at low idle.
8. Set the travel direction toward the ramps and drive slowly.
9. The center of gravity of the machine shifts suddenly at the border between the ramps and trailer, and the machine is unbalanced and becomes dangerous. Accordingly, pass the border slowly.
10. Drive down the ramps slowly and carefully until the machine leaves the ramps perfectly.

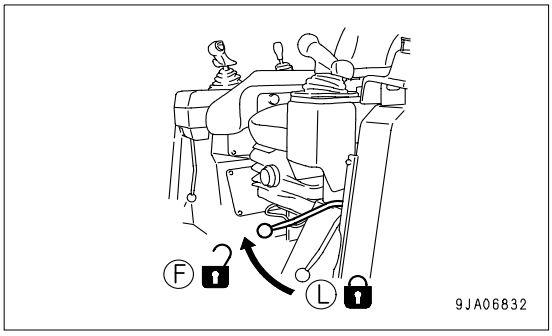

LIFTING MACHINE

WARNING

- **The person using the crane to carry out lifting operations must be a qualified crane operator.**
- **Never carry out lifting operations if any person is on the machine being lifted.**
- **Always use a wire rope that has ample strength for the weight of the machine being lifted.**
- **Keep the machine horizontal when lifting it.**
- **When carrying out lifting operations, set the work equipment lock lever and parking brake lever to the LOCK position to prevent the machine or work equipment from moving unexpectedly.**
- **Never enter the area under or around a raised machine.**
- **There is danger of the machine losing its balance.**
  Use the procedure below to set the machine in the proper posture and use the lifting equipment when lifting the machine.

NOTICE
The lifting procedure applies to machines with standard specifications.
The method of lifting differs according to attachments and options actually installed on the machine. For the proper lifting procedures, contact your Komatsu distributor.

For details of the weight, see “SPECIFICATIONS (5-2)“.

https://truckmanualshub.com/

PROCEDURE FOR LIFTING OPERATIONS

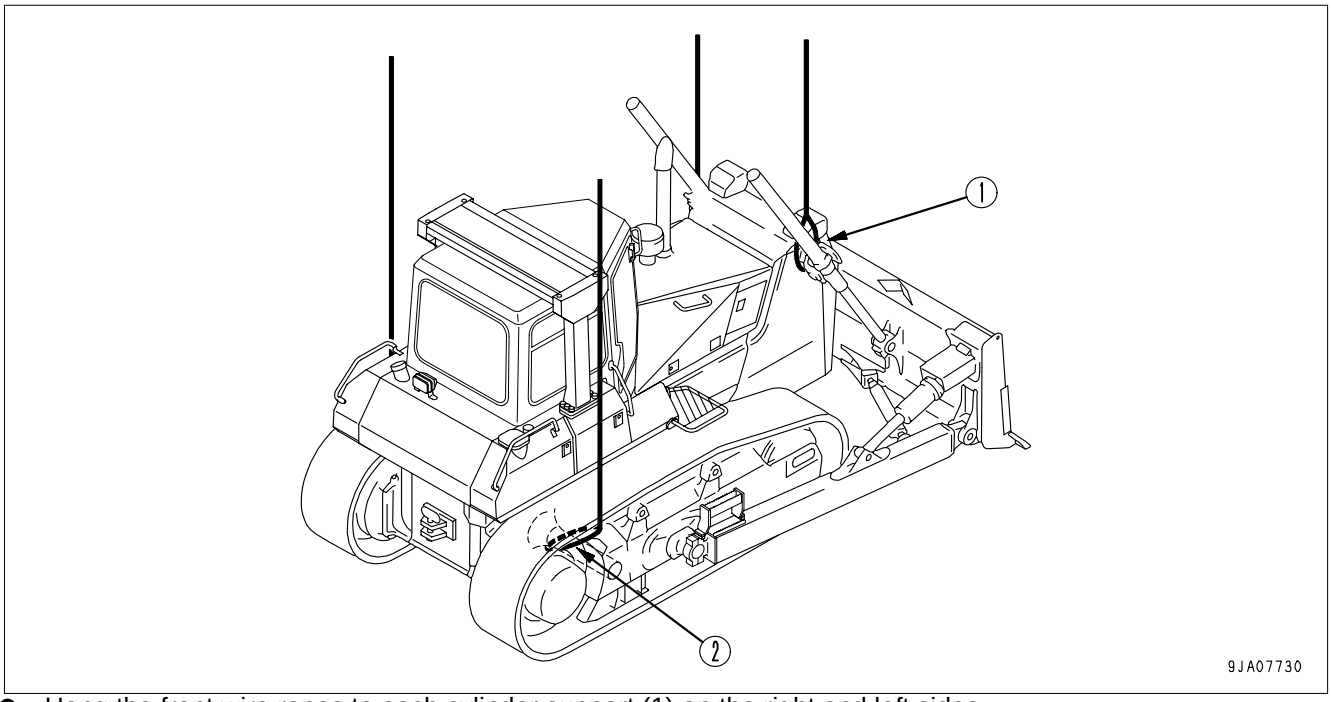

- Hang the front wire ropes to each cylinder support (1) on the right and left sides.
- Fit the wire ropes at the rear to both left and the right pivot shafts (2).

For machine equipped with ripper

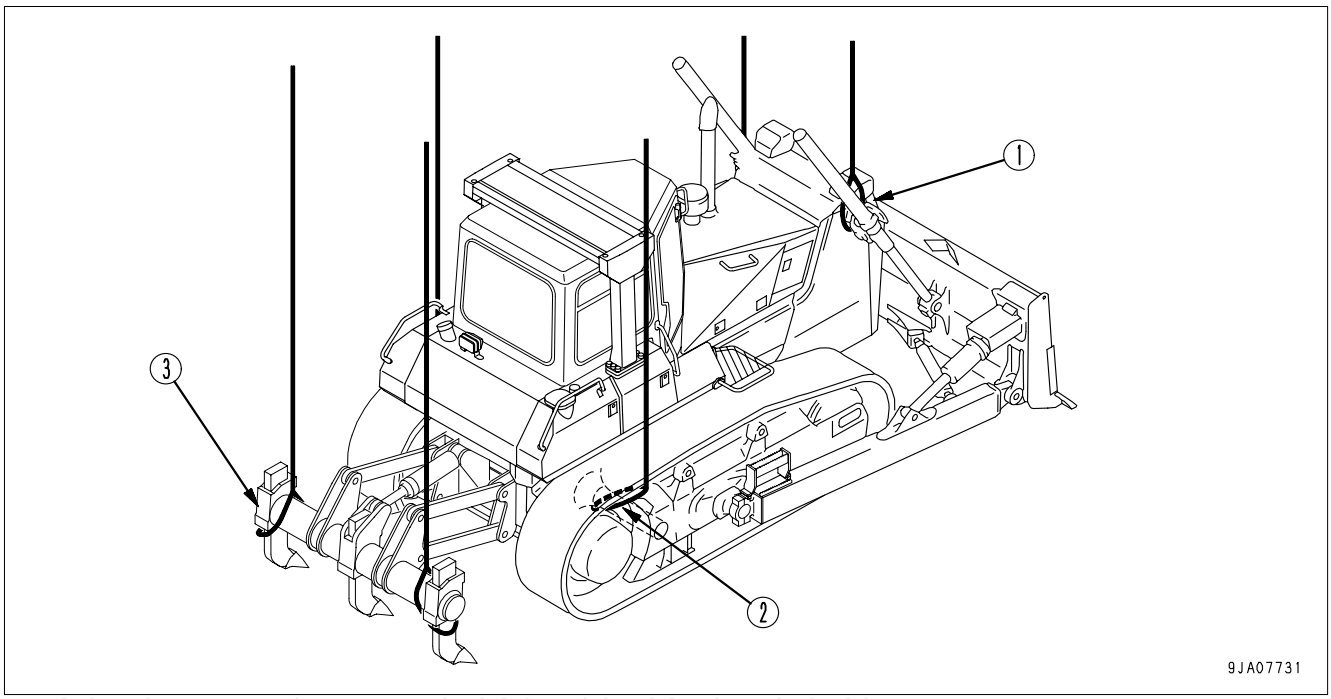

- Fit the wire ropes at the center to both left and the right pivot shafts (2).
- Hang the rear wire rope to ripper beam (3).

When lifting the machine, stop it on a level place, then observe the following procedure.

https://truckmanualshub.com/

1. Stop the engine and set the parking brake lever to the LOCK position (L) securely.

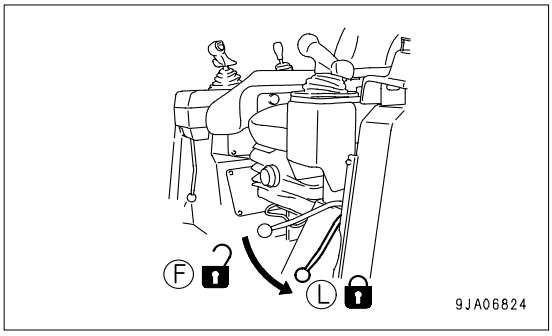

2. Set the work equipment lock lever to the LOCK position (L) securely.
3. Install wire ropes, slings, etc. matched to the weight of the machine to the lifting points as shown in the above figure.

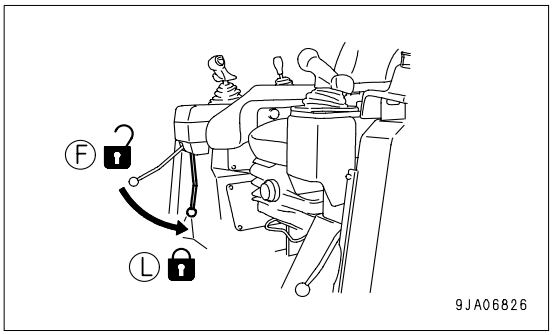

NOTICE

- **Use protectors, etc. so that the wire ropes will not be broken at sharp edges or narrow places.**
- **Use spreaders and bars having sufficient width so that they will not touch the machine.**

4. After setting the wire ropes, lift up the machine and stop at 100 to 200 mm above the ground, and check that the wire ropes are not slack and the machine is level, then lift up slowly.

TRAVELING ON ROADS

- When traveling on paved roads, use flat shoes to protect their surface.

  Even when travelling a short distance, always place boards to protect the road surface.

REMARK

Note that the asphalt road becomes soft in summer.

https://truckmanualshub.com/

COLD WEATHER OPERATION

PRECAUTIONS FOR LOW TEMPERATURE

If the temperature becomes low, it becomes difficult to start the engine, and the coolant may freeze, so do as follows.

FUEL AND LUBRICANTS

Change to oil with low viscosity for all components. For details of the specified visicosity, see “RECOMMENDED FUEL, COOLANT, AND LUBRICANT (4-12)“.

COOLANT

WARNING

- **Antifreeze is toxic. Be careful not to get it into your eyes or on your skin. If it should get into your eyes or on your skin, wash it off with large amounts of fresh water and see a doctor at once.**
- **When changing the coolant or when handling coolant containing antifreeze that has been drained when repairing the radiator, please contact your Komatsu distributor or request a specialist company to carry out the operation. Antifreeze is toxic. Do not let it flow into drainage ditches or spray it onto the ground surface.**
- **Antifreeze is flammable. Do not bring any flame close. Do not smoke when handling antifreeze.**

NOTICE

- **Use Komatsu Supercoolant wherever available, or use permanent type antifreeze coolant.**
- **Never use methanol, ethanol, or propanol-based antifreeze.**
- **Do not use any water leakage prevention agent, either alone, or in combination with antifreeze.**
- **Do not mix one brand of antifreeze with a different brand.**

For details on the amount of antifreeze mixture and on when to change the coolant, see “CLEAN INSIDE OF COOLING SYSTEM (4-24)“.

BATTERY

WARNING

- **The battery generates flammable gas. Do not bring fire or sparks near the battery.**
- **Battery electrolyte is dangerous. If it gets in your eyes or on your skin, wash it off with a large amount of water and consult a doctor.**
- **Battery electrolyte dissolves paint. If it gets on the bodywork, wash it off immediately with water.**
- **If the battery electrolyte is frozen, do not charge the battery or start the engine with a different power source. There is danger that the battery may explode.**
- **Battery electrolyte is toxic. Do not let it flow into drainage ditches or spray it on to the ground surface.**

https://truckmanualshub.com/

When the ambient temperature drops, the capacity of the battery will also drop. If the battery charge ratio is low, the battery electrolyte may freeze. Maintain the battery charge as close as possible to 100%. Insulate it against cold temperature to ensure the machine can be started easily the next morning.

REMARK
Measure the specific gravity and calculate the charging rate from the following conversion table.

Charging Rate (%)	Electrolyte Temperature (°C)			
	20	0	-10	-20
100	1.28	1.29	1.30	1.31
90	1.26	1.27	1.28	1.29
80	1.24	1.25	1.26	1.27
75	1.23	1.24	1.25	1.26

- As the battery capacity drastically drops in low temperatures, cover or remove the battery from the machine, store the battery in a warm place, and install it again the next morning.
- If the electrolyte level is low, add distilled water in the morning before beginning work. Do not add water after the day's work to prevent diluted electrolyte in the battery from freezing during the night.

AFTER COMPLETION OF WORK

To prevent mud, water, or the undercarriage from freezing and making it impossible for the machine to move on the following morning, observe the following precautions.

- Remove all the mud and water from the machine body. In particular, wipe the hydraulic cylinder rods clean to prevent damage to the seal caused by mud, dirt, or drops of water on the rod from getting inside the seal.
- Park the machine on hard, dry ground.

  If this is impossible, park the machine on boards.

  The boards prevent the tracks from freezing to the ground, and allow the machine to be moved the next morning.
- Open the drain valve and drain any water collected in the fuel system to prevent it from freezing.
- Fill the fuel tank to capacity. This minimizes moisture condensation in the tank when the temperature drops.

AFTER COLD WEATHER

When the season changes and the weather becomes warmer, do as follows.

- Replace the fuel and oil for all parts with oil of the viscosity specified.

  For details, see “RECOMMENDED FUEL, COOLANT, AND LUBRICANT (4-12)“.

https://truckmanualshub.com/

LONG-TERM STORAGE

BEFORE STORAGE

When keeping in long-term storage (more than one month), store as follows.

- Clean and wash all parts, then store the machine indoors. If the machine has to be stored outdoors, select level ground and cover the machine with a sheet.
- Completely fill the fuel tank. This prevents moisture from collecting.
- Lubricate and change the oil before storage.
- Apply a thin coat of grease to metal surface of the hydraulic piston rods and the idler adjusting rods.
- Disconnect the negative terminals of the battery and cover it or remove it from the machine and store it separately.
- Place all control levers in the neutral position, set the work equipment lock lever and parking brake lever in the LOCK position, and set the fuel control dial to the low idling position.
- To prevent corrosion, be sure to fill the cooling system with Supercoolant (AF-NAC) or permanent type anti-freeze (density between 30% and 68%).

DURING STORAGE

WARNING

If it is necessary to perform the rust-prevention operation while the machine is indoors, open the doors and windows to improve ventilation and prevent gas poisoning.

- During storage, operate and move the machine for a short distance once a month so that a new film of oil will coat moving parts. At the same time, also charge the battery.
- When operating the work equipment, wipe off all the grease from the hydraulic cylinder rods.
- If the machine is equipped with an air conditioner, operate the air conditioner for 3 to 5 minutes once a month to lubricate all parts of the air conditioner compressor. Always run the engine at low idle when doing this. In addition, check the refrigerant level twice a year.

AFTER STORAGE

NOTICE
If the machine has been stored without carrying out the monthly rust-prevention operation, consult your Komatsu distributor before using it.

When using the machine after long-term storage, do as follows before using it.

- Wipe off the grease from the hydraulic cylinder rods.
- Add oil and grease at all lubrication points.
- When the machine is stored for a long period, moisture in the air will mix with the oil. Check the oil before and after starting the engine. If there is water in the oil, change all the oil.

https://truckmanualshub.com/

TROUBLESHOOTING

AFTER RUNNING OUT OF FUEL

When starting the engine again after running out of fuel, fill with fuel, then bleed the air from the fuel system before starting the engine.

PROCEDURE FOR BLEEDING AIR

1. Insert the key into the engine starting switch and turn the key to ON position (B). Then the electric priming pump begins to work.

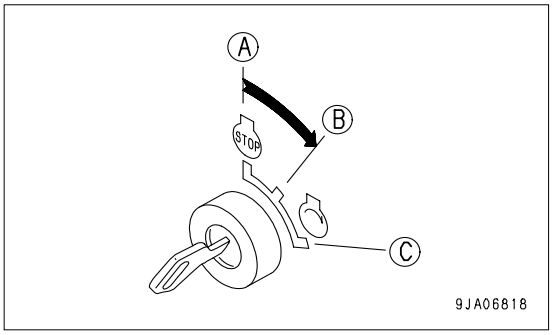

2. After holding the key in ON position (B) for 30 seconds, turn it back to OFF position (A) and hold it there for 10 seconds.

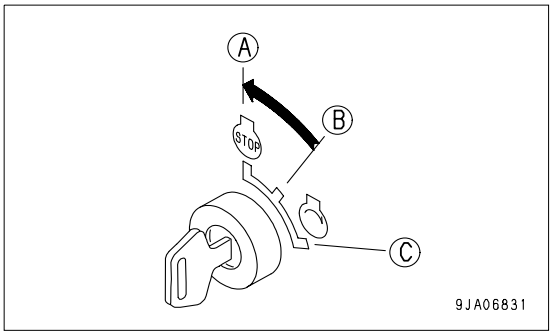

3. Repeat Steps 1 and 2 four times.
4. Turn the engine starting switch key to START position (C) to start up the engine.

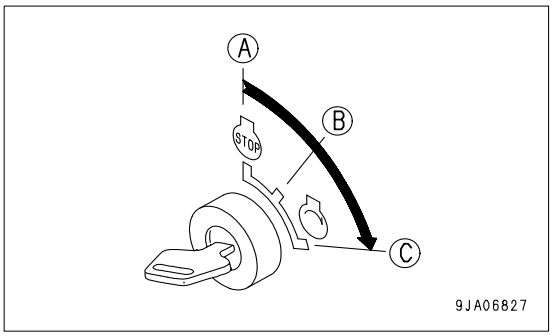

5. If the engine does not start up even after the engine starting motor is kept running for 20 seconds, repeat the procedures of Step 1 through Step 4.

https://truckmanualshub.com/

METHOD OF TOWING MACHINE

⚠ WARNING

Serious injury or death could result if a disabled machine is towed incorrectly or if there is a mistake in the selection or inspection of the wire rope.
If the engine does not start, put blocks under the track to prevent the machine from moving, then release the brake. If blocks are not use, there is danger that the machine may move suddenly.
Always check that the wire rope used for towing has ample strength for the weight of the machine being towed.
Never use a wire rope which has cut strands (A), reduced diameter (B), or kinks (C). There is danger that the rope may break during the towing operation.
Always wear leather gloves when handling wire rope.
Never tow a machine on a slope.
During the towing operation, never stand between the towing machine and the machine being towed.
Operate the machine slowly and be careful not to apply any sudden load to the wire rope.

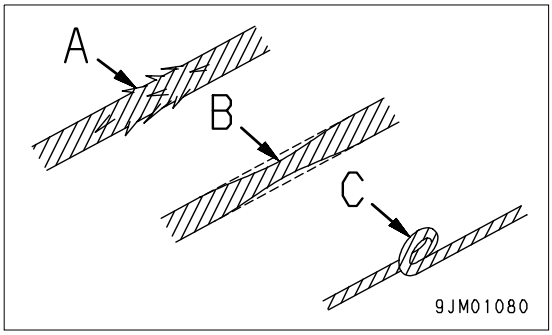

NOTICE
The maximum towing capacity for this machine is 197,100 N (20,100 kgf).
Always carry out towing operations within the maximum towing capacity.

For details of the method of towing, please contact your Komatsu distributor.

- If the engine stops or the oil pressure in the brake circuit lowers because of a trouble in the hydraulic system, the brake works and the machine cannot move. To move the machine in this case, the oil pressure in the brake circuit must be heightened to the specified level with a special device. Ask your Komatsu distributor.
- Moving a machine by towing is only used to move it to a place where it is possible to carry out inspection and maintenance. It is not intended for moving the machine long distances. Do not use this method for towing the machine for long distances.
- If it is impossible to operate the steering and brakes of the machine being towed, do not let anyone ride on the machine.
- Keep the angle of the towing line to the minimum. Operate the machine so that the angle does not become greater than 30° from the straight line.

https://truckmanualshub.com/

If the machine gets stuck in the mud or a heavy thing needs to be towed, install a towing wire rope to the draw bar pin.

- Connect a wire rope to the part indicated with the arrow in the diagram at right.

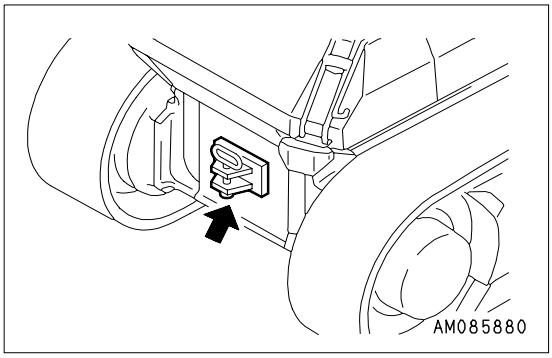

IF BATTERY IS DISCHARGED

⚠ WARNING

- **It is dangerous to charge a battery when mounted on a machine. Make sure that it is dismounted before charging.**
- **When checking or handling the battery, stop the engine and turn the starting switch key to the OFF position.**
- **The battery generates hydrogen gas, so there is a hazard of explosion. Do not bring lighted cigarettes near the battery, or do anything that will cause sparks.**
- **Battery electrolyte is dilute sulfuric acid, and it will attack your clothes and skin. If it gets on your clothes or on your skin, immediately wash it off with a large amount of water. If it gets in your eyes, wash it out with fresh water and consult a doctor.**
- **When handling batteries, always wear safety glasses and rubber gloves.**
- **When removing the battery, first disconnect the cable from the ground (normally the negative (-) terminal). When installing, install the positive (+) terminal first. If a tool touches the positive terminal and the chassis, there is danger that it will cause a spark, so be extremely careful.**
- **If the terminals are loose, there is danger that the defective contact may generate sparks that will cause an explosion.**
- **When removing or installing the terminals, check which is the positive (+) terminal and which is the negative (-) terminal.**

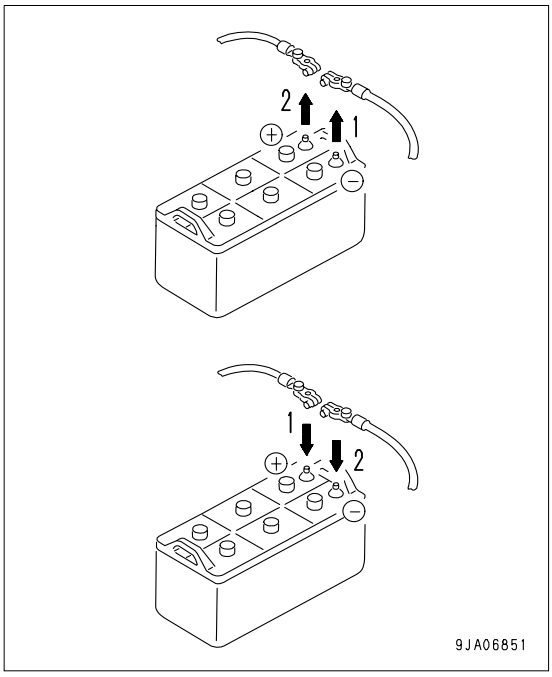

https://truckmanualshub.com/

REMOVE AND INSTALL BATTERY

1. Open the battery cover.
2. Before removing battery, remove the ground cable (normally connected to the negetive (-) terminal). If any tool touches between the positive terminal and the chassis, there is danger of sparks being generated. Loosen the nuts of the terminal and remove the wires from the battery.
3. After installing the battery, fix it with the battery hold down.

   Tightening torque: 1.47 to 1.96 N·m (0.15 to 0.2 kgf·m)
4. When installing the battery, connect the ground cable last.

   Insert the hole of the terminal on the battery and tighten the nut.

   Tightening torque: 5.9 to 9.8 N·m (0.6 to 1.0 kgf·m)

PRECAUTIONS FOR BATTERY CHARGING

If the battery is charged improperly, it may explode. Accordingly, charge it according to “IF BATTERY IS DISCHARGED (3-113)“ and the instruction manual attached to the charger, and observe the following items.

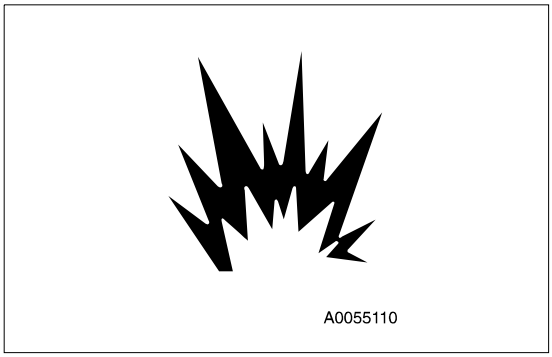

- Set the voltage of the charger to match the voltage of the battery to be charged. If the correct voltage is not selected, the charger may overheat and cause an explosion.
- Connect the positive (+) charger clip of the charger to the positive (+) terminal of the battery, then connect the negative (-) charger clip of the charger to the negative (-) terminal of the battery. Be sure to attach the clips securely.
- Set the charging current to 1/10 of the value of the rated battery capacity; when carrying out rapid charging, set it to less than the rated battery capacity.

  If the charger current is too high, the electrolyte will leak or dry up, and this may cause the battery to catch fire and explode.
- If the battery electrolyte is frozen, do not charge the battery or start the engine with a different power source. There is a danger that this will ignite the battery electrolyte and cause the battery to explode.
- Do not use or charge the battery if the battery electrolyte level is below the LOWER LEVEL line. This may cause an explosion. Check the battery electrolyte level periodically and add distilled water to bring the electrolyte level to the UPPER LEVEL line.

https://truckmanualshub.com/

STARTING ENGINE WITH BOOSTER CABLE

When starting the engine with a booster cable, do as follows:

PRECAUTIONS WHEN CONNECTING AND DISCONNECTING BOOSTER CABLE

⚠ WARNING

- **When connecting the cables, never contact the positive (+) and negative (-) terminals.**
- **When starting the engine with a booster cable, wear safety glasses and rubber gloves.**
- **Be careful not to let the normal machine and problem machine contact each other. This prevents sparks from generating near the battery which could ignite the hydrogen gas given off by the battery.**
- **Make sure that there is no mistake in the booster cable connections. The final connection is to the engine block of the problem machine, but sparks will be generated when this is done, so connect to a place as far as possible from the battery.**
- **When disconnecting the booster cable, take care not to bring the clips in contact with each other or with the machine body.**

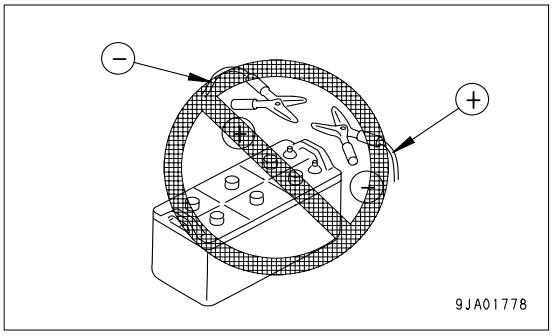

NOTICE

- **The starting system for this machine uses 24V. For the normal machine, also use a 24V battery.**
- **The size of the booster cable and clip should be suitable for the battery size.**
- **The battery of the normal machine must be the same capacity as that of the engine to be started.**
- **Check the cables and clips for damage or corrosion.**
- **Make sure that the cables and clips are firmly connected.**
- **Check that the work equipment lock levers and parking brake levers of both machine are in the LOCK position.**
- **Check that each lever is in the NEUTRAL position.**

https://truckmanualshub.com/

CONNECTING THE BOOSTER CABLE

Keep the starting switch of the normal machine and problem machine in the OFF position.

Connect the booster cable as follows, in the order of the numbers marked in the diagram.

1. Connect the clip of booster cable (A) to the positive (+) terminal of battery (C) on the problem machine.
2. Connect the clip at the other end of booster cable (A) to the positive (+) terminal of battery (D) on the normal machine.
3. Connect the clip of booster cable (B) to the negative (-) terminal of battery (D) on the normal machine.
4. Connect the clip at the other end of booster cable (B) to engine block (E) on the problem machine.

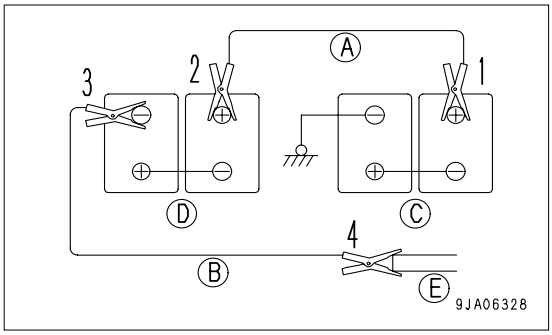

STARTING ENGINE

WARNING

Always check that the work equipment lock lever is set to the LOCK position, regardless of whether the machine is working normally or has failed. Check also that all the control levers are in the HOLD or NEUTRAL position.

1. Make sure the clips are firmly connected to the battery terminals.
2. Start engine of the normal machine and run it at high idle speed.
3. Turn the starting switch of the problem machine to the START position and start the engine.

   If the engine doesn't start at first, try again after 2 minutes or so.

DISCONNECTING THE BOOSTER CABLE

After the engine has started, disconnect booster cables in the reverse order in which they were connected.

1. Remove the clip of booster cable (B) from engine block (E) on the problem machine.
2. Remove the clip of booster cable (B) from the negative (-) terminal of battery (D) on the normal machine.
3. Remove the clip of booster cable (A) from the positive (+) terminal of battery (D) on the normal machine.
4. Remove the clip of booster cable (A) from the positive (+) terminal of battery (C) on the problem machine.

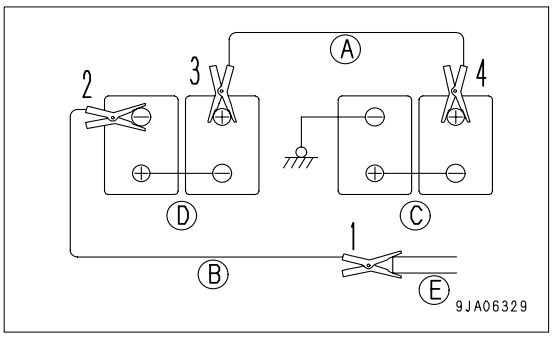

https://truckmanualshub.com/

OTHER TROUBLE

ELECTRICAL SYSTEM

- ( ): Always contact your Komatsu distributor when dealing with these items.
- In cases of problems or causes which are not listed below, contact your Komatsu distributor for repairs.

Problem	Main cause	Remedy
Lamp does not glow brightly even when the engine runs at high speed Lamp flickers while engine is running	•Defective wiring	(•Check, repair loose terminals, disconnections •Check fuses and diodes in fuse box)
Battery charge circut caution lamp dose not go out even when engine is running	•Defective°belt •Defective alternator •Defective wiring	•Replace (•Replace) (•Check, repair Check fuse, diode in fuse box)
Abnormal noise is generated from alternator	•Defective alternator	(•Replace)
Starting motor does not turn when starting switch is turned to ON	•Defective wiring •Insufficient battery charge	(•Check, repair) •Charge
Pinion of starting motor keeps going in and out	•Insufficient battery charge	•Charge
Starting motor turns engine sluggishly	•Insufficient battery charge •Defective starting motor	•Charge (•Replace)
Starting motor disengages before engine starts	•Defective wiring •Insufficient battery charge	(•Check, repair) •Charge
Engine preheating pilot lamp does not light up (When the temperature of the engine coolant exceed 20°C, this condition is normal)	•Defective wiring •Defective monitor •Disconnection in glow plug	(•Check, repair) (•Replace) (•Replace)
Air conditioner operation is defective	•Blown fuse •Insufficient battery charge •Defective air conditioner switch •Defective blower switch •Defective compressor	(•Check, repair) •Charge (•Replace air conditioner switch) (•Replace blower switch) (•Replace)

https://truckmanualshub.com/

MONITOR PANEL

When an error code appears on the display panel B (multi-information), take appropriate remedies based upon the table below.

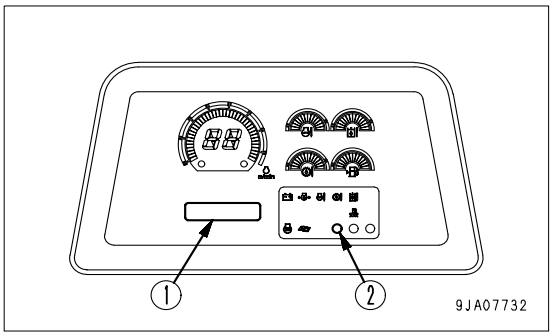

(1): Display panel B

(2): Warning lamp (red)

REMARK
If different kinds of failures occur at the same time, their failure codes are arranged in the order of seriousness in the display. The order of seriousness in this case is E04, E03, E02 and E01, starting from the most serious one.

Action code	Display panel B	Warning lamp	Alarm buzzer	Remedy
E01	Top line: Displays E01 Bottom line: Displays service meter	-	-	Failure in part of function, stops. When continuing operations, be extremely careful of location of failure. After completing operations, contact Komatsu distributor for repairs
E02	Top line: Displays E02 Bottom line: Displays service meter	Flashes	Sounds	Serious failure in part of function, stops. When continuing operations, be extremely careful of location of failure. After completing operations, contact Komatsu distributor for repairs
E03	Top line: Displays E03 Bottom line: Displays telephone number (If no telephone number is set, displays 0)	Flashes	Sounds	After moving to safe place, stop machine immediately. Contact Komatsu distributor for repairs
E04	Top line: Displays E04 Bottom line: Displays telephone number (If no telephone number is set, displays 0)	Flashes	Sounds	Stop machine immediately. Contact Komatsu distributor for repairs

Note: If a problem display appears on display panel B, check the fault code. For details, see “METHOD OF USING FAULT CODE DISPLAY MODE (3-26)“.

When contacting your Komatsu distributor, please give the fault code also.

https://truckmanualshub.com/

CHASSIS

- ( ): Always contact your Komatsu distributor when dealing with these items.
- In cases of problems or causes which are not listed below, contact your Komatsu distributor for repairs.

Problem	Main causes	Remedy
Oil pressure in torque converter fails to rise	•Improper tightening of oil pipe, pipe joint, air leaking in or oil leaking out because of damage •Wear, scuffing of gear pump •Insufficient oil in power train case •Clogged oil filter element strainer in power train case	•Check, repair (•Check, replace) •Add oil to the specified level. For details, see CHECK BEFORE STARTING •Clean. For details, see EVERY 500 HOURS SERVICE
Torque converter is overheats	•Clogged radiator •Engine coolant temperature is high •Clogged oil cooler •Oil pressure too low •Lack of flow of lubricant caused by wear of power train gear pump	•Clean radiator core •See ENGINE related parts (•Clean or repalce) •Go to “Oil pressure in torque converter fails to rise“ (•Replace gear pump)
Torque converter oil temperature gauge does not work	•Defective oil temperature gauge •Defective contact in wiring connection	(•Replace oil temperature gauge) (•Check, repair)
Lacks drawbar pull (machine does not pick up speed)	•Lack of engine horsepower •Oil pressure in torque converter is too low	•See ENGINE related parts •Go to “ Oil pressure in torque converter fails to rise“
Machine will not move when joystick is placed in FORWARD	•Insufficient oil in power train case •Transmission oil pressure does not rise •Defective Brake •Defective lever wiring •Parking brake lever is in LOCK position	•Add oil to specified level. For details, see CHECK BEFORE STARTING •Go to oil pressure in torque converter fails to rise (•Adjust linkage) (•Check, repair) •Set to FREE position
Does not steer even when steering is operated	•Defective lever wiring •Abnormal HSS pump •Abnormal HSS motor	(•Check, repair) (•Check, replace) (•Check, replace)
Machine doesn't stop when brake pedal are depressed	•Defective brake adjustment	(•Adjust linkage) (•Check brake pressure)
Track comes off	•Track is too loose	•Adjust track tension. For details, see WHEN REQUIRED
Sprocket develops abnormal wear	•Track is too loose or too tight	•Adjust track tension. For details, see WHEN REQUIRED
Machine does not travel in straight line	•Initial improper adjustment of HSS controller •Defective HSS pump	(•Adjust) (•Replace)

https://truckmanualshub.com/

Problem	Main causes	Remedy
Blade rises too slowly or does not rise at all (or blade tilts too slowly)	•Lack of hydraulic oil •Defective hydraulic pump •Work equipment lock lever is in LOCK position	•Add oil to specified level. For details, see EVERY 250 HOURS SERVICE •Check •Set to FREE position

https://truckmanualshub.com/

ENGINE

- ( ): Always contact your Komatsu distributor when dealing with these items.
- In cases of problems or causes which are not listed below, contact your Komatsu distributor for repairs.

Problem	Main causes	Remedy
Engine oil pressure monitor flashes when engine speed is raised after completion of warm-up	•Engine oil pan oil level is low (sucking in air) •Clogged oil filter cartridge •Defective tightening of oil pipe joint, oil leakage from damaged part •Defective monitor panel	•Add oil to specified level, see CHECK BEFORE STARTING •Replace cartridge, see EVERY 500 HOURS SERVICE (•Check, repair) (•Replace)
Steam is emitted from top part of radiator (pressure valve)	•Coolant level low, water leakage •Dirt or scale accumulated in cooling system •Clogged radiator fins or damaged fins •Defective thermostat •Loose radiator filler cap (high altitude operation) •Defective monitor panel	•Add coolant, repair, see CHECK BEFORE STARTING •Change coolant, clean inside of cooling system, see WHEN REQUIRED •Clean or repair, see WHEN REQUIRED (•Replace thermostat) •Tighten cap or replace packing (•Replace)
Engine water temperature monitor remains alight altitude operation)		
Engine does not start when starting motor is turned	•Lack of fuel •Air in fuel system •No fuel in fuel filter •Starting motor cranks engine sluggishly •Defective electric priming pump •Defective valve compression	•Add fuel, see CHECK BEFORE STARTING •Repair place where air is sucked in (•Replace pump or nozzle) •See ELECTRICAL SYSTEM •See ELECTRICAL SYSTEM (•Adjust valve clearance)
Exhaust gas is white or blue	•Too much oil in oil pan •Defective cooling water temperature sensor •Improper fuel	•Refill with engine oil up to the specified level, referring to CHECK BEFORE STARTING. •Replace the sensor or repair the wiring harness. •Change to specified fuel
Exhaust gas occasionally turns black	•Clogged air cleaner element •Defective nozzle •Defective compression •Defective turbocharger	•Clean or replace, see WHEN REQUIRED (•Replace nozzle) (•Adjust valve clearance) (•Clean or replace, turbocharger)
Combustion noise occasionally makes breathing sound	•Defective nozzle •Lack of fuel (in Air)	(•Replace nozzle) •Add fuel
Abnormal noise generated (combustion or mechanical)	•Low grade fuel being used •Overheating •Damage inside muffler •Excessive valve clearance	•Change to specified fuel •See item “Indicator of water temperature gauge is in red range on right side of gauge“. (•Replace muffler) (•Adjust valve clearance)

https://truckmanualshub.com/

Problem	Main causes	Remedy
Monitor displays error code	Please contact your Komatsu distributor	
Alarm buzzer sounds		
Engine horsepower lowered suddenly (Engine is running in duration mode)		

https://truckmanualshub.com/

https://truckmanualshub.com/

https://truckmanualshub.com/

MAINTENANCE

⚠ WARNING

Please read and make sure that you understand the SAFETY section before reading this section.

https://truckmanualshub.com/

GUIDE TO MAINTENANCE

Do not perform any inspection and maintenance operation that is not found in this manual.

CHECK SERVICE METER:

Check the service meter reading every day to see if the time has come for any necessary maintenance to be performed.

KOMATSU GENUINE REPLACEMENT PARTS:

Use Komatsu genuine parts specified in the Parts Book as replacement parts.

KOMATSU GENUINE OILS:

Use Komatsu genuine oils and grease. Choose oils and grease with proper viscosities specified for ambient temperature.

ALWAYS USE CLEAN WASHER FLUID:

Use automobile window washer fluid, and be careful not to let any dirt get into it.

CLEAN OIL AND GREASE:

Use clean oil and grease. Also, keep the containers of the oil and grease clean. Keep foreign materials away from oil and grease.

CHECKING FOREIGN MATERIALS IN DRAINED OIL:

After oil is changed or filters are replaced, check the old oil and filters for metal particles and foreign materials. If large quantity of metal particles or foreign materials are found, always report to the person in charge, and carry out suitable action.

FUEL STRAINER:

If your machine is equipped with a fuel strainer, do not remove it while fueling.

WELDING INSTRUCTIONS:

- Turn off the engine starting switch.
- Do not apply more than 200 V continuously.
- Connect grounding cable within 1 m of the area to be welded. If grounding cable is connected near instruments, connectors, etc., the instruments may malfunction.
- If a seal or bearing happens to come between the part being welded and grounding point, change the grounding point to avoid such parts.
- Do not use the area around the work equipment pins or the hydraulic cylinders as the grounding point.

DO NOT DROP THINGS INSIDE MACHINE:

- When opening inspection windows or the oil filler port of the tank to carry out inspection, be careful not to drop nuts, bolts, or tools inside the machine.

  If such things are dropped inside the machine, it may cause damage and/or malfunction of the machine, and will lead to failure. If you drop anything inside the machine, always remove it immediately.
- Do not put unnecessary things in your pockets. Carry only things which are necessary for inspection.

https://truckmanualshub.com/

DUSTY WORKSITES:

When working at dusty worksites, do as follows:

- Inspect the dust indicator frequently to see if the air cleaner is dirty or clogged.
- Clean the radiator core frequently to avoid clogging.
- Clean and replace the fuel filter frequently.
- Clean electrical components, especially the starting motor and alternator, to avoid accumulation of dust.
- When inspecting or changing the oil, move the machine to a place that is free of dust to prevent dirt from getting into the oil.

AVOID MIXING OILS:

If a different brand or grade of oil has to be added, drain the old oil and replace all the oil with the new brand or grade of oil. Never mix different brand or grade of oil.

PRECAUTIONS FOR OPENING AND CLOSING ENGINE SIDE COVER:

- Open the engine side cover all the way and ensure that it is locked open before letting go.
- When standing on the track to open the engine side cover, bend at the knees and open the cover in a standing position to avoid back strain.

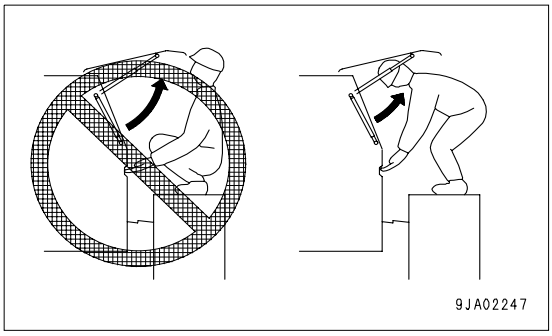

- Before opening the cab door, always close the engine side cover.

  If the lock for the engine side cover is not released, it will not close. If any attempt is made to close it without releasing the lock, the gas damper may break.

  When closing the cover, push the orange button in the center of the gas damper (1) to release the lock, then close the cover.

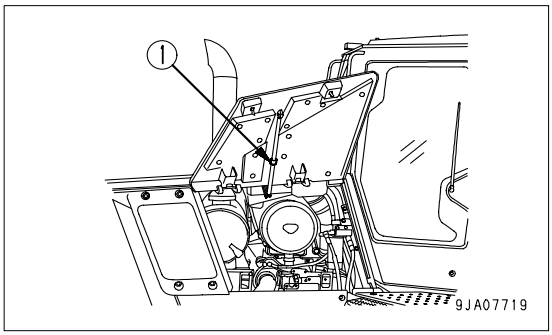

LOCKING THE INSPECTION COVER:

Lock inspection cover securely into position with the lock bar. If inspection or maintenance is performed with inspection cover not locked in position, there is a danger that it may be suddenly blow shut by the wind and cause injury to the worker.

HYDRAULIC SYSTEM-AIR BLEEDING:

After repairing or replacing hydraulic equipment or after removing the hydraulic piping, it is necessary to bleed the air from the circuit. For details, see “PROCEDURE FOR BLEEDING AIR IN HYDRAULIC SYSTEM (4-42)“.

https://truckmanualshub.com/

PRECAUTIONS WHEN INSTALLING HYDRAULIC HOSES:

- When removing parts at locations where there are O-rings or gasket seals, clean the mounting surface, and replace with new parts.

  When doing this, be careful not to forget to assemble the O-rings and gaskets.

- When installing the hoses, do not twist them or bend them sharply. If they are installed so, their service life will be shortened extremely and they may be damaged.

CHECKS AFTER INSPECTION AND MAINTENANCE WORK:

If you forget to perform the checks after inspection and maintenance, unexpected problems may occur, and this may lead to serious injury or property damage. Always do the following:

- Checks after operation (with engine stopped)
  - Have any inspection and maintenance points been forgotten?
  - Have all inspection and maintenance items been performed correctly?
  - Have any tools or parts been dropped inside the machine? It is particularly dangerous if parts are dropped inside the machine and get caught in the lever linkage mechanism.
  - Are there any leakage of coolant or oil? Have all nuts and bolts been tightened?
- Checks when engine is running
  - For the checks when the engine is running, see “TWO WORKERS FOR INSPECTION AND MAINTENANCE WHEN ENGINE IS RUNNING (2-25)“ in the SAFETY section, and take care of safety sufficiently.
  - Check that the inspected and maintained parts work normally.
  - Raise the engine speed and check for fuel leakage and oil leakage.

FUEL AND LUBRICANTS TO MATCH THE AMBIENT TEMPERATURE:

Select the fuel and lubricants to match the ambient temperature.

For details, see “RECOMMENDED FUEL, COOLANT, AND LUBRICANT (4-12)“.

https://truckmanualshub.com/

OUTLINE OF SERVICE

- Always use Komatsu genuine parts for replacement parts, grease or oil.
- When changing the oil or adding oil, do not mix different types of oil. When changing the type of oil, drain all the old oil and fill completely with the new oil. Always replace the filter at the same time. (There is no problem if the small amount of oil remaining in the piping mixes with the new oil.)
- Unless otherwise specified, when the machine is shipped from the factory, it is filled with the oil and coolant listed in the table below.

Item	Type
Engine oil pan	Engine oil EO15W40DH (Komatsu genuine parts)
Power train case Final drive case Damper case Idler (each)	Power train oil TO30 (Komatsu genuine parts)
Hydraulic system	Power train oil TO10 (Komatsu genuine parts)
Radiator	Supercoolant AF-NAC (Density: 30% or above) (Komatsu genuine parts)

HANDLING OIL, FUEL, COOLANT, AND PERFORMING OIL CLINIC

OIL

- Oil is used in the engine and hydraulic equipment under extremely severe conditions (high temperature, high pressure), and deteriorates with use.

  Always use oil that matches the grade and maximum and minimum ambient temperatures recommended in the Operation and Maintenance Manual. Even if the oil is not dirty, always change the oil at the specified interval.
- Oil corresponds to blood in the human body, always be careful when handling it to prevent any impurities (water, metal particles, dirt, etc.) from getting in.

  The majority of problems with the machine are caused by the entry of such impurities.

  Take particular care not to let any impurities get in when storing or adding oil.
- Never mix oils of different grades or brands.
- Always add the specified amount of oil.

  Having too much oil or too little oil are both causes of problems.
- If the oil in the work equipment is not clear, there is probably water or air getting into the circuit. In such cases, please contact your Komatsu distributor.
- When changing the oil, always replace the related filters at the same time.
- We recommend you have an analysis made of the oil periodically to check the condition of the machine. For those who wish to use this service, please contact your Komatsu distributor.
- When using commercially available oil, it may be necessary to reduce the oil change interval.

  We recommend that you use the Komatsu oil clinic to carry out a detailed checks of the characteristics of the oil.

https://truckmanualshub.com/

FUEL

- To prevent the moisture in the air from condensing and forming water inside the fuel tank, always fill the fuel tank after completing the day's work.
- The fuel pump is a precision instrument, and if fuel containing water or dirt is used, it cannot work properly.
- Be extremely careful not to let impurities get in when storing or adding fuel.
- Always use the fuel specified in the Operation and Maintenance Manual.

  Fuel may congeal depending on the temperature when it is used (particularly in low temperatures below -15°C), so it is necessary to use the fuel that is suitable for the temperature.
- Before starting the engine, or when 10 minutes have passed after adding fuel, drain the sediment and water from the fuel tank.
- If the engine runs out of fuel, or if the filters have been replaced, it is necessary to bleed the air from the circuit.
- If there is any foreign material in the fuel tank, wash the tank and fuel system.

NOTICE
Always use diesel fuel. Never use any other fuel.
The engine on this machine uses electronic control and high-pressure fuel injection equipment to enable it to provide good fuel consumption and good exhaust gas characteristics. For this reason, high-precision parts and lubricating ability are demanded. Using low-viscosity fuel with poor lubricating ability will cause a marked reduction in the durability of the engine.

COOLANT AND WATER FOR DILUTION

- The coolant has the important function of preventing corrosion as well as preventing freezing.

  Even in the areas where freezing is not an issue, the use of antifreeze coolant is essential.

  Komatsu machines are supplied with Komatsu Supercoolant (AF-NAC). Komatsu Supercoolant (AF-NAC) has excellent anticorrosion, antifreeze and cooling properties and can be used continuously for 2 years or 4000 hours.

  Komatsu Supercoolant (AF-NAC) is strongly recommended wherever available.
- When diluting the antifreeze coolant, use distilled water or tap water (soft water).

  Natural water, such as a river water or well water (hard water), contains large amounts of minerals (calcium, magnesium, etc.), and this makes it easier for scale to form inside the engine or radiator. Once scale is deposited inside the engine or radiator, it is extremely difficult to remove. It also causes overheating due to poor heat exchange, so when you dilute the coolant, we recommend that you use water with an overall hardness of less than 100 PPM.
- When using antifreeze, always observe the precautions given in the Operation and Maintenance Manual.
- Antifreeze coolant is flammable, so be sure to keep it away from flame.
- The ratio of Supercoolant (AF-NAC) to water differs according to the ambient temperature.

  For details of the ratio when mixing, see “CLEAN INSIDE OF COOLING SYSTEM (4-24)“.

  Supercoolant (AF-NAC) may be supplied already mixed. In such cases, never dilute with water.
- If the engine overheats, wait for the engine to cool before adding coolant.
- If the coolant level is low, it will cause overheating, and will also cause problems with corrosion due to air entering the coolant.

https://truckmanualshub.com/

GREASE

- Grease is used to prevent seizure and noises at the joints.
- This construction equipment is used under heavy-duty conditions. Always use the recommended grease and follow the change intervals and recommended ambient temperatures given in this Operation and Maintenance Manual.
- The nipples not included in the MAINTENANCE section are nipples used when overhauling, so they do not need grease.

  If any part becomes stiff or generates noise after being used for a long time, grease it.
- Always wipe off all of the old grease that is pushed out when greasing.

  Be particularly careful to wipe off the old grease in places where sand or dirt sticking in the grease would cause wear of the rotating parts.

CARRYING OUT KOWA (Komatsu Oil Wear Analysis)

KOWA is a maintenance service that makes it possible to prevent machine failures and downtime. With KOWA, the oil is periodically sampled and analyzed. This enables early detection of wear of the machine drive parts and other problems.

We strongly recommend you to use this service. The oil analysis is carried out at actual cost, so the cost is low, and the results of the analysis are reported together with recommendations which will reduce repair costs and machine downtime.

KOWA ANALYSIS ITEMS

- Measurement of density of metal wear particles

  This uses an ICP (Inductively Coupled Plasma) analyzer to measure the density of iron, copper, and other metal wear particles in the oil.

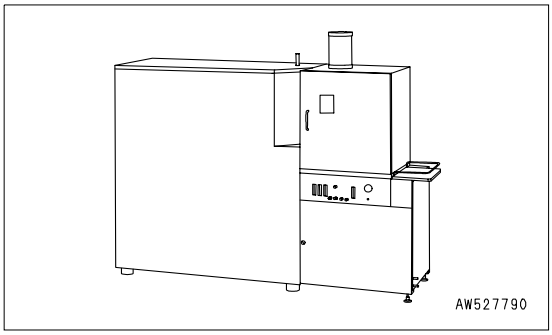

- Measurement of quantity of particles

  This uses a particle quantifier index measurement machine to measure the quantity of iron particles of 5μ or more, enabling early detection of failures.

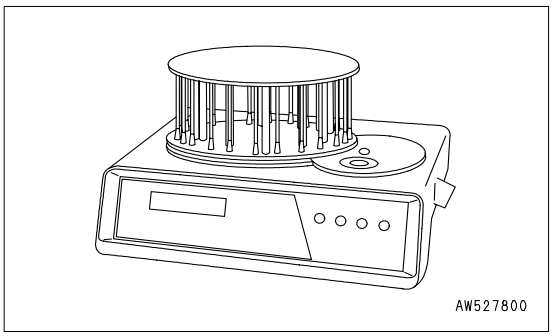

- Others

  Measurements are made of items such as the ratio of water in the oil, density of the antifreeze coolant, ratio of fuel in the oil, and dynamic viscosity, enabling a highly precise diagnosis of the machine's health.

https://truckmanualshub.com/

OIL SAMPLING

- Sampling interval

  250 hours: Engine

  500 hours: Other components

- Precautions when sampling
  - Make sure that the oil is well mixed before sampling.
  - Perform sampling at regular fixed intervals.
  - Do not perform sampling on rainy or windy days when water or dust can get into the oil.

For further details of KOWA, please contact your Komatsu distributor.

STORING OIL AND FUEL

- Keep indoors to prevent any water, dirt, or other impurities from getting in.
- When keeping drum cans for a long period, put the drum on its side so that the filler port of the drums is at the side to prevent moisture from being sucked in.

  If drums have to be stored outside, cover them with a waterproof sheet or take other measures to protect them.

- To prevent any change in quality during long-term storage, be sure to use in the order of first in - first out (use the oldest oil or fuel first).

FILTERS

- Filters are extremely important safety parts. They prevent impurities in the fuel and air circuits from entering important equipment and causing problems.

  Replace all filters periodically. For details, see the Operation and Maintenance Manual.

  However, when working in severe conditions, replace the filters at shorter intervals according to the oil and fuel (sulfur content) being used.

- Never try to clean the filters (cartridge type) and use them again. Always replace with new filters.
- When replacing oil filters, check if any metal particles are attached to the old filter. If any metal particles are found, contact your Komatsu distributor.
- Do not open packs of spare filters until just before they are to be used.
- Always use Komatsu genuine filters.

RELATING TO ELECTRIC SYSTEM

- It is extremely dangerous if the electrical equipment becomes wet or the covering of the wiring is damaged. This will cause an electrical short circuit and may lead to malfunction of the machine. Do not wash the inside of the operator's cab with water. When washing the machine, be careful not to let water get into the electrical components.
- Service relating to the electric system is checking fan belt tension, checking damage or wear to the fan belt and checking battery fluid level.
- Never install any electric components other than those specified by Komatsu.
- External electro-magnetic interference may cause malfunction of the control system controller, before installing a radio receiver or other wireless equipment, contact your Komatsu distributor.

https://truckmanualshub.com/

- Be careful to keep the electric system free of water when washing the machine or when it rains.
- When working at the seashore, carefully clean the electric system to prevent corrosion.
- When installing electrical equipment, connect it to the special power source connector.

  Do not connect the optional power source to the fuse, starting switch, or battery relay.

HANDLING HYDRAULIC SYSTEM

- During operations and after completion of operations, the hydraulic equipment is at a high temperature. During operations, it is also under high pressure, so when carrying out inspection and maintenance of hydraulic related equipment, be careful of the following points.
  - Stop the machine on flat ground, lower the work equipment completely to the ground, and carry out the operation so that there is no pressure on the cylinder circuits.
  - Always stop the engine.
  - Immediately after stopping operations, the hydraulic oil and lubricating oil is at high temperature and high pressure, so wait for the oil temperature to go down before starting maintenance.
    Even after the temperature has gone down, some parts may still be under internal pressure, so when loosening plugs, bolts, or hose connections, do not stand directly in front of the parts, and loosen slowly to release the internal pressure before removing.
  - When carrying out inspection and maintenance of the hydraulic circuit, always release the air in the hydraulic tank to remove the internal pressure.
- Inspection and maintenance include checking the hydraulic system for oil level, replacement of filter elements and replacement of hydraulic oil.
- If high-pressure hoses have been removed, check that there is no damage to the O-rings. If any damage is found, replace the O-ring.
- It is necessary to bleed the air from the circuits when the hydraulic filter element or strainer have been replaced or washed, or when hydraulic equipment has been repaired or replaced, or when the hydraulic piping has been removed.
- The accumulator is charged with high-pressure nitrogen gas, and it is extremely dangerous if it is handled incorrectly. For details of the method of handling, see “CHECKING CHARGE PRESSURE OF NITROGEN GAS IN ACCUMULATOR (FOR CONTROL CIRCUIT) (4-66)“.

https://truckmanualshub.com/

WEAR PARTS LIST

Replace wear parts such as the filter element or air cleaner element at the time of periodic maintenance or before they reach the wear limit. The wear parts should be replaced correctly in order to ensure more economic use of the machine. When replacing parts, always use Komatsu genuine parts.

As a result of our continuous efforts to improve product quality, the part number may change, so inform your Komatsu distributor of the machine serial number and check for the latest part number when ordering parts.

WEAR PARTS LIST

The parts in parentheses are to be replaced at the same time.

Item		Part No.	Part Name	Weight (kg)	Q'ty	Replacement frequency
Engine oil filter		6742-01-4540	Cartridge	-	1	Every 500 hours service (**)
Power train filter		14X-49-32750 (07000-72110)	Element (O-ring)	- -	1 (1)	Every 500 hours service
Fuel pre-filter		600-319-3610	Cartridge (with O-ring for clear ball)	-	1	
Fuel main filter		6754-71-6130	Cartridge (with cap)	-	1	Every 1000 hours service
Corrosion resistor		600-411-1191	Cartridge	-	1	
Hydraulic oil filter		14X-60-31150 (07000-15195)	Element (O-ring)	- -	1 (1)	Every 2000 hours service
Hydraulic tank breather element		20Y-60-21470	Element	-	1	
Air cleaner		600-185-5100	Element Ass'y	-	1	-
Air conditioner	Fresh filter	14X-911-7750	Filter	-	2	-
	Recirc filter	20Y-979-6261	Filter	-	2	
Blade	D65EX Tiltdozer	14X-71-11310 14X-71-11330 14X-71-11340 (02090-11270) (02290-11219)	Cutting edge End bit (left) End bit (right) (Bolt) (Nut)	38.4 14.2 14.2 - -	2 1 1 (28) (28)	-
	D65PX Tiltdozer Tilt pitch dozer	14Y-71-11210 14Y-71-11330 14Y-71-11340 (02090-11270) (02290-11219)	Cutting edge End bit (left) End bit (right) (Bolt) (Nut)	45.5 13.6 13.6 - -	2 1 1 (32) (32)	-
	D65EX Angle dozer	144-70-11131 14X-71-11330 14X-71-11340 (02090-11270) (02290-11219)	Cutting edge End bit (left) End bit (right) (Bolt) (Nut)	45.5 14.2 14.2 - -	2 1 1 (32) (32)	-
	D65PX Angle dozer	130-70-51130 130-920-2180 13F-Z27-1581 13F-Z27-1571 (02090-11270) (02091-11210) (02290-11219)	Cutting edge (center) Cutting edge (side) End bit (left) End bit (right) (Bolt) (Bolt) (Nut)	39.0 34.0 10.8 10.8 - - -	1 2 1 1 (31) (4) (35)	-

https://truckmanualshub.com/

Item		Part No.	Part Name	Weight (kg)	Q'ty	Replacement frequency
Blade	D65EX Semi-U blade (tilt dozer)	130-70-41130	Cutting edge (right)	37.5	1	-
		130-920-2180	Cutting edge (left)	34.0	1	
		(02090-11270)	(Bolt)	-	(17)	
		(02290-11219)	(Nut)	-	(17)	
		175-71-22272	End bit (left)	39.0	1	
		175-71-22282	End bit (right)	39.0	1	
		(02090-11495)	(Bolt)	-	(14)	
		(02290-11422)	(Nut)	-	(14)	
	D65EX Semi-U blade (3m) (tilt dozer)	14X-952-1270	Cutting edge	29.8	2	-
		(02090-11270)	(Bolt)	-	(14)	
		(02290-11219)	(Nut)	-	(14)	
		150-70-21356	End bit (left)	26.2	1	
		150-70-21346	End bit (right)	26.2	1	
		(02090-11280)	(Bolt)	-	(12)	
		(02290-11219)	(Nut)	-	(12)	
	D65WX Semi-U blade (tilt dozer)	14X-952-1450	Cutting edge	32.0	2	-
		(02090-11270)	(Bolt)	-	(18)	
		(02290-11219)	(Nut)	-	(18)	
		175-71-22272	End bit (left)	39.0	1	
		175-71-22282	End bit (right)	39.0	1	
		(02090-11495)	(Bolt)	-	(14)	
		(02290-11422)	(Nut)	-	(14)	
		(01643-22245)	(Washer)	-	(14)	

NOTICE
When handling parts that weigh more than 25 kg, remember that they are heavy objects, and take the necessary care.

- (**) For details about engine oil interval, refer to section, RECOMMENDED FUEL, COOLANT, AND LUBRICANT (4-12)

https://truckmanualshub.com/

RECOMMENDED FUEL, COOLANT, AND LUBRICANT

- Komatsu genuine oils are adjusted to maintain the reliability and durability of Komatsu construction equipment and components.

  In order to keep your machine in the best conditioner for long periods of time, it is essential to follow the instructions in this Operation and Maintenance Manual.
- Failure to follow these recommendations may result in shortened life or excess wear of the engine, power train, cooling system, and/or other components.
- Commercially available lubricant additives may be good for the machine, but they may also cause harm. Komatsu does not recommend any commercially available lubricant additive.
- Use the oil recommended according to the ambient temperature in the chart below.
- Specified capacity means the total amount of oil including the oil in the tank and the piping. Refill capacity means the amount of oil needed to refill the system during inspection and maintenance.
- When starting the engine in ambient temperatures below 0°C, do not use EO30DH, even if the daytime temperature rises to 10°C. Always use multigrade oil such as the recommended EO10W30DH or EO15W40DH.
- If the machine is operated at a temperature below -20°C, a separate device is needed, so consult your Komatsu distributor.
- When the fuel sulfur content is less than 0.5%, change the engine oil according to the period inspection table given in this Operation and Maintenance Manual.
- If the fuel sulfur content is more than 0.5%, change the oil according to the following table.

NOTE: Only use Komatsu genuine engine oil.

Sulphur content (%)	Oil change interval
Less than 0.5	500 hours
0.5 ~ 1.0	250 hours
Above 1.0	Consult Komatsu Distributor

* If using these fuels, serious troubles may occur because of early deterioration of engine oil or early wear of engine internal parts. If using them by necessity for local situations, be sure to inform customers about the following.

1) Be sure to check Total Basic Number (TBN) of oil frequently by TBN handy checker etc., and change oil based on the result.

2) Always be aware that oil change interval is extremely shorter than standard.

3) Be sure to carry out periodic engine inspection by distributor's expert since change interval of periodic replacement parts and overhaul interval are also shorter.

For details refer Note 1 at the end of this chaper.

https://truckmanualshub.com/

USE OF FUEL, COOLANT AND LUBRICANTS ACCORDING TO AMBIENT TEMPERATURE

Reservoir	Fluid type	AMBIENT TEMPERATURE		Recommended Komatsu Genuine Fluids
		Min	Max	
Engine oil pan	Engine oil	-30°C	30°C	SAE0W30EOS and HTHS Over 3.5cP. (Note.1) Komatsu EOS0W30
		-25°C	40°C	SAE5W40EOS and HTHS Over 3.5cP. (Note.1) Komatsu EOS5W40
		-20°C	40°C	SAE10W30DH Komatsu EO10W30DH
		-15°C	50°C	SAE15W40DH Komatsu EO15W40DH
		0°C	40°C	SAE30DH Komatsu EO30DH
Damper case Idler (each)	Power train oil (Note. 2)	-30°C	50°C	Komatsu TO30
Power train case (each)	Power train oil	-30 °C	10°C	Komatsu TO10
		0 °C	50°C	Komatsu TO30
Final drive case (each)	Power train oil	-30°C	40°C	Komatsu TO30
Hydraulic system	Power train oil	-20° C	40° C	Komatsu TO10
	Hydraulic oil	-20° C	45° C	Komatsu HO46-HM
	Engine oil	-20° C	50° C	Komatsu EO10W30DH
		-15° C	50° C	Komatsu EO15W40DH
Grease fitting	Hyper grease (Note. 3)	-20° C	50° C	Komatsu G2-TE
	Lithium EP grease	-20° C	50° C	Komatsu G2-LI
Cooling sytem	Supercoolant AF-NAC	-30°C	50°C	AF-NAC (Note. 4)
Fuel tank	Diesel fuel	0° C -30° C	50° C 20° C	ASTM No. 2-D ASTM No. 1-D

- SAE: Society of Automotive Engineers
- ASTM: American Society of Testing and Material

https://truckmanualshub.com/

		Engine oil pan	Damper case	Idler (each)	Hydraulic system	Power train case	Final drive case (each)		Fuel tank	Cooling system (including sub-tank)
							EX	PX,WX		
Specified capacity	Liters	33	1.3	0.15	95	68	24	27	415	37
Refill capacity	Liters	28	1.3	0.15	55	48	24	27	-	-

NOTICE
Use only diesel fuel.
The engine mounted on this machine employs electronic control and a high-pressure fuel injection device to obtain good fuel consumption and good exhaust gas characteristics. For this reason, it requires high precision for the parts and good lubrication.
If kerosene or other fuel with low lubricating ability is used, there will be a big drop in durability.

Note 1: SAE0W30EOS and SAE5W40EOS must be fully synthetic and HTHS (High-Temperature High-Shear Viscosity 150°C) must be equal to or higher than 3.5 cP. Komatsu EOS0W30 and EOS5W40 are the most suitable oils. If these oils are not available, follow the instruction “RECOMMENDED BRANDS, RECOMMENDED QUALITY FOR PRODUCTS OTHER THAN KOMATSU GENUINE OIL (4-15)“ at the end of this chapter.

Note 2: Power train oil has different properties from engine oil. Be sure to use the recommended oils.

Note 3: Hyper grease (G2-T, G2-TE) has a high performance.

When it is necessary to improve the lubricating ability of the grease in order to prevent squeaking of pins and bushings, the use of G2-T or G2-TE is recommended.

Note 4: Supercoolant (AF-NAC)

1) Coolant has the important function of anticorrosion as well as antifreeze.

Even in the areas where freezing is not an issue, the use of antifreeze coolant is essential.

Komatsu machines are supplied with Komatsu Supercoolant (AF-NAC). Komatsu Supercoolant (AF-NAC) has excellent anticorrosion, antifreeze and cooling properties and can be used continuously for 2 years or 4000 hours.

Komatsu Supercoolant (AF-NAC) is strongly recommended wherever available.

2) For details of the ratio when diluting super coolant with water, see “CLEAN INSIDE OF COOLING SYSTEM (4-24)“.

When the machine is shipped from the factory, it may be filled with coolant containing 30% or more Supercoolant (AF-NAC). In this case, no adjustment is needed for temperatures down to -10°C, (never dilute with water)

3) To maintain the anticorrosion properties of Supercoolant (AF-NAC), always keep the density of Supercoolant between 30% and 68%.

https://truckmanualshub.com/

RECOMMENDED BRANDS, RECOMMENDED QUALITY FOR PRODUCTS OTHER THAN KOMATSU GENUINE OIL

When using commercially available oils other than Komatsu genuine oil, or when checking the latest specifications, refer to the Komatsu web page or consult your Komatsu distributor.

https://truckmanualshub.com/

STANDARD TIGHTENING TORQUES FOR BOLTS AND NUTS

TORQUE LIST

CAUTION

If nuts, bolts, or other parts are not tightened to the specified torque, it will cause looseness or damage to the tightened parts, and this will cause failure of the machine or problems with operation.
Always pay careful attention when tightening parts.

Unless otherwise specified, tighten the metric nuts and bolts to the torque shown in the table below.

If it is necessary to replace any nut or bolt, always use a Komatsu genuine part of the same size as the part that was replaced.

Thread diameter of bolt (a)(mm)	Width across flats (b)(mm)	Tightening torque			
		Target value		Service limit	
		N·m	kgf·m	N·m	kgf·m
6	10	13.2	1.35	11.8-14.7	1.2-1.5
8	13	31	3.2	27-34	2.8-3.5
10	17	66	6.7	59-74	6.0-7.5
12	19	113	11.5	98-123	10.0-12.5
14	22	172	17.5	153-190	15.5-19.5
16	24	260	26.5	235-285	23.5-29.5
18	27	360	37	320-400	33.0-41.0
20	30	510	52.3	455-565	46.5-58.0
22	32	688	70.3	610-765	62.5-78.0
24	36	883	90	785-980	80.0-100.0
27	41	1295	132.5	1150-1440	118.0-147.0
30	46	1720	175.0	1520-1910	155.0-195.0
33	50	2210	225.0	1960-2450	200.0-250.0
36	55	2750	280.0	2450-3040	250.0-310.0
39	60	3280	335.0	2890-3630	295.0-370.0

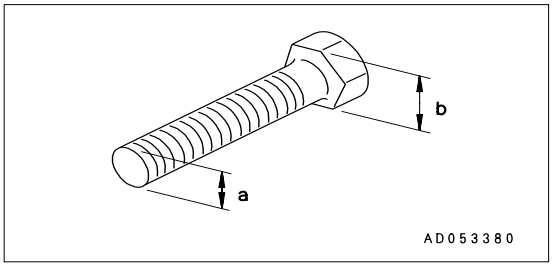

Apply the following table for Hydraulic Hose.

Nominal-No. of threads (a)	Width across flats (b) mm	Tightening torque (N·m (kgf·m))	
		Target valve	Parmissible range
9/16 -18UNF	19	44 (4.5)	34 - 54 (3.5 - 5.5)
11/16 -16UN	22	74 (7.5)	54 - 93 (5.5 - 9.5)
13/16 -16UN	27	103 (10.5)	84 - 132 (8.5 - 13.5)
1 -14UNS	32	157 (16.0)	128 - 186 (13.0 - 19.0)
1·3/16 -12UN	36	216 (22.0)	177 - 245 (18.0 - 25.0)

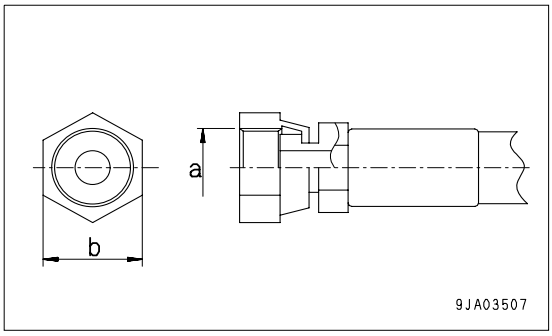

https://truckmanualshub.com/

PERIODIC REPLACEMENT OF SAFETY CRITICAL PARTS

To ensure safety at all times when operating or driving the machine, the user of the machine must always carry out periodic maintenance. In addition, to further improve safety, the parts in the safety-critical parts list on the next page must also be replaced at the specified interval. These parts are particularly closely connected to safety and fire prevention, so please contact your Komatsu distributor to have them replaced.

Material quality of these parts can change as time passes and they are likely to wear out or deteriorate. However, it is difficult to determine the extent of wear or deterioration at the time of periodic maintenance. Hence, it is required to replace them with new ones regardless of their condition after a certain period of usage. This is important to ensure that these parts maintain their full performance at all times.

Furthermore, should anything abnormal be found on any of these parts, replace it with a new one even if the periodic replacement time for the part has not yet arrived.

If any of the hose clamps show deterioration like deformation or cracking, replace the clamps at the same time as the hoses.

Also perform the following checks with hydraulic hoses which need to be replaced periodically. Tighten all loose clamps and replace defective hoses, as required.

When replacing hoses, always replace O-rings, gaskets, and other such parts at the same time.

Have your Komatsu distributor replace the critical parts.

SAFETY CRITICAL PARTS

NO.	Safety critical parts for periodic replacement	Q'ty	Replacement interval
1	Fuel hose (fuel tank - fuel strainer)	1	Every 2 years or 4000 hours, whichever comes sooner
2	Fuel hose (fuel strainer to fuel pre-filter)	1	
3	Fuel hose (fuel pre-filter to engine inlet)	1	
4	Fuel return hose (engine outlet to fuel tank)	1	
5	Hose (power train strainer - power train pump)	1	
6	Hose (power train pump - power train filter)	1	
7	Hose (power train filter - transmission case)	1	
8	Hose (transmission case - steering case)	1	
9	Hose (power train lubrication pump - steering case)	1	
10	Hose (Scavenging pump - Steering case)	1	
11	Hose (torque converter case - mission oil cooler)	1	
12	Hose (mission oil cooler - transmission case)	1	
13	Brake pressure detection hose	1	
14	Torque converter inlet post pressure detection hose	1	
15	Torque converter outlet post pressure detection hose	1	
16	Main relief valve pressure detection hose	1	
17	Hose (HSS pump - main control valve)	2	
18	Hose (HSS pump - central drain block)	1	
19	Hose (self-reducing pressure valve - hydraulic tank)	1	
20	Hose (main valve - HSS motor)	2	
21	Hose (main valve - hydraulic tank)	1	

https://truckmanualshub.com/

NO.	Safety critical parts for periodic replacement	Q'ty	Replacement interval
22	Hose (main valve - central drain block)	1	Every 2 years or 4000 hours, which-ever comes sooner
23	Hose (main control valve - blade tilt relay block)	2	
24	Hose (blade tilt relay block - Tilt cylinder)	8	
25	Hose (main valve - blade tilt relay tube)	2	
26	Hose (Radiator guard upper part - Lift cylinder)	4	
27	Hose (self-reducing pressure valve - fan pump)	1	
28	Hose (hydraulic tank - fan pump)	1	
29	Hose (self-reducing pressure valve - fan motor)	1	
30	Hose (fan motor - hydraulic oil cooler)	1	
31	Hose (hydraulic tank - fan motor)	1	
32	Hose (hydraulic oil cooler - hydraulic tank)	1	
33	Hose (central drain block - HSS motor)	1	
34	Hose (PPC valve - main valve)	4	
35	Hose (central PPC block - main valve)	2	
36	Hose (fan pump - central PPC block)	1	
37	Hose (PPC lock valve - central PPC block)	1	
38	Hose (self-reducing pressure valve - central PPC block)	1	
39	Hose (PPC valve - PPC lock valve)	1	
40	Hose (PPC valve - central drain block)	1	
41	Hose (central drain block - hydraulic tank)	1	
42	Hose (HSS delivery hose - pressure detection block)	1	
43	Hose (HSS pump - pressure detection block)	1	
44	Accumulator (for operating circuit)	1	
45	High-pressure tube clamp	1S	Every 8000 hours
46	Fuel spray prevention cap	1S	
47	Seat belt (If equipped)	1	Every 3 years

https://truckmanualshub.com/

MAINTENANCE SCHEDULE CHART

MAINTENANCE SCHEDULE CHART

WHEN REQUIRED

CHECK, CLEAN AND REPLACE AIR CLEANER ELEMENT 4-21
CLEAN INSIDE OF COOLING SYSTEM 4-24
CHECK TRACK SHOE TENSION, ADJUST 4-27
CHECK AND TIGHTEN TRACK SHOE BOLTS 4-29
REVERSE AND REPLACE END BITS AND CUTTING EDGES 4-30
CLEANING AND INSPECTION OF FINS OF RADIATOR, OIL COOLER, CONDENSER AND AFTER-COOLER 4-32
CHECK, ADJUST AIR CONDITIONER 4-35
GREASE DOOR HINGE 4-36
CHECK DOOR LOCK STRIKER 4-37
REPLACE DOOR DAMPER 4-37
CHECK DOOR LATCH 4-37
CHECK WINDOW WASHER FLUID LEVEL, ADD FLUID 4-38
REPLACE WIPER BLADE 4-39
CHECK IDLER OIL LEVEL, ADD OIL 4-40
ADJUST IDLER CLEARANCE 4-40
LUBRICATING UNIVERSAL JOINT 4-41
PROCEDURE FOR BLEEDING AIR IN HYDRAULIC SYSTEM 4-42

CHECK BEFORE STARTING

EVERY 50 HOURS SERVICE

DRAIN WATER, SEDIMENT FROM FUEL TANK 4-43

EVERY 250 HOURS SERVICE

LUBRICATING 4-44
GREASE EQUALIZER BAR SIDE PIN 4-45
GREASE EQUALIZER BAR CENTER PIN 4-46
CHECK OIL LEVEL IN FINAL DRIVE CASE, ADD OIL 4-46
CHECK OIL LEVEL IN HYDRAULIC TANK, ADD OIL 4-47
CHECK LEVEL OF BATTERY ELECTROLYTE 4-48
CHECK, CLEAN ADDITIONAL FUEL STRAINER 4-49
CHECK BRAKE PERFORMANCE 4-50
CLEAN AIR CONDITIONER AIR FILTER (FRESH/RECIRC FILTER) 4-51

EVERY 500 HOURS SERVICE

CHANGE OIL IN ENGINE OIL PAN, REPLACE ENGINE OIL FILTER CARTRIDGE 4-52
REPLACE POWER TRAIN OIL FILTER ELEMENT 4-54
REPLACE FUEL PRE-FILTER CARTRIDGE 4-54

EVERY 1000 HOURS SERVICE

REPLACE FUEL MAIN FILTER CARTRIDGE 4-57
CHANGE OIL IN POWER TRAIN CASE, CLEAN STRAINERS (POWER TRAIN STRAINER, SCAVENGING PUMP STRAINER) 4-60
CHECK OIL LEVEL IN DAMPER CASE, ADD OIL 4-62

https://truckmanualshub.com/

CHANGE OIL IN FINAL DRIVE CASE 4-63
CLEAN BREATHER 4-63
REPLACE CORROSION RESISTOR CARTRIDGE 4-64
CHECK FOR LOOSE ROPS MOUNT BOLTS 4-64
INSPECTION OF AFTER-COOLER CIRCUIT FOR LOOSENED BOLTS AND NUTS 4-64

EVERY 2000 HOURS SERVICE

CHANGE OIL IN HYDRAULIC TANK, REPLACE OIL FILTER ELEMENT 4-65
REPLACE HYDRAULIC TANK BREATHER ELEMENT 4-66
CHECKING CHARGE PRESSURE OF NITROGEN GAS IN ACCUMULATOR (FOR CONTROL CIRCUIT) . 4-66
CHANGE OIL IN DAMPER CASE 4-69
CHECK VIBRATION DAMPER 4-70
CHECK ENGINE VALVE CLEARANCE, ADJUST 4-70

EVERY 4000 HOURS SERVICE

REPLACE ACCUMULATOR (FOR CONTROL CIRCUIT) 4-71
CHECK WATER PUMP 4-71
CHECKING FOR LOOSENESS OF HIGH-PRESSURE CLAMP, HARDENING OF RUBBER 4-72
CHECKING FOR MISSING FUEL SPRAY PREVENTION CAP, HARDENING OF RUBBER 4-73

EVERY 8000 HOURS SERVICE

REPLACE HIGH-PRESSURE PIPING CLAMP 4-74
REPLACE FUEL SPRAY PREVENTION CAP 4-74

https://truckmanualshub.com/

SERVICE PROCEDURE

WHEN REQUIRED

CHECK, CLEAN AND REPLACE AIR CLEANER ELEMENT

⚠ WARNING

- **If inspection, cleaning, or maintenance is carried out with the engine running, dirt will get into the engine and damage it. Always stop the engine before carrying out these operations.**
- **When using compressed air, there is danger that dirt may be blown around and cause serious injury. Always use protective glasses, dust mask, and other protective equipment.**

CHECKING

If the yellow piston at the display portion of dust indicator (1) becomes red (7.5 kPa), clean the outer element.

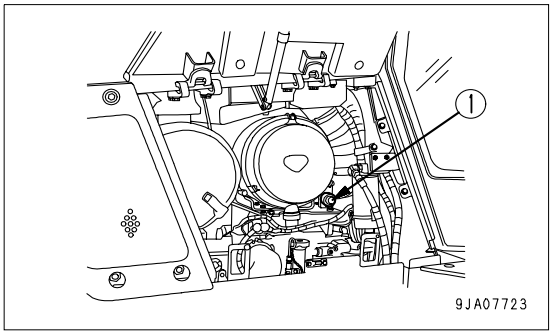

NOTICE
Do not clean the filter element until after a yellow piston in the dust indicator display has come in the red area (7.5 kPa).
If the filter element is cleaned frequently before the yellow piston in the dust indicator display comes in the red area (7.5 kPa), the air cleaner cannot exert its inherent cleaning capability, reducing its cleaning effect.
In addition, dust sticking to the element falls into the inner element each time the element is cleaned.

CLEANING OR REPLACING OUTER ELEMENT

1. Open the left engine side cover.
2. Remove three clips (2), then remove cover (3).

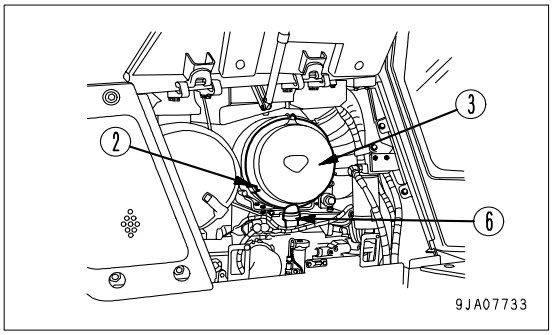

NOTICE
Never remove inner element (5). If it is removed, dust will enter and cause engine trouble.

3. Remove outer element (4).

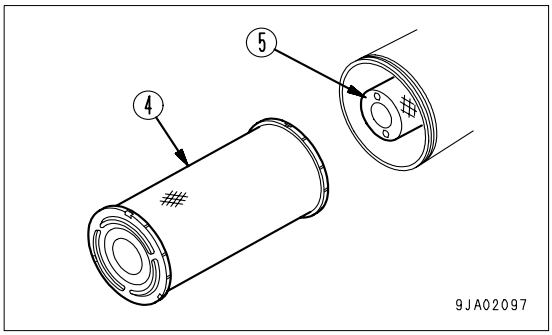

https://truckmanualshub.com/

4. Clean the interior of the air cleaner body, cover (3) and evacuator valve (6).

NOTICE
The inner element must not be used again even after cleaning. When replacing the outer element, replace the inner element at the same time.

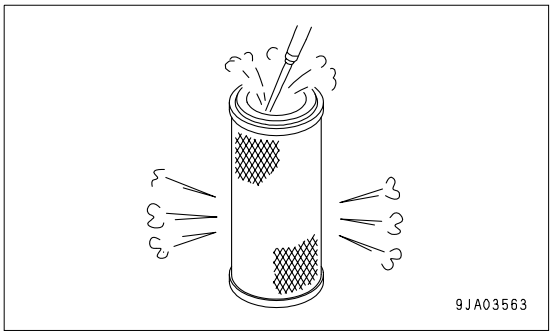

5. Direct dry compressed air (Max. 0.69 MPa (7 kgf/cm^2)) from the inside of the outer element along its folds. Then direct the compressed air from the outside along the folds, and again from the inside.
6. Replace any outer element which has been cleaned 6 times or used for 1 year. Replace the inner element at the same time.
7. Even if the outer element has not been cleaned 6 times, if the yellow piston in the dust indicator goes to the 5 kPa position immediately after cleaning (when the engine is running at high idling, replace both the inner and the outer element.
8. If small holes or thinner parts are found on the element when it is checked by shining a light through it after cleaning, replace the element.

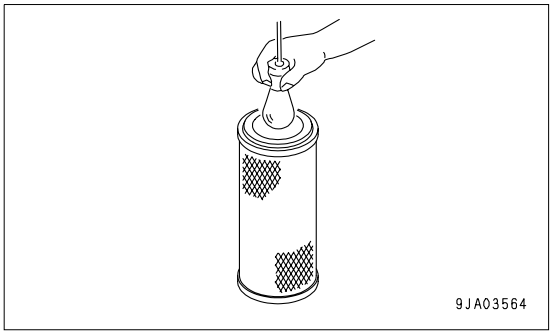

NOTICE
When cleaning the element, do not hit or beat it against anything.
Do not use an element whose folds, gasket or seal are damaged.

9. Before installing the outer element, check that the inner element is fitted securely. If the inner element is not fitted securely, push it in properly.

⚠ CAUTION

When installing the cover (3), check O-ring (7) and replace it if there are any scratches or damage.

10. Set the cleaned outer element in position, then secure cover (3) with mounting clips (2).

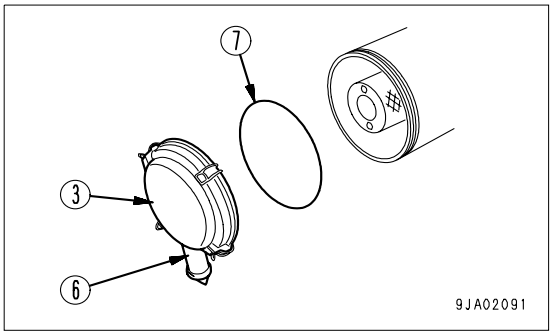

https://truckmanualshub.com/

11. Push the button of dust indicator (1) and return the yellow piston to its original position.

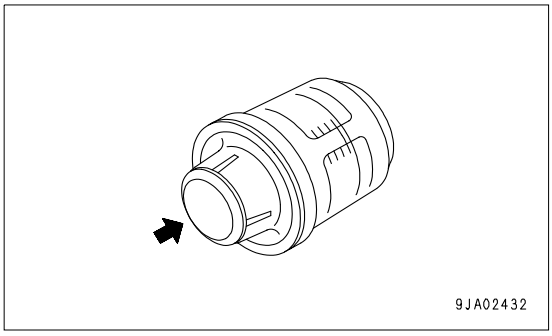

12. Close the left engine side cover.

REPLACING ELEMENT

1. Open the left engine side cover.
2. Remove three clips (2), then remove cover (3).

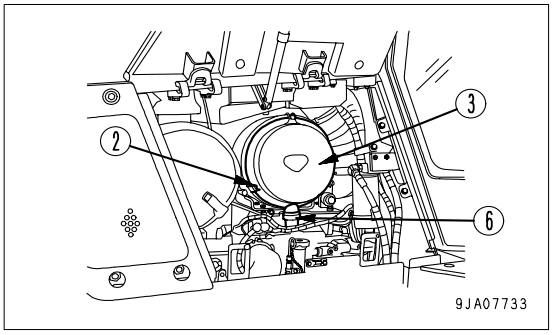

3. Remove outer element (4).

   Do not remove inner element (5) at this time, however.
4. Clean the interior of the air cleaner body, cover (3) and evacuator valve (6).

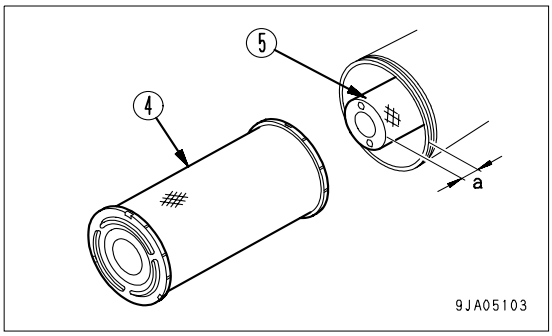

NOTICE
If the outer element and cover are installed when the inner element is not installed properly, the outer element may break.
When installation is correct, protrusion “a“ of the inner element from the air cleaner body is 35 mm.

5. Remove inner element (5), then quickly install the new inner element.

   Push the inner element in properly and check that it is fitted securely.
6. Set the new outer element (4) in position.

https://truckmanualshub.com/

7. Replace O-ring (7) for cover (3) with new one.
8. Set the arrow mark on cover (3) at the top, install to the air cleaner body, then secure with clip (2).

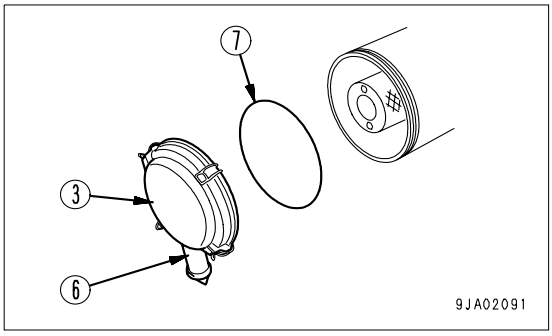

9. Push the button of dust indicator (1) and return the yellow piston to its original position.

REMARK
Immediately after a new element has been installed, the yellow piston of the dust indicator may go to the 2nd position, but this does not indicate any abnormality.

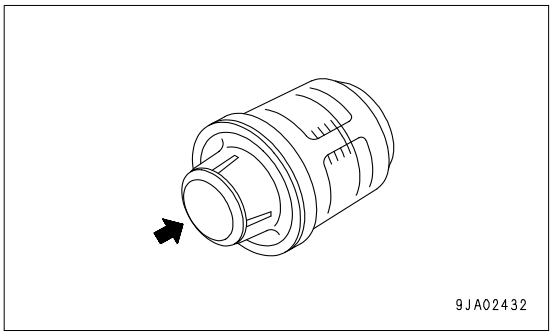

10. Close the left engine side cover.

CLEAN INSIDE OF COOLING SYSTEM

⚠ WARNING

- **Just after the engine is stopped, the coolant is still hot and the internal pressure in the radiator is still high. If the radiator cap is removed under this condition, you may scald yourself. Accordingly, wait until the temperature goes down, then loosen the cap slowly to release the pressure.**
- **Start the engine to clean the cooling system. When standing up from the operator's seat or leaving the machine, set the work equipment lock lever and parking brake lever to the LOCK positions.**
- **For the starting method of the engine, see “CHECK BEFORE STARTING ENGINE, ADJUST (3-53)“ and “STARTING ENGINE (3-68)“ in the OPERATION section of the manual.**
- **Never go under the machine body while the engine is running. It is very dangerous since the machine may move suddenly.**

Clean the inside of the cooling system, change the coolant and replace the corrosion resistor according to the table below.

Antifreeze coolant	Interval of cleaning inside of cooling system and changing antifreeze coolant	Replacing corrosion resistor
Komatsu supercoolant (AF-NAC)	Every two years or every 4000 hours whichever comes first	Every 1000 hours and when cleaning the inside of the cooling system and when changing coolant.
Permanent type antifreeze (All-season type, *)	Every year (autumn) or every 2000 hours whichever comes first.	

*: Permanent type antifreeze shall meet the requirements of ASTM D3306-03.

Stop the machine on level ground when cleaning or changing the coolant.

https://truckmanualshub.com/

The coolant has the important function of preventing corrosion as well as preventing freezing.

Even in the areas where freezing is not an issue, the use of antifreeze coolant is essential.

Komatsu machines are supplied with Komatsu Supercoolant (AF-NAC). Komatsu Supercoolant (AF-NAC) has excellent anticorrosion, antifreeze and cooling properties and can be used continuously for 2 years or 4000 hours.

Komatsu Supercoolant (AF-NAC) is strongly recommended wherever available.

To maintain the anticorrosion properties of Supercoolant (AF-NAC), always keep the density of Supercoolant between 30% and 68%.

When deciding the ratio of antifreeze to water, check the lowest temperature in the past, and decide from the mixing table given below.

It is actually better to estimate and temperature about 10°C lower when deciding the mixing ratio.

The mixing ratio depends on the ambient temperature, but it should always be a minimum of 30% by volume (antifreeze/total amount of coolant x 100).

The freezing temperature of undiluted antifreeze is -15°C. Do not store undiluted antifreeze at a temperature of below -15°C.

Mixing rate of water and antifreeze

Min. atmospheric temperature	°C	Above -10	-15	-20	-25	-30
Amount of antifreeze	Liters	11.1	13.3	15.2	17.0	18.5
Amount of water	Liters	25.9	23.7	21.8	20.0	18.5

⚠ WARNING

Antifreeze is flammable, so keep it away from flame.
Antifreeze is toxic. When removing the drain plug, be careful not to get water containing antifreeze on you. If it gets in your eyes, flush your eyes with large amount of fresh water and see a doctor at once.

Use antifreeze and appropriate water for diluting (for details, see “COOLANT AND WATER FOR DILUTION (4-6)“)

We recommend use of an antifreeze density gauge to control the mixing proportions.

Prepare a container whose capacity is larger than the specified coolant volume to catch drained coolant.

Prepare a hose to supply antifreeze coolant and water.

1. Stop the engine and tighten 2 valves of the corrosion resistor.

https://truckmanualshub.com/

2. Turn radiator cap (1) slowly until it hits the stopper and by so doing, relieving the internal pressure.
3. Turn radiator cap (1) until it hits the next stopper, while depressing it. Keep turning the radiator cap (1) until it hits the last stopper.
4. Put containers to catch the coolant under drain valve (2) at the bottom of the radiator and under drain valve (3) at the side of the cylinder block.

   Open drain valve (2) and drain valve (3), and drain the water.
5. After draining the antifreeze solution, close drain valve (2), (3), then fill with clean water. After the radiator is filled with water, start and run the engine at low idling speed. After the water temperature rises above 90°C, run the engine for about 10 minutes.

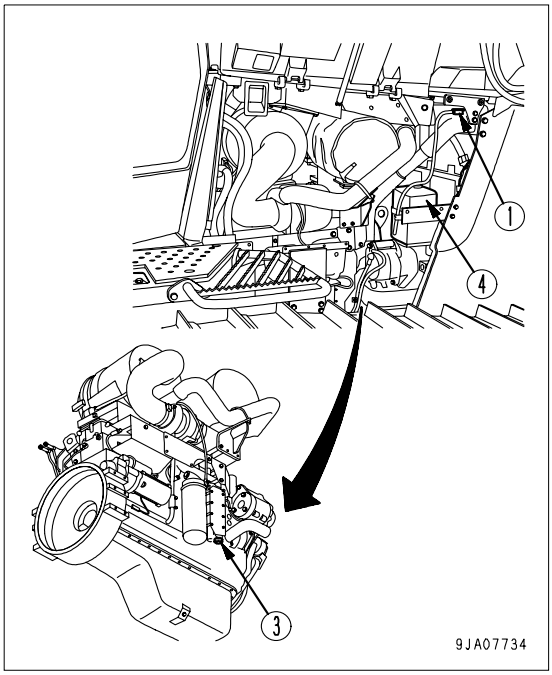

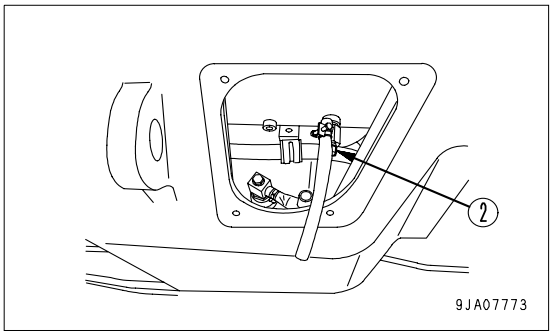

6. Stop the engine and open drain valve (2), (3) to drain the water.
7. After draining the water, clean the cooling system with cleaning agent.

   For the cleaning method, see the instructions for the cleaning agent.
8. Replace the corrosion resistor, then open 2 valves.

   For details of the procedure for replacing the corrosion resistor, see “REPLACE CORROSION RESISTOR CARTRIDGE (4-64)“.
9. Close drain valve (2), (3).
10. Add coolant mixed with antifreeze until it overflows from the water filler.

    Decide the proportions of antifreeze and water according to the table for the mixing rate of water and anti-freeze.
11. To remove air in the cooling system, run the engine for 5 minutes at low idle, then for 5 minutes at high idle. (While doing this, leave the radiator cap removed.)

https://truckmanualshub.com/

12. Drain the coolant from sub-tank (4), clean the inside of the sub-tank, then add water until the coolant level is between the FULL and LOW marks.
13. Stop the engine, wait for approx. 3 minutes, then add coolant until the coolant level is near the coolant filler port, and tighten the cap. Check the coolant level and add coolant if necessary.

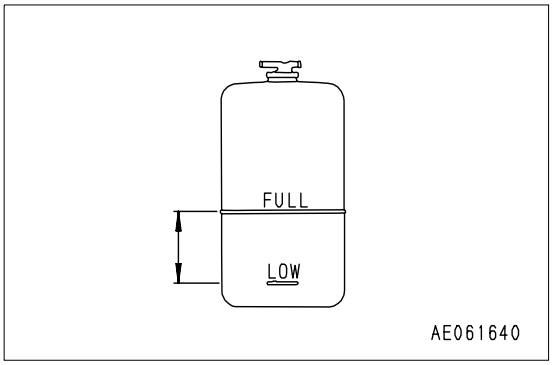

CHECK TRACK SHOE TENSION, ADJUST

The wear of pins and bushings on the undercarriage will vary with the working conditions and types of soil. It is thus necessary to continually inspect the track tension so as to maintain the standard tension.

Carry out the check and adjustment under the same conditions as when operating (on jobsites where the track becomes clogged with mud, measure with the track clogged with mud).

INSPECTION

Stop the machine on level ground (stop with the transmission in FORWARD without applying the brake). Then place a straight bar on the track shoes between the carrier roller and the idler as shown in the figure, and measure the clearance between the bar and the grouser at the midpoint. If the clearance (a) is 20 to 30 mm, the tension is standard.

If the track tension is not at the standard value, adjust it in the following manner.

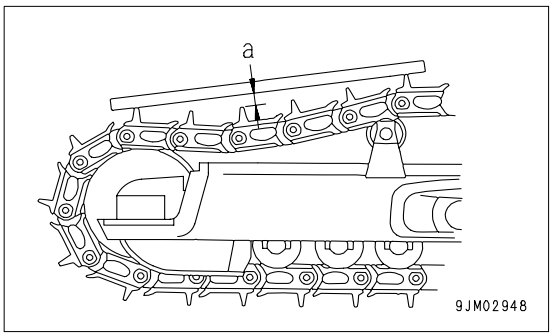

ADJUSTMENT

⚠ WARNING

There is danger of plug (1) flying out under the high internal pressure of the grease. Never loosen plug (1) more than 1 turn.
Never loosen any part other than plug (1). Never put your face in the mounting direction of plug (1).
If the track tension cannot be loosened with the procedure given here, please contact your Komatsu distributor.

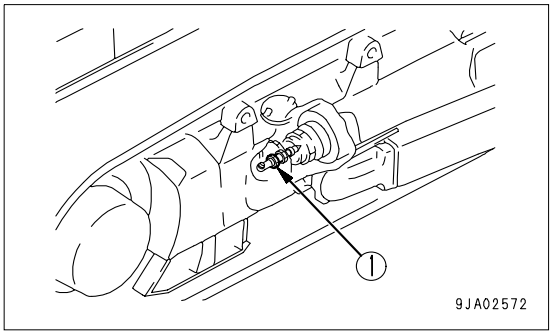

https://truckmanualshub.com/

WHEN INCREASING TENSION

Prepare a grease pump.

1. Pump in grease through grease fitting (2) with a grease pump.
2. To check that the correct tension has been achieved, move the machine backwards and forwards.
3. Check the track tension again, and if the tension is not correct, adjust it again.

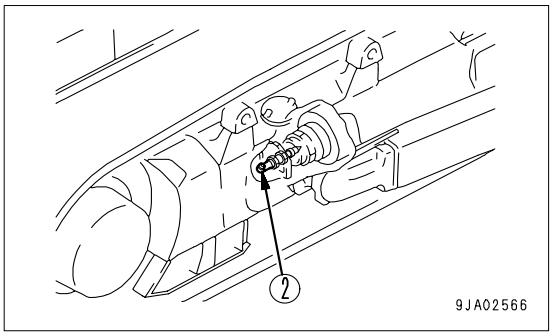

4. Continue to pump in grease until S becomes 0 mm. If the tension is still loose, the pins and bushings are excessively worn, so they must be either turned or replaced. Please contact your Komatsu distributor.

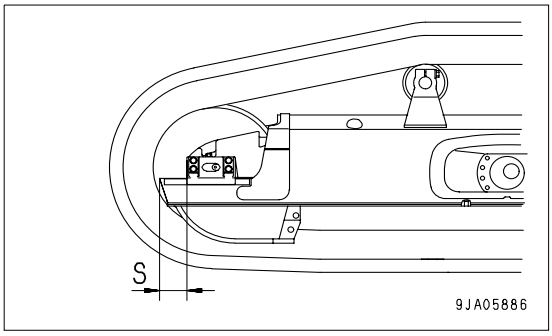

WHEN LOOSENING TENSION

WARNING

It is extremely dangerous to release the grease by any method except the procedure given below. If the track tension is not relieved by this procedure, please contact your Komatsu distributor.

1. Loosen plug (1) gradually to release the grease.
2. When loosening plug (1), turn it a maximum of one turn.
3. If the grease does not come out smoothly, move the machine forwards and backwards a short distance.
4. Tighten plug (1).
5. To check that the correct tension has been achieved, move the machine backwards and forwards.
6. Check the track tension again, and if the tension is not correct, adjust it again.

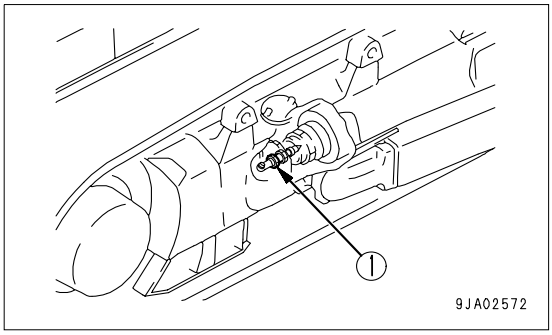

https://truckmanualshub.com/

CHECK AND TIGHTEN TRACK SHOE BOLTS

If the machine is used with track shoe bolts (1) loose, they will break, so tighten any loose bolts immediately.

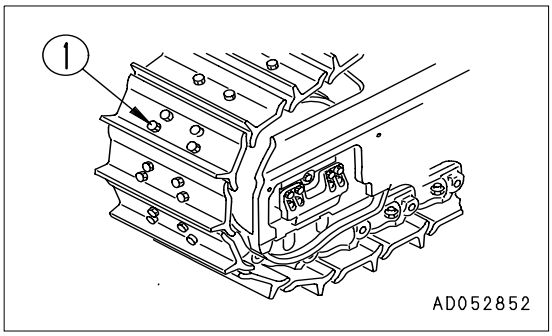

METHOD OF TIGHTENING (TRACK SHOE BOLTS)

1. Torque the track shoe bolts to 539 ± 49 N·m (55 ± 5 kg·m). Then ensure the nut and shoes are in close contact with the link contact surface.
2. After checking, tighten a further. 120° ± 10°.

METHOD OF TIGHTENING (MASTER CONNECTING BOLT)

1. First tighten to a tightening torque of 343 ± 39 N·m (35 ± 4 kgf·m) then check that the link contact surfaces are in close contact.
2. After checking the link contact surfaces, tighten the bolt by 180° (Allowable range: 0° - 20°).

ORDER FOR TIGHTENING

Tighten the bolts in the order shown in the diagram on the right.

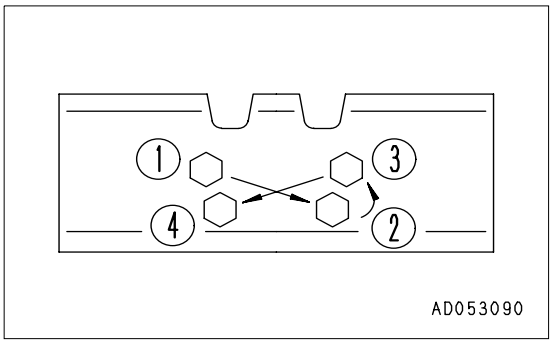

https://truckmanualshub.com/

REVERSE AND REPLACE END BITS AND CUTTING EDGES

WARNING

It is dangerous if the work equipment moves during the turning or replacement operation.
Set the work equipment in a stable condition, set the work equipment lock lever to the LOCK position, then stop the engine.

Reverse or replace the end bits and cutting edges before it is worn out to the blade end.

1. Raise the blade to a proper height, position a block under the frame to prevent the blade from falling.
2. Set the work equipment lock lever to the LOCK position and stop the engine.
3. Measure the wear of the end bit and cutting edge in accordance with the wear standards given below.

Wear standards

Item			Judgement criteria (mm)	
No.	Dimension to be measured	Work equipment	Basic dimension	Allowable max. value
1	Height of end bit (outside)	A,G	242	187
		B,C	204	187
		D	292	237
		E,F	315	237
		H	222	204
2	Width of end bit	A,B,C	325	300
		D	435	410
		E,F	540	515
		G,H	325	310
3	Height of end bit (inside)	A,B,C,G	204	187
		D,E,F	254	237
		H	222	204
4	Height of cutting edge (Center of bolt mounting hole to edge)	A to H	102	85

The symbols in the work equipment column have the following meaning.
A: Powertilt dozer (D65EX)
B: Powertilt dozer (D65PX)
C: Powertilt, Power pitch dozer (D65PX)
D: Semi-U blade (3m)(D65EX)
E: Semi-U blade (D65EX)
F: Semi-U blade (D65WX)
G: Angledozer (D65EX)
H: Angledozer (D65PX)

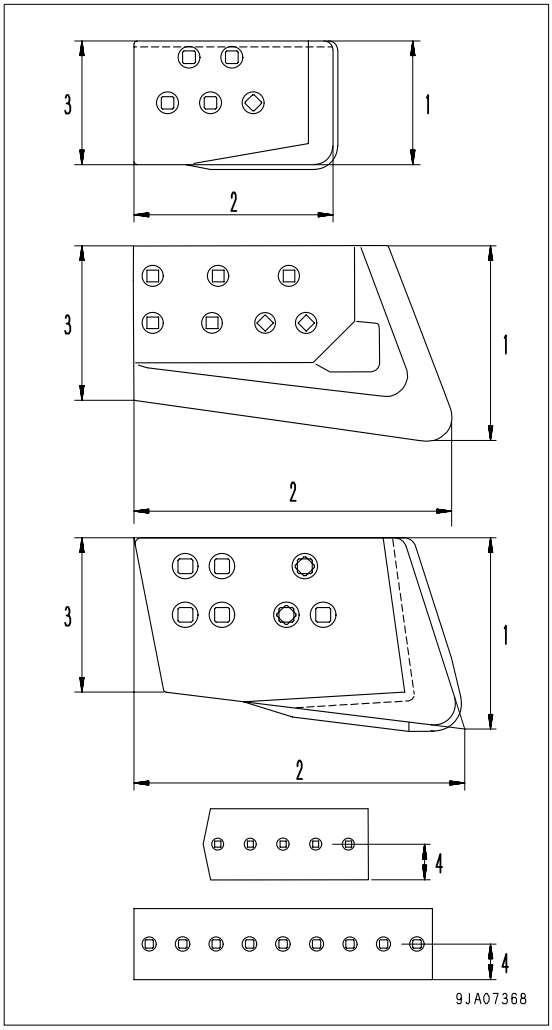

REMARK
If the cutting edge and the end bit on both sides are worn out, replace with new ones.
If it has been worn out up to the fitting surface, repair the fitting surface and then reverse or replace.

4. Remove the cutting edge and the end bit and clean the mounting surface.

https://truckmanualshub.com/

5. Reverse or replace the cutting edge and the end bit when worn out.
6. Remove nut (1) and bolt (2), then replace or reverse the cutting edge and the end bit.
7. Install the cutting edge on the blade and tighten the bolt temporarily. Press the blade against the ground to eliminate the play of bolt (2), then tighten the bolt to the specified torque.

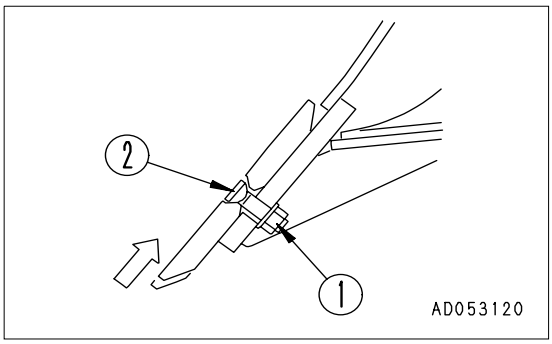

Nut tightening torque:

Powertilt dozer : 461 ± 69 N·m (47 ± 7 kgf·m)

Powertilt, Power pitch dozer : 461 ± 69 N·m (47 ± 7 kgf·m)

Angledozer : 441 ± 49 N·m (45 ± 5 kgf·m)

Semi-U dozer :

Cutting edge : 461 ± 69 N·m (47 ± 7 kgf·m)

End bit : 745 ± 108 N·m (76 ± 11 kgf·m)

If bolt (2) and nut (1) are damaged, replace them with new ones at the same time.

8. After several hours of running, retourque the nuts.

https://truckmanualshub.com/

CLEANING AND INSPECTION OF FINS OF RADIATOR, OIL COOLER, CONDENSER AND AFTER-COOLER

If the radiator fins are clogged or dirty, clean and inspect them.

CLEANING BY COOLING FAN REVERSE TURN

NOTICE

- **When turning the cooling fan in the reverse direction, be careful of dirt that is sent flying around.**
- **Leave open the right and left engine side covers so that dirt does not accumulate in the engine room.**
- **When stopping the engine while the cooling fan is turning in the reverse direction, first reduce the engine rotation to a low idling speed and then stop it.**

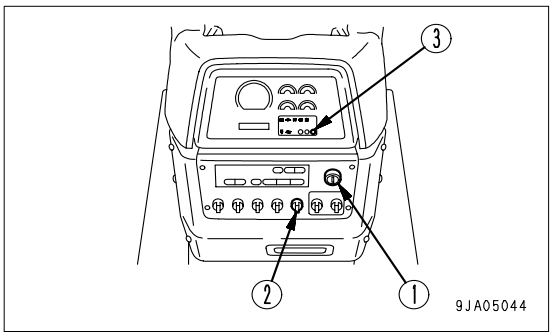

The dust and dirt stuck to the radiator and cooler can be blown out by rotating the cooling fan in the reverse direction.

1. Turn starting switch (1) to the OFF position and stop the engine.
2. Turn starting switch (1) to the ON position.
3. Set fan rotation selector switch (2) to the cleaning position (CLN).

   Cooling fan operation checking lamp (3) lights up.

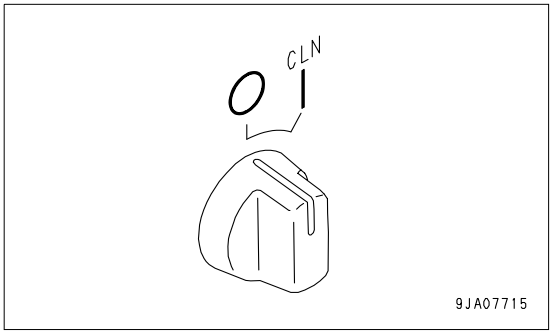

REMARK
Even if it is attempted to reverse a rotation direction of the cooling fan while the engine is running, the rotation direction cannot be changed.
In that case, cooling fan operation checking lamp (3) flashes and warns that the fan rotation cannot be reversed.

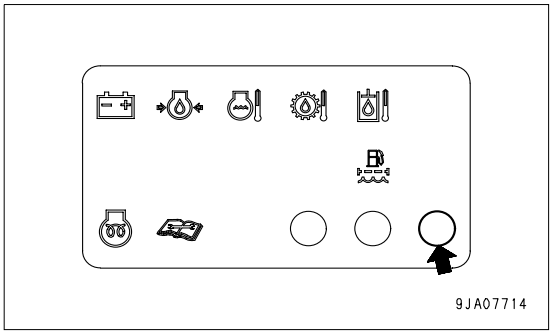

4. Turn engine starting switch key (1) to the ON position to start up the engine. Then the cooling fan begins to rotate in the reverse direction.
5. Run the engine at high idle.

   Select the time for running the engine at high idle as follows according to the condition of clogging.

   Normal clogging: 1 to 2 minutes

   Excessive clogging: 2 to 3 minutes

https://truckmanualshub.com/

6. After completing the cleaning, run the engine at low idle for approx. 10 seconds.
7. Turn starting switch (1) to the OFF position and stop the engine.
8. Turn starting switch (1) to the ON position.
9. Check first that cooling fan operation checking lamp (3) is unlighted and then start up the engine. The cooling fan begins to turn in the normal direction.

CLEANING WITH COMPRESSED AIR

⚠ WARNING

- **Directing compressed air, pressurized water, or steam directly at your body, or using these and causing dust to fly may cause personal injury. Always wear protective glasses, anti-dust mask, and other protective equipment.**
- **When carrying out cleaning, always stop the engine and check that the fan is not rotating. If you touch the fan when it is rotating, it will cause serious personal injury.**

CLEANING OF RADIATOR FINS AND AFTER-COOLER FINS

When the radiator fins and after-cooler fins are clogged or lots of dust is accumulated, clean them with compressed air.

1. Remove bolts (1) (4 bolts).
2. Open the A side (hinge side) of the radiator mask. It opens approx. 10 mm.
3. Open the B side of the radiator mask.
4. Blow off dirt, dust and dry leaf shreds clogging the radiator fins and after-cooler fins with compressed air. Steam and water may also be used for cleaning instead of compressed air.

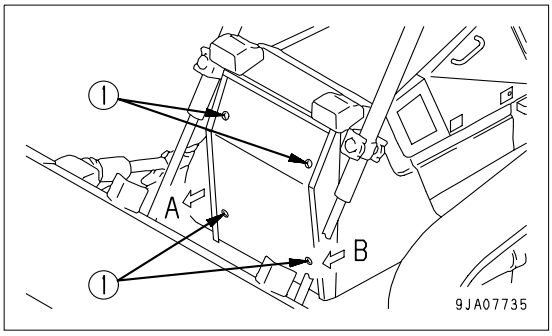

REMARK
Check the hydraulic cooler hoses. If any hose is cracked or hardened by age, replace with a new hose. Also check and tighten all loose hose clamps.

5. When closing the radiator mask, always push in the A side first, then push in the B side, align the bolt holes, and tighten bolts (1).

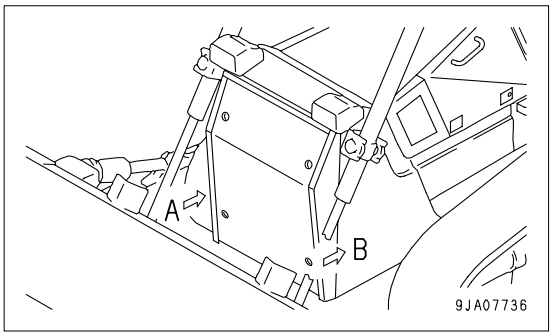

https://truckmanualshub.com/

CLEANING OF OIL COOLER FINS AND CONDENSER FINS

When the oil cooler fins and condenser fins are clogged or lots of dust is accumulated, clean them with compressed air.

1. Open up right and left side covers (1).

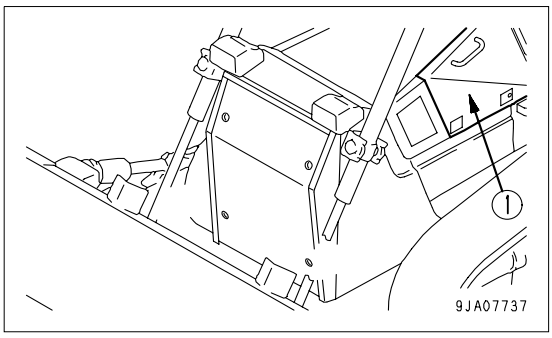

2. Remove right and left bolts (3) - 4 bolts in total - to remove right and left lower side covers (5).
3. Remove right and left bolts (4) - 8 bolts in total - to remove right and left small side covers (6).

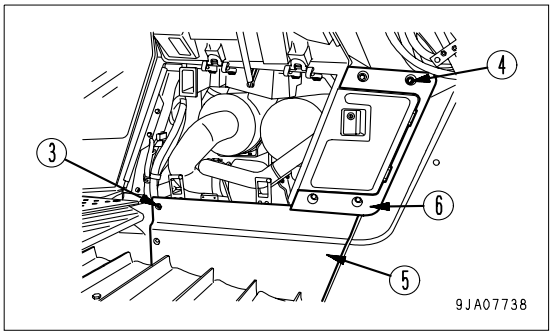

4. Remove bolts (2) - 2 bolts in total - to remove sub-tank assembly together with stay (7).

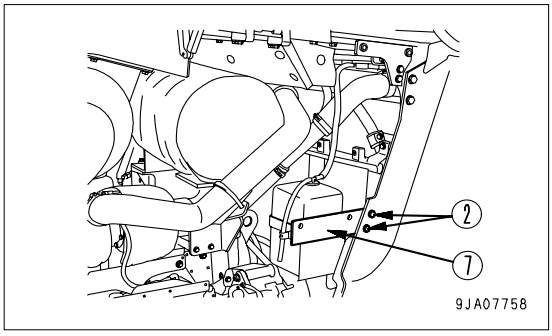

5. Put the removed sub-tank assembly on radiator guard seat (8) and temporarily fasten it to radiator guard seat (9) with removed bolt (2) - 1 bolt only.

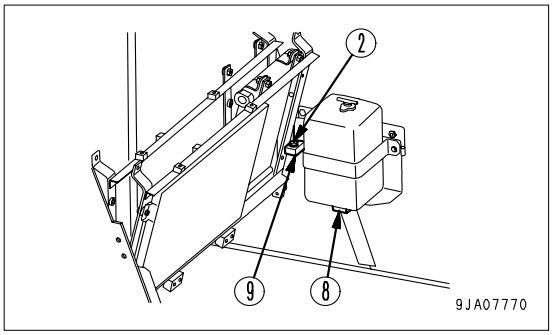

https://truckmanualshub.com/

6. Remove right and left bolts (11) - 2 bolts in total, and loosen bolts (12) - 2 bolts in total - to swing back oil cooler (9) and air conditioner condenser (10).
7. Blow off dirt, dust and dry leaf shreds clogging the oil cooler fins and air conditioner condenser fins with compressed air. Steam and water may also be used for cleaning instead of compressed air.
8. Put oil cooler (9) and air conditioner condenser (10) back to the original position by swinging them forth, tighten bolts (12) and install bolts (11).
9. Reassemble the temporarily fastened sub-tank assembly in the original position.
10. Install right and left lower side covers (5) and small side covers (6) and close the engine side covers.

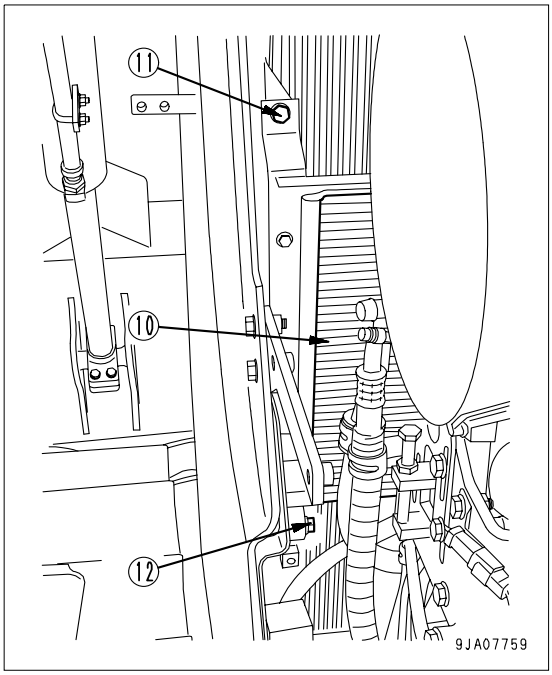

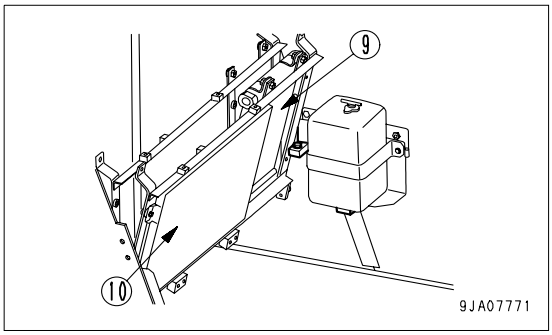

CHECK, ADJUST AIR CONDITIONER

(Machine equipped with cab)

CHECKING TENSION OF COMPRESSOR BELT

If the driving belt slackens, it is likely to slip, lowering the cooling efficiency. Depress the mid point between drive pulley (1) and compressor pulley (2) with a thumb (approx. 98 N (10 kg)) every now and then to make sure that deflection amount (A) is approx. 15 mm to 18 mm.

When it is a new belt, elongation is expected in the initial period of use, so be sure to make an adjustment in a few days after the replacement.

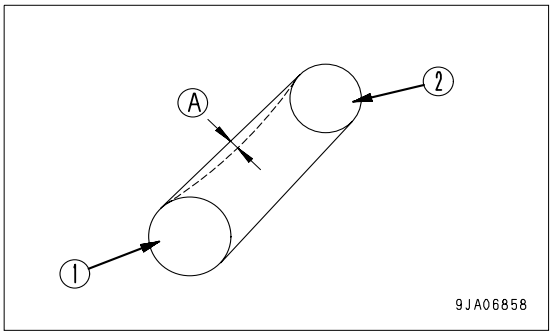

https://truckmanualshub.com/

CHECK LEVEL OF REFRIGERANT

WARNING

If the refrigerant used in the air conditioner gets into your eyes or on your hands, it may cause loss of sight or frostbite. Do not touch the refrigerant. Never loosen any part of the refrigerant circuit.
Do not bring any flame close to any point where the refrigerant gas is leaking.

If the level of the refrigerant (gas) is low, the cooling effect will be reduced. Run the engine at high idle, and check the flow of the refrigerant gas (freon 134a) in the refrigerant circuit through the sight glass (2) (inspection window) of the receiver (1) when the cooler is running at high speed.

- (A) Correct: No bubbles are included in the flow
- (B) Low: Bubbles are included in the flow

  (bubbles pass continuously)
- (C) None: Colorless, transparent

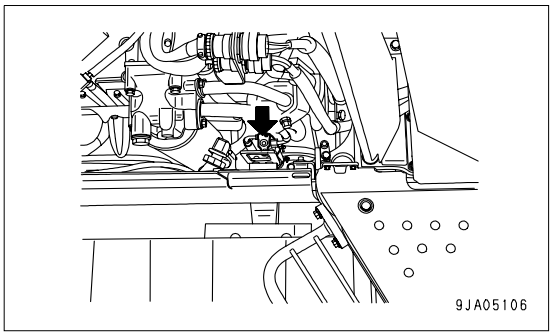

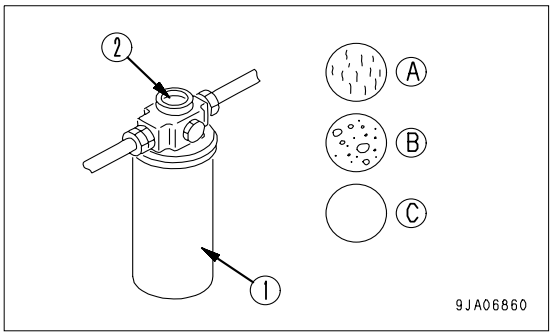

REMARK
When there are bubbles, the refrigerant gas level is low, so contact your refrigerant dealer to have refrigerant added. If the air conditioner is run with the refrigerant gas level low, it will cause damage to the compressor.
New Freon R134a is used as the refrigerant.

OPERATING AIR CONDITIONER OFF-SEASON

Even during the off-season, operate the air conditioner for 3 to 5 minutes once a month to maintain the oil film at all parts of the compressor.

GREASE DOOR HINGE

(Machine equipped with cab)

If the door makes a squeaking noise when it is opened or closed, spray lubricant in through the split in the hinge bushing.

If the bushing is worn, replace the hinge.

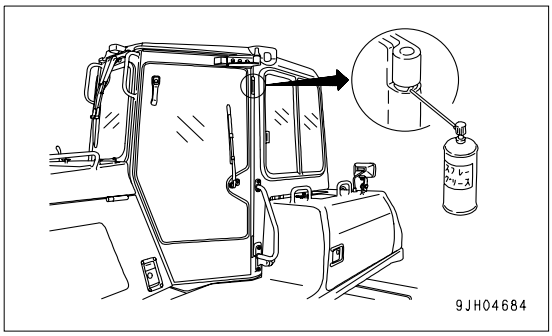

https://truckmanualshub.com/

CHECK DOOR LOCK STRIKER

(Machine equipped with cab)

If wear (A) of the door of lock striker exceeds 0.5 mm, replace the striker. If it is used as it is, the play will increase and this may result in breakage of the hinge or door lock.

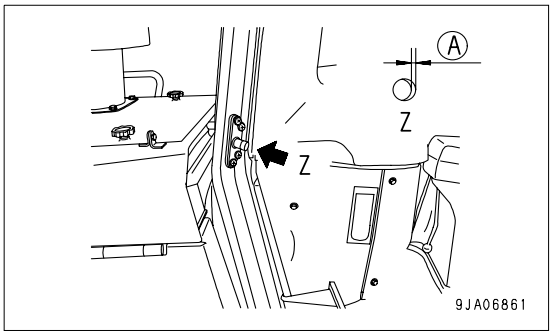

REPLACE DOOR DAMPER

(Machine equipped with cab)

If depth (A) of the groove of door damper rubber (1) is less than 2 mm, replace the damper.

There are 4 dampers: 1 each at the top and bottom on the left and right doors.

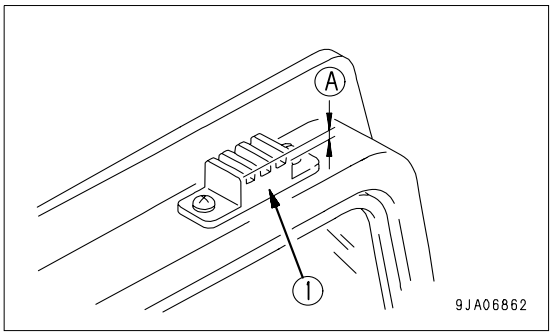

CHECK DOOR LATCH

(Machine equipped with cab)

Hold the door open and check that there is still grease inside the latch. If the amount of grease is low or there is no more grease, coat the inside of the latch with grease from portion (1).

REMARK
If there is no more grease inside the latch, the movement will become poor because of dust inside the latch, and the handle may be stiff when opening the door.

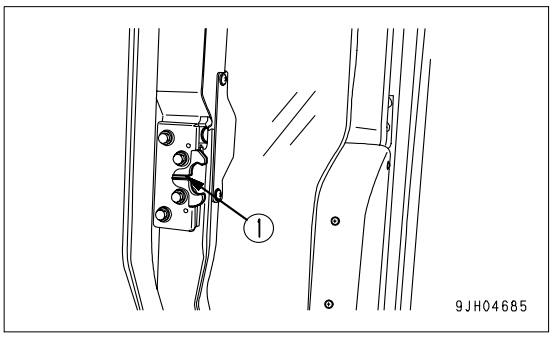

https://truckmanualshub.com/

CHECK WINDOW WASHER FLUID LEVEL, ADD FLUID

(Machine equipped with cab)

If there is air in the window washer fluid, check the level and add fluid.

Open the engine side cover on the right side, check the level of the fluid in window washer tank(1), and if it is low, add automobile window washer fluid.

When adding fluid, be careful not to let any dust get in.

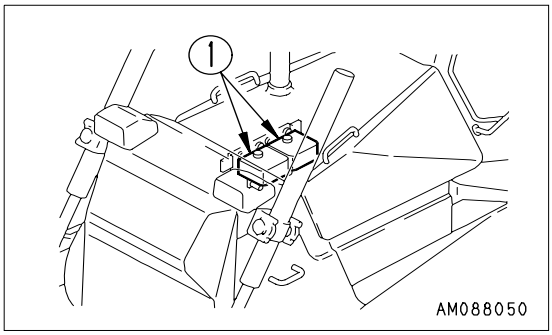

PROPORTION FOR MIXING FLUID WITH WATER

The proportion differs according to the ambient temperature, so dilute the washer fluid with water to the following proportions before adding.

Area, season	Proportions	Freezing temperature
Normal	Washer fluid 1/3: water 2/3	-10°C
Winter in cold area	Washer fluid 1/2 : water 1/2	-20°C
Winter in extremely cold area	Pure washer fluid	-30°C

There are two types depending on the freezing temperature:

-10°C (general use) and -30°C (cold area use), select according to the area and season.

https://truckmanualshub.com/

REPLACE WIPER BLADE

(Machine equipped with cab)

If the blade is damaged, it will not wipe the window clean, so replace the blade.

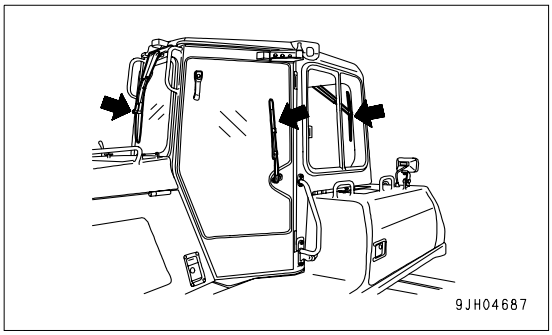

REPLACEMENT

FRONT, DOOR WIPER

1. It is hooked at portion (A), so move the blade in the direction of the arrow to remove it.
2. Install the new blade and hook it securely.

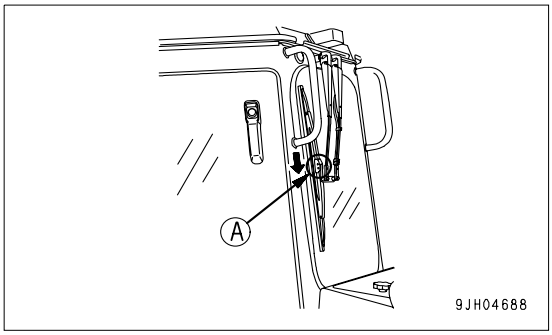

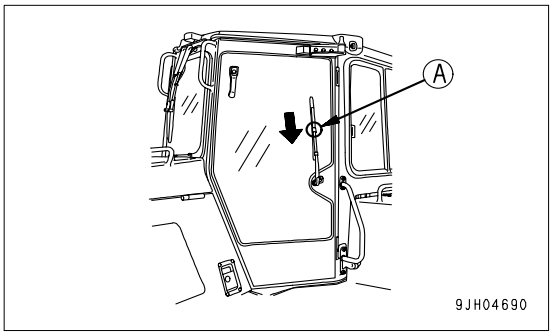

REAR WIPER

1. Remove E-ring (1).

   The blade can then be removed.
2. Install a new blade, then install securely with E-ring (1).

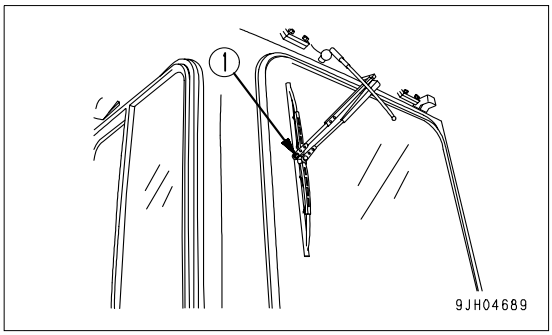

https://truckmanualshub.com/

CHECK IDLER OIL LEVEL, ADD OIL

WARNING

If the oil level in the idler is low, new oil must be added, and the machine body must be inclined in this case. Since this work is dangerous, ask your Komatsu distributor.

If the oil level in the idler is low, noise will be generated and there will be seizure, so check the oil level and add oil as follows.

INSPECTION

1. Remove bolt (1), then remove guide plate (2) and shim (3).

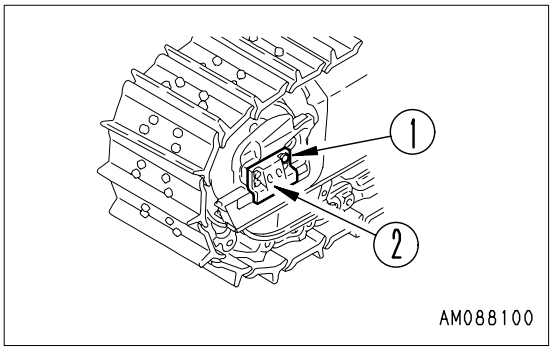

REMARK
When removing shim (3) keep it in a safe place and be careful not to lose it.

2. Loosen plug (4) slowly. If oil oozes through the threads at this time, the quantity of oil is sufficient. Tighten plug (4).
3. If any oil does not flow out when plug (4) is removed, the quantity of oil is insufficient. In this case, ask your Komatsu distributor for repair.
4. Install guide plate (2) and shim (3) with bolt (1).

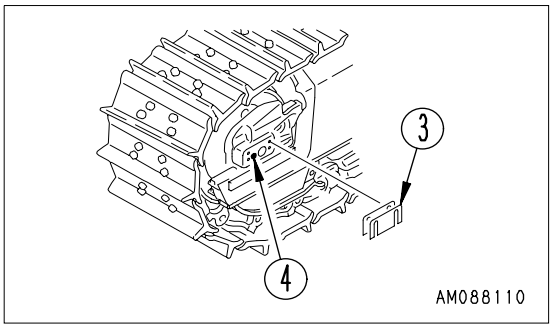

REMARK
When installing guide plate (2), install the same number and thickness of shim (3) as removed in Step 1.
The optimum clearance may be obtained, if the adjustment is made at the same time. For details of adjusting the shim thickness, see “ADJUST IDLER CLEARANCE (4-40)“.

ADJUST IDLER CLEARANCE

Since the idlers are forced to move forward and backward by an external force guide plates will be worn out.

Wear of these plates will cause the vibration of idlers from side to side or inclination of the idlers, and running off of track links from the idlers or unevenly worn idler and links may result.

Therefore, adjust the idlers according to the following procedure.

https://truckmanualshub.com/

ADJUSTMENT

1. Travel for 1 or 2 meters on flat ground, then measure clearance (A) between track frame (1) and guide plate (2) (4 places: left, right, inside, outside).
2. If the clearance (A) exceeds 4.0 mm, loosen bolt (3), and pull out the shim to adjust the clearance at one end to 0.5 to 1.0 mm.

   Thickness of one shim is 1.0 mm.

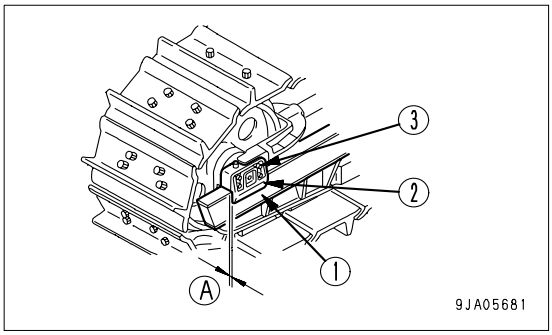

LUBRICATING UNIVERSAL JOINT

WARNING

The undercover is heavy. Never try to open or close the cover when directly beneath it. When removing bolts (2), carry out the work from the rear of the cover so that you can easily get out of the way.

1. Remove the undercover from the rear bottom of the machine body as follows.
2. Remove two bolts (1) from the front side of the machine body.
3. Holding the cover, remove two bolts (2) from the rear side of the machine body.

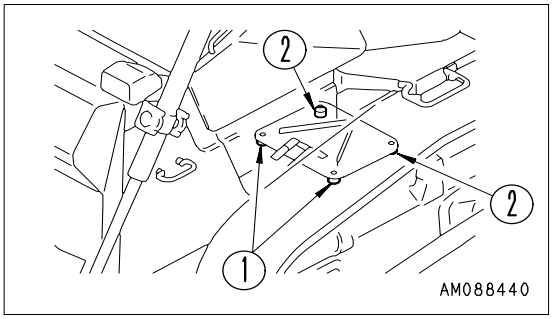

4. Lower and open the cover gradually.

   (A) Front of machine

   (B) Dangerous place

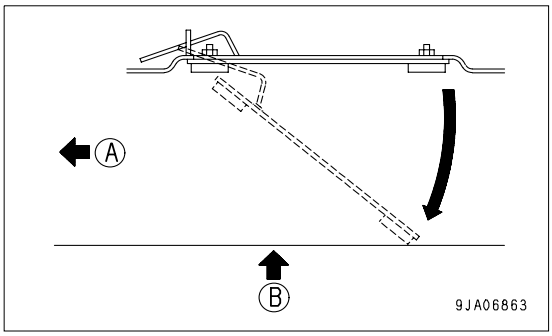

5. Apply grease to the grease fittings (2 places) shown by arrows.

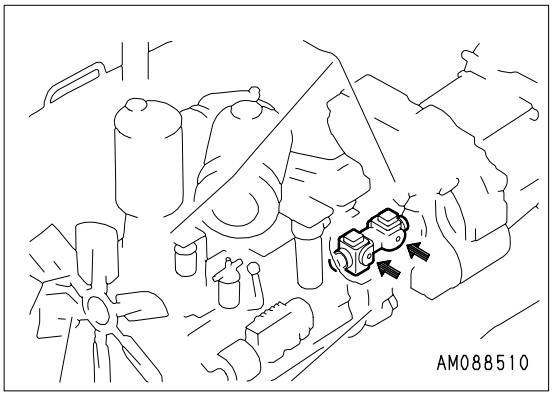

https://truckmanualshub.com/

PROCEDURE FOR BLEEDING AIR IN HYDRAULIC SYSTEM

See “STARTING ENGINE (3-68)“.

Since the engine must be started and the blade must be operated, see OPERATION.

NOTICE
If the engine is run at high speed immediately after startup or a cylinder is pushed up to its stroke end, air taken inside the cylinder may cause damage to the piston packing.

1. Bleed air from left pitch cylinder

   (Powertilt, Power pitch dozer only)

   Bleeding air from the hydraulic system is required when removing and installing the work equipment or when making the repairs.

2. Start the engine and run it at low idle for at about 5 minutes.
3. Raise the blade.
4. Bleeding air in the tilt hydraulic circuit by repeating left and right tilt operation five to ten times.
5. Bleeding air from the bottom of left cylinder by operating the blade to pitch forward and backward 5 to 10 times repeatedly.
6. Set the left and right cylinders at the neutral position, then carry out the following operations 5 to 10 times to bleed the air from the head end of the left pitch cylinder.

   (1) Forward pitch → (2) Left tilt → (3) Right tilt → (4) Backward pitch

7. Bleeding air from cylinders

8. Run the engine at low idle, and extend and retract each cylinder 4 to 5 times, taking care that a cylinder is not moved to the end of its stroke. (Stop the cylinder approx. 100 mm short of its stroke end)
9. Next, operate each cylinder 3 to 4 times to the end of its stroke.
10. Finally, operate each cylinder 4 to 5 times to the end of its stroke to completely remove the air.

https://truckmanualshub.com/

CHECK BEFORE STARTING

For details of the following items, see “CHECK BEFORE STARTING (3-54)“ in the OPERATION section.

- Check oil level in engine oil pan, add oil
- Check dust indicator
- Check, drain water separator
- Check coolant level, add coolant
- Check oil level in power train case, add oil
- Check electric wiring
- Check brake pedal travel
- Checking with machine monitor
- Check fuel level, add fuel
- Check horn sound
- Check that lamps light up
- Check of operation of backup alarm

EVERY 50 HOURS SERVICE

DRAIN WATER, SEDIMENT FROM FUEL TANK

Carry out this check before operating the machine.

- Prepare a container to catch the fuel that is drained.

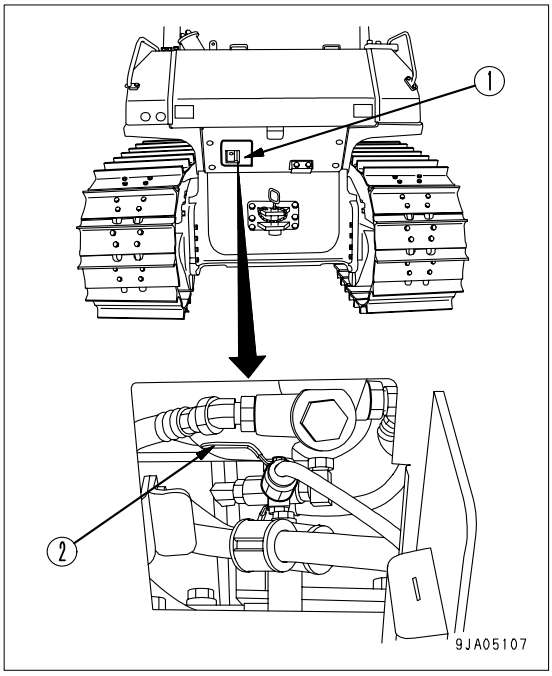

1. Open cover (1).
2. Open valve (2) at the bottom of the tank and drain the sediment and water that has accumulated at the tank bottom together with fuel.

   When doing this, be careful not to get fuel on yourself.
3. When clean fuel comes out, close drain valve (2).

https://truckmanualshub.com/

EVERY 250 HOURS SERVICE

Maintenance for every 50 hours service should be carried out at the same time.

LUBRICATING

1. Lower the blade to the ground, then stop the engine.
2. Using a grease pump, pump in grease through the grease fittings shown by arrows.
3. After greasing, wipe off any old grease that was pushed out.

POWER TILTDOZER

(1) Lift cylinder support yoke (4 places)

(2) Lift cylinder support shaft (2 places)

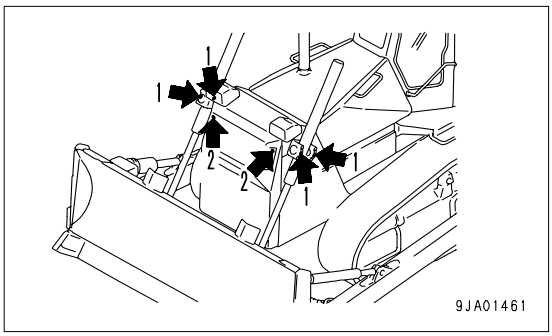

(3) Lift cylinder ball joint (2 places)

(4) Tilt cylinder ball joint (1 place)

(5) Tilt brace ball joint (1 place)

(6) Brace ball joint (2 places)

(7) Tilt brace thread (1 place) (screw-adjustable)

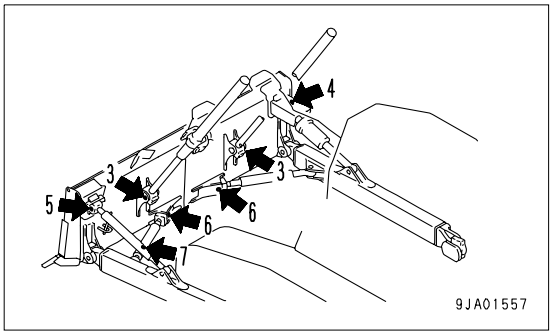

POWER TILT-POWER PITCH DOZER

(1) Lift cylinder support yoke (4 places)

(2) Lift cylinder support shaft (2 places)

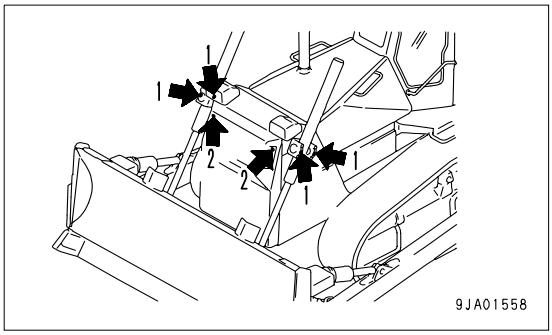

https://truckmanualshub.com/

(3) Lift cylinder ball joint (2 places)

(4) Tilt cylinder ball joint (1 place)

(5) Pitch cylinder ball joint (1 place)

(6) Brace ball joint (2 places)

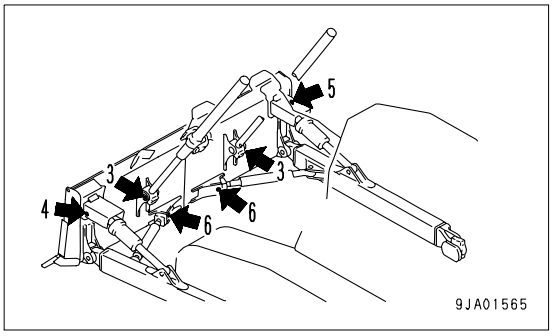

ANGLEDOZER

(1) Lift cylinder support yoke (4 places)

(2) Lift cylinder support shaft (2 places)

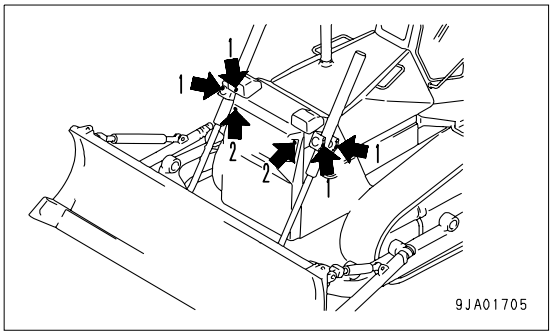

(3) Lift cylinder ball joint (2 places)

(4) Tilt brace ball joint (2 places)

(5) Tilt brace thread (2 places)

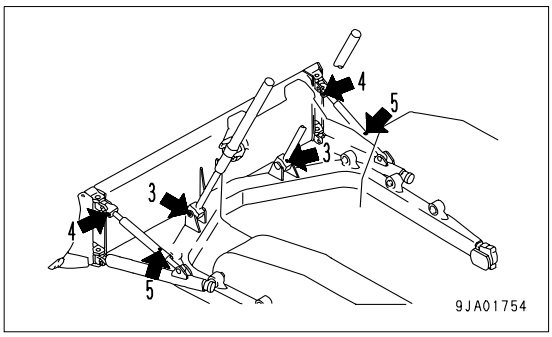

GREASE EQUALIZER BAR SIDE PIN

Left and right, 1 places each

1. Remove all dirt from the top of the track frame and cover.
2. Clean the grease fitting indicated with the arrow, then supply grease to that fitting with a grease pump.

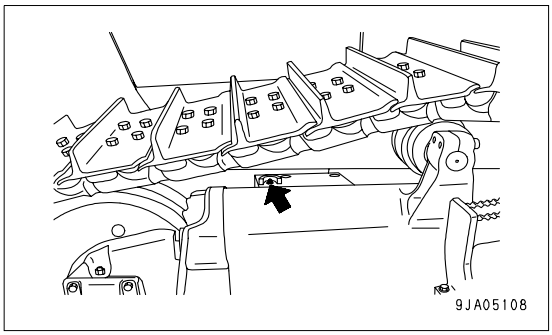

REMARK
Supply 3 shots of grease (Operate the grease pump lever 3 times) to each grease fitting, and check that grease is newly discharged through the seal lip.
If grease is not newly discharged through the lip, continue supplying grease until it is discharged.

https://truckmanualshub.com/

GREASE EQUALIZER BAR CENTER PIN

(1 place)

1. Open the engine side cover on the left side of the chassis.
2. Clean the grease fitting indicated with the arrow, then supply grease to that fitting with a grease pump.

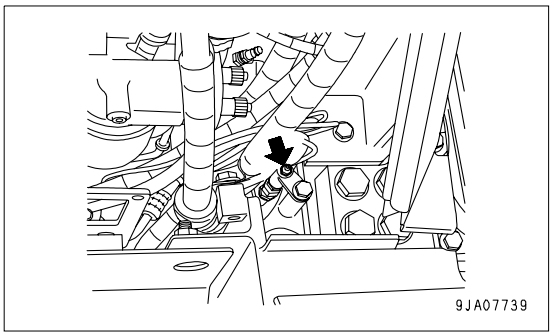

CHECK OIL LEVEL IN FINAL DRIVE CASE, ADD OIL

WARNING

- **The oil is at high temperature immediately after the machine has been operated. Wait for the oil to cool down before starting the operation.**
- **If there is still pressure remaining inside the case, the oil or plug may fly out. Loosen the plug slowly to release the pressure.**

1. Stop the machine so that drain plug (3) is directly at the bottom.
2. Remove oil level plug (2) and check whether the final drive case is filled with oil to lower edge of the plug hole.
3. If the oil level is too low, add oil through the oil filler plug hole (1).
4. When oil starts to overflow from oil level plug (2), stop filling and install oil level plug (2) and oil filler plug (1).

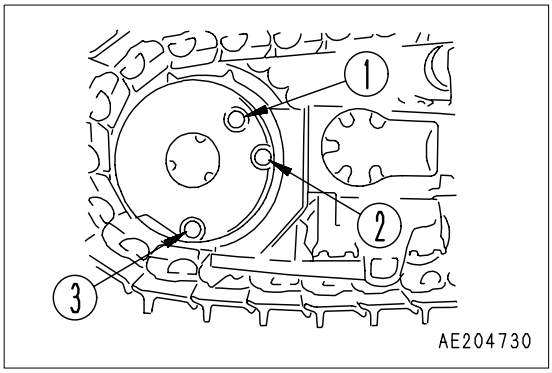

https://truckmanualshub.com/

CHECK OIL LEVEL IN HYDRAULIC TANK, ADD OIL

WARNING

- **The parts and oil are at high temperature immediately after the engine is stopped, and may cause burns. Wait for the temperature to go down before starting the work.**
- **When removing the oil filler cap, turn it slowly to release the internal pressure, then remove it.**

NOTICE

- **Do not add oil if the level is above the H line. This will damage the hydraulic equipment and cause the oil to spurt out.**
- **Always lock the cap with the key.**

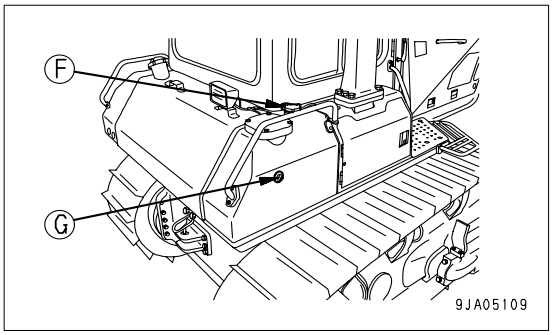

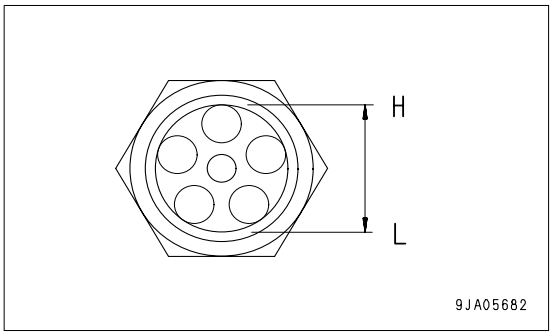

1. Lower blade to the ground and stop the engine. Wait for 5 minutes before checking oil level. Oil level should be between the H and L in sight gauge (G).
2. If the level is below the L mark, add oil through oil filler (F).
3. After adding oil, be sure to screw on the oil filler cap and lock it with the key.

https://truckmanualshub.com/

CHECK LEVEL OF BATTERY ELECTROLYTE

Perform this check before operating the machine.

WARNING

- **Do not use the battery if the battery electrolyte level is below the LOWER LEVEL line. This will accelerate deterioration of the inside of the battery and reduce the service life of the battery. In addition, it may cause an explosion.**
- **The battery generates flammable gas and there is danger of explosion, do not bring fire or sparks near the battery.**
- **Battery electrolyte is dangerous. If it gets in your eyes or on your skin, wash it off with a large amount of water and consult a doctor.**
- **When adding distilled water to the battery, do not allow the battery electrolyte to go above the UPPER LEVEL line. If the electrolyte level is too high, it may leak and cause damage to the paint surface or corrode other parts.**

NOTICE
When adding distilled water in cold weather, add it before starting operations in the morning to prevent the electrolyte from freezing.

Inspect the battery electrolyte level at least once a month and follow the basic safety procedures given below.

WHEN CHECKING ELECTROLYTE LEVEL FROM SIDE OF BATTERY

If it is possible to check the electrolyte level from the side of the battery, check as follows.

1. Open the battery cover on the left side of the machine body.
2. Use a wet cloth to clean the area around the electrolyte level lines and check that the electrolyte level is between the UPPER LEVEL (U.L.) and LOWER LEVEL (L.L.) lines.

   If the battery is wiped with a dry cloth, static electricity may cause a fire or explosion.

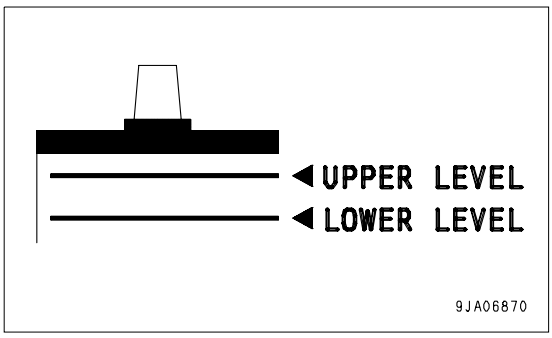

3. If the electrolyte level is below the midway point between the U.L. and L.L. lines, remove cap (1) and add distilled water to the U.L. line.
4. After adding distilled water, tighten cap (1) securely.

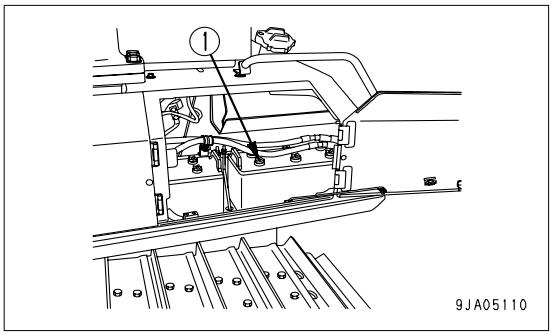

REMARK
If distilled water is added to above the U.L. line, use a syringe to lower the level to the U.L. line. Neutralize the removed fluid with baking soda (sodium bicarbonate), then flush it away with a large amount of water or consult your Komatsu distributor or battery maker.

https://truckmanualshub.com/

WHEN IT IS IMPOSSIBLE TO CHECK ELECTROLYTE LEVEL FROM SIDE OF BATTERY

If it is impossible to check the electrolyte level from the side of the battery, or there is no display of the UPPER LEVEL line on the side of the battery, check as follows.

1. Open the battery cover on the left side of the machine body.
2. Remove cap (1) at the top of the battery, look through the water filler port (2), and check the electrolyte surface. If the electrolyte does not reach the sleeve (3), add distilled water so that the level reaches the bottom of the sleeve (UPPER LEVEL line) without fail.
   - (A) Suitable level: Electrolyte level is up to bottom of sleeve, so surface tension causes electrolyte surface to bulge and poles appear bent.
   - (B) Low: Electrolyte level is not up to bottom of sleeve, so poles appear straight and not bent.
3. After adding distilled water, tighten cap (1) securely.

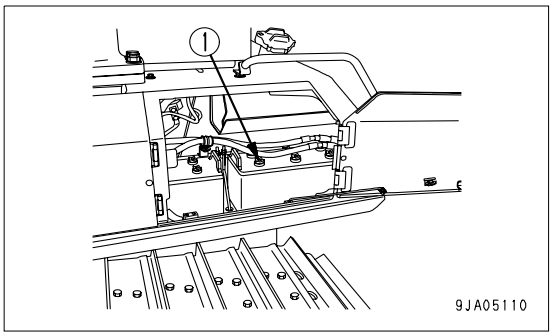

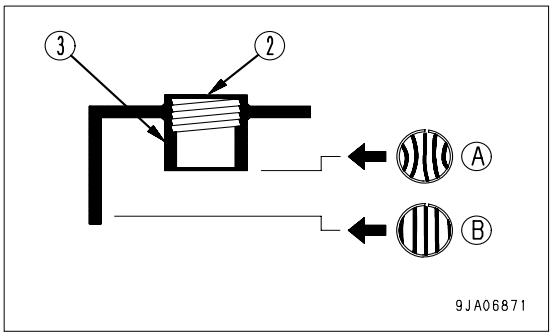

REMARK
If distilled water is added to above the bottom of the sleeve, use a syringe to lower the level to the bottom of the sleeve. Neutralize the removed fluid with baking soda (sodium bicarbonate), then flush it away with a large amount of water or consult your Komatsu distributor or battery maker.

WHEN IT IS POSSIBLE TO USE INDICATOR TO CHECK ELECTROLYTE LEVEL

If it is possible to use an indicator to check the electrolyte level, follow the instructions given.

CHECK, CLEAN ADDITIONAL FUEL STRAINER

(If equipped)

1. Open cover (1).
2. Close fuel supply valve (2), then remove strainer cap (3).

   The strainer forms one unit with the strainer cap.
3. Remove any dirt stuck to the strainer, then wash in clean diesel fuel or flushing oil. If the strainer is damaged, replace it.
4. After checking and cleaning, install the strainer, then tighten cap (3).
5. After installing, open fuel supply valve (2).

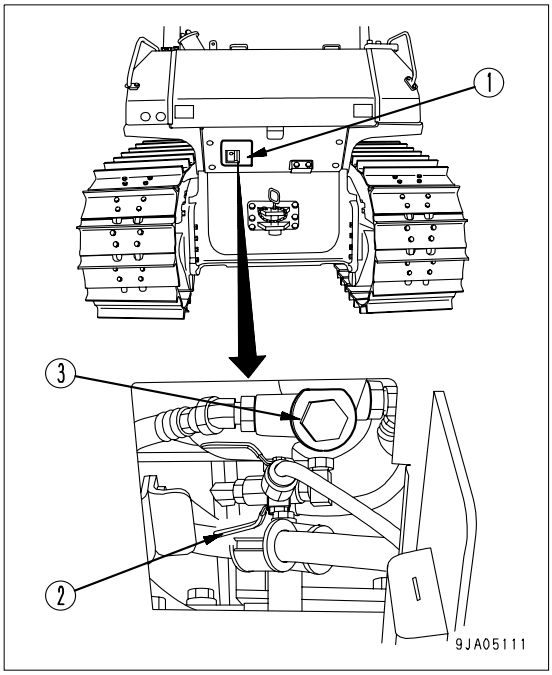

https://truckmanualshub.com/

CHECK BRAKE PERFORMANCE

WARNING

If the machine moves during the following operation, please contact your Komatsu distributor for repairs immediately.

NOTICE
Do not place the gear shift lever in 1st under any circumstances. The machine will be damaged.

Before starting the engine, check that the area around the machine is safe, then do as follows:

1. Start the engine.
2. Set work equipment lock lever (1) to the FREE position (F) then operate blade control lever (2) to raise the blade.

   Leave the work equipment lock lever(1) to the FREE position (F).
3. Set parking brake lever (3) to the FREE position (F).

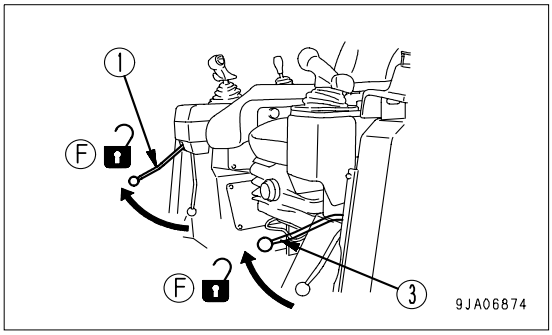

4. Depress brake pedal (4), set steering, forward-reverse, gear shift lever (5) in FORWARD, then press the shift up button to enter 2nd speed.
5. Operate fuel control dial (6) and gradually raise the engine speed to full throttle. (Keep the brake pedal depressed.)
6. Check that the machine does not move. This indicates that brake performance is normal.

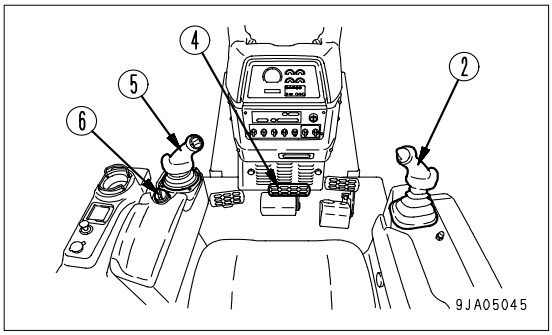

https://truckmanualshub.com/

CLEAN AIR CONDITIONER AIR FILTER (FRESH/RECIRC FILTER)

(Machine equipped with cab)

Clean the air conditioner air filter if it becomes clogged or if there is dirt or oil stuck to it.

In places where there is a lot of dust, clean the air filter once a week. In addition, clean the air conditioner air filter at the same time, when cleaning the engine air cleaner.

1. Loosen mounting bolts (1), pull up inspection cover (2) to the rear, and remove it.
2. Remove inside cover (3), then remove FRESH filter (4).

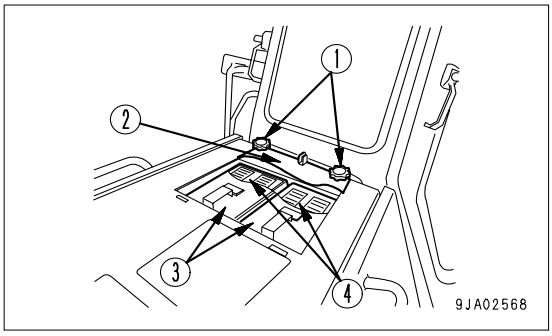

3. Remove the filter box, then brush out the dirt accumulated inside the box through the cleaning hole (5) in the hood.

   When doing this, be careful not to let any dirt or dust get into the fresh air intake port (6) leading to the cab.

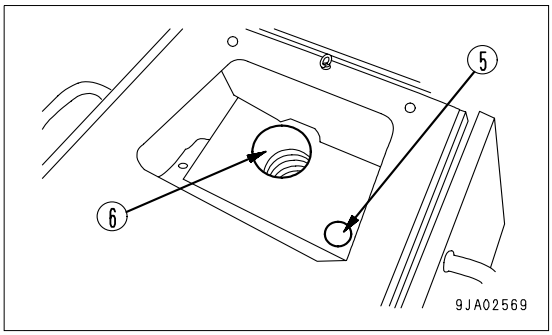

4. Open inspection cover (7) under the front panel, then pull up RECIRC filter (8) and remove it.
5. Clean filters(4) and (8) with compressed air.

   If the filters are stained with oil or extremely dirty, wash them in neutral detergent.

   After washing the filters, dry them up, then install them.

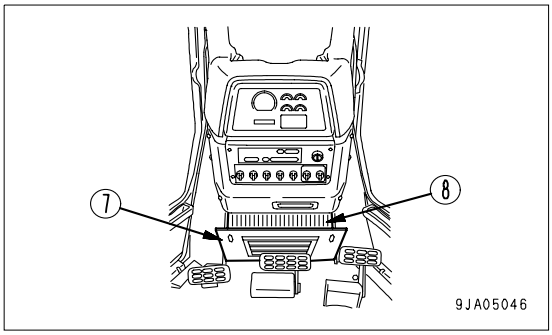

REMARK
If the filters cannot be cleaned with air or in water, replace them with new ones.

https://truckmanualshub.com/

EVERY 500 HOURS SERVICE

Maintenance for every 50 and 250 hours service should be carried out at the same time.

CHANGE OIL IN ENGINE OIL PAN, REPLACE ENGINE OIL FILTER CARTRIDGE

⚠ WARNING

Parts and oil are at high temperature immediately after the engine is stopped and may cause serious burns. Wait for the oil temperature to go down before performing this operation.

- Refill capacity: 28 liters
- Prepare a socket wrench and filter wrench.

1. Remove the cover (1) on the bottom of the machine and set a container to catch the drained oil directly under the drain plug.

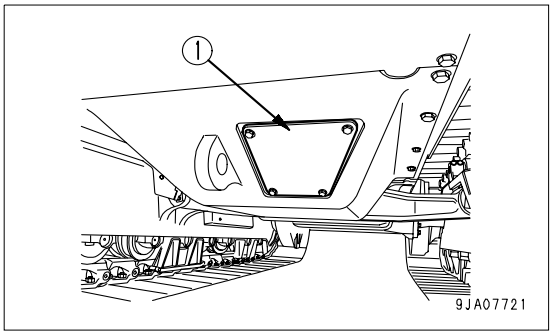

2. Take the end of hose (2) out of the inspection window.
3. Loosen drain plug (P) to drain oil. Do it slowly so that you do not get splashed with drained oil.
4. Check the drained oil, and if there are excessive metal particles or foreign material, please contact your Komatsu distributor.
5. Install drain plug (P).

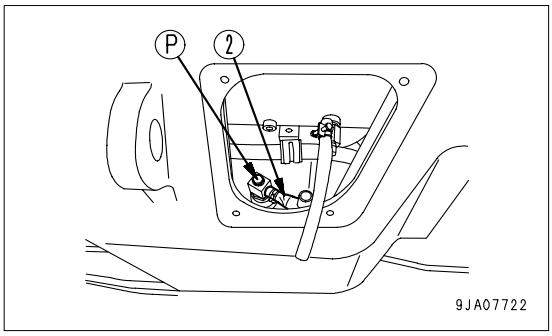

6. Open the engine side cover on the right side of the machine.
7. Remove bolts (3) - 2 bolts in total - to remove lower side cover (4).

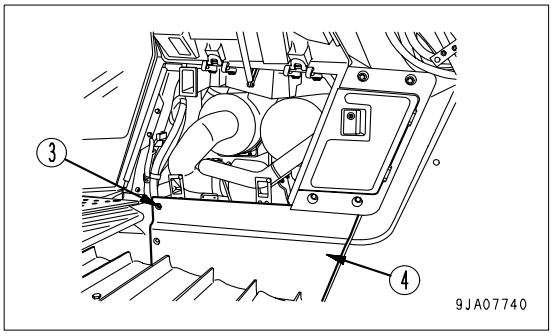

https://truckmanualshub.com/

8. Remove bolts (5) - 4 bolts in total - to remove washer tank assembly (6).
9. Turn engine oil filter cartridge (7) to the left with a filter wrench.
10. Clean the filter holder, fill the new filter cartridge with clean oil, coat the thread and packing portion of the new filter cartridge with oil (or coat thinly with grease), then install.
11. When installing the filter cartridge, bring the packing surface into contact with the filter holder, then tighten a further 3/4 to 1 turn.
12. After replacing the filter cartridge, add oil through oil filler (F) until the oil level is between the H and L marks on the dipstick (G).
13. Run the engine at idle for a short time, then stop the engine, and check that the oil level is between the H and L marks on the dipstick. For details, see “CHECK OIL LEVEL IN ENGINE OIL PAN, ADD OIL (3-54)“.

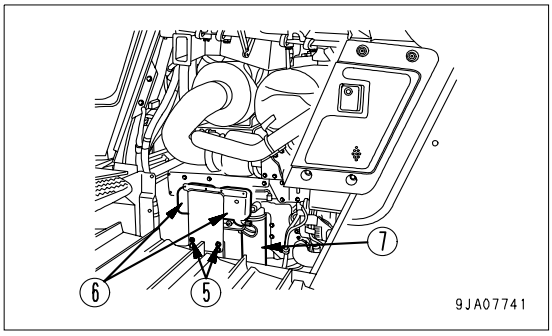

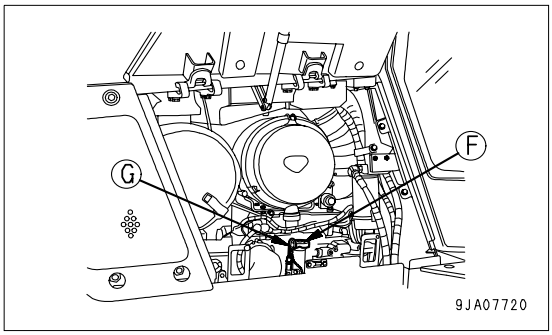

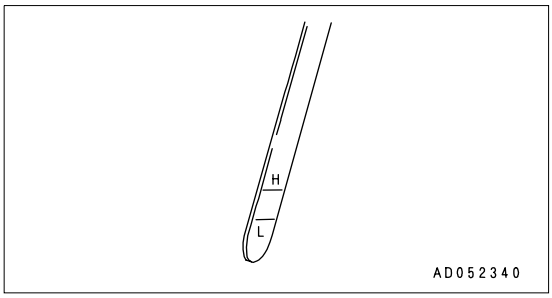

https://truckmanualshub.com/

REPLACE POWER TRAIN OIL FILTER ELEMENT

WARNING

The parts and oil are at high temperature after the engine is stopped, and may cause serious burns. Wait for the temperature to go down before starting the operation.

1. Open cover on the right side of the machine.
2. Remove bolts (1) (4 bolts), then remove cover (2).
3. Remove the grommet under the fender, loosen drain plug (P), and drain the oil from inside the filter case.
4. Take out plate (3), element (4), valve (5), and spring (6).
5. Clean the inside of the case, then wash plate (3), valve (5), and spring (6).
6. Install spring (6), valve (5), new element (4), and plate (3).
7. Replace O-ring (8) with a new part, then install cover (2) with bolt (1).
8. Install drain plug (P).
9. Loosen air vent plug (7) and start engine. Tighten the plug when oil comes out.

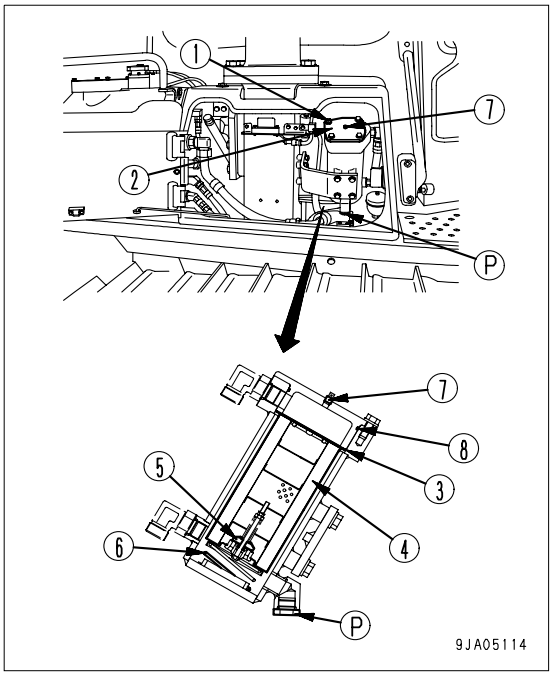

REPLACE FUEL PRE-FILTER CARTRIDGE

WARNING

- **After the engine has been operated, all parts are at high temperature, so do not replace the filter immediately. Wait for all parts to cool down before starting the operation.**
- **High pressure is generated inside the engine fuel piping system when the engine is running.**
  When replacing the filter, wait for at least 30 seconds after stopping the engine to let the internal pressure go down before replacing the filter.
- **Do not bring any fire or flame close.**

NOTICE

- **Genuine Komatsu fuel filter cartridges use a special filter that has highly efficient filtering ability. When replacing the filter cartridge, always use a genuine Komatsu part.**
- **The common rail fuel injection system used on this machine consists of more precise parts than the conventional injection pump and nozzle.**
  If any part other than a genuine Komatsu filter cartridge is used, dust or dirt may get in and cause problems with the injection system. Always avoid using substitute parts.
- **When carrying out inspection or maintenance of the fuel system, pay more attention than normal to the entry of dirt. If dirt is stuck to any part, use fuel to wash it off completely.**

https://truckmanualshub.com/

Prepare a filter wrench and a container to catch the fuel.

1. Open the inspection cover at the bottom of the fuel tank.
2. Close fuel tank valve (1).

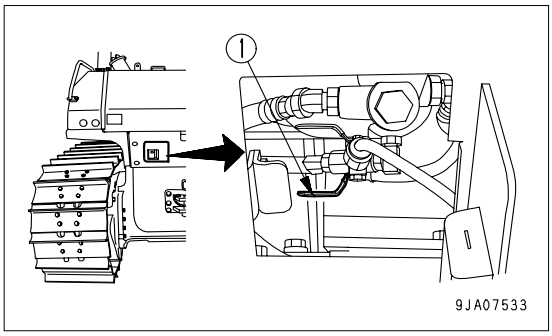

3. Open up the engine side cover on the left side of the machine.
4. Put a container under filter cartridge (4) to receive drained oil.
5. Disconnect connector (2) from the water separator lamp.
6. Turn transparent cap (3) to the left with a filter wrench. (This cap is to be used again, so replace it with a new one if there is any damage on it.)
7. Using a filter wrench, turn cartridge (4) to the left to remove it.
8. Clean the filter base, and coat with oil the contact face of a new filter with the packing.
9. Install a new filter cartridge without t fuel.

   When installing the cartridge, turn it by 3/4 of a turn after the packing comes to contact with the filter base sealing face.

   If the cartridge is tightened too tightly, the packing can be damaged, causing fuel to leak. On the other hand, if it is tightened loosely, fuel can also leak through a clearance between the packing and the base. Therefore, be sure to follow the specified tightening angle.

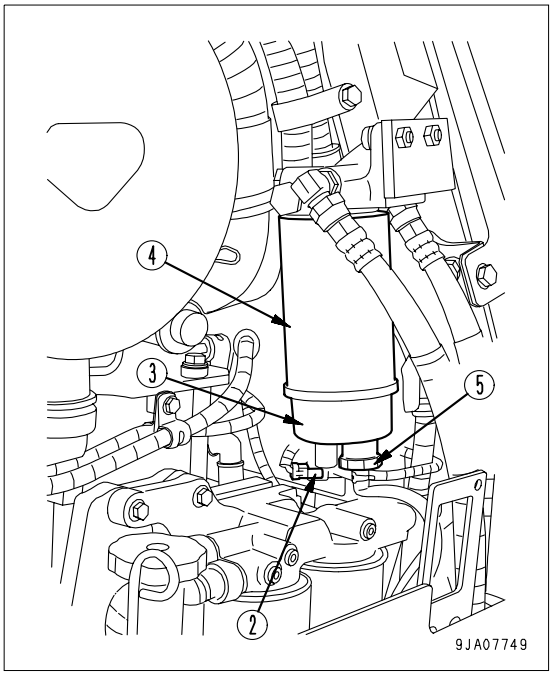

10. Fix earlier removed cap (3) to the base of a new filter cartridge.

    At that time, be sure to replace the seal ring with a new one.

    - Specified tightening torque of transparent cap: 11 N·m (1.0 kg·m)

    When the seal ring has been replaced, coat the surface with clean fuel before installing it.

11. Make sure that drain plug (5), which is provided in the lower part of transparent plug (3), is firmly tightened.

    Specified tightening torque of drain plug: 0.2 to 0.45 N·m (0.02 to 0.046 kg·m)

https://truckmanualshub.com/

12. Connect connector (2) to the water separator.
13. Open fuel tank valve (1).
14. Bleed air from fuel filter cartridge (4) after the replacement.

Bleed the air as follows:

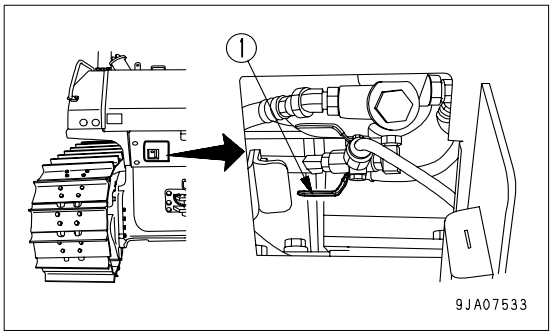

15. Insert the key into the engine starting switch and turn the key to ON position (B). Then the electric priming pump begins to work.

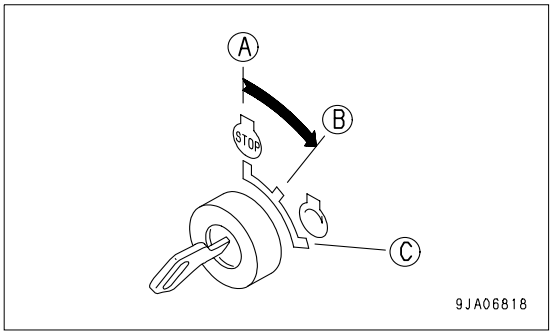

16. After holding the key in ON position (B) for 30 seconds, turn it back to OFF position (A) and hold it there for 10 seconds.

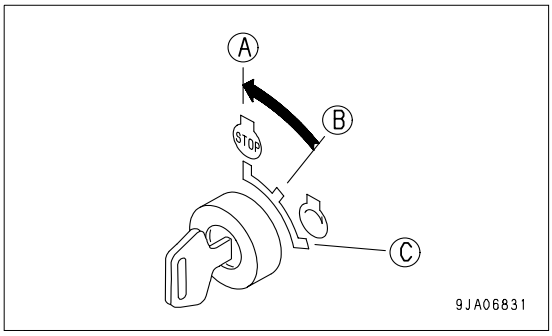

17. Repeat the operation in Step 15 and 16 four times.
18. Turn the engine starting switch key to START position (C) to start up the engine, check the filter sealing face and water separator installing face for fuel leak and run the engine at low idling for approx. 10 minutes.

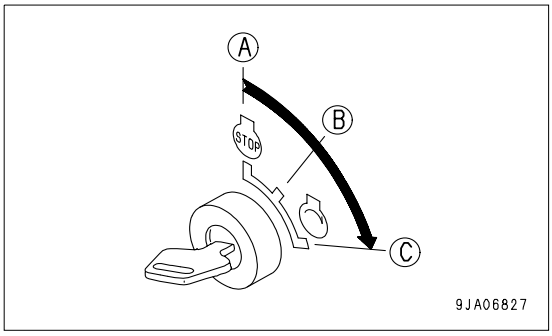

https://truckmanualshub.com/

EVERY 1000 HOURS SERVICE

Maintenance for every 50, 250 and 500 hours should be carried out at the same time.

REPLACE FUEL MAIN FILTER CARTRIDGE

Carry out this operation after carrying out the maintenance in the “REPLACE FUEL PRE-FILTER CARTRIDGE (4-54)“ for every 500 hours.

⚠ WARNING

- **After the engine has been operated, all parts are at high temperature, so do not replace the filter immediately. Wait for all parts to cool down before starting the operation.**
- **High pressure is generated inside the engine fuel piping system when the engine is running.**
  When replacing the filter, wait for at least 30 seconds after stopping the engine to let the internal pressure go down before replacing the filter.
- **Do not bring any fire or flame close.**

NOTICE

- **Genuine Komatsu fuel filter cartridges use a special filter that has highly efficient filtering ability.**
  When replacing the filter cartridge, always use a genuine Komatsu part.
- **The common rail fuel injection system used on this machine consists of more precise parts than the conventional injection pump and nozzle.**
  If any part other than a genuine Komatsu filter cartridge is used, dust or dirt may get in and cause problems with the injection system. Always avoid using substitute parts.
- **When carrying out inspection or maintenance of the fuel system, pay more attention than normal to the entry of dirt. If dirt is stuck to any part, use fuel to wash it off completely.**

Prepare a filter wrench and a container to catch the fuel.

1. Open the inspection cover at the bottom of the fuel tank.
2. Close fuel tank valve (1).

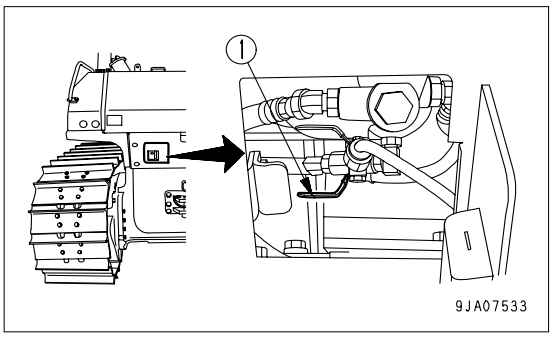

https://truckmanualshub.com/

3. Open up the engine side cover on the left side of the machine.
4. Remove bolts (2) - 2 bolts in total- to remove lower side cover (3).

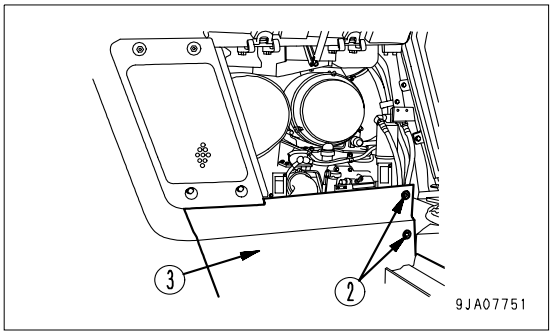

5. Put a container under filter cartridge (4) to receive drained oil.
6. Using a filter wrench, turn cartridge (4) to the left to remove it.

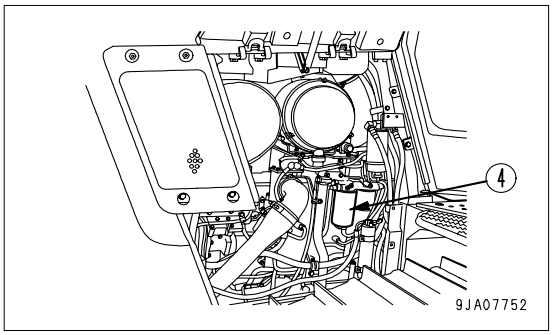

NOTICE

- **Do not fill the new filter cartridge with fuel.**
- **Remove cap (B) and install the filter cartridge.**

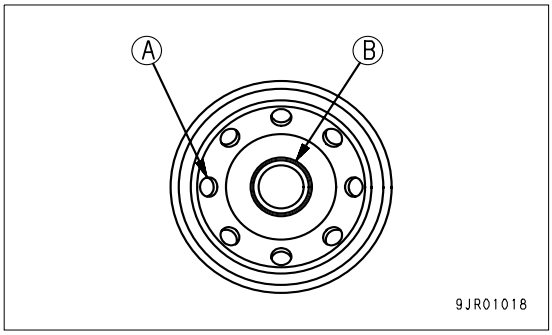

7. Clean the filter holder, coat the packing surface of the new filter cartridge thinly with oil, then install the filter cartridge to the filter holder.
8. When installing, tighten until the packing surface contacts the seal surface of the filter holder, then tighten it 3/4 of a turn.

   If the filter cartridge is tightened too far, the packing will be damaged and this will lead to leakage of fuel. If the filter cartridge is too loose, fuel will also leak from the packing, so always tighten the correct amount.
9. Open fuel tank valve (1).
10. Bleed air from fuel filter cartridge (4) after the replacement.

Bleed the air as follows:

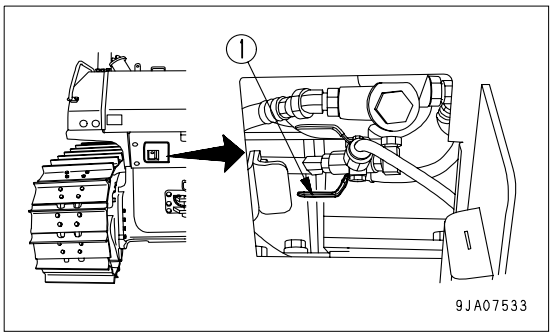

https://truckmanualshub.com/

11. Insert the key into the engine starting switch and turn the key to ON position (B). Then the electric priming pump begins to work.

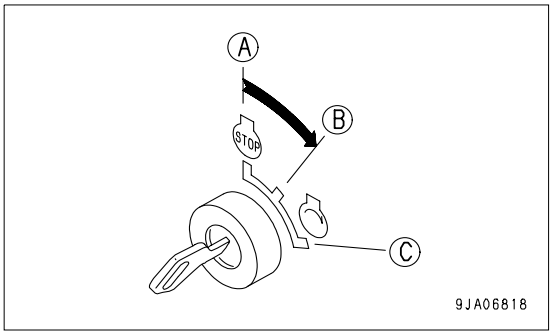

12. After holding the key in ON position (B) for 30 seconds, turn it back to OFF position (A) and hold it there for 10 seconds.

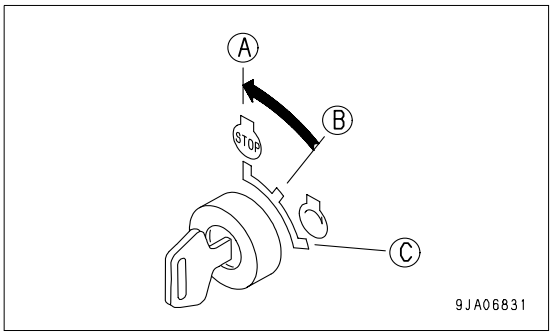

13. Repeat the operation in Step 12 and 13 four times.

14. Turn the engine starting switch key to START position (C) to start up the engine and check the filter sealing face for fuel leak. If leak is noticed, check the filter cartridge for its tightening condition. If it is correctly tightened and fuel still leaks, remove the filter cartridge once and check the contact face with the packing for damage or any caught- in foreign material. If any, replace it with a new one.

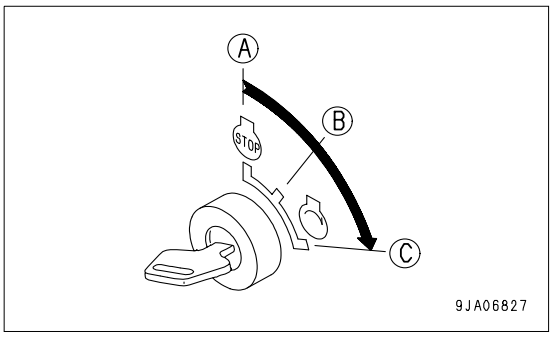

https://truckmanualshub.com/

CHANGE OIL IN POWER TRAIN CASE, CLEAN STRAINERS (POWER TRAIN PUMP STRAINER, SCAVENGING PUMP STRAINER)

⚠ WARNING

- **The oil is at high temperature immediately after the machine has been operated. Wait for the oil to cool down before starting the operation.**
- **The undercover is heavy. Never try to open or close the cover when directly beneath it. When removing bolts (3), carry out the work from the rear of the cover so that you can easily get out of the way.**

- Refill capacity: 48 liters

1. Remove cover (1) at the bottom rear of the machine.
2. Loosen drain plug (P) (with slit) and drain the oil.

   After draining the oil, tighten drain plug (P).

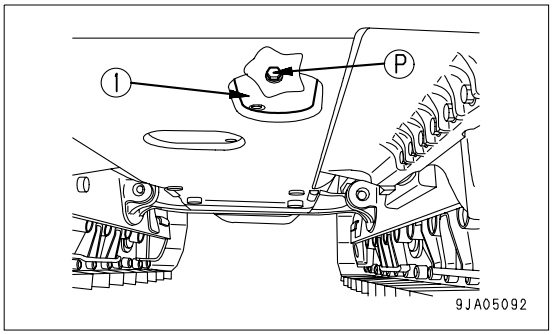

3. Remove the undercover from the rear bottom of the machine body as follows.
4. Remove two bolts (2) from the front side of the machine body.
5. Holding the cover, remove two bolts (3) from the rear side of the machine body.

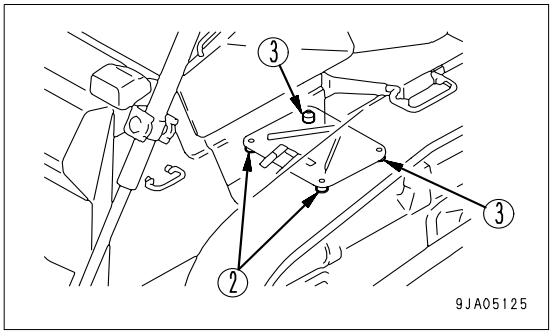

6. Lower and open the cover gradually.

   (A) Front of machine

   (B) Dangerous place

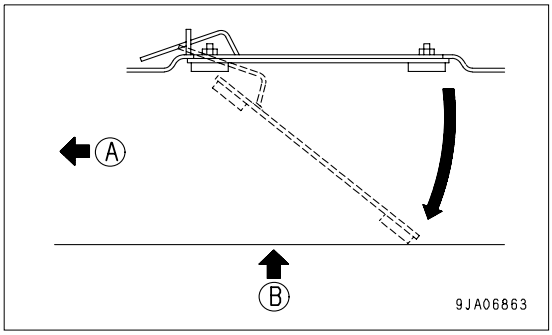

https://truckmanualshub.com/

7. Loosen mounting bolt (4) of the power train strainer, then remove cover (5).
8. Take out spring (6), then take out strainer (7).
9. Remove all dirt from strainer (7), then wash in clean diesel oil or flushing oil. Clean the case interior and the removed parts.

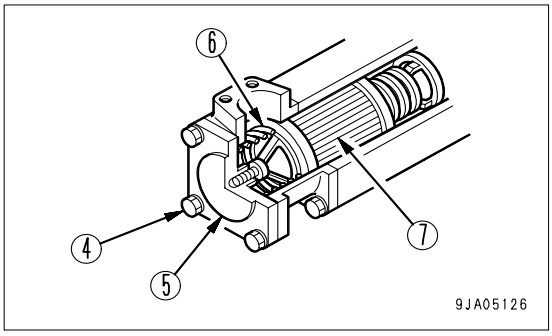

10. Loosen mounting bolt (8) of the scavenging pump strainer, then remove cover (9).
11. Take out spring (10), then take out strainer (11).
12. Remove all dirt from strainer (11), then wash in clean diesel oil or flushing oil. Clean the case interior and the removed parts.

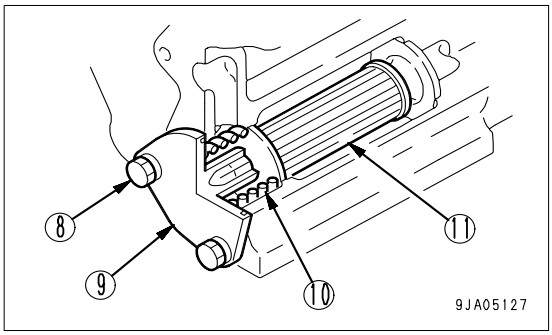

If the spring or strainer are damaged, replace them.

13. Install the strainers in their original position.
14. After installing, replace the element in the power train oil filter. For details, see “REPLACE POWER TRAIN OIL FILTER ELEMENT (4-54)“.
15. Open cover on the right side of the machine.
16. Refill the specified quantity of oil through oil filler (F).
17. Check that the oil is at the specified level. For details, see “CHECK OIL LEVEL IN POWER TRAIN CASE, ADD OIL (3-58)“.
18. Close the cover at right side of machine.

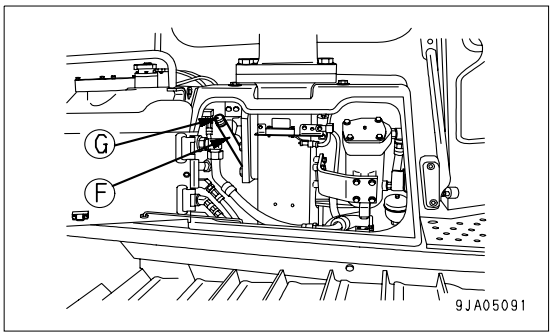

https://truckmanualshub.com/

CHECK OIL LEVEL IN DAMPER CASE, ADD OIL

⚠ WARNING

- **The oil is at high temperature immediately after the machine has been operated. Wait for the oil to cool down before starting the operation.**
- **The undercover is heavy. Never try to open or close the cover when directly beneath it. When removing bolts (2), carry out the work from the rear of the cover so that you can easily get out of the way.**

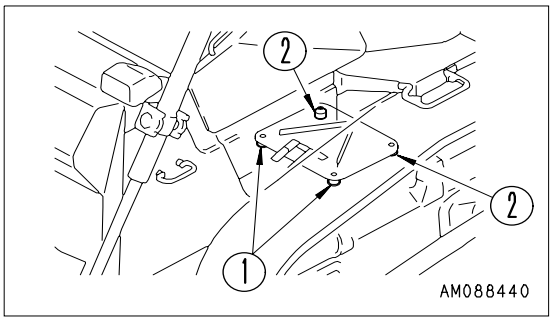

If the quantity of the oil in the damper is insufficient, the damper may be seized. Accordingly, check, and add or replace the oil according to the following procedure.

1. Remove the undercover from the rear bottom of the machine body as follows.
2. Remove two bolts (1) from the front side of the machine body.
3. Holding the cover, remove two bolts (2) from the rear side of the machine body.
4. Lower and open the cover gradually.

   (A) Front of machine

   (B) Dangerous place

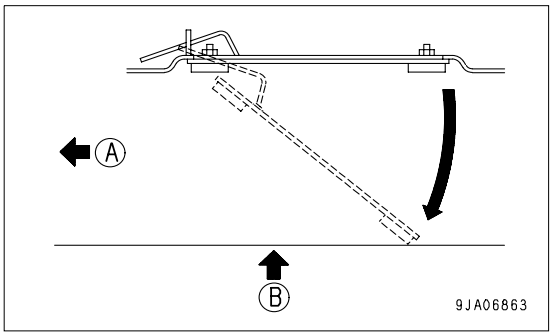

5. Remove oil level plug (3) and check the oil level. The proper oil level is the bottom edge of the plug hole.

   Tighten plug (3).

REMARK
Check the oil level while the engine is stopped.
If the machine is inclined, set it in a level position before checking the oil level.

6. If the oil level is below the bottom edge of the plug hole, remove oil filler plug (4) and add new oil.

   Add new oil until the oil level reaches the bottom edge of oil level plug (3).
7. After adding the oil, tighten plugs (3) and (4).

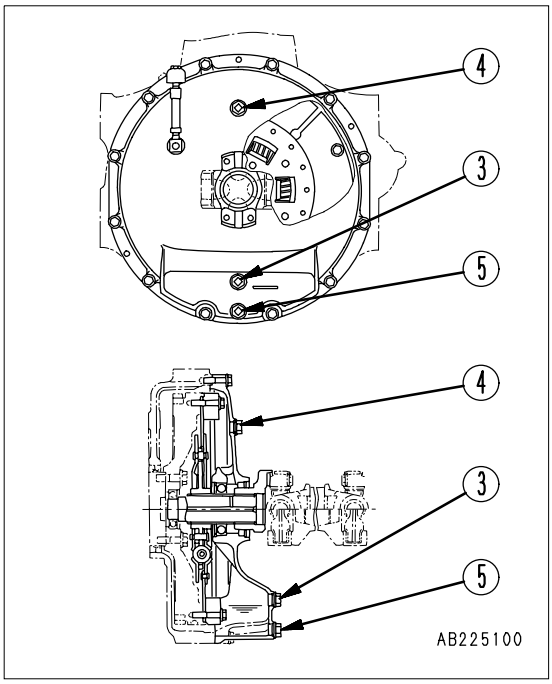

https://truckmanualshub.com/

CHANGE OIL IN FINAL DRIVE CASE

⚠ WARNING

- **The oil is at high temperature immediately after the machine has been operated. Wait for the oil to cool down before starting the operation.**
- **If there is still pressure remaining inside the case, the oil or plug may fly out. Loosen the plug slowly to release the pressure.**

- Refill capacity:

  D65EX : (each) 24 liters

  D65PX,WX: (each) 27 liters

1. Stop the machine so that drain plug (3) is directly at the bottom.
2. Remove oil level plug (2) and oil filler plug (1), then remove drain plugs (3) and (4), and drain the oil.
3. After draining the oil, install drain plugs (3) and (4).
4. Add oil to the specified level through the hole in oil filler plug (1).
5. Check that the oil is at the specified level. For details, see “CHECK OIL LEVEL IN FINAL DRIVE CASE, ADD OIL (4-46)“.

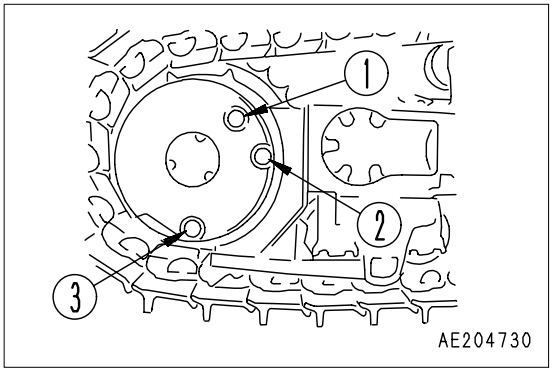

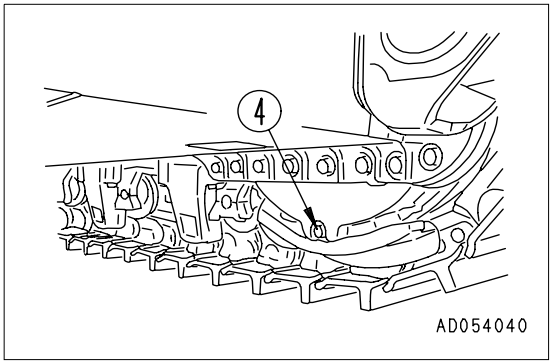

CLEAN BREATHER

1. Open cover on the right side of the machine.
2. Remove breather (1), then use clean diesel fuel or flushing fluid to rinse the dirt out from the inside.

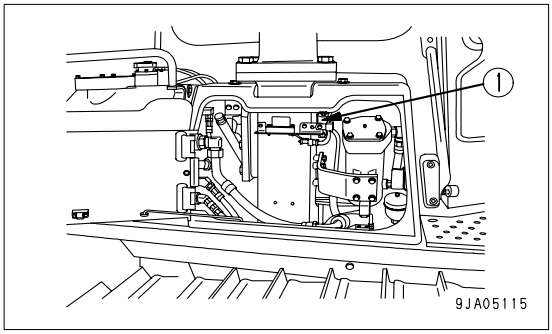

https://truckmanualshub.com/

REPLACE CORROSION RESISTOR CARTRIDGE

Use Komatsu genuine cartridge.

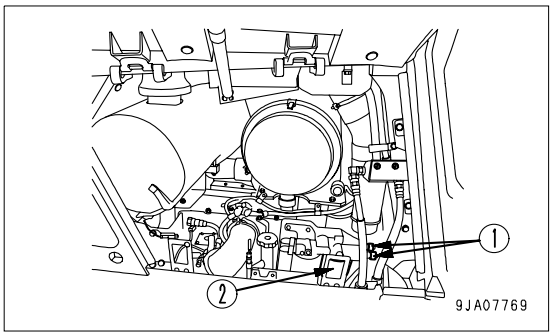

1. Screw in 2 valves (1) at the top of the corrosion resistor.
2. Using a filter wrench, turn cartridge (2) to the left to remove it.
3. Apply engine oil to the sealing surface of a new cartridge, then install it to the filter holder.
4. When installing, screw in cartridge until seal comes in contact with sealing surface, then tighten approx. 2/3 turn.
5. Open valves (1) (2 places).

CHECK FOR LOOSE ROPS MOUNT BOLTS

Check that the bolts are not loose and that there is no damage.

If any bolt is loose, tighten it to the following torque.

If there is any damage, replace the bolt with a genuine Komatsu part.

Tightening torque: 785 to 980 N·m (80 to 100 kgf·m)

INSPECTION OF AFTER-COOLER CIRCUIT FOR LOOSENED BOLTS AND NUTS

Check each clamp for loosening. If any clamp is found loosened, tighten it further.

https://truckmanualshub.com/

EVERY 2000 HOURS SERVICE

Maintenance for every 50, 250, 500 and 1000 hours service should be carried out at the same time.

CHANGE OIL IN HYDRAULIC TANK, REPLACE OIL FILTER ELEMENT

⚠ WARNING

- **The parts and oil are at high temperature immediately after the engine is stopped, and may cause burns. Wait for the temperature to go down before starting the work.**
- **When removing the oil filler cap, turn it slowly to release the internal pressure, then remove it.**

- Refill capacity: 55 liters

1. Lower the work equipment to the ground, then stop the engine.
2. Turn the cap of oil filler (F) slowly to release the internal pressure, then remove the cap.
3. Remove the cover (1) at the bottom of the hydraulic tank.
4. Loosen drain valve (2), drain the oil, tighten drain valve (2) again, then install cover (1). When loosening drain valve (2), be careful not to get oil on yourself.
5. Remove bolt (3), then remove cover (4).
6. Take out spring (5), valve (6), and element (7).
7. Clean the inside of the case, then wash spring (5) and valve (6).
8. Install new element (7), valve (6), and spring (5).
9. Install cover (4) with bolt (3).
10. Refill the specified quantity of oil through oil filler (F).
11. Check that the oil is at the specified level. For details, see “CHECK OIL LEVEL IN HYDRAULIC TANK, ADD OIL (4-47)“.

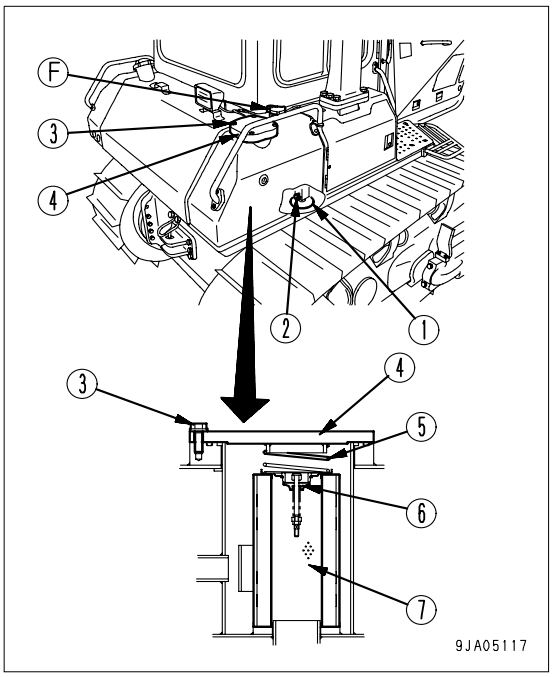

https://truckmanualshub.com/

REPLACE HYDRAULIC TANK BREATHER ELEMENT

WARNING

- **The parts and oil are at high temperature immediately after the engine is stopped, and may cause burns. Wait for the temperature to go down before starting the work.**
- **When removing the oil filler cap, turn it slowly to release the internal pressure, then remove it.**

1. Remove the cap of oil filler (F) at the top of the hydraulic tank.

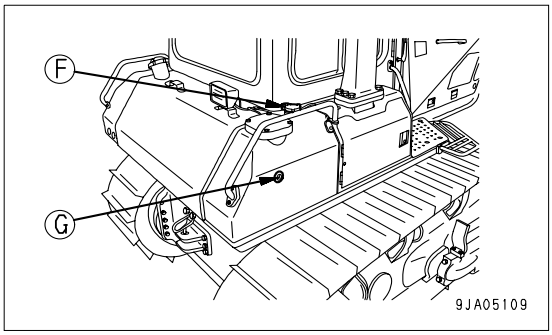

2. Replace element (1) inside the cap.

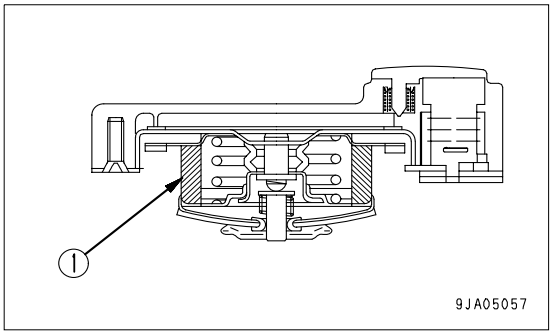

CHECKING CHARGE PRESSURE OF NITROGEN GAS IN ACCUMULATOR (FOR CONTROL CIRCUIT)

WARNING

The accumulator is charged with high-pressure nitrogen gas, so mistaken operation may cause an explosion, which will lead to serious injury or damage. When handling the accumulator, always do as follows.
The pressure in the hydraulic circuit cannot be completely removed. When removing the hydraulic equipment, do not stand in the direction that the oil spurts out when carrying out the operation. In addition, loosen the bolts slowly when carrying out the operation.
Do not disassemble the accumulator.
Do not bring it near flame or dispose of it in fire.
Do not make holes in it or weld it.
Do not hit it, roll it, or subject it to any impact.
When disposing of the accumulator, the gas must be released. Please contact your Komatsu distributor to have this work carried out.

https://truckmanualshub.com/

FUNCTION OF ACCUMULATOR

The accumulator stores the pressure in the control circuit. Even after the engine is stopped, the control circuit can be operated, so the following actions are possible.

- If the control lever is operated in the direction to lower the work equipment, it is possible for the work equipment to go down under its own weight.
- The pressure in the hydraulic circuit can be released.

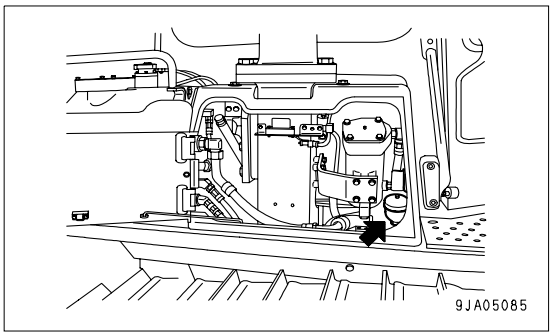

The accumulator is installed to the position shown in the diagram on the right.

CHECKING FUNCTION OF ACCUMULATOR

Replace the accumulator every 2 years or every 4000 hours, whichever comes sooner.

Check the nitrogen gas charge pressure as follows.

1. Stop the machine on firm, level ground.
2. Operate the parking brake lever to LOCK position (L).

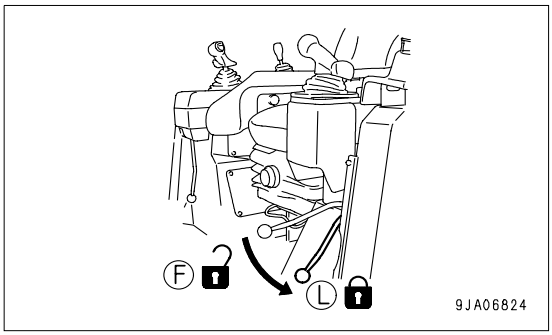

3. Raise the work equipment (blade) to the maximum height.

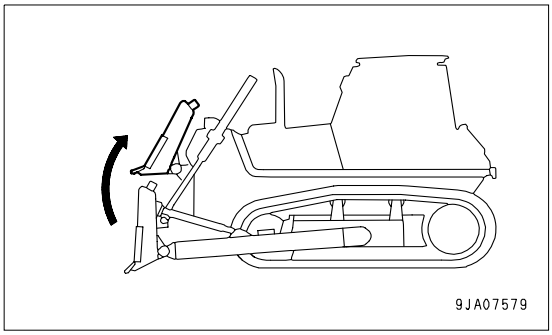

NOTICE
Carry out the following procedure for lowering the blade to the ground within 15 seconds after stopping the engine.
When the engine is stopped, the pressure inside the accumulator gradually goes down, so this inspection can be carried out only immediately after the engine is stopped.

https://truckmanualshub.com/

4. While holding the work equipment at the highest position, turn the engine starting switch key to OFF position (A).
5. Turn the engine starting switch key to ON position (B).

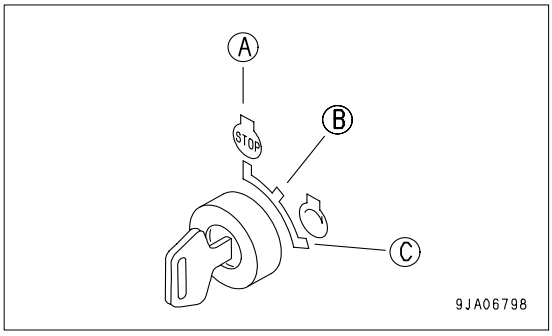

6. Turn the work equipment lock lever to FREE position (F).
7. Operate the blade control lever fully in the direction to lower the blade.

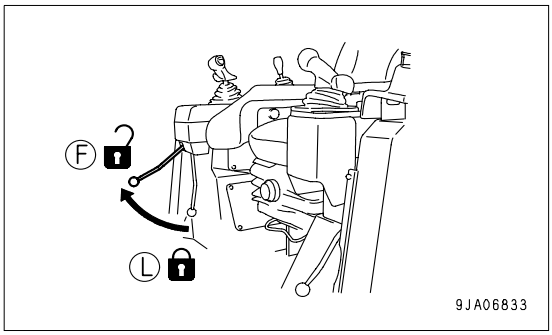

REMARK
Check that the area around the machine is safe, then operate the blade control lever to the LOWER position.

8. Check that the work equipment goes down to the ground under its own weight.
9. This completes the inspection.

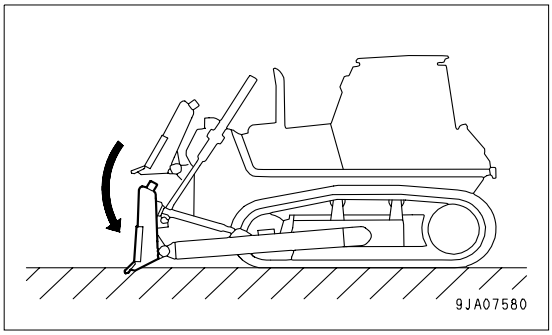

NOTICE
If the nitrogen gas charge pressure in the accumulator is low and operations are continued, it will become impossible to release the remaining pressure inside the hydraulic circuit if a failure occurs on the machine.

In the following cases, the charge pressure of the accumulator has gone down. Please contact your Komatsu distributor.

- Work equipment does not go down
- Stops while going down

https://truckmanualshub.com/

METHOD OF RELEASING PRESSURE IN HYDRAULIC CIRCUIT

NOTICE

Finish the steps of operating the blade control lever to the front and back, and to the right and left, to each stroke end within 15 seconds after the engine has stopped. After the engine stops, pressure inside the accumulator begins to gradually go down, so the pressure cannot be released except right after the engine stops.

1. Lower the work equipment and stop the engine.
2. Turn the starting switch to the ON position.
3. Set the work equipment lock lever to the FREE position.
4. Operate the blade control lever fully to the front, rear, left, and right to release the pressure from the hydraulic circuit.

   In order to release pressure from the ripper hydraulic circuit, operate the ripper control lever to the right and left to each stroke end.

5. Set the work equipment lock lever to the LOCK position.

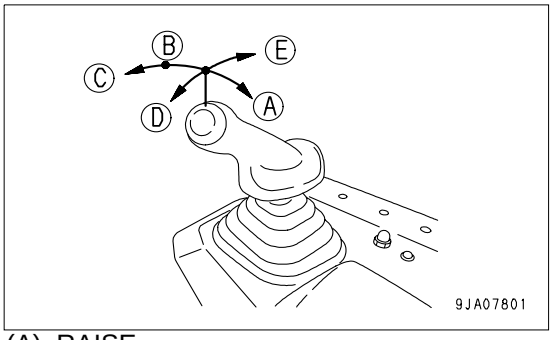

(A) RAISE
(B) LOWER
(C) FLOAT
(D) LEFT TILT
(E) RIGHT TILT

CHANGE OIL IN DAMPER CASE

⚠ WARNING

- **The parts and oil is very hot just after the operation. Wait until the oil temperature drops, then start the work.**
- **The undercover is heavy. Never try to open or close the cover when directly beneath it. When removing bolts (2), carry out the work from the rear of the cover so that you can easily get out of the way.**
- **When removing drain plug (5) of the damper case, take care not to get oil over yourself.**

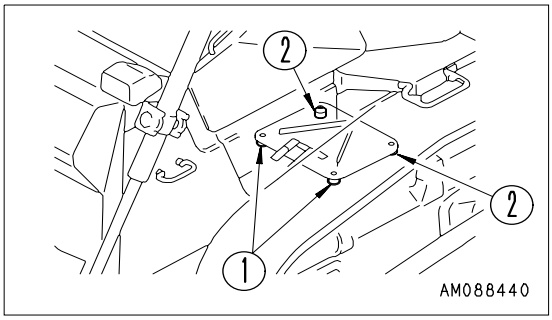

- Quantity of replacement oil: 1.3 liters

1. Remove the undercover from the rear bottom of the machine body as follows.
2. Remove two bolts (1) from the front side of the machine body.
3. Holding the cover, remove two bolts (2) from the rear side of the machine body.
4. Lower and open the cover gradually.

   (A) Front of machine

   (B) Dangerous place

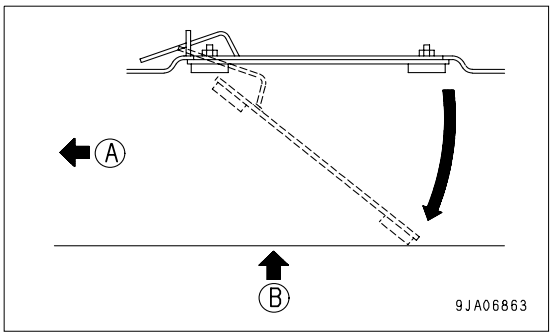

https://truckmanualshub.com/

5. Remove oil level plug (3) and oil filler plug (4), then remove drain plug (5) to drain the oil. After the all oil is drained, tighten plug (5).
6. Add oil through the hole of oil filler plug (4) until the oil level reaches the bottom edge of the hole of oil level plug (3).
7. After refilling the oil, tighten plugs (3) and (4).

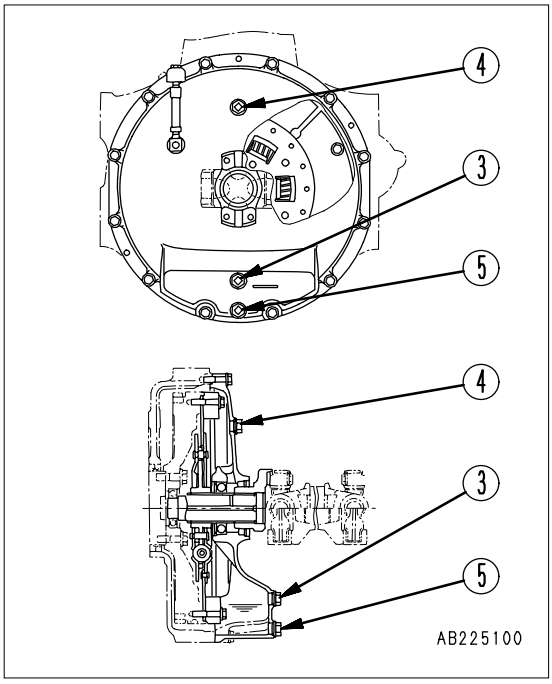

CHECK VIBRATION DAMPER

Check that there are no cracks or peeling in the outside surface of the rubber.

If any cracks or peeling are found, contact your Komatsu distributor to have the parts replaced.

CHECK ENGINE VALVE CLEARANCE, ADJUST

Special tools are needed for inspection and maintenance, please contact your Komatsu distributor.

https://truckmanualshub.com/

EVERY 4000 HOURS SERVICE

Maintenance for every 50, 250, 500, 1000 and 2000 hours service should be carried out at the same time.

REPLACE ACCUMULATOR (FOR CONTROL CIRCUIT)

Replace the accumulator every 2 years or every 4000 hours, whichever comes sooner.

⚠ WARNING

The accumulator is charged with high-pressure nitrogen gas, so mistaken operation may cause an explosion, which will lead to serious injury or damage. When handling the accumulator, always do as follows.
The pressure in the hydraulic circuit cannot be completely removed. When removing the hydraulic equipment, do not stand in the direction that the oil spurts out when carrying out the operation. In addition, loosen the bolts slowly when carrying out the operation.
Do not disassemble the accumulator.
Do not bring it near flame or dispose of it in fire.
Do not make holes in it or weld it.
Do not hit it, roll it, or subject it to any impact.
When disposing of the accumulator, the gas must be released. Please contact your Komatsu distributor to have this work carried out.

If operations are continued after the performance of the accumulator has dropped, it will be impossible to release the remaining pressure in the hydraulic circuit if there should be a failure on the machine. Please ask your Komatsu distributor to replace the accumulator.

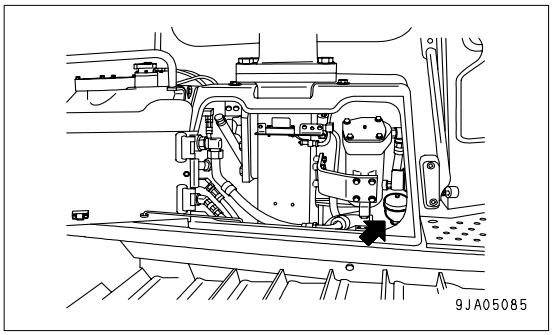

CHECK WATER PUMP

Check the water pump and its relative parts for water leak, and if anything abnormal is found, call on your Komatsu distributor for repairs or replacement.

https://truckmanualshub.com/

CHECKING FOR LOOSENESS OF HIGH-PRESSURE CLAMP, HARDENING OF RUBBER

Check clamp (1) visually or with a finger to see if there is any loosed bolt, or the rubber portion is hardened. If any such abnormality is found, call on your Komatsu distributor for repairs or replacement.

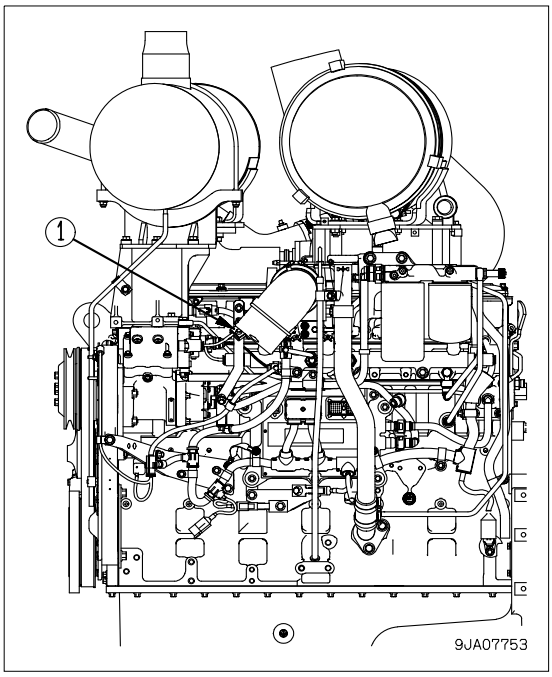

NOTICE

If the engine continues to be used when there are loose bolts, hardened rubber, or missing parts, there is danger of damage or breakage occurring due to vibration and wear at the connections of high-pressure piping. Always check that the proper high-pressure piping clamps are correctly installed.

https://truckmanualshub.com/

CHECKING FOR MISSING FUEL SPRAY PREVENTION CAP, HARDENING OF RUBBER

Check fuel spray prevention caps (1) through (14) visually or with a finger to see if any of them has slipped off, or the rubber portion is hardened. If any such abnormality is found, call on your Komatsu distributor for repairs or replacement. Fuel spray prevention caps (1) through (14) are a protective part that serves to prevent leaked fuel from splashing over highly heated portions of the engine, causing fire as a result.

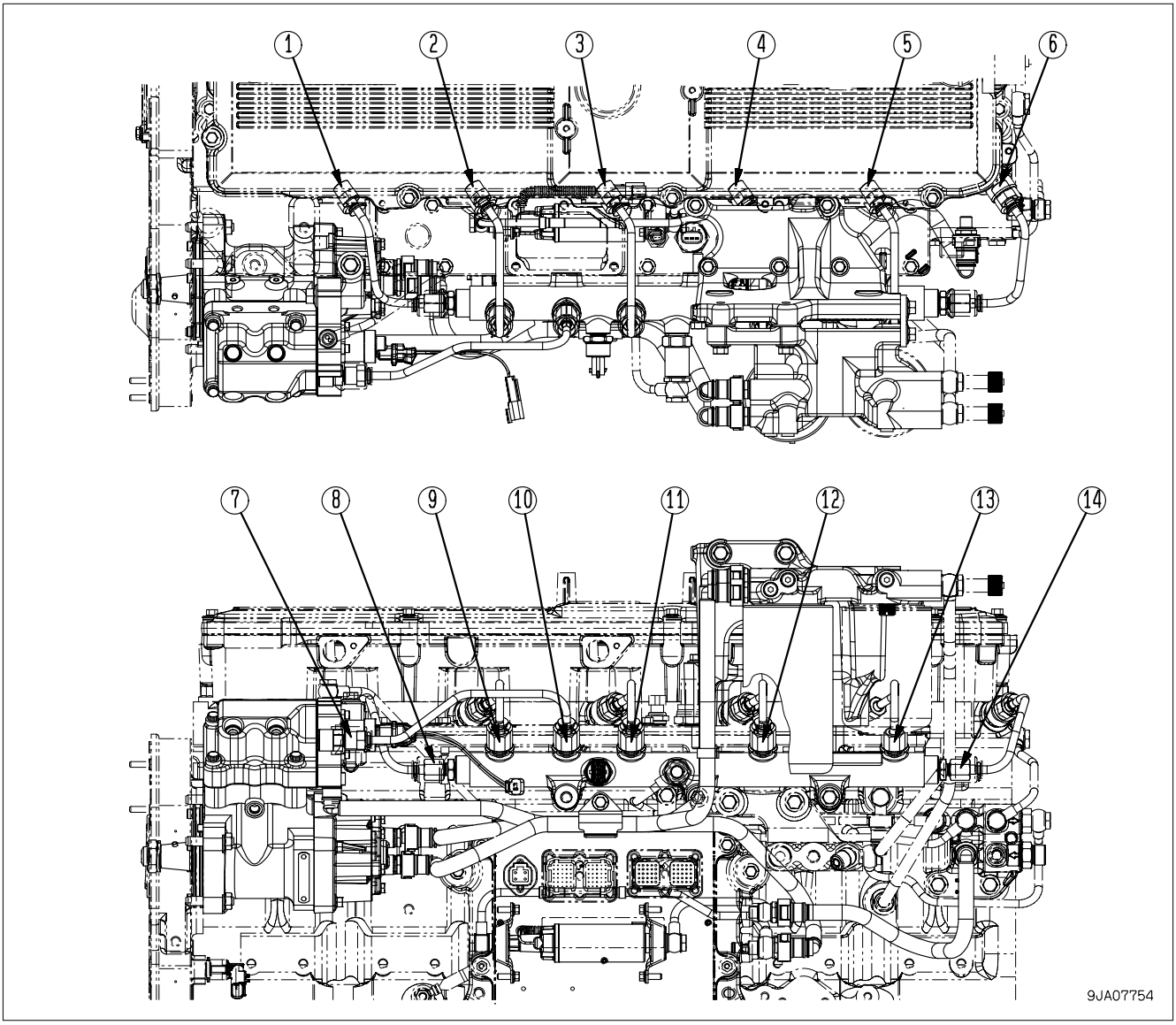

https://truckmanualshub.com/

EVERY 8000 HOURS SERVICE

Maintenance for every 50, 250, 500, 1000, 2000 and 4000 hours service should be carried out at the same time.

REPLACE HIGH-PRESSURE PIPING CLAMP

Contact your Komatsu distributor to have the engine high-pressure clamps replaced.

REPLACE FUEL SPLAY PREVENTION CAPS

Contact your Komatsu distributor to have the fuel spray prevention cap replaced.

https://truckmanualshub.com/

SPECIFICATIONS

https://truckmanualshub.com/

SPECIFICATIONS

D65EX and D65WX: Semi-U dozer with ROPS guard, cab and air conditioner

D65PX: Power tilt-dozer with ROPS guard, cab and air conditioner

	Item		Unit	D65EX-15	D65PX-15	D65WX-15
	Machine weight		kg	20,280	21,000	21,140
	Name of engine		-	Komatsu SAA6D114E-3 diesel engine		
	Engine horsepower (ISO9249)		kw{HP}/rpm	153{205}/1,950		
A	Overall length		mm	5,440	5,520	5,440
B	Overall height		mm	3,220	3,220	3,220
C	Overall width		mm	3,460	3,970	3,640
	Travel speed (1st/2nd/3rd)	Forward	km/h	3.3/6.3/10.1		
		Reverse	km/h	4.4/8.2/12.9		

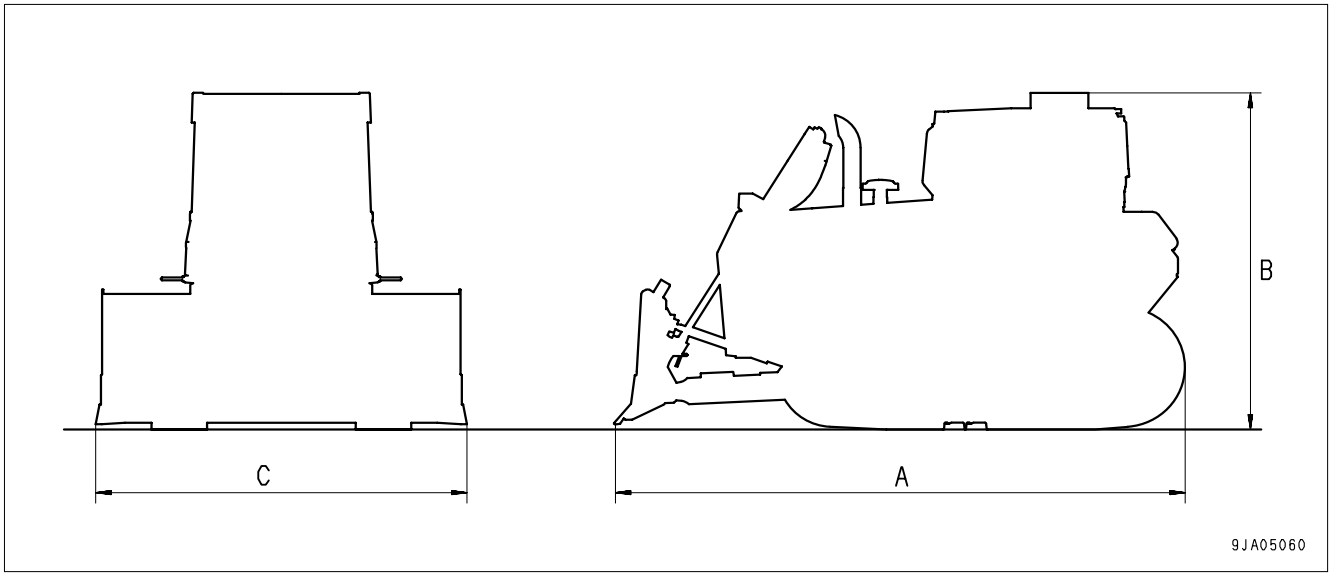

https://truckmanualshub.com/

ATTACHMENTS, OPTIONS

⚠ WARNING

Please read and make sure that you understand the safety section before reading this section.

https://truckmanualshub.com/

GENERAL PRECAUTIONS

PRECAUTIONS RELATED TO SAFETY

If attachments or options other than those authorized by Komatsu are installed, this will not only affect the life of the machine, but will also cause problems with safety.

When installing attachments not listed in this Operation and Maintenance Manual, contact your Komatsu distributor first.

If you do not contact Komatsu, we cannot accept any responsibility for any accidents or failures.

⚠ WARNING

General precautions
Read the instruction manual for the attachment carefully, and do not use the machine before you understand the operation method completely.
If you lose the instruction manual, be sure to order another copy from your Komatsu distributor.
To prevent serious personal injury caused by misoperation, place your foot on the pedal only when operating the pedal.
Precautions for removal and installation
When removing or installing an attachment, observe the following items and work safely.
Select a firm, level surface when installing or removing an attachment.
When working in cooperation with one or more other workers, decide signs and observe them when carrying out the operation.
When carrying a heavy part (25 kg or more), use a crane.
When removing a heavy part, always place a support in position before removing it.
When lifting a load with a crane, be particularly careful of the center of gravity.
It is dangerous to carry out operations when the load has been raised by a crane. Always lower the load onto a stand and check that it is safe.
When leaving an attachment removed or installing it, place it in a stable position to prevent it from falling over.
Never go under a load raised by a crane.
Always stand in a place which is safe even if the load should fall.

NOTICE
Qualifications are required to operate a crane. Never allow the crane to be operated by an unqualified person.
For details of removal and installation operations, contact your Komatsu distributor.

https://truckmanualshub.com/

HANDLING HYDRAULIC RIPPER

- This hydraulic ripper is for D65EX and D65WX dozers.

GENERAL VIEW

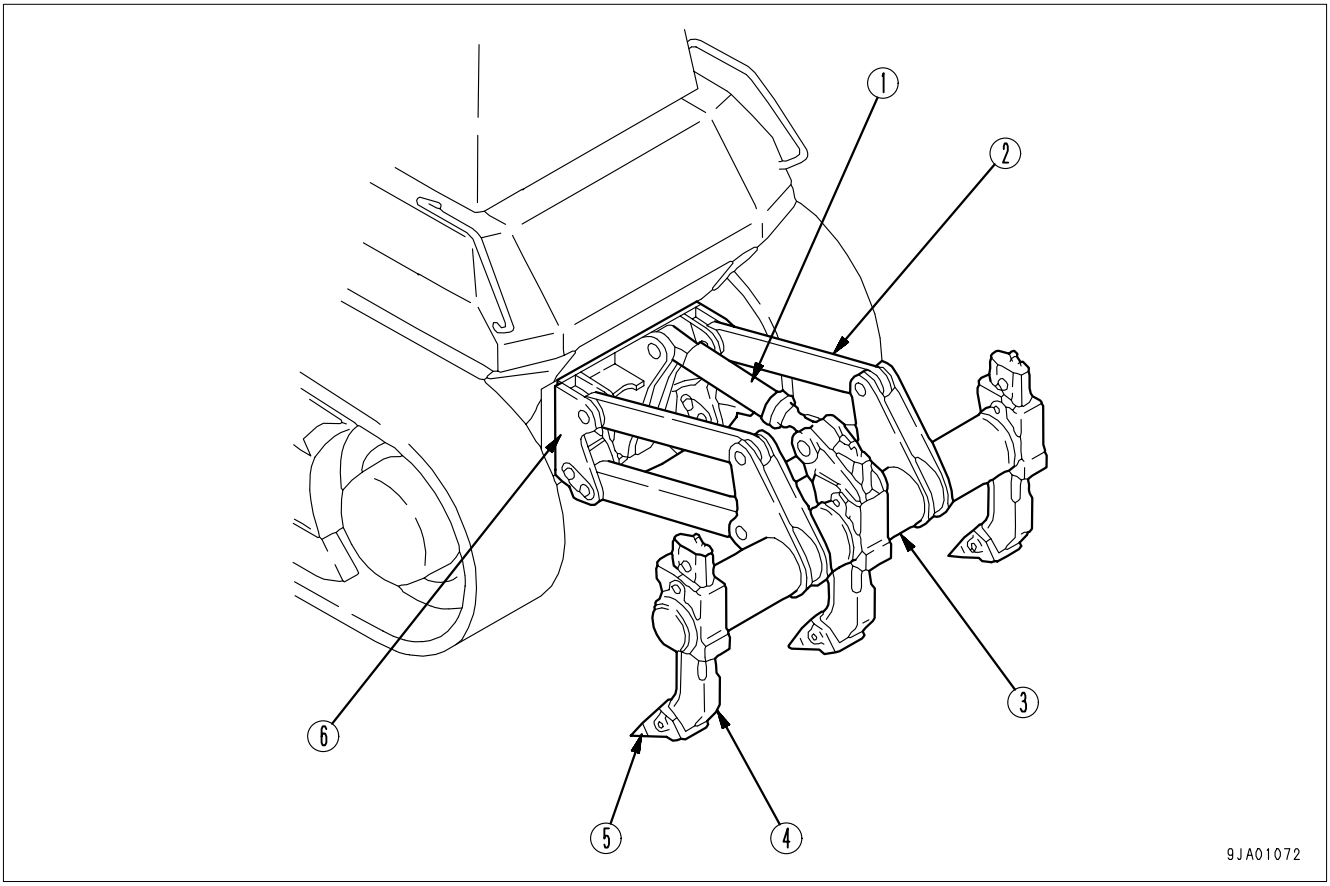

(1) Hydraulic cylider
(2) Link
(3) Beam
(4) Shank
(5) Point
(6) Support

https://truckmanualshub.com/

EXPLANATION OF COMPONENTS

RIPPER CONTROL LEVER

WARNING

When carrying out inspection or maintenance of the machine, or when parking the machine, lower the ripper to the ground and set the work equipment lock lever to the LOCK position.

This lever is used to operate the ripper.

(A) RAISE: Ripper goes up

(B) HOLD: Ripper is stopped and held in the same position.

(C) LOWER: Ripper goes down

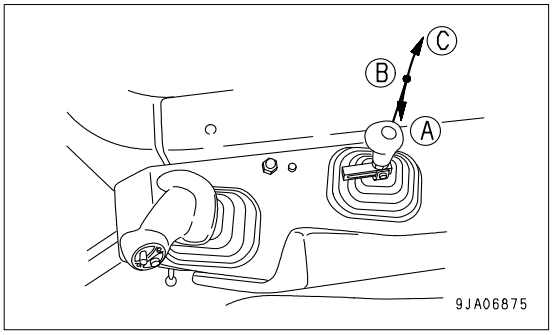

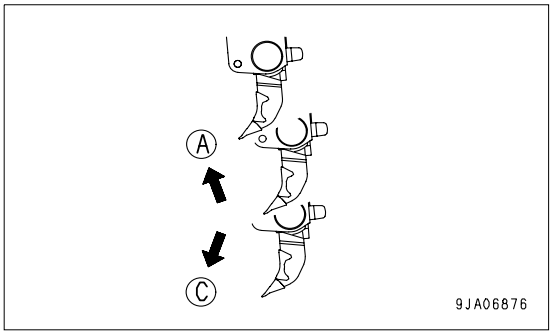

REMARK
If the work equipment lock lever is set to LOCK position (L), the operation of the ripper is locked.
For details of the operation of the work equipment lock lever, see “WORK EQUIPMENT LOCK LEVER (3-33)“.

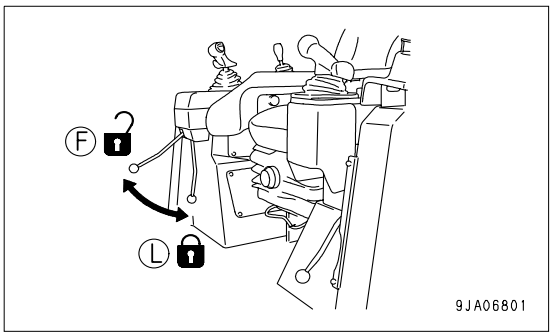

https://truckmanualshub.com/

OPERATION

CHECK BEFORE STARTING ENGINE, ADJUST

WALK-AROUND CHECK

1. Check for wear of the point at the tip of the shank, check the mounting condition, and check for damage to the rivets. If any problem is found, replace or repair.

PRECAUTIONS WHEN OPERATING

- Travel in low speed and lower the ripper gradually when starting to move the machine off. When the optimum digging depth is reached, move the control lever to the HOLD position.

  Do not dig the shank in deep when starting digging operations.
- During ripping operations, never turn the machine suddenly or travel in reverse. When turning the machine suddenly or traveling in reverse, raise the shank from the ground surface.
- When carrying out digging operations with only one shank, always use the center shank. Remove both side shanks.
- When starting to travel up a steep slope or when reaching the bottom of the slope, the point may touch the ground. On hard ground, there is danger of the point breaking if it touches the ground, so raise the shank to the maximum height.

ADJUSTING POSTURE OF WORK EQUIPMENT

ADJUSTMENT OF DIGGING DEPTH

There are mounting holes for the pin in the shank. Select the mounting hole to match the digging depth.

Pin hole position	Use	Max. digging depth
(A)	When there is special need to dig deeply	595 mm
(B)	Normal	485 mm
(C)	When not using ripper	-

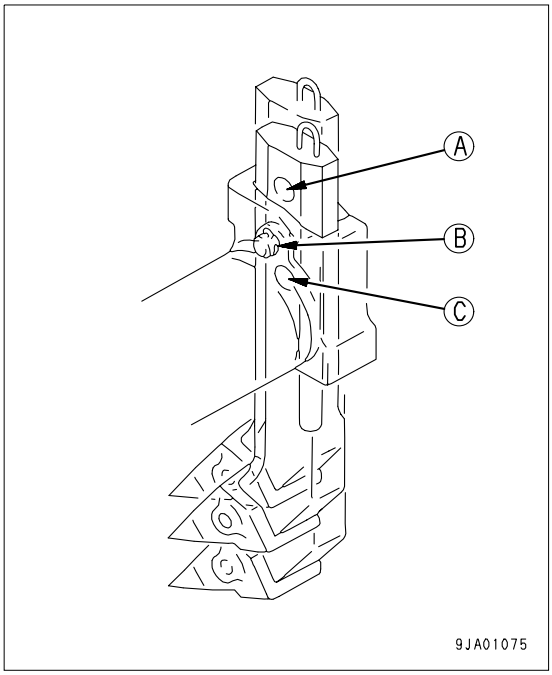

https://truckmanualshub.com/

When changing the digging depth, do as follows.

1. Remove cotter pin (1).
2. Remove pin (2), change the position of the shank hole, then insert pin (2).
3. Insert cotter pin (1).

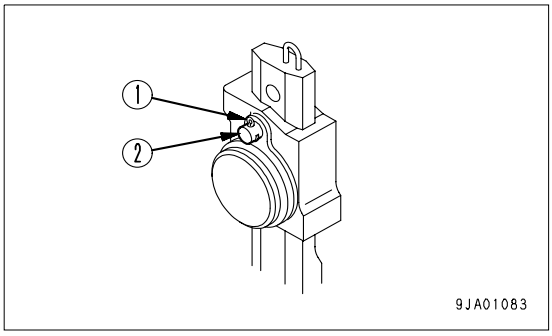

ADJUSTING DIGGING ANGLE

Adjust the position of the mounting pin hole in the beam and upper link.

- Digging angle

  Position (1): 45°

  Position (2): 55°

The pin is locked with lock plate (3).

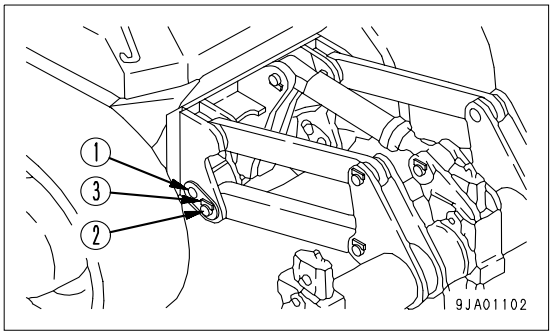

REPLACEMENT OF POINT

A point is installed to protect the shank. If the point is worn, replace it as follows.

1. Put a pin remover in contact with the pin marked by the arrow and tap with a hammer to remove.
2. Replace the point.
3. Insert the pin half way, then knock it in fully with a hammer.

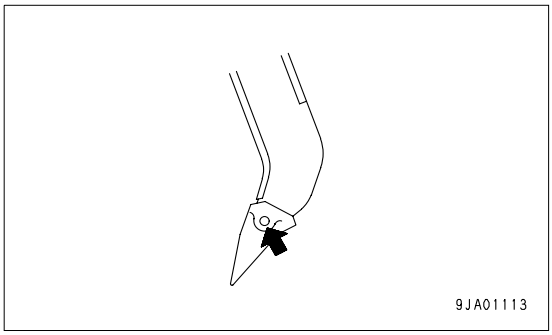

https://truckmanualshub.com/

TROUBLESHOOTING

OTHER TROUBLE

- ( ): Always contact your Komatsu distributor when dealing with these items.
- In cases of problems or causes which are not listed below, contact your Komatsu distributor for repairs.

Problem	Main causes	Remedy
Slow ripper raising and function, lack of ripping force	•Improper hydraulic oil •Defective pump •Defective adjustment of relief valve •Defective control valve, safety valve •Defective valve spool •Defective piston ring, packing, valve •Clogging inside piping	•Add oil to specified level, see EVERY 250 HOURS SERVICE (•Check, repair) (•Check, repair) (•Check, repair) (•Check, repair) (•Check, repair)
Cylinder lacks holding power	•Leakage of oil from piping, hose •Defective piston ring, packing •Defective piston valve •Defective valve spool •Defective safety valve, suction valve	•Tighten (•Replace) (•Check, repair) (•Check, repair) (•Check, repair)
Oil pressure does not rise	•Clogging inside piping •Defective adjustment of relief valve	(•Repair) (•Check, adjust)

MAINTENANCE

EVERY 250 HOURS SERVICE

LUBRICATING

1. Lower the ripper to the ground and stop the engine.
2. Using a grease pump, pump in grease through the grease fittings shown by arrows.
3. After greasing, wipe off any old grease that was pushed out.

https://truckmanualshub.com/

(1) Ripper cylinder foot pin (1 place)

(2) Ripper cylinder rod end pin (1 place)

(3) Link pin (8 places)

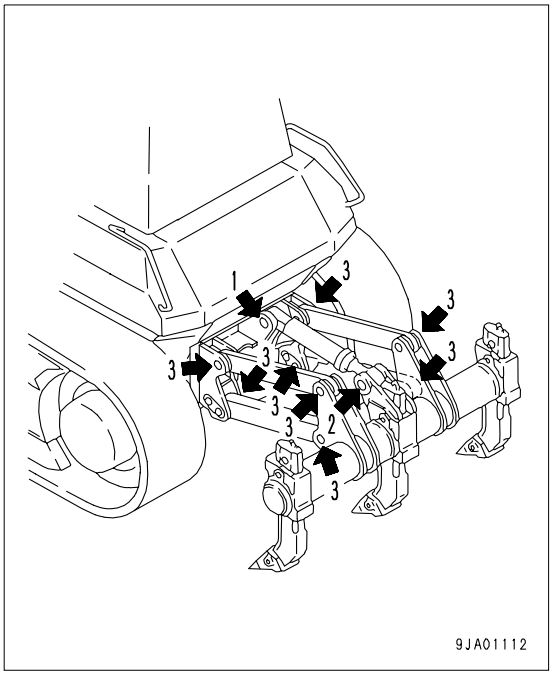

CHECK OIL LEVEL IN HYDRAULIC TANK, ADD OIL

1. Stop the machine on level ground.

   Set the blade perpendicular and lower it the ground, lower the ripper to the ground, then stop the engine.

2. For details of checking the oil level in the hydraulic tank, see “CHECK OIL LEVEL IN HYDRAULIC TANK, ADD OIL (4-47)“.

SPECIFICATIONS

D65EX: Power tilt-dozer with ROPS guard, cab and air conditioner

D65WX: Semi-U dozer with ROPS guard, cab and air conditioner

	Item	Unit	D65EX-15	D65WX-15
	Operating weight (not including operator)	kg	21,400	22,820
	Weight of ripper as individual part	kg	1,610	1,610
A	Overall length	mm	6,480	6,665
	No. of shanks		3	3

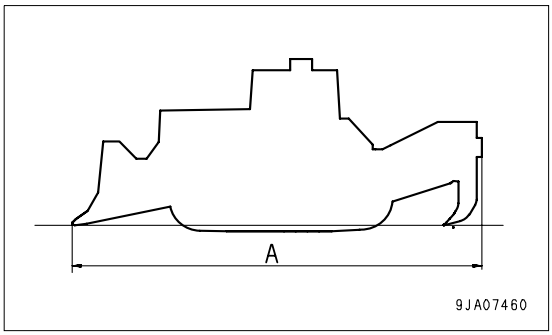

https://truckmanualshub.com/

AIR SUSPENSION SEAT

ADJUSTMENT

WARNING

When adjusting the position of the operator's seat, always set the work equipment lock lever to the LOCK position to prevent any accidental contact with the control levers.

- Always adjust the operator's seat before starting each operation or when the operators change shift.
- When adjusting the seat, put your back against the backrest and adjust to a position where the brake pedal can be fully depressed.

NOTICE
There is danger of damage to the air compressor, so do not keep lever (3) operated continuously for more than 1 minute.

Adjustments (C), (D), and (I) use the air compressor built into the seat, so turn the engine starting switch to the ON position when carrying out the adjustment.

(A) Fore-and-aft adjustment

Pull lever (1), set the seat to a position where it is easy to operate, then release the lever.

Fore-aft adjustment: 170 mm (17 stages)

(B) Adjusting seat angle

Move lever (2) up, move the seat cushion at the front up or down to set to the desired position, then release the lever.

Amount of adjustment

Forward tilt: 3 degrees

Rear tilt: 11 degrees

(C) Setting seat for operator's weight

To protect the operator, it is necessary to adjust the suspension to match the weight of the operator.

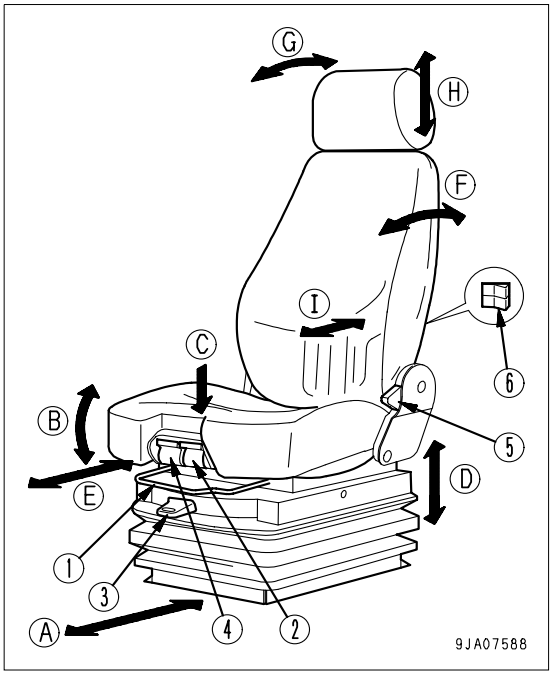

Pull lever (3) up fully (pull it until a click can be felt). When the lever is released, the weight adjustment is carried out automatically. To ensure that the weight adjustment is carried out correctly, the operator should sit in the normal operating position when operating the lever. If the operator raises his body from the seat or changes the amount of weight applied to the seat during adjustment, the air in the suspension may be discharged.

If lever (3) is pulled lightly, the weight adjustment starts, but always pull the lever up fully (pull it until a click is felt) before releasing it.

When operators change shifts, first release the air, then carry out the above operation.

https://truckmanualshub.com/

If the operator raises his body from the seat or changes the amount of weight applied to the seat during adjustment, the air in the suspension may be discharged.

Amount of adjustment: 80 mm

After the automatic weight adjustment is carried out, the seat height is at the lowest point in the adjustment range. Adjust the seat to the appropriate height.

(D) Seat height adjustment

The seat height adjustment uses an air system, and it can be adjusted steplessly.

When adjusting the height, pull lever (3) up fully or push it down fully (when pulling it up, pull it until a click is felt). When the seat is set at the desired height, release the lever. If the lever is kept pulled up, the position where the seat does not rise any further is the maximum height. When the seat reaches the maximum height, the suspension automatically goes down slightly to secure the amount of movement of the lever.

To prevent the suspension from reaching the bottom, do not set to the seat height below the adjustment range.

(E) Fore-and-aft adjustment of seat cushion

Operate lever (4) up, set the seat cushion to the desired position, then release the lever.

Fore-and-aft adjustment: 60 mm

(F) Adjusting reclining angle

Move lever (5) up and move the backrest to the front or rear.

Push your back against the backrest when carrying out this adjustment. If your back is not pressing against the backrest, the backrest may suddenly spring forward.

Amount of adjustment

Forward tilt: 20 degrees (over 20 degrees is free)

Rear tilt: 60 degrees

REMARK
The seat can be reclined more when the seat is pushed to the front. The amount of reclining decreases as the seat is pushed back, so when moving the seat back, return the seatback to the upright position.

NOTICE
If the seat back is reclined too far, the seat back may hit the rear glass, so use it in a position where it does not contact the glass.

(G) Adjusting headrest angle

Rotate the backrest to the front or rear and set to the desired angle.

Amount of adjustment: 38 degrees

https://truckmanualshub.com/

(H) Adjusting headrest height

Move the headrest up or down and set to the desired height.

Amount of adjustment: 100 mm

(I) Lumbar support

Operate switch (6) to give a suitable tension to the lumbar region.

When + is pressed: Tension becomes stronger

When - is pressed: Tension becomes weaker

Adjust the backrest to the desired curve.

https://truckmanualshub.com/

DELUXE SEAT

(Rotating seat)

ADJUSTMENT

⚠ WARNING

When adjusting the position of the operator's seat, always set the work equipment lock lever to the LOCK position to prevent any accidental contact with the control levers.

- Always adjust the operator's seat before starting each operation or when the operators change shift.
- When adjusting the seat, put your back against the backrest and adjust to a position where the brake pedal can be fully depressed.

(A) Fore-and-aft adjustment

Pull lever (1), set the seat to a position where it is easy to operate, then release the lever.

Fore-aft adjustment: 200 mm (10 stages)

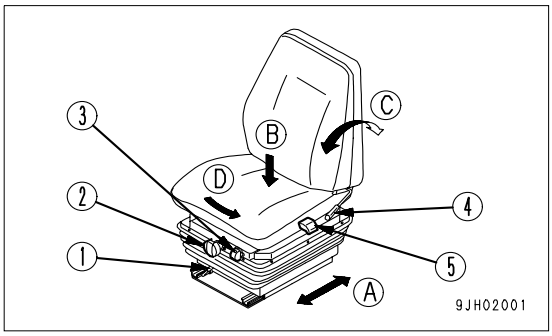

(B) Weight and height adjustment of seat

- Turn knob (2) under the seat so that weight adjustment indicator (3) displays the green range. The height can be adjusted by turning the knob (2) while the green range is displayed.
- Turn the knob clockwise to raise the seat and turn the knob counterclockwise to lower the seat.

Height adjustment range: stepless, 75 mm

Weight adjustment range: 50 to 130 kg

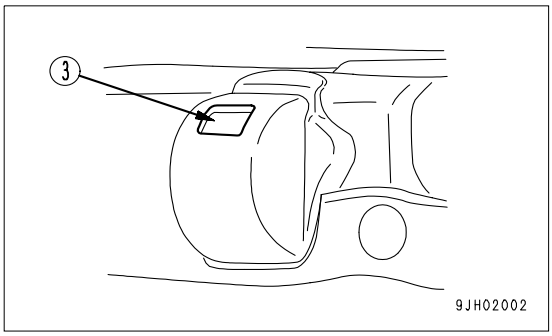

(C) Adjust reclining angle

REMARK
When the seat is pushed forward, the available reclining angle becomes greater; when the seat is pushed back, the available reclining angle becomes smaller. When moving the backrest, return the backrest to its original position before moving the seat.

Pull up lever (4), set the seatback to a position where it is easy to operate, then release the lever.

https://truckmanualshub.com/

(D) Adjusting direction of seat

NOTICE
Depending on the position of the seat, when changing the direction of the seat, it may contact the console or other parts.
Be extremely careful.

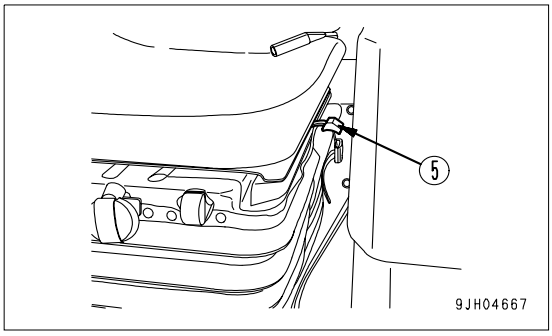

Pull up lever (5) to unlock the seat. The seat can then be turned 15° to the right.

After changing the direction of the seat, return the lever securely to lock the seat.

- Change the direction of the seat to the right for the ease of operation of the ripper.

https://truckmanualshub.com/

HEADREST

Removal of headrest

Pull up the headrest.

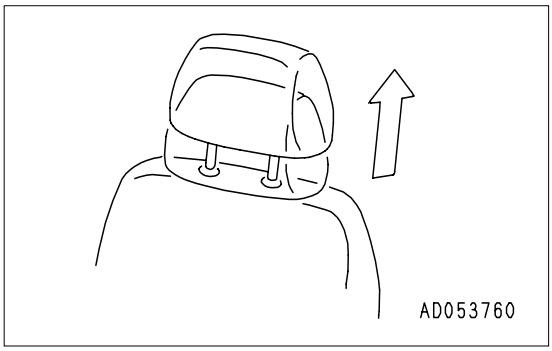

REMARK
The headrest cannot be fixed to halfway.

https://truckmanualshub.com/

EQUIPPING FIRE EXTINGUISHER AND FIRST-AID KIT

Equipping the fire extinguisher and the first-aid kit at the illustrated position needs brackets (if equipped).

The fire extinguisher and the first-aid kit can be installed to the positions shown in the following illustration.

(1) First Aid Kit

(2) Fire Extinguisher

For information on parts which are required to install these items on the machine, call your Komatsu distributor.

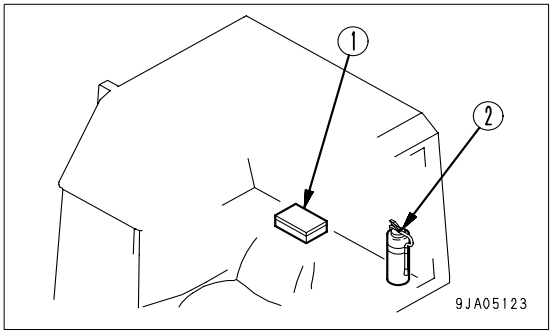

https://truckmanualshub.com/

https://truckmanualshub.com/

INDEX

https://truckmanualshub.com/

https://truckmanualshub.com/

INDEX

<A>

ADJUSTING POSTURE OF WORK EQUIPMENT..3-90
AIR CONDITIONER, HANDLING 3-48
GENERAL LOCATIONS AND FUNCTION OF CONTROL PANEL 3-48
METHOD OF OPERATION.....3-50
PRECAUTIONS WHEN USING 3-51
AIR SUSPENSION SEAT 6-9
ASHTRAY 3-46

<B>

BEFORE READING THIS MANUAL.....1-2
BETWEEN FORWARD AND REVERSE.....3-83

<C>

CAR STEREO, HANDLING 3-48
CHECK AFTER FINISHING WORK 3-95
CHECK BEFORE STARTING ENGINE, ADJUST...3-53
CIRCUIT BREAKER 3-41
COLD WEATHER OPERATION.....3-108
AFTER COLD WEATHER.....3-109
AFTER COMPLETION OF WORK.....3-109
PRECAUTIONS FOR LOW TEMPER.....3-108
CONTROL LEVERS AND PEDALS.....3-33
CUP HOLDER.....3-47

<D>

DELUXE SEAT 6-12
DOOR - OPEN LOCK 3-44
DOOR POCKET.....3-45

<E>

ELECTRIC POWER TAKE-OUT ADAPTER.....3-43
EQUIPPING FIRE EXTINGUISHER AND FIRST-AID KIT 6-15
EXPLANATION OF COMPONENTS 3-6

<F>

FRONT PANEL.....3-6
FUSE.....3-41
FUSIBLE LINK 3-43

<G>

GENERAL PRECAUTIONS.....6-2
PRECAUTIONS RELATED TO SAFETY 6-2
GENERAL VIEW.....3-2
GENERAL VIEW OF CO 3-3
GENERAL VIEW OF MACHINE 3-2
GUIDE TO MAINTENANCE 4-2

<H>

HANDLING HYDRAULIC RIPPER..... 6-3
EXPLANATION OF COMPONENTS 6-4
GENERAL VIEW..... 6-3
MAINTENANCE..... 6-7
OPERATION..... 6-5
SPECIFICATIONS 6-8
TROUBLESHOOTING..... 6-7
HANDLING HYDRAULIC SYSTEM..... 4-9
HANDLING OIL, FUEL, COOLANT, AND PERFORMING OIL CLINIC 4-5
HEADREST 6-14

<I>

IMPORTANT SAFETY INFORMATION 1-4,2-2
INTENDED USE..... 1-8
BREAKING-IN THE NEW MACHINE..... 1-10
GENERAL VIEW AND DIRECTIONS OF MACHINE..... 1-8
USE OF MACHINE 1-8
VISIBILITY FROM OPERATORSSEAT' 1-9

<L>

LIFTING MACHINE 3-105
LOADING, UNLOADING WORK..... 3-102
LOCATION OF PLATES, TABLE TO ENTER SERIAL NO. AND DISTRIBUTOR..... 1-11
ADDITIONAL EPA NAMEPLATE..... 1-12
ENGINE SERIAL NO. PLATE POSITION..... 1-11
PRODUCT IDENTIFICATION NUMBER (PIN)/ MACHINE SERIAL NO. PLATE..... 1-11
SERVICE METER POSITION..... 1-12
TABLE TO ENTER SERIAL NO. AND DISTRIBUTOR..... 1-13
LOCKING..... 3-96
LONG-TERM STORAGE..... 3-110
AFTER STORAGE..... 3-110
BEFORE STORAGE..... 3-110
DURING STORAGE 3-110

<M>

MACHINE OPERATION 3-77
MAINTENANCE SCHEDULE CHART..... 4-19
MAINTENANCE SCHEDULE CHART 4-19

<O>

OPENING AND CLOSING ENGINE SIDE COVER 3-46
OPERATION..... 3-53

https://truckmanualshub.com/

OPERATIONS AND CHECKS AFTER STARTING ENGINE 3-73
OUTLINE OF SERVICE 4-5

<P>
PARKING MACHINE 3-94
PERIODIC REPLACEMENT OF SAFETY CRITICAL PARTS 4-17
PRECAUTIONS COMMON TO OPERATION AND MAINTENANCE 2-10
PRECAUTIONS DURING OPERATION 2-17
PRECAUTIONS FOR MACHINE 2-29
PRECAUTIONS FOR MAINTENANCE 2-23
PRECAUTIONS FOR OPERATION 3-86
PRECAUTIONS WHEN REMOVING ROPS 3-101
PRECAUTIONS WHEN REMOVING WORK EQUIPMENT 3-100

<R>
RECOMMENDED FUEL, COOLANT, AND LUBRICANT 4-12
RECOMMENDED BRANDS, RECOMMENDED QUALITY FOR PRODUCTS OTHER THAN KOMATSU GENUINE OIL 4-15
USE OF FUEL, COOLANT AND LUBRICANTS ACCORDING TO AMBIENT TEMPERATURE 4-13
RELATING TO ELECTRIC SYSTEM 4-8
REMOVING CAB 3-100

<S>
SAFETY CRITICAL PARTS 4-17
SAFETY LABELS 2-4
POSITION FOR ATTACHING SAFETY LABELS 2-5
SAFETY LABELS 2-5
SASH GLASS INTERMEDIATE LOCK 3-45
SERVICE PROCEDURE 4-21
CHECK BEFORE STARTING 4-43
EVERY 1000 HOURS SERVICE 4-57
EVERY 2000 HOURS SERVICE 4-65
EVERY 250 HOURS SERVICE 4-44
EVERY 4000 HOURS SERVICE 4-71
EVERY 50 HOURS SERVICE 4-43
EVERY 500 HOURS SERVICE 4-52
EVERY 8000 HOURS SERVICE 4-74
WHEN REQUIRED 4-21
SHIFTING GEARS 3-79
SHOVEL HOLDER 3-47
SPECIFICATIONS 5-2
STANDARD TIGHTENING TORQUES FOR BOLTS AND NUTS 4-16
STARTING ENGINE 3-68
STEERING MACHINE 3-85
STOPPING ENGINE 3-75
SWITCHES 3-29

<T>
TIPS FOR LONGER UND 3-96
TOOL BOX 3-47
TORQUE LIST 4-16
TRANSPORTATION 3-100
TRANSPORTATION MEANS 3-100
TRAVELING ON ROADS 3-107
TROUBLESHOOTING 3-111
AFTER RUNNING OUT OF FUEL 3-111
IF BATTERY IS DISCHARGED 3-113
METHOD OF TOWING MACHINE 3-112
OTHER TROUBLE 3-117

<V>
Vibration levels 1-5

<W>
WEAR PART LIST 4-10
WEAR PARTS LIST 4-10
WORK POSSIBLE USING BULLDOZER 3-88

https://truckmanualshub.com/

COLOPHON

https://truckmanualshub.com/

D65EX-15, D65PX-15, D65WX-15 GALEO BULLDOZER
Form No. EEAM024400

© 2006 KOMATSU
All Rights Reserved
Printed in Belgium 01-06