https://truckmanualshub.com/

4304579-Rev A

JACOBSEN
A Textron Company

Engine Parts Manual

Kubota Diesel Engine

D1105-E4B-TXRN-1 – Jacobsen SLF 1880
D1105-E4B-TXRN-2 – Cushman Truckster / Haulster / Spraytek
D1105-E4B-TXN-3 – Jacobsen LF510 / Turfcat

WARNING

Warning: If incorrectly used, this machine can cause severe injury. Those who use and maintain this machine should be trained in its proper use, warned of its dangers, and must read the entire manual before attempting to set up, operate, adjust, or service the machine.

GB

https://truckmanualshub.com/

FOREWORD

This manual contains a parts list for your Kubota Engine.

The Engine Serial Number for the Kubota engine is on a plate located on the valve cover.

Record the Engine Serial Number below for easy reference.

Engine Serial Number: _____

If additional information is needed, contact your Jacobsen Dealer.

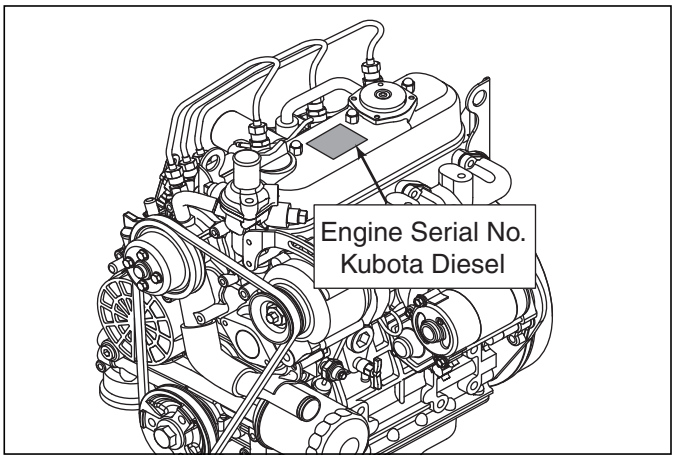

Suggested Stocking Guide

To Keep your Equipment fully operational and productive, Jacobsen suggests you maintain a stock of the more commonly used maintenance items. We have included part numbers for additional support materials and training aids.

To order any of the following material:

1. Write your full name and complete address on your order form.
2. Explain where and how to make shipment:
   - ❑ UPS
   - ❑ Regular Mail
   - ❑ Overnight
   - ❑ 2nd Day
3. Order by the quantity desired, the part number, and the description of the part.
4. Send or bring the order to your authorized Jacobsen Dealer.

Service Parts

Qty.	Part No.	Description	Qty.	Part No.	Description
	4183636	Upper Gasket Kit		4183637	Lower Gasket Kit
	4177262	Oil Filter Cartridge (Engines A C)		4113986	Oil Filter Cartridge (Engine B)
	550489	Fuel Filter Element (Engines A B C)		5001284	V-Belt (Engines A C)

Proposition 65 Warning

This product contains or emits chemicals known to State of California to cause cancer and birth defects or other reproductive harm.

© 2014, Jacobsen, a Textron Company/Textron Innovations Inc.
"All rights reserved, including the right to reproduce this material or portions thereof in any form."

LITHO IN U.S.A. 2-2015

https://truckmanualshub.com/

Table of Contents

1.1 ..... Gasket Kits 4
2.1 ..... Crankcase 6
3.1 ..... Oil Pan 8
4.1 ..... Dipstick and Guide 10
5.1 ..... Cylinder Head 12
6.1 ..... Valve and Rocker Arm 14
7.1 ..... Manifolds 16
8.1 ..... Head Cover 18
9.1 ..... Gear Case 20
10.1 ..... Gear Case 22
11.1 ..... Main Bearing Case 24
12.1 ..... Pistons and Crankshaft 26
13.1 ..... Flywheel and Starter 28
14.1 ..... Starter 30
15.1 ..... Camshaft 32
16.1 ..... Fuel Camshaft and Governor Shaft 34
17.1 ..... Idle Apparatus 36
18.1 ..... Injection Pump 38
19.1 ..... Governor 40
20.1 ..... Speed Control Plate 42
21.1 ..... Nozzle Holder and Glow Plug 44
22.1 ..... Nozzle Holder 46
23.1 ..... Alternator and Pulleys 48
24.1 ..... Alternator 50
25.1 ..... Water Flange and Pump 52
26.1 ..... Fuel Filter and Pump 54
27.1 ..... Miscellaneous 56

https://truckmanualshub.com/

1.1 Gasket Kits

Serial No. All

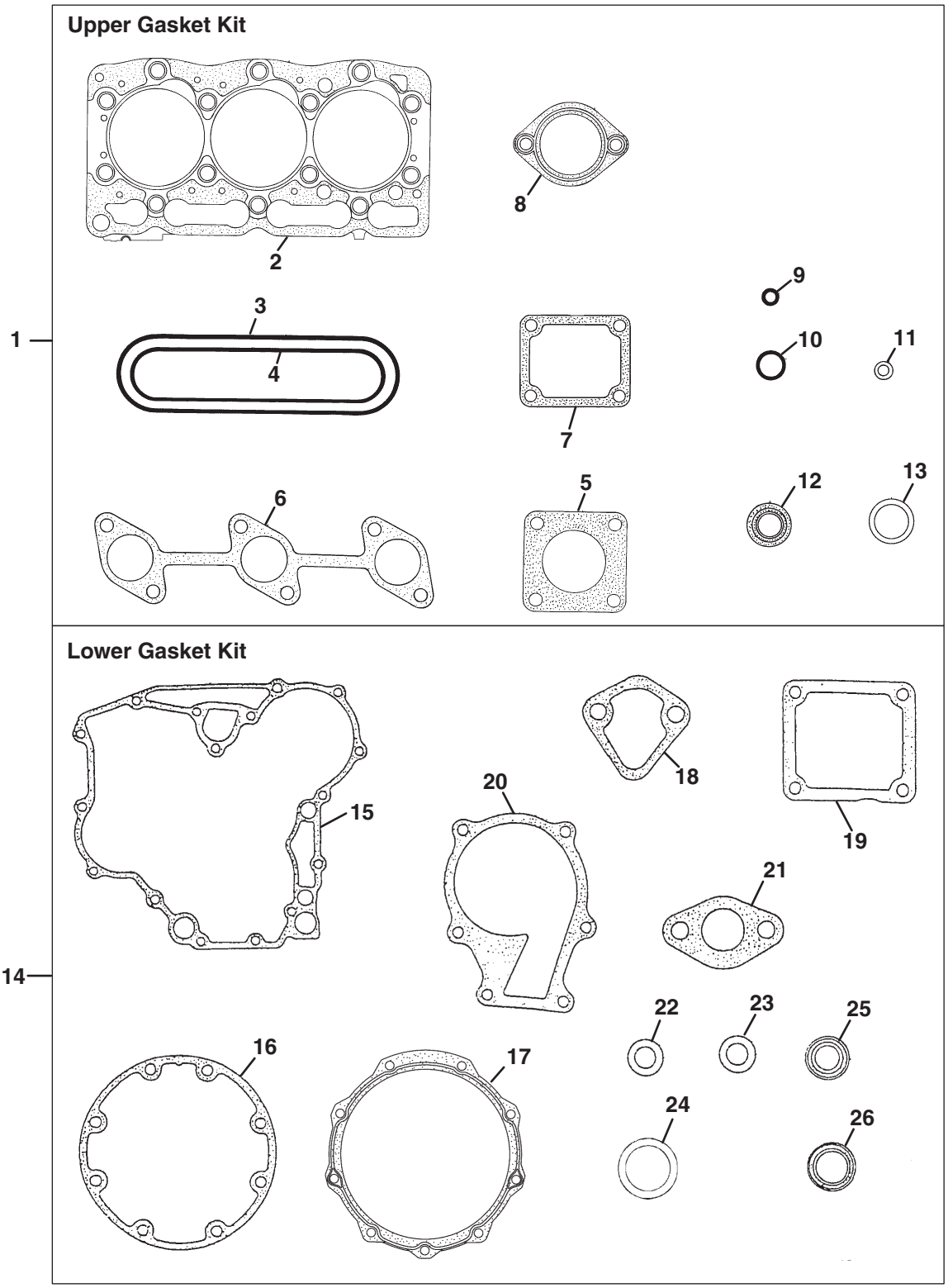

https://truckmanualshub.com/

Engine	Item	Part No.	Qty.	Description	Serial Numbers/Notes
●	1	4183636	1	Upper Gasket Kit	
●	2	4183581	1	• Gasket, Cylinder Head	
●	3	2500856	1	• Gasket, Head Cover	
●	4	2500854	1	• Gasket, Intake Manifold	
B	5	553020	1	• Gasket, Muffler NA	
●	6	5001262	1	• Gasket, Exhaust Manifold	
●	7	5001273	1	• Gasket, Water Flange	
●	8	4134370	1	• Gasket, Thermostat	
●	9	557352	3	• Seal, Heat	
●	10	2809955	1	• O Ring, Oil Cap	
●	11	550839	3	• Gasket, Head Cover Nut	
●	12	2500923	6	• Seal, Valve Stem	
●	13	554051	3	• Gasket, Nozzle Holder	
●	14	4183637	1	Lower Gasket Kit	
●	15	5001269	1	• Gasket, Gear Case	
●	16	2500824	1	• Gasket, Bearing Case	
●	17	5001270	1	• Gasket, Bearing Case Cover	
●	18	5001922	1	• Gasket, Fuel Pump Cover	
●	19	5001272	1	• Gasket, Speed Control Plate	
●	20	557867	1	• Gasket, Water Pump	
●	21	2500845	1	• Gasket, Governor	
●	22	553143	6	• Gasket	
●	23	2500811	1	• Oil Plug Gasket	
	24	Not Used	1	• Oil Plug Gasket	
●	25	2500902	1	• Seal, Gear Case Oil	
●	26	2500825	1	• Seal, Rear Crankshaft Oil	
The following parts are not included in the standard Kubota Gasket Kits and will need to be ordered separately.					
AC	5	5003476	1	Gasket, Muffler NA	

A - SLF 1880 (D1105-E4B-TXRN-1)
B - Truckster / Haulster / Spraytek (D1105-E4B-TXRN-2)
C - LF510 / Turfcat (D1105-E4B-TXN-3)
● - Used on All Engines

> Change from previous revision

https://truckmanualshub.com/

2.1 Crankcase

Serial No. All

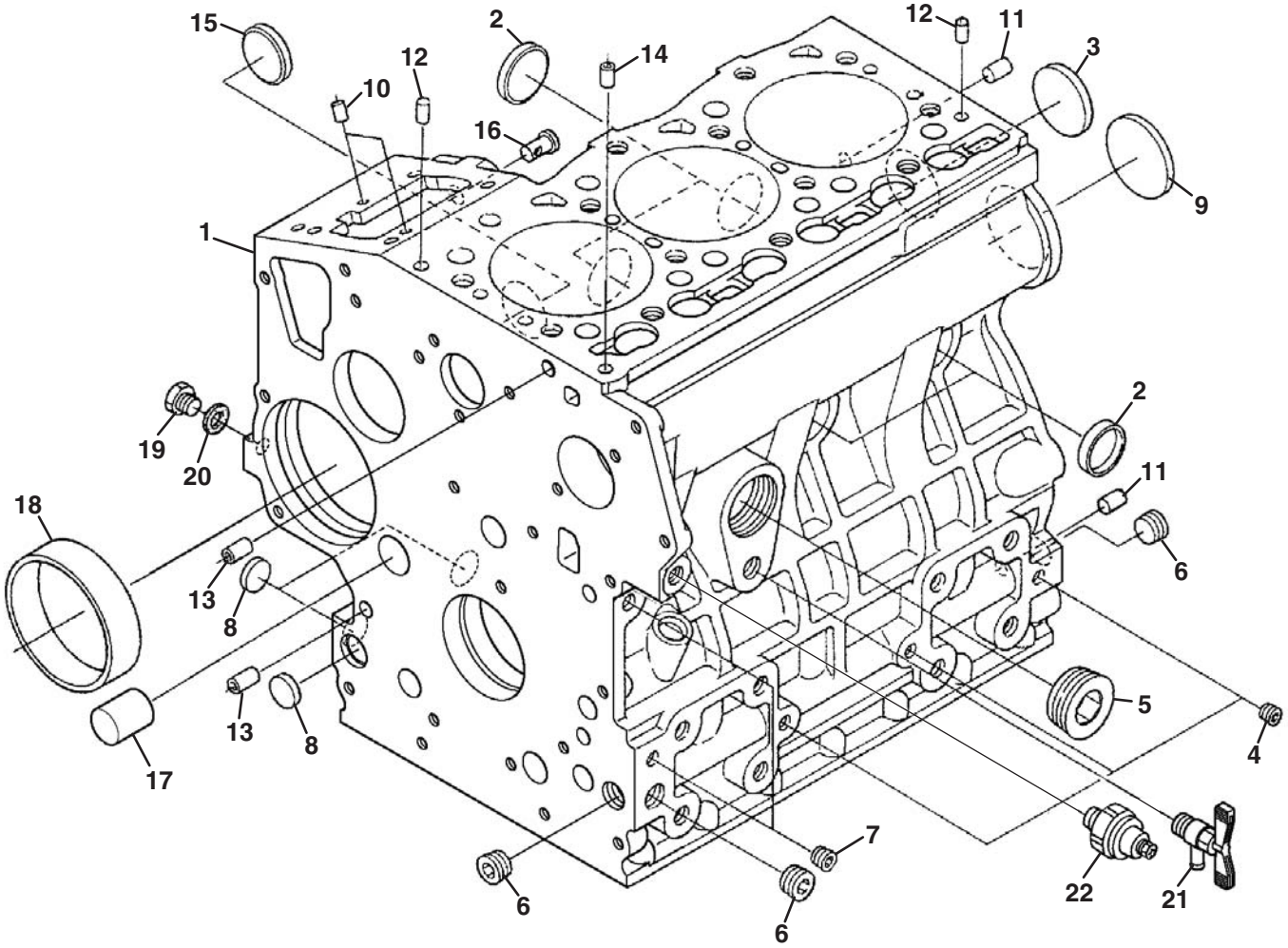

https://truckmanualshub.com/

Engine	Item	Part No.	Qty.	Description	Serial Numbers/Notes
●	1	4145910	1	Comp. Crankcase	
●	2	553911	4	• Plug, Cup Type	
●	3	552977	1	• Plug, Cup Type	
●	4	552978	3	• Plug	
●	5	2500874	1	• Plug	
●	6	2500875	3	• Plug	
●	7	552950	2	• Plug	
●	8	5001308	3	• Plug, Concave	
●	9	2500877	1	• Plug, Concave	
●	10	553857	2	• Pin, Straight	
●	11	550424	2	• Pin, Straight	
●	12	2500878	2	• Pin, Straight	
●	13	550543	2	• Pin, Pipe	
●	14	2500879	1	• Pin, Pipe	
●	15	2500880	1	• Plug, Fuel Camshaft	
●	16	2500881	1	• Pin (Start Spring)	
●	17	2500882	1	• Plug	
●	18	2500883	1	• Bushing(Gear, Governor)	
●	19	4289854	1	• Plug	
●	20	552958	1	• Gasket	
●	21	4306369	1	Assy, Drain Cock	
●	22	554018	1	Switch, Oil	

A - SLF 1880 (D1105-E4B-TXRN-1)
B - Truckster / Haulster / Spraytek (D1105-E4B-TXRN-2)
C - LF510 / Turfcat (D1105-E4B-TXN-3)
● - Used on All Engines

> Change from previous revision

https://truckmanualshub.com/

3.1 Oil Pan

Serial No. All

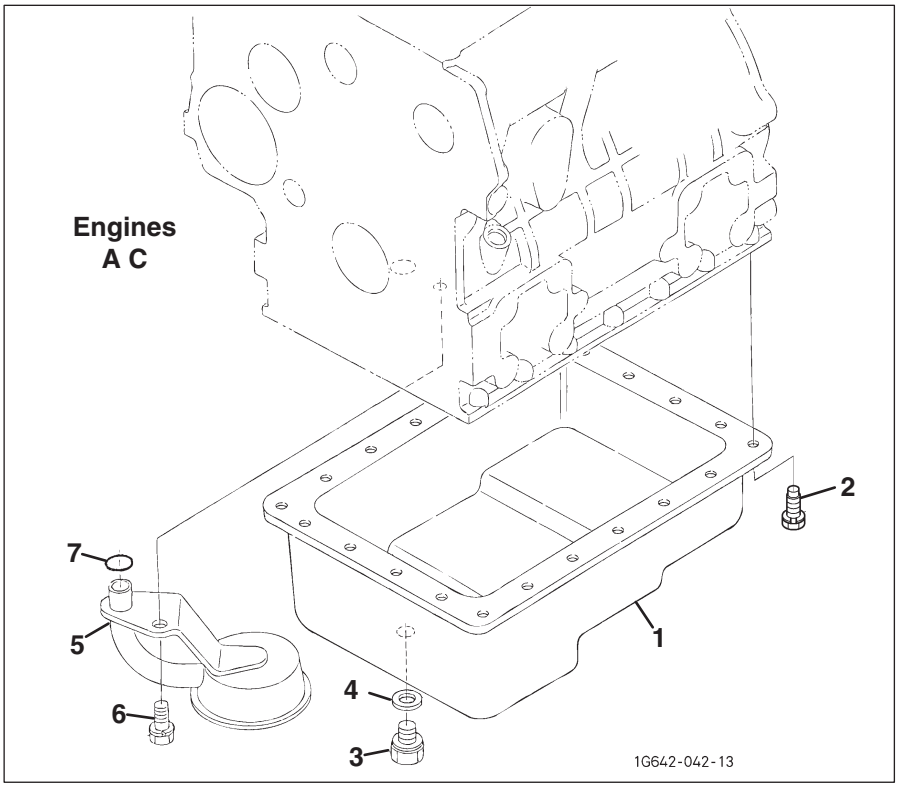

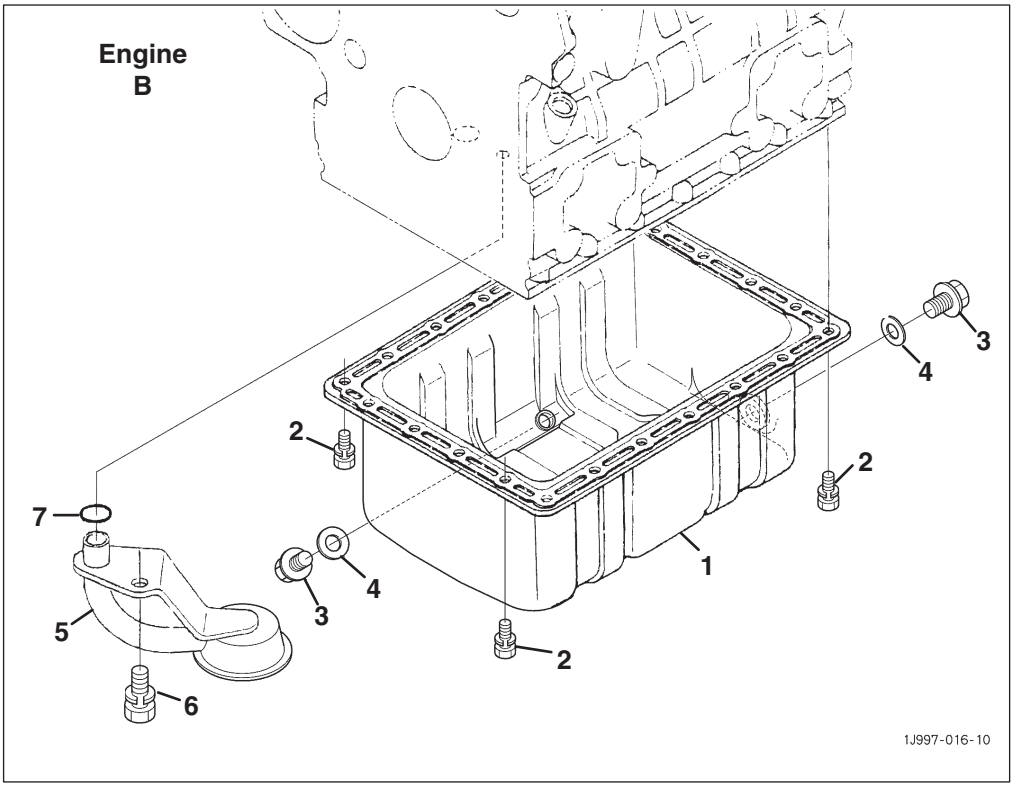

https://truckmanualshub.com/

Engine	Item	Part No.	Qty.	Description	Serial Numbers/Notes
AC	1	2500822	1	Comp. Oil Pan	
B	1	4183605	1	Comp. Oil Pan	
●	2	550361	22	Bolt	
AC	3	4177260	1	Plug, Drain	
B	3	4177260	2	Plug, Drain	
AC	4	2500811	1	Gasket	
B	4	2500811	2	Gasket	
AC	5	5001303	1	Filter, Oil	
B	5	2500859	1	Filter, Oil	
●	6	4289891	1	Bolt	
●	7	553855	1	O Ring	

A - SLF 1880 (D1105-E4B-TXRN-1)
B - Truckster / Haulster / Spraytek (D1105-E4B-TXRN-2)
C - LF510 / Turfcat (D1105-E4B-TXN-3)
● - Used on All Engines

> Change from previous revision

https://truckmanualshub.com/

4.1 Dipstick and Guide

Serial No. All

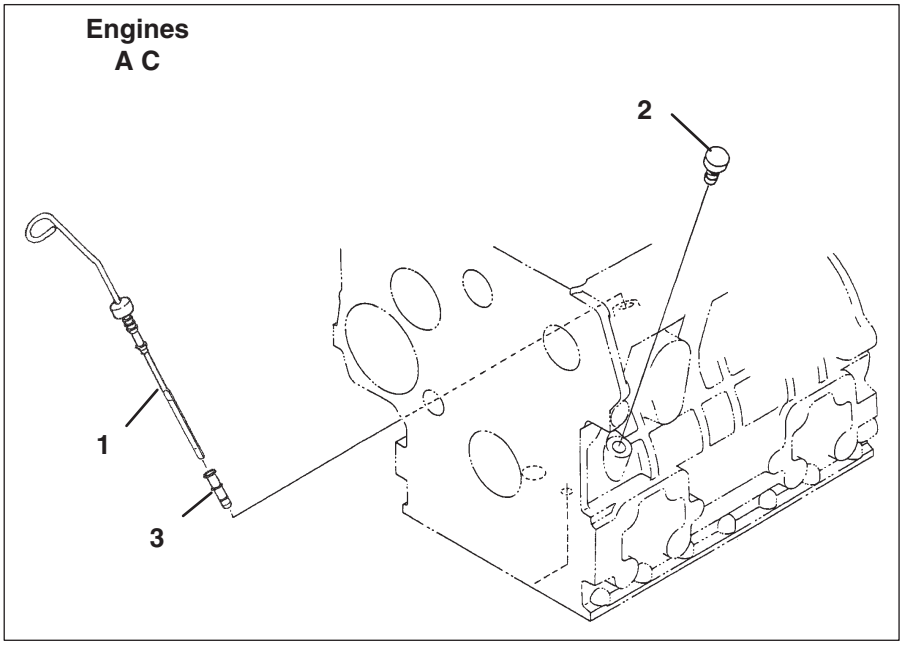

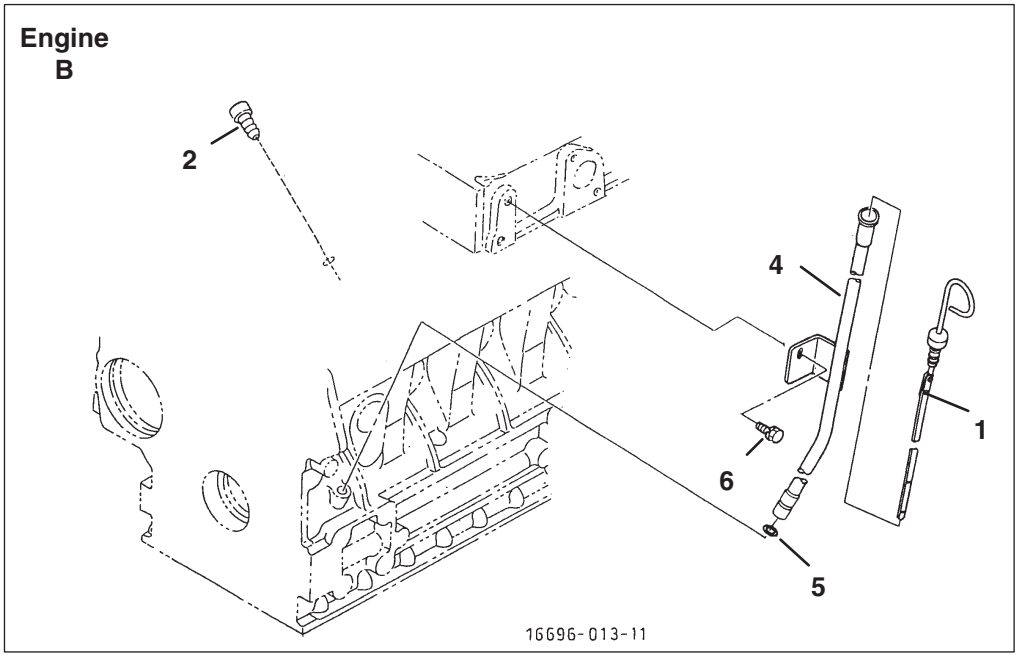

https://truckmanualshub.com/

Engine	Item	Part No.	Qty.	Description	Serial Numbers/Notes
AC	1	4111661	1	Gauge, Oil	
B	1	5002955	1	Gauge, Oil	
●	2	2812014	1	Plug, Oil Gauge	
●	3	4111662	1	Guide, Oil Gauge	
B	4	2810877	1	Assembly Guide, Oil Gauge	
B	5	5002033	1	O Ring	
B	6	5001138	1	Bolt	

A - SLF 1880 (D1105-E4B-TXRN-1)
B - Truckster / Haulster / Spraytek (D1105-E4B-TXRN-2)
C - LF510 / Turfcat (D1105-E4B-TXN-3)
● - Used on All Engines

> Change from previous revision

https://truckmanualshub.com/

5.1 Cylinder Head

Serial No. All

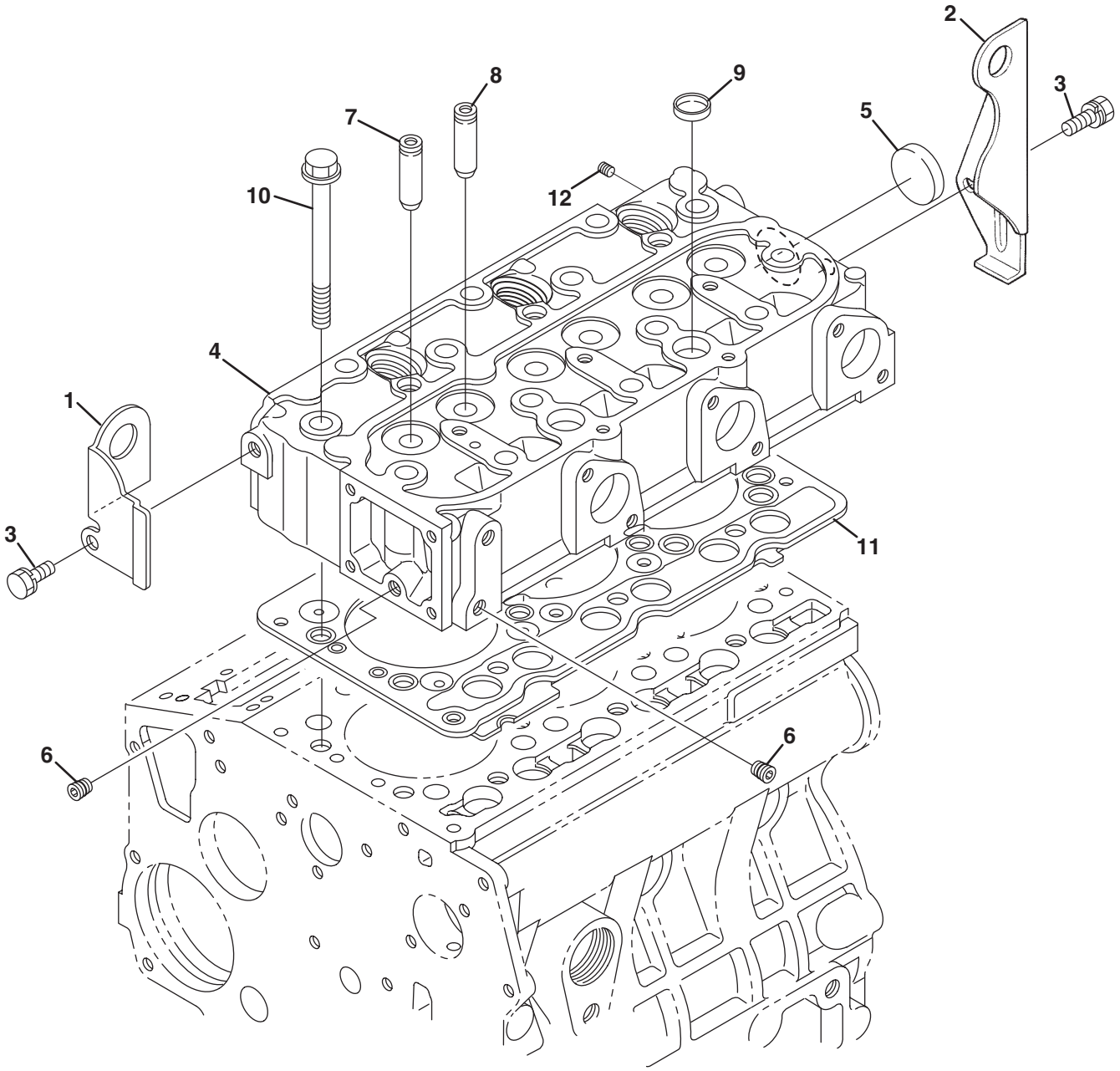

https://truckmanualshub.com/

Engine	Item	Part No.	Qty.	Description	Serial Numbers/Notes
●	1	2500886	1	Hook, Engine	
●	2	2500887	1	Hook, Engine	
●	3	4289798	2	Bolt, Sems	
●	4	4306370	1	Comp. Cylinder Head	
●	5	550673	1	• Plug, Cup Type	
●	6	552978	2	• Plug	
●	7	4145830	3	• Guide (Inlet Valve)	
●	8	4145831	3	• Guide (Exhaust Valve)	
●	9	2500888	2	• Plug, Cup Type	
●	10	2500889	14	Bolt, Cylinder Head	
●	11	4183581	1	Gasket, Cylinder Head	

A - SLF 1880 (D1105-E4B-TXRN-1)
B - Truckster / Haulster / Spraytek (D1105-E4B-TXRN-2)
C - LF510 / Turfcat (D1105-E4B-TXN-3)
● - Used on All Engines

> Change from previous revision

https://truckmanualshub.com/

6.1 Valve and Rocker Arm

Serial No. All

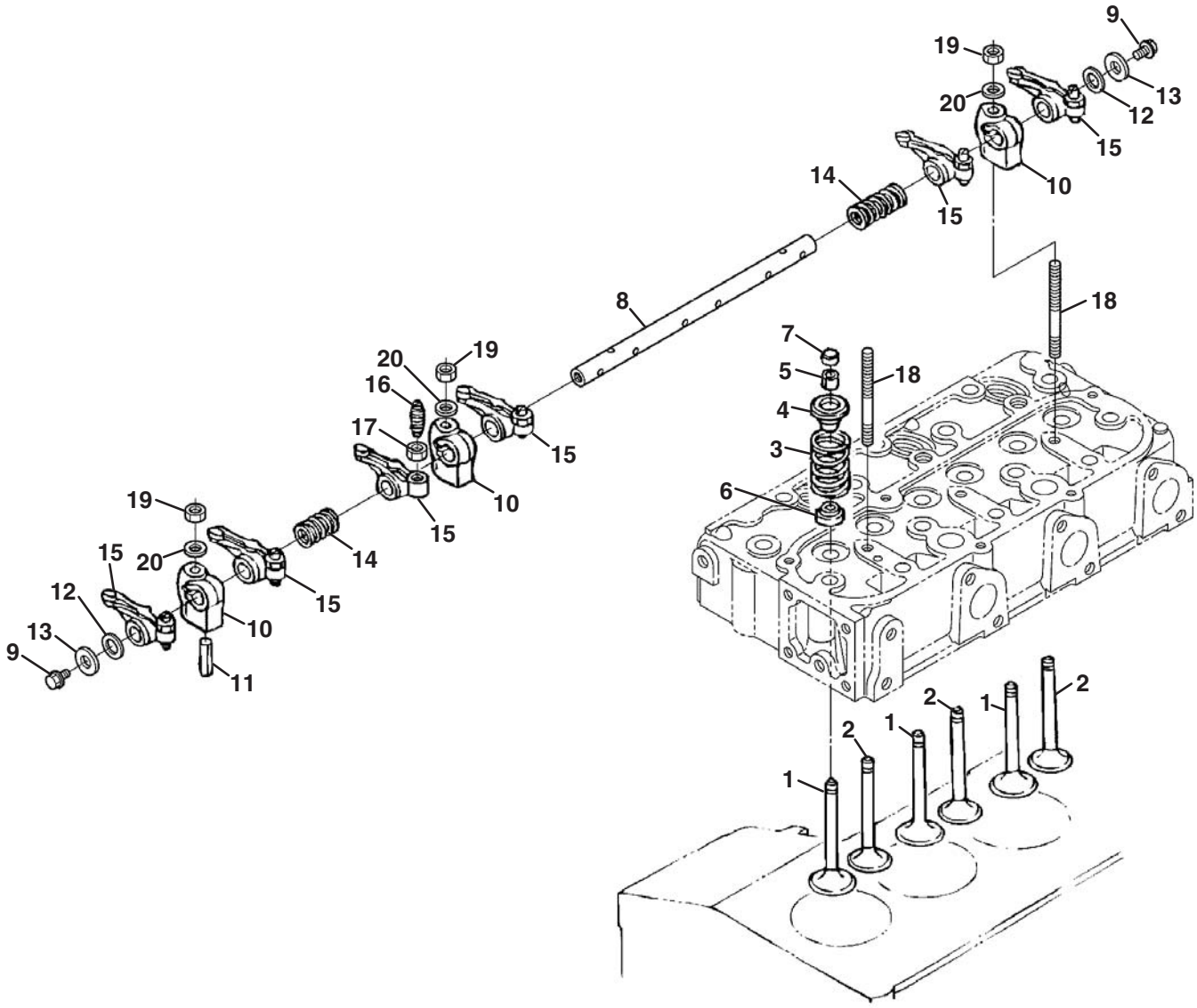

https://truckmanualshub.com/

Engine	Item	Part No.	Qty.	Description	Serial Numbers/Notes
●	1	2500827	3	Valve, Inlet	
●	2	2500828	3	Valve, Exhaust	
●	3	2500920	6	Spring, Valve	
●	4	4165620	6	Retainer, Spring	
●	5	2500922	6	Collet, Valve Spring	
●	6	2500923	6	Seal, Valve Stem	
●	7	2500924	6	Cap, Valve	
●	8	4183592	1	Shaft, Rocker Arm	
●	9	5003269	2	Bolt, Flange	
●	10	2500926	3	Bracket, Rocker Arm	
●	11	2809978	1	Pin, Spring	
●	12	2500928	2	Washer, Rocker Arm Shaft	
●	13	554108	2	Washer, Plain	
●	14	2500930	2	Spring, Rocker Arm	
●	15	2500932	6	Assy, Rocker Arm	
●	16	2500933	6	• Screw, Adjusting	
●	17	2500915	6	• Nut	
●	18	2500935	3	Stud	
●	19	2500936	3	Nut	
●	20	2500937	3	Washer, Plain	

A - SLF 1880 (D1105-E4B-TXRN-1)
B - Truckster / Haulster / Spraytek (D1105-E4B-TXRN-2)
C - LF510 / Turfcat (D1105-E4B-TXN-3)
● - Used on All Engines

> Change from previous revision

https://truckmanualshub.com/

7.1 Manifolds

Serial No. All

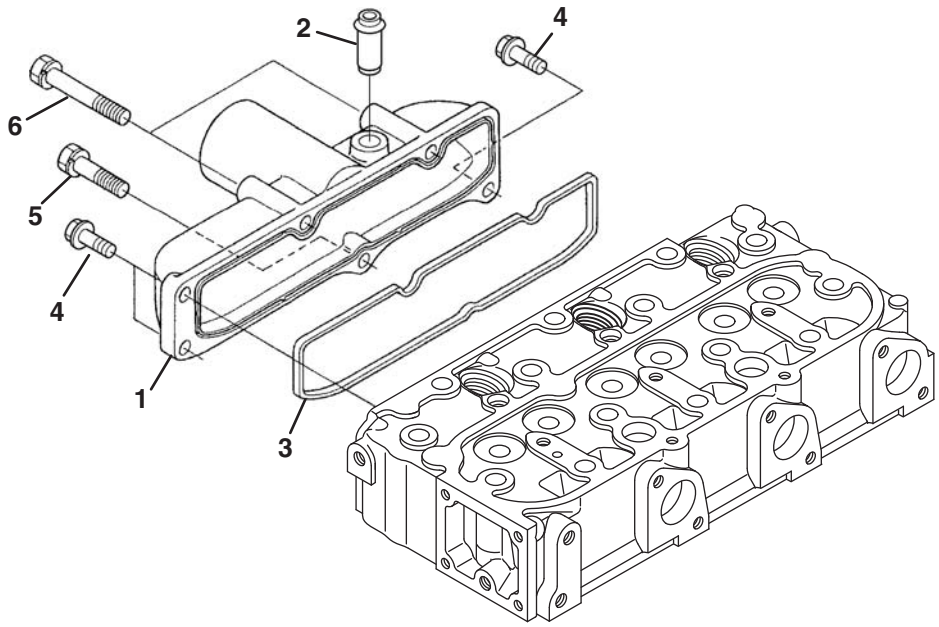

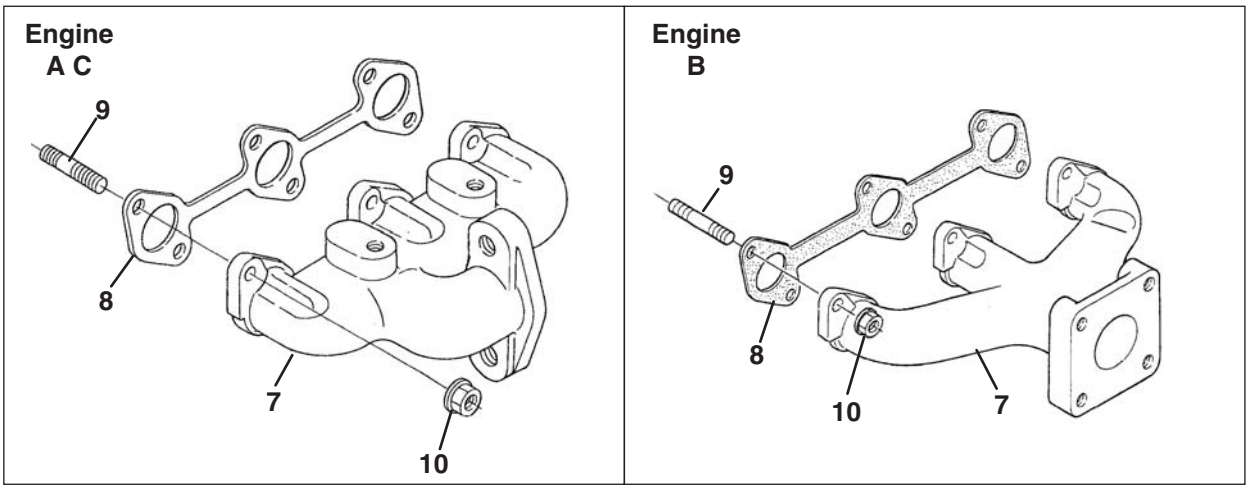

https://truckmanualshub.com/

Engine	Item	Part No.	Qty.	Description	Serial Numbers/Notes
●	1	4165648	1	Assy Manifold, Inlet	
●	2	2500911	1	Joint, Breather Pipe	
●	3	2500854	1	Gasket, Inlet Manifold	
●	4	2811976	3	Bolt, Flange	
●	5	2500917	1	Bolt, Sems	
●	6	553842	2	Bolt, Sems	
AC	7	5003475	1	Manifold, Exhaust	
B	7	5001306	1	Manifold, Exhaust	
●	8	5001262	1	Gasket, Exhaust Manifold	
●	9	2500918	6	Stud	
●	10	2500919	6	Nut	

A - SLF 1880 (D1105-E4B-TXRN-1)
B - Truckster / Haulster / Spraytek (D1105-E4B-TXRN-2)
C - LF510 / Turfcat (D1105-E4B-TXN-3)
● - Used on All Engines

> Change from previous revision

https://truckmanualshub.com/

8.1 Head Cover

Serial No. All

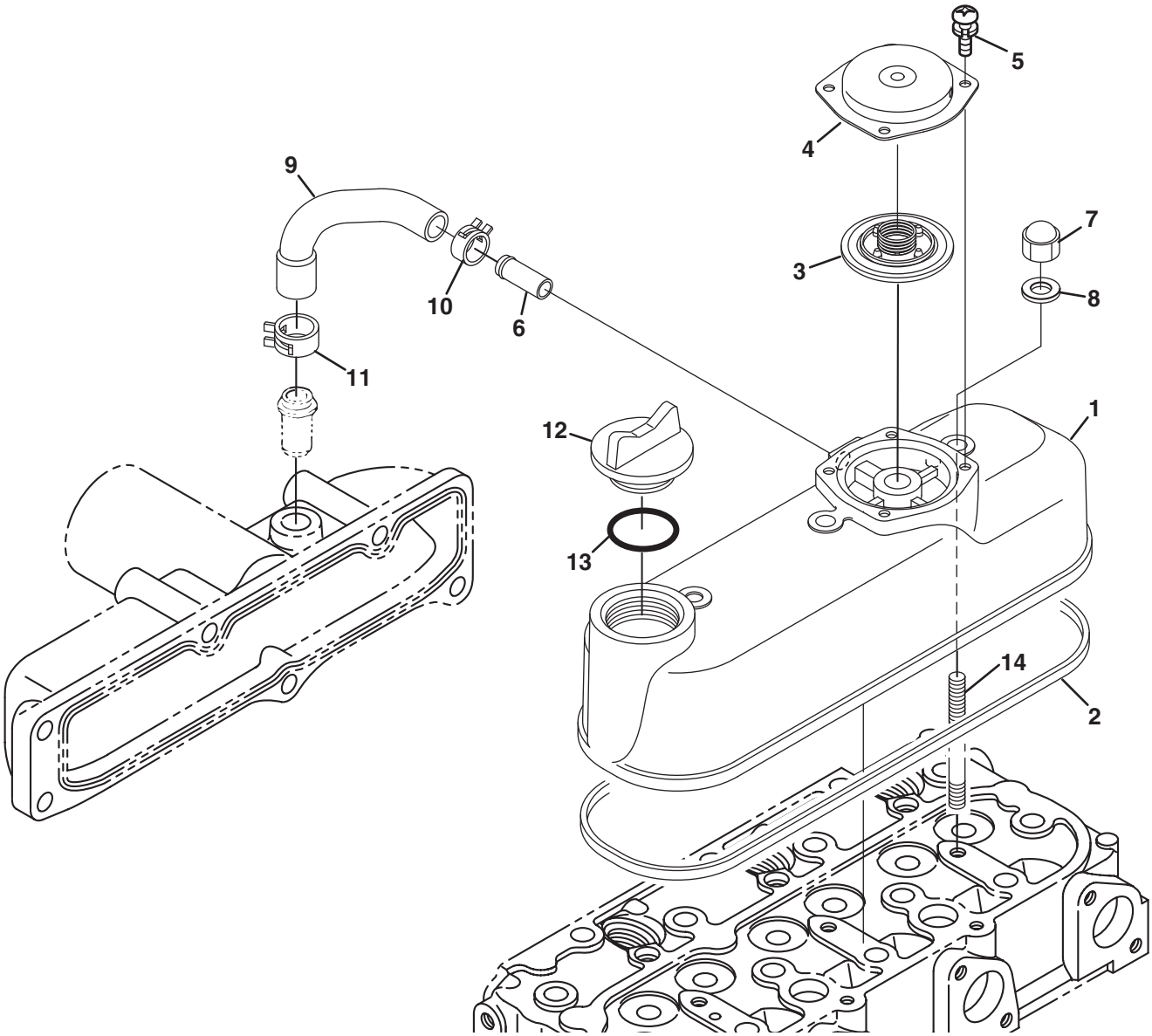

https://truckmanualshub.com/

Engine	Item	Part No.	Qty.	Description	Serial Numbers/Notes
●	1	4165656	1	Assy Cover, Cyl. Head	
●	2	2500856	1	• Gasket, Head Cover	
●	3	4145912	1	• Comp Valve, Breather	
●	4	4145911	1	• Cover, Breather	
●	5	4165421	4	• Screw, Sems Pan Head	
●	6	4134204	1	• Pipe, Water Return	
●	7	550838	3	Nut, Cap	
●	8	550839	3	Gasket	
●	9	4165655	1	Tube, Breather	
●	10	4134199	1	Clamp, Hose	
●	11	4165526	1	Clamp, Hose	
●	12	4145944	1	Plug (Oil Filler)	
●	13	4306378	1	O-ring	

A - SLF 1880 (D1105-E4B-TXRN-1)
B - Truckster / Haulster / Spraytek (D1105-E4B-TXRN-2)
C - LF510 / Turfcat (D1105-E4B-TXN-3)
● - Used on All Engines

> Change from previous revision

https://truckmanualshub.com/

9.1 Gear Case

LF510 and SLF 1880

Serial No. All

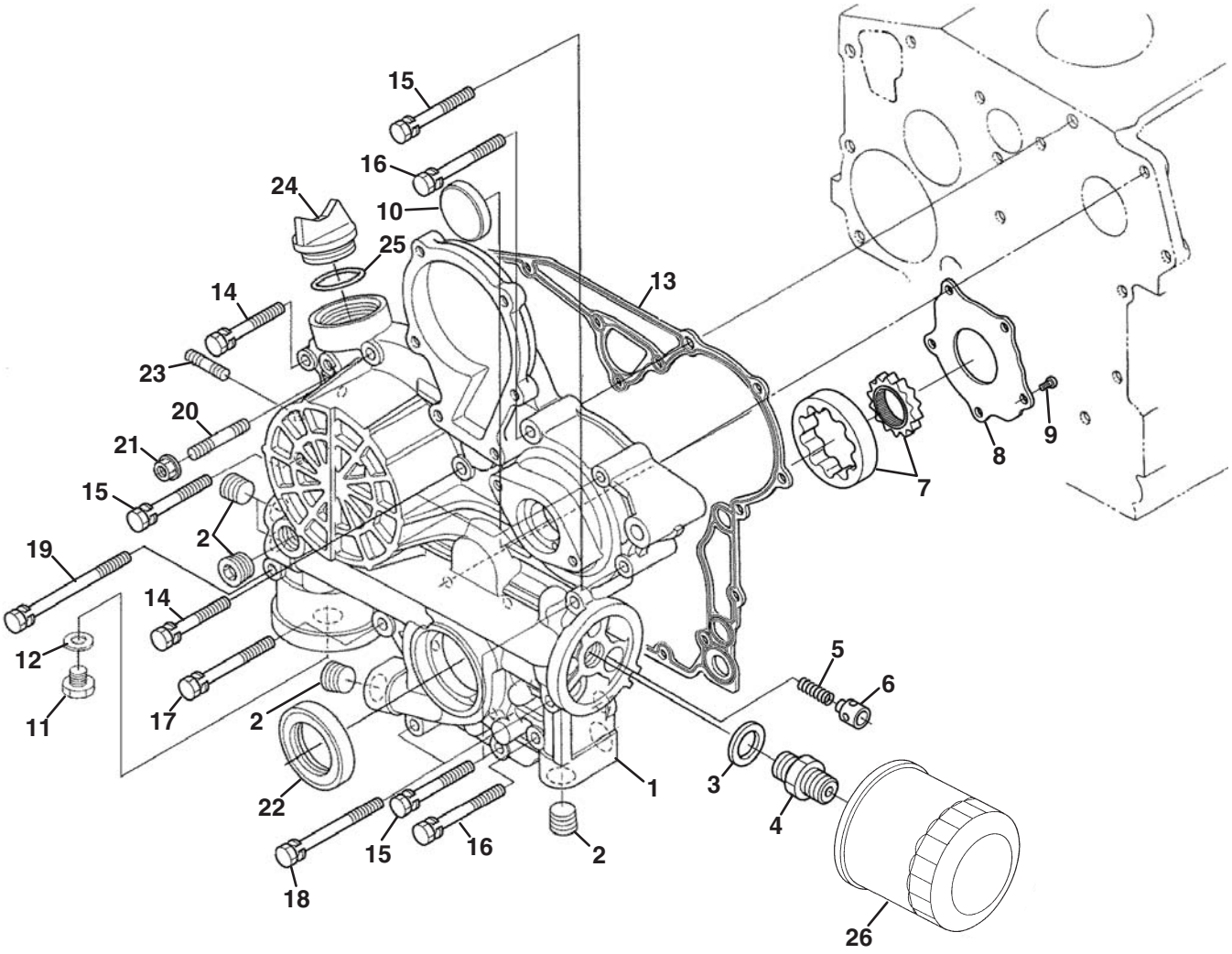

https://truckmanualshub.com/

Engine	Item	Part No.	Qty.	Description	Serial Numbers/Notes
A	1	4306371	1	Case, Gear, Comp	
C	1	4310286	1	Case, Gear, Comp	
AC	2	5001255	5	• Plug	
AC	3	594351	1	• Washer, Plain	
AC	4	2500892	1	• Joint, Pipe	
AC	5	4306373	1	• Spring	
AC	6	4306374	1	• Valve, Relief	
AC	7	4306375	1	• Assy, Oil Pump Rotor	
AC	8	4306376	1	• Cover, Oil Pump	
AC	9	4306377	5	• Screw, Binding	
AC	10	5001276	1	Cover, Gear Case	
AC	11	557859	1	Plug	
AC	12	557960	1	Packing, Plug	
AC	13	5001269	1	Gasket, Gear Case	
AC	14	553481	3	Bolt, Sems	
AC	15	553842	4	Bolt, Sems	
AC	16	2500899	2	Bolt, Sems	
AC	17	554097	1	Bolt	
AC	18	2500900	2	Bolt	
AC	19	557861	1	Bolt	
AC	20	2500901	1	Stud	
AC	21	2810647	1	Nut, Flange	
AC	22	2500902	1	Seal, Oil	
AC	23	550386	2	Stud	
AC	24	4145944	1	Plug, Oil Filler	
AC	25	4306378	1	O-Ring	
AC	26	4177262	1	Cartridge Oil Filter	

A - SLF 1880 (D1105-E4B-TXRN-1)
B - Truckster / Haulster / Spraytek (D1105-E4B-TXRN-2)
C - LF510 / Turfcat (D1105-E4B-TXN-3)
● - Used on All Engines

> Change from previous revision

https://truckmanualshub.com/

10.1 Gear Case

Serial No. All

Truckster, Haulster and Spraytek

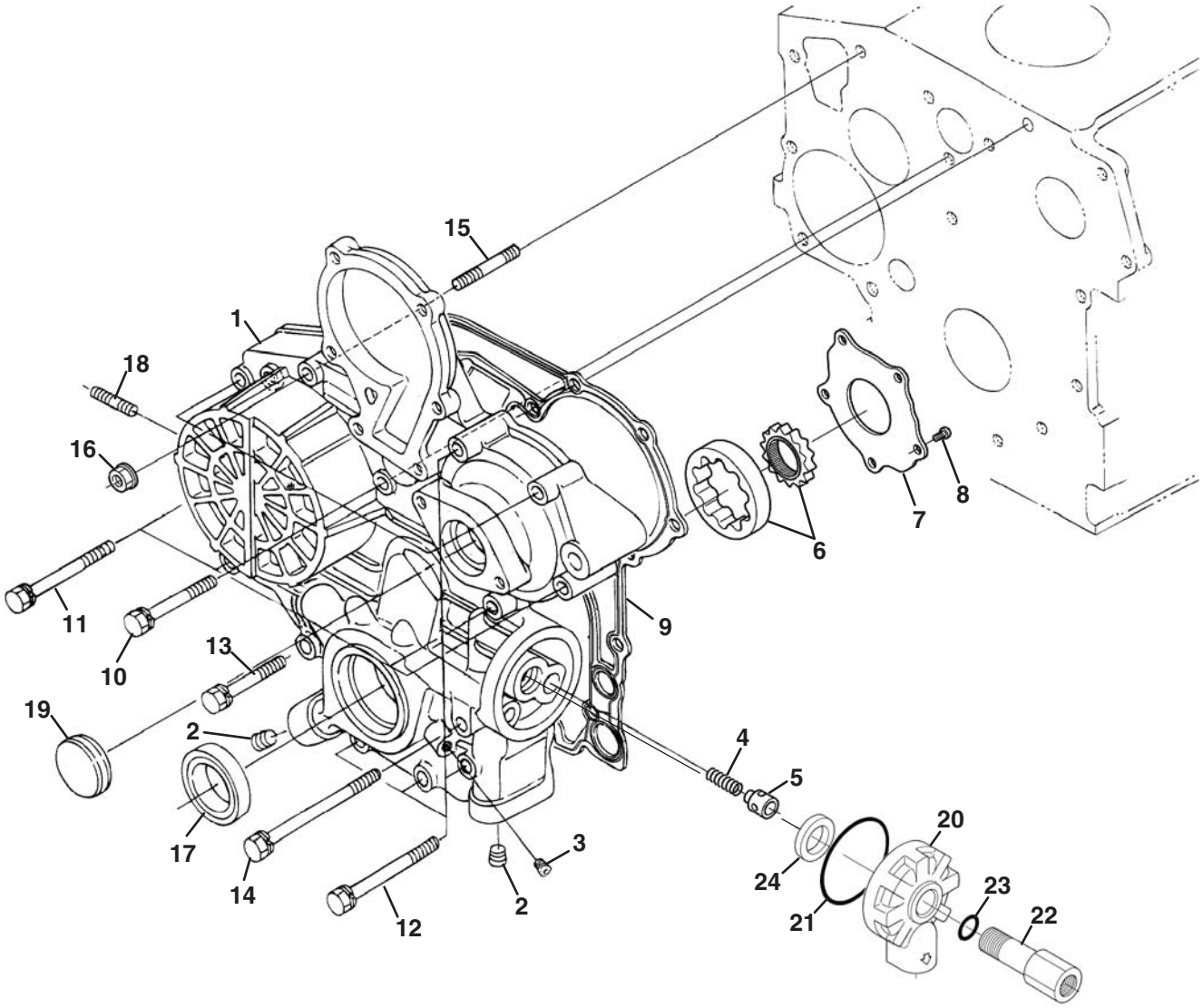

https://truckmanualshub.com/

Engine	Item	Part No.	Qty.	Description	Serial Numbers/Notes
B	1	4306372	1	Case, Gear,comp	
B	2	5001255	2	• Plug	
B	3	552950	1	• Plug	
B	4	4306373	1	• Spring	
B	5	4306374	1	• Valve, Relief	
B	6	4306375	1	• Assy, Oil Pump Rotor	
B	7	4306376	1	• Cover, Oil Pump	
B	8	4306377	5	• Screw, Binding	
B	9	5001269	1	Gasket, Gear Case	
B	10	553481	3	Bolt, Sems	
B	11	553842	4	Bolt, Sems	
B	12	2500899	4	Bolt, Sems	
B	13	4183611	1	Bolt, Sems	
B	14	2500900	1	Bolt	
B	15	2500901	1	Stud	
B	16	2810647	1	Nut, Flange	
B	17	2500902	1	Seal, Oil	
B	18	550386	2	Stud	
B	19	5001276	1	Cover, Gear Case	
B	20	4183612	1	Base, Oil Filter	
B	21	5002751	1	O Ring	
B	22	4183613	1	Joint, Pipe	
B	23	2809954	1	O Ring	
B	24	4183614	1	Collar	

A - SLF 1880 (D1105-E4B-TXRN-1)
B - Truckster / Haulster / Spraytek (D1105-E4B-TXRN-2)
C - LF510 / Turfcat (D1105-E4B-TXN-3)
● - Used on All Engines

> Change from previous revision

https://truckmanualshub.com/

11.1 Main Bearing Case

Serial No. All

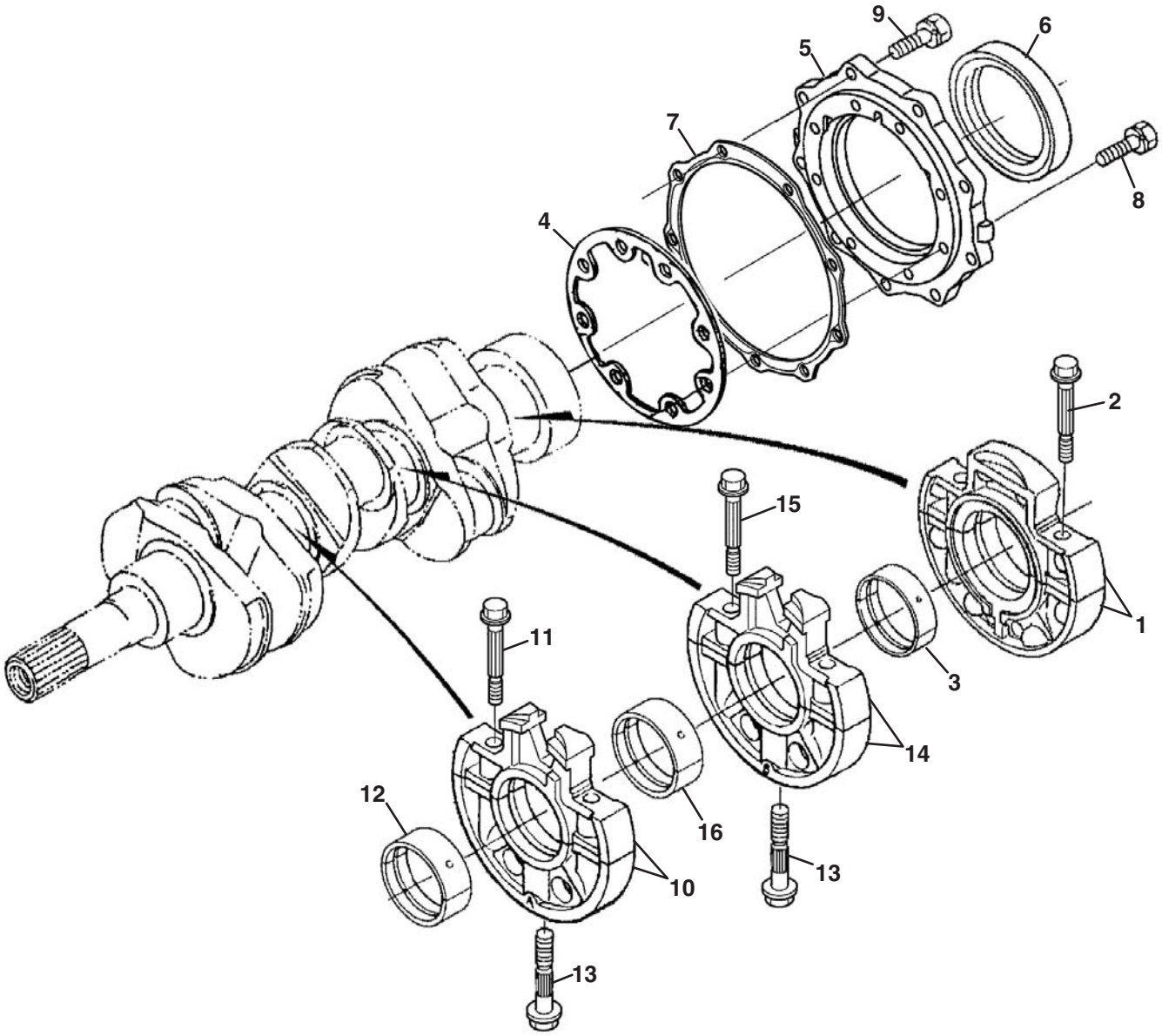

https://truckmanualshub.com/

	Engine	Item	Part No.	Qty.	Description	Serial Numbers/Notes
	●	1	4177263	1	Assy, Bearing Case	
	●	2	2500905	2	• Bolt, Bearing Case	
▼	●	3	2500838	1	• Metal, Crankshaft	STD Set
■	●	3	2500839	1	Metal, Crankshaft	-0.20 mm Set
◆	●	3	2500840	1	Metal, Crankshaft	-0.40 mm Set
	●	4	4306379	1	Gasket, Bearing Case	
	●	5	5001241	1	Cover, Bearing Case	
	●	6	2500825	1	Seal, Oil	
	●	7	5001270	1	Gasket	
	●	8	4306380	8	Bolt	
	●	9	4306381	9	Bolt	
	●	10	4177223	1	Assy, Bearing Case, Main	
	●	11	2500905	2	• Bolt, Bearing Case	
▼	●	12	2500837	1	• Metal, Crankshaft	STD Set
■	●	12	2809969	1	Metal, Crankshaft	-0.20 mm Set
◆	●	12	2809970	1	Metal, Crankshaft	-0.40 mm Set
	●	13	2500908	2	Bolt(Case,brg)	
	●	14	4177224	1	Assy, Bearing Case, Main	
	●	15	2500905	2	• Bolt, Bearing Case	
▼	●	16	2500837	1	• Metal, Crankshaft	STD Set
■	●	16	2809969	1	Metal, Crankshaft	-0.20 mm Set
◆	●	16	2809970	1	Metal, Crankshaft	-0.40 mm Set

▼	Included in STD Metal Kit 4306400, **See 12.1**
■	Included in -0.20/+0.20 Metal Kit 4306401, **See 12.1**
◆	Included in -0.40/+0.40 Metal Kit 4306402, **See 12.1**

A - SLF 1880 (D1105-E4B-TXRN-1)
B - Truckster / Haulster / Spraytek (D1105-E4B-TXRN-2)
C - LF510 / Turfcat (D1105-E4B-TXN-3)
● - Used on All Engines

> Change from previous revision

https://truckmanualshub.com/

12.1 Pistons and Crankshaft

Serial No. All

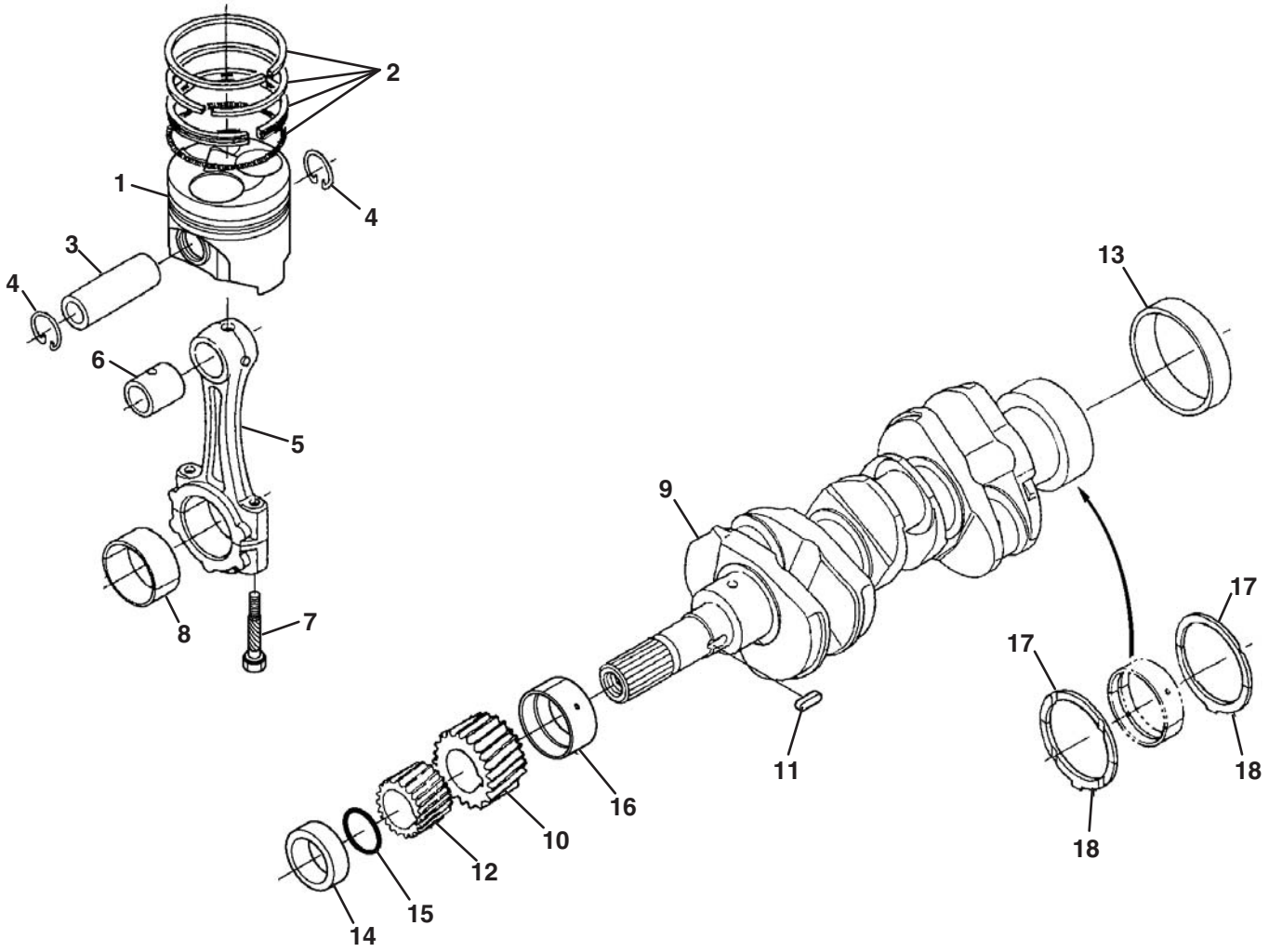

https://truckmanualshub.com/

	Engine	Item	Part No.	Qty.	Description	Serial Numbers/Notes
❖	●	1	4306383	3	Piston	STD
★	●	1	4306384	3	Piston	+0.50 mm
❖	●	2	4306385	3	Assy, Piston Ring	STD
★	●	2	4306386	3	Assy, Piston Ring	+0.50 mm
❖★	●	3	2500831	3	Pin, Piston	
❖★	●	4	2500832	6	Circlip, Piston Pin	
	●	5	5002742	3	Assy, Connecting Rod	
❖★	●	6	2500949	3	• Bushing (Pin, Piston)	
	●	7	2500950	6	• Bolt (Connecting Rod)	
▼	●	8	2809961	3	• Metal, Crank Pin	STD Set
■	●	8	2809962	3	Metal, Crank Pin	-0.20 mm Set
◆	●	8	2809963	3	Metal, Crank Pin	-0.40 mm Set
	●	9	5001278	1	Comp. Crankshaft	
	●	10	4206384	1	• Gear, Crankshaft	
	●	11	2500955	1	• Key	
	●	12	4306387	1	• Gear, Oil Pump Drive	
	●	13	555567	1	• Sleeve, Crankshaft	
	●	14	4306388	1	Collar, Crankshaft	
	●	15	2809964	1	Ring	
▼	●	16	2809965	1	Metal, Crankshaft	STD Set
■	●	16	2809966	1	Metal, Crankshaft	-0.20 mm Set
◆	●	16	2809967	1	Metal, Crankshaft	-0.40 mm Set
▼	●	17	553093	2	Metal, Side	STD Set
■	●	17	2500812	2	Metal, Side	+0.20 mm Set
◆	●	17	2500813	2	Metal, Side	+0.40 mm Set
▼	●	18	553094	2	Metal, Side	STD Set
■	●	18	2500868	2	Metal, Side	+0.20 mm Set
◆	●	18	2500869	2	Metal, Side	+0.40 mm Set

▼	Included in STD Metal Kit 4306400
■	Included in -0.20/+0.20 Metal Kit 4306401
◆	Included in -0.40/+0.40 Metal Kit 4306402
❖	Included in STD Piston Kit 4306398
★	Included in +0.50 mm Piston Kit 4306399

A - SLF 1880 (D1105-E4B-TXRN-1)
B - Truckster / Haulster / Spraytek (D1105-E4B-TXRN-2)
C - LF510 / Turfcat (D1105-E4B-TXN-3)
● - Used on All Engines

> Change from previous revision

13.1 Flywheel and Starter

Serial No. All

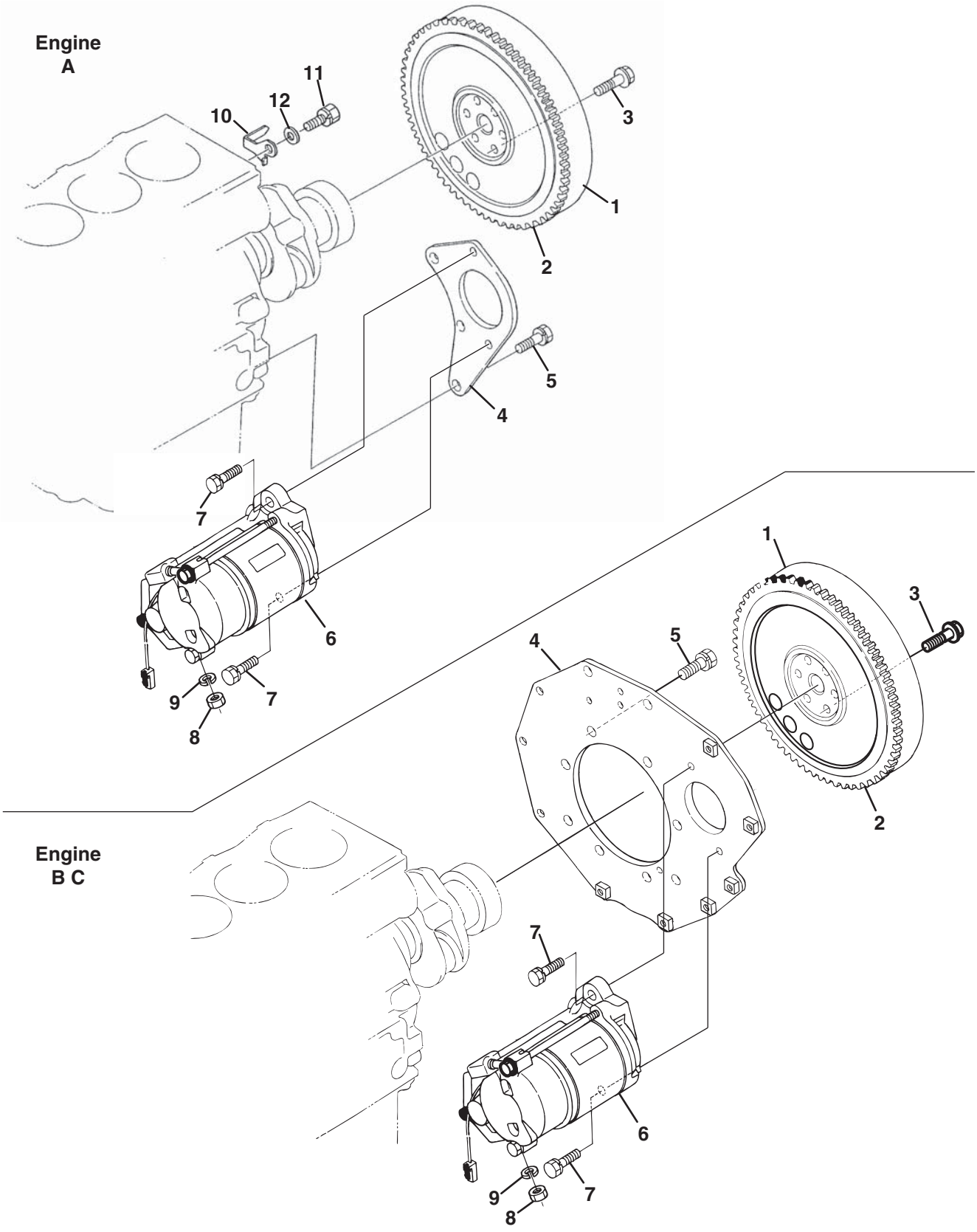

https://truckmanualshub.com/

Engine	Item	Part No.	Qty.	Description	Serial Numbers/Notes
●	1	5001302	1	Comp. Flywheel	
●	2	4177268	1	• Gear, Ring	
●	3	555571	6	Bolt, Flywheel	
A	4	5003470	1	Plate, Rear End	
BC	4	2500958	1	Plate, Rear End	
●	5	2500959	8	Bolt	
●	6	557888	1	Assy Starter	
●	7	2500960	2	Bolt	
●	8	550395	1	Hex. Nut	
●	9	5002002	1	Washer, Spring Lock	
A	10	5003472	1	Plate, Timing	
A	11	5003473	1	Bolt	
A	12	4165422	1	Washer, Plain	

A - SLF 1880 (D1105-E4B-TXRN-1)
B - Truckster / Haulster / Spraytek (D1105-E4B-TXRN-2)
C - LF510 / Turfcat (D1105-E4B-TXN-3)
● - Used on All Engines

> Change from previous revision

https://truckmanualshub.com/

14.1 Starter

Serial No. All

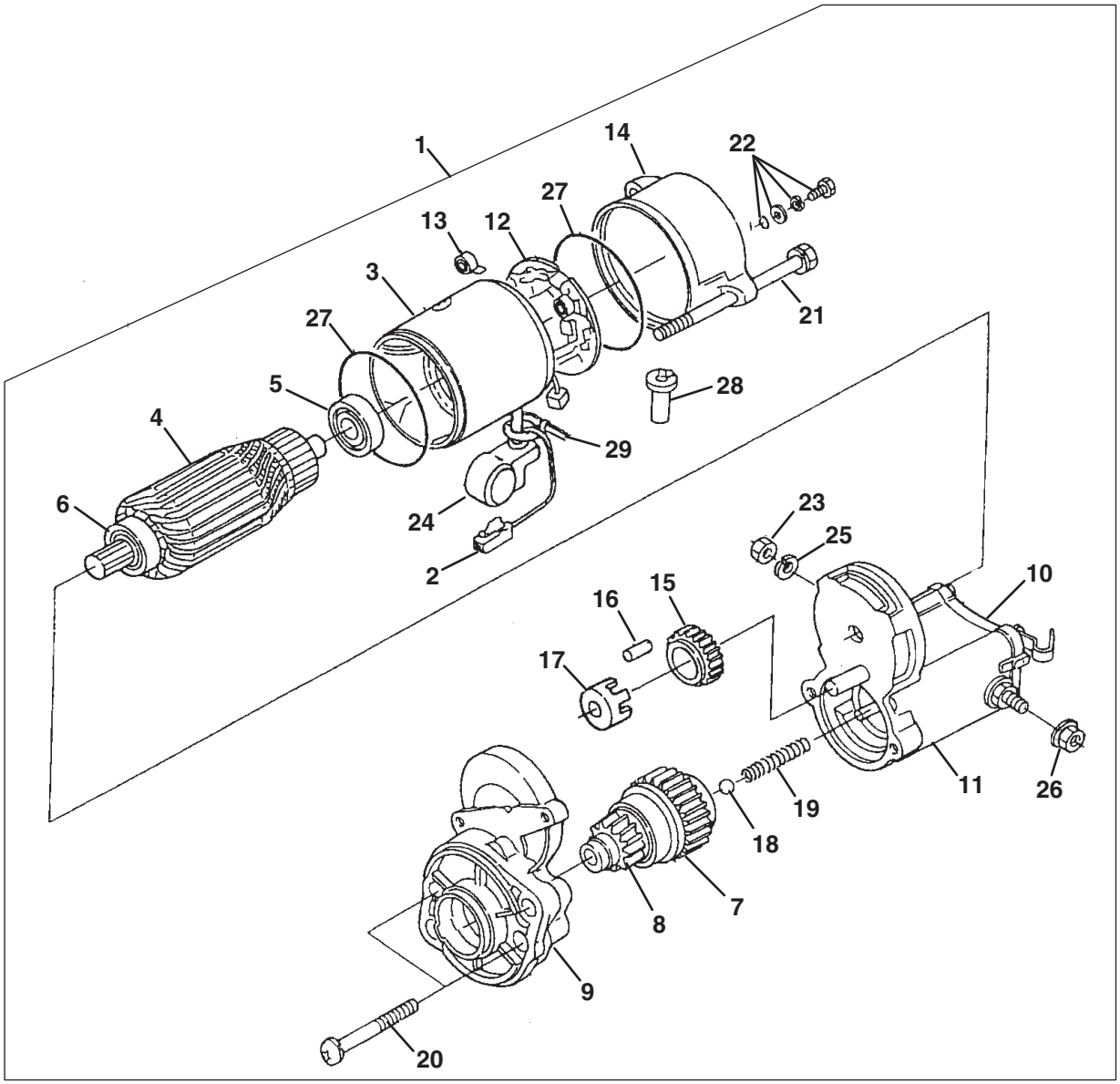

https://truckmanualshub.com/

Engine	Item	Part No.	Qty.	Description	Serial Numbers/Notes
●	1	557888	1	Assy Starter	
●	2	5001292	1	• Band, Cover	
●	3	557890	1	• Yoke	
●	4	557891	1	• Armature	
●	5	557893	1	• Bearing	
●	6	557892	1	• Bearing	
●	7	557894	1	• Assy Clutch	
●	8	557895	1	• Pinion, Bevel	
●	9	557896	1	• Assy Housing	
●	10	557897	1	• Assy Switch, Magnetic	
●	11	4145832	1	• Assy Cover	
●	12	557898	1	• Assy Holder, Brush	
●	13	557899	4	• Spring, Brush	
●	14	557900	1	• Assy Frame, End	
●	15	2810751	1	• Gear	
●	16	557902	5	• Roller	
●	17	557903	1	• Retainer	
●	18	557904	1	• Ball	
●	19	557905	1	• Spring	
●	20	557906	2	• Bolt	
●	21	557907	2	• Bolt, Through	
●	22	557908	2	• Assy Bolt	
●	23	557912	1	• Nut, Hexagon	
●	24	557910	1	• Cover	
●	25	557911	1	• Washer, Spring	
●	26	557909	1	• Nut, Hexagon	
●	27	5001244	2	• O Ring	
●	28	5003301	1	• Pipe,drain	
●	29	557913	1	• Cord, Stop Solenoid	

A - SLF 1880 (D1105-E4B-TXRN-1)
B - Truckster / Haulster / Spraytek (D1105-E4B-TXRN-2)
C - LF510 / Turfcat (D1105-E4B-TXN-3)
● - Used on All Engines

> Change from previous revision

https://truckmanualshub.com/

15.1 Camshaft

Serial No. All

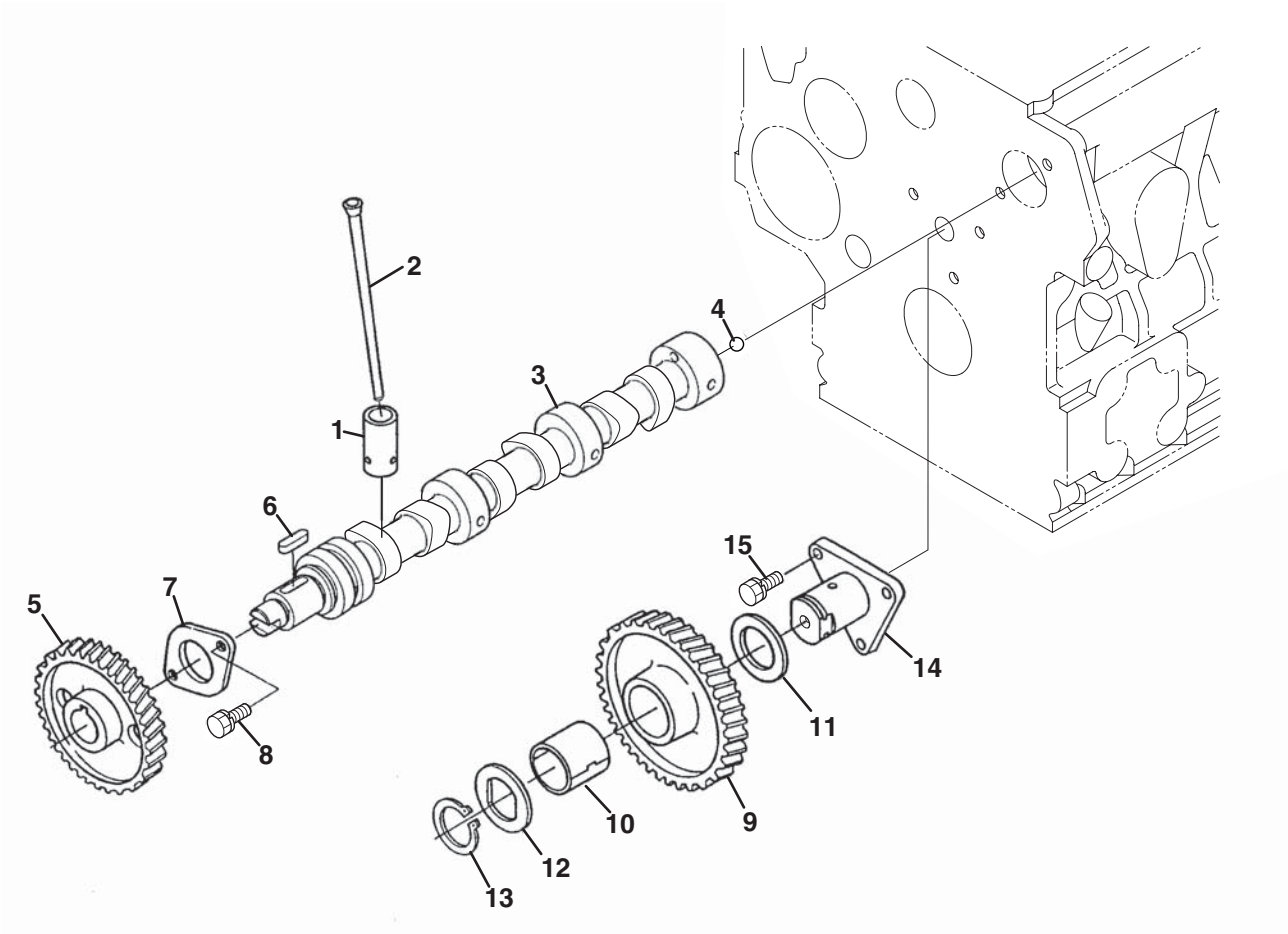

https://truckmanualshub.com/

Engine	Item	Part No.	Qty.	Description	Serial Numbers/Notes
●	1	4177265	6	Tappet	
●	2	2500949	6	Push Rod	
●	3	4306382	1	Assy, Camshaft	
●	4	2500953	1	• Ball 1/4	
●	5	2500940	1	• Gear, Cam	
●	6	553860	1	• Feather Key	
●	7	2500941	1	• Stopper, Camshaft	
●	8	550362	2	Bolt, Sems	
●	9	2500942	1	Comp Gear, Idle	
●	10	2500943	1	• Bush, Idle Gear	
●	11	2500944	1	Collar, Idle Gear	
●	12	2500945	1	Collar, Idle Gear	
●	13	2500946	1	Circlip, Idle Gear	
●	14	2500947	1	Shaft, Idle Gear	
●	15	550362	3	Bolt, Sems	

A - SLF 1880 (D1105-E4B-TXRN-1)
B - Truckster / Haulster / Spraytek (D1105-E4B-TXRN-2)
C - LF510 / Turfcat (D1105-E4B-TXN-3)
● - Used on All Engines

> Change from previous revision

https://truckmanualshub.com/

16.1 Fuel Camshaft and Governor Shaft

Serial No. All

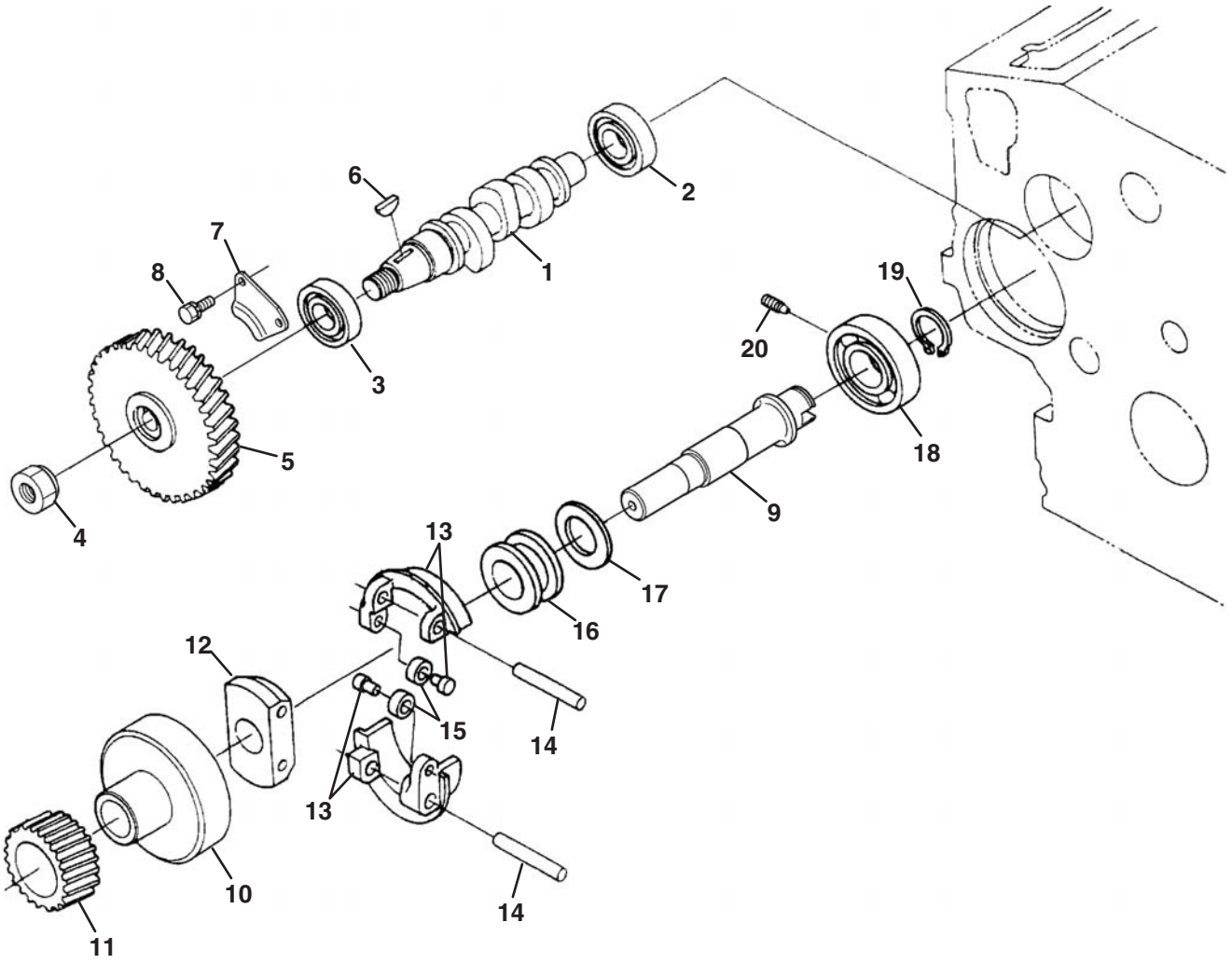

https://truckmanualshub.com/

Engine	Item	Part No.	Qty.	Description	Serial Numbers/Notes
●	1	5000897	1	Camshaft (Fuel)	
●	2	4165622	1	Bearing, Ball	
●	3	4165623	1	Bearing, Ball	
●	4	4306389	1	Nut	
●	5	4306390	1	Gear, Injection Pump	
●	6	2500967	1	Key, Woodruff	
●	7	2500969	1	Stopper (Fuel C/shaft)	
●	8	550362	2	Bolt, Sems	
●	9	5001279	1	Assy Shaft, Governor	
●	10	5001247	1	• Holder, Governor Gear	
●	11	2500972	1	• Gear, Governor	
●	12	2500973	1	• Holder, Governor Weight	
●	13	5001246		• Comp. Weight, Governor 2	
●	14	2500975	2	• Shaft, Governor Weight	
●	15	5001314	2	• Roller	
●	16	2500976	1	• Sleeve, Governor	
●	17	5001147	1	• Washer, Thrust	
●	18	4165624	1	Bearing, Ball	
●	19	2500979	1	Circlip, Governor Shaft	
●	20	2500980	1	Screw, Set	

A - SLF 1880 (D1105-E4B-TXRN-1)
B - Truckster / Haulster / Spraytek (D1105-E4B-TXRN-2)
C - LF510 / Turfcat (D1105-E4B-TXN-3)
● - Used on All Engines

> Change from previous revision

https://truckmanualshub.com/

17.1 Idle Apparatus

Serial No. All

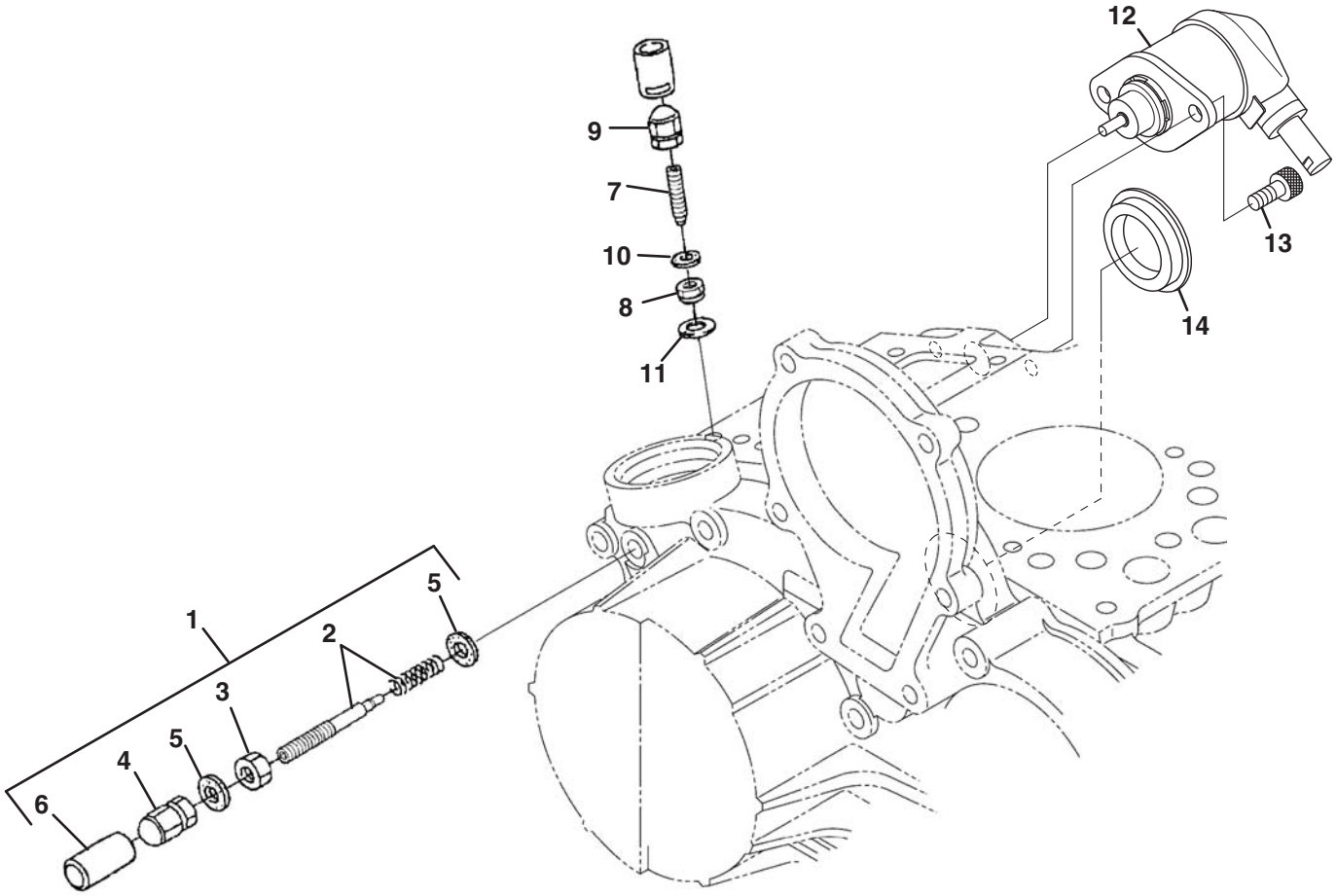

https://truckmanualshub.com/

Engine	Item	Part No.	Qty.	Description	Serial Numbers/Notes
AC	1	557934	1	Assy Apparatus, Idle	
B	1	2500894	1	Assy Apparatus, Idle	
AC	2	5001257	1	Assy Bolt, Adjusting	
B	2	5001285	1	Assy Bolt, Adjusting	
●	3	5002018	1	Nut	
●	4	4138091	1	Nut, Cap	
●	5	553143	2	Gasket	
●	6	4165442	1	Cap	
●	7	2500987	1	Bolt, Adjusting	
●	8	4138090	1	Nut, Lock	
●	9	4138091	1	Nut, Cap	
●	10	553143	1	Gasket	
●	11	4145906	1	Gasket	
●	12	2811021	1	Assy Solenoid, Stop	
●	13	4306391	2	Bolt, Socket Head	
●	14	5001275	1	Cover, Hydraulic Pump	

A - SLF 1880 (D1105-E4B-TXRN-1)
B - Truckster / Haulster / Spraytek (D1105-E4B-TXRN-2)
C - LF510 / Turfcat (D1105-E4B-TXN-3)
● - Used on All Engines

> Change from previous revision

https://truckmanualshub.com/

18.1 Injection Pump

Serial No. All

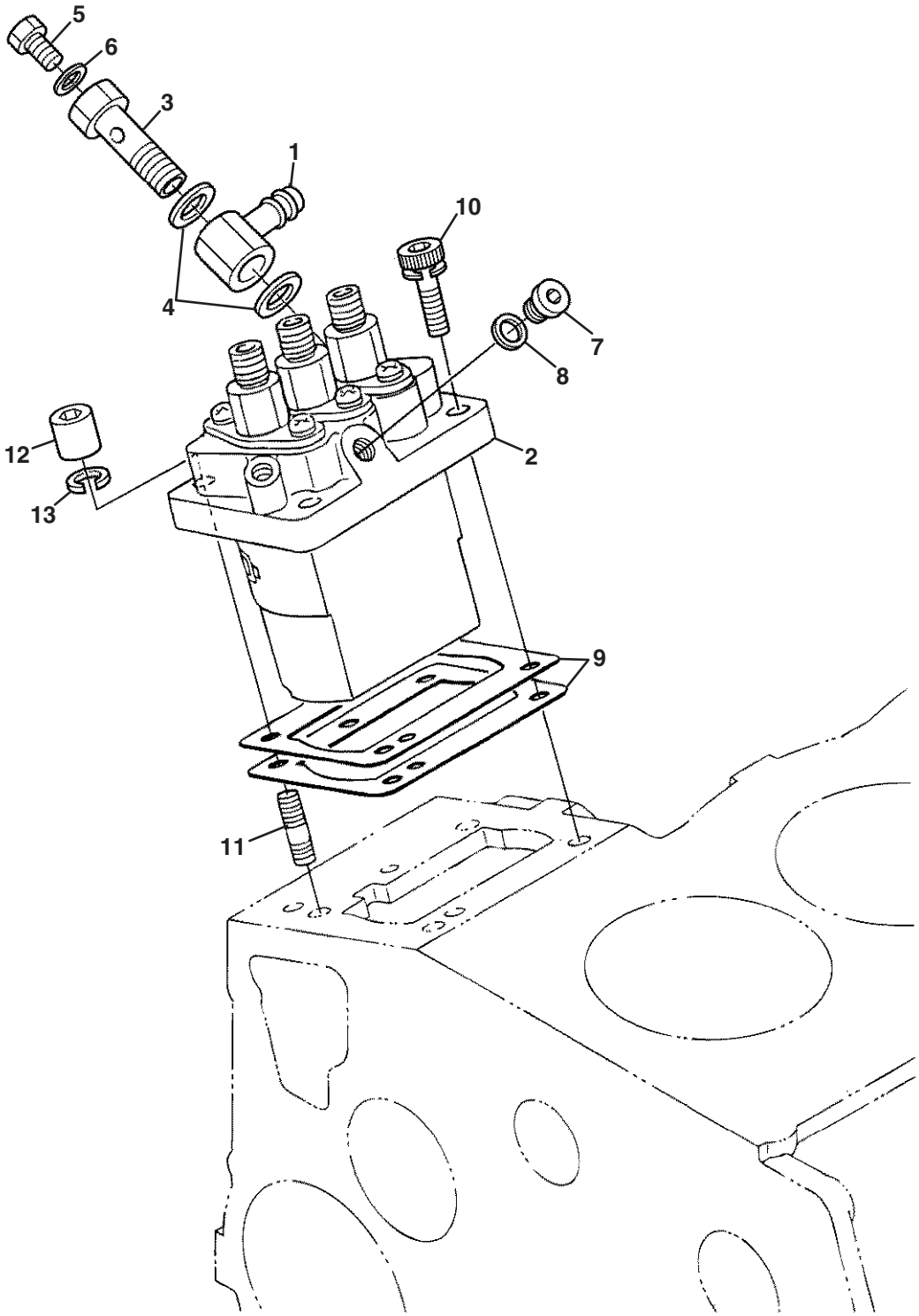

https://truckmanualshub.com/

Engine	Item	Part No.	Qty.	Description	Serial Numbers/Notes
●	1	2500961	1	Joint, Eye	
●	2	5000894	1	Assy Pump, Injection	
●	3	5001215	1	Bolt, Joint	
●	4	554116	2	Gasket	
●	5	554036	1	Screw (Air Bleeder)	
●	6	554117	1	Gasket	
●	7	5001217	1	Plug	
●	8	557584	1	Gasket	
●	9	4183583	1	Shim, Injection Pump	0.175 mm
●	9	554202	1	Shim, Injection Pump	0.200 mm
●	9	5000886	1	Shim, Injection Pump	0.250 mm
●	9	5001118	1	Shim, Injection Pump	0.300 mm
●	9	4183584	1	Shim, Injection Pump	0.350 mm
●	10	4206382	2	Screw, Hex Soc. Cap	
●	11	554099	2	Stud	
●	12	554104	2	Nut, Cap	
●	13	843281	2	Washer, Spring Lock	

A - SLF 1880 (D1105-E4B-TXRN-1)
B - Truckster / Haulster / Spraytek (D1105-E4B-TXRN-2)
C - LF510 / Turfcat (D1105-E4B-TXN-3)
● - Used on All Engines

> Change from previous revision

https://truckmanualshub.com/

19.1 Governor

Serial No. All

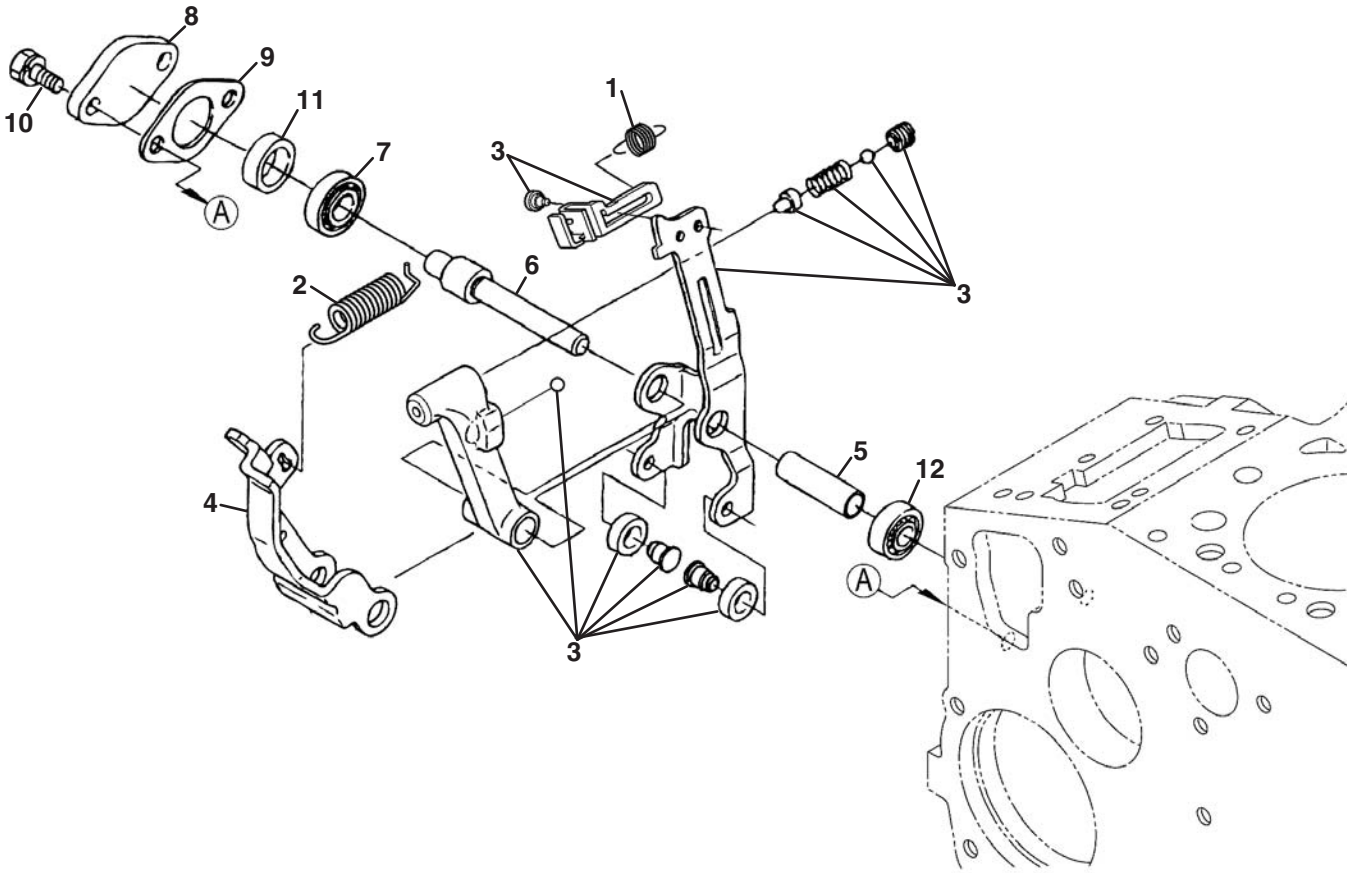

https://truckmanualshub.com/

Engine	Item	Part No.	Qty.	Description	Serial Numbers/Notes
AC	1	2500990	1	Spring, Start	
B	1	4183622	1	Spring, Start	
●	2	5001287	1	Spring, Governor	
●	3	4183585	1	Assy Lever, Fork	
●	4	4177278	1	Lever, Fork	
●	5	4177279	1	Shaft, Fork Lever	
●	6	4177280	1	Shaft, Fork Lever	
●	7	2500995	1	Bearing, Miniaturize	
●	8	2500997	1	Cover, Fork Lev. Shaft	
●	9	2500845	1	Gasket	
●	10	550360	2	Bolt, Sems	
●	11	2500998	1	Collar	
●	12	2500999	1	Bearing, Miniaturize	

A - SLF 1880 (D1105-E4B-TXRN-1)
B - Truckster / Haulster / Spraytek (D1105-E4B-TXRN-2)
C - LF510 / Turfcat (D1105-E4B-TXN-3)
● - Used on All Engines

> Change from previous revision

https://truckmanualshub.com/

20.1 Speed Control Plate

Serial No. All

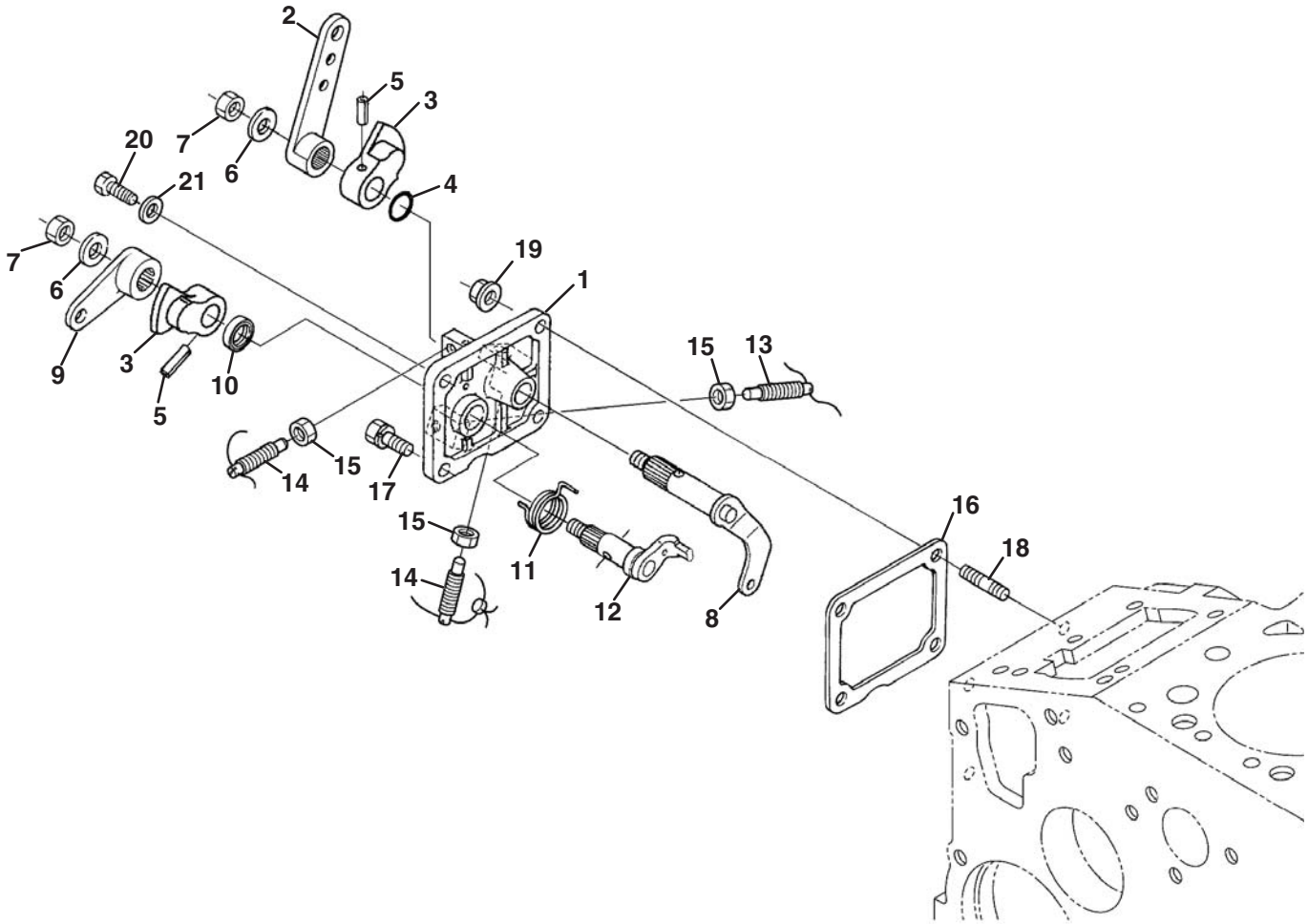

https://truckmanualshub.com/

Engine	Item	Part No.	Qty.	Description	Serial Numbers/Notes
●	1	4165630	1	Plate, Assy (Control)	
●	2	2501000	1	Lever, Speed Control	
●	3	2501001	2	Lever, Speed Control	
●	4	2809974	1	O Ring	
●	5	550425	2	Pin, Spring	
●	6	2501002	2	Washer, Plain	
●	7	2501003	2	Nut	
●	8	2501004	1	Comp. Lever, Governor	
●	9	2501005	1	Lever, Engine Stop	
●	10	2501006	1	Seal, Oil	
●	11	2501007	1	Spring, Return	
●	12	2501008	1	Shaft, Stop Lever	
●	13	5001272	1	Gasket	
●	14	550362	1	Bolt, Sems	
●	15	550386	2	Stud	
●	16	2810647	2	Nut, Flange	
●	17	4306392	1	Hex.bolt	
●	18	553143	1	Gasket	
●	19	4306393	1	Bolt(Adjusting)	
●	20	5001249	2	Bolt (Adjusting)	
●	21	550395	3	Hex. Nut	

A - SLF 1880 (D1105-E4B-TXRN-1)
B - Truckster / Haulster / Spraytek (D1105-E4B-TXRN-2)
C - LF510 / Turfcat (D1105-E4B-TXN-3)
● - Used on All Engines

> Change from previous revision

https://truckmanualshub.com/

21.1 Nozzle Holder and Glow Plug

Serial No. All

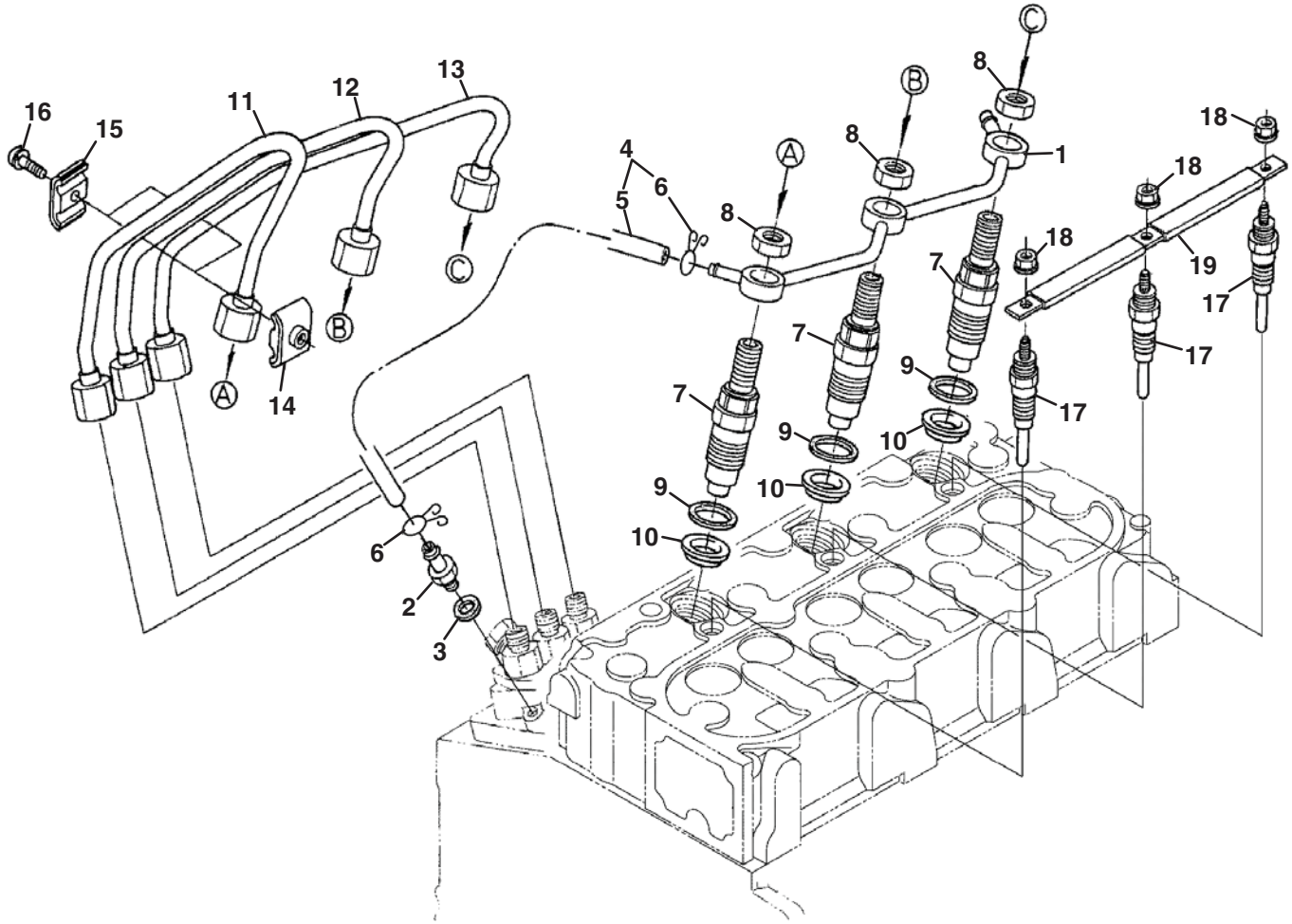

https://truckmanualshub.com/

Engine	Item	Part No.	Qty.	Description	Serial Numbers/Notes
●	1	5001265	1	Assy Pipe, Over Flow	
●	2	554037	1	Screw, Air Bleeder	
●	3	553143	1	Gasket	
●	4	554022	1	Assy Pipe, Over Flow	
●	5	4177275	1	• Pipe, Fuel Over Flow	
●	6	553105	2	• Clip Pipe	
●	7	4177276	3	Kit Holder, Nozzle	
●	8	4306394	3	• Nut	
●	9	554051	3	• Gasket	
●	10	557352	3	• Seal, Heat	
●	11	5000901	1	Pipe, Injection	
●	12	5000902	1	Pipe, Injection	
●	13	5000903	1	Pipe, Injection	
●	14	554054	2	Clamp Pipe	
●	15	554055	2	Clamp Pipe	
●	16	550401	2	Screw, Sems Pan Head	
●	17	4306395	3	Plug, Glow	
●	18	5001152	3	• Nut, Flange	
●	19	5001266	1	Cord, Glow Plug	

A - SLF 1880 (D1105-E4B-TXRN-1)
B - Truckster / Haulster / Spraytek (D1105-E4B-TXRN-2)
C - LF510 / Turfcat (D1105-E4B-TXN-3)
● - Used on All Engines

> Change from previous revision

https://truckmanualshub.com/

22.1 Nozzle Holder

Serial No. All

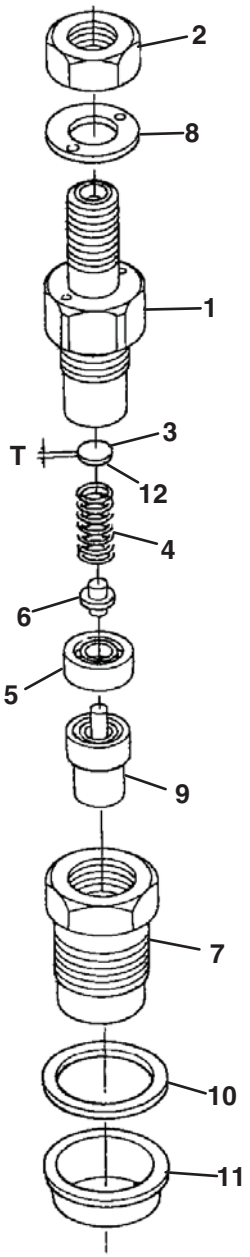

https://truckmanualshub.com/

Engine	Item	Part No.	Qty.	Description	Serial Numbers/Notes
●	1	4177276	3	Kit Holder,nozzle	
●	2	4306394	3	• Nut	
●	3	5001220	3	• Washer, Adjusting	
●	4	5001219	3	• Spring, Nozzle	
●	5	5001222	3	• Spacer, Distance	
●	6	5001218	3	• Rod, Push	
●	7	5001221	3	• Nut, Nozzle	
●	8	5001225	3	• Washer, Plain	
●	9	4177277	3	• Piece, Nozzle	
●	10	554051	3	• Gasket	
●	11	557352	3	• Seal, Heat	
●	12	5001226	3	Assy Washer Adjusting	
●		5001227	1	• Washer, Adjusting	0.10 mm
●		5001228	1	• Washer, Adjusting	0.20 mm
●		5001229	1	• Washer, Adjusting	0.30 mm
●		5001230	1	• Washer, Adjusting	0.40 mm
●		5001231	1	• Washer, Adjusting	0.50 mm
●		5001232	1	• Washer, Adjusting	0.52 mm
●		5001233	1	• Washer, Adjusting	0.54 mm
●		5001234	1	• Washer, Adjusting	0.56 mm
●		5001235	1	• Washer, Adjusting	0.58 mm
●		5001236	1	• Washer, Adjusting	0.80 mm

A - SLF 1880 (D1105-E4B-TXRN-1)
B - Truckster / Haulster / Spraytek (D1105-E4B-TXRN-2)
C - LF510 / Turfcat (D1105-E4B-TXN-3)
● - Used on All Engines

> Change from previous revision

https://truckmanualshub.com/

23.1 Alternator and Pulleys

Serial No. All

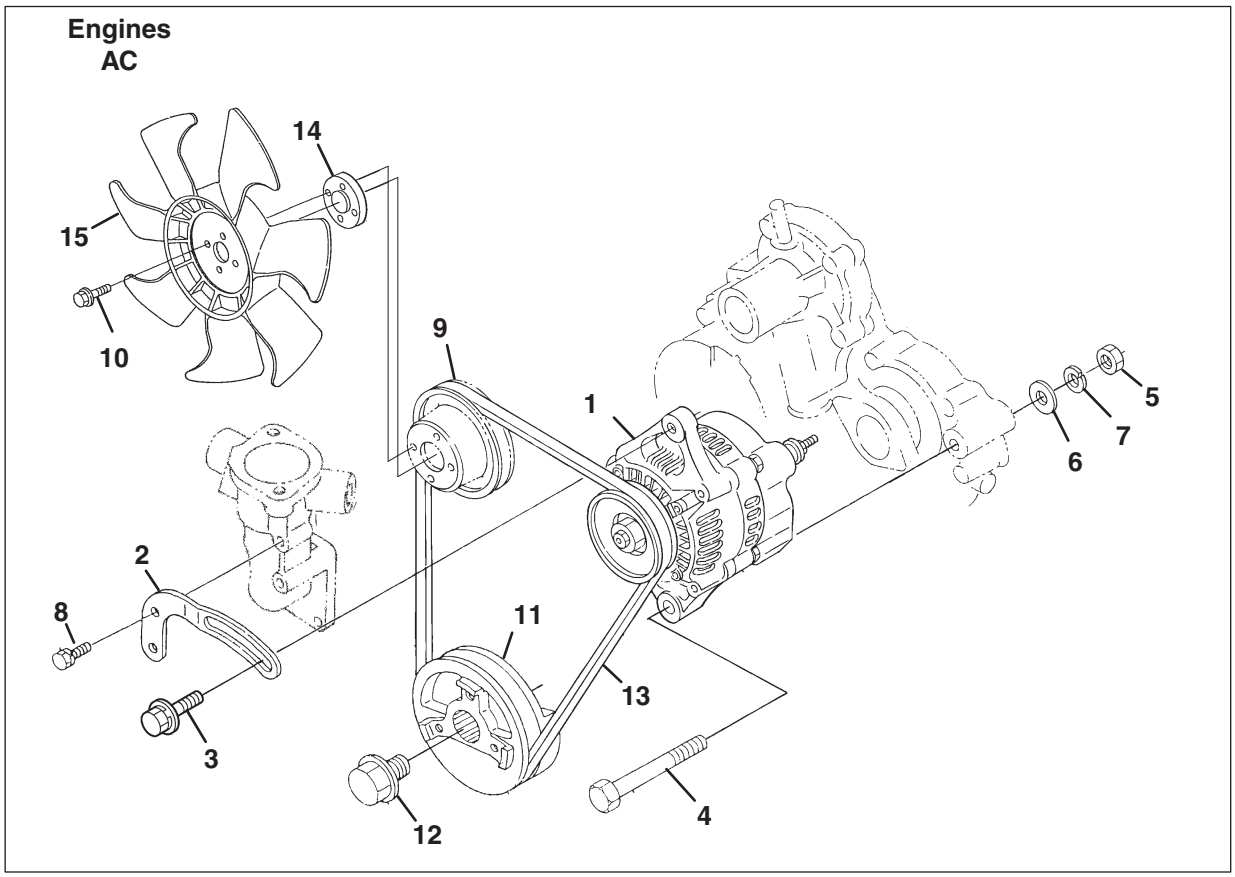

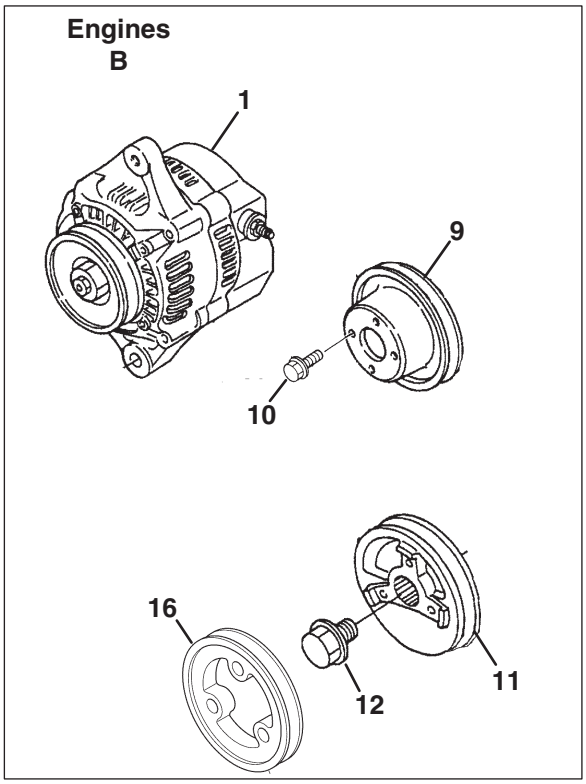

https://truckmanualshub.com/

Engine	Item	Part No.	Qty.	Description	Serial Numbers/Notes
AC	1	2810354	1	Assy Alternator	
B	1	4183623	1	Assy Alternator	
AC	2	557941	1	Stay, Dynamo	
AC	3	4134321	1	Bolt	
AC	4	557942	1	Bolt	
AC	5	594348	1	Nut	
AC	6	594350	1	Washer, Plain	
AC	7	5001160	1	Washer, Spring	
AC	8	550362	1	Bolt	
●	9	2501014	1	Pulley, Fan	
●	10	5003269	4	Bolt, Flange	
●	11	5001239	1	Pulley, Fan Drive	
●	12	2501017	1	Bolt, Fan Drive	
AC	13	5001284	1	V Belt	
A	14	5003480	1	Collar, Fan	
A	15	5003478	1	Fan	
C	15	5002776	1	Fan	
B	16	4183624	1	Pulley, Drive	

A - SLF 1880 (D1105-E4B-TXRN-1)
B - Truckster / Haulster / Spraytek (D1105-E4B-TXRN-2)
C - LF510 / Turfcat (D1105-E4B-TXN-3)
● - Used on All Engines

> Change from previous revision

https://truckmanualshub.com/

24.1 Alternator

Serial No. All

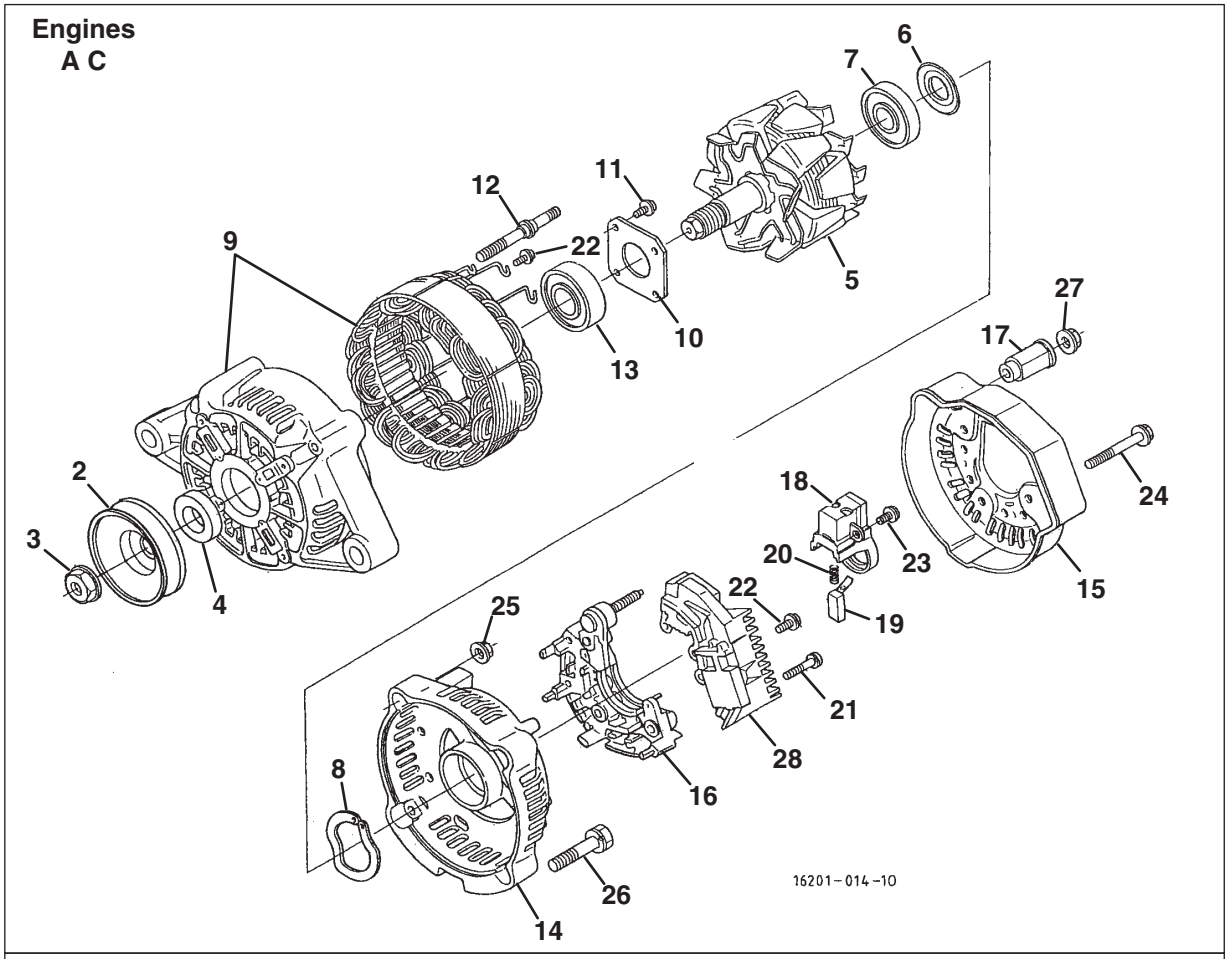

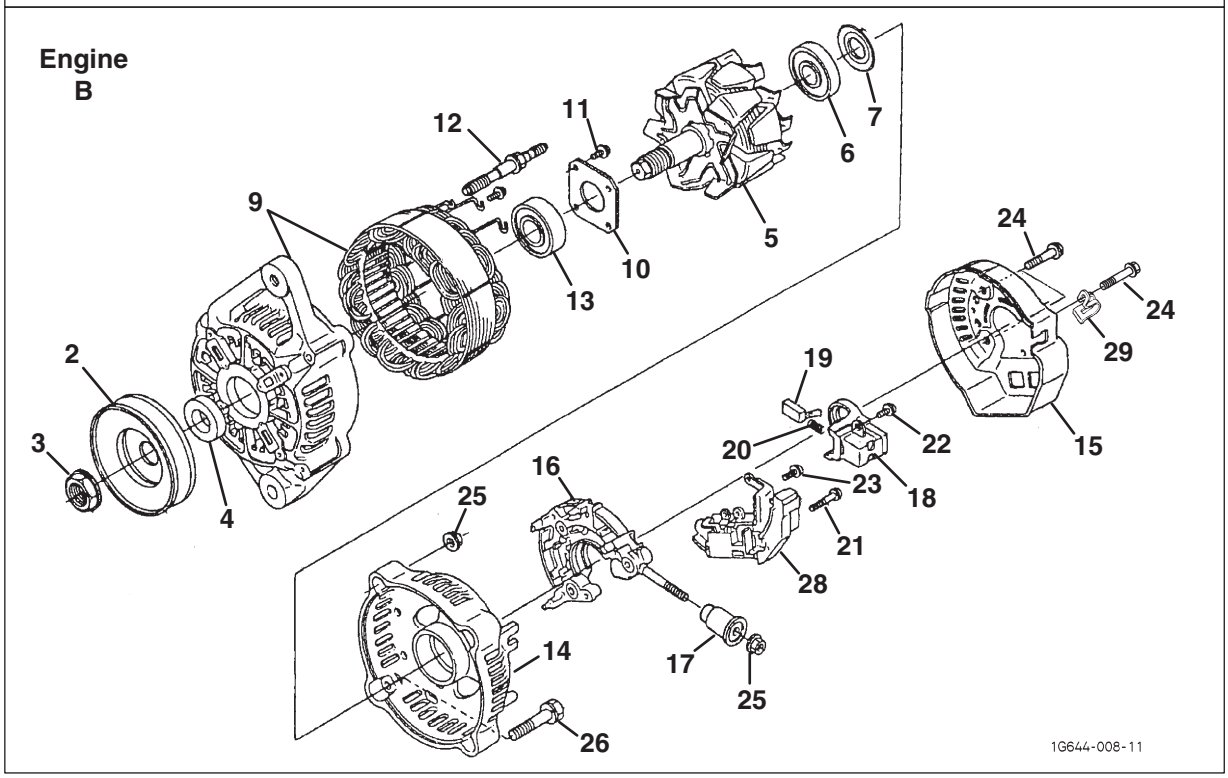

https://truckmanualshub.com/

Engine	Item	Part No.	Qty.	Description	Serial Numbers/Notes
AC	1	2810354	1	Assy Alternator	
B	1	4183623	1	Assy Alternator	
●	2	557947	1	• Pulley, Dynamo	
●	3	557948	1	• Nut	
●	4	557949	1	• Collar	
AC	5	4145943	1	• Rotor	
B	5	4183627	1	• Rotor	
●	6	557951	1	• • Cover, Bearing	
●	7	4145838	1	• • Bearing, Ball	
AC	8	557953	1	• Washer, Thrust	
AC	9	4145942	1	• Frame, Drive End	
B	9	4183626	1	• Frame, Drive End	
●	10	5001210	1	• • Plate, Retainer	
●	11	557956	4	• • Screw, Round Head	
●	12	557957	2	• • Bolt, Through	
●	13	4135839	1	• • Bearing, Ball	
AC	14	4145828	1	• Frame, End	
B	14	4183628	1	• Frame, End	
AC	15	4145829	1	• Cover, End	
B	15	4183631	1	• Cover, End	
AC	16	557961	1	• Assy Rectifier	
B	16	4183629	1	• Holder	
●	17	557962	1	• Bush, Insulation	
●	18	4145837	1	• Holder, Brush	
●	19	557964	2	• • Brush	
●	20	557965	2	• • Spring, Brush	
●	21	557966	2	• Screw, Round Head	
●	22	557967	6	• Screw, Round Head	
●	23	557968	1	• Screw, Round Head	
●	24	557969	3	• Bolt	
●	25	557970	2	• Nut	
●	26	557971	2	• Bolt	
AC	27	557972	1	• Nut	
AC	28	2810355	1	• Assy Regulator	
B	28	4183630	1	• Assy Regulator	
B	29	4134341	1	• Clamp, Cord	

A - SLF 1880 (D1105-E4B-TXRN-1)
B - Truckster / Haulster / Spraytek (D1105-E4B-TXRN-2)
C - LF510 / Turfcat (D1105-E4B-TXN-3)
● - Used on All Engines

> Change from previous revision

https://truckmanualshub.com/

25.1 Water Flange and Pump

Serial No. All

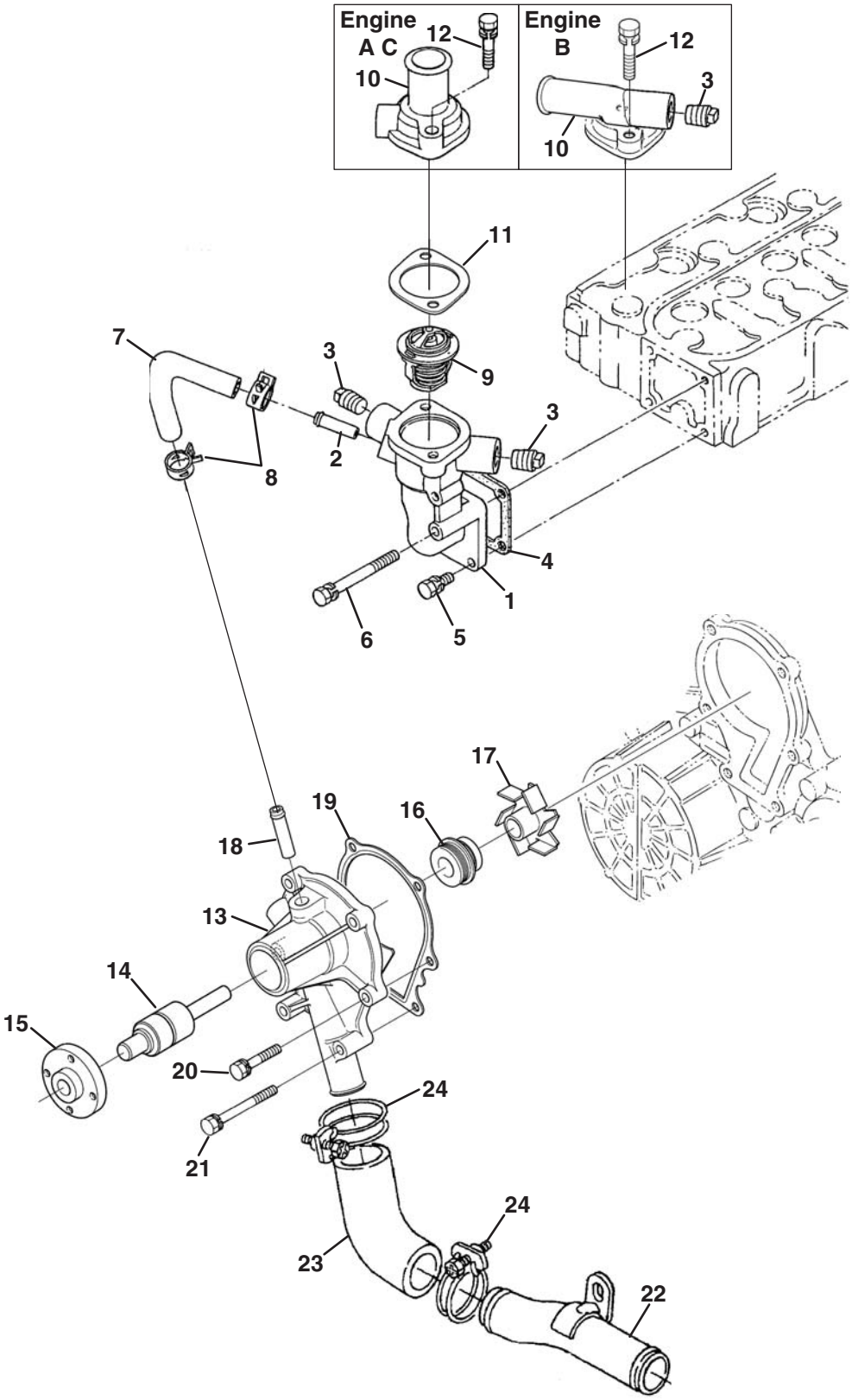

https://truckmanualshub.com/

Engine	Item	Part No.	Qty.	Description	Serial Numbers/Notes
●	1	5001297	1	Comp. Flange, Water	
●	2	557975	1	Pipe, Water Return	
AC	3	4134361	2	Plug	
B	3	4134361	3	Plug	
●	4	5001273	1	Gasket, Water Flange	
●	5	550362	3	Bolt, Sems	
AC	6	2500899	1	Bolt, Sems	
B	6	553842	1	Bolt, Sems	
●	7	5001254	1	Pipe, Water Return	
●	8	4306396	2	Clamp, Hose	
●	9	556412	1	Assy Thermostat	
AC	10	5003479	1	Cover, Thermostat	
B	10	4183632	1	Cover, Thermostat	
●	11	4134370	1	Gasket, Thermostat	
●	12	594334	2	Bolt, Sems	
B	13	4165525	1	Pump, Water,assy	
●	14	N/S	1	• Shaft, Pump	
●	15	557866	1	• Flange, Water Pump	
●	16	4155662	1	• Seal, Mechanical, Assy	
●	17	557865	1	• Impeller, Water Pump	
●	18	557571	1	• Pipe, Water Return	
●	19	557867	1	Gasket, Water Pump	
●	20	2500917	4	Bolt, Sems	
●	21	4183633	2	Bolt, Sems	
●	22	557980	1	Pipe, Water	
●	23	4165647	1	Pipe, Water	
●	24	4306397	2	Clamp, Hose	

A - SLF 1880 (D1105-E4B-TXRN-1)
B - Truckster / Haulster / Spraytek (D1105-E4B-TXRN-2)
C - LF510 / Turfcat (D1105-E4B-TXN-3)
● - Used on All Engines

> Change from previous revision

https://truckmanualshub.com/

26.1 Fuel Filter and Pump

Serial No. All

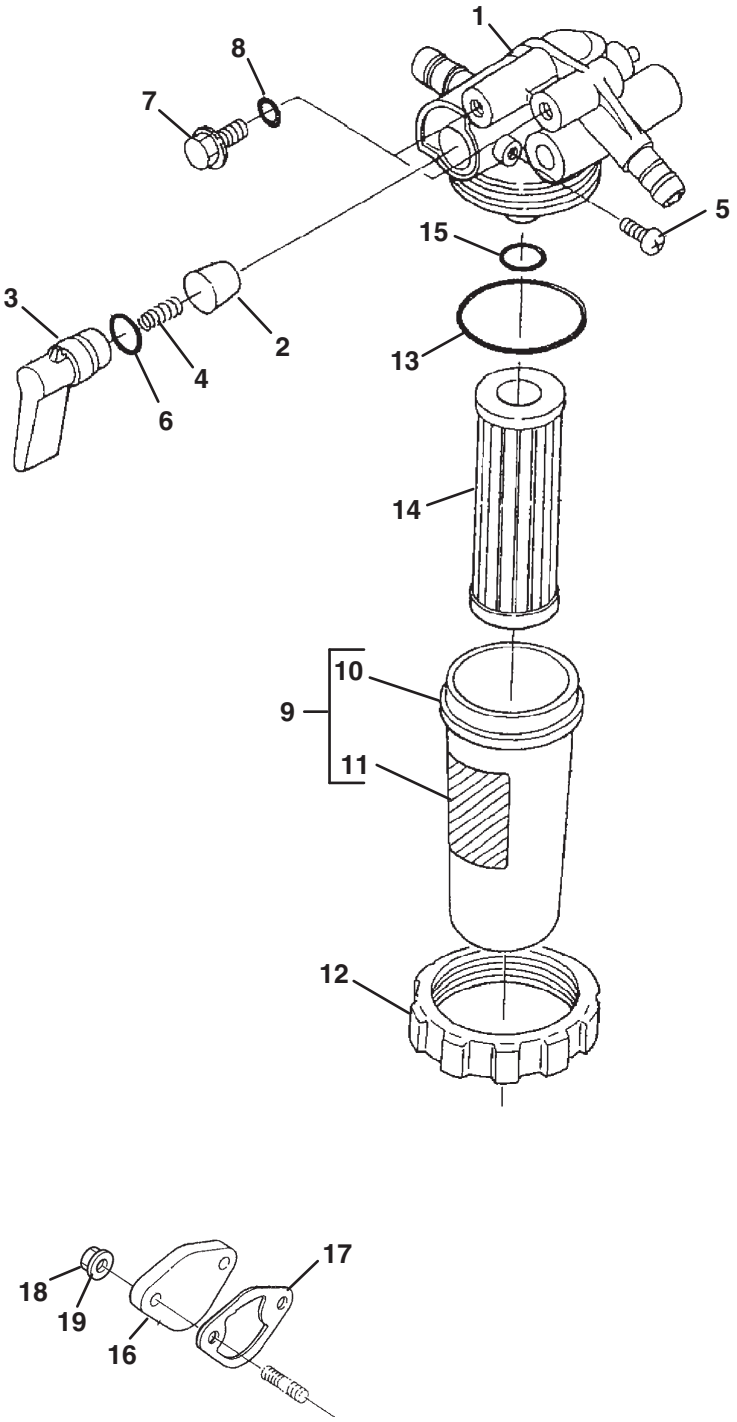

https://truckmanualshub.com/

Engine	Item	Part No.	Qty.	Description	Serial Numbers/Notes
●	1	5001947	1	Assy Filter, Fuel	
●	2	NS	1	• Stopper	
●	3	550396	1	• Lever, Cock	
●	4	550464	1	• Spring, Valve	
●	5	4145702	1	• Screw, Set	
●	6	4145703	1	• O Ring, Lever	
●	7	4145892	2	• Screw, Air Bleeder	
●	8	4145666	2	• O Ring	
●	9	5001309	1	• Assy Cup, Filter	
●	10	4183588	1	• • Cup, Filter	
●	11	5001301	1	• • Label, Fuel	
●	12	4183589	1	• Ring, Retaining	
●	13	550463	1	• O Ring, Filter Cup	
●	14	550489	1	• Assy Element	
●	15	2810640	1	• O Ring, Filter	
●	16	2500962	1	Cover	
●	17	5001922	1	Gasket, Fuel Pump	
●	18	550395	2	Nut	
●	19	5001160	2	Washer, Spring	

A - SLF 1880 (D1105-E4B-TXRN-1)
B - Truckster / Haulster / Spraytek (D1105-E4B-TXRN-2)
C - LF510 / Turfcat (D1105-E4B-TXN-3)
● - Used on All Engines

> Change from previous revision

https://truckmanualshub.com/

27.1 Miscellaneous

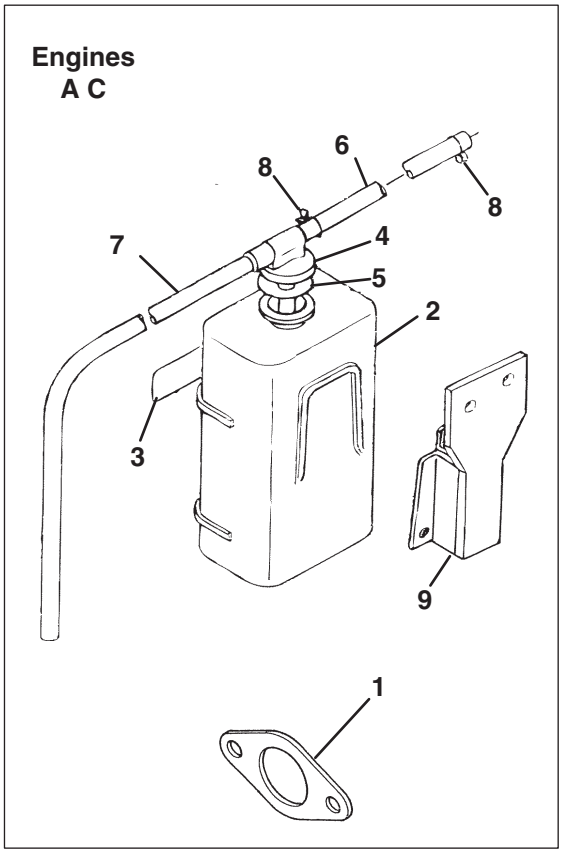

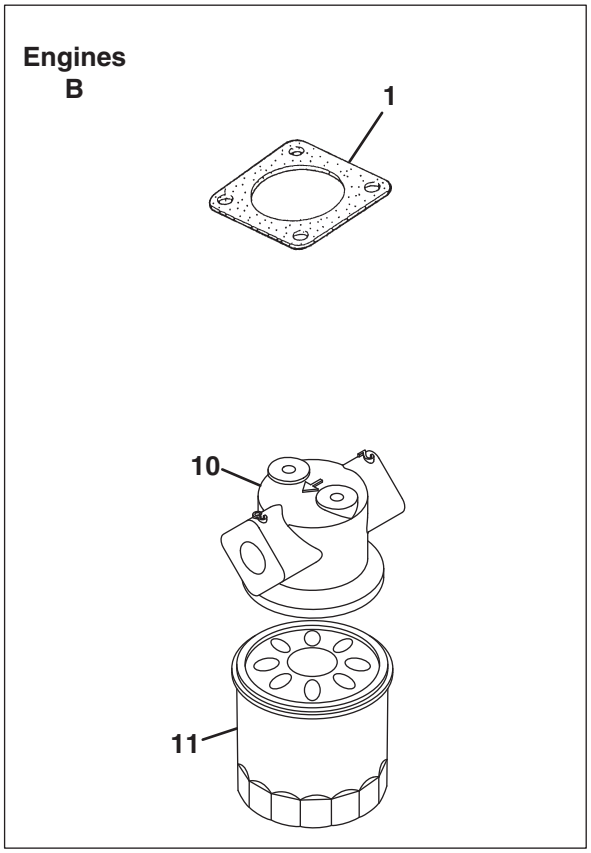

https://truckmanualshub.com/

Engine	Item	Part No.	Qty.	Description	Serial Numbers/Notes
B	1	553020	1	Gasket, Muffler Na	
AC	1	5003476	1	Gasket, Muffler Na	
AC	2	553926	1	Assy Tank, Reserve	
AC		5001207	1	• Body, Tank	
AC	3	4145735	1	• Label, Caution	
AC	4	2500814	1	• Cap	
AC	5	2500815	1	• Gasket	
AC	6	553913	1	• Pipe, Water Over Flow	
AC	7	553929	1	• Pipe, Water Over Flow	
AC	8	553914	2	• Clip, Pipe	
AC	9	554231	1	Comp Support, Tank	
B	10	4183634	1	Base. Filter	
B	11	4113986	1	Filter, Oil	

A - SLF 1880 (D1105-E4B-TXRN-1)
B - Truckster / Haulster / Spraytek (D1105-E4B-TXRN-2)
C - LF510 / Turfcat (D1105-E4B-TXN-3)
● - Used on All Engines

> Change from previous revision

https://truckmanualshub.com/

2500809.....55
2500811.....5, 9
2500812.....27
2500813.....27
2500814.....57
2500815.....57
2500822.....9
2500824.....5
2500825.....5, 25
2500827.....15
2500828.....15
2500831.....27
2500832.....27
2500837.....25
2500838.....25
2500839.....25
2500840.....25
2500845.....5, 41
2500854.....5, 17
2500856.....5, 19
2500859.....9
2500868.....27
2500869.....27
2500874.....7
2500875.....7
2500877.....7
2500878.....7
2500879.....7
2500880.....7
2500881.....7
2500882.....7
2500883.....7
2500886.....13
2500887.....13
2500888.....13
2500889.....13
2500892.....21
2500894.....37
2500899..... 21, 23, 53
2500900.....21, 23
2500901.....21, 23
2500902..... 5, 21, 23
2500905.....25
2500908.....25
2500911.....17
2500915.....15
2500917.....17, 53
2500918.....17
2500919.....17
2500920.....15
2500922.....15
2500923.....5, 15
2500924.....15
2500926.....15
2500928.....15
2500930.....15
2500932..... 15
2500933..... 15
2500935..... 15
2500936..... 15
2500937..... 15
2500940..... 33
2500941..... 33
2500942..... 33
2500943..... 33
2500944..... 33
2500945..... 33
2500946..... 33
2500947..... 33
2500949..... 27, 33
2500950..... 27
2500953..... 33
2500955..... 27
2500958..... 29
2500959..... 29
2500960..... 29
2500961..... 39
2500962..... 55
2500967..... 35
2500969..... 35
2500972..... 35
2500973..... 35
2500975..... 35
2500976..... 35
2500979..... 35
2500980..... 35
2500987..... 37
2500990..... 41
2500995..... 41
2500997..... 41
2500998..... 41
2500999..... 41
2501000..... 43
2501001..... 43
2501002..... 43
2501003..... 43
2501004..... 43
2501005..... 43
2501006..... 43
2501007..... 43
2501008..... 43
2501014..... 49
2501017..... 49
2501023..... 55
2501024..... 55
2501025..... 55
2501026..... 55
2809954..... 23
2809955..... 5
2809961..... 27
2809962..... 27
2809963..... 27
2809964..... 27
2809965..... 27
2809966..... 27
2809967..... 27
2809969..... 25
2809970..... 25
2809974..... 43
2809978..... 15
2810354..... 49, 51
2810355..... 51
2810640..... 55
2810647..... 21, 23, 43
2810751..... 31
2810877..... 11
2811021..... 37
2811976..... 17
2812014..... 11
4111661..... 11
4111662..... 11
4113986..... 57
4134199..... 19
4134204..... 19
4134321..... 49
4134341..... 51
4134361..... 53
4134370..... 5, 53
4135839..... 51
4138090..... 37
4138091..... 37
4145666..... 55
4145702..... 55
4145703..... 55
4145735..... 57
4145828..... 51
4145829..... 51
4145830..... 13
4145831..... 13
4145832..... 31
4145837..... 51
4145838..... 51
4145892..... 55
4145906..... 37
4145910..... 7
4145911..... 19
4145912..... 19
4145942..... 51
4145943..... 51
4145944..... 19, 21
4155662..... 53
4165421..... 19
4165422..... 29
4165442..... 37
4165525..... 53
4165526..... 19
4165620..... 15
4165622..... 35
4165623..... 35
4165624..... 35
4165630..... 43
4165647..... 53
4165648..... 17
4165655..... 19
4165656..... 19
4177223..... 25
4177224..... 25
4177260..... 9
4177262..... 21
4177263..... 25
4177265..... 33
4177268..... 29
4177275..... 45
4177276..... 45
4177278..... 41
4177279..... 41
4177280..... 41
4183581..... 5, 13
4183583..... 39
4183584..... 39
4183585..... 41
4183588..... 55
4183589..... 55
4183592..... 15
4183605..... 9
4183611..... 23
4183612..... 23
4183613..... 23
4183614..... 23
4183622..... 41
4183623..... 49, 51
4183624..... 49
4183626..... 51
4183627..... 51
4183628..... 51
4183629..... 51
4183630..... 51
4183631..... 51
4183632..... 53
4183633..... 53
4183634..... 57
4183636..... 5
4183637..... 5
4206382..... 39
4206384..... 27
4289798..... 13
4289854..... 7
4289891..... 9
4306369..... 7
4306370..... 13
4306371..... 21
4306372..... 23
4306373..... 21, 23
4306374..... 21, 23

https://truckmanualshub.com/

INDEX

4306375 ..... 21, 23
4306376 ..... 21, 23
4306377 ..... 21, 23
4306378 ..... 19, 21
4306379 25
4306380 25
4306381 25
4306382 33
4306383 27
4306384 27
4306385 27
4306386 27
4306387 27
4306388 27
4306389 35
4306390 35
4306391 37
4306392 43
4306393 43
4306394 45
4306395 45
4306396 53
4306397 53
4306398 27
4306399 27
4306400 ..... 25, 27
4306401 ..... 25, 27
4306402 ..... 25, 27
5000886 39
5000894 39
5000897 35
5000901 45
5000902 45
5000903 45
5001118 39
5001138 11
5001147 35
5001152 45
5001160 ..... 49, 55
5001182 55
5001189 55
5001207 57
5001210 51
5001215 39
5001217 39
5001239 49
5001241 25
5001244 31
5001246 35
5001247 35
5001249 43
5001254 53
5001255 ..... 21, 23
5001257 37
5001262 ..... 5, 17
5001265 45
5001266 45
5001269 ..... 5, 21, 23
5001270 ..... 5, 25
5001272 ..... 5, 43
5001273 ..... 5, 53
5001275 37
5001276 ..... 21, 23
5001278 27
5001279 35
5001284 49
5001285 37
5001287 41
5001292 31
5001297 53
5001301 55
5001302 29
5001303 9
5001306 17
5001308 7
5001309 55
5001314 35
5001922 ..... 5, 55
5001947 55
5001948 55
5002002 29
5002018 37
5002033 11
5002742 27
5002751 23
5002776 49
5002955 11
5003269 ..... 15, 49
5003301 31
5003470 29
5003472 29
5003473 29
5003475 17
5003476 ..... 5, 57
5003478 49
5003479 53
5003480 49
550360 41
550361 9
550362 33, 35, 43, 49, 53
550386 ..... 21, 23, 43
550395 ..... 29, 43, 55
550396 55
550401 45
550424 7
550425 43
550463 55
550464 55
550489 55
550543 7
550673 13
550838 19
550839 ..... 5, 19
552950 ..... 7, 23
552958 7
552977 7
552978 ..... 7, 13
553020 ..... 5, 57
553093 27
553094 27
553105 45
553143 ..... 5, 37, 43, 45
553481 ..... 21, 23
553842 ..... 17, 21, 23, 53
553855 9
553857 7
553860 33
553911 7
553913 57
553914 57
553926 57
553929 57
554018 7
554022 45
554036 39
554037 45
554051 ..... 5, 45
554054 45
554055 45
554097 21
554099 39
554104 39
554108 15
554116 39
554117 39
554202 39
554231 57
555567 27
555571 29
556412 53
557352 ..... 5, 45
557357 55
557358 55
557571 53
557584 39
557859 21
557861 21
557865 53
557866 53
557867 ..... 5, 53
557888 ..... 29, 31
557890 31
557891 31
557892 31
557893 31
557894 31
557895 31
557896 31
557897 31
557898 31
557899 31
557900 31
557902 31
557903 31
557904 31
557905 31
557906 31
557907 31
557908 31
557909 31
557910 31
557911 31
557912 31
557913 31
557934 37
557941 49
557942 49
557947 51
557948 51
557949 51
557951 51
557953 51
557956 51
557957 51
557960 21
557961 51
557962 51
557964 51
557965 51
557966 51
557967 51
557968 51
557969 51
557970 51
557971 51
557972 51
557975 53
557980 53
594334 53
594348 49
594350 49
594351 21
843281 39

https://truckmanualshub.com/

World Class Quality, Performance And Support

Equipment from Jacobsen is built to exacting standards ensured by ISO 9001 and ISO 14001 registration at all of our manufacturing locations.

A worldwide dealer network and factory trained technicians backed by Genuine Jacobsen Parts provide reliable, high-quality product support.

JACOBSEN®
A Textron Company

When Performance Matters.™

CUSHMAN JACOBSEN RANSOMES

Jacobsen, A Textron Company
11108 uality Drive, Charlotte, NC 28273
www.Jacobsen.com
800-848-1636