https://truckmanualshub.com/

Driver's Instruction Book

SMV 10-600 B – SMV 60-1200 B

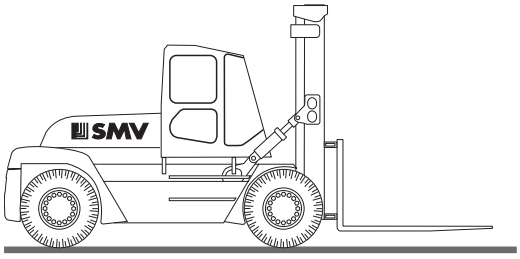

SMV 10–13,6-600 B

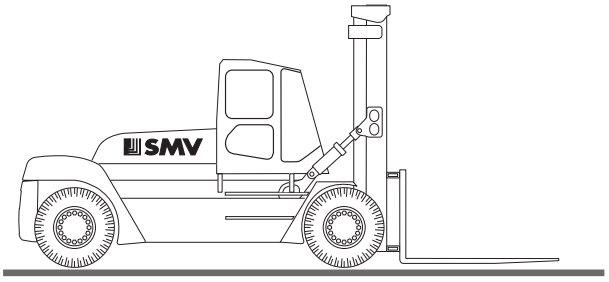

SMV 12-16-1200 B

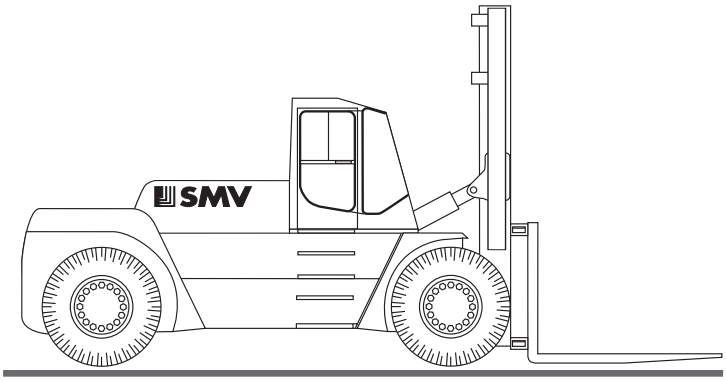

SMV 28–32 -1200 B

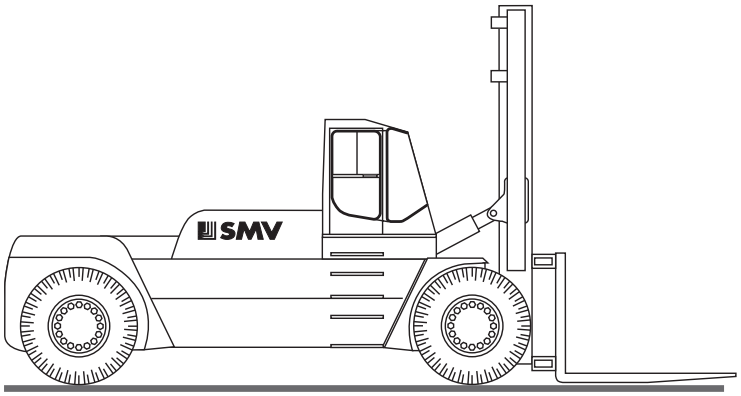

SMV 37–45-1200 B

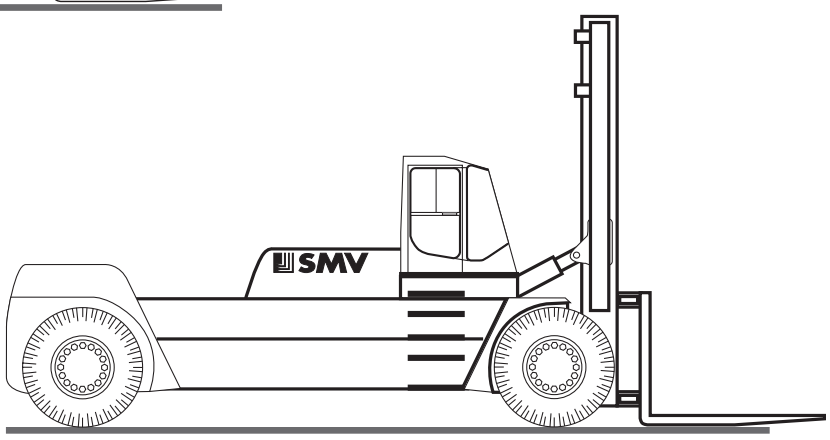

SMV 52–60-1200 B

CONDESIGN INFOCOM AB, SWEDEN

https://truckmanualshub.com/

This user manual provides you with the information you need to know about starting, driving, servicing and maintaining your SMV fork-lift truck.

Using and attending to the truck properly will preserve its qualities for a long and profitable working life, and will make full use of its applications.

The expressions ”front”, ”back”, ”right” and ”left” indicate the position in which the relevant component is installed in the truck as seen from the driving compartment.

Follow all instructions in the manual on using the fork-lift truck and carry out maintenance and inspection as described in the maintenance table on a regular basis and at the correct time, using the specified lubricant.

Maintenance must be carried out only by qualified staff.

Above all, we would like to emphasise the importance of following both the general traffic regulations and the guidelines in force for the use of fork-lift trucks and the prevention of accidents at work.

The regulations in force for normal and regular use of commercial trucks must be strictly adhered to by management, commercial operators and service staff.

The user, not Konecranes Lifttrucks, is responsible for any dangers that may arise when the truck is being used for applications not approved by the manufacturer.

Konecranes lifttrucks are designed for the transport and lifting of loads indicated on the load-bearing capacity plate. No alterations and, above all, no additions or conversions may be made to the fork-lift truck without the permission of the manufacturer.

The user instructions for additional parts issued by the manufacturer apply to those additional parts.

Technical remarks

Konecranes Lifttrucks is constantly developing both the design and manufacture of its products. Illustrations and technical details concerning the design, parts and performance of the fork-lift truck are subject to alteration as a result of this technological development.

Konecranes Lifttrucks therefore assumes no responsibility on the basis of those specifications, illustrations and descriptions found in the user manual.

If you have any questions concerning Konecranes Lifttrucks' trucks and ordering spares, contact your nearest authorised dealer. Take care to supply the correct address for delivery.

If any repairs are needed, use only Konecranes Lifttrucks original spares. This is necessary in order for your Konecranes Lifttruck to retain its original technical standard.

When ordering spares, it is important to indicate the item number found in the spares list as well as the following information:

Model:
Serial number/year of manufacture:
Delivery date:

When ordering spares for the following units, you must indicate their individual manufacturing numbers:

Engine no.:
Mast no.:
The lift height of the mast:
Hydraulic pump no.:
Transmission no.:
Drive shaft no.:

When the fork-lift truck is delivered, the details on the type plate should be written in this user manual.

Delivery inspection

Every Konecranes Lifttruck is carefully inspected before it leaves the factory to ensure that it is fully in order and is fully equipped in accordance with the order. Authorised Konecranes Lifttrucks dealers are then required to re-inspect the truck before it is delivered to the customer.

In order to avoid later complaints and problems, the customer should also check that the truck is in full working order and is fully equipped when it is delivered, with a receipt of the acceptance/handover of the truck from the dealer.

Always perform Lubrication, Checking, Maintenance and Daily Maintenance according to the Maintenance tables in this book as well as the Delivery Report before operating the Fork-lift truck for the first time.

The following technical manuals accompany every fork-lift truck:

1 Spares catalogue for the fork-lift truck
1 User manual for the fork-lift truck
1 Machine card

When contacting your authorised dealer, always indicate:

1. Truck designation
2. Truck serial number
3. Year of manufacture.

https://truckmanualshub.com/

SAFETY REGULATIONS

* **Follow national safety regulations**
* **The truck must only be driven by those trained to do so and who have the permission of the management**
* **Remember: The national and state laws on driving licences and driving regulations always apply!**
* **Before starting up, ensure that no person(s) or other obstacles are in the way of the truck or its equipment**
* **Do not block doors and/or emergency exits.**
* **The truck must not be used if it has faulty brakes, steering, lifting or other important functions**
* **Passengers are not allowed**
* **Lifting a person or persons is forbidden unless the truck is equipped with an approved lift cage for this purpose**
* **Never exceed the lifting capacity of the truck - see type plate and load diagram**
* **The load should always be transported in a lowered position**
* **Always report damage and wear and tear affecting the safety/function and life of the truck**
* **The hydraulics of the truck are equipped with a highpressure hydraulic accumulator. Take great care when working with the hydraulic system. Only service staff with knowledge of the hydraulics may intervene here.**
* **Use protective equipment - helmet, gloves, eye and ear protection when working on the truck.**

https://truckmanualshub.com/

WARNINGS AND IMPORTANT INFORMATION

In the instruction book there are three types of warning texts. These are divided into different levels of hazardous situations. Warning texts are preceded by a warning symbol.

This symbol indicates a potential personal injury hazard. Whenever you see this symbol, take care to read the following instructions:

DANGER
Indicates an immediately hazardous situation which, if not avoided, will result in death or serious injury.

WARNING
Indicates a potentially hazardous situation which, if not avoided, could result in death or serious injury.

CAUTION
Indicates a potentially hazardous situation which, if not avoided, may result in minor or moderate injury.

Always read the instructions that follow the safety alert symbol or the signal word.

Important information is indicated by the indicator word NOTE. The information is not necessarily safety related; it can also touch on issues that will facilitate handling, or clarify information.

NOTE
Used to draw attention to important information that facilitates work processes or handling.

Read the instruction book carefully before you start using the machine.
Incorrect handling may cause serious injury or damage to persons, products, or property. The instruction book contains important information on handling and safety and should always be available in the machine. Never use a machine that does not have an instruction book.

https://truckmanualshub.com/

BEFORE OPERATION

Persons responsible, particularly truck- drivers and service staff, must be instructed on the regulations for normal and safe use of commercial trucks which accompany this manual. Follow the guidelines and safety regulations applicable to:
- use of commercial trucks
- roads and work places
- drivers (rights, obligations and regula- tions for implementation)
- any extra equipment
- different types of vehicle
- service (maintenance and inspection)
- annual inspection for the prevention of accidents.

The driver (/owner) or other persons in positions of responsibility must ensure that the above guidelines and safety regulations are adhered to.
When a trained driver is about to operate the truck, instruct him on:
- special functions of the SMV truck
- extra equipment
- special operating applications.

Driving, manoeuvring and steering should be practised until the driver is fully acquainted with all these operations.

Only after that stage can training in stacking manoeuvres begin.
The stability of the truck in the working area can only be guaranteed if the correct procedures are followed. Should the truck start to roll due to unapproved manouvres or incorrect driving, the full instructions supplied must be followed.

Prevention of accidents

In some countries, fork-lift trucks must be inspected once a year by trained staff in accordance with the prevention of accidents regulations. Authorised Konecranes Lifttrucks dealers can supply information on these.

We reserve the right to modify our design and material specifications without prior notice.

ENVIRONMENTAL ASPECTS

1. **Driving the lift truck**
   Exhaust emissions, noise, leakage (oil, fuel, fluids) are influenced negativly by incorrect driving and handling of the lift truck.

2. **Remainings from servicing**
   Oil, fuel, filters and filter deposit, cleaning fluidshave to be disposed of or recovered according to local legislation.

3. **Remainings from repairs**
   Metal, batteries, elctronics, rubber (tyres, hoses, seals), solutions, and chemicals have to be diposed of or recovered according to local legislation.

NORMS

This lift truck is built regarding the following norms according to

Noise	2000/14/EC PrEN 12053 ISO 3744:1998 DIN 45635
Vibrations	2000/44/EC PrEN 13059:1997
Emission	97/23/EC

https://truckmanualshub.com/

Outline picture of the forklift truck

KONECRANES

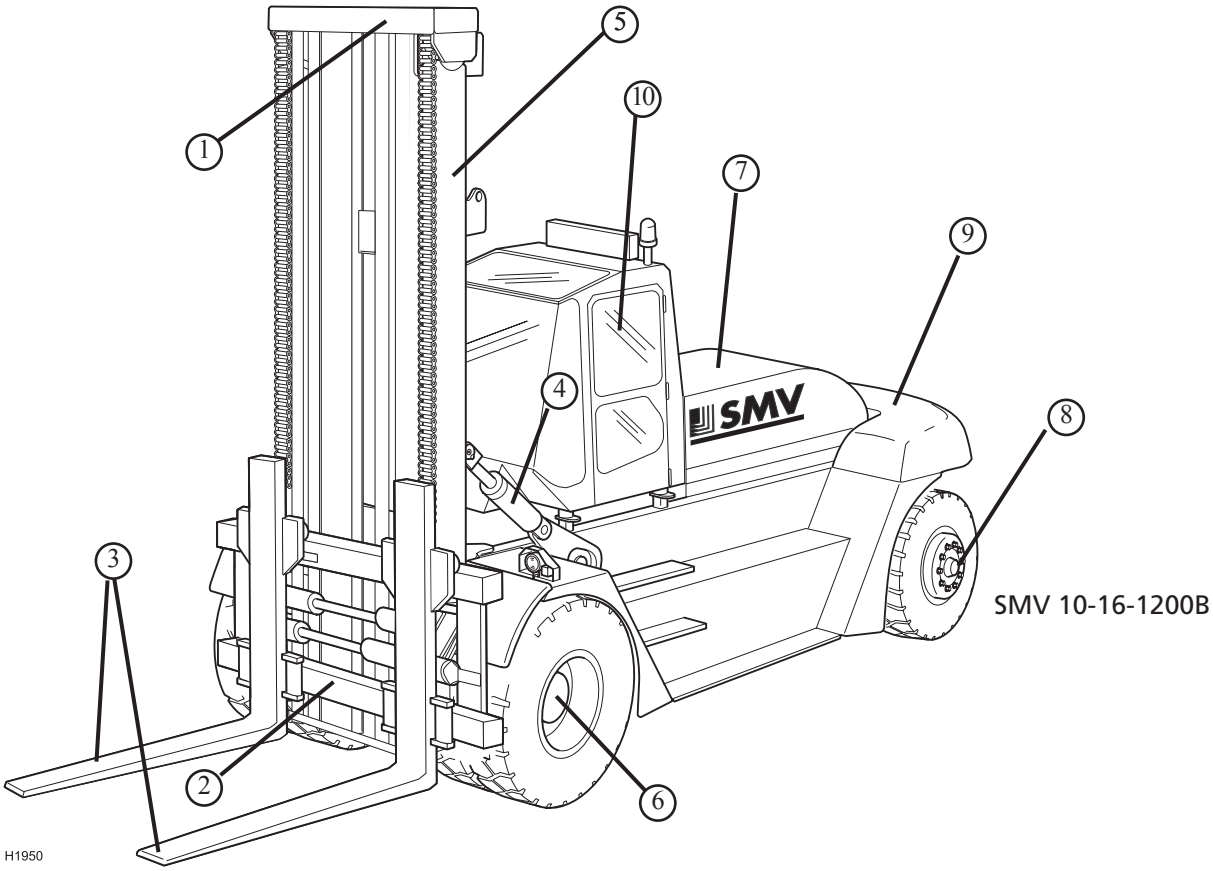

1. Mast
2. Fork carriage
3. Forks
4. Tilt cylinders
5. Lift cylinders
6. Drive axle
7. Engine casing
8. Steer axle
9. Counterweight
10. Driver's cab

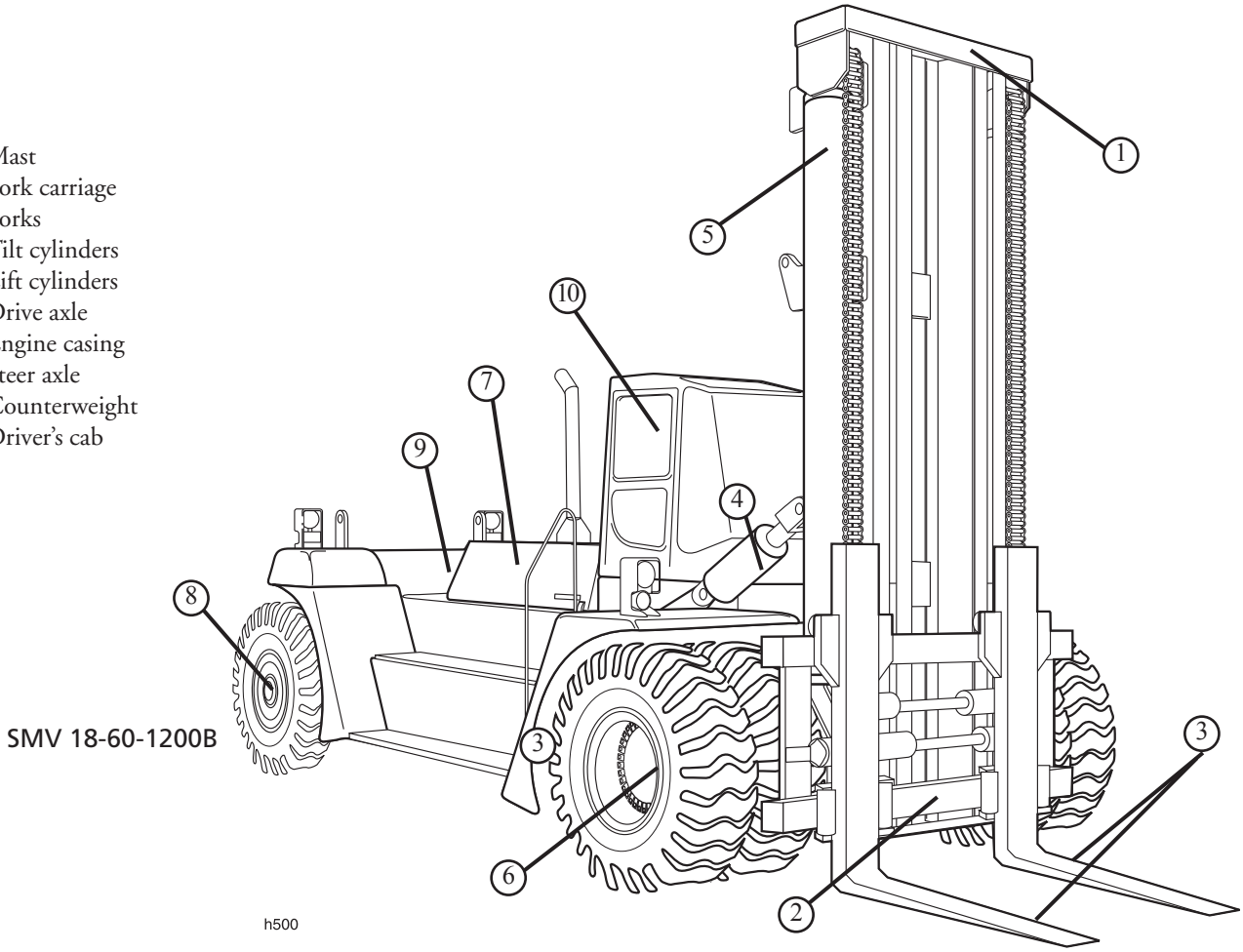

https://truckmanualshub.com/

ID-plates and serial numbers

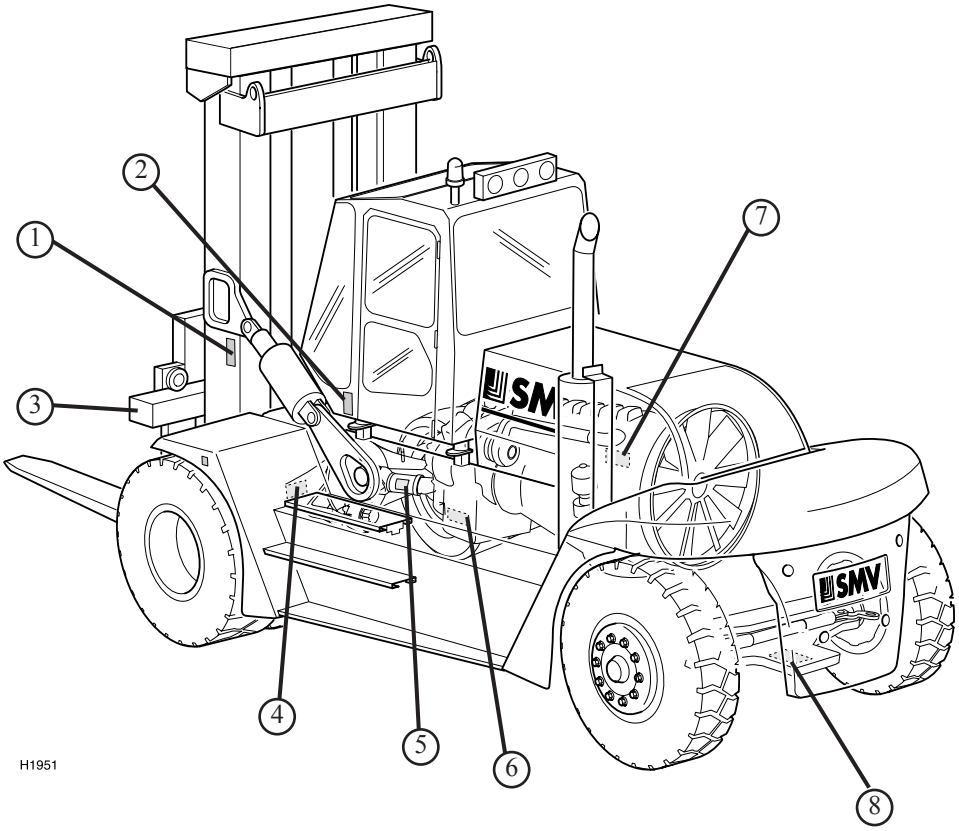

SMV 10-16-1200B

1. Mast number
2. Load capacity plate
3. Fork carriage number
4. Drive axle number
5. Factory number
6. Transmission number
7. Engine number
8. Steer axle number

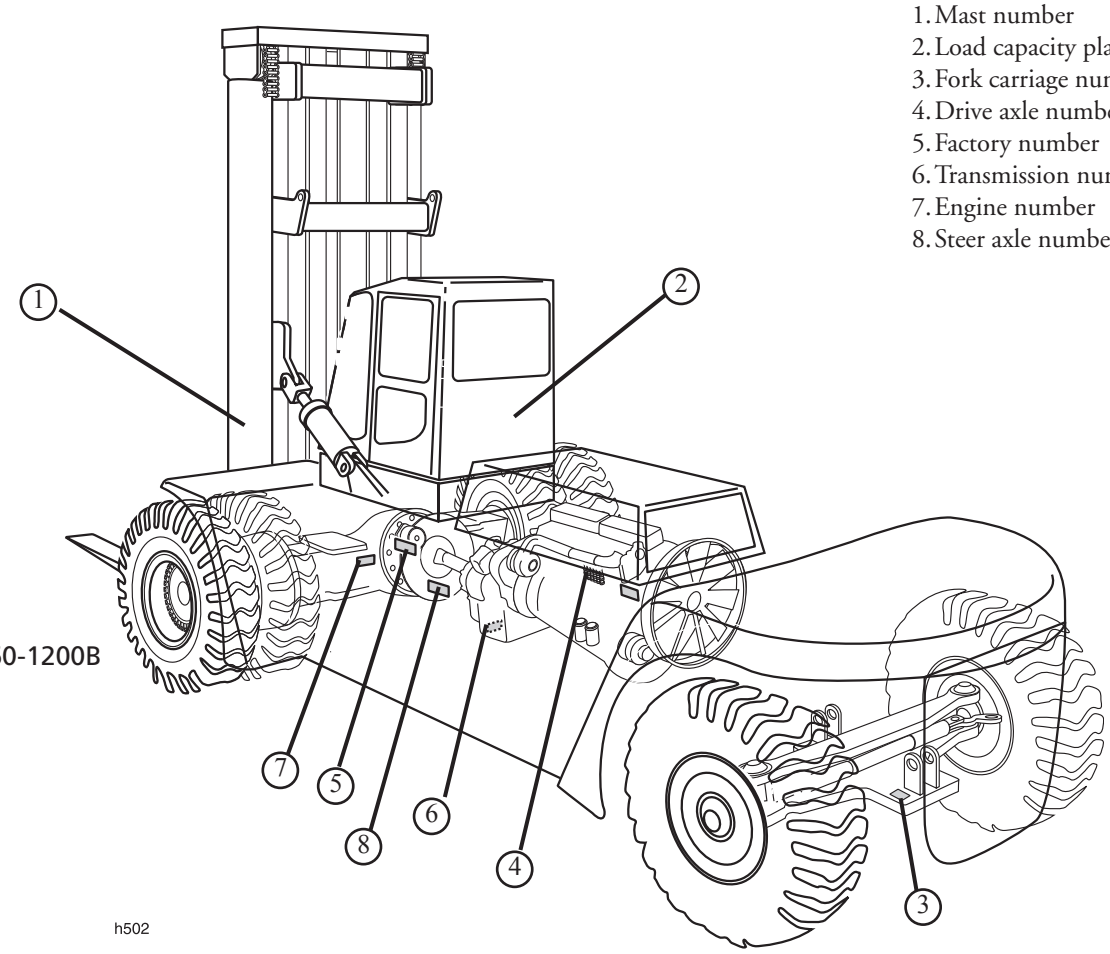

SMV 18-60-1200B

https://truckmanualshub.com/

TECHNICAL DESCRIPTION

Specification SMV 32-1200 B means:
SMV = Product name
32 = 32 tonnes lifting capacity
1200 = 1.200 mm load centre
B = series designation

The engine is a water-cooled, turbo-charged 6-cylinder diesel engine. The engine drives a four speed transmission using a torque converter. The gear selector is electrical with three gears for driving front/back. The torque converter is equipped with an oil cooler which lies underneath the radiator. The gearbox has a disengaging valve controlled by the brake pedal in the cab. This valve disengages the gearbox so that the operator can control the brakes whilst maintaining a high engine speed during stacking manoeuvres.

The front axle is driven by the gearbox via an universally jointed drive shaft. The axle is of the heavy duty double reduction type. The primary reduction is through the hypoid crown wheel and pinion gear set, the differential gears are carried within the centre of the crown wheel. The secondary reduction is achieved by a planetary gear set within the wheel hub. The wheel hubs are carried on taper roller bearings, thus relieving the half shaft of any loading other than driving torque.

The steer axle is mounted in ”spherelastic” bushes which allow sufficient wheel movements for stability on uneven ground. The parallel tie-rods are between the steering cylinder and the wheel axles.

The brakes are operated by an oil-cooled wet disc-braking system. The foot brakes are controlled by the foot brake valve which activates the drive axle.
The parking brake is controlled electrically and activates a hydraulic cylinder on the drive shaft.

The hydraulic pump is mounted directly on the gearbox. The system is divided into four circuits - two for manoeuvring, one for servo functions and one for steering. The relief valves in the hydraulic circuits are installed to prevent the system from overloading.

The steering is fully servo-assisted. If the engine should stall, it is still possible to steer the truck without servo assistance, although it is heavy going.

Two control valves, mounted on the chassis, are controlled from the cab by servo-assisted control levers on the right of the driver. These regulates the functions for lifting, tilting, sideshifting, spreading the forks, and any extra functions.

The mast consists of an outer and an inner upright, a lifting carriage, two lifting cylinders and two tilt cylinders. The inner upright section moves along the outer upright with support wheels and support backing rollers. The mast is mounted on two axles in the chassis.

The forks are of a rolling type with sideshift movement and fork positioning. The forks roll on the lifting carriage.

The driver’s cab fulfils international safety standards, and is rubbermounted to protect the driver from vibrations. Entrance to the cab is on the left side via the steps on the truck. When the driver’s seat is rotated through 90°, it is also possible to exit the cab from the right side.

All hydraulic controls for the lifting functions are grouped on the console to the right of the driver’s seat.
The parking brake and the switch for selecting additional electrical equipment instruments, gauges and warning lights together with the switches for the direction indicators and windscreen wipers are located on the front mounted instrument panel.
Gear control lever on the steer shaft.

The electrical system is 24 V and has two serial-connected heavy duty batteries.

SMV 10-28–1200B	88 Ah
SMV 32-52–1200B	140 Ah

https://truckmanualshub.com/

Contents

KONECRANES®

Your SMV lift truck **2**

Safety regulations **3**

Outline picture of the forklift truck **6**

ID-plates and serial numbers **7**

Technical description **8**

Contents **9**

Cab controls and indicators 10

Warning lights and gauges 11

Before operating
- Daily maintenance and service before start, checking washing fluid level, checking the coolant level 12
- Checking the engine oil level, checking the oil level in the gearbox, checking the air filter indicator 13
- Cleaning the airfilter coarse cleaner, checking the hydraulic oil level, topping up the hydraulic oil 14
- Checking the fuel level, filling fuel, checking main cicuit switch 15
- Checking the condition of the tyres and the tyre pressure, adjustment of steering wheel and panel 16
- Adjusting the driver's seat 17
- Description of the IQAN 18-23

Driving
- Starting the engine 24
- Warning lights and gauges, Stopping the engine 25
- Operating 26
- Driving forward 27
- Stopping the truck. Driving backward 28

Steering and braking
- Steering, declutch and parking brake 29
- Emergency stop 30
- Ventilation and cab filter 31

Cab tilting
- Cab tilting 32

Maneouvering the lifting eqipment
- Maneouvering the fork carriage 33

Lifting loads
- Before lifting loads, capacity plates 34
- Emergency lowering 35

Lifting and driving with loads
- Lifting loads, Driving with loads, Transort and unloading 36-38

Maintenance data 39

Fuel and oil recommendations 40-41

Electrical system 42-44

Notes 45

https://truckmanualshub.com/

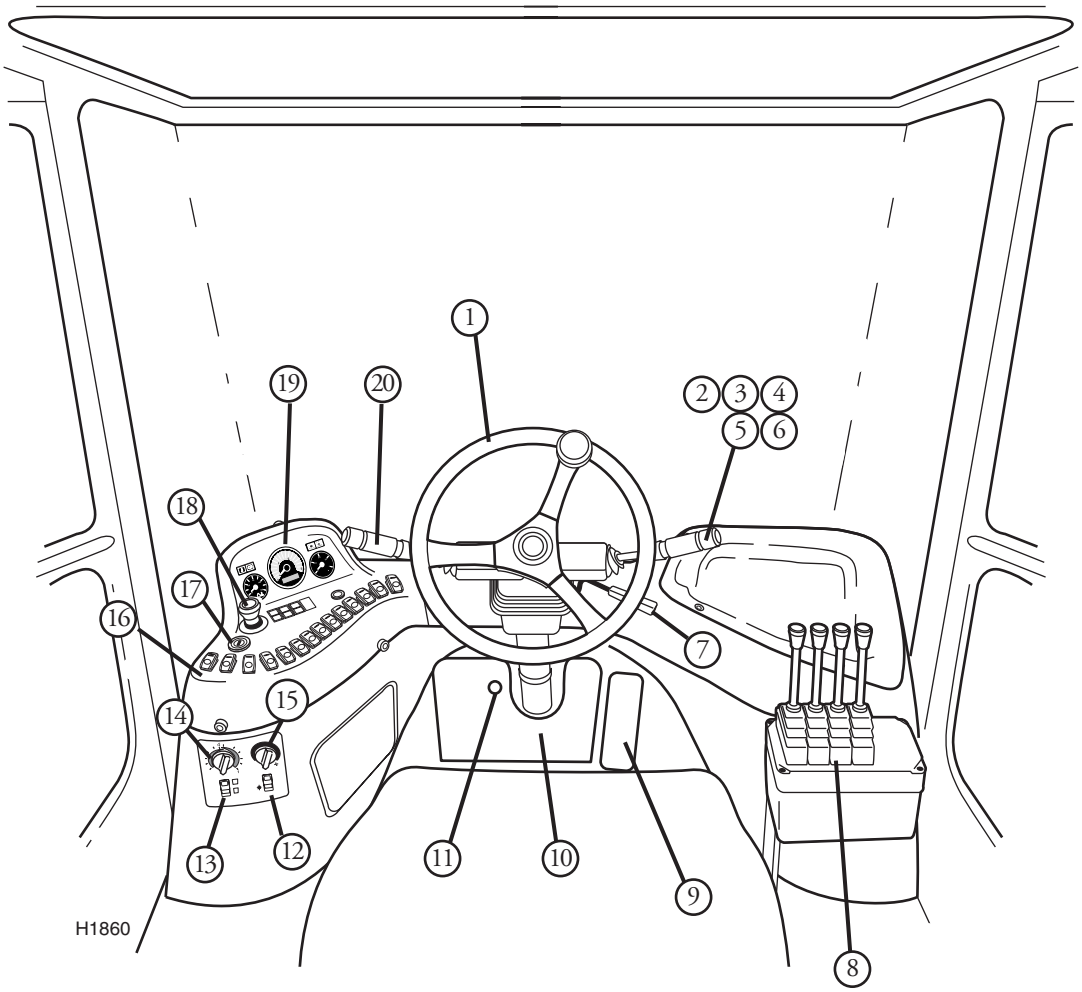

DESCRIPTION

1. Steering wheel
2. Wiper front screen
3. High/low beam
4. Horn
5. Directional switch
6. Front screen washer
7. Steering wheel adjustment
8. Hydraulic controls
9. Accelerator
10. Brake pedal
11. Disengaging switch
12. Cooler (AC)
13. Recirculation
14. Heater
15. Fan
16. Instrument panel and gauges
17. Ignition switch
18. Emergency stop
19. Display for EMC / Gauges
20. Direction and gear selector

Position of controls may vary from truck to truck depending on customer order.

https://truckmanualshub.com/

Warning lights and gauges

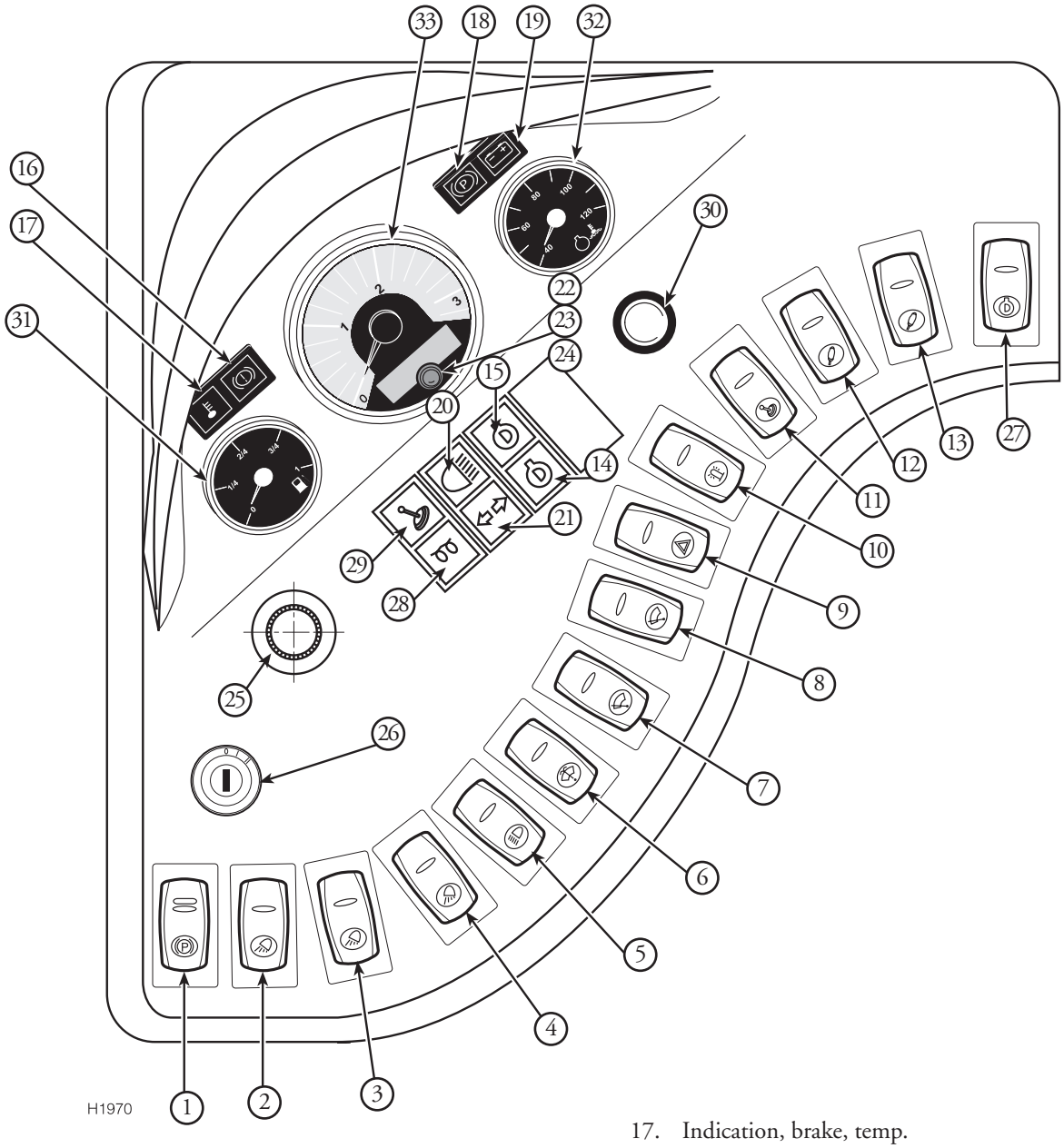

1. Parking brake
2. Working lights, mast
3. Working lights, roof
4 Working lights, extra
5. Road lights
6. Screen washer, roof/rear
7. Intermittent wiper, rear (optional)
8. Intermittent wiper, roof (optional)
9. Hazard
10. Rotating beacon
11. Joy stick steering (optional)
12. Central lubrication (optional)
13. Central lubrication (optional)
14. Indication, engine diagnostic, Volvo
    Indication, coordinator, Scania
15. Indication, diagnostic computer, Scania
16. Indication, brake, oil pressure
17. Indication, brake, temp.
18. Indication, parking brake
19. Indication, battery charging
20. Indication, high beam
21. Indication, direction R/L
22. Indication, engine, pressure
23. Indication, engine, temp.
24. Indication, gearbox, temp.
25. Emergency stop
26. Ignition switch
27. Activation engine diagnostics
28. Indication, engine preheater (optional)
29. Indication joystick steering
30. Warning light
31. Fuel level
32. Temp. engine
33. Rev. counter

Position of controls may vary from truck to truck depending on customer order.

https://truckmanualshub.com/

DAILY MAINTENANCE AND SERVICE BEFORE OPERATION

Points to check:

- Washer level
- Water level of the radiator
- The fuel level
- The level of the engine oil
- The air filter indicator (the engine's air filter)
- The air filter coarse cleaner
- The gear box oil level
- Hydraulic oil level
- Tyre pressure and condition
- Main switch
- Brake operation
- Steering operation

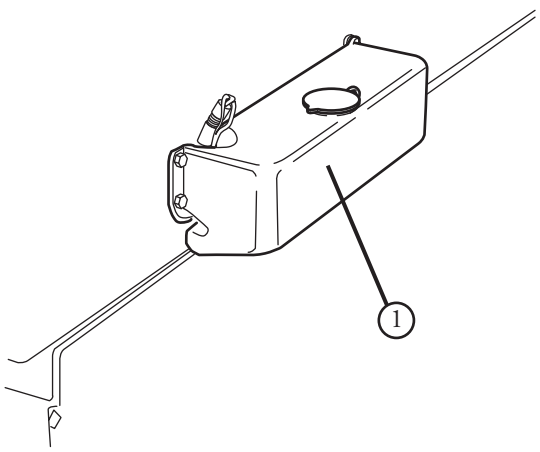

H 1200

Check the washer level

The washer tank (1) is placed on the right side of the truck, under the bonnet. Fill when necessary.

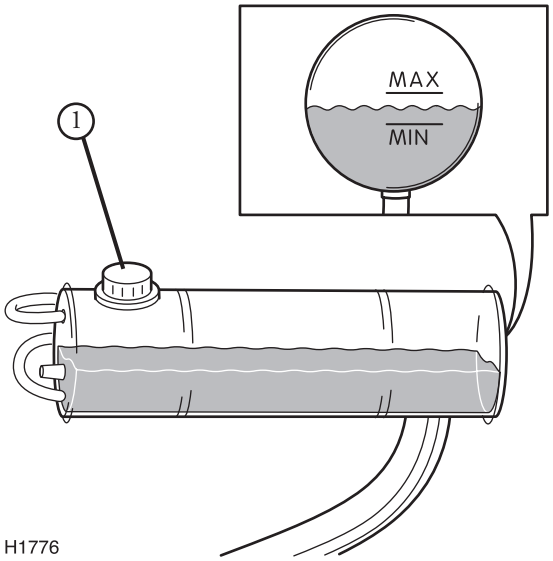

H1776

Coolant level

WARNING
The system is pressurised.

- Open the cap of the expansion tank (1).
  First a 1/4 of a turn to ensure that the system is not under pressure.
- The level should be up to the MAX-indication of the expansion tank.

https://truckmanualshub.com/

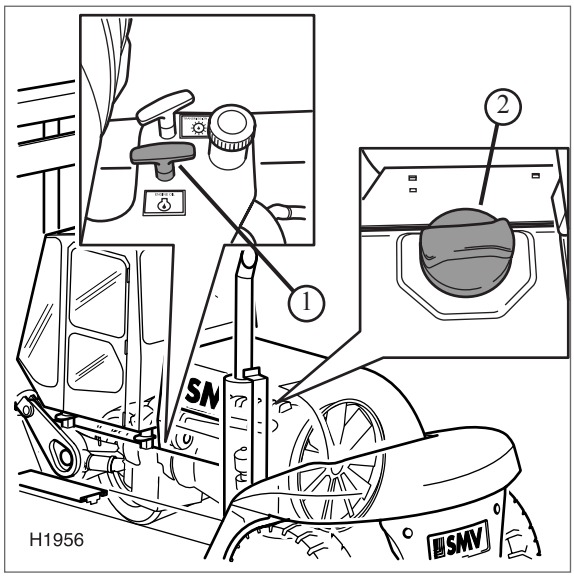

Check the engine oil

- Lift the engine casing.
- The dip stick (1) is on the right-hand side of the engine.
- Remove the dip stick (1) completely and dry it off with a clean cloth.
- Dip the stick back in fully and remove again.
- The oil level should be between the minimum and maximum level indicators.
- If necessary, remove the filler cap (2) and top up the oil.
- Fill with oil to the maximum level indicator on the dip stick.

See Maintenance Data for volume.

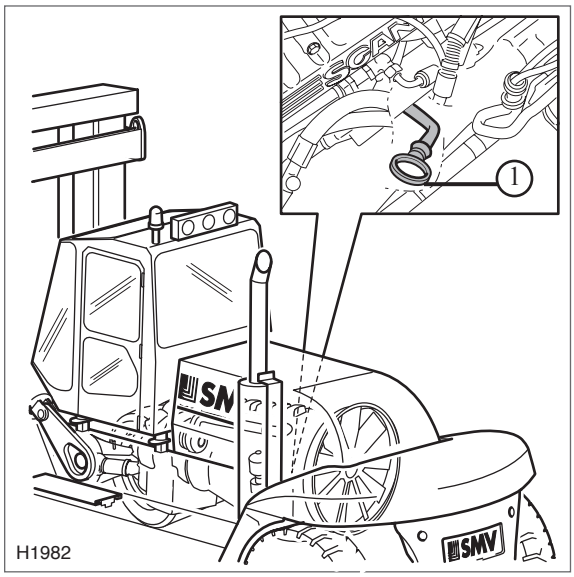

- The dip stick (1) of the SCANIA-engine is placed on the left-hand side of the engine.

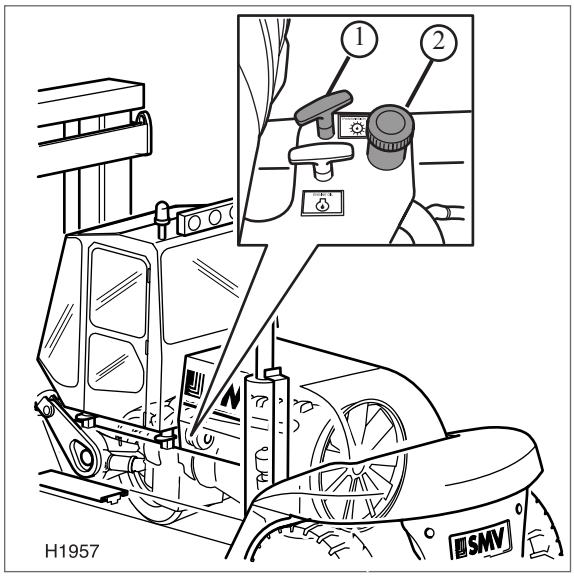

Check the oil level in the gearbox

- Start the engine and run until the oil has reached operating temperature.
- Remove the dip stick (1) and dry it off with a clean cloth.
- Dip the stick back in fully and remove again.
- The oil level should be between the minimum and maxi mum level indicators.
- If necessary, remove the filler cap (2) and top up the oil.
- Fill with oil to the maximum level indicator on the dip stick.
- Turn off the engine.

See Maintenance Data for volume.

https://truckmanualshub.com/

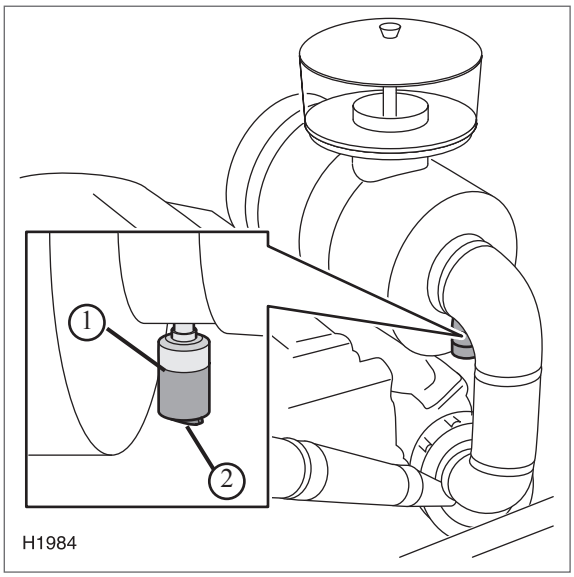

Air filter indicator

- Check the indicator (1).
- If the indicator shows RED, reset the indicator by pressing the knob (2) under the unit.
- Start the engine. If the indicator still shows red, stop the engine and clean or replace the air filter.

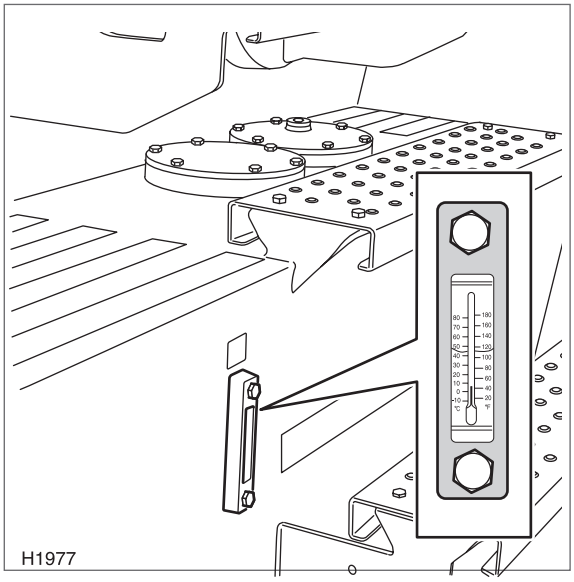

HYDRAULIC SYSTEM

Fork-lift trucks SMV 10-25 are equipped with a single hydraulic oil filter.
Fork-lift trucks SMV 18-52 are equipped with two hydraulic oil filters.

Checking the hydraulic oil level

- Check that the oil level is between the MIN- and MAX-marks on the indicator at the side of the hydraulic oil tank (the forks carriage should be lowered completely).

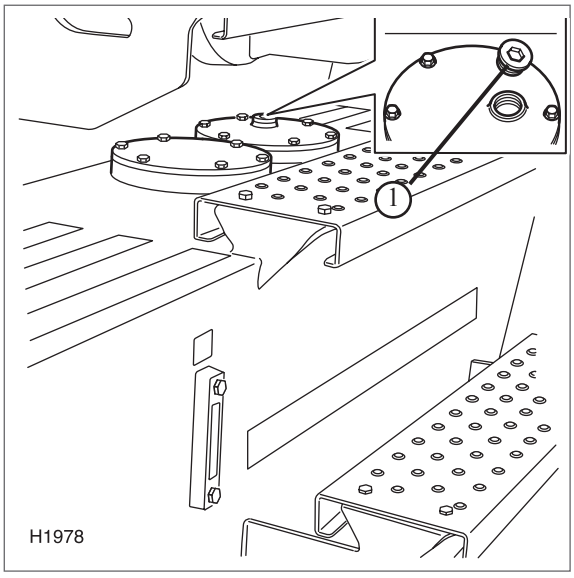

Topping up the hydraulic oil

WARNING
Hot hydraulic oil may spray from the oil refill.
Risk of serious injury.
Do not open the oil cap whilst the engine is running.

- Unscrew the oil cap (1).
- Fill with hydraulic oil up to the upper mark on the indicator.
- Screw the cap back on.

https://truckmanualshub.com/

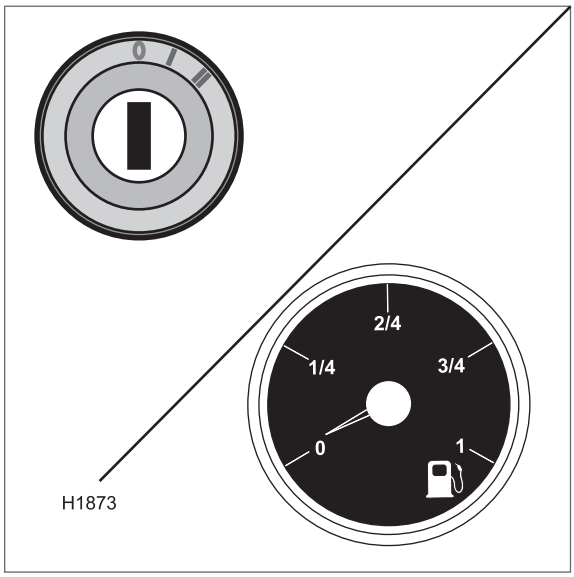

Checking the fuel level

- Turn the ignition key to position 1.
- Wait until the fuel indicator on the dashboard has stabilised.
- If necessary, fill.

WARNING
To avoid air being sucked into the fuel injection system, the fuel tank should never be run completely empty. If air enters the fuel system, the engine will stop and the system must be deaired.

- Turn off the ignition key.
- Fill up according to instructions below.

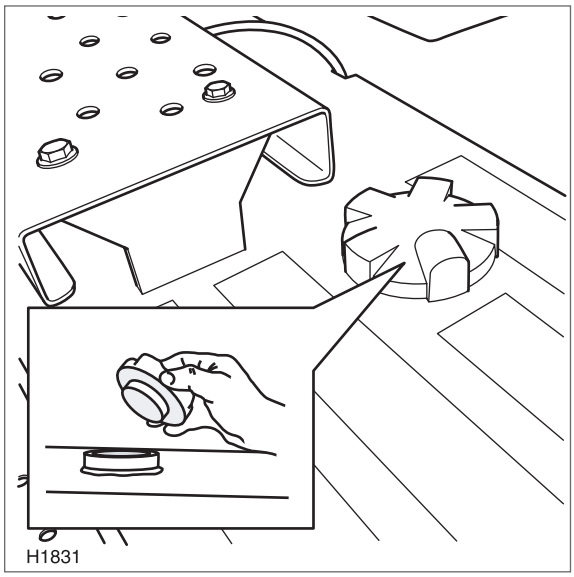

Filling with fuel

- Open the cap located on the left-hand side of the truck and fill with the recommended fuel.
- Screw on the cap.
- To avoid that air is sucked into the fuel system, the fuel tank should never be entirely emptied.

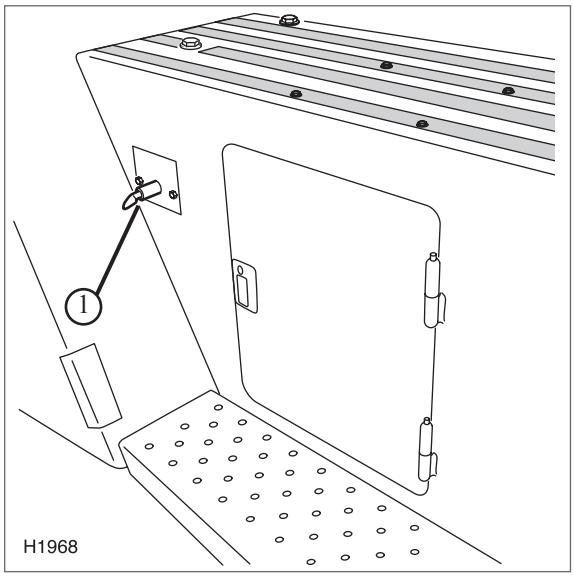

Main circuit switch

WARNING
The main disconnect does not cut the power to the alternator. Always disconnect the ground (minus) cable at the battery when working near or on the alternator.
To reduce the risks of electrical shock and personal injury always remove jewelry and conductive material prior to working on the electrical system.
Unless in an emergency situation, do not turn off the main circuit switch while the engine is running or the ignition is still on.
Beware of short-circuiting the battery, which may cause fire or explosion.
Risk for serious injury or death.
The battery contains corrosive acid. Always use the necessary protective equipment.
Batteries generate explosive hydrogen when charged. Ensure that there is good ventilation and avoid sparking.

- The circuit switch (1) is located on the right-hand side of the truck.
- Turn the cut-out switch clockwise to turn it on.
- Turn the switch anti-clockwise to turn it off and remove the key.

https://truckmanualshub.com/

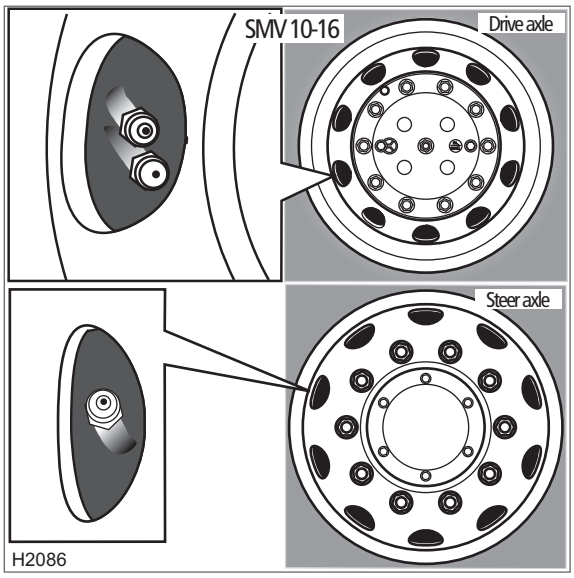

Checking the condition and pressure of the tyres

- Check that the tyres have not been damaged or become too worn.
- Remove any foreign objects from the tread.
- Check that the tyres have the correct pressure of 9 bar. (Michelin 10 bar)
- Pump the tyres according to the relevant regulations.

WARNING
When changing tyres, only use tyres which are approved by the manufacturer

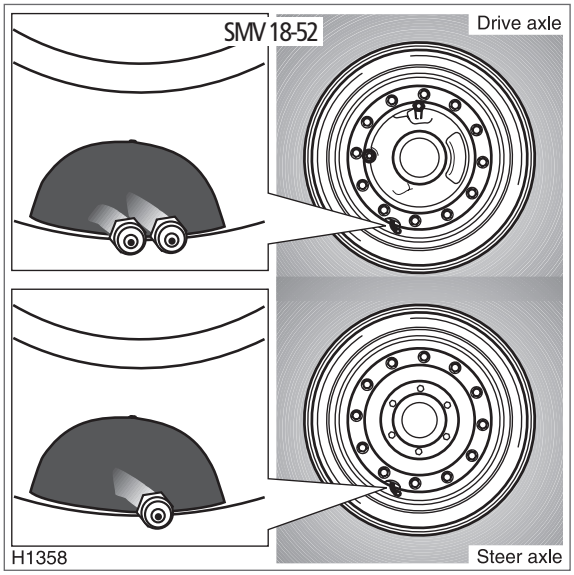

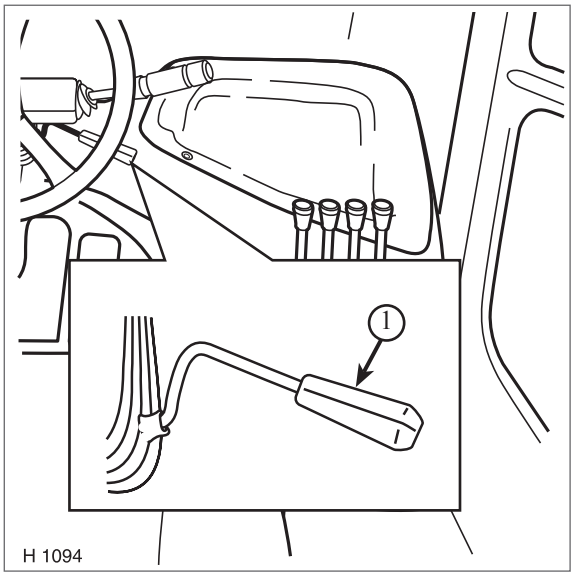

Adjustment lever of steering wheel and panel

When positioning the steering wheel and the panel:
- Pull lever (1) upward to adjust the tilt
- Pull lever (1) downward to adjust the height

https://truckmanualshub.com/

Adjusting the driver's seat

- To elevate the seat, turn the hand wheel (3) clockwise. Weight adjustment is automatic.
- Adjust tilting of the seat cushion, by the hand wheel (2).
- Adjust tilting of the backrest with hand wheel (1).

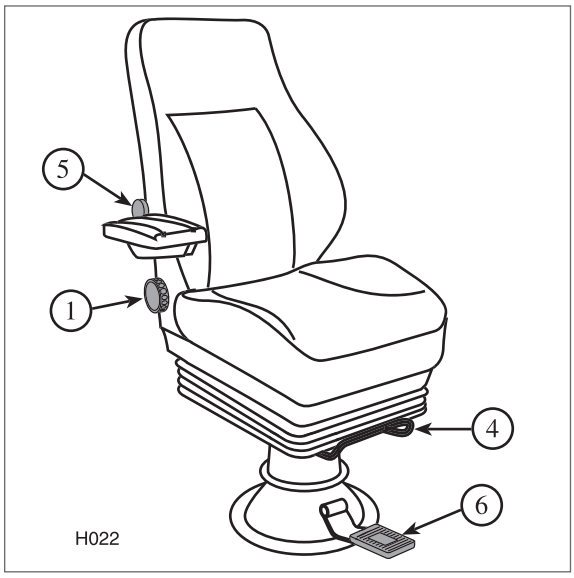

- Lift the clamp (4), to adjust the seat forward/backwards.
- Adjust the lumbard support with hand wheel (5).
- Rotate the seat by pressing pedal (6) Option.

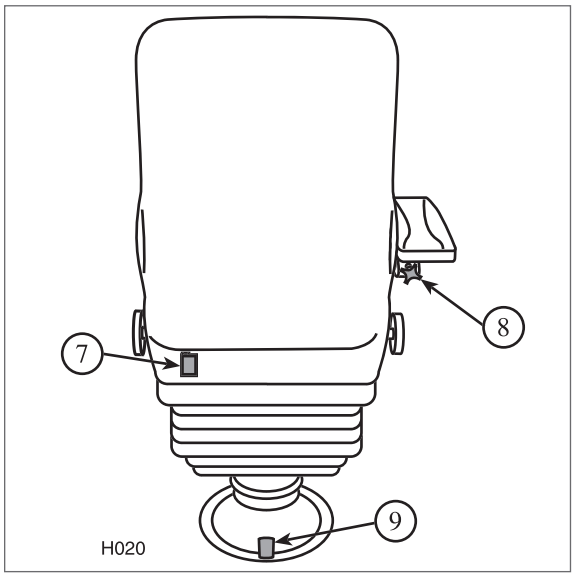

- Adjust the height stroke limiter with handle (7).
  Lever to the right - full stroke.
  Lever one step to left - stroke limited partially.
  Lever to the left - stroke fully limited.
- Adjust the armrest with the hand wheel (8).
- To remove seat press pedal (9) Option.

WARNING
Never operate a machine without having fastened the seat belt properly.
Risk of serious injury or death.
The safety belt should always be used when driving.

WARNING
Never drive the truck unless the seat is locked in position.
Risk of serious injury or death.
A seat that is not locked in position may cause the driver to make uncontrolled movements, which may cause the machine to be handled incorrectly.

https://truckmanualshub.com/

DESCRIPTION OF THE EMC DRIVE MONITOR TYPE IQAN

The drive monitor's purpose is to efficiently control the reach stacker's hydraulic system and drive line by utilising both analog and digital information from various sensors. This will give the driver a complete overview of the reachstacker's activities during operation.

START-UP MENU

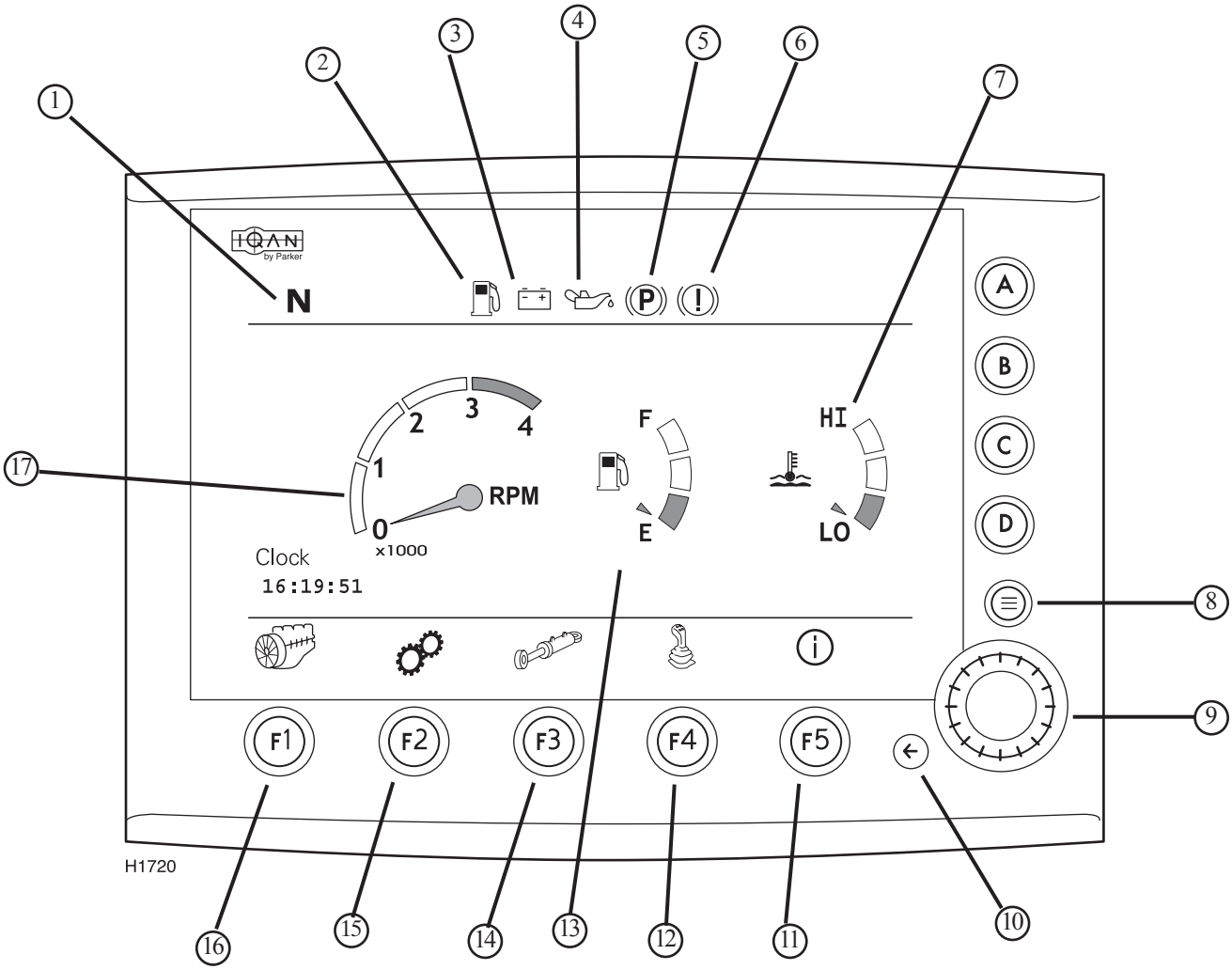

Description of the keys

1. Gear position
2. Warning, low fuel level
3. Alternator
4. Oil pressure, engine
5. Parking brake
6. Low brake pressure
7. Engine temperature
8. Measure and adjustment menus
9. Scroller and selector
10. Previous menu
11. Information main menu
12. Attachment main menu
13. Fuel level
14. Hydraulics main menu
15. Transmision main menu
16. Engine main menu
17. Engine RPM

The scroller knob

By turning the scroller knob you can step up/down in the menu. The selected function is lightend up in green. By pressing the scroller knob the selected function will be activated.

The character of the menues may vary from truck to truck depending on customer order.

https://truckmanualshub.com/

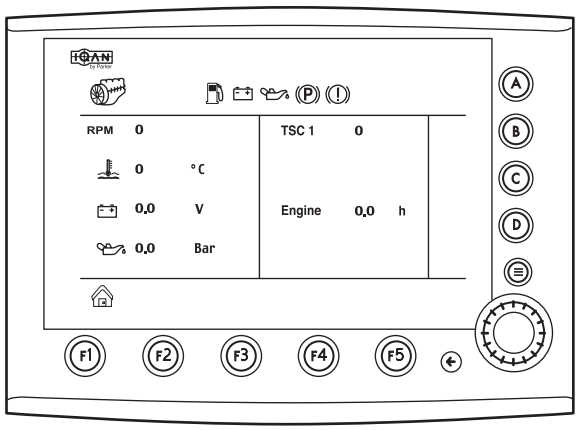

H1721

Engine main menu

- Press button F1 on the main menu.

The menu displays:
- current engine RPM
- current engine temperature
- battery voltage
- engine oil pressure
- transmission required engine RPM
- required engine RPM in percent of E-gas max.value
- engine operating hours
- engine diagnostics, warning and indicator lamp.

Stop the engine by pressing button F4.
Error codes are displayed when pressing button F5.
Button ☰ takes you to the Adjust & measure menu.
- Press button F1 to return to the Start-up menu.

Transmission main menu

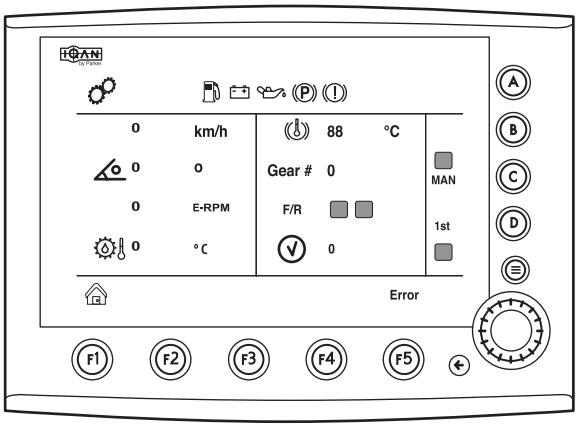

H1722

- Press button F2 on the Start-up menu.

The transmission main menu displays:
- driving speed
- transmission (gear box) temperature
- accelerator position (angle)
- input transmission RPM
- brake temperature, drive axle
- currently selected gear, 0-4th
- driving direction F/R
- transmission diagnostics, warning and error code ”0” or error code missing = no error detected

Button C activates manual gear shifting. Default: automatic gear shifting.
- Press button D for start in 1st gear. Default: 2nd gear.

Button ☰ takes you to the Adjust & measure menu.
- Press button F1 to return to the Start-up menu.

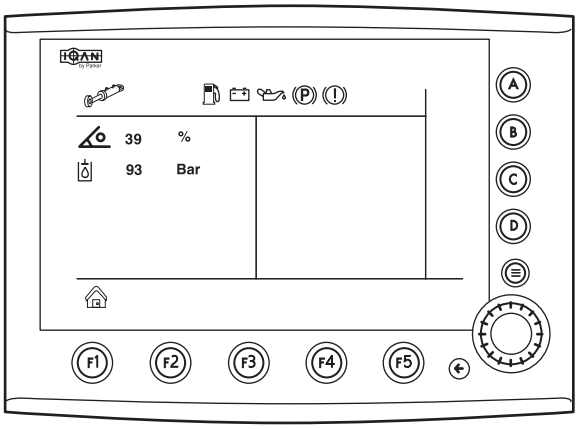

H1723

Hydraulics main menu

- Press F3 in Start-up menu.

The Hydraulics main menu displays:
- Tilt angle
- Pressure (bar) piston rod side

Button ☰ takes you to the Adjust & measure menu.
- Press button F1 to return to the Start-up menu.

https://truckmanualshub.com/

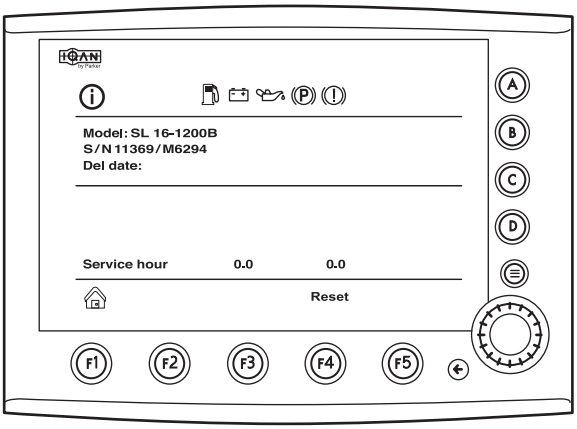

H1724

Information main menu

- Press button F5 in the start-up menu.

The Information main menu displays:
- Machine specifications
- Operating hour main counter. Can not be zeroed.
- Operating hours sub-counter. Press the F4-button to zero.

Button ☰ takes you to the Adjust & measure menu.
- Press button F1 to return to the Start-up menu.

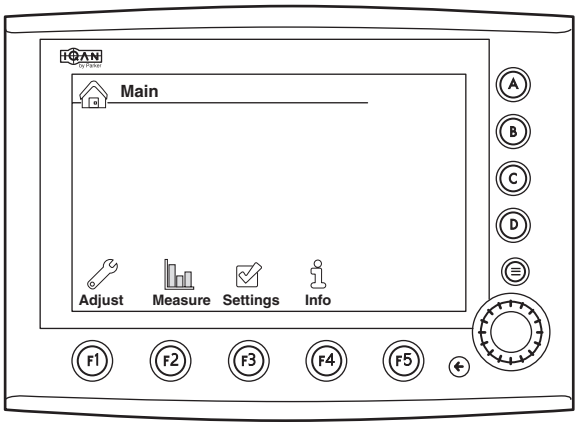

H1626

Adjust & measure main menu

- Press button ☰ in start-up menu.

- Press button F1 to go to sub-menu Adjust
- Press button F2 to go to sub-menu Measure
- Press button F3 to go to sub-menu Settings
- Press button F4 to go to sub-menu Info

- Press button ☰ to return to the Start-up menu.

https://truckmanualshub.com/

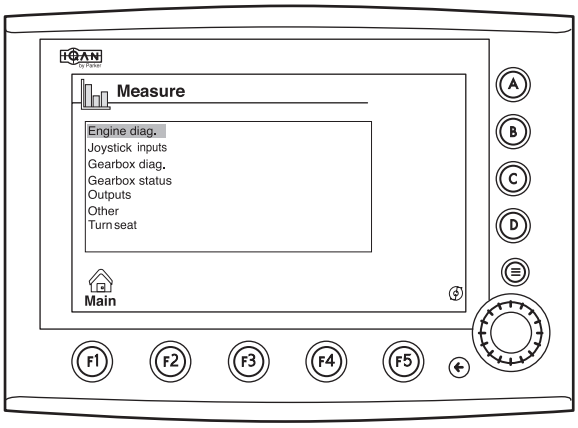

H1725

Sub-menu Measure

- Turn and press the scroller knob to select an option.

- Press the ← to return to the previous menu.
- Press button F1 to return to Adjust & measure main menu.
- Press button ☰ to return to the Start-up menu.

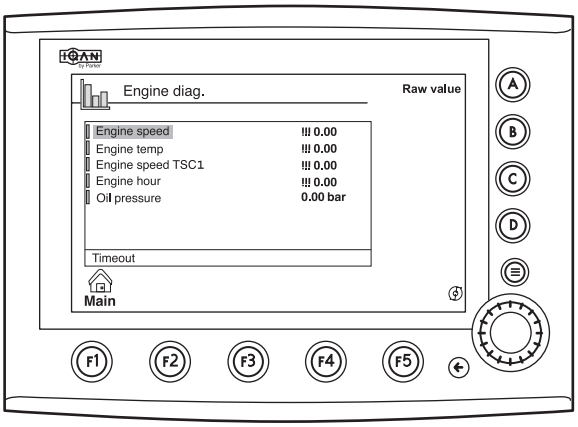

H1726

Third menu "Engine Diagnostics"

- Select any function by pressing the scroller knob. The selected function is marked green.

- Press the ← to return to the previous menu.
- Press button F1 to return to Adjust & measure main menu.
- Press button ☰ to return to the Start-up menu.

https://truckmanualshub.com/

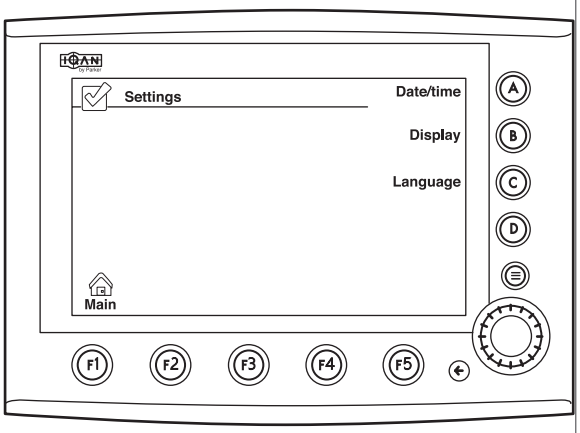

H1629

Sub-menu Settings

- Press button F3 in the main menu Adjust & measure.

- Press button A to set Date/time.
- Press button B to select Display settings.
- Press button C to select Language.

- Press the ← to return to the previous menu.
- Press button F1 to return to Adjust & measure main menu.
- Press button ☰ to return to the Start-up menu.

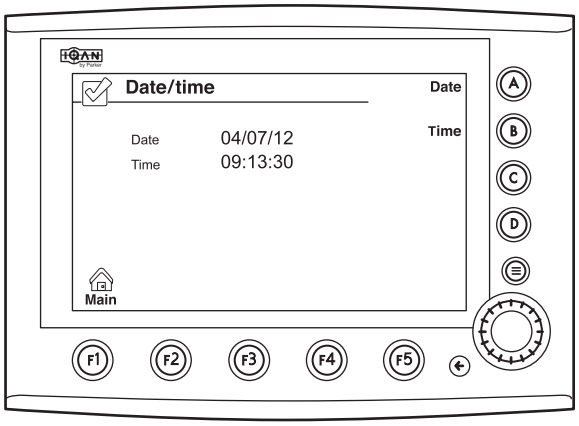

H1630

Third menu Date/time

- Press button A to set date.
- Press button B to set time.

- Select the required value by turning the scroller knob.
- Save the value by pressing the scroller knob.

- Press the ← to return to the previous menu.
- Press button F1 to return to Adjust & measure main menu.
- Press button ☰ to return to the Start-up menu.

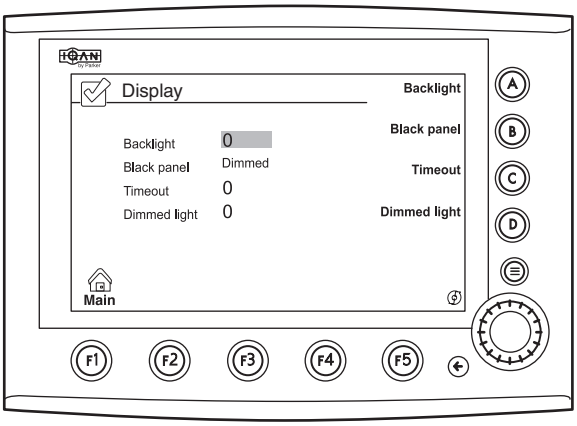

H1631

Third menu Display

- Select settings by pressing buttons A-D.
- Change settings by turning the scroller knob.
- Save settings by pressing the scroller knob.

- Press the ← to return to the previous menu.
- Press button F1 to return to Adjust & measure main menu.
- Press button ☰ to return to the Start-up menu.

https://truckmanualshub.com/

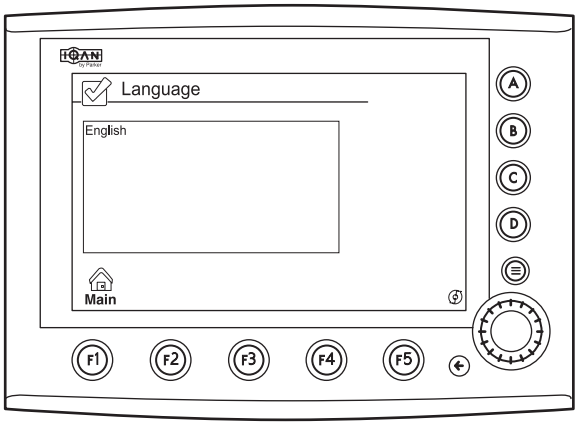

H1632

Third menu Language

- Select a language by turning the scroller knob.
- Save settings by pressing the scroller knob.

- Press the ← to return to the previous menu.
- Press button F1 to return to Adjust & measure main menu.
- Press button ☰ to return to the Start-up menu.

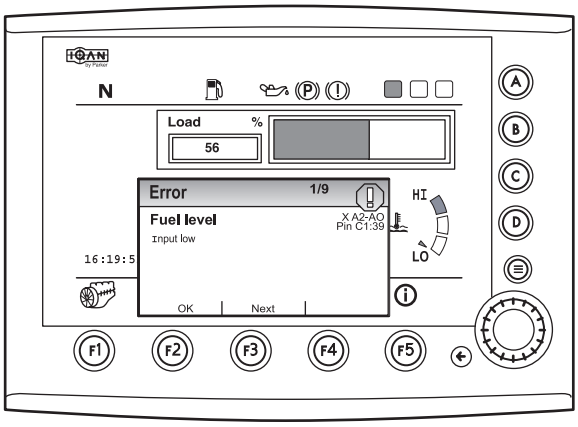

H1633

Error code display

This message is displayed if an input value, that is not within the preset limits, is registered.

The message will inform you about the digital input, error code and pin number. ”Input high” or ”Input low” is also displayed.

- Press F2 to acknowledge the message.
  The message will disappear from the display.

- Press F3 to display more than one error code.

Button ☰ takes you to the Adjust & measure menu.

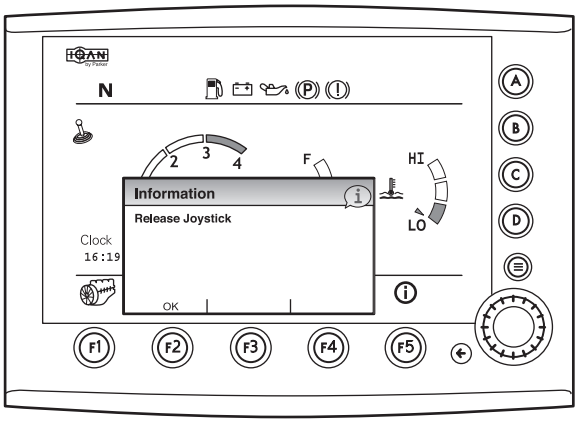

H1729

Alarm and message display

The alarm message, due to anything abnormal, informs you about
- cause of alarm
- digital input causing the alarm
- pin number.

- Press F2 to acknowledge the message.
  The message will disappear from the display.

- Press F3 to display more than one error code.

Button ☰ takes you to the Adjust & measure menu.

https://truckmanualshub.com/

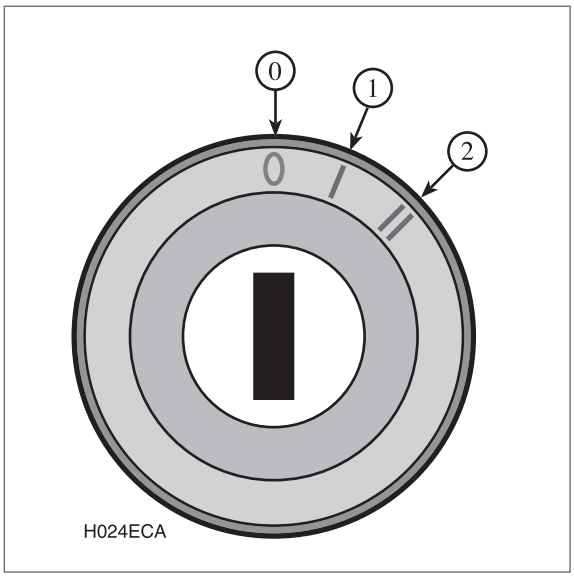

Starting the engine

WARNING
Exhaust fumes are harmful. Never run the engine in unventilated places.
Risk for serious injury or death.
Use fume extraction.

Before starting up the engine, the driving direction control on the left-hand side of the instrument panel must be in neutral.

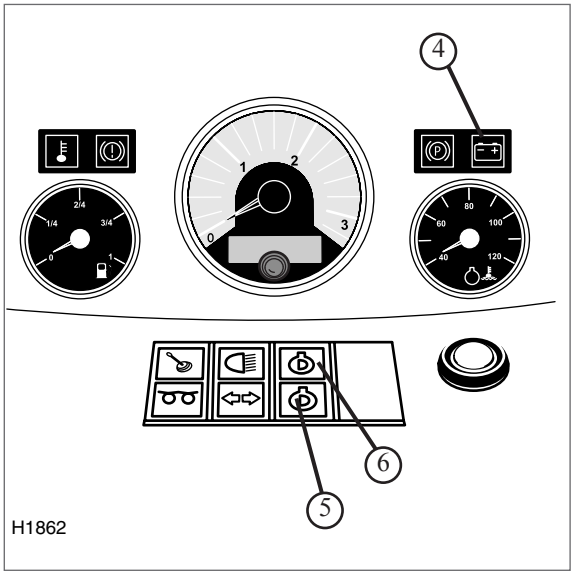

- Position yourself in the driver's seat.
- Insert the ignition key into the ignition lock, position (0).
- Turn the key into position (I). The electrical system is now turned on.
- Check the battery light (4) and engine diagnostic lights (5 and 6) illuminate.
- Turn the key into position (II). Release the key as soon as the engine has ignited.

https://truckmanualshub.com/

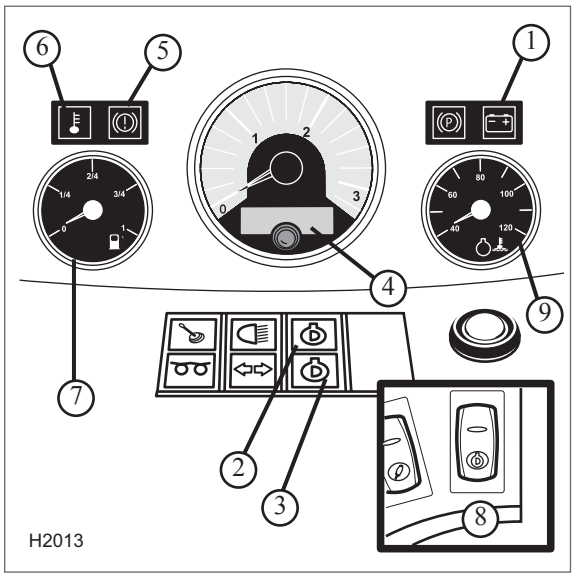

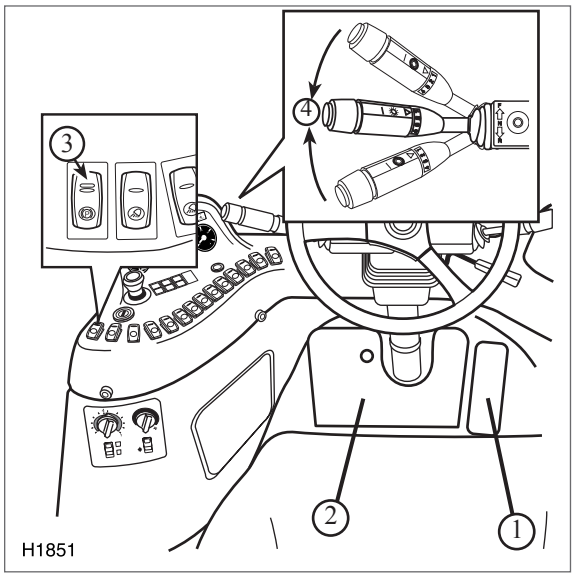

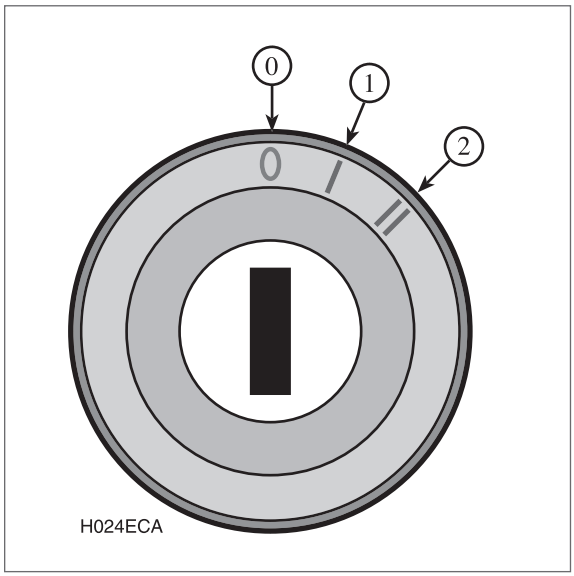

Warning indicators

- The battery light (1) goes out after the engine has started. If this light comes on while the engine is running, the generator is not charging.
- The engine diagnostic lights (2 and/or 3) goes out after the engine has started. If the light comes on whilst the engine is running, it indicates an engine malfunction detected by the Engine Management System EMS. In order to avoid serious damage to the engine the EMS will reduce the engine power or shut the engine off.
  When activating the engine diagnostic (8) the indication lamps will flash fault codes. See SMVs Technical Handbook for fault codes.
- The engine oil pressure lights up on the display (4) if the oil pressure is too low. Normal value 1-6 bar.
- The gearbox pressure indication (4) goes out after the engine has started. If the indication comes on whilst the engine is running, the gearbox pressure is too low. Normal value 16-20 bar.
- The gearbox temperature (4) lights up when the temperature of the oil is too high. Max value 120°C.
- The accumulator pressure lights up (5) when the brake pressure is low.
- Light (6) indicates the temperature in the brake unit.
- Gauge (7) indicates fuel level.
- Gauge (9) indicates engine temperature. Normal value 70°-93°C.

WARNING
If any of the following warninglights comes on, or an indicator shows an abnormal reading during operation, the fault must be remedied immediately. Do not use the machine, in case the brake pressure light illumunates as brakes may not work.

Stopping the engine

- Release the accelerator (1).
- Apply the brakes in a controlled manner (2).
- Engage the parking brake (3).
- Put the driving direction control (4) into neutral.

CAUTION
Allow the engine to idle for a few minutes if it has constantly been run hard this to avoid any turbo dameges or overheating.
The current must not be interrupted before the engine has stopped.

- Turn the ignition key to position (0).
- Remove the key from the ignition switch when leaving the truck.
- Turn the electricity off as well at the main circuit switch if the truck is being left unsupervised.

Use the emergency stop only in an emergency situation.

https://truckmanualshub.com/

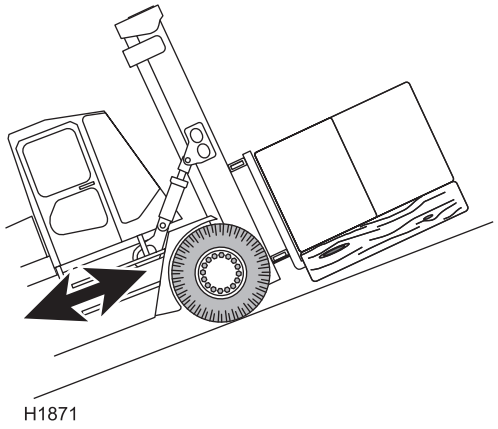

Operating

WARNING
Driving on uneven terrain may cause damage to the machine.
Driving on surfaces with not enough support may cause the machine to roll or sink.
Risk of serious injury and damage to vehicle.
The truck is not intended for off-road driving.
The truck is not equipped with wheel suspension and should therefore only be driven on level ground intended for the total weight and surface pressure of the truck.

WARNING
Risk of the brakes not stopping the machine.
Risk of the machine rolling.
Risk of serious injury and damage to vehicle.
Driving on slopes steeper than 15% is not permitted as a rule because of the minimum regulations for braking and the stabilising capabilities of the truck. If the truck has to be driven along steeper slopes, you should contact your SMV dealer. The hill-climbing capacity of the truck indicated in the data sheet is based on the pulling power of the truck, and applies only to driving over obstacles and minor irregularities in ground level.

WARNING
Always adjust your method of driving to the condition of the road (undulations, etc.), to hazards within the working area and the load.
Risk of serious injury and damage to vehicle.

- Start the engine.
- Tilt the lifting frame backwards a little.
- Hold the steering wheel steady. Always use the whole of your hand to hold the wheel.

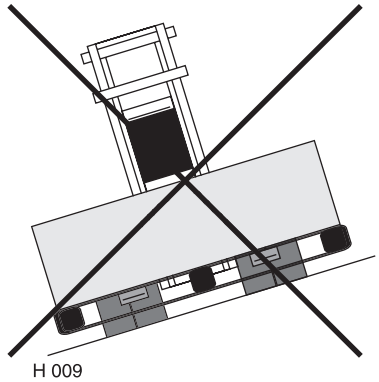

WARNING
The working range of the machine is large and visibility from the driver's cab is limited.
Risk of serious injury and damage to vehicle.
Before you start to move the truck, check that the road ahead is free and that you have a clear view.

WARNING
Avoid driving on slopes or uneven ground when transporting a container. Never cross or turn on a slope.

https://truckmanualshub.com/

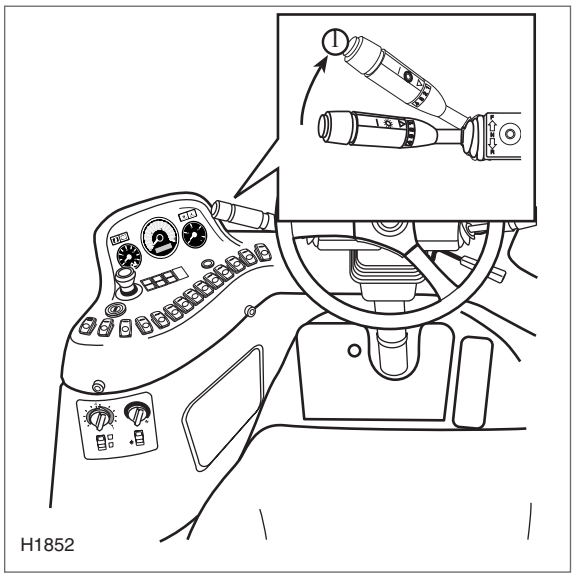

Driving forwards

- Press brake pedal (4).
- Put into first gear using the gear stick (1).

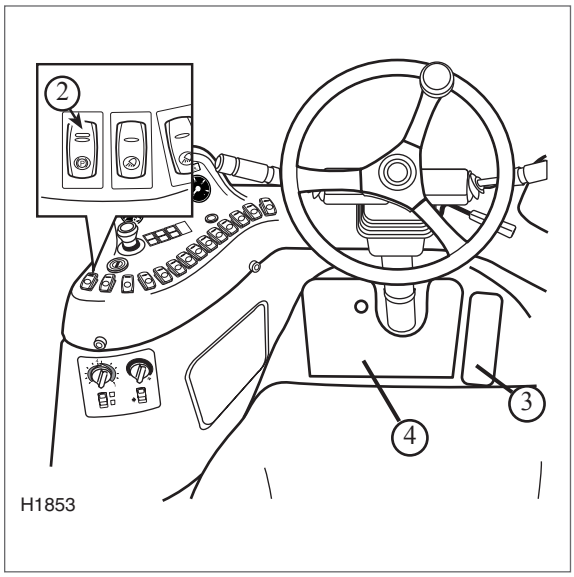

- Push the driving direction control (1) forward
- Release the parking brake (2).
- Release brake pedal (4).
- Depress the accelerator (3) slowly so that the truck starts off gently.

NOTE
When starting up a hill, hold the machine still using the brake pedal (4) until you have sufficient pulling power.

https://truckmanualshub.com/

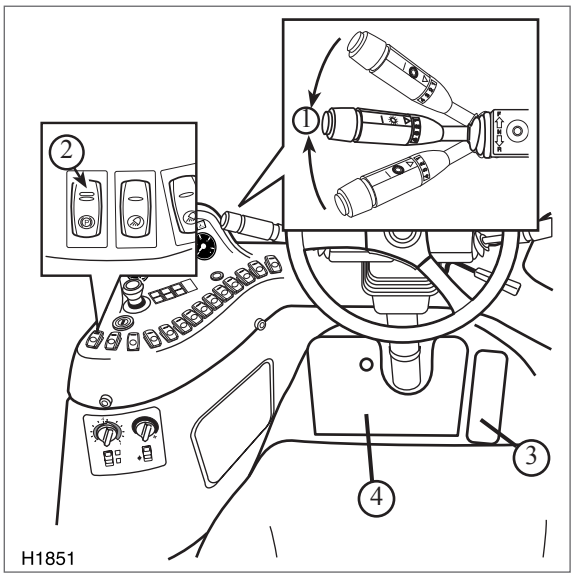

Stopping the truck

- Take your foot off the accelerator (3).
- Press the brake pedal (4) and stop the truck in a gentle, controlled manner.

WARNING
Sudden braking and acceleration may cause the machine to roll or tip.
Risk of serious injury and damage to the vehicle.
Avoid violent acceleration and braking.

CAUTION
Do not use the gearbox as a brake.

- When the truck has stopped completely, engage the parking brake (2) before releasing the brake pedal.
- Put the driving direction control (1) into neutral.

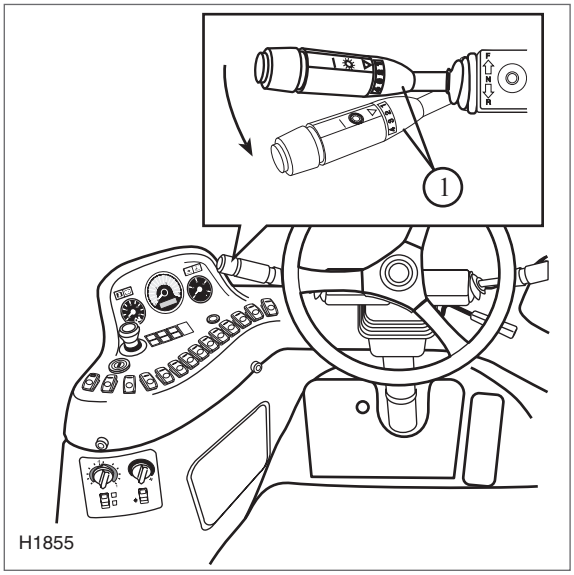

Driving backwards

Changing the direction of driving

WARNING
The truck must be completely stopped before changing the direction of driving.
Serious damage may be inflicted on the gear box and drive axle.

- Pull the driving direction control (1) backwards.

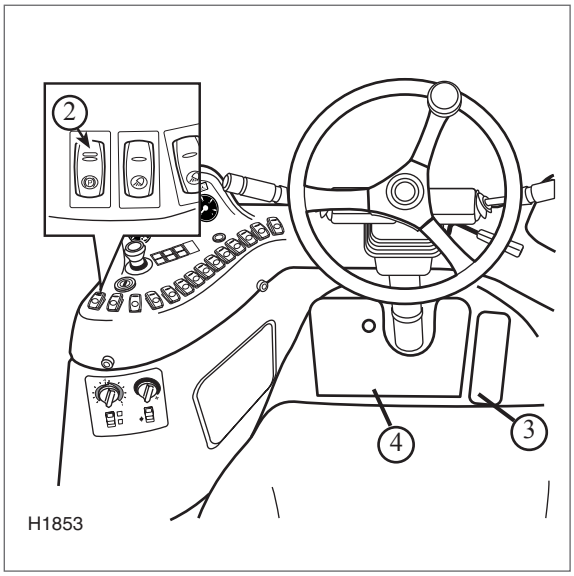

- Release the parking brake (2).
- Depress the accelerator (3) slowly so that the truck starts gently.

NOTE
When starting uphill, hold the machine stationary with brakepedal (4) until you have obtained sufficient pulling power.

https://truckmanualshub.com/

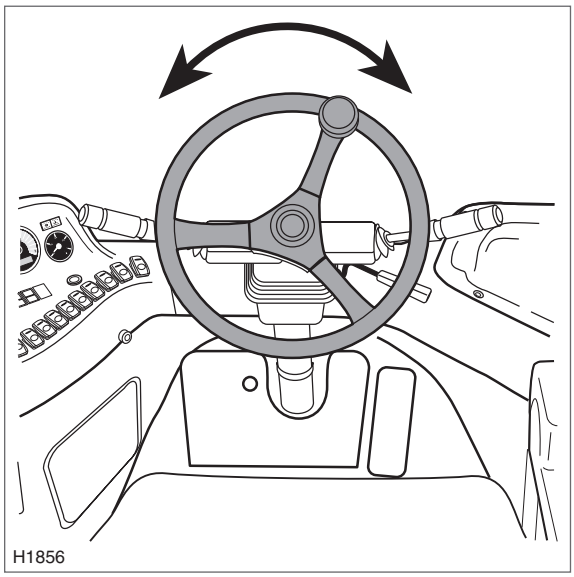

Steering

Very little effort is needed to turn the steering wheel thanks to the servo-assisted steering system.

To minimise unnecessary wear and tear to the tyres, the steering wheel should, if possible, be turned only when the truck is moving.

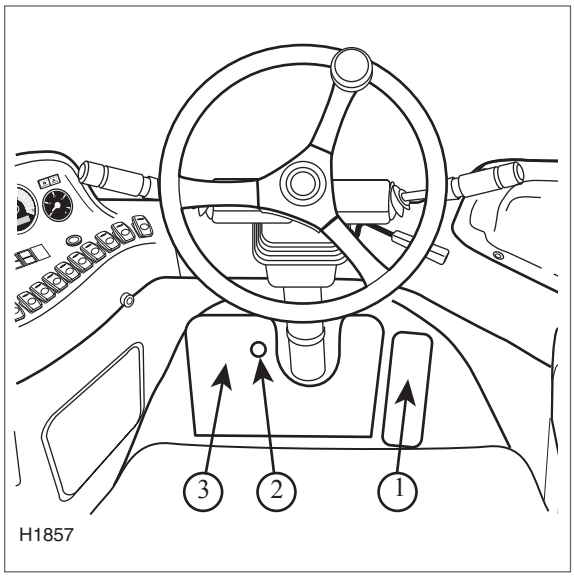

Declutch

- Release the accelerator (1).
- Activate the clutch using the disengaging switch (2).
- If the disengager is pressed at the same time as the brake pedal (3), the brakes are applied.
- When braking, using only the brake pedal (3), the disengaging function is activated only after the brakes have been applied.

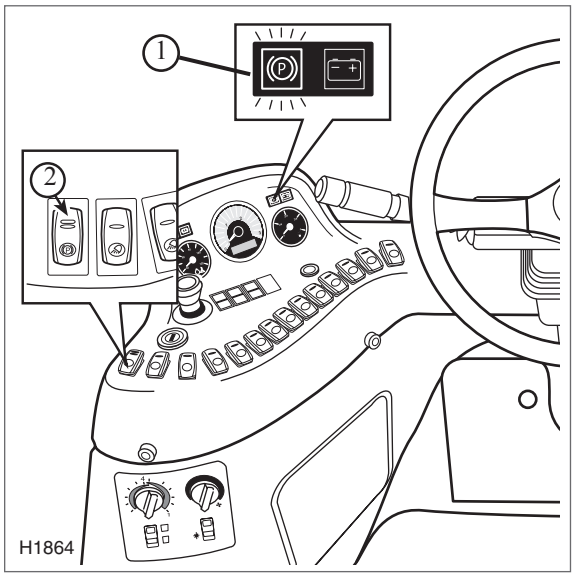

Parking brake

- The parking brake (2) is to the left of the steering wheel.
- The parking brake **should not** be used to bring the truck to a halt unless in an emergency.
- When the parking brake is applied, the warning light (1) is illuminated.
- If the driver is leaving the seat with parking brake not activated, a audio signal is sounding.

https://truckmanualshub.com/

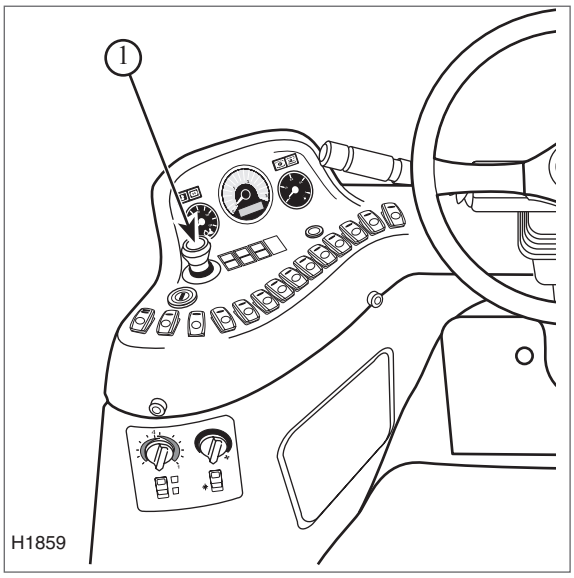

Emergency stop

- When using the emergency stop (press button (1) downwards), all functions are cut out, the parking brake is activated and the engine stops.

WARNING
There is a risk of tipping over if the emergency stop is used when the truck is moving.
Risk of serious injury and damage to the vehicle.

https://truckmanualshub.com/

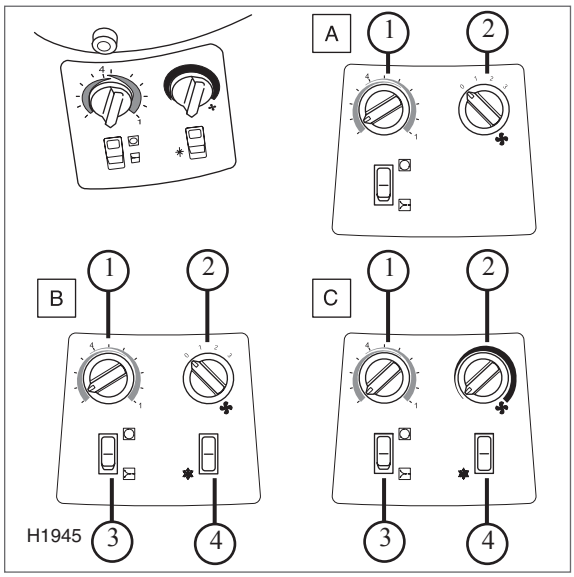

Ventilation

A = Heating;
- (1) heating
- (2) fan

B = AC;
- (1) heating
- (2) fan
- (3) recirkulation
- (4) cooling

C = ACC;
- (1) heating
- (2) fan (variable)
- (3) recirkulation
- (4) cooling

Settings for different wheather conditions

Hot wheather and normal atmospheric humidity
- Open the fresh air intake.
- Turn off the heating.
- Turn on the cooling system and set the cooling thermostat at desired temperature.

Very hot wheather and high atmospheric humidity
- Close the fresh air intake.
- Turn off the heating.
- Turn on the cooling system and set the cooling thermostat at desired temperature.

Fall or early winter and high atmospheric humidity caused by rain and sleet; steamy windows
- Turn on the cooling system.
- Open the fresh air intake.
- Open a window to provide air ciculation.

Decrease heat if necessary.

Cold wheather during winter time
- Open the fresh air intake, turn off the cooling system.
- Set the temperature as desired.

Very cold wheather and low atmospheric humidity
- Close the fresh air intake.
- Turn off the cooling system.
- Adjust the temperature.

Cold and dry periods during winter time and little usage
- Turn on the cooling system, operate the compressor for a few minutes, so that couplings, gaskets etc are lubricated.

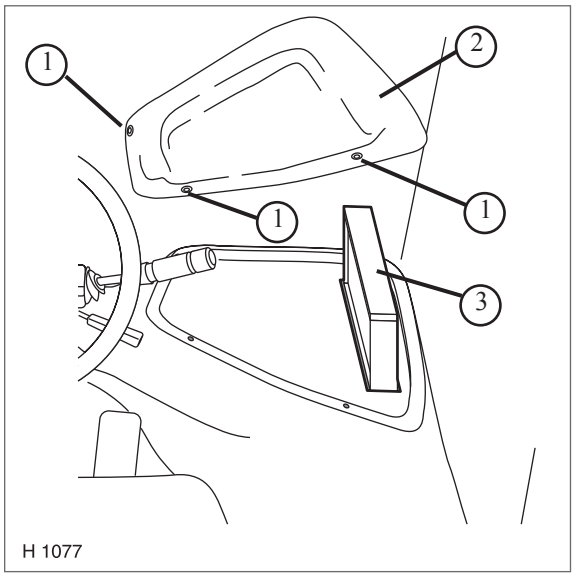

Cab filter

A filter for cab air intake is located on the right hand dashboard.

- loosen the screws (1)
- disassamble the cover (2)
- pull up the filter cassette (3) gentle to avoid dust in the climate unit and cabin.

Replace the filter insert, Part No. 2050000143.

https://truckmanualshub.com/

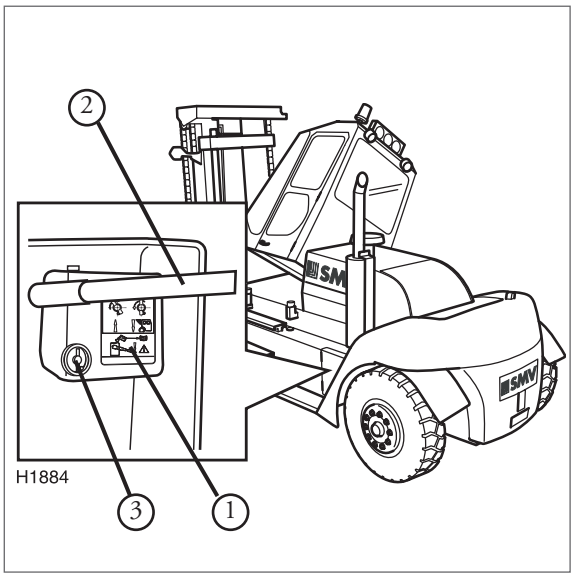

Cab tilting

All standard machines are equipped with a manually operated hydraulic cab tilting device. (Electro-hydraulic tilting can be fitted as optional equipment.)

Loose objects may fall out of the cab or door may become unhinged when the cab is tilted. Risk of serious injury.
Before the cab is tilted, both doors must be shut. Loose objects inside the cab should be removed. The mast must be in vertical and the carriage in lowered position.

Open the hatch (using the special tool) on the right of the fuel tank, located on the vehicle's left side. This compartment contains the tilt pump (1) and the pump handle (2).

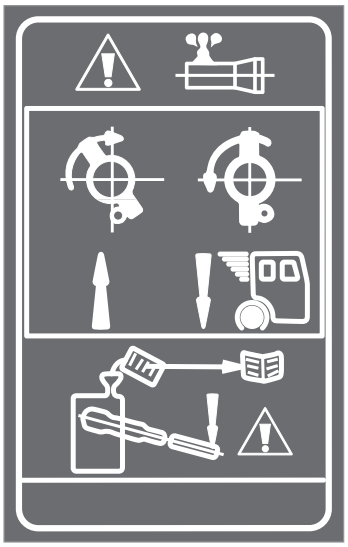

When tilting upwards, the valve (3) is rotated clockwise and for tilting downwards it is rotated anti-clockwise, using the pump handle's lower end. Insert the pump handle into the attachment and start pumping.

When the vehicle is on the move, the cab shall always be in the fully lowered position.

WARNING
Always tilt the cab completely so that the center of gravity is displayed.
Risk of serious injury.
Ensure that nobody is under or near a tilted cab.

A simple graphic sign is attached to the pump.

WARNING
There is a limitation to operating with the cab tilted.
Risk of serious injury and damage to the vehicle.
The machine should never be driven if the cab is partly or fully tilted. The cab should always be in the fully lowered position.

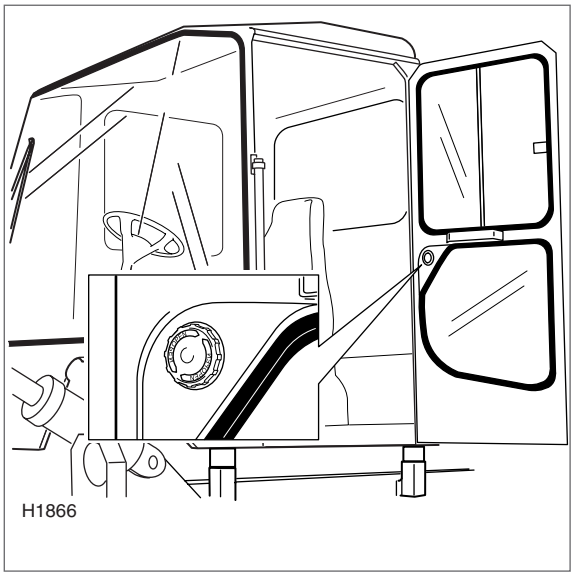

Locking open door

The cab door can be locked in open position.

- Open the door until it locks in position.
- Turn the knob anti-clockwise to unlock.

https://truckmanualshub.com/

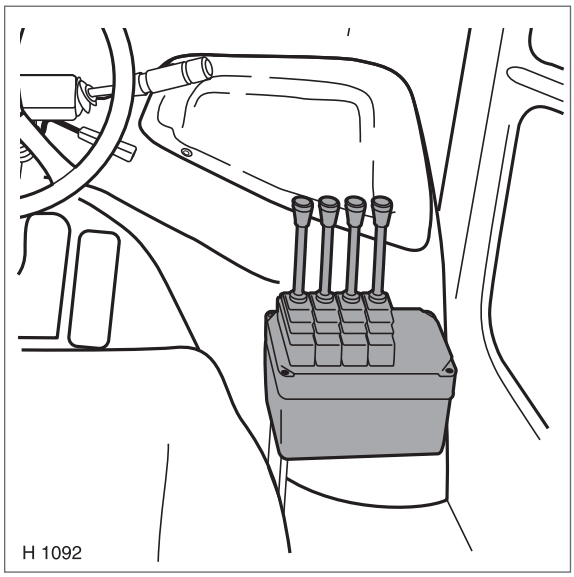

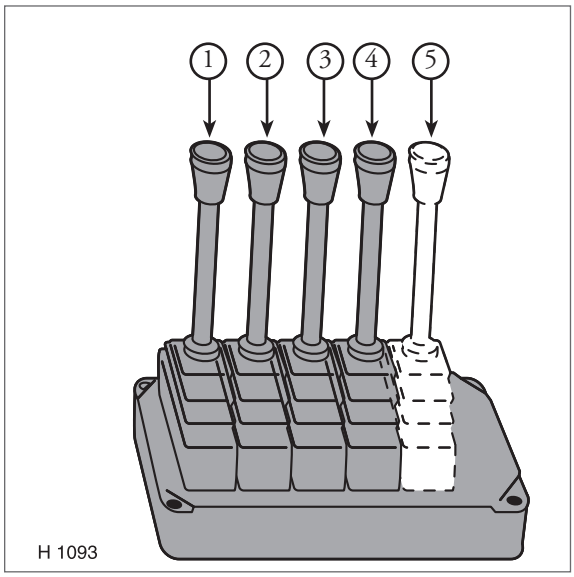

Manouvering the mast

WARNING
The lifting of loads may present a risk of serious injury or damage to the vehicle. The use of the machin beyond its designed purpose may cause capacity and stability to be exceeded.
Use the mast and its carriage only for approved applications. The driver must be trained to handle the truck and its equipment.

Always operate the control gently and slowly.

The speed of the hydraulic functions is determined by the control lever´s position.

The control automatically slips into its initial position when released.

All hydraulic controls sit on the console to the right of the driver's seat.

Manoeuvering levers

Observe the operating symbols and directional arrows.

Raising the fork carriage.
- Pull lever control (1) backwards.

Lowering the fork carriage.
- Push lever control (1) forwards.

Tilting the fork carriage backwards.
- Pull lever control (2) backwards.

Tilting the fork carriage forwards.
- Push lever control (2) forwards.

Sideshifting
- Push lever control (3) forwards to move the forks to the left.
- Pull lever control (3) backwards to move the forks to the right.

Manouvering the fork positioning
- Push lever control (4) forwards to increase the distance between the forks.
- Pull lever control (4) backwards to decrease the distance between the forks.
- Extra function (5) is optional.

https://truckmanualshub.com/

CD5970

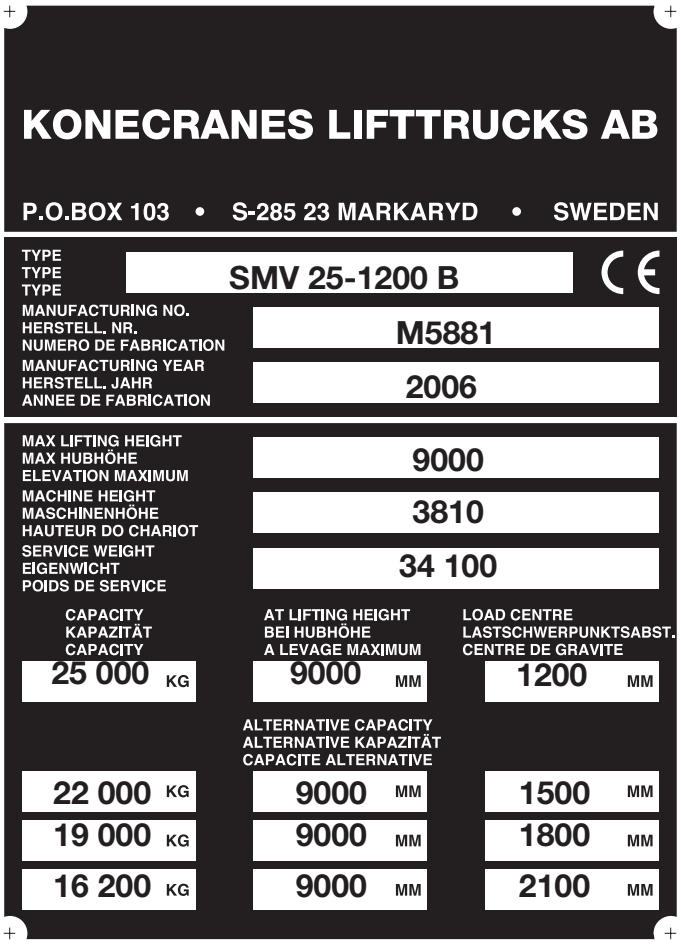

Before lifting loads

Capacity plate

Before lifting a load, read the lifting capacity plate on the left side of the cab.

If an accessory has been fitted, read the capacity plate for this.

The values indicated on the capacity plate are valid for compact and regular loads, and if they are exceeded, there is a risk to the stability of the truck and the tensile strength of the forks/lifting frame.

Maximum capacity depends on the height of the lift and the distance to the centre of the load, ”LC”. ”LC” is the distance between the front face of the vertical fork arm and the gravity center of the load.

Read the capacity plate according to the following example;

Main lifting capacity

Lifting capacity of 25 000 kg at lifting height 9000 mm and center of load 1200 mm (related to truck model).

Alternative lifting capacities

Lifting capacity is 22 000 kg at lifting height 9000 mm and center of load 1500 mm (related to truck model).

Lifting capacity is 19 000 kg at lifting height 9000 mm and center of load 1800 mm (related to truck model).

Lifting capacity is 16 200 kg at lifting height 9000 mm and center of load 2100 mm (related to truck model).

https://truckmanualshub.com/

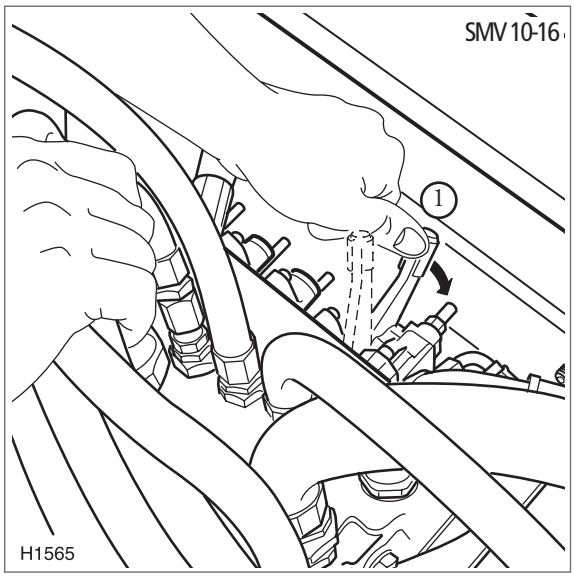

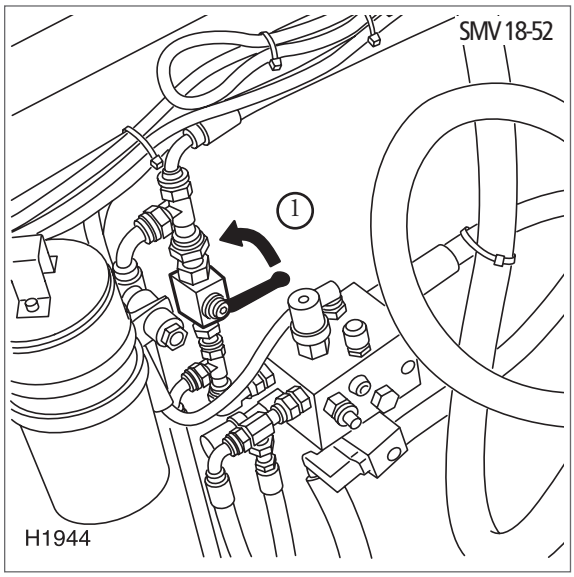

Emergency lowering

The truck is equipped with a hydraulic servo (option electro/ hydraulic servo). If the engine or the hydraulic system should failure, it is impossible to lower the load by means of the hydraulic controls.

The directional valve is euipped with a gate valve, that makes emergency lowering possible.

DANGER
Make sure that carriage and mast can be lowered without obstructions.
Make sure that there are no object or personell underneath or near load or atachments.
Risk of serious injury and damage to vehicle.

- Tilt the cab.
- Open the gate valve (1) gently.

CAUTION
Once the mast has been lowered it can not be lifted again unless the engine is running and the hydraulics is functioning properly.

https://truckmanualshub.com/

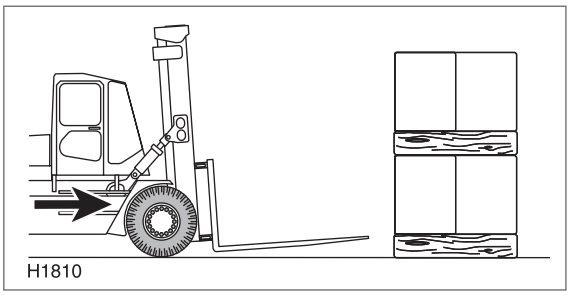

Lifting loads

- Drive forward towards the load which must be lifted as carefully and as precisely as possible.

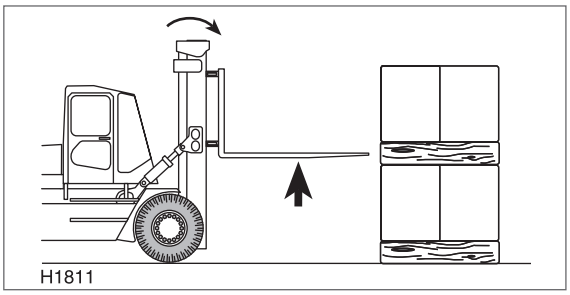

- Move the frame into a vertical position.
- Raise or lower the fork carriage to the correct height.

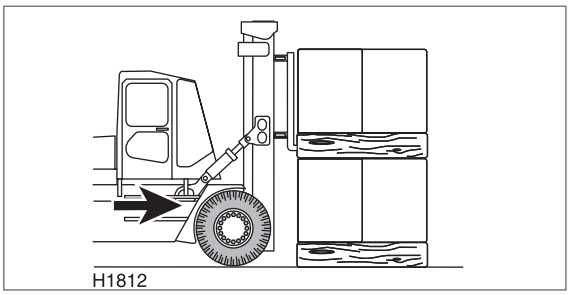

- Carefully push the forks underneath the load until the forks touch the load.
- Ensure that the point of balance of the load is between the forks.

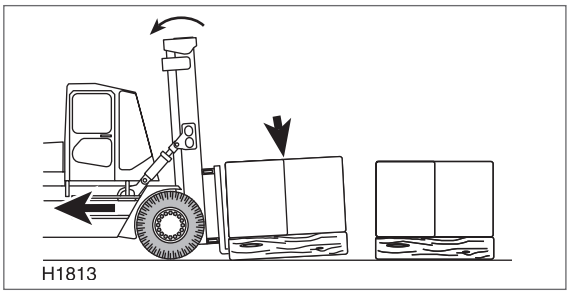

- Raise the mast until the loads rests on the forks, but only as much as needed to ensure clearance from the stack; 'A' = 20-40 cm.

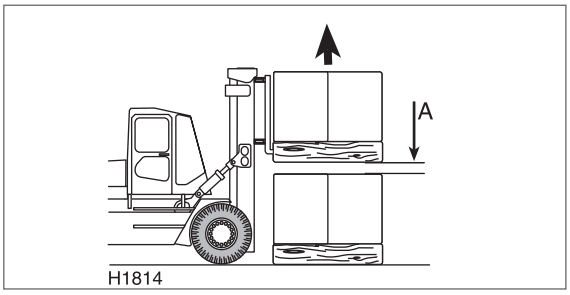

- Tilt the mast slightly.
- Reverse the truck only as much as needed to to ensure clearance from front of the stack; 'B' = 20-40 cm.

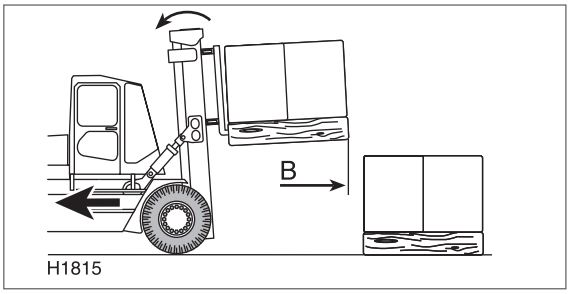

- Tilt the frame backwards.
- Lower the load to the transit position.

https://truckmanualshub.com/

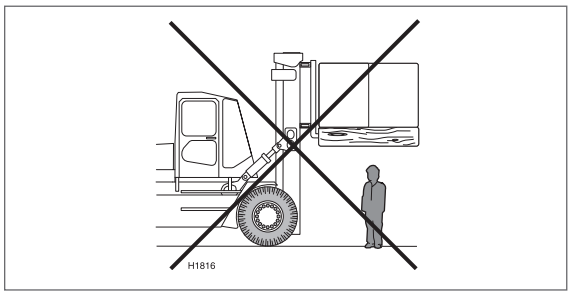

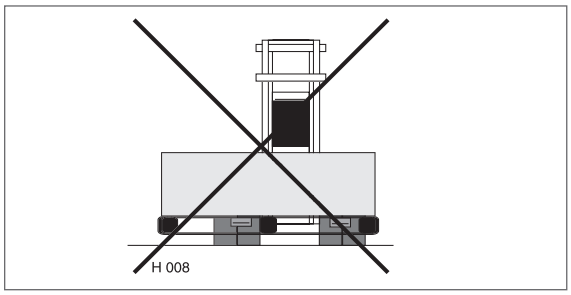

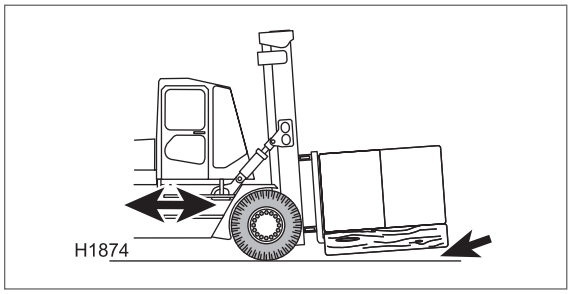

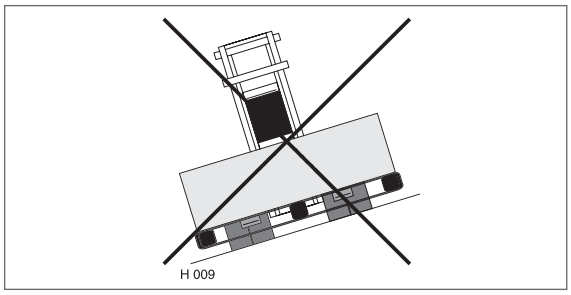

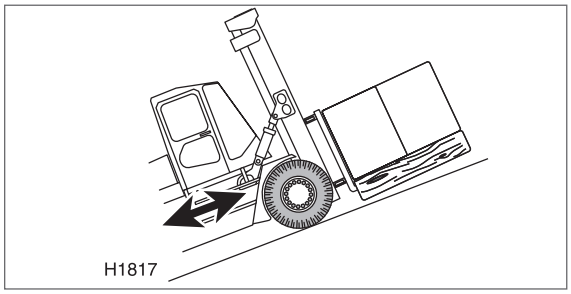

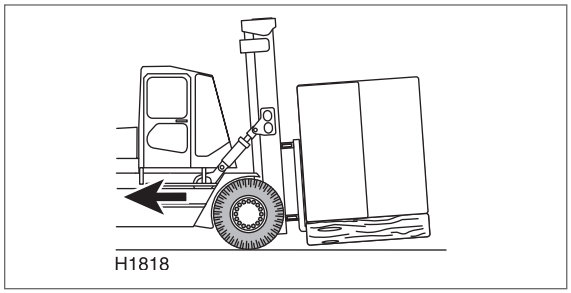

Lifting loads

DANGER
Load and attachment may drop down.
Risk of serious injury or death.
Do not allow anyone to stand or walk under the elevated portion of the truck whether it empty or loaded.

WARNING
Load ant attachment may drop down.
Risk of serious injury or death.
Never park and leave the truck unattended with the load lifted.

Driving with loads

- Do not drive with the load in a non central position (e.g. sideshifting) .
- Transport the load as close as possible to the ground.

WARNING
Avoid driving on slopes or uneven ground when driving with load.
Never drive or turn across aslope.
Never drive with forks or load in raised position.

- Work with a guide, if your view is obscured.
- Drive the truck backwards if the transported load is stacked so high that it obscures the front view.

https://truckmanualshub.com/

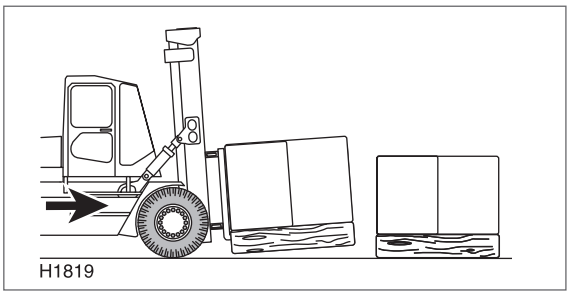

Unloading loads

- Drive forwards as carefully and precisely as possible to the stack or arrangement where you are to deposit the load.

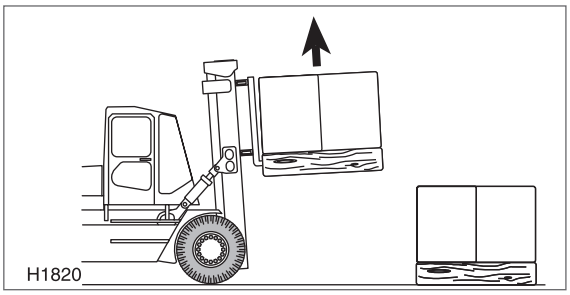

- Raise the fork carriage to the correct height.

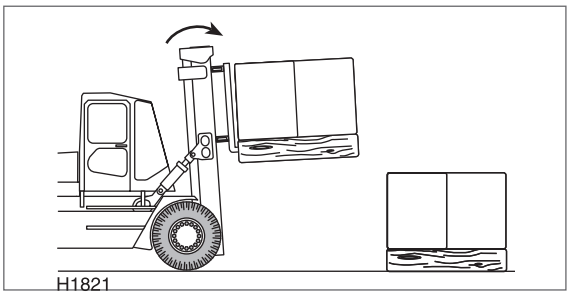

- Place the frame in a vertical position.
- Drive carefully in towards the stack.
- Lower the load.

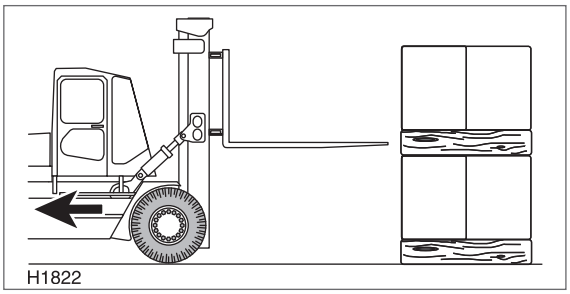

- Reverse slowly from the stack. Make sure there is clearance between the stack and the forks.

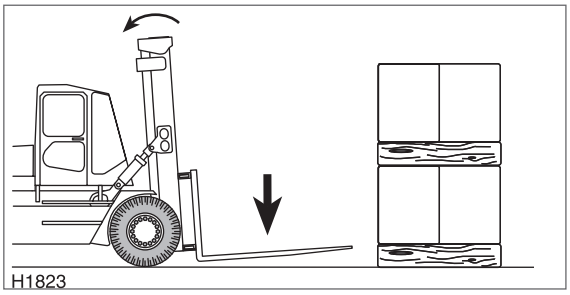

- Lower the forks into transport position. Tilt the mast slightly backwards.

WARNING
Never drive with forks or load in raised position.

https://truckmanualshub.com/

INSPECTION AND MAINTENANCE DATA

No.	Unit	Material/oil/ lubricant			
1.	Engine	Engine oil	SMV 10-28_1200B VOLVO TAD 620 VE-EU II VOLVO TAD 660 VE-EU III	Filter and oil change 16 L	
			VOLVO TAD 722VE-EU II VOLVO TAD 760VE-EU III	Filter and oil change 23 L	
			SMV 32-52-1200B SCANIA DI12 54A-EU II SCANIA DC12 58A-EU III	Filter and oil change 30 L	
2.	Air filter	Air pressure max 1 bar (cleaning)			
3.	Fuel tank	Diesel	SMV 10/12-600 B	131 L	
			SMV 13,6-600 B	168 L	
			SMV 12-1200/16-900 B	206 L	
			SMV 16-1200 B	243 L	
			SMV 20-1200 B	280 L	
			SMV 22–25-1200 B	336 L	
			SMV 28-1200B	320 L	
			SMV 32–37-1200B	400 L	
			SMV 42–52-1200B	535 L	
4.	Cooling system	Glycol/water mix.	SMV 10–28-1200 B	50 L	
			SMV 32–421200 B	58 L	
			SMV 42–52-1200 B	60 L	
5.	Hydraulic oil tank	Hydraulic oil	SMV10/12-600 B	112 L	
			SMV 13,6-600 B	150 L	
			SMV 12-1200/ 16-900 B	187 L	
			SMV 16-1200 B	224 L	
			SMV 20-1200 B	312 L	
			SMV 22–25-1200 B	368 L	
			SMV 28-1200 B	295 L	
			SMV 32–37-1200 B	346 L	
			SMV 42–52-1200 B	465 L	
6.	Drive axle	Gearbox oil		Each hub	Diff.
			SMV 10–16-1200B	7,0 L	20 L
			SMV 18–25-1200 B	8,5 L	25 L
			SMV 28–32-1200 B	9,5 L	28 L
			SMV 37–52-1200 B	11,5 L	38 L
7.	Gearbox	Dexron III	SMV 10–16-1200B	27 L	
			SMV 18–28-1200 B	21 L	
			SMV 32–52-1200 B	42 L	
8.	Tyres	Air	9,0 bar (Michelin 10 bar)		
9.	Wheel nuts	- -	SMV 10–16-1200B SMV 18–52-1200B	768 Nm 400 Nm	
10.	All lubrication points	Grease	When necessary		
11.	Valve clearance	-	See manufacturer's work-shop manual		
12.	Fuel injection.	Diesel	See manufacturer's work-shop manual		

https://truckmanualshub.com/

Quality of the engine oil

The engine oil must comply with one of below classifications for oil:
- ACEA E3, E4, or E5
- TBN-value should at least be 12-13 (ASTM 2896)

Check with your oil supplier if your oil meets these demands.

Sted oil change intervals are valid if the sulphur content of the fuel is below 0.3%. If the sulphur content is higher than 0.3%, the oil change intervals must be divided in half (250 h).

When the engine is in use, some of the oil which serves as a lubricant will be burned (used) prior to reaching the pistons. The combustion products in combination with the high temperatures lead to ”oil wear”, particularly for the chemical additives.

Since this oil wear depends on operating conditions, the quality of the oil (the productivity of the oil) and the fuel used, the intervals between changing the oil may vary in length.
The longest possible time before the engine lubricating oil is replaced is one year, i.e. the oil should be replaced after a maximum of one year’s operation.
Since the viscosity of the oil varies according to temperature, the temperature in the place where the
truck is being used is vital to the choice of the engine oil viscosity range (see diagram).

Changing the oil due to a replace in season may be avoided by using what are known as multi-grade oils. Specified intervals for changing the oil also apply to multi-grade oils.

NOTE
No oil additives of any sort must be added to those oils recommended! Using such additives could invalidate the engine warranty.

Mixing different brands of oil should be avoided.
Since the temperature ranges for adjacent SAE classes overlap, the oil does not need to be replaced when shortterm temperature replaces occur.

Extended oil change interval

Extended oil service life may result when using synthetic fluids. Appropriate change intervals should be determined for each engine by measuring oil oxidation and wear metals over time, to determine a baseline. Wear metals analysis can provide useful information but an engine should not be removed from service based solely on this analysis.

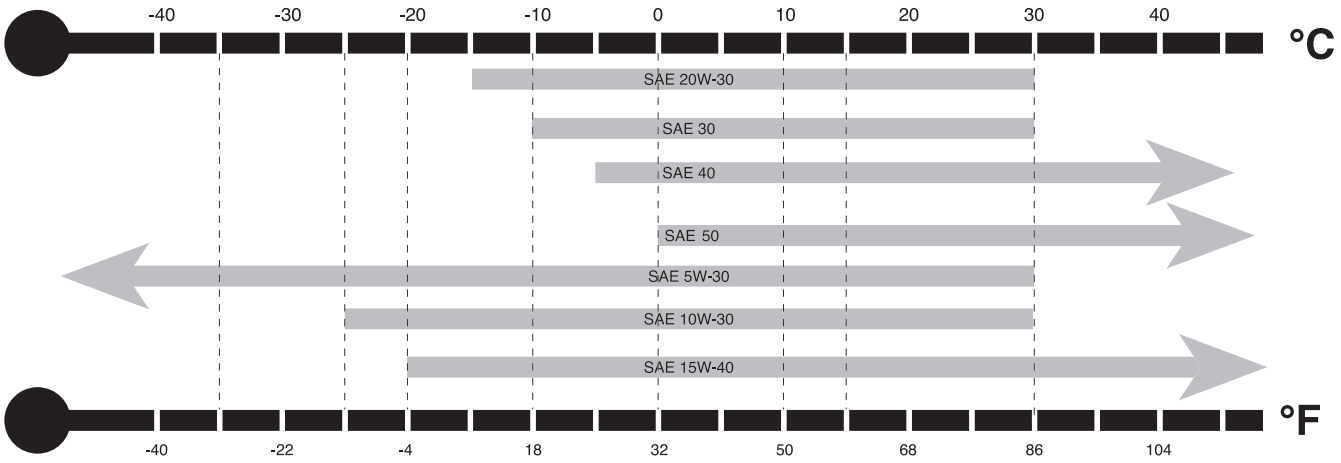

https://truckmanualshub.com/

RECOMMENDED FUELS , HYDRAULIC OILS AND TRANSMISSION OIL

Diesel

Use only fuel in accordance with DIN 51601 with a cetane rating not below 45.

The diesel sulphur content should not exceed 0.3 %. If the sulphur content lies over 0.3 % the oil changing intervals in the maintenance table must be halved.

If the values are higher, contact the manufacturer of the fork-lift truck or the lubricant.

NOTE
As the surrounding temperature falls, the flow characteristics of the diesel are reduced to a point where paraffin begins to precipitate. If ”summer quality” diesel is used, this may cause trouble in operation. For this reason, ”winter quality” diesel should be used during the cold part of the year, as it operates in the cold better and functions reliably at -15 °C.

Using additives to improve the flow is not recommended. They may reduce the capacity to start from cold.

Converter/transmission oil

ATF Dexron III

Oil change interval

Drain and refill system every 1000 hrs for average environmental and duty cycle conditions. Severe or sustained high operating temperature or very dusty atmospheric conditions will result in accelerated detioration
or contamination. Judgement must be used to determine the required change intervals for extreme conditions.

Drive axle oil

API GL.5 SAE 80 W-140

NOTE
The above are strictly recommendations. When ever hasitating contact the Konecranes Lifttrucks-dealer for advice.

Hydraulic oil

Universal TracTtor Transmission Oil (UTTO)

The oil must comply with one of the following classifications:

- John Deere JD20C
- Massey Ferguson
  MF1141/MF1135/ MF1143
- ZF TE-ML 03E/TE-ML 05F/TE-ML 06K

It is also possible to use an standard hydraulic oil according to specification
DIN 51524 Part 2 HLP and Part 3 HVLP
in addition with 1.5 % Lubrizol.

Use hydraulic oil from a well-known oil company for mobile applications.

Viscosity	Temperature range
SHS 32	-30 °C – +10 °C
SHS 46	-20 °C – +20 °C
SHS 68	±0 °C – +50 °C

Grease

Multipurpose type E.P. according to N LGI Grade 2.

Coolant

Use only monoethylene glycol-based coolants with an additive to prevent corrosion. Do not mix with anti-freeze liquid containing ethanolamine.

Liquid anti-freeze at the lowest temperature	% volume mixture liquid anti-freeze °C	Mixture of anti-freeze and water
-12	**25**	**1:3**
-18	**30**	**1:2**
-25	**40**	**1:1,5**
-37	**50**	**1:1**
-60	**66**	**2:1**

https://truckmanualshub.com/

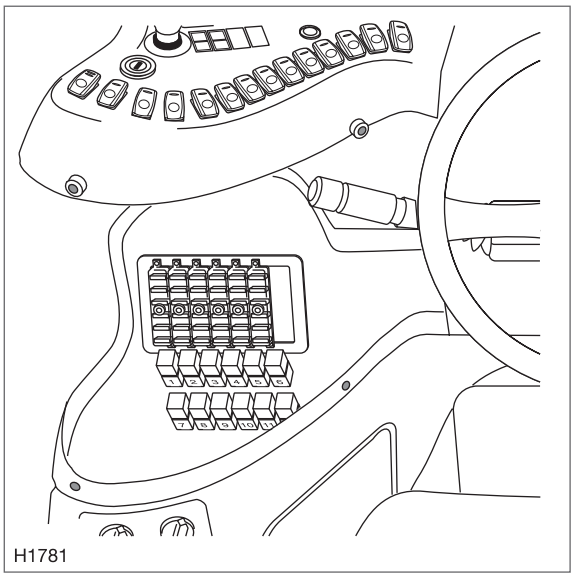

Fuses

Fuses are located below the left hand dash board. They are numbered (1), upper left to (40), lower right. *Italic = optional.*

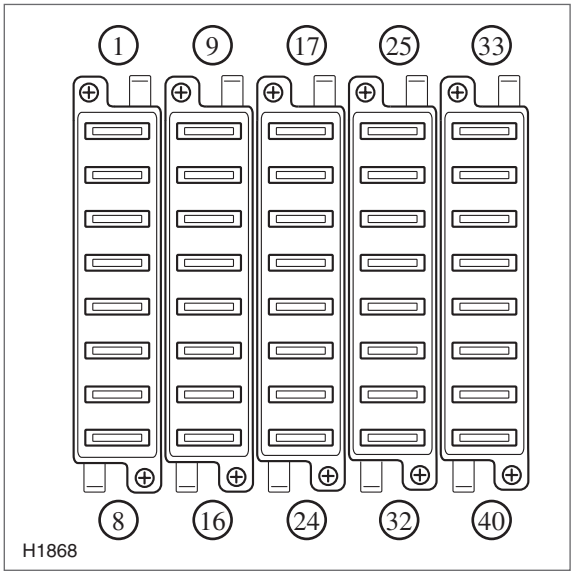

Fuses below the dash board

Fuses are located below the dash board. They are numbered (1), upper left to (40), lower right.

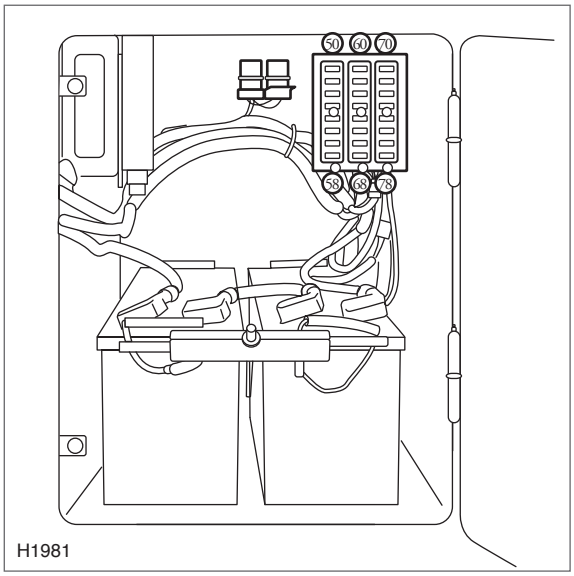

Fuses in the battery compartment.

WARNING
Beware of short-circuiting the battery, which may cause fire or explosion.
Risk for serious injury or death.
The battery contains corrosive acid. Always use the necessary protective equipment.
Batteries generate explosive hydrogen when charged. Ensure that there is good ventilation and avoid sparking.
The main disconnect does not cut the power to the alternator. Always disconnect the ground (minus) cable at the battery when working near or on the alternator.
To reduce the risks of electrical shock and personal injury always remove jewelry and conductive material prior to working on the electrical system.
Unless in an emergency situation, do not turn off the main cicuit switch while the engine is running.

https://truckmanualshub.com/

FUSES

The fuses are located below the left hand dashboard. They are numbered (1), upper left, to (40), lower right.
Italic = optional.

FUSE	SIZE	FUNCTION
F1	10 A	Charging Ind. Lamp, Relays Workinglights
F2	7,5 A	Break Lights , Side Marker Lamps, Dome Lamp, Switch Illumination
F3	15 A	HVAC, A/C Compressor, Heat Water Valve
F4	5 A	Fuel Shutoff valve, Central Lubrication Pump, Buzzer Seat
F5	15 A	Condensor Fan Motor
F6	7,5 A	High Beam
F7	7,5 A	Low Beam
F8	10 A	IQAN-MDL, IQAN-MDL (Internal)
F9	3 A	Can-cockpit
F10	10 A	IQAN-XA2-A0, IQAN-XA2-A1
F11	10 A	IQAN-XA2-A1, IQAN-XA2-A2 (Internal)
F12	7,5 A	Turn Lamps, HVAC
F13	7,5 A	Relay Key-Start SW., Coold Sart Aid, Relay Starter Motor
F14	15 A	ROAD LIGHTS, High Beam, Low Beam
F15	7,5 A	Entrance Lights
F16	10 A	Wiper Motor Front, Wiper Motor Rear, Wiper Motor Roof, Windshield Washer Motor, Horn
F17	7,5 A	Turn Lamps, Seat Heater
F18	10 A	Seat Suspension Air Compressor
F19	7,5 A	*Workinglights Extra ELME*
F20	7,5 A	Beacon, Rear View Mirror Heater, Map Light, Search Light
F21	7,5 A	Backup Lights, Backup Alarm
F22	7,5 A	Radio
F23	15 A	24V Outlet
F24	3 A	IQAN-MDL (+RTC), Timer Diesel Fired Preheater
F25	3 A	Marker Lights Left
F26	3 A	Marker Lights Right
F27	7,5 A	Workinglights Mast Right
F28	7,5 A	Workinglights Mast Left
F29	5 A	*Workinglights roof*
F30	5 A	*Workinglights roof*
F31	10 A	Extra, (Elme Spreader) Fuse not mounted
F32		Extra
F33	3 A	Can-Cockpit
F34		Extra
F35	15 A	*SCANIA EMS / Cummins QSM II*
F36	15 A	*SCANIA EMS / Cummins QSM II*
F37	10 A	DATOR
F38	10 A	DATOR
F39	15 A	Reserved for seat compressor. (Large) Fuse not mounted
F40		Extra

https://truckmanualshub.com/

Fuses F51-F68 and F71-F75 are situated in the battery compartment.

FUSE	SIZE	FUNCTION
F51	10 A	main fuse, F12 & F24
F52		Extra
F53	1 A	Radio Memory
F54	15 A	Engine Preheater
F55	15 A	Engine Preheater
F56	5 A	APC200 DANA
F57	10 A	Volvo 660/760 EMS2/(Cummins QSB 6.7 (15A))
F58		(Cummins QSB 6.7 (15A))
F61	30 A	F1, F3, F4 & F5
F62	30 A	Main fuse F8, F9, F10, F11 & F34
F63	30 A	Main fuse F16, F17, F18, F21, F31 & F32
F64	30 A	Main fuse F2, F13, F27 & F28, F33
F65	30 A	Main fuse F14, F15, F29 & F30
F66	30 A	Main fuse F19, F20, F22, F37, F38 & F39
F67	30 A	Main fuseF23, F35 & F36
F68	30 A	Starter Motor Solenoid
F71	10 A	*ELME Spreader*
F72		Extra
F73		Extra
F74	10 A	Volvo EDC4 (Cummins QSB 6.7)
F75	5 A	APC200 DANA
F76		Extra
F77		Extra
F78		Extra

RELAIS

K1-K17 is mounted in the electrical main box.
K31, K32, K33 and K34 are mounted near the main fuses.

Relay nr.	Relay function
K1	(Automatic shut off)
K2	(Automatic shut off)
K3	(Automatic shut off)
K4	Working lights mast.
K5	Working lights roof.
K6	Working lights extra.
K7	Backup lights.
K8	F-N-R switch seat.
K9	Rear view mirror heater.
K10	Windshield wiper rear.
K11	Windshield wiper roof.
K12	*Windshield wiper front.*
K13	Marker light.
K14	Backup camera.
K15	*Switching marker light rot. drivers seat.*
K16	*Switching brake light, backup warning* rot. driving seat.
K17	Switching roading lights, backup *lights rot. driving seat.*
K31	(Starter.)
K32	Shut down consumers. (Main Power Relay)
K33	(Starter hold function.)
K34	(Hold function APC 200 DANA)

https://truckmanualshub.com/

https://truckmanualshub.com/

https://truckmanualshub.com/

https://truckmanualshub.com/