https://truckmanualshub.com/

SERVICE MANUAL

C3E120	C4E120
C3E150	C4E150
C3E160	C4E160
C3E160L	C4E160L
C3E180	C4E180
C3E180L	C4E180L
C3E200	C4E200

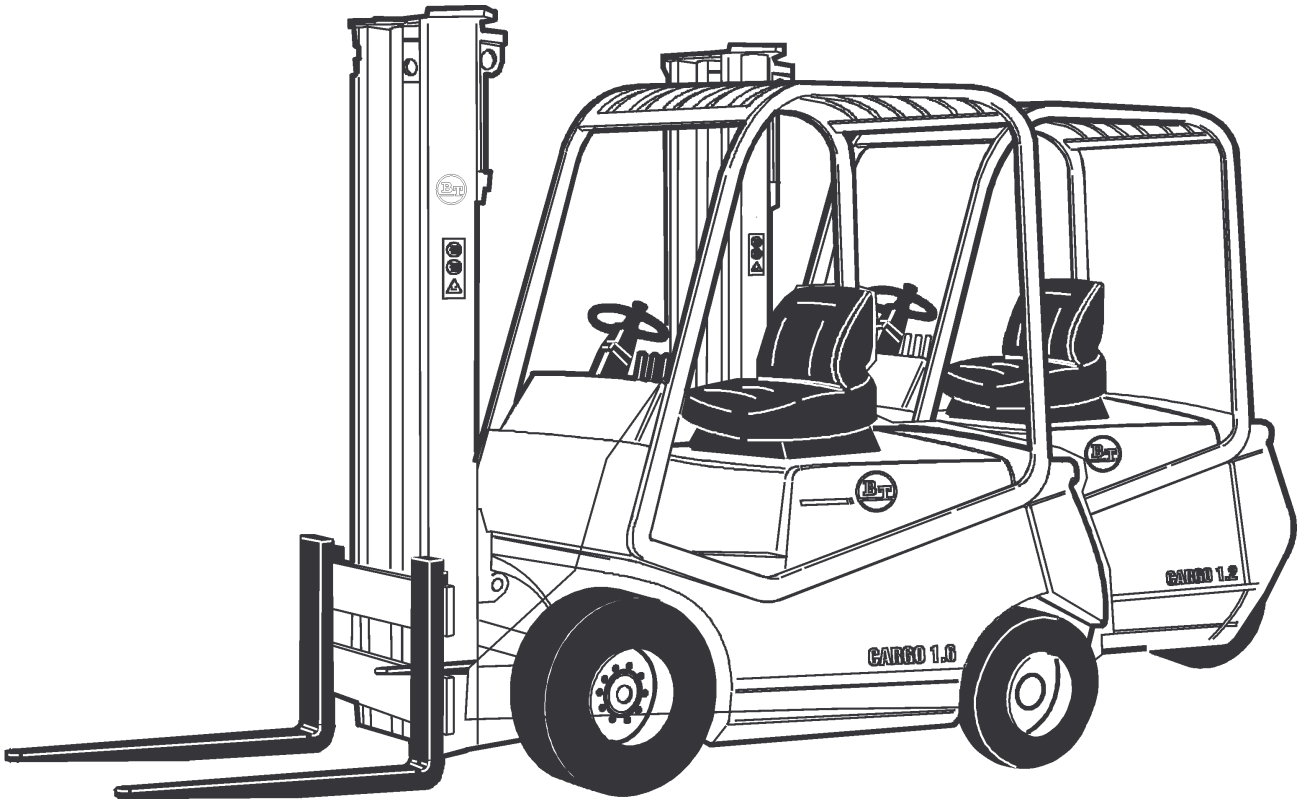

036-0410-07

04/2005

https://truckmanualshub.com/

PAGINA INTENZIONALMENTE BIANCA

INTENTIONALLY LEFT BLANK

PAGE INTENTIONNELLEMENT BLANCHE

ABSICHTLICH FREIGELASSENE SEITE

PÁGINA INTENCIONALMENTE BLANCA

https://truckmanualshub.com/

CESAB S.p.a. reserves all rights of reproduction of this handbook

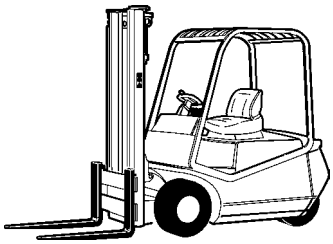

The text and the numbering system may not be used in other printed matter, reprinted or translated, whether entirely or in part, without written authorization from

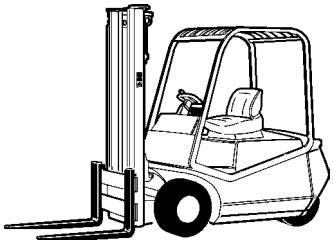

CESAB reserves the right to make any necessary modifications without obligation to promptly update this handbook.

Copyright by

CESAB S.p.A
via Persicetana Vecchia, 10
40132 Bologna - Italy
Tel. (0039) 051.20 54 11
Fax (0039) 051.72 80 07
E-mail: cesab@cesab.it

BOLOGNA'S FACTORY, AFTER SALES SERVICE

https://truckmanualshub.com/

INDEX

GENERAL INFORMATION	chapter	A
CHASSIS	chapter	0000
MOTORS / ENGINES	chapter	1000
TRANSMISSION / DRIVE GEAR	chapter	2000
BRAKE / WHEEL	chapter	3000
STEERING SYSTEM	chapter	4000
ELECTRICAL SYSTEM	chapter	5000
HYDRAULIC / PNEUMATIC SYSTEM	chapter	6000
MAST GROUP	chapter	7000
ATTACHEMENT	chapter	8000
OPTIONS	chapter	9000
MAINTENANCE TABLES	chapter	B
SAFETY INFORMATION	chapter	C

https://truckmanualshub.com/

CHAPTER A

GENERAL INFORMATION

https://truckmanualshub.com/

GENERAL INFORMATION INDEX

TECHNICAL DATA page3

SERVICE MANUAL

TECHNICAL DATA

TECHNICAL AND WORKING SPECIFICATIONS			FORKLIFT MODEL (Standard Configuration)																					
CHARACTERISTICS																								
1.1	Manufacturer		CESAB				CESAB				CESAB				CESAB				CESAB				CESAB	
1.2	Model		**BLITZ 312 - CBE 1,2 T °°°**				**BLITZ 315 - CBE 1,5 T °°°**				**BLITZ 316 - CBE 1,6 T °°°**				**BLITZ 318 - CBE 1,8 T °°°**				**BLITZ 316 L - CBE 1,6 L T °°°**				**BLITZ 318 L - CBE 1,8 L T °°°**				**BLITZ 320 - CBE 2,0 T °°°**			
			BLITZ 412 - CBE 1,2 F °°°°				**BLITZ 415 - CBE 1,5 F °°°°**				**BLITZ 416 - CBE 1,6 F °°°°**				**BLITZ 418 - CBE 1,8 F °°°°**				**BLITZ 416 L - CBE 1,6 L F °°°°**				**BLITZ 418 L - CBE 1,8 L F °°°°**				**BLITZ 420 - CBE 2,0 F °°°°**			
1.3	Power: Electric (battery) - Diesel - Petrol - LPG		Electric				Electric				Electric				Electric				Electric				Electric				Electric			
1.4	Control type: Standing/seated/pedestrian		Driver seated				Driver seated				Driver seated				Driver seated				Driver seated				Driver seated				Driver seated			
1.5	Capacity (Nominal capacity)	Q [kg]	1200				1500				1600				1800				1600				1800				2000			
1.6	Load centre	c [mm]	500				500				500				500				500				500				500			
1.8	Front overhang (Distance from front axle)	x [mm]	365,5		b		365,5		b		365,5		b		365,5		b		365,5		b		365,5		b		365,5		b	
1.9	Wheel-base	y [mm]	1300 °°°				1300 °°°				1410 °°°				1410 °°°				1542 °°°				1542 °°°				1542 °°°			
			1290 °°°°				1290 °°°°				1400 °°°°				1400 °°°°				1532 °°°°				1532 °°°°				1532 °°°°			
WEIGHTS																								
2.1	Service mass	kg	2960 °°°				3190 °°°				3230 °°°				3375 °°°				3335 °°°				3440 °°°				3565 °°°			
			2950 °°°°				3140 °°°°				3180 °°°°				3320 °°°°				3300 °°°°				3380 °°°°				3520 °°°°			
2.2	Load per axle with load, front/rear	kg	3685 / 475 °°°				4200 / 490 °°°				4370 / 460 °°°				4695 / 480 °°°				4355 / 580 °°°				4690 / 550 °°°				4985 / 580 °°°			
			3675 / 475 °°°°				4150 / 490 °°°°				4300 / 480 °°°°				4600 / 520 °°°°				4330 / 570 °°°°				4650 / 530 °°°°				4940 / 580 °°°°			
2.3	Load per axle without load, front/rear.	kg	1675 / 1285 °°°				1680 / 1510 °°°				1740 / 1490 °°°				1770 / 1605 °°°				1845 / 1490 °°°				1860 / 1580 °°°				1850 / 1715 °°°			
			1665 / 1285 °°°°°				1670 / 1470 °°°°				1650 / 1530 °°°°				1630 / 1690 °°°°				1820 / 1480 °°°°				1830 / 1550 °°°°				1820 / 1700 °°°°			
WHEELS -CHASSIS																								
3.1	Tyres: C=Cushion, PN=Pneumatic, SE=Superelastic, G=Tw		C / SE - PN		c		C / SE - PN		c		C / SE-PN		c		C / SE				C / SE-PN		c		C / SE				C / SE			
3.2	Tyres: Size, front		432x152 / 18x7-8				432x152 / 18x7-8				432x152 / 18x7-8				457x178 | 200/50-10				432x152 / 18x7-8				457x178 | 200/50-10				457x178 | 200/50-10			
3.3	Tyres: Size, rear		381x127 / 16x6-8				381x127 / 16x6-8				381x127 / 16x6-8				381x127 / 16x6-8				381x127 / 16x6-8				381x127 / 16x6-8				381x127 / 16x6-8			
3.5	Wheels (x = drive)		2x / 2				2x / 2				2x / 2				2x / 2				2x / 2				2x / 2				2x / 2			
3.6	Track:centre of tyres, front	b10 [mm]	839 / 851		e		839 / 851		e		839 / 851		e		828 / 861		e		839 / 851				828 / 861				828 / 861			
3.7	Track: centre of tyres, rear	b11 [mm]	199 / 229 °°°		e		199 / 229 °°°		e		199 / 229 °°°		e		199 / 229 °°°		e		199 / 229 °°°		e		199 / 229 °°°		e		199 / 229 °°°		e	
			863 / 843 °°°°				863 / 843 °°°°				863 / 843 °°°°				863 / 843 °°°°				863 / 843 °°°°				863 / 843 °°°°				863 / 843 °°°°			
DIMENSIONS																								
4.1	Mast tilt: Forward/Backward	α / β [°]	2°30' / 6°				2°30' / 6°				2°30' / 6°				2°30' / 6°				2°30' / 6°				2°30' / 6°				2°30' / 6°			
4.2	Overall dimensions: Heigth, mast closed	h1 [mm]	2160				2160				2160				2160				2160				2160				2160			
4.3	Overall dimensions: Standard free lift (travel)	h2 [mm]	80				80				80				80				80				80				80			
4.4	Overall dimensions: Lift travel	h3 [mm]	3170				3170				3170				3170				3170				3170				3170			
4.5	Overall dimensions: Height, mast open	h4 [mm]	3720				3720				3720				3720				3720				3720				3720			
4.7	Overall dimensions: Height, overhead guard	h6 [mm]	1950				1950				1950				1950				1950				1950				1950			
4.8	Overall dimensions: Seat height	h7 [mm]	888				888				888				888				888				888				888			
4.12	Hook height	h10 [mm]	630				630				630				630				630				630				630			
4.19	Overall Length	l1 [mm]	2880 °°°		b		2920 °°°		b		2990 °°°		b		3030 °°°		b		3122 °°°		b		3122 °°°		b		3162 °°°		b	
			2945 °°°°		b		3090 °°°°		b		3055 °°°°		b		3100 °°°°		b		3187 °°°°		b		3187 °°°°		b		3232 °°°°		b	
4.20	Overall Length included forks back	l2 [mm]	1880 °°°		b		1920 °°°		b		1990 °°°		b		2030 °°°		b		2122 °°°		b		2122 °°°		b		2162 °°°		b	
			1945 °°°°		b		1990 °°°°		b		2055 °°°°		b		2100 °°°°		b		2187 °°°°		b		2187 °°°°		b		2232 °°°°		b	
4.21	Overall Width	l1\b2 [mm]	990 / 1003		e		990 / 1003		e		990 / 1003		e		1006 / 1066		e		990 / 1003		e		1006 / 1066		e		1006 / 1066		e	
4.22	Fork size: Height(s) x Width(e) x Length(l)	s/e/l [mm]	35x100x1000				35x100x1000				35x100x1000				35x130x1000				35x100x1000				35x130x1000				35x130x1000			
4.23	Fork carriage According to DIN 15173, class /type A, B		II A				II A				II A				II A				II A				II A				II A			
4.24	Fork carriage width	b3 [mm]	900				900				900				900				900				900				900			
4.31	Free height under the mast, with load	m1 [mm]	100				100				100				100				100				100				100			
4.32	Free height from chassis to ground in the middle of the truc	m2 [mm]	90				90				90				90				90				90				90			
4.33	Stacking at 90° aisle width, 1000x1200 pallet, forks on the	Ast [mm]	3208 °°°				3248 °°°				3318 °°°				3358 °°°				3450 °°°				3450 °°°				3490 °°°			
			3295 °°°°				3335 °°°°				3415 °°°°				3455 °°°°				3560 °°°°				3560 °°°°				3600 °°°°			
4.34	Stacking at 90° aisle width, 800x1200 pallet, forks on the	Ast [mm]	3332 °°°				3372 °°°				3442 °°°				3482 °°°				3574 °°°				3574 °°°				3614 °°°			
			3495 °°°°				3535 °°°°				3615 °°°°				3655 °°°°				3760 °°°°				3760 °°°°				3800 °°°°			
4.35	Overall Turning radius	Wa [mm]	1517 °°°				1557 °°°				1627 °°°				1667 °°°				1759 °°°				1759 °°°				1799 °°°			
			1730 °°°°				1770 °°°°				1850 °°°°				1890 °°°°				1995 °°°°				1995 °°°°				2035 °°°°			
4.36	Min.turning radius	b13 [mm]	---				---				---				---				---				---				---			
PERFORMANCES																								
5.1	Travel speed with/without load	km/h	14,5 / 14,5				14,5 / 14,5				14,5 / 14,5				14,5 / 14,5				14,5 / 14,5				14,5 / 14,5				14,5 / 14,5			
5.2	Lifting speed with/without load	m/s	0,35 / 0,54				0,34 / 0,54				0,34 / 0,54				0,33 / 0,54				0,34/ 0,54				0,33/ 0,54				0,32 / 0,54			
5.3	Lowering speed with/without load	m/s	0,55 / 0,50				0,55 / 0,50				0,55 / 0,50				0,55 / 0,50				0,55 / 0,50				0,55 / 0,50				0,55 / 0,50			
5.5	Nomal draw-bar pull, with/without load, hourly	N	2900 / 3140				2840 / 3140				2820 / 3140				2780 / 3140				2820 / 3140				2780 / 3140				2740 / 3140			
5.6	Max. draw-bar pull, with/without load, S2 5'	N	8760 / 9000		d		8700 / 9000		d		8680 / 9000				8640 / 9000				8680 / 9000		d		8640 / 9000		d		8620 / 9000		d	
5.7	Surmountable inclination, with/without load (S2 30')	%	7 / 10,6 °°°				6 / 9,7 °°°				5,7 / 9,6 °°°				5,2 / 9,1 °°°				6,1 / 10,1 °°°				5,1 / 8,9 °°°				4,7 / 8,5 °°°			
			7,7 / 11,7 °°°°				6,6 / 10,8 °°°°				6,4 / 10,7 °°°°				5,8 / 10 °°°°				6,2 / 10,2 °°°°				5,7 / 9,7 °°°°				5,2 / 9,4 °°°°			
5.8	Max.surmountable inclination, with/without load (S2 5')	%	21 / 30		d		18 / 28		d		17,5 / 28				16 / 26,5				17 / 27		d		16 / 26		d		15 / 25		d	
5.9	Acceleration time, with/without load	s	---				---				---				---				---				---				---			
5.10	Service brake: Mechanical / Hydraulic / Elictric / Pneumatic		Hydraulic				Hydraulic				Hydraulic				Hydraulic				Hydraulic				Hydraulic				Hydraulic			
ELECTRIC MOTORS																								
6.1	Traction Motor(s), power (S2 60')	kW	4,5 x 2				4,5x 2				4,5 x 2				4,5 x 2				4,5 x 2				4,5 x 2				4,5 x 2			
6.2	Lifting Motor, power (S3 15%)	kW	10				10				10				10				10				10				10			
6.3	Battery (DIN 43531/35/36 A, B, C, NO)		---				---				---				---				---				---				---			
6.4	Battery Voltage / capacity (K5)	V/Ah	48 / 420-500				48 / 420-500				48 / 525-625				48 / 525-625				48 / 630-750				48 / 630-750				48 / 630-750			
6.5	Battery Mass	kg	775				775				920				920				1090				1090				1090			
6.6	Energy consumption (VDI cycle)	kWh/h	---				---				---				----				---				---				---			
OTHERS																								
8.1	Control		Inverter MOSFET				Inverter MOSFET				Inverter MOSFET				Inverter MOSFET				Inverter MOSFET				Inverter MOSFET				Inverter MOSFET			
8.2	Working pressure for attachment	bar	140				140				140				140				140				140				140			
8.3	Oil capacity for attachment	l/min	---				---				---				---				---				---				---			
8.4	Noise level to driver's ear	dB (A)	---				---				---				---				---				---				---			
8.5	Tow hook / DIN Type		---				---				---				---				---				---				---			

b) + 34 mm with integrated sideshifting
c) PN available only for front tyres
d) the concerned values show the electric motors and transmission ca
e) C / SE
°°°) 3 wells
°°°°) 4 wells

https://truckmanualshub.com/

https://truckmanualshub.com/

N.B. *= The performances concern S.E. tyres and mast group 2M V.T. H= 4000*

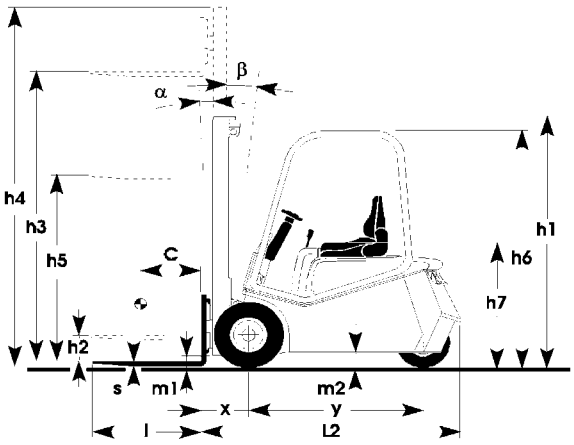

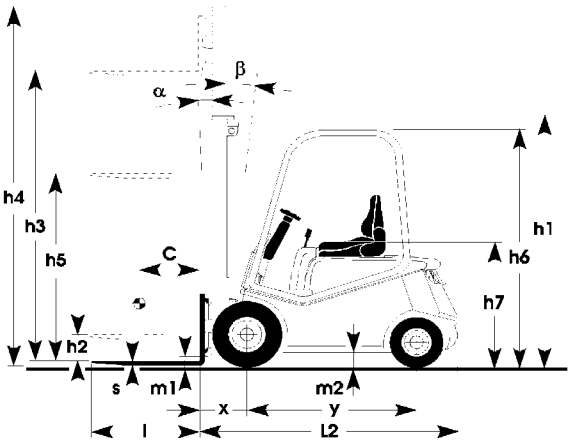

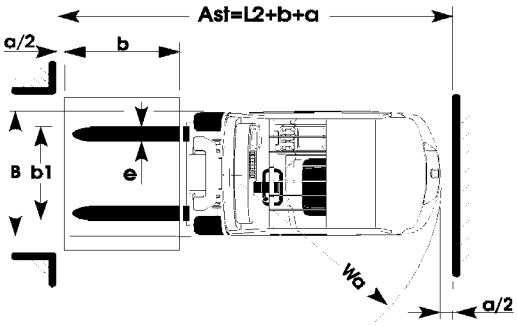

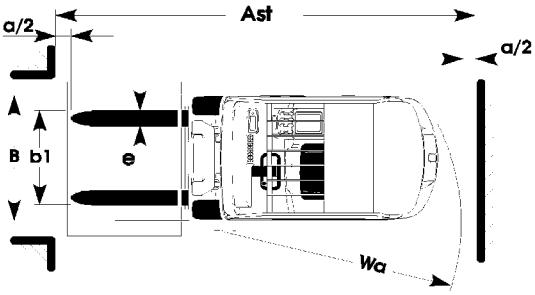

CAPACITY DIAGRAM
(with SE tyres)

3 whells

1,2

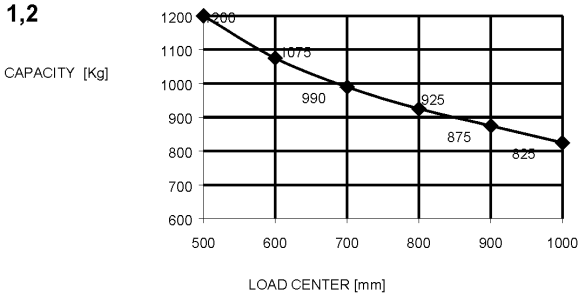

1,5

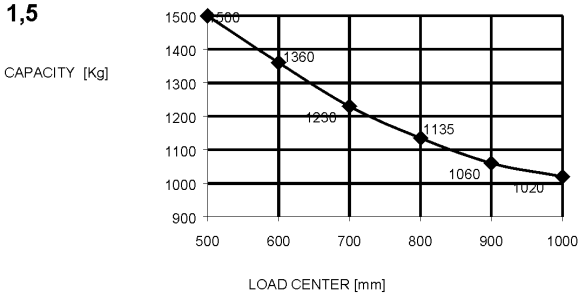

4 whells

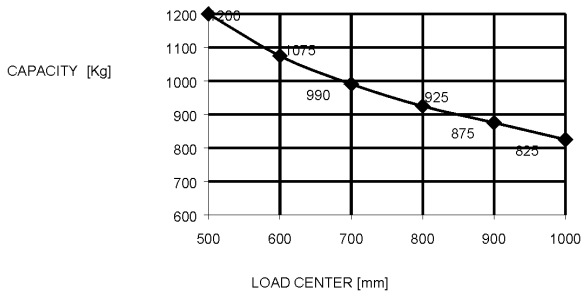

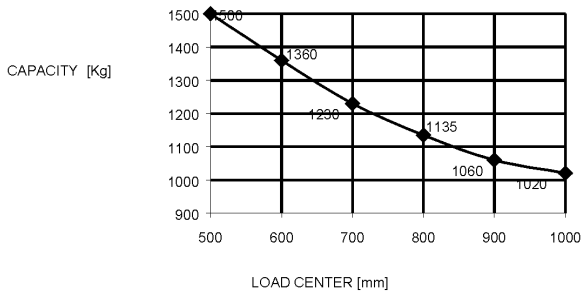

https://truckmanualshub.com/

CAPACITY DIAGRAM
(with SE tyres)

3 whells

1,6

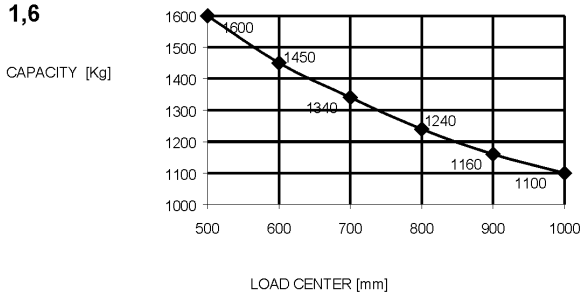

1,8

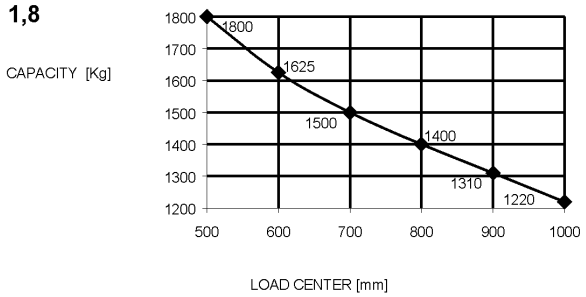

1,6L

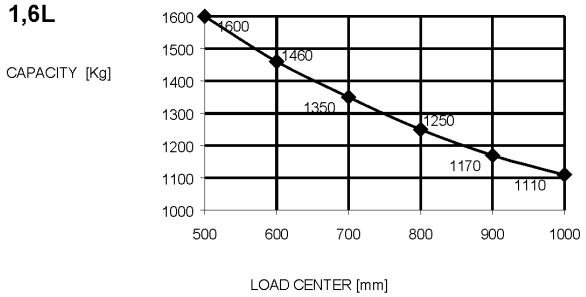

1,8L

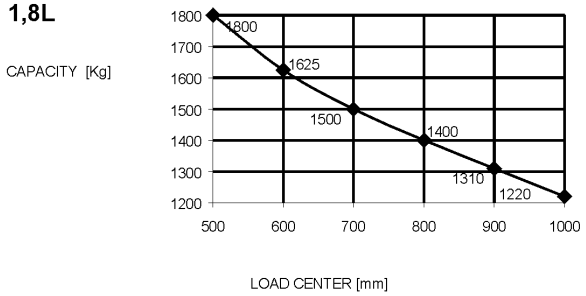

2,0

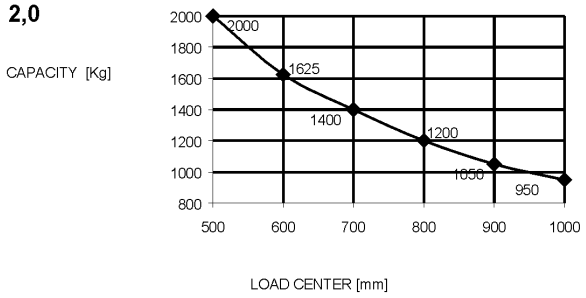

4 whells

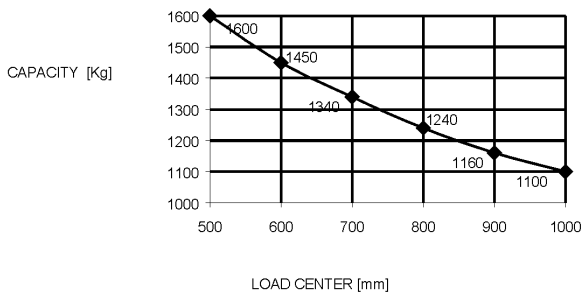

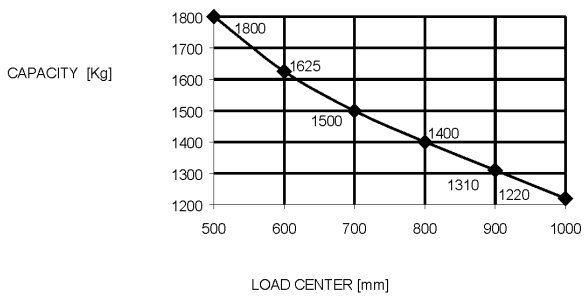

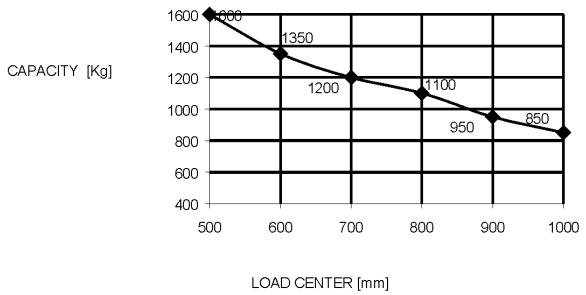

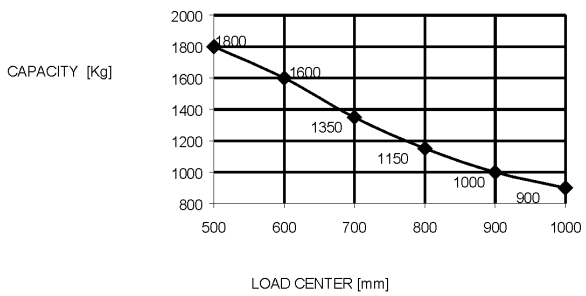

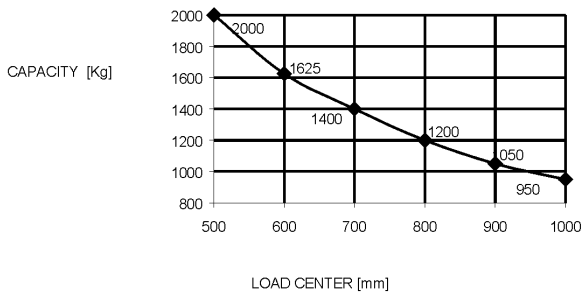

https://truckmanualshub.com/

PAGINA INTENZIONALMENTE BIANCA

INTENTIONALLY LEFT BLANK

PAGE INTENTIONNELLEMENT BLANCHE

ABSICHTLICH FREIGELASSENE SEITE

PÁGINA INTENCIONALMENTE BLANCA

https://truckmanualshub.com/

CHAPTER 0000

CHASSIS

https://truckmanualshub.com/

CHASSIS INDEX

TRUCK'S LAY OUT page 3

PEDALS page 4

DRIVE DIRECTION LEVER ON STEERING COLUMN page 4

STEERING COLUMN PUSH BUTTONS page 5

LOAD HANDLING COMMANDS page 6

DASHBOARD page7

DASHBOARD CONTROLS page 8

PLATES page 9

LIFTING OF THE TRUCK page 10

https://truckmanualshub.com/

TRUCK'S LAY OUT

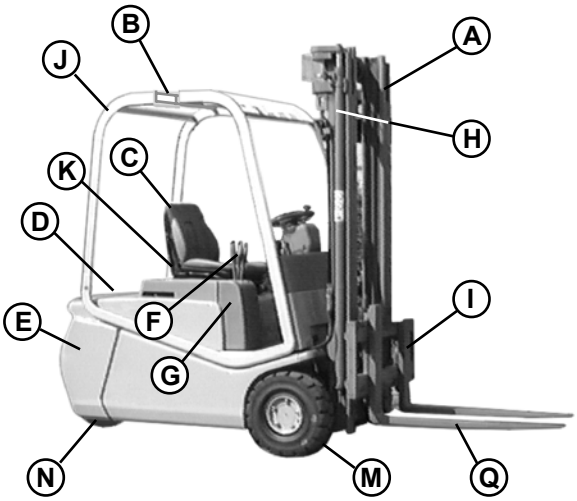

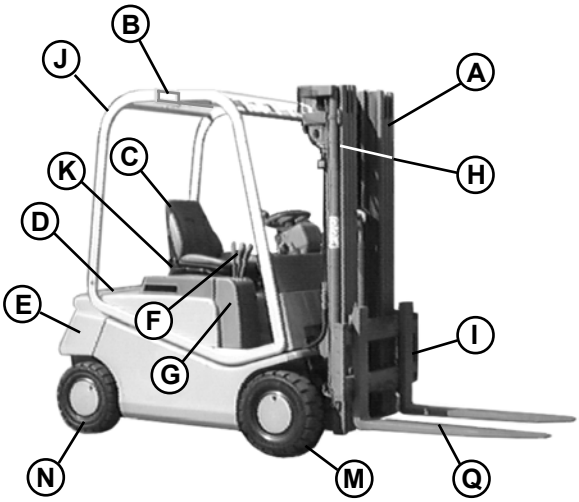

DESCRIPTION OF MAIN PARTS

A) Mast frame
B) Opening for lifting battery
C) Seat
D) Electronic control unit compartment
E) Counterweight
F) Hydraulic valve commands
G) Control valve cover
H) Lifting jack
I) Lifting fork carriage
J) Overhead guard
K) Present man device
M) Driven wheels
N) Steered wheels
Q) Forks

https://truckmanualshub.com/

OPERATOR'S SEAT

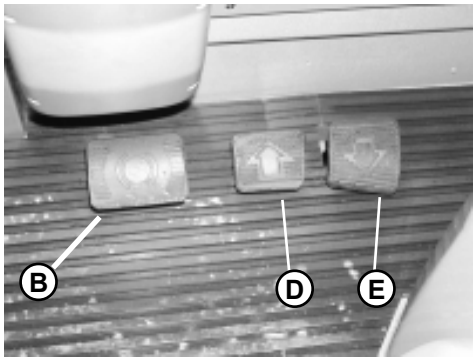

FOOT PEDALS VERSION

FOOT DRIVE DIRECTION (Standard version)

- Forward direction (**D**)
- Backward direction (**E**)
- Service brake pedal (**B**)

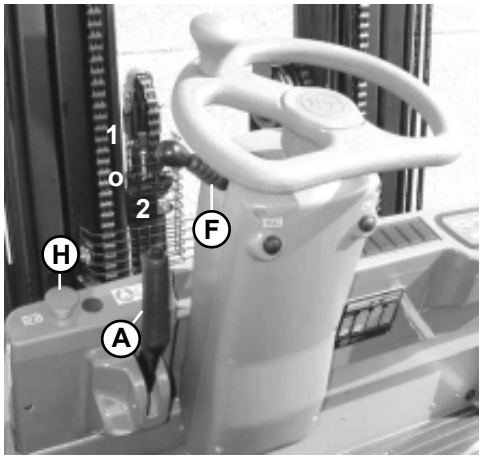

DRIVE DIRECTION LEVER ON STEERING COLUMN (Alternative version)

Direction selector lever (F)

↑ **1** Forward direction
o **0** Neutral
↓ **2** Backward direction

Parking brake lever (**A**)

Emergency push button **(H)**

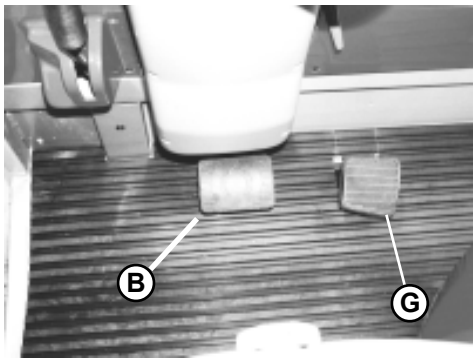

Single drive pedal **(G)**

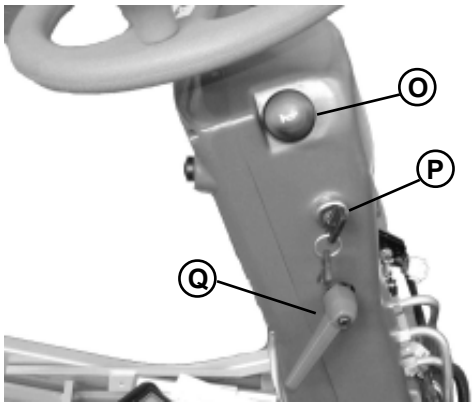

Horn push button **(O)**

Ignition key **(P)**

The steering column position can be adjusted forward or backward. In order to do it, unloose the lever **(Q)** then secure the steering column in the desired position. Do not adjust the steering column while the truck is moving.

https://truckmanualshub.com/

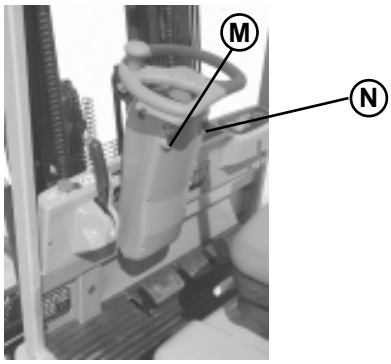

STEERING COLUMN PUSH BUTTONS

It is strongly recommended to avoid operating both push buttons when the truck is running.

Selected setting push button **(M)**:
P (programmable), H (high), L (low)
Speed reduction push button **(N)** (turtle function)

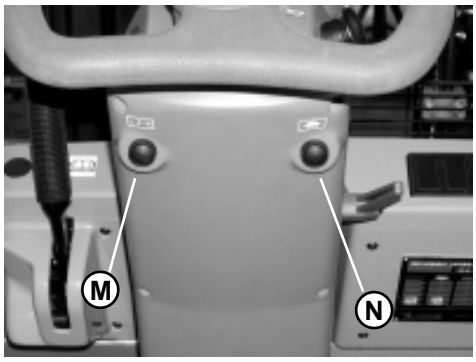

M) Selected setting push button:
at the start up, the truck is setted in the same condition as it was turned off. The available settings are: P (programmable), H (high) or L (low).
Settings can be selected pulling the push button several times.Three leds will show the selected program as indicated at the dashboard description page, item 11.

P: - Maximum drive speed.
- Acceleration and braking action are optimised for low energy consumption.
- Parameter change function enabled.

H: - High drive speed.
- Strong action of the traction parameters.
- Parameter change function disabled.

L: - Low drive speed.
- Soft action of the traction parameters.
- Parameter change function disabled.

N) Speed reduction push putton:
it limits the maximum drive speed of the truck by the set percentage (from 10% up to 90%). See chapter 5000 (Parameter change function, DualAC2 traction unit) paragraph “CUTBACK SPEED”.

https://truckmanualshub.com/

LOAD HANDLING COMMANDS

The truck can be equipped with three types of commands for load handling

CONTROL VALVE VERSION (A)
JOYSTICK VERSION (B)
FINGERTIPS VERSION (C)

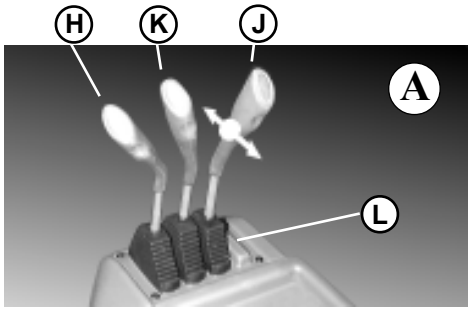

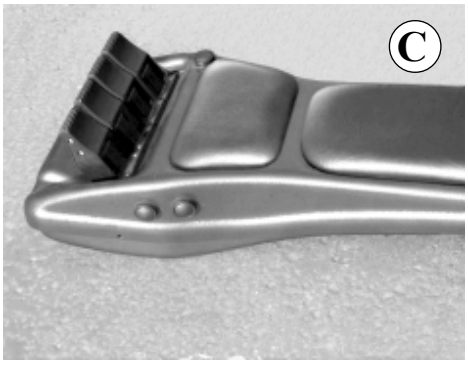

Levers unit

H) Lifting control lever (yellow cap)
K) Tilting control lever (green cap)
J) Sideshift control lever (red cap)
L) Device control lever (optional) (black cap)

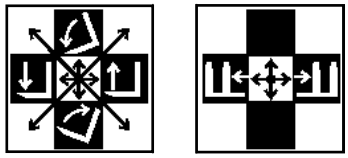

Functions

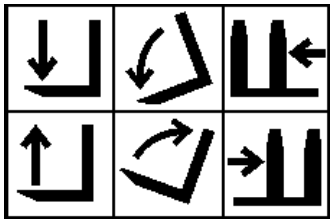

BATTERY COVER

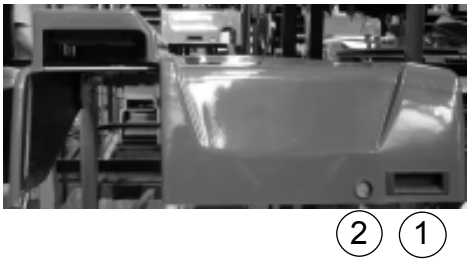

- Handle for a better opening / closing (1)
- Hook with opening button(2)

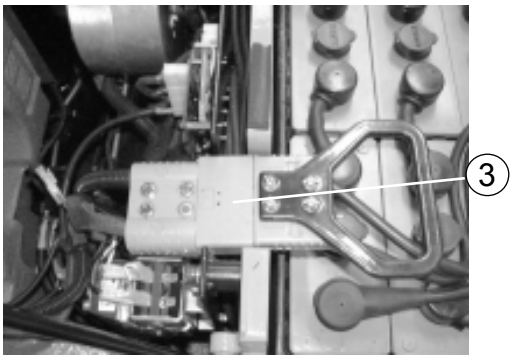

Battery plug fixing position

- Battery Plug (3)

https://truckmanualshub.com/

DASHBOARD

The dashboard consists of a series of instruments and warning lights to check the correct operation of the truck.

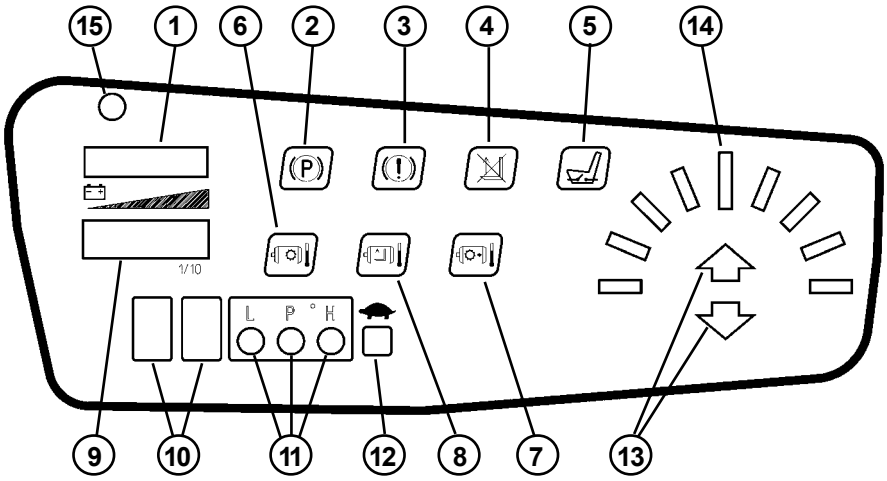

1) Battery charge status indicator.
2) Parking brake ON warning light.
3) Brake fluid low level warning light.
4) Lifting speed reduction due to flat battery.
5) "Present man device" warning light.
6) Drive left motor temperature warning light.
7) Drive right motor temperature warning light.
8) Lifting motor temperature warning light.
9) Electronic hour meter.
10) Diagnostic code alphanumeric display.
11) Selected setting display.
12) Speed reduction indication light
13) Forward/backward indication lights
14) Steering indication display
15) Light sensor

https://truckmanualshub.com/

DASHBOARD CONTROLS

1

2

3

4

5

6

7

8

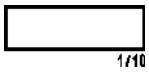

9

10

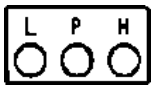

11

12

13

14

15

1) **Battery charge status indicator:**
This bar consists of 3 green LEDS on the right side, 4 orange LEDS in the middle and 3 red LEDS on the left side; when the battery is charged the first green LED on the right is On; while the battery discharges, the LEDS turn On or Off, one per time, from the right to the left according with the battery charging status. When the battery is 80% discharged, the first red LED on the left is On, the display (**10**) shows the alarm code **1C** so the battery must be recharged (reserve). There is an indication on the dashboard (**4**) and the lifting speed is reduced because there is a current cutback by 50%. The battery charge indicator does not rearm if the battery charging status is between 70% and 100%. It can be adjusted (see at chapter 5000).

2) **Parking brake ON warning light**

3) **Brake fluid low level warning light:**
This warning light comes ON when the level of brake fluid in the tank has reached the minimum level.

4) **Lifting speed reduction due to flat battery**

5) **"Present man device" warning light:**
The pilot light comes ON when the driver leaves the driving seat without switching OFF the truck; under these conditions, the traction and the lifting movement are disabled.

6) **Drive left motor temperature warning light:**
lights up when the temperature is 140°C.

7) **Drive right motor temperature warning light:**
lights up when the temperature is 140°C.

8) **Lifting motor temperature warning light:**
lights up when the temperature is 140°C.

9) **Electronic hour meter:**
It is activated by insertion of the ignition key and it conts the real working time of the truck. It shows the working hours and hours fractions (in tenth). It can be adjusted (see chapter 5000, dashboard map)

10) **Diagnostic code alphanumeric display:**
When a malfunction occurs in the truck, this display identifies the error through a corresponding code (see Alarm function chapter 5000).

11) **Selected setting display:**
Indicates the running setting selected: L (low), P (programmable), H (high):

12) **Speed reduction indication light:**
When the reduction speed is selected the blue light is on.

13) **Forward/backward indication lights.**

14) **Steering indication display.**

15) **Light sensor:**
It changes automatically the light intensity of the LEDS in the dashboard according to the light of the environment.

https://truckmanualshub.com/

PLATES

A IDENTIFICATION PLATE
B CAPACITY PLATE

The plates positions, as shown in the picture, are refered to the standard fork lift trucks; those positions can be modified in case of special truck configuration.

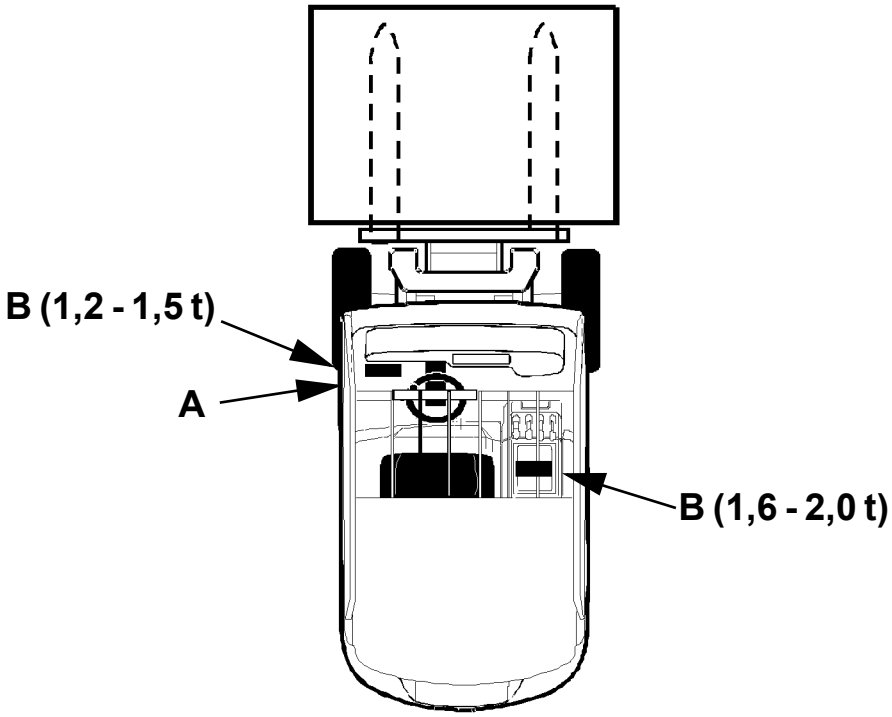

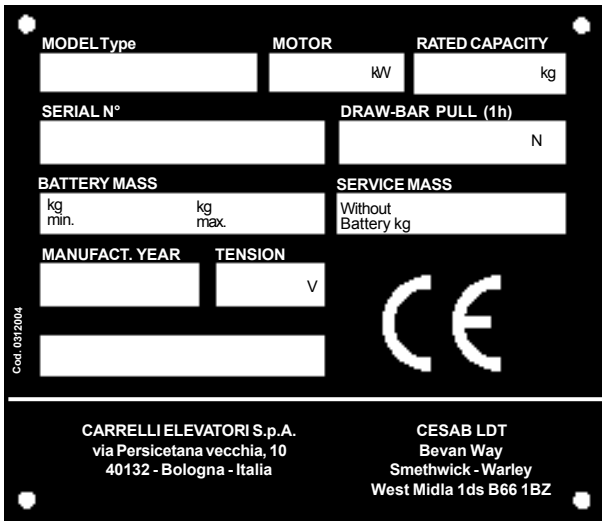

A B

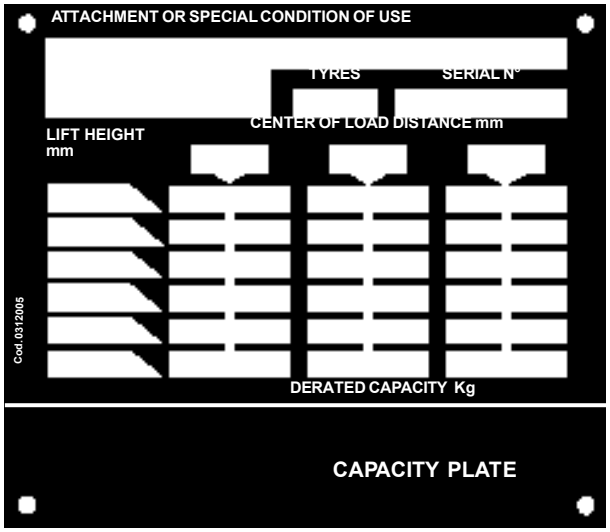

IDENTIFICATION PLATE
It identifies the lift truck technical data

LOAD PLATE
It identifies the load capacity with a load center of 500 mm (except for different indications)

https://truckmanualshub.com/

LIFTING OF THE TRUCK

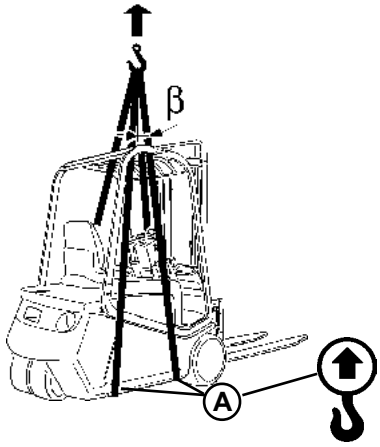

If the truck is equipped with mudguard extensions, the chains can be hooked only after the extensions disassembling.

HOOK ATTACHMENT POINTS FOR LIFTING THE TRUCK
The hooking points are shown on the carriage with the symbol shown on the side (see picture).

LIFTING OF THE FORKLIFT TRUCK WITH OVERHEAD GUARD
The following equipments must be used to lift the forklift truck with overhead guard (standard):

- N° 2 slings (A): in accordance with DIN B2N -UNI 9531, minimum length 9 m and capacity of 2800 kg.

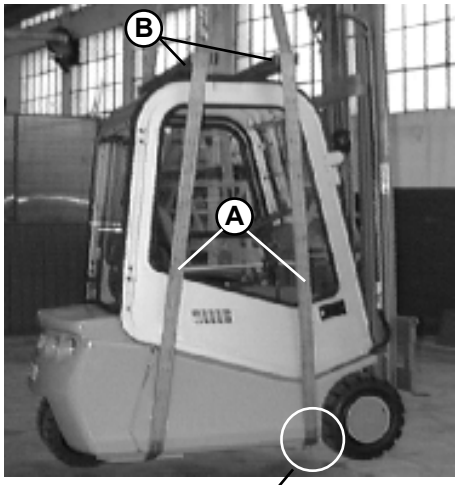

LIFTING OF THE FORKLIFT TRUCK WITH CABIN
The following equipments must be used to lift the forklift truck with cabin:

- N° 2 slings (A): in accordance with DIN B2N -UNI 9531, minimum length 9 m and capacity of 2800 kg.

- N° 2 upper brackets (B) to hold the chains.

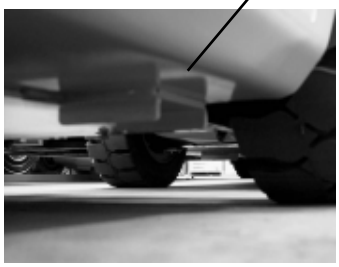

It is important to remember that the chains or slings length must be sufficient to lift the truck in a horizontal position, with the lifting angles (ß) ≤ 45° with respect to the vertical lifting line. Ensure that the chains or slings are protected where it comes into contact with edges, then arrange the chains or slings on the truck so that it remains in a horizontal position during the entire lifting operation.
Make sure that there are no personnel in the vicinity of the truck, before carrying out the lifting operation.
If any maintenance operations need to be performed on the truck in a raised position, the vehicle must be rested on appropriate supports, sufficient to bear the overall weight of the vehicle, keeping the chains or slings taut.

TYPE t.	WHEELS	TRUCK WEIGHT WITH STANDARD BATTERY	WEIGHT ON AXLES WITHOUT LOAD (FRONT / REAR)
1.2	3	2960 kg	1675 / 1285 kg
1.5	3	3190 kg	1680 / 1510 kg
1.6	3	3230 kg	1740 / 1490 kg
1.8	3	3375 kg	1770 / 1605 kg
2.0	3	3565 kg	1850 / 1715 kg
1.6L	3	3335 kg	1845 / 1490 kg
1.8L	3	3440 kg	1860 / 1580 kg
1.2	4	2950 kg	1665 / 1285 kg
1.5	4	3140 kg	1670 / 1470 kg
1.6	4	3180 kg	1650 / 1530 kg
1.8	4	3320 kg	1630 / 1690 kg
2.0	4	3520 kg	1820 / 1700 kg
1.6L	4	3300 kg	1820 / 1480 kg
1.8L	4	3380 kg	1830 / 1550 kg

https://truckmanualshub.com/

CHAPTER 1000

MOTORS/ ENGINES

https://truckmanualshub.com/

MOTORS / ENGINES INDEX

ELECTRICAL MOTORS CHARACTERISTICS page 3

ELECTRICAL MOTORS ARRANGEMENT page 5

https://truckmanualshub.com/

ELECTRICAL MOTORS CHARACTERISTICS

TRACTION MOTORS

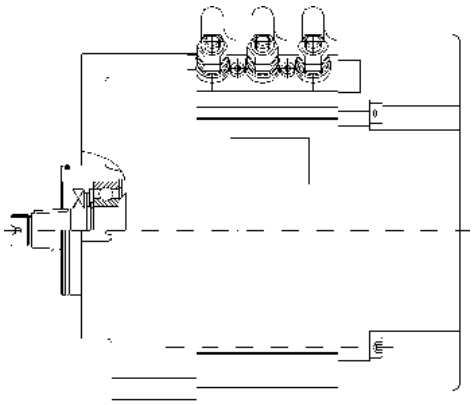

MANUFACTURER	SAUER DANFOSS (SCHABMÜLLER)
POWER	4,5 KW f=80 Hz
POLES NUMBER	4
FREQUENCY	80 Hz
NOMINAL VOLTAGE	27 V (AC)
POWER FACTOR (cos ϕ)	0,915
SERVICE	S2 60’
INSULATION CLASS	F
R.P.M.	2295 rpm

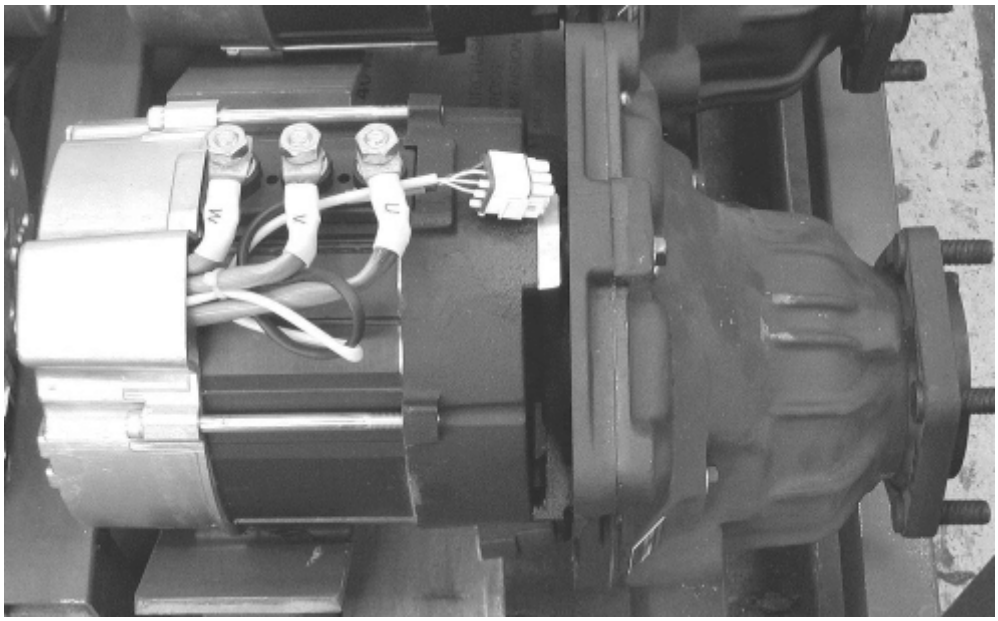

https://truckmanualshub.com/

LIFTING MOTOR

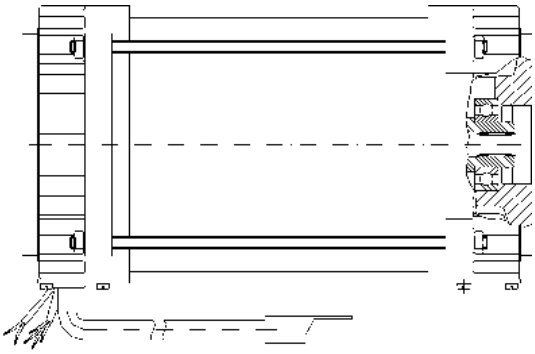

MANUFACTURER	SAUER DANFOSS (SCHABMÜLLER)
POWER	10 KW
POLES NUMBER	4
FREQUENCY	80 Hz
NOMINAL VOLTAGE	28 V (AC)
POWER FACTOR (cos ϕ)	0,83
SERVICE	S3 = 26%
INSULATION CLASS	F
R.P.M.	2314 rpm
PUMP CAPACITY	11 l/m’

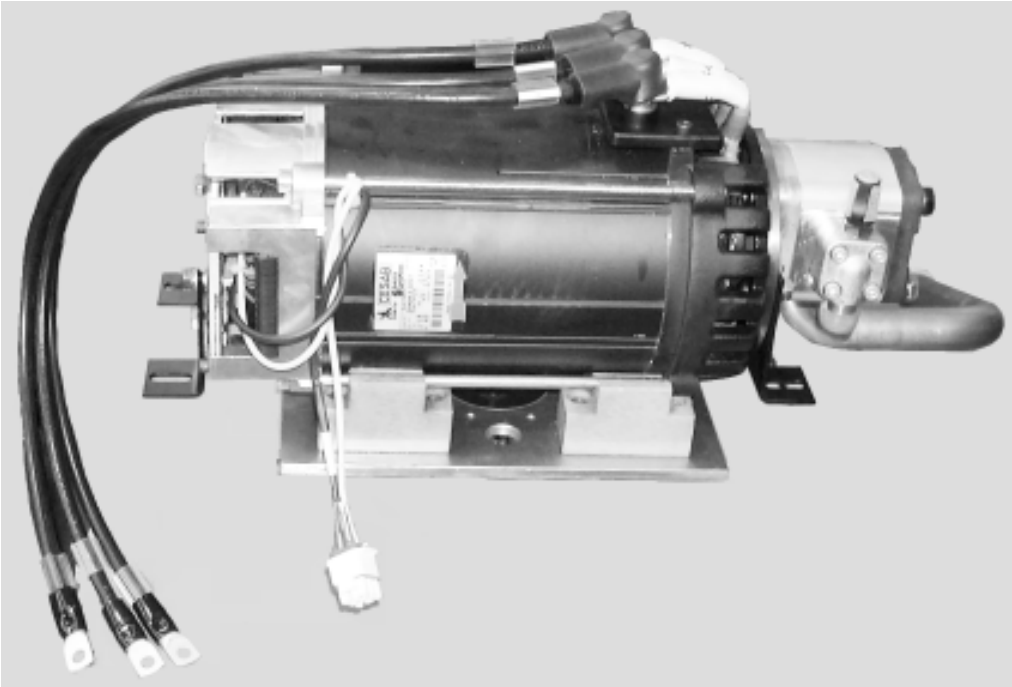

https://truckmanualshub.com/

ELECTRICAL MOTORS ARRANGEMENT

TRACTION MOTORS

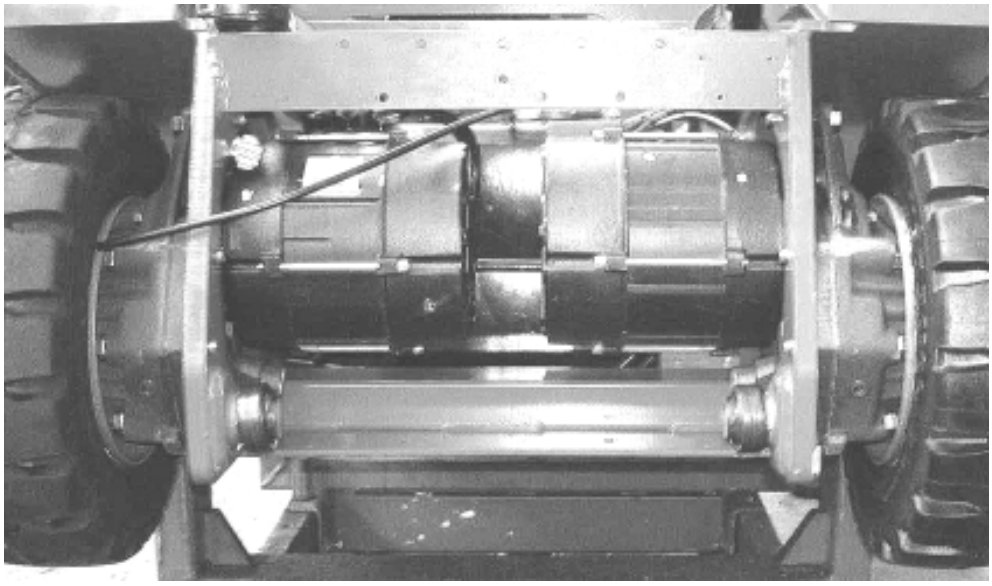

LIFTING MOTOR

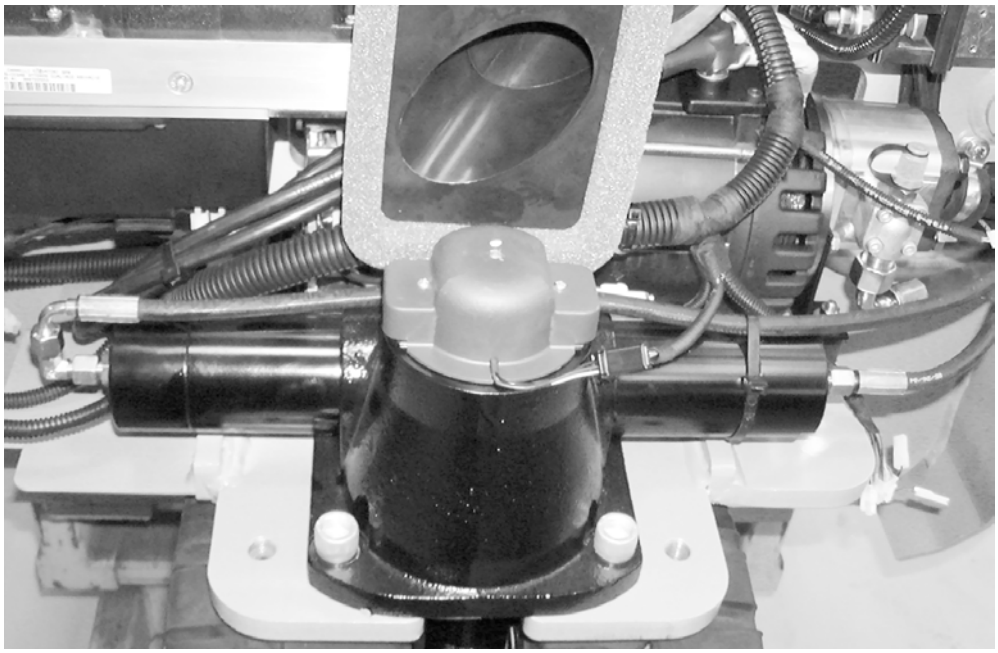

https://truckmanualshub.com/

PAGINA INTENZIONALMENTE BIANCA

INTENTIONALLY LEFT BLANK

PAGE INTENTIONNELLEMENT BLANCHE

ABSICHTLICH FREIGELASSENE SEITE

PÁGINA INTENCIONALMENTE BLANCA

https://truckmanualshub.com/

CHAPTER 2000

TRANSMISSION / DRIVE GEAR

https://truckmanualshub.com/

TRANSMISSION / DRIVE GEAR INDEX

REDUCTION GEAR VIEW page 3

REDUCTION GEAR MAINTENANCE page 4

REPLACEMENT OF THE REDUCTION GEAR page 5

https://truckmanualshub.com/

REDUCTION GEAR VIEW

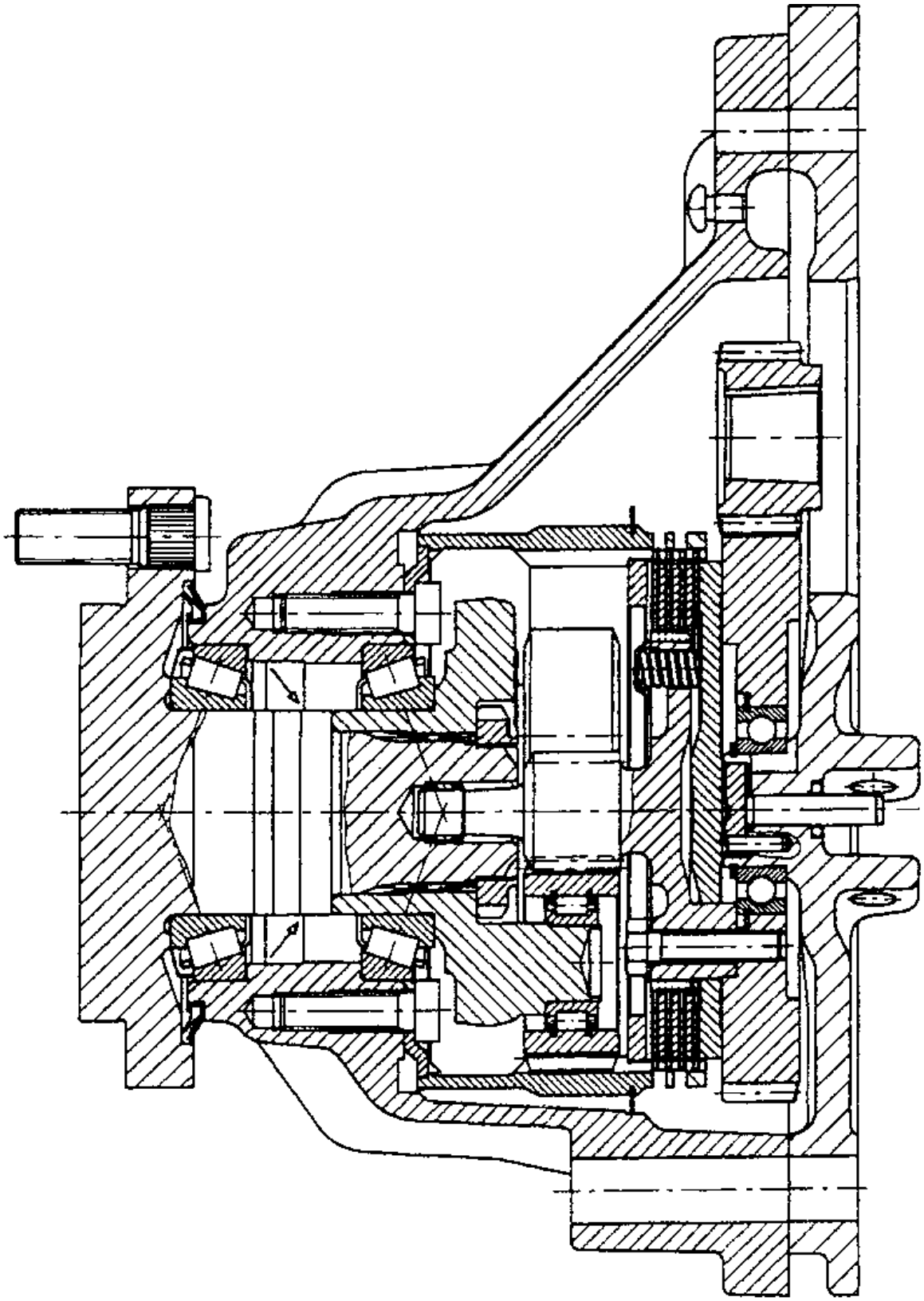

Reduction ratio of the reduction gear: 1 : 18,2

https://truckmanualshub.com/

REDUCTION GEAR MAINTENANCE

DRIVE UNIT
The drive unit, one for each driven wheel, consists of an electric motor and a reduction gear, complete with oil-bathed brake discs inside.
To top up or drain oil remove the magnetic plugs.

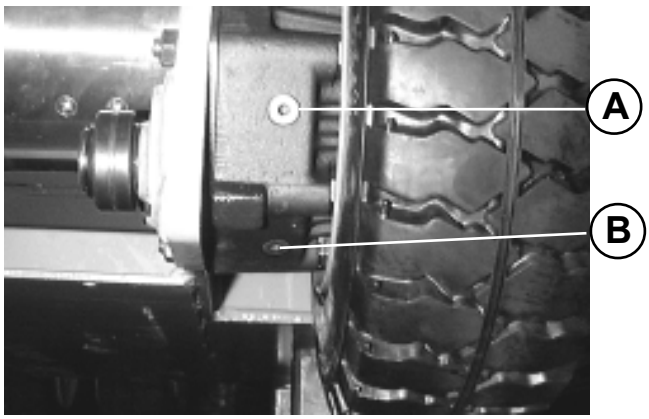

After the first 50-100 hours
- replace the oil.

Every 500 hours
- check the oil level, when cold, with the truck on a flat surface, and if necessary top up. Use transmission oil such as **AGIP-ATF II** D or equivalent. The correct level is obtained when the oil starts to come out from the hole (**A**).
- check that there are no oil leaks.

Every 1000 hours
- check that all the screws on the unit are tight.
- change the oil; in any case, for occasional use change the oil at least every 12 months

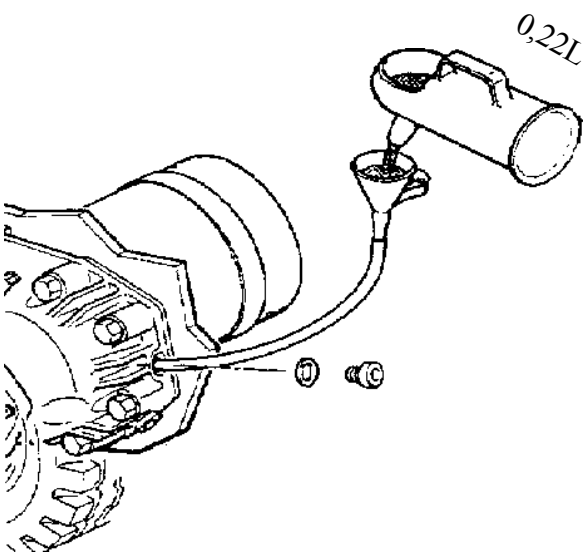

Changing the oil in the reduction gears:
- clean carefully the area around the oil topping up and draining plugs; place a suitable container below the drain plug and then remove both the topping up and the draining plug and allow the oil to drain out completely;
- clean the magnetic plug (**B**) from any ferrous residues and replace it;
- pour fresh oil into the hole (**A**) until it begins to overflow (**approximately 0.22 litre**) then replace the plug;
- when the topping up is complete, remove any trace of overflowing. After a short period of operation, check the oil level again.

To improve the oil flow, it is advisable to empty the reduction gears after running the truck for a few minutes to warm them up.

For a correct operation of the reduction gears do not fill with more oil than necessary.

https://truckmanualshub.com/

REPLACEMENT OF THE REDUCTION GEAR

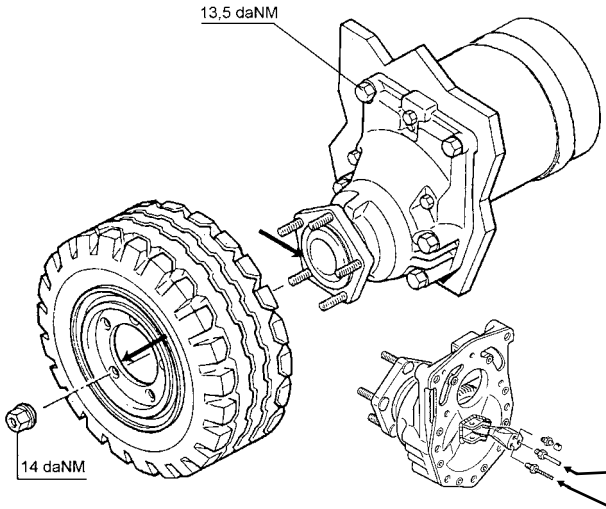

- Lift the truck
- Remove the wheel from the reduction gear.
- Remove the cable for the parking brake and the tube for the oil brake system.
- Put a shim under the electric motor.

Tube for the oil brake system.

Cable for the parking brake.

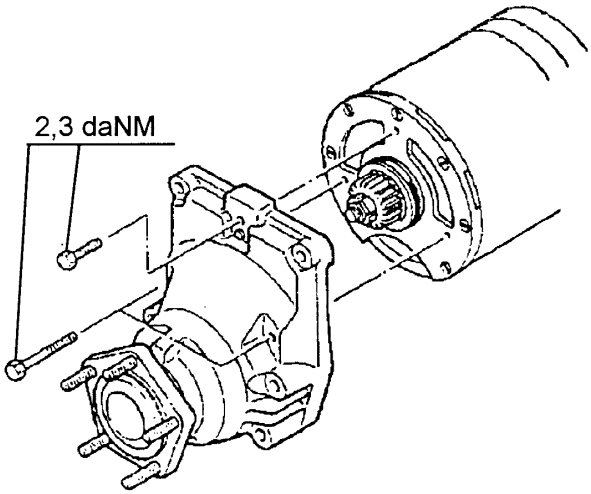

- Remove the screws for fixing the group (gear-motor).

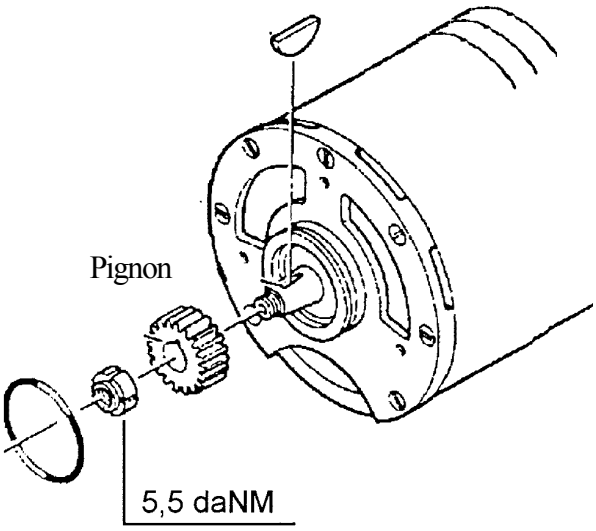

After replacing the reduction gear it is necessary to replace also the pinion.

https://truckmanualshub.com/

PAGINA INTENZIONALMENTE BIANCA

INTENTIONALLY LEFT BLANK

PAGE INTENTIONNELLEMENT BLANCHE

ABSICHTLICH FREIGELASSENE SEITE

PÁGINA INTENCIONALMENTE BLANCA

https://truckmanualshub.com/

CHAPTER 3000

BRAKES / WHEELS

https://truckmanualshub.com/

BRAKES / WHEELS INDEX

SERVICE BRAKES page 3

PARKING BRAKE page 4

BRAKE OPERATING SYSTEM DESCRIPTION page 5

BRAKE DISKS page 6

REPLACEMENT OF THE WHEEL BRAKE CYLINDER page 7

WHEELS / TYRES page 9

https://truckmanualshub.com/

BRAKE SYSTEM

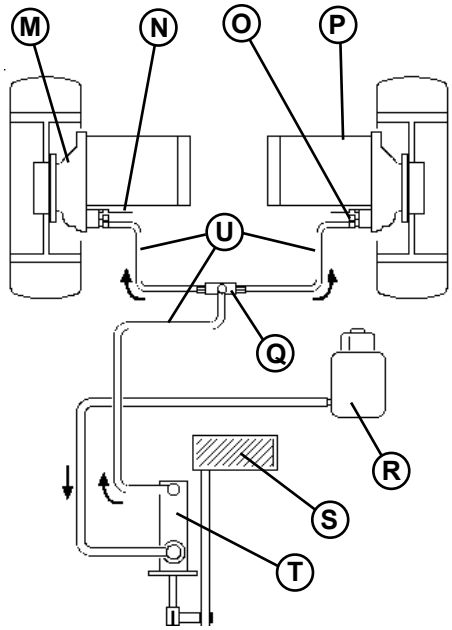

SERVICE BRAKE

Oil-bath brakes are inside the reduction gear box and use the same oil.

SERVICE BRAKE SYSTEM DIAGRAM

M) Reduction gears and braking unit
N) Parking brake command
O) Bleeding screw
P) Electric drive motor
Q) Distribution block
R) Tank
S) Service brake pedal
T) Command pump
U) Brake pipes

BRAKE PEDAL

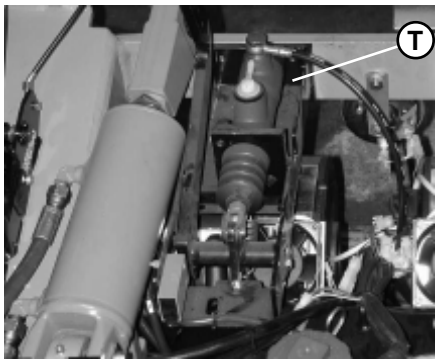

BRAKE PIPES

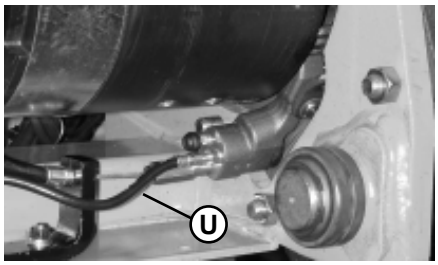

BRAKE OIL TANK

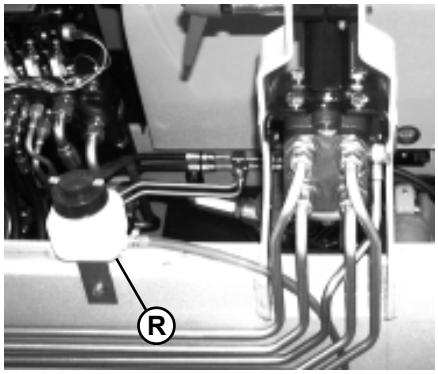

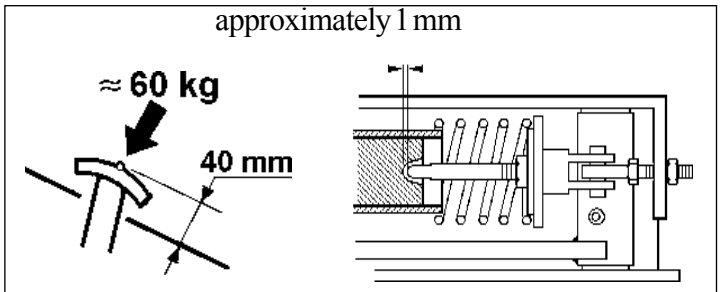

Clearance of the brake pedal in neutral position

SERVICE BRAKE CONTROL

Every 1000 hours
- check that the braking system liquid level in the tank has not dropped; if it has, check the system.
- control functioning of the service brake pedal and the parking brake pedal or lever , they must be smooth and with no jamming;

Every 2000 hours
- change the braking system liquid.

Every 5000 hours
- replace brake hoses.

The brake system uses the
AGIP BRAKE FLUID DOT 4
This is used only in the brake system and not in the reduction gear.
The brake oil tank is located in the front side of the machine below the dashboard. After pressing the brake pedal the oil pressure moves the brake cylinder, which, acting on the brakes, creates the brake effect.

Warning light (3) on the dashboard
When the liquid in the brake tank is too low, the warning light comes ON. If the warning light (3) comes ON, check that there are no leaks in the system.

https://truckmanualshub.com/

PARKING BRAKE

The hand parking brake operates by means of the same disks as the service brake.
J) Release system
K) Parking brake lever
V) Microswitch
W) Brake block anchor
X) Parking brake lever adjusting screw

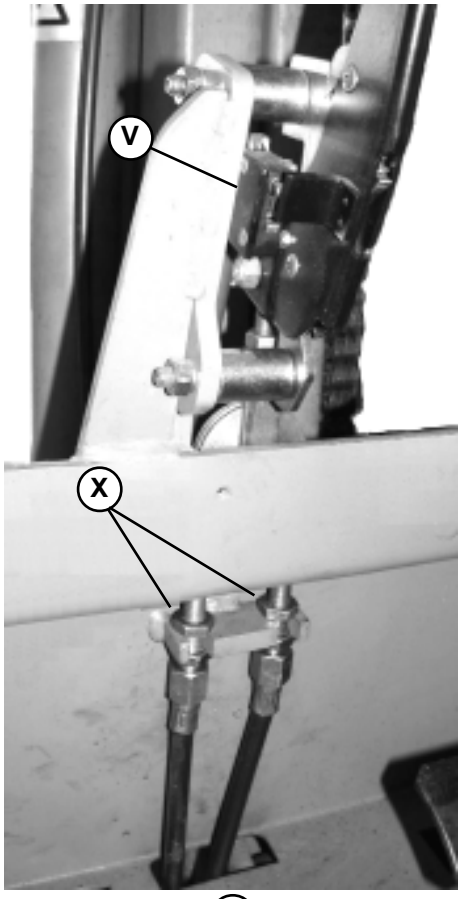

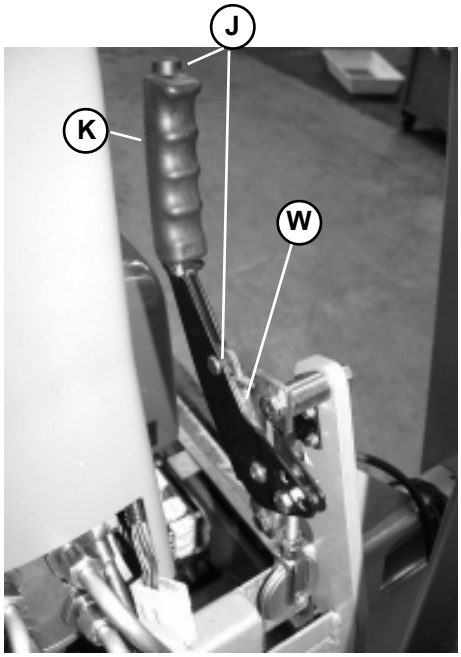

PARKING BRAKE CONTROL AND ADJUSTMENT

Every 1000 hours
- check the parking brake travel which should correspond to 3 notches. If necessary, adjust the appropriate screws (**X**);
- check the condition of the stay bolt cables and the anchors.

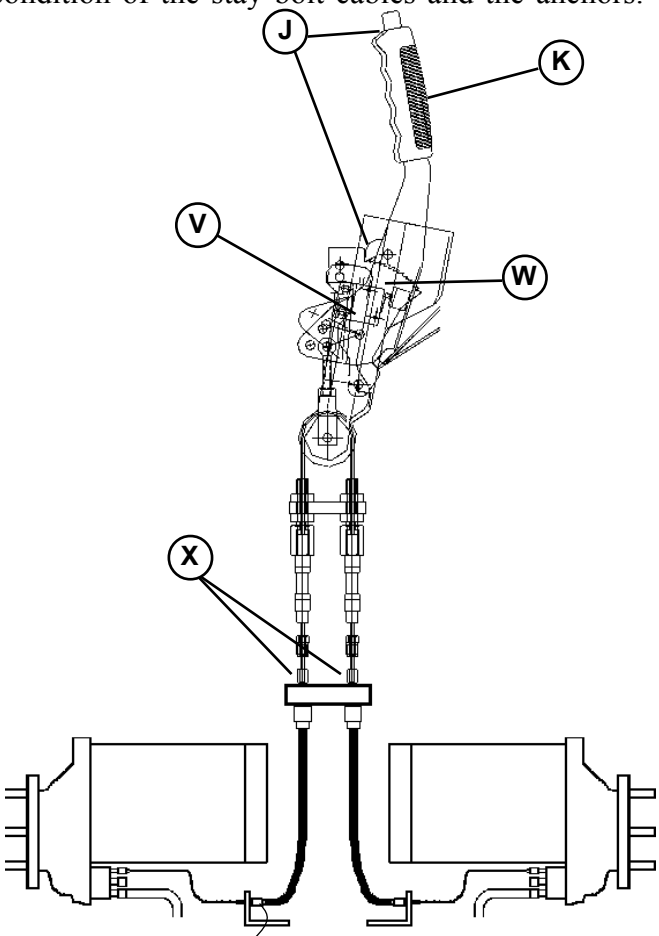

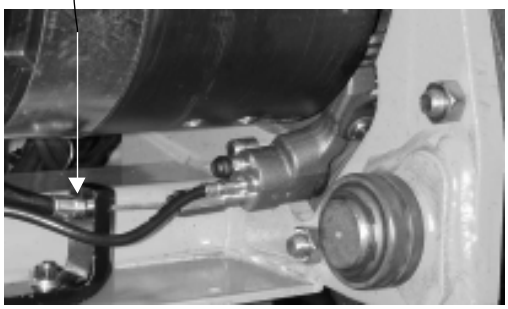

https://truckmanualshub.com/

BRAKE OPERATING SYSTEM DESCRIPTION

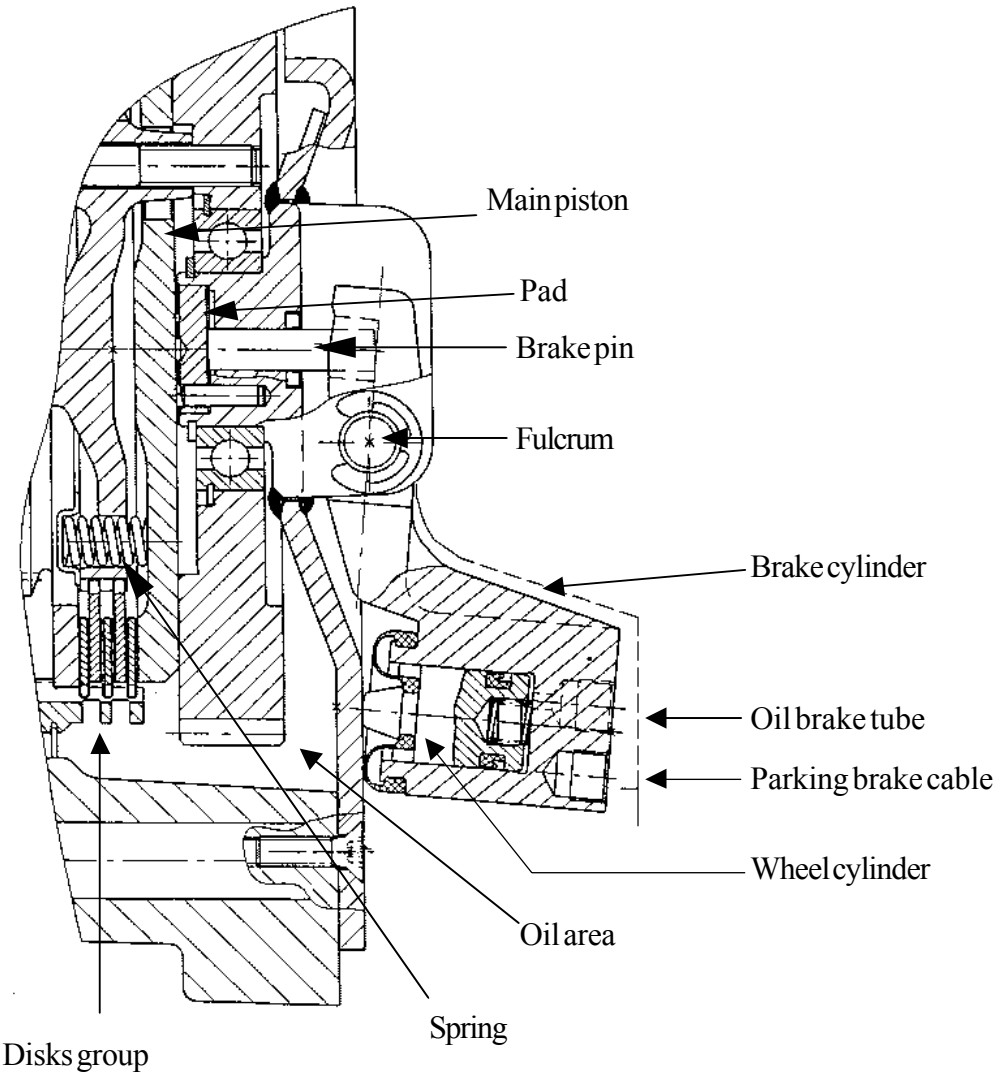

The brake effect is activated when the brake cylinder of the reduction gear is moving. It moves when the parking brake pedal or the brake pedal is pressed.

When the brake pedal is pressed the oil moves the wheel cylinder which, by pressing against the side surface of the reduction gear, moves the wheel brake cylinder. This turns around the fulcrum and presses against the brake pin that pushes the pad. The pad pushes the main piston that closes the brake disks, obtaining the braking effect.
When the brake pedal is released the springs push the main piston in the neutral position, freeing the disks.

The same movement around the fulcrum is obtained by pulling the parking brake lever that moves the brake cylinder mechanically.

https://truckmanualshub.com/

BRAKE DISKS

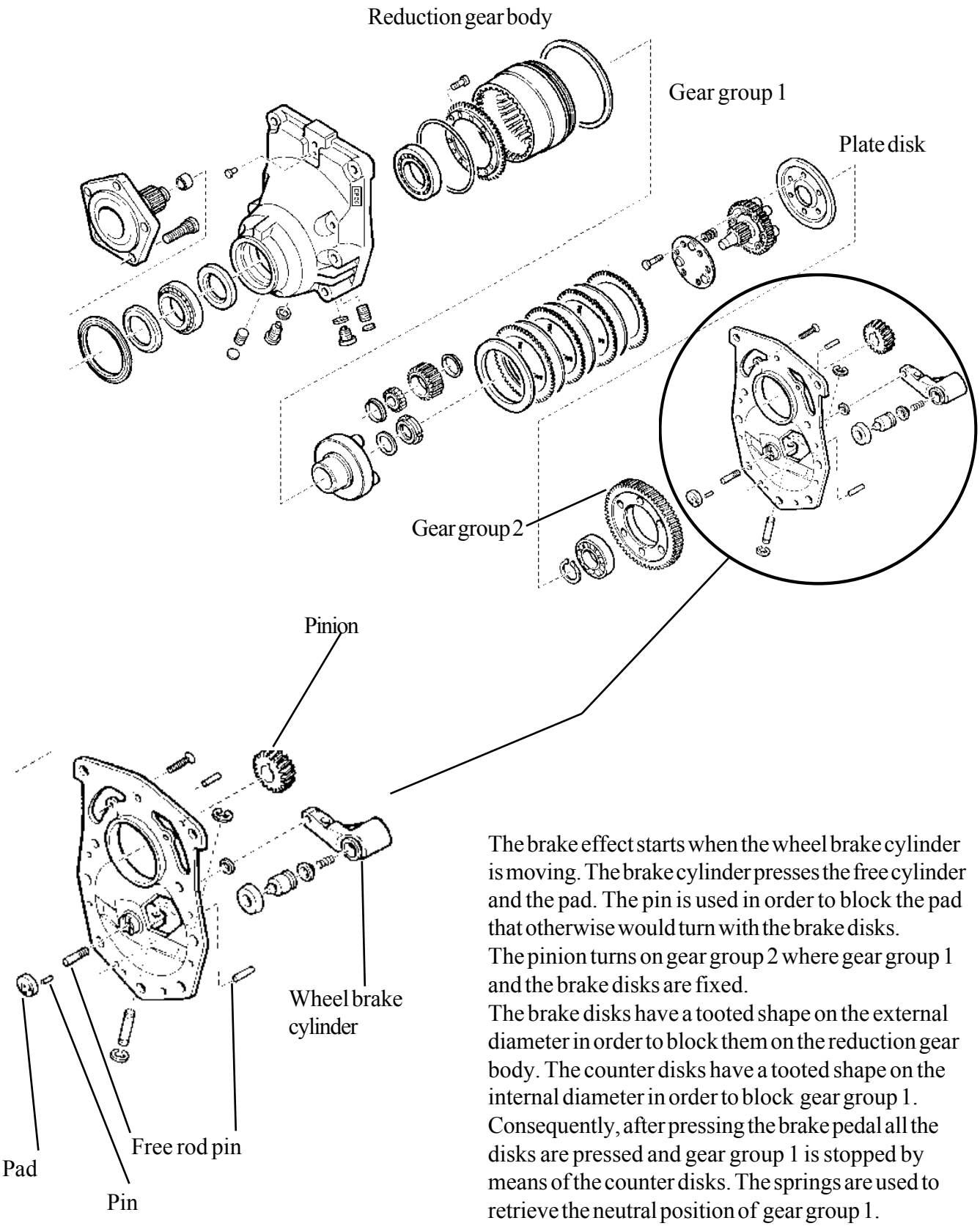

The brake effect starts when the wheel brake cylinder is moving. The brake cylinder presses the free cylinder and the pad. The pin is used in order to block the pad that otherwise would turn with the brake disks.
The pinion turns on gear group 2 where gear group 1 and the brake disks are fixed.
The brake disks have a tooted shape on the external diameter in order to block them on the reduction gear body. The counter disks have a tooted shape on the internal diameter in order to block gear group 1.
Consequently, after pressing the brake pedal all the disks are pressed and gear group 1 is stopped by means of the counter disks. The springs are used to retrieve the neutral position of gear group 1.

https://truckmanualshub.com/

REPLACEMENT OF THE WHEEL BRAKE CYLINDER

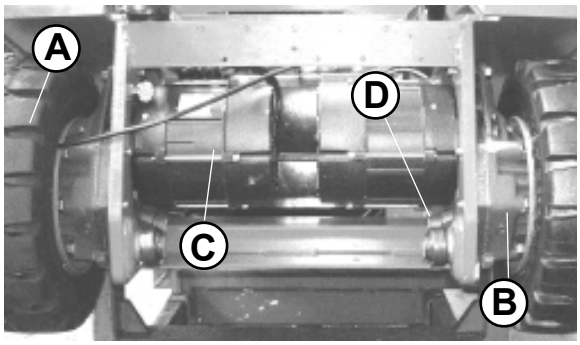

A: Wheel

B: Reduction gear

C: Electric motor

D: Wheel brake cylinder

E: Metal parking brake cable

F: Oil brake hose

G: Threaded bar M8

H: Threaded bar M14 (see next page)

In order to replace the wheel brake cylinder **D** it is possible to proceed in two different ways:

1st WAY

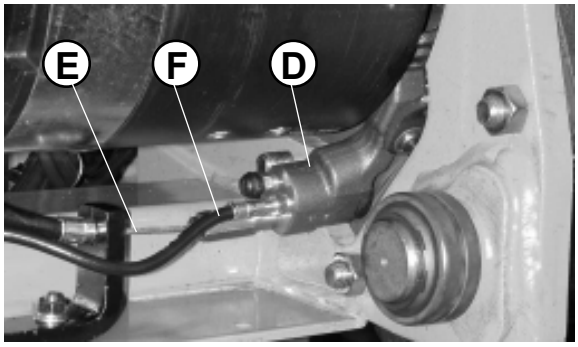

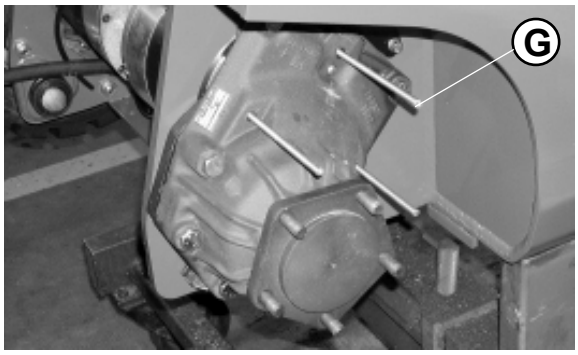

1) Lift the truck

2) Remove cable **E** and hose **F**

3) Remove wheel **A**

4) Replace the three screws used for fixing the reduction gear to the electric motor with three threaded bar M8 or three longer screws (G).

5) Move the electric motor **C** in order to create enough space between the two components (reduction gear and electric motor).

6) Replace the wheel brake cylinder by dismounting the clip of the pin.

7) Reassemble the parts.

Be careful not to damage the pinion during the coupling of the motor with the reduction gear.

https://truckmanualshub.com/

2nd WAY

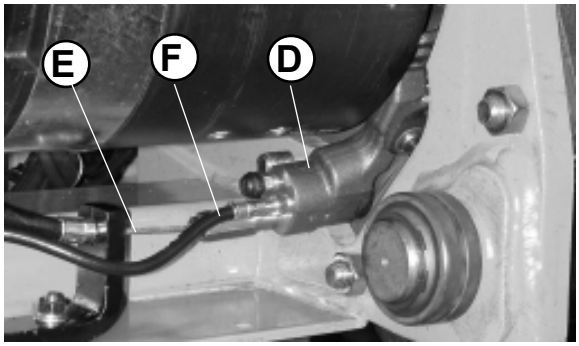

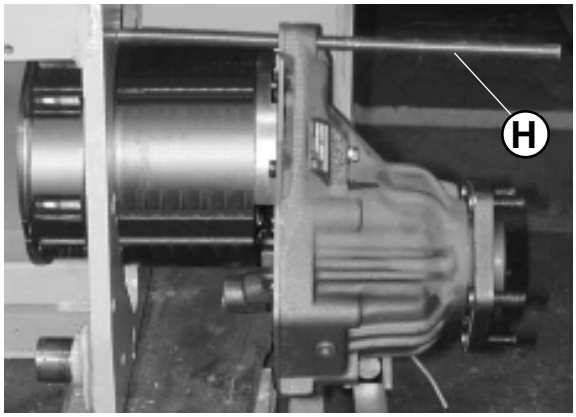

1) Lift the truck

2) Remove cable **E** and hose **F**

3) Remove wheel **A** (see previous page)

4) Remove the screws that fixed the gear box to the frame

5) Fix bar **G** (of 40 cm) into the upmost hole in the frame using it as a guide to keep the reduction gear (5-10 cm) off the frame, therefore having enough space to change the brake cylinder.

6) Repeat the procedure backwards to fit the components again.

https://truckmanualshub.com/

STANDARD TYRES

SAFETY OF RIMS AND WHEELS FOR FORKLIFT TRUCKS

"PNEUMATIC" tyres must be replaced when the tread is less than 1.6 mm. "SUPERELASTIC" tyres must be replaced when the tread reaches the "60J" indication printed on the side.
The replacement of "CUSHION" tyres is recommended when they reach a thickness of 20 or 30 mm.

C
CUSHION →

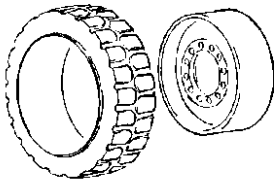

SE
SUPERELASTICHE →

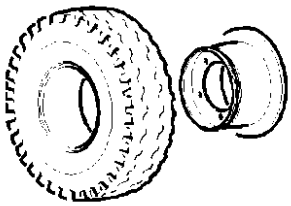

PN
PNEUMATICHE →

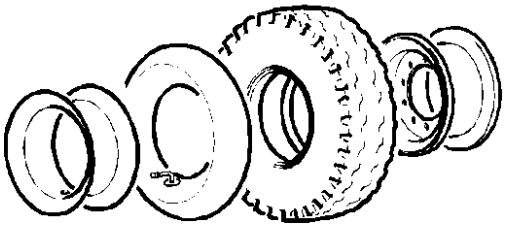

STANDARD TYRES

Type	Size	Air Pressure	Truck
(C)			
FRONT	432x152		1,2-1,6L t
FRONT	457x178		1,8-2,0 t
REAR	381x127		ALL
(SE)			
FRONT	18x7-8		1,2-1,6L t
FRONT	200/50-15		1,8-2,0 t
REAR	16x6-8		ALL
(PN)			
FRONT	18x7-8	10 bar	ALL

TIGHTENING TORQUES

		WHEEL TORQUE
14	**daNm**	steering wheels
14	**daNm**	driving wheels
		DRIVE UNIT TORQUE
2,3	**daNm**	electric motor securing
13,5	**daNm**	unit securing to frame
5	**daNm**	service brake delivery pipes screw
5	**daNm**	parking brake cable fixing screw
2,2	**daNm**	oil filling and draining cap
		VARIOUS TORQUES
4,9	**daNm**	mast-securing U-bolts
0,8÷1,2	**daNm**	jack collar self-locking nuts
20	**daNm**	counterweight locking screws

https://truckmanualshub.com/

PAGINA INTENZIONALMENTE BIANCA

INTENTIONALLY LEFT BLANK

PAGE INTENTIONNELLEMENT BLANCHE

ABSICHTLICH FREIGELASSENE SEITE

PÁGINA INTENCIONALMENTE BLANCA

https://truckmanualshub.com/

CHAPTER 4000

STEERING SYSTEM

https://truckmanualshub.com/

STEERING SYSTEM INDEX

STEERING CONTROL	page 3
POWER STEERING HYDRAULIC DIAGRAM	page4
POWER STEERING HYDRAULIC LAYOUT	page5
POWER STEERING SETTING	page 6
STEERING AXLE 3 WHEELS	page 8
STEERING AXLE 3 WHEELS	page 9
BEARING ADJUSTMENT	page 10

https://truckmanualshub.com/

STEERING CONTROL

The steering uses the same oil as the lifting by means of a priority valve, which guarantees a sufficient oil flow to the power steering.
The oil capacity is checked by the Ls signal (load - sensing), coming from the steering unit so that the oil quantity sent to the power steering is equal to its real request.
The exceeding oil is sent to the control valve for other functions.
When the steering wheel is turned, proportionally to the above rotation, the steering unit “measures” a volume of oil and sends it into the steering cylinder.

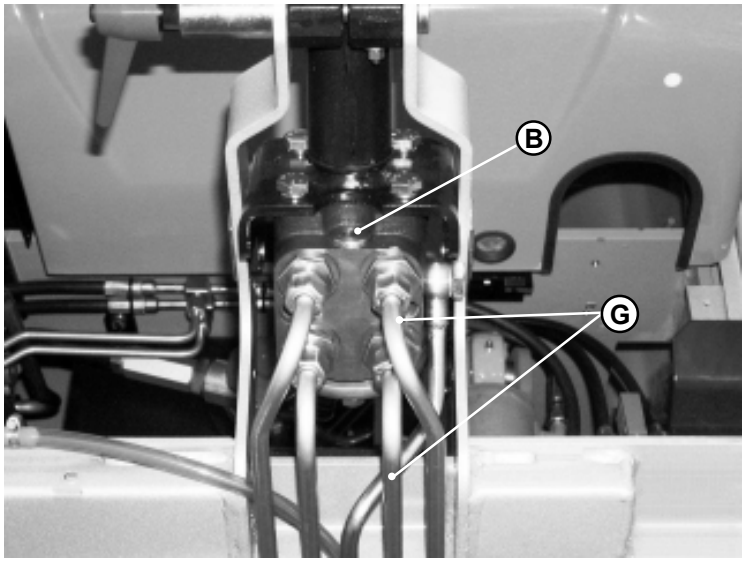

Every 1000 hours
- check the entire system to identify any leak; any intervention must be carried out without pressure in the system.

Every 5000 working hours
- replace hoses **(G)** connecting the orbitrol device to the steering jack.

Every 10000 hours
- replace the hydraulic pipe system.

Power steering pressure setting
The max power steering pressure must be 100 Bar

In order to set the power steering pressure, the following operation are necessary:

1 - Fit a manometer on the pressure access point (**A**) on the punp;

2 - In order reach the adjusting screw (**B**) remove the cap (by means of an Allen wrench) positioned on the upper side of the orbitrol (power steering unit);
- **screw in to increase the pressure**
- **screw out to decrease the pressure**

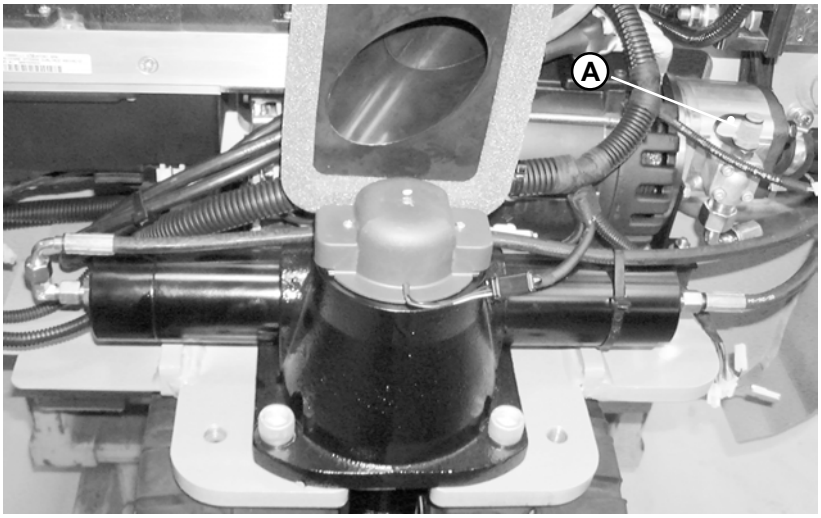

https://truckmanualshub.com/

POWER STEERING HYDRAULIC DIAGRAM

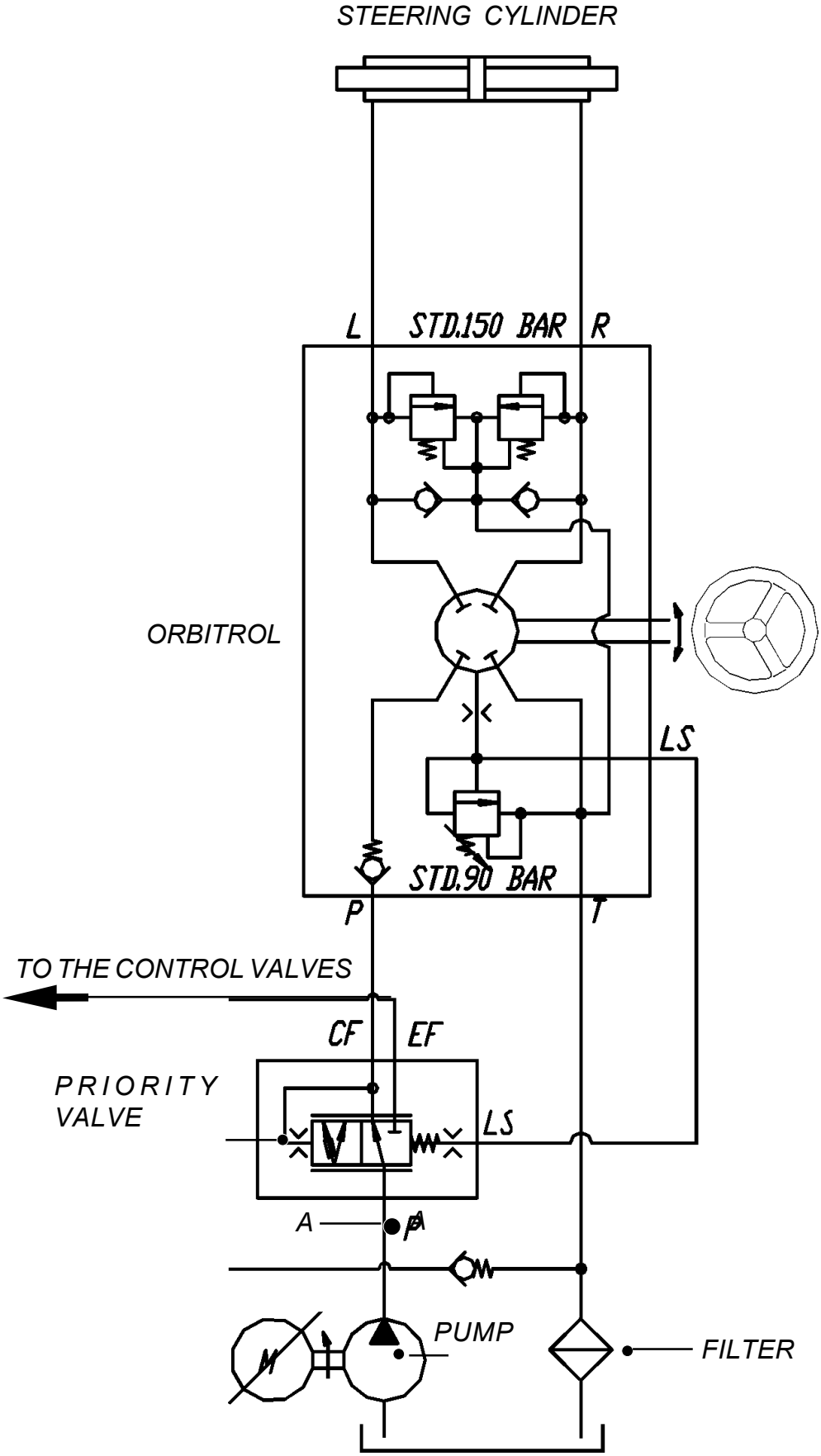

https://truckmanualshub.com/

3 AND 4 WHEELS VERSION

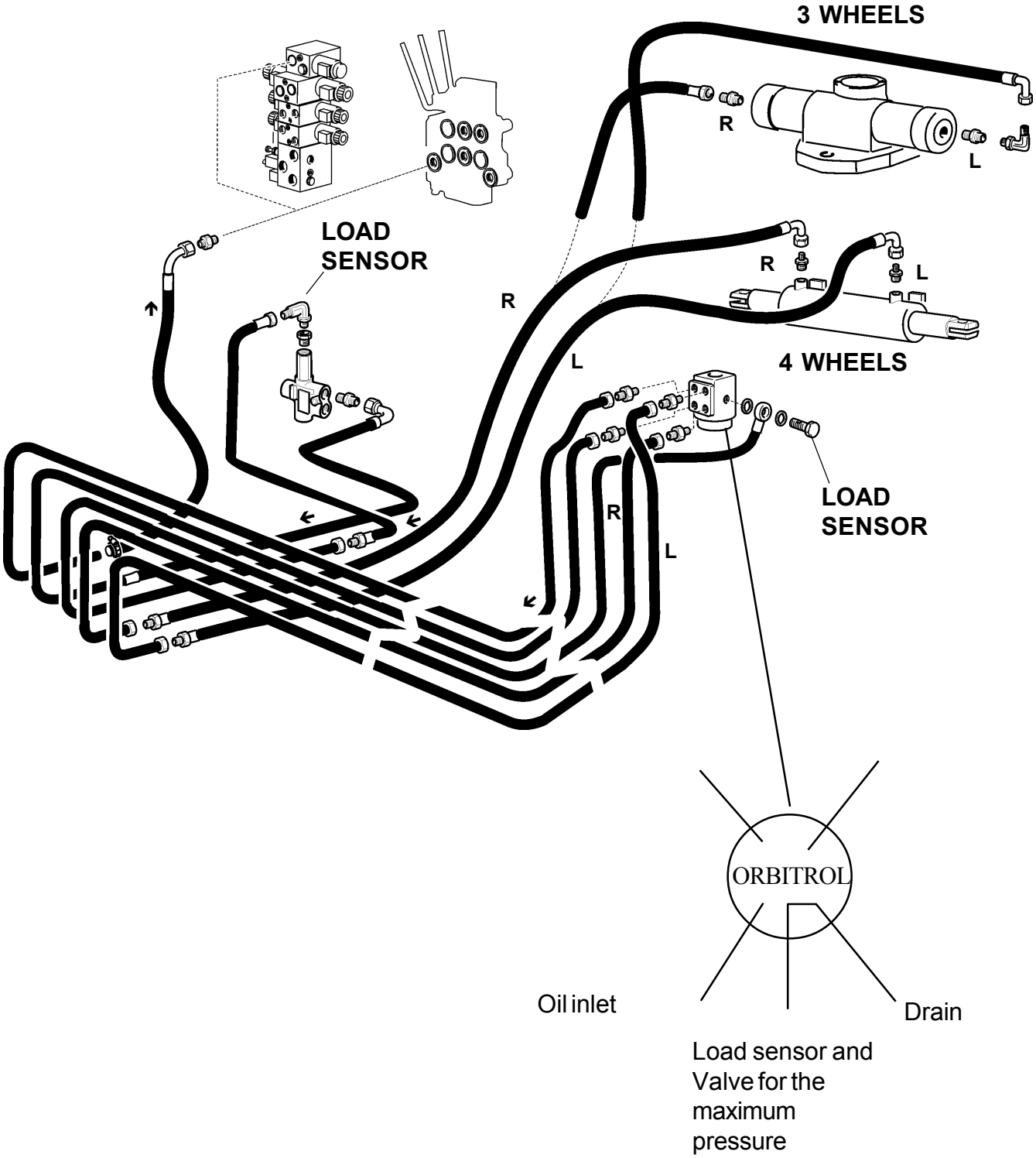

https://truckmanualshub.com/

POWER STEERING SETTING

In order to set the pressure remove the cap and adjust the Allen screw

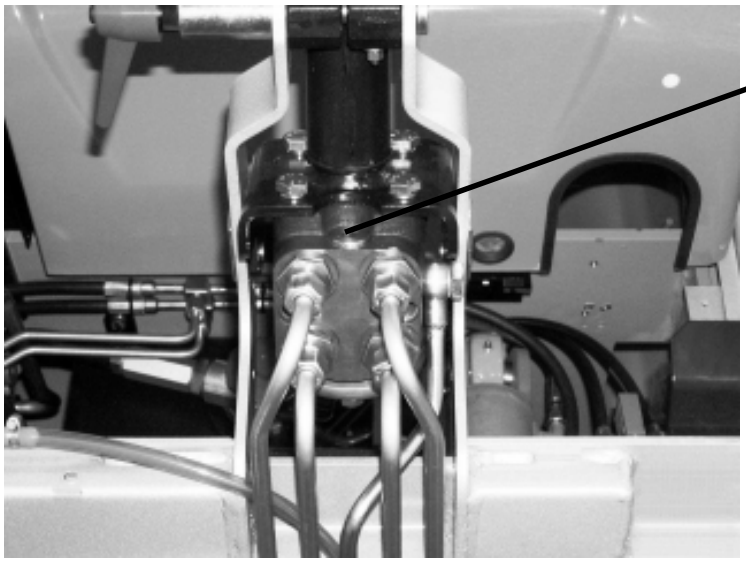

PRESSURE SETTING
90-100 BAR

The same pressure is used for both versions (3 and 4 wheels)

Adjusting:

Screw in = highter pressure

Screw out = lower pressure

https://truckmanualshub.com/

3 WHEELS VERSION

The 3 wheels uses a static system. It means that the oil reaches the load sensor on the priority valve only when the steering is moving.

PRIORITY VALVE

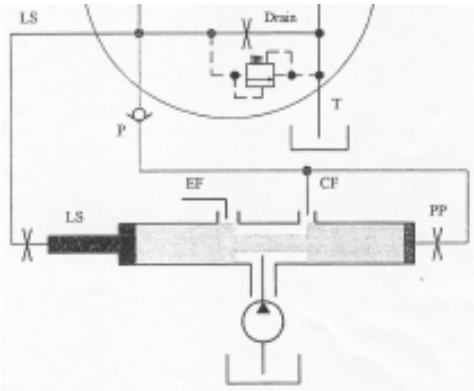

OSPC 50 LS STATIC ORBITROL

4 WHEELS VERSION

The 4 wheels uses a dinamic system. It means that the oil always reaches the load sensor on the priority valve. On the priority valve there is a channel that connect LS to PP in order to guarantee always a flow of oil for a prompt replay of the steering. The increasing of the pressure on the system can create a return pressure on the line LS (that is connected to PP) and a conseguent kickback on the steering. Another no return valve is used on the line LS to avoid this situation.

PRIORITY VALVE

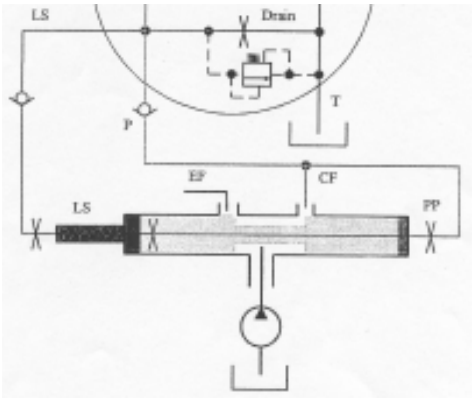

OSPF 80 LS DINAMIC ORBITROL

https://truckmanualshub.com/

3-WHEEL STEERING AXLE

Control of steering unit

The steering unit (**D**) does not require greasing or lubrication.

Every 1000 hours

- check and if necessary adjust the wheel hub bearings.

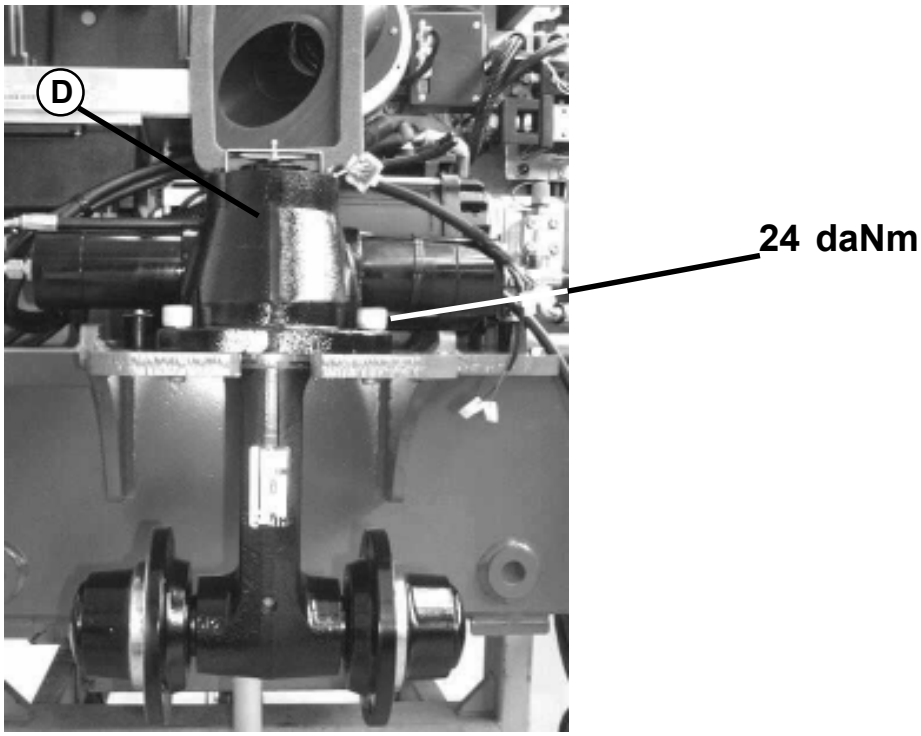

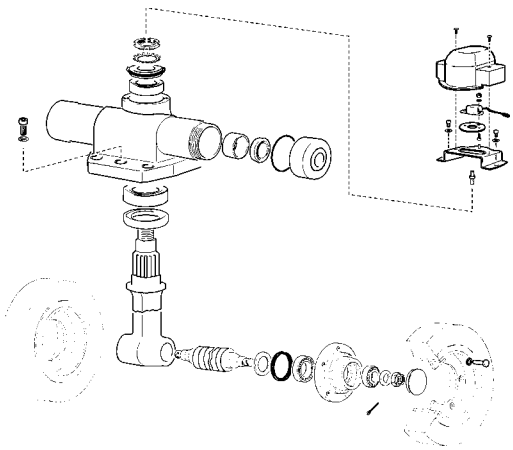

Steering potentiometer fixing

https://truckmanualshub.com/

4-WHEEL STEERING AXLE

Steering axle check
Every 1000 hours

- lubricate the steering gear joints using the appropriate grease nipples (**I**);
- check the steering angles.
- check and if it is necessary, adjust the wheel hub bearings.

Max steering angle (internal wheel B = 80°)
End stroke setting (adjustment):

make the cylinder reach the internal end stroke, then operate on the special screws fixing them on the spindles. Then screw in the adjust screws until you obtain the desired steering angle **B = 80°**

If any abnormal consumption of the wheel tread is observed, the following controls should be performed:

- check the parallelism of the steered wheels;
- check that the steering angle of the wheels is the same in both directions.

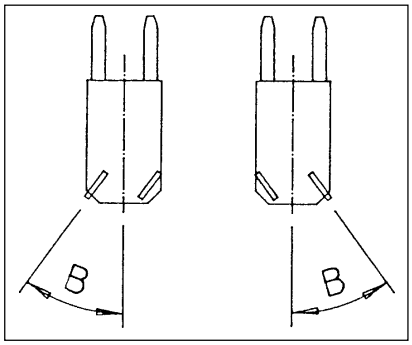

B = 80° Standard
ANGLE MEASURED FROM THE AXLE FRAME TO THE INTERNAL WHEEL THROUGH A SPECIAL DEVICE

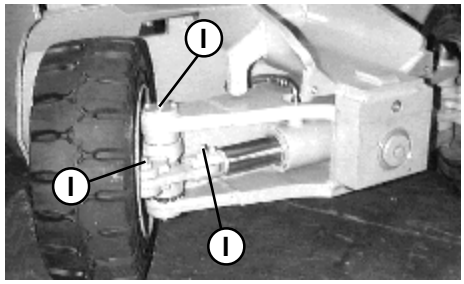

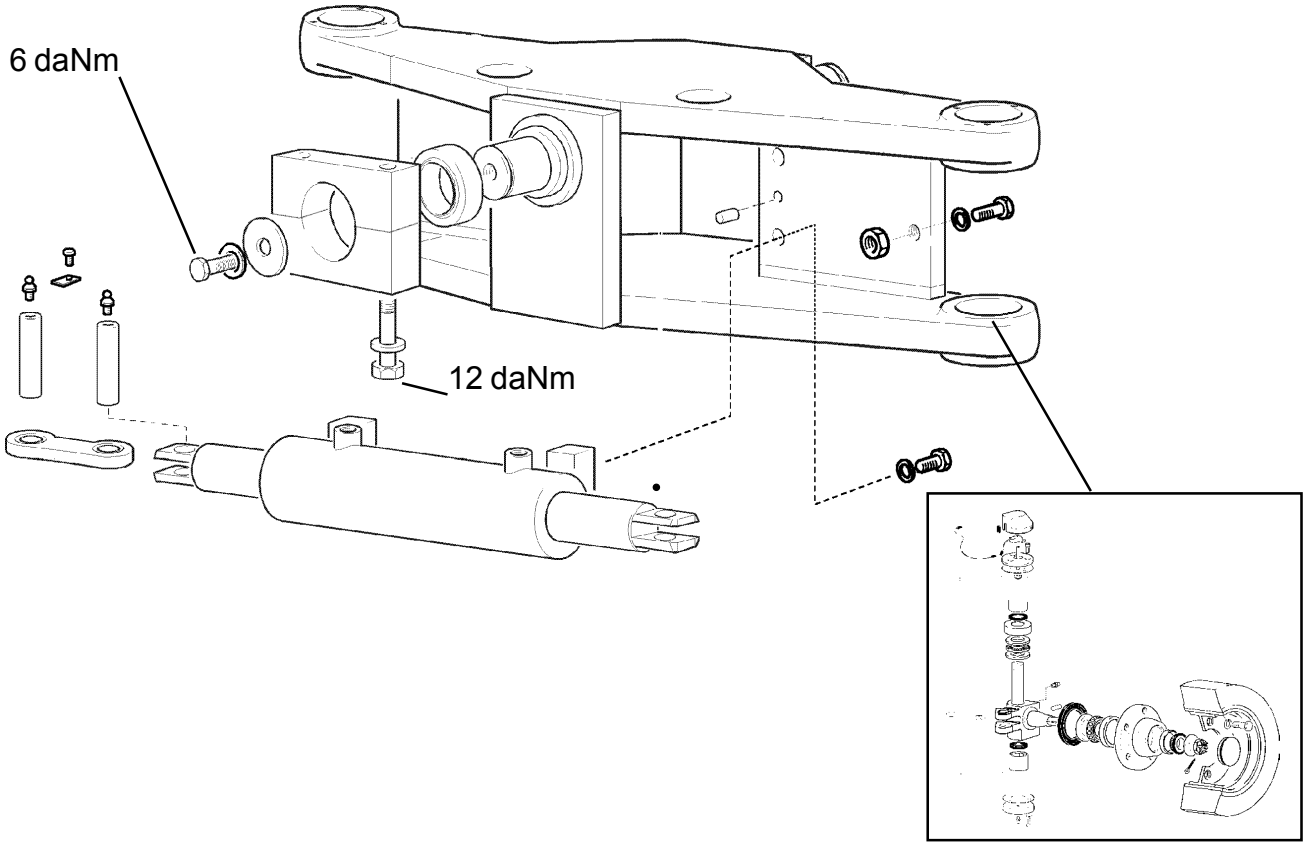

https://truckmanualshub.com/

BEARING ADJUSTMENT

Steering wheel bearings require an adjustment once a year.

Steering wheels

- lift the steering wheels
- remove cap (1);
- fasten the nut with a torque setting of 6 dNm;
- turn the hub of 2-3 turns in both senses;
- unfasten nut (3) and retighten with a 2-1 daNm torque;
- check that the wheels slide correctly (max. rolling final torque: 0.2 dNm) and that there is no side play (maximum axial play of 0.05 mm);
- reassemble the cap (1);
- lower the wheels again and check that all bolts fixing the wheel disk (5) to hub (2) are well tightened.

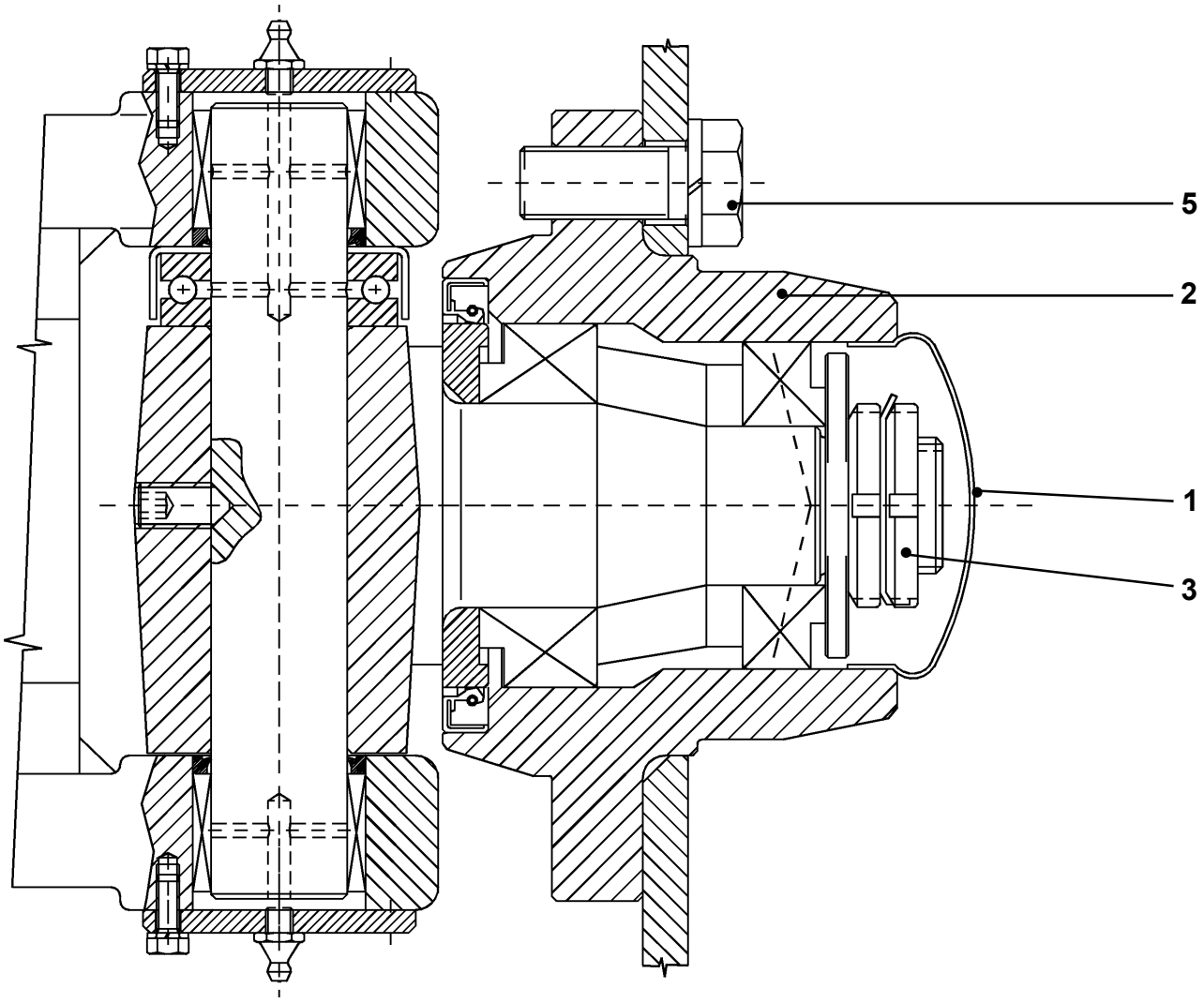

https://truckmanualshub.com/

CHAPTER 5000

ELECTRIC & ELECTRONIC SYSTEM

https://truckmanualshub.com/

ELECTRIC & ELECTRONIC SYSTEM INDEX

BATTERY AND BATTERY CHARGER page3
ELECTRICAL MOTOR CHARACTERISTIC page4
ENCODER page5
MAIN ELECTRICAL COMPONENTS DESCRIPTION page7
ACCELERATOR PEDAL page7
FUSE BOX page8
24 VOLT FUSES page8
DC/DC CONVERTER page9
ELECTRONIC PANELS (TECHNICAL SPECIFICATIONS) page10
OPERATIONAL FEATURES page11
DIAGNOSI page11
GENERAL PRECAUTIONS page12
PROTECTIONS page12
CONNECTION OF THE AUXILIARY CIRCUIT: TRACTION page13
TRACTION ELECTRIC BLOCK DIAGRAM page15
STEERING SYSTEM page16
CONNECTION OF THE AUXILIARY CIRCUIT: LIFTING page18
LIFTING ELECTRIC BLOCK DIAGRAM page20
ELECTRICAL CIRCUIT CONNECTION TRACTION AND LIFTING page21
CAN-BUS AND ONBOARD COMMANDS DIAGRAM page23
CAN - BUS DESCRIPTION page25
ARM CARD page26
LIGHT CARD page28
I/O CARD page30
MHYRIO CARD page31
POTENTIOMETER CONFIGURATION page32
CONSOLE FUNCTION GENERAL DESCRIPTION page36
GENERAL DESCRIPTION page38
KEYBOARD page38
CONSOLE CONNECTION page39
PARAMETER CHANGE page40
TESTER page44
ALARM FUNCTIONS page50
PARAMETER SETTING TABLE page66
MAPS FOR USING THE CONSOLE
- TRACTION page69
- LIFTING page95
- MHYRIO page109
- DASHBOARD page119

WIRING DIAGRAM page123

https://truckmanualshub.com/

BATTERY AND BATTERY CHARGER

General indications for battery maintenance
Every 50 working hours - measure electrolyte density.

Approximate density data
For a temperature of 15° C
- a density of 1.12 to 1.13+
kg/dm^3 indicates that the battery is flat;
- a density of 1.25 to 1.26 kg/dm^3 indicates that the battery is charged (battery capacity increased: 1.29 to 1.30 kg/dm^3).

BATTERY CHARGING WARNINGS

Before charging the battery, verify that the room is well aerated. Open the battery compartment door.
Make sure that all electrical connections (electrical cable terminals, battery terminals, plugs-sockets, etc.) are well attached and in good condition.
- Do not open either remove battery filling caps.
- Never top up before and while charging the battery.
- Do not smoke, do not stay close to naked flames and do not cause sparks next to batteries
- Do not use the battery while it is being charged
- Do not lean metal tools on the battery while under charge
- Never repair the battery while under charge
- Check that during the charging phase, the electrolyte temperature is kept below 50°C.

Warning
The battery normal working range is from 100% to 20% of the capacity. For the battery protection, don't let the residual capacity to drop down under 20% of the charge. Under this limit you can have possible battery damages and, above all, logic units malfunctions and stops that could invalidate the truck safe use.

BATTERY WEIGHTS AND CAPACITY

TRUCK t.	WHEELS	WEIGHT WITH STANDARD BATTERY	BATTERY WEIGHT	BATTERY CAPACITY
1.2	3	2960 kg	775 kg	420-500 Ah
1.5	3	3190 kg	775 kg	420-500 Ah
1.6	3	3230 kg	920 kg	525-625 Ah
1.8	3	3375 kg	920 kg	525-625 Ah
2.0	3	3565 kg	1090 kg	630-750 Ah
1.6L	3	3335 kg	1090 kg	630-750 Ah
1.8L	3	3440 kg	1090 kg	630-750 Ah
1.2	4	2950 kg	775 kg	420-500 Ah
1.5	4	3140 kg	775 kg	420-500 Ah
1.6	4	3180 kg	920 kg	525-625 Ah
1.8	4	3320 kg	920 kg	525-625 Ah
2.0	4	3520 kg	1090 kg	630-750 Ah
1.6L	4	3300 kg	1090 kg	630-750 Ah
1.8L	4	3380 kg	1090 kg	630-750 Ah

https://truckmanualshub.com/

ELECTRICAL MOTORS CHARACTERISTICS

TRACTION MOTORS

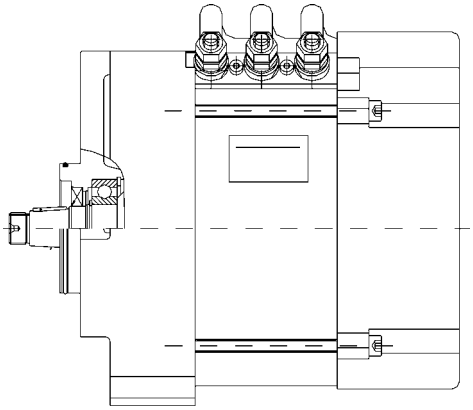

MANIFACTURER	SAUER DANFOSS (SCHABMÜLLER)
POWER	4,5 KW f=80 Hz
POLES NUMBER	4
FREQUENCY	80 Hz
NOMINAL VOLTAGE	27 V (AC)
POWER FACTOR (cos ϕ)	0,915
SERVICE	S2 60’
INSULATION CLASS	F
R.P.M.	2295 rpm

LIFTING MOTOR

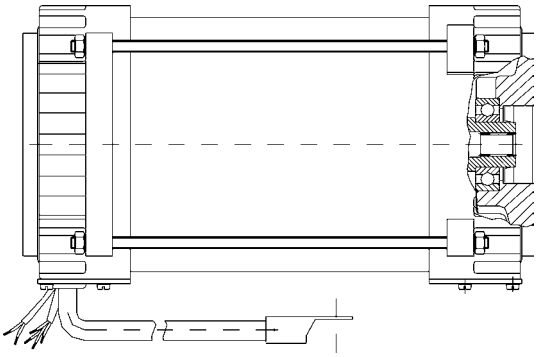

MANIFACTURER	SAUER DANFOSS (SCHABMÜLLER)
POWER	10 KW
POLES NUMBER	4
FREQUENCY	80 Hz
NOMINAL VOLTAGE	28 V (AC)
POWER FACTOR (cos ϕ)	0,83
SERVICE	S3 = 26%
INSULATION CLASS	F
R.P.M.	2314 rpm
PUMP CAPACITY	11 l/m’

https://truckmanualshub.com/

ENCODER

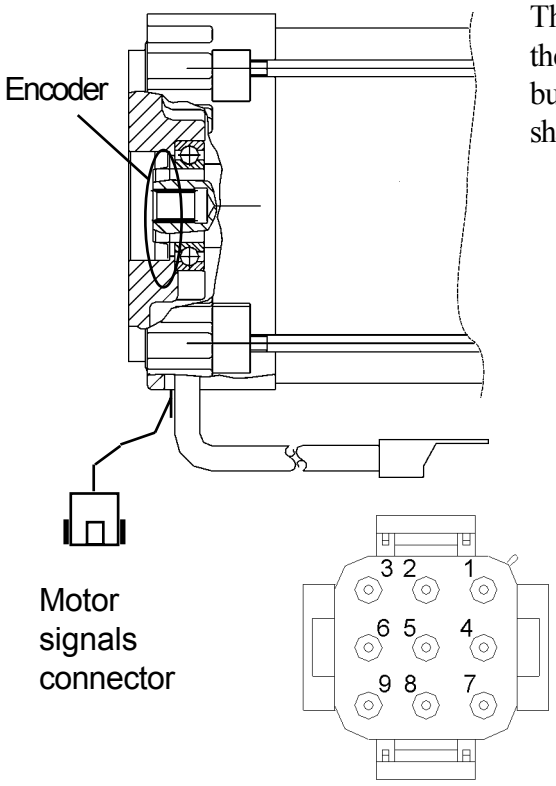

The encoder function is to generate motors feed-back signals to the logic unitis (motor running; R.P.M.; rotation direction). It is built-in the bearing placed on the opposite side of the motor drive shaft

Motor signals connector

pin	cable color	destination	function
1	red	encoder	+12 V
2	black	encoder	-
3	blue	encoder	signal B
4	white	encoder	signal A
5	white	thermo sensor	
6	white	thermo sensor	
7			not used
8			not used
9			not used

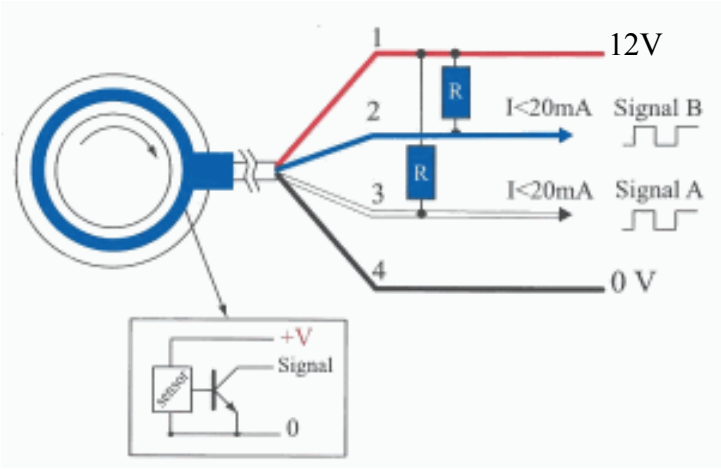

Critical damage if:

_ +V > 13Volts
_ Short circuit between signal and supplay
_ Induction heating
_ Hammer mounting

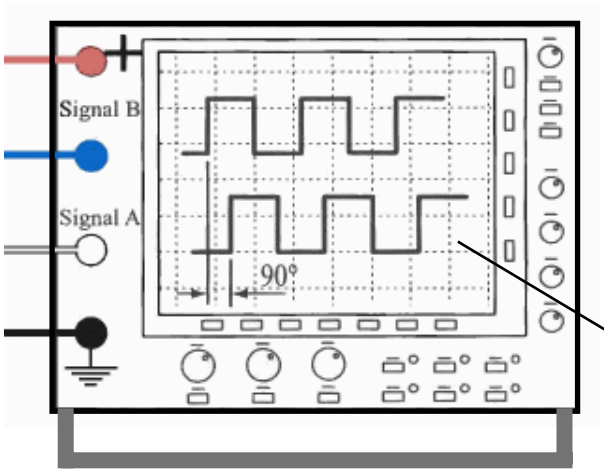

The signal is connected to the power supplay to 12 Volt. It is brought down with the internal transistor for creating to output impulse.

Signals view on the oscilloscope screen.

https://truckmanualshub.com/

LIFTING MOTOR

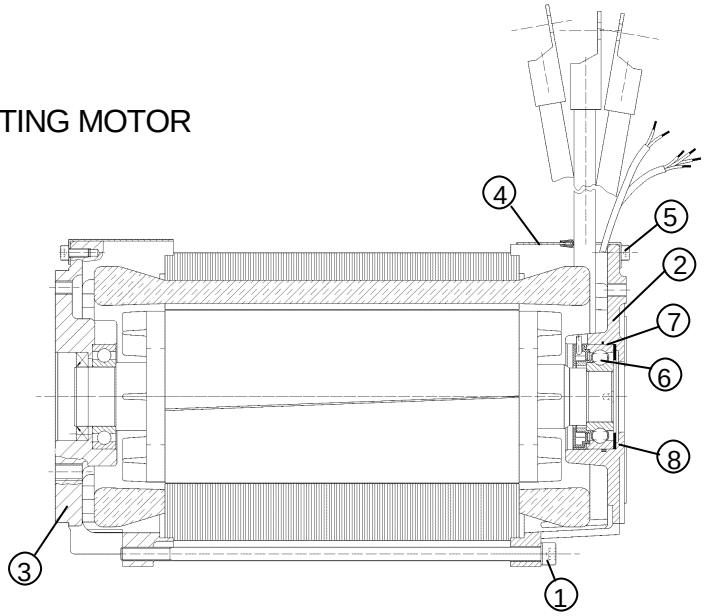

TRACTION MOTOR

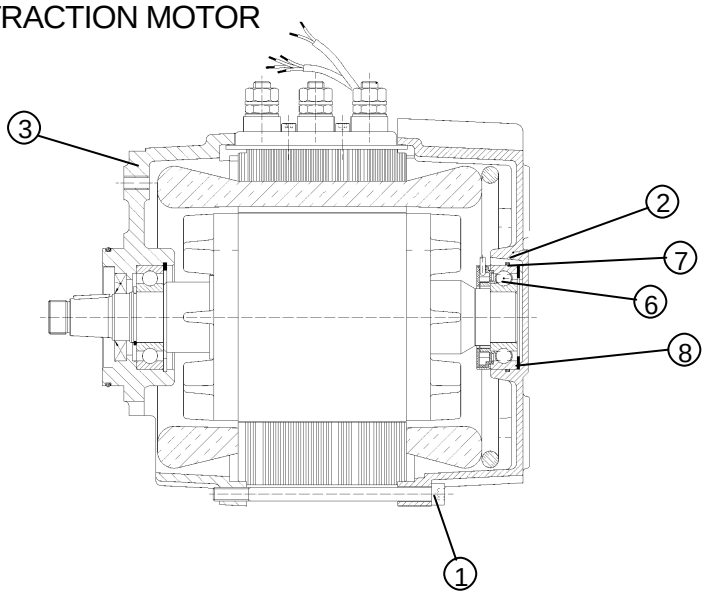

LIFTING MOTOR TRACTION MOTOR

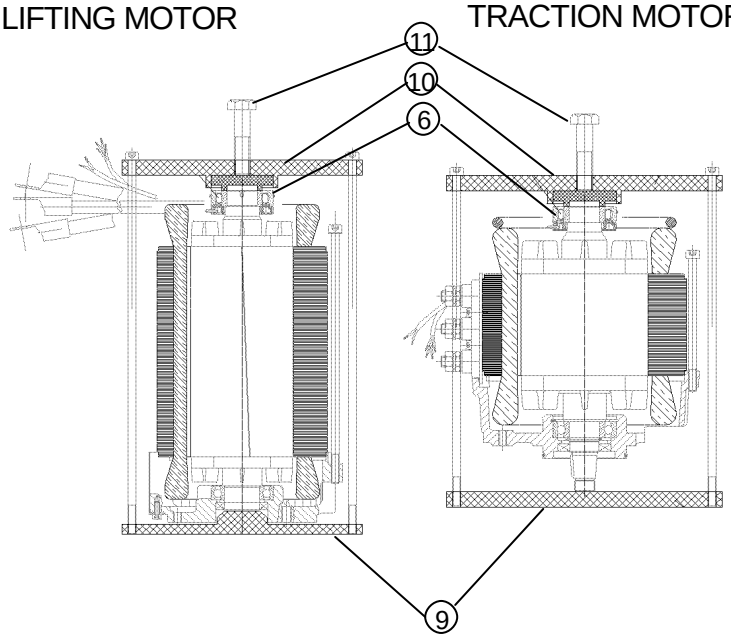

Disassembly

Disconnect the motor electrically and remove it. Open and remove the 4 cylinder head screws (M8x250 for the lifting motor, M8x130 for the traction motor) Pos. 1 between non drive end plate Pos. 2 and drive end plate Pos. 3. For the lifting motor: take off the metal cover Pos. 4 after loosening the cylinder head screws Pos. 5 of the aluminium non drive end plate Pos. 2. Take off the aluminium non drive end plate Pos. 2 with slight punches by means of a rubber mallet. Remove the cable strap (which fastens the sensor bearing cable).
Carefully remove the 2 clamping pins of the temperature sensor from the 9-pin plug (pin 5+6). Remove the sensor bearing Pos. 6 by means of an extractor (caution! do not damage the centering of the shaft).

Assembly

Put the motor shaft with drive end side against the plate (Pos 9); there should be no pressure to the drive end bearing ! Put the sensor bearing on the shaft (Pos 6). Put the press on device (Pos 10) on the inner ring of the sensor bearing as shown in the drawing and fix the device with the two longer screws. Press on the sensor bearing with the screw (Pos 11):
Be shure to press only the inner (!) ring of the sensor bearing.
Put the connection of the temperature sensor in the 9-pin plug (pin 5+6) again. Secure the cable of the temperature sensor and the sensor cable by means of a cable strap at the motor connecting cables. Examine the o-ring (62x2,0) Pos. 7 inside the non drive end plate Pos. 2 regarding damages, if necessary exchange it. Put in the wavy washer Pos. 8 inside the aluminium non drive end plate Pos. 2 again. Put the aluminium non drive end plate Pos..2 on the motor again, pay attention to the position of the cable of the sensor bearing. (Attention! Risk of damaging the cable insulation). For the lifting motor: put the metal cover on the aluminium non drive end plate Pos. 2 again and fix it by means of the cylinder head screws Pos. 5 with a torque of 7 Nm. For the traction and lifting motors: clamp the complete terminal between the drive end plate Pos. 3 and the aluminium non drive end plate Pos. 2 again. Put in the 4 cylinder head screws (M8x250 for the lifting motor, M8x130 for the traction motor) Pos. 1 and tighten them with 11 Nm. torque for the lifting motor or with 20 Nm. torque for the traction motor

https://truckmanualshub.com/

MAIN ELECTRICAL COMPONENTS DESCRIPTION

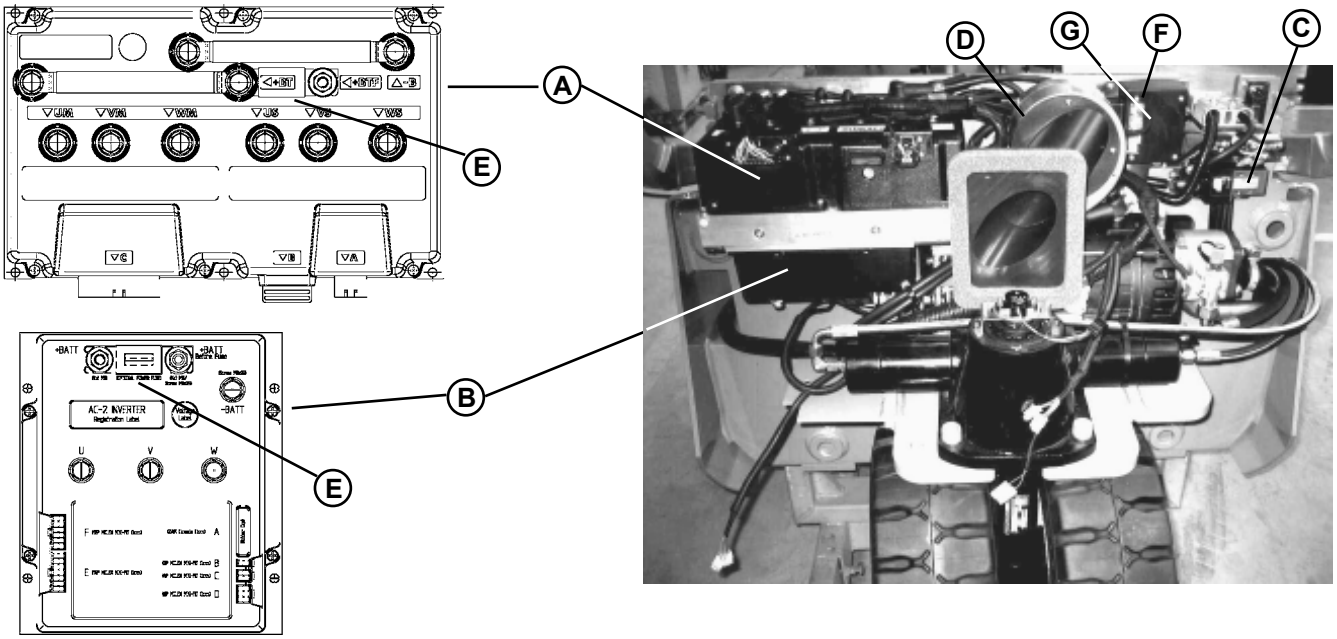

A) Traction module
B) Lifting module
C) Contactors
D) Panel cooling fan
E) Power fuses
F) Fuses (covered by the light board)
G) Light card

ACCELERATOR PEDAL

Set the potentiometer
Position the tester set in OHM between the green and the red wire.
Set the potentiometer
from 5.13 to 6.27 KOHM (pedal released)
from 1.087 to 1.32 KOHM (pedal pressed)

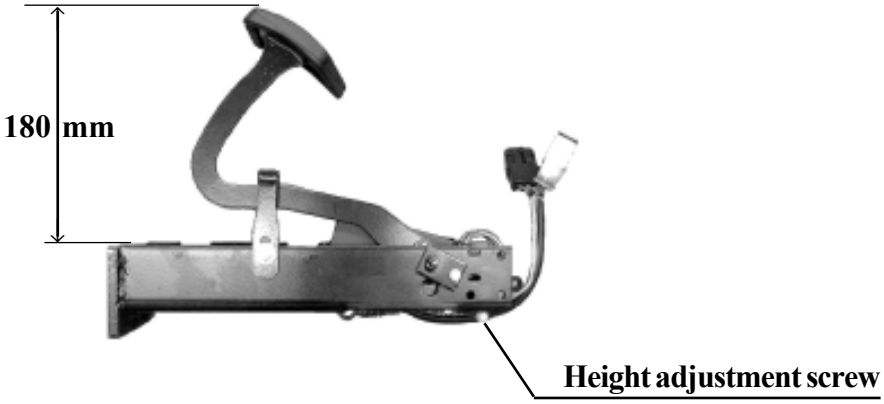

https://truckmanualshub.com/

FUSE BOX

The fuse box is located next to the battery connector, covered by the light card.

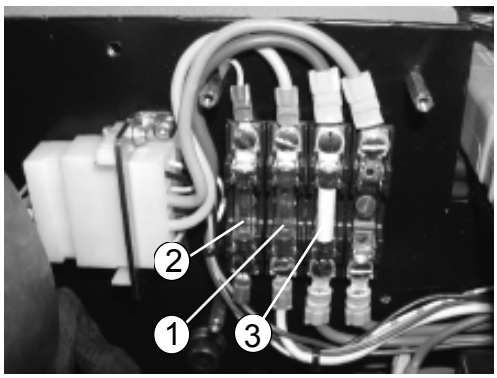

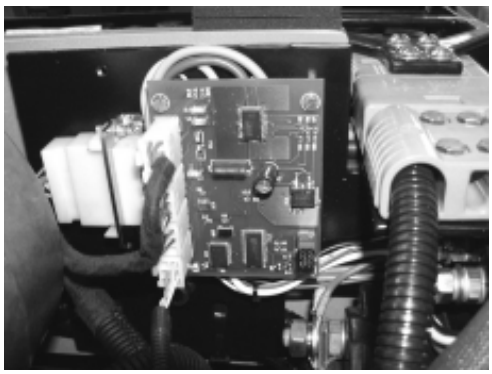

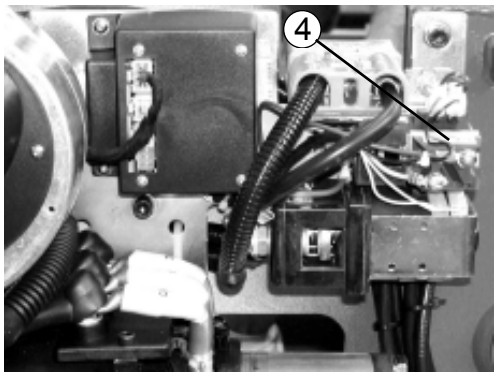

FUSE DESCRIPTION

1. F1 key fuse	10 Amp
2. F2 horn fuse	5 Amp
3. F3 DC/DC converter fuse	20 Amp
4. Diode	

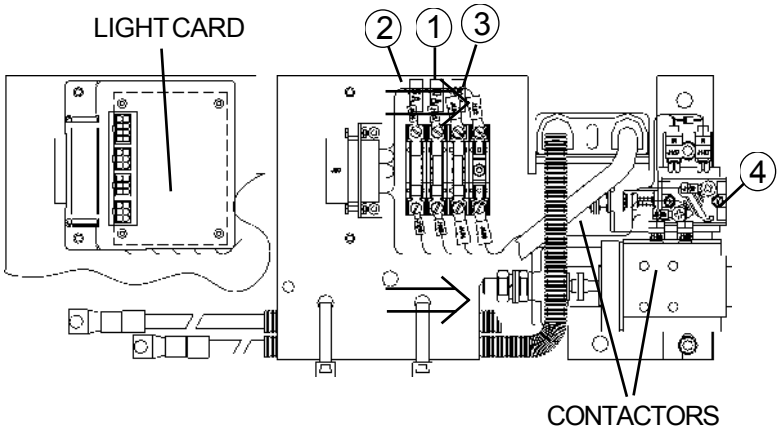

24 VOLT FUSES

This box is located under the dashboard and it is used for all the 24 V fuses only.

5 Connector for the wiring.
6 Connection bars transfer the positive pole to all fuses.
7 Direction lights intermittence connector.

This box is present on the truck only if optional equipments are foreseen

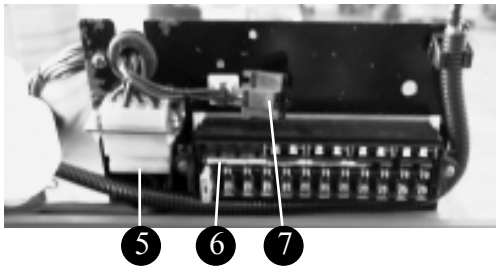

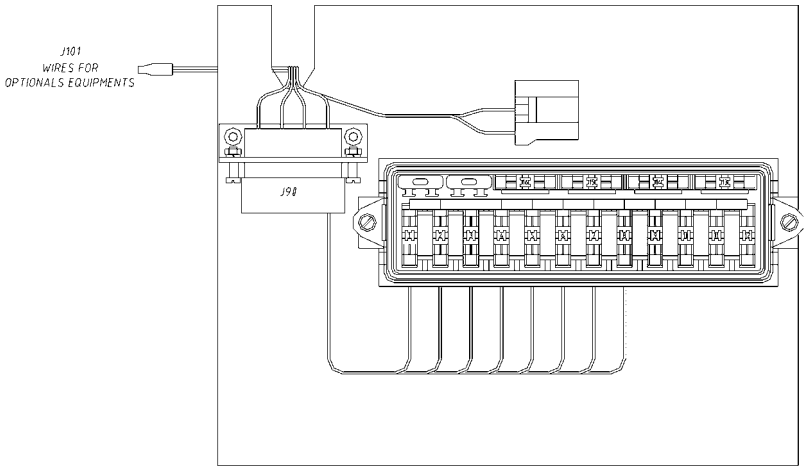

https://truckmanualshub.com/

DC/DC CONVERTER

140 W DC/DC converter (STD)

The DC/DC converter is located on the truck front side, under the I/O card fixed on the same plate. The STD machines use a converter to 140 Watt. It is under contactor (see electrical diagram).

CONVERTER

P/N	Power
2773040	140W
2773041	240W
2773042	360W
2773043	720W
2773044	960W

EQUIPMENT	**CONSUPTION OF THE EQUIPMENT CONNECTED TO 24 V**
STD. MACHINE	86 W
REVERCE ACUSTIC WARNING	05 W
FLASH BEACON	03 W
ROTARY BEACON	70 W
WIPER	100W
2 WORKING LIGHTS	140W
LIGHTENING EQUPIMENT (STREET LIGHT)	200W
HEATER	150W

Choose the right converter rounding up the calculation of the maximum power used and considering a margin of 10%.
A std machine uses a converter of 140W and the maximum power used is 86W.
It means that there are 40W still available.

https://truckmanualshub.com/

ELECTRONIC PANELS

TECHNICAL SPECIFICATIONS

"DUALAC2" TRACTION

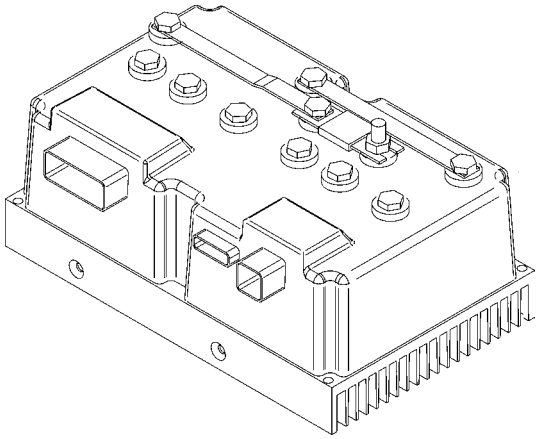

Inverter for pairs of AC asynchronous 3-phase motors
Regenerative braking functions
Can-bus interface
Digital control based upon a microcontroller (one per each motor)

Voltage:	48V
Maximum current	2 x 275A (RMS) for 3'
Operating frequency	8kHz
External temperature range	-30°C ÷ 40°C
Maximum inverter temperature (at full power)	75°C

"AC2" LIFTING

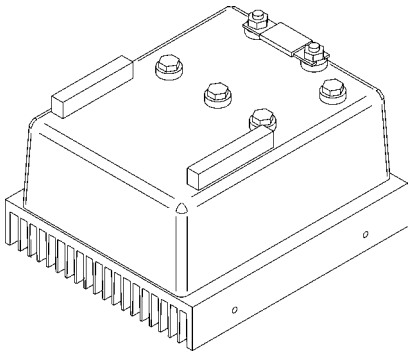

Inverter for AC asyncronous 3-phase motors
Regenerative braking functions
Can-bus interface
Digital control based upon a microcontroller

Voltage	48V
Maximum current	350A (RMS) for 3'
Operating frequency	8kHz
External temperature range	-30°C ÷ 40°C
Maximum inverter temperature (at full power)	75°C

https://truckmanualshub.com/

OPERATIONAL FEATURES

- Speed control.
- Very good behaviour on a slope due to the speed feedback.
- The motor speed follows the accelerator, starting a regenerative braking if the speed overtakes the speed set point.
- Stable speed in every position of the accelerator.
- Regenerative release braking based upon deceleration ramps.
- Regenerative braking when the accelerator pedal is partially released (deceleration).
- Direction inversion with regenerative braking based upon deceleration ramp.
- Regenerative braking and direction inversion without contactors: only the two main contactors are present.
- The release braking ramp can be modulated by an analog input, so that a proportional brake feature is obtained.
- Very good sensitivity at low speeds.
- Voltage boost at the start and with overload to obtain more torque (with current control).
- High efficiency of motor and battery due to high frequency commutations.
- Self diagnosis with indication of the fault shown by numeric display.
- Modification of parameters through the programming console.
- Internal hour-meter with values that can be displayed on the console.
- Memory of the last five alarms with relative hour-meter and temperature displayed on the console.
- Test function within console for checking main parameters.
- Hydraulic steering function:
  1) traction inverter
  - the traction inverter sends a "hydraulic steering function" request to the pump inverter on the can-bus line
  2) pump inverter
  - the pump inverter manages a "hydraulic steering function". That is, it drives the pump motor at the programmed speed for the programmed time.

DIAGNOSIS

The microprocessor continually monitors the inverter and carries out a diagnostic procedure on the main functions. The diagnosis is made in 4 points:

1) Diagnosis on key switch closing that checks: watchdog circuit, current sensor, capacitor charging, phases' voltages, contactor drives, can-bus interface, if the switch sequence for operation is correct and if the output of the accelerator unit is correct.
2) Standby diagnosis at rest that checks: watchdog circuit, phases' voltages, contactor driver, current sensor, can-bus interface.
3) Diagnosis during operation that checks: watchdog circuits, contactor driver, current sensors, can-bus interface.
4) Continuous diagnosis that checks: temperature of the inverter.

Diagnosis is provided in two ways.

- the diagnostic ERROR DISPLAY placed to the dashboard that shows the code number for a given alarm (see the chapter 5000 Alarm description).
- the digital console, which gives more detailed information about the failure.

https://truckmanualshub.com/

GENERAL PRECAUTIONS

- Do not connect the inverter to a battery with a nominal value different from the value indicated on the chopper plate. If the battery value is greater, the MOS may fail; if it is lower, the control unit does not "power up".
- During the battery charge, disconnect the INVERTER from the battery.
- Supply the INVERTER only with battery for traction; do not use a power supply.
- When the chopper is installed, make tests with the wheels raised from the ground, in order to avoid dangerous situations due to connection errors.
- After the chopper is switched off (key off), the filter capacitors remain charged for some minutes; if you need to work on the inverter, discharge them using a
  10W ÷ 100W resistance connected from the +Batt to the -Batt.
- Before carrying out any arc-welding on the trucks, disconnect the battery and short-circuit the unit between positive (+) and negative (-).

PROTECTIONS

- **Connection Errors:**

  All inputs are protected against connection errors.
- **Thermal protection:**

  If the chopper temperature exceeds 75°C, the maximum current is reduced in proportion to the thermal increase. The temperature can never exceeds 100°C.
- **External agents:**

  The inverter is protected against dust and the spray of liquid to a degree of protection meeting IP54.
- **Protection against uncontrolled movements:**

  The main contactor will not close if:
  - the Power unit is not functioning.
  - the Logic is not functioning perfectly.
  - the output voltage of the accelerator does not fall below the minimum voltage value stored, with 1V added.
  - running microswitch in closed position.
- **Protection against accidental Start up**

  A precise sequence of operations are necessary before the machine starts.
  Operation cannot begin if these operations are not carried out correctly.
  Drive requests must be made after closing the key switch.

https://truckmanualshub.com/

CONNECTION OF THE AUXILIARY CIRCUIT - DUAL AC2 UNIT TRACTION

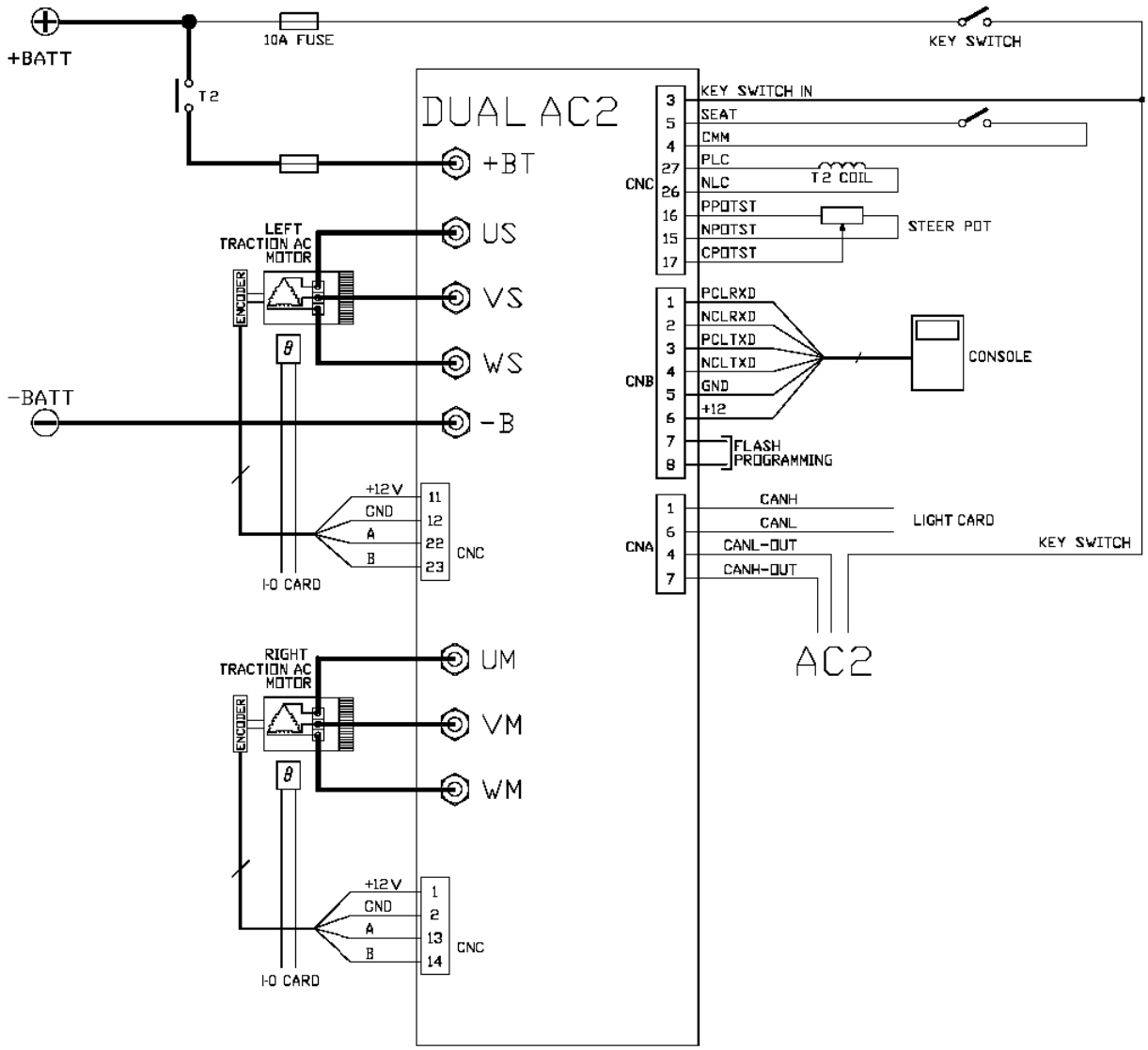

CABLES ASSEMBLY INSTRUCTIONS

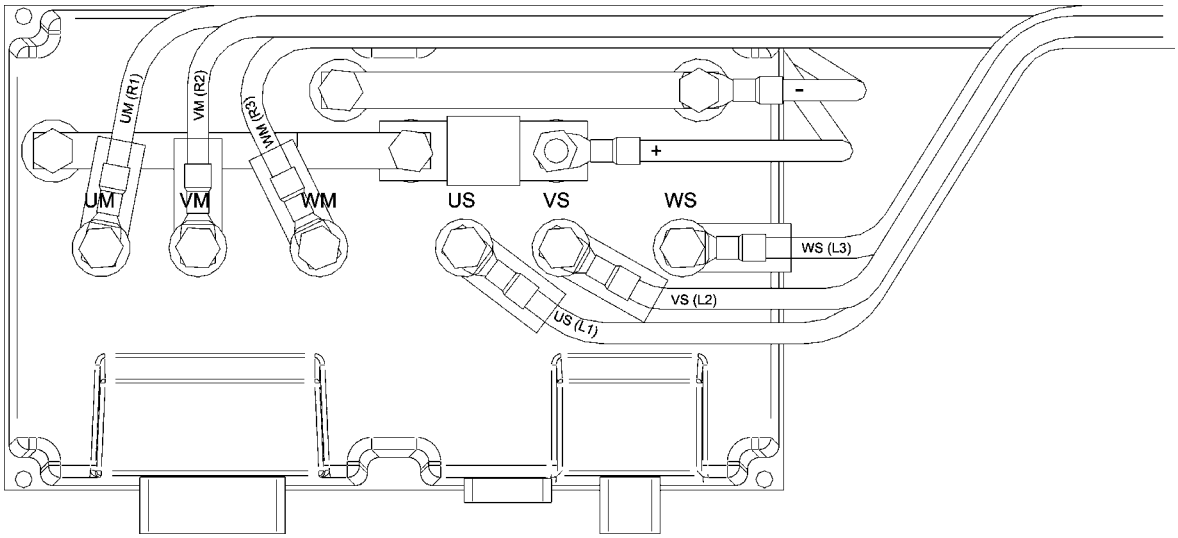

https://truckmanualshub.com/

CONNECTORS

A1	CAN_H	High level CANBUS.
A4	CANL_OUT	Low level CANBUS: to be used as repetition for CAN_L line.
A6	CAN_L	Low level CANBUS.
A7	CAN_H_OUT	High level CANBUS: to be used as repetition for CAN_H line or to be connected to CANT_L to insert termination resistance.
B1	PCLRXD	console connecto
B2	NCLRXD	
B3	PCLTXD	
B4	NCLTXD	
B5	GND	
B6	+12	
B7	FLASH	
B8	FLASH	
C1	PENC_R	Positive of right motor encoder power supply (+12V).
C2	NENC_R	Negative of right motor encoder power supply.
C3	KEY	Connected to +Batt through the series costituited by the key switch, the protection diode and a 10A fuse.
C4	CM	Common of FW / REV / HB / PB / SEAT / ENABLE microswitches.
C5	SEAT	Seat presence signal; active high.
C11	PENC_L	Positive of left motor encoder power supply (+12V).
C12	NENC_L	Negative of left motor encoder power supply.
C13	PHA_R	Right motor encoder phase A.
C14	PHB_R	Right motor encoder phase B.
C15	NPOTST	Negative of steering potentiometer (-BATT).
C16	PPOTST	Positive of steering potentiometer (+12V).
C17	CPOTST	Steering potentiometer wiper signal.
C22	PHB_H	Left motor encoder phase A.
C23	PHB_L	Left motor encoder phase B.
C26	NLC	Output of main contactor coil driver (drives to -BATT).
C27	PLC	Positive of main contactor coil.

https://truckmanualshub.com/

ENABLING OF C10 SPEED REDUCTION

By connecting a wire between the pin C10 and the positive (+Vb) from the seat switch, it is possible to disable the reduction of speed (CUTBACK SPEED 3) normally on.
By connecting a microswitch on the wire between the pin C10 and the seat switch, it is possible to set ON or OFF the CUTBACK SPEED 3 (parameter located in the menu PARAMETER CHANGE).

Disconnect the connector from the logic unit and and remove the red part that is fixed inside by means of two tongues on the external side.

Type of PINS used:

AMP770854 - 3.

TRACTION ELECTRIC BLOCK DIAGRAM

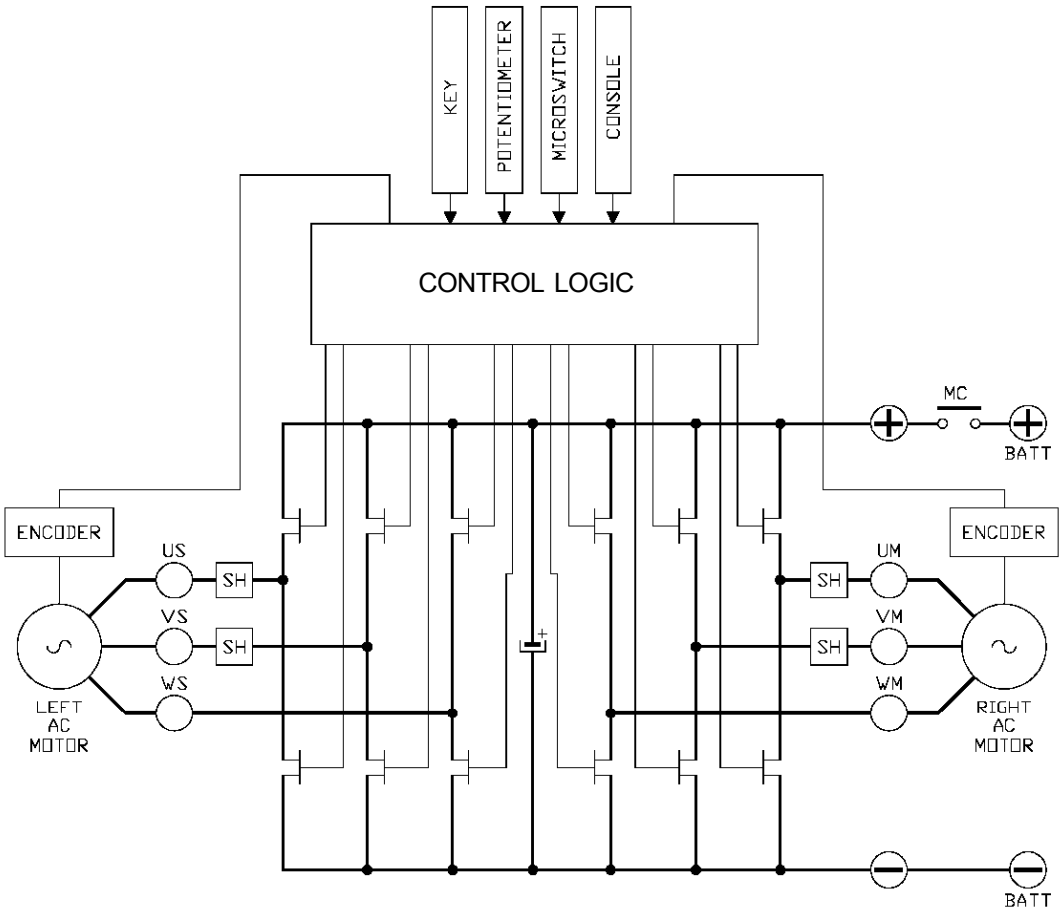

https://truckmanualshub.com/

STEERING SYSTEM

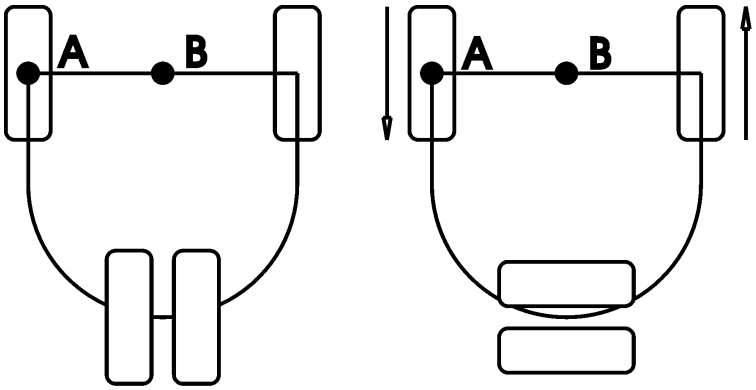

3 WHEELS

When the potentiometer reaches approximately 70° the traction logic unit controls the motor in order to stop one motor completely according to the direction. In this case the truck turns around point A. If the stroke of the potentiometer increases the motor that was stopped starts running in the opposite direction and the truck starts turning around point B.

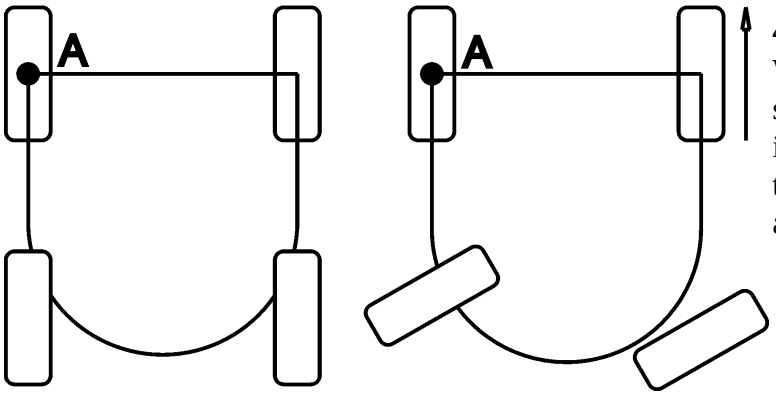

4 WHEELS

When the potentiometer reaches the maximum stroke the traction logic unit controls the motor in order to stop one motor completely according to the direction. In this case the truck turns around point A.

3 WHEELS

Transducer steering-wheel with potentiometer

The potentiometer has the following characteristics:

- Resistance 2,2 Kohm.
- The potentiometer supply is 12 V (5 V on the console). The potentiometer should be installed so that in the "zero position" (straightened wheels) the output voltage is 2,5 V. The potentiometer has to be fitted so that when the trolley turns clockwise the voltage decreases.

4 WHEELS

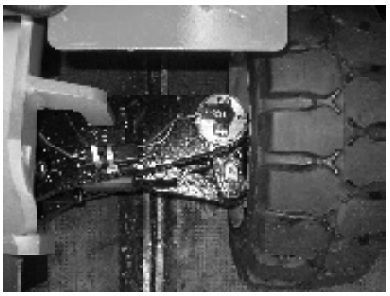

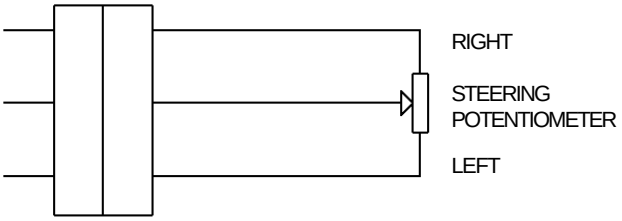

https://truckmanualshub.com/

3 WHEELS

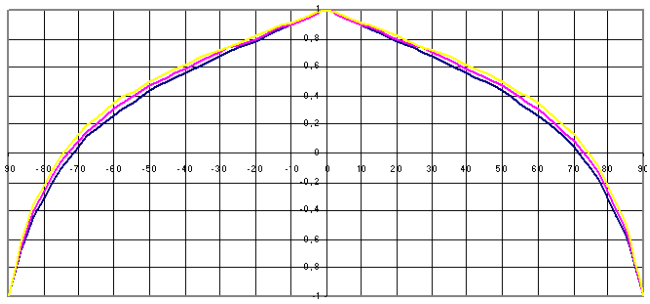

-90° +90°

Steering potentiometer (3 wheels)

Yellow	:	~	12 V
Green	:	~	0,7 V with max. steering angle right hand + 90°
			2,5 V with straight wheel
		~	4,3 V with max. steering angle left hand - 90°
Black	:		0 V

4 WHEELS

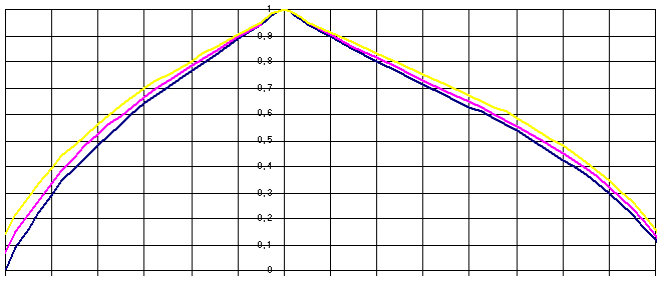

-58° +80°

Steering potentiometer (4 wheels)

Yellow:	~	12 V	
Green :	~	0,9V with max. steering angle right hand + 80°	
		2,5 V with straight wheel	
	~	3,8 V with max. steering angle left hand - 58°	
Black :		0 V	

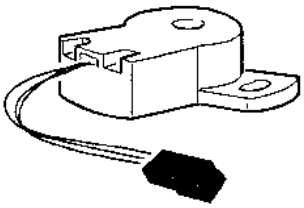

https://truckmanualshub.com/

CONNECTION OF THE ELECTRIC CIRCUIT - AC2 UNIT LIFTING

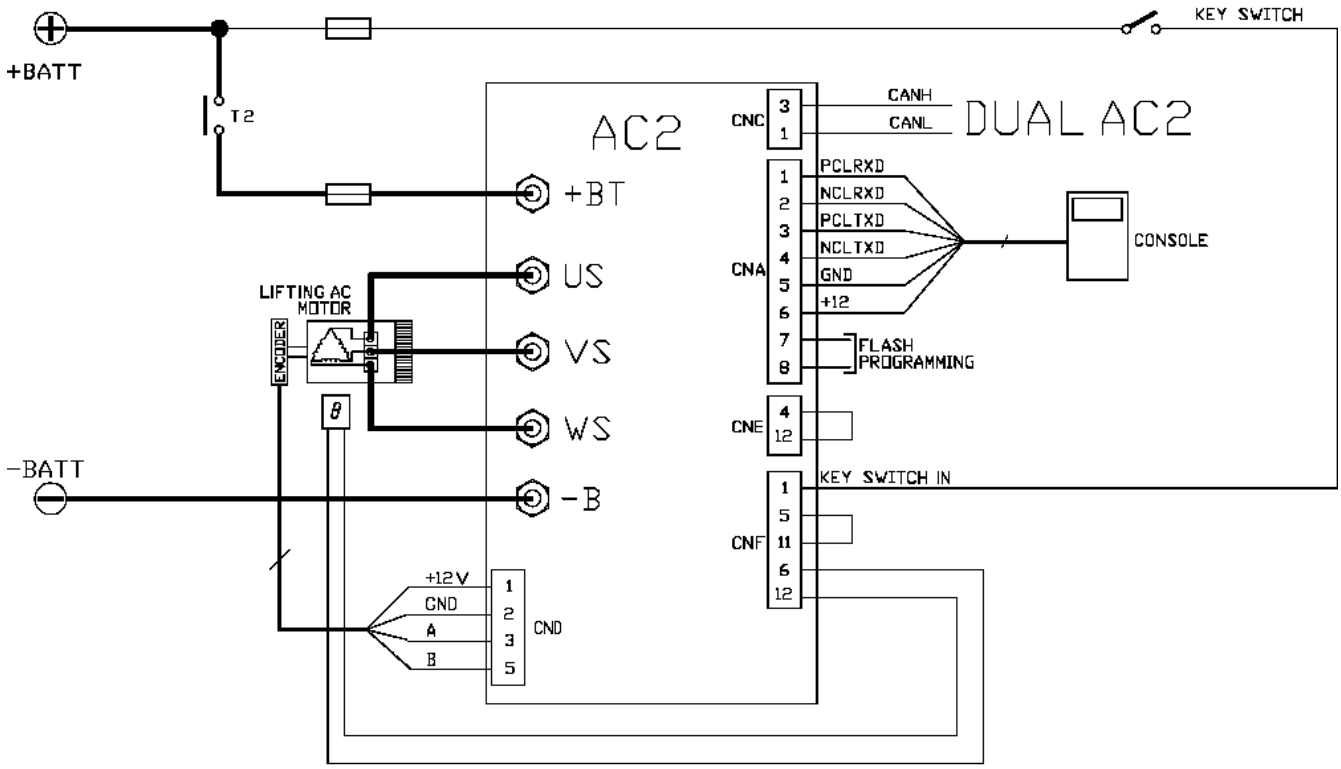

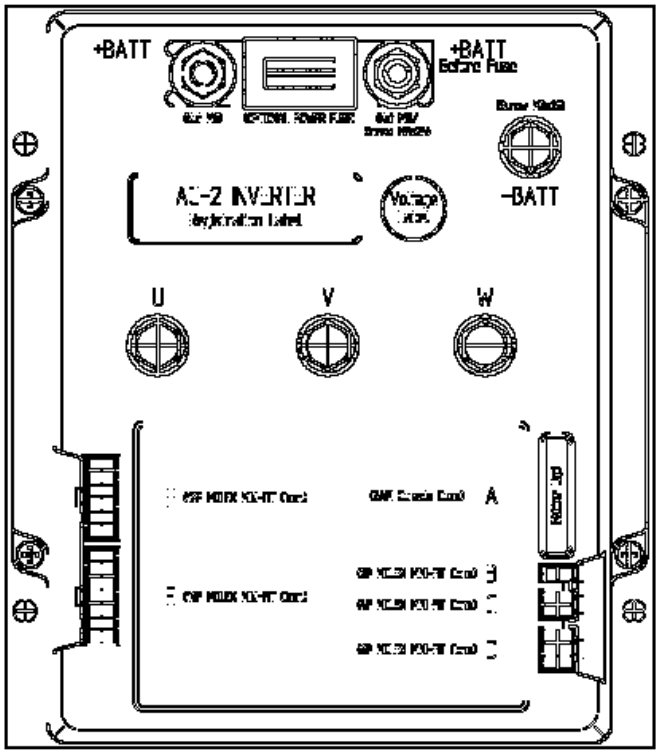

https://truckmanualshub.com/

CONNECTORS

A1	PCLRXD	Console connector
A2	NCLRXD	
A3	PCLTXD	
A4	NCLTXD	
A5	GND	
A5	GND	
A6	+12	
A7	FLASH	
A8	FLASH	
C1	CAN-L	Low level CAN-BUS voltage I/O.
C3	CAN-H	High level CAN-BUS voltage I/O.
D1		Positive of lifting motor encoder power supply (+12V).
D2		Negative of lifting motor encoder power supply.
D3		Lifting motor encoder phase A.
D5		Lifting motor encoder phase B.
E4	CM	Common of LIFT ENABLE / 1st SPEED / 2nd SPEED/ 3rd SPEED /4th SPEED / HYDRO / SR microswitches.
E12	HYDRO REQ.	Input for hydraulic steering request. Active high.
F1	KEY	Connected to +Batt through the series costituited by the key switch, the protection diode and a 10A fuse
F5	SAFETY	If not connected to -Batt the MC coil power output will be disabled. Can also be used as a general purpose input.
F6	PTHERM	Input for motor temperature sensor.
F11	GND	-Batt.
F12	NTHERM	-Batt.

https://truckmanualshub.com/

LIFTING ELECTRIC BLOCK DIAGRAM

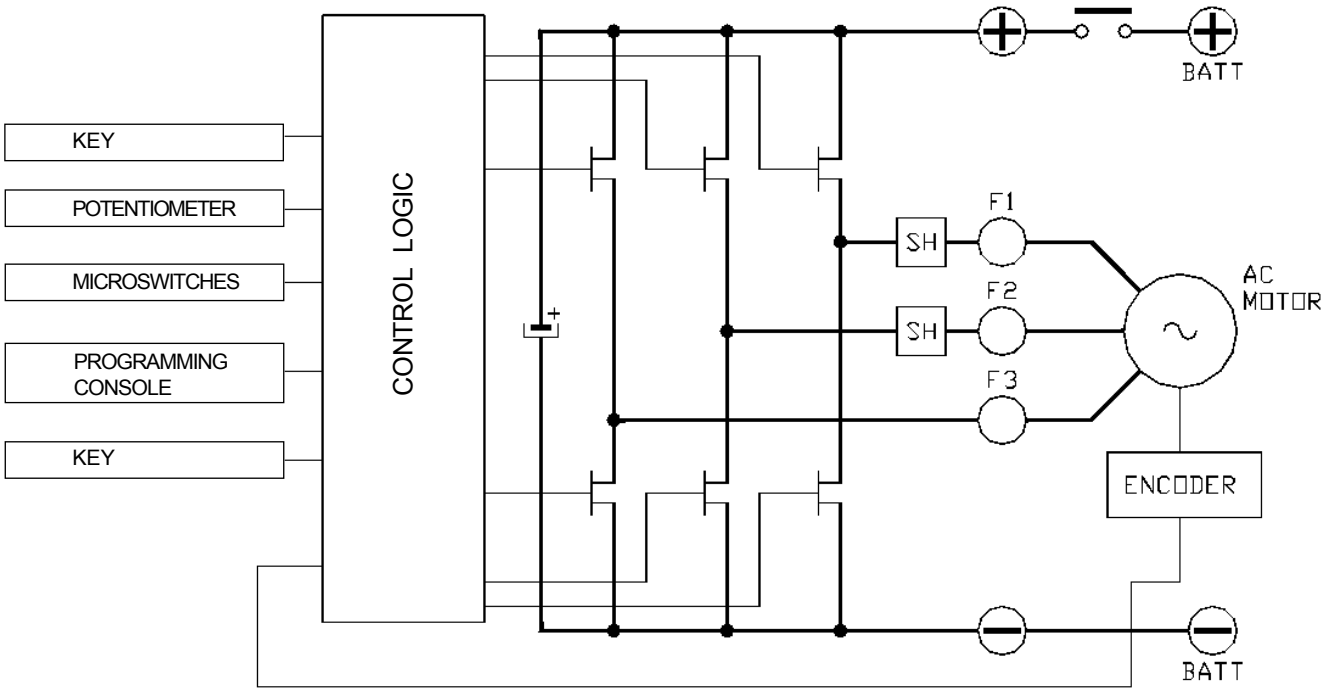

https://truckmanualshub.com/

ELECTRICAL CIRCUIT CONNECTION
DUAL AC2 TRACTION UNIT AND AC2 LIFTING UNIT

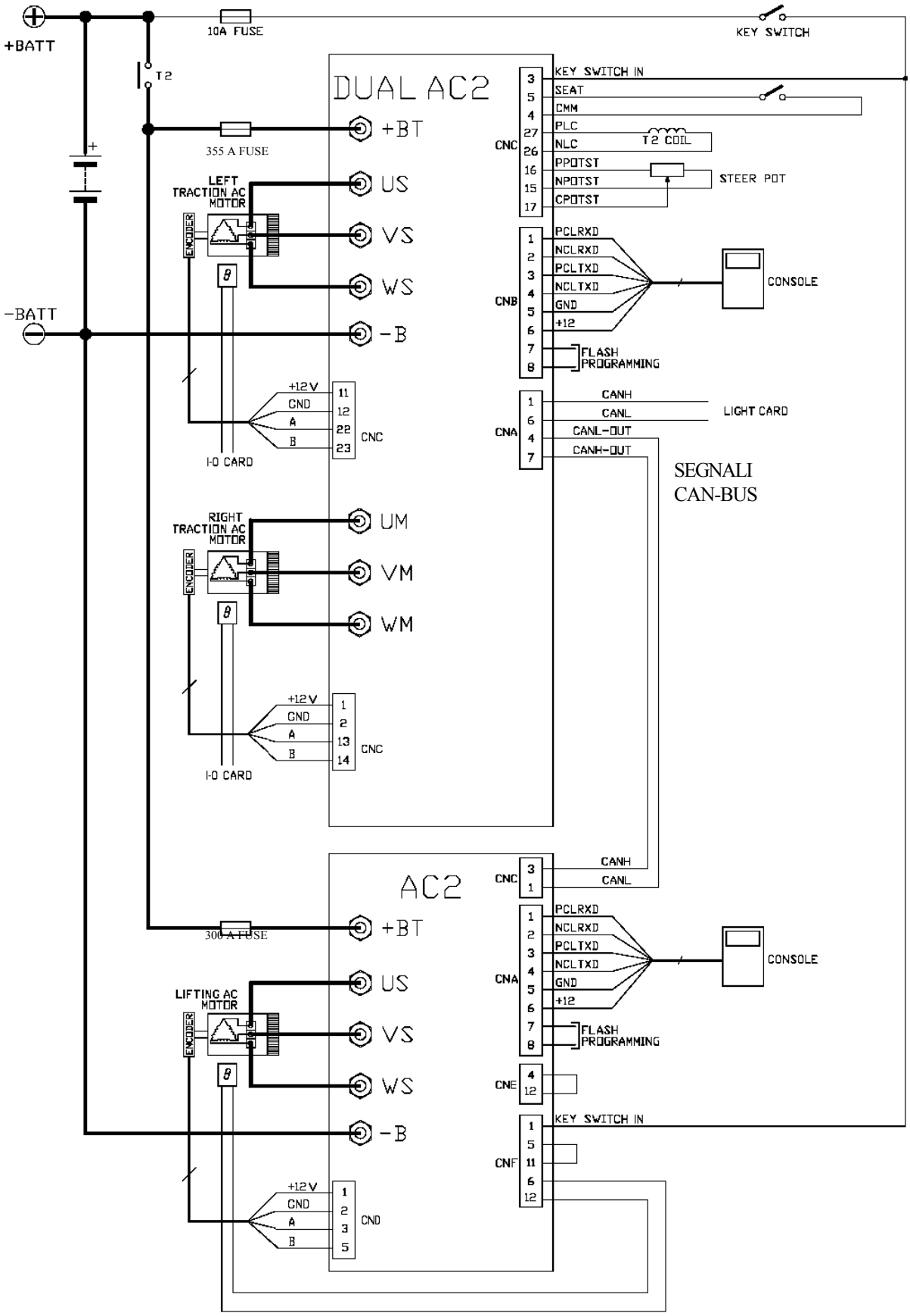

https://truckmanualshub.com/

NECESSARY SETTING AFTER REPLACING THE TRACTION LOGIC UNIT

1. TRACTION ACQUISITION
2. ADJUST BATTERY
3. STEERING POTENTIOMETER
4. Vacc PROGRAM
5. STEER TABLE

for all references see “MAPS FOR USING THE CONSOLE - TRACTION” in the following pages

NECESSARY SETTING AFTER REPLACING THE LIFTING LOGIC UNIT

1. LIFTING ACQUSITION
2. Vacc PROGRAM (with mechanic distributor only)

for all references see “MAPS FOR USING THE CONSOLE - LIFTING” in the following pages

https://truckmanualshub.com/

CAN-BUS AND ONBOARD COMMANDS DIAGRAM

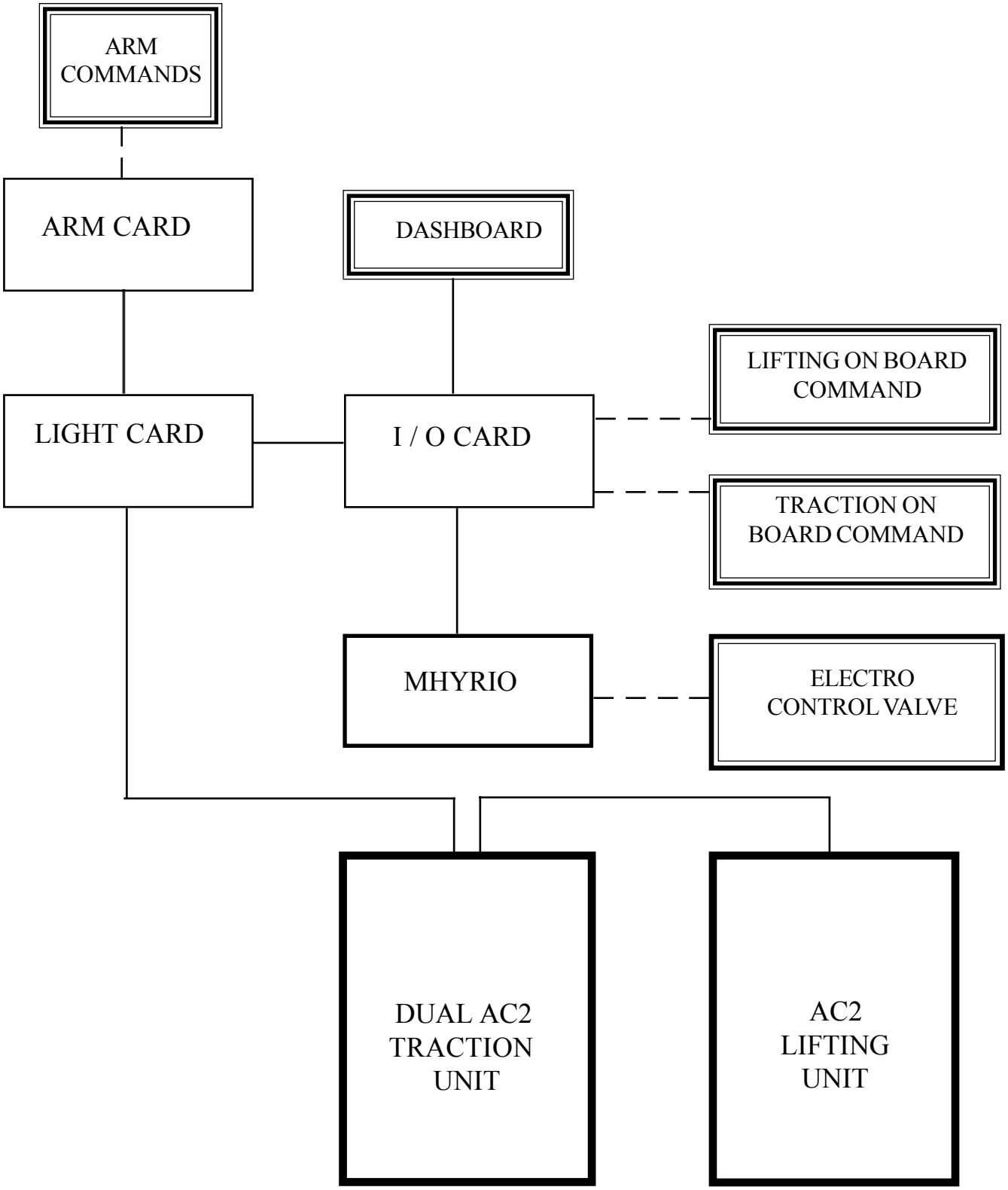

= CAN-BUS CONNECTION (4 WIRES)

= ANALOGIC CONNECTION (SEVERAL WIRES)

see legend at the next page

https://truckmanualshub.com/

LEGEND

ARM COMMANDS

joystick
- forward switch
- backward switch
- horn switch
- 5° way (opt)
- lifting-tilt joystick
- sideshift / 4° way (opt) joystick

fingertip
- forward switch
- backward switch
- horn switch
- lifting fingertip
- tilt fingertip
- sideshift fingertip
- 4° way fingertip (opt)
- 5° way fingertip (opt)

ARM CARD *

LIGHT CARD *

I / O CARD *

AC2 = lifting logic unit

DUAL AC2 = traction logic unit

LIFTING ON BOARD COMMAND = lift reduction speed (FFL only)

TRACTION ON BOARD COMMAND = park brake switch
accelerator switch
traction potentiometer
seat switch
pedal brake switch

MHYRIO *

CONTROL VALVES *

* for all references see following pages

https://truckmanualshub.com/

CAN - BUS DESCRIPTION

Controller **A**rea **N**etwork

The **CAN BUS** technology is a way to assemble the electronic parts of the machines. It has been designed to avoid the enormous quantity of cables that normally are used to connect two or more electric components. For example, in case you want to connect all potentiometers to control the distributor, it is necessary to fix a lot of wires with consequent reduction of space. Normally a cable in an electric installation is used for only one function: either positive, or negative, or signal.
In order to avoid the above problem the NEW TECHNOLOGY is used for saving in space given that all the information go only through two cables and they are decoded by microchips located in different parts of the truck. One of the greatest advantages is that all microchips can communicate with each other and control functions which work contemporaneously in a short time.
The CAN transfers all data giving priority to the most important signals.

The CAN is composed of four cables: two for the feeding and two for the signals.

R (red cable)	+24Volt
L (blue cable)	Negative
AN (light blue/ black cable)	CAN H (high)
HG (grey/ yellow cable)	CAN L (low)

It is necessary to have two cables for the feeding given that the microchips are not fed.

BUS: In electronics and computer science it indicates a set of wires connecting several microchips, thus allowing information exchange within the circuit.

BIT: Figure of the binary numeration that can have only two values: 1 (high) - 0 (low).
In computer science it defines the information unit. The bit/sec. defines the capacity of a channel, that is the quantity of information which can be transmitted through the channel in one second.

https://truckmanualshub.com/

ARM CARD

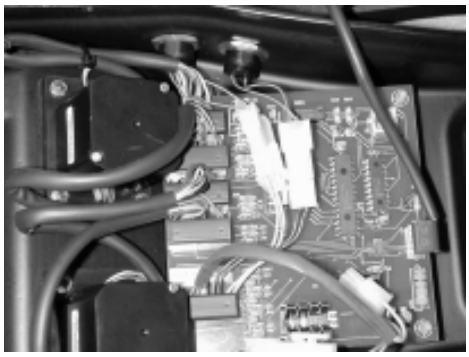

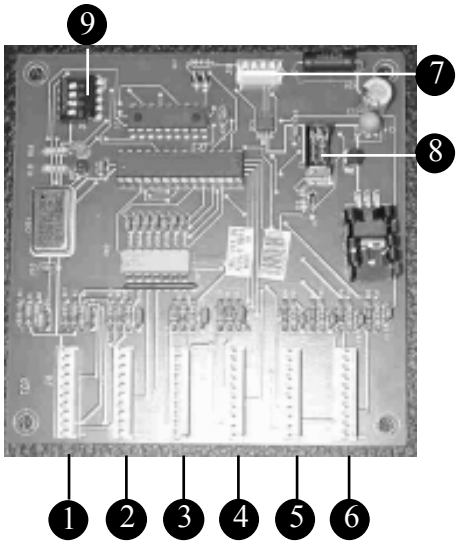

The arm card, located inside the seat arm is present in fingertips / joysticks truck version. It is supplied by the dc / dc converter with 24 V.
The fingertips /joysticks version requires also the use of an additional logic unit (Mhyrio)

FUNCTIONS
It controls and converts from analogic to digital the fingertips / joysticks potentiometers signals in order to drive, via Mhyrio, the electric distibutor, equipped with solenoid valves.
It also controls the push buttons signals of the forward / backward directions and of the horn.

CONNECTIONS
The card is connected by the cab-bus wiring to the light card

SETTINGS
In order to inform the card about the potentiometers type used, the following setting is required:

JOYSTICKS	**all the dip switches (layout, pos. 9) are setted on OFF position.**
FINGERTIPS	**the dip switch n° 2 (layout, pos. 9) is setted on ON position** (In case this is not enabled the logic unit shows the alarm INCORRECT START)

The potentiometres replacement does not require any calibration by the console

LAY-OUT

1. Connector for the lifting potentiometer (finger/joystick)
2. Connector for the tilt potentiometer (finger/joystick)
3. Connector for the sideshift potentiometer (finger/joystick)
4. Connector for the 4th way potentiometer (finger/joystick)
5. Connector for the 5th way potentiometer (finger/joystick)
6. Connector for the auxiliary funtions: push buttons for the horn and for the directions.
7. Connector for the CAN-BUS
8. Connector for the programming of the microchip.
9. Dip switches

see wiring diagram

https://truckmanualshub.com/

FINGERTIP

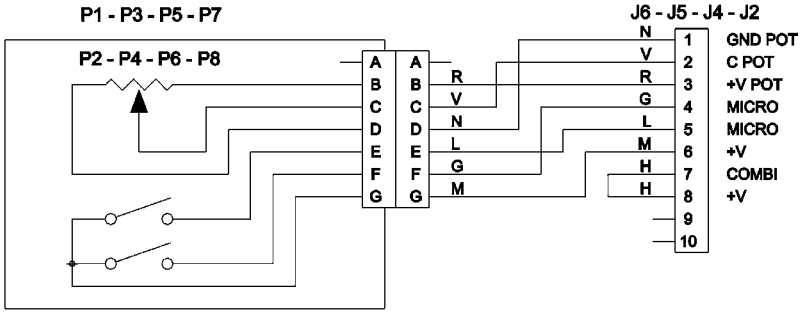

JOYSTICK

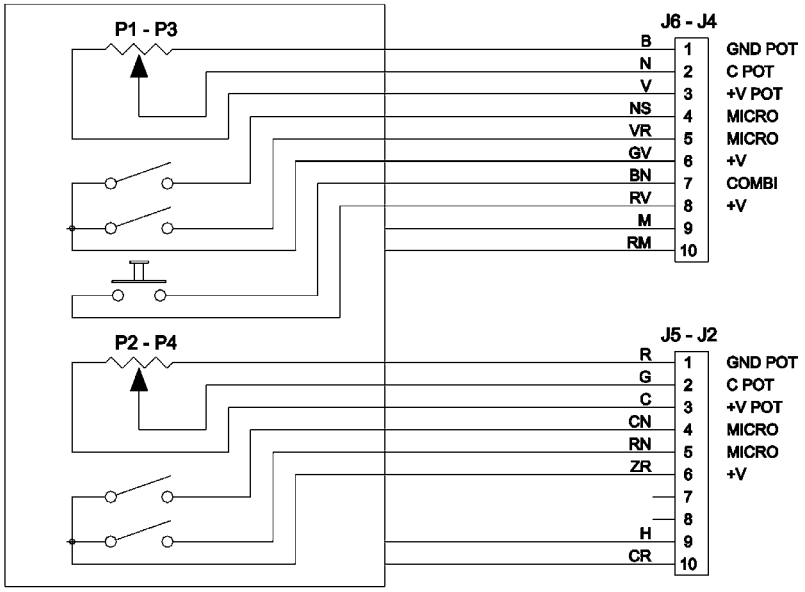

PB1=Horn pushbutton
PB2=Backward pushbutton
PB3=Forward pushbutton

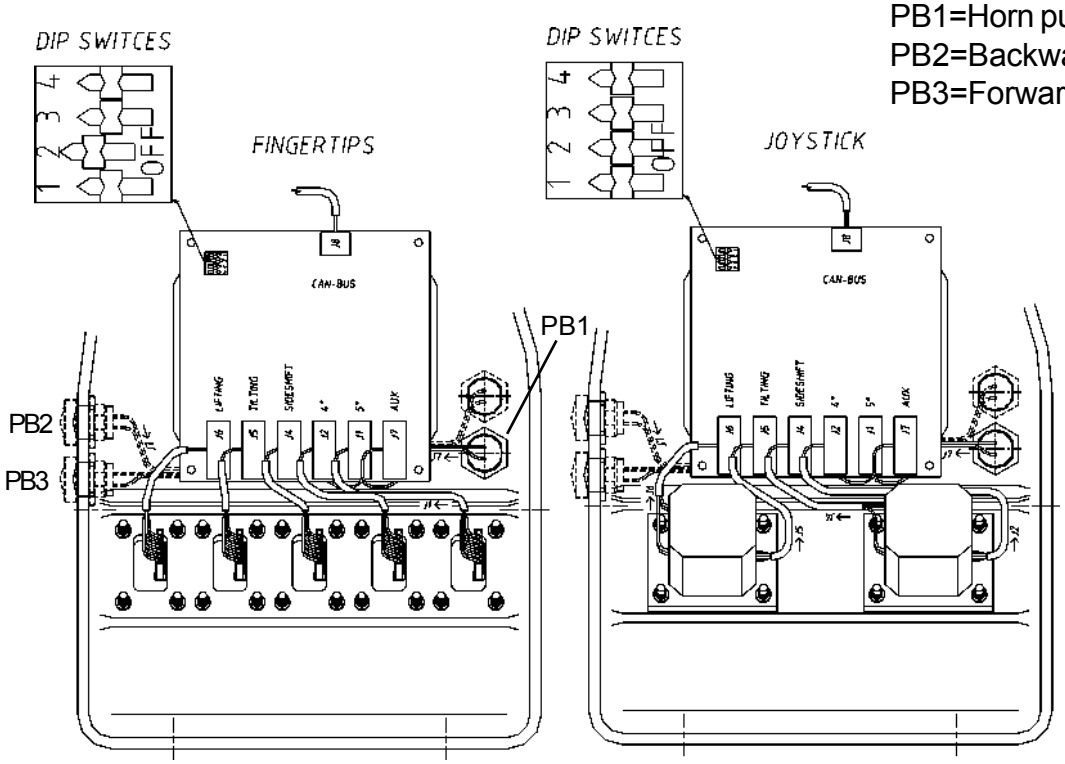

https://truckmanualshub.com/

LIGHT CARD

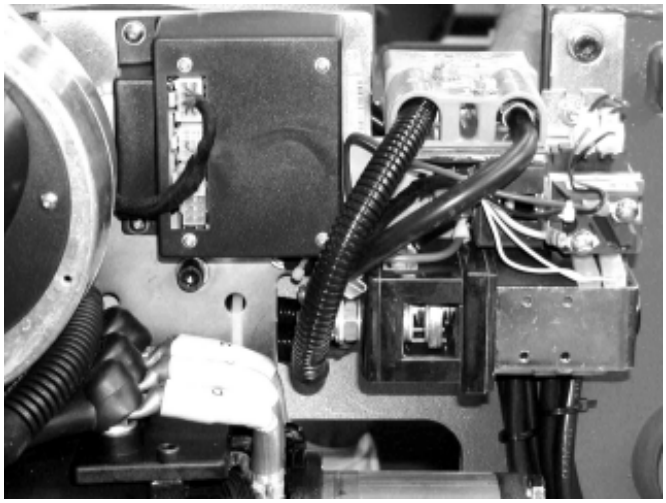

The light card is located in the compartment on the left side of the truck. The 24 V supplied by the converter arrive at the card. It is used as a bridge so that the voltage is supplied to all the other cards.

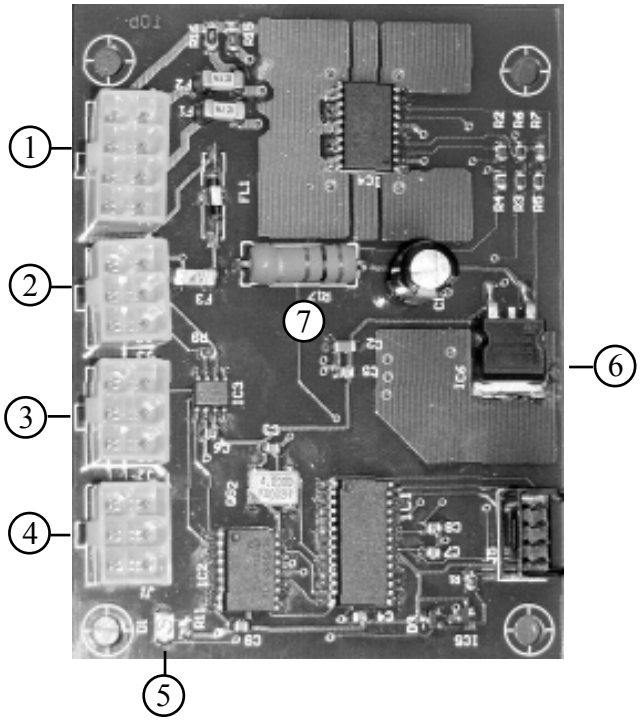

FUNCTIONS
- Controlling of the back lights.

The light card permits the automatic control of the back lights according to the operation of the traction motors. The card is controlled by the traction logic unit that receives the signals of the external motor (in a curve). The light card works thanks to the signals put out by the encoder, therefore the back lights are not operative when the machine stands still.

https://truckmanualshub.com/

CONNECTOR DESCRIPTION

5	1
6	2
7	3
8	4

Connector 1
It is a connector to 8 Pins used for controlling the lights.
PINS 1-5 are connected together = 24 Volt.
PINS 2-6 are connected together = output of the stop lights 0-24 Volt. It is a proportional value given that the voltage depends on the temperature of the lamp bulbs
PINS 3-7 are connected together = output of the reverse lights 0-24 Volt.
It is a proportional value given that the voltage depends on the temperature of the lamp bulbs
PINS 4 negative signal
PIN 8 24 Volt input for the converter 24-5 Volt located on the card.

4	1
5	2
6	3

Connector 2
It is a connector to 6 Pins.
PIN 1 CAN L
PIN 2 CAN H
PIN 3 GND
PIN 4 Not used
PIN 5 Out put 24 Volt
PIN 6 Not used

4	1
5	2
6	3

Connector 3
It is a connector to 6 Pins.
PIN 1 CAN L
PIN 2 CAN H
PIN 3 GND
PIN 4 Not used
PIN 5 Out put 24 Volt
PIN 6 Not used

4	1
5	2
6	3

Connector 4
It is a connector to 6 Pins.
PIN 1 CAN L
PIN 2 CAN H
PIN 3 GND
PIN 4 Not used
PIN 5 Out put 24 Volt
PIN 6 Not used

Led 5
shows that the light card is fed but is not receiving the CAN-BUS input

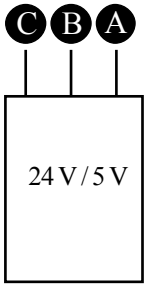

Converter 6
PIN A 24 Volt
PIN B GND
PIN C 5 Volt

Resistance 7
It is the input resistance. R17 = 100 Ohm 3 Watt.
The connectors 2-3-4 are connectors for the CAN-BUS and they can be inverted without problem

See wiring diagram

https://truckmanualshub.com/

I/O CARD

INPUT / OUTPUT CARD
The card is located on the left side of the truck under the footboard. controls and converts analogic signals to digital signals and vice versa

Connector J1 **(J38*)** for input of the brake oil tank LED, button for the programmed performance, button for the speed reduction.
Connector J2 not used
Connector J3 **(J5*)** to control the electric horn. The horn is electronic and this is the electric connection on the card:
- J3/1 command signal (B white cable) from Arm Card via CAN-BUS
- J3/2 negative (N black cable)

Connector J4 **(J34*)** for the pedals: accelerator pedal, brake pedal, parking brake lever, horn.
Connector J5 **(J135*)** CAN-BUS (light card) and feeding to 24V
Connector J6 **(J136*)** CAN-BUS (dashboard) and feeding to 24V
Connector J7 **(J1*)** for traction motors temperature sensors.
Connector J8 **(J98*)**(+BV) feeding for Mhyrio logic unit
Connector J10 **(J40*)** for the mechanic distributor (in this case the voltage on the micro is 5 volt).
Connector J13 **(J139*)** CAN-BUS signals and feeding to 48V for Mhyrio logic unit

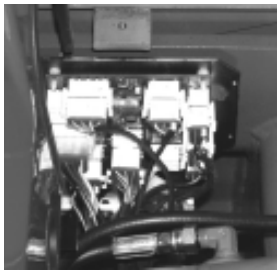

NOTE: (Jxxx*) WIRING DIAGRAM CONNECTORS

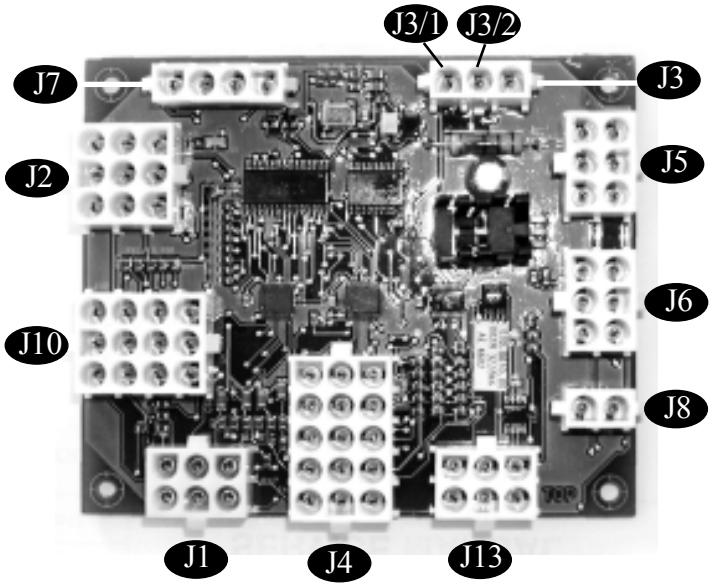

HORN ELECTRIC CONNECTION
(horn side)
The horn is electronic and needs a signal to work. It is continually supplied by the following cables: **A**, light blue, positive cable + 48 V ["+" on the horn] and **N** black cable negative ["-" on the horn]. The command signal on cable **B** white cable ["IN" on the horn] is a high signal, when the horn push button is pressed the signal goes to the negative and the horn begins to beep.

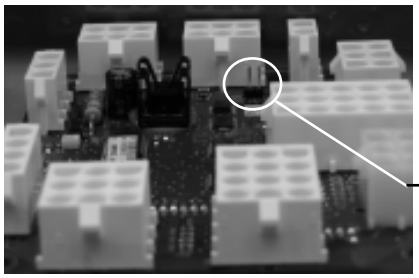

On the I/O card there is another resistance of pull up for the CAN BUS. It could be connected in case of disconnection of the dashboard. To perform this operation it is enough to connect the two free PINS circled in the picture by means of a brigde.

PINS for connecting the extra resistance for the CAN BUS

https://truckmanualshub.com/

MHYRIO CARD

It works to 48 V and it is located on the upper side of the truck over the electro control valve group. The Mhyrio card receives the digital inputs from the CAN and it converts them in analogic signals to control the solenoid valves with.

In the front it has three connectors:
- connector 1 is used for the console
- connector 2 is used for the CAN
- connector 3 is used to control the solenoid valves.

The feeding reaches the card through three cables:
N (black cable) negative (pin 3 connector 2)
M (brown cable) positive (pin 1 connector 2)
M (brown cable) positive (pin 2 connector 2)

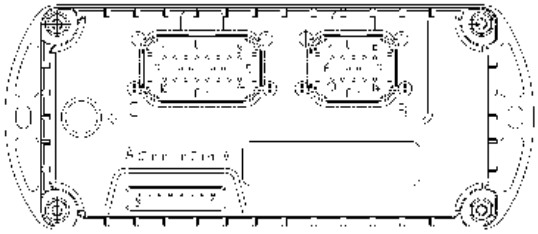

The cables for the CAN-BUS (it means for digital input) arrive to the same connector used for the feeding:

AN (light blu/black cable) — CAN H (high) (pin 13 connector 2)

HG (grey/yellow cable) — CAN L (low) (pin 4 connector 2)

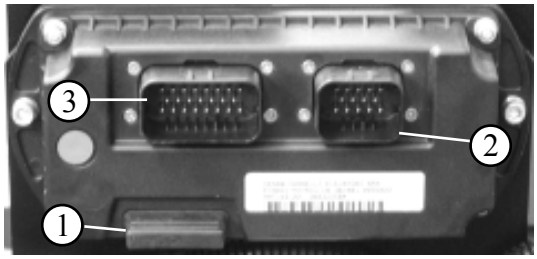

Voltage supplied to the ON-OFF valve coil ≅ battery voltage
Voltage supplied to the proportional valve coil ≅ 12 V

	COLORI	COLOURS	FARBEN	COULEURS	COLORES
C	arancio	orange	orange	orange	naranja
A	azzurro	blue	blau	bleu	azul
B	bianco	white	weiß	blanc	blanco
L	blu	dark blue	dunkelblau	bleu marine	azul intenso
G	giallo	yellow	gelb	jaune	amarillo
H	grigio	grey	grau	gris	gris
M	marrone	brown	braun	marron	castaño
N	nero	black	schwarz	noir	negro
S	rosa	pink	pink	rose	rosa
R	rosso	red	rot	rouge	rojo
V	verde	green	grün	vert	verde
Z	viola/porpora	purple	violett	violet	púrpura

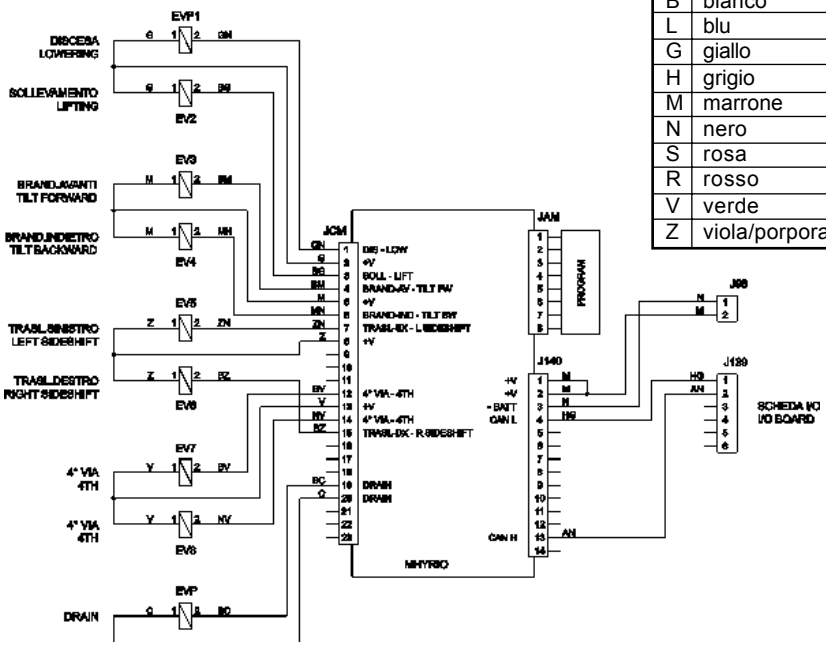

https://truckmanualshub.com/

POTENTIOMETER CONFIGURATION

ARM COMMAND (JOYSTICKS / FINGERTIPS VERSION)

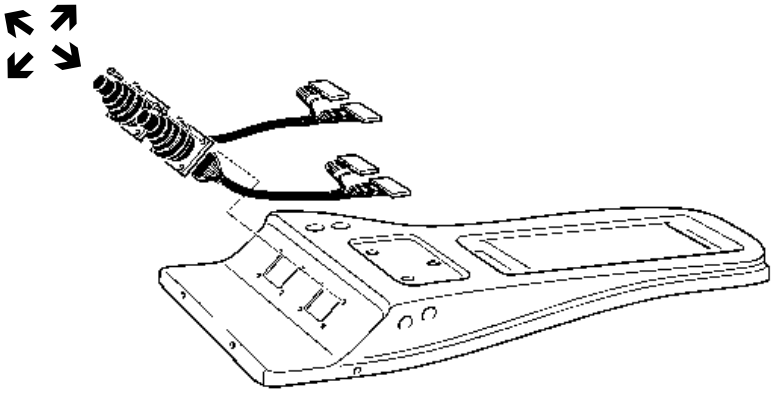

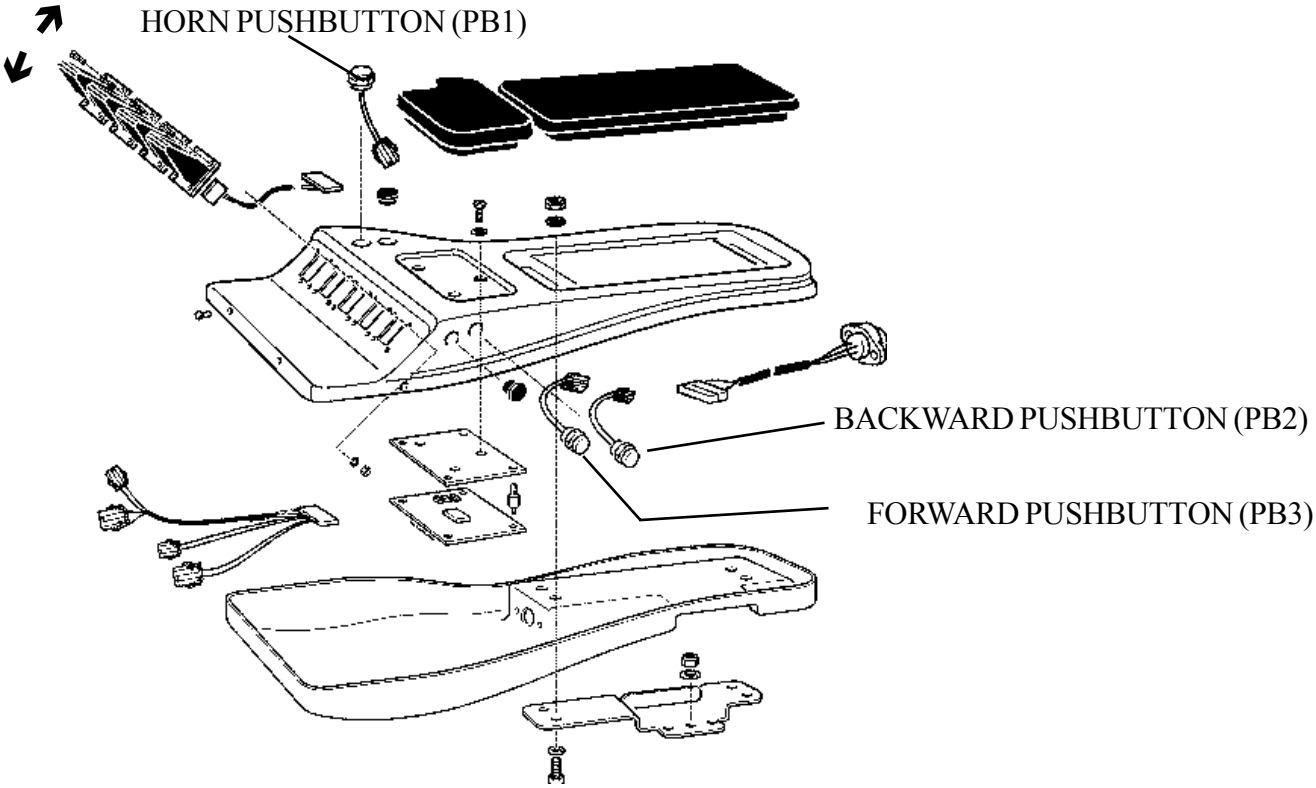

https://truckmanualshub.com/

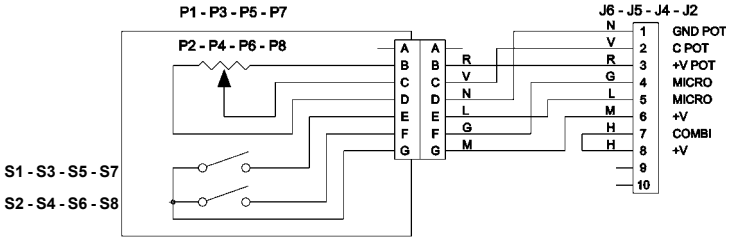

FINGERTIPS

RED : 5 V

GREEN : 0 ÷ 5(AT REST 2,5 V)

BLACK : 0 V

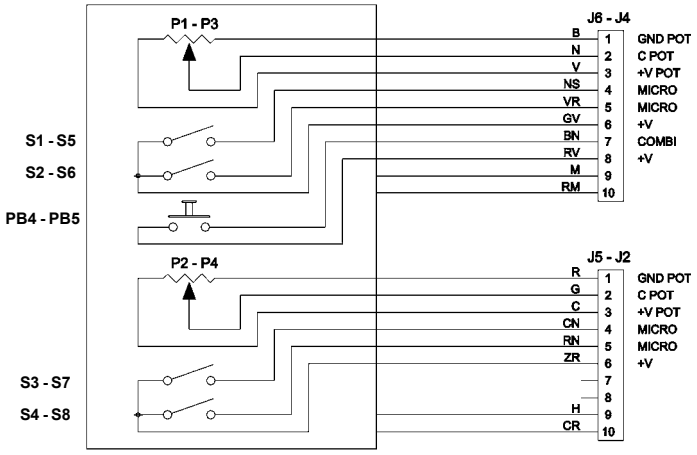

JOYSTICK

(FORWARD-BACKWARD MOV.)

ORANGE : 5 V

YELLOW : 0 ÷ 5 (AT REST 2,5 V)

RED : 0 V

JOYSTICK

(LEFT-RIGHT MOV.)

GREEN : 5 V

BLACK : 0 ÷ 5 (AT REST 2,5 V)

WHITE : 0 V

	COLORI	COLOURS	FARBEN	COULEURS	COLORES
C	arancio	orange	orange	orange	naranja
A	azzurro	blue	blau	bleu	azul
B	bianco	white	weiß	blanc	blanco
L	blu	dark blue	dunkelblau	bleu marine	azul intenso
G	giallo	yellow	gelb	jaune	amarillo
H	grigio	grey	grau	gris	gris
M	marrone	brown	braun	marron	castaño
N	nero	black	schwarz	noir	negro
S	rosa	pink	pink	rose	rosa
R	rosso	red	rot	rouge	rojo
V	verde	green	grün	vert	verde
Z	viola/porpora	purple	violett	violet	púrpura

https://truckmanualshub.com/

ACCELERATOR POTENTIOMETER CONFIGURATION

The test of the potentiometer can be carried out in two different ways:

Values optained by the console

Yellow : 1,6 V

Green : 0,6 ÷1,6 V with pedal pressed

Black : 0,6 V

Values optained by the multimeter

Yellow : 1,2 V

Green : 0,2 ÷1,2 V with pedal pressed

Black : 0,2 V

There is a difference between the values obtained in the two methods because, in case of voltage measurement, the console increases the real value of 0.4 volt and it is a default condition

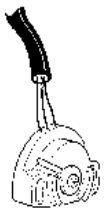

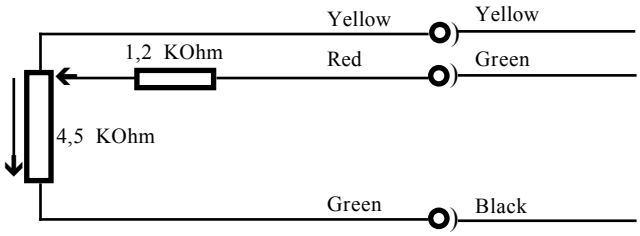

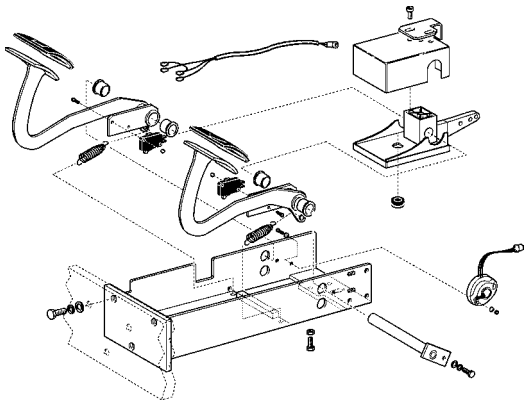

DOUBLE PEDAL VERSION

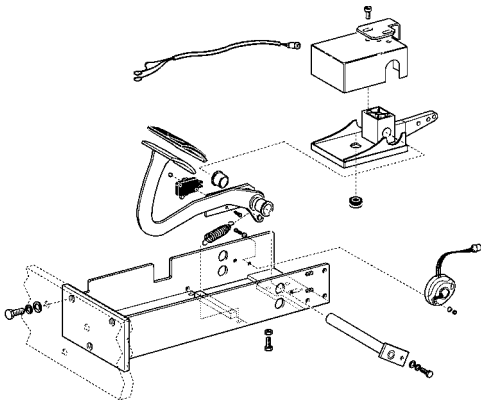

SINGLE PEDAL VERSION

https://truckmanualshub.com/

LIFTING POTENTIOMETER CONFIGURATION (CONTROL VALVE VERSION)

The test of the potentiometer can be carried out in two different ways:

Values optained by the console

137 : 5 V

135 : 1,5 ÷ 5 V with lifting lever pulled

136 : 1,5 V

Values optained by the multimeter

137 : 4,6 V

135 : 1,1 ÷ 4,6 V with lifting lever pulled

136 : 1,1 V

There is a difference between the values obtained in the two methods because, in case of voltage measurement, the console increases the real value of 0.4 volt and it is a default condition

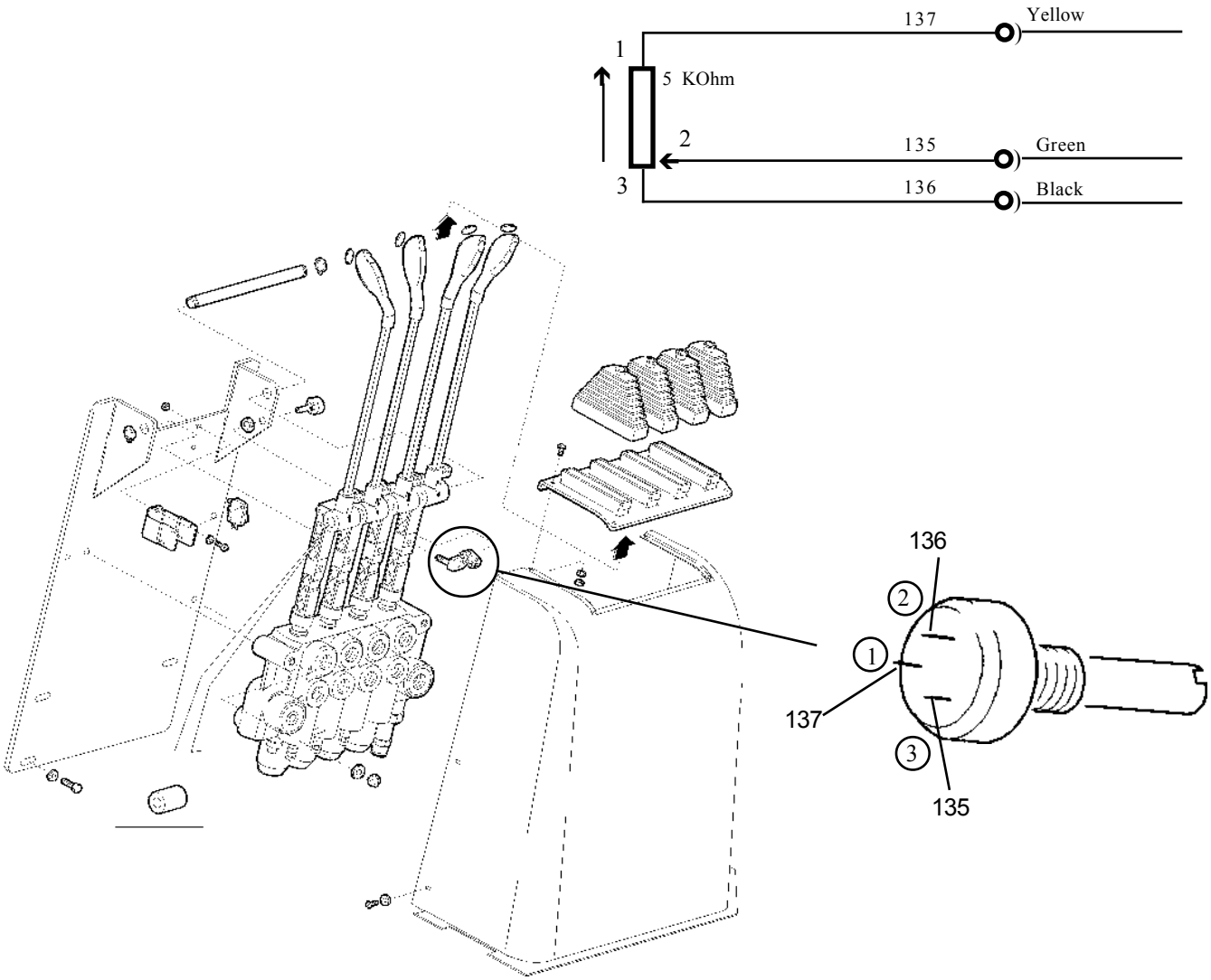

https://truckmanualshub.com/

CONSOLE FUNCTION

GENERAL DESCRIPTION

https://truckmanualshub.com/

CONSOLE FUNCTION GENERAL DESCRIPTION

HOUR METER
The hour meter appears in the second line of the display when the chopper is connected. It shows the real working hours.

PARAMETER CHANGE
The chopper parameters can be displayed and programmed via the keyboard, in real time and with operating machine, thereby making it possible to set the chopper easily.

TESTER
It makes it possible to display the state of the chopper analogue and digital values and thereby to have a useful tool for the analysis of chopper operation and external cables.

SAVE PARAMETER
It makes it possible to store all values relating to the parameters and the chopper hardware configuration into the console with a program which can be selected from the keyboard.

RESTORE PARAMETER
It makes it possible to program a chopper with the parameters contained in a program generated by a SAVE.

ALARMS
The console features the possibility to read the last five alarm messages stored in the chopper and displayed together with the time of occurrence, the number of times the alarm was sent and the temperature value at the time of the alarm.

PROGRAM VACC
It allows to program the accelerator max. stroke.

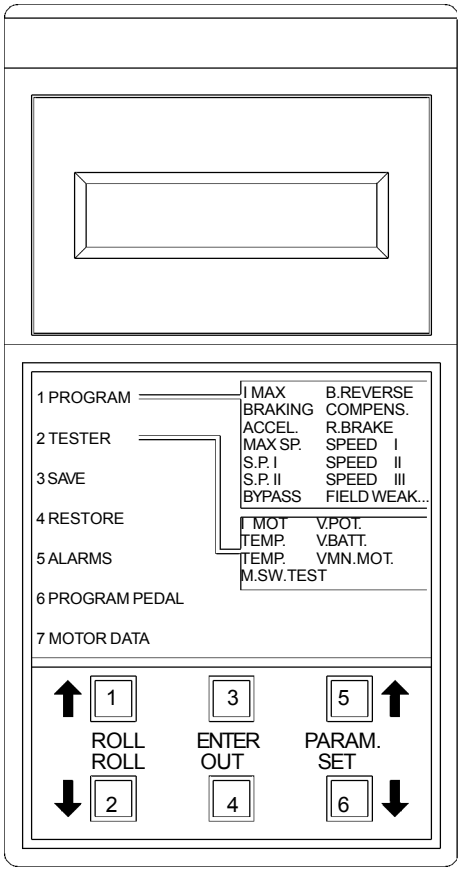

CONSOLE DESCRIPTION

KEYBOARD

Description of key functions:

ROLL 1 = Allows selection of an option or the next menu item

ROLL 2 = Allows selection of an option or the previous menu item

ENTER = Allow confirmation of selected options

OUT = Retains the current function

PARAM = Allows an increase in the parameters or selects the type of connected I/O

SET = Allows a reduction in the parameters or selects the type of connected I/O

https://truckmanualshub.com/

CONSOLE CONNECTION

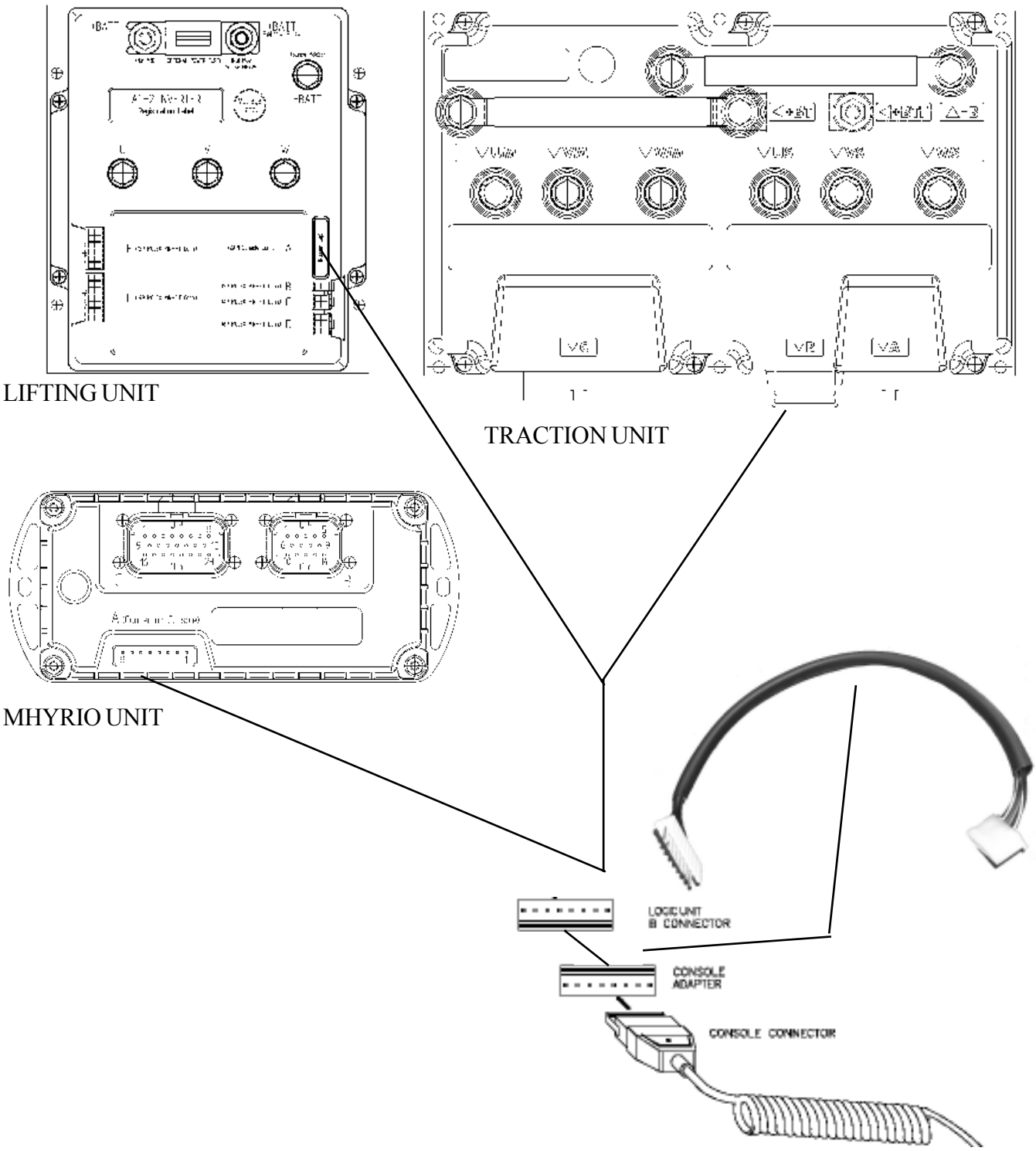

The connection has to be made with the machine at rest.

https://truckmanualshub.com/

PARAMETER CHANGE

DUAL AC2 MASTER TRACTION UNIT

ACCELER/DELAY	determines the acceleration ramp.
RELEASE BRAKING	controls the deceleration ramp when the travel pedal is released.
INVERSION BRAKING	controls the deceleration ramp when the direction switch is inverted during the travel.
PEDAL BRAKING	determines the deceleration ramp when the travel pedal is released and the brake pedal switch is closed.
SPEED LIMIT BRAKING	deceleration ramp when the pedal position is partly released, not completely.
BRAKE CUTBACK	determines the deceleration ramp when the speed reduction input becomes active and the motor slows down.
MAX SPEED FORWARD	determines the maximum speed in forward direction.
MAX SPEED BACKWARD	determines the maximum speed in backward direction.
CUTBACK SPEED 1	speed reduction when the cutback switch is active. Turtle function.
CUTBACK SPEED 2	speed reduction with brake pedal pressed.
CUTBACK SPEED 3	speed reduction enabled when the C10 signal is low.
CURVE CUT BACK	speed reduction in curve.
FREQUENCY CREEP	minimum speed when the forward or reverse switch is closed, but the accelerator is slightly pressed.
MAXIMUM CURRENT	this changes the maximum current of the inverter.
ACC. SMOOTH	this delays the acceleration ramp from 0 hz to “stop smooth” value.
INV. SMOOTH	this delays the deceleration ramp of the inversion from “stop smooth” value to 0 hz.
STOP SMOOTH	reference speed for the parameters ACC. SMOOTH and INV. SMOOTH
AUXILIARY TIME	time delay when an hydraulic steering function request is switched off.

https://truckmanualshub.com/

PARAMETER CHANGE

DUAL AC2 SLAVE TRACTION UNIT

NOT AVAILABLE.

https://truckmanualshub.com/

PARAMETER CHANGE

AC2 LIFTING UNIT

ACCELER/DELAY	acceleration ramp.
DECELER/DELAY	deceleration ramp.
MAX SPEED UP	determines the maximum lifting speed controlled by a potentiometer.
MIN SPEED UP	determines the minimum lifting speed controlled by a potentiometer when the lift enabling switch is closed.
CUTBACK SPEED	speed reduction when the cutback switch is active. (+V =E4; input E13) if E13 is open the Cutbackspeed is on, is the E13 is closed the Cutbackspeed is off.
CUTBACK SPEED 2	speed reduction when the cutback switch is active. (+V =E4; input E14); if E14 is open the Cutbackspeed is off, if E14 is closed the Cutbackspeed is on.
1ST SPEED FINE	tilt speed, fine regulation.
2ND SPEED FINE	side-shift speed, fine regulation.
3RD SPEED FINE	4thth lever speed, fine regulation.
4TH SPEED FINE	5thth lever speed, fine regulation.
AUX FUNCTION 1	pot. value increasing the motor RPM.
HYD SPEED FINE	hydro speed, fine regulation.
MAXIMUM CURRENT	maximum current of the inverter.
AUXILIARY TIME	time delay when a hydraulic steering function request is switched off.

https://truckmanualshub.com/

PARAMETER CHANGE

MHYRIO UNIT

MIN EVP	Min voltage on the draining solenoid valve
MAX EVP	Max voltage on the draining solenoid valve
MIN EVP1	Min. voltage on the lowering solenoid valve
MAX EVP1	Max voltage on the lowering solenoid valve
MIN EVP2	Min. voltage on the lifting solenoid valve
MAX EVP2	Max voltage on the lifting solenoid valve
MIN EVP3	Min voltage on the backward tilt solenoid valve
MAX EVP3	Max voltage on the backward tilt solenoid valve
MIN EVP4	Min voltage on the forward tilt solenoid valve
MAX EVP4	Max voltage on the forward tilt solenoid valve
MIN EVP5	Min voltage on the sideshift right solenoid valve
MAX EVP5	Max voltage on the sideshift right solenoid valve
MIN EVP6	Min voltage on the sideshift left solenoid valve
MAX EVP6	Max voltage on the sideshift left solenoid valve
MIN EVP7	Min voltage on the 4th way forward solenoid valve
MAX EVP7	Max voltage on the 4th way backward solenoid valve
MIN EVP8	Min voltage on the 5th way forward solenoid valve
MAX EVP8	Max voltage on the 5th way backward solenoid valve
EVP OPEN DELAY	Delay of the EVP in opening
EVP CLOSE DELAY	Delay of the EVP in closing
EVP1 OPEN DELAY	Delay of the EVP1 in opening
EVP1 CLOSE DELAY	Delay of the EVP1 in closing
EVP2 OPEN DELAY	Delay of the EVP2 in opening
EVP2 CLOSE DELAY	Delay of the EVP2 in closing
EVP3 OPEN DELAY	Delay of the EVP3 in opening
EVP3 CLOSE DELAY	Delay of the EVP3 in closing
EVP4 OPEN DELAY	Delay of the EVP4 in opening
EVP4 CLOSE DELAY	Delay of the EVP4 in closing
EVP5 OPEN DELAY	Delay of the EVP5 in opening
EVP5 CLOSE DELAY	Delay of the EVP5 in closing
EVP6 OPEN DELAY	Delay of the EVP6 in opening
EVP6 CLOSE DELAY	Delay of the EVP6 in closing
EVP7 OPEN DELAY	Delay of the EVP7 in opening
EVP7 CLOSE DELAY	Delay of the EVP7 in closing
EVP8 OPEN DELAY	Delay of the EVP8 in opening
EVP8 CLOSE DELAY	Delay of the EVP8 in closing

https://truckmanualshub.com/

PARAMETER CHANGE

DASHBOARD UNIT

HOURS COUNTER RUNNING/KEY:	key on / lifting unit working hours counter switch
DISPLAY ON/OFF:	displaied speed switch
SPEED RATIO 0-5 12:	speed calculation ratio

https://truckmanualshub.com/

TESTER

DUAL AC2 MASTER TRACTION UNIT

MOTOR VOLTAGE: voltage supplied to the motor by the inverter; it is expressed as a percentage of the full voltage (which depends on the battery voltage).

FREQUENCY: frequency of the voltage and current supplied to the motor.

ENCODER: motor speed, expressed in the same unit as the frequency; this information comes from the speed sensor.

SLIP VALUE: difference between the rotating field frequency and the motor shaft frequency (measured by the encoder)

CURRENT RMS: Root Mean Square value of the motor current.

TEMPERATURE: temperature measured on the aluminum heat sink holding the MOSFET devices.

TEMPERATURE #1: not used.

TEMPERATURE #2: not used.

ACCELERATOR: voltage of the accelerator potentiometer's wiper (CPOT). The voltage level is shown on the left hand side of the Console Display and the value in percentage is shown on the right hand side.

STEER ANGLE: indication of the angular displacement of the steered wheel.

BRAKE PEDAL POTI: not used.

INTERNAL WHEEL CUTBACK: indication of the speed reduction applied to the internal wheel; in other words, it shows the ratio of the two speeds.

SEAT SWITCH: state of the Seat Microswitch digital input.
ON / +VB* = active input, closed switch.
OFF / GND = non-active input, open switch.

FORWARD SWITCH: state of the Forward direction digital input FW.
ON / +VB* = active input, closed switch.
OFF / GND = non-active input, open switch.

BACKWARD SWITCH: state of the Reverse direction digital input BW.
ON / +VB* = active input, closed switch.
OFF / GND = non-active input, open switch.

ENABLE SWITCH: state of the Enable digital input:
ON / +VB*= active input, closed switch.
OFF / GND = non-active input, open switch.

BRAKE SWITCH: state of the Brake Pedal Microswitch.
ON / +VB* = active input, closed switch.
OFF / GND = non-active input, open switch.

CUTBACK SWITCH: state of the Speed Reduction Microswitch.
ON / GND = active input, opened switch.
OFF / +VB* = non-active input, closed switch.

EXCLUSIVE HYDRO: state of the exclusive hydro switch.
ON / +VB* = active input, closed switch.
OFF / GND = non-active input, open switch.

HAND BRAKE: state of the Handbrake Microswitch.
ON / GND = active input, opened switch.
OFF / +VB* = non-active input, closed switch.

VOLTAGE BOOSTER: voltage booster supplied to the motor in load condition; it is expressed as a percentage of the full voltage.

BATTERY VOLTAGE: level of battery voltage measured with the key switch ON.

BATTERY CHARGE: percentage of battery charge.

* = The console shows " + VB ", but the real voltage is +5V

https://truckmanualshub.com/

TESTER

DUAL AC2 SLAVE TRACTION UNIT

MOTOR VOLTAGE: voltage supplied to the motor by the inverter; it is expressed as a percentage of the full voltage (which depends on the battery voltage).

FREQUENCY: frequency of the voltage and current supplied to the motor.

ENCODER: speed of the motor, expressed in the same unit as the frequency; this information comes from the speed sensor.

SLIP VALUE: difference between the rotating field frequency and the motor shaft frequency (measured by the encoder)

CURRENT RMS: Root Mean Square value of the motor current.

TEMPERATURE: temperature measured on the aluminum heat sink holding the MOSFET devices.

SEAT SWITCH: state of the Seat Microswitch digital input.
ON / +VB* = active input, closed switch.
OFF / GND = non-active input, open switch.

FORWARD SWITCH: state of the Forward direction digital input FW.
ON / +VB* = active input, closed switch.
OFF / GND = non-active input, open switch.

BACKWARD SWITCH: state of the Reverse direction digital input BW.
ON / +VB* = active input, closed switch.
OFF / GND = non-active input, open switch.

ENABLE SWITCH: state of the Enable digital input:
ON / +VB* = active input, closed switch.
OFF / GND = non-active input, open switch.

VOLTAGE BOOSTER: voltage booster supplied to the motor in load condition; it is expressed as a percentage of the full voltage.

BATTERY VOLTAGE: level of battery voltage measured with the key switch ON.

* = The console shows “ + VB “, but the real voltage is +5V

https://truckmanualshub.com/

TESTER

AC2 LIFTING UNIT

MOTOR VOLTAGE:	voltage supplied to the motor by the inverter; it is expressed as a percentage of the full voltage (which depends on the battery voltage).
FREQUENCY:	frequency of the voltage and current supplied to the motor.
ENCODER:	speed of the motor, expressed in the same unit as the frequency; this information comes from the speed sensor.
SLIP VALUE:	difference between the rotating field frequency and the motor shaft frequency (measured by the encoder)
CURRENT RMS:	Root Mean Square value of the motor current.
TEMPERATURE:	temperature measured on the aluminum heat sink holding the MOSFET devices.
MOTOR TEMPERATURE:	temperature of the motor; if the option is programmed "None" it shows 0°.
SEAT SWITCH:	state of the Seat Microswitch digital input. ON / +VB* = active input, closed switch. OFF / GND = non-active input, open switch.
ACCELERATOR:	voltage of the accelerator potentiometer's wiper (CPOT). The voltage level is shown on the Left Hand Side of the Console Display and the value in percentage is shown on the Right Hand Side.
LIFTING SWITCH:	state of the lifting switch.
1 ST SPEED SWITCH:	state of the tilt switch of the pump (%).
2 ND SPEED SWITCH:	state of the side-shift switch of the pump (%).
3 RD SPEED SWITCH:	state of the 4th lever switch of the pump (%).
4 TH SPEED SWITCH:	state of the 5th speed switch of the pump (%).
HYDRO SPEED REQ.:	state of the hydro speed request of the pump.
CUTBACK SWITCH:	state of the Speed Reduction Microswitch. ON / GND = active input, opened switch. OFF / +VB* = non-active input, closed switch.
CUTBACK SWITCH 2:	state of the Speed Reduction Microswitch. ON / +VB* = active input, opened switch. OFF / GND = non-active input, closed switch.
VOLTAGE BOOSTER:	voltage booster supplied to the motor in load condition; it is expressed as a percentage of the full voltage.
BATTERY VOLTAGE:	level of battery voltage measured with the key switch ON.
COS FI:	cos φ (real time calculated) of the motor.
BATTERY CURRENT:	battery current (not measured but calculated).
BATTERY CHARGE:	percentage of battery charge.

* = The console shows " + VB ", but the real voltage is +5V

https://truckmanualshub.com/

TESTER

MHYRIO UNIT

BATTERY VOLTAGE: level of battery voltage measured with the key switch ON.

VALVES SUPPLY: level of voltage at the positive valve supply (0-VB).

CAN POT EVP: single proportional valve current setpoint, received by the canbus (% of the current supplied to the valve).

CAN POT GROUP 1: group 1 proportional valves current setpoint, received by canbus (0-100 % of the current supplied to the lifting, proportional % for the lowering valve).

CAN POT GROUP 2: group 2 proportional valves current setpoint, received by the canbus (0-100 % of the current supplied to the tilt box)

CAN POT GROUP 3: group 3 proportional valves current setpoint, received by the canbus (0-100 % of the current supplied to the side-shift box)

CAN POT GROUP 4: group 4 proportional valves current setpoint, received by the canbus (0-100 % of the current supplied to the 4° Way box)

INPUT 0: state of DIGITAL INPUT 0:
ON / +VB : active input, closed switch
OFF / COND : non-active input, open switch

INPUT 1: state of DIGITAL INPUT 1:
ON / +VB : active input, closed switch
OFF / COND : non-active input, open switch

INPUT 2: state of DIGITAL INPUT 2:
ON / +VB : active input, closed switch
OFF / COND : non-active input, open switch

ANALOG INPUT 1: voltage of the analog input.

not used

* : **ON= active when the switch is closed (+ BATT)**
OFF= not active when the switch is opened (GND)

https://truckmanualshub.com/

TESTER

MHYRIO UNIT

NOT AVAILABLE.

https://truckmanualshub.com/

TESTER

DASHBOARD UNIT

NOT AVAILABLE.

https://truckmanualshub.com/

ALARMS FUNCTIONS

DUAL AC2 TRACTION MASTER UNIT

CODE	*ALARM*	*DESCRIPTION*
1	WATCH - DOG	It is a self-diagnostic test within the logic between the Master and Slave µcontrollers. This alarm could also be caused by the canbus malfunctioning or data transmission interferences.Therefore, before replacing the Dual AC2 unit check the correct canbus functioning and the general turck insulation.
2	EEPROM KO	Fault in the area of memory in which the adjustment parameters are stored; this alarm inhibits the truck operation, but the controller will use default parameters. If the defect persists when the key is switched OFF and ON again, replace the logic. If the alarm disappears, remember that the parameters previously stored have been deleted and replaced by the default values (see adjustin tables).
3	LOGIC FAILURE #3	Logic defect. Replace the traction unit.
4	LOGIC FAILURE #2	Fault in the hardware section of the logic boardwhich manages the phase voltage feedback. Check the 3 power cables connected to the right traction motor. If the fault is not caused by external reasons, replace the traction unit.
5	LOGIC FAILURE #1	This alarm signals that the interruption of protection against undervoltage / overvoltage has been triggered. The possible reasons are: a. Real battery undervoltage / overvoltage, or voltage loss after tht ignition key or after the battery connector b. Fault in the hardware section of the logic board which controls the overvoltage protection. Logic defect. Replace the traction unit. c. The alarm appears also when one or more phases of the right traction motor doesn't present a correct insulation. Check the motor insulation (with deconnected battery): it must be higher than 1 Mohm. Otherwise check the insulation of the power cables to the motor.
6	VMN LOW	Failure in the VMN test. This test starts when the ignition key is turned ON. The alarm appears if there is a creepage on one or more phases; check the connections of the 3 power cables from the Master unit to the right traction motor and the cables condition also. In order to point out if the fault is produced by an internal or external cause invert the connection of the traction motors. It means Slave to right motor and Master to left motor. If the problem jumps on the Slave it means that the right traction motor is demaged, otherwise replace the traction unit.
7	VMN HIGH	Failure in the VMN test. This test starts when the ignition key is turned on. The alarm appears if one or more pover cables are not connected; check the connections of the 3 power cables from the Master unit to the right traction motor and the cables condition also. In order to point out if the fault is produced by an internal or external cause invert the connection of the traction motors. It means Slave to right motor and Master to left motor. If the problem jumps on the Slave it means that the right traction motor is demaged, otherwise replace the traction unit
8	CONTACTOR OPEN	Failure on the contactor driver. - Check main contactors coils and relevant wirings.
9	STBY I HIGH	Failure on the current sensor. - Replace the traction unit.

https://truckmanualshub.com/

CODE	*ALARM*	*DESCRIPTION*
10	CAPACITOR CHARGE	When the key is switch ON, the inverter tries to charge the capacitor through a power resistance, and check if the capitor are charged within a timout. If they do not charge, an alarm is signalled; the main contactor is not closed. - Check the negative connection. - Check voltage in the input of the key. Battery voltage must be present. - Execute a short circuit between the key terminals. - Replace the traction unit.

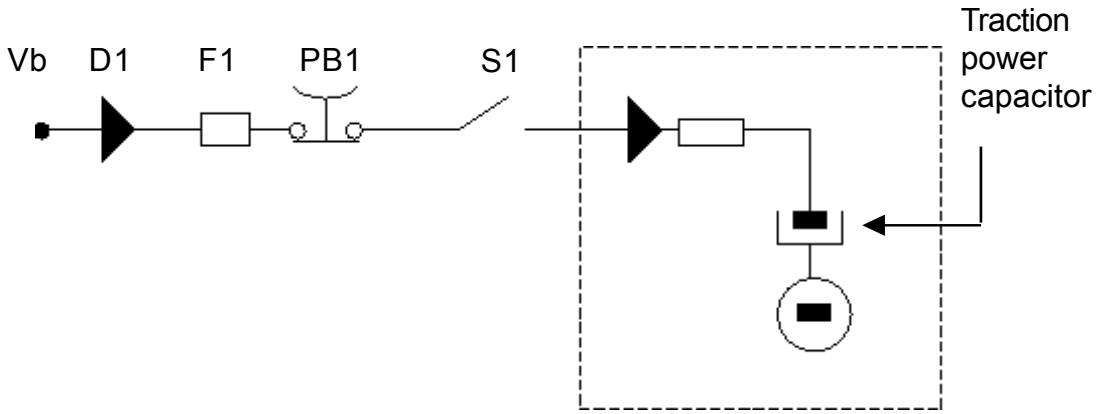

11	HIGH TEMPERATURE	Master or Slave or both temperatures are higher than 75°C. The maximum current is reduced proportionally to the temperature increase. At 100°C the max current of both inverters is reduced to zero. If the alarm is signalled when the controller is cold: - Replace the traction unit.
12	MOTOR TEMPERATURE	This warning is signalled if the sensor of the right motor is opened (digital sensor) - identify the on wiring diagram the connector J1 (J7 on I/O card): - If between the positive pin (1) and negative pin (2) there is 5V = the sensor is open - If between the positive pin (1) and negative pin (2) there is 0V = the sensor is closed If it occurs when the motor is cold, check: a: the sensor is closed b: between the positive pin (1) and negative pin (2) of the connector J1 (J7 on I/O card) there is 0V - if "a" and "b" conditions take place replace the logic unit . - 5V must be present on the positive pin (1) and negative pin (2) in the I/O card connector J7 (with the wiring diagram J1 connector disconnected). In the opposite case, replace the I/O card.

https://truckmanualshub.com/

CODE	*ALARM*	*DESCRIPTION*
13	ENCODER ERROR	Encoder failure. This alarm indicates that the encoder information is not correct or is not present. The encoder transmits signals only when the motor is running. The alarm is detected by the logics when it exceeds 20Hz. Therefore, if an error signal appears on the dashboard and the operator uses the reset key with the machine stopped, the alarm disappears - however, it remains stored in the logic. If the alarm signal starts before reaching 20Hz, the problem can be attributed to a possible wrong insulation of a power cable on the frame. without the encoder correct signals, the machine remains still or moves very slowly. To determine whether the problem is to be attributed to the encoder or to the logic,proceed as follow. Set the SLIP CONTROL on OFF and speeding up slowly. Please note that the engine speed increase does not necessary mean that the problem is linked to the encoder. Any of the following components may have a fault: - The logic internal circuit - The encoder - The wiring You may use a digital or analogue multemeter to determine where the problem is located.

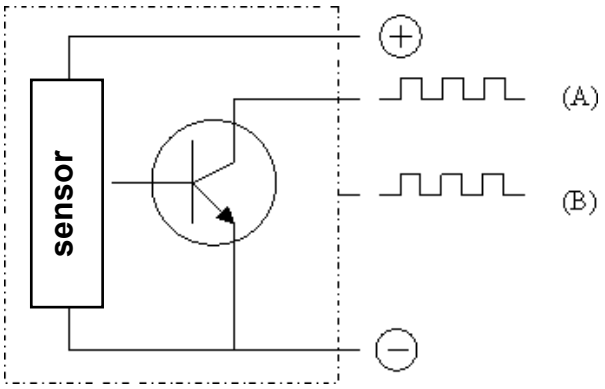

Speed sensor basic electric diagram.
The figure shows only one signal (A).
The encoders used have two equal signals, with a phase difference of 90°(A-B).

1. Connect the multemeter positive point (red) to the encoder positive terminal.
2. Connect the multemeter COM point (black) to the encoder signal (A).

According to the engine position, the following values will be displayed:
low signal: 0.5-1.5 Volt
high signal: 10.5-11.5 Volt
Intermediate values cannot be read as the motor is stopped.

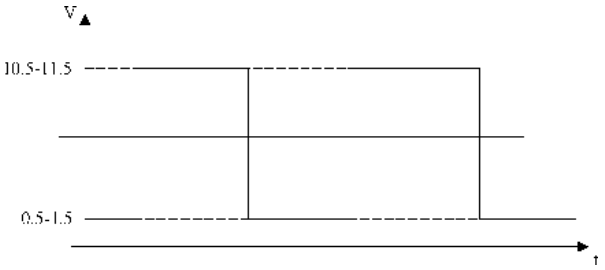

If the motor is running, the multemeter will automatically read the Mv (medium value)
Mv= 5.5-6.5 Volt
Carrying out this test directly on the logic connector, you can determine if the signals are good (see above-mentioned description) or if the channels are open or in short circuit

If the signals are good, the problem should be attributed to the electronic control.

In the contrary case repeat the test directly on the encoder connector. If the problem persists to replace the encoder.

https://truckmanualshub.com/

CODE	*ALARM*	*DESCRIPTION*
14	THERMIC SENS KO	The values indicated by the temperature sensor of the inverter are always checked and if they are out of range this warning appears. - Replace the logic unit.
15	SAFETY	Replace the logic unit.
16	CAN BUS KO	Comunication failure between the logic units: traction (Master & Slave), lifting, Mhyrio and all the cards. The alarm appears if: - CAN H and / or CAN L signals deconnected - there is no comunication from one logic unit. If the problem starts from one card the system recognizes in which one: CAN BUS KO 0A : I/O card CAN BUS KO 05 : Lifting logic unit CAN BUS KO 04 : Slave logic unit CAN BUS KO : Master logic unit (no suffix after the alarm message) - Before replacing any logic unit it is suggested a preliminary check of the CAN BUS connections. Using the console, through connection numbersand selecting the TESTER function, try to carry out a link with all the junction knots toward the different logic units. Verify the links by, at least, one of the signals from the field, i.e. microswitches, potentiometers. Where you don't reach the link, there is a line interruption.
17	WAITING FOR NODE	Time lag fault on the CAN BUS comunication. The Master logic unit detects wich logic unit has generated the problem #4 The Master logic unit receives the informations caming from the Slave logic unitwith a time lag fault. The fault can be caused by - interference on the can bus. Check the CAN-BUS comunication. - broken logic. Replace the traction logic unit. #5 The Master logic unit receives the informations caming from the Lifting logic unit with a time lag fault. The fault can be caused by - interference on the can bus. Check the CAN-BUS comunication. - false contact. Check the connections of CAN H and CAN L wires. - broken logic. Replace the lifting logic unit. #9 The Master logic unit receives the informations caming from the Mhyrio logic unit with a time lag fault. The fault can be caused by - interference on the CAN-BUS. Check the CAN-BUS comunication. - false contact. Check the connections of CAN H and CAN L wires. - broken logic. Replace the Mhyrio logic unit.
18	AUX OUTPUT KO	Failure on the contactor driver. - Replace the traction unit.
19	DRIVER SHORTED	Failure on the contactor driver. Check the main contactors coils and relevant wirings. If the failure is not due to external causes, replace the traction logic unit.
20	CONTACTOR DRIVER	Failure on the contactor driver. - Replace the traction unit.
21	COIL SHORTED	Failure on the contactor driver. Check the main contactors coils and relevant wirings. Control that there are no short-circuits in the wiring and that the coil resistance value is correct. If the failure is not due to external causes replace the logic unit.

https://truckmanualshub.com/

CODE	*ALARM*	*DESCRIPTION*
22	VACC NOT OK	Failure on the acceleration potentiometer signal at rest. The alarm points out that the voltage value detected on the accelerator potentiometer is 1Volt higher than the least value programmed with the Vacc function. Check: - The traction potentiometer (it could be damaged or not correctly calibrated) - The traction potentiometer wiring. - Carry out the Vacc setting again.
23	INCORRECT START	replace the traction logic unit.
24	PEDAL WIRE KO	Not used
25	WRONG BATTERY	When the key is turned ON, the controller checks the battery voltage and compares it with the "SET BATTERY" parameter setting. If the actual value is 20% higher or lower than the nominal value, there is a fault. Replace the battery with a correct one.
26	REMOTE IMPUT	incorrect starting procedure.
28	STEER SENSOR KO	This alarm signals that the steering potentiometer is out of range. There is a fault in the following conditions: - the "Set steer 0 pos" (straight wheels programmation) parameter is wrong (lower than "Set steer min" or higher than "Set steer max"). - the feedback signal of the steering potentiometer is outside the window defined by the "Set steer min" and the "Set steer max" parameters. In the first case, repeat the steering potentiometer acquisition. In the second case, check the steering potentiometer and its wiring again. In case, repeat once again the steering potentiometer acquisition .
29	FORW + BACK	Incorrect sequce by starting. Check: - Microswitch for forward/backward directions and relevant wires. - Microswitch for parking brake and relevant wires.
1A	SLAVE KO	Failure on the slave module. - Replace the traction unit.
1C	BATTERY_LOW	Discharged battery. If the "battery check" option is ON, a battery discharge algorithm is carried out. When the charge level is 10% , this alarm is ignalled and the current is reduced to the half of the programmed level.
2A	CHOPPER NOT CONF.	The Dual AC2 traction unit has an erroneous configuration. Using the programming console it is possible to set the unit correctly according to the truck configuration: (0) double pedal version; (1) manual inversor version; (2) with inversor on the armrest. (3)arm comand + direction selector on the steering column
1E	CONTACTOR CLOSED	Failure on the contactor driver. Check the main contactors coils and the relevant wirings.
2C	GAIN ACQUISITION	This warning communicates that the logic is in phase of input acquisition. In this phase the logic doesn't start.
2E	HANDBRAKE	Failure on parking brake. Check: the parking brake microswitch and the relevant cables.

https://truckmanualshub.com/

DUAL AC2 TRACTION SLAVE UNIT

CODE	*ALARM*	*DESCRIPTION*
61	WATCH - DOG	It is a self-diagnostic test within the logic between the Master and Slave µcontrollers. This alarm could also be caused by the canbus malfunctioning or data transmission interferences.Therefore, before replacing the Dual AC2 unit check the correct canbus functioning and the general turck insulation.
62	EEPROM KO	Fault in the area of memory in which the adjustment parameters are stored; this alarm inhibits the truck operation, but the controller will use default parameters. If the defect persists when the key is switched OFF and ON again, replace the logic. If the alarm disappears, remember that the parameters previously stored have been deleted and replaced by the default values (see adjusting tables).
63	LOGIC FAILURE #3	Logic defect. Replace the traction unit.
64	LOGIC FAILURE #2	Fault in the hardware section of the logic boardwhich manages the phase voltage feedback. Check the power cables connected to the left traction motor. If the fault is not caused by external reasons, replace the Dual AC2 traction unit.
65	LOGIC FAILURE #1	This alarm signals that the interruption of protection against undervoltage / overvoltage has been triggered. The possible reasons are: a. Real battery undervoltage / overvoltage, or voltage loss after tht ignition key or after the battery connector b. Fault in the hardware section of the logic board which controls the overvoltage protection. Logic defect. Replace the traction unit. c. The alarm appears also when one or more phases of the left traction motor doesn't present a correct insulation. Check the motor insulation (with deconnected battery): it must be higher than 1 Mohm. Otherwise check the power cables insulation to the motor.
66	VMN LOW	Failure in the VMN test. This test starts when the ignition key is turned ON. The alarm appears if there is a creepage on one or more phases; check the connections of the 3 power cables from the Slave unit to the left traction motor and the cables condition also. In order to point out if the fault is produced by an internal or external cause invert the connection of the traction motors. It means Slave to right motor and Master to left motor. If the problem jumps on the Master it means that the left traction motor is demaged, otherwise replace the traction unit.
67	VMN HIGH	Failure in the VMN test. This test starts when the ignition key is turned on. The alarm appears if one or more pover cables are not connected; check the connections of the 3 power cables from the Slave unit to the left traction motor and the cables condition also. In order to point out if the fault is produced by an internal or external cause invert the connection of the traction motors. It means Slave to right motor and Master to left motor. If the problem jumps on the Slave it means that the right traction motor is demaged, otherwise replace the traction unit.
68	CONTACTOR OPEN	Failure on the contactor driver. - Check main contactor coil and relevant wirings.
69	STBY I HIGH	Failure on the current sensor. - Replace the traction unit.

https://truckmanualshub.com/

CODE	*ALARM*	*DESCRIPTION*
70	CAPACITOR CHARGE	When the key is switch ON, the inverter tries to charge the capacitor through a power resistance, and check if the capitor are charged within a timout. If they do not charge, an alarm is signalled; the main contactor is not closed. - Check the negative connection. - Check voltage in the input of the key. Battery voltage must be present. - Execute a short circuit between the key terminals. - Replace the traction unit.

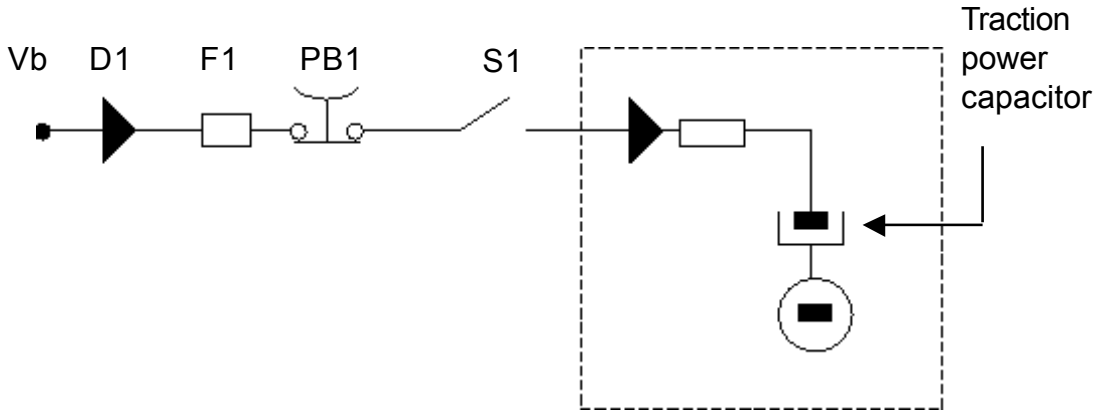

71	HIGH TEMPERATURE	Master or Slave or both temperatures are higher than 75°C. The maximum current is reduced proportionally to the temperature increase. At 100°C the max current of both inverters is reduced to zero. If the alarm is signalled when the controller is cold: - Replace the traction unit.
72	MOTOR TEMPERATURE	This warning is signalled if the sensor of the right motor is opened (digital sensor) - identify the on wiring diagram the connector J1 (J7 on I/O card): - If between the positive pin (3) and negative pin (4) there is 5V = the sensor is open - If between the positive pin (3) and negative pin (4) there is 0V = the sensor is closed If it occurs when the motor is cold, check: a: the sensor is closed b: between the positive pin (3) and negative pin (4) of the connector J1 (J7 on I/O card) there is 0V - if "a" and "b" conditions take place replace the logic unit . - 5V must be present on the positive pin (1) and negative pin (2) in the I/O card connector J7 (with the wiring diagram J1 connector disconnected). In the opposite case, replace the I/O card.

https://truckmanualshub.com/

CODE	*ALARM*	*DESCRIPTION*
73	ENCODER ERROR	Encoder failure. This alarm indicates that the encoder information is not correct or is not present. The encoder transmits signals only when the motor is running. The alarm is detected by the logics when it exceeds 20Hz. Therefore, if an error signal appears on the dashboard and the operator uses the reset key with the machine stopped, the alarm disappears - however, it remains stored in the logic. If the alarm signal starts before reaching 20Hz, the problem can be attributed to a possible wrong insulation of a power cable on the frame. without the encoder correct signals, the machine remains still or moves very slowly. To determine whether the problem is to be attributed to the encoder or to the logic,proceed as follow. Set the SLIP CONTROL on OFF and speeding up slowly. Please note that the engine speed increase does not necessary mean that the problem is linked to the encoder. Any of the following components may have a fault: - The logic internal circuit - The encoder - The wiring You may use a digital or analogue multemeter to determine where the problem is located.

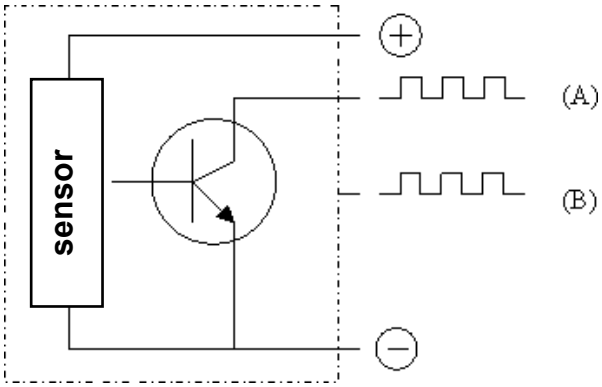

Speed sensor basic electric diagram.
The figure shows only one signal (A).
The encoders used have two equal signals, with a phase difference of 90°(A-B).

1. Connect the multemeter positive point (red) to the encoder positive terminal.
2. Connect the multemeter COM point (black) to the encoder signal (A).

According to the engine position, the following values will be displayed:
low signal: 0.5-1.5 Volt
high signal: 10.5-11.5 Volt
Intermediate values cannot be read as the motor is stopped.

If the motor is running, the multemeter will automatically read the Mv (medium value)
Mv= 5.5-6.5 Volt
Carrying out this test directly on the logic connector, you can determine if the signals are good (see above-mentioned description) or if the channels are open or in short circuit

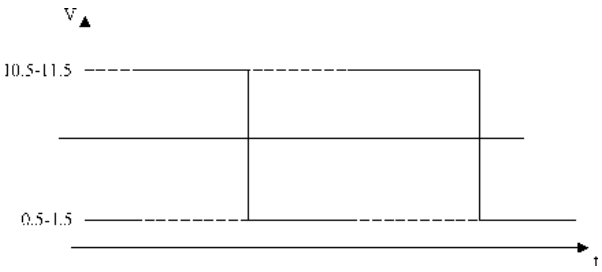

If the signals are good, the problem should be attributed to the electronic control.

In the contrary case repeat the test directly on the encoder connector. If the problem persists to replace the encoder.

https://truckmanualshub.com/

CODE	*ALARM*	*DESCRIPTION*
74	THERMIC SENS KO	The values indicated by the temperature sensor of the inverter are always checked and if they are out of range this warning appears. - Replace the logic unit.
75	SAFETY	Replace the logic unit.
76	CAN BUS KO	Comunication failure between the logic units: traction (Master & Slave), lifting, Mhyrio and all the cards. The alarm appears if: - CAN H and / or CAN L signals deconnected - there is no comunication from one logic unit. If the problem starts from one card the system recognizes in which one: CAN BUS KO 0A : I/O card CAN BUS KO 05 : Lifting logic unit CAN BUS KO 03 : Master logic unit CAN BUS KO : Slave logic unit (no suffix after the alarm message) - Before replacing any logic unit it is suggested a preliminary check of the CAN BUS connections. Using the console, through connection numbersand selecting the TESTER function, try to carry out a link with all the junction knots toward the different logic units. Verify the links by, at least, one of the signals from the field, i.e. microswitches, potentiometers. Where you don't reach the link, there is a line interruption.
77	WAITING FOR NODE	Time lag fault on the CAN BUS comunication. The Slavelogic unit detects wich logic unit has generated the problem #4 The Slave logic unit receives the informations caming from the Master logic unitwith a time lag fault. The fault can be caused by - interference on the can bus. Check the CAN-BUS comunication. - broken logic. Replace the traction logic unit. #5 The Slave logic unit receives the informations caming from the Lifting logic unit with a time lag fault. The fault can be caused by - interference on the can bus. Check the CAN-BUS comunication. - false contact. Check the connections of CAN H and CAN L wires. - broken logic. Replace the lifting logic unit. #9 The Slave logic unit receives the informations caming from the Mhyrio logic unit with a time lag fault. The fault can be caused by - interference on the CAN-BUS. Check the CAN-BUS comunication. - false contact. Check the connections of CAN H and CAN L wires. - broken logic. Replace the Mhyrio logic unit.
78	AUX OUTPUT KO	Failure on the contactor driver. - Replace the traction unit.
79	DRIVER SHORTED	Failure on the contactor driver. Check the main contactors coils and relevant wirings. If the failure is not due to external causes, replace the traction logic unit.
80	CONTACTOR DRIVER	Failure on the contactor driver. - Replace the traction unit.
81	COIL SHORTED	Failure on the contactor driver. Check the main contactors coils and relevant wirings. Control that there are no short-circuits in the wiring and that the coil resistance value is correct. If the failure is not due to external causes replace the logic unit.
82	VACC NOT OK	Not used.

https://truckmanualshub.com/

CODE	*ALARM*	*DESCRIPTION*
84	PEDAL WIRE KO	Failure on the acceleration potentiometer signal at rest. This alarm appears when there is an interruption on the potentiometer positive (PPOT) or the negative (NPOT). Check: - Traction potentiometer (could be damaged) - Traction potentiometer wiring.
85	WRONG BATTERY	When the key is turned ON, the controller checks the battery voltage and compares it with the "SET BATTERY" parameter setting. If the actual value is 20% higher or lower than the nominal value, there is a fault. Replace the battery with a correct one.
89		Not used.
7C		Not used.
7A	MASTER KO	Failure on the Master module. Replace the Dual AC2 traction unit.
8E		Not used.
8A		Not used.
8C	GAIN ACQUISITION	This warning communicates that the logic is in phase of input acquisition. In this phase the logic doesn't start.

AC2 LIFTING UNIT

31	WATCH - DOG	It is a self-diagnostic test of logic lifting µcontroller . This alarm could also be caused by the canbus malfunctioning or data transmission interferences.Therefore, before replacing the AC2 lifting unit check the correct canbus functioning and the general turck insulation.
32	EEPROM KO	Fault in the area of memory in which the adjustment parameters are stored; this alarm inhibits the truck operation, but the controller will use default parameters. If the defect persists when the key is switched OFF and ON again, replace the logic. If the alarm disappears, remember that the parameters previously stored have been deleted and replaced by the default values (see adjustin tables).
33	LOGIC FAILURE #3	Logic defect. Replace the lifting unit.
34	LOGIC FAILURE #2	Fault in the hardware section of the logic boardwhich manages the phase voltage feedback. Check the 3 power cables connected to the liftilg motor. If the fault is not caused by external reasons, replace the traction unit.
35	LOGIC FAILURE #1	This alarm signals that the interruption of protection against undervoltage / overvoltage has been triggered. The possible reasons are: a. Real battery undervoltage / overvoltage, or voltage loss after tht ignition key or after the battery connector b. Fault in the hardware section of the logic board which controls the overvoltage protection. Logic defect. Replace the lifting unit. c. The alarm appears also when one or more phases of the lifting motor doesn't present a correct insulation. Check the motor insulation(with deconnected battery): it must be higher than 1 Mohm. Otherwise check the insulation of the power cables to the motor.
36	VMN LOW	Failure in the VMN test. This test starts when the ignition key is turned ON. The alarm appears if there is a creepage on one or more phases; check the connections of the 3 power cables from the Lifting unit to the lifting motor and the cables condition also. In order to point out if the fault is produced by an internal or external cause connect the lifting motor.to one of the traction logic units: Slave or Master. If the problem jumps on the traction unit connected it means that the lifting motor is demaged, otherwise replace the lifting unit.

https://truckmanualshub.com/

CODE	*ALARM*	*DESCRIPTION*
37	VMN HIGH	Failure in the VMN test. This test starts when the ignition key is turned on. The alarm appears if one or more pover cables are not connected; check the connections of the 3 power cables from the Lifting unit to the lifting motor and the cables condition also. In order to point out if the fault is produced by an internal or external cause connect the lifting motor.to one of the traction logic units: Slave or Master. If the problem jumps on the traction unit connected it means that the lifting motor is demaged, otherwise replace the lifting unit.
38	CONTACTOR OPEN	Failure on the contactor driver. - Check main contactors coils and relevant wirings.
39	STBY I HIGH	Failure on the current sensor. - Replace the lifting unit.
40	CAPACITOR CHARGE	When the key is switch ON, the inverter tries to charge the capacitor through a power resistance, and check if the capitor are charged within a timout. If they do not charge, an alarm is signalled; the main contactor is not closed. - Check the negative connection. - Check voltage in the input of the key. Battery voltage must be present. - Execute a short circuit between the key terminals. - Replace the lifting unit.

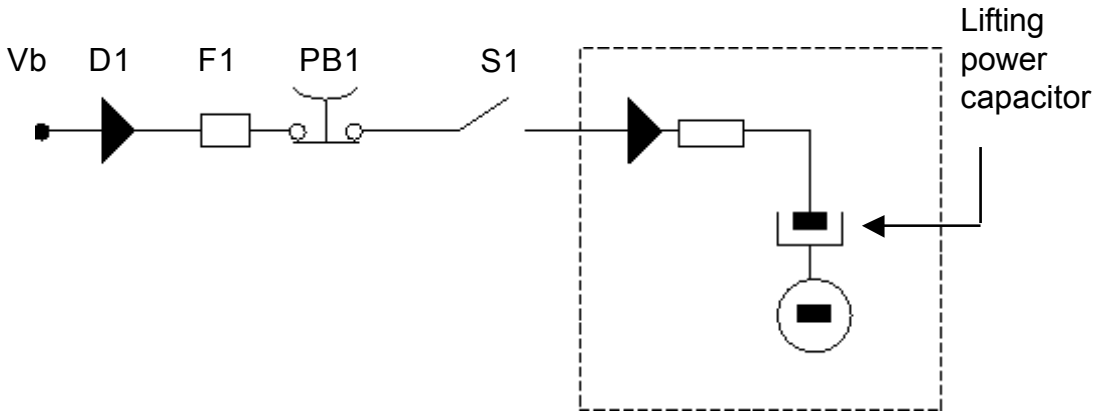

41	HIGH TEMPERATURE	Logic unit temperature is higher than 75°C. The maximum current is reduced proportionally to the temperature increase. The logic unit stops at 100°C. If the alarm is signalled when the chopper is cold replace the lifting unit.
42	MOTOR TEMPERATURE	This warning is signalled if the sensor of the right motor is opened (digital sensor). If it occurs when the motor is cold, check - the sensor (it should be closed) and the relevant wiring loop. - If everything is OK replace the logic unit.

https://truckmanualshub.com/

CODE	*ALARM*	*DESCRIPTION*
43	ENCODER ERROR	Encoder failure. This alarm indicates that the encoder information is not correct or is not present. The encoder transmits signals only when the motor is running. The alarm is detected by the logics when it exceeds 20Hz. Therefore, if an error signal appears on the dashboard and the operator uses the reset key with the machine stopped, the alarm disappears - however, it remains stored in the logic. If the alarm signal starts before reaching 20Hz, the problem can be attributed to a possible wrong insulation of a power cable on the frame. without the encoder correct signals, the machine remains still or moves very slowly. To determine whether the problem is to be attributed to the encoder or to the logic,proceed as follow. Set the SLIP CONTROL on OFF and speeding up slowly. Please note that the engine speed increase does not necessary mean that the problem is linked to the encoder. Any of the following components may have a fault: - The logic internal circuit - The encoder - The wiring You may use a digital or analogue multemeter to determine where the problem is located.

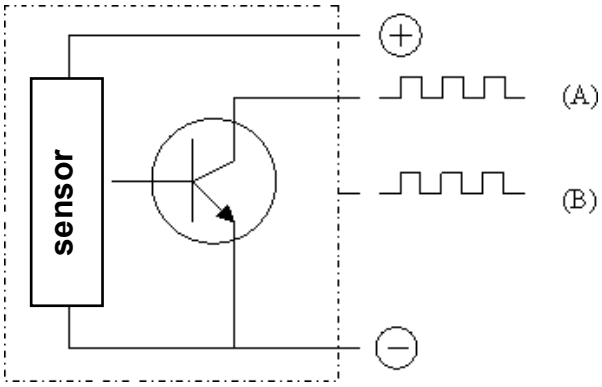

Speed sensor basic electric diagram.
The figure shows only one signal (A).
The encoders used have two equal signals, with a phase difference of 90°(A-B).

1. Connect the multemeter positive point (red) to the encoder positive terminal.
2. Connect the multemeter COM point (black) to the encoder signal (A).

According to the engine position, the following values will be displayed:
low signal: 0.5-1.5 Volt
high signal: 10.5-11.5 Volt
Intermediate values cannot be read as the motor is stopped.

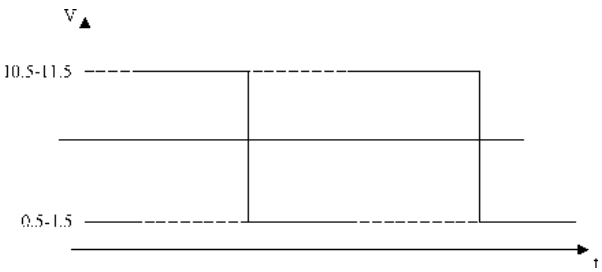

If the motor is running, the multemeter will automatically read the Mv (medium value)
Mv= 5.5-6.5 Volt
Carrying out this test directly on the logic connector, you can determine if the signals are good (see above-mentioned description) or if the channels are open or in short circuit

If the signals are good, the problem should be attributed to the electronic control.

In the contrary case repeat the test directly on the encoder connector. If the problem persists to replace the encoder.

https://truckmanualshub.com/

CODE	*ALARM*	*DESCRIPTION*
44	THERMIC SENS KO	The values indicated by the temperature sensor of the inverter are always checked and if they are out of range there is a warning. - Replace the logic unit.
45	SAFETY	This alarm appears if the connection between the pins 5 and 11 on the JFP connector is open.
46	CAN BUS KO	Comunication failure between the logic units: traction (Master & Slave), lifting, Mhyrio and all the cards. The alarm appears if: - CAN H and / or CAN L signals deconnected - there is no comunication from one logic unit. If the problem starts from one card the system recognizes in which one: - CAN BUS KO 0A: I/O - CAN BUS KO 00: arm card - CAN BUS KO 03: Master - CAN BUS KO 04: Slave - CAN BUS KO : Lifting logic unit (no suffix after the alarm message) - Before replacing any logic unit it is suggested a preliminary check of the CAN BUS connections. Using the console, through connection numbersand selecting the TESTER function, try to carry out a link with all the junction knots toward the different logic units. Verify the links by, at least, one of the signals from the field, i.e. microswitches, potentiometers. Where you don't reach the link, there is a line interruption.
47	WAITING FOR NODE	Time lag fault on the CAN BUS comunication. The Lifting logic unit detects wich logic unit has generated the problem #4 The Lifting logic unit receives the informations caming from the Slave logic unitwith a time lag fault. The fault can be caused by - interference on the can bus. Check the CAN-BUS comunication. - false contact. Check the connections of CAN H and CAN L wires. - broken logic. Replace the traction logic unit. #3 The Lifting logic unit receives the informations caming from the Master logic unitwith a time lag fault. The fault can be caused by - interference on the can bus. Check the CAN-BUS comunication. - false contact. Check the connections of CAN H and CAN L wires. - broken logic. Replace the traction logic unit. #9 The Lifting logic unit receives the informations caming from the Mhyrio logic unit with a time lag fault. The fault can be caused by - interference on the CAN-BUS. Check the CAN-BUS comunication. - false contact. Check the connections of CAN H and CAN L wires. - broken logic. Replace the Mhyrio logic unit.
48	AUX OUTPUT KO	Failure on the contactor driver. - Replace the lifting unit.
49	DRIVER SHORTED	Failure on the contactor driver. Check the main contactors coils and relevant wirings. If the failure is not due to external causes, replace the lifting logic unit.
50	CONTACTOR DRIVER	Failure on the contactor driver. - Replace the lifting unit.
51	COIL SHORTED	Failure on the contactor driver. Check the main contactors coils and relevant wirings. Control that there are no short-circuits in the wiring and that the coil resistance value is correct. If the failure is not due to external causes replace the logic unit.

https://truckmanualshub.com/

CODE	*ALARM*	*DESCRIPTION*
52	VACC NOT OK	Failure on the lifting potentiometer signal at rest. The alarm points out that the voltage value detected on the lifting potentiometer is 1Volt higher than the least value programmed with the Vacc function. Check: - The tlifting potentiometer (it could be damaged or not correctly calibrated) - The lifting potentiometer wiring. - Carry out the Vacc setting again.
53	INCORRECT START	Incorrect sequence from the start. Check: - Control valve microswitcheis and relevant wires. If the failure is not due to external causes replace the traction logic unit.
54	PEDAL WIRE KO	Failure on the lifting potentiometer signal at rest. This alarm appears when there is an interruption on the potentiometer positive (PPOT) or the negative (NPOT). Check: - lifting potentiometer (could be damaged) - lifting potentiometer wiring.
55	WRONG BATTERY	When the key is turned ON, the controller checks the battery voltage and compares it with the "SET BATTERY" parameter setting. If the actual value is 20% higher or lower than the nominal value, there is a fault. Replace the battery with a correct one.
56	REMOTE INPUT	Incorrect starting procedure.
57	WAITING	The Lifting logic unit receives the informations caming from the Mhyrio logic unit with a time lag fault. The fault can be caused by - interference on the CAN-BUS. Check the CAN-BUS comunication. - false contact. Check the connections of CAN H and CAN L wires. - broken logic. Replace the Mhyrio logic unit.
58	I= 0 EVER	Failure on the current sensor. Replace the lifting unit.
59		Not used.
4A		Not used
4C	BATTERY_LOW	Discharged battery. If the "battery check" option is ON, a battery discharge algorithm is carried out. When the charge level is 10% , this alarm is signalled and the current is reduced to the half of the programmed level.
5A	CHOPPER NOT CONF.	The lifting unit has an erroneous configuration. Using the programming console it is possible to set the unitcorrectly according to the truck configuration: a. (joystick ON) control valve version b. (joystick OFF) fingertip - joystick version.
4E		Not used.
5C	GAIN ACQUISITION	This warning communicates that the logic is in phase of input acquisition. In this phase the logic doesn't start.
5E		Not used.

MHYRIO UNIT

A1	EEPROM KO	Fault in the area of memory in which the adjustment parameters are stored; this alarm inhibits the truck operation, but the controller will use default parameters. If the defect persists when the key is switched OFF and ON again, replace the logic. If the alarm disappears, remember that the parameters previously stored have been deleted and replaced by the default values.
A2	DRIVER SHORTED	The transistor that controls the lifting and lowering valvespositive supply is closed when it should be open. Replace the logic unit.

https://truckmanualshub.com/

CODE	*ALARM*	*DESCRIPTION*
A3	CAN BUS KO	Failure wires connecting the logic units: traction (Master & Slave), lifting, Mhyrio and all the cards.
A4	FF VALVES	Replace the logic unit.
A5	DRIVER OPEN	The transistor that controls the lifting and lowering valvespositive supply is open when it should be closed. Replace the logic unit.
A6	DRIVER EPV GR1	One or more MOS controlling the valves are inshort-circuit. Replace the logic unit.
A7	DRIVER EPV GR2	One or more MOS controlling the valves are inshort-circuit. Replace the logic unit.
A8	DRIVER EPV GR3	One or more MOS controlling the valves are inshort-circuit. Replace the logic unit.

DASHBOARD

d1	the dashboard doesn't receive information from the traction Master unit.
d2	the dashboard doesn't receive information from lifting logic unit.
d4	the dashboard doesn't receive information from traction Slave unit
d8	the dashboard doesn't receive information from joystick card.
b1	the dashboard doesn't receive information from I/O card (Input output)
b2	the dashboard doesn't receive information from Mhyrio unit
b4	the dashboard doesn't receive information from lights card

Combinations of the above alarms as follows:

d3	d1+d2
d5	d1+d4
d6	d2+d4
d7	d1+d2+d4
dA	d2+d8
dB	d1+d2+d8
dC	d4+d8
dD	d1+d4+d8
dE	d2+d4+d8
dF	d1+d2+d4+d8
b3	b1+b2
b5	b1+b4
b6	b2+b4
b7	b1+b2+b4

FINGERTIPS/JOYSTICKS (NOT SHOWN BY THE CONSOLE)

E1		Not used.
E2	BAD LIFT POT	Failure on the lifting potentiometer in the fingertips / joysticks group. Check, and if necessary replace the relevant fingertip / joystick.
E3	BAD TILT POT	Failure on the tilting potentiometer in the fingertips / joysticks group. Check, and if necessary replace the relevant fingertip / joystick
E4	BAD SIDESH. POT	Failure on the sideshift potentiometer in the fingertips / joysticks group. Check, and if necessary replace the relevant fingertip / joystick.
E5	BAD IV POT	Failure on the 4th way potentiometer in the fingertips / joysticks group. Check, and if necessary replace the relevant fingertip / joystick.
E6	BAD V POT	Failure on the 5th way potentiometer in the fingertips / joysticks group. Check, and if necessary replace the relevant fingertip / joystick.
E7	INCORRECT START	Incorrect start sequence.
E8	BAD POTENTIOMETER	
BF	FW+BW	Incorrect start sequence. Check, and if necessary replace the forward pushbutton (PB3), the backward pushbutton (PB2) and the relevant cables on the arm.

https://truckmanualshub.com/

CODE	*ALARM*	*DESCRIPTION*

LIGHTS CARD (NOT SHOWN BY THE CONSOLE)

C1	STOP-OPEN	Failure on the stop lights. Check the bulbs of the stop streetlights and the relevant cables.
C2		Not used.
C3		Not used.
C4	RETRO-OPEN	Failure on the backup lights. Check the bulbs of the backup streetlights and the relevant cables.
C5	C1+C4	Failure on the stop and the backup lights. Check the relevant bulbs and the cables of both light types.
C6		Not used.
C7		Not used.
C8		Not used.

I / O CARD (NOT SHOWN BY THE CONSOLE)

81	TRACTION INCORRECT START	Incorrect start sequence (control valve version). Check: - forward, backward microswitches and relevant cables; - parking brake micro and relevant cables.
82	LOGIC FAILURE	Logic defect (control valve version).
83	PEDAL WIRE KO	Failure on the acceleration potentiometer signal at rest. Check: - traction potentiometer (could be damaged or not correctly calibrated); - traction potentiometer wiring.
84	BAD MICROSWITCH	
85		Not used.
86		Not used.
87		Not used.
88	PUMP INCORRECT START	
89	TRACTION AND PUMP INCORRECT START	Alarm 81 + alarm 88

ALARM COMBINATION

81-26	INCORRECT START	traction pedal
56-88	INCORRECT START	mechanic distributor

https://truckmanualshub.com/

PARAMETER SETTING TABLE

DUAL AC2 TRACTION UNIT

PARAMETER	PROGRAMMED LEVEL										
	UNIT	0	1	2	3	4	5	6	7	8	9
ACCELERATION DELAY (*)	SEC	1	1,5	2	2,5	3	3,5	4	4,5	5	5,5
RELEASE BRAKING (**)	SEC	5.5	5.0	4.5	4.0	3.5	3.0	2.5	2.0	1.5	1.0
INVERS BRAKING (**)	SEC	5.5	5.0	4.5	4.0	3.5	3.0	2.5	2.0	1.5	1.0
PEDAL BRAKING (**)	SEC	5.5	5.0	4.5	4.0	3.5	3.0	2.5	2.0	1.5	1.0
SPEED LIMIT BRAKING (**)	SEC	8.9	8.3	7.7	7.1	6.6	6.0	5.5	4.9	4.4	3.8
BRAKE CUTBACK (**)	SEC	5.5	5.0	4.5	4.0	3.5	3.0	2.5	2.0	1.5	1.0
MAX SPEED FW	HZ	65	80	95	110	125	140	155	170	185	200
MAX SPEED BW	HZ	65	80	95	110	125	140	155	170	185	200
CURVE CUTBACK	%	10	20	30	40	50	60	70	80	90	100
CUTBACK SPEED	% MAX SPEED	10	20	30	40	50	60	70	80	90	100
FREQUENCY CREEP	HZ	0.3	0.6	0.9	1.2	1.5	1.8	2.1	2.4	2.7	3.0
MAXIMUM CURRENT	% IMAX	47	53	58	64	70	76	82	88	94	100
ACC. SMOOTH											
INV. SMOOTH											
STOP SMOOTH	HZ										
AUXILIARY TIME	SEC	0	0.2	0.4	0.8	1	1.5	2	3	4	5

(*) The acceleration time shown is the time from 0 Hz to 100 Hz. This is the ideal ramp calculated by the software; the real ramp could change according to the motor parameters setting and, obviously, according to the load.

(**) The braking feature is based upon deceleration ramps. The value shown in the table is the time to decrease the speed from 100 Hz to 0 Hz. This is the ideal ramp calculated by the software; the real ramp could change according to the motor parameters setting and, obviously, according to the load.

https://truckmanualshub.com/

PARAMETER SETTING TABLE

AC2 LIFTING UNIT

PARAMETER	PROGRAMMED LEVEL										
	UNIT	0	1	2	3	4	5	6	7	8	9
ACCELERATION DELAY (*)	SEC	0.5	0.7	1.0	1.4	1.9	2.5	3.2	4.0	4.8	5.5
DELERATION DELAY (**)	SEC	0.5	0.7	1.0	1.4	1.9	2.5	3.2	4.0	4.8	5.5
MAX SPEED UP	HZ	65	80	95	110	125	140	155	170	185	200
MIN SPEED UP	HZ	12.0	13.5	15.0	16.5	18.0	19.5	21.0	22.5	24.0	25.5
SPEED FINE (ALL) (***)	HZ	-	-	-	-	-	-	-	-	-	-
MAXIMUM CURRENT	% IMAX	47	53	58	64	70	76	82	88	94	100
AUXILIARY TIME	SEC	0	0.2	0.4	0.8	1.0	1.5	2.0	3.0	4.0	5.0

(*) The acceleration time shown is the time from 0 Hz to 100 Hz (maximum selectable speed). This is the ideal ramp calculated by the software; the real ramp could change according to the motor parameters setting and, obviously, according to the load.

(**) The deceleration time shown in the table is the time from 100 Hz to 0 Hz. This is the ideal ramp calculated by the software; the real ramp could change according to the motor parameters setting and, obviously, according to the load.

(***) Adjustable with a 1 Hz resolution in the 0 to 200 Hz range.

https://truckmanualshub.com/

PAGINA INTENZIONALMENTE BIANCA

INTENTIONALLY LEFT BLANK

PAGE INTENTIONNELLEMENT BLANCHE

ABSICHTLICH FREIGELASSENE SEITE

PÁGINA INTENCIONALMENTE BLANCA

https://truckmanualshub.com/

MAPS FOR USING THE CONSOLE

TRACTION

https://truckmanualshub.com/

NECESSARY SETTING AFTER REPLACING THE TRACTION LOGIC UNIT

1. TRACTION ACQUISITION see following pages
2. ADJUST BATTERY see following pages
3. STEERING POTENTIOMETER see following pages
4. Vacc PROGRAM see following pages
5. STEER TABLE see following pages

https://truckmanualshub.com/

DESCRIPTION OF THE CONSOLE STANDARD MENU DUAL AC2 MASTER TRACTION UNIT

The console can be connected to the traction logic unit in two different ways:

1. Directly, by means of an interface cable in the concerned connector of the traction logic unit.
2. By connecting the console in another logic unit (pump or Mhyrio) and selecting the relevant connection number as shown in the map here below.

```
AC2P2B D          CE 1.06
48V    350A       00000
```

In case the console is connected to the lifting logic unit

Press ROLL and PARAM together

```
* CONFIG. MENU *
SET MODEL
```

Press ENTER

```
CONNECTED TO
5
```

It is the connection number of the lifting logic unit.

Press SET and select the connection number of the traction logic unit

```
CONNECTED TO
3
```

It is the connection number of the MASTER traction logic unit

Press OUT

```
ARE YOU SURE?
YES=ENTER NO=OUT
```

Press ENTER to confirm

```
* CONFIG. MENU *
SET MODEL
```

Press ROLL, OUT and SET together

```
DA2M2B C          CE 1.13
48V    280A       00000
```

Connected to the MASTER traction logic unit

CONNECTION NUMBERS

3	TRACTION MASTER
4	TRACTION SLAVE
5	PUMP
9	MHYRIO
11	DASHBOARD

https://truckmanualshub.com/

DESCRIPTION OF THE CONSOLE STANDARD MENU DUAL AC2 TRACTION UNIT MASTER MENU

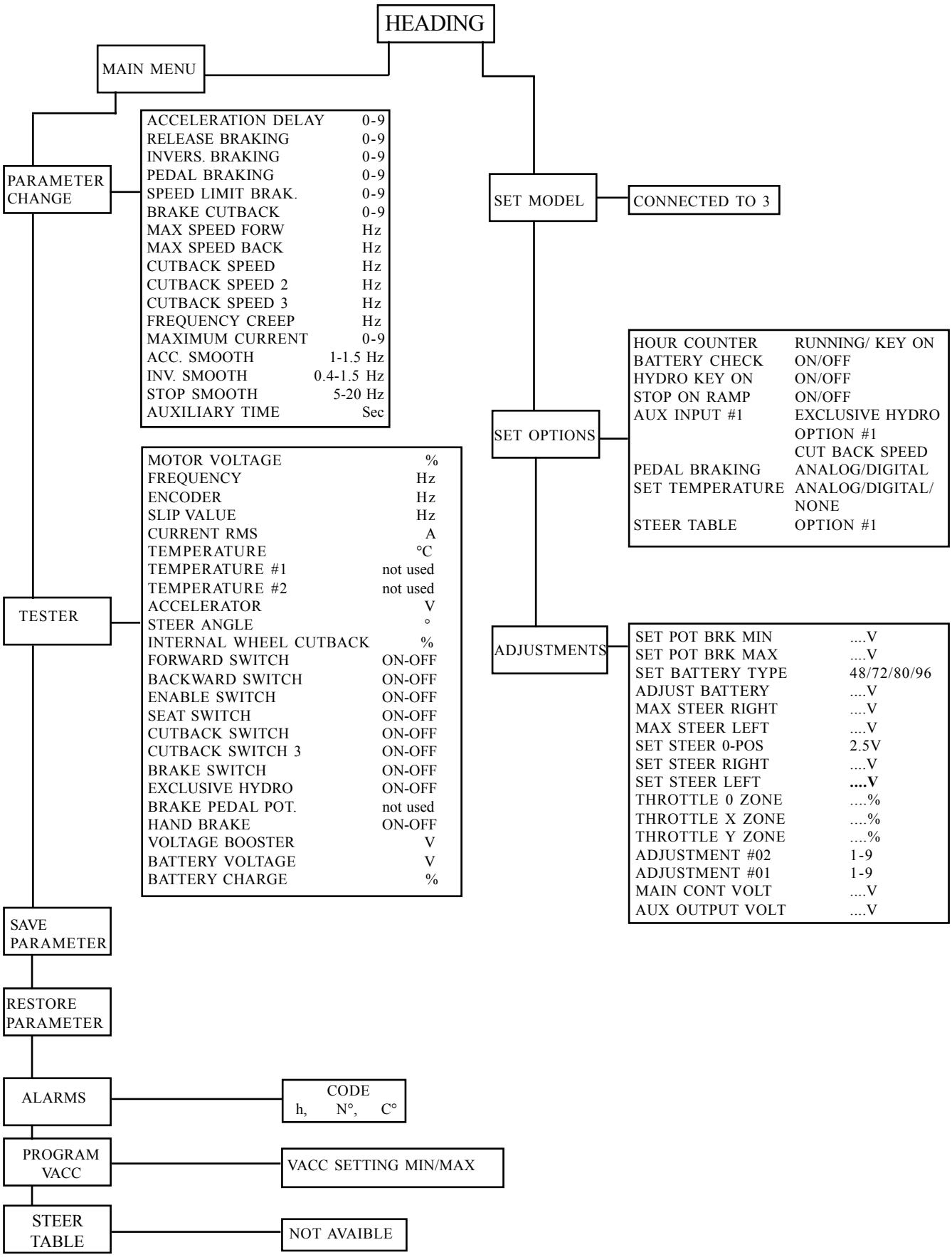

https://truckmanualshub.com/

DESCRIPTION OF THE CONSOLE STANDARD MENU DUAL AC2 TRACTION UNIT SLAVE MENU

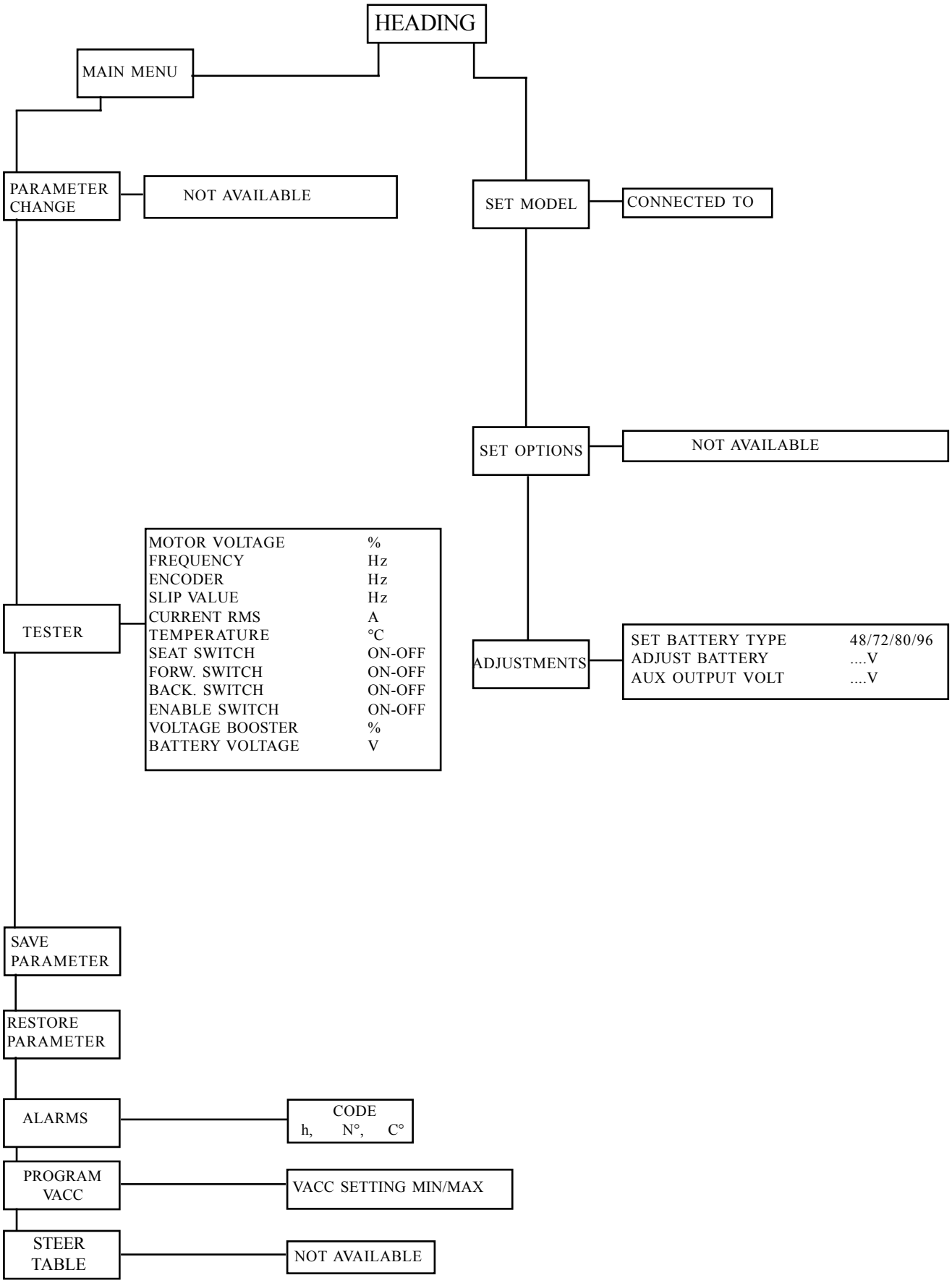

https://truckmanualshub.com/

MAIN MENU: PARAMETER CHANGE (MASTER connection number 3)

Select the program P on the dashboard before working with the main menu PARAMETER CHANGE.

```
DA2M2B C        CE 1.13
48V   280A      00000
```

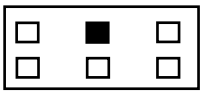

Press ENTER

```
MAIN MENU
PARAM. CHANGE
```

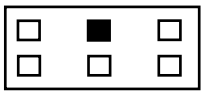

Press ENTER

ACCELER/DELAY	determines the acceleration ramp.
RELEASE BRAKING	controls the deceleration ramp when the travel pedal is released.
INVERSION BRAKING	controls the deceleration ramp when the direction switch is inverted during the travel.
PEDAL BRAKING	determines the deceleration ramp when the travel pedal is released and the brake pedal switch is closed.
SPEED LIMIT BRAKING	deceleration ramp when the pedal position is partly released, not completely.
BRAKE CUTBACK	determines the deceleration ramp when the speed reduction input becomes active and the motor slows down.
MAX SPEED FORWARD	determines the maximum speed in forward direction.
MAX SPEED BACKWARD	determines the maximum speed in backward direction.
CUTBACK SPEED 1	speed reduction when the cutback switch is active. Turtle function.
CUTBACK SPEED 2	speed reduction with brake pedal pressed.
CUTBACK SPEED 3	speed reduction enabled when the C10 signal is low.
CURVE CUT BACK	speed reduction in curve.
FREQUENCY CREEP	minimum speed when the forward or reverse switch is closed, but the accelerator is slightly pressed.
MAXIMUM CURRENT	this changes the maximum current of the inverter.
ACC. SMOOTH	this delays the acceleration ramp from 0 hz to “stop smooth” value.
INV. SMOOTH	this delays the deceleration ramp of the inversion from “stop smooth” value to 0 hz.
STOP SMOOTH	reference speed for the parameters ACC. SMOOTH and INV. SMOOTH
AUXILIARY TIME	time delay when an hydraulic steering function request is switched off.

Scroll the parameters using ROLL and save the new values pressing OUT and after ENTER

https://truckmanualshub.com/

MAIN MENU: TESTER (MASTER connection number 3)

```
DA2M2B C        CE 1.13
48V     280A     00000
```

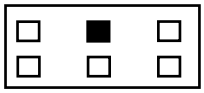

Press ENTER

```
MAIN MENU
PARAM. CHANGE
```

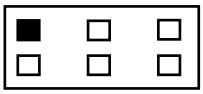

Press ROLL

```
MAIN MENU
TESTER
```

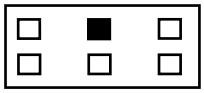

Press ENTER

MOTOR VOLTAGE
FREQUENCY
ENCODER
SLIP VALUE
CURRENT RMS
TEMPERATURE
TEMPERATURE #1
TEMPERATURE #2
ACCELERATOR
STEER ANGLE
BRAKE PEDAL POTI
INTERNAL WHEEL CUTBACK
SEAT SWITCH
FORWARD SWITCH
BACKWARD SWITCH
ENABLE SWITCH
BRAKE SWITCH
CUTBACK SWITCH
EXCLUSIVE HYDRO
HAND BRAKE
VOLTAGE BOOSTER
BATTERY VOLTAGE
BATTERY CHARGE

Scroll the parameters using ROLL.

Press OUT to escape.

https://truckmanualshub.com/

MAIN MENU : SAVE PARAMETER (MASTER connection number 3)

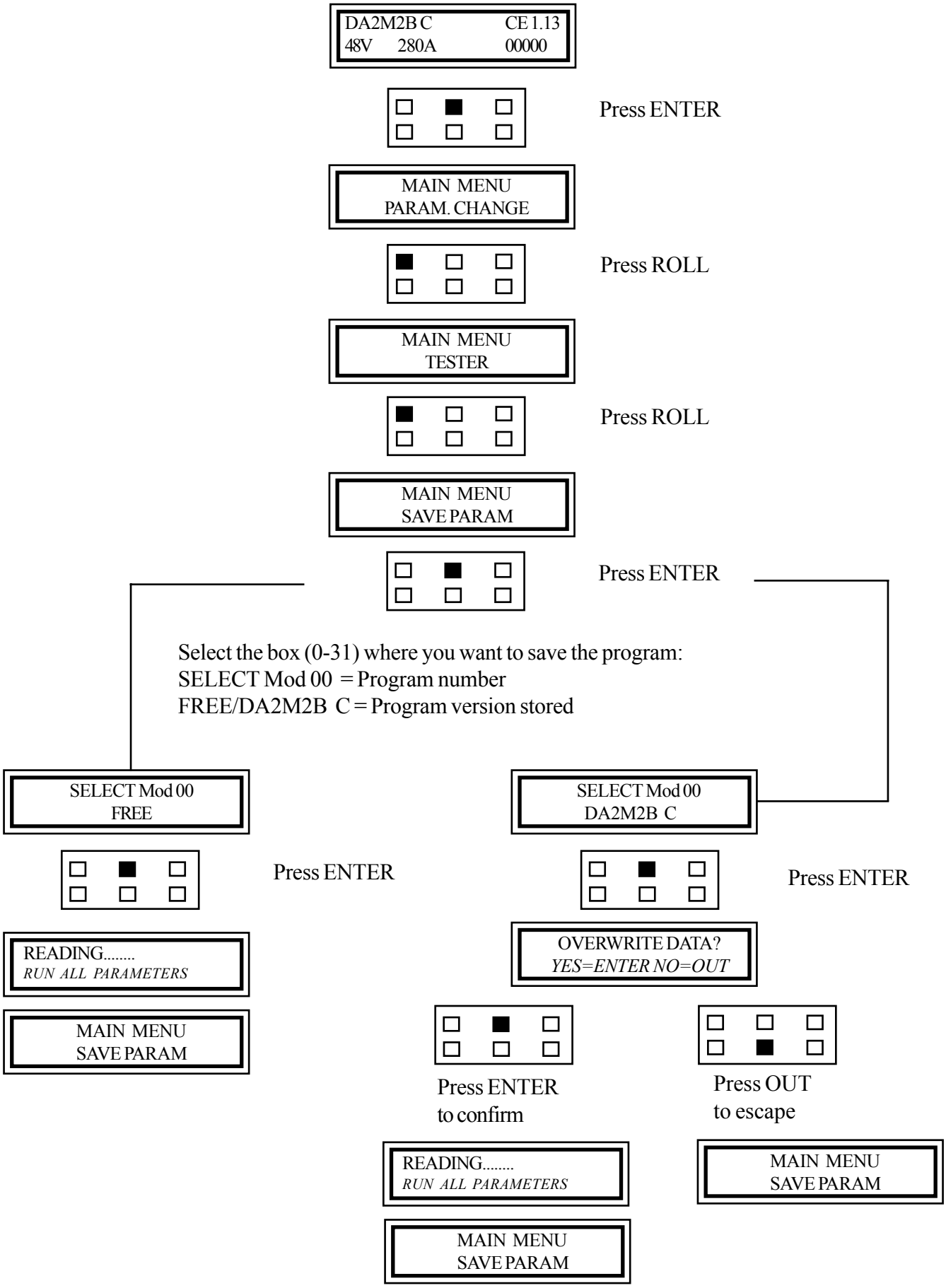

https://truckmanualshub.com/

MAIN MENU : RESTORE PARAMETER (MASTER connection number 3)

```
DA2M2B C        CE 1.13
48V   280A      00000
```

Press ENTER

```
MAIN MENU
PARAM. CHANGE
```

Press ROLL

```
MAIN MENU
TESTER
```

Press ROLL

```
MAIN MENU
SAVE PARAM
```

Press ROLL

```
MAIN MENU
RESTORE PARAM
```

Press ENTER

```
SELECT Mod 00
DA2M2B C
```

SELECT Mod 00 = Program number
FREE/DA2M2B C = Program version stored

Press ROLL to select the box (0-31) where you want to save the program

```
OVERWRITE DATA?
YES=ENTER NO=OUT
```

Press ENTER to confirm

```
STORING.....
RUN ALL PARAMETERS
```

```
MAIN MENU
RESTORE PARAM
```

Press OUT to escape

```
MAIN MENU
RESTORE PARAM
```

https://truckmanualshub.com/

MAIN MENU : ALARM (MASTER connection number 3)

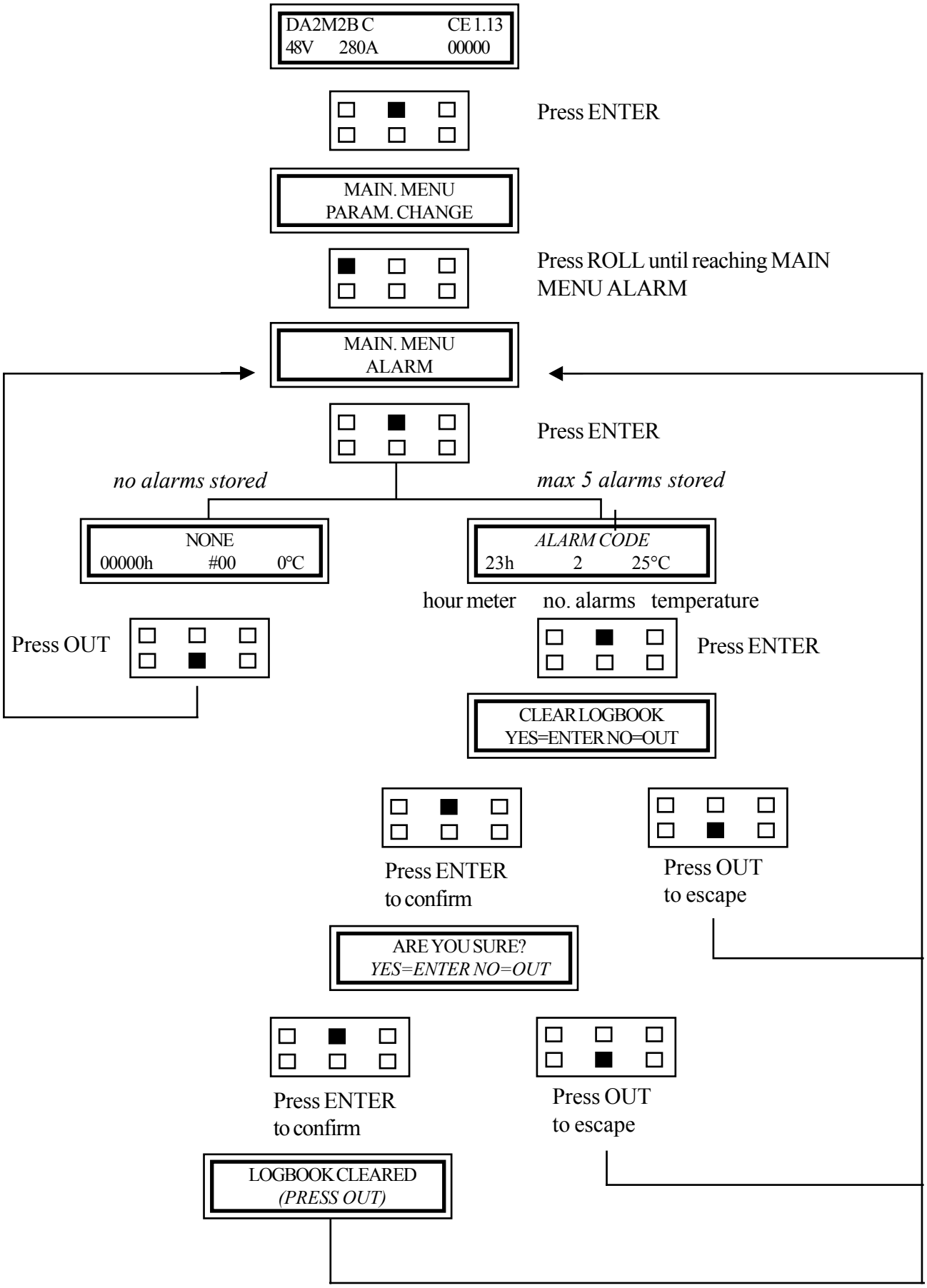

https://truckmanualshub.com/

MAIN MENU: PROGRAM VACC. (MASTER connection number 3)

This setting must be made with the parking brake released

```
DA2M2B C        CE 1.13
48V    280A     00000
```

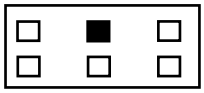

Press ENTER

```
MAIN MENU
PARAM. CHANGE
```

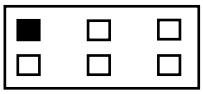

Press ROLL until reaching the program VACC

```
MAIN MENU
PROGRAM VACC
```

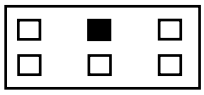

Press ENTER

```
VACC SETTING
0.6        1.6
```

These are the old parameters stored

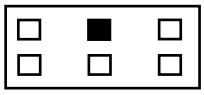

Press ENTER

```
VACC SETTING
0.0        0.0
```

Reset of the parameters

Select the forward direction
Press the accelerator pedal slowly until the maximum stroke

```
VACC SETTING
0.6   ↑    1.6
```

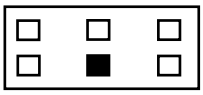

Press OUT keeping the acc. pedal pressed

```
ARE YOU SURE?
YES=ENTER NO=OUT
```

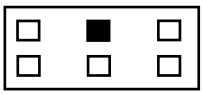

Press ENTER to confirm and release the pedal

Repeat the same operation selecting the backward direction.

https://truckmanualshub.com/

STEERING POTENTIOMETER ADJUSTMENT (MASTER connection number 3)

The setting of the steering potentiometer is made in the MASTER (connection number 3) of the traction logic unit, that is automatically selected when the console is fisically connected to the MASTER unit.

```
DA2M2B C          CE 1.13
48V    280A       00000
```

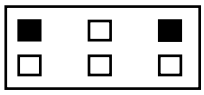

Press ROLL and PARAM together

```
* CONFIG. MENU *
SET MODEL
```

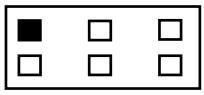

Press ROLL

```
* CONFIG. MENU *
SET OPTIONS
```

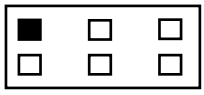

Press ROLL

```
* CONFIG. MENU *
ADJUSTMENTS
```

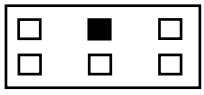

Press ENTER

SET POT BRK MIN	V
SET POT BRK MAX	V
SET BATTERY TYPE	48/72/80/96
ADJUST BATTERY	V
MAX STEER RIGHT	**....V**
MAX STEER LEFT	**....V**
SET STEER 0-POS	**2.5V**
SET STEER RIGHT	....°
SET STEER LEFT	....°
THROTTLE 0 ZONE	....%
THROTTLE X ZONE	....%
THROTTLE Y ZONE	....%
ADJUSTMENT #02	1-9
ADJUSTMENT #01	1-9
MAIN CONT VOLT	V
AUX OUTPUT VOLT	V

Scroll the parameters using ROLL

1. Select **MAX STEER RIGHT** (pressing ENTER to delete the old parameter) with the wheels turned completely right and store the parameter pressing OUT and then ENTER to confirm. (This value corresponds to the min. voltage)

2. Select **MAX STEER LEFT** (pressing ENTER to delete the old parameter) with the wheels turned completely left and store the parameter pressing OUT and then ENTER to confirm. (This value corresponds to the max. voltage)

3. Select **SET STEER 0-POS** (pressing ENTER to delete the old parameter) with straight wheels and store the parameter pressing OUT and then ENTER to confirm the new value.

https://truckmanualshub.com/

STEER TABLE (MASTER connection number 3)

Select the type of truck according to the 3 wheels or 4 wheels configuration.

OPTION #1 3 WHEELS 1,2-2,0 t AC
OPTION #2 4 WHEELS 1,2-2,0 t AC

OPTION #3 cenTAURO 160-200 L AC/C4E 160-200 NL AC

```
DA2M2B C        CE 1.13
48V    280A     00000
```

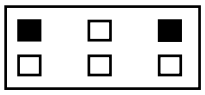

Press ROLL and PARAM together

```
* CONFIG. MENU *
SET MODEL
```

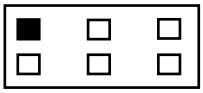

Press ROLL

```
* CONFIG. MENU *
SET OPTIONS
```

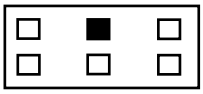

Press ENTER

HOUR COUNTER	RUNNING/ KEY ON
BATTERY CHECK	ON/OFF
HYDRO KEY ON	ON/OFF
STOP ON RAMP	ON/OFF
AUX INPUT #1	EXCLUSIVE HYDRO
	OPTION #1
	CUT BACK SPEED
PEDAL BRAKING	ANALOG/DIGITAL
SET TEMPERATURE	ANALOG/DIGITAL/NONE
STEER TABLE	**OPTION #1**
	OPTION #2
	OPTION #3

Scroll the parameters using ROLL

Select OPTION #1 for the 3 wheels and store the parameter pressing OUT and then ENTER to confirm.
Select OPTION #2 for the 4 wheels and store the parameter pressing OUT and then ENTER to confirm.

Select OPTION #3 for the cenTAURO 160-200 L AC/C4E 160-200 NL AC and store the parameter pressing OUT and then ENTER to confirm.

https://truckmanualshub.com/

STOP ON RAMP (MASTER connection number 3)

```
DA2M2B C          CE 1.13
48V      280A       00000
```

Press ROLL and PARAM together

```
* CONFIG. MENU *
SET MODEL
```

Press ROLL

```
* CONFIG. MENU *
SET OPTIONS
```

Press ENTER

HOUR COUNTER	RUNNING/ KEY ON
BATTERY CHECK	ON/OFF
HYDRO KEY ON	ON/OFF
STOP ON RAMP	**ON/OFF**
AUX INPUT #1	EXCLUSIVE HYDRO OPTION #1 CUT BACK SPEED
PEDAL BRAKING	ANALOG/DIGITAL
SET TEMPERATURE	ANALOG/DIGITAL/NONE
STEER TABLE	OPTION #1 OPTION #2

Scroll the parameters using ROLL

Select **STOP ON RAMP** and change the status using PARAM or SET

ON ACTIVATED
OFF DEACTIVATED

and store the parameter pressing OUT and then ENTER to confirm.

After releasing the pedals the truck can stay still on a ramp for about 1 second.
This parameter activates/deactivates this function.

https://truckmanualshub.com/

SLIP CONTROL (MASTER connection number 3)

This function is useful to understand if a traction problem is due to the encoder or not.

In case the truck stops or works with low speed with high consumption of current (and relevant alarm code shown on the dashboard) it is possible to disable the encoder for some seconds, no longer, given that the logic unit cannot control the motor any longer.

Do not work with this configuration.

```
DA2M2B C          CE 1.13
48V    280A       00000
```

Press ENTER

```
MAIN MENU
PARAM. CHANGE
```

Press ROLL
until reaching ALARM menu

```
MAIN MENU
ALARM
```

Press ENTER

With the SLIP CONTROL OFF push the accelerator pedal slowly otherwise the motor stands still.

DESCRIPTION OF THE ALARM CODE

Press PARAM and SET together

```
* MENU *
SPECIAL ADJUST
```

Press ROLL

```
* MENU *
HARDWARE SETTING
```

Press ENTER

COMPENSATION
SLIP CONTROL **ON/OFF**

Select SLIP CONTROL ON or OFF and store the parameter pressing OUT and then ENTER to confirm.
After that switch the truck OFF and ON.

https://truckmanualshub.com/

BATTERY INDICATOR

The control of the battery LED indication on the dashboard and the relevant reduction of the speed are managed by the traction logic unit.

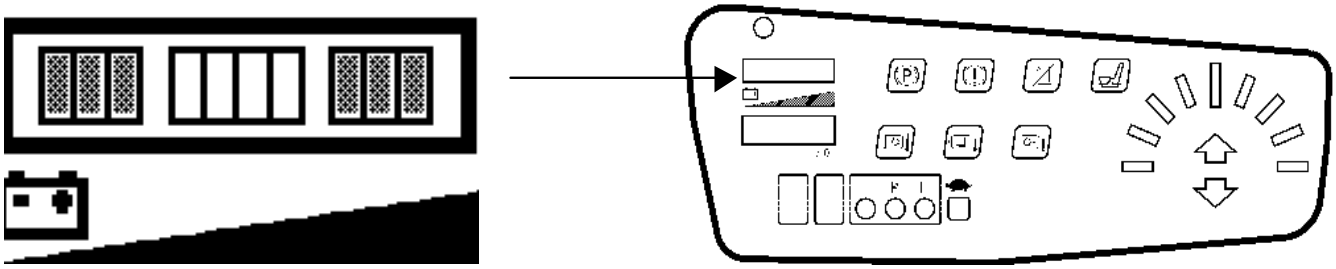

The dashboard reads only the information coming from the logic unit and shows, using the led battery indicator, the status of the battery.

In order to have a precise reading of the logic unit it is necessary to set the parameter ADJUST BATTERY everytime the traction logic unit is replaced or you received a new truck without battery.

ADJUST BATTERY SETTING

- Connect the analyser
- Switch the truck on

In order to have a pricise measure of the battery voltage you have to set the parameter ADJUST BATTERY with the same value read directly on the battery by a multimeter.
Note that the logic uses as refernce voltage the key input which is not at the same potential of the positive pole of the battery due to the fact that between them different devices are locatet (connectors, the fuse F1 the push button PB1).

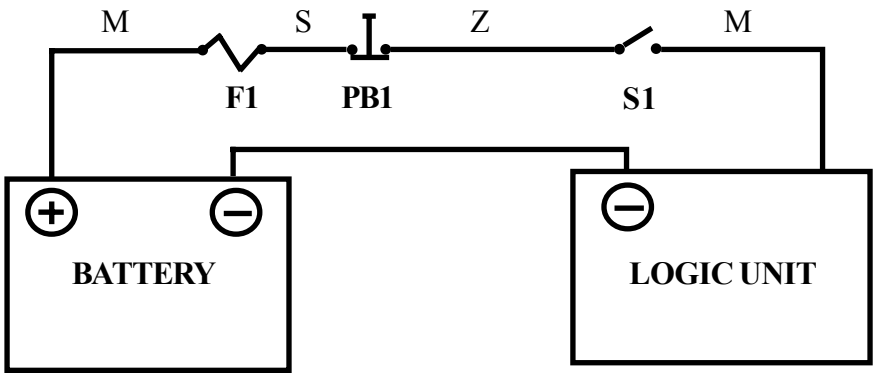

Once taken the measure of the voltage set the parameter adjust battery following the instruction explained in the BATTERY SETTING MAP.

ADVICE

Set the multimeter in volt and join the two terminal togheter. On the display you have to read zero.
If you read other value that it in consideration during the measure of the battery voltage.

https://truckmanualshub.com/

REARM OF THE BATTERY INDICATOR

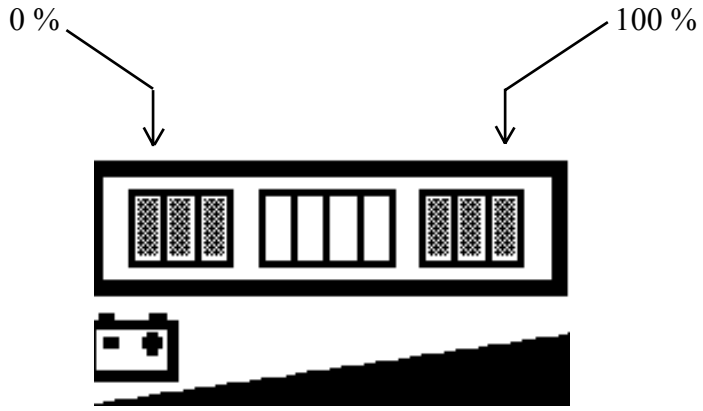

The battery indicator rearms only below the 70% of the full charge.

With highter value there is not the rearm of the indicator. It means that it does not come back to 100%.

The battery indicator is adjustable by the console in order to change the

the reset value	ADJUSTMENT #01
the discharge value	ADJUSTMENT #02

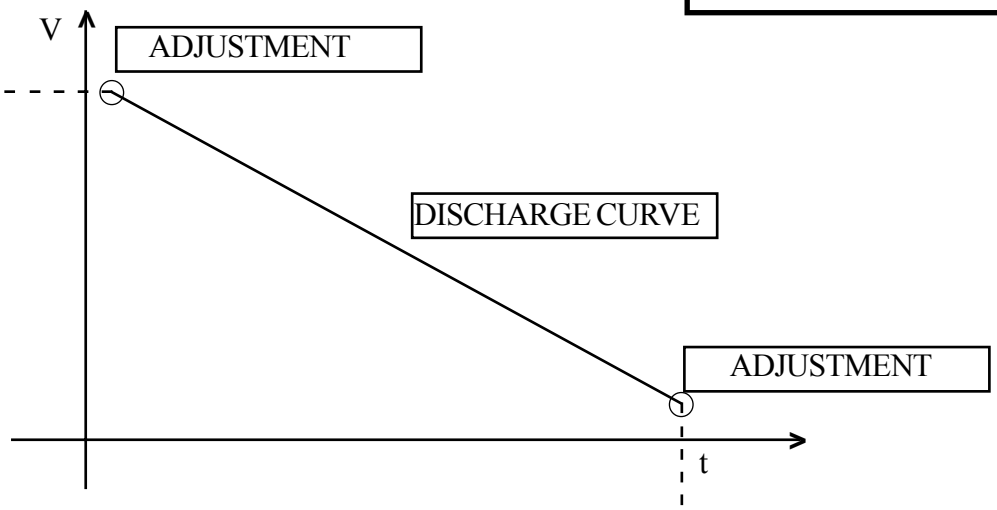

To modify the above parameter see the BATTERY SETTING MAP

https://truckmanualshub.com/

BATTERY (MASTER connection number 3)

The control of the battery LED indication on the dashboard and the relevant reduction of speed are performed by the MASTER of the traction logic unit.

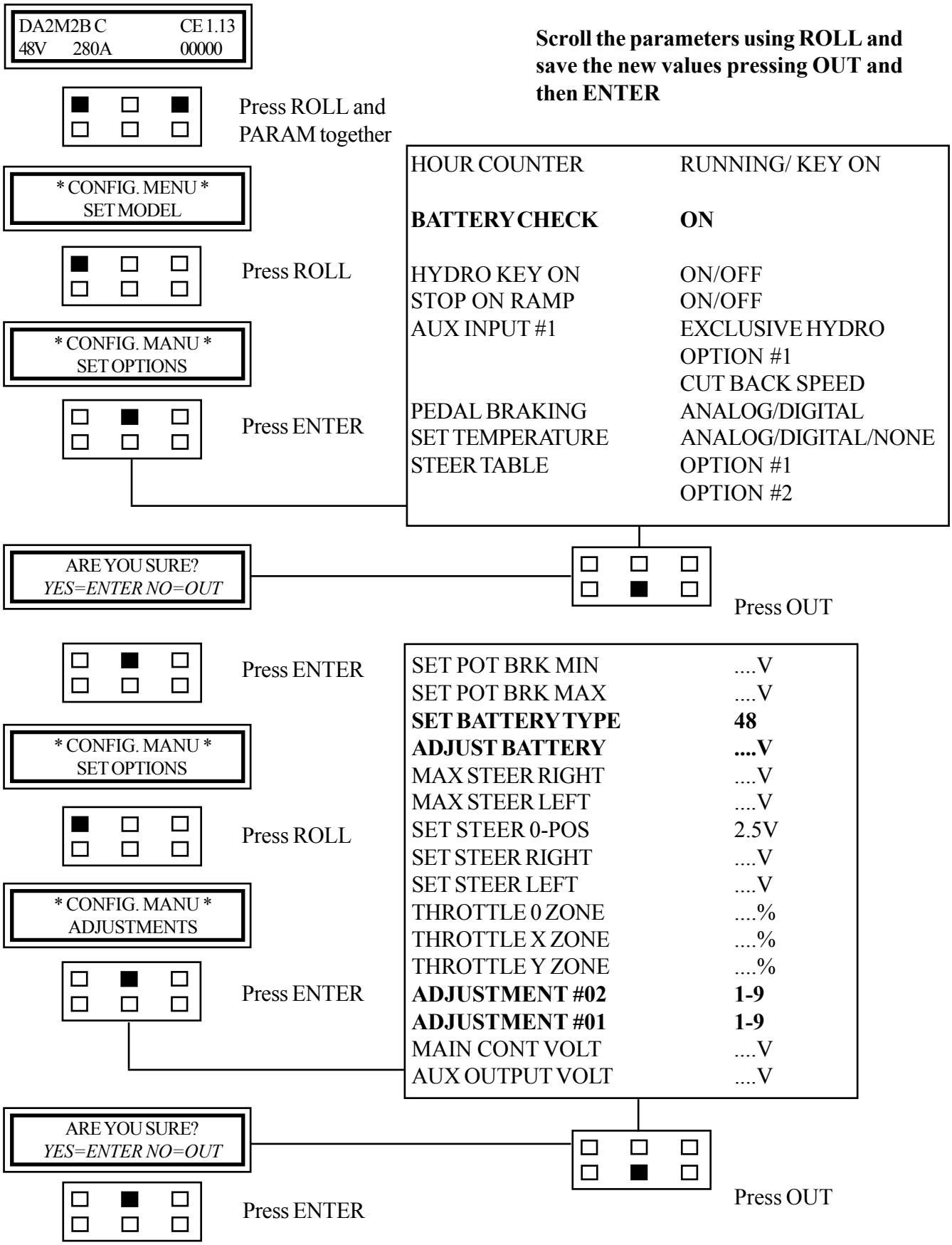

https://truckmanualshub.com/

SET BATTERY TYPE: selects the nominal battery voltage
ADJUST BATTERY: adjusts the value displayed in the console to adapt it to the real value of the battery (measured with a multimeter)
ADJUSTMENT #02 adjustment of the lowest value of charge of the battery
ADJUSTMENT #01 adjustment of the reset value of the battery indicator

ADJUSTMENT #01

CONSOLE VALUE	VOLT	RESETTING indicatore della batteria
0	49.20	49.10
1	49.48	49.39
2	49.73	49.58
3	50.02	49.87
4	50.26	50.11
5	50.54	50.35
6	50.83	50.64
7	51.02	50.83
8	51.26	51.27
9	51.80	51.55

ADJUSTMENT #02

CONSOLE VALUE	VOLT
0	45.70
1	45.98
2	46.22
3	46.51
4	46.75
5	47.04
6	47.33
7	47.57
8	47.81
9	48.38

https://truckmanualshub.com/

MAIN MENU: PARAMETER CHANGE (SLAVE connection number 4)

DUAL AC2 - SLAVE

By means of the config menu of the programming console, the user can configure the following functions.

SUBMENU “SET OPTIONS”
Not available.

SUBMENU “ADJUSTMENT”

1 SET BATTERY TYPE:	selects the battery nominal voltage;
2 ADJUST BATTERY:	fine adjustment of the battery voltage measured by the controller.
3 AUX OUPUT VOLTAGE:	this parameter adjusts the voltage of the auxiliary output coil (hydraulic steering contactor coil), PWM output A31.

```
DA2S2B C          CE 1.13
48V    280A       00000
```

Press ENTER

```
MAIN MENU
PARAM. CHANGE
```

Press ENTER

```
NOT AVAILABLE
```

Press OUT to escape

https://truckmanualshub.com/

MAIN MENU: TESTER (SLAVE connection number 4)

```
DA2S2B C        CE 1.13
48V    280A     00000
```

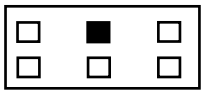

Press ENTER

```
MAIN MENU
PARAM. CHANGE
```

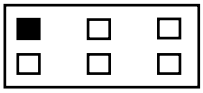

Press ROLL

```
MAIN MENU
TESTER
```

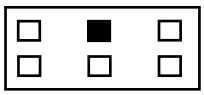

Press ENTER

MOTOR VOLTAGE
FREQUENCY
ENCODER
SLIP VALUE
CURRENT RMS
TEMPERATURE
SEAT SWITCH
FORWARD SWITCH
BACKWARD SWITCH
ENABLE SWITCH
VOLTAGE BOOSTER
BATTERY VOLTAGE

Scroll the parameters using ROLL.

Press OUT to escape

https://truckmanualshub.com/

MAIN MENU : SAVE PARAMETER (SLAVE connection number 4)

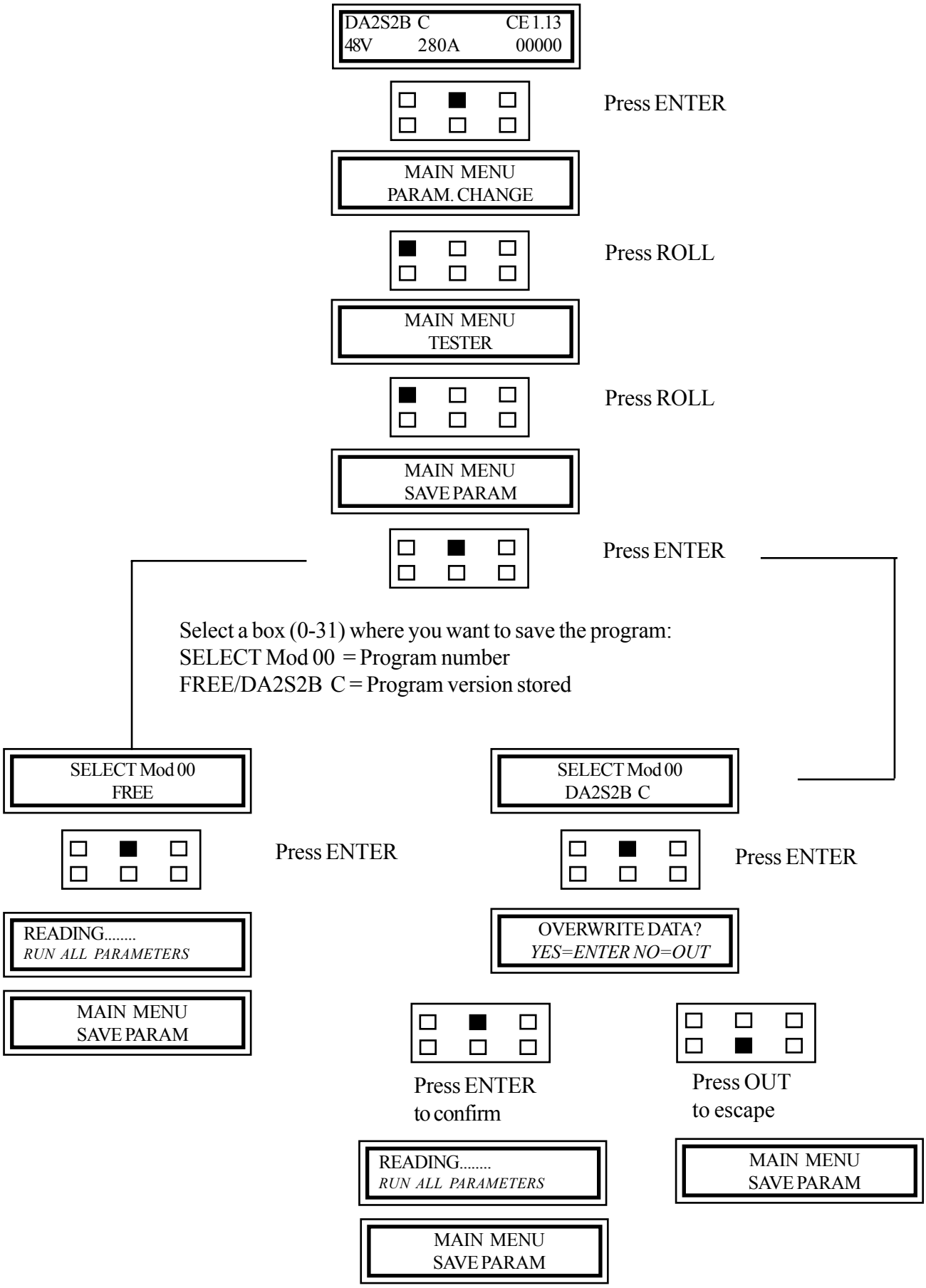

https://truckmanualshub.com/

MAIN MENU : RESTORE PARAMETER (SLAVE connection number 4)

```
DA2S2B C          CE 1.13
48V      280A       00000
```

Press ENTER

```
MAIN MENU
PARAM. CHANGE
```

Press ROLL

```
MAIN MENU
TESTER
```

Press ROLL

```
MAIN MENU
SAVE PARAM
```

Press ROLL

```
MAIN MENU
RESTORE PARAM
```

Press ENTER

```
SELECT Mod 00
DA2S2B C
```

SELECT Mod 00 = Program number
FREE/DA2S2B C = Program version stored

Press ROLL to select the box (0-31) where you want to save the program

```
OVERWRITE DATA?
YES=ENTER NO=OUT
```

Press ENTER to confirm

```
STORING.....
RUN ALL PARAMETERS
```

```
MAIN MENU
RESTORE PARAM
```

Press OUT to escape

```
MAIN MENU
RESTORE PARAM
```

https://truckmanualshub.com/

MAIN MENU : ALARM (SLAVE connection number 4)

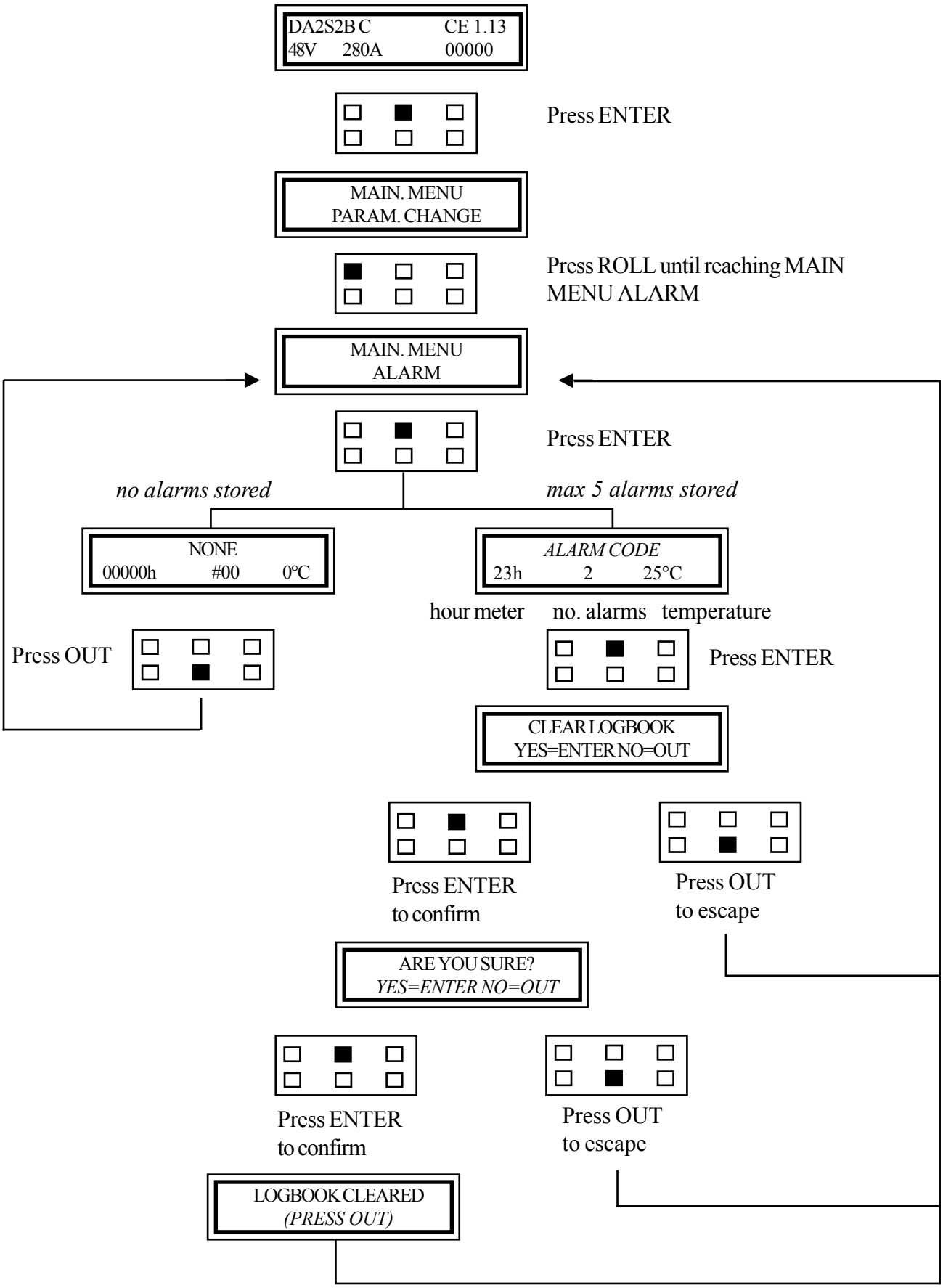

https://truckmanualshub.com/

MAIN MENU: PROGRAM VACC. (SLAVE connection number 4)

It must be carried out in the MASTER traction logic unit.

https://truckmanualshub.com/

TRACTION ACQUISITION (MASTER connection number 3)

Connect the console to the **TRACTION** logic unit

```
DA2M2B C        CE 1.13
48V    280A     00000
```

Press ROLL and PARAM together

```
* CONFIG MENU *
SET MODEL
```

Press ENTER

```
CONNECTED TO 3
```

Press ROLL

```
LEVEL 0
```

0 with double pedal version

```
LEVEL 1
```

1 with hand inversor version

```
LEVEL 2
```

2 with inversor on the arm

Press OUT

```
ARE YOU SURE?
YES=ENTER NO=OUT
```

Press ENTER to confirm

https://truckmanualshub.com/

MAPS FOR USING THE CONSOLE

LIFTING

https://truckmanualshub.com/

NECESSARY SETTING AFTER REPLACING THE LIFTING LOGIC UNIT

1. LIFTING ACQUSITION — see following pages
2. Vacc PROGRAM (with mechanic distributor only) — see following pages

https://truckmanualshub.com/

DESCRIPTION OF THE CONSOLE STANDARD MENU AC2 LIFTING UNIT

The console can be connected to the lifting logic unit in two different ways:

1. Directly by means of an interface cable on the logic unit.
2. By connecting the console to another logic unit (traction or Mhyrio) and selecting the relevant connection number as shown in the map here below.

```
DA2M2B C          CE 1.13
48V     280A       00000
```

In case the console is connected to the traction logic unit

Press ROLL and PARAM together

```
* CONFIG. MENU *
SET MODEL
```

Press ENTER

```
CONNECTED TO
3
```

It is the connection number of the traction logic unit.

Press SET and select the connection number of the lifting logic unit

```
CONNECTED TO
5
```

It is the connection number of the lifting unit.

Press OUT

```
ARE YOU SURE?
YES=ENTER NO=OUT
```

Press ENTER to confirm

```
* CONFIG MENU *
SET MODEL
```

Press ROLL, OUT and SET together

```
AC2P2B D          CE 1.06
48V     350A       00000
```

Connected to the lifting logic unit

CONNECTION NUMBERS

3	TRACTION MASTER
4	TRACTION SLAVE
5	PUMP
9	MHYRIO
11	DASHBOARD

https://truckmanualshub.com/

DESCRIPTION OF THE CONSOLE STANDARD MENU
AC2 LIFTING UNIT MENU

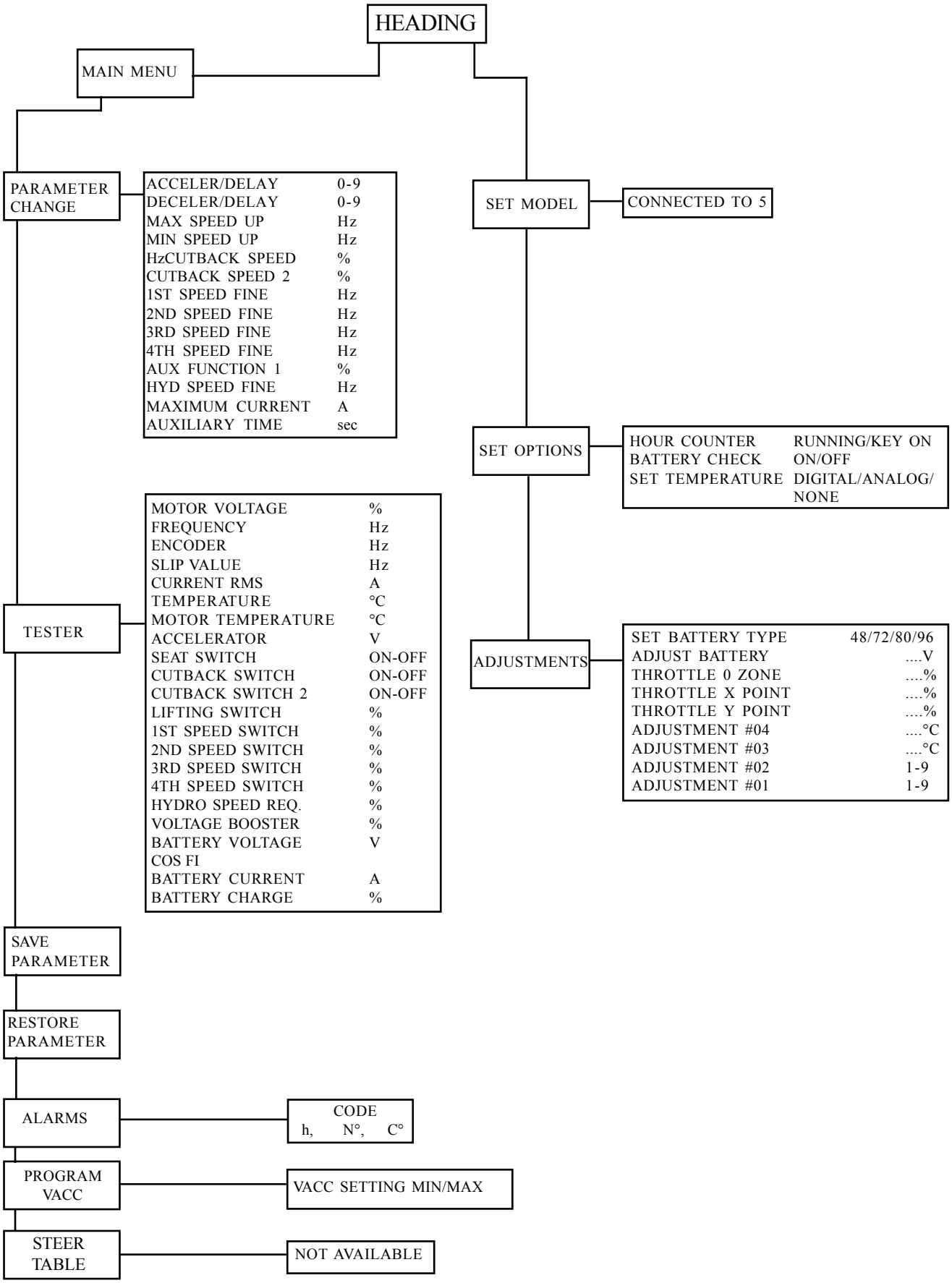

https://truckmanualshub.com/

MAIN MENU: PARAMETER CHANGE (PUMP connection number 5)

```
AC2P2B D          CE 1.06
48V    350A        00000
```

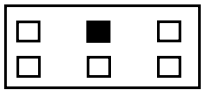

Press ENTER

```
MAIN MENU
PARAM. CHANGE
```

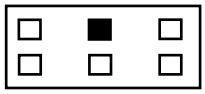

Press ENTER

ACCELER/DELAY	acceleration ramp.
DECELER/DELAY	deceleration ramp.
MAX SPEED UP	determines the maximum lifting speed controlled by a potentiometer.
MIN SPEED UP	determines the minimum lifting speed controlled by a potentiometer when the lift enabling switch is closed.
CUTBACK SPEED	speed reduction when the cutback switch is active. (+V =E4; input E13) if E13 is open the Cutbackspeed is on, is the E13 is closed the Cutbackspeed is off.
CUTBACK SPEED 2	speed reduction when the cutback switch is active. (+V =E4; input E14); if E14 is open the Cutbackspeed is off, if E14 is closed the Cutbackspeed is on.
1ST SPEED FINE	tilt speed, fine regulation.
2ND SPEED FINE	side-shift speed, fine regulation.
3RD SPEED FINE	4thth lever speed, fine regulation.
4TH SPEED FINE	5thth lever speed, fine regulation.
AUX FUNCTION 1	pot. value increasing the motor RPM.
HYD SPEED FINE	hydro speed, fine regulation.
MAXIMUM CURRENT	maximum current of the inverter.
AUXILIARY TIME	time delay when a hydraulic steering function request is switched off.

Scroll the parameters using ROLL and save the new values pressing OUT and then ENTER

https://truckmanualshub.com/

MAIN MENU: TESTER (PUMP connection number 5)

```
AC2P2B D          CE 1.06
48V    350A        00000
```

Press ENTER

```
MAIN MENU
PARAM. CHANGE
```

Press ROLL

```
MAIN MENU
TESTER
```

Press ENTER

MOTOR VOLTAGE
FREQUENCY
ENCODER
SLIP VALUE
CURRENT RMS
TEMPERATURE
MOTOR TEMPERATURE
SEAT SWITCH
ACCELERATOR
LIFTING SWITCH
1 ST SPEED SWITCH
2 ND SPEED SWITCH
3 RD SPEED SWITCH
4 TH SPEED SWITCH
HYDRO SPEED REQ.
CUTBACK SWITCH
CUTBACK SWITCH 1
VOLTAGE BOOSTER
BATTERY VOLTAGE
COS FI
BATTERY CURRENT
BATTERY CHARGE

Scroll the parameters using ROLL.

Press OUT to escape.

https://truckmanualshub.com/

MAIN MENU : SAVE PARAMETER (PUMP connection number 5)

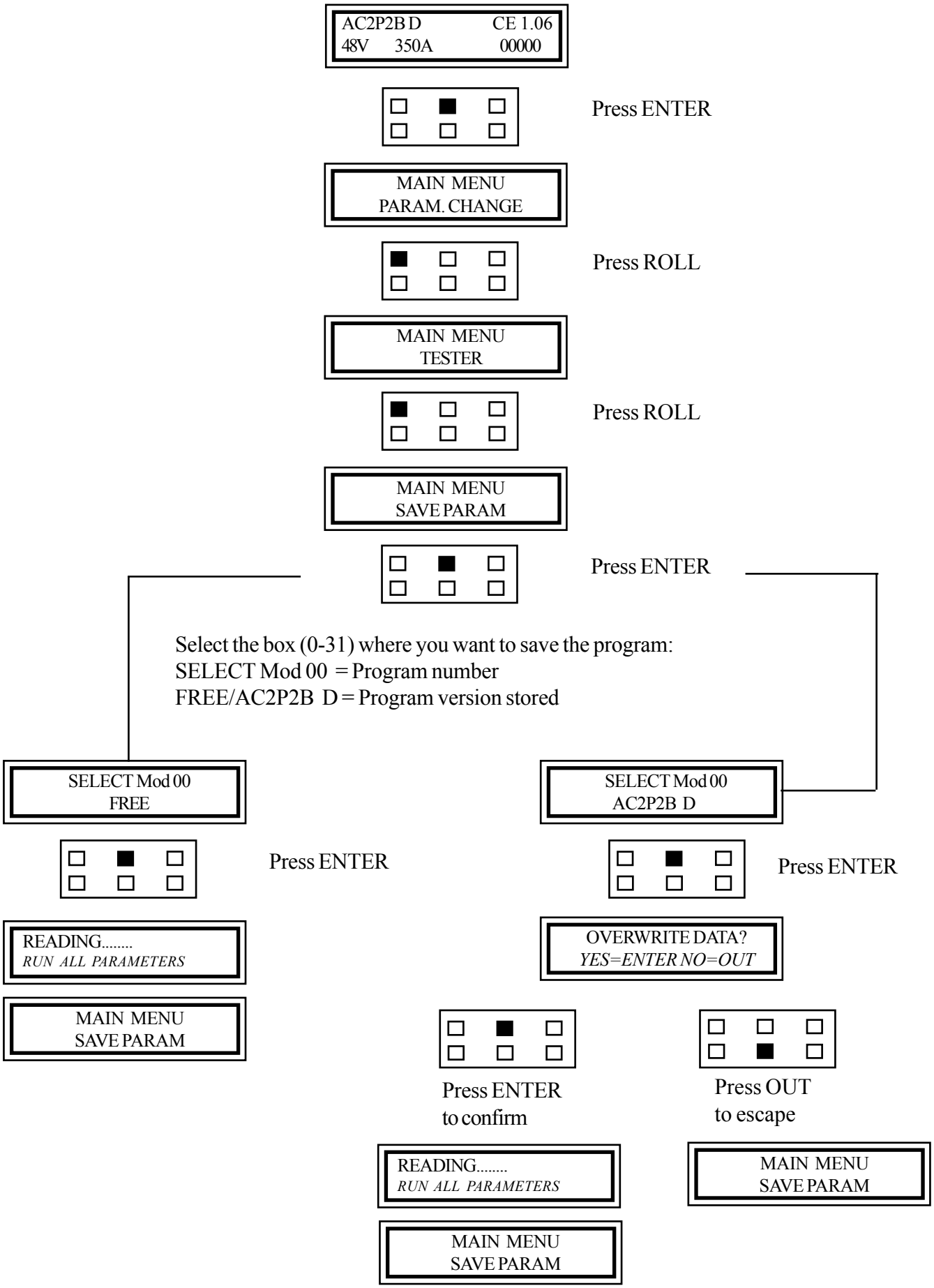

https://truckmanualshub.com/

MAIN MENU : RESTORE PARAMETER (PUMP connection number 5)

```
AC2P2B D        CE 1.06
48V    350A      00000
```

Press ENTER

```
MAIN MENU
PARAM. CHANGE
```

Press ROLL

```
MAIN MENU
TESTER
```

Press ROLL

```
MAIN MENU
SAVE PARAM
```

Press ROLL

```
MAIN MENU
RESTORE PARAM
```

Press ENTER

```
SELECT Mod 00
AC2P2B D
```

SELECT Mod 00 = Program number
FREE/AC2P2B D = Program version stored

Press ROLL to select the box (0-31) where you want to save the program

```
OVERWRITE DATA?
YES=ENTER NO=OUT
```

Press ENTER to confirm

Press OUT to escape

```
STORING.....
RUN ALL PARAMETERS
```

```
MAIN MENU
RESTORE PARAM
```

```
MAIN MENU
RESTORE PARAM
```

https://truckmanualshub.com/

MAIN MENU : ALARM (PUMP connection number 5)

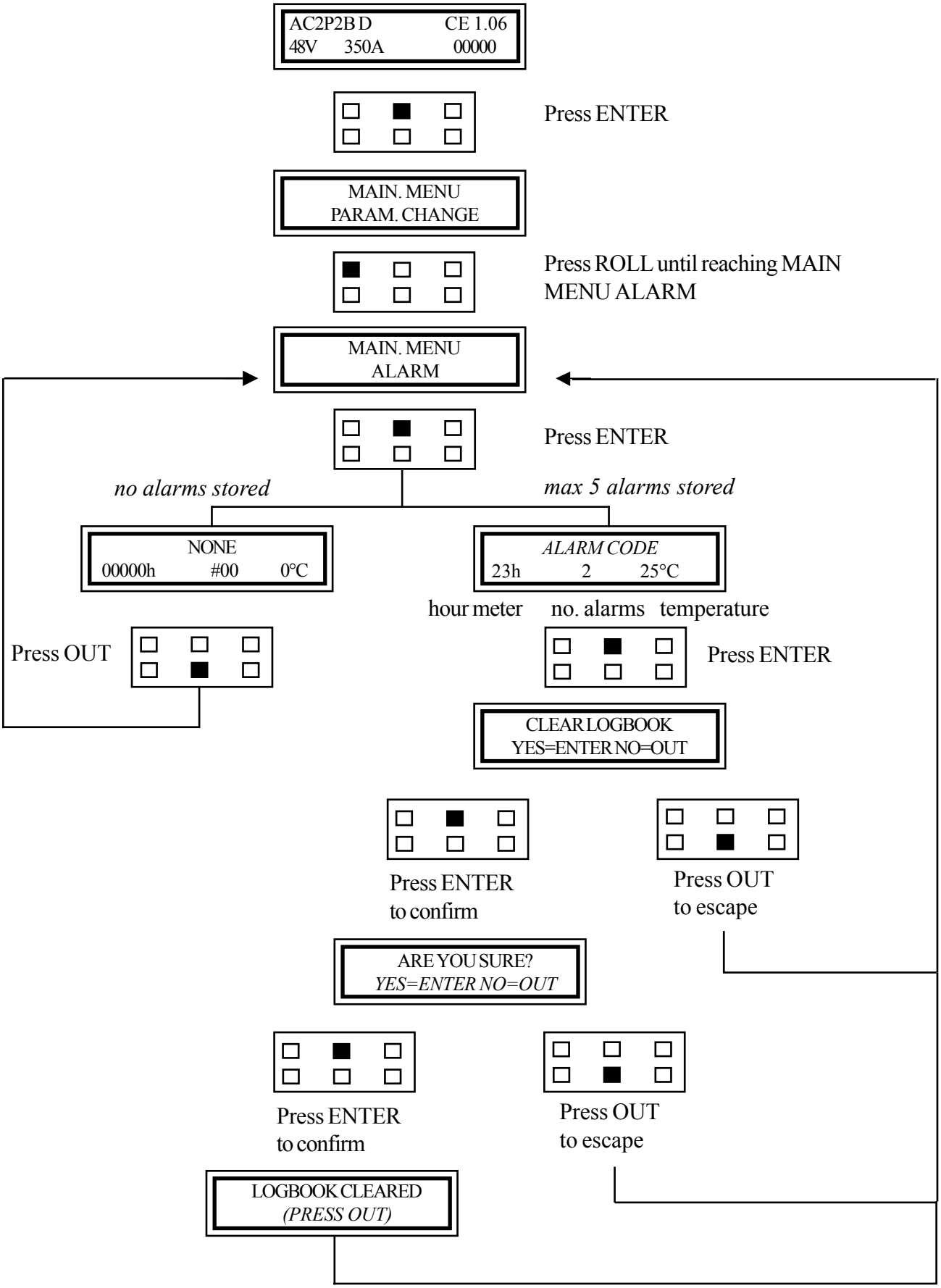

https://truckmanualshub.com/

MAIN MENU: PROGRAM VACC. (PUMP connection number 5)

This setting must be made with the parking brake released

```
AC2P2B D        CE 1.06
48V   350A       00000
```

Press ENTER

```
MAIN MENU
PARAM. CHANGE
```

Press ROLL until reaching the program VACC

```
MAIN MENU
PROGRAM VACC
```

Press ENTER

```
VACC SETTING
0.2        4.8
```

These are the old parameters stored

Press ENTER

```
VACC SETTING
0.0        0.0
```

Reset of the parameters

Pull the lifting lever slowly until the maximun stroke

```
VACC SETTING
0.2   ↑    4.8
```

Press OUT keeping the lever pulled

```
ARE YOU SURE?
YES=ENTER NO=OUT
```

Press ENTER to confirm and release the lever

https://truckmanualshub.com/

SLIP CONTROL (PUMP connection number 5)

This functions is useful to understand if a lifting problem is due to the encoder or not.

In case the truck stops or works with low speed with high consumption of current (and relevant alarm code displayed on the dashboard) it is possible to disable the encoder for some seconds, no longer, given that the logic unit cannot control the motor any longer.

Do not work with this configuration.

```
AC2P2B D          CE 1.06
48V    350A        00000
```

Press ENTER

```
MAIN MENU
PARAM. CHANGE
```

Press ROLL
until reaching ALARM menu

```
MAIN MENU
ALARM
```

Press ENTER

DESCRIPTION OF THE ALARM CODE

Press PARAM and SET together

```
* MENU *
SPECIAL ADJUST
```

Press ROLL

```
* MENU *
HARDWAR E SETTING
```

Press ENTER

COMPENSATION
SLIP CONTROL **ON/OFF**

Select SLIP CONTROL ON or OFF and store the parameter pressing OUT and then ENTER to confirm.
After that switch the truck OFF and ON.

With the SLIP CONTROL OFF pull the lever of the potentiometer slowly otherwise the motor stands still.

https://truckmanualshub.com/

BATTERY (PUMP connection number 5)

The control of the battery LED indication on the dashboard and the relevant reduction of speed are performed by the MASTER of the traction logic unit.

Scroll the parameters using ROLL and save the new values pressing OUT and then ENTER

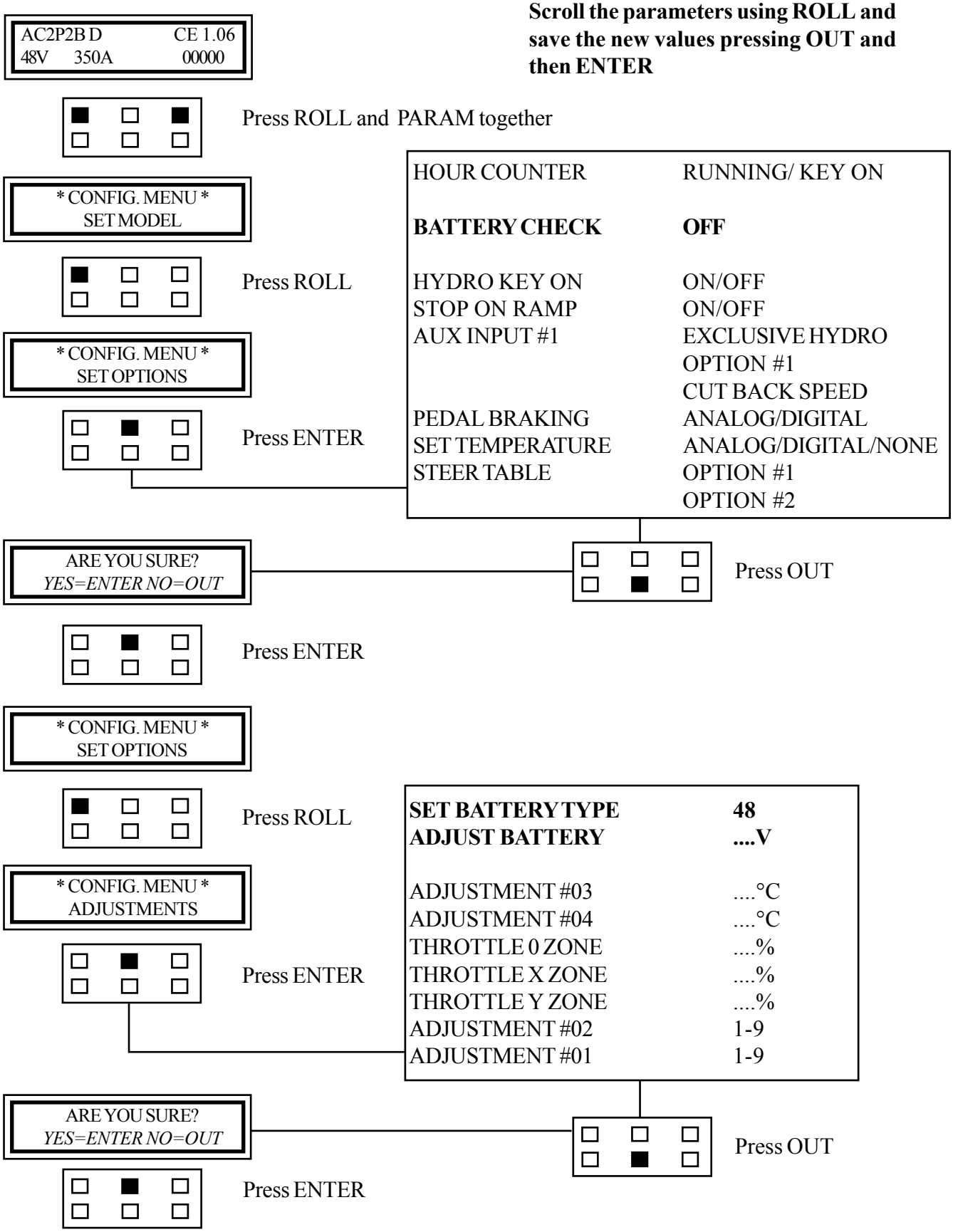

https://truckmanualshub.com/

LIFTING ACQUISITION (Lifting connection number 5)

Connect the console to the **LIFTING** logic unit

```
AC2P2B D          CE 1.06
48V    350A        00000
```

Press ROLL and PARAM together

```
* CONFIG. MENU *
SET MODEL
```

Press ENTER

```
CONNECTED TO 5
```

Press ROLL

```
JOYSTICK      ON
```

with electric distributor

```
JOYSTICK      OFF
```

with mechanic distributor

Press OUT

```
ARE YOU SURE?
YES=ENTER NO=OUT
```

Press ENTER to confirm

https://truckmanualshub.com/

PAGINA INTENZIONALMENTE BIANCA

INTENTIONALLY LEFT BLANK

PAGE INTENTIONNELLEMENT BLANCHE

ABSICHTLICH FREIGELASSENE SEITE

PÁGINA INTENCIONALMENTE BLANCA

https://truckmanualshub.com/

MAPS FOR USING THE CONSOLE

MHIRIO

https://truckmanualshub.com/

PAGINA INTENZIONALMENTE BIANCA

INTENTIONALLY LEFT BLANK

PAGE INTENTIONNELLEMENT BLANCHE

ABSICHTLICH FREIGELASSENE SEITE

PÁGINA INTENCIONALMENTE BLANCA

https://truckmanualshub.com/

DESCRIPTION OF THE CONSOLE STANDARD MENU OF THE MHYRIO UNIT

The console can be connected to the MHYRIO logic unit in two different ways:

1. Directly by means of an interface cable on the logic unit.
2. By connecting the console to another logic unit (pump or traction) and selecting the relevant connection number as shown in the map here below.

```
DA2M2B C          CE 1.13
48V    280A       00000
```

In case the console is connected to the traction logic unit

Press ROLL and PARAM together

```
* CONFIG. MENU *
SET MODEL
```

Press ENTER

```
CONNECTED TO
3
```

It is the connection number of the traction logic unit.

Press SET and select the connection number of the Mhyrio logic unit

```
CONNECTED TO
9
```

It is the connection number of the mhyrio unit.

Press OUT

```
ARE YOU SURE?
YES=ENTER NO=OUT
```

Press ENTER to confirm

```
* CONFIG. MENU *
SET MODEL
```

Press ROLL, OUT and SET together

```
MHY CB            ZP 0.11
48V    0A         00000
```

Connected to the MHYRIO logic unit

CONNECTION NUMBERS

3	TRACTION MASTER
4	TRACTION SLAVE
5	PUMP
9	MHYRIO
11	DASHBOARD

https://truckmanualshub.com/

DESCRIPTION OF THE CONSOLE STANDARD MENU MHYRIO UNIT

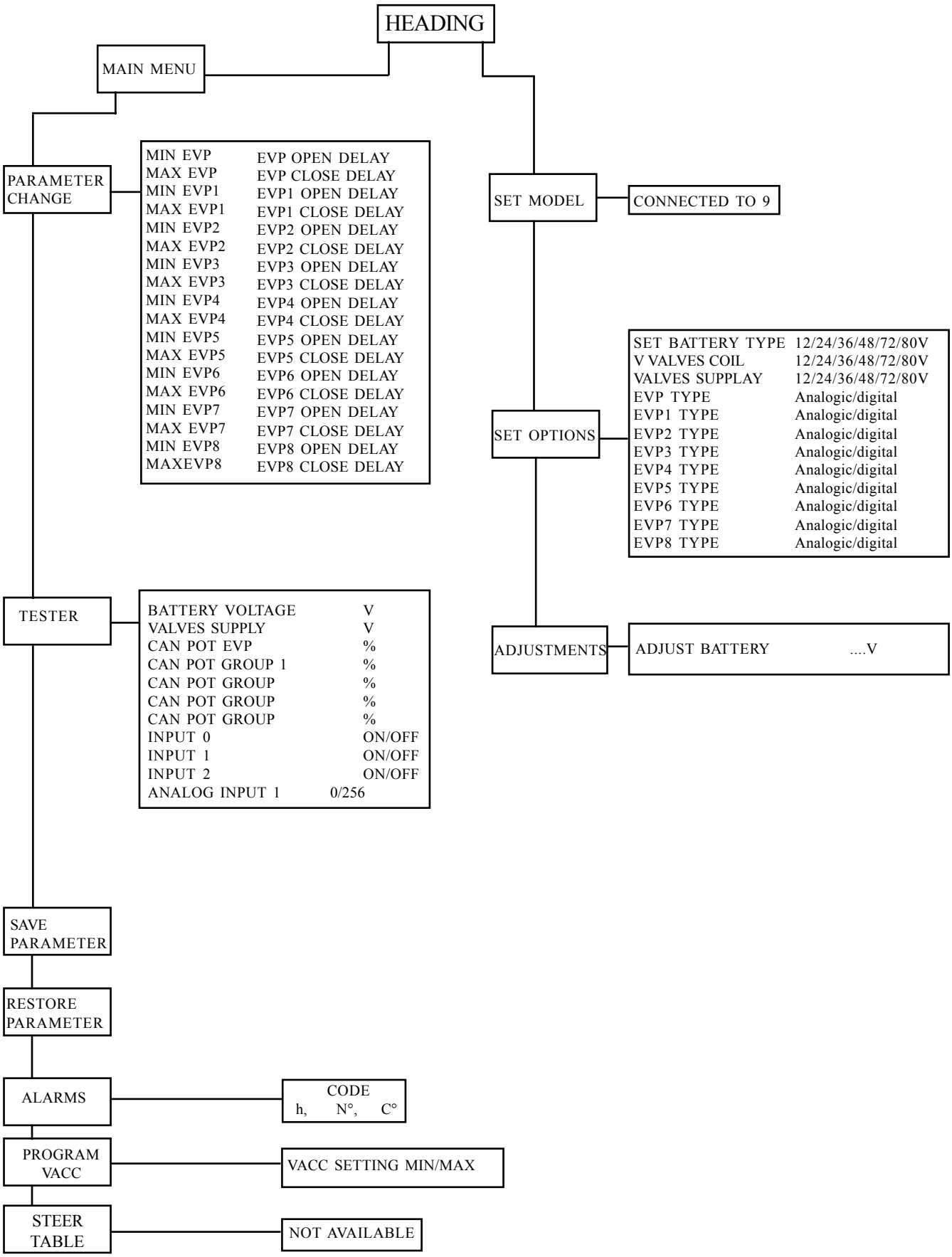

https://truckmanualshub.com/

MAIN MENU: PARAMETER CHANGE (Mhyrio connection number 9)

```
MHY CB        ZP 0.11
48V     0A     00000
```

Press ENTER

```
MAIN MENU
PARAM. CHANGE
```

Press ENTER

MIN EVP	Min voltage on the draining solenoid valve
MAX EVP	Max voltage on the draining solenoid valve
MIN EVP1	Min. voltage on the lowering solenoid valve
MAX EVP1	Max voltage on the lowering solenoid valve
MIN EVP2	Min. voltage on the lifting solenoid valve
MAX EVP2	Max voltage on the lifting solenoid valve
MIN EVP3	Min voltage on the backward tilt solenoid valve
MAX EVP3	Max voltage on the backward tilt solenoid valve
MIN EVP4	Min voltage on the forward tilt solenoid valve
MAX EVP4	Max voltage on the forward tilt solenoid valve
MIN EVP5	Min voltage on the sideshift right solenoid valve
MAX EVP5	Max voltage on the sideshift right solenoid valve
MIN EVP6	Min voltage on the sideshift left solenoid valve
MAX EVP6	Max voltage on the sideshift left solenoid valve
MIN EVP7	Min voltage on the 4th way forward solenoid valve
MAX EVP7	Max voltage on the 4th way backward solenoid valve
MIN EVP8	Min voltage on the 5th way forward solenoid valve
MAX EVP8	Max voltage on the 5th way backward solenoid valve
EVP OPEN DELAY	Delay of the EVP in opening
EVP CLOSE DELAY	Delay of the EVP in closing
EVP1 OPEN DELAY	Delay of the EVP1 in opening
EVP1 CLOSE DELAY	Delay of the EVP1 in closing
EVP2 OPEN DELAY	Delay of the EVP2 in opening
EVP2 CLOSE DELAY	Delay of the EVP2 in closing
EVP3 OPEN DELAY	Delay of the EVP3 in opening
EVP3 CLOSE DELAY	Delay of the EVP3 in closing
EVP4 OPEN DELAY	Delay of the EVP4 in opening
EVP4 CLOSE DELAY	Delay of the EVP4 in closing
EVP5 OPEN DELAY	Delay of the EVP5 in opening
EVP5 CLOSE DELAY	Delay of the EVP5 in closing
EVP6 OPEN DELAY	Delay of the EVP6 in opening
EVP6 CLOSE DELAY	Delay of the EVP6 in closing
EVP7 OPEN DELAY	Delay of the EVP7 in opening
EVP7 CLOSE DELAY	Delay of the EVP7 in closing
EVP8 OPEN DELAY	Delay of the EVP8 in opening
EVP8 CLOSE DELAY	Delay of the EVP8 in closing

Scroll the parameters using ROLL and save the new values pressing OUT and then ENTER

https://truckmanualshub.com/

MAIN MENU: TESTER (Mhyrio connection number 9)

```
MHY CB          ZP 0.11
48V     0A      00000
```

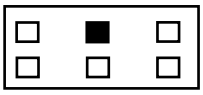

Press ENTER

```
MAIN MENU
PARAM. CHANGE
```

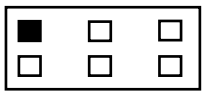

Press ROLL

```
MAIN MENU
TESTER
```

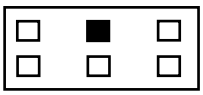

Press ENTER

BATTERY VOLTAGE	V
VALVES SUPPLY	V
CAN POT EVP	%
CAN POT GROUP 1	%
CAN POT GROUP 2	%
CAN POT GROUP 3	%
CAN POT GROUP 4	%
INPUT 0	ON/OFF
INPUT 1	ON/OFF
INPUT 2	ON/OFF
ANALOG INPUT 1	0/256

Scroll the parameters using ROLL.

Press OUT to escape.

https://truckmanualshub.com/

MAIN MENU : SAVE PARAMETER (Mhyrio connection number 9)

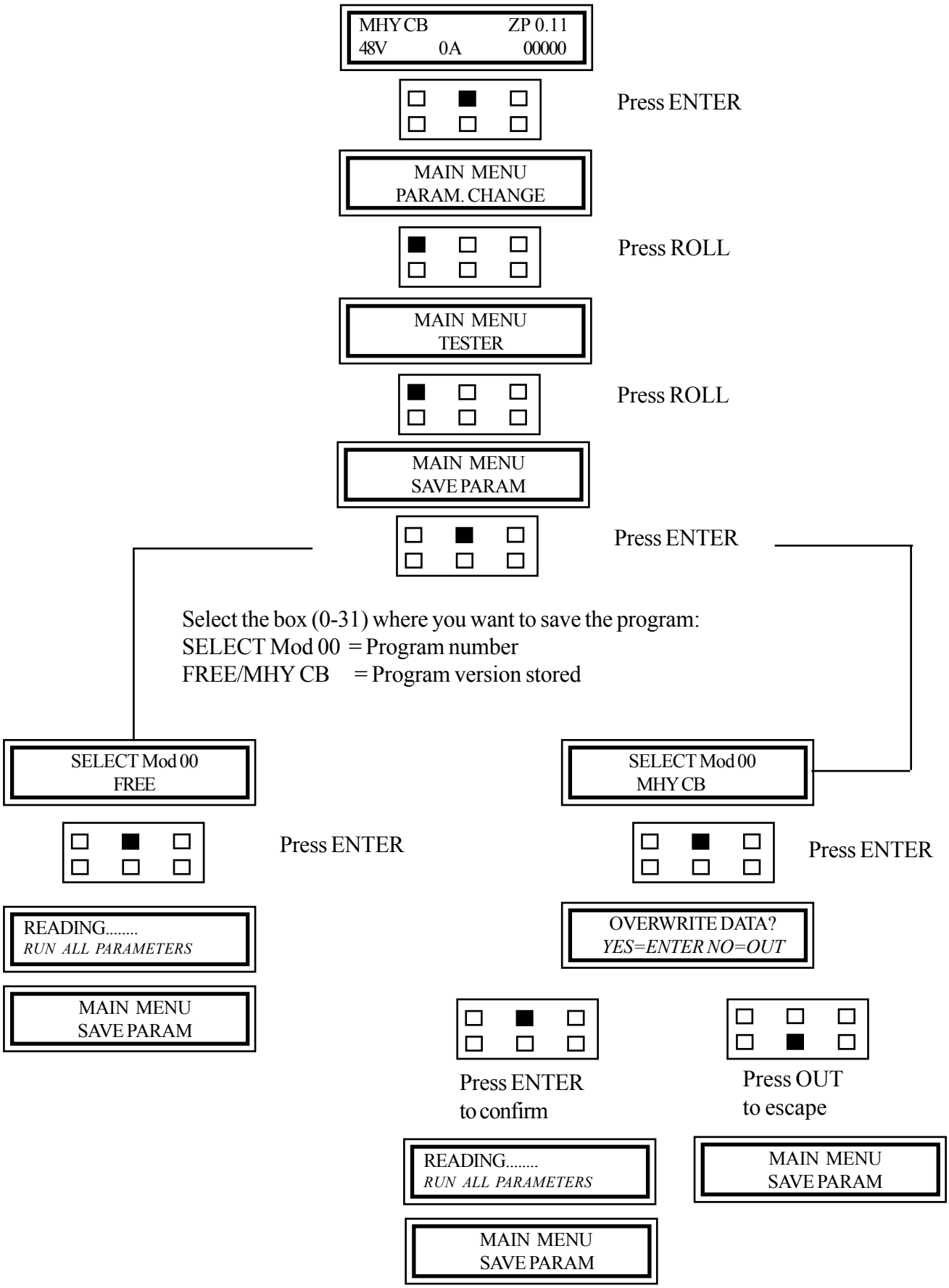

https://truckmanualshub.com/

MAIN MENU : RESTORE PARAMETER (Mhyrio connection number 9)

```
MHY CB          ZP 0.11
48V     0A      00000
```

Press ENTER

```
MAIN MENU
PARAM. CHANGE
```

Press ROLL

```
MAIN MENU
TESTER
```

Press ROLL

```
MAIN MENU
SAVE PARAM
```

Press ROLL

```
MAIN MENU
RESTORE PARAM
```

Press ENTER

```
SELECT Mod 00
MHY CB
```

SELECT Mod 00 = Program number
FREE/MHY CB = Program version stored

Press ROLL to Select the box (0-31) where you want to save the program

```
OVERWRITE DATA?
YES=ENTER NO=OUT
```

Press ENTER to confirm

```
STORING.....
RUN ALL PARAMETERS
```

```
MAIN MENU
RESTORE PARAM
```

Press OUT to escape

```
MAIN MENU
RESTORE PARAM
```

https://truckmanualshub.com/

MAIN MENU : ALARM (Mhyrio connection number 9)

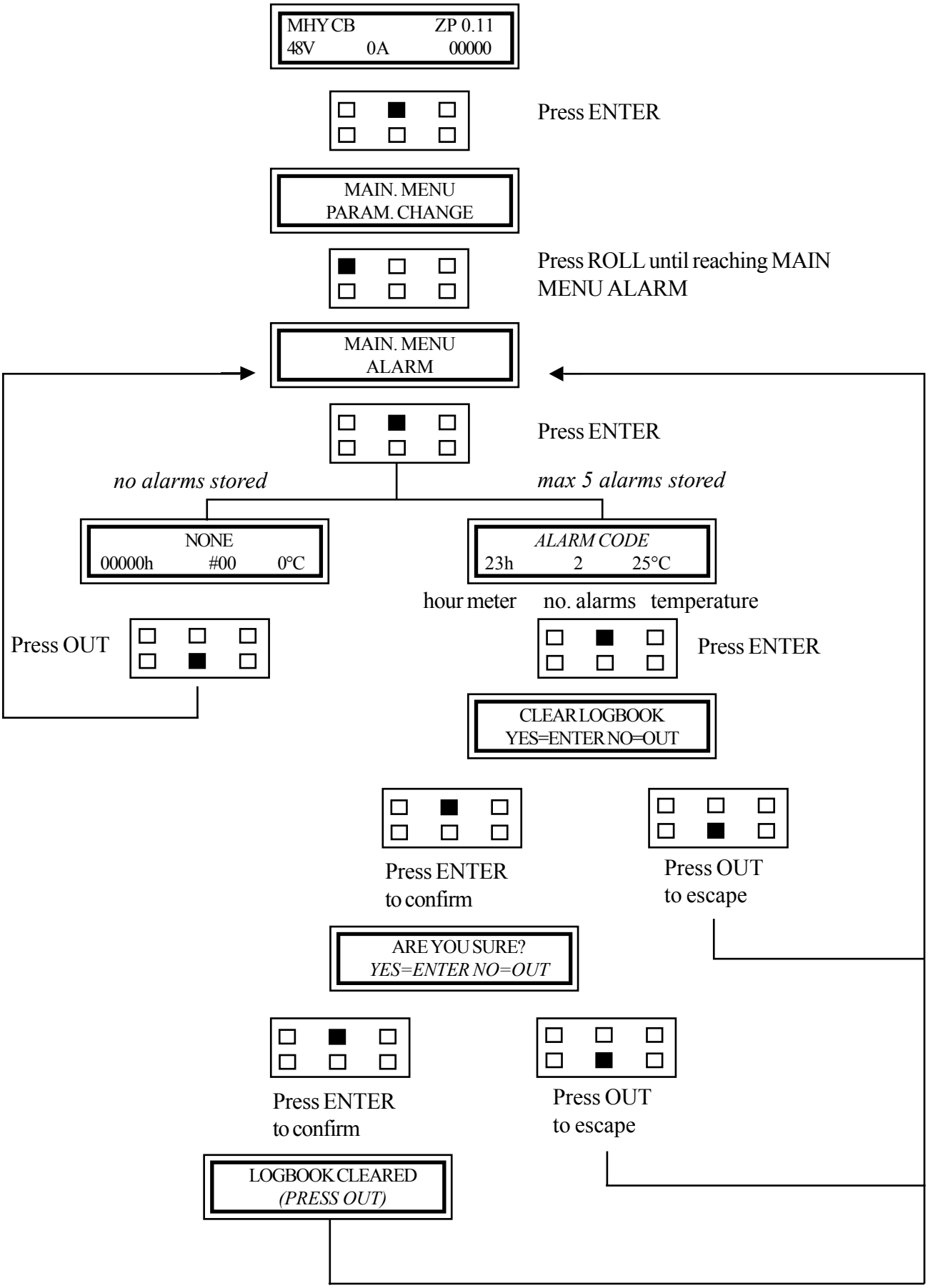

https://truckmanualshub.com/

MAIN MENU : PROGRAM VACC. (Mhyrio connection number 9)

Not available

https://truckmanualshub.com/

MAPS FOR USING THE CONSOLE

DASHBOARD

https://truckmanualshub.com/

PAGINA INTENZIONALMENTE BIANCA

INTENTIONALLY LEFT BLANK

PAGE INTENTIONNELLEMENT BLANCHE

ABSICHTLICH FREIGELASSENE SEITE

PÁGINA INTENCIONALMENTE BLANCA

https://truckmanualshub.com/

DESCRIPTION OF THE CONSOLE STANDARD MENU DASHBOARD

The console can be connected to the dashboard unit in the following way:

By connecting the console to another logic unit (traction, lifting or mhyrio) and selecting the relevant connection number as shown in the map here below.

```
DA2M2B C          CE 1.13
48V    280A       00000
```

In case the console is connected to the traction logic unit

Press ROLL and PARAM together

```
* CONFIG. MENU *
SET MODEL
```

Press ENTER

```
CONNECTED TO
3
```

It is the connection number of the traction logic unit.

Press SET and select the connection number of the lifting logic unit

```
CONNECTED TO
11
```

It is the connection number of the dashboard unit.

Press OUT

```
ARE YOU SURE?
YES=ENTER NO=OUT
```

Press ENTER to confirm

```
* CONFIG MENU *
SET MODEL
```

Press ROLL, OUT and SET together

```
DASH              CE V 1.00
24     0A         00000
```

Connected to the dashboard unit

CONNECTION NUMBERS

3	TRACTION MASTER
4	TRACTION SLAVE
5	PUMP
9	MHYRIO
11	DASHBOARD

https://truckmanualshub.com/

MAIN MENU : PARAMETER CHANGE (Dashboerd connection number 11)

Parameters shown in the adjusting table wich can be modified in a fixed range.

```
DASH          CE V 1.00
24    0A      00000
```

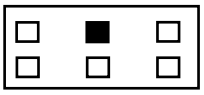

Press ENTER

```
MAIN MENU
PARAM. CHANGE
```

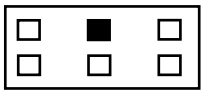

Press ENTER

HOURS COUNTER RUNNING/KEY:	key on / lifting unit working hours counter switch
DISPLAY ON/OFF:	displaied speed switch
SPEED RATIO 0-5 12:	speed calculation ratio

Scroll the parameters using ROLL, store the new parameters pressing OUT and then ENTER.

Reset by ignition key whenever a modification is carryed out.

If the parameter HOURS COUNTER is switched in KEY ON option the hourglass will start to blink whenever the ignition key will be tourned on (=key workhours count).

If the parameter DISPLAY SPEED is switched ON on the display used to point off the alarm codes, will appear two zeros (=truck speed displayed).

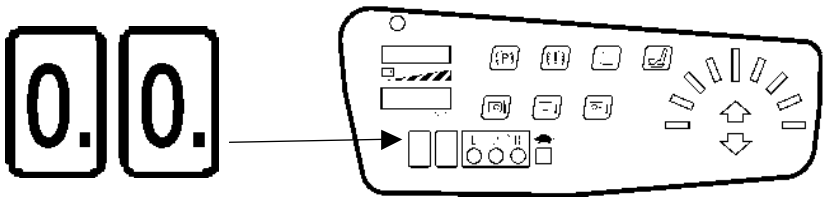

In case of folt the speed indication disappears and the alarm code appears.

https://truckmanualshub.com/

WIRING DIAGRAMS

https://truckmanualshub.com/

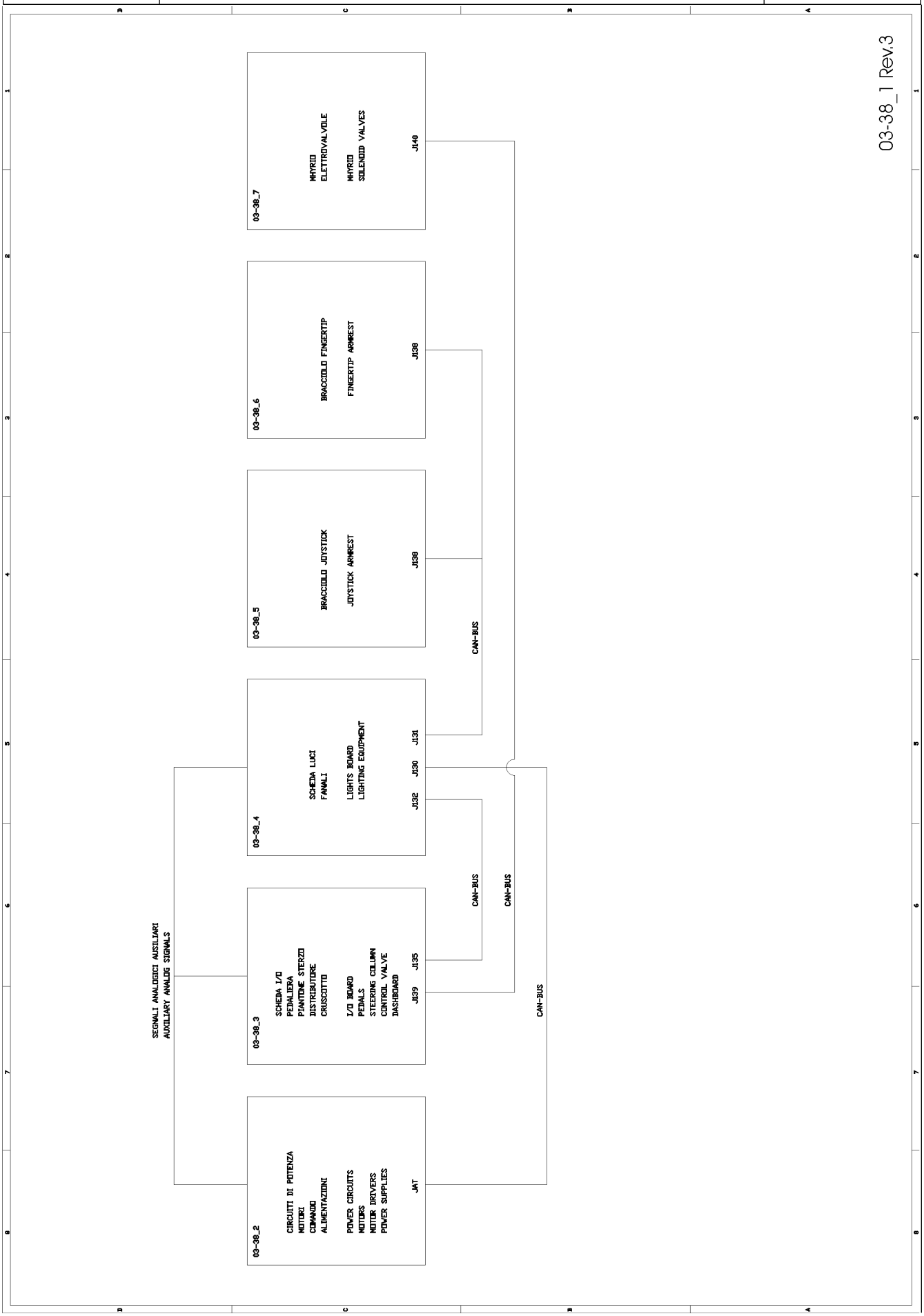

https://truckmanualshub.com/

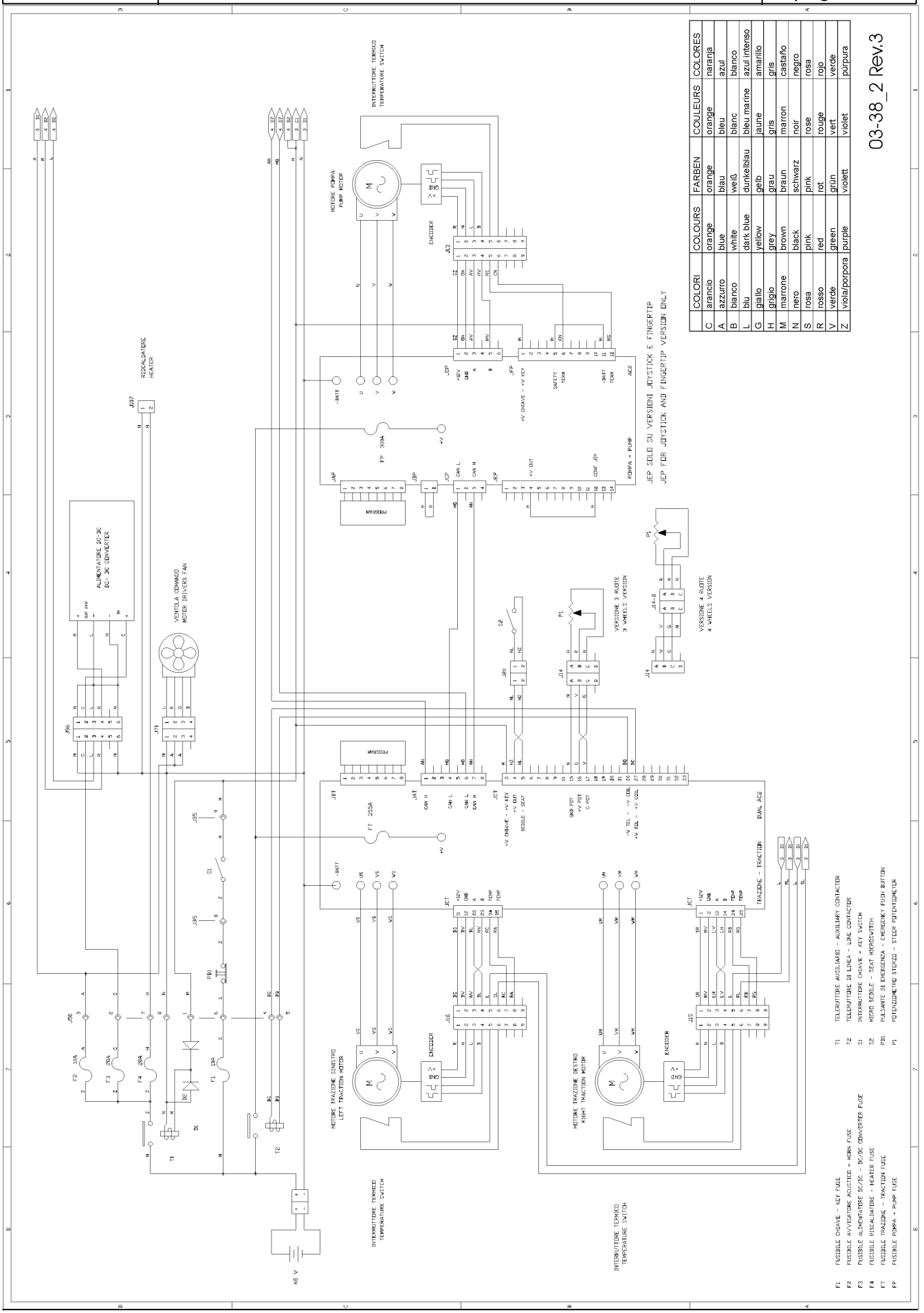

https://truckmanualshub.com/

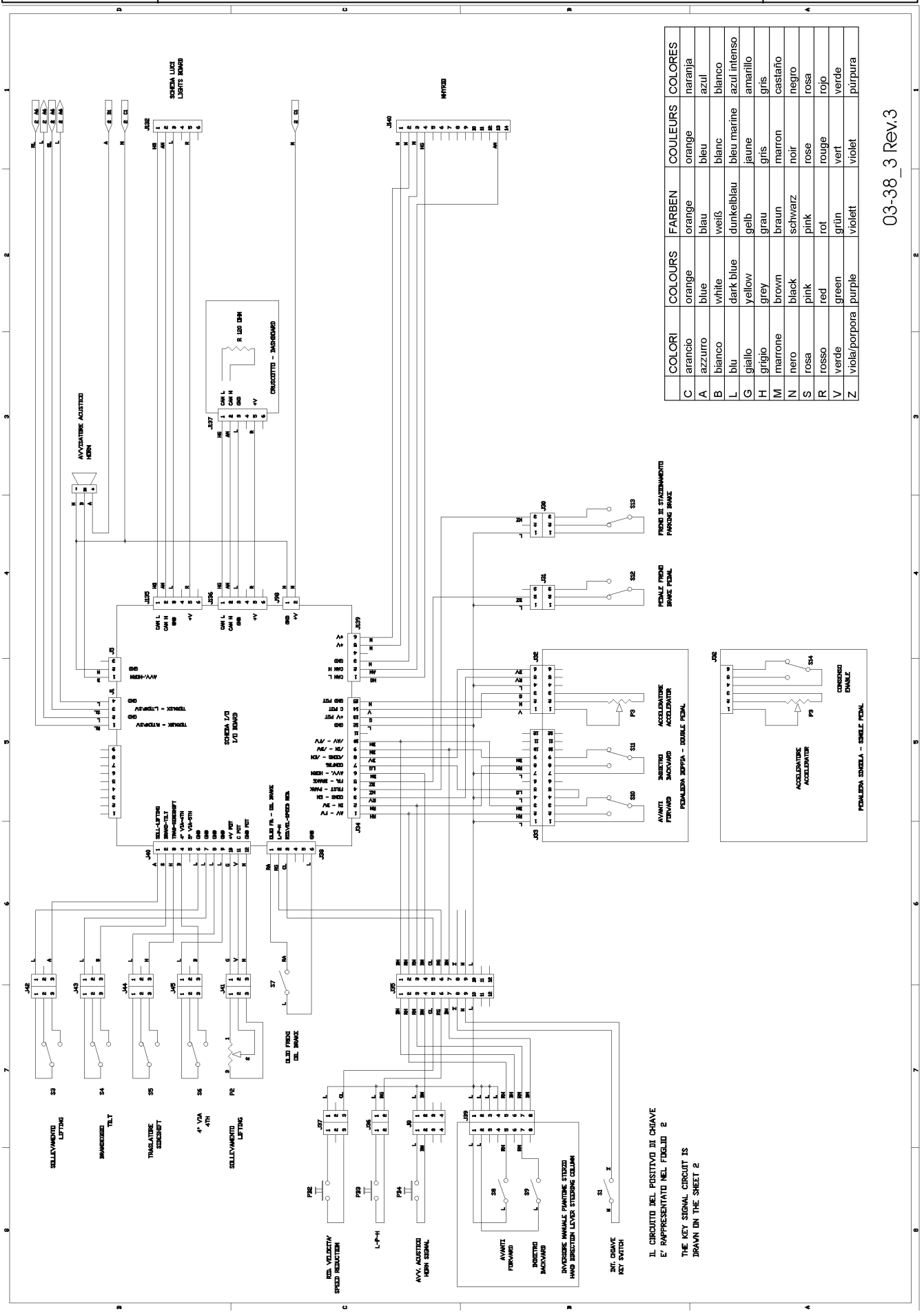

	COLORI	COLOURS	FARBEN	COULEURS	COLORES
C	arancio	orange	orange	orange	naranja
A	azzurro	blue	blau	bleu	azul
B	bianco	white	weiß	blanc	blanco
L	blu	dark blue	dunkelblau	bleu marine	azul intenso
G	giallo	yellow	gelb	jaune	amarillo
H	grigio	grey	grau	gris	gris
M	marrone	brown	braun	marron	castaño
N	nero	black	schwarz	noir	negro
S	rosa	pink	pink	rose	rosa
R	rosso	red	rot	rouge	rojo
V	verde	green	grün	vert	verde
Z	viola/porpora	purple	violett	violet	púrpura

https://truckmanualshub.com/

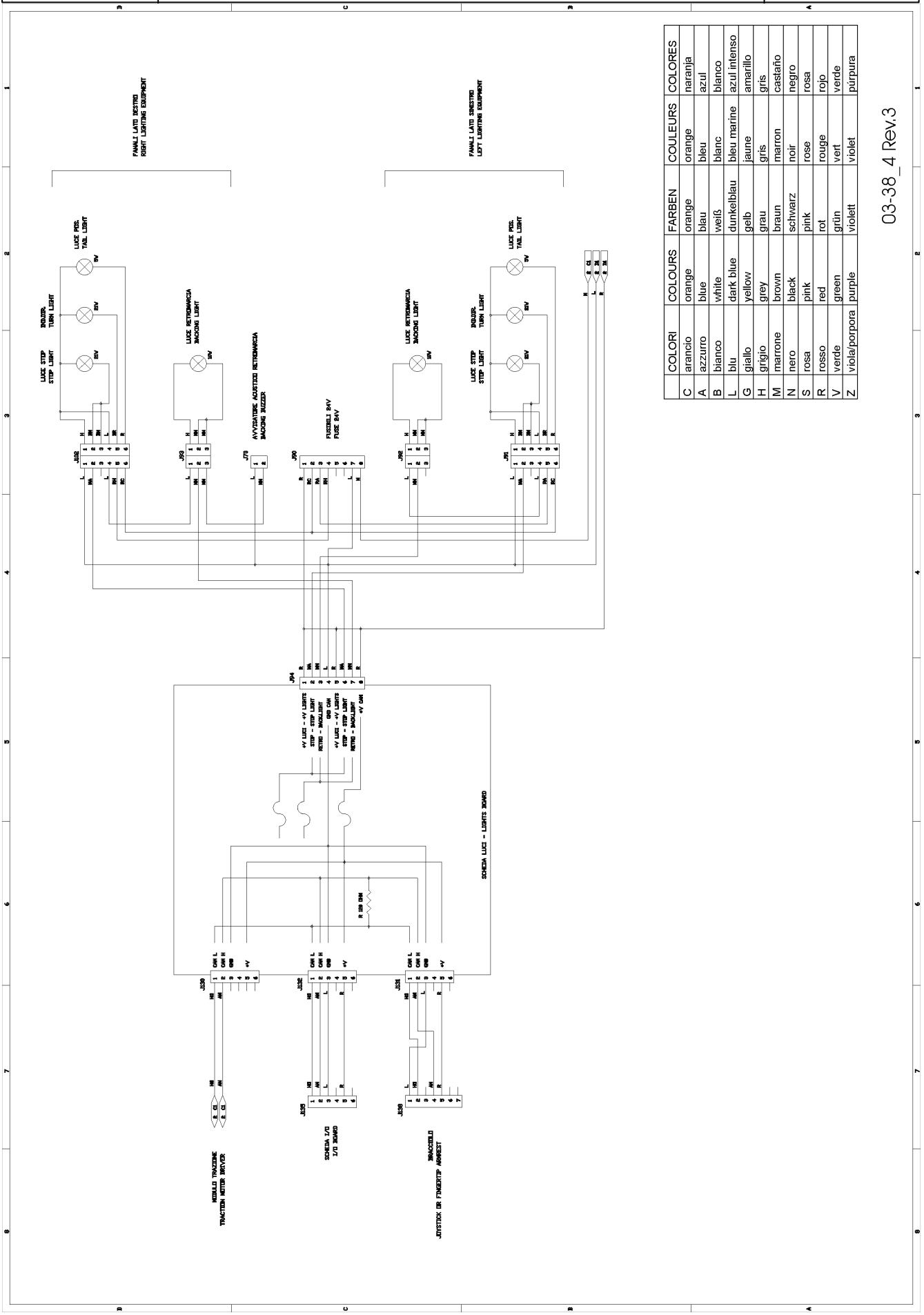

	COLORI	COLOURS	FARBEN	COULEURS	COLORES
C	arancio	orange	orange	orange	naranja
A	azzurro	blue	blau	bleu	azul
B	bianco	white	weiß	blanc	blanco
L	blu	dark blue	dunkelblau	bleu marine	azul intenso
G	giallo	yellow	gelb	jaune	amarillo
H	grigio	grey	grau	gris	gris
M	marrone	brown	braun	marron	castaño
N	nero	black	schwarz	noir	negro
S	rosa	pink	pink	rose	rosa
R	rosso	red	rot	rouge	rojo
V	verde	green	grün	vert	verde
Z	viola/porpora	purple	violett	violet	púrpura

03-38_4 Rev.3

https://truckmanualshub.com/

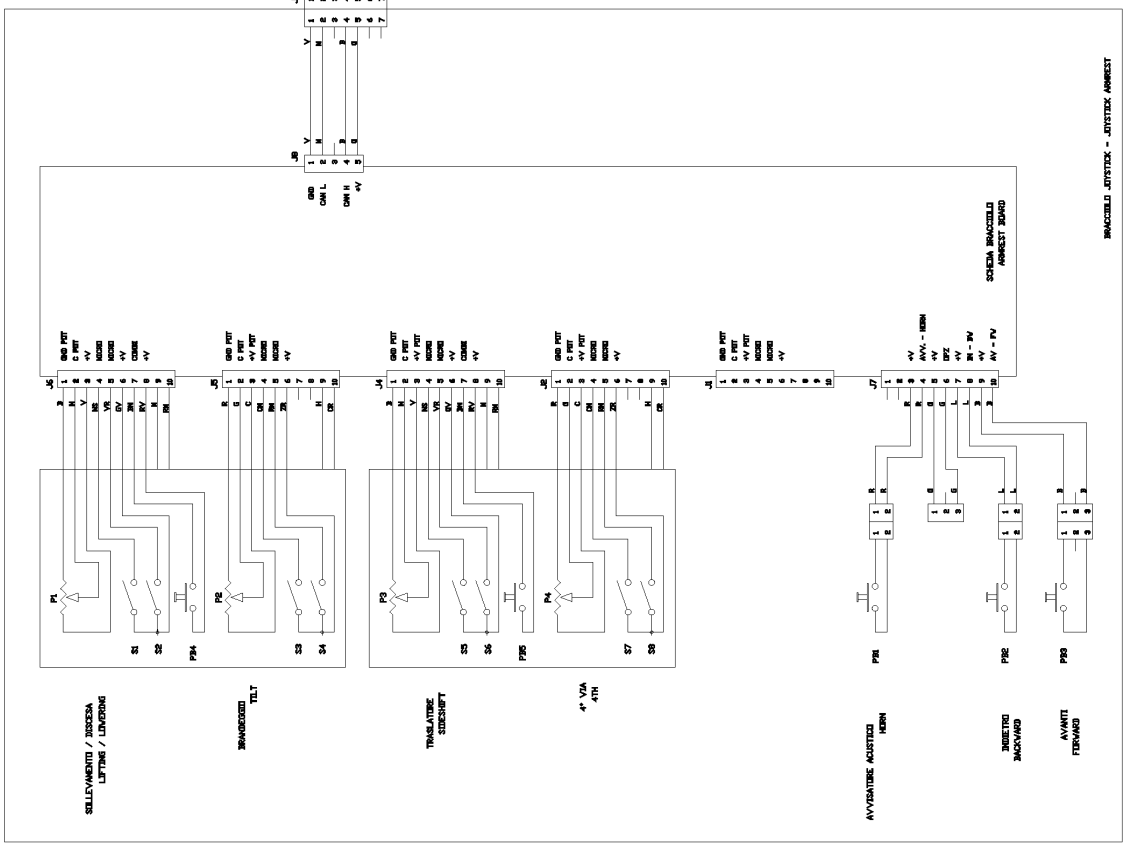

	COLORI	COLOURS	FARBEN	COULEURS	COLORES
C	arancio	orange	orange	orange	naranja
A	azzurro	blue	blau	bleu	azul
B	bianco	white	weiß	blanc	blanco
L	blu	dark blue	dunkelblau	bleu marine	azul intenso
G	giallo	yellow	gelb	jaune	amarillo
H	grigio	grey	grau	gris	gris
M	marrone	brown	braun	marron	castaño
N	nero	black	schwarz	noir	negro
S	rosa	pink	pink	rose	rosa
R	rosso	red	rot	rouge	rojo
V	verde	green	grün	vert	verde
Z	viola/porpora	purple	violett	violet	púrpura

03-38_5 Rev.3

https://truckmanualshub.com/

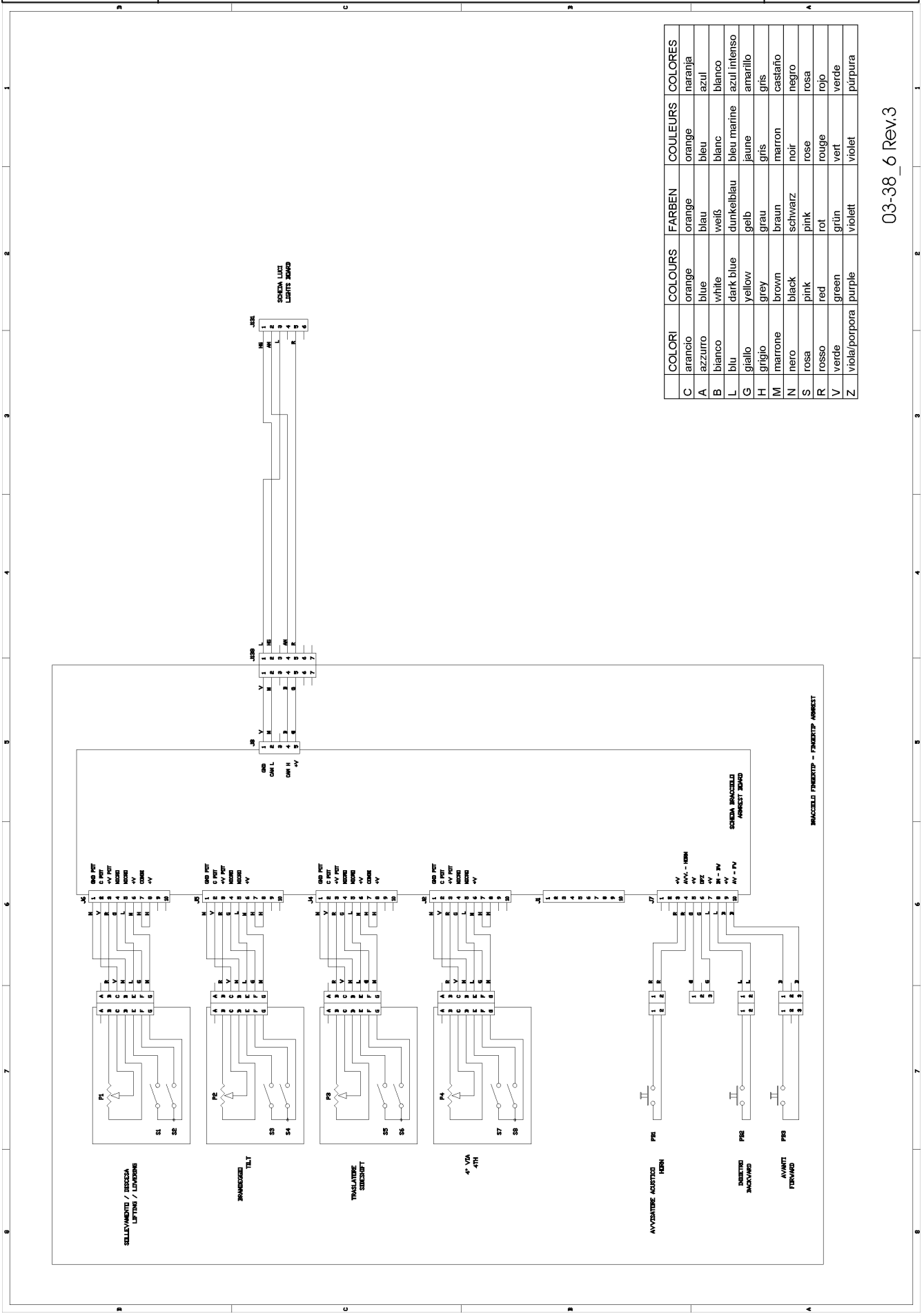

	COLORI	COLOURS	FARBEN	COULEURS	COLORES
C	arancio	orange	orange	orange	naranja
A	azzurro	blue	blau	bleu	azul
B	bianco	white	weiß	blanc	blanco
L	blu	dark blue	dunkelblau	bleu marine	azul intenso
G	giallo	yellow	gelb	jaune	amarillo
H	grigio	grey	grau	gris	gris
M	marrone	brown	braun	marron	castaño
N	nero	black	schwarz	noir	negro
S	rosa	pink	pink	rose	rosa
R	rosso	red	rot	rouge	rojo
V	verde	green	grün	vert	verde
Z	viola/porpora	purple	violett	violet	púrpura

https://truckmanualshub.com/

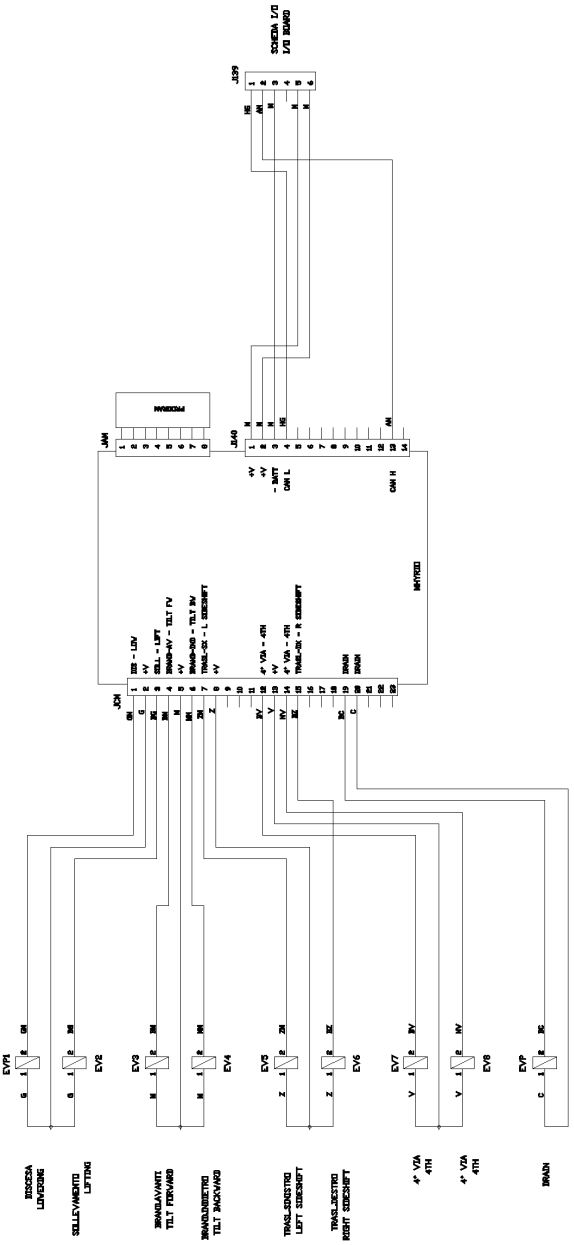

	COLORI	COLOURS	FARBEN	COULEURS	COLORES
C	arancio	orange	orange	orange	naranja
A	azzurro	blue	blau	bleu	azul
B	bianco	white	weiß	blanc	blanco
L	blu	dark blue	dunkelblau	bleu marine	azul intenso
G	giallo	yellow	gelb	jaune	amarillo
H	grigio	grey	grau	gris	gris
M	marrone	brown	braun	marron	castaño
N	nero	black	schwarz	noir	negro
S	rosa	pink	pink	rose	rosa
R	rosso	red	rot	rouge	rojo
V	verde	green	grün	vert	verde
Z	viola/porpora	purple	violett	violet	púrpura

03-38_7 Rev.3

https://truckmanualshub.com/

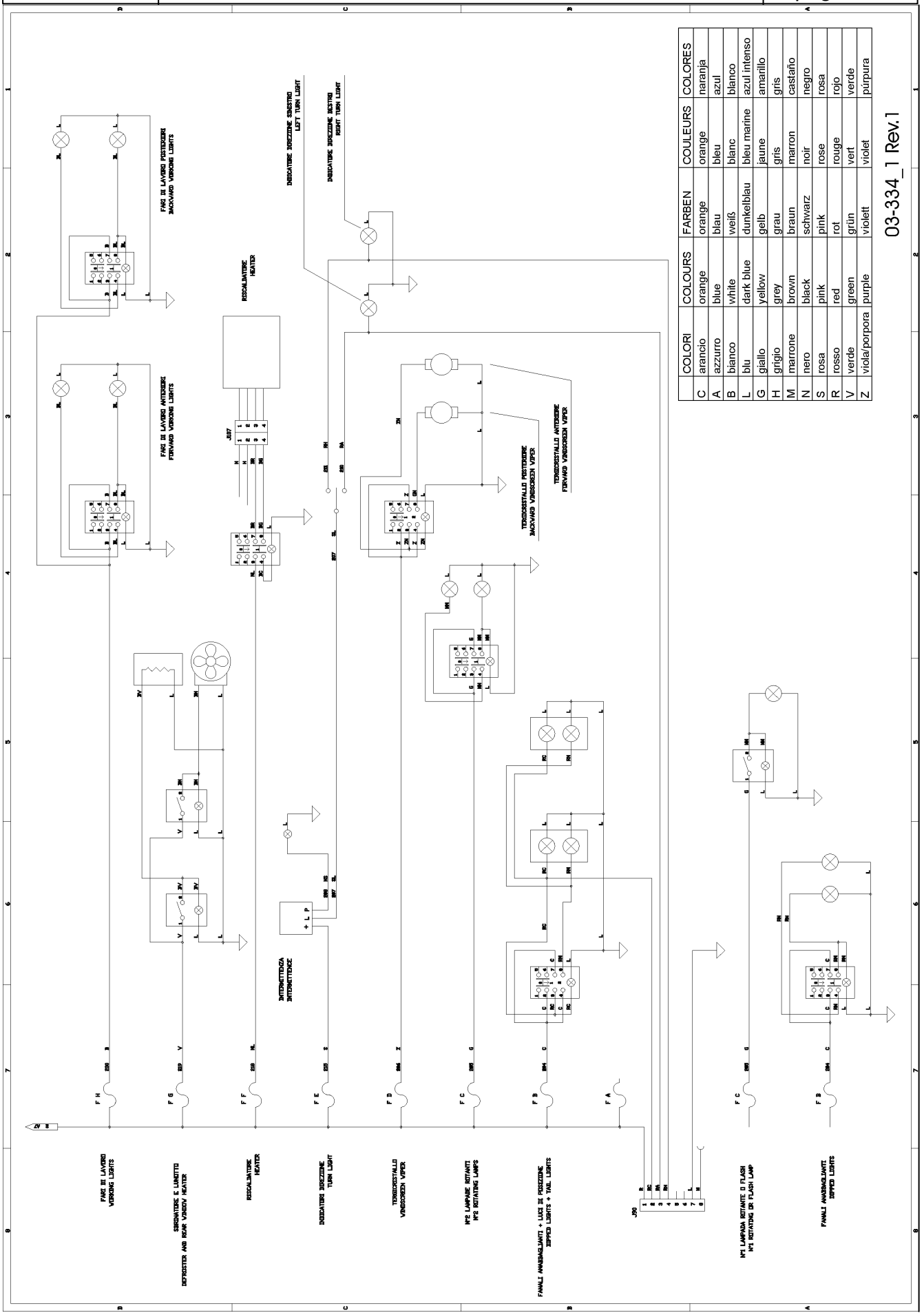

	COLORI	COLOURS	FARBEN	COULEURS	COLORES
C	arancio	orange	orange	orange	naranja
A	azzurro	blue	blau	bleu	azul
B	bianco	white	weiß	blanc	blanco
L	blu	dark blue	dunkelblau	bleu marine	azul intenso
G	giallo	yellow	gelb	jaune	amarillo
H	grigio	grey	grau	gris	gris
M	marrone	brown	braun	marron	castaño
N	nero	black	schwarz	noir	negro
S	rosa	pink	pink	rose	rosa
R	rosso	red	rot	rouge	rojo
V	verde	green	grün	vert	verde
Z	viola/porpora	purple	violett	violet	púrpura

03-334_1 Rev.1

https://truckmanualshub.com/

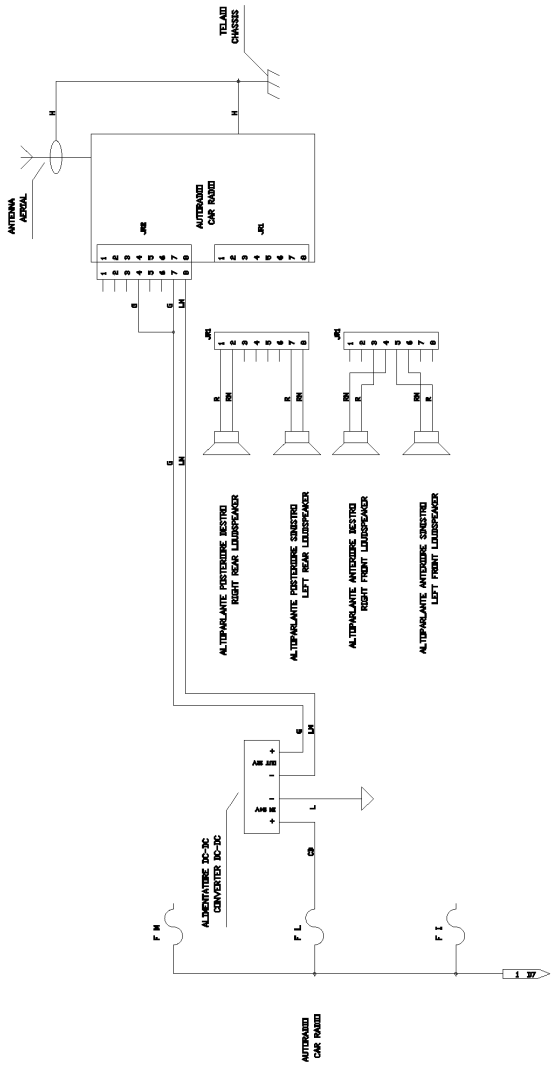

	COLORI	COLOURS	FARBEN	COULEURS	COLORES
C	arancio	orange	orange	orange	naranja
A	azzurro	blue	blau	bleu	azul
B	bianco	white	weiß	blanc	blanco
L	blu	dark blue	dunkelblau	bleu marine	azul intenso
G	giallo	yellow	gelb	jaune	amarillo
H	grigio	grey	grau	gris	gris
M	marrone	brown	braun	marron	castaño
N	nero	black	schwarz	noir	negro
S	rosa	pink	pink	rose	rosa
R	rosso	red	rot	rouge	rojo
V	verde	green	grün	vert	verde
Z	viola/porpora	purple	violett	violet	púrpura

03-334_2 Rev.1

https://truckmanualshub.com/

CHAPTER 6000

HYDRAULIC / PNEUMATIC SYSTEM

https://truckmanualshub.com/

HYDRAULIC / PNEUMATIC SYSTEM INDEX

CONTROL VALVE SYSTEM (CONTROL VALVE VERSION) page 3

CONTROL VALVE SYSTEM (JOYSTICKS/FINGERTIPS VERSION) page 9

POWER STEERING HYDRAULIC DIAGRAM page 13

OIL AND OIL FILTER page 14

PUMP REPLACEMENT page 15

https://truckmanualshub.com/

HYDRAULIC DIAGRAM
Control valve version

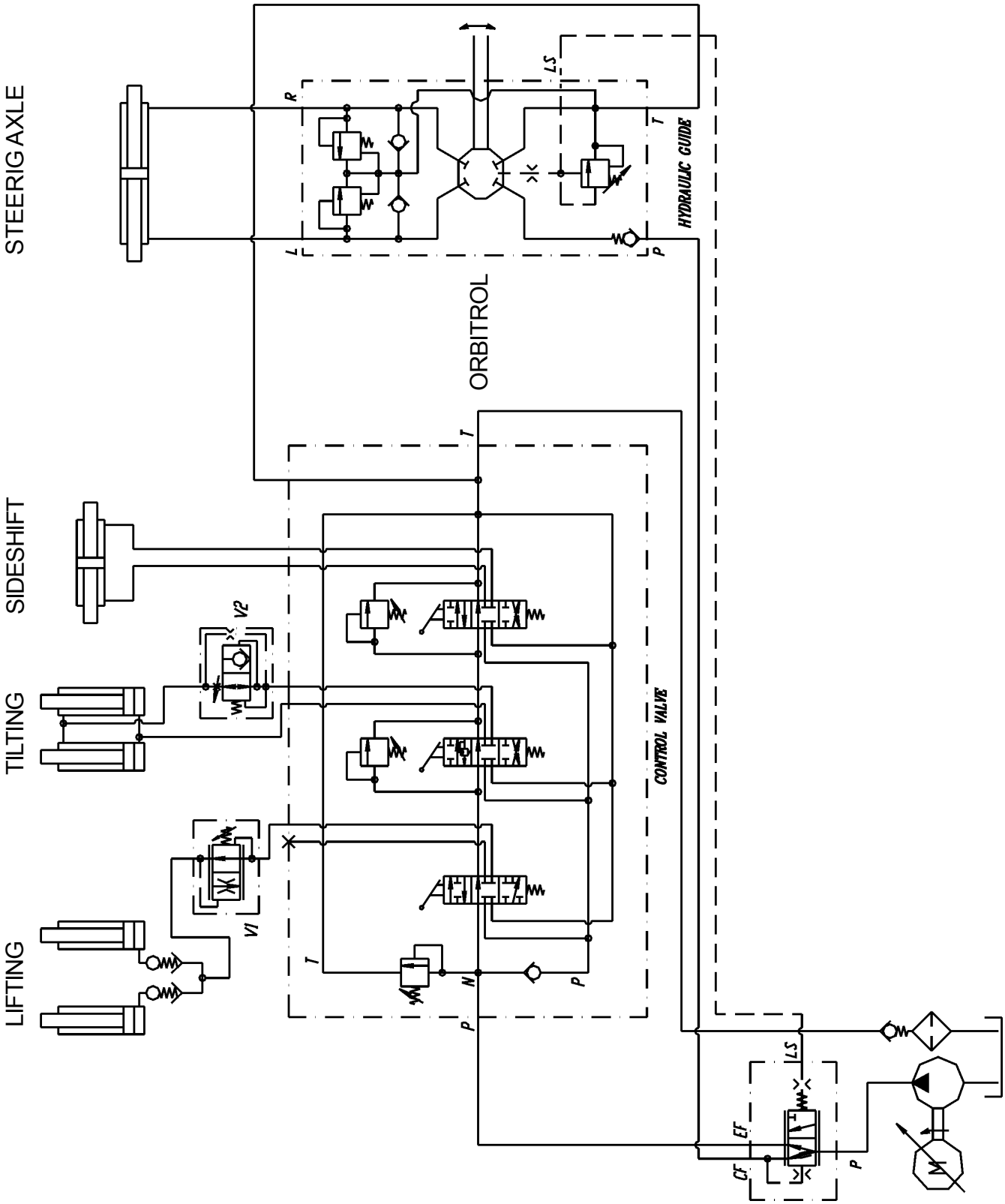

https://truckmanualshub.com/

CONTROL VALVE HYDRAULIC SYSTEM
Control valve version

3 AND 4 WHEELS

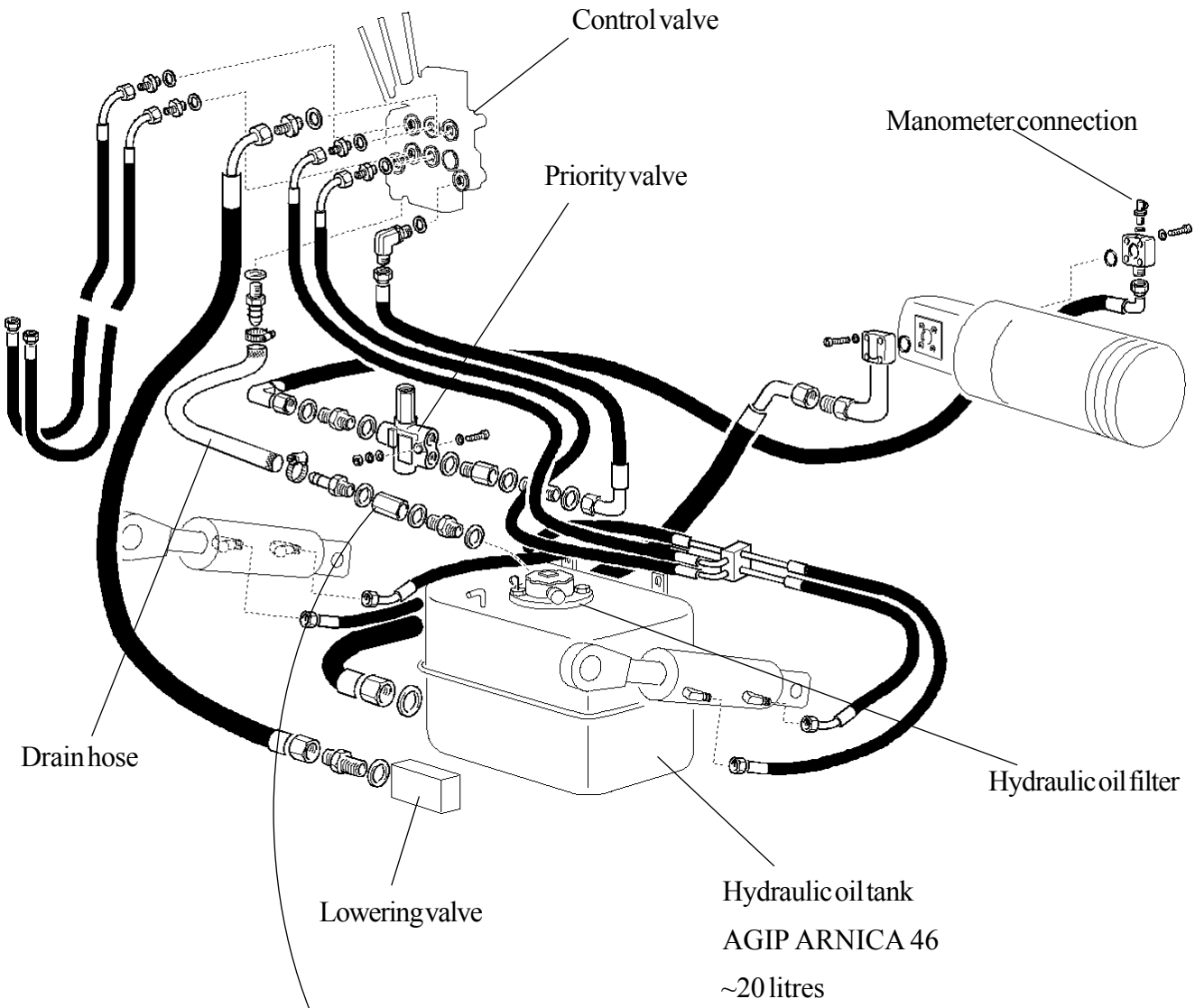

The correct position of the valve is shown in the picture

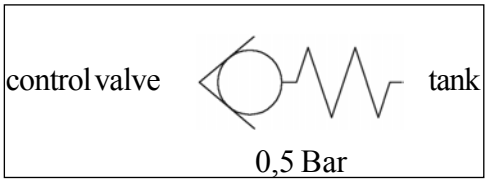

https://truckmanualshub.com/

HYDRAULIC CONTROL VALVES

Control valve version

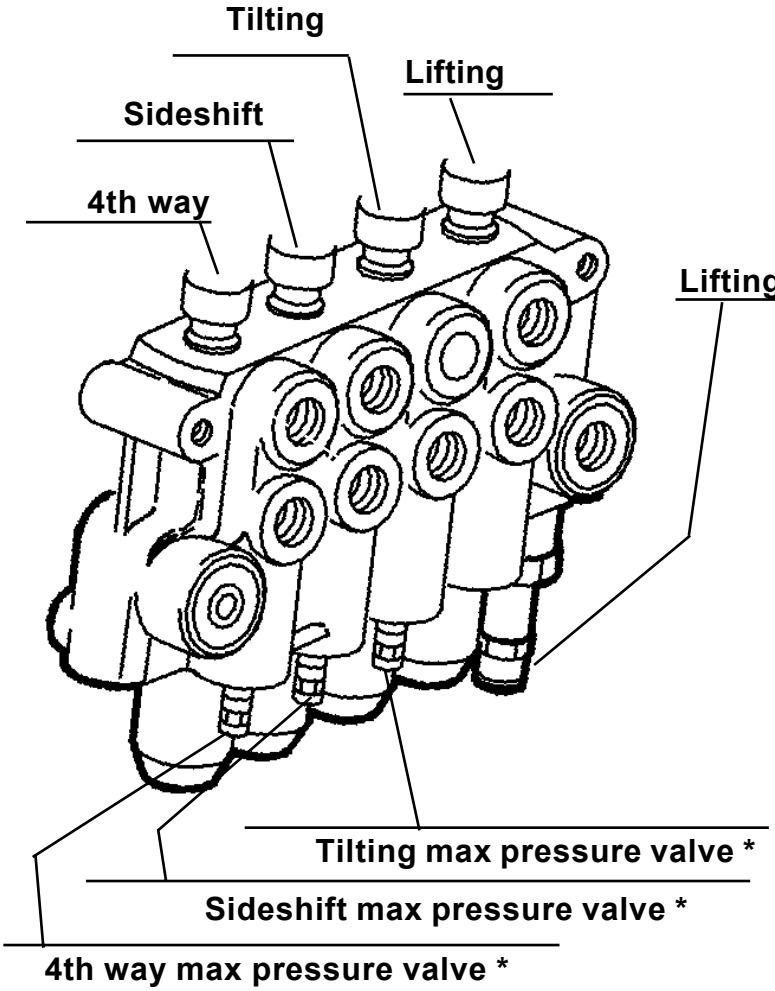

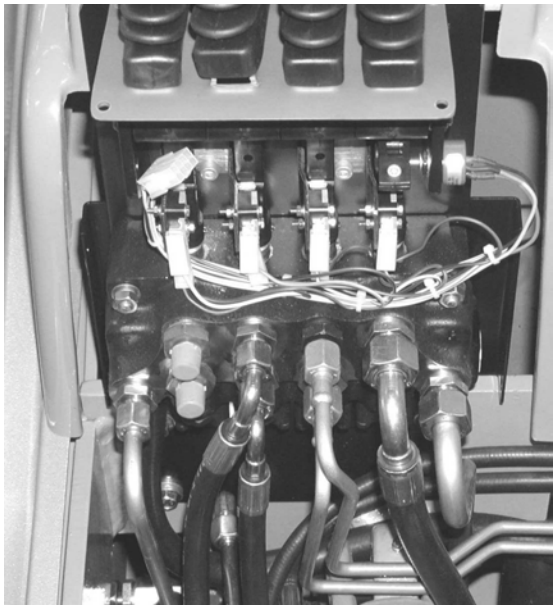

*: screw in to increase pressure, screw out to decrease pressure

MANOMETER CONNECTION POINT FOR HYDRAULIC PRESSURE CONTROL

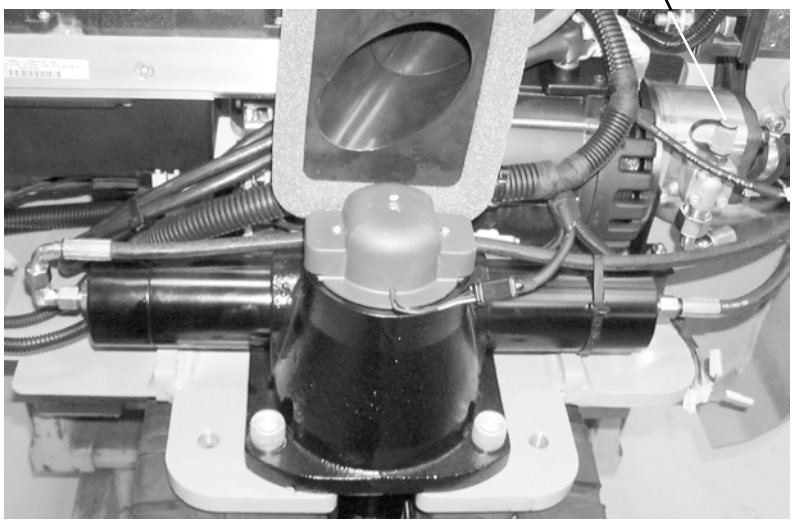

https://truckmanualshub.com/

CONTROL VALVE

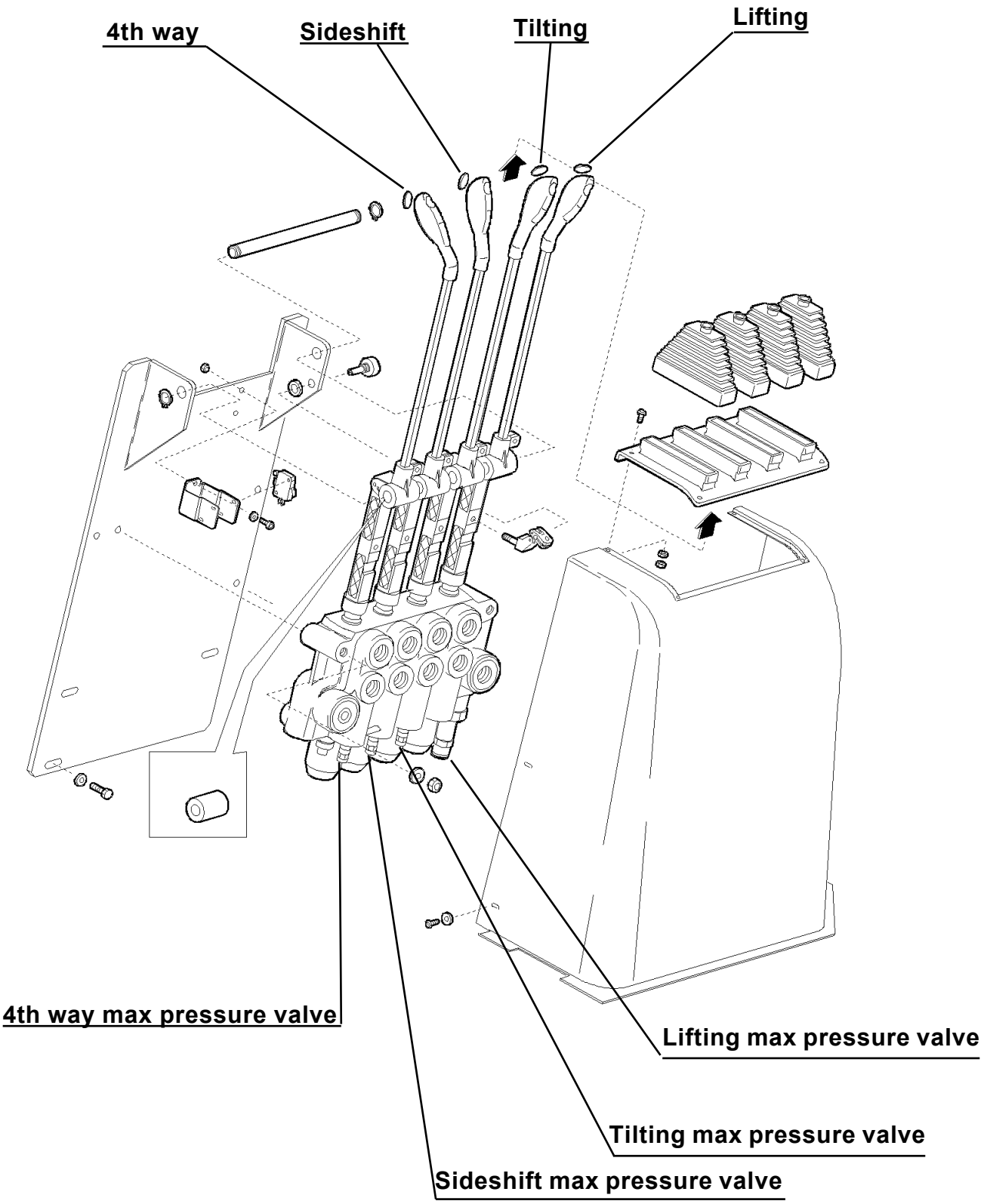

https://truckmanualshub.com/

LIFTING PERFORMANCE

Here below the table with the performance of a STD machine.

Q1 = It corresponds to the maximum load of the machine at 3mt. (See capacity plate).
Q2 = It corresponds to the maximum load of the machine at maximum load.
FFL = Full free loft mast
TV = Total visibility mast
m/sec = Lifting speed: min 0.30 m/sec = it means 3.3 sec to cover 1 meter.
max 0.50 m/sec = it means 2 sec to cover 1 meter.
max 0.60 m/sec = it means 1.7 sec to cover 1 meter
Amp = Consuption of Ampere
P = Pressure

LIFTING

Q1 max. Load Q2 max. Charge at max. Height

1,2 t 3 & 4 weels

load	FFL				TV			
Kg	m/sec		amp	bar	m/sec		amp	bar
Q1	0,28	0,34	max 220	max 150	0,32	0,38	max 250	max 165
lovering Q1	max	0,50			max	0,55		
end stoke							max 280	max 195 *

1,5 t 3 & 4 weels

load	FFL				TV			
Kg	m/sec		amp	bar	m/sec		amp	bar
Q1	0,26	0,33	max 240	max 170	0,28	0,36	max 270	max 185
lovering Q1	max	0,50			max	0,55		
end stoke							max 290	max 210 *

1,6 t 3 & 4 weels

load	FFL				TV			
Kg	m/sec		amp	bar	m/sec		amp	bar
Q1	0,26	0,32	max 235	max 175	0,28	0,36	max 265	max 190
lovering Q1	max	0,50			max	0,55		
end stoke							max 290	max 220 *

1,8 t 3 & 4 weels

load	FFL				TV			
Kg	m/sec		amp	bar	m/sec		amp	bar
Q1	0,24	0,30	max 250	max 180	0,25	0,33	max 280	max 200
lovering Q1	max	0,50			max	0,55		
end stoke							max 300	max 235 *

2,0 t 3 & 4 weels

load	FFL				TV			
Kg	m/sec		amp	bar	m/sec		amp	bar
Q1	0,24	0,32	max 260	max 190	0,22	0,30	max 290	max 210
lovering Q1	max	0,50			max	0,55		
end stoke							max 310	max 240 *

*** = Max pressure to max high**

For fingertips / mini joysticks version the maximum pressure valve is set to 240 Bar

https://truckmanualshub.com/

TILTING AND SIDESHIFT PERFORMANCE

Here below the table with the performance of a STD machine.

Q1 = It corresponds to the maximum load of the machine at 3mt. (See capacity plate).

Exercise = It means mast in movement.

End stroke= It corresponds to the maximum stroke in forward or backward

bw = Backward

fw = Forward

TILTING AND SIDESHIFT

Mast lower than 5000 mm.

Std tilt 2,5° FW 6° BW.:Test to be done at 3 m Hight with Q1 load

	Exercise						End stoke			
	sec		amp		bar		amp		bar	
Lever control valve										
BW - FW	2,6	3,4	max	50	max	50	max	100	max	150
FW - BW	2,4	3,4	max	90	max	120	max	100	max	150
Electric control valve										
BW - FW	3	3,6	max	40	max	30	max	130	max	240
FW - BW	2,8	3,4	max	90	max	110	max	130	max	240

Std sideshift stoke 100 mm: (visual check)

Mast higher than 5000 mm.and lower than 6570 mm.

Std tilt 2,5° FW 6° BW.:Test to be done at 3 m Hight with Q1 load

	Exercise						End stoke			
	sec		amp		bar		amp		bar	
Lever control valve										
BW - FW	3	3,6	max	55	max	50	max	100	max	150
FW - BW	2,8	3,6	max	95	max	120	max	100	max	150
Electric control valve										
BW - FW	3	3,6	max	40	max	30	max	130	max	240
FW - BW	2,8	3,4	max	90	max	110	max	130	max	240

Std sideshift stoke 100 mm: (visual check)

https://truckmanualshub.com/

HYDRAULIC DIAGRAM
Joysticks / fingertips version

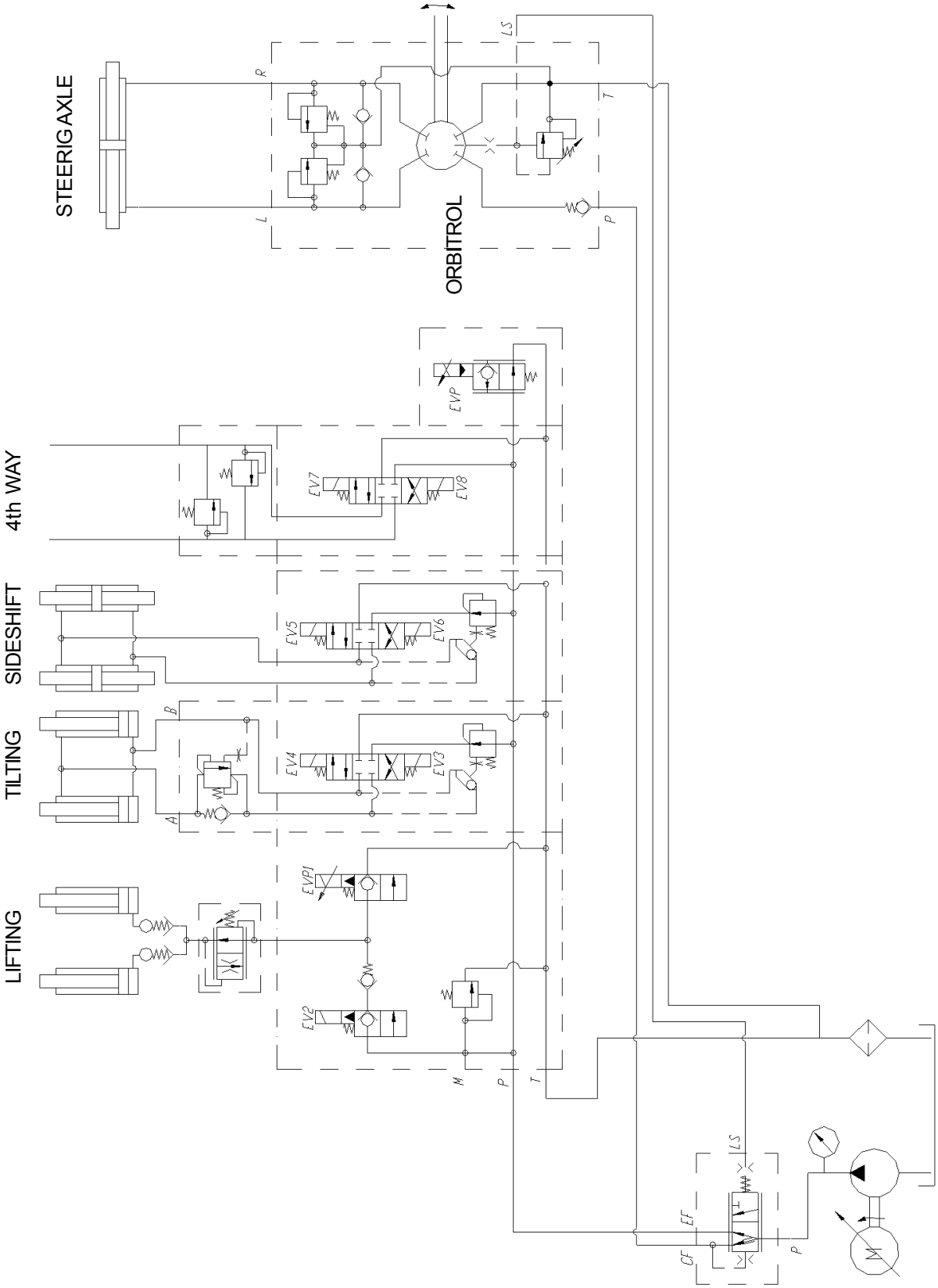

https://truckmanualshub.com/

ELECTRIC CONTROL VALVE HYDRAULIC SYSTEM
Joysticks / fingertips version

3 AND 4 WHEELS

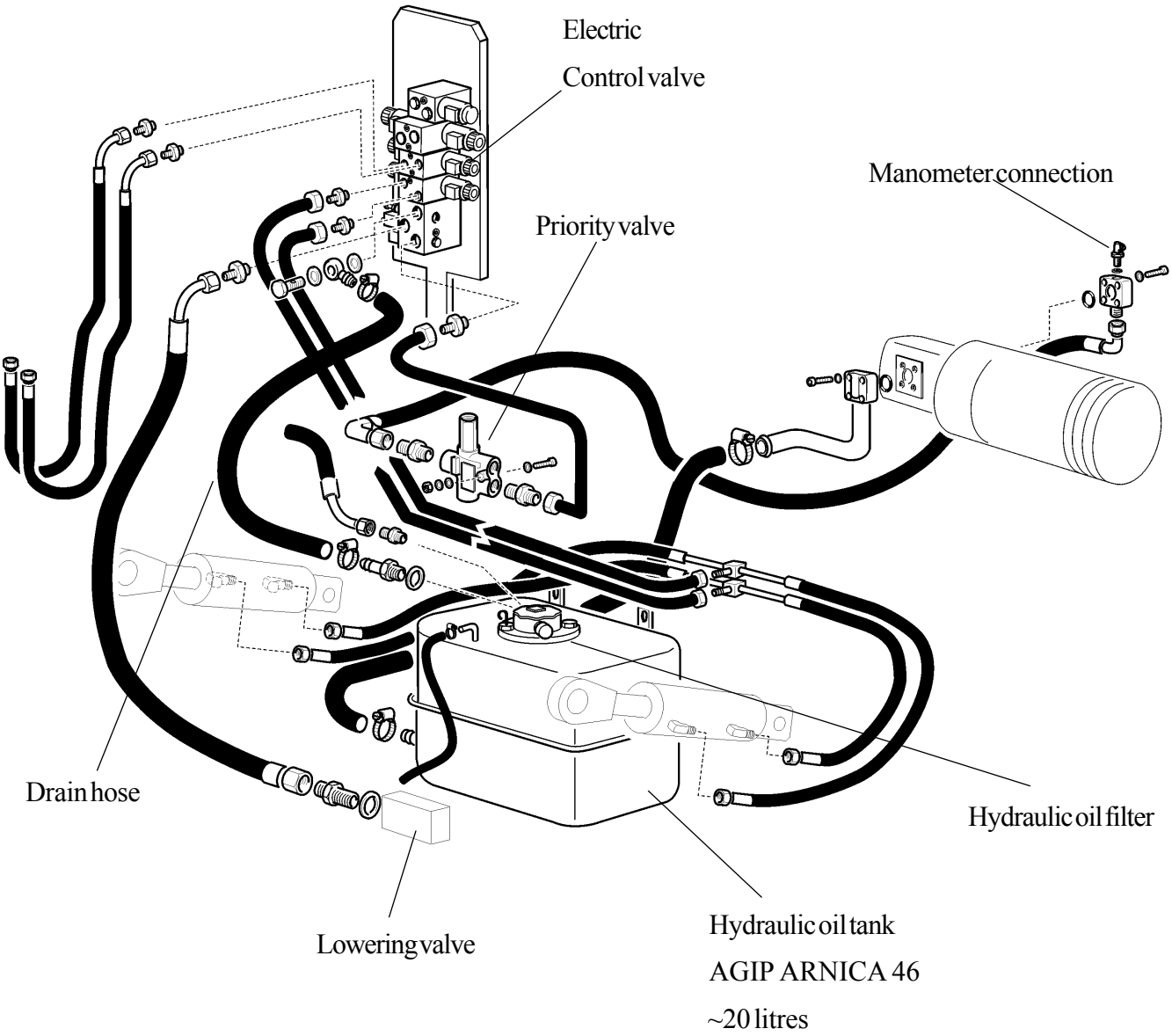

https://truckmanualshub.com/

HYDRAULIC ELECTRIC CONTROL VALVES
Joysticks / fingertips version

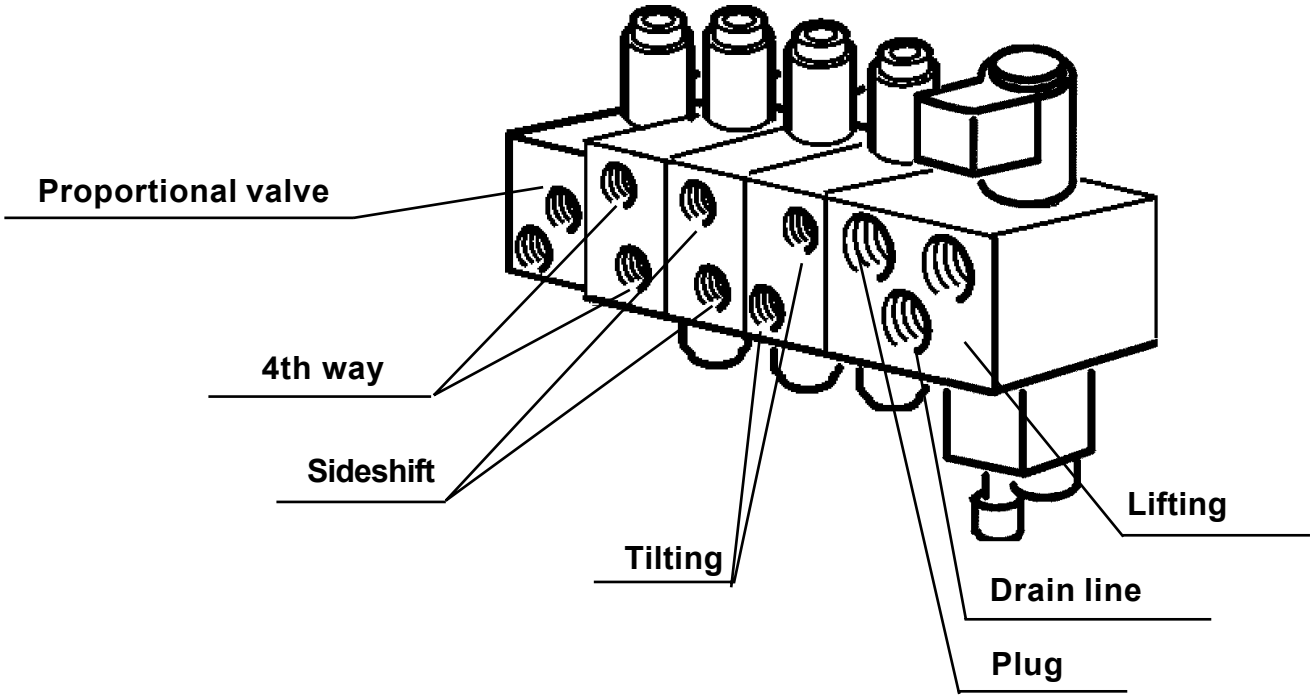

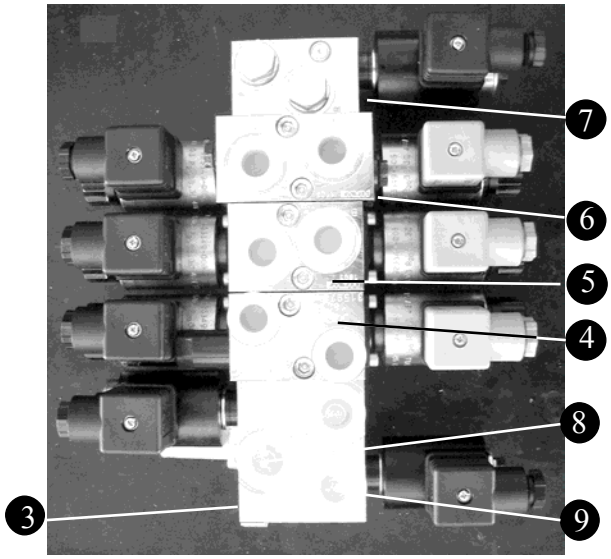

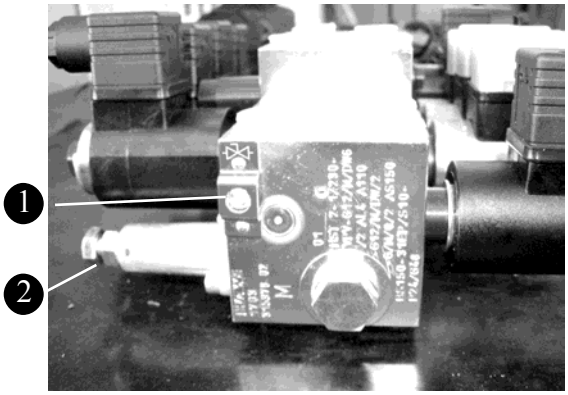

1. Safety valve for load lowering in case of failure of the lifting solenoid valve.
2. Maximum pressure valve.
3. Lifting box.
4. Tilt box.
5. Sideshift box.
6. 4° Way box.
7. Proportional valve (EVP).
8. Drain pipe connection.
9. Main lifting pipe connection.

https://truckmanualshub.com/

Version with fingertips control and joysticks
It consists of:

1. One 48 V lifting ON/OFF solenoid valve
   One 24 V proportional solenoid valve for the lowering
2. Two 48 V ON/OFF tilt control solenoid valves
3. Two 48 V ON/OFF sideshift control solenoid valves
4. One 24 Vproportinonal valve for the drain.

The solenoid valve EVP has been integrated in the circuit given that there is only one motor for both functions, lifting and power steering. It allows the oil in excess to return into the tank, thus reducing the pressure in the hydraulic control valve circuit.

By means of this valve it is possible to increase or decrease the sensitivity of the lifting by acting on control of the valve (SEE MHYRIO setting funtion).

DESCRIPTION OF THE CONTROL VALVE BOX

Lifting box uses a solenoid valve EV2 ON/OFF for the lifting, a proportional solenoid valve for the drain EVP1 and a valve for the maximum pressure.

Tilting box has a governor of oil capacity (12 l/m'). In this way the oil quantity is reduced when using the double function: lifting-tilt. In this box there is also an OVER CENTER valve to avoid any forward movement of the mast with load on the forks and the emptying of the tilt cylinders in case of min. rpm of the motor.

Sideshift box has a governor of oil capacity (12 l/m'). In this way the oil quantity is reduced when using the double function: lifting-sideshift. For safety reason the logic unit is set to the lower speed.

4th WAY has two valves already set to 150 Bar. Shims are used in order to increase or decrease the pressure. Each shim corresponds to 17 bar.

https://truckmanualshub.com/

POWER STEERING HYDRAULIC DIAGRAM

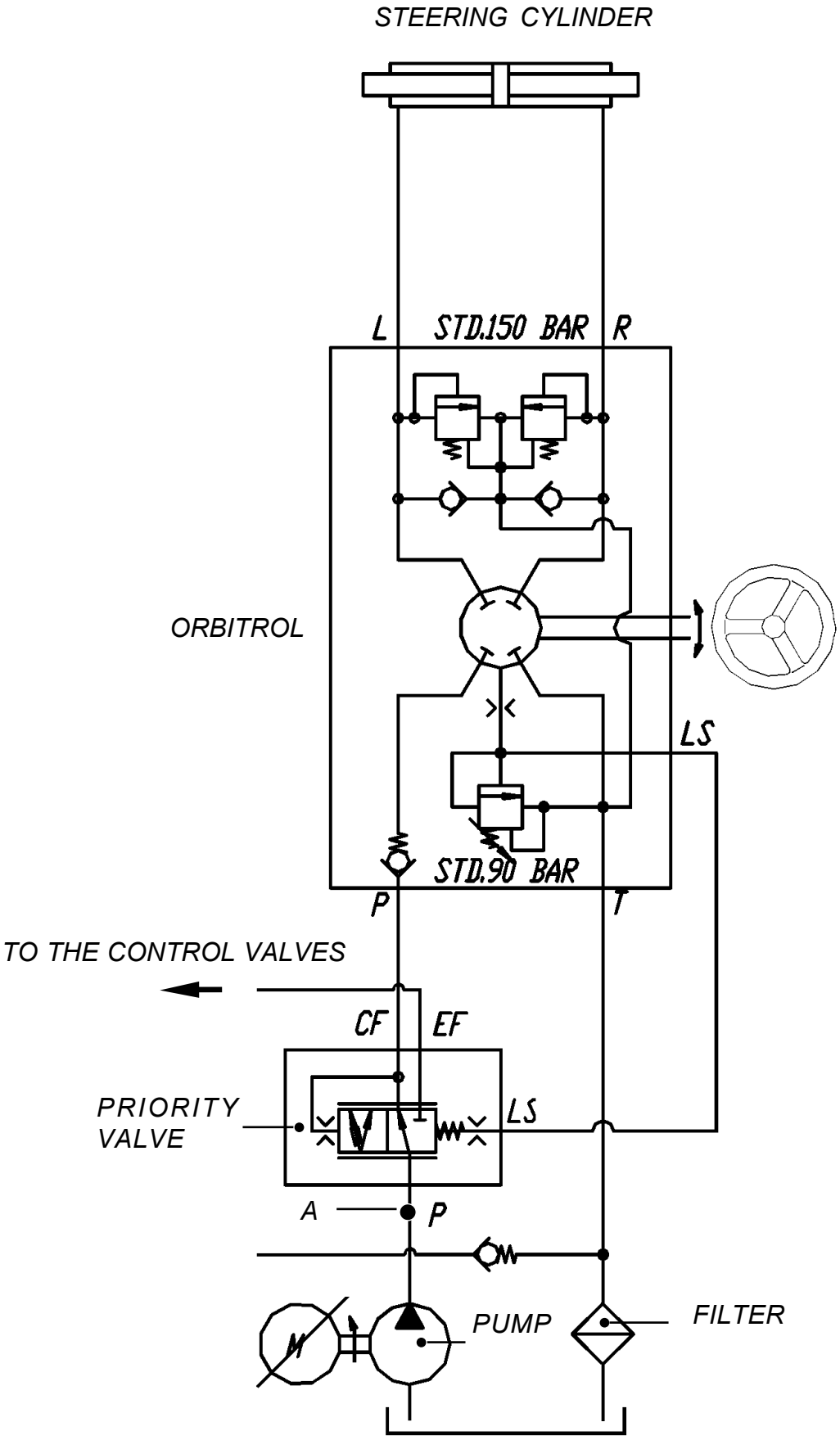

https://truckmanualshub.com/

LIFTING EQUIPMENT OIL AND OIL FILTER

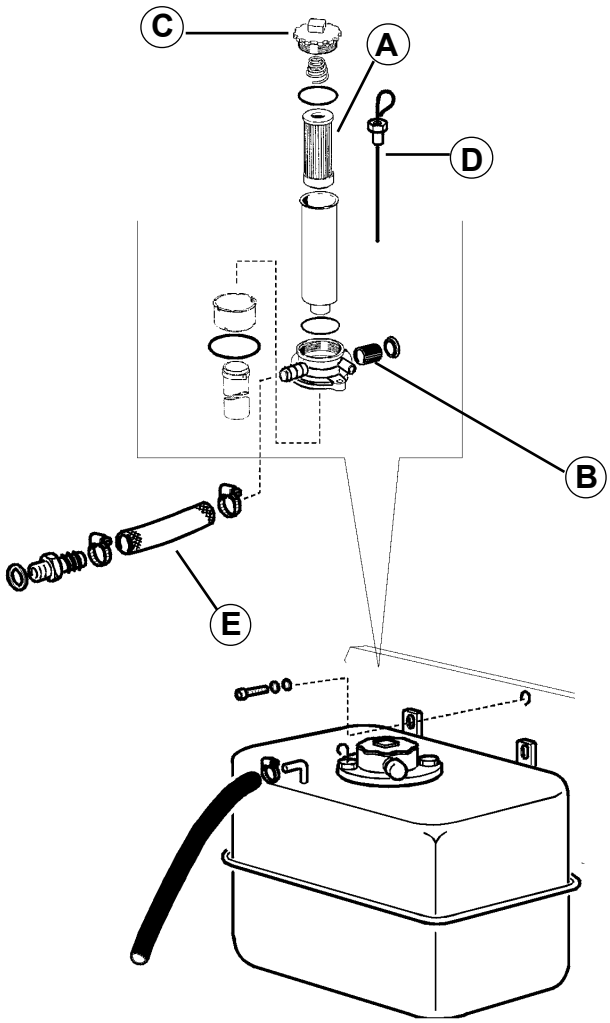

The hydraulic oil tank is located under the platform.
The filter cartridge (**A**) is beneath the screw cap (**C**).

To check and change the oil, place and stop the truck on a flat surface, with the mast tilted backwards and the forks lowered.

After the first 50 hours
- filter change

Every 500 hours
- check the oil level in the tank using the dip-stick (**D**);

Every 2000 hours
- replace the oil and the filter.
- check and clean the tank breather valve filter (**B**).

To change the filter:

- remove the tank cap (**C**) and the filter
- fit a new filter after checking the state of the seals
- after testing, check that there are no oil leaks

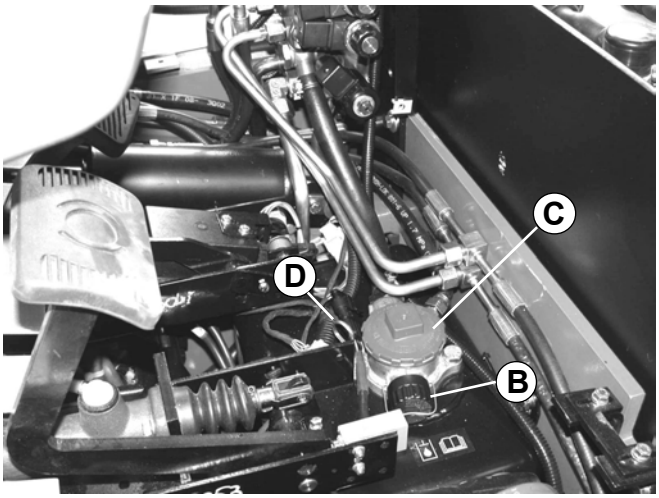

HYDRAULIC OIL: AGIP type ARNICA 46

https://truckmanualshub.com/

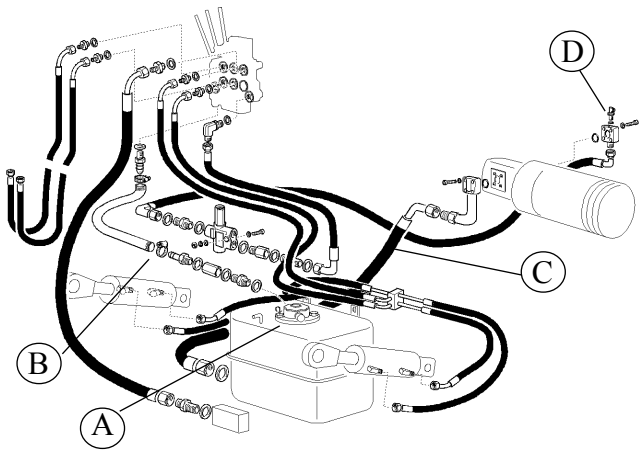

To change oil and filter:

The tank does not have the drain plug. Place and stop the truck on a flat surface, with the mast tilted backwards and the forks lowered. Two different procedures can be followed to replace the hydraulic oil:

1) To drain the tank it is possible to use a pump to such up the hydraulic oil

2) It is also possible to remove the drain hose of the control valve from the tank and place it on an external case. By pressing the brake pedal (at the minimum RPM of the lifting pump) the oil flows out. When the tank is nearly empty switch the the truck off by the key

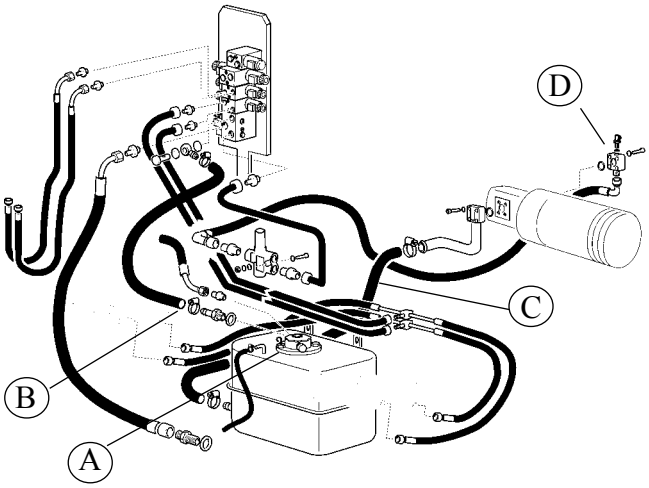

Be careful! The pump must not work without oil.

PUMP REPLACEMENT

Before fitting the new pump to the motor pay attention to the gasket right positioning.

https://truckmanualshub.com/

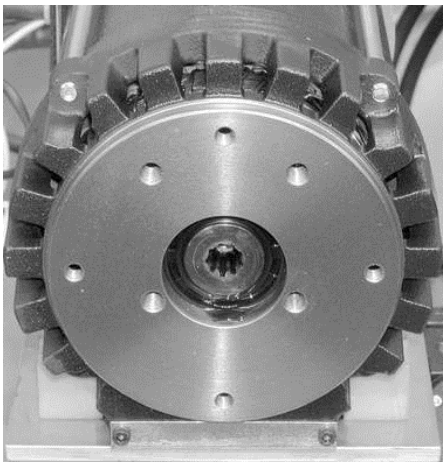

clean carefully the motor coupling surface

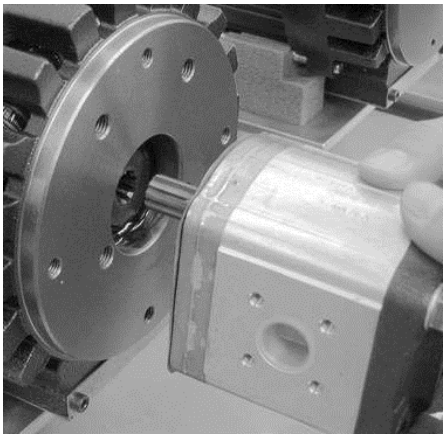

insert the shaft in the tootded seating
Before insert the motor shaft be sure that in the toothed seating there is a thin layer of "CASTROL OPTIMOL T. WHITE" (paste or spray). If not, restore the layer with the product before mentioned.

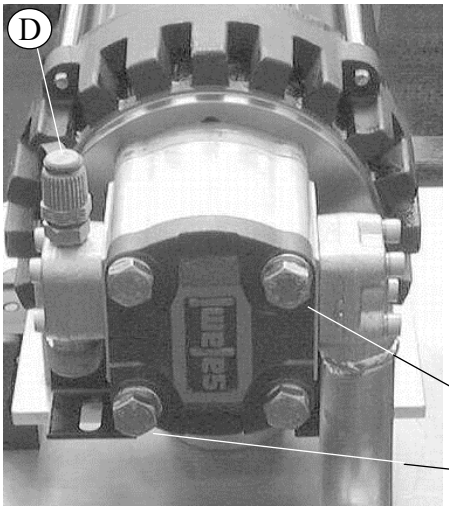

screw in and tight the two bolts

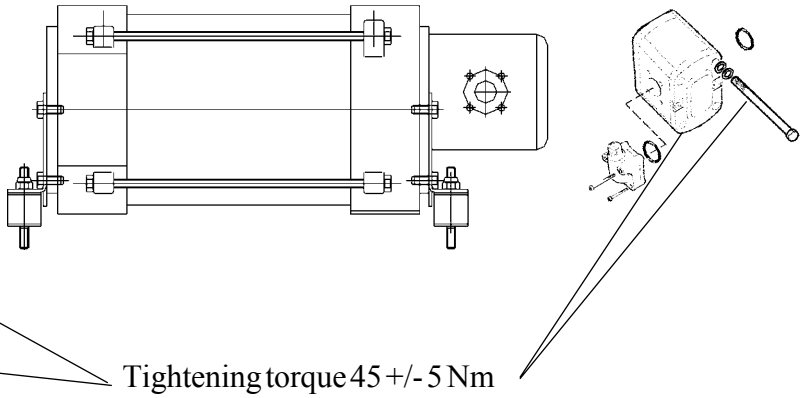

After the pump replacement it is suggested to fill the suction hose **C** (see previous page). It is also possible to use the manometer connection point **D** (see previous page) to fill the main hose C with oil in order to avoid that the pump turns without oil during the first working period. Once ending the assembling operation switch the truck on and wait for the lifting motor automatic stop.

https://truckmanualshub.com/

CHAPTER 7000

MAST GROUP

https://truckmanualshub.com/

MAST GROUP INDEX

MAST GROUP	page 3
TRIPLE MAST SECTION	page 4
LIFTING CYLINDERS ON THE MAST	page 5
CENTRAL DISPLACEMENT CYLINDER WITH BRAKING EFFECT	page 6
SIDE DISPLACEMENT CYLINDER WITH BRAKING EFFECT	page 7
SIDE TELESCOPIC CYLINDER WITH BRAKING EFFECT	page 8
TELESCOPIC CYLINDER WITHOUT BRAKING EFFECT	page 9
CYLINDER CHECKING METHODS	page 10
LUBRICATION OF THE LIFTING EQUIPMENT	page 11
GUIDE ROLLERS AND GUIDE SHOES REPLACING	page 13
GUIDE SHOES FORK CARRIAGE REPLACING	page 14
MAST CHAINS INSPECTION	page 15
FORK INSPECTION	page 16

https://truckmanualshub.com/

MAST GROUPS

The mast profile with double stiffening flange is characterised by a high flexural and torsional strength.
It allows wide visibility thanks to the reduced dimensions of the profile itself.
Cylinders are single-acting type.
The sideshift system has been housed inside the profiles.
The mast group is a roller type with a variable centre distance (i.e. a fixed roller is fitted on the outer mast and a mobile one on the inner mast, instead of a number of mobile rollers only on the inner mast). This solution ensures better grip and stability on operation.

Other features: side plays adjustable from outside. Plastic guide shoes. Roller bearings with grease nipples, ball joints on axle couplings and tilt cylinders.

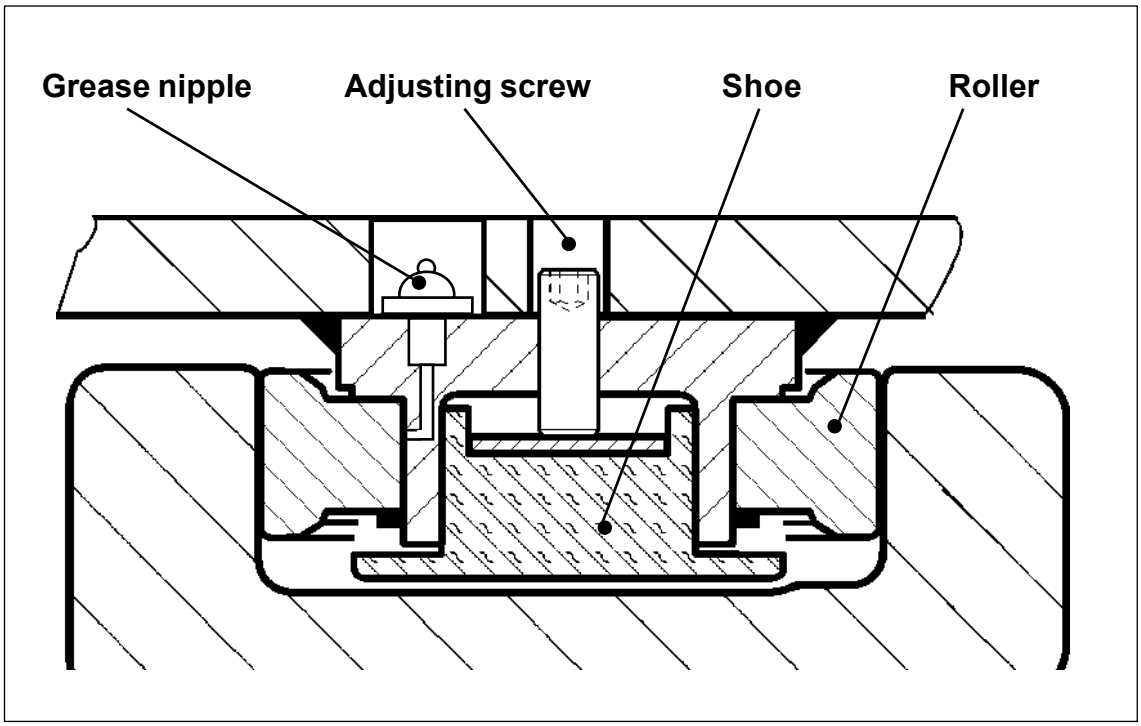

https://truckmanualshub.com/

TRIPLE MAST SECTION

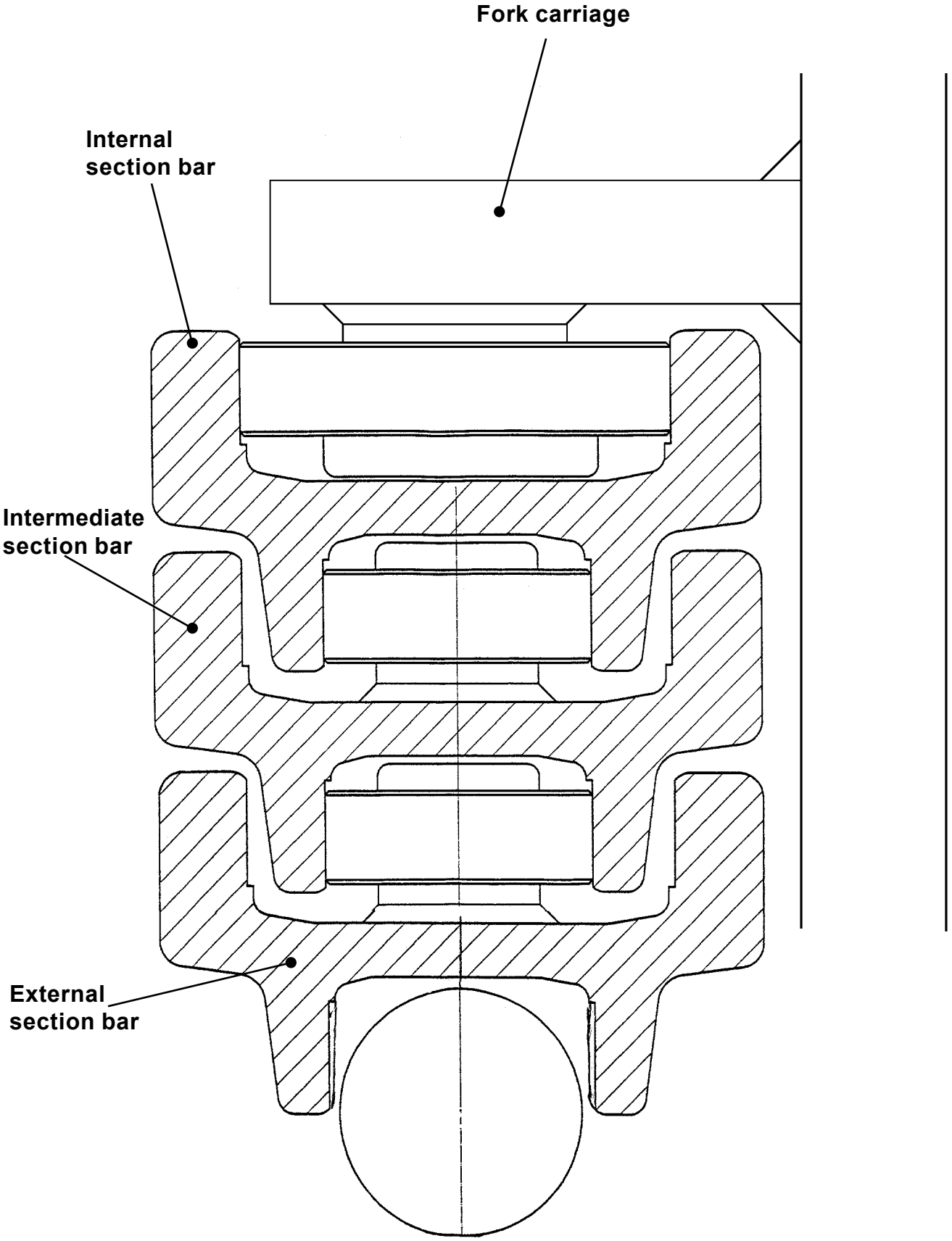

https://truckmanualshub.com/

LIFTING CYLINDERS ON THE MAST

12-20 q	CENTRAL CYLINDER	SIDE CYLINDER
2M TV	/	2 telescopic cylinders 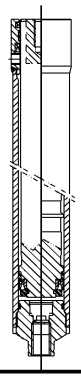
3M TV	/	2 telescopic cylinders 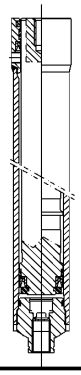
2M FFL	2 displacement cylinders with braking on lifting 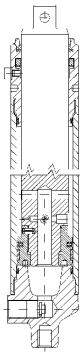	2 displacement cylinders with braking on lowering 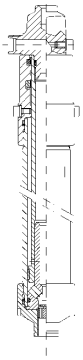
3M FFL	2 displacement cylinders with braking on lifting	2 telescopic cylinders with braking on lowering (with sphere) 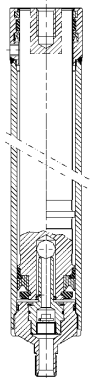

https://truckmanualshub.com/

CENTRAL DISPLACEMENT CYLINDER WITH BRAKING EFFECT ON THE LIFTING

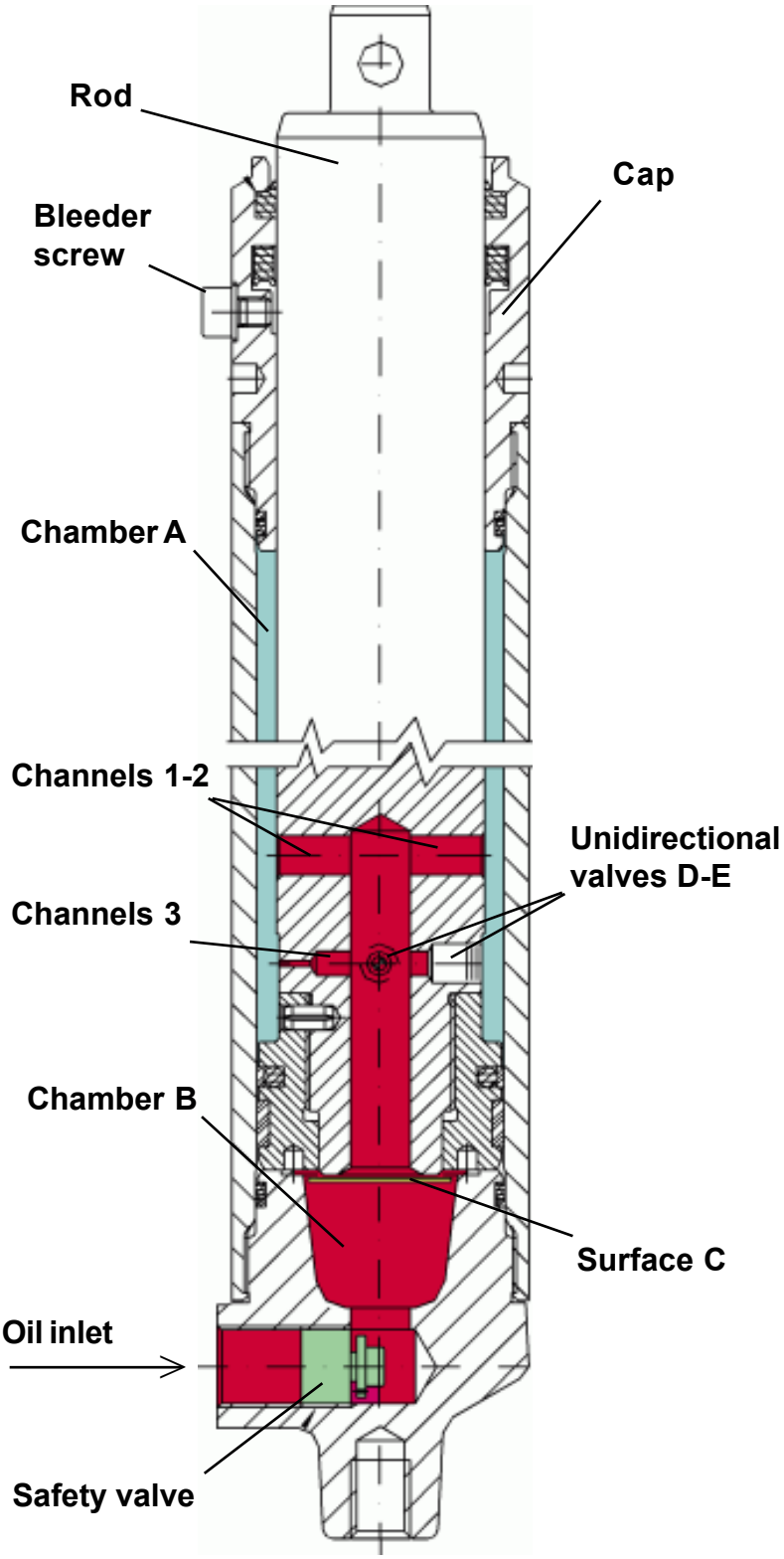

The oil flows into the cylinder from the "Oil inlet" when the control valve is operated.
Flowing through channels 1, 2 and 3, it fills chamber A until the inner oil pressure exerts an upward force against the surface C. The outward sliding of the rod is, thus, set off. This movement is enacted by the oil flow from chamber A to chamber B through the above mentioned channels.
At the end of the expanding process channels 1 and 2 are plugged by the cap. Therefore, since the oil flowing between the two chambers passes only through channel 3, it has a lower capacity. The outcome is a slowing-down or "Braking effect".
The downward sliding of the rod is allowed by the opening of the "Oil inlet" circuit, so that the oil can be retrieved into the tank by means of the control valve.
At the beginning of this phase chamber A contains no oil. A more constant filling is allowed by the two unidirectional valves D and E that, when open, permit avoiding jolts.
Once beyond the cap, the oil flow between the two chambers passes through channels 1 and 2, which are now open.

Unidirectional valves D-E

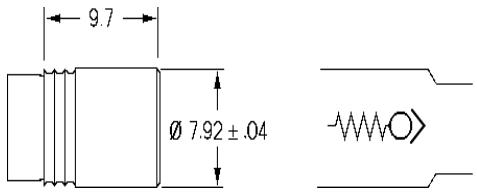

https://truckmanualshub.com/

SIDE DISPLACEMENT CYLINDER WITH BRAKING EFFECT ON THE LOWERING

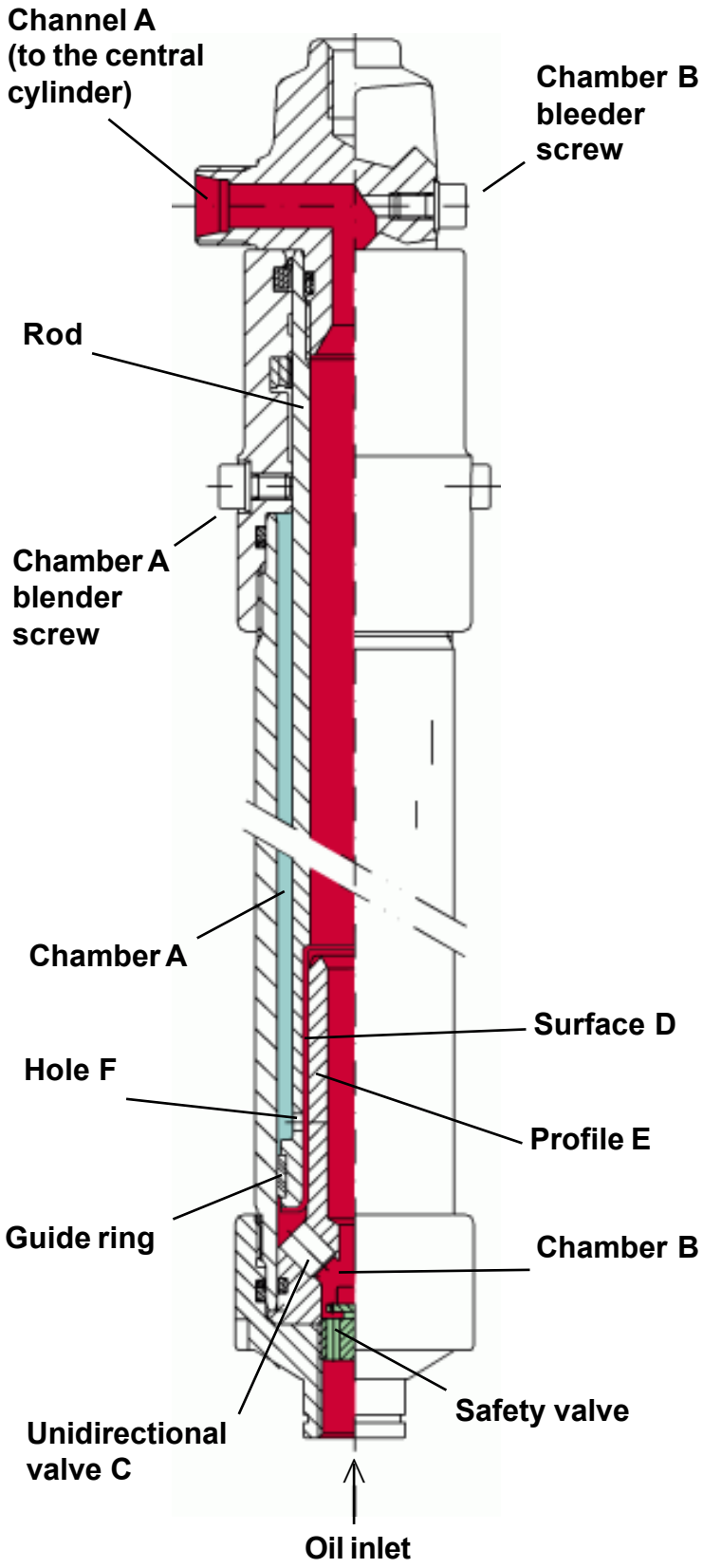

The oil flows into the cylinder from the "Oil inlet" when the control valve is operated.
Flowing through chamber B and channel A it fills first the central cylinders, then chamber A through hole F and the unidirectional valve C.
The oil exerts thus an upward force against the surface D, which sets off the outward sliding of the rod.
This movement is allowed by the oil flow from chamber A to chamber B through hole F and the guide ring.
The downward sliding of the rod is allowed by the opening of the "Oil inlet" circuit, so that the oil can be retrieved into the tank by means of the control valve.
In this phase the oil flows between the two chambers only through the hole F, as valve C is closed.
The downward speed of the rod remains constant until hole F is closed by profile E.
The remarkable reduction of oil flow has a slowing-down or "Braking effect".

https://truckmanualshub.com/

SIDE TELESCOPIC CYLINDER WITH BRAKING EFFECT IN THE LOWERING (WITH SPHERE)

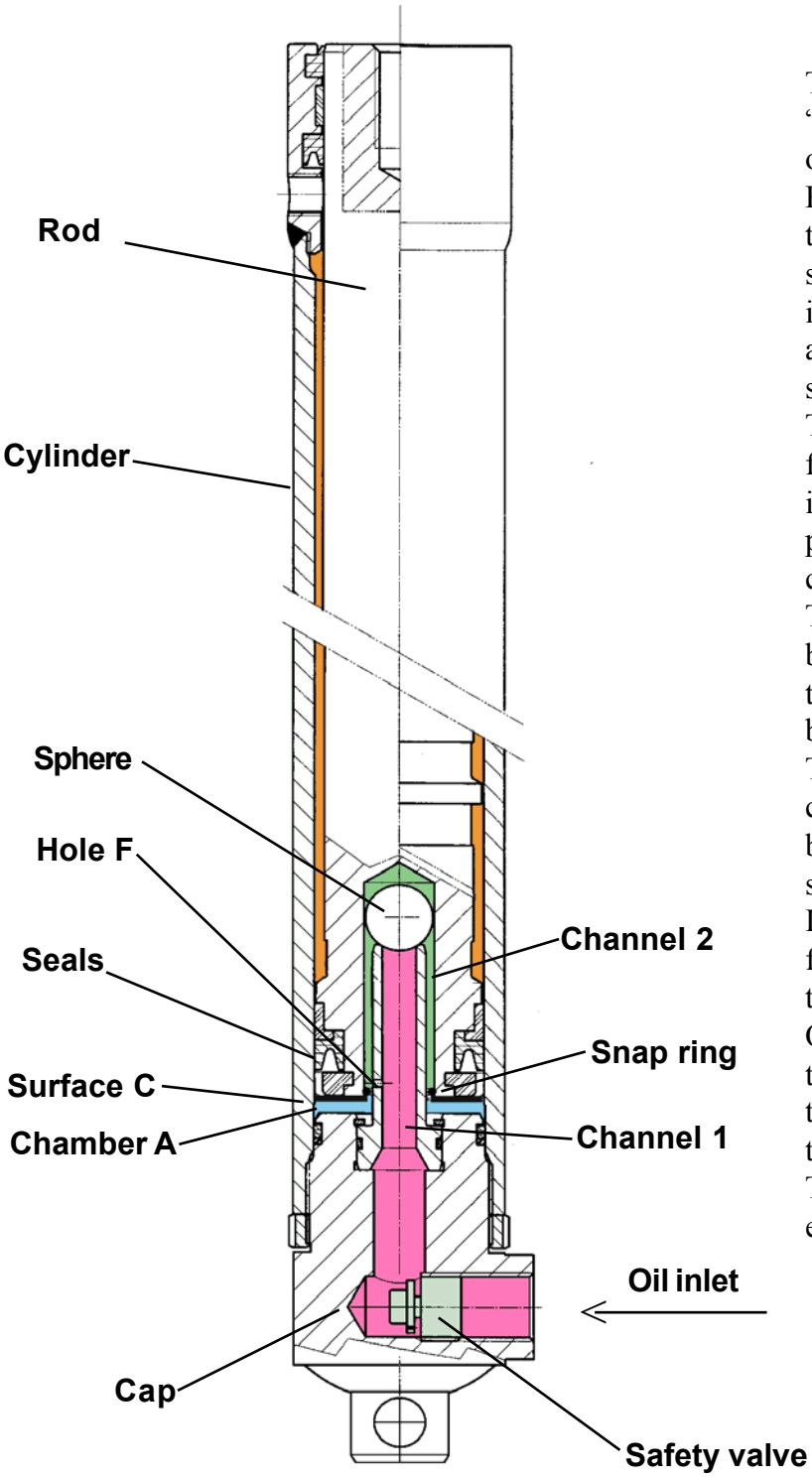

The oil flows into the cylinder from the "Oil inlet" when the control valve is operated.
Flowing through channels 1 and 2 and thanks to the upward movement of the sphere, the oil fills chamber A until the inner oil pressure exerts an upward force against surface C, obtaining the outward sliding of the rod.
The snap ring is used to prevent the sphere from sliding out of channel 2 while the rod is moving, but freeing, all the same, the passage of the oil between channel 2 and chamber A.
The downward sliding of the rod is allowed by the opening of the "Oil inlet" circuit, so that the oil can be retrieved into the tank by means of the control valve.
The drop of oil pressure in chamber A causes the sphere to move to the bottom of channel 2 and stop on the snap ring.
In the beginning of this phase the oil from chamber A flows all the way through channel 1.
Only toward the end of its down-stroke the sphere closes the top of channel 1, thus directing the oil flow uniquely through hole F.
This produces the hydraulic braking effect in the lowering.

https://truckmanualshub.com/

TELESCOPIC CYLINDER WITHOUT BRAKING EFFECT

DESCRIPTION OF THE CYLINDER COMPONENTS

The cylinder pistons are single-acting types (fig. **A**).

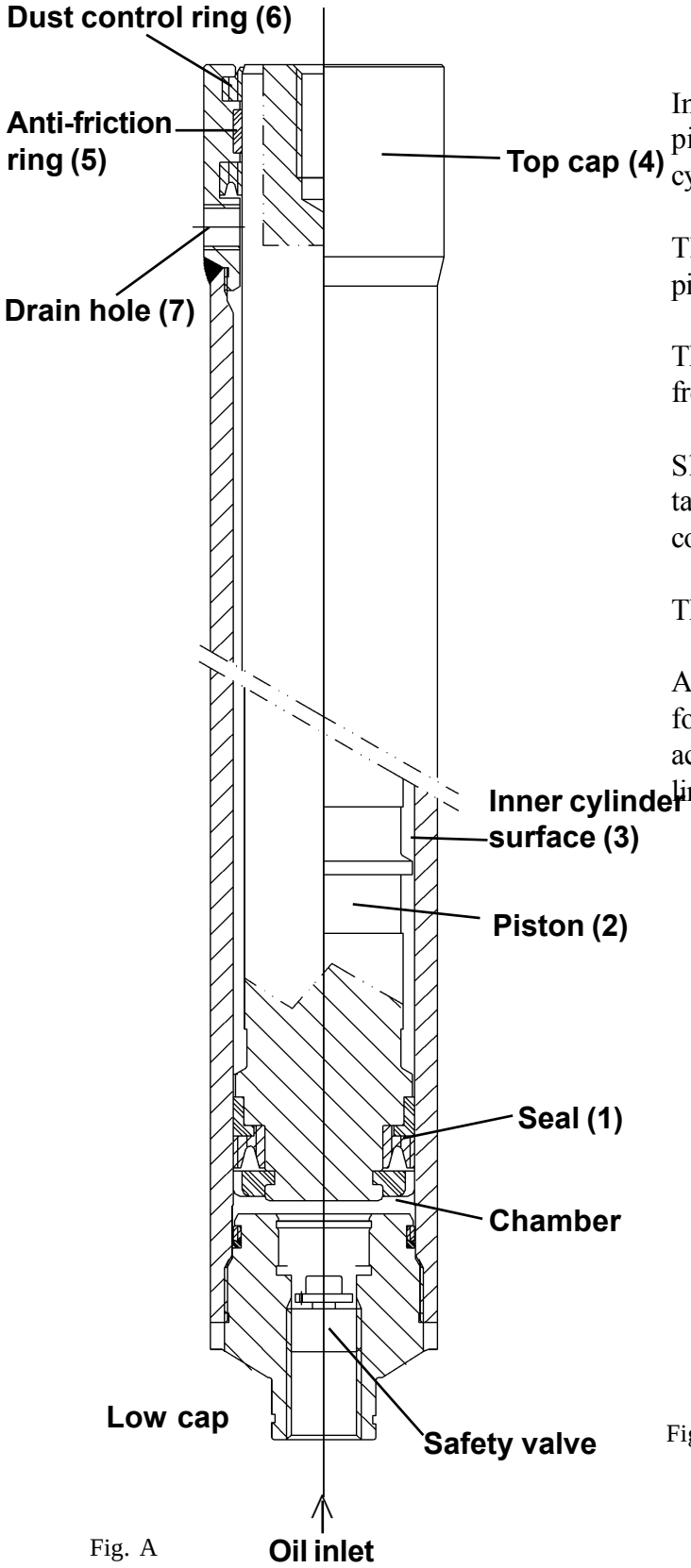

Fig. A

In these cylinders a seal (**1**) has been fitted on the piston (**2**) that works on the inner surface of the cylinder liner (**3**).

The rod guide is made by the plug (**4**) and by the piston through anti-friction rings (**5**).

The dust control ring (**6**) prevents any dirt and water from penetrating the cylinder.

Slight leakages that may occur are directed to the tank through the drain pipe connected to the pipe coupling (**7**).

The drain pipe shall reach the oil tank (fig. **B**)

A small quantity of oil will always remain in the loop formed by the pipe before connecting to the tank. It acts as a trap and constantly moisturizes the cylinder liner, when it is completely closed (fig. **B**).

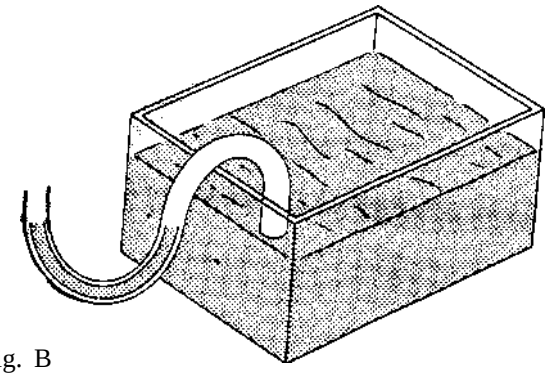

Fig. B

https://truckmanualshub.com/

CYLINDER CHECKING METHODS

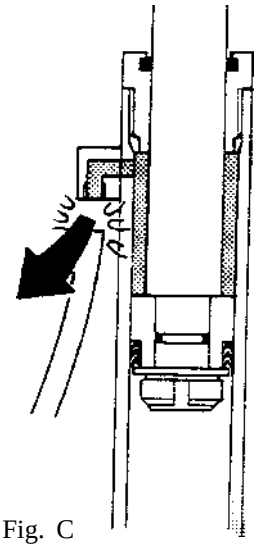

Fig. C

1ST CHECK

Remove the drain pipe from the cylinder (fig. C)

Lift the cylinder some times to end stroke, so as to discharge any oil residual.

Put a load on the forks and lift it by at least 200 mm.

After 10 minutes, measure the amount by which the load has lowered. A drop of a few millimetres is quite normal, as in the distributor there are always some leakages.
Now, lift the cylinder to its end stroke, if no oil leaks from the drain pipe coupling, it means that the load lowering is only due to the leakages on the distributor.

In the presence of leakages, it will be necessary to replace the seal. Should this be the case, inspect the cylinder liner.

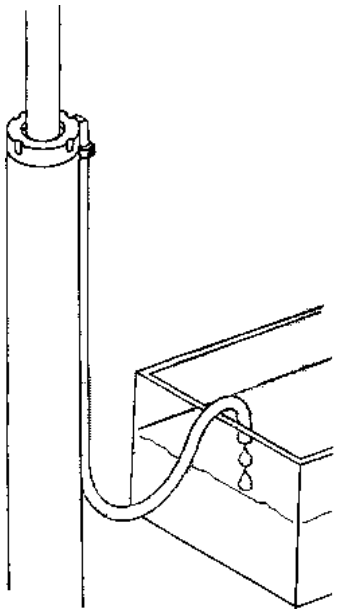

2nd CHECK

(To be carried out if the 1st inspection has been successful and after seal replacement).

Remove the drain pipe from the cylinder.

Lift the cylinder some times to end stroke, so that all the possible remaining oil is discharged.

Put a load on the forks. Lift and lower it for 10 minutes, making sure that the limit stop is never reached.

Lift the cylinder to end stroke.

If any leakages should be still present, the cylinder is damaged and then it must be replaced.

https://truckmanualshub.com/

LUBRICATION OF LIFTING EQUIPMENT

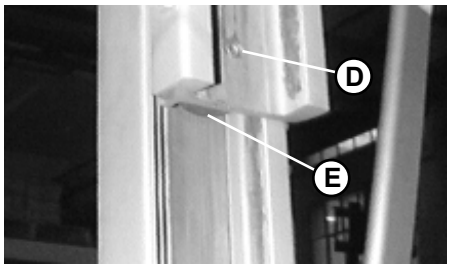

MASTS

After the first 50 hours

- adjust the guide shoes through socket head (Allen) screw **(D)** For this purpose use a 0.2-0.5 mm thickness gauge, inserting it from below upwards to the centre of the Allen screw **(D)** passing behind the roller **(F)** and sliding on the outer mast..

Every 500 hours

- check the mast tilting
- check the mast guide pads
- adjust the mast fixing
- adjust the lifting jacks collars and tilting jacks nuts

Every 1000 hours

- check the mast sliding guides, mast and mast jacks fixing
- lubricate the tilting jacks and the mast connections.
- inspect the mast guide rollers **(E)**; they have to rotate freely and not to be too worn out.

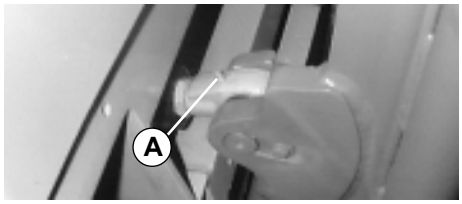

A) Tilting jacks 2+2 grease nipples
B) Mast connections 1+1 grease nipples

- adjust the guide shoes;
- grease the mast guide rollers **(E)**

FORK CARRIAGE AND SIDESHIFT UNIT

After the first 50 hours

- adjust the guide shoes through socket head (Allen) screw **(G)** For this purpose use a 0.2-0.5 mm thickness gauge, inserting it from below upwards to the centre of the Allen screw **(G)** passing behind the roller **(H)** and sliding on the outer mast.

Every 500 hours

- check the fork carriage position

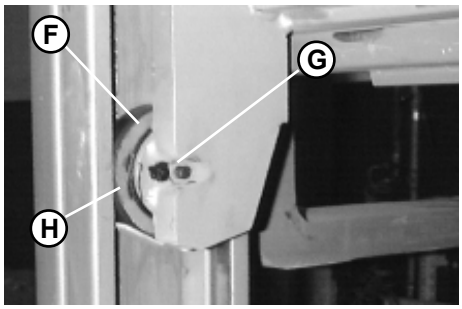

Every 1000 hours

- check and adjust the the sideshift guide shoes
- check and lubricate the fork positioning pins and notches.
- inspect and grease the fork carriage guide rollers **(F)**; they have to rotate freely and not to be too worn out.

https://truckmanualshub.com/

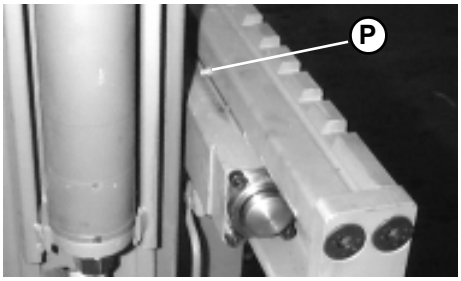

Sideshift unit

upper par 3 grease nipples (**P**)

lower part without grease nipples excessive wear.

SECURITY INSTALLATIONS CONTROL

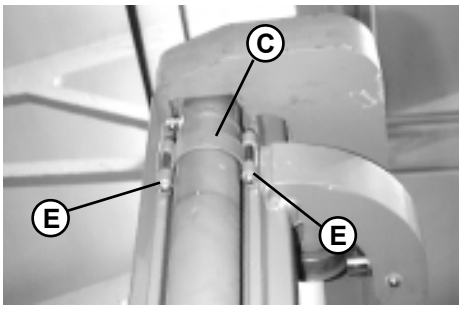

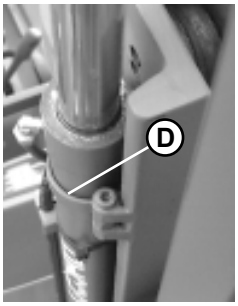

Make sure that:

- the lifting chain stay bolts are free of defects and the adjusting nuts are locked by the appropriate cotter pins (A);
- the fork carriage safety end stops (**G**) are present and tightly fixed.
- the collars (**C**) are present and tightly fixed.

Every 500 hours

- check that there is a clearance (**D**); of 0.5 to 3 mm between the collar and external lifting jack cylinder.
- check that the self-locking nuts (**E**) are tight.

Locking torques:

- collar self-locking nuts 0.8-1.2 daNm

SAFETY FORK CARRIAGE END STOP

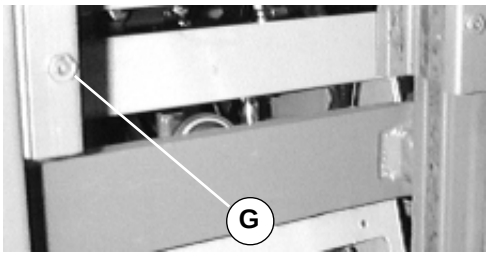

The lifting unit is equipped with a mechanical safety end stop, to avoid the accidental escape of the fork carriage from the botton of the mast.
The end stops (**G**) consists of two Allen bolts. To remove the fork carriage, first of all unscrew the end stops.

https://truckmanualshub.com/

GUIDE ROLLERS AND GUIDE SHOES REPLACING

Picture 1

Picture 2

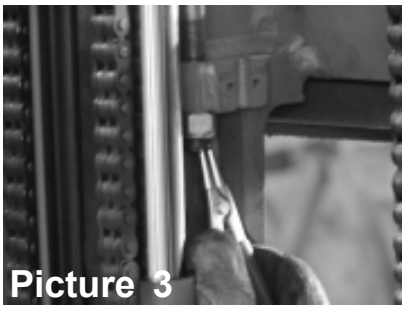
Picture 3

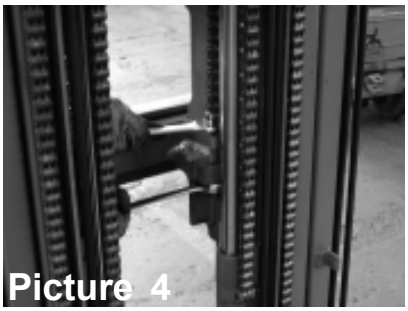
Picture 4

Mast-Fork carriage guide rollers and guide shoes replacing

In order to carry out the job proceed as follows:

1) remove the two forks from the carriage

2) disconnect the two sideshift hoses on the fork carriage (**Picture 1**)

3) tie the fork carriage with a belt (**Picture 2**)

4) remove the safety clip of the chain pin on the carriage (**Picture 3**)

5) remove the nut stopping the chain pin with a tool as shown in **Picture 4**. After that move the two chains to the opposite side in order to have more space.

6) remove the two Allen screws (**Picture 5**)

7) remove the complete fork carriage from the bottom

8) remove the guide shoes with two screw drivers (**Picture 6**) and screw out the Allen screw **G** (**see page 12**) in the opposite side, in order to let the new guide shoes go inside completely.

9) remove the snap ring **A** and take out the guide roller (**Picture 7**)

10) reassemble all parts in reverse order and adjust the guide shoes.

Picture 5

Picture 6

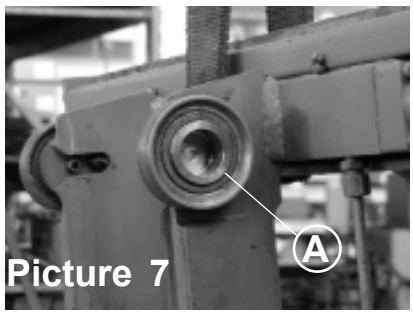

Picture 7

https://truckmanualshub.com/

FORK CARRIAGE GUIDE SHOES REPLACING

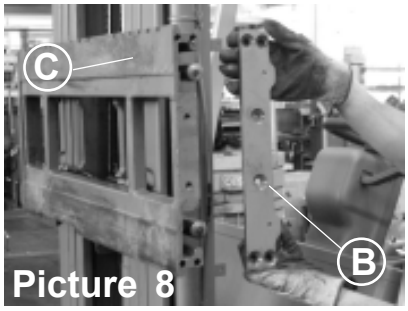

Picture 8

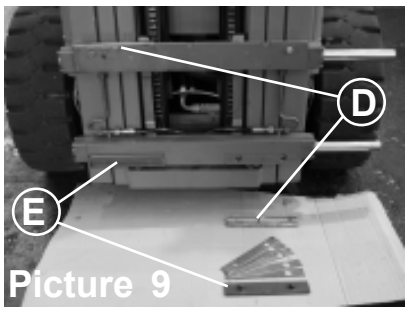

Picture 9

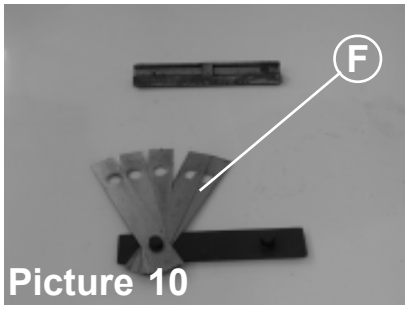

Picture 10

In order to carry out the job proceed as follows:

1) remove one of the two side bars **B** from the fork carriage (**Picture 8**)

2) take out the mobile plate **C** (**Picture 8**)

3) replace the upper and lower guide shoes **D-E** (**Picture 9**)

4) fit the shims **F** properly in order to have a correct clearence of the mobile plate **C** on the fork carriage

5) reassemble all parts in reverse order and adjust the guide shoes.

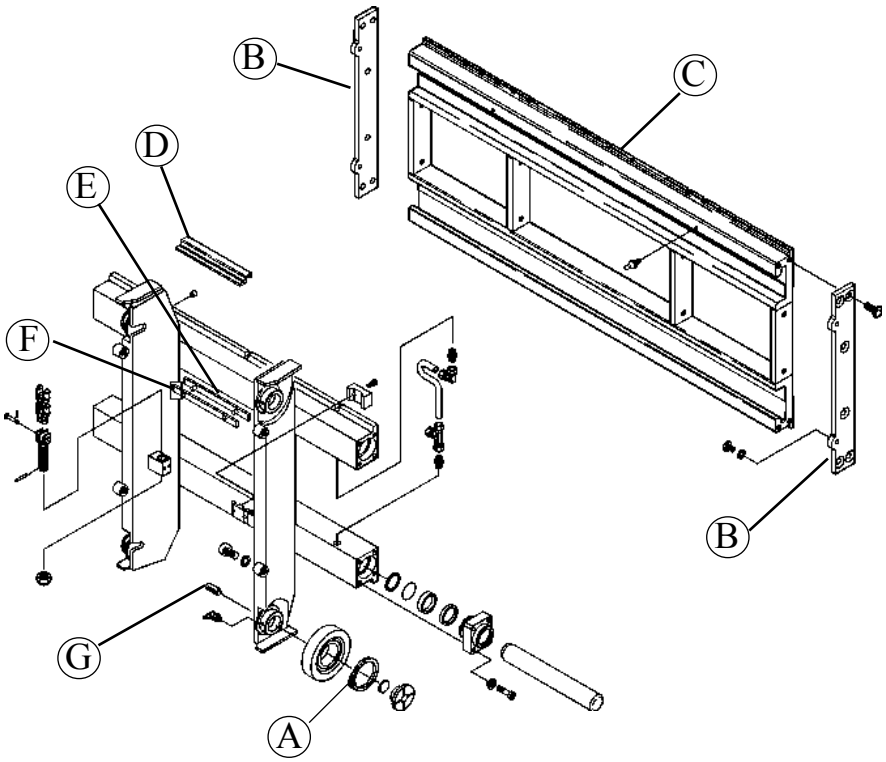

https://truckmanualshub.com/

MAST CHAINS INSPECTION

CHECKING THE CHAINS:

Every 1000 hours

- Check the condition of the chains which in any case must not be faulty, worn out or damaged. To check the links for wear, use the appropriate gauge
- Remove the chains, clean them thoroughly, refit them inverting the original working position and lubricate them.

Every 10000 hours

- Replace the chains and the fixing tie rods

Replacing the chains use original spare parts which will guarantee that the safety requirements stated by the regulations in force are complied with.

POSITIONING THE FORK MOUNTING CARRIAGE

Every 500 hours

After testing the chains as described above, with the truck on an even surface and the mast in a vertical position, check the position of the fork carriage plate, as follows:

- remove the forks, lower the fork carriage completely and measure the height (X), comparing it with the value shown in the table, corresponding to the capacity in kg of the truck.
  (e.g. the correct value of (X) for a truck with a capacity of 2000 kg (class II B), must be 152 ±5 mm).

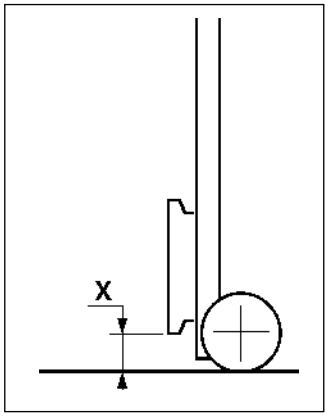

X = 76 mm (A)

X = 152 mm (B) OPTIONAL

TABLE ISO 2328 - 1993		
Rate	**Lifting load (kg)**	**"X" (± 5)**
I A	0 ÷ 999	76 mm
II A	1000 ÷ 2500	76 mm
III A	2500 ÷ 4999	76 mm
IV A	5000 ÷ 8000	127 mm
V A	8001 ÷ 10999	127 mm

TABLE ISO 2328 - 1993		
Rate	**Lifting load (kg)**	**"X" (± 5)**
I B	0 ÷ 999	114 mm
II B	1000 ÷ 2500	152 mm
III B	2500 ÷ 4999	203 mm
IV B	5000 ÷ 8000	254 mm
V B	8001 ÷ 10999	257 mm

https://truckmanualshub.com/

FORK INSPECTIONS

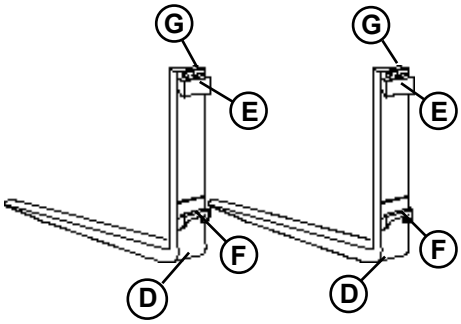

General criteria
Fork arms in use must be **inspected at intervals of not more than 1000 hours**, and whenever a defect or permanent deformation is detected. If the truck is subject to intensive use, more frequent inspections may be required.
Inspection
Fork arm inspection must be carried out carefully by trained personnel to detect any damage, failure, deformation, etc., which may impair safe use.
Surface cracks
The fork arm must be thoroughly examined visually for cracks giving special attention to the heel (D) and top (E) and bottom (F) hooks. If necessary, the forks may be subjected to a non-destructive crack detection process.
Difference in height of fork tips
Check the difference in height between the blade tips on each pair of forks, this must not be more than 3% of blade length with the forks fitted on the fork plate.
Positioning lock
Check that the fork positioning lock (G) is in good working order.
Legibility of marking
If the fork arm marking is not clearly legible, it must be renewed by the original fork supplier.
Fork wear control
The fork arm blade and shank must be thoroughly checked for wear, paying special attention to the area around the heel (D). When maximum wear is detected, with thickness reduced to 90% of the original, the fork arm must be replaced.
Fork mounting wear control
The horizontal supporting surface of the top hook (E) and the contact surfaces of both hooks (E) and (F) must be checked for wear and any damage.
Withdrawal of the forks from the service
Any fork with defects revealed during the above controls must be withdrawn from service.

<= FORWARD - BACKWARD=>

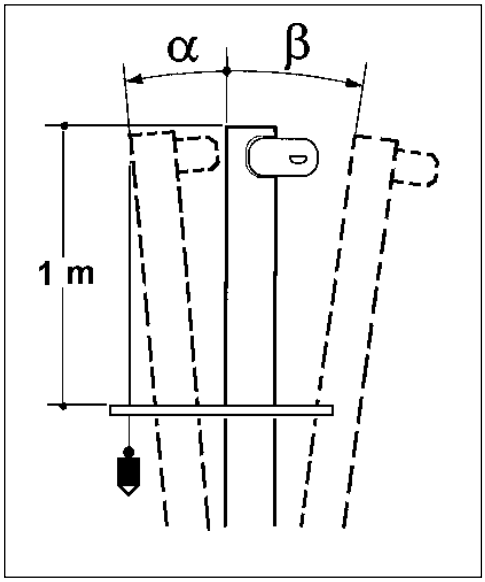

1° = 17,4 mm

MAST GROUP TILTING SETTING

Every 500 hours
- control the tilting of the masts; the standard values (β) (α) are the following:

α =2°30’	FORWARD	=43,7mm
β = 6°	BACKWARD	= 105,1 mm

The tilt angle can easily be checked using a plumb-line dropped from the front outside edge of the top of the fixed masts and measuring the distance between the line and the front edge at a metre from the top of the masts.

N.B. 1 tilting degree corresponds to a 17.4 mm movement on 1 mt.

https://truckmanualshub.com/

CHAPTER 8000

ATTACHEMENT

https://truckmanualshub.com/

PAGINA INTENZIONALMENTE BIANCA

INTENTIONALLY LEFT BLANK

PAGE INTENTIONNELLEMENT BLANCHE

ABSICHTLICH FREIGELASSENE SEITE

PÁGINA INTENCIONALMENTE BLANCA

https://truckmanualshub.com/

CHAPTER 9000

OPTIONS

https://truckmanualshub.com/

PAGINA INTENZIONALMENTE BIANCA

INTENTIONALLY LEFT BLANK

PAGE INTENTIONNELLEMENT BLANCHE

ABSICHTLICH FREIGELASSENE SEITE

PÁGINA INTENCIONALMENTE BLANCA

https://truckmanualshub.com/

CHAPTER B

MAINTENANCE TABLES

https://truckmanualshub.com/

MAINTENANCE TABLES INDEX

OIL AND GREASE SPECIFICATION page 3

TYRE TIGHTENING TORQUES page 3

RUNNING-IN MAINTENANCE TIMES TABLE page 4

MAINTENANCE TIMES page 5

https://truckmanualshub.com/

OIL AND GREASE SPECIFICATIONS

type	specifications	q.ty	FOR NORMAL ENVIRONMENTS PARTS INVOLVED
AGIP ARNICA 46	ISO-L-HV FZG tests to stage 11	20 L	Hydraulic system, lifting and power steering
AGIP ATF II D	GM DEXRON II 6137-M GM DEXRON 6032-M GM DEXRON ATF type A suffix A	0,22 L	Transmission reduction gears
AGIP BRAKE FLUID DOT 4	SAE J 1730-JAN 80 DOT 4 TYPE	---------	Hydraulic brake system
MOBILGREASE SPECIAL	Lithium base ASTM 275-305 NLGI Nr.2 Dropping point 180°	---------	Mast securing joints - sideshift unit - steering joint - general lubrication with grease nipples - Mast guides
			FOR COLD CLIMATES AND COLD-STORAGE CELLS
type	specifications	q.ty	PARTS INVOLVED
AGIP ARNICA 22	ISO-L-HV FZG tests to stage 10	20 L	Hydraulic system, lifting and power steering
MOBILTEMP SHC 100	Thickening Infusible ASTM 265-295 NLGI Nr.2 Dropping point >260°	---------	Mast securing joints - sideshift unit - steering joint - general lubrication with grease nipples - Mast guides

STANDARD TYRES

Type	Size	Air Pressure	Truck
(C)			
FRONT	432x152		1,2-1,6L t
REAR	457x178		1,8-2,0 t
REAR	381x127		ALL
(SE)			
FRONT	18x7-8		1,2-1,6L t
FRONT	200/50-15		1,8-2,0 t
REAR	16x6-8		ALL
(PN)			
FRONT	18x7-8	10 bar	ALL

TIGHTENING TORQUES

		WHEEL TORQUE
14	**daNm**	steering wheels
14	**daNm**	driving wheels
		DRIVE UNIT TORQUE
2,3	**daNm**	electric motor securing
13,5	**daNm**	unit securing to frame
5	**daNm**	service brake delivery pipes screw
5	**daNm**	parking brake cable fixing screw
2,2	**daNm**	oil filling and draining cap
		VARIOUS TORQUES
4,9	**daNm**	mast-securing U-bolts
0,8÷1,2	**daNm**	jack collar self-locking nuts
20	**daNm**	counterweight locking screws

https://truckmanualshub.com/

RUNNING-IN MAINTENANCE TIMES TABLE

50	**at # hours for MEDIUM/INTENSE USE**
7/-	**at # days/months FOR OCCASIONAL USE**
	LIFTING UNIT - MASTS
	guide pads - masts and sideshift unit slides
	lifting oil filter
	chain security bolts
	DRIVE UNIT
	transmission reduction gears oil - differential oil
	CHASSIS AND COMMANDS
	bolts in general
	wheel tightness

LEGEND

In the maintenance table showing a visual control and cleaning of the parts indicated; replacement / lubrification / clamping according to necessity.

In the maintenance table showing the replacement of the parts indicated.

In the maintenance table showing lubrification of the parts indicated.

In the maintenance table showing tightening or adjustment of the parts indicated.

The servicing periods are divided into hours, considering an average working day of 8 hours of effective operation.

If the truck is used on average for less than 8 hours per day, refer to the schedules expressed in days/months

https://truckmanualshub.com/

MAINTENANCE TIMES TABLES

8	50	250	500	1000	2000	5000	10000	
1/-	7/-	-/1	-/3	-/6	-/12	-/24	-/60	
								LIFTING EQUIPMENT - MASTS
-	-	-	-	👁🔧	-	-	-	carriage - sideshift unit
-	-	-	-	👁🏗	-	-	-	forks positioning pins
-	-	-	👁	-	-	-	-	mast guide pads
-	-	-	-	👁	-	-	-	mast, carriage and chain rollers
-	-	-	-	-	-	⚙	-	tilting jacks supply pipes
-	-	-	-	-	⚙	-	-	lifting oil filter
-	-	-	👁	-	⚙	-	-	lifting system oil
-	-	-	-	👁	-	-	-	mast guides, mast and jack fixing
-	-	-	🔧	-	-	-	-	lifting jack retaining collars
-	-	-	👁	-	-	-	-	fork carriage position
-	-	-	-	👁	-	-	-	forks
-	-	-	👁	-	-	-	-	mast inclination
-	-	-	🔧	🏗	-	-	-	mast fixing to the frame
-	-	-	-	👁🏗	-	-	⚙	lifting chains
-	-	-	-	👁🏗	-	-	⚙	chain stay bolts
-	-	-	-	-	-	-	⚙	high pressure hydraulic pipe system
-	-	-	-	👁	-	-	-	hydraulic seals and connection
-	-	-	🔧	-	-	-	-	tilting jacks nuts
								DRIVE UNIT(S)
-	-	-	-	👁	-	-	-	system seal
-	-	-	👁	-	⚙	-	-	transmission reduction gear oil - differential gear oil
-	-	-	-	🔧	-	-	-	transmission complete unit

after # hours FOR MEDIUM/INTENSE USE

after # days/months FOR OCCASIONAL USE

https://truckmanualshub.com/

MAINTENANCE TIMES TABLES

8	50	250	500	1000	2000	5000	10000	
1/-	7/-	-/1	-/3	-/6	-/12	-/24	-/60	**after # days/months FOR OCCASIONAL USE**
								ELECTRICAL SYSTEM
-	-	-	-	●	-	-	-	electronic control
-	-	-	●	-	-	-	-	contactors, pushbuttons, pedals and control valves microswitches
-	-	-	●	-	-	-	-	safety control circuit
-	-	-	-	●	-	-	-	lead terminals - lead insulation
-	●	-	-	-	-	-	-	BATTERY - specific gravity and charge level
-	-	-	●	-	-	-	-	ELECTRIC MOTORS - external cleaning
-	-	-	●	-	-	-	-	electric fans
-	-	-	-	●	-	-	⚙	motor bearings
-	-	-	-	● 🔧	-	-	-	motor supports
								CHASSIS AND CONTROLS
-	-	-	-	●	-	-	⚙	steering and pipe systems seal
-	-	-	-	●	-	⚙	-	hoses from orbitrol to steering jack
-	-	-	-	●	-	-	-	steering axle and wheel hub bearing
-	-	-	-	●	-	-	-	steering lock pedals in general - linkage
-	-	-	-	●	-	-	-	parking brake pedal or lever
-	-	-	-	●	-	-	-	service brake pedal
-	-	-	-	●	-	⚙	-	service brake hoses
-	-	-	-	●	⚙	-	-	brake fluid
-	-	-	-	-	●	-	-	brake fluid low level warning light
-	-	-	-	●	-	-	-	chassis cleaning - bolts in general
-	-	-	●	-	-	-	-	driver's seat
-	-	-	-	●	-	-	-	wheel tyres
-	●	-	-	-	-	-	-	tyre pressure and completeness - wheels tightness

https://truckmanualshub.com/

CHAPTER C

SAFETY INFORMATION

https://truckmanualshub.com/

SAFETY INFORMATION INDEX

WORK CLOTHES page 3

WORK PLACE page 3

LIFTING THE TRUCK page 3

ELECTRIC PART page 4

WELDING page 5

TRUCK WASHING page 5

https://truckmanualshub.com/

SAFETY INFORMATION

Work clothes

1 protective gloves
2 overalls
3 safety boots
4 protective goggles

Work place

The work place must be lighted and aired.
The area around the truck must be obstacles free
Oil signs or grease substances must not be presents on the pavement (danger of sliding).

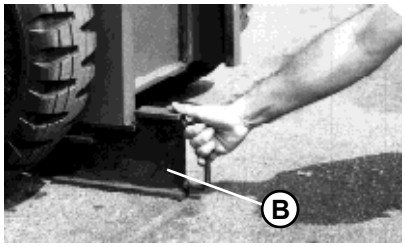

Lifting the truck

Before doing any job, it is obligatory to lift the front wheels with blocks to avoid the risk of accident.

1. Block the steered wheels with chocks (A).
2. Tilt the mast back and place blocks (B) under their base.
3. Tilt the mast forwards: the direction wheels must be lifted and free to rotate

To carry out correctly all the lifting operation of the truck it is necessary to have the following tools:

. a hydraulic jack with up to 5 ton capacity
. metal or hard wood blocks
before putting the blocks under the must, check the inclination of the floor, the truck must be parked on a flat, horizontal surface.

https://truckmanualshub.com/

ELECTRIC PART

It is obligatory to disconnect the battery before doing any job to avoid the risk of accident.

- Do not connect the chopper to a battery with a nominal voltage different from the voltage stated on the unit plate. If the battery voltage is higher, it may cause the MOS failure.

  If the battery voltage is lower, the unit does not run.

- During the battery recharging no units must be connected to the battery as the unit can be damaged by the overvoltage generated by the battery charger.

- Supply the unit only with the traction battery, do not use any output rectifiers or power supplies.

- With the key switched off, the filter capacitors could remain charged for some minutes. To ensure safe working conditions, we advise:

  . **To wait some seconds with the machine stopped and the key inserted until the display turns completely off to disconnect the battery.**

  Or

  . **To short-circuit the capacitors through a resistor (56 Ohm 1W) between the B+ and B- chopper power connections.**

Do not wear jewellery, necklaces, watches, etc because they can be causes of short circuit.

Charging of the battery

Do not smoke (danger of explosion).
It is necessary to switch the battery charger off before disconnecting the battery.
Also little sparks can cause the battery to explode.

In order to fill in the battery or control the level of the acid it is necessary to wear gloves and glasses.
It is prohibited to smoke.

https://truckmanualshub.com/

Welding

Wear a leather overall, gloves and a welding mask.

It is obligatory to wear gloves and protective goggles during the grinding operations because they could cause the projection of metallic particles.

Make sure that these two operations are performable inside the working area where you are.

When these operations are carried out on a truck, in order to avoid the danger of explosion, cover and protect the battery and the parts in contact with fuel carefully.

Make sure that around the working area there are not any inflammable products.

Disconnect the battery and short-circuit the logic units through a resistor (56 Ohm 1W) between the positive (+) and the negative (-) before carrying out any arc-weldings on the truck.

Truck washing

During this operation be careful when using water on electric components.

https://truckmanualshub.com/

PAGINA INTENZIONALMENTE BIANCA

INTENTIONALLY LEFT BLANK

PAGE INTENTIONNELLEMENT BLANCHE

ABSICHTLICH FREIGELASSENE SEITE

PÁGINA INTENCIONALMENTE BLANCA

https://truckmanualshub.com/

PAGINA INTENZIONALMENTE BIANCA

INTENTIONALLY LEFT BLANK

PAGE INTENTIONNELLEMENT BLANCHE

ABSICHTLICH FREIGELASSENE SEITE

PÁGINA INTENCIONALMENTE BLANCA

https://truckmanualshub.com/

Cargo Range

CESAB S.p.A
via Persicetana Vecchia, 10 40132 Bologna - Italy
Tel. (0039) 051.20 54 11
Fax (0039) 051.72 80 07
E-mail: cesab@cesab.it