https://truckmanualshub.com/

JT30/JT30 All Terrain

Tier 3 and Tier 4i

Operator’s Manual

CMW®

Issue 1.0
Original Instruction

053-2544

https://truckmanualshub.com/

Overview

Chapter Contents

Serial Number Location 3

Intended Use 4

Equipment Modification 4

Unit Components 5

Operator Orientation. 6

About This Manual 6

- Bulleted Lists. 6
- Numbered Lists. 6
- "Continued" Indicators. 6

https://truckmanualshub.com/

Serial Number Location

Record serial numbers and date of purchase in spaces provided. Drilling unit serial number is located as shown.

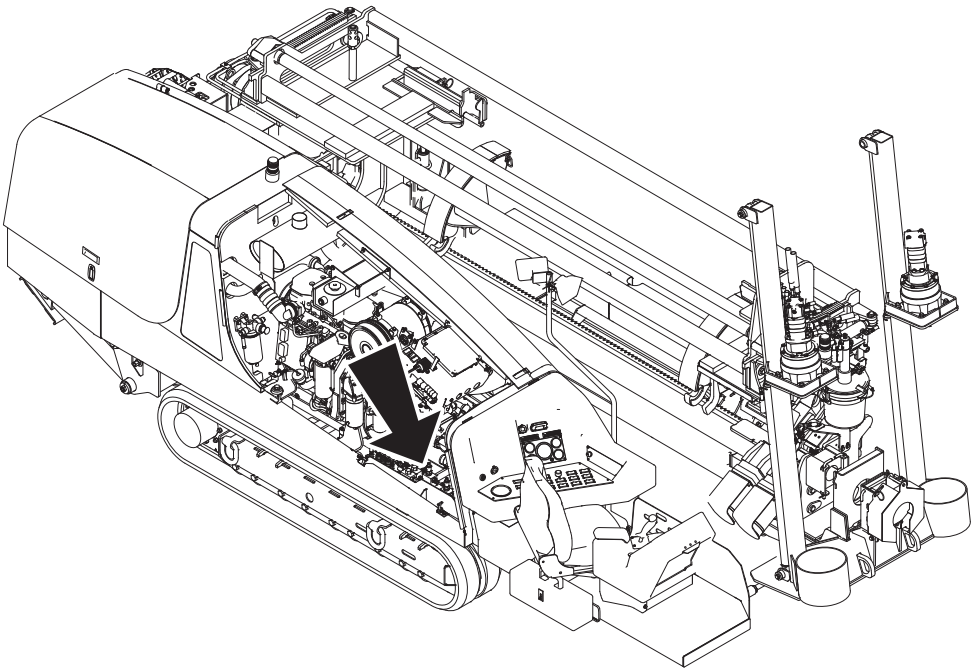

j22om001h.eps

Item	
date of manufacture	
date of purchase	
drilling unit serial number	
engine serial number	

https://truckmanualshub.com/

Intended Use

The JT30 is a self-contained horizontal directional drilling unit designed to install buried cable and pipe to distances of 650' (200 m) depending on soil conditions. Its All Terrain version is designed to drill through rock, cobblestone, broken rock, gravel, and caliche.

The unit is designed for operation in temperatures typically experienced in earth moving and construction work environments. Provisions may be required to operate in extreme temperatures. Contact your Ditch Witch dealer. Use in any other way is considered contrary to the intended use.

The JT30/JT30 All Terrain should be used with genuine Ditch Witch drilling fluid units and Ditch Witch tracking equipment. It should be operated, serviced, and repaired only by persons familiar with its particular characteristics and acquainted with the relevant safety procedures.

Equipment Modification

This equipment was designed and built in accordance with applicable standards and regulations. Modification of equipment could mean that it will no longer meet regulations and may not function properly or in accordance with the operating instructions. Modification of equipment should only be made by competent personnel possessing knowledge of applicable standards, regulations, equipment design functionality/requirements and any required specialized testing.

https://truckmanualshub.com/

Unit Components

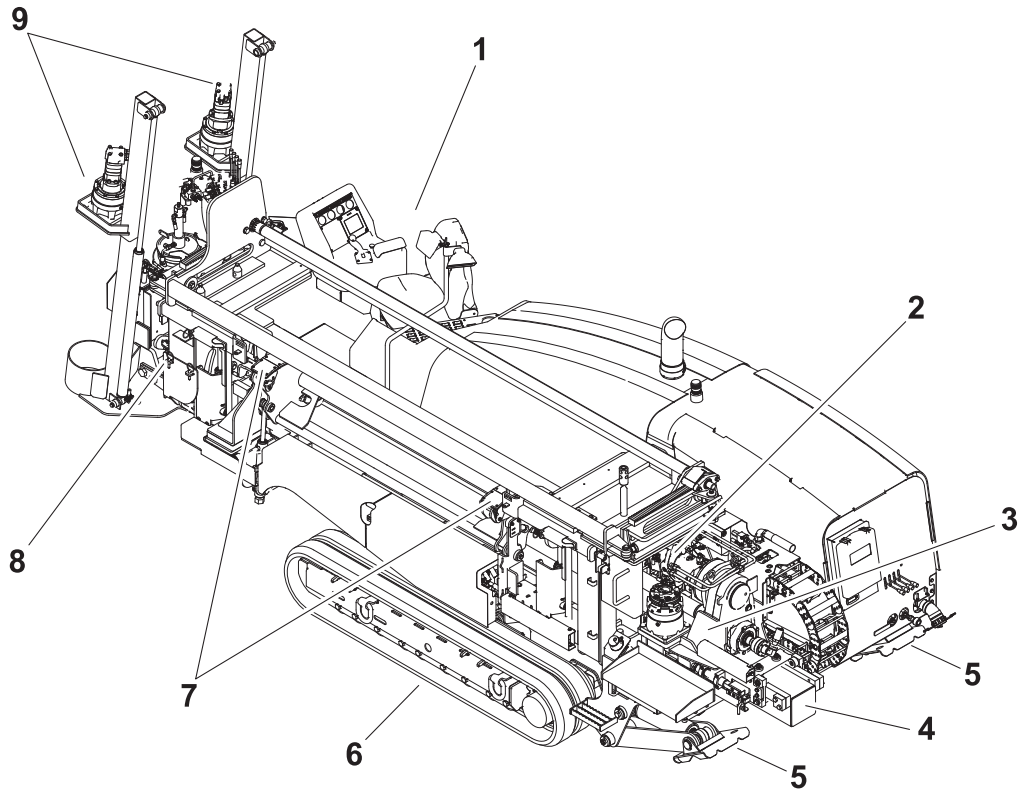

j22om002h.eps

1. Operator's station
2. Spindle
3. Carriage
4. Drill frame
5. Stabilizer
6. Tracks
7. Pipeloader
8. Vise wrenches
9. Anchoring system

https://truckmanualshub.com/

Operator Orientation

IMPORTANT: Top view of unit is shown.

1. Front of unit
2. Right side of unit
3. Rear of unit
4. Left side of unit

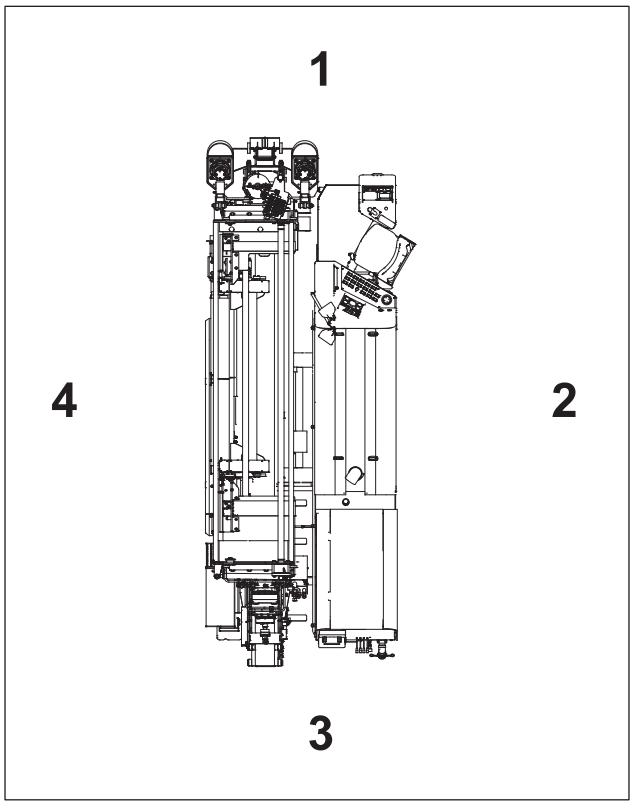

j22om003h.eps

About This Manual

This manual contains information for the proper use of this machine. See the beige **Operation Overview** pages for basic operating procedures. Cross references such as "See page 50" will direct you to detailed procedures.

Bulleted Lists

Bulleted lists provide helpful or important information or contain procedures that do not have to be performed in a specific order.

Numbered Lists

Numbered lists contain illustration callouts or list steps that must be performed in order.

https://truckmanualshub.com/

https://truckmanualshub.com/

Foreword

This manual is an important part of your equipment. It provides safety information and operation instructions to help you use and maintain your Ditch Witch equipment.

Read this manual before using your equipment. Keep it with the equipment at all times for future reference. If you sell your equipment, be sure to give this manual to the new owner.

If you need a replacement copy, contact your Ditch Witch dealer. If you need assistance in locating a dealer, visit our website at **www.ditchwitch.com** or write to the following address:

The Charles Machine Works, Inc.
Attn: Marketing Department
PO Box 66
Perry, OK 73077-0066
USA

The descriptions and specifications in this manual are subject to change without notice. The Charles Machine Works, Inc. reserves the right to improve equipment. Some product improvements may have taken place after this manual was published. For the latest information on Ditch Witch equipment, see your Ditch Witch dealer.

Thank you for buying and using Ditch Witch equipment.

https://truckmanualshub.com/

JT30/JT30 All Terrain
Tier 3 and Tier 4i
Operator's Manual

Issue number 1.0/OM-07/12

Part number 053-2544

Copyright 2012

by The Charles Machine Works, Inc.

Ditch Witch®, Ditch Witch, CMW, Jet Trac, Subsite, Fluid Miser, Power Pipe, and The Underground Authority are registered trademarks of The Charles Machine Works, Inc.

This product is covered by one or more of the following patents:
U.S. 5490569; 5684466; 5713423; 5794719; 5880680; 5941322; 6085852; 6109371; 6179065; 6250403; 6250404; 6311790; 6411094; 6543551; 6550547; 6672409; 6739413; 6761231; 6776246; 6808210; 6827158; 6848506; 6871712; 7011166; 7038454; 7759824; 7025152; 7347283; 7413031; 7392858; 7600584; 7628226; 7987924; RE37,450; RE37,975; RE38,418; **AU** 689,533; 706,544; 718,034; 755,862; **CA** 2,156,398; 2,217,899; **DE** 694 17 019; 695 29 634; 697 28 716; 69829107.7-08, 19712641; 66942993.5; **EP** 0683845; **FR** 674093; **GB** 2312006; 817901; 146608; EP 927892; EP674,093; EP846,841; UK 0984132; **JP** 3,458,247; other U.S. and foreign patents pending.

https://truckmanualshub.com/

Contents

Overview machine serial number, information about the type of work this machine is designed to perform, basic machine components, and how to use this manual	**2**
Foreword part number, revision level, and publication date of this manual, and factory contact information	**8**
Safety machine safety alerts and emergency procedures	**12**
Controls machine controls, gauges, and indicators and how to use them	**22**
Operation Overview an overview for completing a job with this machine: planning, setting up, installing product, and restoring the jobsite; with cross references to detailed procedures	**64**
Prepare procedures for inspecting and classifying the jobsite, planning the installation path, and preparing the jobsite for work	**68**
Drive procedures for startup, cold start, driving, and shutdown	**88**
Transport procedures for lifting, hauling, and towing	**92**
Conduct a Bore procedures for drilling and backreaming	**100**
Systems and Equipment downhole tools and drill pipe, anchor, electric strike, tracker control, fluid systems, and diagnostic codes	**128**
Complete the Job procedures for restoring the jobsite and rinsing and storing equipment	**190**
Service service intervals and instructions for this machine including lubrication, replacement of wear items, and basic maintenance	**196**

https://truckmanualshub.com/

Specifications 234
machine specifications including weights, measurements, power ratings, and fluid capacities

Support 240
the warranty policy for this machine, and procedures for obtaining warranty consideration and training

Service Record 244
a record of major service performed on the machine

https://truckmanualshub.com/

Safety

Chapter Contents

Guidelines 13

Safety Alert Classifications 14

Safety Alerts 15

Emergency Procedures 18

- Electric Strike Description 18
- If an Electric Line is Damaged 19
- If a Gas Line is Damaged 20
- If a Fiber Optic Cable is Damaged 21
- If Machine Catches on Fire 21

https://truckmanualshub.com/

Guidelines

Follow these guidelines before operating any jobsite equipment:

- Complete proper training and read operator's manual before using equipment.
- Contact your local One-Call (811 in USA) or the One-Call referral number (888-258-0808 in USA and Canada) to have underground utilities located before digging. Also contact any utilities that do not participate in the One-Call service.
- Classify jobsite based on its hazards and use correct tools and machinery, safety equipment, and work methods for jobsite.
- Mark jobsite clearly and keep spectators away.
- Wear personal protective equipment.
- Review jobsite hazards, safety and emergency procedures, and individual responsibilities with all personnel before work begins. Safety videos are available from your Ditch Witch dealer.
- Replace missing or damaged safety shields and safety signs.
- Use equipment carefully. Stop operation and investigate anything that does not look or feel right.
- Do not operate unit where flammable gas may be present.
- Contact your Ditch Witch dealer if you have any question about operation, maintenance, or equipment use.

https://truckmanualshub.com/

Safety Alert Classifications

These classifications and the icons defined on the following pages work together to alert you to situations which could be harmful to you, jobsite bystanders or your equipment. When you see these words and icons in the book or on the machine, carefully read and follow all instructions. YOUR SAFETY IS AT STAKE.

Watch for the three safety alert levels: **DANGER**, **WARNING** and **CAUTION**. Learn what each level means.

DANGER indicates a hazardous situation that, if not avoided, will result in death or serious injury. This signal word is to be limited to the most extreme situations.

WARNING indicates a hazardous situation that, if not avoided, could result in death or serious injury.

CAUTION indicates a hazardous situation that, if not avoided, could result in minor or moderate injury.

Watch for two other words: ***NOTICE*** and **IMPORTANT**.

NOTICE indicates information considered important, but not hazard-related (e.g., messages relating to property damage).

IMPORTANT can help you do a better job or make your job easier in some way.

https://truckmanualshub.com/

Safety Alerts

DANGER Turning shaft will kill you or crush arm or leg. Stay away.

DANGER Electric shock. Contacting electric lines will cause death or serious injury. Know location of lines and stay away.

DANGER Moving tools will kill or injure. Shut off drill string power when anyone can be struck by moving or thrown tools. Never use pipe wrenches on drill string.

WARNING Jobsite hazards could cause death or serious injury. Use correct equipment and work methods. Use and maintain proper safety equipment.

WARNING Crushing weight could cause death or serious injury. Use proper procedures and equipment or stay away.

WARNING Moving parts could cut off hand or foot. Stay away.

WARNING Explosion possible. Serious injury or equipment damage could occur. Follow directions carefully.

WARNING Incorrect procedures could result in death, injury, or property damage. Learn to use equipment correctly.

https://truckmanualshub.com/

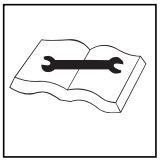

WARNING Improper control function could cause death or serious injury. If control does not work as described in instructions, stop machine and have it serviced.

WARNING Looking into fiber optic cable could result in permanent vision damage. Do not look into ends of fiber optic or unidentified cable.

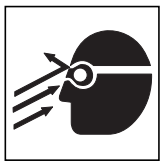

WARNING Pressurized fluid or air could pierce skin and cause injury or death. Stay away.

WARNING Fire or explosion possible. Fumes could ignite and cause burns. No smoking, no flame, no spark.

WARNING Moving traffic - hazardous situation. Death or serious injury could result. Avoid moving vehicles, wear high visibility clothing, post appropriate warning signs.

https://truckmanualshub.com/

WARNING Hot pressurized cooling system fluid could cause serious burns. Allow to cool before servicing.

CAUTION Flying objects may cause injury. Wear hard hat and safety glasses.

CAUTION Hot parts may cause burns. Do not touch until cool.

CAUTION Exposure to high noise levels may cause hearing loss. Wear hearing protection.

CAUTION Fall possible. Slips or trips may result in injury. Keep area clean.

CAUTION Battery acid may cause burns. Avoid contact.

CAUTION Improper handling or use of chemicals may result in illness, injury, or equipment damage. Follow instructions on labels and in material safety data sheets (MSDS).

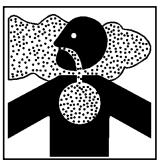

CAUTION Breathing crystalline silica dust may cause lung disease. Cutting, drilling, or working materials such as concrete, sand, or rock containing quartz may result in exposure to silica dust. Use dust control methods or appropriate breathing protection when exposed to silica dust.

https://truckmanualshub.com/

Emergency Procedures

WARNING Jobsite hazards could cause death or serious injury. Use correct equipment and work methods. Use and maintain proper safety equipment.

Before operating any equipment, review emergency procedures and check that all safety precautions have been taken.

EMERGENCY SHUTDOWN - Turn ignition switch to stop position or push remote engine stop button (if equipped).

Electric Strike Description

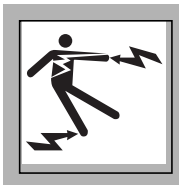

DANGER Electric shock. Contacting electric lines will cause death or serious injury. Know location of lines and stay away.

When working near electric cables, remember the following:

- Electricity follows all paths to ground, not just path of least resistance.
- Pipes, hoses, and cables will conduct electricity back to all equipment.
- Low voltage current can injure or kill. Many work-related electrocutions result from contact with less than 440 volts.

Most electric strikes are not noticeable, but indications of a strike include:

- power outage
- smoke
- explosion
- popping noises
- arcing electricity

If any of these occur, or if strike alarm sounds or flashes, assume an electric strike has occurred.

https://truckmanualshub.com/

If an Electric Line is Damaged

If you suspect an electric line has been damaged and you are **on drilling unit or bonded equipment**, DO NOT MOVE. Remain on drilling machine and take the following actions. The order and degree of action will depend on the situation.

- Warn people nearby that an electric strike has occurred.
- Have someone contact electric company.
- Reverse drilling direction and try to break contact. Do not touch drill pipe with hands or hand-held tools.
- Press electric strike system status button.
  - If alarm sounds again, stay where you are and wait for electric company to shut off power.
  - If alarm does not sound and there is no other indication of a strike, wait at least one full minute before moving away from equipment. Utility might use automatic reclosers which will restart current flow. If alarm sounds again while waiting, stay where you are until electric company shuts off power.
  - If alarm does not sound but all lights in strike indicator are on, assume strike is continuing and stay where you are until electric company shuts off power.
- Do not resume drilling or allow anyone into area until given permission by electric company.

If you suspect an electric line has been damaged and you are **off drilling unit or bonded equipment**, DO NOT TOUCH ANY EQUIPMENT connected to drilling unit. Take the following actions. The order and degree of action will depend on the situation.

- Stay where you are unless you are wearing electric insulating boots. If you leave, do not return to area or allow anyone into area until given permission by electric company.

https://truckmanualshub.com/

If a Gas Line is Damaged

WARNING Fire or explosion possible. Fumes could ignite and cause burns. No smoking, no flame, no spark.

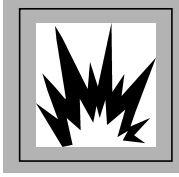

WARNING Explosion possible. Serious injury or equipment damage could occur. Follow directions carefully.

If you suspect a gas line has been damaged, take the following actions. The order and degree of action will depend on the situation.

- Immediately shut off engine(s), if this can be done safely and quickly.
- Remove any ignition source(s), if this can be done safely and quickly.
- Warn others that a gas line has been cut and that they should leave the area.
- Leave jobsite as quickly as possible.
- Immediately call your local emergency phone number and utility company.
- If jobsite is along street, stop traffic from driving near jobsite.
- Do not return to jobsite until given permission by emergency personnel and utility company.

https://truckmanualshub.com/

If a Fiber Optic Cable is Damaged

Do not look into cut ends of fiber optic or unidentified cable. Vision damage can occur.

If Machine Catches on Fire

Perform emergency shutdown procedure and then take the following actions. The order and degree of action will depend on the situation.

- Immediately move battery disconnect switch (if equipped and accessible) to disconnect position.
- If fire is small and fire extinguisher is available, attempt to extinguish fire.
- If fire cannot be extinguished, leave area as quickly as possible and contact emergency personnel.

https://truckmanualshub.com/

Controls

Chapter Contents

Set-Up Console 23

Tethered Ground Drive Controller 27

Left Control Console 29

- Engine Display 29
- Pipeloading controls 33
- Drilling/Operation controls 36

Right Control Console 40

- Controls 40
- Indicators 43
- Gauges 47

Information Center 49

- Displays. 49
- Soft keys 51

Anchoring System Console 53

Seat/Armrest 55

Cab Controls (Optional) 57

Engine Compartment Controls 60

https://truckmanualshub.com/

Set-Up Console

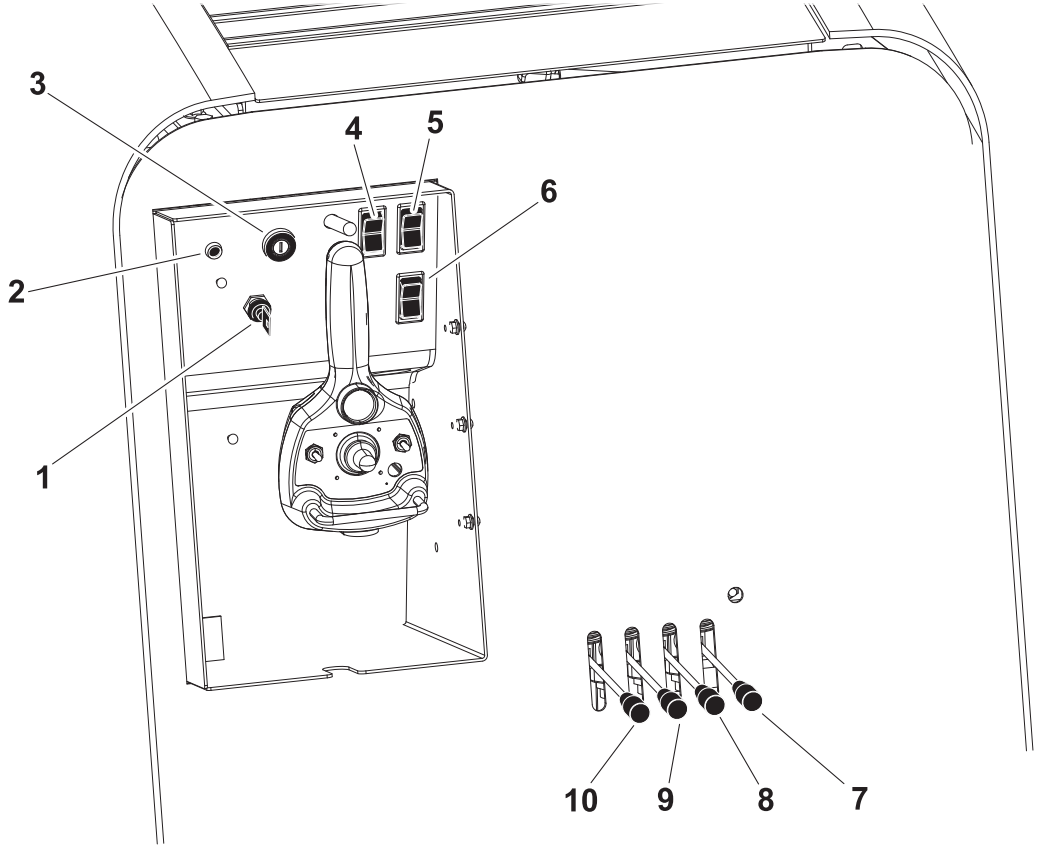

j22om004h.eps

1. Tracker control key
2. Cold start wait indicator
3. Ignition switch
4. Left track switch
5. Right track switch
6. Engine shutdown override switch
7. Right stabilizer control
8. Left stabilizer control
9. Back frame tilt control
10. Front frame tilt control

https://truckmanualshub.com/

Item	Description	Notes
1. Tracker control key 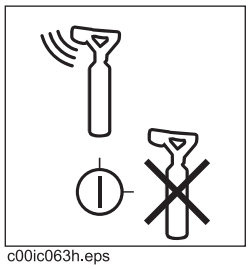 c00ic063h.eps	To allow tracker operator to stop thrust and rotation, move key to enable position (up). To override tracker control mode, move key to disable position (right).	**IMPORTANT:** Remove key and keep in tracker operator's possession.
2. Cold start wait indicator 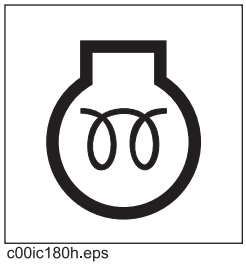 c00ic180h.eps	Lights when intake air pre-heater is operating. Wait until light goes off before starting engine.	
3. Ignition switch 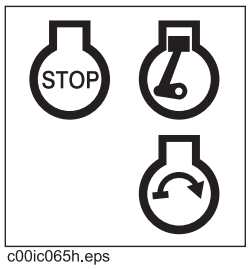 c00ic065h.eps	To start engine, insert key and turn clockwise. To stop engine, turn key counterclockwise.	**IMPORTANT:** • Restart engine with ignition switch after it has been turned off with tethered control remote engine stop switch. • If wrenches are engaged when engine is stopped with ignition switch, wrenches will release and then engage when unit is started.
4. Left track switch 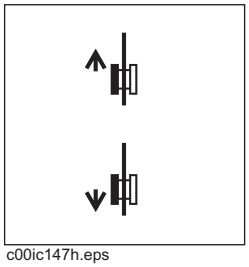 c00ic147h.eps	To move forward, press top. To move backward, press bottom.	**IMPORTANT:** Use track switches only if tethered control is inoperable.

https://truckmanualshub.com/

Item	Description	Notes
5. Right track switch 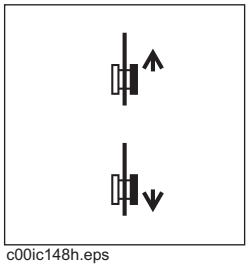 c00ic148h.eps	To move forward, press top. To move backward, press bottom.	**IMPORTANT:** Use track switches only if tethered control is inoperable.
6. Engine shutdown override switch c00ic178h.eps	If engine shutdown indicator comes on, turn ignition switch to STOP and press to delay engine shutdown for 30 seconds.	This control allows a temporary override of engine shutdown. ***NOTICE:*** After 30 seconds, engine will again shut down unless fault condition has been cleared on diagnostic gauge. **IMPORTANT:** See "Electronic Controlled Engine Overview" on page 169 for more information on Tier 3 engines.
7. Left stabilizer control 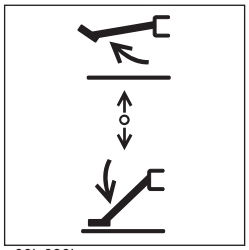 c00ic030h.eps	To raise, pull up. To lower, push down.	**IMPORTANT:** Lower left and right stabilizers to the ground together, then adjust individually. **WARNING:** Crushing weight could cause death or serious injury. Use proper procedures and equipment or stay away.
8. Right stabilizer control 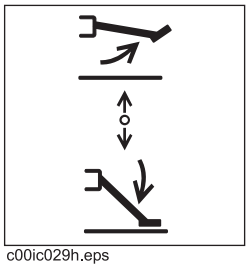 c00ic029h.eps	To raise, pull up. To lower, push down.	**IMPORTANT:** Lower left and right stabilizers to the ground to stabilize unit and then adjust for side-to-side stability. **WARNING:** Crushing weight could cause death or serious injury. Use proper procedures and equipment or stay away.

https://truckmanualshub.com/

Item	Description	Notes
9. Back frame tilt control 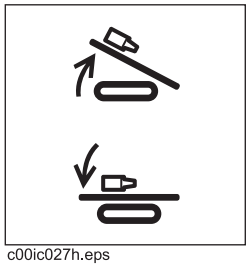 c00ic027h.eps	To raise, pull up. To lower, push down.	**IMPORTANT:** To ensure a stable platform for drilling, use front and back tilt controls together to set frame at desired pitch without raising tracks off the ground.
10. Front frame tilt control 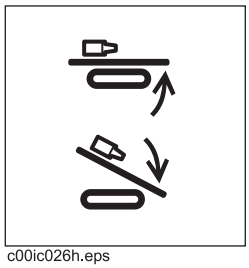 c00ic026h.eps	To raise, pull up. To lower, push down.	**IMPORTANT:** To ensure a stable platform for drilling, use front and back tilt controls together to set frame at desired pitch without raising tracks off the ground.

https://truckmanualshub.com/

Tethered Ground Drive Controller

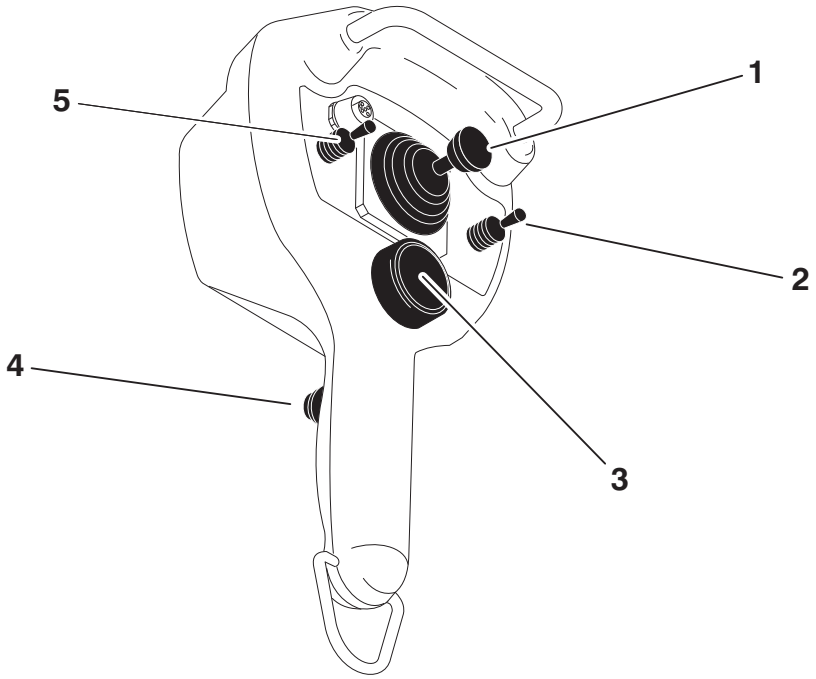

j10om016h.eps

1. Speed/direction control
2. Drive mode switch
3. Remote engine stop
4. Operator presence switch
5. Throttle switch

Item	Description	Notes
1. Speed/direction control 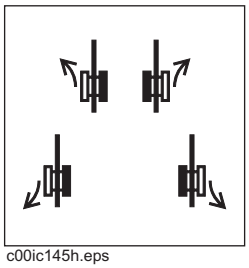 c00ic145h.eps	To move forward, push. To move backward, pull. To steer, move left or right while moving forward or backward.	**IMPORTANT:** • Operator presence switch must be pressed and operator seat must be empty for control to work. • See "Steer Unit" on page 89 for more information.

https://truckmanualshub.com/

Item	Description	Notes
2. Drive mode switch 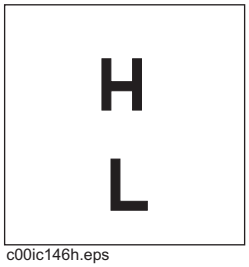 c00ic146h.eps	To select normal driving mode (high), push. To select loading and unloading mode (low), pull. To disable controller, return to center.	
3. Remote engine stop	To stop engine, press red button.	**IMPORTANT:** To restart engine, turn ignition switch off and then back on.
4. Operator presence switch	To operate ground drive with tethered controller, press. To disable controller, release.	
5. Throttle switch 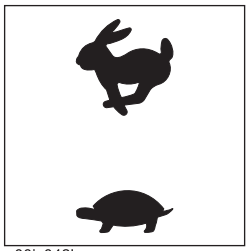 c00ic042h.eps	To increase engine speed, press top. To decrease engine speed, bottom.	

https://truckmanualshub.com/

Left Control Console

Indicators

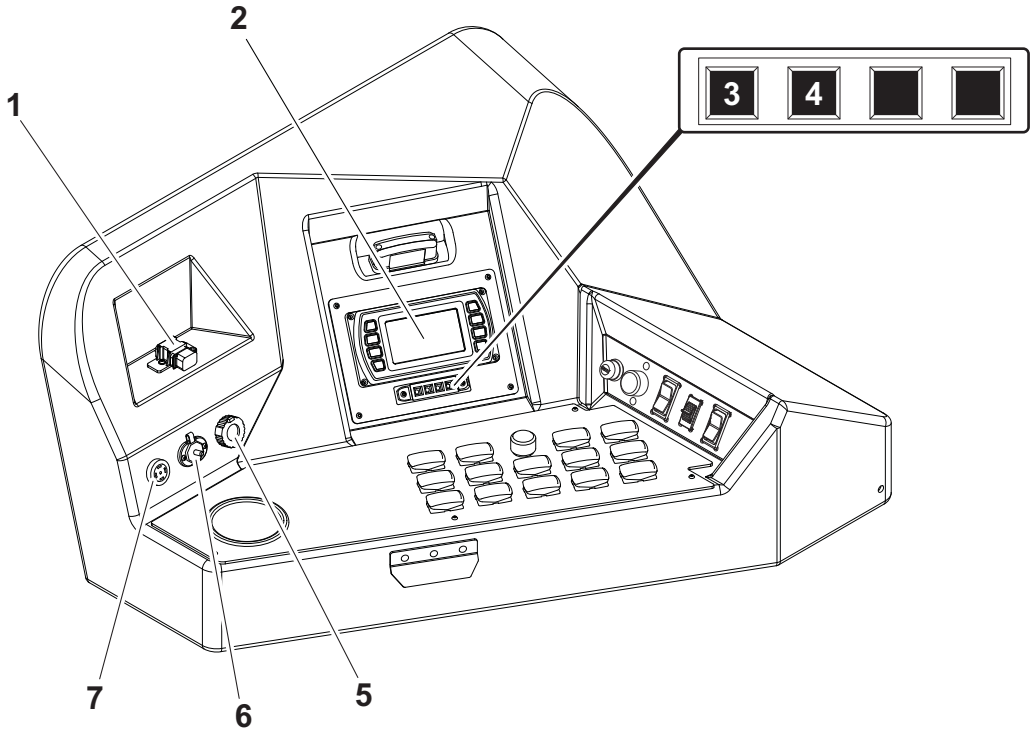

j34om011w.eps

1. USB port
2. Engine display
3. Hydraulic fluid temperature indicator
4. Hydraulic filter service indicator
5. Diagnostic port
6. Auxiliary outlet
7. Horn

Item	Description	Notes
1. USB port	Provides power for mobile devices.	DC5V, 1A (5W)
2. Engine display	Communicates status of engine operation.	See "Engine Display" on page 31.

https://truckmanualshub.com/

Item	Description	Notes
3. Hydraulic fluid temperature indicator 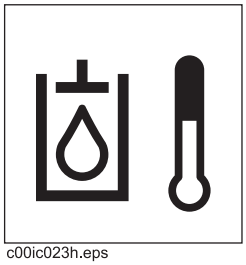 c00ic023h.eps	Indicates hydraulic fluid is overheating.	Check hydraulic fluid level.
4. Hydraulic filter service indicator 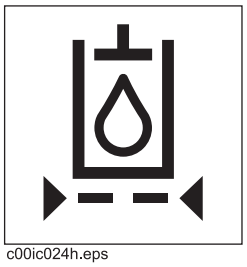 c00ic024h.eps	Indicates hydraulic fluid filter needs replacing.	Change filter when indicator lights continuously and as indicated on page 218.
5. Diagnostic port	For use by only by qualified Ditch Witch technicians.	
6. Auxiliary outlet 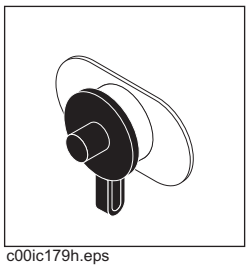 c00ic179h.eps	Provides power for other equipment.	Power output is 12VDC, 5A.
7. Horn	Provides audible alarm for strike system and tracker control.	

https://truckmanualshub.com/

Engine Display

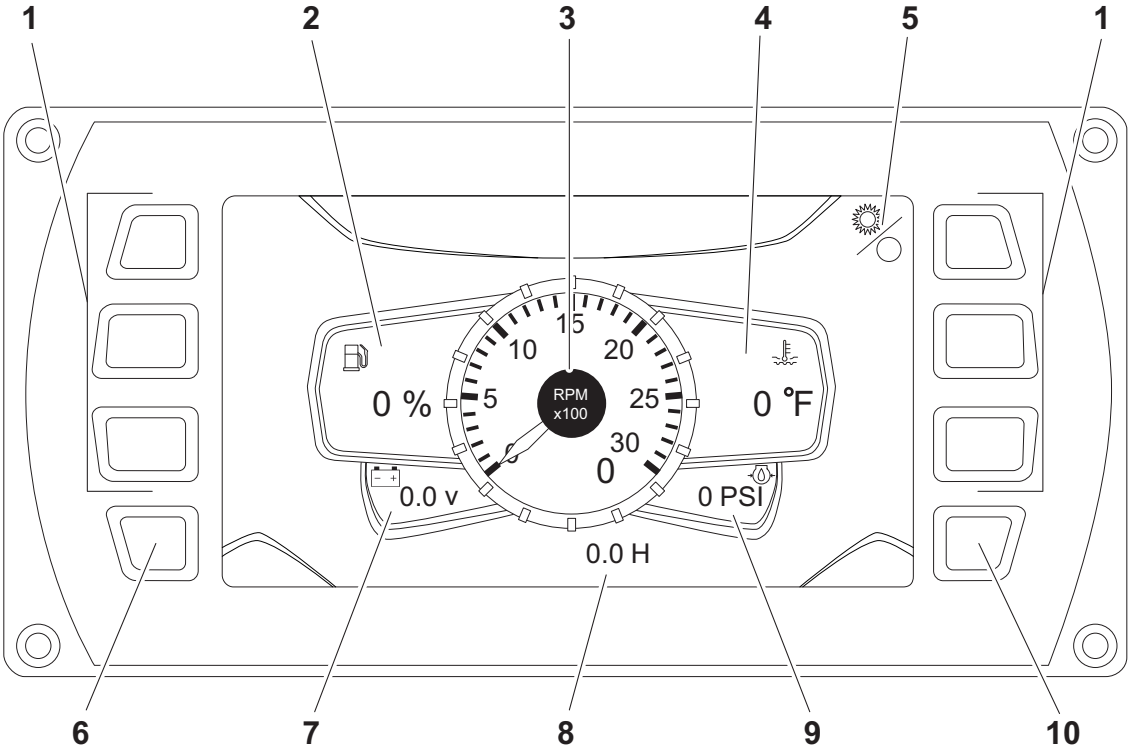

j34om003w.eps

1. Soft keys
2. Fuel gauge
3. Tachometer
4. Engine coolant temperature gauge
5. Screen brightness (soft key command)
6. Menu key
7. Voltmeter display
8. Hour meter
9. Engine oil pressure gauge
10. Enter key

Item	Description	Notes
1. Soft keys	Press to select a soft key command.	Soft key commands change with each menu screen and are displayed next to the key.
2. Fuel gauge	Displays amount of fuel remaining in tank.	See "Approved Fuel" on page 202.
3. Tachometer	Displays engine speed.	

https://truckmanualshub.com/

Item	Description	Notes
4. Engine coolant temperature gauge	Displays engine coolant temperature.	Normal coolant temperature is 160°-212° F (71°-100° C).
5. Screen brightness soft key command	Displays screen brightness setting.	To access screen brightness menu, press soft key. Select day or night setting.
6. Menu key	Press at any time to return to main menu.	This key may be used for another function. If so, a soft key command will display.
7. Voltmeter display	Shows system voltage.	Normal voltage is 13-14V with engine running.
8. Hour meter	Displays number of hours engine has been running.	
9. Engine oil pressure gauge	Displays engine oil pressure.	Full load reading should be 60-80 psi (4.1-5.5 bar).
10. Enter key	Press to finalize a selection.	This key may be used for another function. If so, a soft key command will display.

Most engine display functions are self-explanatory. For more information about functions, see the manufacturer's instructions at www.fwmurphy.com.

https://truckmanualshub.com/

Pipeloading Controls

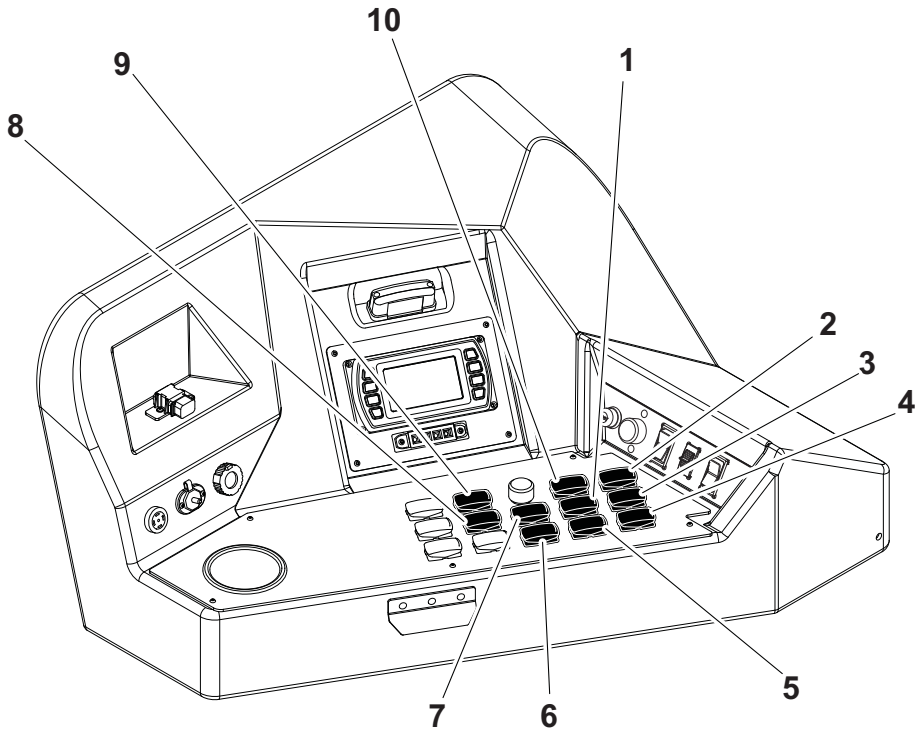

j34om002w.eps

1. Pipe lift switch
2. Rear wrench rotation switch
3. Rear wrench clamp switch
4. Front wrench clamp switch
5. Pipe shuttle switch
6. Pipe gripper switch
7. Pipe lubricator switch
8. Pipe box position switch
9. Add pipe/manual/remove pipe switch
10. Set/Resume switch

Item	Description	Notes
1. Pipe lift switch 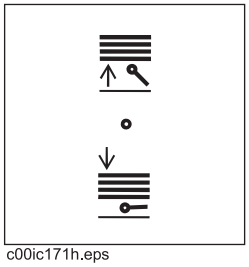 c00ic171h.eps	To raise, press top. To lower, press bottom. To stop, release.	

https://truckmanualshub.com/

Item	Description	Notes
2. Rear wrench rotation switch 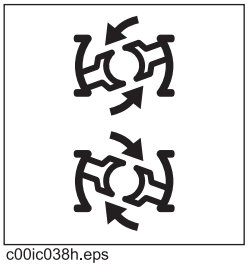 c00ic038h.eps	To rotate counterclockwise, press top. To rotate clockwise, press bottom. To stop rotation, release.	
3. Rear wrench clamp switch 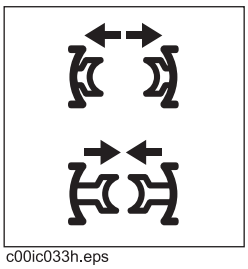 c00ic033h.eps	To unclamp, press top. To clamp, press bottom.	
4. Front wrench clamp switch 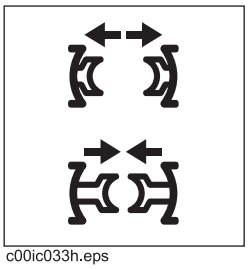 c00ic033h.eps	To unclamp, press top. To clamp, press bottom.	
5. Pipe shuttle switch 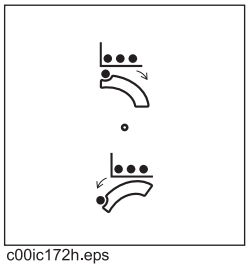 c00ic172h.eps	To move toward pipe box, press top. To move toward spindle, press bottom. To stop shuttles, release.	

https://truckmanualshub.com/

Item	Description	Notes
6. Pipe gripper switch 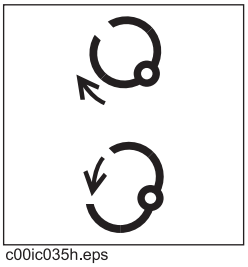 c00ic035h.eps	To close, press top. To open, press bottom. To stop grippers, release.	
7. Pipe lubricator switch 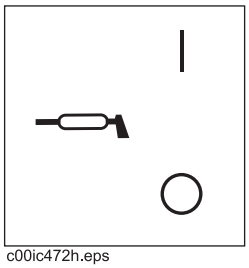 c00ic472h.eps	To apply joint compound, press top.	Applies joint compound to threads at wrenches.
8. Pipe position switch 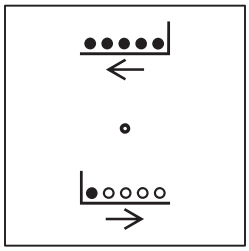 c00ic126a.eps	To shift pipe box away from operator, press top. To shift pipe box toward operator, press bottom. To stop pipe box, release.	**IMPORTANT:** See "Shift Pipe Box" on page 159.
9. Add pipe/manual/ remove pipe switch 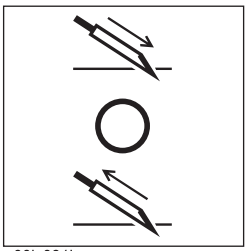 c00ic031h.eps	To select "add pipe" automated pipeloader function, press top. To use manual pipeloader controls, move to center. To select "remove pipe" automated pipeloader function, press bottom.	See "Enable Automated Pipeloader System" on page 112.
10. Set/Resume switch 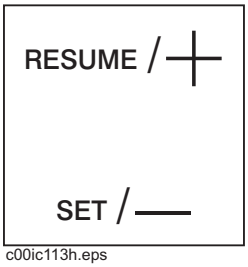 c00ic113h.eps	To resume operation or increase operation levels, press top. To set operating conditions or reduce operation levels, press bottom.	See "Cruise Control" on page 164. See "AutoCarve switch" on page 37 and 119. See "Pipeloader" on page 156.

https://truckmanualshub.com/

Drilling/Operation Controls

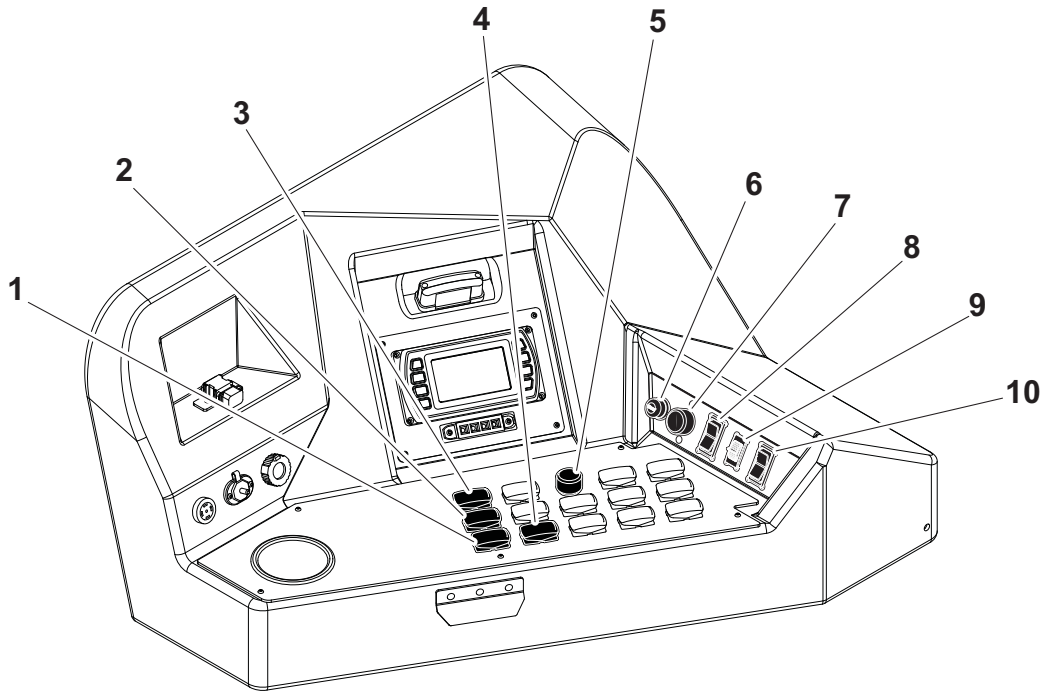

j34om010w.eps

1. Fluid pump speed switch
2. AutoCarve switch
3. Console/Work light switch
4. Engine throttle switch
5. Fluid flow control
6. Remote engine start switch
7. AutoCarve speed control (JT, AT Dirt modes)
   Inner spindle speed control (AT Rock mode)
8. Inner spindle switch (AT only)
9. Manual inner spindle control (AT only)
10. Outer spindle brake switch (AT only)

https://truckmanualshub.com/

Item	Description	Notes
1. Fluid pump speed switch 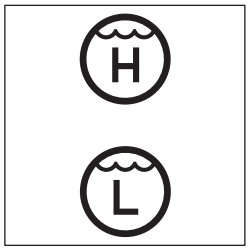 c00ic106c.eps	For high speed, press top. For low speed, press bottom.	High speed delivers more flow at lower pressure. Low speed delivers less flow at higher pressure.
2. AutoCarve switch 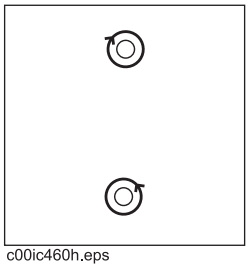 c00ic460h.eps	To enable autocarve, press top. To deactivate autocarve, press bottom.	Two-speed thrust is not allowed in autocarve mode. Cruise control is not available in autocarve mode. Autocarve is disabled while front wrench is closed.
3. Console/Work light switch 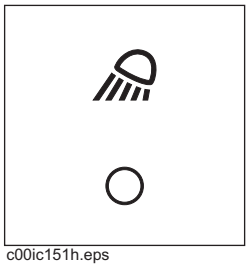 c00ic151h.eps	To turn on, press top. To turn off, press bottom.	
4. Engine throttle switch 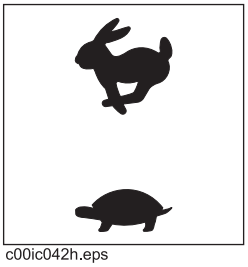 c00ic042h.eps	To increase speed, press top. To enable autothrottle mode, leave switch in top position. To disable autothrottle mode, return switch to center after desired speed is reached. To decrease speed, press bottom.	Autothrottle mode slows the engine to low throttle after 15 seconds of inactivity involving thrust, rotation, drilling fluid flow, or pipeloader functions. To return to high speed, activate thrust, rotation, drilling fluid, or an add/remove pipe cycle.

https://truckmanualshub.com/

Item	Description	Notes
5. Fluid flow control 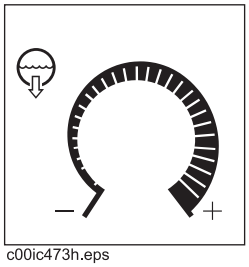 c00ic473h.eps	To increase flow, turn clockwise. To decrease flow, turn counterclockwise. To stop flow, turn all the way counterclockwise.	**Note:** Drilling fluid pump must be switched on. See "Right Control Console" on page 40.
6. Remote engine start switch 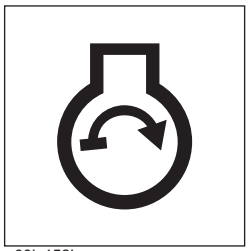 c00ic152h.eps	To start engine from operator's station, push button. Release when engine starts.	**IMPORTANT:** This button works only when key in set-up console is on, operator is in seat, and battery disconnect switch is closed.
7. Carve window control (JT and AT Dirt mode) **or** **Inner spindle speed control (AT Rock mode)** 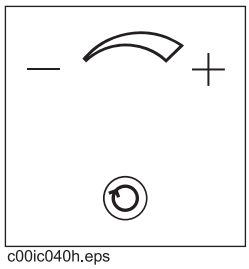 c00ic040h.eps	To increase carve window range, turn clockwise. To decrease carve window range, turn counterclockwise.	See "Use AutoCarve" on page 119. For AT units: To set carve window, autocarve mode must be enabled and drilling mode switch in **AT Dirt** position. See "Engine Compartment Controls" on page 60.
	To increase rotation speed, turn clockwise. To decrease rotation speed, turn counterclockwise.	To control inner spindle speed, Inner Spindle switch must be on and drilling mode switch in AT position. See "Engine Compartment Controls" on page 60.
8. Inner spindle switch 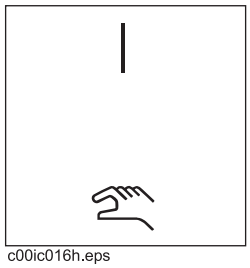 c00ic016h.eps	To turn on, press top. To turn off, move to center. To manually control inner rotation speed and direction, press bottom. Then use manual inner spindle control as needed.	**IMPORTANT:** • To restart inner rotation after operator has left seat, turn inner rotation off and then on. • Normal dither works in manual control mode unless the manual inner spindle control is moved from its normal position.

https://truckmanualshub.com/

Item	Description	Notes
9. Manual inner spindle control 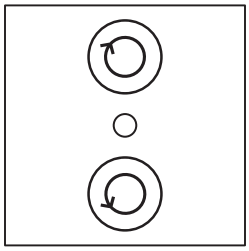 c00ic127a.eps	To rotate clockwise, move to top. To rotate counterclockwise, move to bottom. To stop inner rotation, release.	**IMPORTANT:** • Inner spindle switch must be in manual position for this control to work. • Range of speed is reduced to allow easier manual control. • Up/down paddle is spring centered. Moving it above center rotates inner rod clockwise. Moving it further rotates the rod faster. Moving it below center does the same for counter clockwise rotation.
10. Outer spindle brake switch 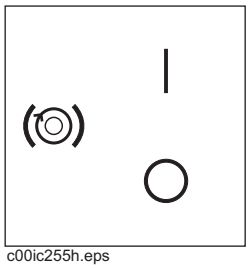 c00ic255h.eps	To engage, press top. To disengage, press bottom.	Prevents outer spindle from rotating when inner spindle or mud motor are in use. Brake is temporarily released when front wrench is closed to allow pipe change.

https://truckmanualshub.com/

Right Control Console

Controls

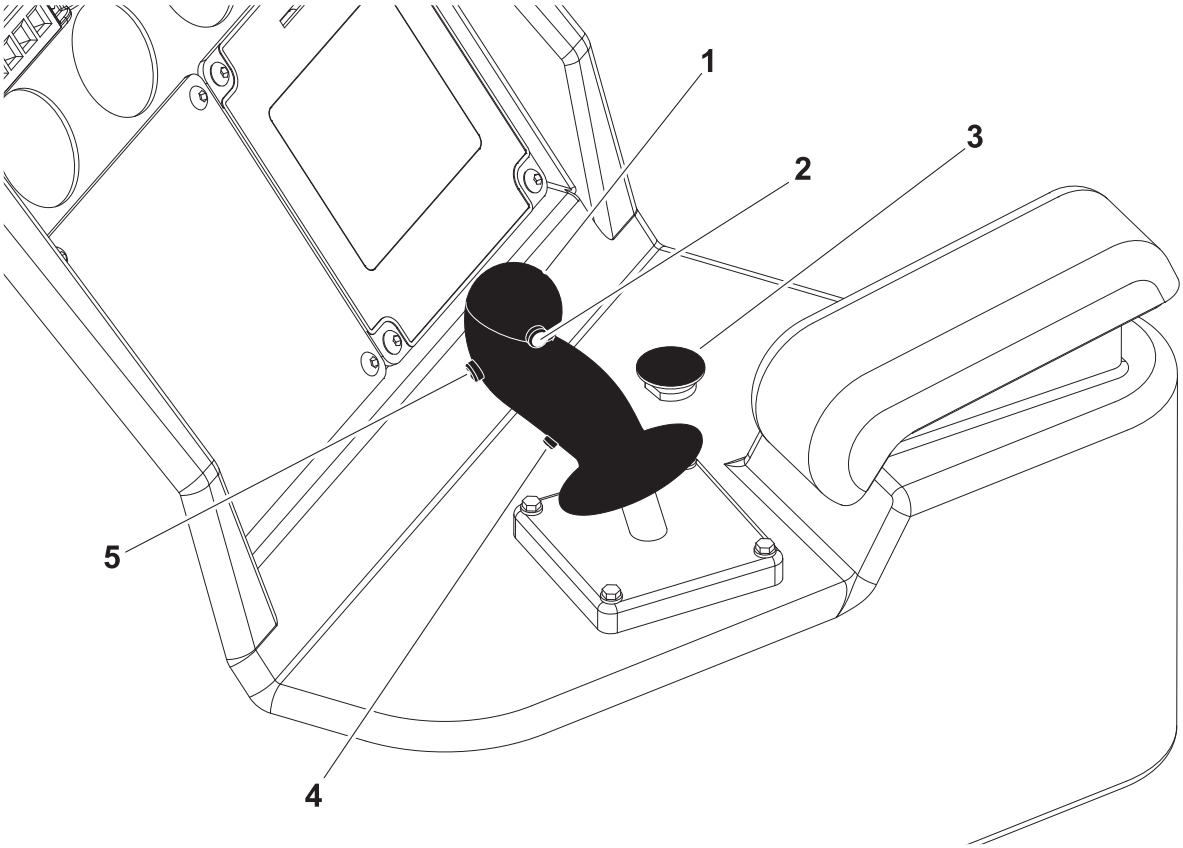

j22om010h.eps

1. Carriage control joystick
2. Drilling fluid quick fill switch
3. Remote engine stop switch
4. Drilling fluid pump switch
5. Multi-use button

https://truckmanualshub.com/

Item	Description	Notes
1. Carriage control 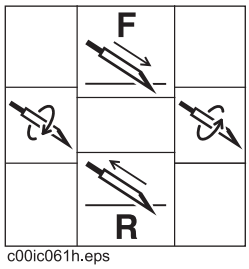 c00ic061h.eps	To move carriage forward, push. To move carriage backward, pull. To rotate spindle counterclockwise (breakout), move right. To rotate spindle clockwise (makeup), move left.	**IMPORTANT:** See "Operate Carriage Control" on page 104 for more information.
2. Drilling fluid quick fill switch c00ic059h.eps	To override fluid control setting for full pump flow, press and hold. To return fluid flow to flow control setting, release.	**IMPORTANT:** Also overrides temporary fluid shutdown when front wrench is closed.
3. Remote engine stop switch 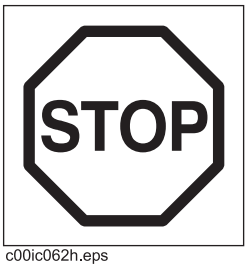 c00ic062h.eps	To stop engine, press. To restart engine, press remote engine start switch (page 36).	**IMPORTANT:** • If this switch is used to stop drilling unit, be sure to turn ignition switch off if machine will be left unattended for long periods of time. Battery discharge can occur. • If wrenches are engaged when remote stop is pressed, wrenches will remain engaged but could gradually open.
4. Drilling fluid pump switch 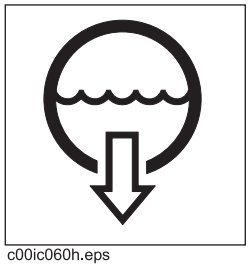 c00ic060h.eps	To turn on, press once. To turn off, press once.	

https://truckmanualshub.com/

Item	Description	Notes
5. Multi-use button	To engage a function, push and hold. To return to normal operation, release.	**Operation Options** • Two-speed carriage control • Fine adjustment for cruise and autocarve mode • Autocarve reaming and positioning functions • Automated add pipe for pipes in delivery chute • Jammed collar separation (AT only) • Failed makeup system override • Single pipe loader reset

https://truckmanualshub.com/

Indicators

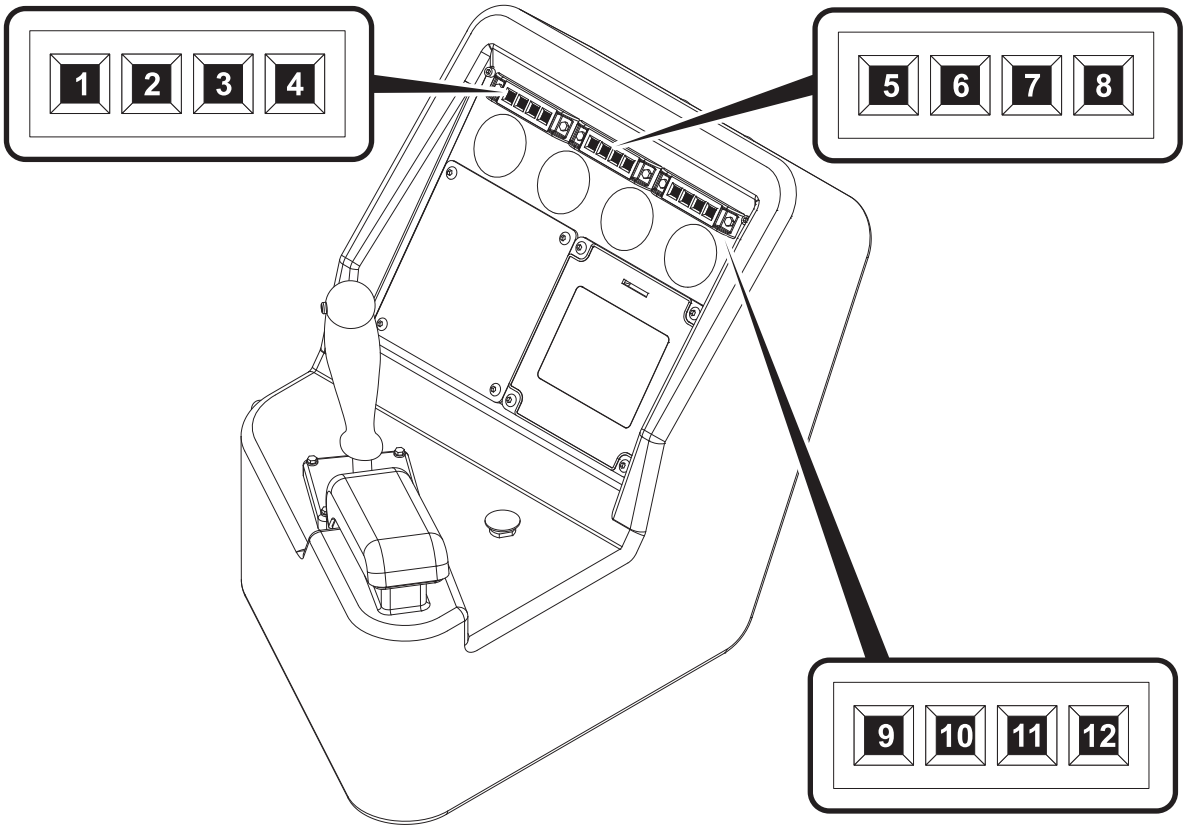

j22om008h.eps

1. Main controller diagnostic light (red)
2. Pipeloader diagnostic light (red)
3. Operator presence indicator
4. (blank)
5. Front wrench status indicator
6. Shuttle home status indicator
7. Carriage home status indicator
8. Rear stop status indicator
9. Pipe lift status indicator
10. Front pipe box status indicator
11. Rear pipe box status indicator
12. Fluid pump status indicator

https://truckmanualshub.com/

Item	Description	Notes
1. Main controller diagnostic light (red) 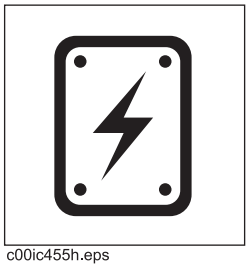 c00ic455h.eps	If system is OK, light should be off. If system is not getting power, light should be on. If a non-essential diagnostic code is recorded, light should flash on and off for 10 seconds. If an essential diagnostic code is recorded, light should repeatedly flash on for three seconds and off for half a second.	See "Machine Diagnostic Codes" on page 177.
2. Pipeloader diagnostic light (red) 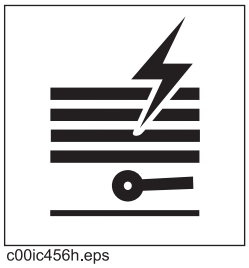 c00ic456h.eps	If system is OK, light should be off. If system is not getting power, light should be on. If a non-essential diagnostic code is recorded, light should flash on and off for 10 seconds. If an essential diagnostic code is recorded, light should repeatedly flash on for three seconds and off for half a second.	See "Machine Diagnostic Codes" on page 177.
3. Operator presence indicator 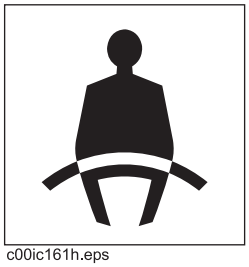 c00ic161h.eps	Lights when operator is seated in operator's station.	Thrust and rotation will not operate unless light is on.
4. (Blank)		

https://truckmanualshub.com/

Item	Description	Notes
5. Front wrench status indicator 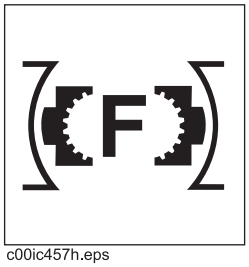 c00ic457h.eps	If front wrench is closed, light should be on. If front wrench is open, light should be off.	
6. Shuttle home status indicator 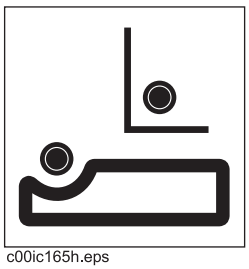 c00ic165h.eps	If shuttle is retracted, light should be on. If shuttle is not completely retracted, light should be off.	
7. Carriage home status indicator 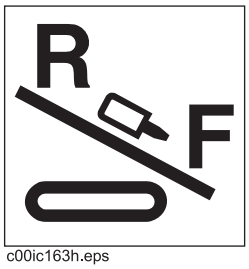 c00ic163h.eps	If carriage is in the home zone at either end of drill frame, light should be on. If carriage is not in the home zone at either end of drill frame, light should be off.	
8. Rear stop status indicator 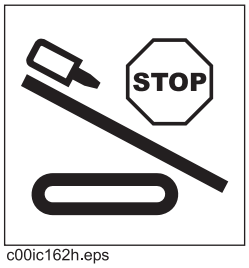 c00ic162h.eps	If carriage is at very back of drill frame, light should be on. If carriage is away from very back of drill frame, light should be off.	**IMPORTANT:** The stop sensor is used to determine when to stop carriage when backing up.

https://truckmanualshub.com/

Item	Description	Notes
9. Pipe lift status indicator 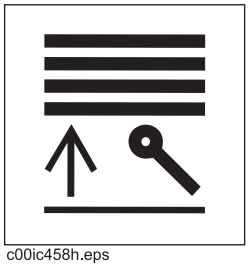 c00ic458h.eps	If pipe lifter is lifted fully and lift pressure switch is engaged, light should be on. If pipe lift pressure switch is not engaged, light should be off.	
10. Front pipe box status indicator 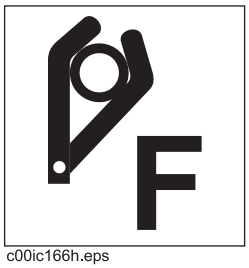 c00ic166h.eps	If active pipe column contains pipe, light should be on. If active pipe column does not contain pipe, light should be off.	**IMPORTANT:** • Check pipe box status lights to see when active column of pipe box is empty. See "Shift Pipe Box" on page 159. • One light on and one light off indicates a jammed pipe. See "Correct Misaligned or Jammed Pipe" on page 160.
11. Rear pipe box status indicator c00ic167h.eps	If active pipe column contains pipe, light should be on. If active pipe column does not contain pipe, light should be off.	**IMPORTANT:** • Check pipe box status lights to see when active column of pipe box is empty. See "Shift Pipe Box" on page 159. • One light on and one light off indicates a jammed pipe. See "Correct Misaligned or Jammed Pipe" on page 160.
12. Fluid pump status indicator 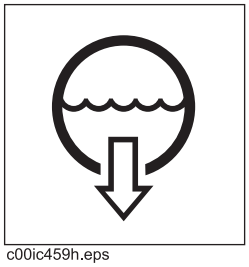 c00ic459h.eps	If fluid pump is on, light should be on. If fluid pump is off, light should be off.	***NOTICE:*** Do not run fluid pump without fluid.

https://truckmanualshub.com/

Gauges

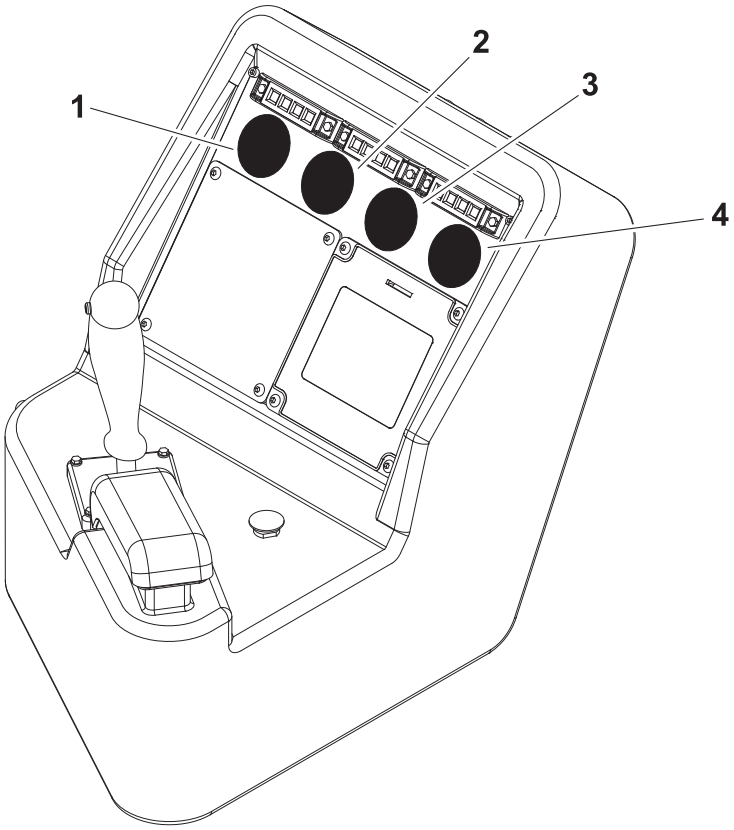

j22om009h.eps

1. Outer rotation pressure gauge
2. Thrust/pullback pressure gauge
3. Fluid pressure gauge
4. Inner rotation pressure gauge (AT only)

Item	Description	Notes
1. Outer rotation pressure gauge 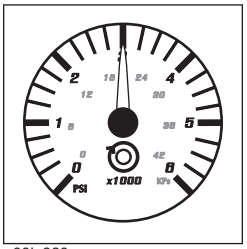 c00ic660w.eps	Displays hydraulic pressure in outer rotation circuit.	

https://truckmanualshub.com/

Item	Description	Notes
2. Thrust/pullback pressure gauge 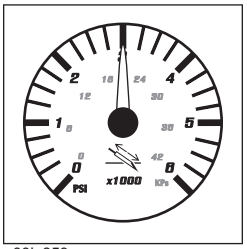 c00ic659w.eps	Displays hydraulic pressure in thrust/pullback circuit.	
3. Drilling fluid pressure gauge 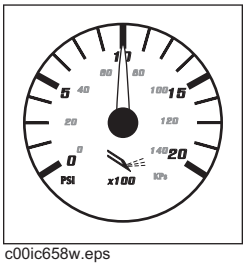 c00ic658w.eps	Displays hydraulic pressure in drill fluid circuit.	***NOTICE:*** Monitor this gauge and drilling fluid flowmeter carefully to see if values are rising and falling at the same time. If they are not, nozzle might be plugged or fluid supply depleted.
4. Inner rotation pressure gauge (AT only)	Displays hydraulic pressure in inner rotation circuit.	

https://truckmanualshub.com/

Information Center

Displays

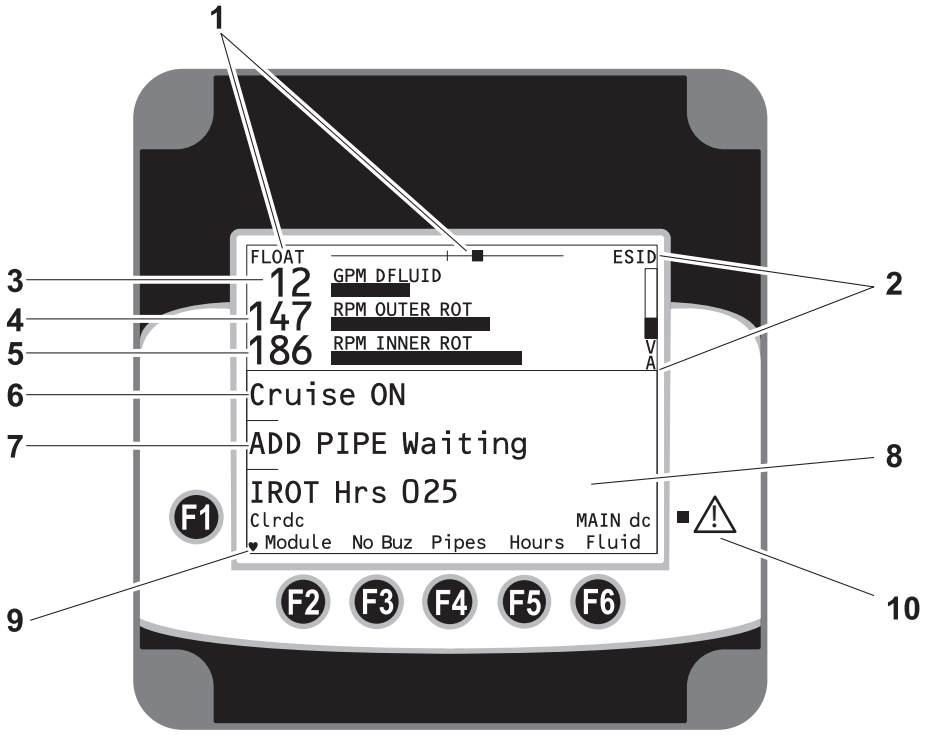

j34om004w.eps

1. Float sensor display
2. ESID display
3. Drilling fluid flow display
4. Outer rotation speed display
5. Inner rotation speed display
6. Operation and exception message display
7. Pipeloader message display
8. Diagnostic message display
9. Active display indicator
10. Diagnostic indicator

Item	Description	Notes
1. Float sensor display	Displays the position of the carriage float sensor.	When threading and unthreading a pipe joint, float should generally be in middle of range.

https://truckmanualshub.com/

Item	Description	Notes
2. ESID display	Displays the ESID information.	**IMPORTANT:** If a strike is detected, the bottom portion of the display automatically switches to the ESID information display.
3. Drilling fluid flow display	Displays the estimated GPM or LPM of drilling fluid being pumped.	
4. Outer rotation speed display	Displays the measured RPM of outer rotation pipe.	
5. Inner rotation speed display	Displays the measured RPM of inner rotation rod (AT only).	
6. Operation and exception message display	Displays status of cruise control, carve mode, drill fluid, tracker control, diagnostic test mode and service mode.	Displays exception messages when a requested function is blocked due to a conflicting condition.
7. Pipeloader message display	Displays messages related to add or remove pipe cycles. Displays diagnostic information when unit is in service mode.	
8. Diagnostic message display	Displays messages related to diagnostic information of machine.	
9. Active display indicator	Indicates that information center display is operating.	**IMPORTANT:** If nothing is changing on the display except this indicator, communications may have stopped.
10. Diagnostic indicator	Indicates diagnostic codes (dc) from main controller, ESID, or Information Center.	Device shown is the source of the diagnostic code shown.

https://truckmanualshub.com/

Soft Keys

Keys F1-F6 can be assigned different functions based on which display is selected. Pressing any of the assigned keys may reassign any key as needed for the new display.

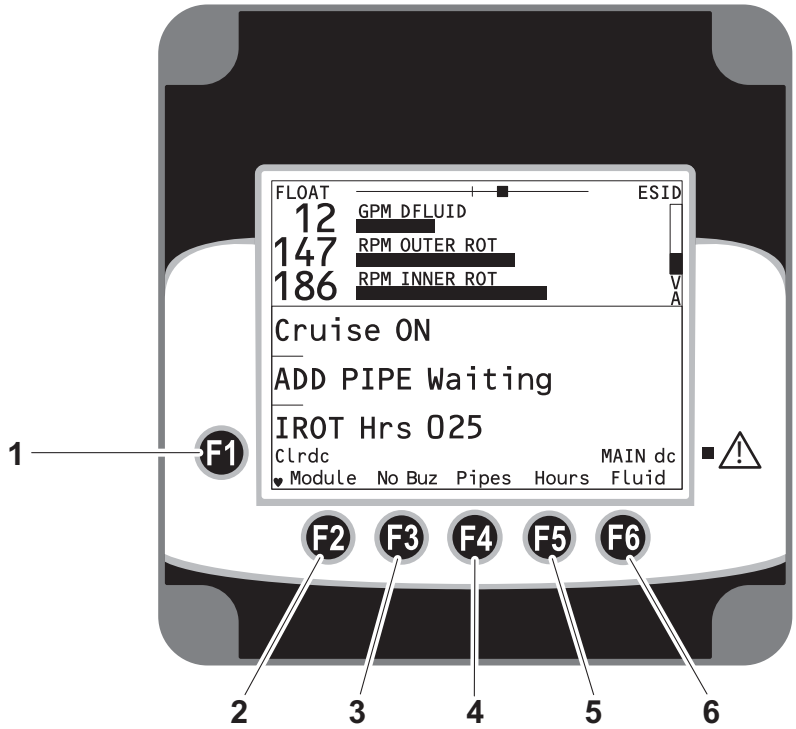

j34om005w.eps

The soft keys are described below as they are assigned (shown) in the diagram, but can have many other configurations that are not shown here.

1. Clear button
2. Module button
3. No buz / Buz on button
4. Pipe counter button
5. (not used)
6. Fluid usage button

Item	Description	Notes
1. Clear button	Press button to clear a diagnostic code or return to the previous screen.	**IMPORTANT:** Removes diagnostic code from the display but does not clear the code.

https://truckmanualshub.com/

Item	Description	Notes
2. Module button	Use to see more specific information about the Information Center, ESID, Main, or Pipeloader controllers.	Provides access to individual components in the system.
3. No buz / Buz on button	Toggles indicator (intermittent buzzer) off or on for reminder when key is on but engine is not running.	**IMPORTANT:** If the key is left on, battery will discharge.
4. Pipe counter button	Displays pipe count in lower part of display to allow operator to count pipe while drilling and backreaming. Push to show pipe count and pipe control buttons.	Pipe counter only works when running automated add pipe or remove pipe cycles. If changing pipe manually, counter will not increase or decrease. Can display both positive and negative counts. Operator can manually increase, decrease, or reset pipe count if desired.
5. F5 button	Has no functionality at this time.	
6. Fluid usage button	Displays an estimate of drilling fluid used since last reset.	Operator can reset estimated amount.

https://truckmanualshub.com/

Anchoring System Console

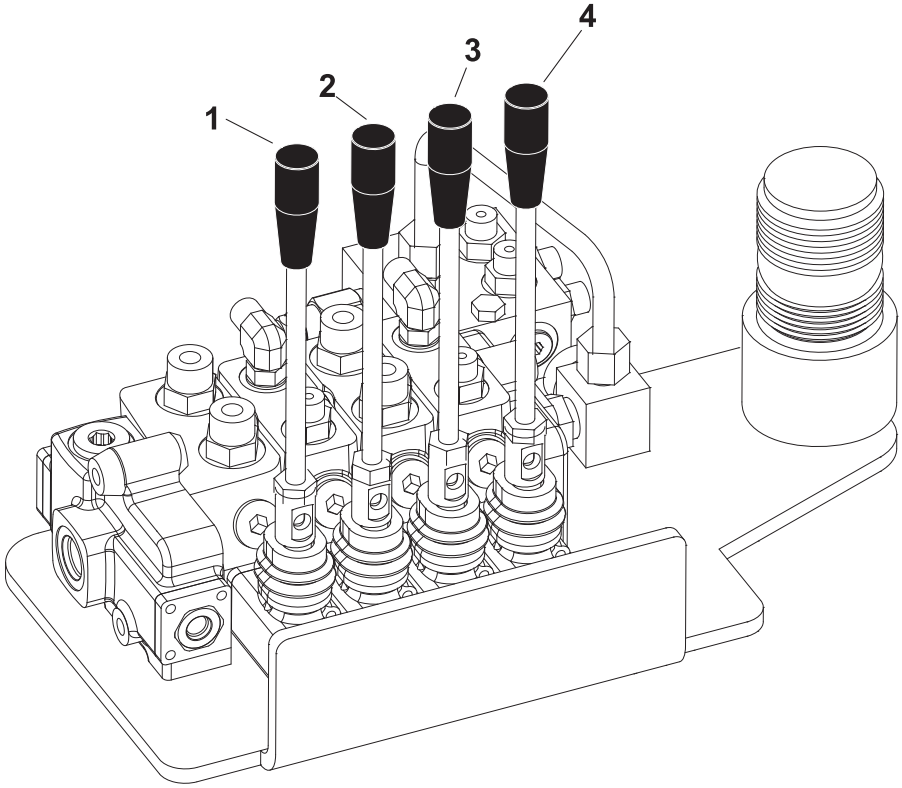

j34om012w.eps

1. Left rotation control
2. Left thrust control
3. Right rotation control
4. Right thrust control

Item	Description	Notes
1. Left rotation control 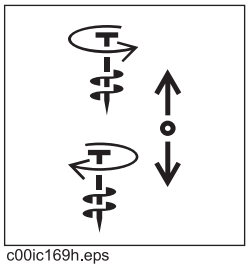 c00ic169h.eps	To remove anchor, push. To drive anchor, pull.	See "Anchor System" on page 130.

https://truckmanualshub.com/

Item	Description	Notes
2. Left thrust control 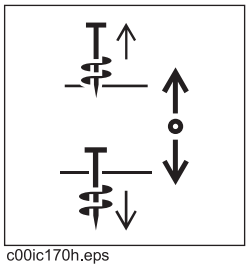 c00ic170h.eps	To move anchor up, push. To move anchor down, pull.	See "Anchor System" on page 130.
3. Right rotation control 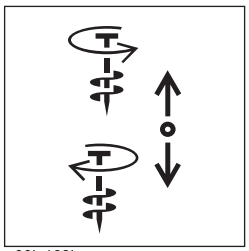 c00ic169h.eps	To remove anchor, push. To drive anchor, pull.	See "Anchor System" on page 130.
4. Right thrust control 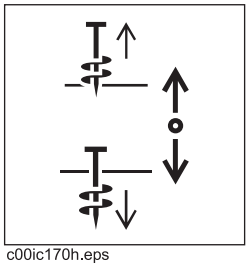 c00ic170h.eps	To move anchor up, push. To move anchor down, pull.	See "Anchor System" on page 130.

https://truckmanualshub.com/

Seat/Armrest

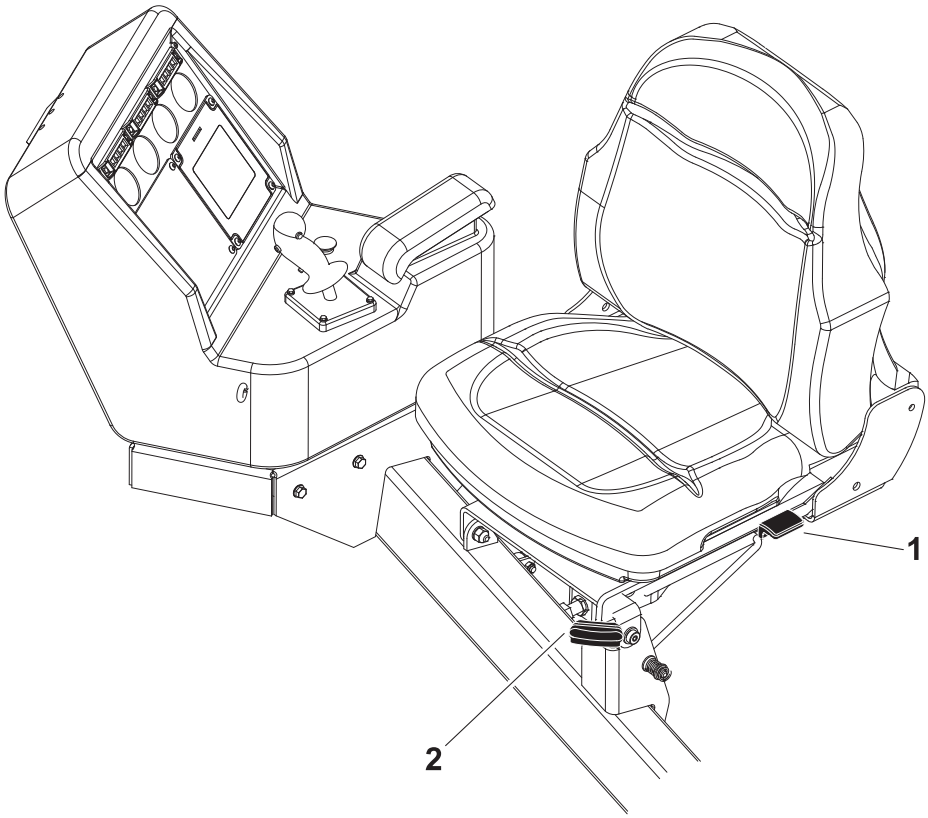

j22om012h.eps

1. Seat recline control
2. Seat slide control

Item	Description	Notes
1. Seat recline control 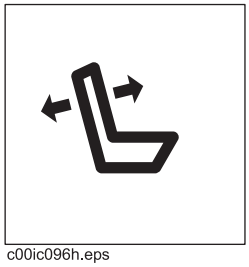 c00ic096h.eps	To recline or raise seatback, lift. To lock seatback in position, release.	

https://truckmanualshub.com/

Item	Description	Notes
2. Seat slide control c00ic095h.eps	To slide forward or backward, move left. To lock seat in position, move right.	

https://truckmanualshub.com/

Cab Controls (optional)

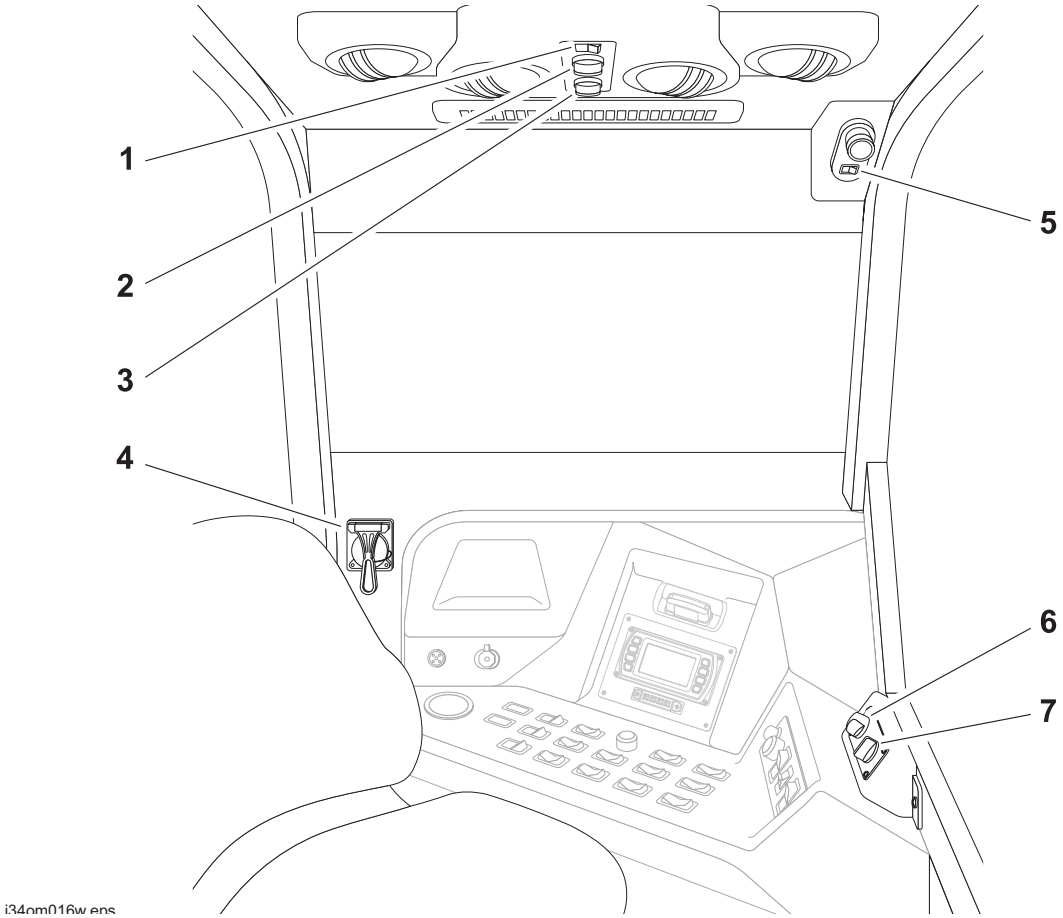

1. Air conditioner on/off switch
2. Air conditioner temperature dial
3. Air conditioner fan speed dial
4. Emergency glass breaker
5. Dome light switch
6. Heater temperature dial
7. Heater fan speed dial

Item	Description	Notes
1. AC on/off switch 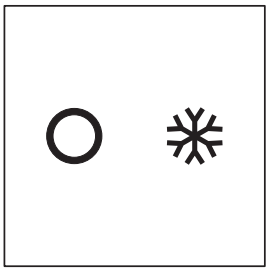 c00ic157a.eps	To turn air conditioner on, press right. To turn air conditioner off, press left.	

https://truckmanualshub.com/

Item	Description	Notes
2. AC temperature dial 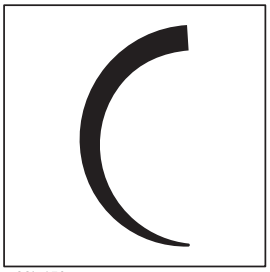 c00ic158a.eps	To adjust air temperature, turn dial.	
3. AC fan speed dial 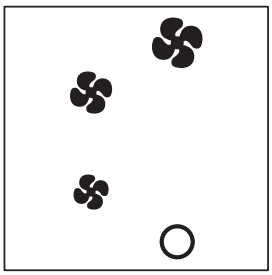 c00ic159a.eps	To adjust fan speed, turn dial.	
4. Glass breaker 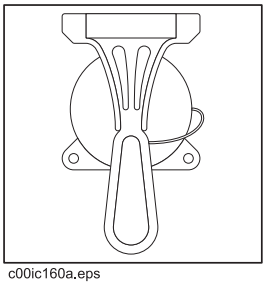 c00ic160a.eps	Use breaker to break glass if door becomes inoperable.	***NOTICE:*** Only the rear and left windows are fitted with true glass. Hammer may not work on front and right windows, which are acrylic.
5. Dome light switch 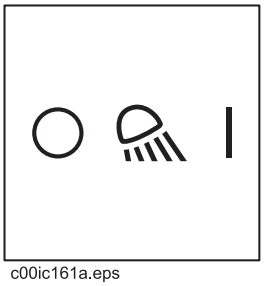 c00ic161a.eps	To turn on dome light, press right. To turn off dome light, press left.	

https://truckmanualshub.com/

Item	Description	Notes
6. Heater temperature dial c00ic162a.eps	To adjust heater temperature, turn dial.	
7. Heater fan speed dial 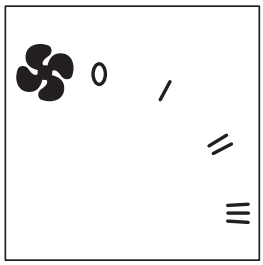 c00ic163a.eps	To adjust heater fan speed, turn dial.	

https://truckmanualshub.com/

Engine Compartment Controls

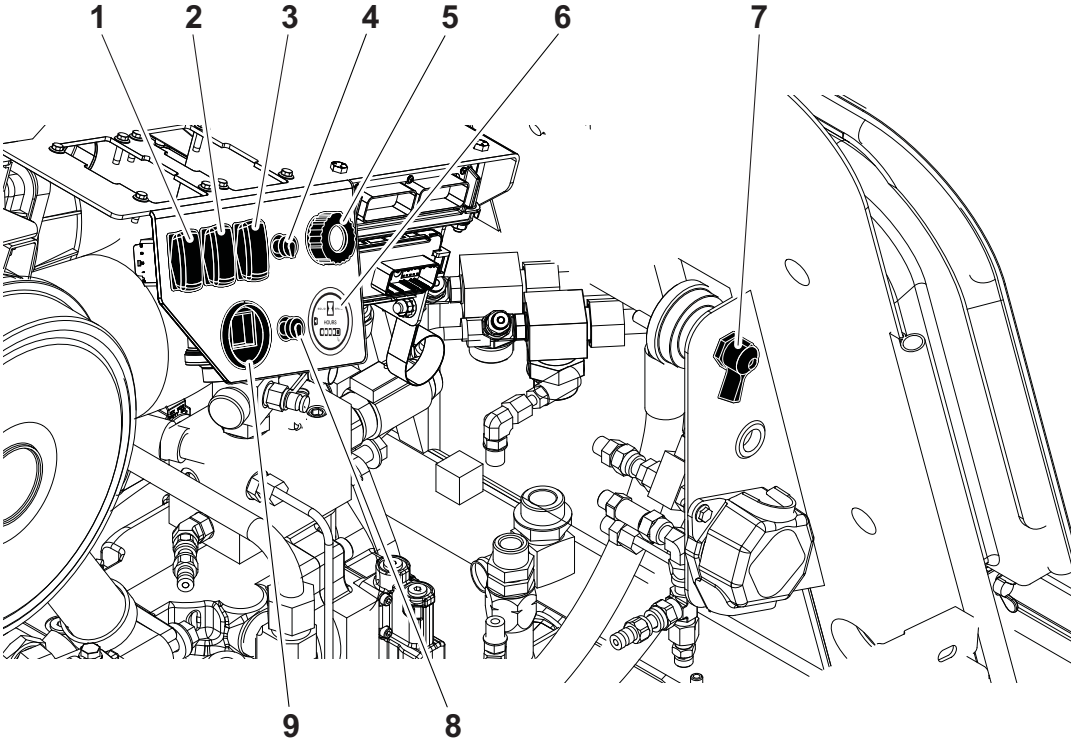

j34om006w.eps

1. Throttle switch
2. Drilling mode switch (AT units only)
3. Fan speed switch
4. EDT diagnostic port, main controller
5. J1939 CAN diagnostic port, engine
6. Inner rotation hour meter
7. Battery disconnect switch
8. EDT diagnostic port, tether controller
9. Air intake service indicator

https://truckmanualshub.com/

Item	Description	Notes
1. Throttle switch 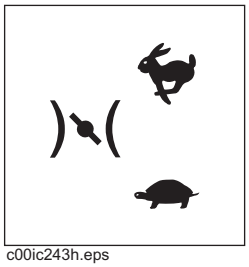 c00ic243h.eps	To increase engine speed, press top. To decrease engine speed, press bottom. To further increase or decrease speed, press additional times (or hold until desired speed is reached).	Use this switch only if throttle switch on console does not work.
2. Drilling mode switch (AT only) 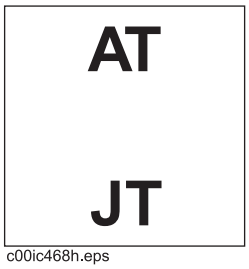 c00ic468h.eps	To select **AT Rock** mode, press top. To select **AT Dirt** mode, move to middle. To select **JT** mode, press bottom.	Use **AT Rock** mode when using AT pipe with inner rod and rock drilling bits. Use **AT Dirt** mode when using AT pipe with inner rod and adapter to use dirt tool head. Use **JT** drilling mode when using JT pipe without inner rod.
3. Fan speed switch 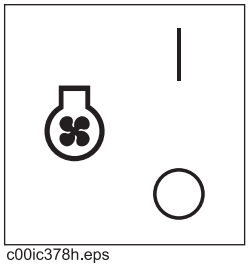 c00ic378h.eps	For high speed, press top. For automatic speed, press bottom.	**IMPORTANT:** If switch is on high speed, fan will run at full speed all the time. If switch is on auto speed, fan speed will vary in relation to engine temperature.
4. EDT diagnostic port, main controller	For use only by qualified Ditch Witch technicians.	
5. J1939 CAN diagnostic port, engine	For use only by qualified Ditch Witch technicians.	

https://truckmanualshub.com/

Item	Description	Notes
6. Inner rotation hour meter 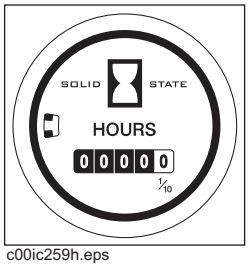 c00ic259h.eps	Displays inner rotation operating time hours.	Use to determine service intervals.
7. Battery disconnect switch 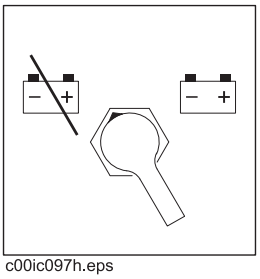 c00ic097h.eps	To connect, move clockwise. To disconnect, move counterclockwise.	
8. EDT diagnostic port, tether controller	For use only by qualified Ditch Witch technicians.	
9. Air intake restriction indicator 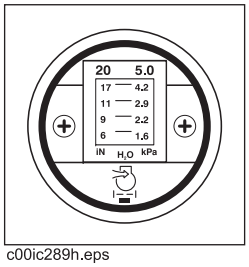 c00ic289h.eps	Shows air intake restriction.	Replace the air filter elements when the indicator reaches the red zone. See "Change Air Filter" on page 231.

https://truckmanualshub.com/

https://truckmanualshub.com/

Operation Overview

Chapter Contents

Planning 65

Setting Up at Jobsite 65

Drilling 66

Backreaming 67

Leaving Jobsite 67

Storing Equipment 67

https://truckmanualshub.com/

Planning

1. Gather information about jobsite. See page 70.
2. Inspect jobsite. See page 71.
3. Classify jobsite. See page 73.
4. Plan bore path. See page 75.
5. Check supplies and prepare equipment. See page 86.
6. Load equipment. See page 94.

Setting Up at Jobsite

1. Prepare jobsite. See page 85.
2. Mix drilling fluid. page 138
3. Unload drilling unit from trailer. See page 97.
4. Assemble drill string. See page 106.
5. Position drilling unit and drill frame. See page 102.
6. Assemble strike system. See page 132.
7. Anchor drilling unit. See page 130.
8. Connect fluid system. See page 102.
9. Calibrate tracker with beacon that will be installed in beacon housing. See tracker operator's manual.

https://truckmanualshub.com/

Drilling

1. Start system. See page 102.
2. Engage tracker control if desired. See page 143.
3. Drill first pipe. See page 111.
4. Record bore path. See page 121.
5. Enable automated pipeloader system. See page 112.
6. Add pipe. See page 113.
7. Drill remaining pipes in pipe box.
   - Correct direction. See page 117.
   - Engage cruise control. See page 164.
   - Shift pipe box. See page 159.
8. Add additional drill pipe to empty box (see page 161) to complete bore.
9. Surface drill head. See page 121.
   - Remove drill head.
   - Grease downhole tool (AT mode).

https://truckmanualshub.com/

Backreaming

1. Assemble backream string. See page 123.
2. Start drilling unit and adjust throttle.
3. Set drilling fluid flow. Check that fluid flows through all nozzles.
4. Remove extra drill pipe from pipe box (see page 163) to complete backream.
5. Remove remaining pipe to complete backream.
6. Remove pullback device. See page 127.

Backreaming Tips

- Plan backreaming job before drilling. Plan bore path as straight as possible. Check bend limits of pullback material. Check that appropriate pullback devices are on hand.
- Keep all bends as gradual as possible.
- Drilling fluid quality is a key factor in backreaming success. Contact your Ditch Witch dealer for information on testing water, selecting additives, and mixing drilling fluid.
- Backreaming requires more fluid than drilling. Make sure enough fluid is used.

Leaving Jobsite

1. Remove downhole tools.
2. Remove anchors. See page 132.
3. Rinse unit and downhole tools. See page 192.
4. Disassemble strike system and disconnect from fluid system. See page 132.
5. Stow tools. See page 194.
6. Load unit onto trailer. See page 94.

Storing Equipment

1. For cold weather storage, antifreeze drilling unit. See
2. .
3. For long-term storage, disconnect battery disconnect switch.

https://truckmanualshub.com/

Prepare

Chapter Contents

Gather Information 70

- Review Job Plan 70
- Notify One-Call Services 70
- Examine Pullback Material 70
- Arrange for Traffic Control. 70
- Plan for Emergency Services 70

Inspect Site 71

- Identify Hazards 71
- Select Start and End Points 72

Classify Jobsite. 73

- Inspect Jobsite 73
- Select a Classification 73
- Apply Precautions 74

Plan Bore Path 75

- Recommended Bend Limits 76
- Entry Pitch. 81
- Minimum Setback 81
- Minimum Depth 82
- Bore Path Calculator 82

https://truckmanualshub.com/

Prepare Jobsite 85

- Mark Bore Path 85
- Prepare Entry Point 85

Check Supplies and Prepare Equipment 86

- Check Supplies 86
- Prepare Equipment 87
- Assemble Accessories 87

https://truckmanualshub.com/

Gather Information

A successful job begins before the bore. The first step in planning is reviewing information already available about the job and jobsite.

Review Job Plan

Review blueprints or other plans and make sure you have taken bore enlargement during backreaming and pullback into account. Check for information about existing or planned structures, elevations, or proposed work that may be taking place at the same time.

Notify One-Call Services

Contact your local One-Call (811 in USA) or the One-Call referral number (888-258-0808 in USA and Canada) to have underground utilities located before digging. Also contact any utilities that do not participate in the One-Call service.

Examine Pullback Material

Ask for a sample of the material you will be pulling back. Check its weight and stiffness. Contact the manufacturer for bend radius information. Check that you have appropriate pullback devices.

Arrange for Traffic Control

If working near a road or other traffic area, contact local authorities about safety procedures and regulations.

Plan for Emergency Services

Have the telephone numbers for local emergency and medical facilities on hand. Check that you will have access to a telephone.

https://truckmanualshub.com/

Inspect Site

Inspect jobsite before transporting equipment. Check for the following:

- overall grade or slope
- changes in elevation such as hills or open trenches
- obstacles such as buildings, railroad crossings, or streams
- signs of utilities (See "Inspect Jobsite" on page 73.)
- traffic
- access
- soil type and condition
- water supply
- sources of locator interference (rebar, railroad tracks, etc.)

Take soil samples from several locations along bore path to determine best bit and backreamer combinations.

Identify Hazards

Identify safety hazards and classify jobsite. See "Classify Jobsite" on page 73.

WARNING Jobsite hazards could cause death or serious injury. Use correct equipment and work methods. Use and maintain proper safety equipment.

To help avoid injury:

- Wear personal protective equipment including hard hat, safety eye wear, and hearing protection.
- Do not wear jewelry or loose clothing.
- Notify One-Call and companies which do not subscribe to One-Call.
- Comply with all utility notification regulations before digging or drilling.
- Verify location of previously marked underground hazards.
- Mark jobsite clearly and keep spectators away.

Remember, jobsite is classified by hazards in place -- not by line being installed.

https://truckmanualshub.com/

Select Start and End Points

Select one end to use as a starting point. Consider the following when selecting a starting point:

Slope

Fluid system should be parked on a level site. Consider how slope will affect drilling unit setup, bending pipe, and fluid flow out of hole.

Traffic

Vehicle and pedestrian traffic must be a safe distance from drilling equipment. Allow at least 10' (3 m) buffer zone around equipment.

Space

Check that starting and ending points allow enough space for gradual pipe bending. See "Minimum Setback" on page 81.

Check that there is enough space to work and to set up electric strike system.

Comfort

Consider shade, wind, fumes, and other site features.

Drill downhill when possible so fluid will flow away from drilling unit.

https://truckmanualshub.com/

Classify Jobsite

Inspect Jobsite

- Follow U.S. Department of Labor regulations on excavating and trenching (Part 1926, Subpart P) and other similar regulations.
- Contact your local One-Call (811 in USA) or the One-Call referral number (888-258-0808 in USA and Canada) to have underground utilities located before digging. Also contact any utilities that do not participate in the One-Call service.
- Inspect jobsite and perimeter for evidence of underground hazards, such as:
  - "buried utility" notices
  - utility facilities without overhead lines
  - gas or water meters
  - junction boxes
  - drop boxes
  - light poles
  - manhole covers
  - sunken ground
- Have an experienced locating equipment operator sweep area within 20' (6 m) to each side of trench bore path. Verify previously marked line and cable locations.
- Mark location of all buried utilities and obstructions.
- Classify jobsite.

Select a Classification

Jobsites are classified according to underground hazards present.

If working . . .	then classify jobsite as . . .
within 10' (3 m) of a buried electric line	electric
within 10' (3 m) of a natural gas line	natural gas
in concrete, sand, or granite which is capable of producing crystalline silica (quartz) dust	crystalline silica (quartz) dust
within 10' (3 m) of any other hazard	other

NOTICE: If you have any doubt about jobsite classification, or if jobsite might contain unmarked hazards, take steps outlined previously to identify hazards and classify jobsite before working.

https://truckmanualshub.com/

Apply Precautions

Once classified, precautions appropriate for jobsite must be taken.

Electric Jobsite Precautions

Use one or both of these methods.

- Expose line by careful hand digging or soft excavation. Use beacon to track bore path.
- Have service shut down while work is in progress. Have electric company test lines before returning them to service.

Natural Gas Jobsite Precautions

Position equipment upwind from gas lines and use one or both of these methods.

- Expose lines by careful hand digging or soft excavation. Use beacon to track bore path.
- Have gas shut off while work is in progress. Have gas company test lines before returning them to service.

Crystalline Silica (Quartz) Dust Precautions

Crystalline silica dust is a naturally occur i ng substance found in soil, sand, concrete, granite, and quartz. Breathing silica dust particles while cutting, drilling, or working materials may cause lung disease or cancer. To reduce exposure:

- Use water spray or other means to control dust.
- Refer to U.S. Department of Labor Occupational Safety and Health Administration guidelines to learn more about appropriate breathing protection and permissible exposure limits.

Other Jobsite Precautions

You may need to use different methods to safely avoid other underground hazards. Talk with those knowledgeable about hazards present at each site to determine which precautions should be taken or if job should be attempted.

https://truckmanualshub.com/

Plan Bore Path

Plan the bore path, from entry to end, before drilling begins. The Ditch Witch **Trac Management System Plus** is available for planning your bore path. This special software can be run in the field using a laptop computer equipped with Windows® 95 or higher operating system. See your Ditch Witch dealer for details.

If not using Trac Management System Plus, mark the bore path on the ground with spray paint or flags, or record it on paper for operator reference.

For complicated bores, consult an engineer. Have the jobsite surveyed and bore path calculated. Be sure the engineer knows minimum entry pitch, bend limits of drill pipe, bend and tension limits of pullback material, pipe lengths, and location of all underground utilities.

For less complicated bores, plan the bore based on four measurements:

- recommended bend limit
- entry pitch
- minimum setback
- minimum depth

IMPORTANT: See the following pages for more information about these measurements. If not using Trac Management System Plus, see "Bore Path Calculator" on page 82 and use these measurements to help plan your bore.

https://truckmanualshub.com/

Recommended Bend Limits

Ditch Witch drill pipes are designed to bend slightly during operation. Slight bending allows for steering and correcting direction. Bending beyond recommended limits will cause damage that might not be visible. This damage adds up and will later lead to sudden drill pipe failure.

IMPORTANT: Consider recommended bend limits during any bend, not just during bore entry.

Pipe Pitch

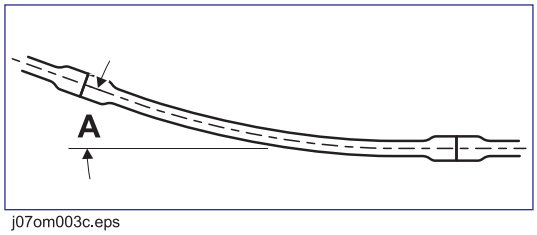

j07om003c.eps

Ditch Witch drill pipe is tested to bend at a maximum percent pitch.

Make sure pitch (A) changes no more than the following percentages over the full length of each pipe.

JT pipe	AT pipe	AT cobble pipe
6.5%	6.4%	4.4%

NOTICE: Bending drill pipe more sharply than recommended will damage pipe and cause failure over time. Changes in pitch must be **equally distributed** over the length of a pipe. Maximum changes in pitch within 1-2' (300-600 mm) of pipe create sharp bends that will damage pipe.

Monitor the pitch of each pipe with the tracker remote display on the operator's console.

https://truckmanualshub.com/

Bend Radius

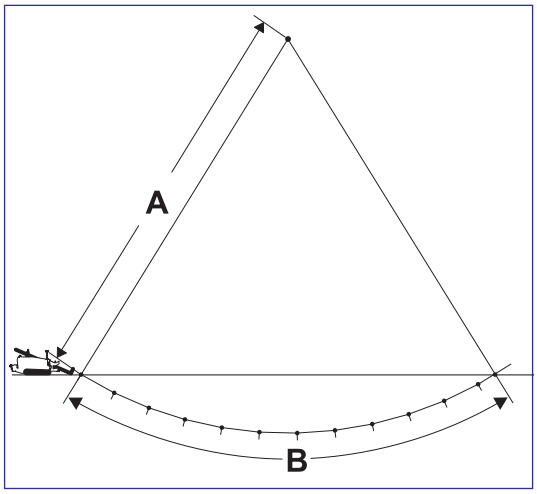

j07om078h.eps

JT

JT30 drill pipes have a tested minimum bend radius of 155' (44.2 m). This means that a 90-degree bend in the bore path:

- has a radius (A) of 155' (44.2 m)
- requires approximately 243' (74 m) of drill pipe (B).

AT

JT30 All Terrain drill pipes have a tested minimum bend radius of 145' (47.2 m). This means that a 90-degree bend in the bore path:

- has a radius (A) of 145' (47.2 m)
- requires approximately 228' (69.5 m) of drill pipe (B).

AT Cobble

JT30 All Terrain cobble drill pipes have a tested minimum bend radius of 210' (64 m). This means that a 90-degree bend in the bore path:

- has a radius (A) of 145' (47.2 m)
- requires approximately 330' (100.5 m) of drill pipe (B).

NOTICE: Bending drill pipe more sharply than recommended will damage the pipe and cause failure over time.

- If bend radius is reduced, drill pipe life is reduced.
- If bend radius is increased, drill pipe life is increased.

IMPORTANT: Use the charts on the next page to keep bends within safe limits.

https://truckmanualshub.com/

Pipe-By-Pipe Bend Limits

JT pipe

Pipe (C)	Forward (B)	Deflection (A)	Pipe (C)	Forward (B)	Deflection (A)
1	9' 10" (3.0 m)	0' 3.7" (0.1 m)	**14**	120' 4.2" (36.7 m)	57' 3.8" (17.5 m)
2	19' 7.6" (6.0 m)	1' 3" (0.4 m)	**15**	126' 3.7" (38.5 m)	65' 1.9" (19.9 m)
3	29' 4.2" (8.9 m)	2' 9.6" (0.9 m)	**16**	131' 9" (40.2 m)	73' 4.2" (22.4 m)
4	38' 11.4" (11.9 m)	4' 11.7" (1.5 m)	**17**	136' 8" (41.7 m)	81' 10.5" (25.0 m)
5	48' 4.7" (14.7 m)	7' 9" (2.3 m)	**18**	141' 0.4" (43.0 m)	90' 8.3" (27.6 m)
6	57' 7.6" (17.6 m)	11' 1.4" (3.4 m)	**19**	144' 9.9" (44.1 m)	99' 9.3" (30.4 m)
7	66' 7.8" (20.3 m)	15' 0.7" (4.6 m)	**20**	148' 0.5" (45.1 m)	109' 0.9" (33.2 m)
8	75' 4.8" (23.0 m)	19' 6.9" (6.0 m)	**21**	150' 7.9" (45.9 m)	118' 6.8" (36.1 m)
9	83' 10.1" (25.6 m)	24' 7.6" (7.5 m)	**22**	152' 8" (46.5 m)	128' 2.4" (39.1 m)
10	91' 11.3" (28.0 m)	30' 2.6" (9.2 m)	**23**	154' 0.7" (47 m)	137' 11.3" (42.0 m)
11	99' 8.1" (30.4 m)	36' 3.6" (11.1 m)	**24**	154' 10" (47.2 m)	147' 9" (45.0 m)
12	107' 0.1" (32.6 m)	42' 10.4" (13.1 m)	**25**	155' (47.2 m)	155' (47.2 m)
13	113' 10.9" (34.7 m)	49' 10.6" (15.2 m)			

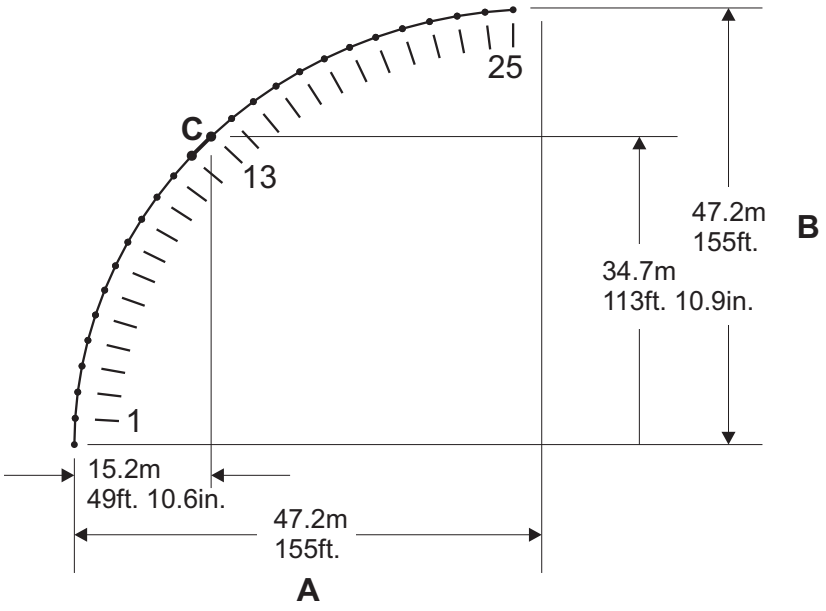

j22om001t.eps

Pipe 13 is illustrated.

https://truckmanualshub.com/

AT Pipe

Pipe (C)	Forward (B)	Deflection (A)	Pipe (C)	Forward (B)	Deflection (A)
1	9' 4.7" (2.9 m)	0' 3.7" (0.1 m)	**13**	108' 2.9" (33.0 m)	48' 6.2" (14.8 m)
2	18' 9" (5.7 m)	1' 2.6" (0.4 m)	**14**	114' 3.2" (34.8 m)	55' 8.8" (17.0 m)
3	28' 0.3" (8.5 m)	2' 8.8" (0.8 m)	**15**	119' 9.7" (36.5 m)	63' 3.8" (19.3 m)
4	37' 2.2" (11.3 m)	4' 10.2" (1.5 m)	**16**	124' 10.1" (38.1 m)	71' 3" (21.7 m)
5	46' 2.2" (14.1 m)	7' 6.6" (2.3 m)	**17**	129' 4.3" (39.4 m)	79' 6" (24.2 m)
6	54' 11.9" (16.8 m)	10' 10" (3.3 m)	**18**	133' 4" (40.7 m)	88' 0.2" (26.8 m)
7	63' 6.8" (19.4 m)	14' 8.1" (4.5 m)	**19**	136' 8.9" (41.7 m)	96' 9.3" (29.5 m)
8	71' 10.5" (21.9 m)	19' 0.8" (5.8 m)	**20**	139' 7" (42.5 m)	105' 8.8" (32.2 m)
9	79' 10.6" (24.3 m)	23' 11.9" (7.3 m)	**21**	141' 10" (43.2 m)	114' 10.3" (35.0 m)
10	87' 6.6" (26.7 m)	29' 5" (9.0 m)	**22**	143' 5.8" (43.7 m)	124' 1.3" (37.9 m)
11	94' 10.3" (28.9 m)	35' 4" (10.8 m)	**23**	144' 6.5" (44.1 m)	133' 5.4" (40.7 m)
12	101' 9.1" (31.0 m)	41' 8.5" (12.7 m)	**24**	145' (44.2 m)	145' (44.2 m)

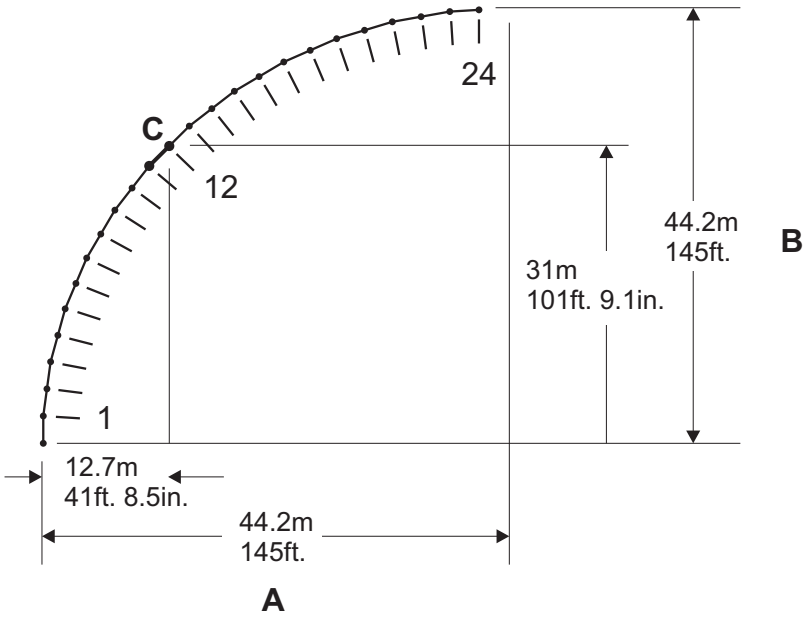

j22om002t.eps

Pipe 12 is illustrated.

https://truckmanualshub.com/

AT cobble pipe

Pipe (C)	Forward (B)	Deflection (A)	Pipe (C)	Forward (B)	Deflection (A)
1	9' 4.8" (2.9 m)	0' 2.5" (0.1 m)	**19**	157' 10" (48.1 m)	71' 5.7" (21.8 m)
2	18' 9.3" (5.7 m)	0' 10.1" (.3 m)	**20**	163' 10.5" (49.9 m)	78' 8.2" (24 m)
3	28' 1.4" (8.6 m)	1' 10.7" (.6 m)	**21**	169' 7" (51.7 m)	86' 1.7" (26.3 m)
4	37' 4.8" (11.4 m)	3' 4.3" (1 m)	**22**	174' 11.5" (53.3 m)	93' 10.3" (28.6 m)
5	46' 7.3" (14.2 m)	5' 2.9" (1.6 m)	**23**	179' 11.8" (54.9 m)	101' 9.6" (31 m)
6	55' 8.7" (17 m)	7' 6.3" (2.3 m)	**24**	184' 7.7" (56.3 m)	109' 11.6" (33.5 m)
7	64' 8.7" (19.7 m)	10' 2.7" (3.1 m)	**25**	188' 11.2" (57.6 m)	118' 3.9" (36.1 m)
8	73' 7.2" (22.4 m)	13' 3.9" (4.1 m)	**26**	192' 10.2" (58.8 m)	126' 10.5" (38.7 m)
9	82' 4" (25.1 m)	16' 9.7" (5.1 m)	**27**	196' 4.5" (59.9 m)	135' 7" (41.3 m)
10	90' 10.7" (27.7 m)	20' 8.3" (6.3 m)	**28**	199' 6.1" (60.8 m)	144' 5.4" (44 m)
11	99' 3.3" (30.3 m)	24' 11.4" (7.6 m)	**29**	202' 2.9" (61.6 m)	153' 5.3" (46.8 m)
12	107' 5.4" (32.8 m)	29' 6.9" (9 m)	**30**	204' 6.8" (62.4 m)	162' 6.6" (49.5 m)
13	115' 5" (35.2 m)	34' 6.7" (10.5 m)	**31**	206' 5.8" (62.9 m)	171' 9" (52.3 m)
14	123' 1.8' (37.5 m)	39' 10.8" (12.2 m)	**32**	207' 11.9" (53.3 m)	181' .3" (55.2 m)
15	130' 7.7" (39.8 m)	45' 7" (13.9 m)	**33**	209' 1" (63.7 m)	190' 4.3" (58 m)
16	137' 10.4" (42 m)	51' 7.1" (15.7 m)	**34**	209' 9" (63.9 m)	199' 8.8" (60.9 m)
17	144' 9.8" (44.1 m)	57' 11.1" (17.7 m)	**35**	210' (64 m)	210' (64 m)
18	151' 5.7" (46.2 m)	64' 6.7" (19.7 m)			

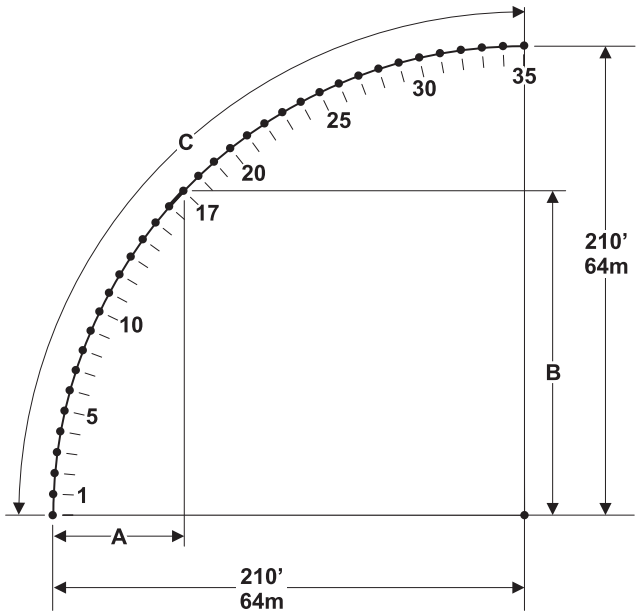

j22om093h.eps

https://truckmanualshub.com/

Entry Pitch

Entry pitch is the slope of the drill frame compared with the slope of the ground. Determine entry pitch one of two ways:

1. **With Pitch Beacon**
   - Lay pitch beacon on the ground and read pitch.
   - Lay pitch beacon on drill frame and read pitch.
   - Subtract ground pitch from drilling unit pitch.
2. **With Measurements**
   - Measure from the ground to front end of drill frame (H1).
   - Measure from the ground to back end of frame (H2).
   - Subtract (H1) from (H2). Record this number.
   - Measure the distance between front and back points (C).
   - Divide (H2-H1) by (C), then multiply by 100. This is your pitch.

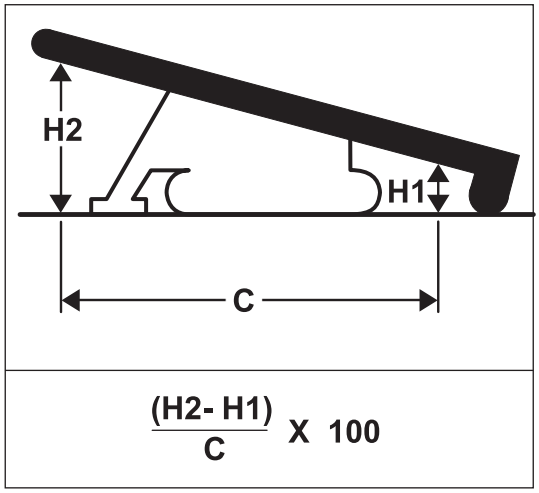

j07om006c.eps

IMPORTANT: A shallow entry pitch (A1) allows you to reach horizontal sooner and with less bending. Increasing entry pitch (A2) makes minimum setback longer and deeper.

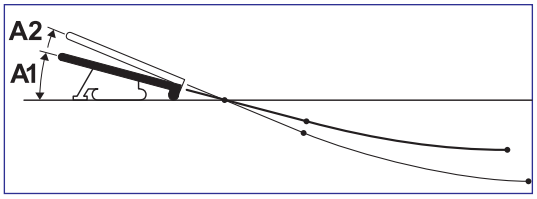

j07om007c.eps

Minimum Setback

Setback is the distance from the entry point to where pipe becomes horizontal (B1).

NOTICE: If setback is too small (B2), you will exceed bend limits and damage the pipe.

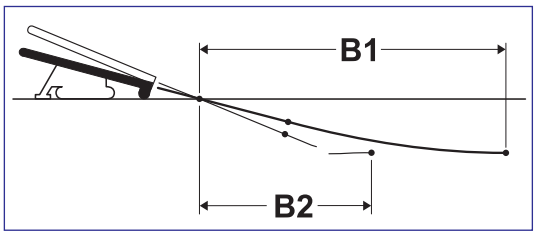

j07om008c.eps

https://truckmanualshub.com/

Minimum Depth

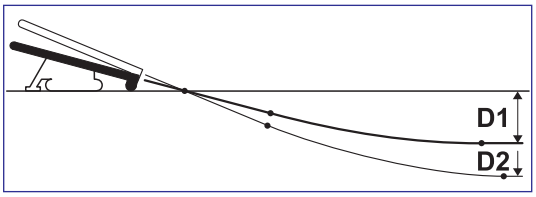

j07om009c.eps

Because you must bend pipe gradually, entry pitch and bend limits determine how deep the pipe will be when it becomes horizontal. This is called the **minimum depth**.

- To reduce minimum depth (D1), reduce entry pitch. This also decreases setback.
- To increase minimum depth (D2), increase entry pitch. This also increases setback.

Bore Path Calculator

Entry pitch, setback, and minimum depth work together with bend limits to determine the bore path. To find the setback (B) and entry pitch (A) that will take you to the desired minimum depth (D), use the chart below.

JT pipe

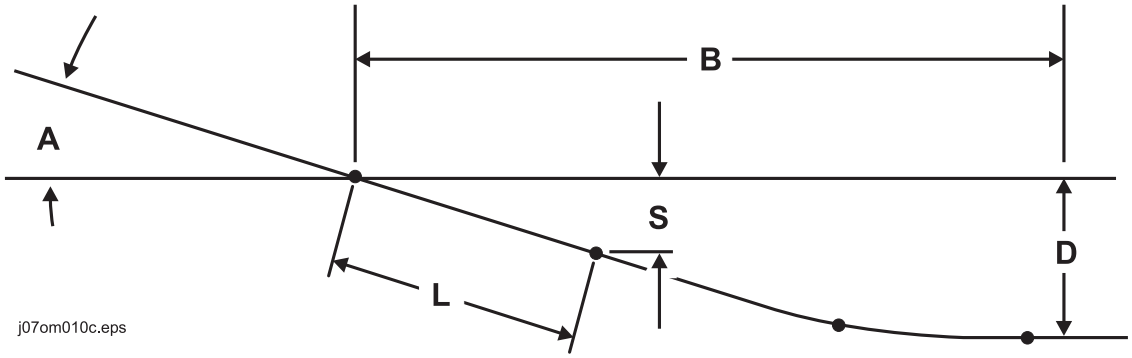

j07om010c.eps

Minimum depth (D)	Entry pitch (A)	Setback (B)	Depth to begin steering (S)
4 ft 0 in (1.3 m)	18% / 10.2°	36 ft 0 in (11.0 m)	1 ft 6 in (0.46 m)
4 ft 9 in (1.5 m)	20% / 11.3°	38 ft 11 in (11.9 m)	1 ft 8 in (0.51 m)
5 ft 6 in (1.8 m)	22% / 12.4°	41 ft 9 in (12.7 m)	1 ft 10 in (0.56 m)
6 ft 4 in (2.1 m)	24% / 13.5°	44 ft 7 in (13.6 m)	2 ft 0 in (0.61 m)
7 ft 2 in (2.4 m)	26% / 14.6°	47 ft 5 in (14.5 m)	2 ft 2 in (0.66 m)
8 ft 1 in (2.7 m)	28% / 15.6°	50 ft 2 in (15.3 m)	2 ft 4 in (0.71 m)
9 ft 0 in (3.0 m)	30% / 16.7°	52 ft 10 in (16.1 m)	2 ft 6 in (0.76 m)

IMPORTANT: Numbers in table based on **155' (47.2 m) minimum bend radius**, beacon housing, EZ-Connect, connector, transition sub, and 1/3 of first drill pipe (L, totaling 8' 8" [2.6 m]) in the ground before steering.

https://truckmanualshub.com/

AT pipe

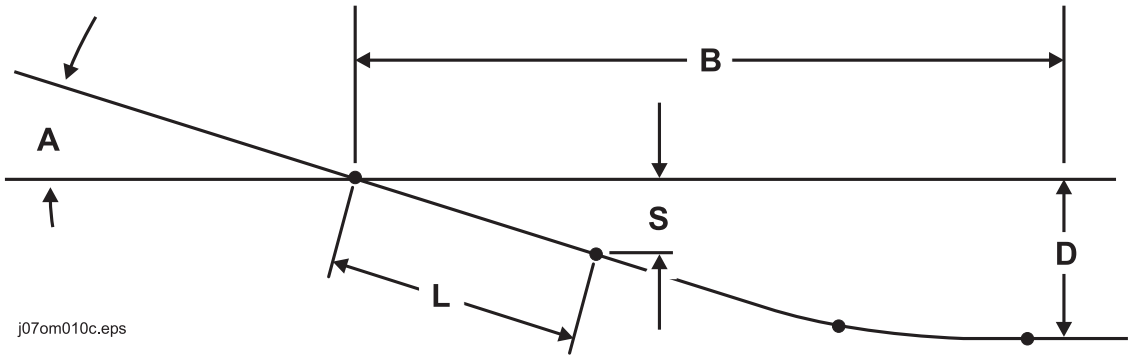

Minimum depth (D)	Entry pitch (A)	Setback (B)	Depth to begin steering (S)
3 ft 5 in (1.0 m)	18% / 10.2°	31 ft 11 in (9.7 m)	1 ft 1 in (0.33 m)
4 ft 1 in (1.2 m)	20% / 11.3°	34 ft 7 in (10.5 m)	1 ft 3 in (0.38 m)
4 ft 9 in (1.5 m)	22% / 12.4°	37 ft 4 in (11.4 m)	1 ft 4 in (0.41 m)
5 ft 6 in (1.7 m)	24% / 13.5°	40 ft 0 in (12.2 m)	1 ft 6 in (0.46 m)
6 ft 3 in (1.9 m)	26% / 14.6°	42 ft 7 in (13.0 m)	1 ft 7 in (0.48 m)
7 ft 1 in (2.2 m)	28% / 15.6°	45 ft 2 in (13.8 m)	1 ft 8 in (0.51 m)
7 ft 11 in (2.4 m)	30% / 16.7°	47 ft 8 in (14.5 m)	1 ft 10 in (0.56 m)

IMPORTANT: Numbers in table based on **145' (44.2 m) minimum bend radius**, beacon housing and 1/3 of first drill pipe (L, totaling 6' 4" [1.9 m]) in the ground before steering.

https://truckmanualshub.com/

AT Cobble pipe

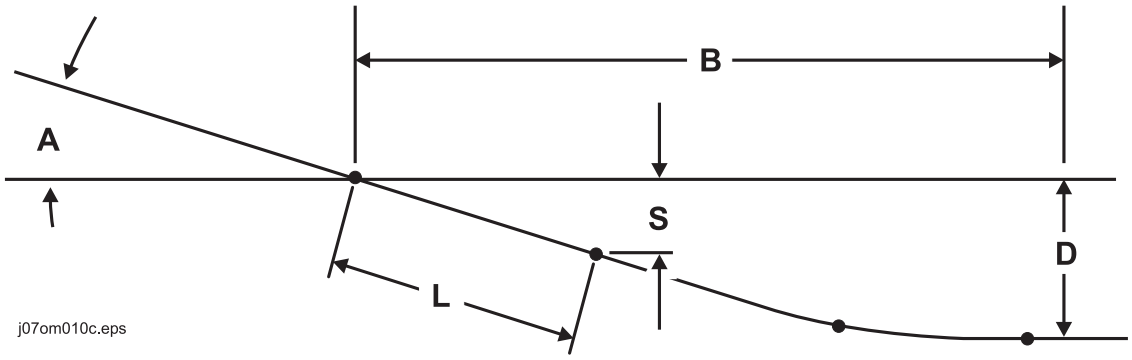

Minimum depth (D)	Entry pitch (A)	Setback (B)	Depth to begin steering (S)
4 ft 5 in (1.3 m)	18% / 10.2°	43 ft 5 in (13.2 m)	1 ft 1 in (0.33 m)
5 ft 4 in (1.6 m)	20% / 11.3°	47 ft 4 in (14.4 m)	1 ft 3 in (0.38 m)
6 ft 3 in (1.9 m)	22% / 12.4°	51 ft 3 in (15.6 m)	1 ft 4 in (0.41 m)
7 ft 3 in (2.2 m)	24% / 13.5°	55 ft 2 in (16.8 m)	1 ft 6 in (0.46 m)
8 ft 4 in (2.5 m)	26% / 14.6°	58 ft 11 in (18.0 m)	1 ft 7 in (0.48 m)
9 ft 6 in (2.9 m)	28% / 15.6°	62 ft 8 in (19.1 m)	1 ft 8 in (0.51 m)
10 ft 8 in (3.3 m)	30% / 16.7°	66 ft 5 in (20.2 m)	1 ft 10 in (0.56 m)

IMPORTANT: Numbers in table based on **210' (53 m) minimum bend radius**, beacon housing, EZ-Connect, connector, transition sub, and 1/3 of first drill pipe (L, totaling 6' 4" [2.6 m]) in the ground before steering.

https://truckmanualshub.com/

Prepare Jobsite

WARNING Jobsite hazards could cause death or serious injury. Use correct equipment and work methods. Use and maintain proper safety equipment.

To help avoid injury:

- Classify jobsite as electric if jobsite classification is in question or if the possibility of unmarked electric utilities exists.
- Expose lines by hand before digging. Cutting high voltage cable can cause electrocution.
- Remove all vegetation near operator's station. Contact with trees, shrubs, or weeds during electrical strike could result in electrocution.

Mark Bore Path

Mark your planned bore path and all located utility lines with flags or paint.

Prepare Entry Point

For bore to be successful, first pipe must be straight as it enters the ground. "Align the Joints" on page 154.

To help ensure that the first pipe does not bend, dig a small starting hole so that the first pipe is drilled into a vertical surface. Steer down as required at start. Drill head will tend to move in easiest direction (toward surface) when rotated near the surface.

To prevent bending or straining pipe, position drilling unit for straight entry.

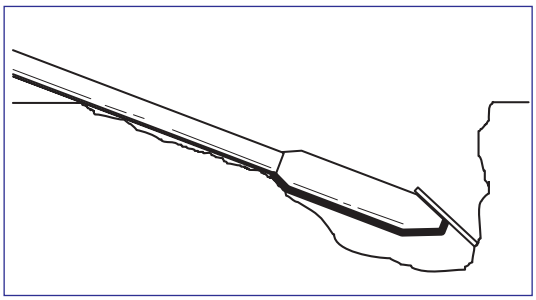

j07om011c.eps

https://truckmanualshub.com/

Check Supplies and Prepare Equipment

Check Supplies

- receiver/transmitter or tracker with spare batteries
- beacons with new and spare batteries
- two-way radios with new and spare batteries
- quick wrench (see page 151)
- transition sub
- anchoring equipment and accessories
- bits, screens, nozzles (see page 146)
- adapters, pipe, beacon housings
- marking flags or paint
- water and additional hoses
- fuel
- drilling fluid additives (see page 141)
- spare fuses
- keys
- backreamers, swivels, pulling devices (see page 148)
- wash down hose and spray gun
- duct tape
- spray lubricant
- tool joint compound (see page 200)
- electrically insulating boots and gloves
- personal protective equipment, such as hard hat and safety glasses
- notepad and pencil

https://truckmanualshub.com/

Prepare Equipment

Fluid Levels

- fuel
- hydraulic fluid
- engine coolant
- battery charge
- engine oil

Condition and Function

- filters (air, oil, hydraulic)
- fluid pump
- couplers
- tires and tracks
- pumps and motors
- drilling fluid mixer
- hoses and valves
- water tanks

Assemble Accessories

Fire Extinguisher

If required, mount a fire extinguisher near the power unit but away from possible points of ignition. The fire extinguisher should always be classified for both oil and electric fires. It should meet legal and regulatory requirements.

https://truckmanualshub.com/

Drive

Chapter Contents

Start Unit 89

Steer Unit 89

Shut Down Unit 90

https://truckmanualshub.com/

Start Unit

1. Insert key.
2. Turn key clockwise. See page 89 for more information.
3. Run engine at low throttle for 5 minutes.

Steer Unit

To steer drilling unit while using tethered ground drive controller, follow instructions for type of steering desired.

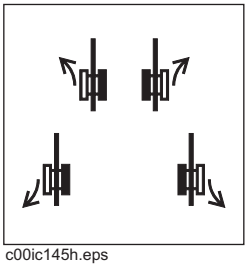
c00ic145h.eps

To steer while moving forward, push forward and move to left or right. Drilling unit will turn to left or right.

To steer while moving backward, pull back and move to left or right. Drilling unit will turn to left or right.

For tight steering in low speed, move control to left or right limit, then forward or backward as needed. Tracks will counter-rotate and turn drilling unit in a tight circle.

https://truckmanualshub.com/

Tips to Reduce Track Wear

Rubber tracks are best suited at soil-based job sites with minimal rock and debris. Sharp objects such as gravel, steel shards, and broken concrete will damage rubber tracks and undercarriage components. Excessive operation on concrete or asphalt will shorten track life. When storing your machine, keep tracks away from rain and direct sunlight.

Wash tracks daily to remove foreign objects and abrasive soil from sprockets and idler rollers. Drive slowly and make wide turns when possible. Regularly check undercarriage components (sprocket, rollers, idler) for wear and damage. Maintain proper track tension. (See "Check Track Tension and Condition" on page 205.)

To prevent premature wear, avoid the following:

- Spinning tracks under heavy load.
- Turning on sharp objects such as stones, stumps and debris.
- Quick turns or "spin" turns on asphalt or concrete.
- Driving over curbs, ledges, and sharp objects.
- Driving with track edges pressed against hard walls, curbs or other objects.
- Driving on slopes.
- Operating on corrosive materials such as salt or fertilizer. Wash immediately.

Shut Down Unit

1. Stop track movement.
2. Lower drill frame and stabilizers to the ground.
3. Run engine at low throttle for 3 minutes to cool.
4. Turn ignition switch to STOP.
5. Remove key.

https://truckmanualshub.com/

https://truckmanualshub.com/

Transport

Chapter Contents

Lift 93

Load 94

- Tie Down 95
- Unload 97

Tow 97

https://truckmanualshub.com/

Lift

This machine is not configured for lifting. If the machine must be lifted, load machine into a container or onto a platform appropriate for lifting. See "Specifications" for weight of machine.

Pipe Box Lifting Procedure

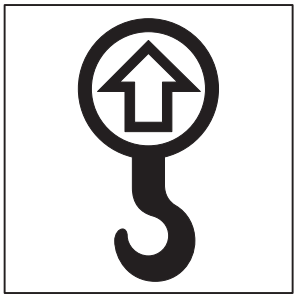
ic1319a.eps

Pipe Box lifting points are identified by lifting decals. Lifting at other points is unsafe and can damage machinery.

See "Remove/Install Pipe Box" on page 156.

https://truckmanualshub.com/

Load

WARNING Crushing weight. If load falls or moves it could kill or crush you. Use proper procedures and equipment or stay away.

To help avoid injury:

- Attach trailer to tow vehicle before loading or unloading.
- Load and unload trailer on level ground.
- Block trailer wheels.
- Prevent trailer sway by loading ten to fifteen percent of total vehicle weight (equipment plus trailer) on tongue.

1. Start drilling unit engine.
2. Using tethered ground drive controller, pull drive mode switch into low position. See page 27.
3. Move drilling unit to rear of trailer and align with ramps.
4. Slowly drive unit onto trailer.
5. Lower stabilizers to trailer floor.
6. Lower drill frame to trailer floor.
7. Stop engine when unit is safely positioned on trailer bed for proper tongue weight.
8. Attach tiedowns to drilling unit where indicated on page 95.
9. Ensure that all covers are properly secured.

https://truckmanualshub.com/

Tie Down

Points

Tiedown points are identified by tiedown decals. Securing to trailer at other points can damage machinery.

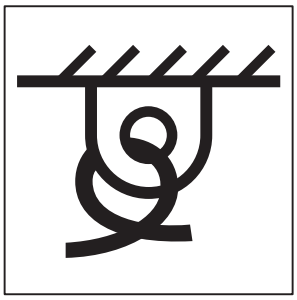

ic1320a.eps

https://truckmanualshub.com/

Procedure

NOTICE:

- Wrenches can open after engine shutdown. Ensure that any downhole tool or pipe in wrenches is attached to spindle or removed before transport.
- Use Grade 7-3/8" (18.7 cm) transport chain to secure drilling unit.

Loop a transport chain around each tie down point. See chart below for correct distances between tiedown ends. Make sure tiedowns are tight before transporting.

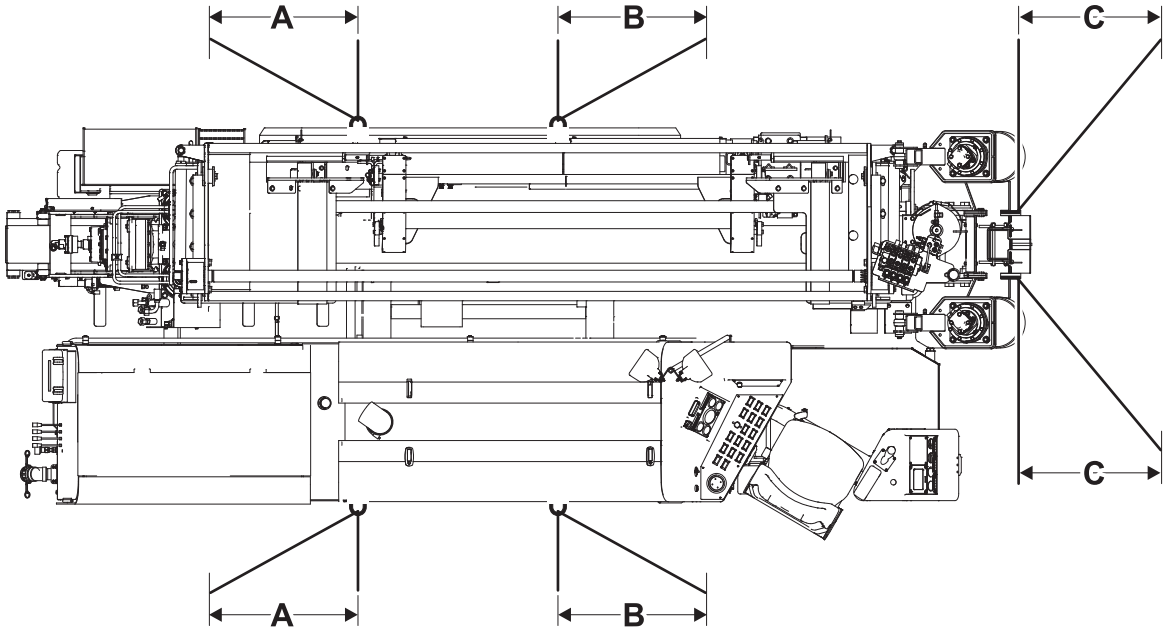

j22om021h.eps

Note: If hauling unit without pipe box, remove remaining pipe in drill frame chute.

Distance	U.S.	Metric
A	12-45"	31-114 cm
B	12-45"	31-114 cm
C	less than 55"	less than 140 cm

https://truckmanualshub.com/

Unload

WARNING Crushing weight. If load falls or moves it could kill or crush you. Use proper procedures and equipment or stay away.

To help avoid injury:

- Attach trailer to vehicle before loading or unloading.
- Load and unload trailer on level ground.
- Ensure trailer wheels are blocked.

1. Lower ramps.
2. Remove tiedowns.
3. Start drilling unit engine.
4. Using tethered ground drive controller, pull power mode switch into low position. See page 27.
5. Raise stabilizers.
6. Raise drill frame.
7. Slowly back unit down trailer or ramps.

Tow

Under normal conditions, drilling unit should not be towed. If towing is necessary:

- tow for short distances at less than 1 mph (1.6 km/h),
- attach chains to indicated tow points facing towing vehicle (shown),
- use maximum towing force of 1.5 times unit weight,
- disengage track planetaries.

If **front** tow points are facing towing vehicle, loop chain (1) through tow point and pull straight forward. If **back** tow points are facing towing vehicle, loop chain (2) through each tow point and bring them together to a central pull point.

https://truckmanualshub.com/

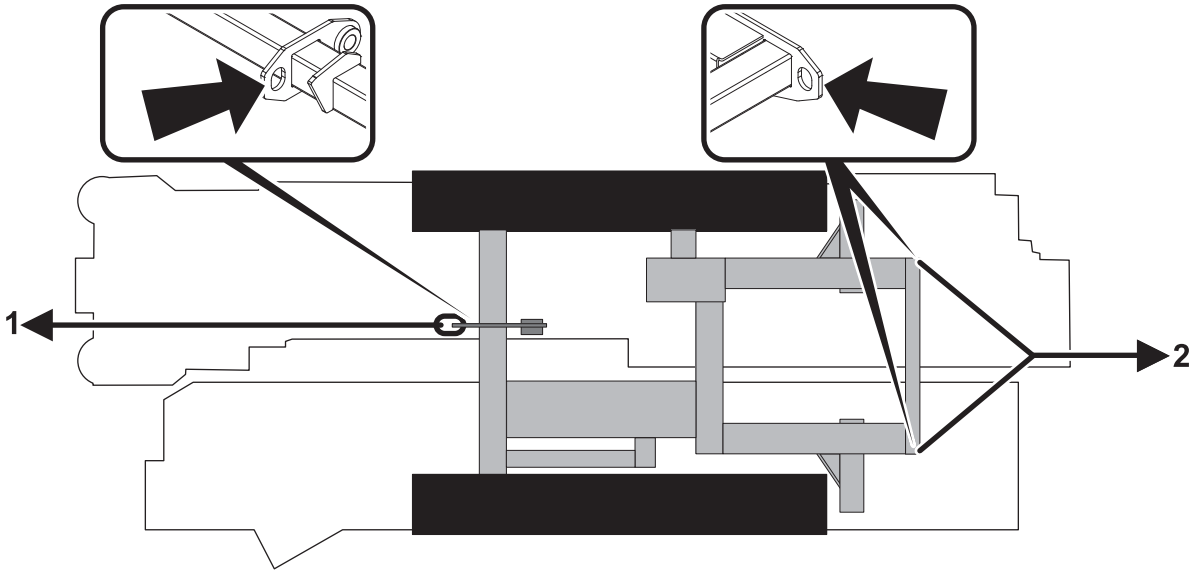

j34om017w.eps

To disengage track planetaries, reverse small cover plate in center of planetary on each track drive.

IMPORTANT: When planetaries are disengaged, unit has no brakes.

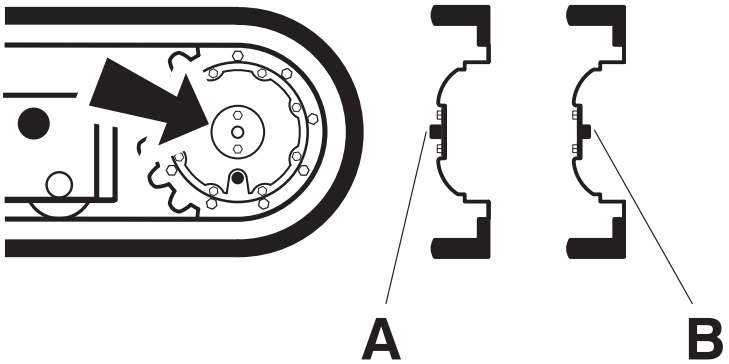

j07om041c.eps

A. Normal operation B. Towing

https://truckmanualshub.com/

https://truckmanualshub.com/

Conduct a Bore

Chapter Contents

Position Equipment 102

Connect Fluid System 102

Start System 102

Prime Drilling Fluid Pump 103

Operate Carriage Control 104

Clamp Pipe 105

Assemble Drill String 106

- Prepare Beacon Housing 109
- Attach Transition Sub 109
- Attach Beacon Housing. 109
- Connect Drill Pipe 110

Drill First Pipe 111

Enable Automated Pipeloader System 112

Add Pipe 113

Correct Direction 117

- Basic Rules 117
- Procedure 118
- Drill Head Position 118

https://truckmanualshub.com/

Use Carve Mode 119

Record Bore Path 121

Surface Drill Head 121

Backream. 122

Remove Pipe 124

Remove Pullback Device 127

https://truckmanualshub.com/

Position Equipment

1. Review bore plan and select drilling unit position and fluid unit position. See "Select Start and End Points" on page 72.
2. Move equipment into selected positions.

Connect Fluid System

DANGER Electric shock. Contacting electric lines will cause death or serious injury. Know location of lines and stay away.

To help avoid injury: Do not connect drilling unit to a public or private (business or home) water supply. If an electrical strike occurs while drilling unit is connected to a fluid system, the fluid system will also become electrified.

1. Connect fluid hose from mixing system to drilling fluid pump. A 2.0" (50.8 mm) or larger, non-collapsible hose is required.
2. Install y-strainer between mixing unit and drilling fluid pump. Position strainer so that drilling fluid flows in the direction of the arrow. In most cases, positioning strainer at outlet of mixing unit gives best results.

IMPORTANT: Clean y-strainer regularly. See page 210.

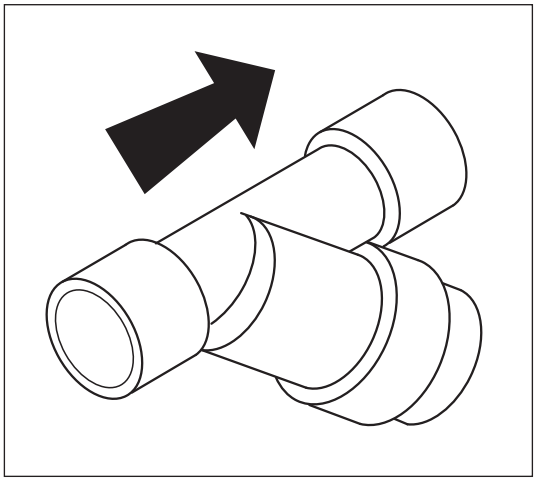

j07om057c.eps

Start System

1. Start drilling unit and remote fluid unit. Allow both engines to warm up.

IMPORTANT: Ensure that mixture of drilling fluid matches drilling conditions. See "Drilling Fluid" on page 138.

2. Enable tracker control mode if desired. See "Tracker Control" on page 143.
3. Press top of drilling unit throttle switch. Engine will increase to full throttle. If you do not want to use autothrottle mode, return switch to center position.

https://truckmanualshub.com/

Prime Drilling Fluid Pump

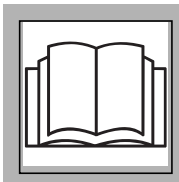

WARNING Incorrect procedures could result in death, injury, or property damage. Learn to use equipment correctly.

NOTICE: Failure to prime the drilling fluid pump will cause flow fluctuations, which will make it difficult to control the washwand.

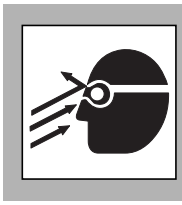

WARNING Pressurized fluid or air could pierce skin and cause injury or death. Stay away.

Prime drilling fluid pump each time tank is changed. To prime the pump:

1. Fill drilling fluid hose and connect hose to unit.
2. Operate mixing/transfer pump at full speed for 1 - 3 minutes to discharge air from system.
3. Return mixing/transfer pump to normal operating speed and continue the bore.
4. If drilling fluid pressure surges are observed, repeat step 2.

https://truckmanualshub.com/

Operate Carriage Control

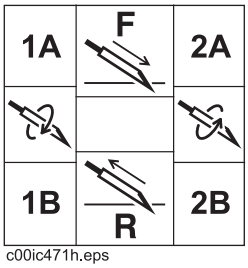

c00ic471h.eps

Drilling

During normal drilling operation, the thrust/rotation joystick controls both operations and allows any combination of the two based on the position of the joystick:

- Push joystick toward 1A for forward thrust with clockwise rotation.

NOTICE: Counterclockwise rotation can unthread pipe in the ground.

- Push joystick toward 2A for forward thrust with counterclockwise rotation.
- Pull joystick toward 2B for reverse thrust, with counterclockwise rotation.
- Pull joystick toward 1B reverse thrust, with clockwise rotation.

Assisted Make-up

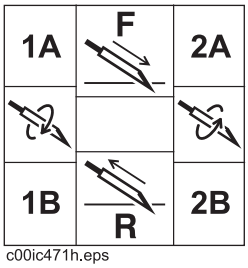

c00ic471h.eps

During pipe change operations when front wrench is closed and carriage is on front or rear home, the thrust/rotation joystick only controls the speed and direction of rotation. The machine controller manages thrust and matches the speed and direction of rotation to smoothly thread or unthread pipe sections.

Push joystick toward 1A or 1B for clockwise rotation (machine controlled forward thrust).

Push joystick toward 2A or 2B for counterclockwise rotation (machine controlled reverse thrust).

If the thrust/rotation joystick is moved straight forward or backward so there is no rotation, only thrust is controlled.

https://truckmanualshub.com/

Clamp Pipe

DANGER Turning shaft can kill you or crush arm or leg. Stay away.

To help avoid injury: Only clamp pipe at reinforced end. Clamping anywhere else on the pipe will weaken the pipe. Pipe can later break, even when operating under normal loads.

NOTICE: Wrenches can open after engine shutdown. Ensure that any downhole tool or pipe in tool joint vises is attached to spindle or removed before transport.

Clamp on pipe when joint is between wrenches (1 and 2). Always clamp on the larger diameter areas on either side of the tool joint face.

NOTICE: Clamping pipes on top of female end threads can damage threads. Only clamp female pipe ends behind the threads.

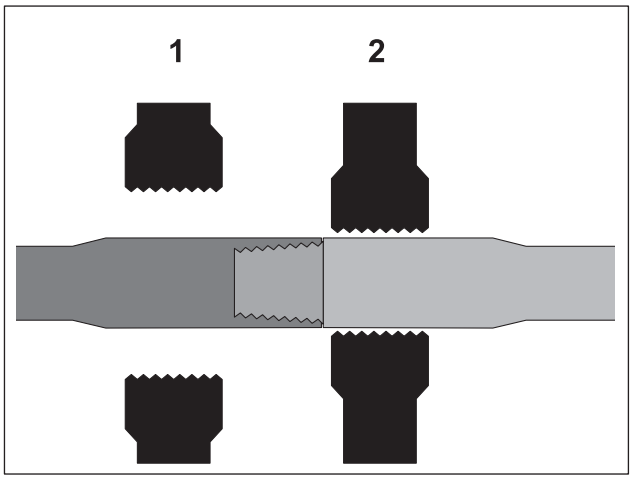

DrillPipe_Clamp.eps

https://truckmanualshub.com/

Assemble Drill String

AT Mode (AT Pipe)

1. Rockmaster tool
2. bit
3. JT30 AT drill pipe

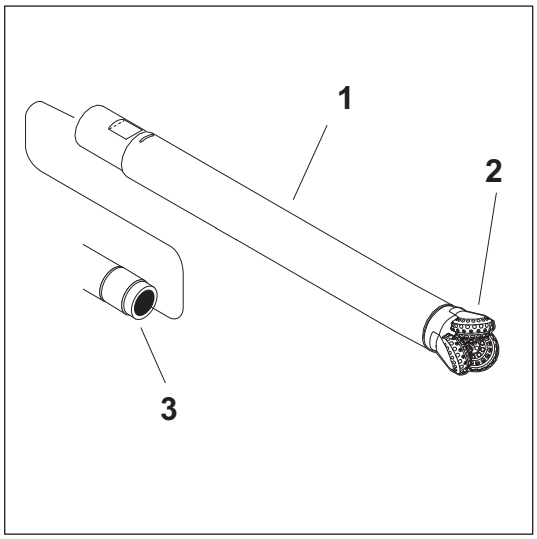

j15om031h.eps

AT Mode (Cobble Pipe)

1. Cobblemaster tool
2. bit
3. JT30 AT lead pipe, cobble.

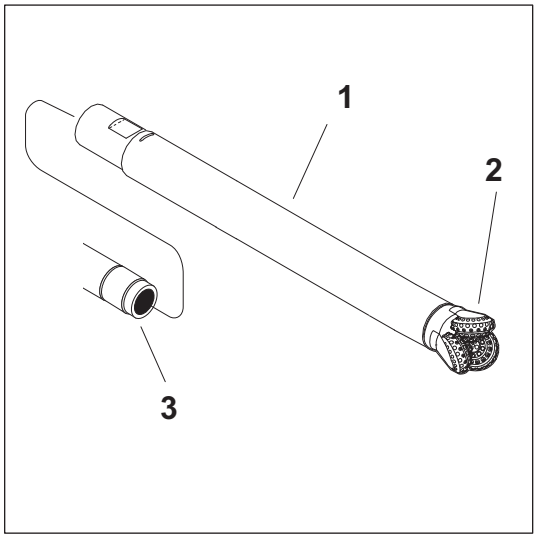

j15om031h.eps

https://truckmanualshub.com/

Prepare Rockmaster Tool

1. Select bit. Ensure that bit has suitable number of nozzles for jobsite conditions. See page 146.
2. Install bit onto Rockmaster tool using the wrench set and scribe line technique. See page 151 for correct procedures.
3. Ensure that Rockmaster tool is properly lubricated (from last usage). If using Rockmaster tool for the first time, lubricate the tool:
   - Remove plug from tool.
   - Install zerk.
   - Rotate the tool by hand while pumping tool with MPG until grease comes out at the seal.
4. Install beacon, following beacon instructions for:
   - battery replacement
   - beacon positioning
5. Install beacon housing lid.
6. Follow beacon instructions to check beacon operation.
7. Follow tracker instructions to calibrate beacon.

Attach Lead Pipe

1. Start drilling unit engine.
2. Apply TJC (tool joint compound) to shoulders and threads, and thread lead pipe onto saver sub.
3. Clamp rear wrench.
4. Use machine power to connect lead pipe to saver sub. Tighten to full machine torque.

Attach Downhole Tool

See "Quick Wrench" on page 151.

Machine Torque

1. Remove blocks from pipe guides.
2. Pull tool into lower wrench.
3. Close wrench.
4. Use machine torque to tighten joint fully.

Quick Wrenches

1. Lube joints with TJC (tool joint compound).
2. Attach quick wrenches to the joint in the join position and tighten joint.

https://truckmanualshub.com/

AT Dirt Mode (AT Pipe)

1. bit
2. beacon housing
3. adapter
4. collar
5. transition sub
6. inner spindle spacer
7. JT30 AT drill pipe

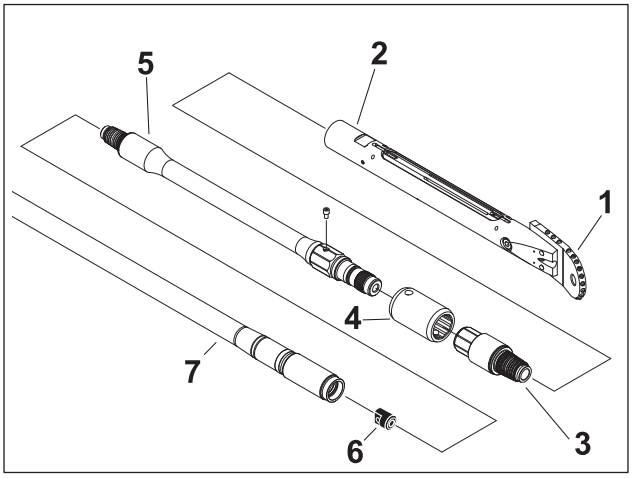

EZ_ConnectsAT.eps

JT Mode

1. bit
2. beacon housing
3. adapter
4. collar
5. transition sub
6. JT30 drill pipe

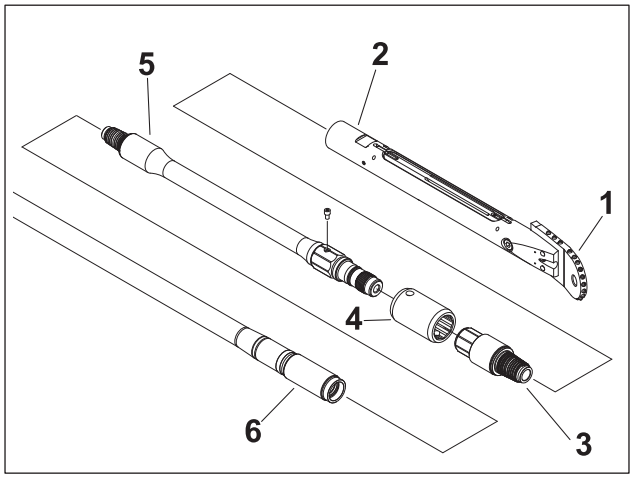

EZ_Connects.eps

https://truckmanualshub.com/

Prepare Beacon Housing

1. Select nozzles and bit.

> **IMPORTANT:** A variety of nozzles and bits are available to suit your particular job conditions. See page 146 for more information, or contact your Ditch Witch dealer.

2. Insert nozzle into beacon housing.
3. Attach bit to beacon housing.
4. Install beacon, following beacon instructions for:
   - battery replacement
   - beacon positioning.
5. Install beacon housing lid.
6. Follow beacon instructions to check beacon operation.
7. Follow tracker instructions to calibrate beacon.

Attach Transition Sub

1. Remove blocks from pipe guides.
2. Pull transition sub into front wrench.
3. Close wrench.
4. Lube joints.
5. Use machine torque to tighten joint fully.

Attach Beacon Housing

Use machine torque to attach beacon housing.

1. Pull beacon housing into front wrench.
2. Close wrench.
3. Use machine torque to tighten joint fully.

https://truckmanualshub.com/

Connect Drill Pipe

1. Start drilling unit engine.
2. Align drill pipe in front wrench.
3. Clamp tool joint in front wrench. See "Clamp Pipe" on page 105.
4. Disconnect from pipe:
   - Rotate spindle counterclockwise until threads on pipe segments are disengaged from each other. Carriage will move backward as pipe rotates counterclockwise.
   - Stop rotation and move carriage backward until it stops on the rear stop switch.
5. Load pipe:
   - Make sure pipe box is positioned correctly.
   - Open grippers or make sure they are open.
   - Grippers open as pipe is lowered.
   - Close grippers around pipe.
   - Lubricate pipe threads at front wrench.
   - Move pipe to spindle.
   - Raise pipe lifters.
6. Connect pipe:
   - Move carriage forward until spindle meets back end of pipe joint. Rotate spindle clockwise until pipe begins to spin. Relax grippers slightly.
   - Move carriage forward until pipe joints meet at front wrench.
   - Rotate spindle clockwise. Carriage will move forward as pipe threads tighten.
   - Rotate clockwise until spindle stops turning, and joint is fully tightened.
   - Open grippers.
   - Retract shuttles fully.
   - Open front wrench.

https://truckmanualshub.com/

Drill First Pipe

DANGER Turning shaft can kill you or crush arm or leg. Stay away.

To help avoid injury:

- Keep everyone at least 10' (3 m) away from turning drill string.
- Push pipe slowly. Forcing can bend string. Do not use bent pipe.

WARNING Jobsite hazards could cause death or serious injury. Use correct equipment and work methods. Use and maintain proper safety equipment.

AT Mode

1. Turn on drilling fluid.
2. Visually check for drilling fluid flow.
3. Turn drill outer pipe to starting position.
4. Rotate inner spindle clockwise.
5. Slowly move carriage forward. Drill first pipe as straight as possible.
6. Monitor gauges.
   - If inner rotation torque approaches 800 ft•lb (1080 N•m), slow carriage travel.
   - If inner rotation stalls, stop carriage thrust. If inner rotation does not resume, pull pipe back.

AT Dirt/JT Mode

1. Turn on drilling fluid.
2. Visually check for drilling fluid flow.
3. Turn drill bit to starting position.
4. Slowly move carriage forward. Drill first pipe as straight as possible.
5. Monitor gauges.

https://truckmanualshub.com/

Swab the Hole

IMPORTANT: Swab hole after each pipe is drilled to remove cuttings and keep the hole clear (AT Mode). Some conditions may require more frequent swabbing.

1. Move carriage forward until carriage touches rear wrench.
2. Move carriage to rear of drill frame with drilling fluid and inner rotation on.
3. Move carriage forward until pipe joint is properly located between wrenches for joint breakout.

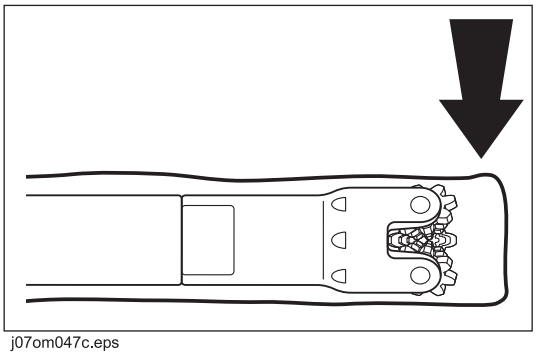

j07om047c.eps

Enable Automated Pipeloader System

Add Pipe	Remove Pipe
1. Ensure pipe box is properly positioned.	1. Ensure pipe box is properly positioned.
2. Open front wrench.	2. Open front wrench.
3. Retract shuttles.	3. Retract shuttles.
4. Adjust engine to full throttle for add pipe function to work.	4. Adjust engine to full throttle for remove pipe function to work.
5. Press top of add pipe/manual/remove pipe switch. If any steps are skipped, the Information Center will inform the operator which steps to take to continue operation.	5. Press bottom of add pipe/manual/remove pipe switch. If any steps are skipped, the Information Center will inform the operator which steps to take to continue operation.
6. Grippers will open, pipe will be lifted, pipe box checked (pipe available), then lowered into shuttles. If no pipe is detected, the operator is instructed to move the pipe box before continuing.	6. Grippers will open, pipe will be lowered and lifted out of shuttles.
	7. Ensure pipe box column is not full. If pipe box column is full, shift pipe box to the next empty column.

IMPORTANT: If operator leaves the seat **during** an add or remove pipe cycle when the information center display shows "Adding (or removing) pipe", the pipe cycle will pause and the display will show "PIPE paused in <pipe state>". When returning to the seat, the display will show three cycling messages that prompt you to re-enable the system: "PIPE LOADER paused"; "to continue..."; "press RESUME switch." If you leave the seat while the display shows the pipe cycle is "ready" or "waiting", it is not necessary to re-enable the system.

https://truckmanualshub.com/

Add Pipe

AT Mode

1. Press top of drilling unit throttle switch. Engine will increase to full throttle.
2. Enable automated pipeloader system if desired. See "Enable Automated Pipeloader System" on page 112.
3. Break joint at saver sub.

Manual Pipeloader Controls	Automated Pipeloader Control
• Turn inner rotation off and position pipe between wrenches. See "Clamp Pipe" on page 105. • If spindle brake is set, disengage it, rotate outer pipe to 3 o'clock, and close front wrench. • Locate drill head. • Rotate spindle counterclockwise. • Carriage moves back slowly as threads separate. • After threads are fully separated, stop rotation and move carriage to back of frame until rear stop indicator is lit in right console.	• Turn inner rotation off and position pipe between wrenches. See "Clamp Pipe" on page 105. • If spindle brake is set, disengage it, rotate outer pipe to 3 o'clock, and close front wrench. • Locate drill head. • Rotate spindle counterclockwise. • Carriage moves back slowly as threads separate. • After threads are fully separated, stop rotation and move carriage to back of frame until rear stop indicator is lit in right console. • While carriage is moving, grippers will grip, pipe is lubed, and information center displays corresponding messages.

4. Load pipe.

Manual Pipeloader Controls	Automated Pipeloader Control
• Ensure that lift arms are completely lowered. • Close grippers. • Move pipe in shuttles to spindle and lube threads at wrench. • Raise pipe in box.	• With carriage on rear stop switch at back of drill frame (light is on in right console), press RESUME. Display changes to "Adding Pipe". Pipe is moved to spindle, pipe in box is lifted. • Display reads "ADD PIPE waiting".

https://truckmanualshub.com/

5. Connect pipe to saver sub.

Manual Pipeloader Controls	Automated Pipeloader Control
• Move carriage forward until saver sub meets pipe. • Rotate spindle clockwise until saver sub threads onto pipe. • Relax grippers.	• Move carriage forward until saver sub meets pipe. • Rotate spindle clockwise until saver sub threads onto pipe. • Press RESUME. Grippers will relax.

6. Connect new pipe.

Manual Pipeloader Controls	Automated Pipeloader Control
• Slowly move carriage forward to allow inner rod to match up and rotate spindle clockwise until pipe threads together. • To fully tighten joint, slowly rotate pipe until spindle stops turning. • Open wrench. • Open grippers fully. • Retract shuttles. • Lower pipe lifters.	• Slowly move carriage forward to allow inner rod to match up and rotate spindle clockwise until pipe threads together. • Press RESUME. Display changes to "Adding Pipe". Grippers open, shuttles retract, and pipe lifters lower. Display returns to "ADD PIPE waiting". • To fully tighten joint, slowly rotate pipe until spindle stops turning. • Open wrench. If wrench will not open, look at information center.

7. Press and hold quick fill fluid pump switch until pipe fills and fluid pressure begins to rise.
8. Adjust fluid flow control to set flow to appropriate level.
9. Set clock position for steering or rotate spindle.
10. Turn inner rotation on.
11. Slowly move carriage forward. Adjust rotation speed control according to bit size and soil conditions.
12. Engage and set cruise control as desired.
13. Monitor gauges.
    - If inner rotation torque reaches 800 ft•lb (1080 N•m), slow carriage travel.
    - If inner rotation stalls, stop carriage travel. If inner rotation does not resume, pull pipe back.
14. Locate drill head with tracker at least every half-length of pipe.

IMPORTANT: To improve accuracy of depth estimate, turn inner rotation off, disengage spindle brake, and rotate outer pipe to 3 o'clock.

15. Engage spindle brake, if desired, and drill rest of pipe.

IMPORTANT: If steering, rotate to desired clock position, engage spindle brake and drill.

https://truckmanualshub.com/

JT Mode

1. Press top of drilling unit throttle switch. Engine will increase to full throttle.
2. Enable automated pipeloader system if desired. See "Enable Automated Pipeloader System" on page 112.
3. Break joint at saver sub.

Manual Pipeloader Controls	Automated Pipeloader Control
• Position pipe in wrenches. See "Clamp Pipe" on page 105. • Locate drill head. • Rotate pipe to 12 o'clock position. • Close front wrench. • Rotate spindle counterclockwise. • Carriage moves back slowly as threads separate. • After threads are fully separated, stop rotation and move carriage to back of frame until rear stop indicator is lit in right console.	• With pipe loader enabled, see "Enable Automated Pipeloader System" on page 112. Position pipe in wrenches. See "Clamp Pipe" on page 105. • Locate drill head. • Rotate pipe to 12 o'clock position. • Close front wrench. • Rotate spindle counterclockwise. • Carriage moves back slowly, as threads separate. • After threads are fully separated, stop rotation and move carriage to back of frame until rear stop indicator is lit in right console. • While carriage is moving, grippers will grip, pipe is lubed, and information center displays corresponding messages.

4. Load pipe.

Manual Pipeloader Controls	Automated Pipeloader Control
• Ensure that lift arms are completely lowered. • Close grippers. • Move pipe in shuttles to spindle and lube front threads at wrench. • Raise pipe in box.	• With carriage on rear stop switch at back of drill frame (light is on in right console), press RESUME. Display changes to "Adding Pipe". • Pipe is moved to spindle, pipe in box is lifted. Display reads "ADD PIPE waiting".

https://truckmanualshub.com/

5. Connect pipe to saver sub.

Manual Pipeloader Controls	Automated Pipeloader Control
• Move carriage forward until saver sub meets pipe. • Rotate spindle clockwise until saver sub threads onto pipe. • Relax grippers.	• Move carriage forward until saver sub meets pipe. • Rotate spindle clockwise until saver sub threads onto pipe. • Press RESUME. Grippers will relax.

6. Connect new pipe.

Manual Pipeloader Controls	Automated Pipeloader Control
• Slowly move carriage forward until new pipe meets pipe in wrench. • Rotate spindle clockwise until pipes thread together. • To fully tighten joint, slowly rotate pipe until spindle stops turning. • Open wrench. • Open grippers fully. • Retract shuttles. • Lower pipe lifters.	• Slowly move carriage forward until new pipe meets pipe in wrench. • Rotate spindle clockwise until pipes thread together. • Press RESUME. Display reads "Adding Pipe", grippers open, shuttles retract, pipe lifters lower. Display reads "ADD PIPE waiting". • To fully tighten joint, slowly rotate pipe until spindle stops turning. • Open wrench. If wrench will not open, look at information center. It may say that pipe row is empty, no pipe at rear, no pipe at front, or pipe box needs to be moved. After pipe box has been moved to the new row, the front wrench can be opened.

7. Press and hold quick fill fluid pump switch until pipe fills and fluid pressure begins to rise.
8. Adjust fluid flow control to set flow to appropriate level.
9. Rotate spindle.
10. Slowly move carriage forward. Adjust rotation speed control according to bit size and soil conditions.
11. Engage and set cruise control as desired.
12. Monitor gauges.
13. Locate drill head with tracker at least every half-length of pipe.

https://truckmanualshub.com/

Correct Direction

Correcting direction is a skill operators gain with experience and knowledge of equipment and soil conditions. These instructions cover only basic procedures. For information about specific equipment or jobsites, contact your Ditch Witch dealer.

To track progress and make corrections, one crew member locates the drill head and sends instructions to the operator. Corrections are made by tracking the drill head, comparing current position to bore plan, and steering drill head as needed.

Basic Rules

General

- Steering ability depends on soil condition; bit, drill head, and nozzle used; roll of drill head; and distance pushed without outer rotation.
- All corrections should be made as gradually as possible. See "Recommended Bend Limits" on page 76.
- Over correcting will cause "snaking." This can damage pipe and will make drilling and pullback more difficult. Begin to straighten out of each correction as early as possible.

JT Mode

- Do not push an entire piece of drill pipe into ground without rotation. This can exceed bend radius and cause pipe failure.

AT Mode

- Steering in rock is slower than steering in other soil conditions. Be patient.
- Inner shaft is rotating at all times when AT mode is selected and inner rotation switch is on.
- Stop outer rotation and engage spindle brake when making directional changes.
- Depth estimate and pitch accuracy improve if drill head is at 3 o'clock when reading is taken.
- Pull back 6" (152 mm) of pipe before checking pitch.

https://truckmanualshub.com/

Procedure

1. Locate drill head. Take readings available with your beacon and locating equipment such as:
   - depth

     IMPORTANT: In AT mode, depth estimate improves if drill head is at 3 o'clock position (A) rather than horizontal (B).

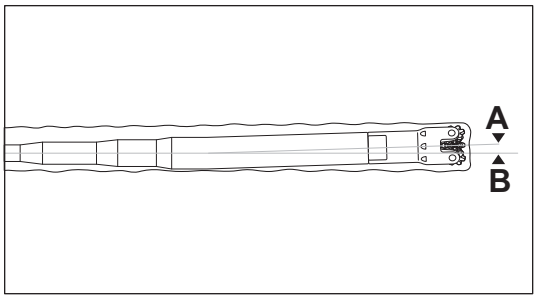

j15om033h.eps

   - pitch
   - left/right information
   - temperature
   - beacon roll
2. Compare position to bore plan. Determine direction drilling should go.
3. Position drill head.
4. Drill in pipe.

Drill Head Position

The drill head position is determined by reading beacon roll. Roll is displayed as a clock face position.

1. Read beacon roll.
2. Slowly rotate pipe until locator displays desired beacon roll.

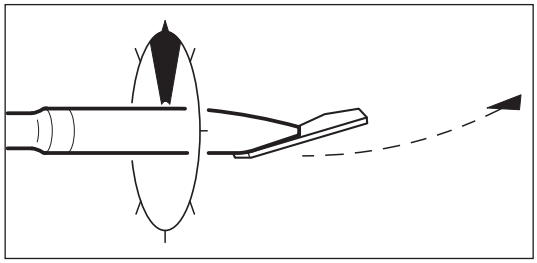
j07om048c.eps

To change direction:

JT mode	AT mode
1. Rotate pipe to clock position you intend to travel. 2. Push pipe into ground.	1. Rotate outer pipe to clock position you intend to travel. 2. Engage spindle brake. 3. Engage inner rotation and push pipe into ground.

To move forward without changing direction:

JT mode	AT mode
1. Rotate pipe. 2. Push pipe into ground.	1. Rotate outer pipe. 2. Engage inner rotation and push pipe into ground.

https://truckmanualshub.com/

Use AutoCarve

AutoCarve helps the operator change direction when thrust stalls in difficult soil conditions while drilling in JT or AT dirt mode. AutoCarve rotates the bit clockwise and counterclockwise to grind away soil, clearing a path to improve steering through tough formations. AutoCarve does not replace AT drill mode.

Movement	Description
alternating clockwise and counterclockwise rotation	Enables the downhole tool to carve tough soil formations. Rotation speed can be adjusted during autocarving. ***NOTICE:*** To reduce the chance of unthreading pipe sections downhole, rotation pressure is limited during counterclockwise rotation; however, the operator should monitor carve operation and adjust thrust and rotation to prevent unthreading.
carve window	The range of alternating rotation.
thrust	In autocarve mode, initial thrust speed is very slow or fully stopped. Adjust speed anytime during carving.
pullback	thrust and rotation operate normally when joystick is pulled rearward. High-speed pullback is not available in autocarve mode.

Setup

IMPORTANT: Autocarve is only available in JT or AT Dirt drilling modes.

1. **Select steering direction and enable autocarve** using one of the methods below:
   - Rotate downhole tool to the desired steering position, then set AutoCarve switch to ON.
   - Set AutoCarve switch to ON, then press and hold the 2-Speed button while rotating the drill bit to the desired position. Release the 2-Speed button when desired position is reached.

   Verify that AutoCarve Mode is displayed on the information center.
2. **Set carve window.** Hold the joystick left or right of neutral to activate rotation. Use the Carve Window Potentiometer (Inner Rotation Potentiometer on AT units) to set the desired range of travel. Adjust as needed while carving.
3. **Adjust carve speed**. Move downhole tool so it is not touching formation. Move joystick left or right of neutral. Press the Set/Resume switch to decrease/increase speed. Adjust as needed while carving.

   IMPORTANT: For finer adjustment, press the multi-use button while adjusting thrust or rotation. Be aware, however, this also activates the reaming function and will change steering direction unless the tool is stopped at the original position before releasing multi-use button.

4. **Adjust thrust pressure.** Move downhole tool so it is touching formation. Press and hold the Resume switch until carriage begins to move forward, then release switch. Press Resume repeatedly to increase thrust pressure to desired setting. To reduce thrust pressure, press Set switch.

https://truckmanualshub.com/

Operation

IMPORTANT:

- 2-speed thrust is not allowed in AutoCarve mode.
- AutoCarve mode is disabled while front wrench is closed.
- Adding or removing pipe does not affect AutoCarve position.

1. **Position downhole tool for carving.** Press and hold the 2-Speed button and rotate the toolhead to the desired position. Move the carriage forward until toolhead touches formation.
2. **Begin carving.** Push joystick fully forward then release to neutral to start alternating rotation. Adjust thrust and rotation pressure as needed during carving.
3. **Pause carving.** Pull joystick away from neutral.
4. **Resume carving.** Push joystick fully forward then release to neutral to start alternating rotation.
5. **Ream a newly carved section.** After carving a few inches, press and hold the 2-Speed button and move the joystick fully left for maximum rotation. When tool rotates freely, reduce rotation speed and stop at desired carve position. Release 2-Speed button and resume carving.

   IMPORTANT: If full rotation seems restricted and insufficient to ream the hole, move carriage back slightly un till full rotation is possible, then move carriage forward while rotating.

6. **Exit carve mode.** Press bottom of AutoCarve switch. Carriage movement and rotation will stop. Continue normal drilling.

   Note: For quicker setup during a long bore, autocarve thrust and rotation settings are retained until the unit is shutdown.

https://truckmanualshub.com/

Record Bore Path

Locate drill head every half-length of pipe. As the job is completed, record the actual data for each drill pipe. List pitch and depth of each joint and a brief description of the procedure. In addition, draw a simple sketch of the site and record depth and rough location of pullback.

The Trac Management System Plus is also available for plotting and tracking your bore path. It utilizes a Ditch Witch tracker and display, a tracking beacon, and special software. The display can store jobs in its memory or the system can be run in the field using a laptop computer equipped with the Windows® 95 or higher operating system. See your Ditch Witch dealer for details.

Surface Drill Head

DANGER Moving tools will kill or injure. Shut off drill string power when anyone can be struck by moving or thrown tools. Never use pipe wrenches on drill string.

DANGER Turning shaft will kill you or crush arm or leg. Stay away.

To help avoid injury:

- Tracker operator and drill operator should maintain two-way communication.
- Keep everyone clear of the exposed drill string.
- No one should enter pit until clear communication is given by the drill operator that the drill unit is shut down. If using tracker control (See "Tracker Control" on page 143.), do not enter pit until tracker control is turned off and green light on drill unit is lit.
- Drill operator should be instructed to discontinue drill string rotation as soon as drill bit exits the bore. Use thrust only to extend drill string beyond exit hole.

1. Guide drill head to target pit or up through surface. Make all bends gradual. See "Recommended Bend Limits" on page 76.
2. If using tracker control mode, tracker operator turns off tracker to disable drilling unit thrust/pullback and rotation hydraulics. Tracker operator waits for green light to enter pit and/or change tools. If not using tracker control mode, tracker operator signals to drilling unit operator to stop engine before changing downhole tools.
3. Turn fluid flow control to off position as soon as drill head emerges.
4. Clean drill head especially around threads.
5. Disconnect EZ-Connect joint or use quick wrench to remove drill head. Keep threads clean. See "Quick Wrench" on page 151.

https://truckmanualshub.com/

Backream

Sometimes it is necessary to drill a pilot hole first, then enlarge the hole to accommodate larger product. As a general rule, the final hole should be 1.5 times larger than the diameter of the product being installed. The number of passes needed depends on soil conditions. Do not try to increase hole size too much in one pass. Several passes using successively larger reamers will save wear on machine.

DANGER Moving tools will kill or injure. Shut off drill string power when anyone can be struck by moving or thrown tools. Never use pipe wrenches on drill string.

WARNING Jobsite hazards could cause death or serious injury. Use correct equipment and work methods. Use and maintain proper safety equipment.

To help avoid injury: Continue to use strike system during backreaming.

DANGER Turning shaft will kill you or crush arm or leg. Stay away.

To help avoid injury:

- Maintain two-way communication with tracker operator.
- Begin backream only when tracker operator has communicated that everyone is clear of the exposed backream string.
- Do not allow anyone to stand to the side of the exposed drill string. Drill string and backreamer can move sideways suddenly if rotated while away from the exit hole.

https://truckmanualshub.com/

Assemble Backream String

1. Select backreaming devices. See "Backreamers" on page 148.
2. Determine fluid rate requirements and install appropriate nozzles to provide sufficient flow. See "Backream Fluid Requirements" on page 149 and "Nozzles" on page 146.
3. Attach backreamer to beacon housing if tracking backream.
4. Install beacon, following beacon instructions for:
   - battery replacement
   - beacon positioning
5. Install beacon housing lid. See page 147.
6. Follow beacon instructions to check beacon operation.
7. Follow tracker instructions to calibrate beacon.
8. If in AT mode, install inner spindle spacer (shown) onto end of lead pipe.
9. Use quick wrenches to attach transition sub to drill pipe string.
10. Use quick wrenches to attach backreamer/beacon housing assembly to transition sub.
11. Attach additional pullback devices or product to end of backreamer/beacon housing assembly.

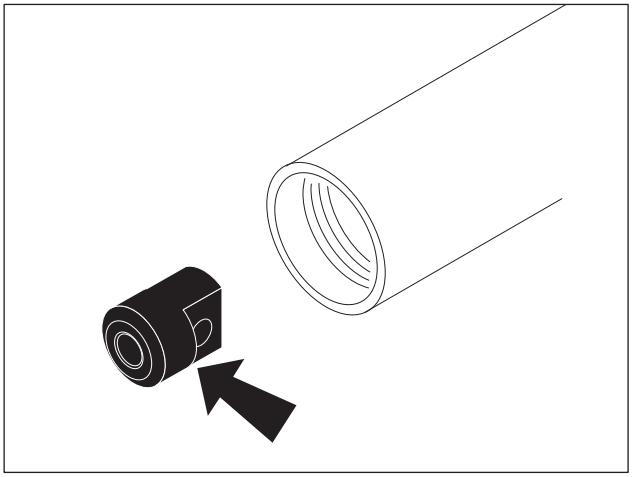

InnerSpindleSpacer.eps

Begin Backream

1. After backream assembly is attached to pipe, tracker operator should:
   - leave pit and stand away from the exposed drill string.
   - if using tracker control, turn on tracker to enable drilling unit thrust/pullback and rotation.
   - if not using tracker control, communicate to drill operator that backream string is clear.
2. Turn on drill fluid and pressurize drill pipe. Verify that jets are open.
3. Without rotating, slowly pull back until reamer contacts bore hole opening. Do not lodge reamer in hole.
4. Begin slow rotation and pullback.
5. Increase drilling fluid flow and rotation as the backream string enters the ground.
6. If tracking backream, tracker operator may continue tracking when the backream string is no longer visible.

https://truckmanualshub.com/

Remove Pipe

1. Enable automated pipeloader system if desired. See "Enable Automated Pipeloader System" on page 112.
2. Position pipe joint between wrenches.
3. Clamp pipes with both wrenches (1,2). Always clamp on the large diameter areas of either side of the tool joint face.

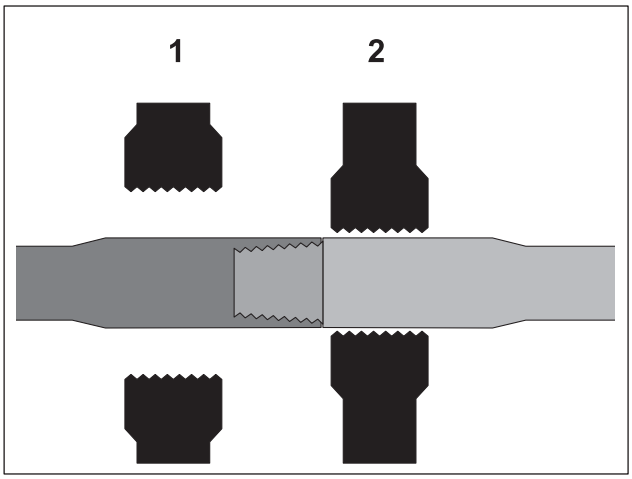

DrillPipe_Clamp.eps

4. Break front joint.

Manual Pipeloader Controls	Automated Pipeloader Control
• Turn rear wrench counterclockwise to break joint. • Open rear wrench and rotate wrench clockwise to original position.	• Turn rear wrench counterclockwise to break joint. • Open rear wrench and rotate wrench clockwise to original position.

5. Grip pipe.

Manual Pipeloader Controls	Automated Pipeloader Control
• Lift pipe out of shuttles. Grippers will open as pipe is lifted. • Extend shuttles to spindle position. • Close grippers. Relax grippers to allow pipe to rotate. • Lower lifters.	• Press RESUME. Display reads "Removing Pipe" and shuttles extend, grippers grip fully then relax open, and pipe lifters lower. • Display reads "REM PIPE Waiting"

https://truckmanualshub.com/

6. Break front joint.

Manual Pipeloader Controls	Automated Pipeloader Control
• Rotate spindle counterclockwise to separate pipe. • Continue to rotate until joint is fully separated.	• Rotate spindle counterclockwise to separate pipe. • Continue to rotate until joint is fully separated.

7. Break rear joint.

Manual Pipeloader Controls	Automated Pipeloader Control
• Close rear wrench. • Rotate spindle counterclockwise until joint is loosened at saver sub. **Do not** fully unthread joint. • Open rear wrench. • Move carriage back until front end of pipe is between the two markers on the pipe guide (A).	• Close rear wrench. • Rotate spindle counterclockwise until joint is loosened at saver sub. **Do not** fully unthread joint. • Open rear wrench. • Move carriage back until front end of pipe is between the two markers on the pipe guide (A).
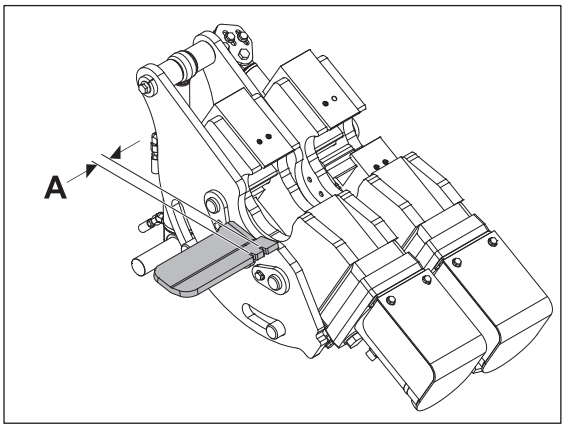 j22om099h.eps	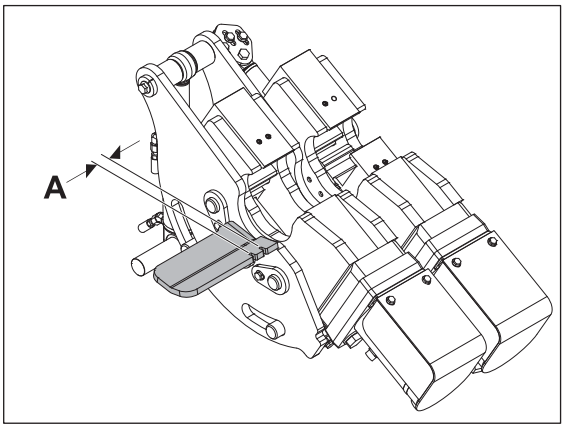 j22om099h.eps
• Close grippers. • Rotate spindle counterclockwise until saver sub is separated from pipe. • Move carriage to back of frame until rear stop indicator is lit in right console.	• Press RESUME. Grippers close. • Rotate spindle counterclockwise until saver sub is separated from pipe. • Move carriage to back of frame until rear stop indicator is lit in right console.

https://truckmanualshub.com/

8. Load pipe into pipe box.

Manual Pipeloader Controls	Automated Pipeloader Control
• Retract shuttles to delivery chute. • Release grippers and raise lift arms to place pipe in box. • Lube front threads.	• Press RESUME. Display reads "Removing Pipe", shuttles will retract to delivery chute, threads are lubed, grippers release pipe, and pipe lifters raise to place pipe in box. • Display reads "REM PIPE Waiting".

9. Attach saver sub to next pipe.

Manual Pipeloader Controls	Automated Pipeloader Control
• Move carriage forward until saver sub touches pipe. • Rotate spindle to thread saver sub onto pipe. Carriage moves forward slowly as pipe threads together. Slowly tighten joint to full machine torque.	• Move carriage forward until saver sub touches pipe. • Rotate spindle to thread saver sub onto pipe. Carriage moves forward slowly as pipe threads together. Slowly tighten joint to full machine torque.

10. Open front wrench to release pipe.
11. Check pipe box flags to see if row is full. If so, move pipe box to next empty row.

NOTICE: Damage can occur when lifting with too many pipes in a column. Be aware of the number of pipes in the column and check indicator flags as column is filled.

https://truckmanualshub.com/

Remove Pullback Device

The pullback device can be removed when the last pipe is on the frame. It can also be removed when a target pit along the bore path has been reached. Remaining pipe is then pulled back and removed.

DANGER Moving tools will kill or injure. Shut off drill string power when anyone can be struck by moving or thrown tools. Never use pipe wrenches on drill string.

1. Press bottom of drilling unit throttle switch until engine is at low throttle.
2. Turn off drilling fluid.
3. Clean pullback device.
4. Turn drilling unit engine off.
5. Disconnect pullback material.
6. Use quick wrenches to remove pullback device.

https://truckmanualshub.com/

Systems and Equipment

Chapter Contents

Anchor System 130

- Drive Anchors 131
- Remove Anchors 132

Electric Strike System 132

- FCC Statement 132
- Assemble Voltage Detector 133
- Test Strike System 133
- Troubleshoot Strike System 134
- Use Electric Strike Simulator 136

Drilling Fluid 138

- Guidelines 138
- Polymer 138
- Bentonite 139
- Mixtures 139
- Basic Fluid Recipes 140
- Drilling Fluid Requirements 141
- Funnel Viscosity 142

Tracker Control 143

- Overview 143
- Operation 143

https://truckmanualshub.com/

Downhole Tools 146

- Nozzles 146
- Bits 146
- Beacon Housings 147
- Backreamers 148
- Backream Fluid Requirements 149

Quick Wrench 151

Drill Pipe 153

- Perform Regular Drill Pipe Care 153
- Use Drill Pipe Correctly 154

Pipeloader 156

- Shift Pipe Box 159
- Correct Dropped Pipe 160
- Correct Misaligned or Jammed Pipe 160
- Rotate Drill Pipe Order 160
- Add/Remove Single Pipe 161

Cruise Control 164

- Engage 164
- Adjust Settings 165
- Override 165
- Disengage 165
- Resume 165

Wireline Tracking 166

Interpret Diagnostic Codes 169

- Electronic Controlled Engine Overview. 169
- Code Severity Levels 177
- Machine Diagnostic Codes 177

Service Mode. 187

https://truckmanualshub.com/

Anchor System

WARNING Crushing weight. If load falls or moves, it could kill or crush you. Use proper procedures and equipment or stay away.

To help avoid injury:

- Drive anchors properly before drilling.
- Stand on platform when operating anchor controls.
- Wear high-top protective boots with legs of pants completely tucked inside.
- Wear protective gloves.
- If you are not driving two anchors to full depth, drive optional ground rod into soil away from drilling unit and connect ground rod to drilling unit.

DANGER Turning shaft can kill you or crush arm or leg. Stay away.

To help avoid injury: Do not replace anchor collar bolt with one longer than original. Clothing could catch on turning shaft.

Select Anchor

Two anchor types are available. Choose the correct anchor type based on jobsite conditions.

Anchor type	Situation used
rock bit	hard/soft rock, asphalt, concrete, cobble
auger bit	soft soil to hard soil, soft rock

IMPORTANT: Do not attempt to operate anchor controls while drill fluid is on. Drill fluid operation may divert power from anchor system so that anchor controls perform poorly.

https://truckmanualshub.com/

Drive Anchors (Rock)

1. Raise anchor shaft to top of anchor frame.

> ***NOTICE:*** Centering cap **MUST** be positioned in centering tube to prevent damage to anchor.

2. Use high speed rotation and low thrust speed to drive anchor into ground.
3. Carefully position cap (1) into centering tube (2) as anchor is being driven into the ground.
4. Anchor is set when auger shaft flange (3) rests firmly on cap (1) and centering tube (2).
5. Repeat process for other anchor.
6. Leave anchors attached to anchor drivers.

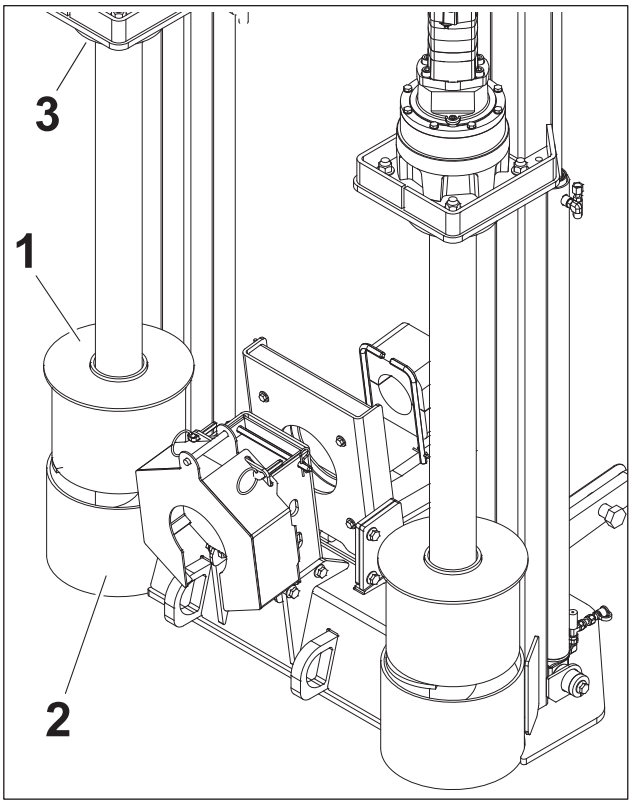

j22om014h.eps

Drive Anchors (Soil)

> **IMPORTANT:** Carefully time anchor rotation with anchor movement. Properly driven anchors should not auger up soil.

1. Raise anchor shaft to top of anchor frame.
2. Use rotation and thrust controls to drive anchor into ground.

> ***NOTICE:***
>
> - Rotate augers slowly and thrust hard to thread auger into the ground.
> - Centering cap **MUST** be positioned in centering tube to prevent damage to anchor.

3. Carefully position cap (1) into centering tube (2) as anchor is being driven into the ground.
4. Anchor is set when auger shaft flange (3) rests firmly on cap (1) and centering tube (2).
5. Repeat process for other anchor.

https://truckmanualshub.com/

Remove Anchors

1. Use anchor rotation and thrust controls to slowly remove anchor shaft from ground.
2. Repeat process for other anchor.

Electric Strike System

Any time you drill in an electric jobsite, electric strike system must be properly set up, tested, and used. You must wear protective boots and gloves meeting the following standards:

- Boots must have high tops and meet the electric hazard protection requirements of ASTM F2413 or ASTM F1117 when tested at 14,000 volts. Tuck legs of pants completely inside boots.
- Gloves must have 17,000 AC maximum use voltage, according to ASTM specification D120.

If working around higher voltage, use gloves and boots with appropriately higher ratings.

NOTICE: The strike system does not prevent electric strikes or detect strikes before they occur. **If alarms are activated, a strike has already occurred** and equipment is electrified.

Read and follow "Electric Jobsite Precautions" on page 74. Review safety procedures before each job.

FCC Statement

The Electric Strike System has been tested and found to comply with the limits for a Class A digital device, pursuant to Part 15 of the FCC rules. These limits are designed to provide reasonable protection against harmful interference when the equipment is operated in a commercial environment. This equipment generates, uses and can radiate radio frequency energy and, if not installed and used in accordance with the instructions, can cause harmful interference to radio communications. Operation of this equipment in a residential area could cause harmful interference which the user will be required to correct at his own expense.

Changes or modifications not expressly approved in writing by The Charles Machine Works, Inc. may void the user's authority to operate this equipment.

https://truckmanualshub.com/

Assemble Voltage Detector

1. Drive voltage stake into ground at least 6' (2 m) away from any part of system.
2. Clip voltage limiter to voltage stake.

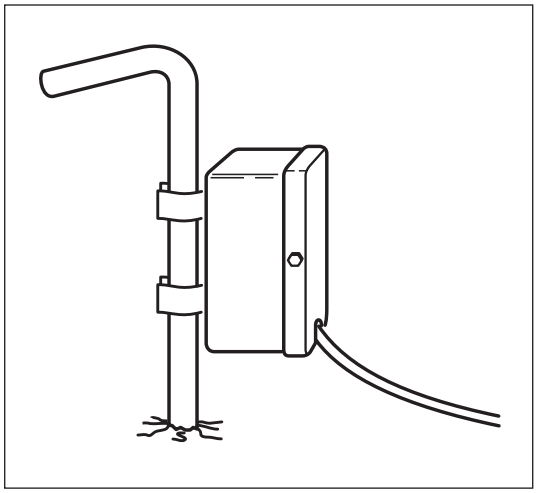

j07om021c.eps

Test Strike System

If system fails any part of this test, see "Troubleshoot Strike System" on the following page. Do not drill until test is completed successfully.

1. Turn on drilling unit.
2. ESID control module will perform internal tests which check everything but alarms and strobe.
3. On Information Center, press F2 (Module), then F4 (ESID), and then F2 (Test) to perform total test of strike system. During this test:
   - ESID bar graph in upper right corner of Information Center display should turn on (black).
   - Alphanumeric readout (ESID, Volts and Amps) should display numbers.
   - Alarms and strobes on all connected units should sound.
   - If this test is successful, no diagnostic codes will be displayed or recorded under Codes (F4) in ESID.
4. Use Electric Strike Simulator to test voltage and current sensors. See page 136.

https://truckmanualshub.com/

Troubleshoot Strike System

When strike system detects a problem, a diagnostic code will be displayed. Anytime this happens, go to the ESID menu and select test function to retest. If a diagnostic code is still displayed and does not appear in this chart, have control module checked or replaced.

Other problem situations and their possible causes and solutions are listed in the chart below.

Problem	Possible cause	Possible solution
V and A flashing on Information Center ESID display	Problems in startup	Go to ESID menu and select test function. If problem goes away, retest strike system
	No power to strike system control module	Check drilling unit electrical system
		Check that harness from drilling unit to control module is connected
		Check that cable from drilling unit carries more than 10V
	Defective control module	Have control module checked or replaced
	Defective CAN bus connection	Ensure CAN cable from drilling unit to ESID control module is connected
dc513 Test Wire shows on Information Center	Test wire not connected	Check that test wire is connected to ESID control module
		Check that test wire is connected to Information Center
		Have ESID control module checked or replaced
Strobe light on drilling unit does not work during total test	Improper connections with control module	Check connections and wiring harness
	Defective strobe light	1. Disconnect strobe and connect to external 12V power source. 2. If alarm does not work, replace it.
	Defective control module	Have control module checked or replaced
Alarm on drilling unit does not work during total test	Improper connections with control module	Check connections and wiring harness
	Defective alarm	1. Disconnect alarm and connect to external 12V power source. 2. If strobe does not work, replace it.
	Defective control module	Have control module checked or replaced

https://truckmanualshub.com/

Problem	Possible cause	Possible solution
Strobe light and alarm on drilling unit do not work during total test	Improper connections with control module	Check connections and wiring harness
	Defective control module	Have control module checked or replaced
dc518 POST AC I code displays and A is flashing on Information Center ESID display	Improper connections with control module	Check cable connections on control module and current transformer
	Defective current transformer	1. Disconnect current transformer. 2. Check for 20-40 ohms from pin 1 to pin 4, 20-40 ohms from pin 1 to pin 2, and less than 1 ohm from pin 2 to pin 4.
	Defective current transformer cable	1. Disconnect cable from transformer and control module. 2. Check continuity of cable. 3. If continuity is zero or cable is damaged, replace.
	Defective control module	Have control module checked or replaced
dc517 POST AC V code displays and V is flashing on Information Center ESID display	Improper connection of voltage limiter to ground stake	Check voltage limiter connection to ground stake and verify that ground stake is driven into the ground
	Defective voltage limiter	Have voltage limiter checked or replaced
	Defective control module	Have control module checked or replaced

https://truckmanualshub.com/

Use Electric Strike Simulator

Use the Electric Strike Simulator (p/n 259-506) to test voltage and current sensors on ESID. If readings are less than indicated here, replace 9V battery in simulator and retest.

Current Test

To test for current at normal levels:

1. Thread one lead wire through current transformer.
2. Clip ends of lead wires together to make one loop.
3. Select Module, ESID menu on Information Center.
4. Move simulator switch to "current" and press test button.
5. Watch display on Information Center.
   - ESID bar graph should show 1/2 scale on display.
   - ESID % and Current "AMPS" should show 30-50% in display.

To test for current at strike levels:

1. Put two or three loops through current transformer.
2. Follow steps above to test.
3. Display should show the following:
   - ESID bar graph should show full bar.
   - Alarm and strobe should turn on.
   - ESID and STK LED should flash.

   With two loops,
   - Current "Amps" should be 80-110%.
   - Strike indication might go on and off.

   With three loops,
   - Current should be 130-160%.
   - Strike indication should be continuous.

https://truckmanualshub.com/

Voltage Test

1. Place voltage limiter on something insulated from ground and drilling unit (such as dry board or tire), but near frame of drilling unit.
2. Clip one lead to frame.
3. Clip other lead to one voltage limiter mount.
4. Move simulator switch to "voltage" and press test button.
5. Watch screen and lights above display on strike system.
   - ESID bar graph should show full bar.
   - Alarm and strobe should turn on.
   - ESID and STK LED should flash.
   - ESID% and Voltage "Volts" should show 90-110%.

It is normal for simulator voltage levels to drift below strike level. When this happens, ESID bar should show less than full and alarm and strobe should stop working. If the level drifts above strike level again, light, ESID bar, and strobe should be turned on again.

https://truckmanualshub.com/

Drilling Fluid

For productive drilling and equipment protection, use these recommended Baroid® products, available from your Ditch Witch dealer.

- Soda ash
- Quik-Gel™ dry powder bentonite (p/n 259-804)
- E-Z Mud™ liquid polymer (p/n 259-805)
- Liqui-Trol™ liquid polymer suspension (p/n 259-808)
- Quik-Trol™ dry powder polymer (p/n 259-809)
- Bore-Gel™ drilling fluid (p/n 259-807)
- Con-Det™ water-soluble cleaning solution (p/n 259-810)

Guidelines

Match drilling fluid to soil type. This chart is meant as a guideline only. See your local Ditch Witch dealer for soil conditions and drilling fluid recommendations for your area.

Soil type	Drilling fluid recommendation
smooth, flowing sand	bentonite or Bore-Gel + medium chain polymer
coarse sand or light soil	bentonite or Bore-Gel
heavy clay	long chain polymer + Con-Det
swelling clay	long chain polymer + Con-Det
rock	Bore-Gel

Polymer

This drilling fluid additive provides excellent lubrication and increases viscosity in average soils and heavy clay. In swelling clay, polymer can reduce swelling that traps pipe in the bore.

There are two types of polymer:

- long chain such as Baroid EZ-Mud
- medium chain such as Baroid Quik-Trol

https://truckmanualshub.com/

Bentonite

Bentonite is a dry powder. When properly mixed with water, it forms a thin cake on bore walls, lubricating the bore, keeping it open, and holding fluid in the bore.

Some things to remember when mixing bentonite:

- Use clean water free of salt, calcium, or excessive chlorine.
- Use water with pH level between 9 and 10.
- Use water with hardness of less than 120 ppm.
- Do not use bentonite containing sand.
- Mix bentonite thoroughly or it will settle in tank.
- Do not mix bentonite to a funnel viscosity of over 50.

For information on measuring funnel viscosity, see "Funnel Viscosity" on page 142.

Mixtures

Bentonite does not mix well in water containing polymer. To use both, mix bentonite first, then add polymer. When adding other products follow the order listed below.

IMPORTANT:

- If chemicals are added in the wrong order, they will not mix properly and will form clumps.
- If tank contains bentonite/polymer mix and more drilling fluid is needed, completely empty tank and start with fresh water before mixing another batch.

General mixing order:

1. Soda ash
2. Bentonite
3. Polymer
4. Con-Det

Bore-Gel contains premixed bentonite, polymer, and soda ash. Use approximately 15 lb/100 gal (7 kg/380 L) in normal drilling conditions, up to 45 lb/100 gal (21 kg/380 L) in sand or gravel and up to 50 lb/100 gal (23 kg/380 L) in rock.

https://truckmanualshub.com/

Basic Fluid Recipes

Soil type	Mixture/100 gal (378 L) of water	Notes
fine sand	35 lb (16 kg) Bore-Gel	
coarse sand	35 lb (16 kg) Bore-Gel .5 lb (225 g) No-Sag	Add .5 lb (225 g) of Quik-Trol for additional filtrate control
fine sand below water table	40 lb (18 kg) Bore-Gel .75 lb (340 g) Quik-Trol	Add .5 - 1 gal (2-4 L) of Dinomul in high torque situations
coarse sand below water table	40 lb (18 kg) Bore-Gel .75 lb (340 g) Quik-Trol .75 lb (340 g) No-Sag	Add .5 - 1 gal (2-4 L) of Dinomul in high torque situations
gravel	50 lb (23 kg) Bore-Gel .75 lb (340 g) Quik-Trol .75 lb (340 g) No-Sag	Add .5 lb (225 g) of Barolift to reduce loss of returns
cobble	50 lb (23 kg) Bore-Gel .75 lb (340 g) Quik-Trol .75 lb (340 g) No-Sag	Add .5 lb (225 g) of Barolift to reduce loss of returns
sand, gravel, clay or shale	35 - 40 lb (16-18 kg) Bore-Gel .5 pt (235 mL) EZ-Mud .5 gal (2 L) Con-Det	Vary mixture according to percentage of sand and clay
clay	.5 lb (225 g) Poly Bore .5 gal (2 L) Con-Det	Flow rate should be 3-5 parts fluid to 1 part soil. May use .25 - .5 gal (1-2 L) of Penetrol instead of Con-Det
swelling/sticky clay	.75 - 1 lb (340-450 g) Poly Bore .5 - 1 gal (2-4 L) Con-Det	Flow rate should be 3-5 parts fluid to 1 part soil. May use .25 - .5 gal (1-2 L) of Penetrol instead of Con-Det
solid rock (shale)	40 lb (18 kg) Bore-Gel	Use .5 pt (235 mL) of No Sag for large diameter or longer bores
solid rock (other than shale)	40 - 50 lb (18-23 kg) Bore-Gel	Use .5 pt (235 mL) of EZ-Mud in reactive shales
rock/clay mixture	40 - 50 lb (18-23 kg) Bore-Gel .5 pt (235 mL) EZ-Mud	
rock/sand mixture	40 - 50 lb (18-23 kg) Bore-Gel	Use .5 pt (235 mL) of No Sag for large diameter or longer bores
fractured rock	50 lb (23 kg) Bore-Gel .5 - 1lb (225-450 g) No-Sag	Use .5 lb (225 g) of Barolift to reduce fluid loss to formation

https://truckmanualshub.com/

Drilling Fluid Requirements

1. Determine drilling conditions and choose appropriate drilling fluid mix.
2. Estimate amount of supplies needed and check availability.
   - Drilling fluid
   - Water supply. If more water than can be carried with the unit will be needed, arrange to transport additional water.
   - Bentonite and/or polymer
3. Check water quality.
   - Use meter or pH test strips to test pH of water. If pH is below 9.0, add 1 lb (454 g) soda ash per tank. Test and repeat until pH is between 9 and 10.
   - Check water hardness using hardness test strips. Treat with soda ash if hardness exceeds 125 ppm.

https://truckmanualshub.com/

Funnel Viscosity

Viscosity is the measure of internal resistance of a fluid to flow; the greater the resistance, the higher the viscosity. Viscosity of drilling fluids must be controlled.

To determine viscosity, you will need a Marsh funnel (p/n 259-267) and a measuring cup, available from your Ditch Witch dealer.

IMPORTANT: Make sure Marsh funnel is clean and free of obstruction and that you have a stopwatch available for timing the viscosity.

1. Using wash hose and a clean container, take a fresh sample of drilling fluid. The sample must be at least 1.5 qt (1.4 L).
2. With finger over bottom of funnel, fill with fluid from the container through the screen until fluid reaches the bottom of the screen.
3. Move funnel over 1 qt (.95 L) container.
4. Remove finger from bottom of funnel and use the stopwatch to count the number of seconds it takes for 1 qt (.95 L) of fluid to pass through the funnel. The number of seconds is the viscosity.
5. Thoroughly rinse measuring cup and Marsh funnel.

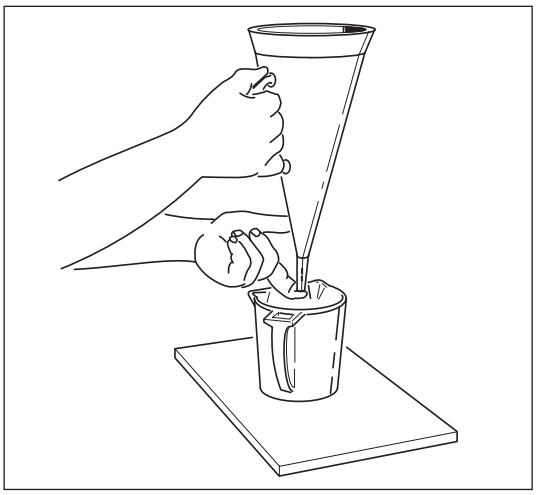

j07om033c.eps

https://truckmanualshub.com/

Tracker Control

Overview

WARNING Incorrect procedures could result in death, injury, or property damage. Learn to use equipment correctly.

This mode allows the Ditch Witch Tracker operator to disable hydraulic power to drilling unit thrust and rotation.

IMPORTANT: This mode does not disable thrust and rotation immediately. Functions are disabled within 16 seconds. Thrust and rotation are disabled when green light on drilling unit is flashing.

Use tracker control any time you change downhole tools or during other times when the drill string is exposed. Tracker control works by stopping communication between the tracker and the display. When this happens, the green tracker control light on the drilling unit flashes and thrust and rotation are disabled.

Operation

Enable Thrust and Rotation

1. Start drilling unit.
2. Turn off tracker remote display.
3. Press and hold DOWNLOAD (1) while turning on tracker remote display until a four-digit code (2) appears.

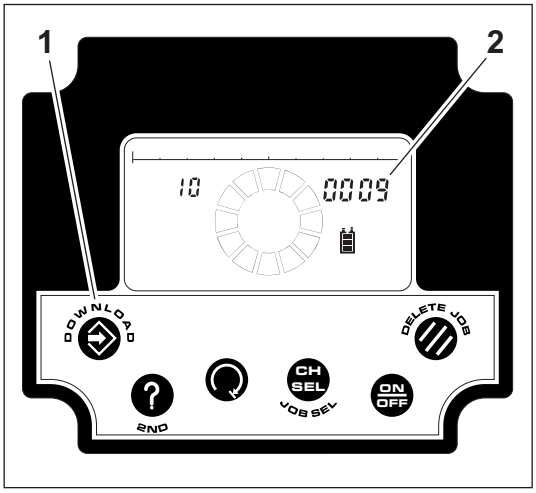

j07om023c.eps

https://truckmanualshub.com/

4. Turn on tracker and check four-digit code.

   If codes on tracker and display match, thrust and rotation hydraulics on the drilling unit are enabled.

   If codes on tracker and display do not match, adjust tracker code:

   - Press and hold fore/aft/left/right button while making the following adjustments.
   - Use ON/OFF to advance first two digits (1). Use DEPTH to lower first two digits.
   - Use up arrow to advance last two digits (2). Use down arrow to lower last two digits.
   - Press and hold each button to advance or lower value quickly.
   - To start sending code from the tracker to the display, press and hold fore/aft/left/right button and press MODE. Thrust and rotation hydraulics on the drilling unit are now enabled.

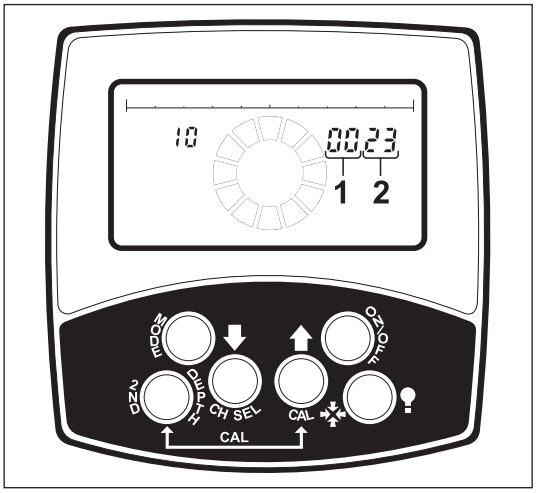

j07om024c.eps

5. Remove tracker control key (shown) from set-up console at rear of drilling unit. Keep in tracker operator's possession.
6. Drill and track bore.

Troubleshooting Tip: If thrust and rotation are not enabled:

- Check whether the green tracker control light located on drilling unit anchoring console is on. If it is, communication has probably stopped between tracker and display, or tracker is set to incorrect code.
- If communication cannot be restored, install tracker control key (shown) in drilling unit and rotate clockwise. Green tracker control light located on anchoring console will go off. Thrust and rotation will function.

NOTICE: Tracker operator cannot disable thrust and rotation from tracker if tracker control key (shown) is installed in drilling unit and turned to the disable position.

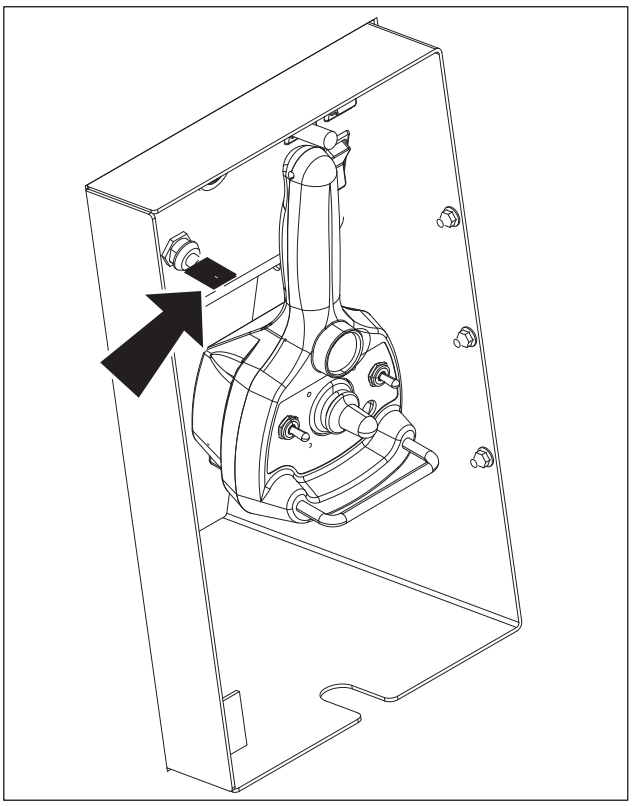
j22om015h.eps

https://truckmanualshub.com/

Disable Thrust and Rotation

1. When drill head enters target pit or exits the ground, turn off tracker.

   After 8-16 seconds, green tracker control light (shown), located on drilling unit anchoring console, will come on. Hydraulic power to thrust and rotation will be disabled.

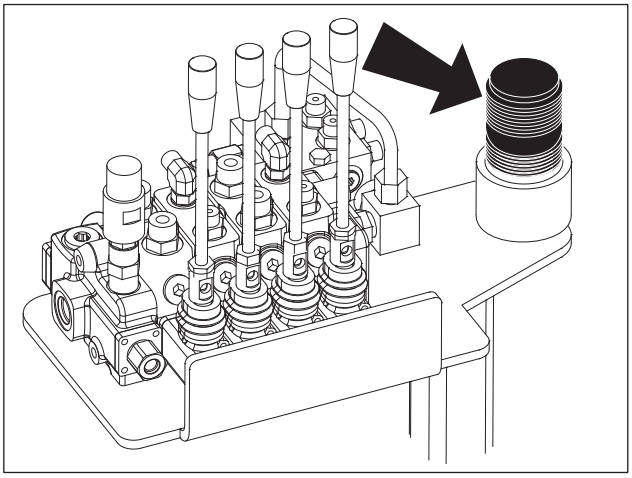

j22om016h.eps

IMPORTANT: Tracker operator cannot disable thrust and rotation from tracker if tracker control key (shown) is installed in drilling unit and turned to the disable position.

NOTICE: If you are not using tracker control, turn off drilling unit before changing downhole tools.

2. Change downhole tools.
3. **If tracking backreamer's path**, turn on tracker and enable code transmission. After 8-16 seconds, green tracker control light on drilling unit anchoring console will go off and thrust and rotation will function.

   If not tracking backreamer's path, install tracker control key (shown) on drilling unit. Green tracker control light on drilling unit anchoring console will go off and thrust and rotation will function.

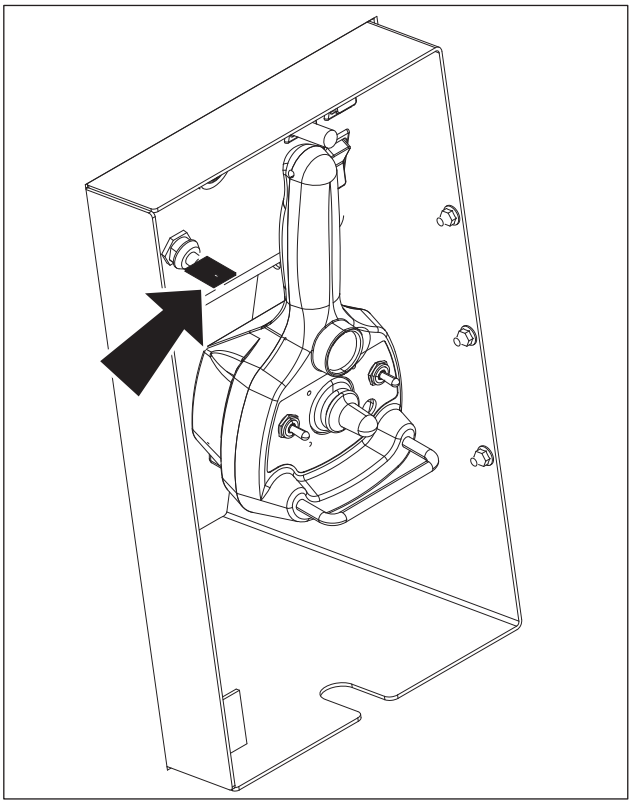

j22om015h.eps

https://truckmanualshub.com/

Downhole Tools

Nozzles

Nozzles control fluid flow from the pipe to the bore. Select nozzles that will supply **at least** the amount of fluid per minute needed for the flow and pressure you will be using. A nozzle that will supply more fluid per minute is recommended. See your Ditch Witch dealer for nozzle recommendations.

Bits

Selection

These charts are meant as a guideline only. No one bit works well in all conditions. See your Ditch Witch dealer for soil conditions and bit recommendations for your area.

- 1 = best
- 2 = good
- 3 = fair
- 4 = not recommended

Bit	Sandy Soil	Soft Soil	Medium Soil	Hard Soil	Rocky Soil	Soft Rock	Hard Rock
Sand bit	1	2	3	4	4	4	4
Tornado bit	2	2	2	1	1	3	4
Tuff bit	3	2	1	1	3	1	4
Steep Taper Tuff bit	2	2	1	1	2	1	4
Barracuda bit	2	1	1	2	3	4	4
Steep Taper bit	2	2	1	2	2	3	4
Hard Surface bit	3	1	2	3	4	4	4
Glacier bit	4	4	4	3	1	2	4
Rhino bit	4	4	3	3	1	1	3
Rockmaster	4	4	3	2	1	1	1
Talon bit	3	3	2	1	1	2	4

https://truckmanualshub.com/

Soil	Description
sandy soil	sugar sand, blow sand, or other soils where sand is the predominant component
soft soil	sandy loam
medium soil	loams, loamy clays
hard soil	packed clays, gumbo, all compacted soils
rocky soil	chunk rock, glacial till, cobble, rip rap, gravel
soft rock	soft limestone, sandstone, shale, coral, caliche
hard rock	granite, schist, marble, hard limestone

Installation

Remove all paint from mating surfaces before attaching any bit to housing. Install screws (p/n 107-277) and tighten bolts to 120 ft•lb (163 N•m).

Beacon Housings

Lid Installation

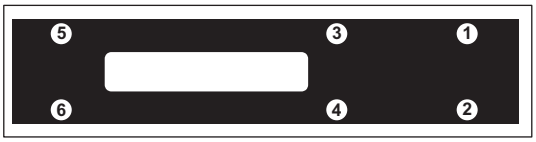

j15om085h.eps

1. Clean all threads, bolt holes and mating surfaces.
2. Follow tightening sequence (shown).
3. Use removable thread locker (Loctite® 242 or equivalent), if desired.
4. Tighten bolts to 60-70 ft•lb (81-95 N•m).
5. Repeat tightening sequence.

https://truckmanualshub.com/

Backreamers

A backreamer enlarges the hole as pipe is pulled back through the bore. No one backreamer works well in all conditions. These charts are meant as a guideline only. See your local Ditch Witch dealer for soil conditions and backreamer recommendations for your area.

- 1 = best
- 2 = good
- 3 = fair
- 4 = not recommended

Backreamer	Sandy Soil	Soft Soil	Medium Soil	Hard Soil	Rocky Soil	Soft Rock	Hard Rock
Beavertail	3	1	1	1	3	4	4
Three Wing	4	3	3	2	1	1	4
Water Wing	4	3	2	1	2	2	4
Compact Fluted	1	1	2	2	2	3	4
Kodiak	4	3	3	2	1	2	4
Rockmaster	4	4	4	4	3	1	1

IMPORTANT: For soil definitions, see the chart on the previous page.

https://truckmanualshub.com/

Backream Fluid Requirements

Backreaming is only successful when enough fluid reaches the bore. The amount of fluid needed depends on size of bore and soil condition.

Follow these steps to find the **minimum** amount of fluid needed in perfect conditions.

IMPORTANT: Use more fluid than recommended or the backream might be dry and unsuccessful.

Instructions	Example
1. Find amount of fluid needed for your size of backreamer. See the table on the next page.	**U.S.** A 6" backreamer requires at least 1.47 gal/ft.
	Metric A 152-mm backreamer requires at least 18.24 L/m.
2. Multiply this number by distance per minute you plan to backream. The answer is an estimate of amount of fluid you will need for each minute of backreaming.	**U.S.** 1.5 gal x 2 ft/min = 3 gal for each minute of backreaming.
	Metric 18 L x .5 m/min = 9 L for each minute of backreaming

IMPORTANT: After you have determined how much fluid you will need, see your Ditch Witch dealer for nozzle recommendations.

https://truckmanualshub.com/

Backream Fluid Requirements

Backreamer/product diameter		Gal/ft	L/m	Backreamer/product diameter		Gal/ft	L/m
.5 in	13 mm	0.01	0.13	13.5 in	343 mm	7.44	92.35
1 in	25 mm	0.04	0.51	14 in	356 mm	8.00	99.31
1.5 in	38 mm	0.09	1.14	14.5 in	368 mm	8.58	106.54
2 in	51 mm	0.16	2.03	15 in	381 mm	9.18	114.01
2.5 in	64 mm	0.25	3.17	15.5 in	394 mm	9.80	121.74
3 in	76 mm	0.37	4.56	16 in	406 mm	10.44	129.72
3.5 in	89 mm	0.5	6.21	16.5 in	419 mm	11.11	137.95
4 in	102 mm	0.65	8.11	17 in	432 mm	11.79	146.44
4.5 in	114 mm	0.83	10.26	17.5 in	445 mm	12.49	155.18
5 in	127 mm	1.02	12.67	18 in	457 mm	13.22	164.17
5.5 in	140 mm	1.23	15.33	18.5 in	470 mm	13.96	173.42
6 in	152 mm	1.47	18.24	19 in	483 mm	14.73	182.92
6.5 in	165 mm	1.72	21.41	19.5 in	495 mm	15.51	192.68
7 in	178 mm	2.00	24.83	20 in	508 mm	16.32	202.68
7.5 in	191 mm	2.29	28.50	20.5 in	521 mm	17.15	212.94
8 in	203 mm	2.61	32.43	21 in	533 mm	17.99	223.46
8.5 in	216 mm	2.95	36.61	21.5 in	546 mm	18.86	234.23
9 in	229 mm	3.30	41.04	22 in	559 mm	19.75	245.25
9.5 in	241 mm	3.68	45.73	22.5 in	572 mm	20.65	256.52
10 in	254 mm	4.08	50.67	23 in	584 mm	21.58	268.05
10.5 in	267 mm	4.50	55.86	23.5 in	597 mm	22.53	279.83
11 in	279 mm	4.94	61.31	24 in	610 mm	23.50	291.86
11.5 in	292 mm	5.40	67.01	24.5 in	622 mm	24.49	304.15
12 in	305 mm	5.88	72.97	25 in	635 mm	25.50	316.69
12.5 in	318 mm	6.37	79.17	25.5 in	648 mm	26.53	329.49
13 in	330 mm	6.90	85.63	26 in	660 mm	27.58	342.53

https://truckmanualshub.com/

Quick Wrench

To attach or remove downhole tools, use quick wrench to join or break the joint.

DANGER Moving tools will kill or injure. Shut off drill string power when anyone can be struck by moving or thrown tools. Never use pipe wrenches on drill string.

NOTICE: Apply TJC to threads and hand-tighten joint before attaching quick wrench components to tighten joint.

Attach quick wrench in either the join or break position.

IMPORTANT: Use standard jaws (A) for drill pipe and most downhole tools. Use jaws (B) for adapters, subs, or other tools that have flats. Use bit block (C) for the Rockmaster tool.

Note: Most tools with flats can be joined or broken with vise (standard jaw) as well as flats.

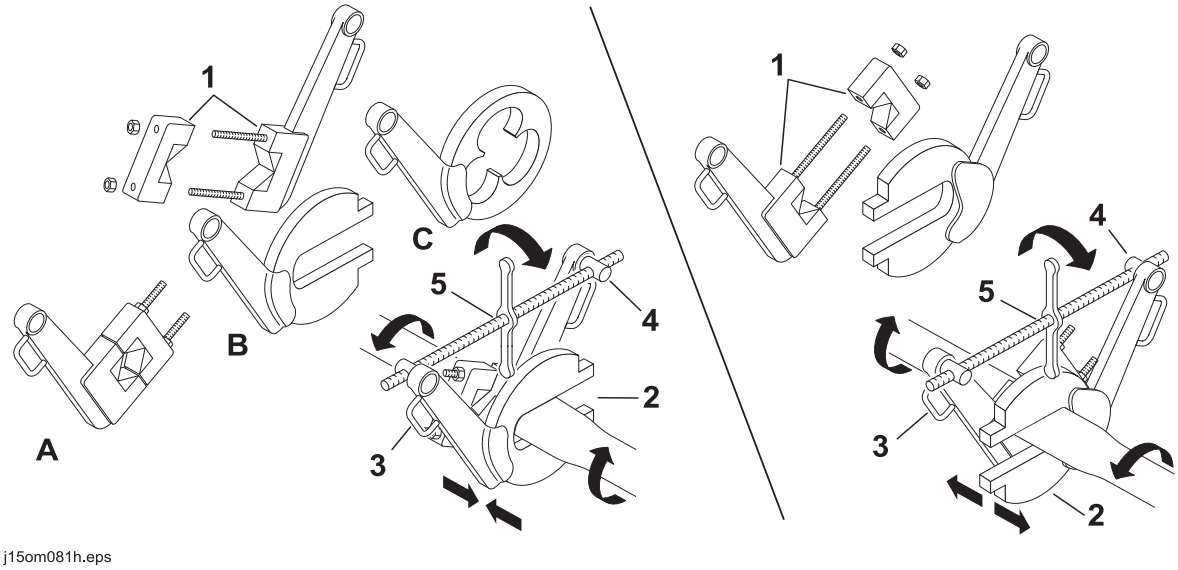

Join **Break**

- Unbolt vise (1) and place jaws around pipe.
- Bolt jaws of vise together.
- Place jaw (2) around pipe, transition sub, or downhole tool.
- Pin handles (3) to wrench jaws. Be sure handles are both up.
- Attach pivot nuts (4) to wrench handles so that screw drive handle (5) is over joint.

https://truckmanualshub.com/

To Join

1. Scribe straight line across joint on both sides of separating line (A).
2. Scribe second line (B) on moveable side of joint in the opposite direction of tightening action 3/8" (9.5 mm) away from first line.
3. Turn handle until second line (B) meets first (A).
4. Turn handle opposite direction two turns to relieve pressure.
5. Remove quick wrench components.

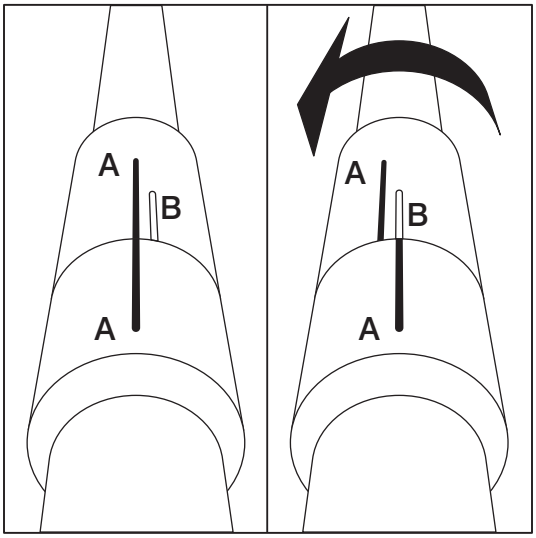

j07om071h.eps

To Break

NOTICE: Ensure that engine is not on or tracker control has disabled the unit before breaking joints.

1. Turn handle until joint is broken.
2. Turn handle opposite direction two turns to relieve pressure.
3. Remove quick wrench components.

https://truckmanualshub.com/

Drill Pipe

Perform Regular Drill Pipe Care

Precondition New Pipe

Repeat this procedure **three times** for each piece of pipe before it is used the first time:

1. **Hand-lubricate** entire surface of threads and shoulders of both ends of pipe with copper base tool joint compound. See page 200 for recommended lubricant.
2. Join pipe and tighten joint.
3. Break joint.
4. Move pipe back to box.

NOTICE: Failure to follow this procedure could result in fused joints. Pipe will be damaged or destroyed.

Lubricate Joints Before Each Use

Lubricate threads and shoulders of male joints with copper base tool joint compound. This prevents rust and reduces wear on shoulders and threads. See page 200 for recommended lubricant.

Clean the Threads

Clean the threads as needed with high-pressure water and detergent.

NOTICE: Do not use gasoline or other petroleum-based solvents. This prevents tool joint compound from sticking to the joints and will reduce thread life.

Replace Worn Saver Sub

Because each pipe comes in contact with the saver sub, check saver sub regularly for wear. Compare condition of saver sub threads to condition of your drill pipe threads. Replace saver sub any time when its thread condition is not better than thread condition of your drill pipe. Failing to replace saver sub will result in damaged drill pipe. See page 233 for replacement procedure.

Precondition a new saver sub the same way you do new pipe. See "Precondition New Pipe" on page 153.

Rotate Pipe Order

Because the lead drill pipe is in the ground longer, it is subjected to higher shock loads and experiences more wear. To help spread this wear evenly over all pipe, move the lead pipe from the previous job out of the first position.

https://truckmanualshub.com/

Use Drill Pipe Correctly

Align the Joints

Always carefully align the male and female ends of pipe before threading them together. Poor alignment can damage the threads and destroy the usefulness of the joint.

NOTICE: If joints get out of alignment during a bore, use frame tilt or rear stabilizers to adjust the unit.

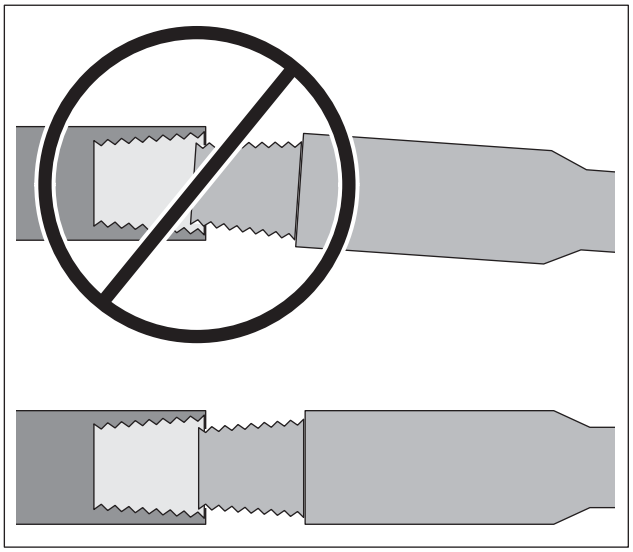

DrillPipe_Align.eps

Clamp Pipe Correctly

Clamp on pipe when joint is between wrenches. Clamp only on the tool joint of the drill pipe as shown. This portion of the drill pipe is designed for clamping and is considerably thicker and stronger than the rest of the pipe.

NOTICE: Clamping anywhere else on the pipe will weaken the pipe. Pipe can later break, even when operating under normal loads.

See "Clamp Pipe" on page 105 for more information.

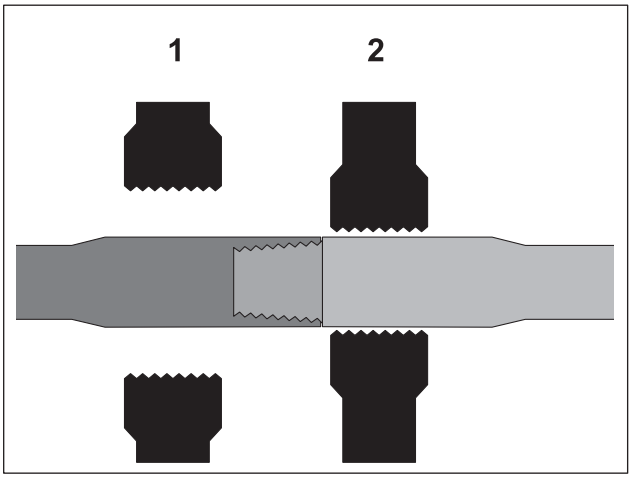

DrillPipe_Clamp.eps

https://truckmanualshub.com/

Make Up and Break Out Joints Correctly

Assisted Makeup protects threads by automatically matching carriage movement speed to rotation during makeup and breakout.

- To connect pipes together and fully tighten joint, slowly rotate pipe until spindle stops turning and full pressure is developed. Improperly tightened joints will damage the shoulder faces and threads, and will cause joints to leak or break while drilling or backreaming.
- To disconnect pipes, slowly rotate spindle counterclockwise. Carriage will move back automatically as threads fully separate.

IMPORTANT: If assisted makeup is not functioning, unit will not thrust or rotate while carriage is on front or rear home with front wrench closed. Press and hold multi-use button to operate thrust and rotation and follow these instructions.

Make up and break out joints slowly. Do not ram pipes together during makeup or force them apart during breakout. Carefully match carriage travel speed to rotation speed, and always connect and disconnect joints slowly and deliberately. This will help prevent thread crossing, galling, and shoulder swelling.

Makeup

- Carefully move carriage forward until spindle (or pipe) contacts threads of pipe in the wrench and begins to collapse spring on the side of the carriage (shown). Do not fully collapse the spring. Stop thrusting and rotate clockwise until spring is fully relaxed. Carefully move thrust forward as you spin the threads together, keeping the spring as relaxed as possible.
- **Tighten joints fully.** Once the joint is connected and the shoulder faces are touching, tighten to full machine torque. Improperly tightened joints will damage the shoulder faces and threads, and will cause joints to leak or break while drilling or backreaming.

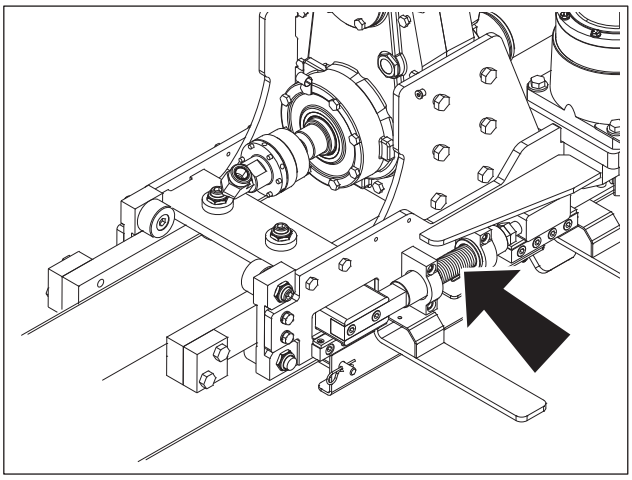

j22om096h.eps

Breakout

Carefully move the carriage backward until the spring on the side of the carriage is almost fully collapsed. Do not fully collapse the spring. Stop thrusting and rotate counterclockwise until spring is fully relaxed. Carefully move thrust backward and spin the threads apart, keeping the spring as relaxed as possible until the pipe joint is fully separated.

https://truckmanualshub.com/

Do not Overwork the Pipe

Never exceed the bend radius for your pipe. See "Recommended Bend Limits" on page 76. Do not oversteer.

NOTICE: Bending pipe more sharply than recommended will damage pipe and cause failure.

Pipeloader

Remove/Install Pipe Box

DANGER Electric shock. Contacting electric lines will cause death or serious injury. Know location of lines and stay away.

To help avoid injury:

- Do not attempt to load and unload pipe while drilling or backreaming. Unprotected worker can be injured by electric strike.
- On electrical jobsite, load and unload pipe only if loader is wearing electrically insulating boots and gloves.

WARNING Crushing weight. If load falls or moves it could kill or crush you. Use proper procedures and equipment or stay away.

To help avoid injury:

- Always walk around unit and check for obstructions before moving load.
- Use crane capable of supporting the equipment's size and weight. See page 234 or measure and weigh equipment before lifting.
- Never remove pins from ends of pipe box until you have attached lifting device. Box may fall if pipe lift switch is pressed without end pins in place.
- Lift only one box of pipe at a time.
- Do not take your eyes off moving load. Always look in the direction load is moving.
- Never swing a load over people.

https://truckmanualshub.com/

Prepare

1. Press pipe lift switch to fully raise first row of pipe.
2. Remove pins (1) and support bars (2) from drill frame storage pockets.
3. Insert each support bar (2) into opening (4) and allow it to sit on chute (3) and retain with pin (1) through tab (5).
4. Press pipe lower switch to lower pipes in chute.

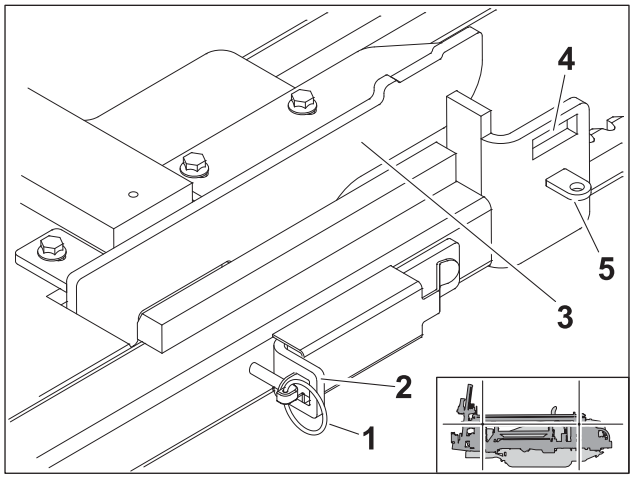

j22om051h.eps

Remove Pipe Box

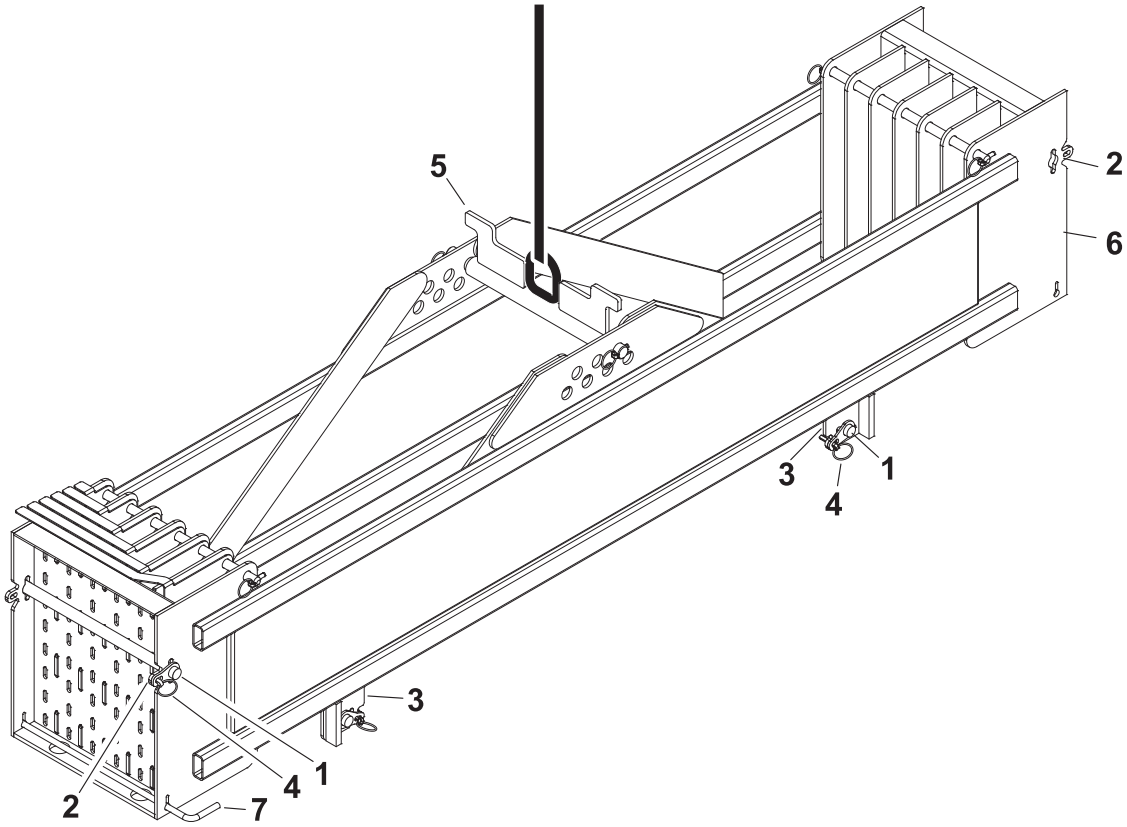

j22om028h.eps

1. Remove support rods (1) from pipe box storage (2).
2. Insert support rods into pipe supports (3) and retain with pins (4).
3. Install lift block (5) and adjust to match drill frame angle.
4. Remove threaded caps (6) from back pins.
5. Remove front (7) pin.
6. Move pipe box off of drill frame.

https://truckmanualshub.com/

Install Pipe Box

1. Move pipe box over pipeloader and lower into position.
2. Install threaded caps on back pins.
3. Install front pin.
4. Remove lift block and pin.

NOTICE: Pipe box should only be installed onto pipeloader when pipe box shuttle is in first row position.

https://truckmanualshub.com/

Shift Pipe Box

IMPORTANT: Lift arms must be fully raised for pipe box to move.

Drilling

1. Shift pipe box when both pipe box status lights are off (column is empty). If automated pipeloader is being used, the Information Center will inform you that it is time to move the pipe box.

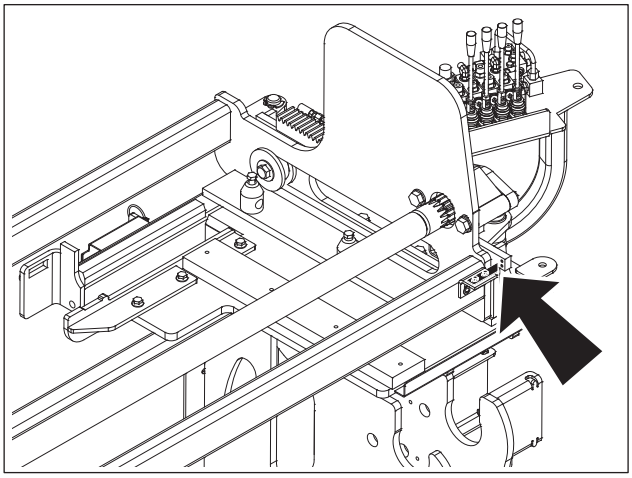

j22om017h.eps

2. Release pipe box switch when box hits mechanical stops, then move back to align mechanical pointer in center of appropriate dot on decal (shown) for new column.

j21om097h.eps

Backreaming

1. Shift pipe box when active column is full. Indicator flag will lift partially when there is room for one more pipe.

NOTICE: Damage can occur when lifting with too many pipes in a column. Be aware of the number of pipes in the column and check indicator flags as column is filled.

2. Release pipe box switch when mechanical pointer is in center of appropriate dot on decal (shown) for new column.

https://truckmanualshub.com/

Correct Dropped Pipe

To return a dropped pipe to the drill string, turn off engine and manually retrieve pipe. Return it to the pipe box by loading it as a single piece of pipe. See "Add Single Pipe" on page 162.

Correct Misaligned or Jammed Pipe

One pipe box status light on and one light off indicates a misaligned or jammed pipe. Turn off engine and inspect pipe in active column.

- If one end of a drill pipe is jammed and will not drop correctly from pipe box, inspect pipe box position. If pipe box appears to be improperly aligned with discharge chute, return to operator's station and move pipe box slightly until mechanical pointer is in center of appropriate dot on decal (see page 159) for active column.
- If drill pipe is bent, remove it from pipe box and discard.

NOTICE: If neither of the causes and solutions outlined above correct the misaligned or jammed pipe, contact your Ditch Witch dealer for assistance.

Rotate Drill Pipe Order

Rotating the lead pipe is a manual process. Rotate drill pipes in the drill string weekly.

Guidelines

- Rotate only as many columns as used on the longest bore of the week. For example, if the longest bore was 320' (98 m), then only rotate the four columns used.
- Plan to rotate the pipes during the longest bore of the week.

Procedure

1. Before beginning pullback, temporarily remove next pipe from the box. See "Add/Remove Single Pipe" on page 161. Close both auxiliary pipe loaders.
2. Follow regular pullback procedure to load remaining pipe into pipe box.
3. When all pipes (except lead pipe on AT units) have been returned to pipe box, open both auxiliary pipe loaders, see "Add/Remove Single Pipe" on page 161, place the pipe that was temporarily removed in step 1 into the remaining position in the delivery chute.
4. Turn off engine.
5. Close both auxiliary pipe loaders.

https://truckmanualshub.com/

Add/Remove Single Pipe

Load a drill pipe into an empty column of pipe box to finish bore without changing pipe boxes.

DANGER Electric shock. Contacting electric lines will cause death or serious injury. Know location of lines and stay away.

To help avoid injury: Do not attempt to load and unload pipe while drilling or backreaming. Load or unload all of the pipes that will be needed before resuming drilling or backreaming. Unprotected worker can be injured by electric strike.

NOTICE:

- Open or close **both** auxiliary pipe loaders. Moving shuttles with one auxiliary pipe loader open and one closed will damage equipment and cause possible injury.
- Carriage must be all the way back on the rear stop switch to load and unload pipe.
- Use caution when loading single pipes on side slopes.

https://truckmanualshub.com/

Add Single Pipe

1. Ensure pipe box is positioned properly. See "Shift Pipe Box" on page 159.

> ***NOTICE:*** If loading more than one column full of pipe, start by filling an inside column, then shift box inward and load pipe in the next empty column.

2. Move shuttles out half way (45°).

> **WARNING** Crushing weight. If load falls or moves it could kill or crush you. Use proper procedures and equipment or stay away.

3. Remove pipe guide (1) (shown in storage position) from drill frame and insert in slot on drill frame.
4. Ensure backup bracket (4) on drill frame allows pipe guide to align with front face (5) on drill frame, adjust if necessary.
5. Pull pin (3) from slot (A) on shuttle, rotate auxiliary pipe loader (2) down, and install pin in slot (B).

> **Note:** This step creates a temporary shuttle stop position at 45°.

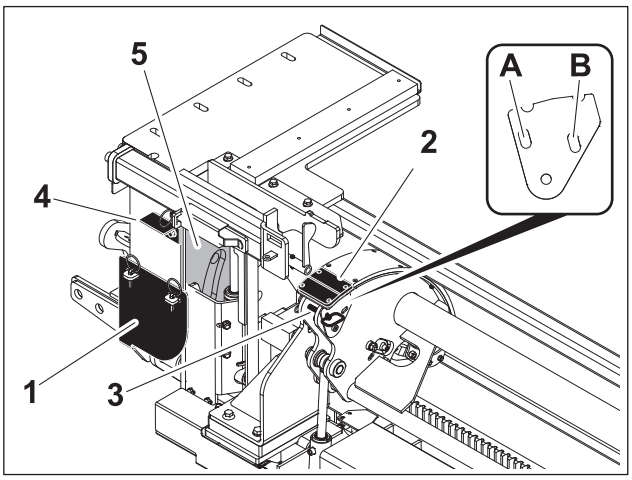

j22om019h.eps

6. Repeat step 5 for rear auxiliary pipe loader.
7. Lower pipe lifters.
8. Load a pipe in auxiliary pipe loaders with lower end resting against pipe guide (1).
9. Step back from machine.
10. Move auxiliary shuttle in.
11. Raise pipe into column.
12. Move shuttle out (shuttle stop switch will stop shuttle movement at correct position for loading pipe).
13. Repeat steps 7-13 to load more pieces of pipe.
14. Close both auxiliary pipe loaders. Pins must be inserted in slot (A) and held in place with retaining pins.
    - If shuttle will not retract after completing single pipe operations, hold retract pipe shuttle switch and momentarily press multi-use button to reset shuttles to normal operation (shuttles will retract).
    - Use standard procedure for pipeloader operation.

https://truckmanualshub.com/

Remove Single Pipe

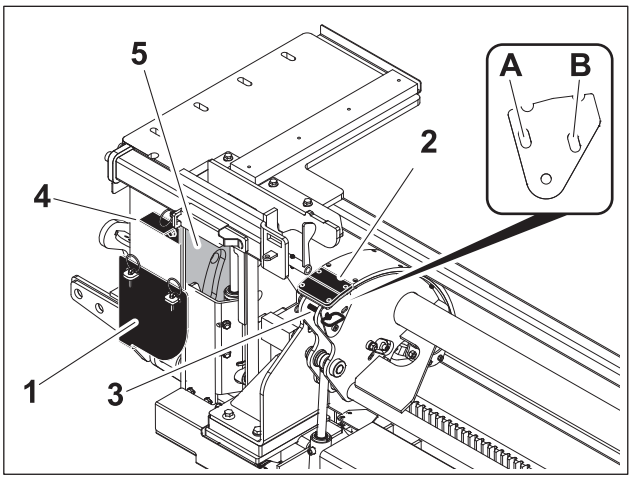

j22om019h.eps

Unload drill pipe loaded with auxiliary pipe loaders.

1. Ensure pipe guide is still installed and not in storage position.
2. Ensure pipe box is positioned properly. See "Remove/Install Pipe Box" on page 156.
3. Move shuttles out half way (45°).
4. Pull pin (3) from slot (A) on shuttle, rotate auxiliary pipe loader (2) down, and install pin in slot (B).
5. Repeat step 4 for rear auxiliary pipe loader.
6. Raise pipe.
7. Move shuttle in, auxiliary pipe loaders should be beneath pipe column.
8. Lower pipe into auxiliary pipe loaders.
9. Move shuttle out (shuttle stop switch will stop shuttle movement at correct position for removing pipe).

WARNING Crushing weight. If load falls or moves it could kill or crush you. Use proper procedures and equipment or stay away.

10. Remove pipe from auxiliary pipe loaders and store properly.
11. Repeat steps 6-9 to unload remaining added drill pipe.
12. After all added drill pipe is unloaded with auxiliary pipe loaders:
    - Close both auxiliary pipe loaders. Pins must be inserted in slot (A) and held in place with retaining pins.
    - Place pipe guide in storage position (shown) and secure in place with retaining pins.
    - Step away from pipeloader.
    - Finish loading remaining drill pipe using standard procedure.
    - If shuttle will not retract after completing single pipe operations, hold retract pipe shuttle switch and momentarily press multi-use button to reset shuttles to normal operation (shuttles will retract).

https://truckmanualshub.com/

Cruise Control

During the bore, you can set the desired thrust/pullback, and rotation speeds to match ground conditions. Cruise control enables the unit to maintain these settings hands-free. You can engage, disengage, override, and resume these settings at any time.

IMPORTANT: In order for cruise control to function, front wrench must be open and shuttles must be under pipe delivery chute (fully retracted).

Engage

Thrust/Pullback and Rotation Cruise	Thrust/Pullback Cruise Only
1. Position joystick so that thrust or pullback and rotation are at desired speeds. 2. Press set. Information Center will display "Cruise ON." 3. Release joystick.	1. Position joystick to desired thrust or pullback setting. 2. Press set. Information Center will display "Cruise ON." 3. Release joystick. 4. Operator can control rotation with joystick. In JT or AT Dirt modes, there is only clockwise rotation. In AT mode, there is clockwise and counterclockwise rotation so the operator can "wiggle" through cobble rock. ***NOTICE:*** Counterclockwise rotation can "break out" pipe joints downhole and unthread the joint. Operator should not rotate counterclockwise long enough to unthread a joint.

https://truckmanualshub.com/

Adjust Settings

Setting	Instructions
Thrust or Pullback	• To increase thrust or pullback speed, set joystick in neutral position and press resume. • To decrease thrust or pullback speed, set joystick in neutral position and press set.
Rotation	• To increase rotation speed, move joystick to left and press resume. • To decrease rotation speed, move joystick to left and press set.

Note: To obtain fine adjustments, press and hold the multi-use button while making the adjustment.

Override

- To override thrust/pullback settings, move joystick out of neutral and beyond current setting. Unit will increase to joystick setting.
- To return to previous setting, release joystick.

Disengage

To disengage cruise control, move joystick out of neutral in opposite direction of carriage travel. "Cruise ON" disappears from the Information Center display and carriage stops moving.

Resume

1. Position joystick out of neutral in direction to be resumed (forward or backward).
2. Press resume. Thrust and rotation resume at the previous settings and "Cruise ON" is shown on the Information Center.

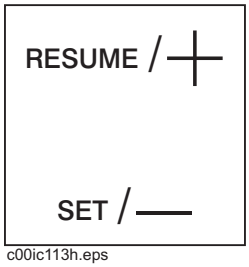

c00ic113h.eps

https://truckmanualshub.com/

Wireline Tracking

IMPORTANT: This section is intended as an overview for the JT30 drilling unit operator. During most bores, a wireline tracking specialist is responsible for making wireline connections. For specific information about wireline tracking, including system operation and safety precautions, consult your wireline tracking equipment vendor.

The Ditch Witch JT30 can be modified to operate a wireline tracking system by installing kit 190-1627. Wireline tracking uses a transmitter in the drilling head that is hard wired through the drill string to an offboard computer station at the rear of the unit. Each time pipe is added to the drill string, a new section of wireline is inserted through the new pipe, gearbox, and water swivel, then spliced to the tracking system. The operator must be aware of the wireline tracking specialist's activity at the front and rear of the machine.

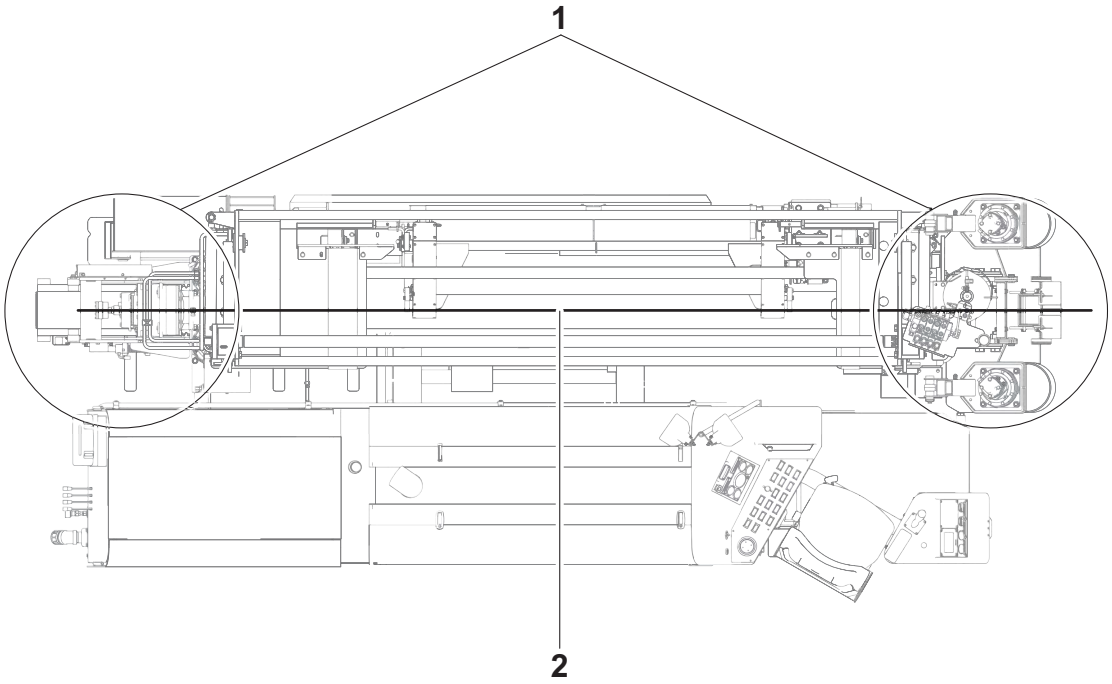

j34om013w.eps

1. Operator awareness zones
2. Wireline

https://truckmanualshub.com/

Operation

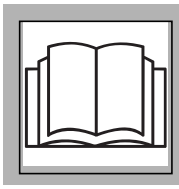

WARNING Incorrect procedures could result in death, injury, or property damage. Learn to use equipment correctly.

DANGER Turning shaft will kill you or crush arm or leg. Stay away.

To help avoid injury: Ensure that thrust and rotation are disabled while tracking specialist is working at front and rear of machine.

1. Connect drill head, transition sub, and wireline beacon housing.
2. Drill first pipe. After first pipe is downhole, clamp pipe in wrenches.
3. Position next pipe in shuttles.

WARNING Moving parts could cut off hand or foot. Stay away.

To help avoid injury:

- DO NOT operate pipe box, pipeloading, anchor, setup controls, or any other controls while tracking specialist is making wireline connections.
- Maintain constant two-way communication with tracking specialist.

https://truckmanualshub.com/

4. The tracking specialist will:
   - Turn the tracker control key to the ON position (shown) to disable thrust and rotation.
   - Insert a section of wireline through the pipe in the shuttles.
   - Splice one end of the new wire to the wireline in the clamped pipe.
   - Insert the other end (rear of machine) through the spindle, gearbox, and water swivel.
   - Turn the tracker control key to the OFF position to enable thrust and rotation.
5. Use the pipeloading controls to move the new pipe into position and makeup the joint.
6. The tracking specialist will:
   - Turn the tracker control key to the ON position (shown) to disable thrust and rotation.
   - Remove slack in the wireline.
   - Secure the wireline at the spindle.
   - Connect the wireline to the offboard computer.
   - Turn the tracker control key to the OFF position to enable thrust and rotation.
7. Install next new section of pipe.
8. Continue process for duration of bore.

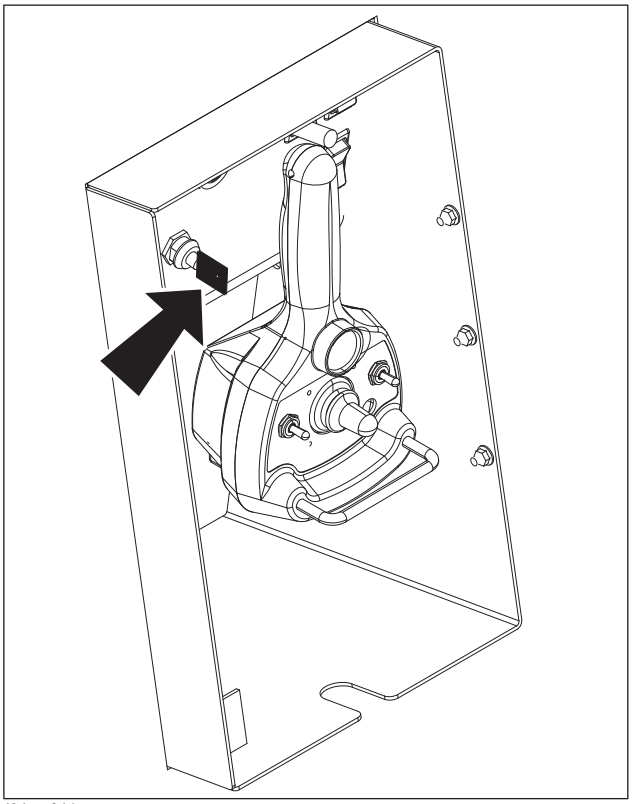

j34om014w.eps

https://truckmanualshub.com/

Diagnostic Codes

The JT30 / JT30 All Terrain is equipped with two diagnostic systems: engine and machine. The engine diagnostic system detects critical and non-critical errors within the engine operating system and communicates fault codes on the engine display. The machine diagnostic system detects essential and non-essential errors within the automated machine control system. These error codes are displayed on the onboard information center.

Electronic Controlled Engine Overview

This unit is equipped with a self-diagnostic computer-controlled fuel management system. A variety of sensors send input data to an ECU (Electronic Control Unit) that compares inputs with pre-programed parameters and sends output voltage to a variety of actuators to adjust and operate the engine within the specified parameters.

Warning indicators on the engine display tell the operator when critical and non-critical faults develop. Non-critical faults occur when engine sensors detect moderate trouble with coolant temperature, oil pressure, charge air temperature, or fuel temperature. Non-critical faults cause the operator alert indicator to light. Critical faults cause the engine shutdown indicator to light. In both cases, a fault code is stored in the ECU. If the fault corrects itself, the engine will gradually return to normal power. The alert indicator will continue to flash until the trouble goes away, but a fault code will remain stored.

Engine shutdown will occur due to critical faults in engine coolant temperature or oil pressure. Before shutdown, the operator alert indicator will light continuously and the engine will begin a rapid power derate. If the fault does not improve in 30 seconds the engine will shut down.

Reading Engine Diagnostic Codes

Problems with the engine are indicated by a popup message box on the engine display. The popup message is presented as either yellow for non-critical faults, or red for critical engine faults.

To hide/show active codes:

Press the soft key on the right next to the Hide icon. The message box will disappear, however the Warning or Stop message will remain on the screen until the fault is cleared.

Diagnostic Codes

SPN	FMI	Warning Color	Circuit	Error Description
27	4	amber	EGR valve position	Voltage below normal, or shorted to low source
91	3	red	accelerator pedal or lever position sensor 1	voltage above normal, or shorted to high source
91	4	red	accelerator pedal or lever position sensor 1	voltage below normal, or shorted to low source

https://truckmanualshub.com/

SPN	FMI	Warning Color	Circuit	Error Description
91	1	red	accelerator pedal lever position 1 sensor frequency	data valid but below normal operational range - most severe level
91	0	red	accelerator pedal or lever position sensor 1	data valid, but above normal operational range - most severe level
91	2	red	accelerator pedal or lever position sensor 1	data erratic, intermittent or incorrect
91	19	red	SAE J1939 multiplexed accelerator pedal or lever sensor system	received network data in error
91	9	red	SAE J1939 multiplexed accelerator pedal or lever sensor system	abnormal update rate
95	16	amber	fuel filter differential pressure	data valid but above mornal operating range, moderately severe
97	15	amber, blinking	water in fuel indicator	data valid but above normal operating range, least severe level
97	3	amber	water in fuel indicator sensor circuit	voltage above normal or shorted to high source
97	4	amber	water in fuel indicator sensor circuit	voltage below normal or shorted to low source
100	3	amber	engine oil rifle pressure 1 sensor	voltage above normal or shorted to high source
100	4	amber	engine oil rifle pressure 1 sensor	voltage below normal or shorted to low source
100	18	amber	engine oil rifle pressure	data valid but below normal operationg range - moderately severe level
100	1	red	engine oil rifle pressure	data valid but below normal operating range - most severe level
100	2	amber	engine oil rifle pressure	data erratic, intermittent or incorrect
101	16	amber	crankcase pressure	data valid but above normal operating range, moderately severe level
101	0	red	crankcase pressure	data valid but above normal operational range, most severe level
101	3	amber	crankcase pressure	voltage above normal or shorted to high source
101	4	amber	crankcase pressure	voltage below normal or shorted to low source

https://truckmanualshub.com/

SPN	FMI	Warning Color	Circuit	Error Description
101	2	amber	crankcase pressure	data erratic, intermittent, or incorrect
101	15	amber blinking	crankcase pressure	data valid but above normal operating range, least severe level
102	3	amber	intake manifold 1 pressure sensor	voltage above normal or shorted to high source
102	4	amber	intake manifold 1 pressure sensor	voltage below normal or shorted to low source
102	2	amber	intake manifold 1 pressure	data erratic, intermittent, or incorrect
103	16	amber	turbocharger 1 speed	data valid but above normal operating range, moderately severe level
103	18	amber	turbocharger 1 speed	data valid but below normal operating range, moderately severe level
103	15	amber	turbocharger 1 speed	data valid but above normal operating range, least severe level
105	3	amber	intake manifold 1 temperature sensor	voltage above normal or shorted to high source
105	4	amber	intake manifold 1 temperature sensor	voltage below normal or shorted to low source
105	0	red	intake manifold 1 temperature	data valid but above normal operational range, most severe level
105	16	amber	intake manifold 1 temperature	data valid but above normal operating range, moderately severe level
108	3	amber	barometric pressure sensor	voltage above normal or shorted to high source
108	4	amber	barometric pressure sensor	voltage below normal or shorted to low source
108	2	amber	barometric pressure sensor	data erratic, intermittent, or incorrect
110	3	amber	engine coolant temperature 1 sensor	voltage above normal or shorted to high source
110	4	amber	engine coolant temperature 1 sensor	voltage below normal or shorted to low source
110	16	amber	engine coolant temperature	data valid but above normal operating range, moderately severe level
110	0	red	engine coolant temperature	data valud but above normal operational range, most severe level
110	31	amber	engine coolant temperature	condition exists

https://truckmanualshub.com/

SPN	FMI	Warning Color	Circuit	Error Description
111	3	amber	coolant level sensor 1	voltage above normal or shorted to high source
111	4	amber	coolant level sensor 1	voltage below normal or shorted to low source
111	18	amber	coolant level	data valid but below normal operating range, moderately severe level
111	1	red	coolant level	data valid but below normal operational range, most severe level
111	17	amber blinking	coolant level	data valid but below normal operating range, least severe level
157	0	red	injector metering rail 1 pressure sensor	data valid but above normal operational range, most severe level
157	3	amber	injector metering rail 1 pressure sensor	voltage above normal or shorted to high source
157	4	amber	injector metering rail 1 pressure sensor	voltage below normal or shorted to low source
157	16	amber	injector metering rail 1 pressure	data valid but above normal operating range, moderately severe level
157	18	amber	injector metering rail 1 pressure	data valid but below normal operating range, moderately severe level
157	0	amber	injector metering rail 1 pressure	data valid but above normal operational range, most severe level
168	18	amber	battery 1 voltage	data valid but below normal operating range, moderately severe level
168	16	amber	battery 1 voltage	data valid but above normal operating range, moderately severe level
190	0	red	engine crankshaft speed/ position	data valid but above normal operational range, most severe level
190	2	amber	engine crankshaft speed/ position	data erratic, intermittent, or incorrect
190	2	none	engine crankshaft speed/ position	data erratic, intermittent, or incorrect
412	3	amber	exhaust gas recirculation temperature sensor	voltage above normal or shorted to high source
412	4	amber	exhaust gas recirculation temperature sensor	voltage below normal or shorted to low source

https://truckmanualshub.com/

SPN	FMI	Warning Color	Circuit	Error Description
412	15	none	exhaust gas recirculation temperature sensor	data valid but above normal operating range, least severe level
558	2	amber	accelerator pedal or lever idle validation switch	data erratic, intermittent, or incorrect
558	13	red	accelerator pedal or lever idle validation switch	out of calibration
558	9	red	accelerator pedal or lever idle validation switch	abnormal update rate
612	2	red	engine magnetic speed/ position lost both of two signals	data erratic, intermittent or incorrect
627	12	amber	injector power supply	bad intelligent device or component
627	2	none	power supply lost with ignition on	data erratic, intermittent, or incorrect
629	12	red	engine control module critical internal failure	bad intelligent device or component
629	12	amber	engine control module warning internal hardware failure	bad intelligent device or component
633	31	amber	electronic fuel injection control valve	condition exists
639	9	amber	SAE J1939 multiplexing PGN timeout error	abnormal update rate
639	13	amber	SAE J1939 multiplexing configuration error	out of calibration
651	5	amber	injector solenoid driver cylinder 1	current below normal or open circuit
652	5	amber	injector solenoid driver cylinder 2	current below normal or open circuit
653	5	amber	injector solenoid driver cylinder 3	current below normal or open circuit
654	5	amber	injector solenoid driver cylinder 4	current below normal or open circuit
677	3	amber	starter relay driver	voltage above normal or shorted to high source
677	4	amber	starter relay driver	voltage below normal or shorted to low source

https://truckmanualshub.com/

SPN	FMI	Warning Color	Circuit	Error Description
703	14	red	auxiliary equipment sensor input 3 engine protection critical	special instruction
723	7	amber	engine speed/position camshaft and crankshaft misalignment	mechanical system not responding or out of adjustment
723	2	amber	engine camshaft speed/ position sensor	data erratic, intermittent, or incorrect
723	2	none	engine camshaft speed/ position sensor	data erratic, intermittent, or incorrect
729	3	amber	engine intake air heater 1	voltage above normal or shorted to high source
729	4	amber	engine intake air heater 1	voltage below normal or shorted to low source
974	19	red	SAE J1939 multiplexing remote accelerator pedal or lever position sensor system	received network data in error
1172	3	amber	turbocharger 1 compressor intake temperature	voltage above normal or shorted to high source
1172	4	amber	turbocharger 1 compressor intake temperature	voltage below normal or shorted to low source
1209	3	amber	exhaust gas pressure sensor	voltage above normal or shorted to high source
1209	4	amber	exhaust gas pressure sensor	voltage below normal or shorted to low source
1209	2	amber	exhaust gas pressure sensor	data erratic, intermittent or incorrect
1347	4	amber	engine fuel pump pressurizing assembly 1	voltage below normal or shorted to low source
1347	3	amber	engine fuel pump pressurizing assembly 1	voltage above normal or shorted to high source
1623	9	amber	tachograph output shaft speed	abnormal update rate
1623	19	amber	tachograph output shaft speed	received network data in error
1675	31	none	[C2ST] engine starter mode overcrank protection	condition exists
2623	3	amber	accelerator pedal or lever position sensor 2	voltage above normal or shorted to high source

https://truckmanualshub.com/

SPN	FMI	Warning Color	Circuit	Error Description
2623	4	amber	accelerator pedal or lever position sensor 2	voltage below normal or shorted to low source
2791	13	amber	EGR valve control	out of calibration
2791	15	amber	EGR valve control over temperature	data valid but above normal operating range, least severe level
2791	5	amber	EGR valve control	current below normal or open circuit
2791	6	amber	EGR valve control circuit	current above normal or grounded circuit
2791	7	amber	EGR valve control circuit	mechanical system not responding or out of adjustment
2797	13	none	engine injector bank 1 barcodes	out of calibration
3509	4	amber	sensor supply 1	voltage below normal or shorted to low source
3509	3	amber	sensor supply 1	voltage above normal or shorted to high source
3510	4	amber	sensor supply 2	voltage below normal or shorted to low source
3510	3	amber	sensor supply 2	voltage above normal or shorted to high source
3511	4	amber	sensor supply 3	voltage below normal or shorted to low source
3511	3	amber	sensor supply 3	voltage above normal or shorted to high source
3512	4	amber	sensor supply 4	voltage below normal or shorted to low source
3512	3	amber	sensor supply 4	voltage above normal or shorted to high source
3513	4	amber	sensor supply 5	voltage below normal or shorted to low source
3513	3	amber	sensor supply 5	voltage above normal or shorted to high source
3514	4	amber	sensor supply 6	voltage below normal or shorted to low source
3514	3	amber	sensor supply 6	voltage above normal or shorted to high source
3597	18	amber	ECU power output supply voltage 1	data valid but below normal operating range, moderately severe level

https://truckmanualshub.com/

SPN	FMI	Warning Color	Circuit	Error Description
5571	7	none	[C2ST] High pressure common rail fuel pressure relief valve	mechanical system not responding or out of adjustment

https://truckmanualshub.com/

Machine Diagnostic System Overview

Use the Information Center to view condition of the machine automation diagnostic system. Under normal operating conditions, any diagnostic code that is recorded will be shown on the bottom line of the Information Center. Non-essential codes will remain for 10 seconds and then go away. Essential codes will remain until the operator clears them from the display. If diagnostic codes are detected, the diagnostic light will either flash on and off for 10 seconds to indicate a non-essential code or remain on for 3 seconds and off for half a second to indicate an essential code.

Code Severity Levels

Diagnostic codes are given one of two levels of severity.

- A **non-essential** code affects non-essential functions of the unit. If the system detects a non-essential problem, a diagnostic code will be recorded and the diagnostic light will flash for 10 seconds and then go out. Each time ignition is turned on, full operation will be available until the diagnostic system detects a problem.
- An **essential** code affects rotation, thrust, drilling fluid, or ground drive. If the system detects an essential problem, a diagnostic code will be recorded and the diagnostic light will cycle on for three seconds and off for 1/2 second. Some machine functions may not work until the problem is corrected. Each time ignition is turned on, full operation will be available until the diagnostic system detects a problem.

Machine Diagnostic Codes

The following table lists the attributes of each diagnostic code. Information presented includes: code number, condition causing code to be sent, result, and level of severity.

Code	Display	Condition	Result	Severity
12	START MSG	normal entry into diagnostic mode	code is not stored	n/a
13	m12VOLT OUTPUT	no 12V power to main controller	drill and drive are blocked	essential
14	m5VOLT OUTPUT	no 5V power from main controller	drill and drive are blocked	essential
15	m6VOLT DRIVER	incorrect voltage on 6V driver on main controller	drive is blocked	essential
16	p12VOLT OUT	no 12V power to pipe controller	drill fluid is blocked	essential
17	p5VOLT OUT	no 5V power from pipe controller	drill fluid is blocked	essential
18	p6VOLT DRIVER	incorrect voltage on 6V driver on pipe controller	code is stored	essential
19	MISC OUTPUT	unknown output driver continuity problem	code is stored	non-essential

https://truckmanualshub.com/

Code	Display	Condition	Result	Severity
20	pMISC OUTPUT	unknown output driver continuity problem in pipe controller	code is stored	non-essential
21	FRWRNCH CLOSE	no continuity to front wrench close solenoid	code is stored	non-essential
23	REWRNCH CLOSE	no continuity to rear wrench close solenoid	code is stored	non-essential
25	WRNCH CW ROT	no continuity to wrench cw rotate solenoid	code is stored	non-essential
31	WRNCH CCW ROT	no continuity to wrench ccw rotate solenoid	code is stored	non-essential
32	SHUTTLE EXT	no continuity to shuttle extend solenoid	add pipe or remove pipe is aborted and code is stored	non-essential
33	SHUTTLE RET	no continuity to shuttle retract solenoid	add pipe or remove pipe is aborted and code is stored	non-essential
34	PIPE LIFT	no continuity to pipe lift solenoid	add pipe or remove pipe is aborted and code is stored	non-essential
35	PIPE LOWER	no continuity to pipe lower solenoid	add pipe or remove pipe is aborted and code is stored	non-essential
41	PIPE GRIP	no continuity to pipe grip solenoid	add pipe or remove pipe is aborted and code is stored	non-essential
42	PIPE REL	no continuity to pipe release solenoid	add pipe or remove pipe is aborted and code is stored	non-essential
44	LUBE FRONT	no continuity to lube front solenoid	code is stored	non-essential
45	THRUST 2 SPD	no continuity to thrust two-speed solenoid	code is stored	non-essential
46	AUX DUMP	no continuity to auxiliary dump valve	add pipe or remove pipe is aborted and code is stored	non-essential
47	PIPE BOX IN	no continuity to pipe box in solenoid	code is stored	non-essential
48	PIPE BOX OUT	no continuity to pipe box out solenoid	code is stored	non-essential
51	ROTCW/LTREV	no continuity to rotation cw/ left track reverse solenoid	cruise control, carve mode, and drive are blocked	essential
52	ROTCCW/LTFWD	no continuity to rotation ccw/ left track forward solenoid	cruise control, carve mode, and drive are blocked	essential

https://truckmanualshub.com/

Code	Display	Condition	Result	Severity
53	THRFWD/RTFWD	no continuity to thrust forward/right track forward solenoid	cruise control, carve mode, and drive are blocked	essential
54	THRBWD/RTREV	no continuity to thrust backward/right track reverse solenoid	cruise control, carve mode, and drive are blocked	essential
55	THR BRAKE REL	no continuity to thrust brake valve	cruise control and carve mode are blocked	essential
57	DRV BRAKE REL	no continuity to ground brake solenoid	code is stored	essential
58	DRIVE SELECT	no continuity to drive selector valve	drive is blocked	essential
59	TKR CNT LIGHT	no continuity to tracker control light	code is stored	non-essential
61	DFLUID PUMP	no continuity to drilling fluid pump solenoid	code is stored	essential
63	DFLUID ENABLE	no continuity to fluid enable solenoid	code is stored	essential
64	DFLUID 2 SPD	no continuity to fluid two-speed solenoid	code is stored	non-essential
74	INNER ROT CW	no continuity to inner rotation clockwise solenoid	code is stored	essential
75	INNER ROT CCW	no continuity to inner rotation counter-clockwise solenoid	code is stored	essential
76	THRUST LIMIT	no continuity to thrust limit solenoid	code is stored	non-essential
81	MAIN WRONG ID	main controller has pipe ID on CAN ID line	controller runs in service mode	essential
82	PIPE WRONG ID	pipe controller has main ID on CAN ID line	controller runs in service mode	essential
83	MAIN INVAL ID	main controller has invalid ID on CAN ID line	controller runs in service mode	essential
84	PIPE INVAL ID	pipe controller has invalid ID on CAN ID line	controller runs in service mode	essential
85	MAIN NOSAV ID	main controller has no saved ID	controller runs in service mode	essential
86	PIPE NOSAV ID	pipe controller has no saved ID	controller runs in pipeloader service mode	essential

https://truckmanualshub.com/

Code	Display	Condition	Result	Severity
87	HARNESS POSN	ID state does not agree with harness position and cannot be resolved	controller runs in EDT only mode	essential
88	CAN BOOT TO	timeout has occurred while waiting for CAN system to boot	controller runs in service mode	essential
91	CAN PHYS ERR	errors on the CAN Bus totalling 275 have been logged	code is stored	non-essential
92	MAIN BUS OFF	main controller has shutdown CAN communications	controller runs in main service mode	essential
93	PIPE BUS OFF	pipe controller has shutdown CAN communications	controller runs in pipeloader service mode	essential
94	MAIN PROTOCOL	main controller has an incorrect protocol message	code is stored	non-essential
95	PIPE PROTOCOL	pipe controller has an incorrect protocol message	code is stored	non-essential
96	MAIN NG FAIL	main controller has detected node guard timeout	controller runs in main service mode	essential
97	PIPE NG FAIL	pipe controller has missed a node guard from the master	controller runs in pipeloader service mode	essential
98	MAIN LOG FAIL	pipe controller has had an internal software failure	controller runs in main service mode	essential
99	PIPE LOG FAIL	pipe controller has had an internal software failure	controller runs in pipeloader service mode	essential
111	TETH NG FAIL	tether controller has missed a node guard from the main controller	drive is blocked	essential
112	ESID NG FAIL	ESID controller has missed a node guard from the main controller	code is stored	non-essential
113	ICTR NG FAIL	Information Center has missed a node guard from the main controller	code is stored	non-essential
131	THREAR HSW	no continuity to thrust rear home switch	add pipe and remove pipe are blocked	non-essential
132	THFRNT HSW	no continuity to thrust front home switch	add pipe and remove pipe are blocked	non-essential

https://truckmanualshub.com/

Code	Display	Condition	Result	Severity
133	SHUTTL HSW	no continuity to shuttle home switch	add pipe and remove pipe are blocked	non-essential
134	FWRNCH PSW	no continuity to front wrench switch	add pipe and remove pipe are blocked	non-essential
136	TH REAR STOP	no continuity to thrust rear stop switch	add pipe and remove pipe are blocked	non-essential
137	PIPE UP PSW	no continuity to pipe up switch	pipe box movement is blocked and code is stored	non-essential
138	FRONT BOX HSW	no continuity to front pipe box switch	code is stored	non-essential
139	REAR BOX HSW	no continuity to rear pipe box switch	code is stored	non-essential
141	ROTATE POS	no continuity to rotation position sensor	code is stored	non-essential
143	DFLUID GPM	no continuity to drilling fluid speed sensor	code is stored	non-essential
146	FLOAT POS	no continuity to float position sensor	assisted makeup is blocked and code is stored	non-essential
147	TKR CONTROL	no continuity to tracker control input	code is stored	non-essential
149	ANCHOR ON PSW	no continuity to anchor pressure switch	code is stored	non-essential
151	DRL JOY L/R	drill joystick left/right out of range	rotation, cruise control, and carve mode are blocked	essential
152	DRL JOY F/B	drill joystick forward/ backward out of range	thrust, cruise control, and carve mode are blocked	essential
153	DRV JOY L/R	drive joystick left/right out of range	drive is blocked	essential
154	DRV JOY F/B	drive joystick forward/ backward out of range	drive is blocked	essential
156	DR FLUID POT	drilling fluid potentiometer out of range	code is stored	essential
158	FAN POSN SEN	no information from engine fan pulse pickup sensor	code is stored and fan is controlled without feedback	non-essential
161	ROT PRES SEN	rotation pressure sensor out of range	code is stored	non-essential
162	THR PRES SEN	thrust pressure sensor out of range	code is stored	non-essential

https://truckmanualshub.com/

Code	Display	Condition	Result	Severity
163	DFLD PRES SENS	drilling fluid pressure sensor out of range	code is stored	non-essential
165	SHUTL STOP SW	no continuity to shuttle stop switch	shuttles are blocked	non-essential
171	PIPE GRIP RSW	no continuity to pipe grip rocker switch	code is stored	non-essential
172	SHUTTLE RSW	no continuity to pipe shuttle rocker switch	code is stored	non-essential
173	PIPE LIFT RSW	no continuity to pipe lift rocker switch	code is stored	non-essential
174	PIPE BOX RSW	no continuity to pipe box rocker switch	code is stored	non-essential
175	PIPE LUBE RSW	no continuity to pipe lube rocker switch	code is stored	non-essential
181	FRONT WR RSW	no continuity to front wrench rocker switch	code is stored	non-essential
182	REAR WR RSW	no continuity to rear wrench rocker switch	code is stored	non-essential
183	ROT WR RSW	no continuity to rotating wrench rocker switch	code is stored	non-essential
184	THROTTLE RSW	no continuity to throttle rocker switch	code is stored	non-essential
185	SET/RES RSW	no continuity to set/resume rocker switch	code is stored	non-essential
191	JT/AT RSW	no continuity to JT/AT rocker switch	code is stored	non-essential
192	INNER ROT RSW	no continuity to inner rotation rocker switch	inner rotation is blocked	essential
193	INNER ROT POT	inner rotation potentiometer out of range	inner rotation is blocked	essential
194	INNER ROT JOG	inner rotation jog switch out of range	code is stored	non-essential
195	INNER ROT POS	no continuity to inner rotation position sensor	dither compensation is blocked	non-essential
196	IROT PRES SEN	inner rotation pressure out of range	code is stored	non-essential
221	LOW VOLTAGE	system voltage is below 12.5V	code is stored	non-essential

https://truckmanualshub.com/

Code	Display	Condition	Result	Severity
222	INNER ROT SPD	inner rotation position sensor not changing	dither compensation is blocked	non-essential
223	ROTATE SPD	rotation position sensor not changing	full auto pipe is blocked	non-essential
231	PIPELOADER RSW	more than two pipeloader rocker switches are active	pipeloader functions are blocked	essential
233	DRL/DRV SW	both drill (in seat) and drive (tether) operator presence inputs are present	unit will not drill or drive; will recover if condition clears	essential
234	ADDP/REMP SW	add pipe and remove pipe inputs both on	add pipe and remove pipe are blocked	non-essential
235	TH F/R HSW	front and rear home switch inputs both on	add pipe and remove pipe are blocked	non-essential
241	SHUTTLE RESP	shuttles not responding correctly	add pipe or remove pipe is aborted and code is stored	non-essential
251	FLOAT ZERO	float sensor is reading too low	assisted makeup is blocked and code is stored	non-essential
252	FLOAT RANGE	float sensor is reading out of range	assisted makeup is blocked and code is stored	non-essential
253	A2D SYNCH	questionable voltage reading on controller circuit board	code is stored	non-essential
254	SETUP TABLE	error reading setup table information	add pipe and remove pipe are blocked	essential
255	MISC CODE	undefinable diagnostic code reported	code is stored	non-essential
412	START MSG	normal entry into diagnostic mode for Information Center	code is not stored	
413	3VOLT POWER	3V power error in Information Center		
414	5VOLT OUTPUT	5V output error in Information Center		
415	MSC OUTPUT	misc output error in Information Center	code is stored in Information Center	
416	BACKLIGHT PWR	backlight power error	backlight may not function correctly	
417	LCD -20V PWR	LCD -20V power error	LCD may not function correctly	

https://truckmanualshub.com/

Code	Display	Condition	Result	Severity
441	ICTR PHYS ERR	errors on CMW CAN Bus totalling 275 have been logged	throttle, engine fan, and some status lights no longer work correctly; may recover if condition clears	non-essential
442	1939 PHYS ERR	errors on the J1939 Bus totalling 275 have been logged		
443	ICTR BUS OFF	Information Center has shut down CMW CAN communications		
444	1939 BUS OFF	Information Center has shut down J1939 communications		
445	ICTR PROTOCOL	Information Center has an incorrect CMW CAN protocol message	code is stored in Information Center	
446	1939 PROTOCOL	Information Center has an incorrect J1939 protocol message	code is stored in Information Center	
447	ICTR NG FAIL	Information Center has detected a CAN nodeguard timeout	code is stored in Information Center	
448	1939 NG FAIL	Information Center has detected a J1939 nodeguard timeout	code is stored in Information Center	
449	ICTR LOG FAIL	Information Center has had an internal CMW CAN software failure	throttle, engine fan, and some status lights no longer work correctly	
450	1939 LOG FAIL	Information Center has had an internal J1939 software failure	throttle, engine fan, and some status lights may not work correctly	non-essential
452	MAIN MSG TOUT	CAN message from main controller failed to arrive	code is shown and display waits for next message	non-essential
453	PIPE MSG TOUT	CAN message from pipeloader controller failed to arrive at info center	code is shown and display waits for next message	non-essential
454	ESID MSG TOUT	CAN message from ESID failed to arrive at info center	code is shown and display waits for next message	non-essential
455	OPER MSG TOUT	operations CAN message failed to arrive at info center	code is shown and display waits for next message	non-essential

https://truckmanualshub.com/

Code	Display	Condition	Result	Severity
456	OTHER MSG TO	some other CAN message failed to arrive at info center on time	code is shown and display waits for next message	non-essential
457	TETH MSG TOUT	iCTR did not received a CAN message from the tether before timeout	unit will not drive	essential
458	EC CAN OFF	iCTR did not received a 1939 CAN message from the engine controller	functions that require information from the engine will not work (throttle, fan control)	non-essential
461	SD CARD FAIL	Information Center detected an error with the SD card	SD card language functions will not work	non-essential
462	SD LOG FAIL	Information Center has had a problem writing to the SD card	code is stored in Information Center	non-essential
463	SD FILE OPEN	Information Center has had a problem opening a file on the SD card	SD card language functions may not work	non-essential
464	SD LANG LOAD	iCTR has detected a problem with the SD card while trying to load languages	New languages cannot be loaded on the iCTR; system defaults to English	non-essential
488	SETUP TABLE	error reading setup table information	code is stored in Information Center	
489	MISC CODE	invalid error report entry	code is stored in Information Center	
490	RUN HRS	total number of info center run hours in tenths of an hour	n/a	
502	2.5V REF	2.5V reference error in ESID	internal reference failure, ESID may not give valid readings	
503	-5V REF	-5V reference error in ESID	internal reference failure, ESID may not give valid readings	
504	CLK RESP	clock response error	clock may not be working	
505	LCD RESP	LCD response error	LCD display may not work	
506	LED RESP	LED response error	LED display may not work	
507	LCD CONTR	LCD contrast error	LCD contrast not saved properly	

https://truckmanualshub.com/

Code	Display	Condition	Result	Severity
508	COP RESET	cop watchdog error	processor has reset, unknown status of ESID code	
510	STRB DVR	strobe driver output error	strobe may not function	
511	HORN DVR	horn driver output error	horn may not function	
512	BAT POWER	battery power/horn driver error	strike hold on power may not function	
513	TEST WIRE	no continuity on test wire for testing ESID	Information Center may not be able to reset ESID	
515	STR VOLT	strike voltage input error		
516	STR COIL	strike current input error		
517	POST AC V	self test ac voltage input error	self test of ac voltage stake failed	
518	POST AC I	self test ac current input error	self test of ac current coil failed	
519	POST DC V	self test dc voltage input error	self test of dc voltage input amplifier failed	
520	POST DC I	self test dc current input error	self test of dc current input amplifier failed	
521	V NOT GND	strike voltage input stake not grounded	self test of voltage stake failed	
541	ESID PHYS ERR	errors on the CAN Bus totalling 275 have been logged	code is stored in ESID	
542	ESID BUS OFF	ESID has shutdown CAN communications	CAN information is no longer transmitted to Information Center	
546	MAIN NG FAIL	ESID has not received the Node Guard message from the Main Controller	ESID access via the CAN BUS may not work, but ESID will still sound strike alarms	essential
588	EEP WRITE	EEProm write error	ESID may not be able to record strike history	
589	MISC CODE	invalid error report entry	software error report	

https://truckmanualshub.com/

Service Mode

Automated functions of the JT30 are made possible by communication between five electronic controllers onboard the unit. The main controller and pipeloader controller share information as a single unit. If communication between these two controllers is lost, full operation is not possible and the unit will shift into Service Mode. Service Mode permits limited operation without automated functions and standard equipment protections. In Service Mode, an operator can complete a bore and move the unit away from the jobsite so that proper repairs can be made at a Ditch Witch dealership.

NOTICE: Some automated functions that protect components from damage are NOT available in Service Mode. **Use extreme caution when operating in Service Mode.**

IMPORTANT: Only a qualified Ditch Witch service technician can return the unit to normal operation. Contact your Ditch Witch dealership.

This table explains how automated functions are affected in Service Mode.

Function	Normal Operation	Service Mode Operation
Slow Zones Purpose: To protect carriage from high speed or high pressure impact at the front and rear of the drill frame.	Carriage speed automatically slows as the carriage approaches sensors at the front and rear of the drill frame.	Front home and rear home sensor input data is not available. Carriage speed is limited to the slow zone speed. To access full thrust speed/pressure, press and hold the 2-speed button. **Use caution to prevent damage.**
Shuttle Safe Purpose: To protect shuttles from carriage movement.	Carriage movement stops automatically if shuttles are not retracted when carriage moves away from rear home sensor.	Front and rear home sensor input data is not available. Carriage may strike shuttles. Operator must fully retract shuttles before moving carriage.
Auto Dither Purpose: Aligns the hex inner rod and collar on AT units when threading a section of drill pipe.	In AT mode, the inner rod rotates clockwise, then counterclockwise repeatedly as carriage moves forward to align inner rod with inner rod collar.	Inputs required to establish dither are unavailable. Operator must use manual jog potentiometer to rotate inner rod while threading pipe sections. **Note:** In Service Mode, the ON/OFF/ MANUAL switch is not required to enable the jog potentiometer.

https://truckmanualshub.com/

Function	Normal Operation	Service Mode Operation
Rear Stop Purpose: To stop carriage before it reaches the rear of the drill frame.	Machine automatically stops pullback when carriage reaches the rear stop sensor.	Rear stop sensor data is not available. Carriage may impact rear of drill frame. Operator must manually slow carriage and ease it against the rear carriage stop.
Assisted Makeup/Float Purpose: To protect threads on saver sub and pipe sections.	Machine automatically coordinates thrust and rotation speed to reduce thread wear/ damage.	Data from the float sensor is not available. Operator must use the joystick to manually coordinate thrust and rotation speed when threading pipe.
Auto Pipe Release Purpose: To keep pipe lifters from forcing pipe through closed grippers.	When pipe grippers are positioned at pipe delivery chute, grippers automatically open when pipe lifters are raised and lowered.	Pipe gripper position data is not available. Operator must open the grippers before raising or lowering the pipe in the grippers at the delivery chute
Automated Pipe Handling Purpose: Automates most of the operations required to add or remove pipe from the drill string.	Activated with the Add/ Remove Pipe switch on the operator's console. Machine automates many functions during pipe change operations.	Pipeloader automation is unavailable. Operator must activate each function using the joystick and the pipeloader control switches on the operator's console.
Information Center, Main Display	Displays machine information and pipeloading status.	Data from some functions is unavailable to the information center. Some data fields will flash, some will display "Service Mode" and a scrolling message, and others will be replaced with dashes. Affected data fields include: float position, drill fluid, tracker control, cruise control, carve mode, pipeloader status, rotation, and EDT test mode.
Information Center, JTCntrl-EDT Displays	Displays addition information and status of switches, sensors, etc.	When data from a function is unavailable, three dashes (---) will be displayed.

https://truckmanualshub.com/

https://truckmanualshub.com/

Complete the Job

Chapter Contents

Antifreeze Drilling Unit 191

- Add Antifreeze 191
- Reclaim Antifreeze 192

Rinse Equipment 192

Disconnect 194

Stow Tools 194

https://truckmanualshub.com/

Antifreeze Drilling Unit

Your drilling unit can be left overnight in freezing conditions by filling fluid lines with a polyproplyene-based antifreeze (p/n 265-644) with optional antifreeze system before shutdown.

Add Antifreeze

1. Fill antifreeze tank with 8 gal (30 L) of approved antifreeze.
2. Install plug on suction side of drilling fluid pump.
3. Open valve below antifreeze tank.
4. Install antifreeze reclaimer adapter in spindle. Ensure valve (shown) is open.
5. Turn drilling fluid potentiometer counterclockwise to zero position.
6. Start unit and set throttle to slow position.
7. Set drilling fluid pump switch to on position.
8. Slowly turn drilling fluid potentiometer clockwise until indicator light comes on. If light does not come on, press drilling fluid pump switch.
9. Run drilling fluid pump until antifreeze comes out of spindle.
10. Turn drilling fluid pump switch to off position. Close valve on antifreeze reclaimer adapter.
11. Open valve below right operator's console (shown).
12. Repeat steps 5-8.
13. Close valve below right console when antifreeze runs out of valve below right console.
14. Turn drilling fluid pump switch to off position.

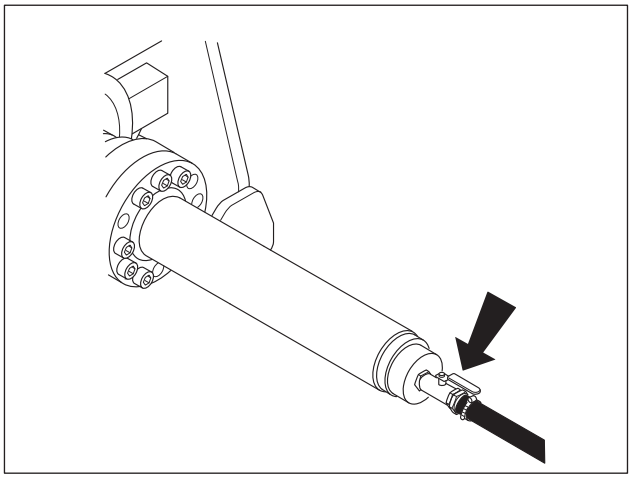

j34om015w.eps

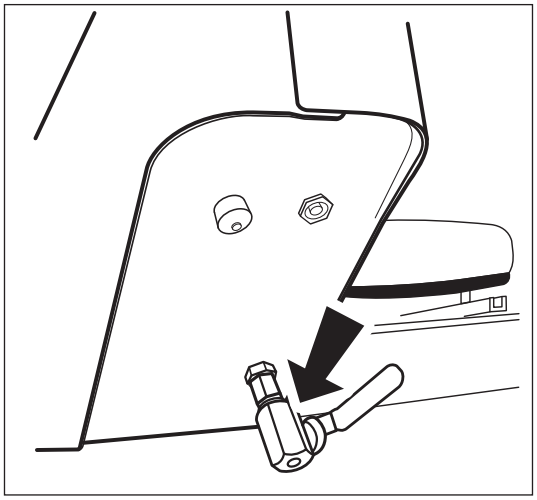

j07om050c.eps

https://truckmanualshub.com/

Reclaim Antifreeze

1. Hold hose on antifreeze reclaimer over top of antifreeze tank.
2. Open valve on reclaimer (shown).
3. Connect drilling fluid transfer hose from tanks to drilling fluid pump inlet.
4. Close valve below antifreeze tank.
5. Start unit and run at low throttle.
6. Turn drilling fluid pump on low speed.
7. Turn drilling fluid pump off when drilling fluid comes out of reclaimer hose.
8. Remove antifreeze reclaimer.

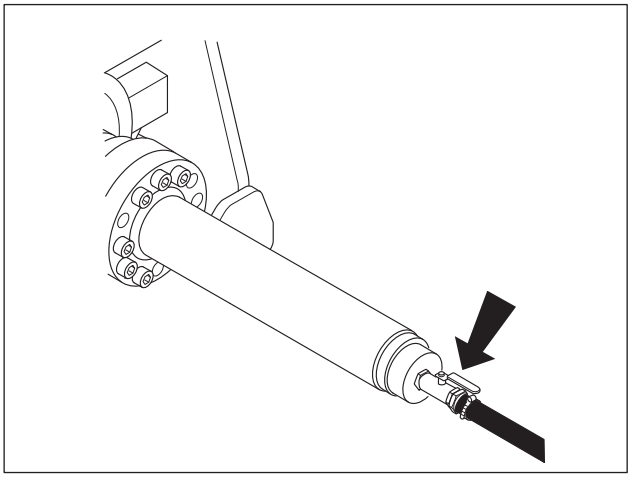

j34om015w.eps

IMPORTANT: Antifreeze can be removed from antifreeze tank and disposed of properly or it can be reused until it is too diluted with drilling fluid to protect against freezing.

https://truckmanualshub.com/

Rinse Equipment

Using Washwand

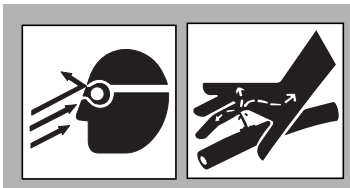

WARNING Pressurized fluid or air could pierce skin and cause injury or death. Stay away.

To help avoid injury:

- Never use high flow when using washwand.
- Prime the drilling fluid pump before operating washwand. Failure to prime the drilling fluid pump will cause flow fluctuations, which will make it difficult to control the washwand. For instructions, see "Connect Fluid System" on page 102.

NOTICE: Do not spray water onto operator's console. Do not spray water onto electrical center in engine compartment. Electrical components could be damaged. Wipe down instead.

1. Connect the washwand at quick connect (2) at rear of unit. Close valve to stop water flow. Close valve (1) to shut off flow to spindle.
2. Spray water onto equipment to remove dirt and mud. Some pressure might be needed to remove dried mud from wrench area.

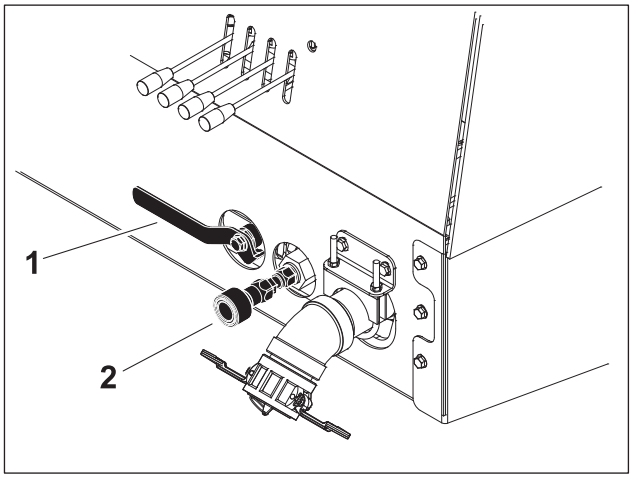

j22om024h.eps

https://truckmanualshub.com/

Disconnect

Disconnect and store the following hoses and cables (if used):

- electric strike system voltage stake
- fluid hose

Stow Tools

Make sure all quick wrenches, bits, pullback devices, and other tools are loaded and properly secured on trailer or truck.

https://truckmanualshub.com/

https://truckmanualshub.com/

Service

Chapter Contents

Service Precautions 198

- Welding Precaution 197
- Washing Precaution 197
- Working Under Drilling Unit 198

Recommended Lubricants/Service Key 200

- Approved Coolant 201
- Approved Fuel 202

10 Hour 204

25 Hour 212

50 Hour 212

250 Hour 217

500 Hour 218

1000 Hour 220

2000 Hour 224

As Needed 225

https://truckmanualshub.com/

Service Precautions

WARNING Incorrect procedures could result in death, injury, or property damage. Learn to use equipment correctly.

To help avoid injury:

- Unless otherwise instructed, all service should be performed with engine off.
- Refer to engine manufacturer's manual for engine maintenance instructions.

Welding Precaution

NOTICE: Welding can damage electronics.

- Welding currents can damage electronic components. Always disconnect the ECU ground connection from the frame, harness connections to the ECU, and other electronic components prior to welding on machine or attachments. Connect welder ground close to welding point and make sure no electronic components are in the ground path.
- Disconnect battery at battery disconnect switch before welding to prevent damage to battery.
- Do not turn off battery disconnect switch with engine running, or alternator and other electronic devices may be damaged.

Washing Precaution

NOTICE:

- Water can damage electronics.
- When cleaning equipment, do not spray electrical components with water.

https://truckmanualshub.com/

Working Under Drilling Unit

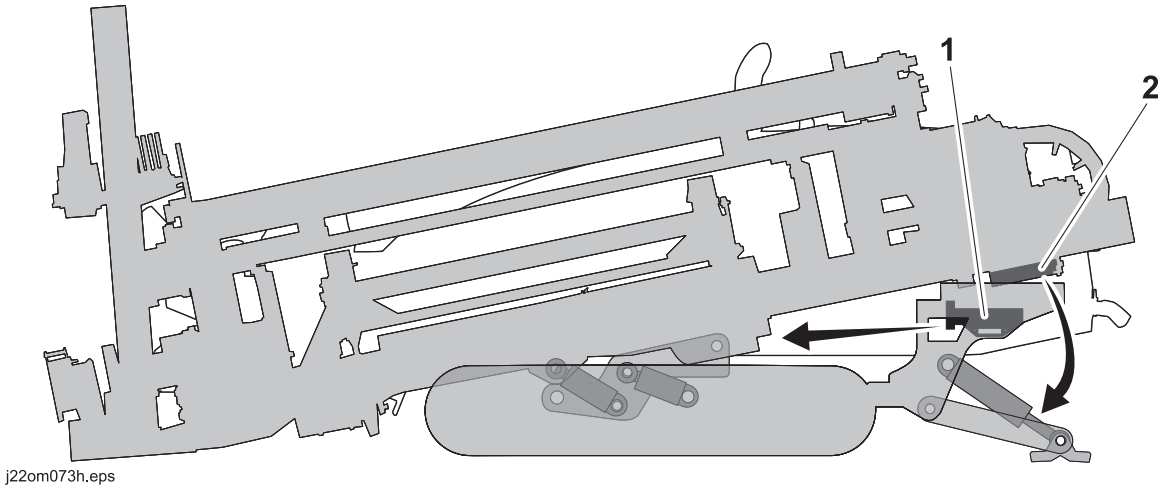

WARNING Crushing weight could cause death or serious injury. Use proper procedures and equipment or stay away.

Before working under area of drilling unit supported by a stabilizer, make sure drilling unit is parked on hard surface.

1. Remove cylinder locks from storage at rear of pipe box (2) and place over extended cylinder rods (shown) with curved ends toward stabilizer shoes.
2. Lower unit until load is supported by cylinder locks.

Before working under area of drilling unit supported by **frame tilt cylinder**, make sure drilling unit is parked on hard surface.

1. Remove drill frame support stored under rear step (1) and place under drill frame (shown).
2. Lower drill frame until load is supported by drill frame support.

Replace cylinder locks or drill frame support if damaged.

https://truckmanualshub.com/

Opening/Closing Front Hood

To open:

1. Unlock hood at lower handle (1) and upper latches (2), if hood is locked.
2. Twist lower handle (1) and lift hood upward and outward.
3. Continue lifting hood and push inward until up-latch (3) engages.

To close:

1. Disengage the up-latch (3) by holding it up as the hood is pulled outward using the lower handle (1).
2. Pull outward on the hood until it begins to move downward.
3. Place other hand on top outer surface of hood (4) and firmly push downward and inward until hood is completely closed, latch upper latches.
4. Lock hood at lower handle and upper latches, if desired.

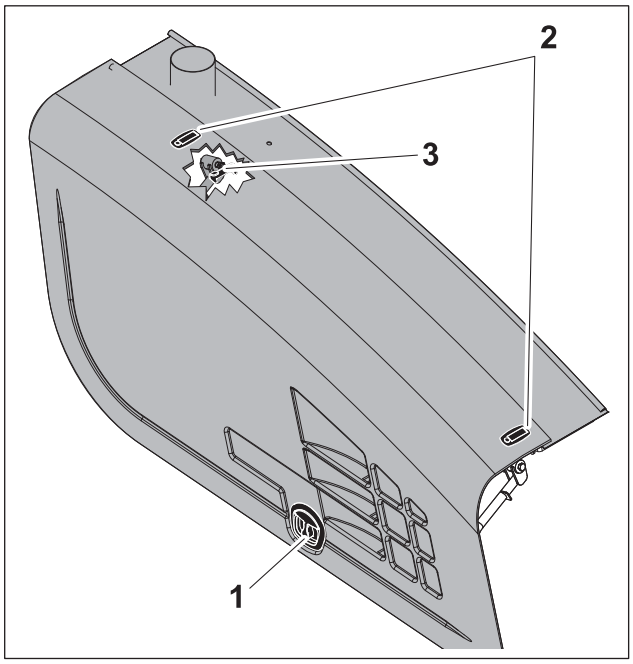

j22om020h.eps

https://truckmanualshub.com/

Recommended Lubricants/Service Key

Item	Description
Tier 4i DEO	Diesel engine oil meeting or exceeding Cummins 20081, API CJ-4, ACEA E9. • Engine must use low SAPS oil (ash will plug aftertreatment device.) • Use viscosity grade SAE 15W40 unless ambient temperatures below 5° F (-15° C) are expected. Lower viscosity oils must meet the performance specifications shown above. API American Petroleum Institute, ACEA European Automobile Manufacturer's Association.
Tier 3 DEO	Diesel engine oil meeting or exceeding Cummins 20078, API CH-4, ACEA E5. ***NOTICE:*** Shipped from factory with CJ-4 DEO. Change oil initially at 250 hrs. Use viscosity grade SAE 15W40 unless ambient temperatures below 5° F (-15° C) are expected. Lower viscosity oils must meet the performance specifications shown above. API American Petroleum Institute, ACEA European Automobile Manufacturer's Association.
NDO	SAE 30 Non-detergent oil
MPG	Multipurpose grease. Use polyurea based NLGI GC-LB Grade 1.5 or lithium based NLGI GC-LB Grade 2.
EPG	Open gear extreme pressure lubricant (p/n 256-666)
EPS	Open gear extreme pressure lubricant, spray (p/n 256-034)
MPL	Multipurpose gear oil meeting API service classification GL-5 (SAE 80W90)
THF	Tractor hydraulic fluid, similar to Phillips 66 HG, Mobilfluid 424, Chevron Tractor Hydraulic Fluid, Texaco TDH Oil, or equivalent
TJC	Tool joint compound: Ditch Witch standard (p/n 259-858) or summer grade (p/n 256-031)
DEAC	Diesel engine antifreeze/coolant meeting ASTM D5345 (prediluted) or D4985 (concentrate)
	Check level of fluid or lubricant
	Check condition
	Filter
	Change, replace, adjust, service or test

https://truckmanualshub.com/

Proper lubrication and maintenance protects Ditch Witch equipment from damage and failure. Service intervals listed are for minimum requirements. In extreme conditions, service machine more frequently. Use only recommended lubricants. Fill to capacities listed in "Fluid Capacities" on page 237.

For more information on engine lubrication and maintenance, see your engine manual.

NOTICE:

- Use only genuine Ditch Witch parts, filters, approved lubricants, TJC, and approved coolants to maintain warranty.
- Use the "Service Record" on page 244 to record all required service to your machine.

Approved Coolant

This unit was filled with John Deere Cool-Gard coolant before shipment from factory. Add only John Deere Cool-Gard (p/n 255-006) or any fully-formulated, ethylene glycol based, low-silicate, heavy-duty diesel engine coolant meeting ASTM specification D5345 (prediluted) or D4985 (concentrate).

NOTICE:

- Do not use water or high-silicate automotive-type coolant. This will lead to engine damage or premature engine failure.
- Use only distilled water for mixing coolants. Do not use tap water.

https://truckmanualshub.com/

Approved Fuel

Tier 4i Engine (U.S., Canada, EU, and Japan)

This engine is designed to run on diesel fuel. Use only high quality fuel meeting ASTM D975 No. 2D, EN590, or equivalent. At temperatures below 32° F (0° C) winter fuel blends are acceptable. See the engine operation manual for more information.

NOTICE: Use only Ultra Low Sulfur Diesel (less than 15ppm sulfur content) in this unit. Operating with higher sulfur content will damage the engine and aftertreatment device.

Biodiesel blends up to 5% (B5) are approved for use in this unit. The fuel used must meet the specifications for diesel fuel shown above. In certain markets, higher blends may be used if certain steps are taken. Extra attention is needed when using biodiesel, especially when operating in cold weather or storing fuel. Contact your Ditch Witch dealer or the engine manufacturer for more information.

Tier 3 Engine (Rest of World)

This engine is designed to run on diesel fuel. Use only high quality fuel meeting ASTM D975 No. 2D, EN590, or equivalent. At temperatures below 32° F (0° C) winter fuel blends are acceptable. See the engine operation manual for more information.

IMPORTANT: Worldwide, fuel sulfur regulations vary widely. Fuel used should always comply with local regulations. Prior to shipping, Tier 3 units were filled with Tier 4i DEO. If operating fuel with sulfur content above 15 ppm (0.0015%), change oil initially at 250 hours.

Biodiesel blends up to 5% (B5) are approved for use in this unit. The fuel used must meet the specifications for diesel fuel shown above. In certain markets, higher blends may be used if certain steps are taken. Extra attention is needed when using biodiesel, especially when operating in cold weather or storing fuel. Contact your Ditch Witch dealer or the engine manufacturer for more information.

https://truckmanualshub.com/

Each Use

Location	Task	Notes
DOWNHOLE TOOL	AT Rockmaster tool	AT only; pump seal grease (p/n 256-036)

Downhole Tool

Lube Rockmaster Tool

Lube drill head with pump seal grease (p/n 256-036) before first use, every 8 hours, and after every bore.

To lube:

1. Remove allen head plug.
2. Install zerk.
3. Rotate bit by hand and fill with pump seal grease until it comes out front seal.
4. Remove zerk and replace plug.

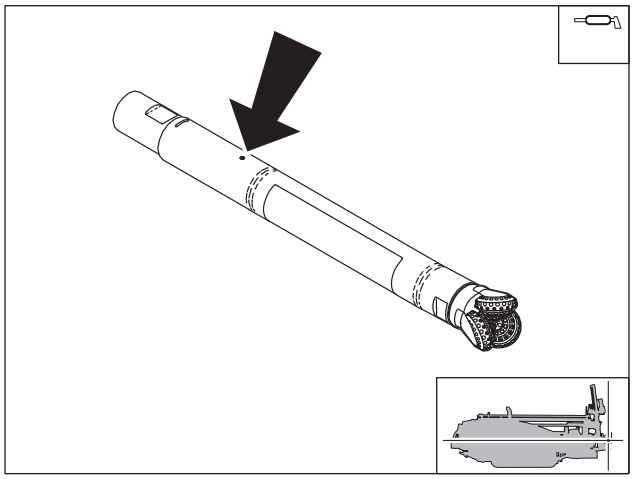

j22om063h.eps

https://truckmanualshub.com/

Startup/10 Hour

Location	Task	Notes
DRILLING UNIT	Check track tension and condition	
	Check fuel filter water separator	
	Check air filter indicator	
	Check engine oil level	DEO
	Check fluid pump piston seals	
	Check engine coolant level	DEAC
	Check hydraulic hoses	
	Check hydraulic fluid level	THF
	Check fluid pump oil level	NDO
	Test control switches	
	Check pipe lube applicator	
	Check pipe auto lubricator spray nozzle	
	Check pipe auto lubricator TJC level	TJC
	Check inner rotation dither	

https://truckmanualshub.com/

Drilling Unit

Check Track Tension and Condition

Check track tension and condition before startup and every 10 hours of operation and adjust or replace as needed.

To Adjust:

1. Pump MPG into fitting (shown) until the length of the compressed spring, dimension (A), is 12.75" (323.85 mm).
2. Drive straight forward one machine length and check tension again.

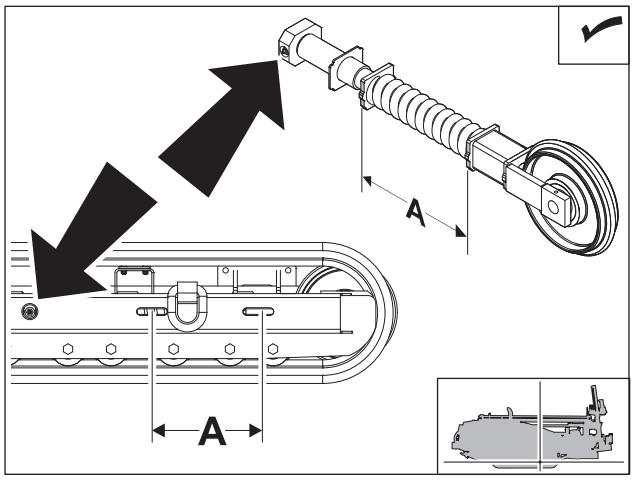

j22om050h.eps

Check Fuel Filter Water Separator

Check fuel filter water separators before startup and every 10 hours of operation. Drain water at plug (shown) as needed.

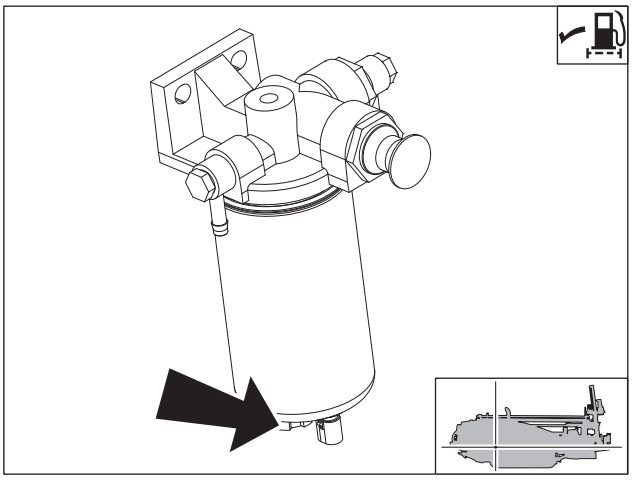

j22om039h.eps

https://truckmanualshub.com/

Check Engine Air Filter Service Indicator

Check air filter restriction indicator before startup and every 10 hours of operation. Change air filter elements when air filter restriction indicator reaches the red zone.

NOTICE: Only open the air filter canister when air restriction is indicated. Change the elements, do not attempt to clean them.

- Compressed air or water may damage filter elements.
- Tapping filter elements to loosen dirt may damage the elements.

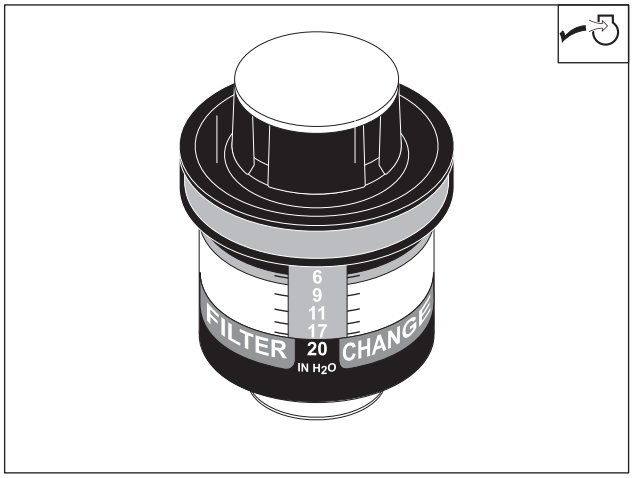

AirFilterIndicator.eps

Check Engine Oil Level

Check engine oil at dipstick (1) before startup and every 10 hours of operation. Check with unit on level surface. Add DEO at fill (2) as necessary to keep oil level at highest line on dipstick.

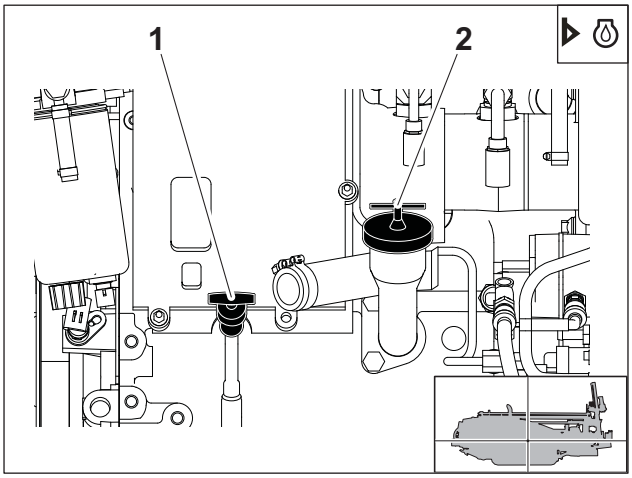

j34om007w.eps

Check Engine Coolant Level

Check coolant level, with engine cool, at sight glass (1) of expansion tank before startup and every 10 hours of operation. Maintain coolant level at halfway point on sight glass. If low, add approved coolant to fill (2).

IMPORTANT: See "Approved Coolant" on page 201 for information on approved coolants.

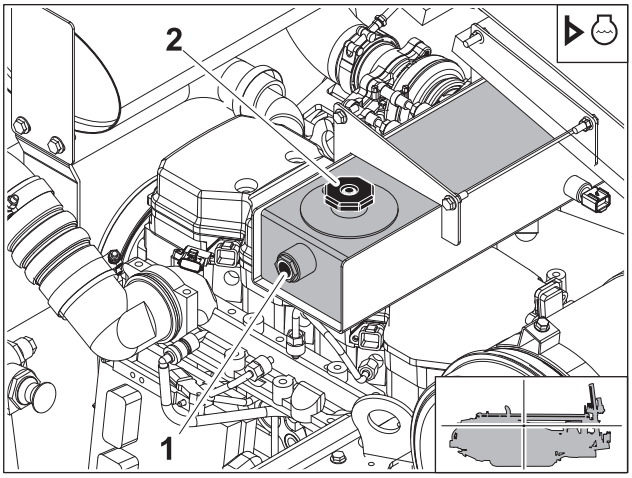

j22om034h.eps

https://truckmanualshub.com/

Check Hydraulic Hoses

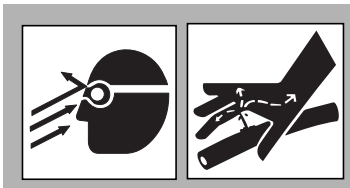

WARNING Fluid or air pressure could pierce skin and cause injury or death. Stay away.

To help avoid injury:

- Use a piece of cardboard or wood, rather than hands, to search for leaks.
- Wear protective clothing, including gloves and eye protection.
- Before disconnecting a hydraulic line, turn engine off and operate all controls to relieve pressure.
- Lower, block, or support any raised component with a hoist.
- Cover connection with heavy cloth and loosen connector nut slightly to relieve residual pressure. Catch all fluid in a container.
- Before using system, check that all connections are tight and all lines are undamaged.
- If you are injured, seek immediate medical attention from a doctor familiar with this type of injury.

Check hydraulic hoses for leaks before startup and every 10 hours of operation.

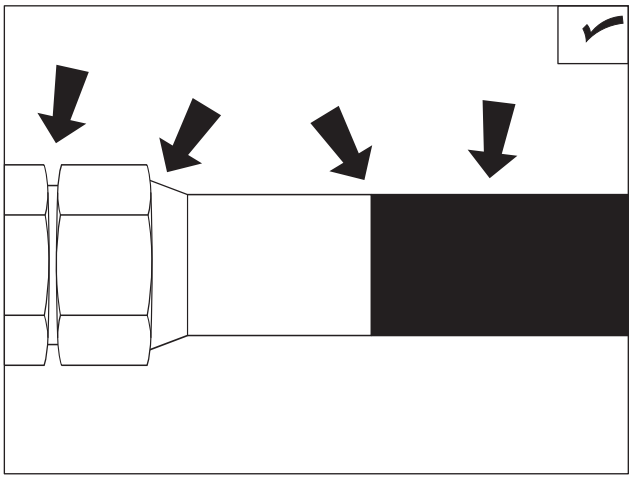

CheckHoses.eps

https://truckmanualshub.com/

Check Hydraulic Fluid Level

Check hydraulic fluid level before startup and every 10 hours of operation. Maintain fluid level at halfway point on sight glass (2), when engine is off and fluid is cool. Add THF at hydraulic fluid fill (1).

IMPORTANT: If hydraulic system must be opened for repair, install new filter (p/n 153-791) for first 50 hours of operation. If this filter becomes plugged in fewer than 20 hours, replace with new filter. After 50 hours of normal operation, replace with new filter (p/n 153-792).

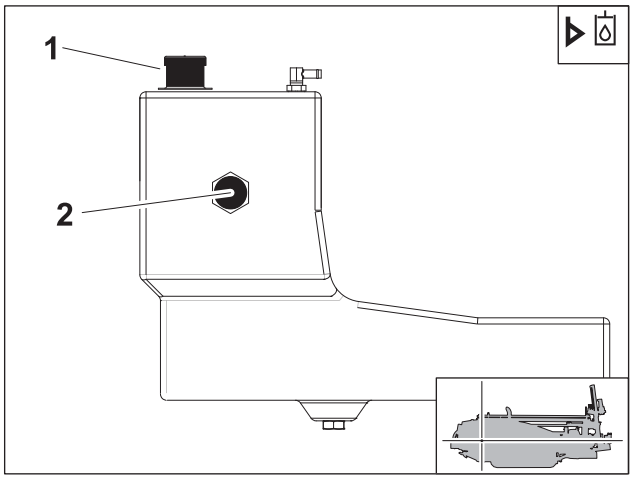

j22om036h.eps

Check Fluid Pump Oil Level

Check fluid pump oil level at sight glass (1) before startup and every 10 hours of operation. Add NDO at fill (2) as needed.

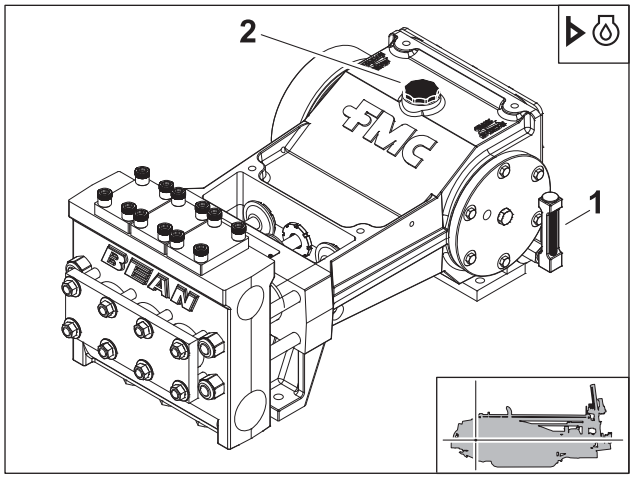

j22om037h.eps

Check Fluid Pump Piston Seals

Check piston seals for signs of excessive leakage before startup and every 10 hours of operation. Replace if leakage becomes excessive. See your Ditch Witch dealer for replacement parts.

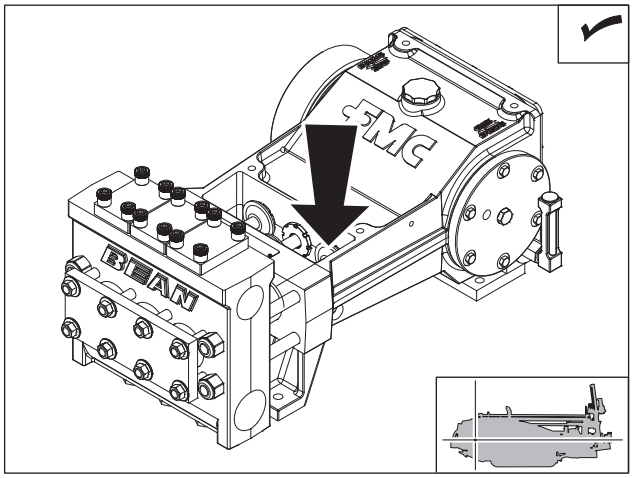

j22om087h.eps

https://truckmanualshub.com/

Test Control Switches

Check control proximity switches before startup and every 10 hours of operation and clean or replace as needed.

1. front pipe box switch
2. shuttle home switch
3. rear pipe box switch
4. rear stop switch
5. rear home switch
6. front home switch
7. shuttle stop switch

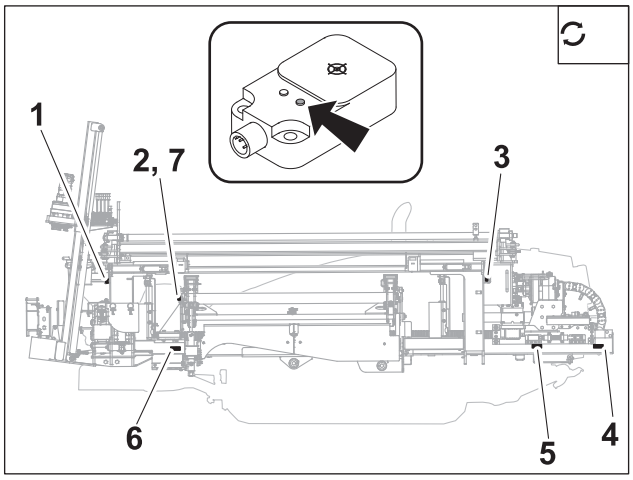

j22om040h.eps

To test:

1. Turn ignition switch to the on position. Do not start engine.
2. Place metal object above target on each switch.
3. If yellow LED on switch lights, switch sensor is working.

Check Pipe Auto Lubricator Spray Nozzle

Check pipe auto lubricator spray nozzle before startup and every 10 hours of operation. Ensure that nozzle is free of obstructions and operates properly. Clean as needed.

NOTICE: Ditch Witch tool joint compound is specially formulated to work with Ditch Witch pipe lubrication system. Use of other tool joint compounds will clog system. See "Recommended Lubricants/Service Key" on page 200 for more information.

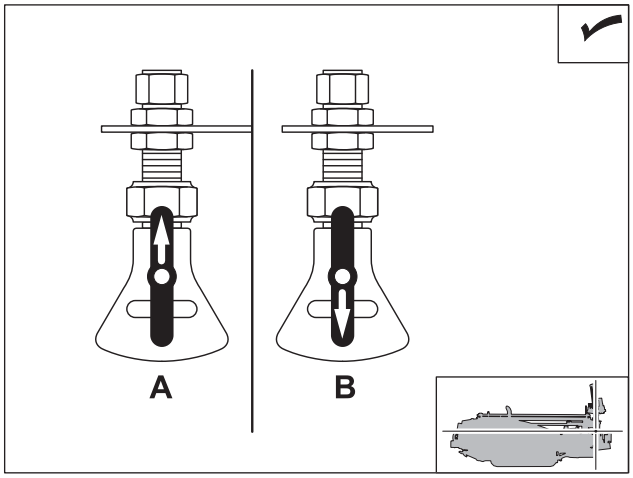

j22om041h.eps

To clean:

1. Rotate handle to the upward, or cleanout, position (A).
2. Operate pump until obstruction is flushed.
3. Rotate handle to the downward, or spray, position (B).
4. Clean nozzle guard. If necessary, pull handle/nozzle insert out of housing to clean with fine wire or solvent.

https://truckmanualshub.com/

Check Pipe Auto Lubricator TJC Level

Check pipe auto lubricator TJC level before startup and every 10 hours of operation. Change pail as needed. See "Change Auto Lubricator TJC Pail" on page 226 for procedure.

NOTICE: Ditch Witch tool joint compound is specially formulated to work with Ditch Witch pipe lubrication system. Use of other tool joint compounds will clog system. See "Recommended Lubricants/Service Key" on page 200 for more information.

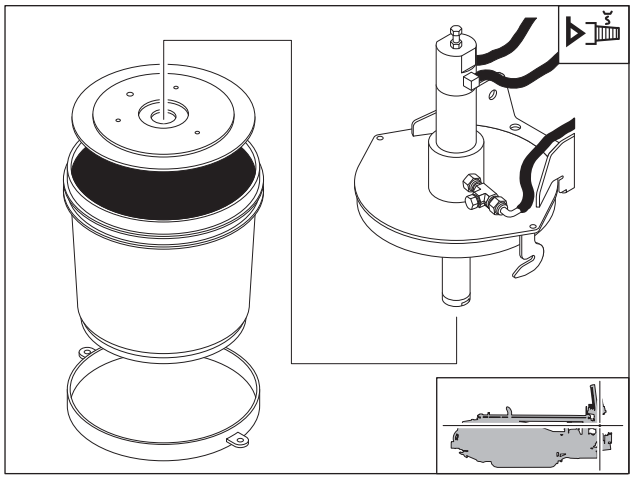

j22om042h.eps

Check Inner Rotation Dither

Check movement of inner rod before startup and every 10 hours of operation. Inner rod should have between 90 and 180° of movement in each direction. If inner rod does not dither, use manual switch to finish bore and then repair dither (see Repair Guide).

To check:

1. Select AT mode.
2. Close front wrench.
3. Put carriage on rear home switch.
4. Put engine at high idle.
5. Move joystick forward or to left slightly.
6. Inner rod should start dithering.

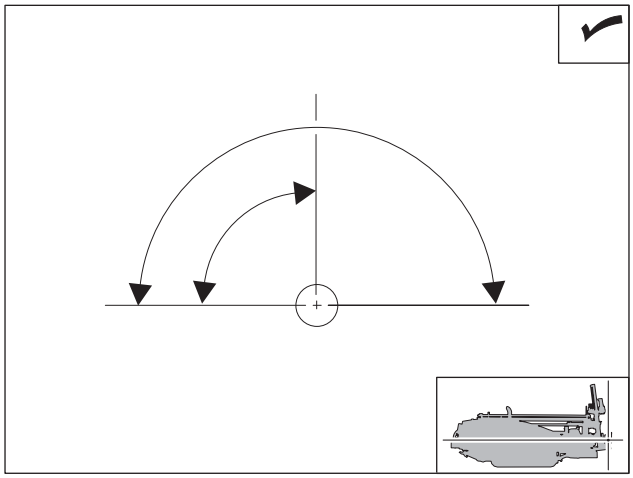

j22om064h.eps

https://truckmanualshub.com/

Clean Drilling Fluid Y-Strainer

Clean drilling fluid y-strainer before startup and every 10 hours of operation. Ensure that strainer is free of debris.

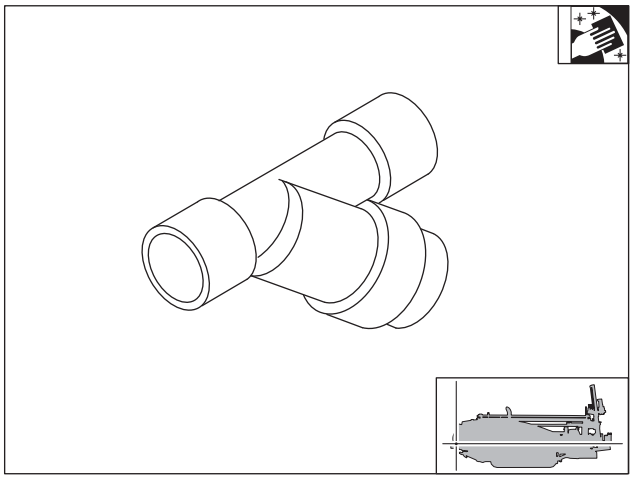

j22om044h.eps

https://truckmanualshub.com/

50 Hour

Location	Task	Notes
DRILLING UNIT	Change fluid pump oil	Initial service, NDO
	Check radiator	
	Change hydraulic filters	Initial service
	Check ground drive gearbox oil level	2 gearboxes, MPL
	Check rotation gearbox oil level	MPL
	Inspect thrust rollers	
	Check hex stub	
	Drain water from hydraulic tank	
	Check thrust drive gearbox oil level	
	Check anchor drive gearbox oil level	

Drilling Unit

Change Fluid Pump Oil (Initial Service)

Change fluid pump oil at first 50 hours and every 2000 hours thereafter.

To change:

1. Drain at plug (3). Ensure that magnetic drain plug is cleaned of debris before reinstalling.
2. Add NDO at fill plug (2). Maintain fluid level at fill plug (2). Inspect oil level at sight glass (1).

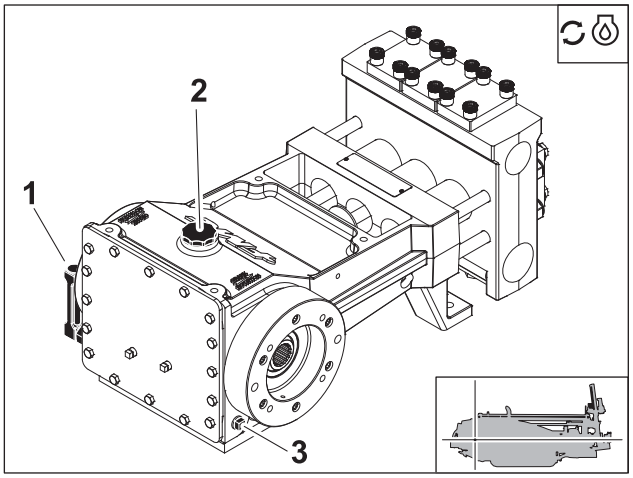

j22om038h.jpg

https://truckmanualshub.com/

Check Radiator

Check radiator for dirt, grass, and other debris every 50 hours. Check more often if operating in dusty or grassy conditions. Clean as needed.

To clean:

- Clean fins with compressed air or spray wash.
- Open rear hood and spray through radiator toward engine.
- If grease and oil are present on radiator, spray with solvent and allow to soak overnight.

IMPORTANT: Be careful not to damage fins with high pressure air or water.

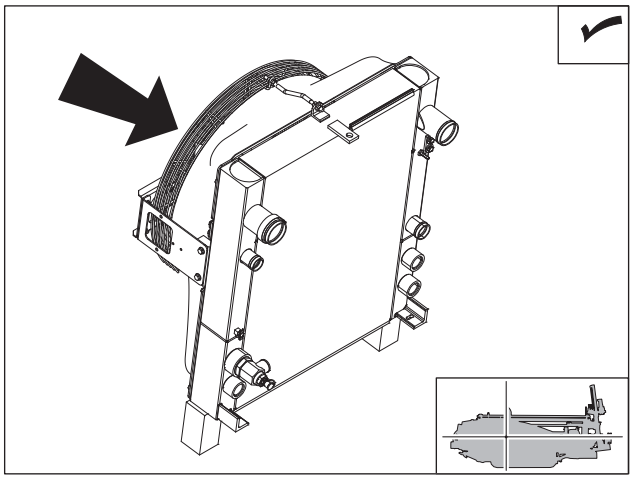

j22om081h.eps

Change Hydraulic Filters (Initial Service)

Change hydraulic filter after first 50 hours. Replace filter every 500 hours thereafter. Change filter more often if indicated by filter indicator.

IMPORTANT: If hydraulic system must be opened for repair, install new filter (p/n 153-791) for first 50 hours of operation. If this filter becomes plugged in fewer than 20 hours, replace with new filter. After 50 hours of normal operation, replace with new filter (p/n 153-792).

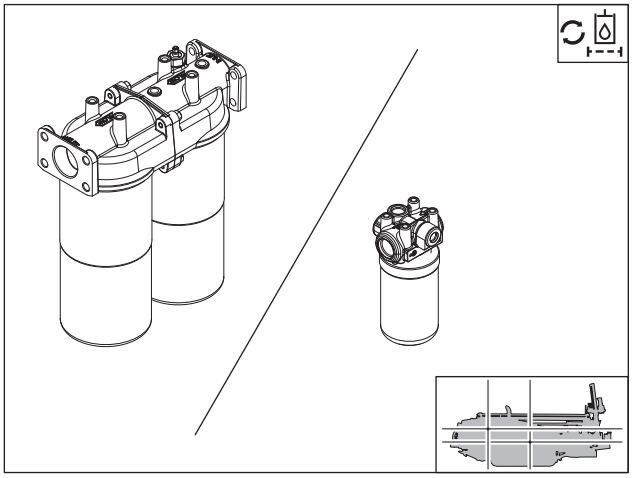

j22om066h.eps

Check Ground Drive Gearbox Oil Level

Check oil level in both ground drive gearboxes every 50 hours. Rotate plug (shown) until level with center of gearbox. Open plug. If oil does not come out, add MPL as needed. Never fill more than halfway.

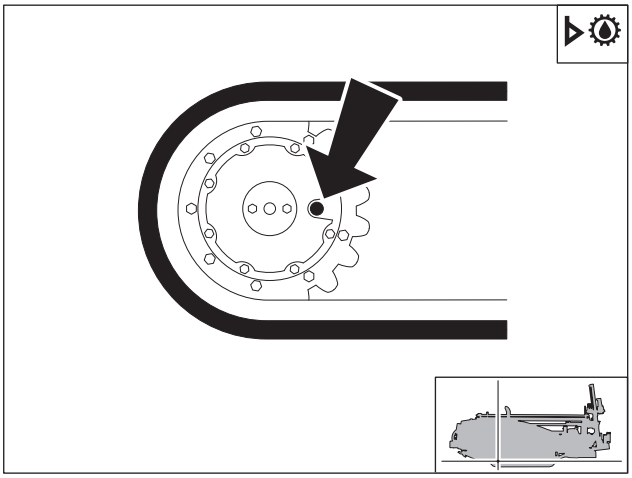

j22om065h.eps

https://truckmanualshub.com/

Check Rotation Gearbox Oil Level

IMPORTANT: Drill frame must be level for accurate reading.

Check rotation gearbox oil level every 50 hours.

Outer Rotation Gearbox:

Add MPL through plug (1) to level of sight plug (2) as needed.

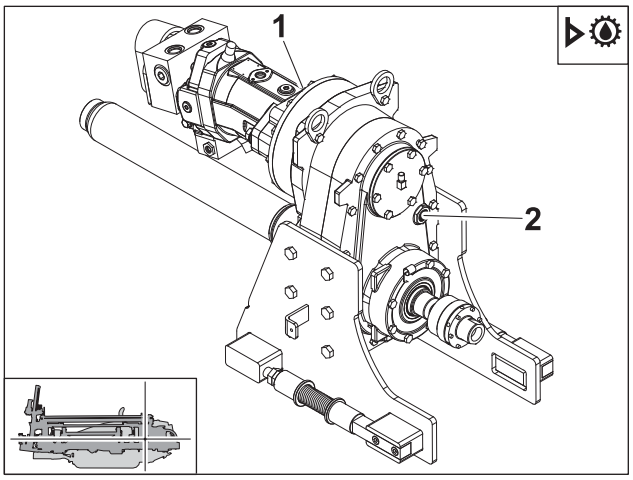

j22om074h.eps

Inner Rotation Gearbox (AT only):

Add MPL through fill plug (1) until oil comes out.

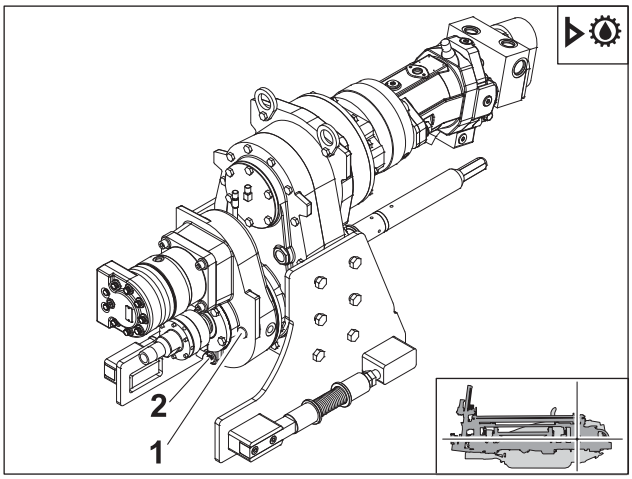

j22om075h.eps

https://truckmanualshub.com/

Inspect Thrust Rollers

Inspect thrust rollers (at each end of carriage) every 50 hours. Clean or replace if they do not turn freely.

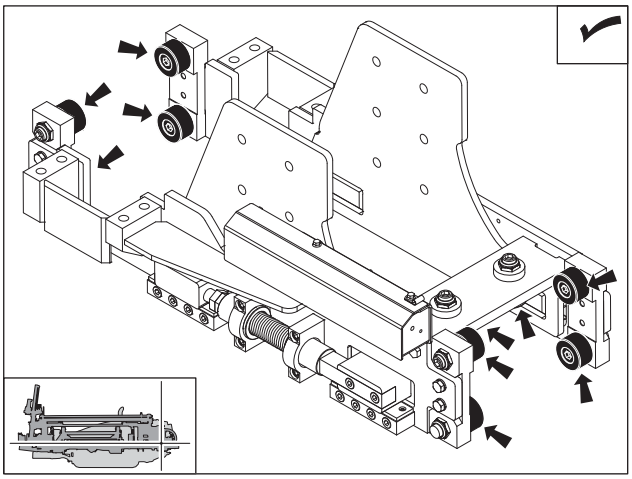

j22om080h.eps

Check Hex Stub

Shine flashlight into spindle and check condition of hex stub (4) every 50 hours. Replace if rounded.

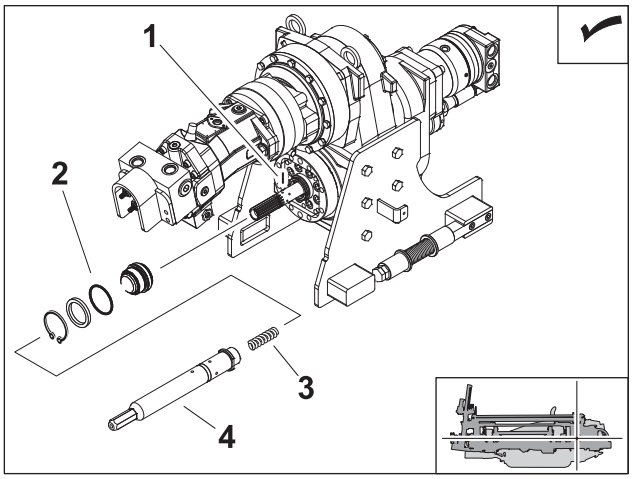

j22om068h.eps

To replace:

1. Remove saver sub. Do not remove indexing dowels from spindle.
2. Slide hex stub (4) and spring (3) off of drive shaft.
3. Check condition of hex stub and replace if needed.
4. Check o-ring (2) on inner water swivel (seal kit) and replace if needed.
5. Install new spring and hex stub.
6. Install saver sub. See "Change Inner Water Swivel (Seal Kit)" on page 229.

https://truckmanualshub.com/

Drain Water from Hydraulic Tank

Drain water out of tank every 50 hours if using environment friendly hydraulic fluid. To drain, turn plug slightly until water comes out. After all water has drained, tighten plug.

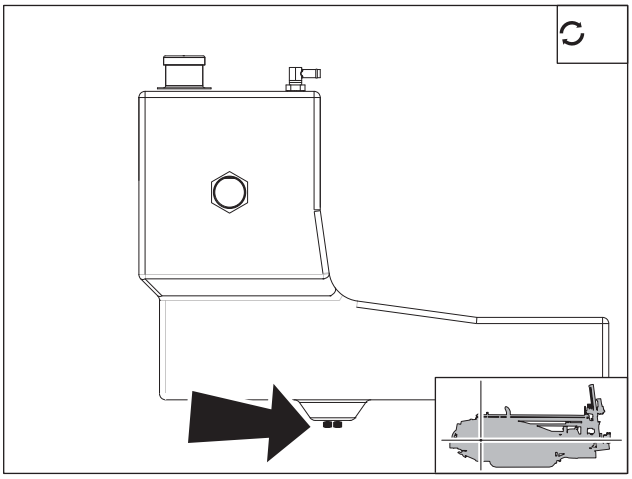

j22om060h.eps

Check Thrust Drive Gearbox Oil Level

Check thrust drive gearbox oil level at fill plug (1,2) every 50 hours. Add MPL at fill (1,2) as needed.

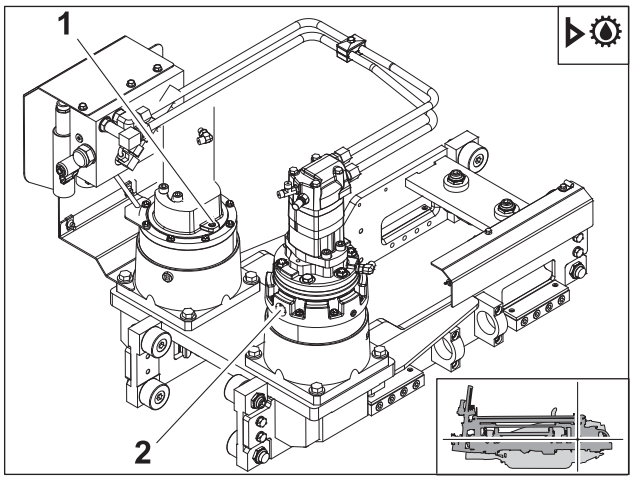

j22om083h.eps

Check Anchor Driver Gearbox Oil Level

Check anchor driver gearboxes oil level at fill plug (shown) every 50 hours. Add MPL at fill as needed.

IMPORTANT: Gearbox must be level for accurate reading.

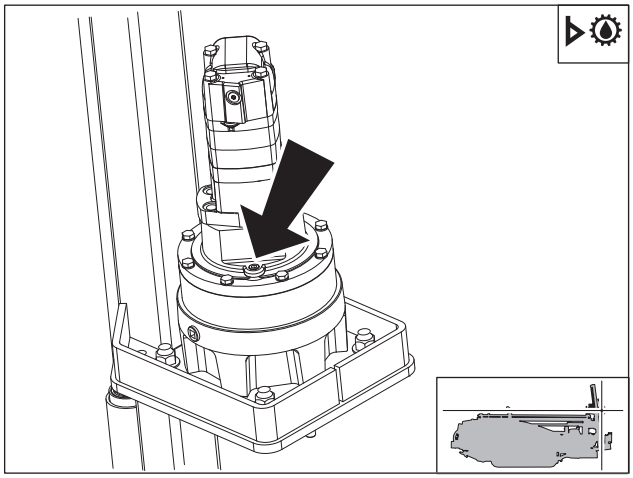

j22om085h.eps

https://truckmanualshub.com/

250 Hour

Location	Task	Notes
DRILLING UNIT	Inspect air intake system	
	Tier 3: Change engine oil, initial	Only applies to units with Tier 3 engines operating with high sulfur fuel (sulfur content >15 ppm).

Drilling Unit

Inspect Air Intake System

Inspect intake piping for cracked hoses, loose clamps, or punctures. Tighten or replace parts as necessary.

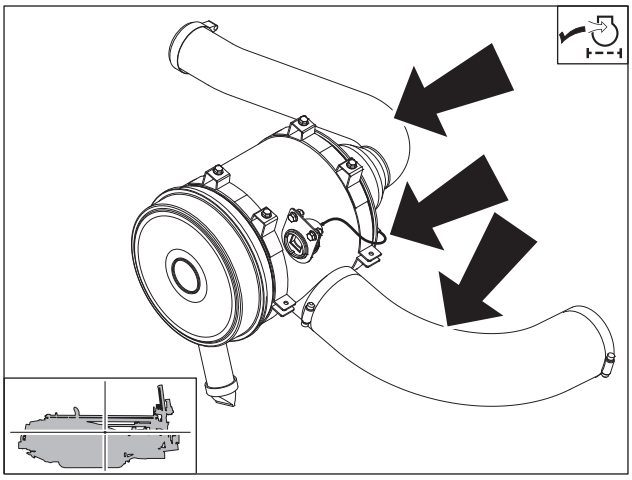

j22om079h.eps

Tier 3: Change Engine Oil and Filter

NOTICE: Units are initially filled with Tier 4i DEO engine oil. If operating with high sulfur fuel (greater than15 ppm sulfur, found oust i de of US, Canada, EU and Japan), change oil initially at 250 hours.

Drain oil (3), change filter (4), and add 11.5 qt (10.9 L) of Tier 3 DEO at fill (2). Check oil level at dipstick (1).

IMPORTANT: Use oil specified in temperature chart found in "Recommended Lubricants/ Service Key" on page 200.

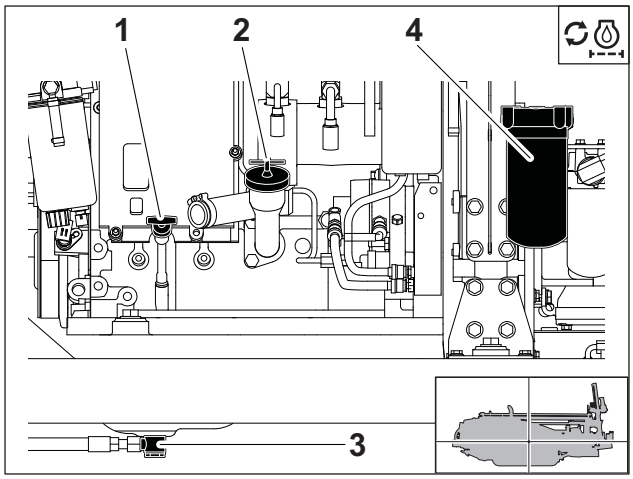

j34om009w.eps

https://truckmanualshub.com/

500 Hour

Location	Task	Notes
DRILLING UNIT	Change engine oil and filter	DEO
	Change hydraulic filters	Normal conditions
	Change fuel filters	
	Check batteries	

Drilling Unit

Change Engine Oil and Filter

NOTICE: Incorrect fuel and oil combinations can damage engine.

- Tier 4i: Use Tier 4i DEO and ULSD. Change oil every 500 hours. DO NOT use high sulfur fuel (greater than 15 ppm).
- Tier 3: If using Tier 3 DEO, change oil every 500 hours.

IMPORTANT: See "Recommended Lubricants/ Service Key" on page 200.

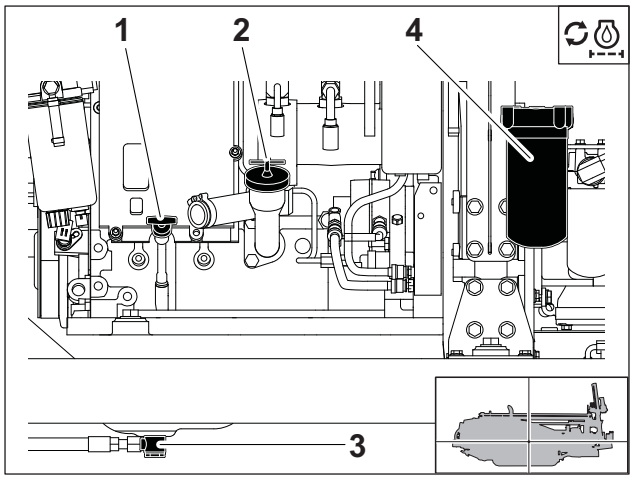

j34om009w.eps

Drain oil (3), change filter (4), and add 11.5 qt (10.9 L) of DEO at fill (2). Check oil level at dipstick (1).

Change Hydraulic Filters (Normal Conditions)

Change hydraulic filter every 500 hours. Change filter more often if indicated by filter indicator.

IMPORTANT: If hydraulic system must be opened for repair, install new filter (p/n 153-791) for first 50 hours of operation. If this filter becomes plugged in fewer than 20 hours, replace with new filter. After 50 hours of normal operation, replace with new filter (p/n 153-792).

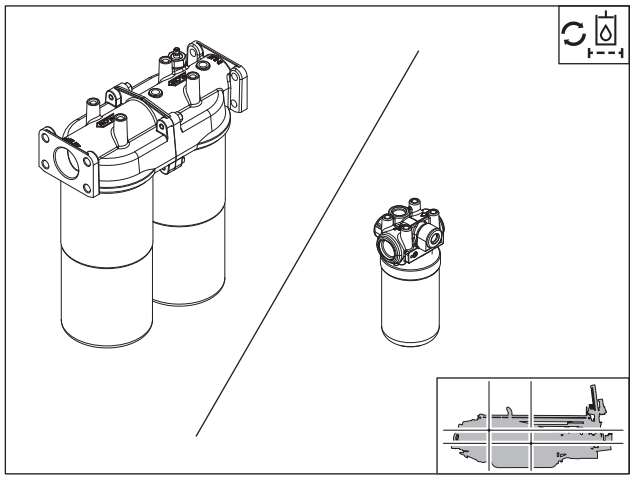
j22om066h.eps

https://truckmanualshub.com/

Change Fuel Filters

Replace fuel filters every 500 hours. See parts manual or contact your Ditch Witch dealer for correct replacement filter.

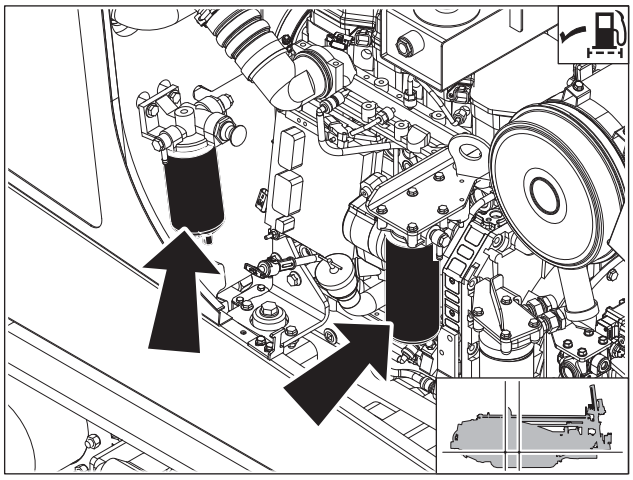

j22om057h.eps

Check Battery

Check battery every 500 hours. Keep batteries clean and terminals free of corrosion.

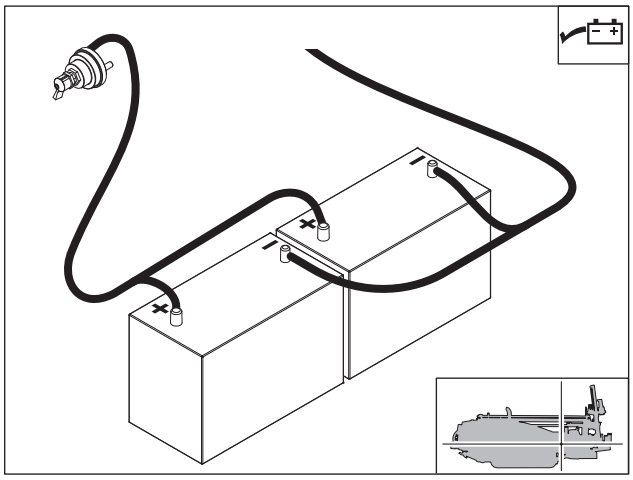

j22om045h.eps

To clean:

1. Turn battery disconnect switch to the off position.
2. Ensure that no ignition sources are near batteries.
3. Loosen and remove battery cable clamps carefully, **negative (-)** cable first.
4. Clean cable clamps and terminals with wire brush or battery cleaning tool to remove dull glaze.
5. Check for signs of internal corrosion in cables.
6. Apply MPG to terminals after cleaning to reduce corrosion.
7. Connect battery cable clamps, **positive (+)** cable first.
8. Tighten any loose connections.
9. Ensure that battery tiedowns are secure.
10. Turn battery disconnect switch to the on position.

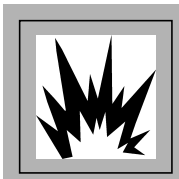

WARNING Explosion possible. Serious injury or equipment damage could occur. Follow directions carefully.

NOTICE: To avoid explosion, do not create sparks and do not short across battery terminals for any reason.

https://truckmanualshub.com/

1000 Hour

Location	Task	Notes
DRILLING UNIT	Change hydraulic fluid and filters	THF
	Change ground drive gearbox oil	2 gearboxes, MPL
	Change rotation gearbox oil	MPL
	Change spindle brake oil	THF
	Change thrust drive gearbox oil	2 gearboxes, MPL
	Change anchor driver gearbox oil	2 gearboxes, MPL

Drilling Unit

Change Hydraulic Fluid and Filters

Change hydraulic fluid and filters every 1000 hours.

To change:

1. Drain hydraulic oil at drain (3).
2. Change hydraulic filters. See "Change Hydraulic Filters (Normal Conditions)" on page 218.
3. Add (2) THF.

IMPORTANT: Change oil and filter every 500 hours if jobsite temperature exceeds 100°F (38°C) more than 50% of the time.

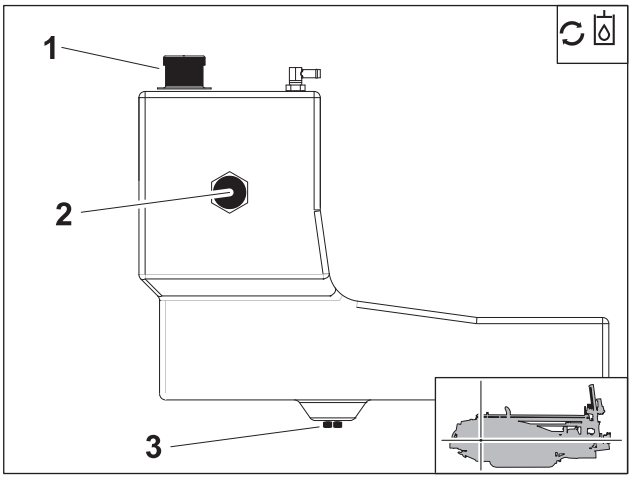

j22om035h.eps

https://truckmanualshub.com/

Change Ground Drive Gearbox Oil

Change oil in both ground drive gearboxes every 1000 hours.

To change:

1. Drain oil at plug (shown).
2. Rotate gearbox 90° and add MPL at fill plug.

IMPORTANT:

- Drill frame must be parked on level surface for accurate reading.
- Use helper to assist in positioning gearbox plugs for checking and adding oil.
- Do not overfill.

3. Replace fill plug.

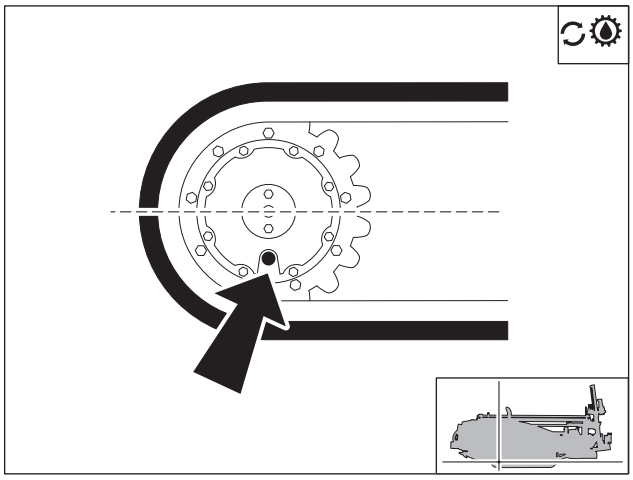

j22om082h.eps

Change Anchor Gearbox Oil

Change anchor gearbox oil every 1000 hours. Capacity is 26 oz (0.77 L) MPL per gearbox.

To Change:

1. Ensure that gearbox is level.
2. Drain oil at gearbox oil drain (1). Replace drain plug.
3. Fill gearbox with MPL at fill plug (2).

IMPORTANT: Gearbox must be level for accurate reading.

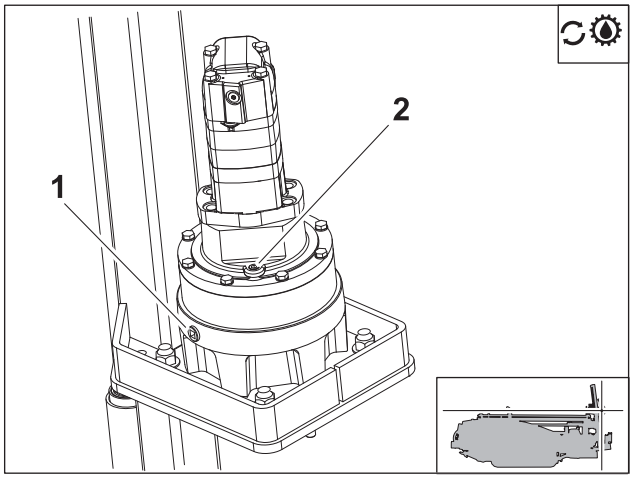

j22om086h.eps

https://truckmanualshub.com/

Change Rotation Gearbox Oil

Outer Rotation Gearbox:

IMPORTANT: Gearbox must be level for accurate reading.

JT Units: Drain oil at gearbox oil drain (3) every 1000 hours. Replace drain plug. Add MPL at fill (1). Check level at sight glass (2). Replace fill plug.

AT Units: Drail oil at gearbox oil drain (4) every 1000 hours. Replace drain plug. Add MPL at fill (1). Check level at sight glass (2). Replace fill plug.

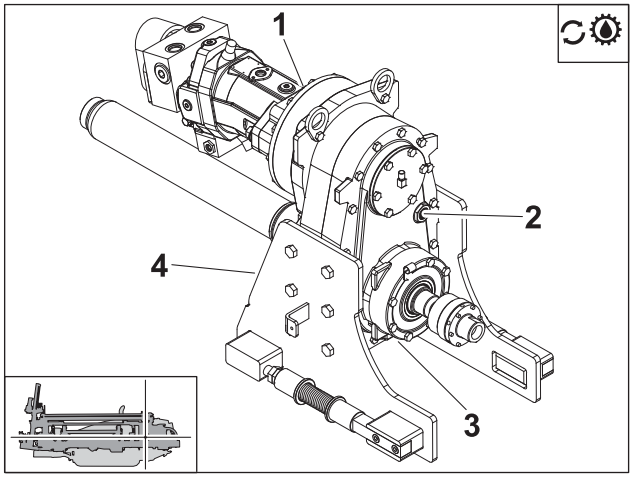

j22om077h.eps

Inner Rotation Gearbox (AT only):

IMPORTANT: Gearbox must be level for accurate reading.

Drain oil at gearbox oil drain (2) every 1000 hours. Replace drain plug. Add MPL at fill (1). Replace fill plug.

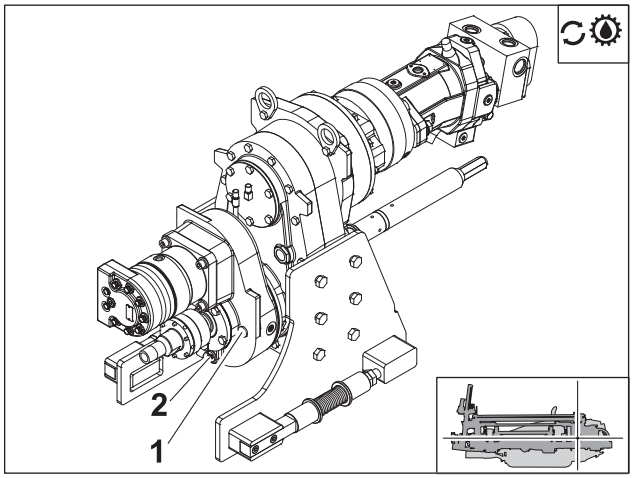

j22om078h.eps

https://truckmanualshub.com/

Change Spindle Brake Oil

IMPORTANT: Gearbox must be level for accurate reading.

Change spindle brake oil every 1000 hours. Capacity is 5 oz (148 mL) of THF.

To change:

1. Ensure drill frame is level.
2. Remove bottom plug on brake housing (3).
3. After all oil drains, replace bottom plug and remove either top plug (1) and side fill level plug (2).
4. Add MPL at plug (1) until it comes out oil level hole (2).

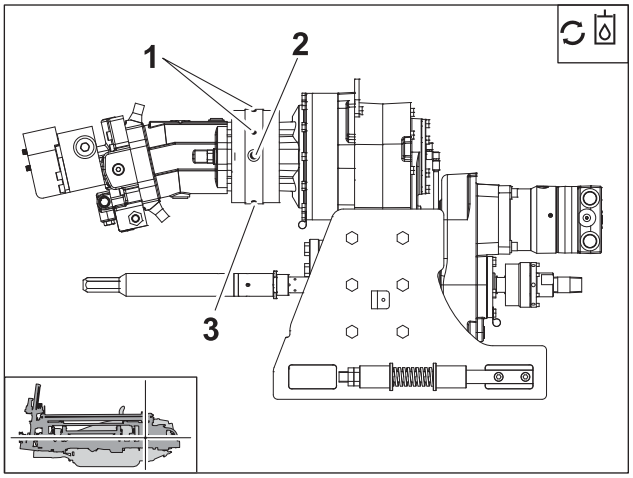

j22om071h.eps

Change Thrust Drive Gearbox Oil

Change thrust drive gearbox oil every 1000 hours. Capacity is 26 oz (0.77 L) MPL per gearbox.

To change:

1. Ensure that drill frame is level.
2. Drain oil at gearbox oil drain (2, 4).
3. Fill each gearbox with MPL at fill plugs (1, 3).

IMPORTANT: Gearbox must be level for accurate reading.

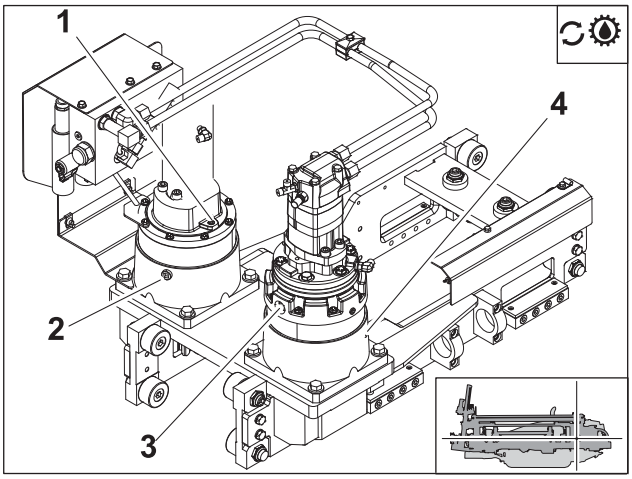

j22om084h.eps

https://truckmanualshub.com/

2000 Hour

Location	Task	Notes
DRILLING UNIT	Change engine coolant	DEAC
	Change fluid pump oil	NDO

Drilling Unit

Change Engine Coolant

Drain cooling system at drain (1) every two years or 2000 hours. Add approved coolant according to instructions below. Refill capacity is 23 qt (21.8 L).

NOTICE:

- The use of non-approved coolant may lead to engine damage or premature engine failure and will void engine warranty.
- See "Approved Coolant" on page 201 for list of approved coolants.
- Use only distilled water for mixing coolants. Do not use tap water.

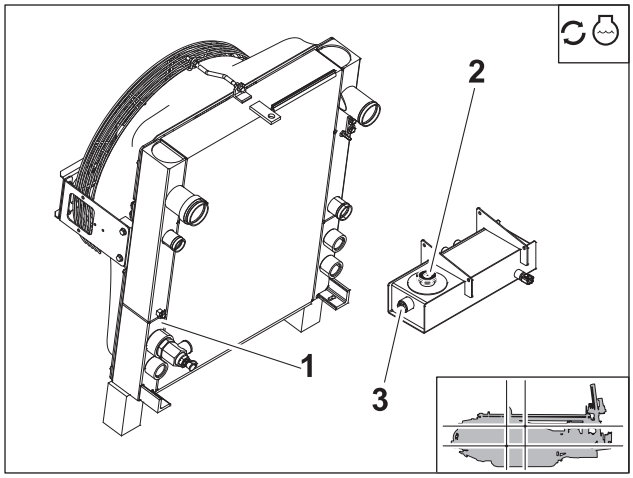

j22om046h.eps

To fill:

1. Add coolant at radiator fill (2) at a rate of 3 gpm (11.4 L/min) or less until full.
2. Run engine with thermostat open (>195°F/90°C engine temperature) for several minutes.
3. Stop engine and let it cool.
4. Maintain coolant level at halfway point on sight glass (3).

https://truckmanualshub.com/

Change Fluid Pump Oil

Change fluid pump oil every 2000 hours.

To change:

1. Drain at plug (3). Ensure that magnetic drain plug is cleaned of debris before reinstalling.
2. Add NDO at fill plug (2). Maintain fluid level at fill plug (2). Inspect oil level at sight glass (1).

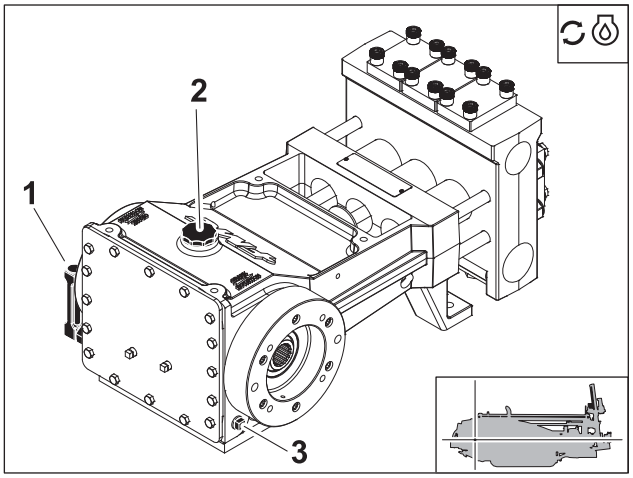

j22om038h.jpg

As Needed

Location	Task	Notes
DRILLING UNIT	Change pipe auto lubricator pail	TJC
	Change hydraulic filter	Any time system is opened
	Check pipeloader pads	
	Check front pipe guide inserts	
	Check fluid pump ball valve	
	Check track tension and condition	
	Check track support slide pads	
	Change inner water swivel (seal kit)	
	Change engine drive belt	
	Change air filter	
	Check pipeloader chute opening	
	Check saver sub	
	Replace pipe glide blocks	
	Replace carriage slide bars	
	Replace fuses	

https://truckmanualshub.com/

Drilling Unit

Change Auto Lubricator TJC Pail

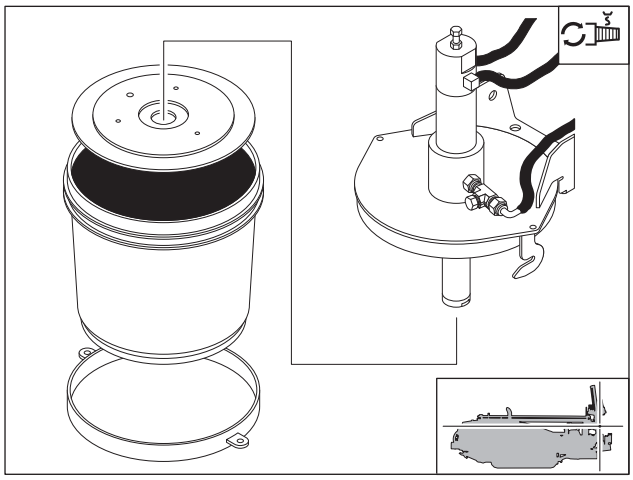
j22om043h.eps

Check pipe auto lubricator TJC level and change pail as needed.

To change pail:

1. Remove wingnuts and bolts attaching base ring to pail cover.
2. Rotate base ring slightly to clear hooks on cover and remove pail from cover.
3. Remove follower plate from empty pail and install into new pail. Press firmly on follower plate until TJC comes up in center opening.
4. Remove base ring from empty pail and install onto new pail.
5. Install pail into place over pump dip tube. Use hooks on cover to support base ring.
6. Install bolts and wingnuts.
7. Remove cap from discharge tee on pump. Operate pump until discharged TJC is free of air pockets. Replace cap.

NOTICE: Use only genuine Ditch Witch tool joint compound to maintain warranty. See "Recommended Lubricants/Service Key" on page 200 for more information.

Change Hydraulic Filter (Anytime System Opened)

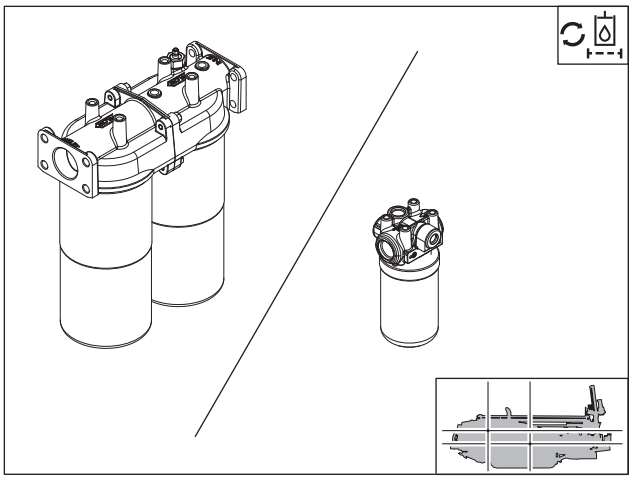
j22om066h.eps

Change hydraulic filter anytime system is opened for repair. Change filter and add THF as needed at hydraulic fluid fill.

https://truckmanualshub.com/

Check Pipeloader Inserts

Check pipeloader inserts at indicated areas for wear. Flip gripper inserts for longer wear, or replace as needed. See your Ditch Witch dealer for replacement parts.

1. Wear pad
2. Shuttle wear pad
3. Shuttle gripper pad
4. Catch arm wear pad

IMPORTANT: Ensure bolts are tightened evenly to enable inserts to slide freely and wear evenly.

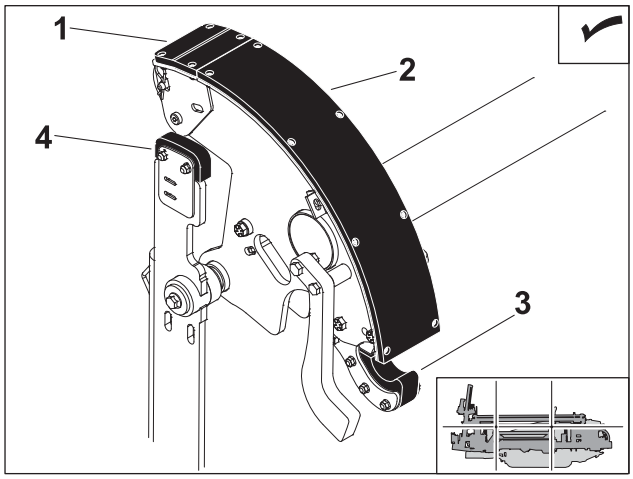

j22om047h.eps

Check Front Pipe Guide Inserts

Check front pipe guide inserts (2) for wear. Rotate inserts for longer wear, or replace as needed. See your Ditch Witch dealer for replacement parts.

To replace:

1. Remove lynch pins (1, one on each side).
2. Remove guide inserts (2).
3. Remove pin (1) and open pipe guide.
4. Remove guide inserts (2).
5. Replace in reverse order.

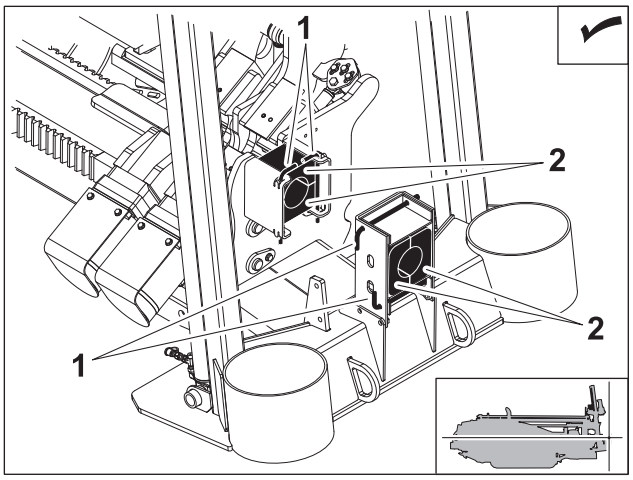

j22om048h.eps

Check Fluid Pump Ball Valve

Check ball valve for leaks. Tighten stem packing as needed. See your Ditch Witch dealer for replacement packing.

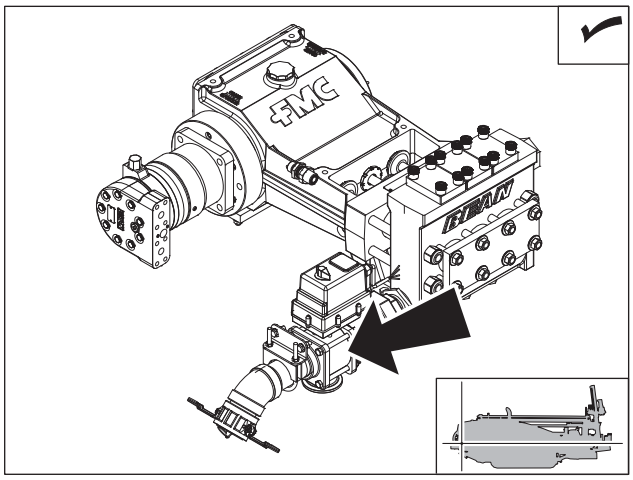

j22om049h.eps

https://truckmanualshub.com/

Check Track Tension and Condition

Check track tension and condition and adjust or replace as needed. See your Ditch Witch dealer for replacement parts.

To adjust:

1. Pump MPG into fitting (shown) until the length of the compressed spring, dimension (A), is 12.75" (323.85 mm).
2. Drive straight forward one machine length and check tension again.

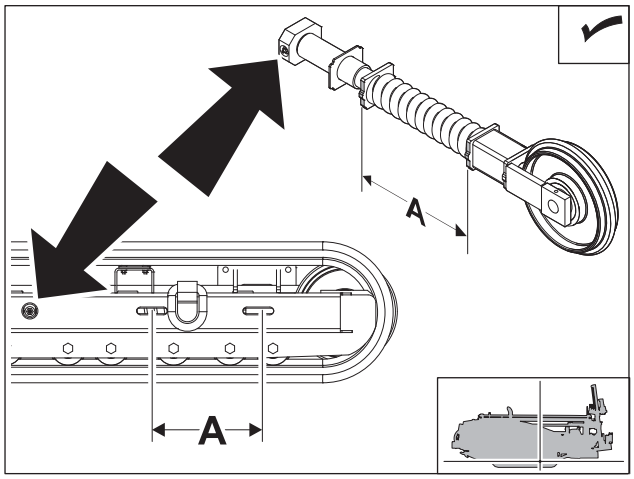

j22om050h.eps

Check Track Support Slide Pads

Check track support slide pads. Replace as needed. See your Ditch Witch dealer for replacement parts.

https://truckmanualshub.com/

Change Inner Water Swivel (Seal Kit)

Replace inner water swivel (seal kit) as needed. See your Ditch Witch dealer for replacement parts.

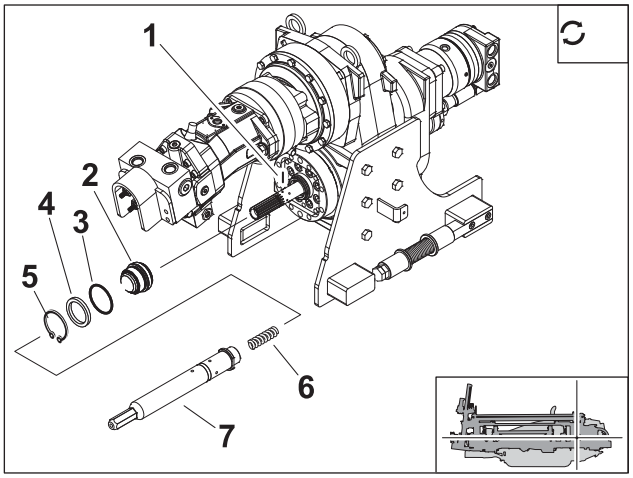

j22om069h.eps

To replace:

1. Remove saver sub. Do not remove indexing dowels from spindle.
2. Remove hex stub (7) and spring (6) from drive shaft.
3. Remove snap ring (5).
4. Remove seal (4) and main body (2).

IMPORTANT: Use care when handling main body to avoid seal contamination. Do not allow grease to touch inner seals during installation.

5. Inspect dowel pin (1). To replace, drive new pin into different hole until top of pin is flush with shaft larger diameter.
6. Slide new main body (1) onto drive shaft. Check o-ring (3) and replace if needed.
7. Lightly coat seal (3) with SAE 30 engine oil and install onto main body.

NOTICE: Do not run seals without lubrication. Damage will occur.

8. Slide snap ring (4) onto main body.
9. Compress seal kit until snap ring is properly seated.
10. Install hex stub (7) and spring (6).
11. Install saver sub. See page 233.

https://truckmanualshub.com/

Change Drive Belt

Change engine drive belt as needed.

JT Units:

1. Turn off engine and remove key.
2. Use a 1/2" drive rachet at pulley (1) to remove tension.
3. Remove belt (2).
4. Install new belt.

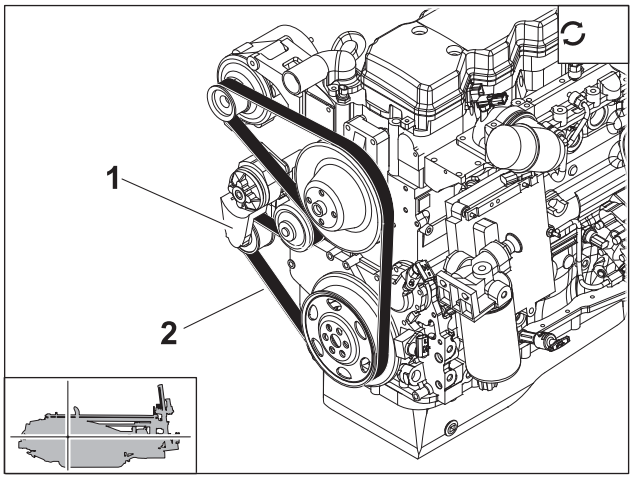

j22om090h.eps

All Terrain Units:

1. Turn off engine and remove key.
2. Remove snap ring (3) from groove and slide pump coupler collar (4) back.
3. Use a 1/2" drive rachet at pulley (1) to remove tension.
4. Remove belt (2).
5. Install new belt.
6. Slide pump coupler collar back into position and reinstall snap ring.

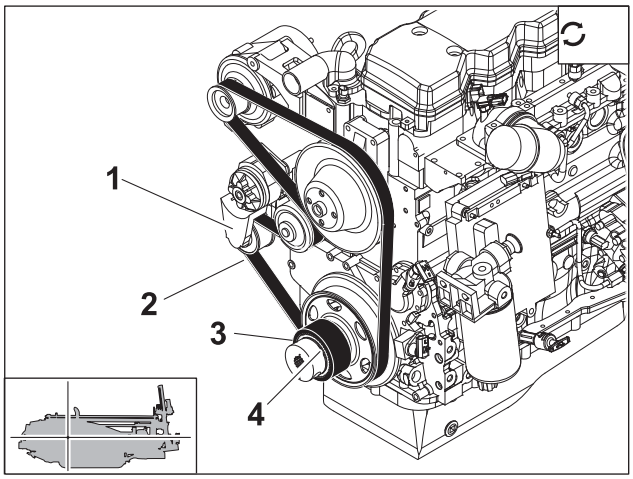

j22om091h.eps

https://truckmanualshub.com/

Change Air Filter

Change air filter when air filter service indicator (3) reaches the red zone.

NOTICE: Only open the air filter canister when air restriction is indicated. Change the elements, do not attempt to clean them.

- Compressed air or water may damage filter elements.
- Tapping filter elements to loosen dirt may damage the elements.

To change Tier 3 air filter:

1. Disengage clasps and remove cover.
2. Remove primary element (1) and secondary element (2).
3. Wipe inside of housing and wash cover and dust ejector slit (4).
4. Install new element(s).
5. Install cover and engage clasps.
6. Reset air filter service indicator (3).

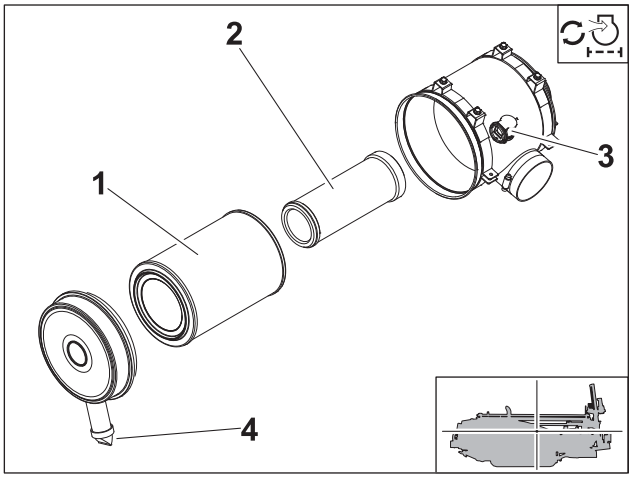

j22om059h.eps

To change Tier 4i air filter:

1. Disengage clasps and remove cover.
2. Remove primary element and secondary element.
3. Wipe inside of housing and wash cover and dust ejector slit.
4. Install new element(s).
5. Install cover and engage clasps.
6. Reset air filter service indicator.

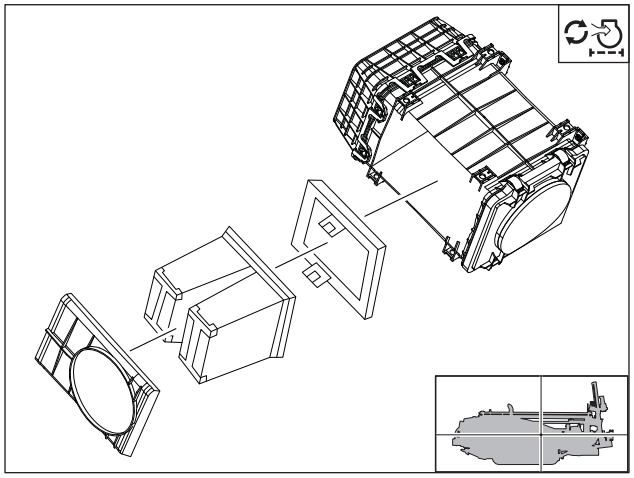

j34om008w.eps

https://truckmanualshub.com/

Check Pipeloader Chute Opening

Check chute openings and adjust per dimension as needed.

1. JT chute opening (shown) = 3.35" (8.5 cm).
2. AT chute opening (shown) = 3.60" (9.1 cm).

Apply Loctite® 242 to bolts.

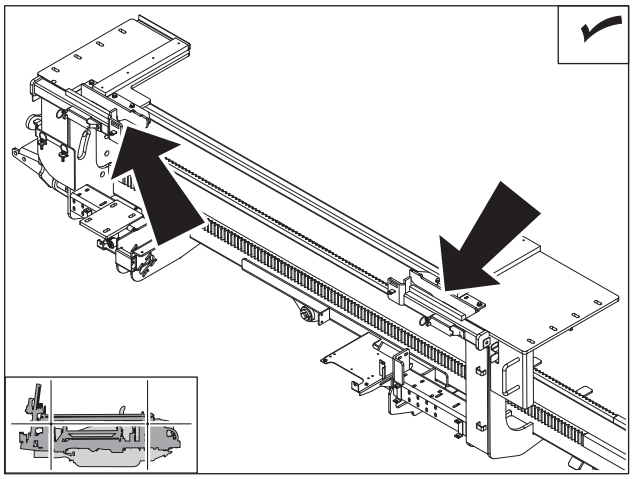

j22om052h.eps

Check Wrench Jaw Inserts

Check wrench jaw inserts for wear and replace as needed.

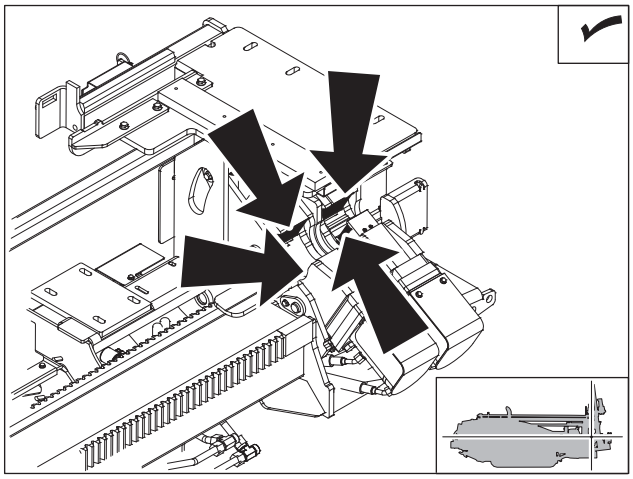

j22om088h.eps

Replace Pipe Guide Blocks

Check pipe guide blocks for wear. Replace as needed.

To replace:

Remove pins (1) and remove guide blocks (2). Install new pins. See your Ditch Witch dealer for replacement parts.

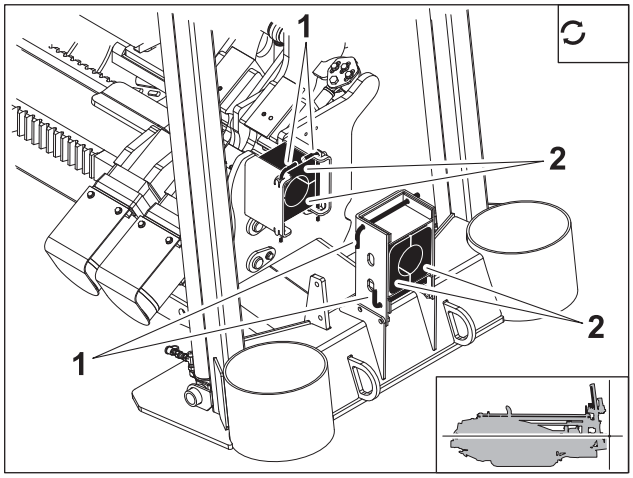

j22om048h.eps

https://truckmanualshub.com/

Check Saver Sub

Check saver sub (see "Replace Worn Saver Sub" on page 153) and replace as needed. See your Ditch Witch dealer for replacement parts.

To replace:

1. Remove eight bolts that attach lock collars to spindle. Do not remove indexing dowels from spindle.
2. Remove saver sub.
3. Remove and replace o-rings, if necessary.
4. Inspect water swivel, replace as needed. See "Change Inner Water Swivel (Seal Kit)" on page 229.
5. Coat inner drive shaft splines with EPG every time saver sub is removed (shown). Apply EPS to sliding shaft surfaces.
6. Install in reverse order and tighten eight bolts in a cross pattern to 200 ft•lb (271 N•m). Apply Loctite® 242 to bolts before installation.

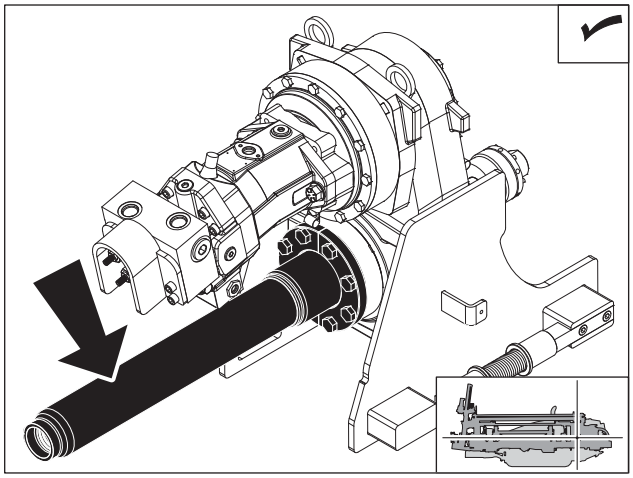

j22om053h.eps

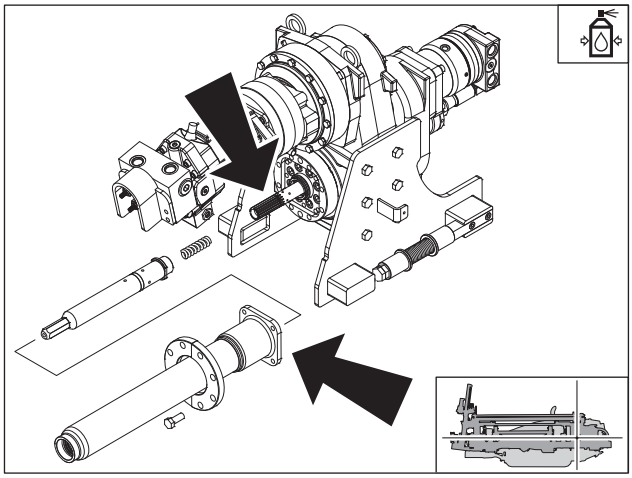

j22om055h.eps

Replace Carriage Wear Bars

Check carriage wear bars for wear. Replace as needed. See your Ditch Witch dealer for replacement parts.

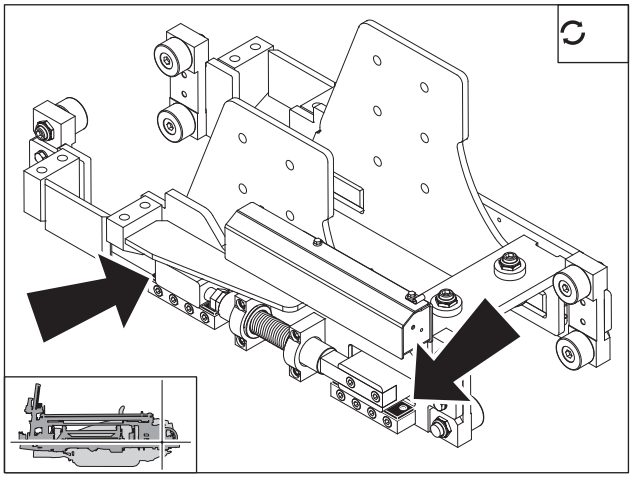

j22om067h.eps

https://truckmanualshub.com/

Specifications

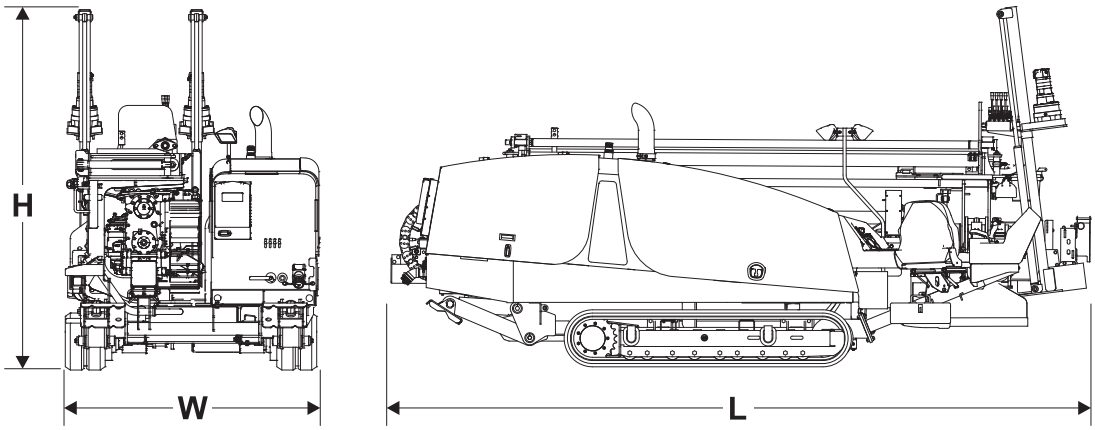

j22om072h.eps

Dimensions		U.S.	Metric
L, overall machine length			
	driving (per SAE J2022)	220 in	5.59 m
	transport (per SAE J2022)	221 in	5.61 m
W, overall machine width			
	base width (per SAE J2022)	80 in	2.03 m
	width with cab (per SAE J2022)	89 in	2.26 m
	width with cab, support removed (per SAE J2022)	88 in	2.23
H, overall machine height			
	driving (per SAE J2022)	119 in	3.02 m
	JT/AT large box, transport (per SAE J2022)	94 in	2.39 m
	JT/AT small box, transport (per SAE J2022)	92 in	2.34 m
Operating mass			
	JT unit (T4i base unit, no pipe), w/anchors and all fluids at 100%	17,075 lb	7 750 kg
	AT unit (T4i base unit, no pipe, w/anchors and all fluids at 100%	17,655 lb	8 010 kg
	Add JT drill pipe, full box and 2 pipes in drill frame	5,680 lb	2580 kg
	Add AT drill pipe, full box and 2 pipes in drill frame	5,000 lb	2270 kg
	Add cobble drill pipe, full box and 2 pipes in drill frame	5,690 lb	2580 kg
	Add cab option, heat and air	900 lb	410 kg
	Deduct Tier 3 engine option	105 lb	50 kg

https://truckmanualshub.com/

Dimensions	U.S.	Metric
Entry angle (per SAE J2022)	10-16°	10-16°
Angle of approach	19°	19°
Angle of approach (with cab)	15°	15°
Angle of departure	18°	18°
Ground bearing pressure (JT, pipe, T4i, w/cab) (SAE 16754)	11.6 psi	0.82 kg/cm^2
Ground bearing pressure (AT, pipe, T4i, w/cab) (SAE 16754)	11.6 psi	0.82 kg/cm^2
Ground clearance	5.7 in	144 mm

Power Pipe	U.S.	Metric
Length (per SAE J2022), nominal	118 in	3.00 m
Joint diameter (per SAE J2022)	3.00 in	76 mm
Tubing diameter (per SAE J2022)	2.38 in	60 mm
Minimum bend radius	155 ft	47 m
Weight (per SAE J2022), lined	90 lb	41 kg
Weight of drill pipe and large box (48 pipe)	5500 lb	2500 kg
Weight of drill pipe and small box (24 pipe)	3200 lb	1450 kg

All Terrain Pipe	U.S.	Metric
Length (per SAE J2022), nominal	112 in	2.84 m
Joint diameter (per SAE J2022)	3.25 in	83 mm
Tubing diameter (per SAE J2022)	2.23 in	57 mm
Minimum bend radius	145 ft	44 m
Weight (per SAE J2022), with inner rod	100 lb	45 kg
Weight of drill pipe and large box (35 pipe)	4800 lb	2180 kg
Weight of drill pipe and small box (20 pipe)	3460 lb	1570 kg

All Terrain Cobble Pipe	U.S.	Metric
Length (per SAE J2022), nominal	112 in	2.84 m
Joint diameter (per SAE J2022)	3.25 in	83 mm
Tubing diameter (per SAE J2022)	2.23in	57 mm

https://truckmanualshub.com/

All Terrain Cobble Pipe	U.S.	Metric
Minimum bend radius	210 ft	64 m
Weight (per SAE J2022), with inner rod	106 lb	48 kg

Operational	U.S.	Metric
Maximum spindle speed (per SAE J2022)	225 rpm	225 rpm
Maximum spindle speed (per SAE J2022) (AT inner spindle)	400 rpm	400 rpm
Maximum spindle torque	4000 ft•lb	5420 N•m
Maximum spindle torque (AT inner spindle)	800 ft•lb	1080 N•m
Carriage thrust travel speed (per SAE J2022)	120 fpm	37 m/min
Carriage pullback travel speed (per SAE J2022)	120 fpm	37 m/min
Thrust force (per SAE J2022)	24,800 lb	110 kN
Thrust force (All Terrain mode) (per SAE J2022)	24,800 lb	110 kN
Pullback force (per SAE J2022)	30,000 lb	133 kN
Bore diameter	4.5 in	114 mm
Bore diameter (All Terrain w/ Rockmaster 822)	4.75 in	121 mm
Bore diameter (All Terrain w/ Rockmaster 86)	5.50 in	140 mm
Backream diameter	soil dependent	
Ground travel speed (forward) (per SAE J2022)	2.4 mph	3.9 km/h
Ground travel speed (reverse) (per SAE J2022)	2.2 mph	3.5 km/h

Power: Tier 3 Engine	U.S.	Metric
Engine: Cummins QSB4.5, EPA Tier 3, EU Stage IIIA		
Fuel: diesel		
Cooling medium: liquid		
Injection: direct		
Aspiration: turbocharged and charge air cooled		
Cylinders: 4		
Displacement	275 in^3	4.5 L
Bore	4.21 in	107 mm
Stroke	4.88 in	124 mm
Power		

https://truckmanualshub.com/

Power: Tier 3 Engine		U.S.	Metric
	manufacturer's gross power rating (per SAE J1995)	148 hp	110 kW
	estimated net power rating (per SAE J1349)	143 hp	114 kW
	rated speed	2300 rpm	2300 rpm
	peak gross power @ 2000 rpm	156 hp	116 kW

Power: Tier 4i Engine		U.S.	Metric
Engine: Cummins QSB4.5, EPA Tier 3, EU Stage IIIB			
Fuel: diesel			
Cooling medium: liquid			
Injection: direct			
Aspiration: turbocharged and charge air cooled			
Cylinders: 4			
Displacement		275 in^3	4.5 L
Bore		4.21 in	107 mm
Stroke		4.88 in	124 mm
Power			
	manufacturer's gross power rating (per SAE J1995)	160 hp	119 kW
	estimated net power rating (per SAE J1349)	152 hp	113 kW
	rated speed	2300 rpm	2300 rpm
	peak gross power @ 2000 rpm	163 hp	122 kW

Drilling Fluid System (Onboard)	U.S.	Metric
Maximum drilling fluid pressure (per SAE J2022)	1500 psi	103 bar
Maximum drilling fluid flow (per SAE J2022)	50 gpm	189 L/min

Fluid Capacities	U.S.	Metric
Hydraulic reservoir	27 gal	102 L
Fuel tank *	42 gal	159 L
Engine oil, including filter	12 qt	11 L
Cooling system	23 qt	22 L
Antifreeze tank	8 gal	30 L

* Under normal operating conditions, a full tank of fuel will last 10 hours.

https://truckmanualshub.com/

Battery (2 used)
SAE reserve capacity 195 min, 12V, negative ground, SAE cold crank @ 0°F (-18°C), 950 amps.

Noise Levels
Operator ear sound pressure level is < or = 85 dBA sound pressure per ISO 6396 Operator ear sound pressure level (with cab) is < or = 85 dBA sound pressure per ISO 6396 Exterior sound power level is < or =102 dBA per ISO 6395

Vibration Levels
Average vibration transmitted to the operator's hand and whole body during normal operation does not exceed 2.5 and 0.5 m/sec^2 respectively. Operator seat complies with ISO 7096.

Specifications are called out according to SAE recommended practices where indicated. Specifications are general and subject to change without notice. If exact measurements are required, equipment should be weighed and measured. Due to selected options, delivered equipment may not necessarily match that shown.

https://truckmanualshub.com/

https://truckmanualshub.com/

Support

Procedure

Notify your dealer immediately of any malfunction or failure of Ditch Witch equipment.

Always give model, serial number, and approximate date of your equipment purchase. This information should be recorded and placed on file by the owner at the time of purchase.

Return damaged parts to dealer for inspection and warranty consideration if in warranty time frame.

Order genuine Ditch Witch replacement or repair parts from your authorized Ditch Witch dealer. Use of another manufacturer's parts may void warranty consideration.

Resources

Publications

Contact your Ditch Witch dealer for publications and videos covering safety, operation, service, and repair of your equipment.

Ditch Witch Training

For information about on-site, individualized training, contact your Ditch Witch dealer.

https://truckmanualshub.com/

Warranty

Ditch Witch Equipment and Replacement Parts Limited Warranty Policy

Subject to the limitation and exclusions herein, free replacement parts will be provided at any authorized Ditch Witch dealership for any Ditch Witch equipment or parts manufactured by The Charles Machine Works, Inc. (CMW) that fail due to a defect in material or workmanship within one (1) year of first commercial use (Exception: 2 years for all SK5 attachments). Free labor will be provided at any authorized Ditch Witch dealership for installation of parts under this warranty during the first year following "initial commercial" use of the serial-numbered Ditch Witch equipment on which it is installed. The customer is responsible for transporting their equipment to an authorized Ditch Witch dealership for all warranty work.

Exclusions from Product Warranty

- All incidental or consequential damages.
- All defects, damages, or injuries caused by misuse, abuse, improper installation, alteration, neglect, or uses other than those for which products were intended.
- All defects, damages, or injuries caused by improper training, operation, or servicing of products in a manner inconsistent with manufacturer's recommendations.
- All engines and engine accessories (these are covered by original manufacturer's warranty).
- Tires, belts, and other parts which may be subject to another manufacturer's warranty (such warranty will be available to purchaser).
- ALL IMPLIED WARRANTIES NOT EXPRESSLY STATED HEREIN, INCLUDING ANY WARRANTY OF FITNESS FOR A PARTICULAR PURPOSE AND MERCHANTABILITY.

IF THE PRODUCTS ARE PURCHASED FOR COMMERCIAL PURPOSES, AS DEFINED BY THE UNIFORM COMMERCIAL CODE, THEN THERE ARE NO WARRANTIES WHICH EXTEND BEYOND THE FACE HEREOF AND THERE ARE NO IMPLIED WARRANTIES OF ANY KIND WHICH EXTEND TO A COMMERCIAL BUYER. ALL OTHER PROVISIONS OF THIS LIMITED WARRANTY APPLY INCLUDING THE DUTIES IMPOSED.

Ditch Witch products have been tested to deliver acceptable performance in most conditions. This does not imply they will deliver acceptable performance in all conditions. Therefore, to assure suitability, products should be operated under anticipated working conditions prior to purchase.

Defects will be determined by an inspection within thirty (30) days of the date of failure of the product or part by CMW or its authorized dealer. CMW will provide the location of its inspection facilities or its nearest authorized dealer upon inquiry. CMW reserves the right to supply remanufactured replacements parts under this warranty as it deems appropriate.

Extended warranties are available upon request from your local Ditch Witch dealer or CMW.

Some states do not allow exclusion or limitation of incidental or consequential damages, so above limitation of exclusion may not apply. Further, some states do not allow exclusion of or limitation of how long an implied warranty lasts, so the above limitation may not apply. This limited warranty gives product owner specific legal rights and the product owner may also have other rights which vary from state to state.

For information regarding this limited warranty, contact CMW's Product Support department, P.O. Box 66, Perry, OK 73077-0066, or contact your local Ditch Witch dealer.

First version: 1/91; Latest version: 7/05

A Note To Ditch Witch Equipment Owners:

If your equipment was purchased through a Ditch Witch dealer, there is no need to read further.

However, if you purchased from any other source, please fill out the form on the reverse side and return it to us.

This will enable you to receive updates on this equipment as well as information on new products of interest.

Thanks for using Ditch Witch equipment.

(Please Fold Along This Line And Seal At Bottom With Tape)

NO POSTAGE NECESSARY IF MAILED IN THE UNITED STATES

BUSINESS REPLY MAIL

FIRST CLASS PERMIT NO 23 PERRY OKLAHOMA

POSTAGE WILL BE PAID BY

The Charles Machine Works, Inc.
P.O. Box 66
Perry, Oklahoma 73077-9989

A Note To Ditch Witch Equipment Owners:

If your equipment was purchased through a Ditch Witch dealer, there is no need to read further.

However, if you purchased from any other source, please fill out the form on the reverse side and return it to us.

This will enable you to receive updates on this equipment as well as information on new products of interest.

Thanks for using Ditch Witch equipment.

(Please Fold Along This Line And Seal At Bottom With Tape)

NO POSTAGE NECESSARY IF MAILED IN THE UNITED STATES

BUSINESS REPLY MAIL

FIRST CLASS PERMIT NO 23 PERRY OKLAHOMA

POSTAGE WILL BE PAID BY

The Charles Machine Works, Inc.
P.O. Box 66
Perry, Oklahoma 73077-9989

https://truckmanualshub.com/

Ditch Witch® Registration Card

Please Type or Print All Information

Purchaser's Company Name

Attention

Street Address or P.O. Box

City County

State Zip Nation

( )

Phone Number With Area Code

Model Serial Number

Attachments/Accessories Serial Numbers

Attachments/Accessories Serial Numbers

Attachments/Accessories Serial Numbers

Name of Ditch Witch Dealership

Your Signature

Ditch Witch® Registration Card

Please Type or Print All Information

Purchaser's Company Name

Attention

Street Address or P.O. Box

City County

State Zip Nation

( )

Phone Number With Area Code

Model Serial Number

Attachments/Accessories Serial Numbers

Attachments/Accessories Serial Numbers

Attachments/Accessories Serial Numbers

Name of Ditch Witch Dealership

Your Signature

https://truckmanualshub.com/

https://truckmanualshub.com/

Service Record

Service Performed	Date	Hours

https://truckmanualshub.com/

Service Performed	Date	Hours