https://truckmanualshub.com/

U.S.A. : **KUBOTA TRACTOR CORPORATION**
3401 Del Amo Blvd., Torrance, CA 90503, U.S.A.
Telephone : (310)370-3370
Western Division : 1175 S. Guild Avc., Lodi, CA 95240
Telephone : (209)334-9910
Central Division : 14855 FAA Blvd., Fort Worth, TX 76155
Telephone : (817)571-0900
Northern Division : 6300 at One Kubota Way, Groveport, OH 43125
Telephone : (614)835-1100
Southeast Division : 1025 Northbrook Parkway, Suwanee, GA 30024
Telephone : (770)995-8855

Canada : **KUBOTA CANADA LTD.**
5900 14th Avenue, Markham, Ontario, L3S 4K4, Canada
Telephone : (905)294-7477

France : **KUBOTA EUROPE S.A.S**
19-25, Rue Jules Vercruysse, Z.I. BP88, 95101 Argenteuil Cedex, France
Telephone : (33)1-3426-3434

Italy : **KUBOTA EUROPE S.A.S Italy Branch**
Via Grandi, 29 20068 Peschiera Borrome (MI) Italy
Telephone : (39)02-51650377

Germany : **KUBOTA (DEUTSCHLAND) GmbH**
Senefelder Str. 3-5 63110 Rodgau /Nieder-Roden, Germany
Telephone : (49)6106-873-0

U.K. : **KUBOTA (U.K.) LTD.**
Dormer Road, Thame, Oxfordshire, OX9 3UN, U.K.
Telephone : (44)1844-214500

Spain : **KUBOTA ESPAÑA S.A.**
Avenida Recomba No.5, Poligno Industrial la Laguna, Leganes, 28914 (Madrid) Spain
Telephone : (34)91-508-6442

Australia : **KUBOTA TRACTOR AUSTRALIA PTY LTD.**
25-29 Permas Way, Truganina, VIC 3029, Australia
Telephone : (61)-3-9394-4400

Malaysia : **SIME KUBOTA SDN. BHD.**
No.3 Jalan Sepadu 25/123 Taman Perindustrian Axis,
Seksyen 25, 40400 Shah Alam, Selangor Darul Ehsan Malaysia
Telephone : (60)3-736-1388

Philippines : **KUBOTA PHILIPPINES, INC.**
155 Panay Avenue, South Triangle Homes, 1103 Quezon City, Philippines
Telephone : (63)2-9201071

Taiwan : **SHIN TAIWAN AGRICULTURAL MACHINERY CO., LTD.**
16, Fengping 2nd Rd, Taliao Shiang Kaohsiung 83107, Taiwan R.O.C.
Telephone : (886)7-702-2333

Indonesia : **P.T. KUBOTA INDONESIA**
Jalan Setyabudi 279, Semarang, Indonesia
Telephone : (62)-24-7472849

Thailand : **SIAM KUBOTA CORPORATION CO., LTD.**
101/19-24 Moo 20, Navanakorn Industrial Estate, Tambon Khlongnueng, Amphur Khlongluang,
Pathumthani 12120, THAILAND
Telephone : (66)2-909-0300

Korea : **KUBOTA KOREA CO., LTD.**
106-24 Mongsan-Ri, Mankyung-Up, Kimje-City, Chonrapuk-Do, KOREA
Telephone : (82)-63-544-5822

India : **KUBOTA AGRICULTURAL MACHINERY INDIA PVT. LTD.**
Regus, Level 2 Altius, Olympia Tech Park, No.1 SIDCO Industrial Estate, Guindy, Chennai 600032, TN, India
Telephone : (91)-44-4299-4237

Vietnam : **KUBOTA VIETNAM CO., LTD.**
Lot B-3A2-CN, My Phuoc 3 Industrial Park, Ben Cat District, Binh Duong Province, Vietnam
Telephone : (84)-650-3577-507

KUBOTA Corporation

English, French, German (Europe)
Code No.
Nº de code. TA530-8113-5
Code Nr.

S T V 3 2 • S T V 3 6 • S T V 4 0

OPERATOR'S MANUAL
KUBOTA TRACTOR

MANUEL DE L'UTILISATEUR
KUBOTA TRACTEUR

BEDIENUNGSANLEITUNG
KUBOTA TRAKTOR

ENGLISH

FRANÇAIS

DEUTSCH

MODELS STV32
MODELES STV36
MODELLE STV40

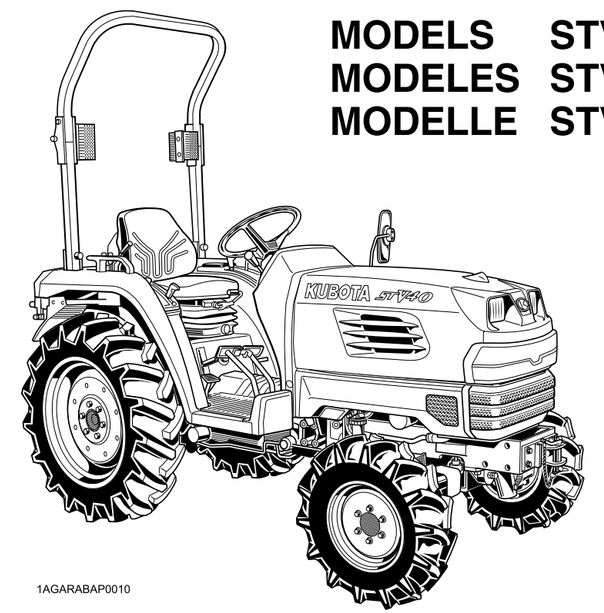

1AGARABAP0010

READ AND SAVE THIS MANUAL
MANUEL A LIRE ET A CONSERVER
DIESE ANLEITUNG SORGFÄLTIG
DURCHLESEN UND AUFBEWAHREN

PRINTED IN JAPAN
IMPRIME AU JAPON
DRUCK : JAPAN

© KUBOTA Corporation 2004

https://truckmanualshub.com/

ABBREVIATION LIST

Abbreviations	Definitions
2WD	Two Wheel Drive
4WD	Four Wheel Drive
API	American Petroleum Institute
ASABE	American Society of Agricultural and Biological Engineers, USA
ASTM	American Society for Testing and Materials, USA
DIN	Deutsches Institut für Normung, GERMANY
DT	Dual Traction [4WD]
fpm	Feet Per Minute
GST	Glide Shift Transmission
Hi-Lo	High Speed-Low Speed
HST	Hydrostatic Transmission
m/s	Meters Per Second
PTO	Power Take Off
RH/LH	Right-hand and left-hand sides are determined by facing in the direction of forward travel
ROPS	Roll-Over Protective Structures
rpm	Revolutions Per Minute
r/s	Revolutions Per Second
SAE	Society of Automotive Engineers, USA
SMV	Slow Moving Vehicle

Intended use

This machine is designed solely for use in customary agricultural or similar operations. Use in any other way is considered as contrary to the intended use. Compliance with and strict adherence to the conditions of operation, service, and repair as specified by the manufacturer, also constitute essential elements of the intended use.
This machine should be operated, serviced, and repaired only by persons who are familiar with its particular characteristics and who are acquainted with the relevant safety procedures.
Accident prevention regulations, all other generally recognized regulations on safety and occupational medicine, and all road traffic regulations must be observed at all times.
Any arbitrary modifications carried out to this machine may relieve the manufacturer of liability for any resulting damage or injury.

manufacturer or distributor of the machine	Kubota Corporation
the model designation of the machine	STV32 / STV36 / STV40
the name or type of publication	Operator's Manual
the part number or publication number by which the manual may be ordered	TA530-8113-5
the date of issue	December 24, 2003
the publication date	February 4, 2012
the language in which the manual is written	English

KUBOTA Corporation C'EST · · ·

Depuis sa fondation en 1890, KUBOTA Corporation a progressé pour figurer au rang des plus grandes entreprises du Japon. Pour parvenir à cette position, la Société a diversifié, au cours des années, la gamme de ses produits et services de façon remarquable.
Aujourd'hui, 19 usines et 16,000 employés produisent plus de 1,000 articles et produits différents petits et grands.
Tous ces produits et les services qui en dépendent sont toutefois liés à un souci majeur:
KUBOTA fabrique des produits qui, pris à une échelle nationale sont des nécessités de base, produits indispensables, produits conçus pour aider les hommes et leurs nations à tirer parti du potentiel inhérent à leur environnement, KUBOTA est le géant des nécessités de base.
Ce potentiel inclut l'approvisionnement en eau, la production d'aliments tirés du sol et de la mer, le développement industriel, l'architecture et la construction, les transports.
Des milliers de personnes font confiance au savoir faire de KUBOTA, à sa technologie, à son expérience et à son service après vente, vous aussi pouvez faire confiance à KUBOTA.

KUBOTA ist · · ·

Seit der Firmengründung im Jahre 1890 ist KUBOTA zu einem der wichtigsten Unternehmen in Japan angewachsen.
Hierzu hat zum großen Teil die ständige Erweiterung der Produktpalette und das ständig wachsende Angebot an Dienstleistungen beigetragen. Heute werden von 16000 Beschäftigten in 19 Werken mehr als 1000 verschiedene Produkte hergestellt.
Das vorrangige Ziel von KUBOTA ist es, mit seinen Produkten und den dazugehörigen Dienstleistungen Grundbedürfnissen gerecht zu werden, auch auf internationaler Ebene.
Die von KUBOTA hergestellten Produkte sind unverzichtbar; sie helfen einzelnen Personen, sogar ganzen Nationen die örtlich gegebenen Möglichkeiten in Bereichen wie Wasserversorgung, Landwirtschaft, Fischerei, Industrie, Archtitektur, Bau-und Transportwesen bestmöglich auszuschöpfen. Tausende bauen auf KUBOTA -und Sie?

STV32/36/40
AR. D. 12-19. 4. K

https://truckmanualshub.com/

UNIVERSAL SYMBOLS

As a guide to the operation of your tractor, various universal symbols have been utilized on the instruments and controls. The symbols are shown below with an indication of their meaning.

- Safety Alert Symbol
- Diesel Fuel
- Fuel-Level
- Engine-Rotational Speed
- Hourmeter/Elapsed Operating Hours
- Engine Coolant-Temperature
- Engine Coolant Temperature
- Parking Brake
- Diesel Preheat/Glow Plugs(Low Temperature Start Aid)
- Battery Charging Condition
- Engine Oil-Pressure
- Turn Signal
- Engine-Stop
- Engine-Run
- Diesel Preheat/Glow Plugs(Low Temperature Start Aid)
- Engine-Start
- Power Take-Off Clutch Control-Off (Disengaged) Position
- Power Take-Off Clutch Control-On (Engaged) Position
- Bi-Speed turn
- Differential Lock
- Position Control-Raised Position
- Position Control-Lowered Position
- Draft Control-Shallow Position
- Draft Control-Deep Position
- 3-Point Lowering Speed Control
- Remote Cylinder-Retract
- Remote Cylinder-Extend
- Hazard Warning Lights
- Position Lamps
- Headlight-Low Beam
- Headlight-High Beam
- Four-Wheel Drive-On
- Four-Wheel Drive-Off
- Fast
- Slow
- Creep
- Steering Wheel-Tilt Control
- Audible Warning Device
- Lock
- Engine Speed Control
- PTO 540 rpm
- PTO 800 rpm
- Rear-PTO gear shift lever
- Mid-PTO gear shift lever

https://truckmanualshub.com/

FOREWORD

You are now the proud owner of a KUBOTA Tractor. This tractor is a product of KUBOTA quality engineering and manufacturing. It is made of fine materials and under a rigid quality control system. It will give you long, satisfactory service. To obtain the best use of your tractor, please read this manual carefully. It will help you become familiar with the operation of the tractor and contains many helpful hints about tractor maintenance. It is KUBOTA's policy to utilize as quickly as possible every advance in our research. The immediate use of new techniques in the manufacture of products may cause some small parts of this manual to be outdated. KUBOTA distributors and dealers will have the most up-to-date information. Please do not hesitate to consult with them.

SAFETY FIRST

This symbol, the industry's "Safety Alert Symbol", is used throughout this manual and on labels on the machine itself to warn of the possibility of personal injury. Read these instructions carefully. It is essential that you read the instructions and safety regulations before you attempt to assemble or use this unit.

DANGER : Indicates an imminently hazardous situation which, if not avoided, will result in death or serious injury.

WARNING : Indicates a potentially hazardous situation which, if not avoided, could result in death or serious injury.

CAUTION : Indicates a potentially hazardous situation which, if not avoided, may result in minor or moderate injury.

IMPORTANT : Indicates that equipment or property damage could result if instructions are not followed.

NOTE : Gives helpful information.

https://truckmanualshub.com/

ENGLISH

CONTENTS

⚠SAFE OPERATION ..... ⚠-1

SERVICING OF TRACTOR 1

SPECIFICATIONS 2
- SPECIFICATION TABLE 2
- TRAVELING SPEEDS 4

IMPLEMENT LIMITATIONS 5

INSTRUMENT PANEL AND CONTROLS 7

PRE-OPERATION CHECK 9
- DAILY CHECK 9

OPERATING THE ENGINE 10
- STARTING THE ENGINE 10
  - Cold Weather Starting 13
- STOPPING THE ENGINE 13
- WARMING UP 14
  - Warm-Up Transmission Oil in the Low Temperature Range 14
- JUMP STARTING 14

OPERATING THE TRACTOR 16
- OPERATING NEW TRACTOR 16
  - Do not Operate the Tractor at Full Speed for the First 50 Hours 16
  - Changing Lubricating Oil for New Tractors 16
- BOARDING AND LEAVING THE TRACTOR 16
- OPERATING FOLDABLE ROPS (if equipped) 16
  - To Fold the ROPS 16
  - To Raise the ROPS to Upright Position 17
- STARTING 18
  - Operator's Seat 18
  - Tilt Steering Adjustment 19
  - Head Light Switch 20
  - Turn Signal / Hazard Light Switch 20
  - Position Light Switch 20
  - Horn Button 21
  - Tractor Lights 21
  - Brake Pedals (Right and Left) 22
  - Clutch Pedal 23
  - Range Gear Shift Lever 23
  - Front Wheel Drive Lever 24
  - Bi-speed Turn Switch 24
  - Hand Throttle Lever 25
  - Parking Brake Lever 25
  - Speed Control Pedal 26
  - Cruise Control Lever 26
- STOPPING 27
  - Stopping 27

https://truckmanualshub.com/

CHECK DURING DRIVING 27
Immediately Stop the Engine if: 27
Easy Checker(TM) 27
Fuel Gauge 28
Coolant Temperature Gauge 28
Hourmeter/Tachometer 28
PARKING 29
Parking 29
OPERATING TECHNIQUES 29
Differential Lock 29
Operating the Tractor on a Road 30
Operating on Slopes and Rough Terrain 30
Transport the Tractor Safely 30
Directions for Use of Power Steering 30
Trailer Electrical Outlet 31
Electrical Outlet 31
Accelerator Auto Throttle System 31

PTO 32
PTO OPERATION 32
PTO Clutch Control Switch 32
Rear PTO Gear Shift Lever 33
Mid-PTO Gear Shift Lever 33
Stationary PTO 35
PTO Shaft Cover and Shaft Cap 35

THREE-POINT HITCH & DRAWBAR 36
3-POINT HITCH 37
Selecting the holes of lower links 37
Selecting the top link mounting holes 37
Drawbar 37
Lifting Rod (Right) 37
Top Link 37
Check Chains 38
Lower link holder 38
DRAWBAR 39
FRONT HITCH 39
HIGH-HITCH 39
High-Hitch 39

HYDRAULIC UNIT 40
3-POINT HITCH CONTROL SYSTEM 40
Position Control 40
Float Control 40
3-point Hitch Lowering Speed 40
AUXILIARY HYDRAULICS 41
Hydraulic Block Type Outlet 41
REMOTE HYDRAULIC CONTROL SYSTEM (if equipped) 41
Remote Control Valve Lever 41
Remote Control Valve 42
Hydraulic Control Unit Use Reference Chart 43

TIRES, WHEELS AND BALLAST 44

https://truckmanualshub.com/

TIRES 44
Inflation Pressure 44
Dual Tires 44
WHEEL ADJUSTMENT 44
Front Wheels (with four wheel drive) 45
Rear Wheels 46
BALLAST 47
Front Ballast 47
Rear Ballast 48
Liquid Ballast in Rear Tires 48
Rear Counter Weight 48
Maximum Masses 48

MAINTENANCE 49
SERVICE INTERVALS 49
LUBRICANTS 51

PERIODIC SERVICE 53
HOW TO OPEN THE HOOD 53
Hood 53
Engine Side Cover and Front Grill 53
Tool Box [ROPS Type] 54
DAILY CHECK 54
Walk Around Inspection 54
Checking and Refueling 54
Checking Engine Oil Level 55
Checking Transmission Fluid Level 56
Checking Coolant Level 56
Cleaning Grill, Radiator Screen and Oil Cooler 57
Checking Brake Pedals and Clutch Pedal 57
Checking Gauges, Meter and Easy Checker(TM) 57
Checking Head Light, Hazard Light etc. 57
Checking ROPS and CAB 57
Checking Movable Parts 57
EVERY 50 HOURS 58
Lubricating Grease Fittings 58
Oiling 58
Checking Engine Start System 59
Checking Wheel Bolt Torque 60
EVERY 100 HOURS 60
Changing Engine Oil 60
Cleaning Air Cleaner Element [Single Element Type] 61
Cleaning Air Cleaner Primary Element [Double Element Type] 62
Cleaning Fuel Filter 62
Adjusting Fan Belt Tension 63
Checking Fuel Line 63
Adjusting Clutch Pedal 64
Adjusting Brake Pedal 64
Checking Battery Condition 65
Adjusting Parking Brake Lever 66
EVERY 200 HOURS 67
Replacing Engine Oil Filter 67

https://truckmanualshub.com/

Replacing Hydraulic Oil Filter / Replacing Transmission Oil Filter [HST Type] 67
Checking Radiator Hose and Clamp 68
Checking HST Oil Line [HST Type] / Checking Power Steering Line 69
Adjusting Toe-in 69
EVERY 400 HOURS 70
Changing Transmission Fluid 70
Replacing Fuel Filter Element 70
Changing Front Axle Case Oil 70
EVERY 600 HOURS 71
Adjusting Front Axle Pivot 71
EVERY 800 HOURS 71
Adjusting Engine Valve Clearance 71
EVERY 1 YEAR 71
Replacing Air Cleaner Primary Element and Secondary Element 71
EVERY 2 YEARS 71
Flushing Cooling System and Changing Coolant 71
Anti-Freeze 72
Replacing Radiator Hose (Water pipes) 73
Replacing Power Steering Hose 73
Replacing HST Oil Line [HST Type] 73
Replacing Fuel Hose 73
SERVICE AS REQUIRED 73
Bleeding Fuel System 73
Draining Clutch Housing Water 74
Replacing Fuse 74
Replacing Light Bulb 75

STORAGE 76
TRACTOR STORAGE 76
REMOVING THE TRACTOR FROM STORAGE 77

TROUBLESHOOTING 78
ENGINE TROUBLESHOOTING 78

OPTIONS 79

APPENDICES 80
MAXIMUM MASSES 80
Maximum Permissible Load of The Tire 80
Trailer Load Capacity 81
INDEX 82

https://truckmanualshub.com/

SAFE OPERATION

Careful operation is your best insurance against an accident.

Read and understand this manual carefully before operating the tractor.

All operators, no matter how much experience they may have, should read this and other related manuals before operating the tractor or any implement attached to it. It is the owner's obligation to instruct all operators in safe operation.

1. BEFORE OPERATING THE TRACTOR

1. Know your equipment and its limitations. Read this entire manual before attempting to start and operate the tractor.
2. Pay special attention to the danger, warning and caution labels on the tractor.
3. KUBOTA recommends the use of a CAB or Roll Over Protective Structures (ROPS) in almost all applications. This CAB or ROPS will reduce the risk of serious injury or death, should the tractor be upset.
   If the tractor is equipped with a foldable ROPS it may be temporarily folded down only when absolutely necessary for areas with height constraints.
   (There is no operator protection provided by the ROPS in the folded position. For operator safety the ROPS should be placed in the upright and locked position for all other operations.)
   If the CAB or ROPS is loosened or removed for any reason, make sure that all parts are reinstalled correctly before operating the tractor.
   Never modify or repair a ROPS because welding, bending, drilling, grinding, or cutting may weaken the structure.
   A damaged CAB or ROPS structure must be replaced, not repaired or revised.
   If any structural member of the CAB or ROPS is damaged, replace the entire structure at your local KUBOTA Dealer.

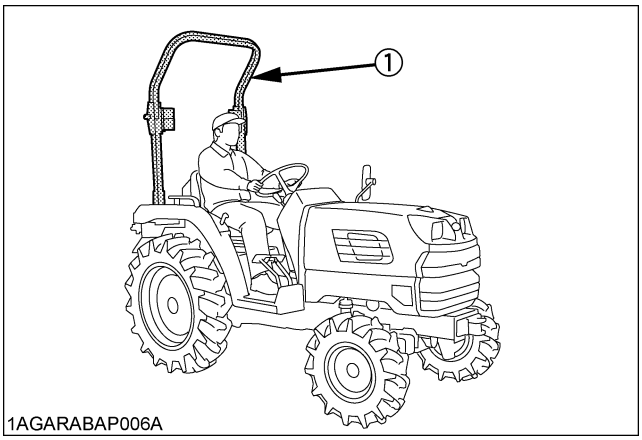

(1) ROPS

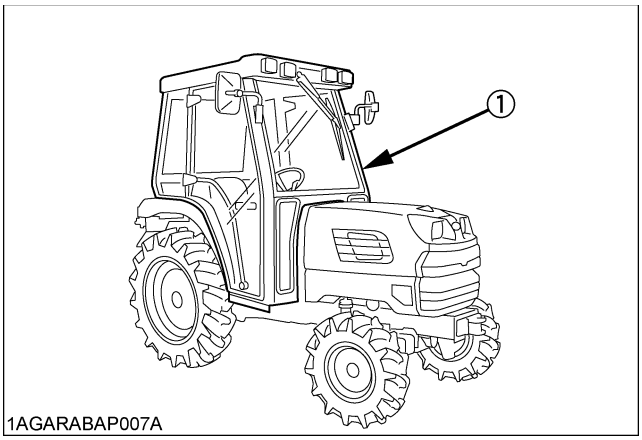

(1) CAB

4. Do not operate the tractor or any implement attached to it while under the influence of alcohol, medication, controlled substances or while fatigued.
5. Carefully check the vicinity before operating tractor or any implement attached to it. Check for overhead clearance which may interfere with a CAB or ROPS. Do not allow any bystanders around or near tractor during operation.
6. Before allowing other people to use your tractor, explain how to operate and have them read this manual before operation.
7. Never wear loose, torn, or bulky clothing around tractor. It may catch on moving parts or controls, leading to the risk of an accident. Use additional safety items, e.g. hard hat, safety boots or shoes, eye and hearing protection, gloves, etc., as appropriate or required.
8. Do not allow passengers to ride on any part of the tractor at anytime. The operator must remain in the tractor seat during operation.

https://truckmanualshub.com/

9. Check brakes, clutch, linkage pins and other mechanical parts for improper adjustment and wear. Replace worn or damaged parts promptly. Check the tightness of all nuts and bolts regularly. (For further details, see "MAINTENANCE" section.)
10. Keep your tractor clean. Dirt, grease, and trash build up may contribute to fires and lead to personal injury.
11. Use only implements meeting the specifications listed under "IMPLEMENT LIMITATIONS" in this manual or implements approved by KUBOTA.
12. Use proper weights on the front or rear of the tractor to reduce the risk of upsets. When using the front loader, put an implement or ballast on the 3-point hitch to improve stability. Follow the safe operating procedures specified in the implement or attachment manual.
13. The narrower the tread, the greater the risk of a tractor upset. For maximum stability, adjust the wheels to the widest practical tread width for your application. (See "TIRES, WHEELS AND BALLAST" section.)

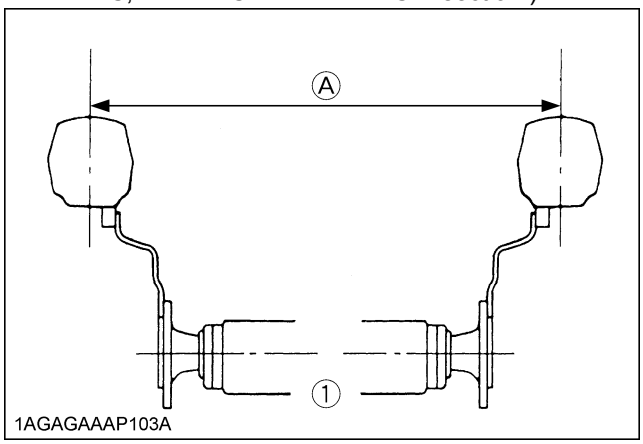

(1) Rear wheels *(A) Tread Width*

14. Do not modify the tractor. Unauthorized modification may affect the function of the tractor, which may result in personal injury.

2. OPERATING THE TRACTOR

Operator safety is a priority. Safe operation, specifically with respect to overturning hazards, entails understanding the equipment and environmental conditions at the time of use. Some prohibited uses which can affect overturning hazards include traveling and turning with implements and loads carried too high etc. This manual sets forth some of the obvious risks, but the list is not, and cannot be, exhaustive. It is the operator's responsibility to be alert for any equipment or environmental condition that could compromise safe operation.

◆ Starting

1. Always sit in the operator's seat when starting engine or operating levers or controls. Adjust seat per instructions in the operating the tractor section. Never start engine while standing on the ground.
2. Before starting the engine, make sure that all levers (including auxiliary control levers) are in their neutral positions, that the parking brake is engaged, and the Power Take-Off (PTO) is disengaged or "OFF".
3. Do not start engine by shorting across starter terminals or bypassing the safety start switch. Machine may start in gear and move if normal starting circuitry is bypassed.
4. Do not operate or idle engine in a non-ventilated area. Carbon monoxide gas is colorless, odorless, and deadly.
5. Check before each use that operator presence controls are functioning correctly. Test safety systems. (See "Checking Engine Start System" in "EVERY 50 HOURS" in "PERIODIC SERVICE" section.)
   Do not operate unless they are functioning correctly.

◆ Working

1. Pull only from the drawbar. Never hitch to axle housing or any other point except drawbar; such arrangements will increase the risk of serious personal injury or death due to a tractor upset.

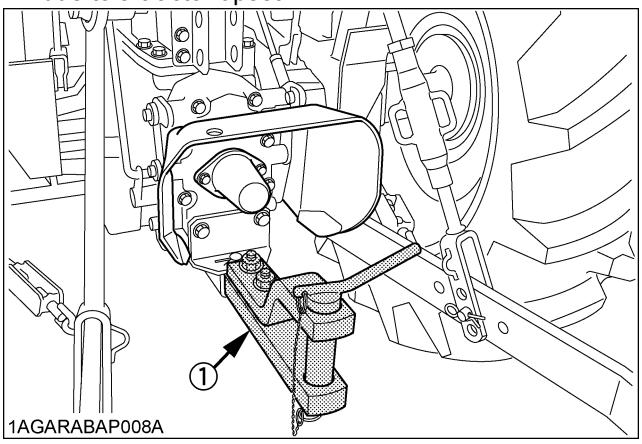

(1) Drawbar

https://truckmanualshub.com/

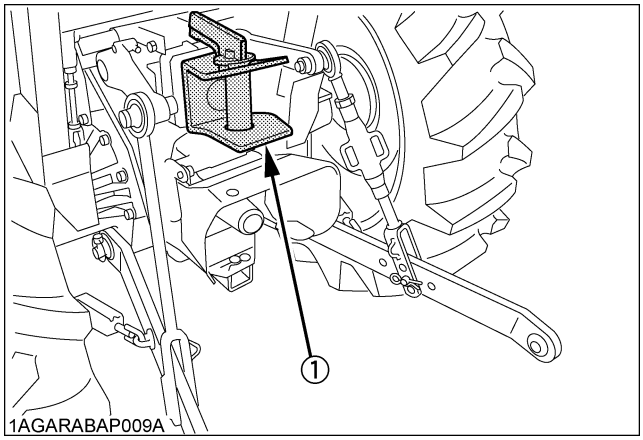

(1) High-hitch

2. Keep all shields and guards in place. Replace any that are missing or damaged.
3. Avoid sudden starts. To avoid upsets, slow down when turning, on uneven ground, and before stopping.
4. The tractor cannot turn with the differential locked and attempting to do so could be dangerous.
5. Do not operate near ditches, holes, embankments, or other ground surface features which may collapse under the tractor's weight. The risk of tractor upset is even higher when the ground is loose or wet. Tall grass can hide obstacles, walk the area first to be sure.
6. Watch where you are going at all times. Watch for and avoid obstacles. Be alert at row ends, near trees, and other obstructions.
7. When working in groups, always let the others know what you are going to do before you do it.
8. Never try to get on or off a moving tractor.
9. Do not use "Bi-speed Turn" at high speed.
10. "Bi-Speed Turn" enables short and fast turns, therefore, become familiar with its performance before operating in close or confined areas.
11. Do not stand between tractor and implement or trailed vehicle unless parking brake is applied.

◆ Safety for children

Tragedy can occur if the operator is not alert to the presence of children. Children generally are attracted to machines and the work they do.

1. Never assume that children will remain where you last saw them.
2. Keep children out of the work area and under the watchful eye of another responsible adult.
3. Be alert and shut your machine down if children enter the work area.
4. Never carry children on your machine. There is no safe place for them to ride. They may fall off and be run over or interfere with your control of the machine.
5. Never allow children to operate the machine even under adult supervision.
6. Never allow children to play on the machine or on the implement.
7. Use extra caution when backing up. Look behind and down to make sure area is clear before moving.
8. When parking your machine if at all possible park on a firm, flat and level surface; if not, park across a slope. Set the parking brake(s), lower the implements to the ground, remove the key from the ignition and lock the cab door (if equipped) and chock the wheels.

◆ Operating on slopes

Slopes are a major factor related to loss-of-control and tip-over accidents, which can result in severe injury or death. All slopes require extra caution.

1. To avoid upsets, always back up steep slopes. If you cannot back up the slope or if you feel uneasy on it, do not operate on it. Stay off slopes too steep for safe operation.
2. Driving forward out of a ditch, mired condition or up a steep slope increases the risk of a tractor to be upset backward. Always back out of these situations. Extra caution is required with four-wheel drive models because their increased traction can give the operator false confidence in the tractor's ability to climb slopes.
3. Keep all movement on slopes slow and gradual. Do not make sudden changes in speed, direction or apply brake and make sudden motions of the steering wheel.
4. Avoid disengaging the clutch or changing gears speed when climbing or going down a slope. If on a slope disengaging the clutch or changing gears to neutral could cause loss of control.
5. Special attention should be made to the weight and location of implements and loads as such will affect the stability of the tractor.
6. To improve stability on slope, set widest wheel tread as shown in "TIRES, WHEELS AND BALLAST" section.
   Follow recommendations for proper ballasting.

◆ Driving the tractor on the road

1. Lock the two brake pedals together to help assure straight-line stops. Uneven braking at road speeds could cause the tractor to tip over.

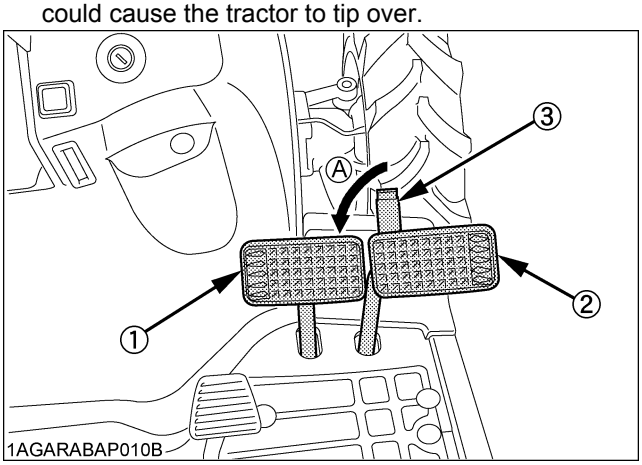

(1) Brake Pedal (LH)
(2) Brake Pedal (RH)
(3) Brake Pedal Lock
(A) Whenever travelling on the road

https://truckmanualshub.com/

2. Check the front wheel engagement. The braking characteristics are different between two and four wheel drive. Be aware of the difference and use carefully.
3. Always slow the tractor down before turning. Turning at high speed may tip the tractor over.
4. Observe all local traffic and safety regulations.
   Use the registration plate as required.

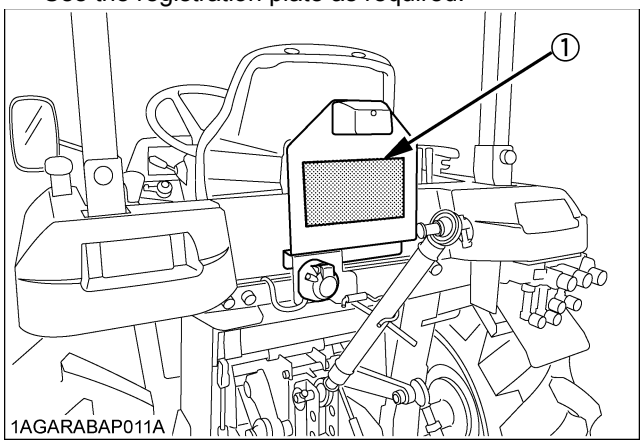

(1) Registration plate

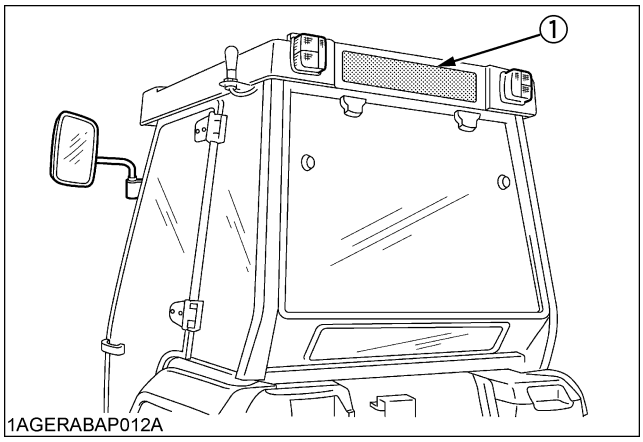

(1) Registration plate

5. Turn the headlights on. Dim them when meeting another vehicle.
6. Drive at speeds that allow you to maintain control at all times.
7. Do not apply the differential lock while traveling at road speeds. The tractor may run out of control.
8. Avoid sudden motions of the steering wheel as they can lead to a dangerous loss of stability. The risk is especially great when the tractor is traveling at road speeds.
9. Do not operate an implement while the tractor is on the road. Lock the 3-point hitch in the raised position.

3. PARKING THE TRACTOR

1. Disengage the PTO, lower all implements to the ground, place all control levers in their neutral positions, set the parking brake, stop the engine, and remove the key.
2. Make sure that the tractor has come to a complete stop before dismounting.
3. Avoid parking on steep slopes, if at all possible park on a firm and level surface; if not, park across a slope with chock the wheels.
   Failure to comply with this warning may allow the tractor to move and could cause injury or death.

4. OPERATING THE PTO

1. Wait until all moving components have completely stopped before getting off the tractor, connecting, disconnecting, adjusting, cleaning, or servicing any PTO driven equipment.
2. Keep the PTO shaft cover in place at all times. Replace the PTO shaft cap when the shaft is not in use.

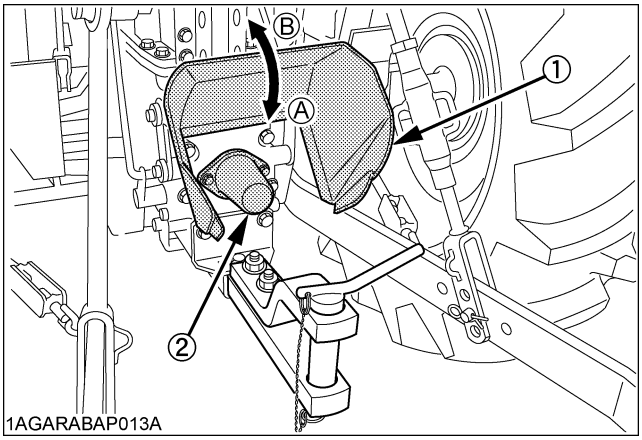

(1) PTO Shaft cover *(A) "NORMAL POSITION"*
(2) PTO Shaft cap *(B) "RAISED POSITION"*

3. Before installing or using PTO driven equipment, read the manufacturer's manual and review the safety labels attached to the equipment.
   To prevent PTO driven equipment from improper or unsafe use, select the lower speed (540rpm) unless the higher one is specifically recommended as safe by the equipment manufacture.
4. When operating stationary PTO driven equipment, always apply the tractor parking brake and place chocks behind and in front of the rear wheels. Stay clear of all rotating parts. Never step over rotating parts.

https://truckmanualshub.com/

5. USING 3-POINT HITCH

1. Use the 3-point hitch only with equipment designed for 3-point hitch usage.
2. When using a 3-point hitch mounted implement, be sure to install the proper counterbalance weight on the front of the tractor.
3. When transporting on the road, set the implement lowering speed knob in the "LOCK" position to hold the implement in the raised position.

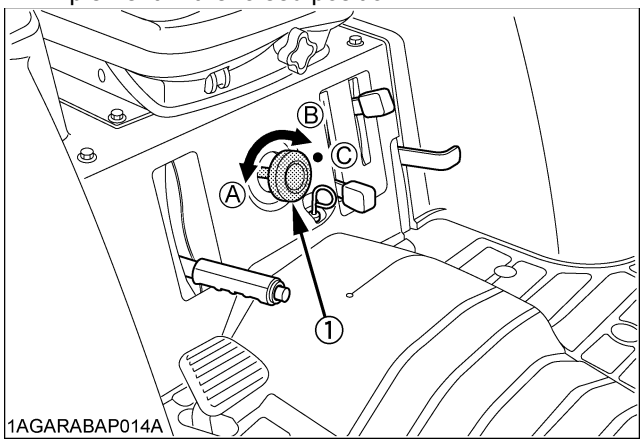

(1) 3-point hitch lowering speed knob

(A) "FAST"
(B) "SLOW"
(C) "LOCK"

6. SERVICING THE TRACTOR

Before servicing the tractor, park it on a firm, flat and level surface, set the parking brake, lower all implements to the ground, place the gear shift lever in neutral, stop the engine and remove the key.

1. Allow the tractor time to cool off before working on or near the engine, muffler, radiator, etc.
2. Do not remove radiator cap while coolant is hot. When cool, slowly rotate cap to the first stop and allow sufficient time for excess pressure to escape before removing the cap completely. If the tractor has a coolant recovery tank, add coolant or water to the tank, not the radiator. (See "Checking Coolant Level" in "DAILY CHECK" in "PERIODIC SERVICE" section.)
3. Always stop the engine before refueling. Avoid spills and overfilling.
4. Do not smoke when working around battery or when refueling. Keep all sparks and flames away from battery and fuel tank. The battery presents an explosive hazard, because it gives off hydrogen and oxygen especially when recharging.
5. Before "jump starting" a dead battery, read and follow all of the instructions. (See "JUMP STARTING" in "OPERATING THE ENGINE" section.)
6. Keep first aid kit and fire extinguisher handy at all times.
7. Disconnect the battery's ground cable before working on or near electric components.
8. To avoid the possibility of battery explosion, do not use or charge the refillable type battery if the fluid level is below the LOWER (lower limit level) mark. Check the fluid level regularly and add distilled water as required so that the fluid level is between the UPPER and LOWER levels.
9. To avoid sparks from an accidental short circuit, always disconnect the battery's ground cable (-) first and reconnect it last.

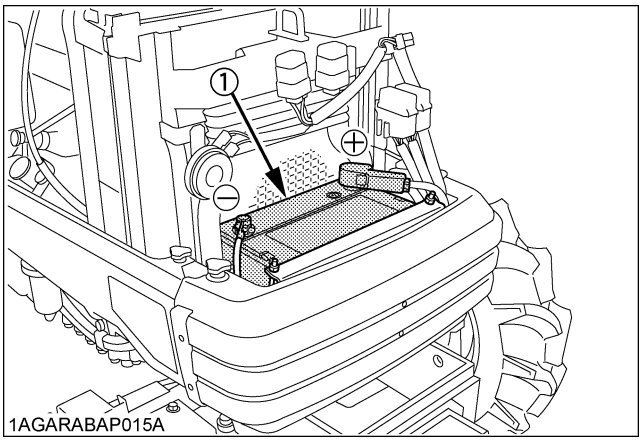

(1) Battery

10. Do not attempt to mount a tire on a rim. This should be done by a qualified person with the proper equipment.
11. Do not work under any hydraulically supported devices. They can settle, suddenly leak down, or be accidentally lowered. If necessary to work under tractor or any machine elements for servicing or adjustment, securely support them with stands or suitable blocking beforehand.
12. Always maintain the correct tire pressure. Do not inflate tires above the recommended pressure shown in the operator's manual.

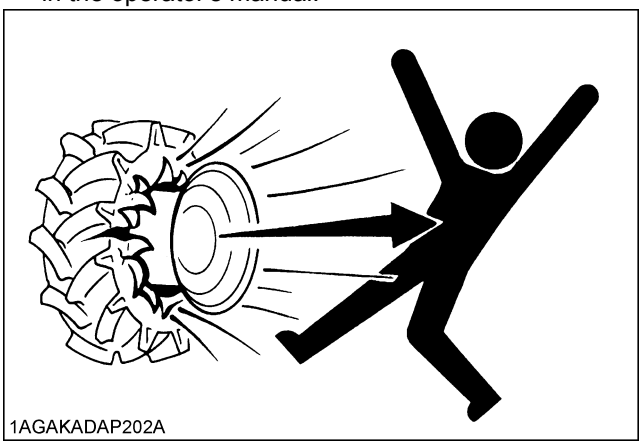

13. Securely support the tractor when either changing wheels or adjusting the wheel tread width.
14. Make sure that wheel bolts have been tightened to the specified torque.

https://truckmanualshub.com/

15. Escaping hydraulic fluid under pressure has sufficient force to penetrate skin, causing serious personal injury. Before disconnecting hydraulic lines, be sure to release all residual pressure. Before applying pressure to the hydraulic system, make sure that all connections are tight and that all lines, pipes, and hoses are free of damage.

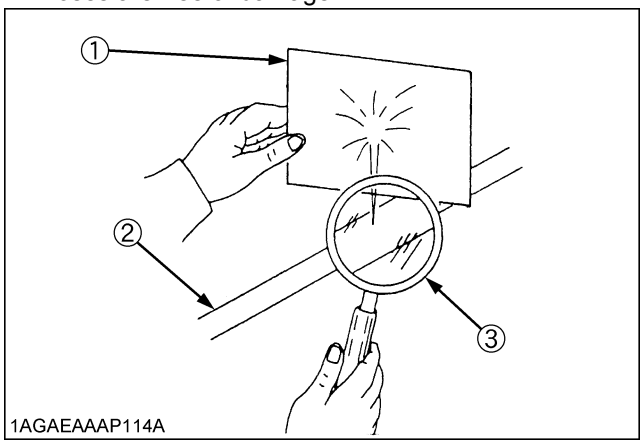

(1) Cardboard
(2) Hydraulic line
(3) Magnifying glass

Fluid escaping from pinholes may be invisible. Do not use hands to search for suspected leaks; use a piece of cardboard or wood. Use of safety goggles or other eye protection is also highly recommended. If injured by escaping fluid, see a medical doctor at once. This fluid will produce gangrene or severe allergic reaction.

16. Waste products such as used oil, fuel, hydraulic fluid, and batteries, can harm the environment, people, pets and wildlife. Please dispose properly.
    See your local Recycling Center or KUBOTA Dealer to learn how to recycle or get rid of waste products.

https://truckmanualshub.com/

7. DANGER, WARNING AND CAUTION LABELS

(1) Part No. 6C040-4742-2

⚠ C A U T I O N

TO AVOID PERSONAL INJURY:
1. Read and understand the operator's manual before operation.
2. Before starting the engine, make sure that everyone is at a safe distance from the tractor and that the PTO is OFF.
3. Do not allow passengers on the tractor at any time.
4. Before allowing other people to use the tractor, have them read the operator's manual.
5. Check the tightness of all nuts and bolts regularly.
6. Keep all shields in place and stay away from all moving parts.
7. Lock the two brake pedals together before driving on the road.
8. Slow down for turns, or rough roads, or when applying individual brakes.
9. On public roads use SMV emblem and hazard lights, if required by local traffic and safety regulations.
10. Pull only from the drawbar.
11. Before dismounting, lower the implement to the ground, set the parking brake, stop the engine and remove the key.
12. Securely support tractor and implements before working underneath.

1AGARABAP090A

(3) Part No. 32751-4958-1
Do not get your hands close to engine fan and fan belt.

1AGARABAP092A

(2) Part No. 3F240-4905-2

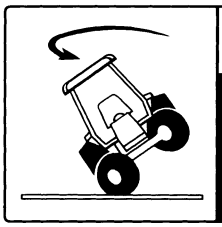

⚠ WARNING

To avoid personal injury:
Use "Bi-speed Turn" only in low gears and slow speed. Do not use "Bi-speed Turn" in high gears or road speed.

1AGARABAP091A

(4) Part No. TA040-4956-2

Diesel fuel only

No fire

1AGARABAP093A

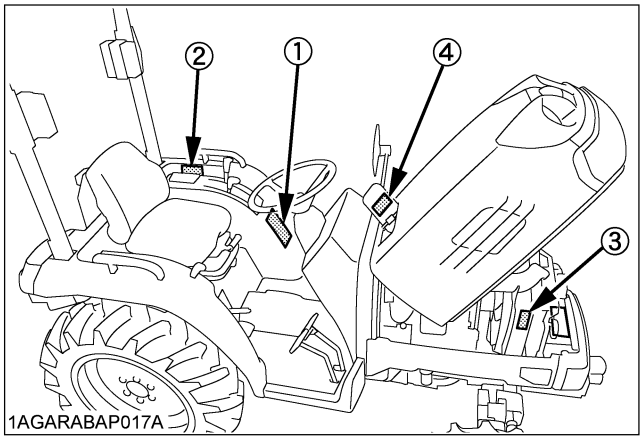

1AGARABAP017A

https://truckmanualshub.com/

(1) Part No. TA040-4965-2

⚠ DANGER

TO AVOID POSSIBLE INJURY OR DEATH FROM A MACHINE RUNAWAY.

1. Do not start engine by shorting across starter terminals or bypassing the safety start switch. Machine may start in gear and move if normal starting circuitry is bypassed.
2. Start engine only from operator's seat with transmission and PTO OFF.
   Never start engine while standing on the ground.

1AGARABAP094A

(2) Part No. TA240-4933-2

⚠ WARNING

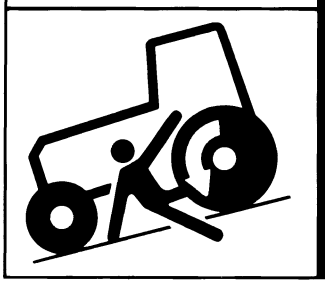

BEFORE DISMOUNTING TRACTOR:

1. **ALWAYS SET PARKING BRAKE.**
   Leaving transmission in gear with the engine stopped will not prevent tractor from rolling.
2. **PARK ON LEVEL GROUND WHENEVER POSSIBLE.**
   If parking on a slope, position tractor across the slope.
3. **LOWER ALL IMPLEMENTS TO THE GROUND.**
   Failure to comply to this warning may allow the wheels to slip, and could cause injury or death.
4. **STOP THE ENGINE.**

1AGARABAP095A

(3) Part No. TA044-4932-1

⚠ WARNING

TO AVOID PERSONAL INJURY OR DEATH FROM ROLL-OVER:

1. Kubota recommends the use of a Roll-Over Protective Structures (ROPS) in almost all applications.
2. Remove the ROPS only when it substantially interferes with operation or itself presents a safety risk. (Examples include work in orchards and vineyards.) ALWAYS REINSTALL IT BEFORE USING THE TRACTOR IN OTHER APPLICATIONS.
3. For further details,consult your Operator's Manual or your local dealer.

1AGARABAP096A

(4) Part No. 32751-4958-1
Do not get your hands close to engine fan and fan belt.

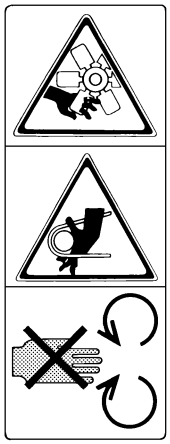

1AGARABAP092A

(5) Part No. TC030-4958-1
Do not touch hot surface like muffler, etc.

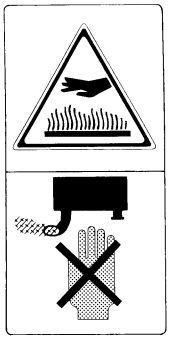

1AGARABAP111A

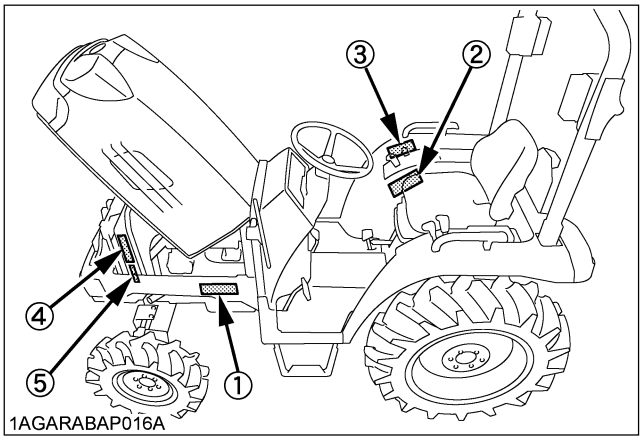

1AGARABAP016A

https://truckmanualshub.com/

(1) Part No. TD020-3012-2

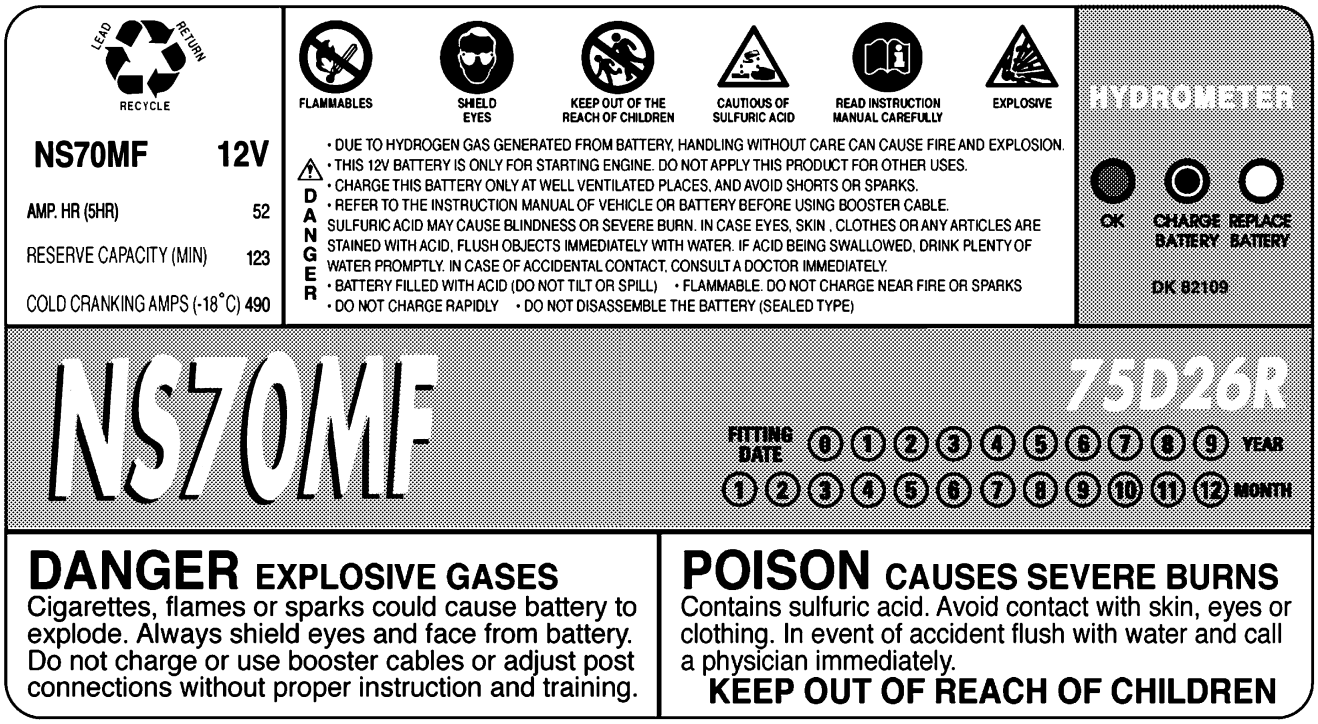

1AGAPAAAP0810

(2) Part No. TA040-4959-3

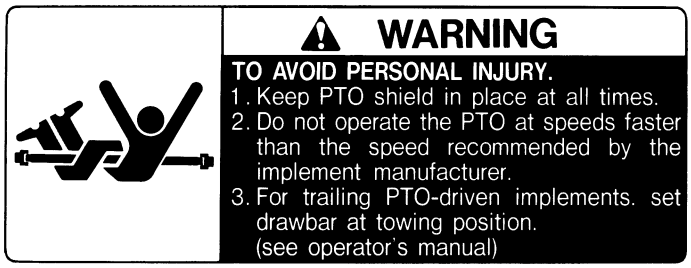

1AGARABAP098A

(3) Part No. TA040-4935-1

1AGARABAP099A

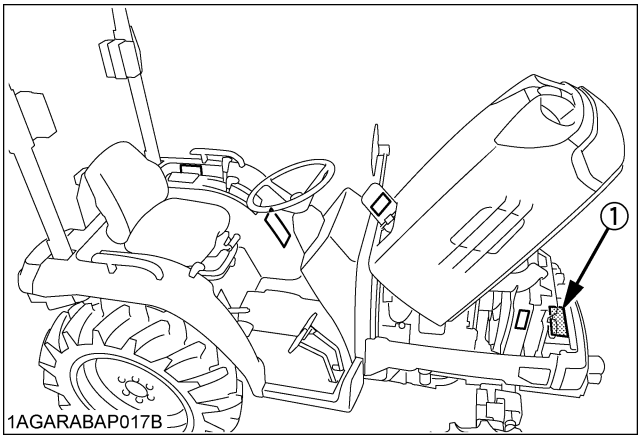

1AGARABAP017B

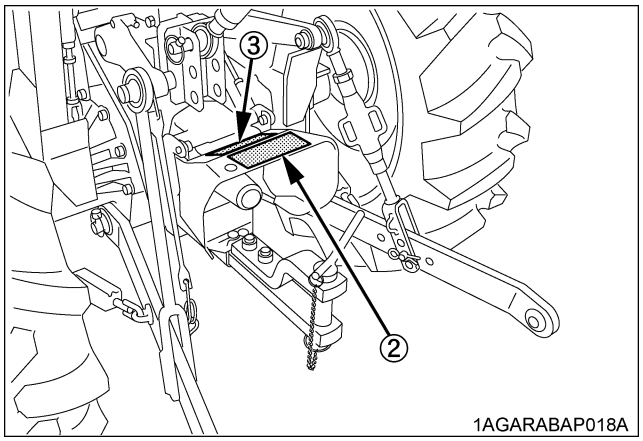

1AGARABAP018A

https://truckmanualshub.com/

8. CARE OF DANGER, WARNING AND CAUTION LABELS

1. Keep danger, warning and caution labels clean and free from obstructing material.
2. Clean danger, warning and caution labels with soap and water, dry with a soft cloth.
3. Replace damaged or missing danger, warning and caution labels with new labels from your local KUBOTA Dealer.
4. If a component with danger, warning and caution label(s) affixed is replaced with new part, make sure new label(s) is (are) attached in the same location(s) as the replaced component.
5. Mount new danger, warning and caution labels by applying on a clean dry surface and pressing any bubbles to outside edge.

https://truckmanualshub.com/

SERVICING OF TRACTOR

Your dealer is interested in your new tractor and has the desire to help you get the most value from it. After reading this manual thoroughly, you will find that you can do some of the regular maintenance yourself.
However, when in need of parts or major service, be sure to see your KUBOTA Dealer.
For service, contact the KUBOTA Dealership from which you purchased your tractor or your local KUBOTA Dealer.
When in need of parts, be prepared to give your dealer both the tractor and engine serial numbers.
Locate the serial numbers now and record them in the space provided.

	Type	Serial No.
Tractor		
Engine		
Date of Purchase		
Name of Dealer		
(To be filled in by purchaser)		

◆ **Warranty**
This tractor is warranted under the KUBOTA Limited Express Warranty, a copy of which may be obtained from your selling dealer. No warranty shall, however, apply if the tractor has not been handled according to the instruction given in the Operator's Manual even it is within the warranty period.

◆ **Scrapping the tractor and its procedure**
To put the tractor out of service, correctly follow the local rules and regulations of the country or territory where you scrap it. If you have questions, consult your local KUBOTA Dealer.

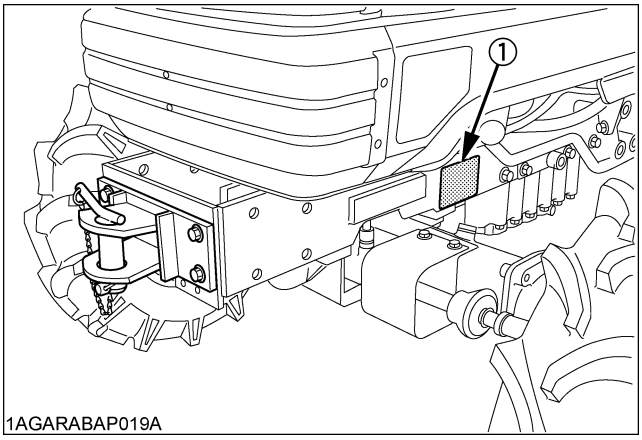

(1) Tractor identification plate

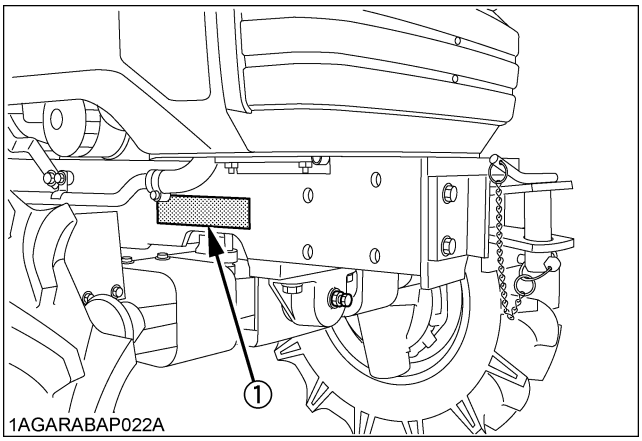

(1) Tractor serial number

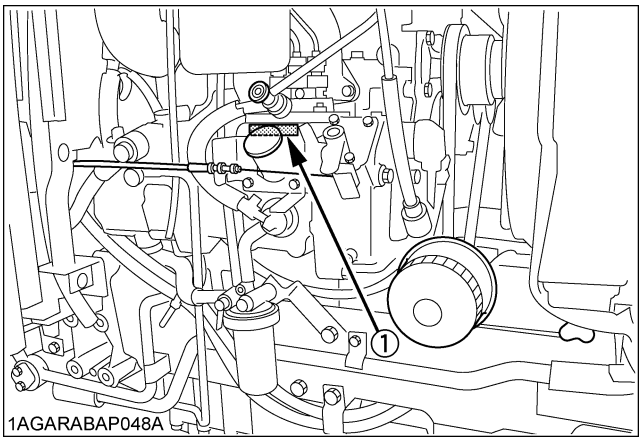

(1) Engine serial number

https://truckmanualshub.com/

ENGLISH

SPECIFICATIONS

SPECIFICATION TABLE

Model			STV32			STV36			STV40		
Engine power ECE-R24 *1		kW	22.8			25.5			28.2		
Engine power SAE gross *1		kW(HP)	24.1 (32.3)			26.8 (35.9)			29.5 (39.5)		
PTO power		kW(PS)	17.7 (24.1)			20.2 (27. 5)			22.8 (31.0)		
Engine	Model		D1503			D1703			D1803		
	Type		ETVCS, water-cooled 4-cycle diesel								
	Number of cylinders		3								
	Bore and stroke	mm	83 x 92.4			87 x 92.4			87 x 102.4		
	Total displacement	L	1.499			1.647			1.826		
	Rated revolution	rpm	2700								
	Maximum torque	N·m(kgf·m)	99.2 (10.0)			108.3 (10.9)			120.7 (12.2)		
	Battery		12V, RC : 123min, CCA : 490A								
	Fuel		Diesel fuel No.1 (below-10ºC), diesel fuel No.2 (above-10ºC)								
Capacities	Fuel tank	L	29.5								
	Coolant (with recovery tank)	L	6.1								
	Engine crankcase (with filter)	L	6.7								
	Transmission case	L	20								
Tires	Front		Farm 6.00-12	Turf 24x8.50-14	Industry 23x8.50-14	Farm 6.00-12	Turf 24x8.50-14	Industry 23x8.50-14	Farm 6.00-12	Turf 24x8.50-14	Industry 23x8.50-14
	Rear		9.5-22	13.6-16	12.4-16	9.5-22	13.6-16	12.4-16	9.5-22	13.6-16	12.4-16
Dimentions	Overall length (with 3P)	mm	2860								
	Overall width (min. tread)	mm	1220	1310	1480	1220	1310	1480	1220	1310	1480
	Overall height (with ROPS)	mm	2350	2340	2335	2350	2340	2335	2350	2340	2335
	Wheel base		1610								
	Min. ground clearance (Mid PTO case)	mm	235	225	220	235	225	220	235	225	220
Tread	Front	mm	1030		1040	1030		1040	1030		1040
	Rear		950,1070	965,1055	1150	950,1070	965,1055	1150	950,1070	965,1055	1150
Weight (with ROPS)		kg	975	995	1025	975	995	1025	975	995	1025
Min. turning radius	with brake	mm	2. 2								
	without brake		2. 5								
Traveling system	Clutch		Single dry disk								
	Steering		Hydrostatic Power Steering								
	Transmission		Main-hydrostatic transmission; range gear shift, 3 forward and 3 reverse								
	Braking system		Wet disk type								
	Trailer brake		not applicable								
	Trailer brake coupler		not applicable								
	Differential		Bevel gear								

https://truckmanualshub.com/

Model				STV32	STV36	STV40
Hydraulic unit	Hydraulic control system			Position control system		
	Pump capacity L/min			23		
	Three point hitch			SAE Category Ⅰ		
	Max. lift force kgf	at lif point		1150		
		600mm behind lift point		890		
	Remote control valve coupler			JISB-2351-1		
PTO	Rear-PTO			SAE 1-3/8, 6 splines		
	PTO / Engine speed rpm			540 / 2670 , 800 / 2717		
	Mid-PTO			USA No.5 (KUBOTA 10-tooth) involute spline		
	PTO / Engine speed rpm			2500 / 2734		
ROPS	The level of protection against hazardous substances *2			Category 1		
	Noise at the operator's ear *3			82.5 dB (A)	83.0 dB (A)	83.9 dB (A)
	Noise of the tractor in motion *4			78.4 dB (A)	79.6 dB (A)	79.8 dB (A)
	Value of the vibration level *5	GRAMMER MSG83/511	Light driver	1.13 m/s²		
			Heavy driver	1.00 m/s²		
		GRAMMER MSG93/511	Light driver	1.21 m/s²		
			Heavy driver	1.05 m/s²		
		KAB XH2/P1	Light driver	1.17 m/s²		
			Heavy driver	0.93 m/s²		
		COBO SC74/SM91 PVC	Light driver	1.13 m/s²		
			Heavy driver	0.76 m/s²		

The company reserve the right to change the specifications without notice.

NOTE : *1 Manufacturer's estimate
*2 According to EN15695-1:2009
*3 Measured according to Directive 2009/76/EC
*4 Measured according to Directive 2009/63/EC
*5 Measured according to Directive 78/764/EEC

https://truckmanualshub.com/

TRAVELING SPEEDS

(At rated engine rpm)

Model		STV32, 36, 40		
Tire Size (Rear)		9.5-22	13.6-16	12.4-16
	Range gear shift lever	km/h	km/h	km/h
Forward	1 (Low)	0 to 6.6	0 to 6.5	0 to 6.1
	2 (Middle)	0 to 12.7	0 to 12.6	0 to 11.9
	3 (High)	0 to 28.4	0 to 28.2	0 to 26.6
	Max. Speed (at 2850 engine rpm)	29.9	29.8	28.0
Reverse	1 (Low)	0 to 4.8	0 to 4.7	0 to 4.4
	2 (Middle)	0 to 9.2	0 to 9.2	0 to 8.7
	3 (High)	0 to 20.6	0 to 20.4	0 to 19.2
	Max. Speed (at 2850 engine rpm)	21.7	21.6	20.3

The company reserves the right to change the specifications without notice.

https://truckmanualshub.com/

IMPLEMENT LIMITATIONS

The KUBOTA Tractor has been thoroughly tested for proper performance with implements sold or approved by KUBOTA. Use with implements which are not sold or approved by KUBOTA and which exceed the maximum specifications listed below, or which are otherwise unfit for use with the KUBOTA Tractor may result in malfunctions or failures of the tractor, damage to other property and injury to the operator or others. [Any malfunctions or failures of the tractor resulting from use with improper implements are not covered by the warranty.]

■ Front Loader

Fixation points on the body of the tractor where the front loader must be installed.

Install the front loader frame to the clutch housing and the front axle frame as shown.

[Main frame and sub frames]

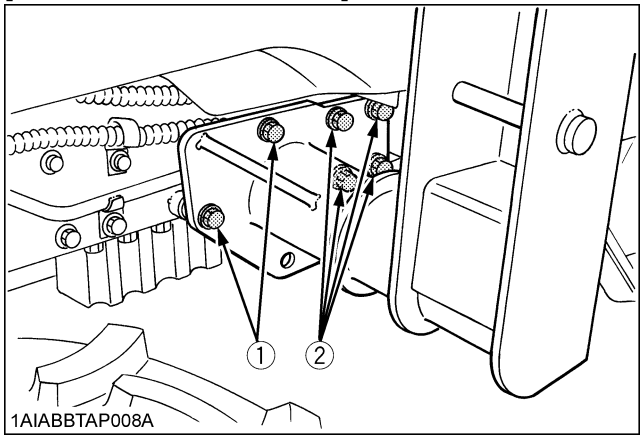

1AIABBTAP008A

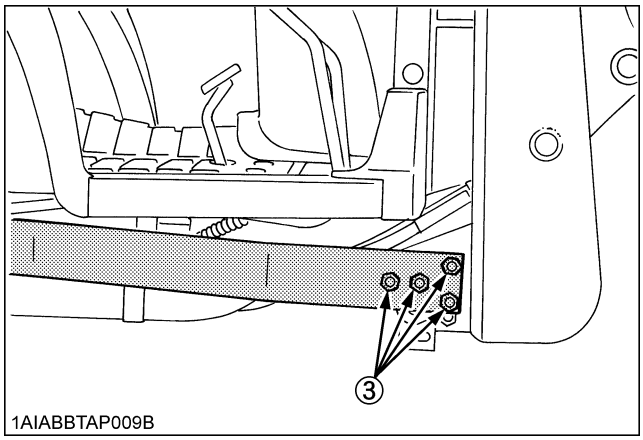

1AIABBTAP009B

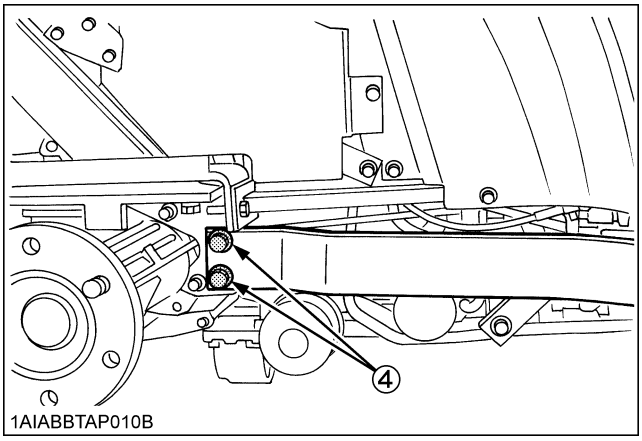

1AIABBTAP010B

[Brace]

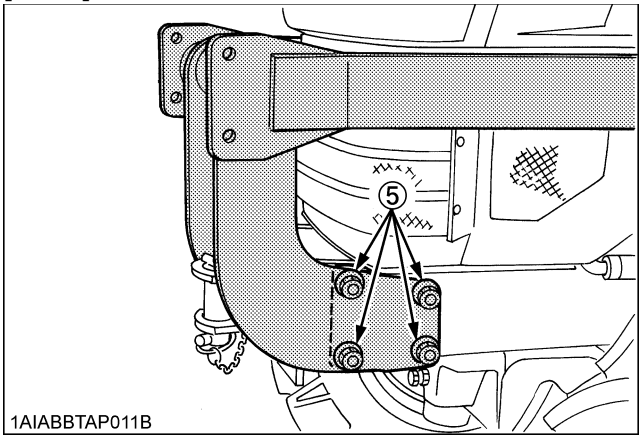

1AIABBTAP011B

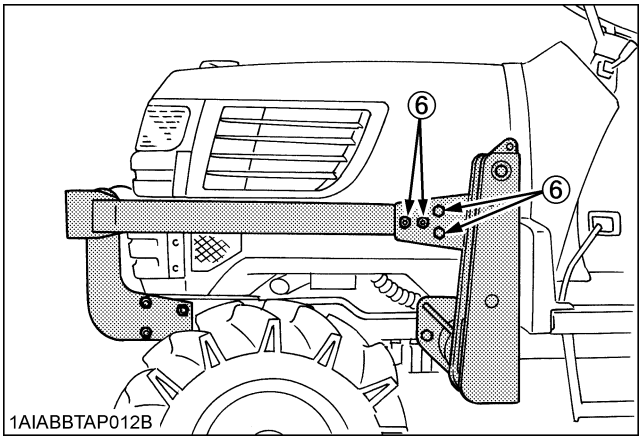

1AIABBTAP012B

https://truckmanualshub.com/

■ Tightening Bolts and Nuts

Tighten all bolts and nuts in the following order to the required torque.

NOTE :

- Before finally tightening all mounting hardware, start the engine and apply down pressure to the bucket until the loader raises the front wheels slightly, and make sure that the mounting pins can be rotated easily. Tighten all bolts and nuts in this position.

Sequence	Location	Ref. No.	Bolt/Nut	Required Torque N-m (kgf-m)
1	Main frame	(2)	8-M14 (P2.0) Bolts	127.5 (13.0)
2	Main frame	(1)	4-M14 (P1.5) Bolts	147.1 (15.0)
3	Brace	(5) (6)	16-9/16 Nuts	176.5 (18.0)
4	Sub frame	(3) (4)	12-9/16 Nuts	176.5 (18.0)

◆ OUTPUT CAPACITY

Max. Lifting Capacity 430 kg
Max. Oil Pressure 17.15 MPa (175 kgf/cm²)

DANGER

To avoid personal injury:

- **Special attention should be made when lifting the load, keep the bucket correctly positioned to prevent spillages.**

NOTE :

- Not all risks are listed.
  Refer to front loader operator's manual.

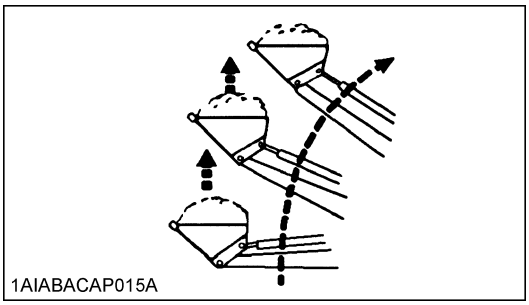

■ Other Implements

- For selecting implements, consult your local dealer.
- Strictly follow the instructions outlined in the operator's manual of the mounted or trailed machinery or trailer, and do not operate the combination tractor - machine or tractor - trailer unless all instructions have been followed.
- Forestry Application
  Following hazards exist;
  (a) toppling trees, primarily in case a rear-mounted tree grab-crane is mounted at the rear of the tractor;
  (b) penetrating objects in the operator's enclosure, primarily in case a winch is mounted at the rear of the tractor.
  Optional equipments such as OPS (Operator Protective Structure), FOPS (Falling Object Protective Structure), etc. to deal with these hazards and other related hazards are not available for this tractor. Without such optional equipment use is limited to tractor specific applications like transport and stationary work.

https://truckmanualshub.com/

INSTRUMENT PANEL AND CONTROLS

■ Instrument Panel, Switches and Hand Controls

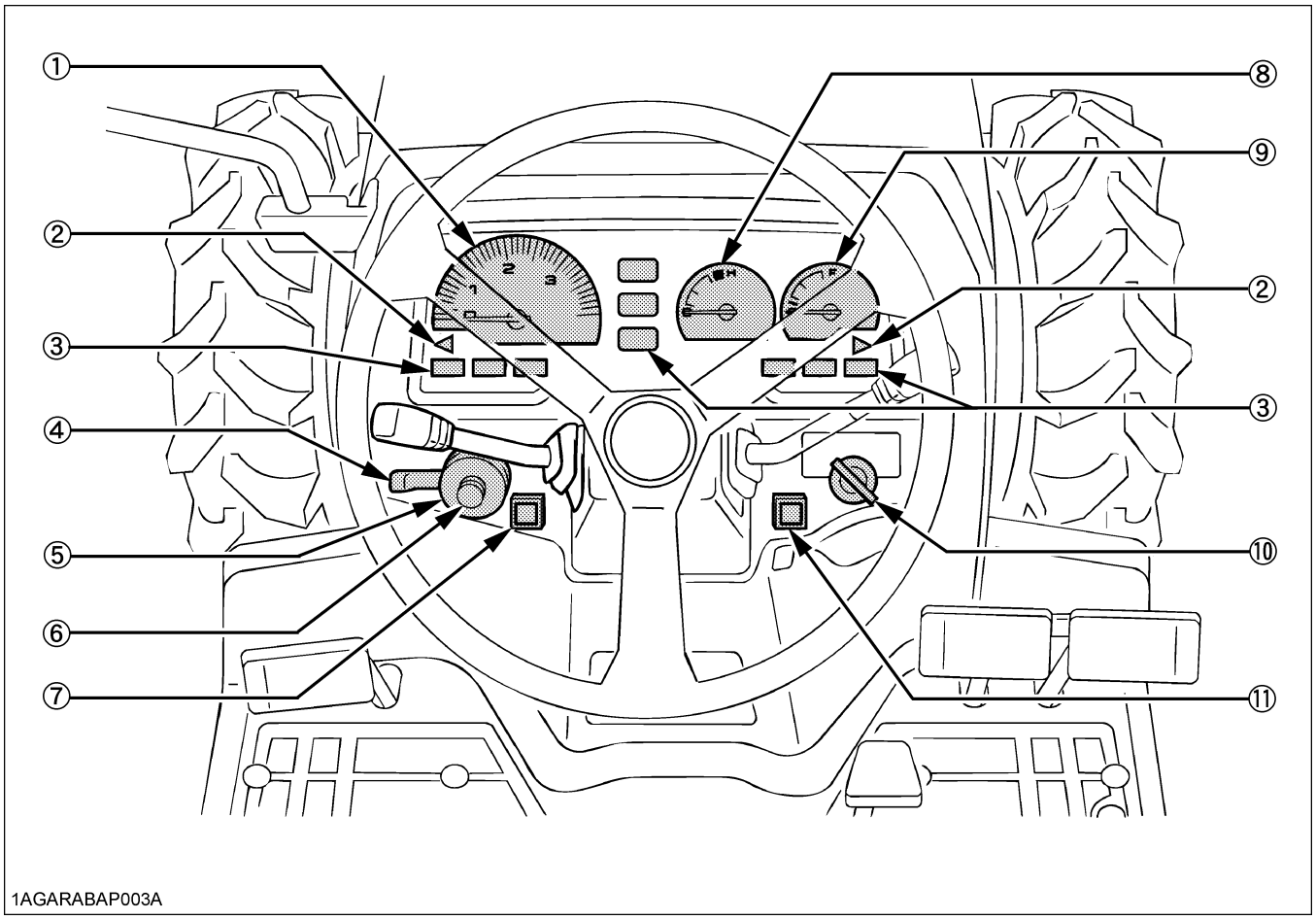

ILLUSTRATED CONTENTS

(1)	*Hourmeter / Tachometer*	*28*
(2)	*Turn signal / Hazard light indicator*	*20*
(3)	*Easy Checker (TM)*	*10, 27*
(4)	*Turn signal light switch*	*20*
(5)	*Head light switch*	*20*
(6)	*Horn button*	*21*
(7)	*Position light switch*	*20*
(8)	*Coolant temperature gauge*	*28*
(9)	*Fuel gauge*	*28*
(10)	*Key switch*	*10*
(11)	*Hazard light switch*	*20*

https://truckmanualshub.com/

ENGLISH

■ Foot and Hand Controls

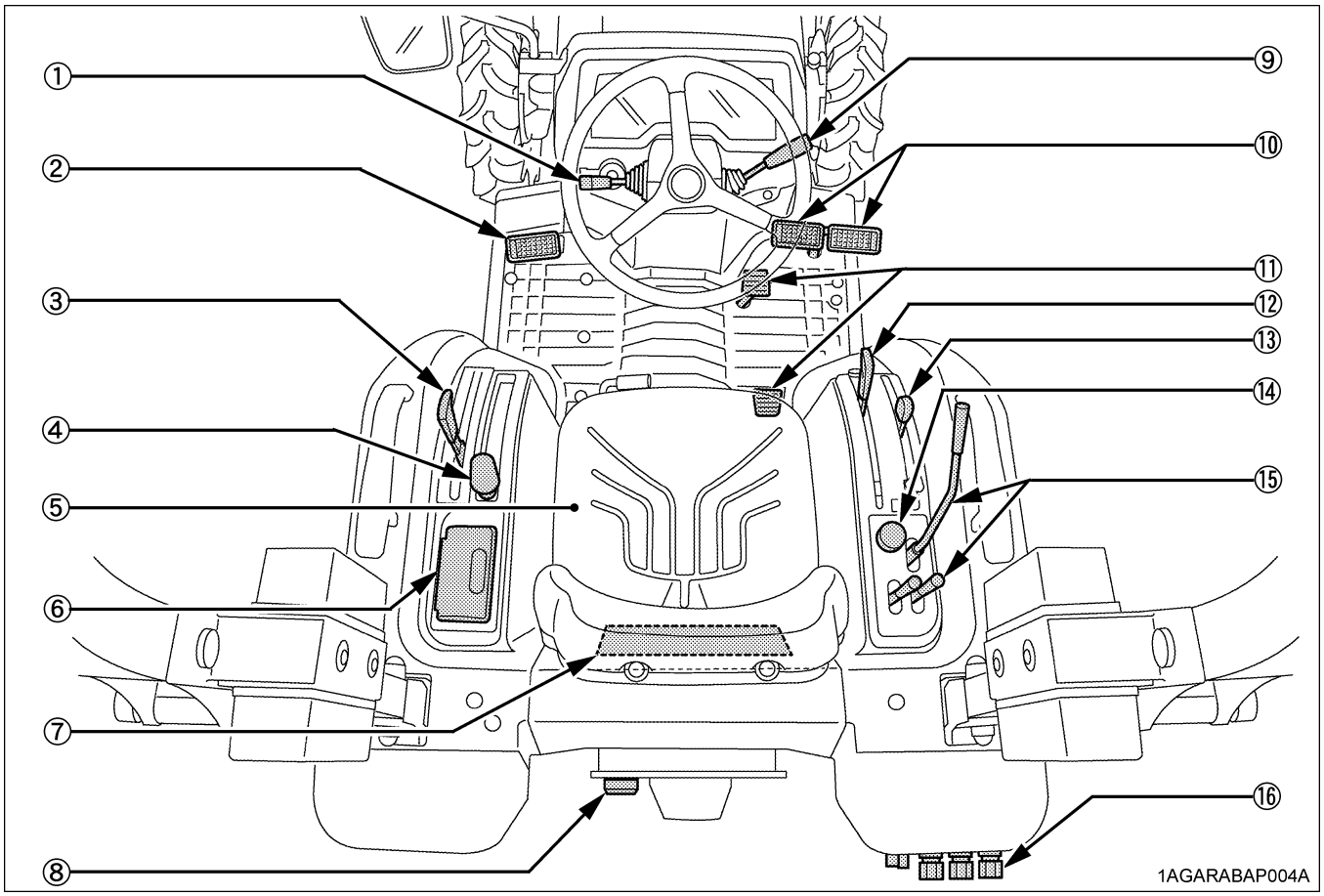

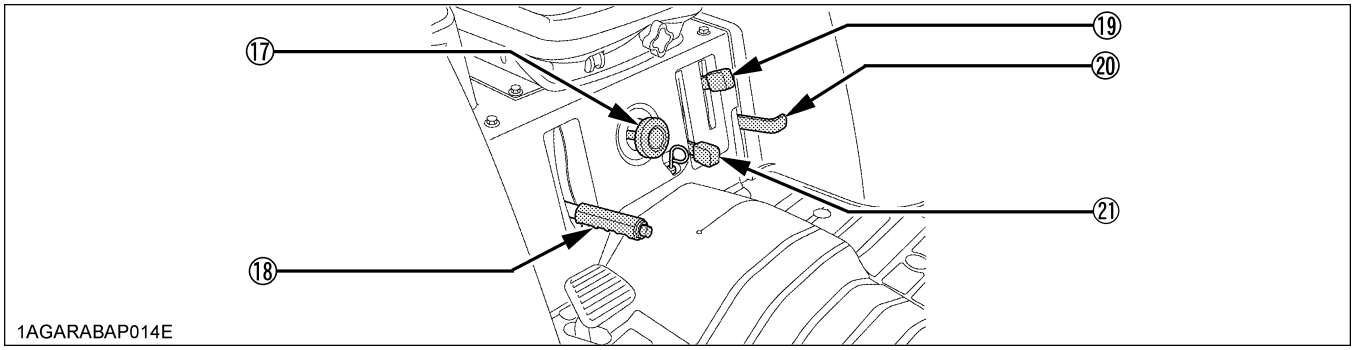

ILLUSTRATED CONTENTS

(1)	*Steering wheel tilt lever*	*19*
(2)	*Clutch pedal*	*23*
(3)	*Range gear shift lever*	*23*
(4)	*Cruise control lever*	*26*
(5)	*Operator's seat*	*18*
(6)	*Bi-Speed turn switch*	*24*
(7)	*Tool-box [ROPS type]*	*54*
(8)	*Trailer electrical outlet*	*31*
(9)	*Hand throttle lever*	*25*
(10)	*Brake pedal*	*22*
(11)	*Speed control pedal*	*10, 26*

ILLUSTRATED CONTENTS

(12)	*Position control lever*	*10, 40*
(13)	*Rear PTO gear shift lever*	*33*
(14)	*PTO clutch control switch*	*32*
(15)	*Remote control valve lever (if equipped)*	*41*
(16)	*Remote control valve (if equipped)*	*42*
(17)	*3-Point hitch lowering speed knob*	*40*
(18)	*Parking brake lever*	*10, 25, 29*
(19)	*Front wheel drive lever*	*24*
(20)	*Differential lock pedal*	*29*
(21)	*Mid PTO gear shift lever*	*33*

https://truckmanualshub.com/

PRE-OPERATION CHECK

DAILY CHECK

To prevent trouble from occurring, it is important to know the condition of the tractor well. Check it before starting.

CAUTION

To avoid personal injury:

- **Be sure to check and service the tractor on a level surface with the engine shut off and the parking brake "ON" and implement lowered to the ground.**

Check item

- Walk around inspection
- Check engine oil level
- Check transmission oil level
- Check coolant level
- Check air cleaner evacuator valve
  (When used in a dusty place)
- Clean grill, radiator screen and oil cooler
- Check brake and clutch pedal
- Check indicators, gauges and meter
- Check lights
- Check ROPS
- Check movable parts
- Refuel
  (See "DAILY CHECK" in "PERIODIC SERVICE" section.)
- Care of danger, warning and caution labels
  (See "DANGER, WARNING AND CAUTION LABELS" in "SAFE OPERATION" section.)

https://truckmanualshub.com/

ENGLISH

OPERATING THE ENGINE

CAUTION

To avoid personal injury:

- **Read "Safe Operation" in the front of this manual.**
- **Read the danger, warning and caution labels located on the tractor.**
- **To avoid the danger of exhaust fume poisoning, do not operate the engine in a closed building without proper ventilation.**
- **Never start engine while standing on ground. Start engine only from operator's seat.**
- **Make it a rule to set all shift levers to the "NEUTRAL" positions and to place PTO clutch control switch in "OFF" position before starting the engine.**

IMPORTANT :

- Do not use starting fluid or ether.
- To protect the battery and the starter, make sure that the starter is not continuously turned for more than 10 seconds.

STARTING THE ENGINE

1. Make sure the parking brake is set.

1. To set the parking brake;
   (1) Interlock the brake pedals.
   (2) Depress the brake pedals.
   (3) Pull the lever to park.
2. To release the parking brake, depress the brake pedals, push release button and push down parking brake lever.

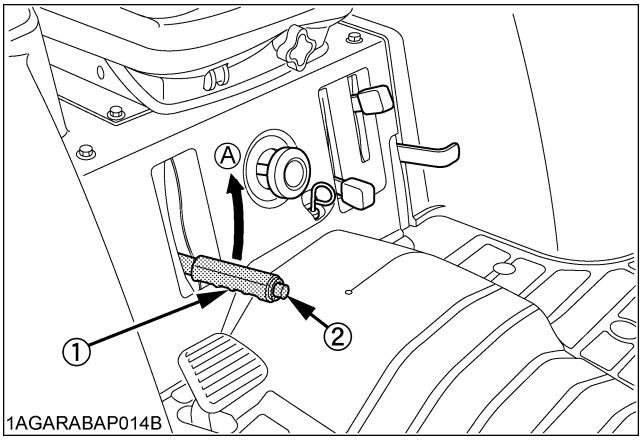

(1) Parking brake lever *(A) "PULL"*
(2) Release button

IMPORTANT :

- To prevent damage to the parking brake lever, make sure that brake pedals are fully depressed before pulling the parking brake lever up.

NOTE :

- The Parking brake indicator comes on while parking brake is applied and goes off when it is released.

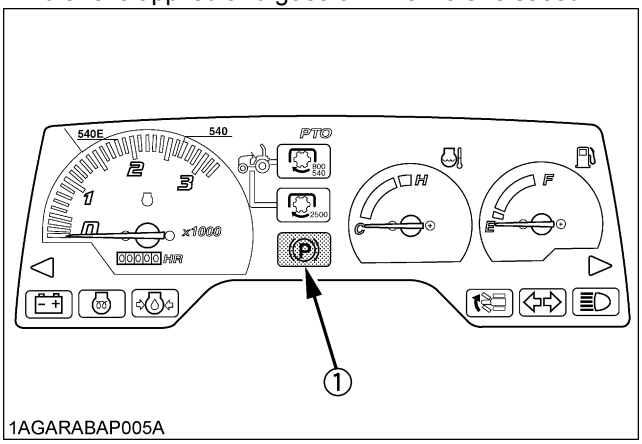

(1) Parking brake indicator

https://truckmanualshub.com/

2. Make sure the fuel cock is in the open position.

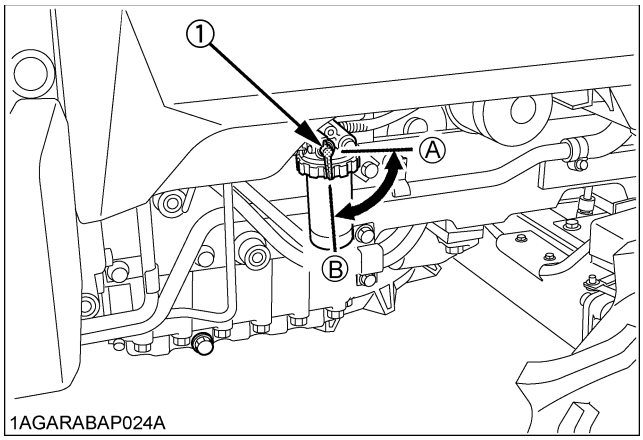

(1) Fuel cock

(A) "CLOSE"
(B) "OPEN"

3. Make sure the cruise control lever is in "NEUTRAL" position.
Place the Speed control Pedal in "NEUTRAL" position.
Place the range gear shift lever in "NEUTRAL" position.

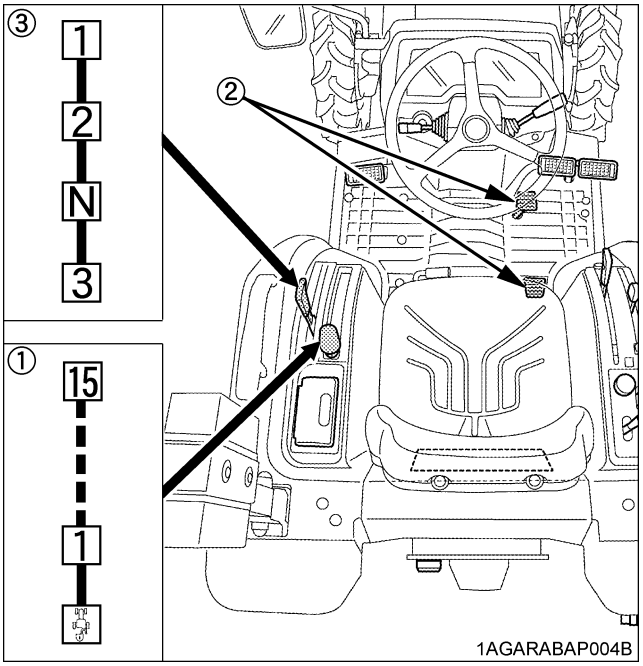

(1) Cruise control lever
(2) Speed control pedal
(3) Range gear shift lever

(N) "NEUTRAL POSITION"
"NEUTRAL POSITION"

NOTE :

- Depress the both brake pedals together, doing so the cruise control lever automatically returns to the off position.
- Step out the foot from speed control pedal, doing so the pedal automatically returns to the neutral position.

https://truckmanualshub.com/

4. Place the PTO clutch control switch in "OFF" position.

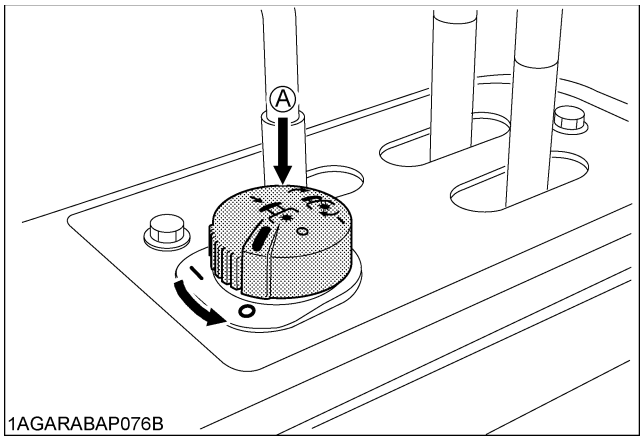

| : "ON"
○ : "OFF"
(A) "PUSH"

5. Place the hydraulic control lever in "LOWEST" position.

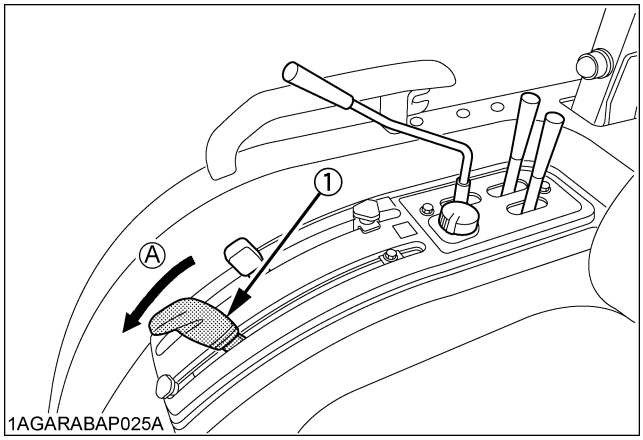

(1) Position control lever *(A) "DOWN"*

6. Set the throttle lever to about 1/2 way.

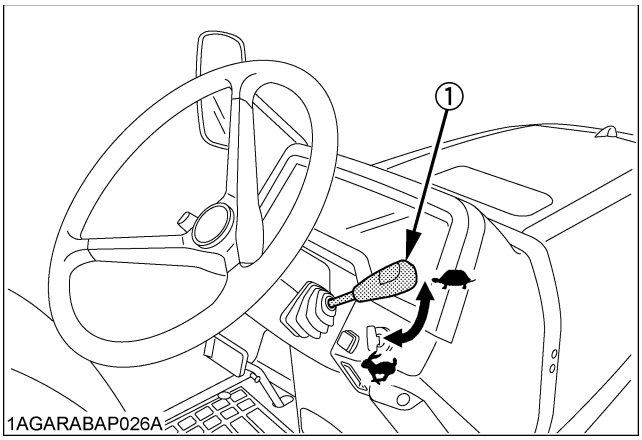

(1) Hand throttle lever "INCREASE"
"DECREASE"

7. Insert the key into the key switch and turn it "ON"

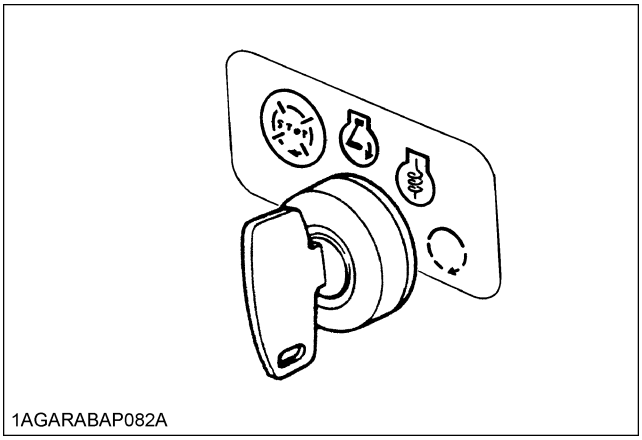

"OFF" *"PREHEAT"*
"ON" *"START"*

https://truckmanualshub.com/

◆ **Check Easy Checker (TM) lamps:**

1. When the key is turned "ON", lamps (3) (5) should come on. If trouble should occur at any location while the engine is running, the warning lamp corresponding to that location comes on.
2. The Bi-speed turn indicator (6) comes on while Bi-speed turn switch is engaged "ON" and goes off when disengaged "OFF" it.

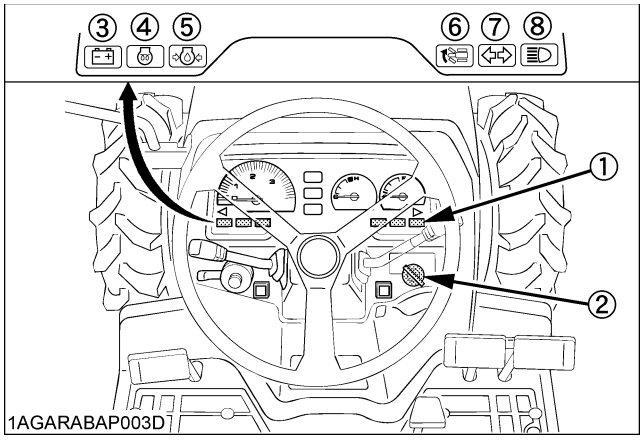

(1) Easy checker (TM)
(2) Key switch
(3) Electrical charge
(4) Glow plug indicator
(5) Engine oil pressure
(6) Bi-speed turn indicator
(7) Hazard light indicator
(8) High beam indicator

IMPORTANT :

- Daily checks with the Easy Checker(TM) only, are not sufficient. Never fail to conduct daily checks carefully by referring to Daily Check. (See "DAILY CHECK" in "PERIODIC SERVICE" section.)

8. Fully depress the clutch pedal.

9. Turn the key to "PREHEAT" position and hold it there until glow plug indicator goes off.

For the appropriate preheating time, refer to the table below:

Temperature	Preheating Time
Over 0°C	until the glow plug indicator goes off.
0 to -5°C	add preheat for about 5 sec. after goes off.

10. Turn the key to "START" position and release when the engine starts.

IMPORTANT :

- Because of the safety devices, the engine will not start except when the PTO clutch control switch is placed in the "OFF" position, speed control pedal is placed in the "NEUTRAL" position and clutch pedal is disengaged.

■Cold Weather Starting

When the ambient temperature is below -5°C and the engine is very cold. (If the engine fails to start after 10 seconds, turn off the key for 30 seconds. Then repeat steps **9** and **10**. To protect the battery and the starter, make sure that the starter is not continuously turned for more than 10 seconds.)

11. Check to see that all the lamps on the Easy Checker (TM) are "OFF".

If a lamp is still on, immediately stop the engine and determine the cause.

12. Release the clutch pedal

STOPPING THE ENGINE

1. After slowing the engine to idle, turn the key to "OFF".

2. Remove the key.

NOTE :

- If key does not stop the engine, consult your local KUBOTA Dealer.

https://truckmanualshub.com/

ENGLISH

WARMING UP

CAUTION

To avoid personal injury:

- **Be sure to set the parking brake during warm-up.**
- **Be sure to set all shift levers to the "NEUTRAL" positions and to place PTO clutch control switch in "OFF" position during warm-up.**

For five minutes after engine start-up, allow engine to warm up without applying any load, this is to allow oil to reach every engine part. If load should be applied to the engine without this warm-up period, trouble such as seizure, breakage or premature wear may develop.

■Warm-Up Transmission Oil in the Low Temperature Range

Hydraulic oil serves as transmission fluid. In cold weather, the oil may be cold with increased viscosity. This can cause delayed oil circulation or abnormally low hydraulic pressure for some time after engine start-up. This in turn can result in trouble in the hydraulic system. To prevent the above, observe the following instructions:
Warm up the engine at about 50% of rated rpm according to the table below:

Ambient temperature	Warm-up time requirement
Higher than -10℃	Approx. 5 minutes
-15 to -10℃	5 to 10 minutes
-20 to -15℃	10 to 20 minutes
Below -20℃	More than 20 minutes

IMPORTANT :

- Do not operate the tractor under full load condition until it is sufficiently warmed up.

JUMP STARTING

CAUTION

To avoid personal injury:

- **Battery gases can explode. Keep cigarettes, sparks, and flames away from battery.**
- **If tractor battery is frozen, do not jump start engine.**
- **Do not connect other end of negative (-) jumper cable to negative (-) terminal of tractor battery.**

When jump starting engine, follow the instructions below to safely start the engine.

1. Bring helper vehicle with a battery of the same voltage as disabled tractor within easy cable reach. "THE VEHICLES MUST NOT TOUCH".
2. Engage the parking brakes of both vehicles and put the shift levers in neutral. Shut both engines off.
3. Put on safety goggles and rubber gloves.
4. Ensure the vent caps are securely in place. (if equipped)
5. Cover vent holes with damp rags. Do not allow the rag to touch the battery terminals.
6. Attach the red clamp to the positive (red, (+) or pos.) terminal of the dead battery and clamp the other end of the same cable to the positive (red, (+) or pos.) terminal of the helper battery.
7. Clamp the other cable to the negative (black, (-) or neg.) terminal of the helper battery.
8. Clamp the other end to the engine block or frame of the disabled tractor as far from the dead battery as possible.
9. Start the helper vehicle and let its engine run for a few moments. Start the disabled tractor.
10. Disconnect the jumper cables in the exact reverse order of attachment. (Steps 8, 7 and 6).
11. Remove and discard the damp rags.

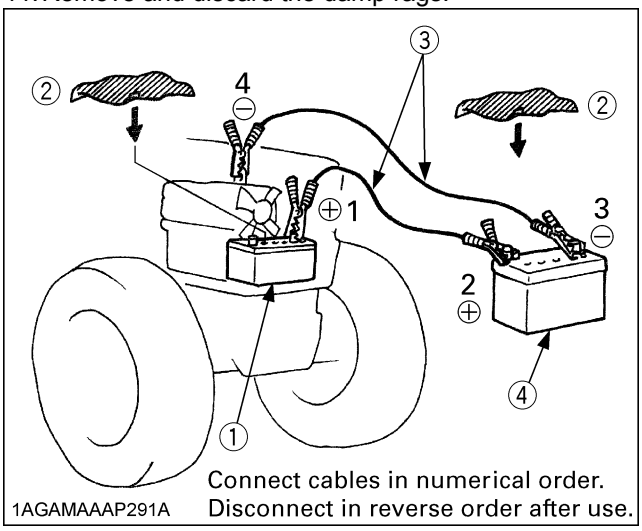

(1) Dead battery
(2) Lay a damp rag over the vent caps
(3) Jumper cables
(4) Helper battery

https://truckmanualshub.com/

IMPORTANT :

- This machine has a 12volt negative (-) ground starting system.
- Use only same voltage for jump starting.
- Use of a higher voltage source on tractor's electrical system could result in severe damage to tractor's electrical system.
  Use only matching voltage source when "Jump starting" a low or dead battery condition.

https://truckmanualshub.com/

ENGLISH

OPERATING THE TRACTOR

OPERATING NEW TRACTOR

How a new tractor is handled and maintained determines the life of the tractor.

A new tractor just off the factory production line has been, of course, tested, but the various parts are not accustomed to each other, so care should be taken to operate the tractor for the first 50 hours at a slower speed and avoid excessive work or operation until the various parts become "broken-in". The manner in which the tractor is handled during the "breaking-in" period greatly affects the life of your tractor. Therefore, to obtain the maximum performance and the longest life of the tractor, it is very important to properly break-in your tractor. In handling a new tractor, the following precautions should be observed.

■Do not Operate the Tractor at Full Speed for the First 50 Hours

- Do not start quickly nor apply the brakes suddenly.
- In winter, operate the tractor after fully warming up the engine.
- Do not run the engine at speeds faster than necessary.
- On rough roads, slow down to suitable speeds.
  Do not operate the tractor at fast speed.

The above precautions are not limited only to new tractors, but to all tractors. But it should be especially observed in the case of new tractors.

■Changing Lubricating Oil for New Tractors

The lubricating oil is especially important in the case of a new tractor. The various parts are not "broken-in" and are not accustomed to each other; small metal grit may develop during the operation of the tractor; and this may wear out or damage the parts. Therefore, care should be taken to change the lubricating oil a little earlier than would ordinarily be required.

For further details of change interval hours.

(See "MAINTENANCE" section.)

BOARDING AND LEAVING THE TRACTOR

1. Never try to get on or off a moving tractor or jump off the tractor to exit.
2. Face the tractor when getting into or out of the tractor. Do not use the controls as hand holds to prevent inadvertent machine movements.
3. Always keep steps and floor clean to avoid slippery conditions.

OPERATING FOLDABLE ROPS (if equipped)

CAUTION

To avoid personal injury:

- **When raising or folding the ROPS, apply parking brake, stop the engine and remove the key.**
  Always perform function from a stable position at the rear of tractor.
- **Fold the ROPS down only when absolutely necessary and fold it up and lock it again as soon as possible.**
- **Before proceeding to fold ROPS, check for any possible interference with installed implements and attachments.**
  If interference occurs, contact your KUBOTA Dealer.

■To Fold the ROPS

1. Remove both lock pins.

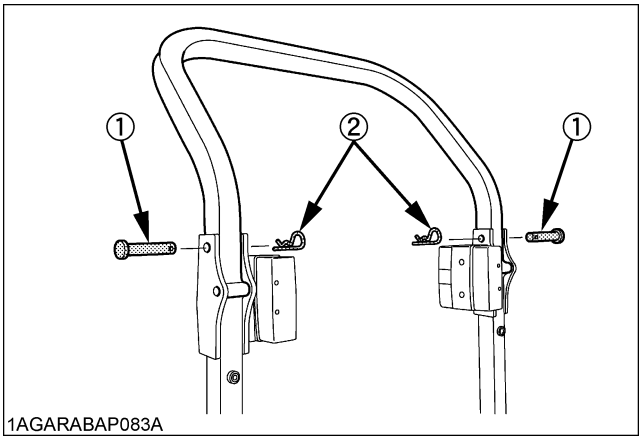

(1) Lock pin
(2) Hair pin

2. Fold the ROPS.

https://truckmanualshub.com/

CAUTION

To avoid personal injury:

- **Hold the ROPS tightly with both hands and fold the ROPS slowly and carefully.**

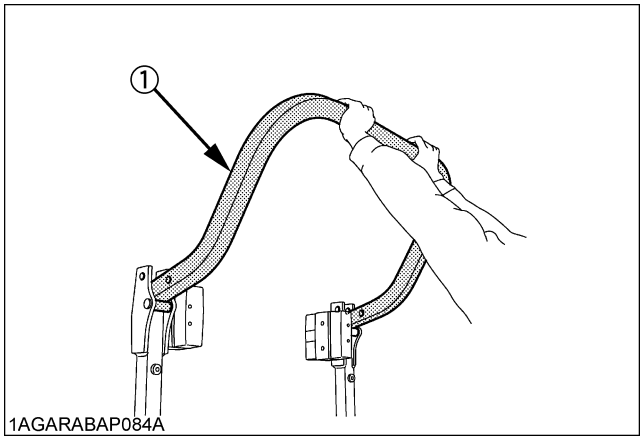

(1) ROPS

3. So as not to lose the pin, the pin is installed in ROPS.

CAUTION

To avoid personal injury:

- **Make sure that both lock pins are properly installed and secured with the hair pins.**

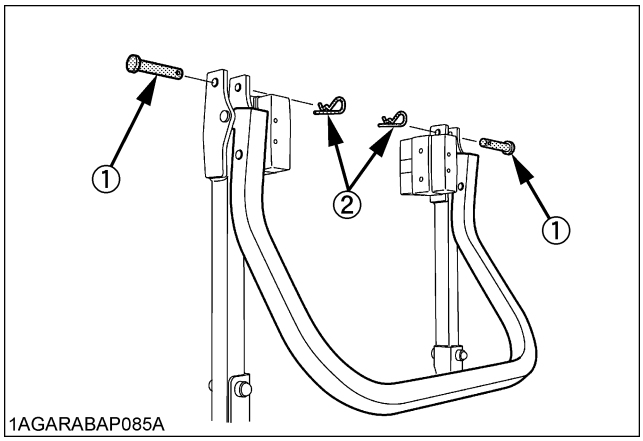

(1) Lock pin
(2) Hair pin

■To Raise the ROPS to Upright Position

1. Remove both hair pins and lock pins.

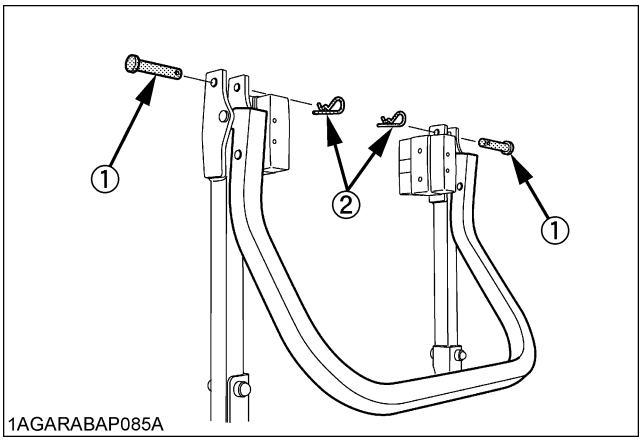

(1) Lock pin
(2) Hair pin

2. Raise ROPS to the upright position.

CAUTION

To avoid personal injury:

- **Raise the ROPS slowly and carefully.**

3. Align lock pin holes, insert both lock pins. And secure them with the hair pins.

CAUTION

To avoid personal injury:

- **Make sure that both lock pins are properly installed as soon as the ROPS is in the upright position and secured with the hair pins.**

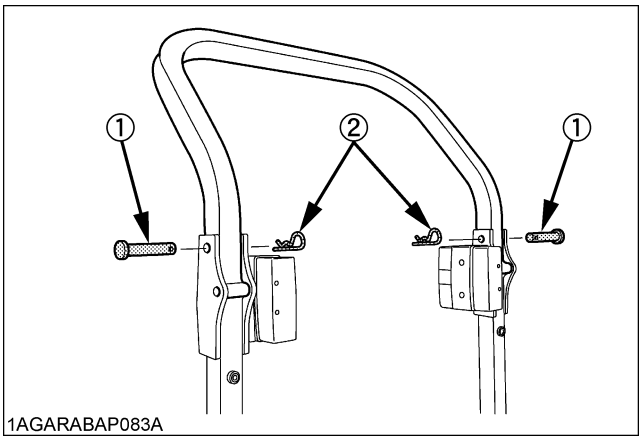

(1) Lock pin
(2) Hair pin

https://truckmanualshub.com/

STARTING

1. Adjusting the operator's position.

NOTE :
- The seat and suspension should be adjusted to ensure that the controls are comfortably at hand for the operator, ensuring that the operator maintains a good posture and minimizes risks from whole body vibration.

■Operator's Seat

CAUTION

To avoid personal injury:
- **Make adjustments to the seat only while the tractor is stopped.**
- **Make sure that the seat is completely secured after each adjustment.**
- **Do not allow any person other than the operator to ride on the tractor.**

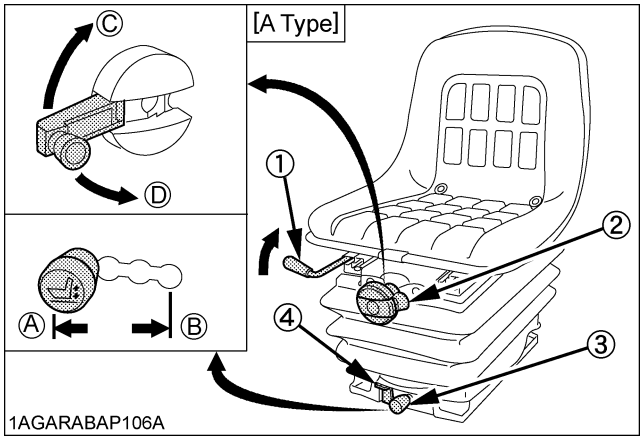

(1) Travel adjust lever
(2) Suspension adjust knob
(3) Height adjust lever
(4) Indication of suspension
(A) "RAISE"
(B) "LOWER"
(C) To increase tension
(D) To decrease tension

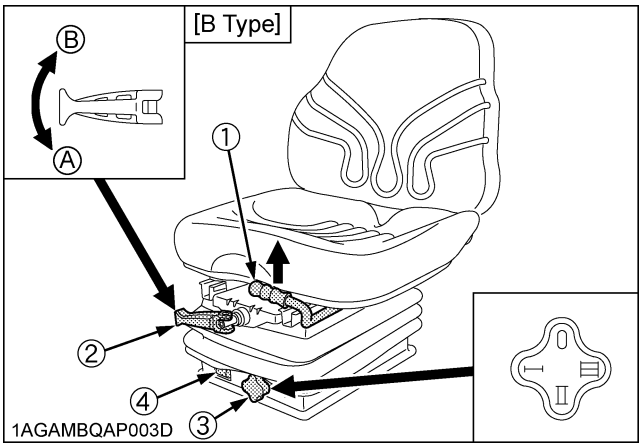

(1) Travel adjust lever
(2) Suspension adjust lever
(3) Height adjust knob
(4) Indication of height
(A) To decrease tension
(B) To increase tension
(O) Highest position
(III) Third position
(II) Second position
(I) Lowest position

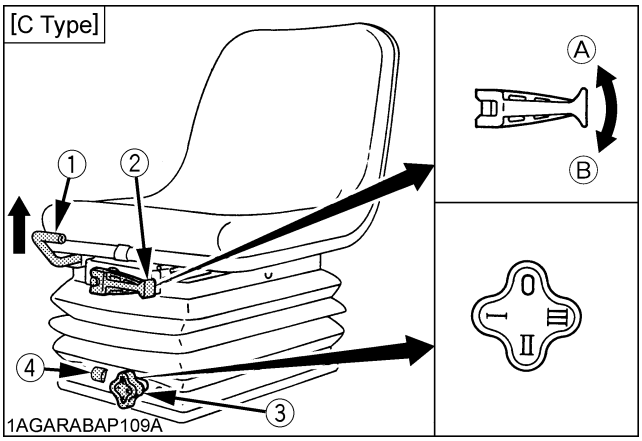

(1) Travel adjust lever
(2) Suspension adjust lever
(3) Height adjust knob
(4) Indication of height
(A) To decrease tension
(B) To increase tension
(0) Highest position
(III) Third position
(II) Second position
(I) Lowest position

https://truckmanualshub.com/

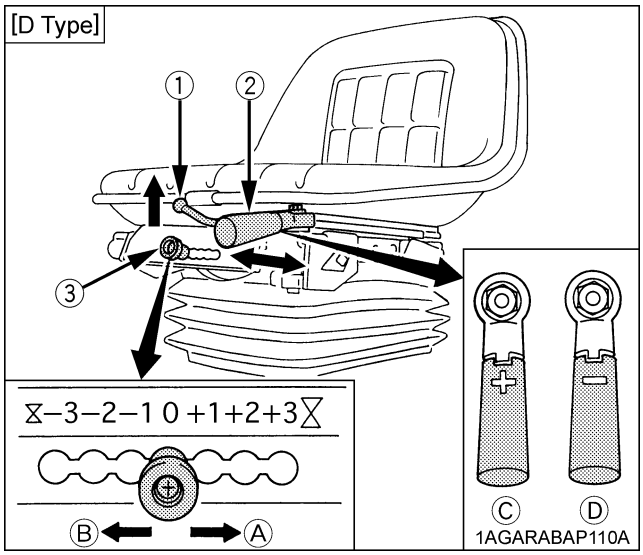

(1) Travel adjust lever
(2) Suspension adjuster
(3) Height adjust lever
(A) "RAISE"
(B) "LOWER"
(C) "INCREASE"
(D) "DECREASE"

◆ **Travel adjustment**
[A, B, C, D type]
Pull the travel adjust lever and slide the seat backward or forward, as required. The seat will lock in position when the lever is released.

◆ **Suspension adjustment**
[A type]
Turn the suspension adjust knob to achieve the optimum suspension setting.

[B, C type]
Turn the suspension adjust lever to achieve the optimum suspension setting.

[D type]
To increase tension, with the "+" (plus) sign on the handle facing forward as shown, and cranking the ratchet handle.
To decrease tension, pull the grip out and rotate half a turn until the "-" (minus) sign is facing forward as shown, and cranking the ratchet handle.
The ratchet action is now reversed.

◆ **Height adjustment**
[A, D type]
Pull and slide the height adjust lever to desired position while sitting in the seat.

[B, C type]
Turn the height adjust knob to desired position while sitting in the seat.

IMPORTANT :
- After adjusting the operator's seat, be sure to check to see that the seat is properly locked.

■Tilt Steering Adjustment

CAUTION
To avoid personal injury:
- **Do not adjust the steering wheel while the tractor is in motion.**
- **Make sure the steering wheel is locked after adjusting.**

Steering wheel is adjustable when tilt lever is unlocked.

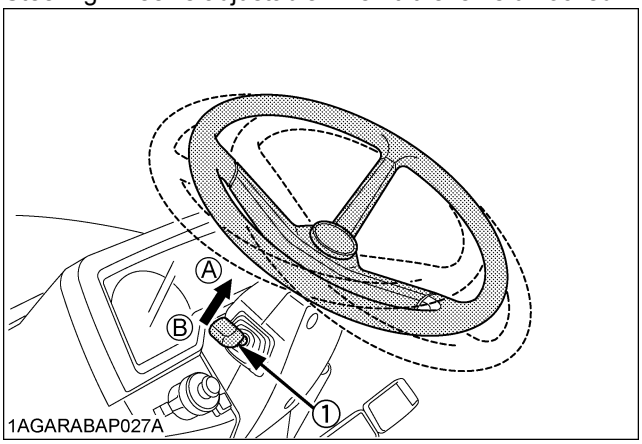

(1) Tilt lever
(A) "UNLOCK"
(B) "LOCK"

https://truckmanualshub.com/

2. Selecting light switch positions.

■Head Light Switch

Turn the light switch clockwise, and the following lights are activated on the switch position.

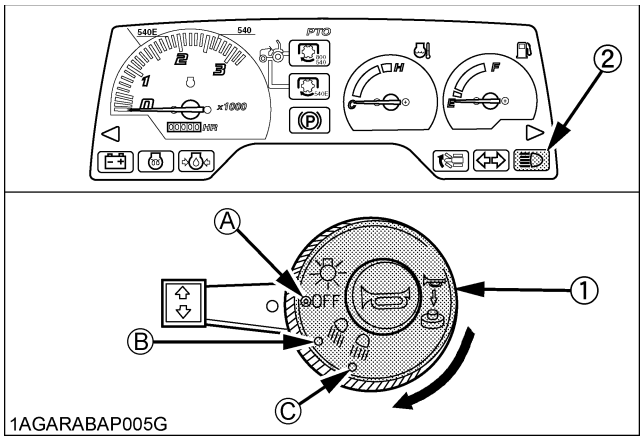

(1) Head light switch
(2) High beam indicator

Light name	(A)	(B)	(C)
Head light (Low beam)	OFF	ON	-
Head light (High beam)	OFF	-	ON
Tail light	OFF	ON	ON
Number plate light	OFF	ON	ON
Front position light	OFF	ON	ON
Meter board light	OFF	ON	ON
Hazard light switch	OFF	ON	ON

NOTE :
- High beam indicator will be on when head light switch is in "high beam" position.

■Turn Signal / Hazard Light Switch

◆ Turn Signal Light Switch

To indicate a right turn, turn the turn signal light switch clockwise. To indicate a left turn, turn the turn signal light switch counter-clockwise. The corresponding right and left turn signal lights and indicator on the instrument panel will flash. Turn signal is active when key switch is in the "ON" position.

NOTE :
- Be sure to return switch to center position after turning.

◆ Hazard Light Switch

When hazard light switch is pushed, the hazard lights flash along with the indicator on the instrument panel. Press the hazard light switch again to turn off the light.
The hazard light switch is operative, even when the key switch is at "OFF" position.

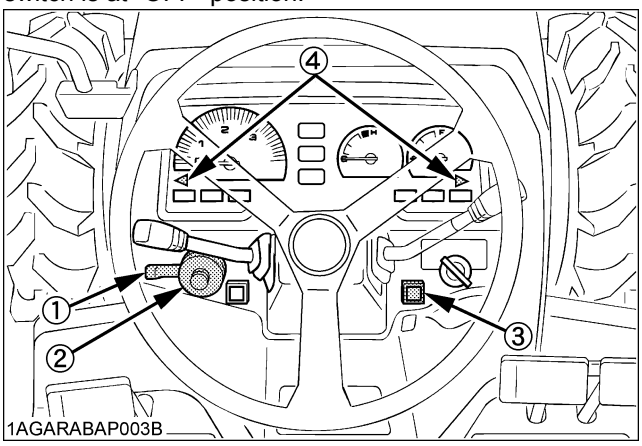

(1) Turn signal light switch
(2) Head light switch
(3) Hazard light switch
(4) Hazard / Turn signal indicator

■Position Light Switch

To activate the position lights :
Press the position light switch, the following lights are activated. When this switch is pressed again, those lights are off.

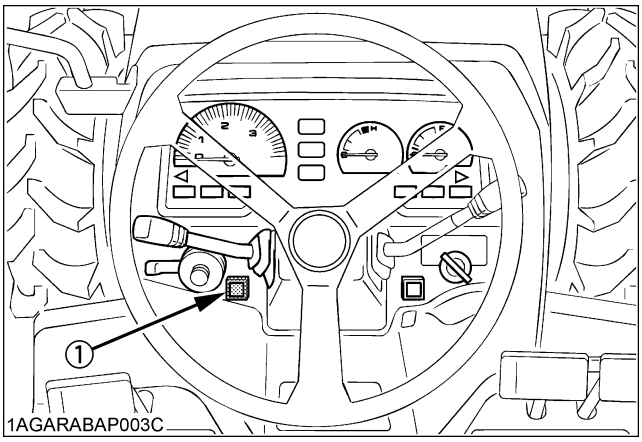

(1) Position light switch

◆ Position Lights :
- Tail light
- Front position light
- Number plate light
- Position light switch

https://truckmanualshub.com/

■Horn Button

The horn will sound when the key switch is in the "ON" position and the horn button pressed.

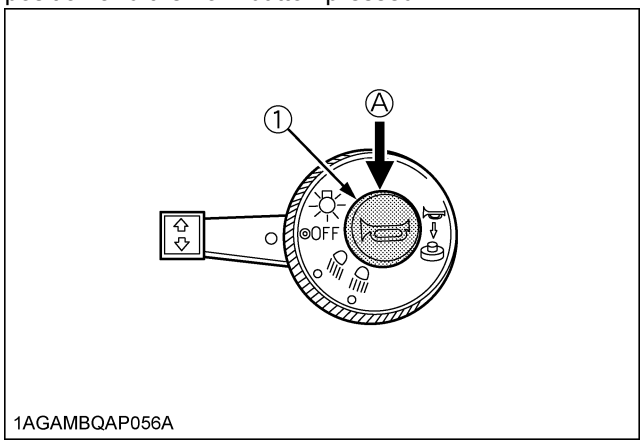

(1) Horn button *(A) "PUSH"*

■Tractor Lights

(1) Head light
(2) Front turn signal / Hazard light
(3) Front position light
(4) Tail light
(5) Rear turn signal / Hazard light
(6) Brake stop light
(7) Number plate light

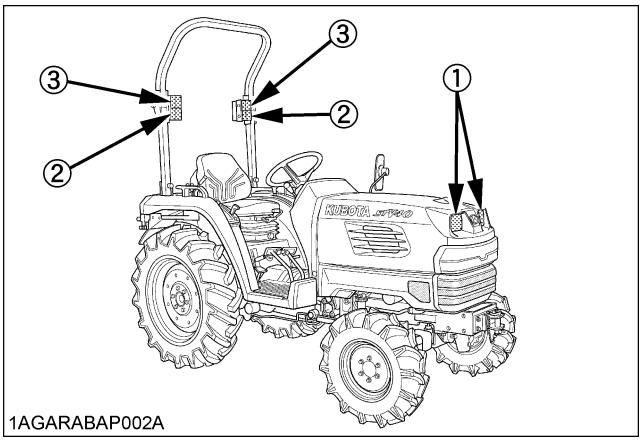

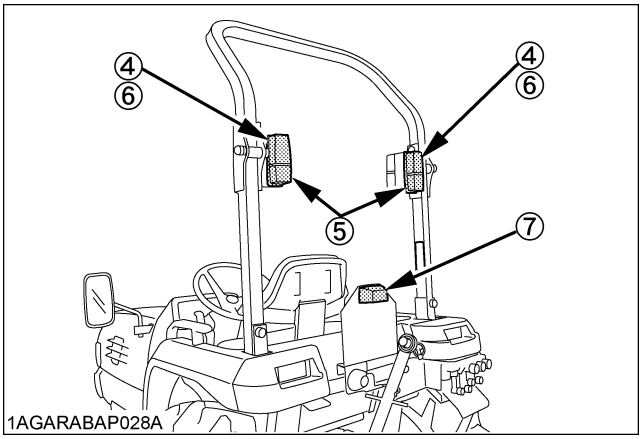

https://truckmanualshub.com/

3. Checking the brake pedal.

■Brake Pedals (Right and Left)

WARNING

To avoid personal injury:

- **Be sure to interlock the right and left pedals. Applying only one rear wheel brake at high speeds could cause the tractor to swerve or roll-over.**
- **Be sure brake pedals have equal adjustment when using locked together. Incorrect or unequal brake pedal adjustment can cause the tractor to swerve or roll-over.**

CAUTION

To avoid personal injury:

- **Do not make sudden braking. An accident may occur such as by heavy towed load shifting forward or loss of control.**
- **To avoid skidding and loss of steering control when driving on icy, wet, or loose surfaces, make sure the tractor is correctly ballasted, operated at reduced speed, operated with front wheel drive engaged (if equipped).**
- **The braking characteristics are different between two and four wheel drive. Be aware of the difference and use carefully.**

1. Before operating the tractor on the road or before applying the parking brake, be sure to interlock the right and left pedals as illustrated below.
2. Use individual brakes to assist in making sharp turns at slow speeds (Field Operation Only). Disengage the brake pedal lock and depress only one brake pedal.
3. Be sure brake pedals have equal adjustment when using locked together.

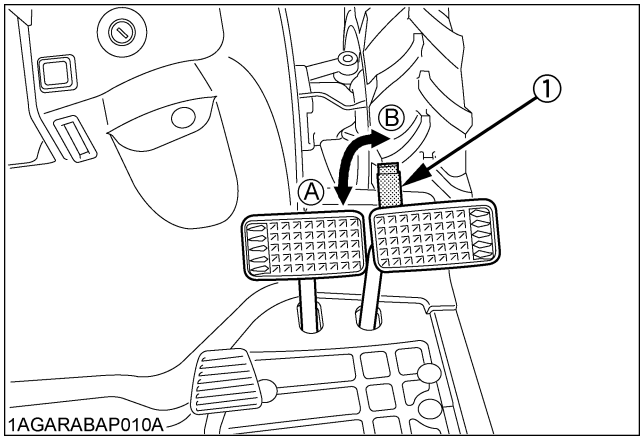

(1) Brake pedal lock (A) "LOCK" (B) "RELEASE"

4. Raise the implement. (See "HYDRAULIC UNIT" section.)

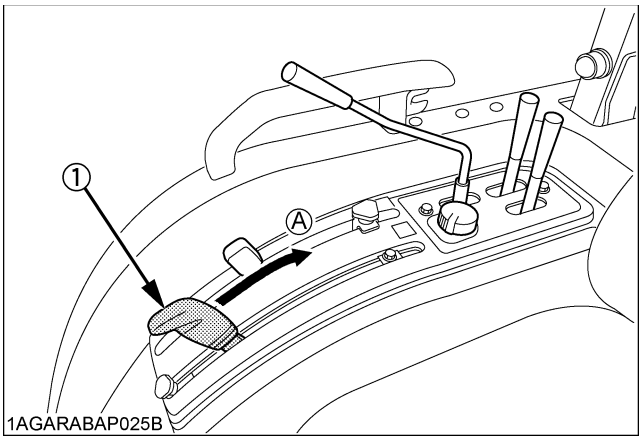

(1) Position control lever (A) "UP"

https://truckmanualshub.com/

5. Depress the clutch pedal.

■Clutch Pedal

CAUTION

To avoid personal injury:

- **Sudden release of the clutch may cause the tractor to lunge in an unexpected manner.**

The clutch is disengaged when the clutch pedal is fully pressed down.

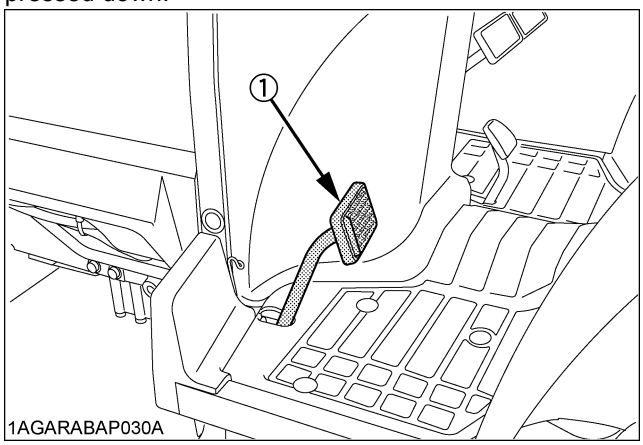

(1) Clutch pedal

IMPORTANT :

To help prevent premature clutch wear:

- The clutch pedal must be quickly disengaged and be slowly engaged.
- Avoid operating the tractor with your foot resting on the clutch pedal.
- Select proper gear and engine speed depending on the type of job.

6. Selecting the Travel Speed.

■Range Gear Shift Lever

The range gear shift can only be shifted when the tractor is completely stopped and the speed control pedal is neutral position.

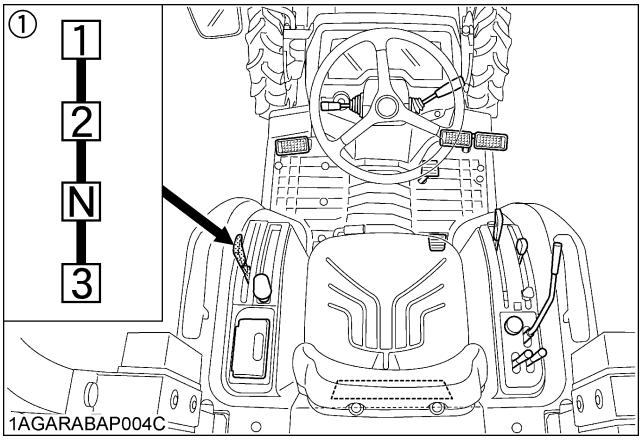

(1) Range gear shift lever (1-2-3)

(1) "LOW"
(2) "MIDDLE"
(N) "NEUTRAL POSITION"
(3) "HIGH"

IMPORTANT:

To avoid transmission and shift linkage damage when shifting:

- Completely stop the tractor using the brake pedals.
- Do not force the range gear shift lever.
- If it is difficult to shift the lever into 1, 2, or 3 from neutral position:
  On slopes be sure to set the parking brake before starting the procedure.
  (1) Slightly depress the speed control pedal to rotate the gears inside of transmission.
  (2) Release the speed control pedal to neutral position.
  (3) Depress the clutch pedal, wait for a moment and then shift the lever.

https://truckmanualshub.com/

■Front Wheel Drive Lever

CAUTION

To avoid personal injury:

- **Do not engage the front wheel drive when traveling at road speed.**
- **When driving on icy, wet or loose surfaces, make sure the tractor is correctly ballasted to avoid skidding and loss of steering control. Operate at reduced speed and engage front wheel drive.**
- **An accident may occur if the tractor is suddenly braked, such as by heavy towed loads shifting forward or loss of control.**
- **The braking characteristics are different between two and four wheel drive. Be aware of the difference and use carefully.**

Use the lever to engage the front wheels with the tractor stopped. Shift the lever to "ON" to engage the front wheel drive.

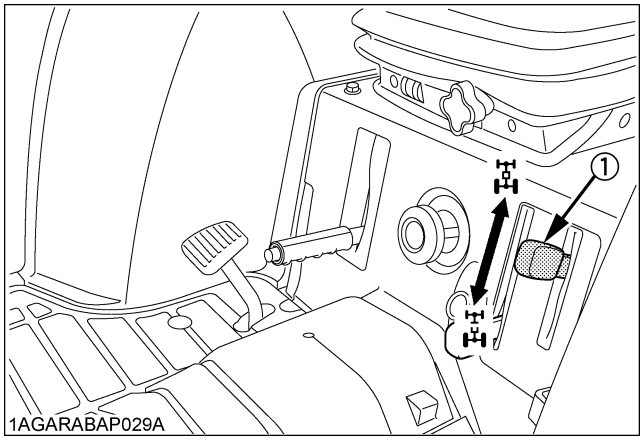

(1) Front wheel drive lever *"ON"* *"OFF"*

IMPORTANT :

- Depress the clutch pedal before engaging the front wheel drive lever.
- If the front wheel drive lever is difficult to set to OFF, stop the tractor, turn the steering wheel and move the lever.
- Tires will wear quickly if front wheel drive is engaged on paved roads.

◆ **Front wheel drive is effective for the following jobs:**

1. When greater pulling force is needed, such as working in a wet field, when pulling a trailer, or when working with a front-end loader.
2. When working in sandy soil.
3. When working on a hard soil where a rotary tiller might push the tractor forward.
4. For increased braking at reduced speed.

■Bi-speed Turn Switch

WARNING

To avoid personal injury:

- **Do not use "Bi-speed Turn" at high speed.**
- **"Bi-speed Turn" enables short and fast turns, therefore, become familiar with its performance before operating in close or confined areas.**

1. Make sure the front wheel drive lever is in the engaged "ON" position.
2. To activate the Bi-speed turn system, press the Bi-speed turn switch.
   The Bi-speed turn indicator comes on when system is in Bi-speed turn mode.
3. Press the switch again, the Bi-speed turn system turns off and indicator goes off.

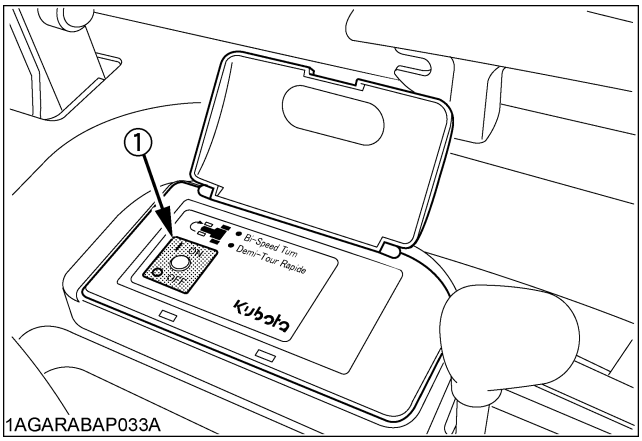

(1) Bi-speed turn switch *Push to "ON"*
Re-push to "OFF"

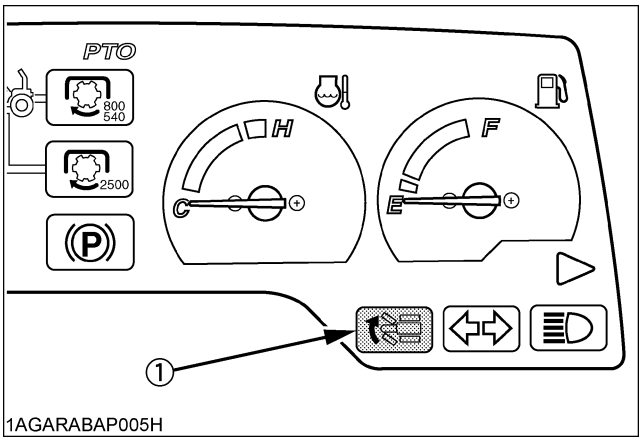

(1) Bi-speed turn indicator

https://truckmanualshub.com/

NOTE :
- The Bi-Speed Turn system functions as follows.
  When you manipulate the steering wheel to turn the machine, the front wheels are still driven at their usual 4WD speed until they turn 34 degrees or so from the straight position. Move the steering wheel further for a turn of 34 degrees or more, and the Bi-speed Turn system is activated. This way, the front wheels start turning about 1.5 times higher for smooth turning.

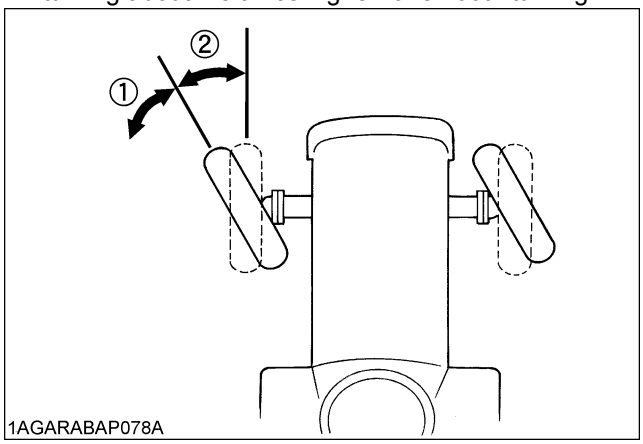

(1) Bi-speed turning
(2) Usual 4WD turning (about 34 degrees)

- Bi-speed turn system works only when traveling speed is less than about 9 km/h.

◆ **Bi-speed turn use is effective for the following jobs:**
1. Turning at the end of rows. (planting, cultivating, harrowing.)
2. Increasing maneuverability when working in tight spaces.

IMPORTANT :
- When the Bi-speed turn switch is set to "ON" and overload is applied to the front wheels, the front wheels may stop (when the turning angle of the front wheels is 34 degrees or more). This is not a problem, but the Bi-speed clutch is slipping. Set the Bi-speed turn to "OFF" when the front wheels stop, making it difficult to continue operation.
- Do not use the Bi-speed turn when operating the front end loader.

7. Accelerate the engine.

■Hand Throttle Lever

Pulling the throttle lever back increases engine speed, and pushing it forward decreases engine speed.

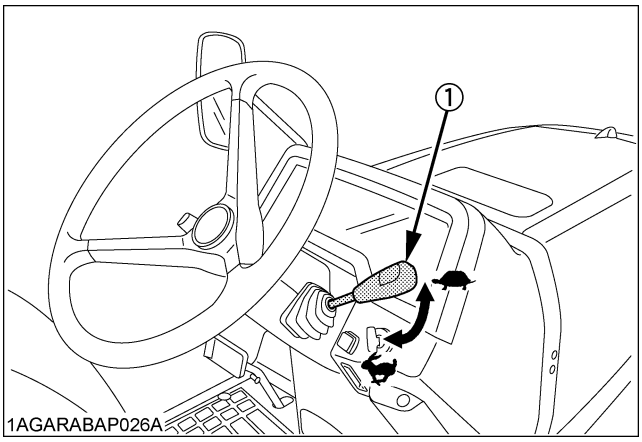

(1) Hand throttle lever *"INCREASE"* *"DECREASE"*

8. Unlock the parking brake and slowly release the clutch.

■Parking Brake Lever

To release the parking brake, depress the brake pedals, push release button and push down parking brake lever.

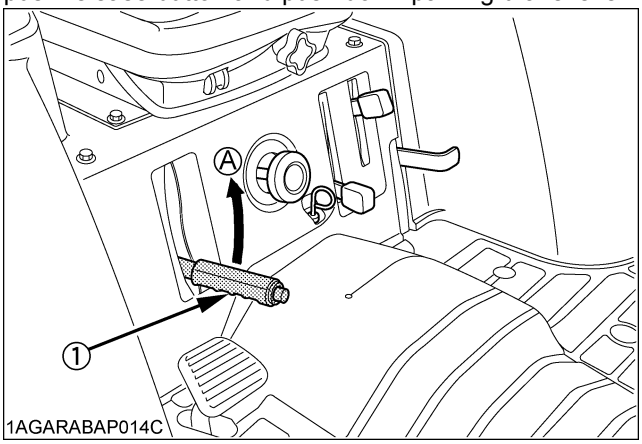

(1) Parking brake lever *(A) "RELEASE"*
(2) Release button

https://truckmanualshub.com/

9. Depress the Speed Control Pedal. [HST Type]

■Speed Control Pedal

WARNING

To avoid personal injury:
- **Do not operate if tractor moves on level ground with foot off of Speed Control Pedal.**
- **Consult your local KUBOTA Dealer.**

Forward Pedal
Depress the speed control pedal with the toe of your right foot to move forward.
Reverse Pedal
Depress the speed control pedal with the heel of your right foot to move backward.

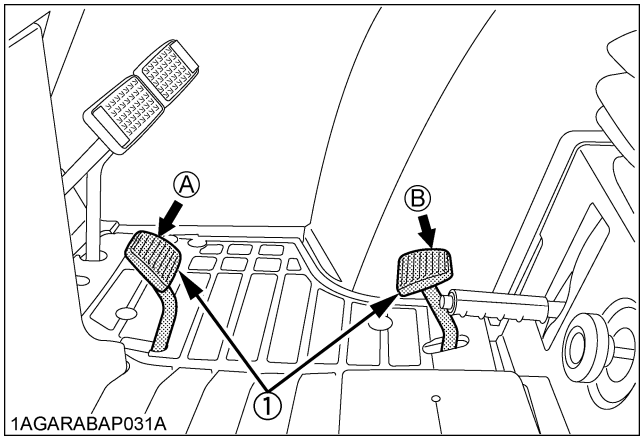

(1) Speed control Pedal *(A) "FORWARD"* *(B) "REVERSE"*

NOTE :
- When you stand up from the seat with the speed control pedal stepped on or the cruise control lever engaged (ON), the engine will stop regardless of whether the tractor is moving or not. This is because the tractor is equipped with Operator Presence Control system (OPC).

■Cruise Control Lever

CAUTION

To avoid personal injury:
- **Pull the cruise control lever completely to the rear before starting the engine.**
- **Do not use the cruise control when driving on the road.**
- **Be sure to connect both the left and the right brakes to release the cruise control. The speed cruise control won't be released with single brake activation.**

Cruise control is designed for tractor operating efficiency and operator comfort, This device will provide a constant forward operating speed by mechanically holding the cruise control lever at the selected position.

◆ **To engage Cruise Control Device**
1. The proper forward speed will be maintained if you apply the cruise control lever at any position.
2. To operate faster than the set speed, depress the speed control pedal further down in this condition. The set speed will be resumed if you release the pedal.

◆ **To disengage Cruise Control Device**
- Tilt the lever toward the seat, move the lever all the way back and then to "NEUTRAL" position to release the cruise control.
- Depress both brake pedals.

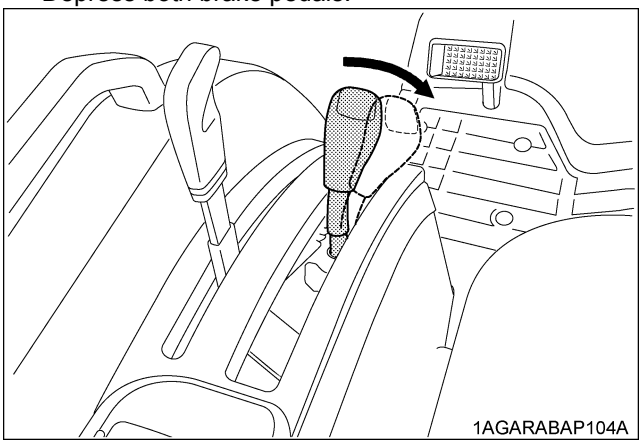

IMPORTANT :
- Do not depress the speed control pedal backward to disengage the cruise control.

NOTE :
- Cruise control will be disengaged automatically when both brake pedals are depressed.
- The cruise control device does not disengage when the individual right or left brake is applied.
- Cruise control device will not operate in reverse.

https://truckmanualshub.com/

- Preferably set the cruise control lever, while holding down the speed control pedal. This makes the setting smoother.
- When releasing the cruise mode, be sure to return the cruise control lever fully backward.

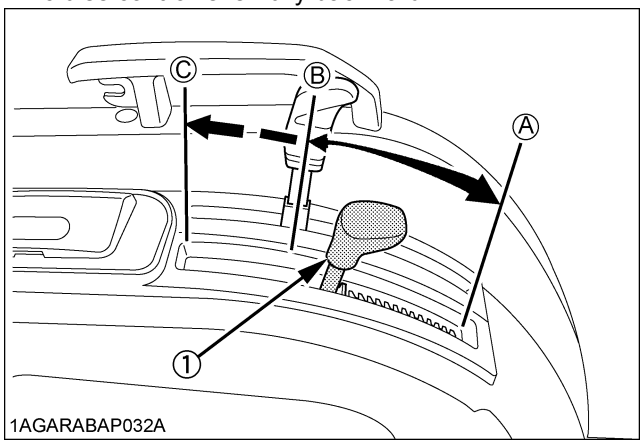

(1) Cruise control lever
(A) "INCREASE"
(B) "DECREASE"
(C) "NEUTRAL"

NOTE :
- When you stand up from the seat with the speed control pedal stepped on or the cruise control lever engaged (ON), the engine will stop regardless of whether the tractor is moving or not. This is because the tractor is equipped with Operator Presence Control system (OPC).

STOPPING

■Stopping

1. Slow down the engine.
2. Step on the clutch and brake pedal.
3. After the tractor has stopped, disengage the PTO, lower the implement to the ground, shift the transmission to neutral, release the clutch pedal, and set the parking brake.

CHECK DURING DRIVING

■Immediately Stop the Engine if:

- The engine suddenly slows down or accelerates,
- Unusual noises suddenly are heard,
- Exhaust fumes suddenly become very dark,

While driving, make the following checks to see that all the parts are functioning normally.

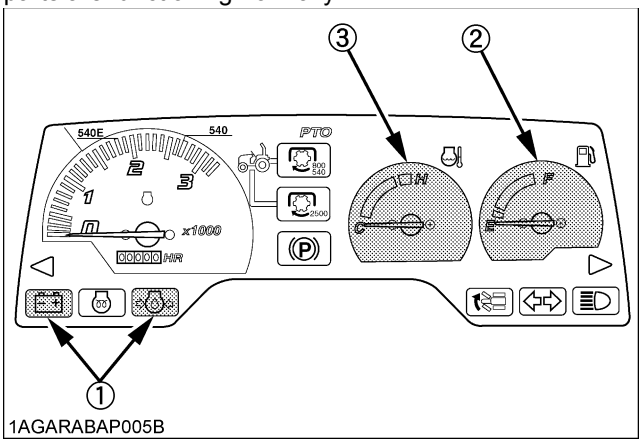

(1) Easy checker(TM)
(2) Fuel gauge
(3) Coolant temperature gauge

■Easy Checker(TM)

Engine oil pressure
If the oil pressure in the engine goes below the prescribed level, the indicator in the Easy Checker(TM) will come on.
If this should happen during operation, and it does not go off when the engine is accelerated to more than 1000 rpm, check level of engine oil.
(See "Checking Engine Oil Level" in "DAILY CHECK" in "PERIODIC SERVICE" section.)

Electrical charge
If the alternator is not charging the battery, the indicator in the Easy Checker(TM) will come on.
If this should happen during operation, check the electrical charging system or consult your local KUBOTA Dealer.

NOTE :
- For checking and servicing of your tractor, consult your local KUBOTA Dealer for instructions.

https://truckmanualshub.com/

■Fuel Gauge

When the key switch is on, the fuel gauge indicates the fuel level.

Be careful not to empty the fuel tank. Otherwise air may enter the fuel system.

Should this happen, the system should be bled. (See "Bleeding Fuel System" in "SERVICE AS REQUIRED" in "PERIODIC SERVICE" section.)

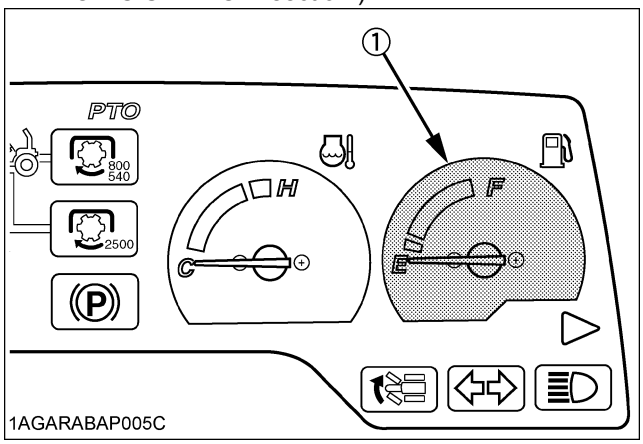

(1) Fuel gauge *(E) "EMPTY"*
(F) "FULL"

■Coolant Temperature Gauge

CAUTION

To avoid personal injury:

- **Do not remove radiator cap until coolant temperature is well below its boiling point. Then loosen cap slightly to the stop to relieve any pressure before removing cap completely.**

1. With the key switch at "ON", this gauge indicates the temperature of the coolant. "C" for "cold" and "H" for "hot."
2. If the indicator reaches the "H" position (red zone), engine coolant is overheated. Check the tractor by referring to "TROUBLESHOOTING" section.

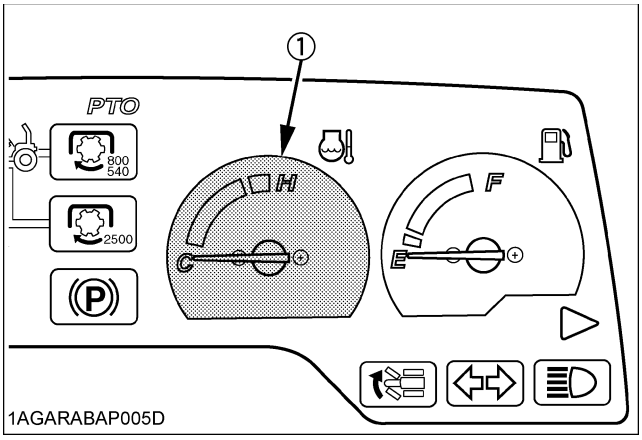

(1) Coolant temperature gauge

■Hourmeter/Tachometer

This meter gives readings for engine speed, PTO shaft speed and the hours the tractor has been operated.

1. The tachometer indicates the engine speed and corresponding PTO shaft speed location on the dial.
2. The hourmeter indicates in five digits the hours the tractor has been used; the last digit indicates 1/10 of an hour.

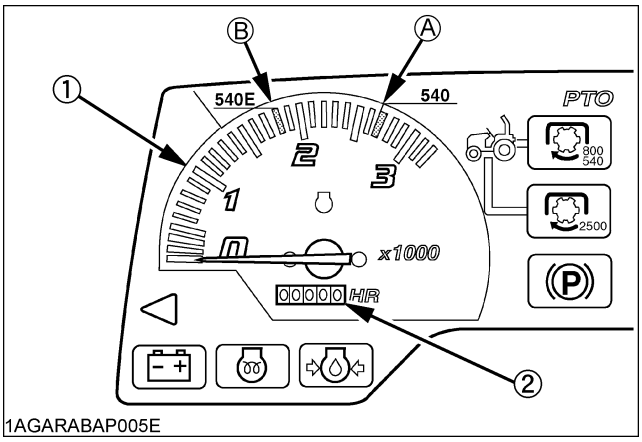

(1) Engine revolution *(A) 540 rpm*
(2) Hours used *(B) 540E rpm*

https://truckmanualshub.com/

PARKING

■Parking

CAUTION

To avoid personal injury:
BEFORE DISMOUNTING TRACTOR

- **ALWAYS SET PARKING BRAKE AND LOWER ALL IMPLEMENTS TO THE GROUND.**
  Leaving transmission in gear with the engine stopped will not prevent the tractor from accidental rolling.
- **STOP THE ENGINE AND REMOVE THE KEY.**

1. When parking, be sure to set the parking brake.
   To set the parking brake;
   (1) Interlock the brake pedals.
   (2) Depress the brake pedals.
   (3) Pull the lever to park.

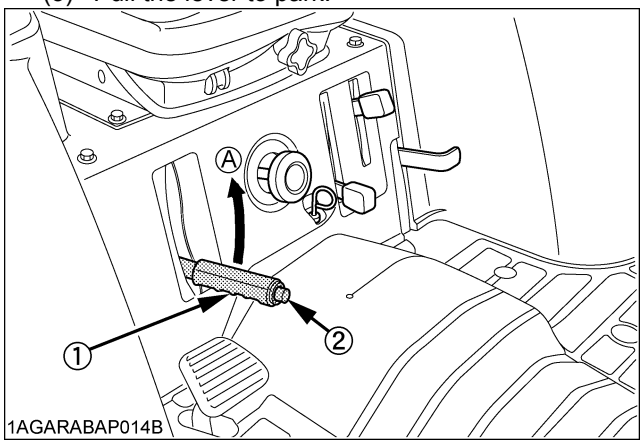

(1) Parking brake lever *(A) "PULL"*
(2) Release button

2. Before getting off the tractor, disengage the PTO, lower all implements, place all control levers in their neutral positions, set the parking brake, stop the engine and remove the key.
3. If it is necessary to park on an incline, be sure to chock the wheels to prevent accidental rolling of the machine.

OPERATING TECHNIQUES

■Differential Lock

WARNING

To avoid personal injury due to loss of steering control:

- **Do not operate the tractor at high speed with differential lock engaged.**
- **Do not attempt to turn with the differential lock engaged.**
- **Be sure to release the differential lock before making a turn in field conditions.**

If one of the rear wheels should slip, step on the differential lock pedal. Both wheels will turn together, then reduce slippage.
Differential lock is maintained only while the pedal is depressed.

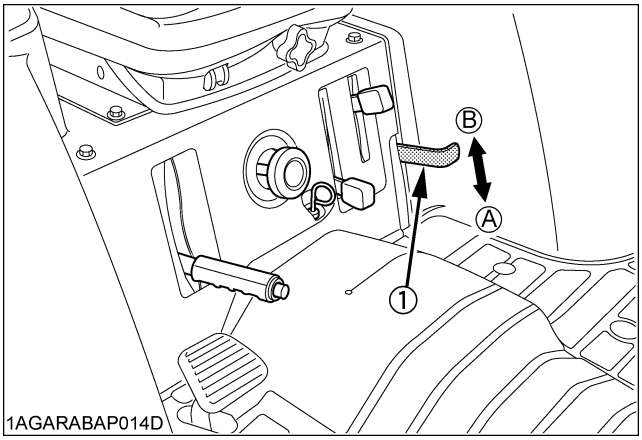

(1) Differential lock pedal *(A) Press to "ENGAGE"*
(B) Release to "DISENGAGE"

IMPORTANT :

- When using the differential lock, always slow the engine down.
- To prevent damage to power train, do not engage differential lock when one wheel is spinning and the other is completely stopped.
- If the differential lock cannot be released, step lightly on the brake pedals alternately.

https://truckmanualshub.com/

■Operating the Tractor on a Road

CAUTION

To avoid personal injury:

- **To help assure straight line stops when driving at transport speeds, lock the brake pedals together. Uneven braking at road speeds could cause the tractor to roll-over.**
- **When traveling on road with 3-point hitch mounted implement attached, be sure to have sufficient front weight on the tractor to maintain steering ability.**

Observe all local traffic and safety regulations.
Use the registration plate.

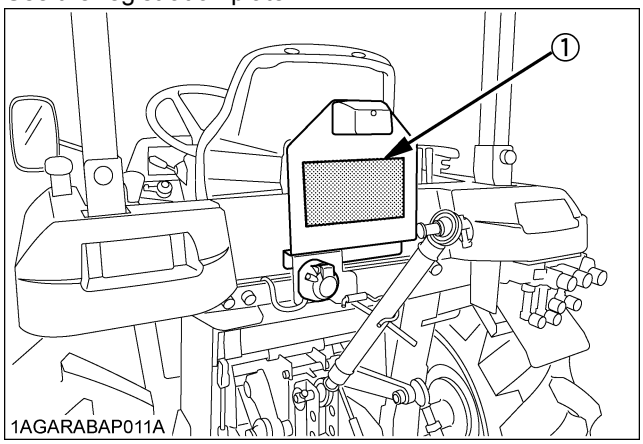

(1) Registration plate

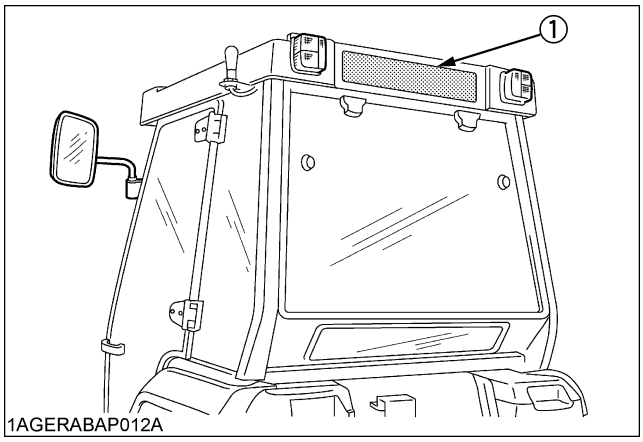

(1) Registration plate

■Operating on Slopes and Rough Terrain

CAUTION

To avoid personal injury:

- **Always back up when going up a steep slope. Driving forward could cause the tractor to tip over backward. Stay off hills and slopes too steep for safe operation.**
- **Avoid changing gears when climbing or descending a slope.**
- **If operating on a slope, never disengage the clutch or shift levers to neutral. Doing so could cause loss of control.**
- **Do not drive the tractor close to the edges of ditches or banks which may collapse under the weight of the tractor. Especially when the ground is loose or wet.**

1. Be sure wheel tread is adjusted to provide maximum stability.
   (See "WHEEL ADJUSTMENT" in "TIRES, WHEELS AND BALLAST" section.)
2. Slow down for slopes, rough ground, or sharp turns, especially when transporting heavy, rear mounted equipment.
3. Before descending a slope, shift to a gear low enough to control speed without using brakes.

■Transport the Tractor Safely

1. The tractor, if damaged, must be carried on a truck. Secure the tractor tightly with ropes.
2. Follow the instruction below when towing the tractor: Otherwise, the tractor's powertrain may get damaged.
   - Set the all shift levers to "NEUTRAL" position.
   - If possible, start engine and select 2WD, if creep speed is fitted ensure that it is disengaged.
   - Tow the tractor using its front hitch or drawbar.
   - Never tow faster than "10 km/h (6.2 mph)".

■Directions for Use of Power Steering

1. Power steering is activated only while the engine is running. Slow engine speeds make the steering a little heavier. While the engine is stopped, the tractor functions in the same manner as tractors without power steering.
2. When the steering wheel is turned all the way to the stop, the relief valve is activated. Do not hold the steering wheel in this position for a long period of time.
3. Avoid turning the steering wheel while the tractor is stopped, or tires may wear out sooner.
4. The power steering mechanism makes the steering easier. Be careful when driving on a road at high speeds.

https://truckmanualshub.com/

■Trailer Electrical Outlet

A trailer electrical outlet is supplied for use with trailer or implement.

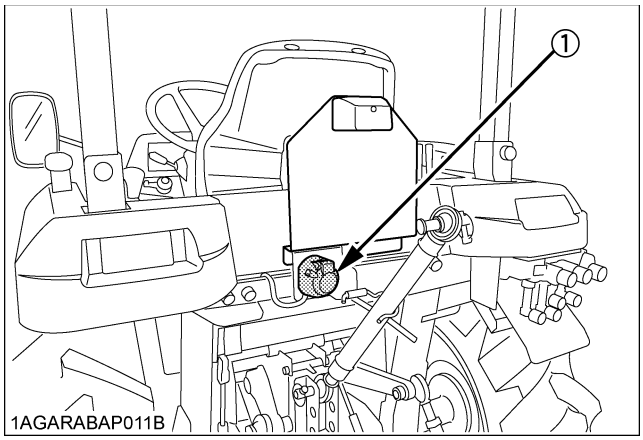

(1) Trailer electrical outlet

◆ **Function of each terminals in trailer electrical outlet**

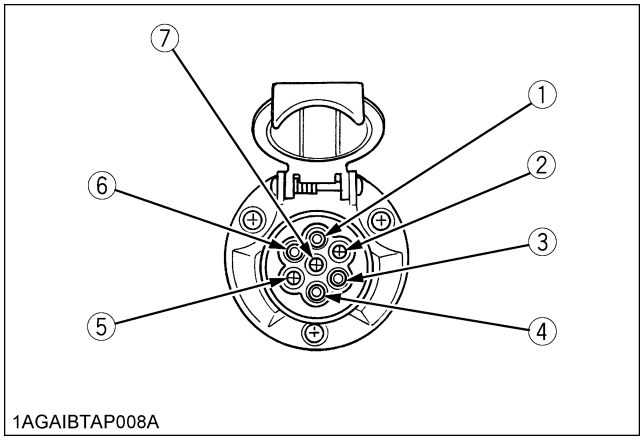

Terminal	Function	Color of wire harness
(1)	Turn signal (LH)	Green / White
(2)	---	---
(3)	Ground	Black
(4)	Turn signal (RH)	Red / White
(5)	Tail (RH)	Yellow / Red
(6)	Brake Stop	Yellow
(7)	Tail (LH)	Yellow / White

■Electrical Outlet

An electrical outlet is supplied for use with implement.

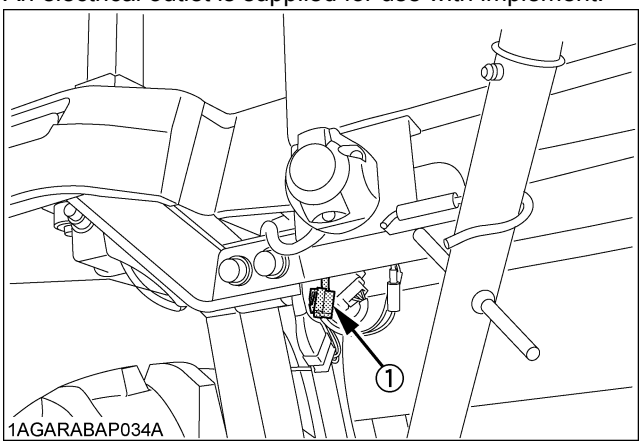

(1) Accessory electrical outlet (10A)

■Accelerator Auto Throttle System

Accelerator auto throttle system is also available to further enhance HST operation. The engine speed increases and decreases in time with the movement of the HST pedal. HST pedal can be operated with the feeling of an accelerator pedal.

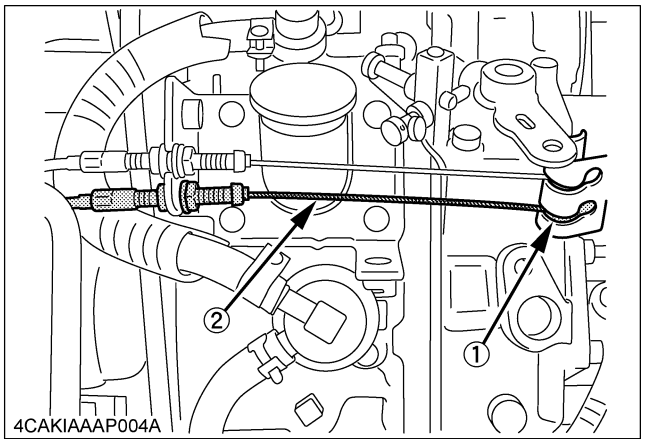

(1) Hole of the engine's speed control lever
(2) Accelerator cooperative cable

IMPORTANT :

- Do the following to have the accelerator interlocked or not.

Connect the cable to the hole:	Accelerator interlocked
Disconnect the cable out of the hole:	Accelerator not interlocked

https://truckmanualshub.com/

ENGLISH

PTO

PTO OPERATION

CAUTION

To avoid personal injury:

- **Disengage PTO, stop engine, and allow all rotating components to come to a complete stop before connecting, disconnecting, adjusting, or cleaning any PTO driven equipment.**

■PTO Clutch Control Switch

The PTO clutch control switch engages or disengages the PTO clutch which gives the PTO independent control.
Turn the switch to "ON" to engage the PTO clutch. Turn the switch to "OFF" to disengage the PTO clutch.

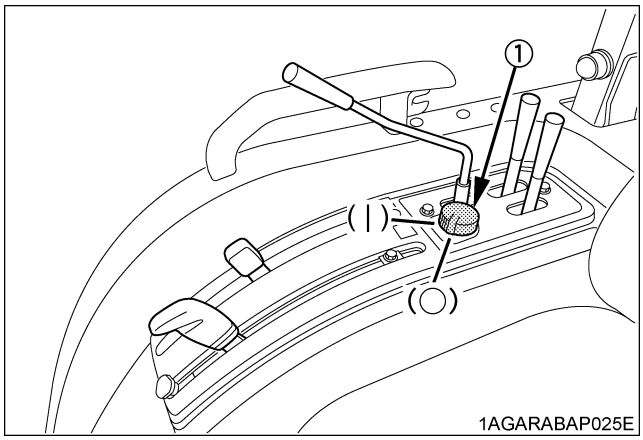

(1) PTO clutch control switch | : "ON" ○ : "OFF"

◆ PTO Clutch Control Switch
OFF position

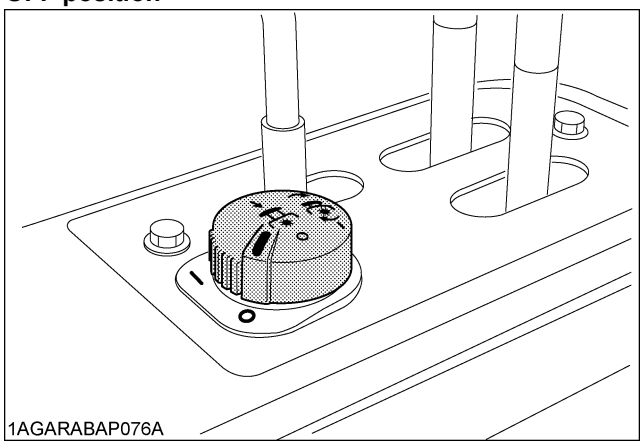

To turn ON

Turn the switch clockwise to the "|" position and release your hand. (In the ON position, switch slightly rises itself.)

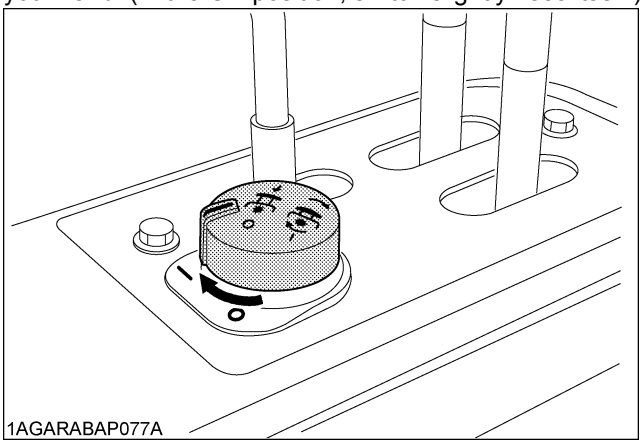

To Turn OFF

Tap on top of the switch, and the switch will return to the OFF position. (In the OFF position, the switch stays low-profile.)

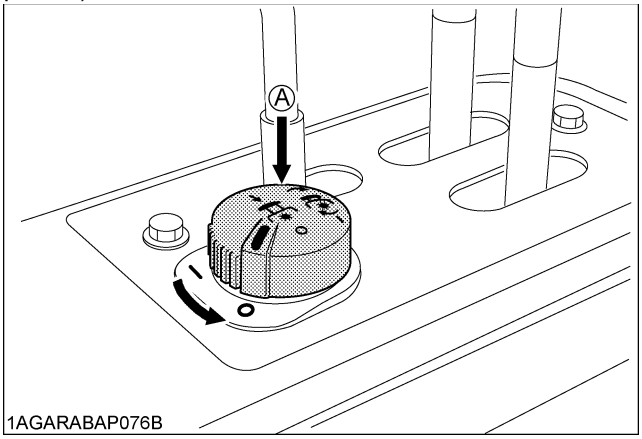

(A) "PUSH"

IMPORTANT :

- To avoid shock loads to the PTO, reduce engine speed when engaging the PTO, then open the throttle to the recommended speed.

NOTE :

- There are PTO 540 and 540E rpm indicated marks on the tachometer board.
- Tractor engine will not start if the rear PTO system or mid PTO system is engaged.
- When you stand up from the seat with the speed control pedal placed in "NEUTRAL" position and the mid-PTO gear shift lever placed in "ON" position, the engine will stop automatically.

https://truckmanualshub.com/

- When you stand up from the seat with the speed control pedal placed in "NEUTRAL" position, the rear PTO gear shift lever engaged and the parking brake released, the engine will stop automatically.

◆ **PTO Indicator**

Suppose that the Rear or Mid PTO gear shift lever is at ON. When the PTO clutch control switch is set to the ON (Engage) position in this state, the PTO indicator lights up.

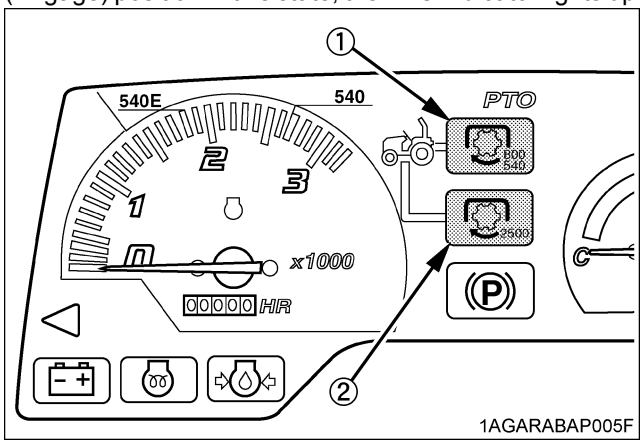

(1) Rear PTO indicator
(2) Mid-PTO indicator

■Rear PTO Gear Shift Lever

WARNING

To avoid personal injury:

- **Be sure to observe the PTO shaft speed prescribed for the individual implements. It is extremely dangerous to run an implement at high speed that is meant to be operated at low speed. Use only when this higher rpm is specifically recommended by the implement manufacturer.**

The rear PTO gear shift lever can be set to either 540 rpm or 800 rpm position.

Move this lever to either position with the PTO clutch control switch set to "OFF".

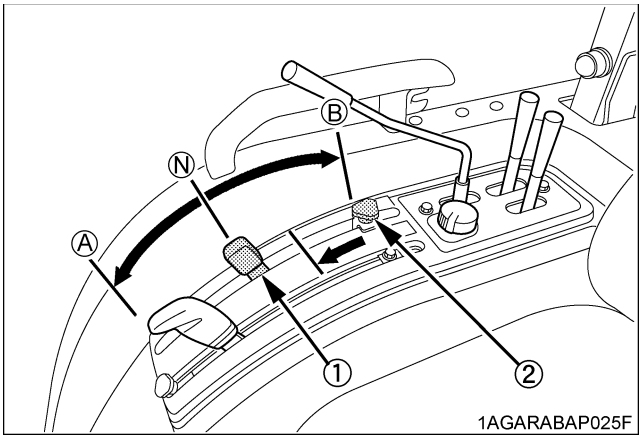

(1) Rear PTO gear shift lever
(2) Knob bolt
(A) 540 rpm
(B) 800 rpm
(N) "NEUTRAL POSITION"

NOTE :

- When the PTO 800 rpm mode is not used, loosen the knob bolt, shift the control fixture in the direction of arrow, and fix it in this position.

■Mid-PTO Gear Shift Lever

WARNING

To avoid personal injury:

- **Before operation, be sure to select the correct PTO lever (mid/rear).**

To use mid-PTO, shift the mid-PTO gear shift lever to engaged position and turn the PTO clutch control switch to engaged position.

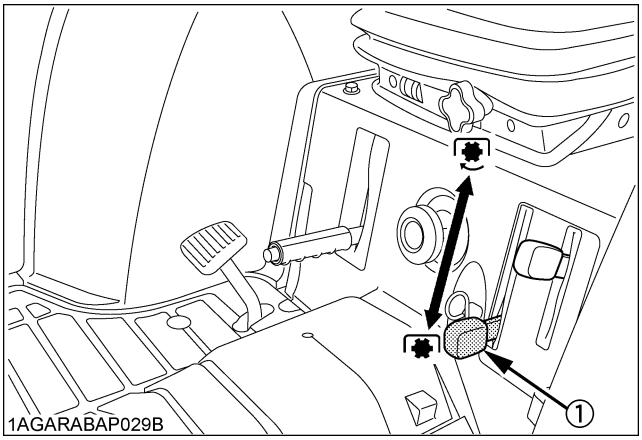

(1) Mid-PTO gear shift lever
"ON"
"OFF"

https://truckmanualshub.com/

◆ **Rear and Mid-PTO speed**

Mid-PTO lever	Rear-PTO lever	PTO clutch	Rear-PTO speed	Mid-PTO speed
OFF	540	OFF ⇩ ON	540/2670	0
	NEUTRAL		0	
	800		800/2717	
ON	540	OFF ⇩ ON	540/2670	2500/2734
	NEUTRAL		0	
	800		800/2717	

◆ **Mid PTO**

The mid PTO is available for KUBOTA approved implements.

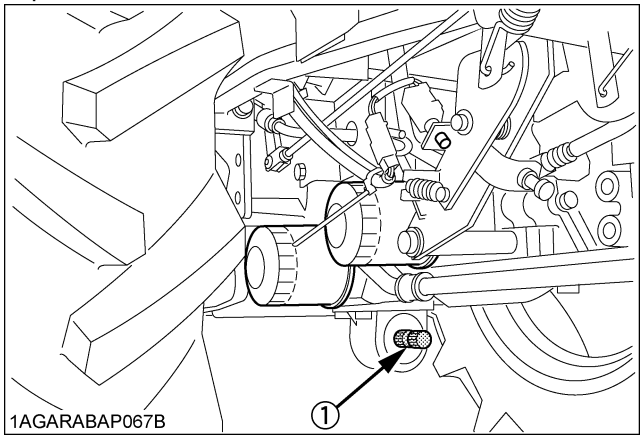

(1) Mid PTO

https://truckmanualshub.com/

■Stationary PTO

To park the tractor and use the rear PTO system (for chipper or pump, for example), start the PTO system in the following steps.

1. Apply the parking brake and place blocks at the tires.
2. Make sure that the speed control pedal and all shift levers are at "NEUTRAL", and start the engine.
3. Set the rear PTO gear shift lever to either "540 rpm" or "800 rpm" position, and set the PTO clutch control switch to "ON" position.
4. Set the engine speed to provide recommended rear PTO speed.
5. Get off the tractor.

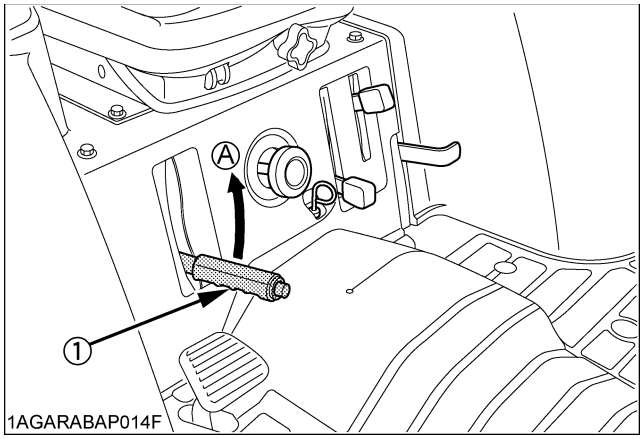

(1) Parking brake lever *(A) "PULL"*

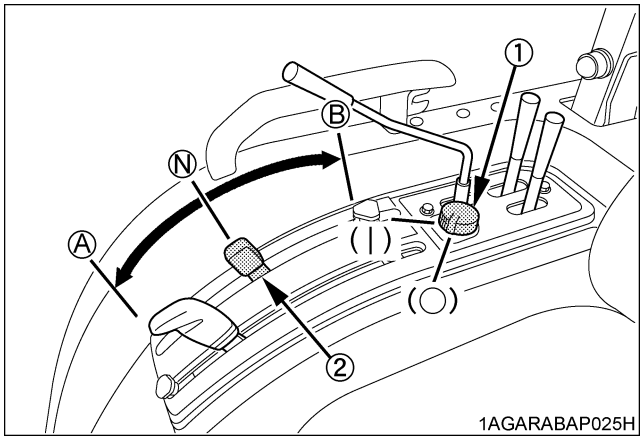

(1) PTO clutch control switch *| : "ON" ○ : "OFF"*
(2) Rear PTO gear shift lever *(A) 540 rpm*
(B) 800 rpm
(N) "NEUTRAL POSITION"

NOTE :

- Make sure the mid-PTO gear shift lever is set to "OFF" position.

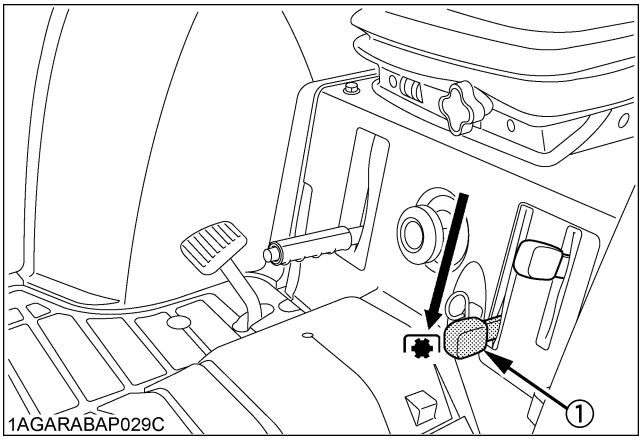

(1) Mid-PTO gear shift lever *"OFF"*

- If the rear PTO system is engaged and the parking brake is released, the engine stops automatically.

■PTO Shaft Cover and Shaft Cap

Keep the PTO shaft cover in place at all times.
Replace the PTO shaft cap when the shaft is not in use.
Before connecting or disconnecting a drive shaft to PTO shaft, be sure engine is "OFF".
When connecting or disconnecting the joint to PTO shaft, raise up the PTO shaft cover.

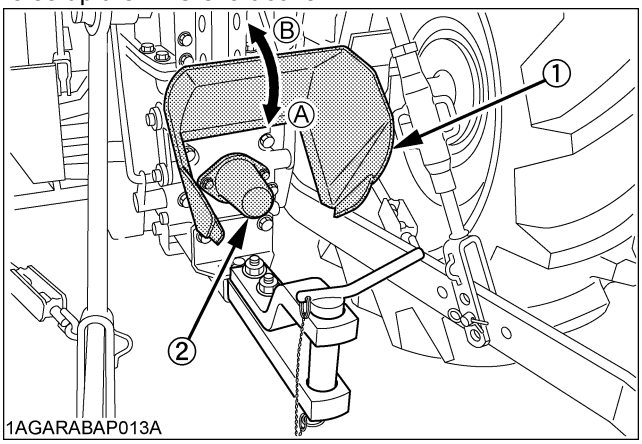

(1) PTO shaft cover *(A) "NORMAL POSITION"*
(2) PTO shaft cap *(B) "RAISED POSITION"*

IMPORTANT :

- The universal joint of the PTO drive shaft is technically limited in its moving angle. Refer to the PTO Drive Shaft Instructions for proper use.

https://truckmanualshub.com/

ENGLISH

THREE-POINT HITCH & DRAWBAR

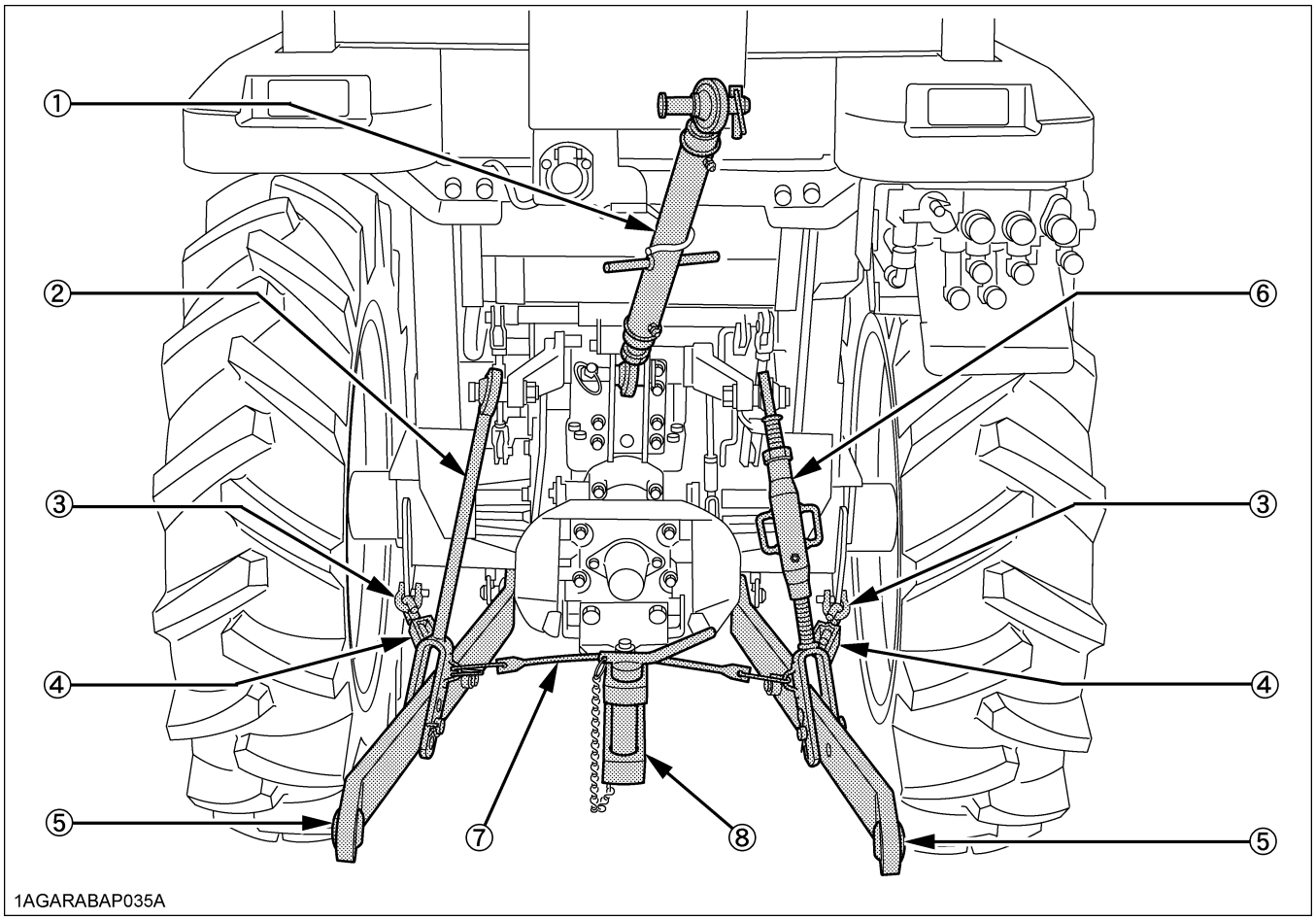

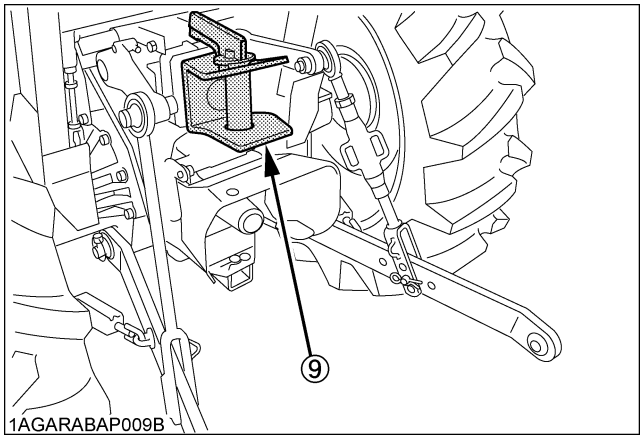

(1) Top link
(2) Lifting rod (Left)
(3) Check chains
(4) Turn buckle
(5) Lower link
(6) Lifting rod (Right)
(7) Lower link holder
(8) Drawbar (if equipped)
(9) High-hitch (if equipped)

https://truckmanualshub.com/

3-POINT HITCH

1. Make preparations for attaching implement.

■Selecting the holes of lower links

There are three holes in the lower links. For most operations the lifting rods should be attached to the (B) hole.

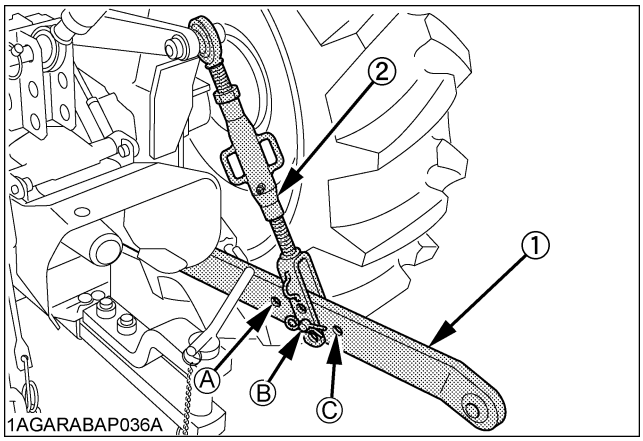

(1) Lower link *Holes: (A),(B),(C)*
(2) Lifting rod

NOTE :
- The lifting rods may be attached to (A) hole for higher lifting height. (with reduced lifting force)
- The lifting rods may be attached to (C) for greater lifting force.

■Selecting the top link mounting holes

Select the proper set of holes by referring to the "Hydraulic Control Unit Use Reference Chart" in "HYDRAULIC UNIT" section.

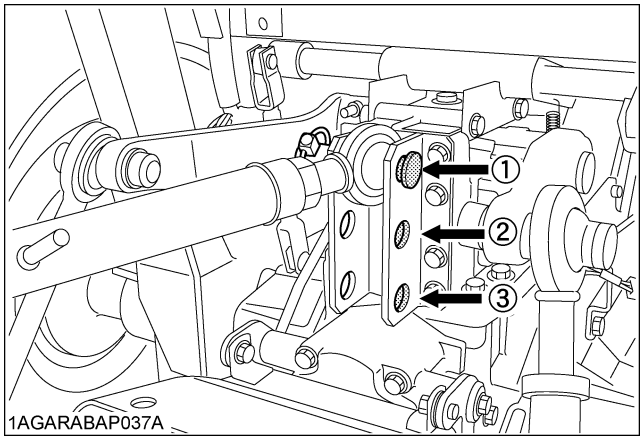

■Drawbar

Remove the drawbar if a close mounted implement is attached.

2. Attaching and detaching implements

CAUTION

To avoid personal injury:
- **Be sure to stop the engine.**
- **Do not stand between tractor and implement unless parking brake is applied.**
- **Before attaching or detaching implement, locate the tractor and implement on a firm level surface.**
- **Whenever an implement or other attachment is connected to the tractor 3-point hitch, check full range of operation for interference, binding or PTO separation.**

■Lifting Rod (Right)

Level a 3-point mounted implement from side to side by turning the adjusting handle to shorten or lengthen the adjustable lifting rod with the implement on the ground. After adjustment, tighten the lock nut securely.

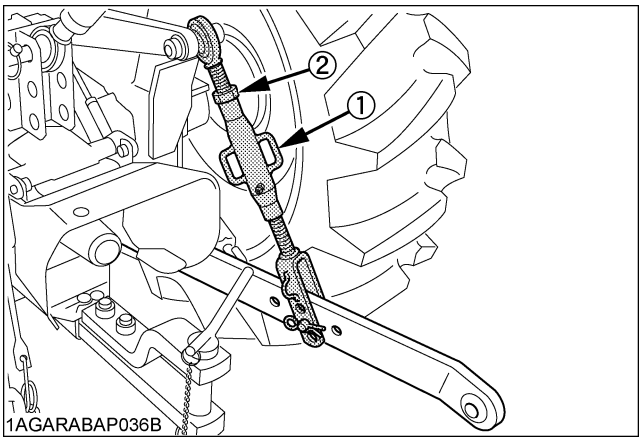

(1) Adjusting handle
(2) Lock nut

■Top Link

1. Adjust the angle of the implement to the desired position by shortening or lengthening the top link.
2. The proper length of the top link varies according to the type of implement being used.

https://truckmanualshub.com/

■Check Chains

Remove the snap pin and adjust the turnbuckle to control horizontal sway of the implement.
After adjustment, re-set the snap pin.

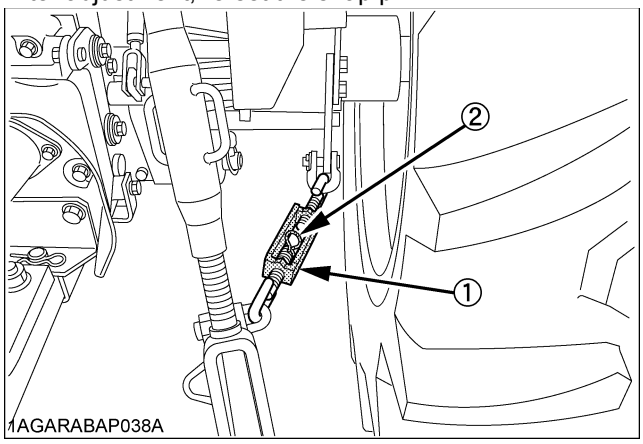

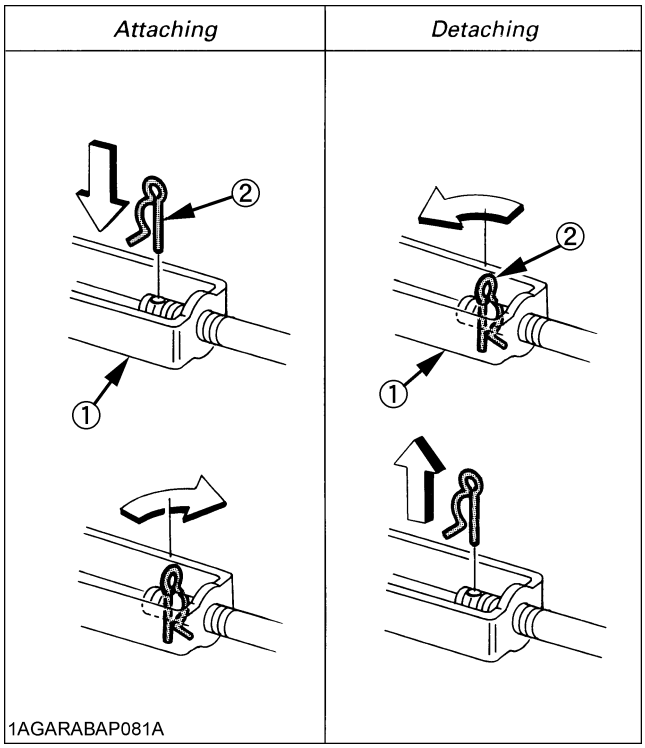

(1) Turnbuckle
(2) Snap pin

■Lower link holder

When operating the tractor without a 3-point hitch implement, it is necessary to lock the lower links to prevent them from hitting the tractor rear wheels.

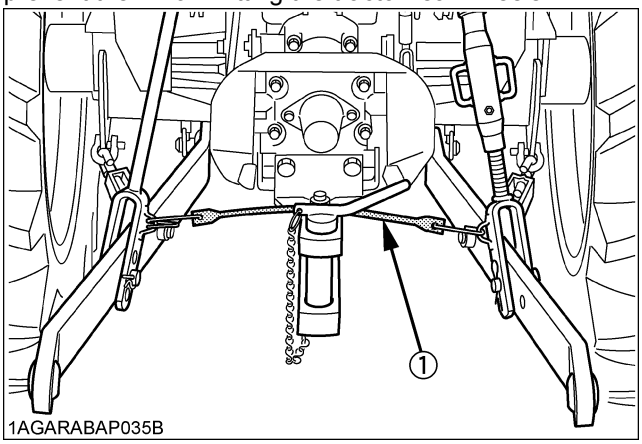

(1) Lower link holder

https://truckmanualshub.com/

DRAWBAR
[if equipped]

WARNING

To avoid personal injury:

- **Never pull from the top link, the rear axle or any point above the drawbar. Doing so could cause the tractor to tip over rearward causing personal injury or death.**

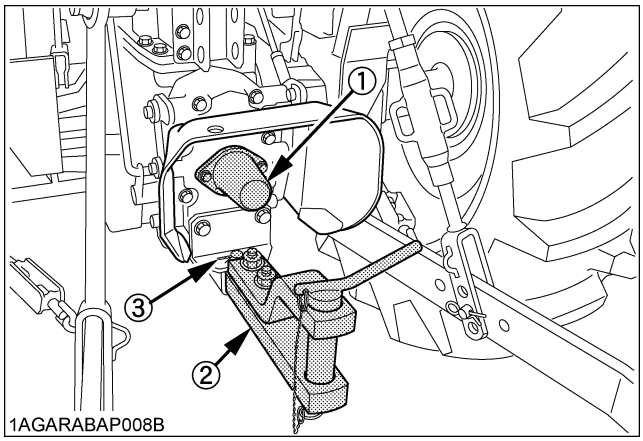

(1) PTO shaft
(2) Drawbar
(3) Drawbar pin

FRONT HITCH

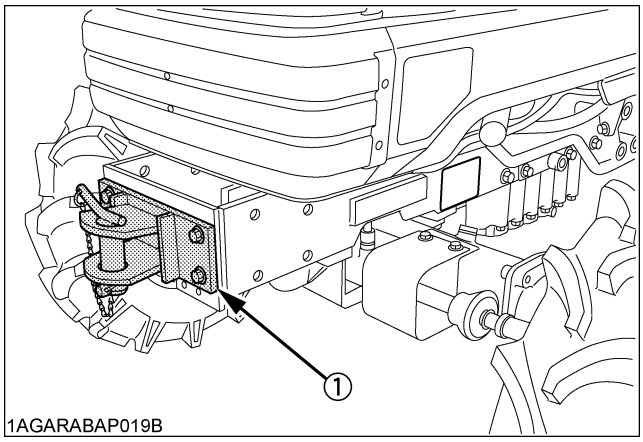

(1) Front hitch

HIGH-HITCH
[if equipped]

WARNING

To avoid personal injury:

- **Never pull from the top link, the rear axle or any point above the hitch. Doing so could cause the tractor to tip over rearward causing personal injury or death.**

■High-Hitch

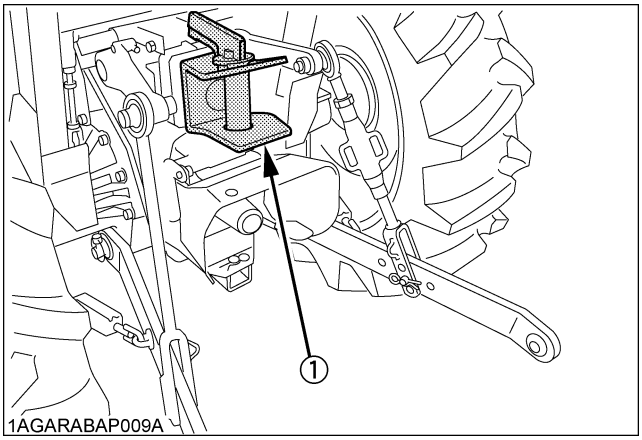

(1) High-hitch

NOTE :

- The drawbar was tested and approved in accordance with the EEC Directive 89/173 Annex 4 dynamic method.

[Drawbar]

EEC Approved No.	D e1 0029
Value of D	14.2 kN
Vertical Load, S	500 daN

[High-hitch]

EEC Approved No.	D e11 0531
Value of D	12.88 kN
Vertical Load, S	490.5 daN

https://truckmanualshub.com/

HYDRAULIC UNIT

IMPORTANT :
- Do not operate until the engine is warmed up. If operation is attempted when the engine is still cold, the hydraulic system may be damaged.
- If noises are heard when implement is lifting after the hydraulic control lever has been activated, the hydraulic mechanism is not adjusted properly. Unless corrected, the unit will be damaged. Contact your KUBOTA Dealer for adjustment.

3-POINT HITCH CONTROL SYSTEM

CAUTION

To avoid personal injury:
- **Before using the 3-point hitch controls, ensure that no person or object is in the area of the implement or 3-point hitch. Do not stand on or near the implement or between the implement and tractor when operating the 3-point hitch controls.**

■Position Control

This will control the working depth of 3-point implements regardless of the amount of pull required.

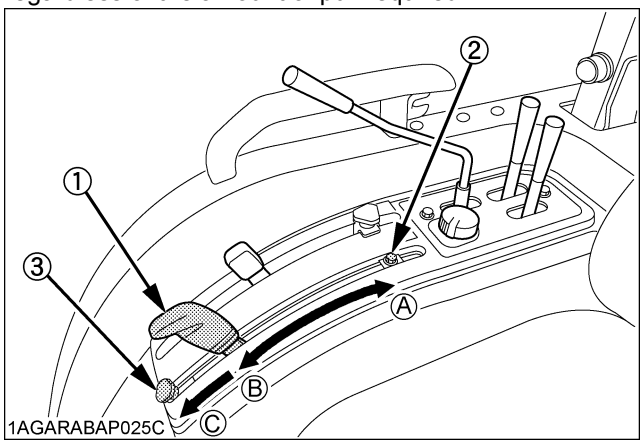

(1) Position control lever *(A) "UP"*
(2) Stopper bolt *(B) "DOWN"*
(3) Stopper knob *(C) "FLOAT"*

■Float Control

Place the position control lever in the float position to make the lower links move freely along with the ground conditions.

■3-point Hitch Lowering Speed

CAUTION

To avoid personal injury:
- **Fast lowering speed may cause damage or injury. Lowering speed of implement should be adjusted to two or more seconds.**

The lowering speed of the 3-point hitch can be controlled by adjusting the 3-point hitch lowering speed knob.

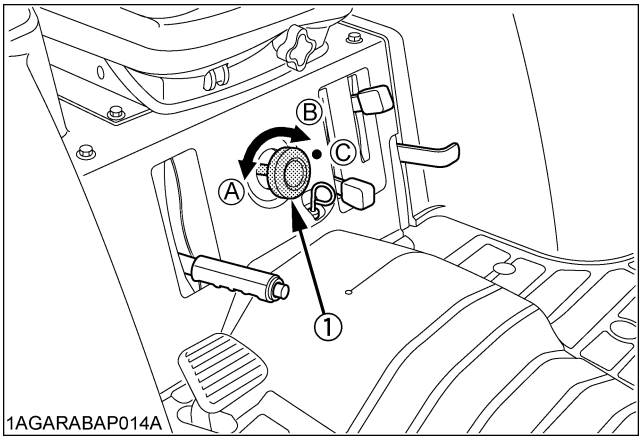

(1) 3-point hitch lowering speed knob *(A) "FAST"*
(B) "SLOW"
(C) "LOCK"

https://truckmanualshub.com/

AUXILIARY HYDRAULICS

■Hydraulic Block Type Outlet

Hydraulic block type outlet is useful when adding hydraulic operated equipment such as front end loader, front blade, etc.

When implement is attached
1. Remove the block cover.
2. Attach the block outlet cover. (option)
   (The block outlet cover is standard part for KUBOTA implement.)

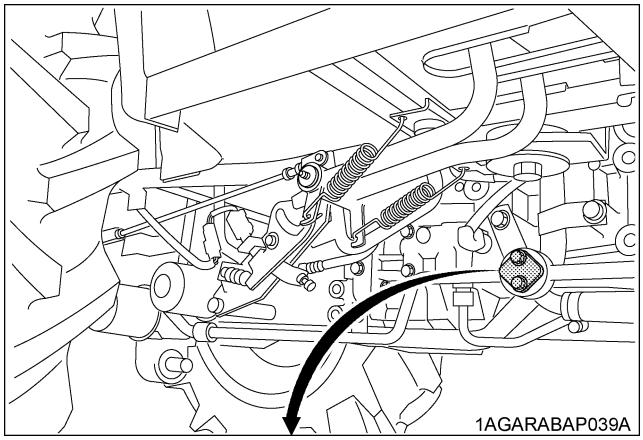

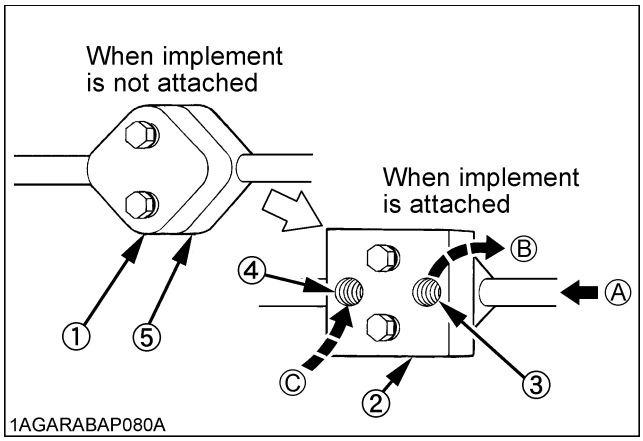

(1) Block cover
(2) Block outlet cover (option)
(3) Outlet
(4) Inlet
(5) Hydraulic block

(A) From gear pump
(B) To implement inlet
Max. flow
23 L/min
No relief valve in
the hydraulic block.
(C) From implement outlet

IMPORTANT :
- For hydraulic block type outlet, be sure to use the control valve of the "Power beyond type" **with relief valve** that has a third line return to tank for the operation of hydraulic block.

NOTE :
- The tank port flow from implement should be connected to the port located on the right hand side of transmission case.

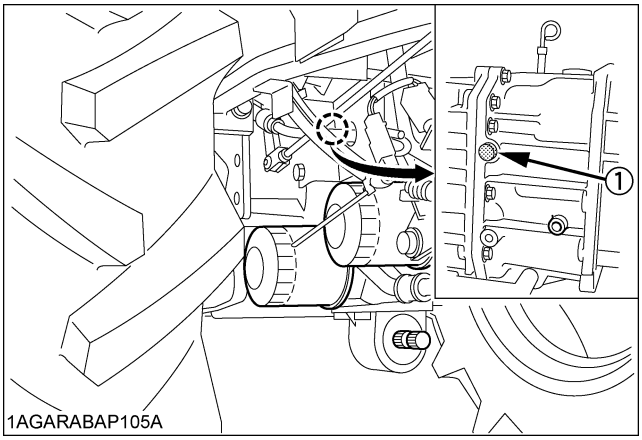

(1) Return port

REMOTE HYDRAULIC CONTROL SYSTEM (if equipped)

■Remote Control Valve Lever

Move the lever to the "FORWARD" or "REARWARD" position and hold. This will raise or lower the implement. Lever will return to neutral when released.

IMPORTANT :
- Do not hold the lever in the "REARWARD" or "FORWARD" position once the remote cylinder has reached the end of the stroke, as this will cause oil to flow through the relief valve. Forcing oil through the relief valve for extended periods will overheat the oil.
- When using the tractor hydraulic system to power front loader, do not operate boom and bucket cylinders simultaneously.

https://truckmanualshub.com/

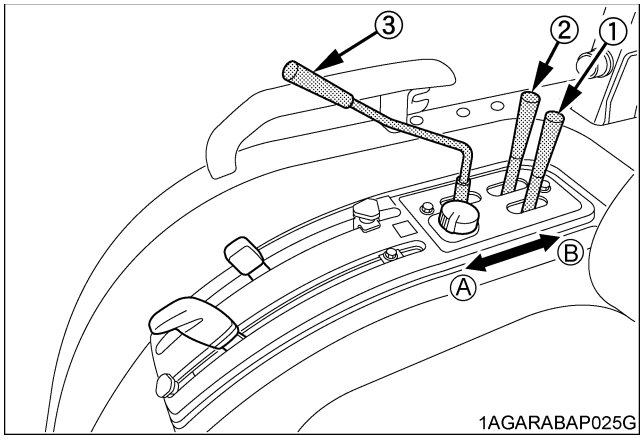

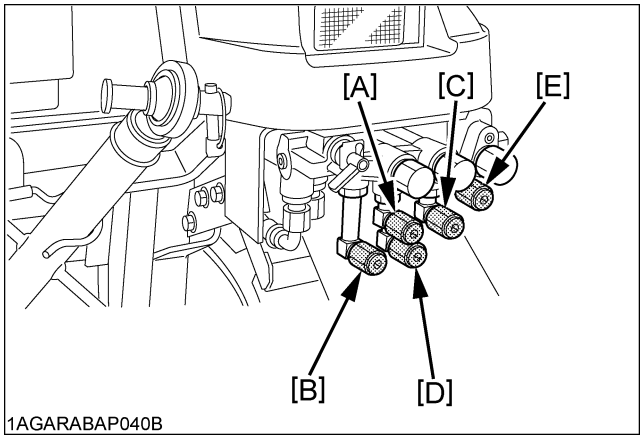

(1) Remote control valve lever (a)
(2) Remote control valve lever (b)
(3) Remote control valve lever (c)

(A) "FORWARD"
(B) "REARWARD"

Pressure ⟶
Returning ⟵

		Double-acting		Single-acting	
Lever (a)		Forward	Rearward	Forward	Rearward
Port	[A]	Out⟶	In⟵	Out⟶	In⟵
	[B]	In⟵	Out⟶	-	-

Lever (b)		Forward	Rearward
Port	[C]	Out⟶	In⟵
	[D]	In⟵	Out⟶

Lever (c)		Forward	Rearward
Port	[E]	In⟵	Out⟶

	Coupler size
Port [A] [B] [C] [D] [E]	PT 3/8

■Remote Control Valve

There are three types of remote valves available for these models.

- Single acting valve :
- Double acting valve :
- Single/double acting valve :
  This valve can be utilized as single or double acting valve by adjusting the auxiliary control valve selector lever located on the valve.
  (1) Turn the auxiliary control valve selector lever clockwise all the way to utilize as single acting valve.
  (2) Turn the auxiliary control valve selector lever counter-clockwise all the way to utilize as double acting valve.

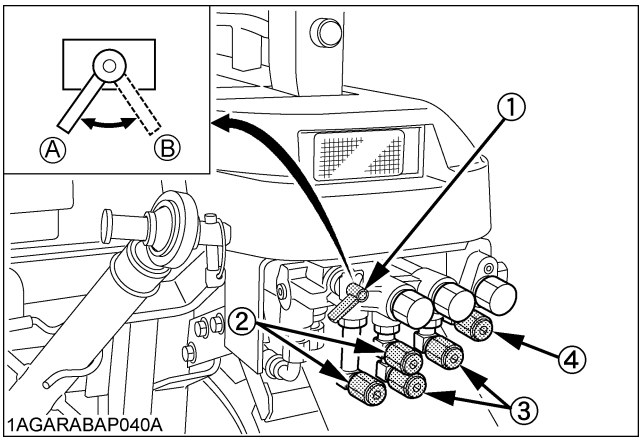

(1) Auxiliary control valve selector lever
(2) Single/double acting valve
(3) Double acting valve
(4) Single acting valve

(A) Single acting
(B) Double acting

https://truckmanualshub.com/

■Hydraulic Control Unit Use Reference Chart

In order to handle the hydraulics properly, the operator must be familiar with the following. Though this information may not be applicable to all types of implements and soil conditions, it is useful for general conditions.

Implement	Soil condition 1AGAMAAAP314A	Top link mounting holes 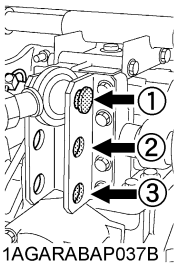 1AGARABAP037B	(1) position control lever 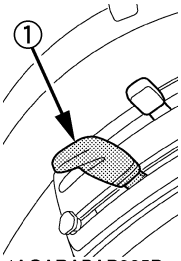 1AGARABAP025D	Gauge wheel 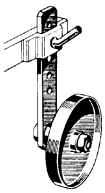 1AGAMAAAP316A	(1) Check chains 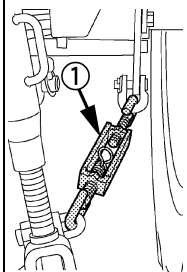 1AGARABAP038B	Remarks
Moldboard plow	Light soil Medium soil Heavy soil	1 or 2 2 or 3 3	Position control	YES/NO	Loose	Adjust the check chains so that the implement can move 5 to 6 cm laterally. Check chains should be tight enough to prevent excessive implement movement when implement is in raised position
Disc plow	-	2 or 3				
Harrower (spike, springtooth, disc type)	-	2 or 3				
Sub-soiler						
Weeder, ridger	-	3		YES	Tighten	
Earthmover, digger, scraper, manure fork, rear carrier				YES/NO		With implements with gauge wheels, lower the position control lever all the way
Mower (mid-and rear-mount type) Hayrake, tedder...				NO		

https://truckmanualshub.com/

TIRES, WHEELS AND BALLAST

TIRES

WARNING

To avoid personal injury:

- **Do not attempt to mount a tire on a rim. This should be done by a qualified person with the proper equipment.**
- **Always maintain the correct tire pressure. Do not inflate tires above the recommended pressure shown in the operator's manual.**

IMPORTANT :

- Do not use tires other than those approved by KUBOTA.

■Inflation Pressure

Though the tire pressure is factory-set to the prescribed level, it naturally drops slowly in the course of time. Thus, check it everyday and inflate as necessary.

	Tire sizes	Inflation Pressure
Rear	9.5-22, 4PR	140 kPa (1.4 kgf/cm^2)
	13.6-16, 4PR	100 kPa (1.0 kgf/cm^2)
	12.4-16, 4PR	120 kPa (1.2 kgf/cm^2)
Front	6.00-12, 4PR	180 kPa (1.8 kgf/cm^2)
	24 x 8.50-14, 4PR	160 kPa (1.6 kgf/cm^2)
	23 x 8.50-14, 4PR	200 kPa (2.0 kgf/cm^2)

NOTE :

- Maintain the maximum pressure in front tires, if using a front loader or when equipped with a full load of front weights.

■Dual Tires

Dual tires are not approved.

WHEEL ADJUSTMENT

CAUTION

To avoid personal injury:

- **When working on slopes or when working with trailer, set the wheel tread as wide as practical for maximum stability.**
- **Support tractor securely on stands before removing a wheel.**
- **Do not work under any hydraulically supported devices. They can settle, suddenly leak down, or be accidentally lowered. If necessary to work under tractor or any machine elements for servicing or adjustment, securely support them with stands or suitable blocking beforehand.**
- **Never operate tractor with a loose rim, wheel, or axle.**

https://truckmanualshub.com/

■Front Wheels (with four wheel drive)

Front tread can not be adjusted.

IMPORTANT :
- Do not turn front discs to obtain wider tread.
- To attach 23 x 8.50-14 industry front tires, need to use Front tire spacer kit.

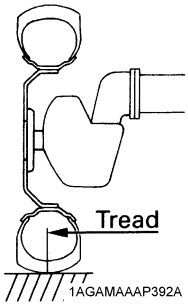

Models	STV32, STV36, STV40		
Tires	6.00 - 12 Farm	24 x 8.50 -14 Turf	23 x 8.50 -14 Industry
Tread	1030	1030	1040

CAUTION

To avoid personal injury:
- **Before jacking up the tractor, park it on a firm and level ground and chock the rear wheels.**
- **Fix the front axle to keep it from swinging.**
- **Select jacks that withstand the machine weight and set them up as shown below.**

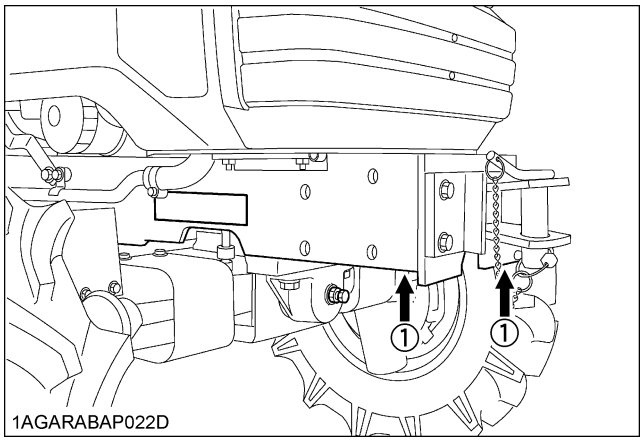

(1) Jack points

https://truckmanualshub.com/

ENGLISH

■Rear Wheels

Rear tread width can be adjusted as shown with the standard equipped tires.
To change the tread width
1. Change the position of the right and left tires.

	9.5-22 Farm	13.6-16 Turf
Rear	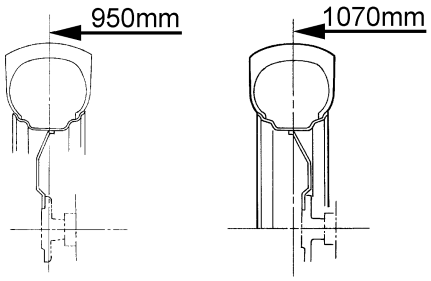 1AGARABAP087A	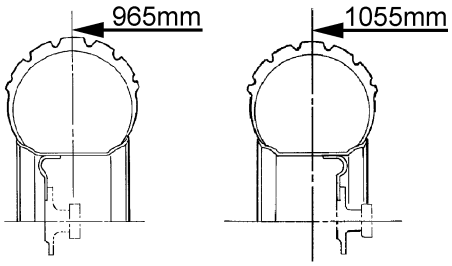 1AGARABAP088A
	12.4-16 Industry	
	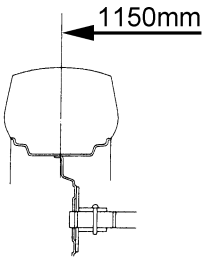 1AGARABAP113A	

IMPORTANT :
- Always attach tires as shown in the drawings.
- If not attached as illustrated, transmission parts may be damaged.
- When re-fitting or adjusting a wheel, tighten the bolts to the following torques then recheck after driving the tractor 200m (200yards) and thereafter according to service interval.
  (See "MAINTENANCE" section.)

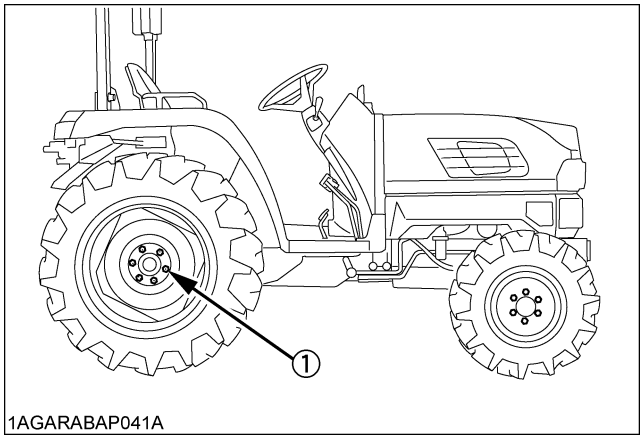

1AGARABAP041A

(1) 215 N-m (22 kgf-m)

https://truckmanualshub.com/

CAUTION

To avoid personal injury:

- **Before jacking up the tractor, park it on a firm and level ground and chock the front wheels.**
- **Fix the front axle to keep it from swinging.**
- **Select jacks that withstand the machine weight and set them up as shown below.**

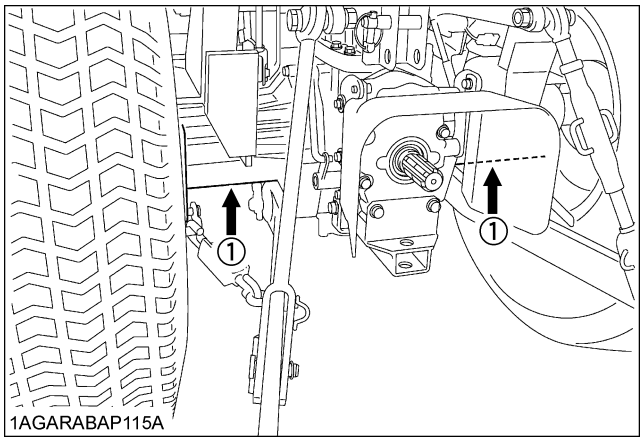

(1) Jack points

BALLAST

CAUTION

To avoid personal injury:

- **Additional ballast will be needed for transporting heavy implements. When the implement is raised, drive slowly over rough ground, regardless of how much ballast is used.**
- **Do not fill the front wheels with liquid to maintain steering control.**

■Front Ballast

Add weights if needed for stability and improve traction. Heavy pulling and heavy rear mounted implements tend to lift front wheels.

Add enough ballast to maintain steering control and prevent tip over. Remove weight when no longer needed.

◆ Front End Weights (option)

The front end weights can be attached to the bumper. See your implement operator's manual for required number of weights or consult your local KUBOTA Dealer to use.

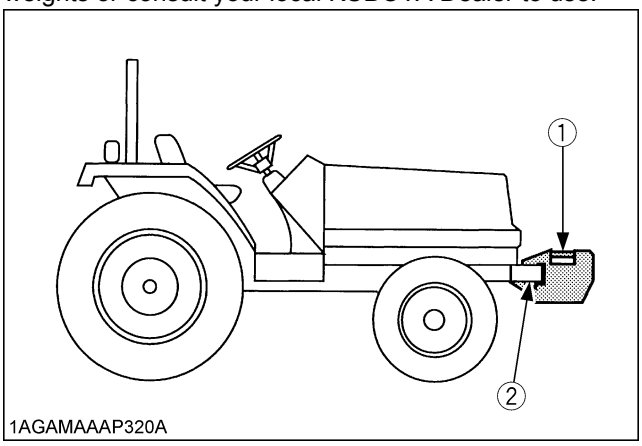

(1) Front end weights
(2) Bumper

IMPORTANT :

- Do not overload tires.
- Add no more weight than indicated in chart.

Maximum weight	25 kg x 7 Pieces

https://truckmanualshub.com/

■Rear Ballast

Add weight to rear wheels if needed to improve traction or for stability. The amount of rear ballast should be matched to job and the ballast should be removed when it is not needed.
The weight should be added to the tractor in the form of liquid ballast, rear wheel weights or a combination of both.

◆ Rear Wheel Weights (option)

The rear wheel weights can be attached to the rear wheel. See your implement operator's manual for required number of weights or consult your local KUBOTA Dealer to use.

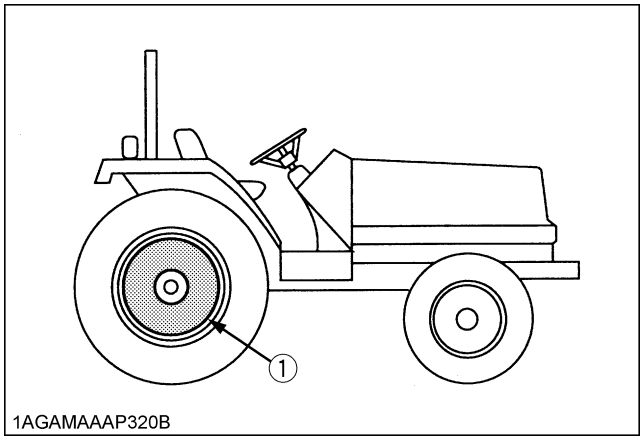

(1) Rear wheel weights

IMPORTANT :
- Do not overload tires.
- Add no more weight than indicated in chart.

Maximum weight per wheel	25 kg x 3 Pieces

■Liquid Ballast in Rear Tires

Water and calcium chloride solution provides safe economical ballast. Used properly, it will not damage tires, tubes or rims. The addition of calcium chloride is recommended to prevent the water from freezing. Use of this method of weighting the wheels has the full approval of the tire companies. See your tire dealer for this service.
Liquid weight per tire (75 Percent filled)

Tire sizes	9.5 - 22
Slush free at -10 ℃ Solid at -30 ℃ [Approx. 1 kg $CaCl_2$ per 4 L of water]	68 kg
Slush free at -24 ℃ Solid at -47 ℃ [Approx. 1.5 kg $CaCl_2$ per 4 L of water]	72 kg
Slush free at -47 ℃ Solid at -52 ℃ [Approx. 2.25 kg $CaCl_2$ per 4 L of water]	76 kg

IMPORTANT :
- Do not fill tires with water or solution more than 75% of full capacity (to the valve stem level at 12 o'clock position).

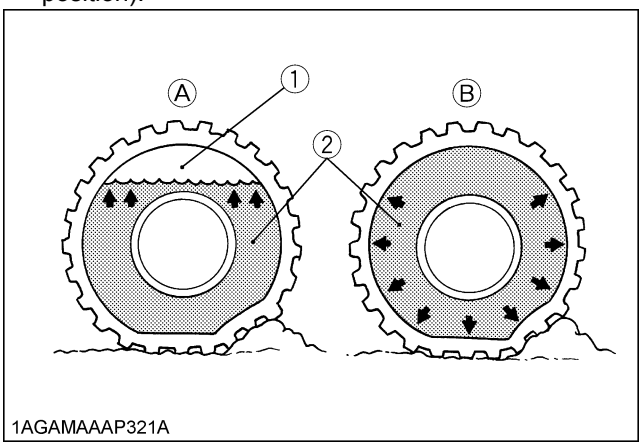

(1) Air
(2) Water
(A) Correct-75% Air compresses like a cushion
(B) Incorrect-100% Full Water can not be compressed

■Rear Counter Weight

To operate the machine with a front loader or other front implement attached, it is necessary to mount an appropriate counter weight at the 3-point link in addition to the rear wheel weights. Otherwise, the machine may suffer from poor power steering or its front axle may get damaged (damage to the tires).

■Maximum Masses

(See "APPENDICES" section.)

https://truckmanualshub.com/

MAINTENANCE

SERVICE INTERVALS

No.	Items			Indication on hour meter														Since then	Ref. page	
				50	100	150	200	250	300	350	400	450	500	550	600	650	700			
1	Greasing		-	○	○	○	○	○	○	○	○	○	○	○	○	○	○	every 50 Hr	58	
2	Engine start system		Check	○	○	○	○	○	○	○	○	○	○	○	○	○	○	every 50 Hr	59	
3	Wheel bolt torque		Check	○	○	○	○	○	○	○	○	○	○	○	○	○	○	every 50 Hr	60	
4	Engine oil		Change	◎	○		○		○		○		○		○		○	every 100 Hr	60	
5	Brake		Adjust		○		○		○		○		○		○		○	every 100 Hr	64	
6	Fan belt		Adjust		○		○		○		○		○		○		○	every 100 Hr	63	
7	Clutch		Adjust	◎	○		○		○		○		○		○		○	every 100 Hr	64	
8	Battery condition		Check		○		○		○		○		○		○		○	every 100 Hr	65	*5
9	Air cleaner element [Single type]		Clean		○		○		○		○		○		○		○	every 100 Hr	61	*1
			Replace															every 1 Year	71	
10	Air cleaner element [Double type]	Primary element	Clean		○		○		○		○		○		○		○	every 100 Hr	62	*1
			Replace															every 1 year	71	*2
		Secondary element	Replace															every 1 year	71	
11	Fuel filter element		Clean		○		○		○		○		○		○		○	every 100 Hr	62	
			Replace								○							every 400 Hr	70	
12	Parking brake		Adjust		○		○		○		○		○		○		○	every 100 Hr	66	
13	Fuel line		Check		○		○		○		○		○		○		○	every 100 Hr	63	
			Replace															every 2 years	73	*3
14	Engine oil filter		Replace	◎			○				○				○			every 200 Hr	67	
15	Hydraulic oil filter		Replace	◎			○				○				○			every 200 Hr	67	
16	Transmission oil filter [HST]		Replace	◎			○				○				○			every 200 Hr	67	
17	Toe-in		Adjust				○				○				○			every 200 Hr	69	

https://truckmanualshub.com/

ENGLISH

No.	Items		Indication on hour meter														Since then	Ref. page	
			50	100	150	200	250	300	350	400	450	500	550	600	650	700			
18	Radiator hose and clamp	Check				○				○				○			every 200 Hr	68	
		Replace															every 2 years	73	
19	Power steering oil line	Check				○				○				○			every 200 Hr	69	
		Replace															every 2 years	73	
20	HST oil line [HST]	Check				○				○				○			every 200 Hr	69	
		Replace															every 2 years	73	
21	Transmission fluid	Change	◎							○							every 400 Hr	70	
22	Front axle case oil	Change	◎							○							every 400 Hr	70	
23	Front axle pivot	Adjust												○			every 600 Hr	71	
24	Engine valve clearance	Adjust															every 800 Hr	71	*4
25	Cooling system	Flush															every 2 years	71	
26	Coolant	Change															every 2 years	71	
27	Fuel system	Bleed															Service as required	73	
28	Clutch housing water	Drain																74	
29	Fuse	Replace																74	
30	Light bulb	Replace																75	

IMPORTANT :

- The jobs indicated by ◎ must be done after the first 50 hours of operation.

*1 Air cleaner should be cleaned more often in dusty conditions than in normal conditions.

*2 Every year or every 6 times of cleaning.

*3 Replace only if necessary.

*4 Consult your local KUBOTA Dealer for this service.

*5 When the battery is used for less than 100 hours per year, check the battery condition by reading the indicator annually.

https://truckmanualshub.com/

LUBRICANTS

No.	Locations	Capacities			Lubricants	
		STV32	STV36	STV40		
1	Fuel	29.5 L			No. 2-D diesel fuel No. 1-D diesel fuel if temperature is below -10℃	
2	Coolant	6.1 L			Fresh clean soft water with anti-freeze	
3	Engine crankcase (with filter)	6.7 L			● Engine oil: API Service Classification CD, CE or CF	
					Above 25℃	SAE30, SAE10W-30 or 15W-40
					0 to 25℃	SAE20, SAE10W-30 or 15W-40
					Below 0℃	SAE10W, SAE10W-30 or 15W-40
4	Transmission case	20 L			● KUBOTA UDT or SUPER UDT fluid*	
5	Front axle case [4WD]	4.0 L			● KUBOTA UDT or SUPER UDT fluid* or SAE80-SAE90 gear oil	
6	Greasing	No. of greasing points			Capacity	Type of grease
	Brake pedal shaft	1			Until grease overflows.	Multipurpose Grease NLGI-2 OR NLGI-1(GC-LB)
	Clutch pedal shaft	1				
	Top link	2				
	Lift rod	1				
	Battery terminal	2			moderate amount	
	Cruise control lever	1				
	Throttle cable	Oiling				Engine oil

NOTE: *KUBOTA UDT or SUPER UDT fluid---KUBOTA original transmission hydraulic fluid

NOTE:

- Engine Oil:
  - Oil used in the engine should have an American Petroleum Institute (API) service classification and Proper SAE Engine Oil according to the ambient temperatures as shown above.
  - With the emission control now in effect, the CF-4 and CG-4 lubricating oils have been developed for use of a low-sulfur fuel on on-road vehicle engines. When an off-road vehicle engine runs on a high-sulfur fuel, it is advisable to employ the CF, CD or CE lubricating oil with a high total base number. **If the CF-4 or CG-4 lubricating oil is used with a high-sulfur fuel, change the lubricating oil at shorter intervals.**
  - Lubricating oil recommended when a low-sulfur or high-sulfur fuel is employed.

○: Recommendable X: Not Recommendable

Lubricating oil class	Fuel		Remark
	Low-sulfur	High-sulfur	
CF	○	○	TBN ≧ 10
CF-4	○	X	
CG-4	○	X	

https://truckmanualshub.com/

- Transmission oil:
  The oil used to lubricate the transmission is also used as hydraulic fluid. To insure proper operation of the hydraulic system and complete lubrication of the transmission, it is important that a multi-grade transmission fluid be used in this system. We recommend the use of **KUBOTA SUPER UDT fluid** for optimum protection and performance.
  (Consult your local KUBOTA Dealer for further detail.)
  Do not mix different brands or grades.
- Indicated capacity of water and oil are manufacturer's estimate.

https://truckmanualshub.com/

PERIODIC SERVICE

CAUTION

To avoid personal injury:

- **Do not work under any hydraulically supported devices. They can settle, suddenly leak down, or be accidentally lowered. If necessary to work under tractor or any machine elements for servicing or adjustment, securely support them with stands or suitable blocking beforehand.**

HOW TO OPEN THE HOOD

CAUTION

To avoid personal injury from contact with moving parts;

- **Never open the hood or engine side cover while the engine is running.**
- **Do not touch muffler or exhaust pipes while they are hot; Severe burns could result.**
- **Support hood with other hand while unlocking support link.**

■Hood

To open the hood, twist the mascot to release the latch and open the hood.

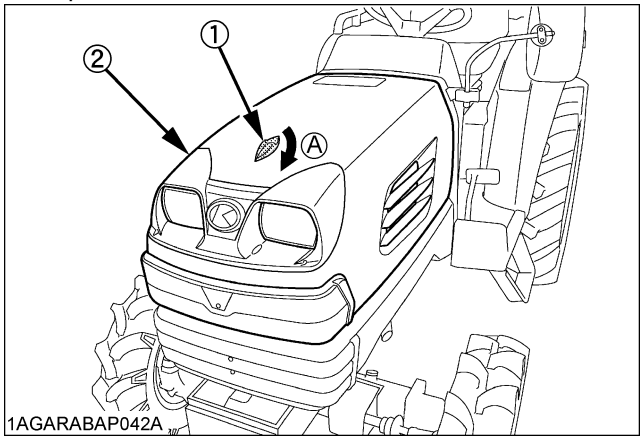

(1) Mascot *(A) "OPEN"*
(2) Hood

NOTE :

- To close the hood, hold the hood and release the support link.

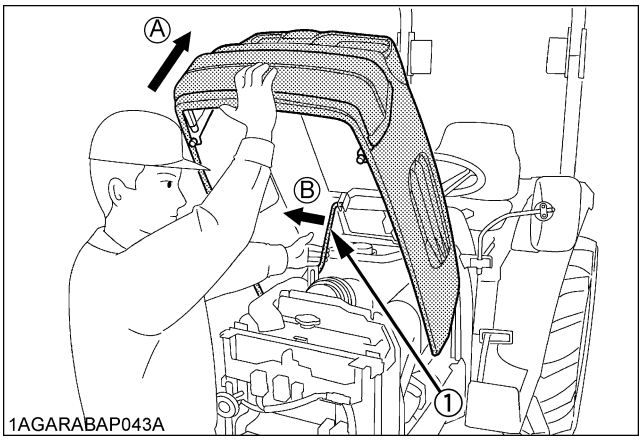

(1) Support link *(A) "HOLD"*
(B) "PULL"

■Engine Side Cover and Front Grill

1. To remove the front grill, loosen knob bolts, pull outward as indicated by arrows, and then lift the front grill off.

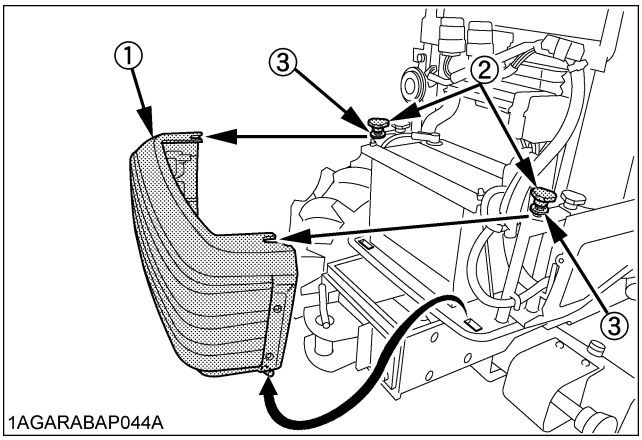

(1) Front grill
(2) Knob bolt
(3) Plain washer

NOTE :

- When reassembling the front grill. Put the plain washer on the oblong hole.

2. To remove the engine side cover, un-screw the knob bolt and then pull cover off.

https://truckmanualshub.com/

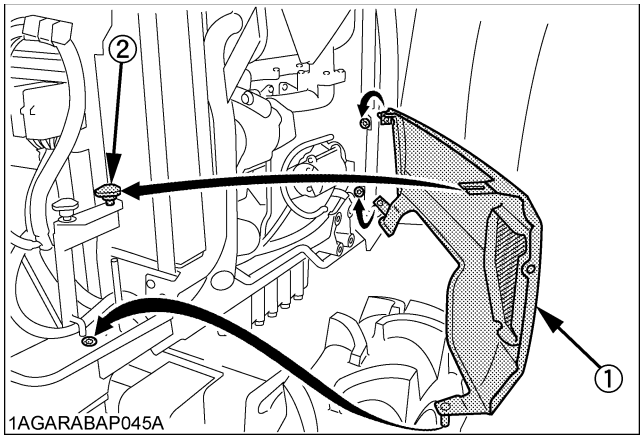

(1) Side cover
(2) Knob bolt

■Tool Box [ROPS Type]

The tool box can be opened when the tool box cover is pulled.
To close the cover, push the arrowed points.

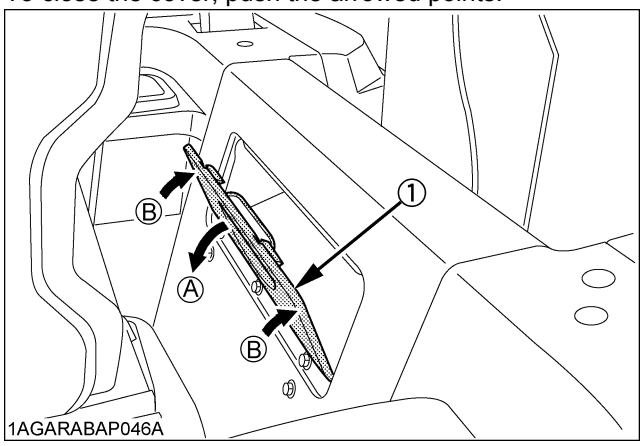

(1) Tool box cover
(A) "PULL"
(B) "PUSH"

DAILY CHECK

For your own safety and maximum service life of the machine, make a thorough daily inspection before operating the machine to start the engine.

CAUTION

To avoid personal injury:
Take the following precautions when checking the tractor.

- **Park the machine on firm and level ground.**
- **Set the parking brake.**
- **Lower the implement to the ground.**
- **All residual pressure of the hydraulic system released.**
- **Stop the engine and remove the key.**

■Walk Around Inspection

Look around and under the tractor for such items as loose bolts, trash build-up, oil or coolant leaks, broken or worn parts.

■Checking and Refueling

CAUTION

To avoid personal injury:

- **Do not smoke while refueling.**
- **Be sure to stop the engine before refueling.**

1. Turn the key switch to "ON", check the amount of fuel by fuel gauge.
2. Fill fuel tank when fuel gauge shows 1/4 or less fuel in tank.
3. Use grade No.2-Diesel fuel at temperatures above -10℃.
   Use grade No.1-Diesel fuel at temperatures below -10℃.

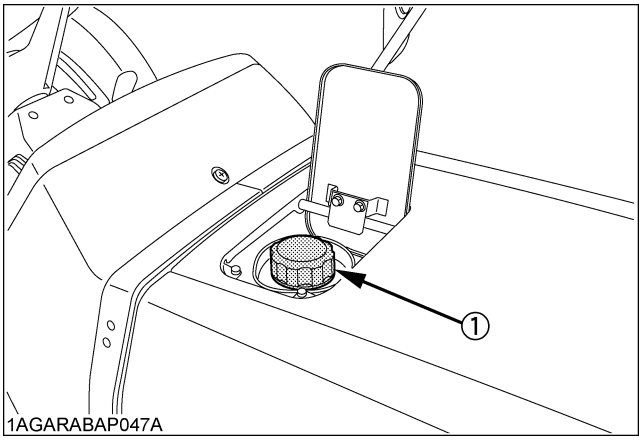

(1) Fuel tank cap

https://truckmanualshub.com/

Fuel tank capacity	29.5 L

IMPORTANT :
- Do not permit dirt or trash to get into the fuel system.
- Be careful not to let the fuel tank become empty, otherwise air will enter the fuel system, necessitating bleeding before next engine start.
- Be careful not to spill during refueling. If should spill, wipe it off at once, or it may cause a fire.
- To prevent condensation (water) accumulation in the fuel tank, fill the tank before parking overnight.

NOTE :
- No.2-D is a distillate fuel of lower volatility for engines in industrial and heavy mobile service.
  (SAE J313 JUN87)
- Grade of Diesel Fuel Oil According to ASTM D975

Flash Point, ℃	Water and Sediment, volume %	Carbon Residue on, 10 percent Residuum, %	Ash, weight %
Min	Max	Max	Max
52	0.05	0.35	0.01

Distillation Temperatures, ℃ 90% Point		Viscosity Kinematic cSt or mm^2/s at 40 ℃		Viscosity Saybolt, SUS at 37.8 ℃		Sulfur weight %	Copper Strip Corrosion	Cetane Number
Min	Max	Min	Max	Min	Max	Max	Max	Min
282	338	1.9	4.1	32.6	40.1	0.50	No.3	40

NOTE :
- The tank cover opens when the arrow parts is pushed.

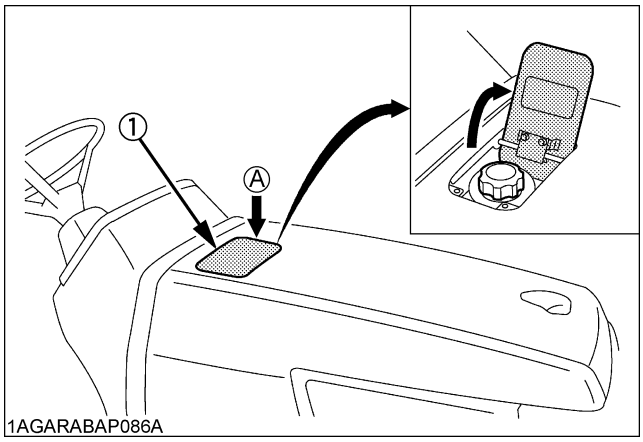

(1) Tank cover *(A) "PUSH"*

■Checking Engine Oil Level

CAUTION

To avoid personal injury:
- **Be sure to stop the engine before checking the oil level.**

1. Park the machine on a flat surface.
2. Check engine oil before starting the engine or 5 minutes or more after the engine has stopped.
3. To check the oil level, draw out the dipstick, wipe it clean, replace it, and draw it out again. Check to see that the oil level lies between the two notches.
   If the level is too low, add new oil to the prescribed level at the oil inlet.
   (See "LUBRICANTS" in "MAINTENANCE" section.)

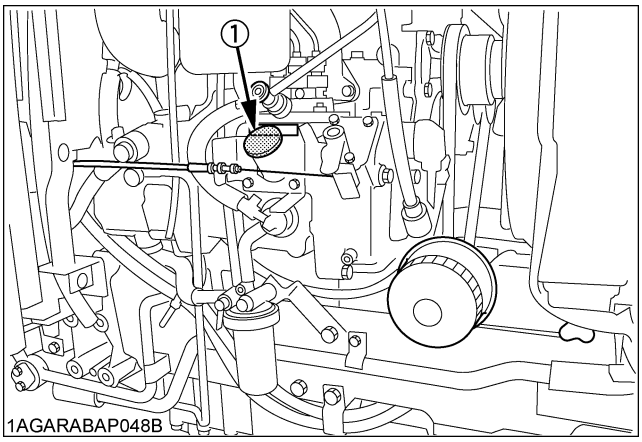

(1) Oil inlet

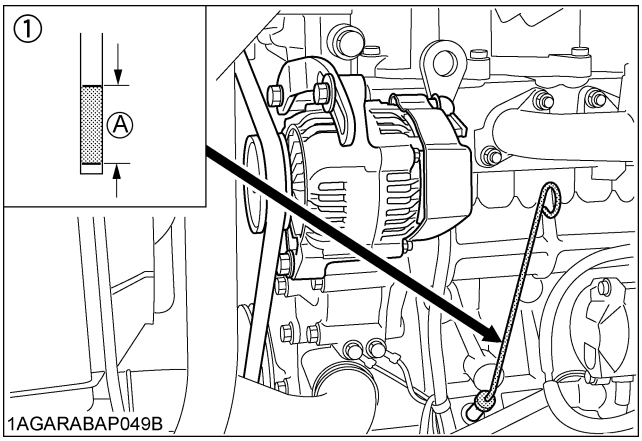

(1) Dipstick *(A) Oil level is acceptable within this range.*

IMPORTANT :
- When using an oil of different maker or viscosity from the previous one, remove all of the old oil.
  Never mix two different types of oil.
- If oil level is low, do not run engine.

https://truckmanualshub.com/

■Checking Transmission Fluid Level

1. Park the machine on a flat surface, lower the implement and shut off engine.
2. To check the oil level, draw out the dipstick, wipe it clean, replace it, and draw it out again. Check to see that the oil level lies between the two notches.
   If the level is too low, add new oil to the prescribed level at the oil inlet.
   (See "LUBRICANTS" in "MAINTENANCE" section.)

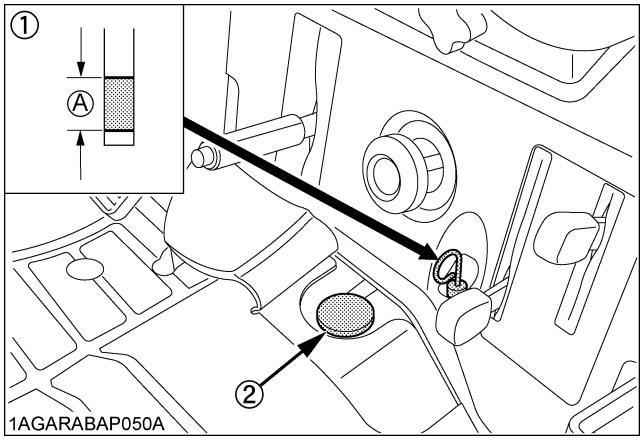

(1) Gauge *(A) Oil level is acceptable within this range.*
(2) Oil inlet

IMPORTANT :
- If oil level is low, do not run engine.

■Checking Coolant Level

CAUTION

To avoid personal injury:
- **Do not remove radiator cap while coolant is hot. When cool, slowly rotate cap to the first stop and allow sufficient time for excess pressure to escape before removing the cap completely.**

1. Check to see that the coolant level is between the "FULL" and "LOW" marks of recovery tank.
2. When the coolant level drops due to evaporation, add soft water only up to the full level.
   In case of leakage, add anti-freeze and soft water in the specified mixing ratio up to the full level.
   (See "Flushing Cooling System and Changing Coolant" in "EVERY 2 YEARS" in "PERIODIC SERVICE" section.)

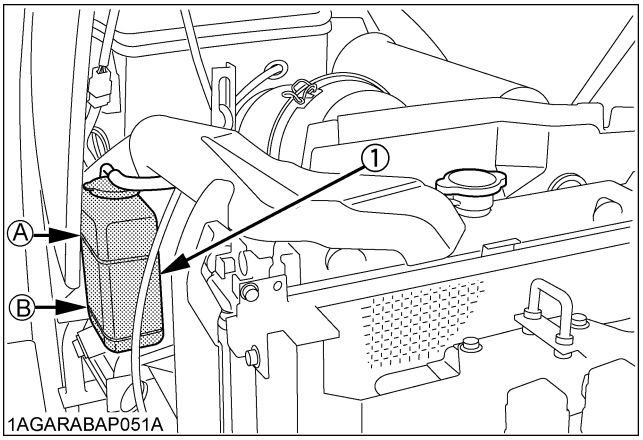

(1) Recovery tank *(A) "FULL"*
(B) "LOW"

IMPORTANT :
- If the radiator cap has to be removed, follow the caution above and securely retighten the cap.
- Use clean, fresh soft water and anti-freeze to fill the recovery tank.
- If water should leak, consult your local KUBOTA Dealer.

https://truckmanualshub.com/

■Cleaning Grill, Radiator Screen and Oil Cooler

CAUTION

To avoid personal injury:

- **Be sure to stop the engine before removing the screen.**

1. Check front grill to be sure it is clean from debris.
2. Detach the screen and remove all foreign material.

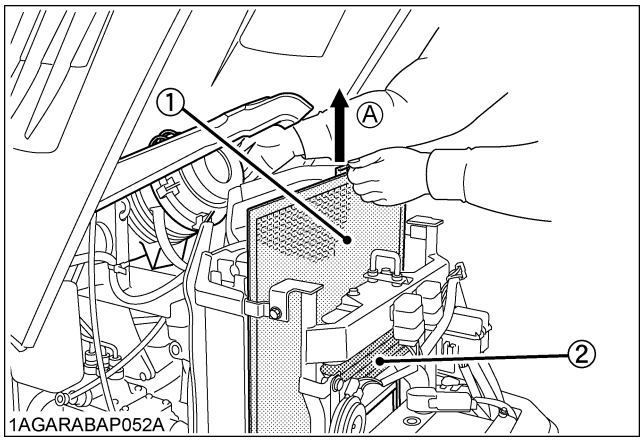

(1) Radiator screen *(A) "DETACH"*
(2) Oil cooler

IMPORTANT :

- Grill and screen must be clean from debris to prevent engine from overheating and to allow good air intake for air cleaner.

NOTE :

- Detach the screen after lifting the air cleaner assy. Do not detach the screen lifting only the air cleaner duct.

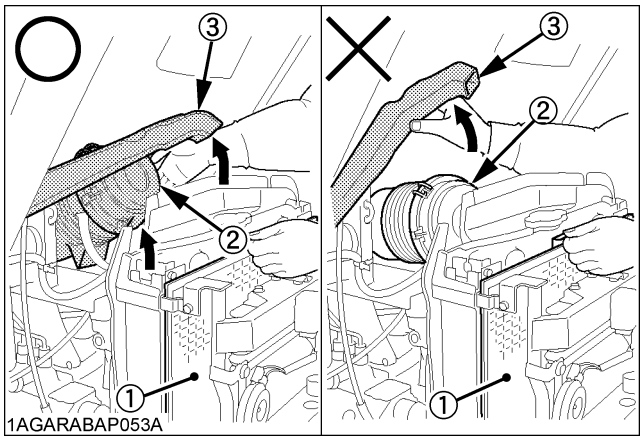

(1) Radiator screen
(2) Air cleaner assy
(3) Air cleaner duct

■Checking Brake Pedals and Clutch Pedal

WARNING

To avoid personal injury:

- **Be sure brake pedals have equal adjustment when using locked together. Incorrect or unequal brake pedal adjustment can cause the tractor to swerve or roll-over.**

1. Inspect the brake and clutch pedals for free travel, and smooth operation.
2. Adjust if incorrect measurement is found:
   (See "Adjusting Clutch Pedal" and "Adjusting Brake Pedal" in "EVERY 100 HOURS" in "PERIODIC SERVICE" section.)

■Checking Gauges, Meter and Easy Checker(TM)

1. Inspect the instrument panel for broken gauge(s), meter(s) and Easy Checker(TM) lamps.
2. Replace if broken.

■Checking Head Light, Hazard Light etc.

1. Inspect the lights for broken bulbs and lenses.
2. Replace if broken.

■Checking ROPS and CAB

1. Always check condition of ROPS and CAB attaching hardware before operating tractor.
2. Replace if damaged.

■Checking Movable Parts

If any of the movable parts, such as levers and pedals, is not smoothly moved because of rust or anything sticky, do not attempt to force it into motion.
In the above case, remove the rust or the sticky thing, and apply oil or grease on the relevant spot.
Otherwise, the machine may get damaged.

https://truckmanualshub.com/

EVERY 50 HOURS

■Lubricating Grease Fittings

Apply a small amount of multipurpose grease to the following points every 50 hours:
If you operated the machine in extremely wet and muddy conditions, lubricate grease fittings more often.

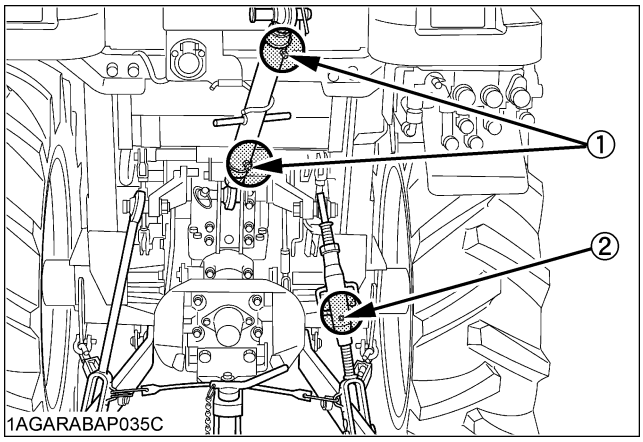

(1) Grease fitting (Top link)
(2) Grease fitting (Lifting rod) [RH]

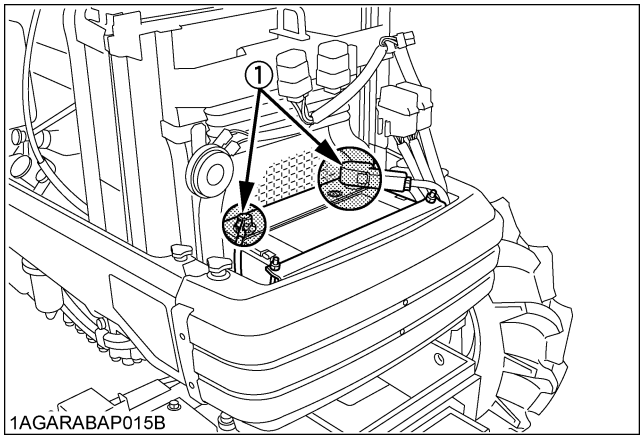

(1) Battery terminals

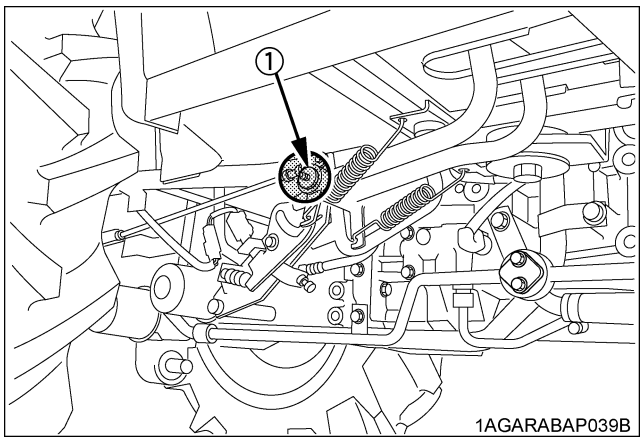

(1) Grease fitting (Brake pedal shaft)

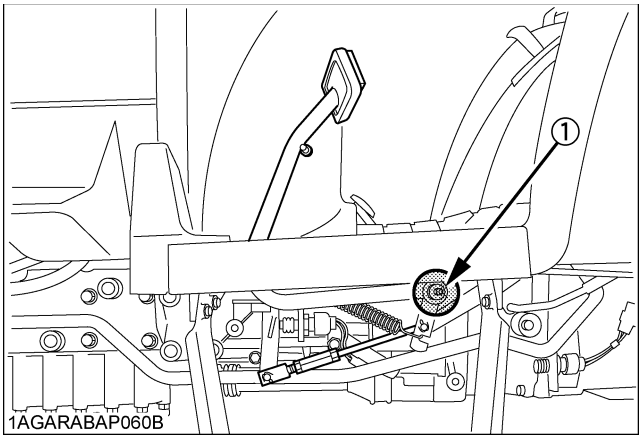

(1) Grease fitting (Clutch pedal shaft)

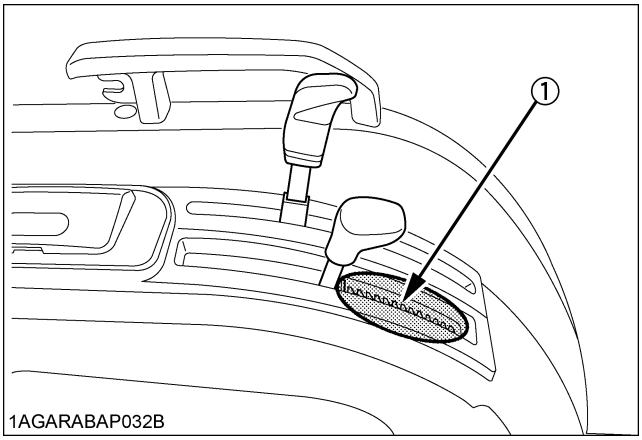

(1) Grease fitting (Cruise control lever)

■Oiling

CAUTION

To avoid personal injury:

- **Be sure to stop the engine and remove the key before oiling.**

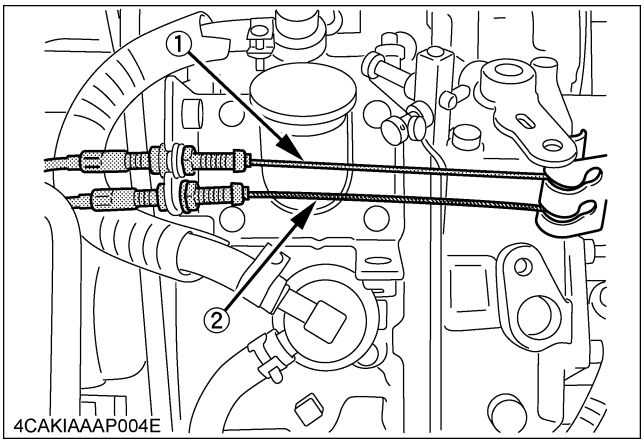

(1) Hand throttle cable
(2) Accelerator cooperative cable

https://truckmanualshub.com/

■Checking Engine Start System

CAUTION

To avoid personal injury:
- **Do not allow anyone near the tractor while testing.**
- **If the tractor does not pass the test, do not operate the tractor.**

◆ **Preparation before testing.**
1. Place all control levers in the "NEUTRAL" position.
2. Set the parking brake and stop the engine.

◆ **Test : Switch for the speed control pedal.**
1. Sit on the operator's seat.
2. Depress the speed control pedal to the desired direction.
3. Depress the clutch pedal fully.
4. Disengage the PTO clutch control switch, and disengage the rear and mid-PTO gear shift levers.
5. Turn the key to "START" position.
6. The engine must not crank.
7. If it cranks, consult your local KUBOTA Dealer for this service.

◆ **Test : Switch for the rear PTO gear shift lever.**
1. Sit on the operator's seat.
2. Engage the rear PTO gear shift lever, and disengage the mid-PTO gear shift lever.
3. Depress the clutch pedal fully.
4. Place the speed control pedal in "NEUTRAL" position.
5. Turn the key to "START" position.
6. The engine must not crank.
7. If it cranks, consult your local KUBOTA Dealer for this service.

◆ **Test : Switch for the mid-PTO gear shift lever.**
1. Sit on the operator's seat.
2. Disengage the rear PTO gear shift lever, and engage the mid-PTO gear shift lever.
3. Depress the clutch pedal fully.
4. Place the speed control pedal in "NEUTRAL" position.
5. Turn the key to "START" position.
6. The engine must not crank.
7. If it cranks, consult your local KUBOTA Dealer for this service.

◆ **Test : Switch for the clutch pedal.**
1. Sit on the operator's seat.
2. Disengage the PTO clutch control switch, and disengage the rear and mid-PTO gear shift levers.
3. Place the speed control pedal in "NEUTRAL" position.
4. Release the clutch pedal.
5. Turn the key to "START" position.
6. The engine must not crank.
7. If it cranks, consult your local KUBOTA Dealer for this service.

◆ **Test: Switch for the operator's seat.**
1. Sit on the operator's seat.
2. Start the engine.
3. Engage the mid-PTO gear shift lever.
4. Stand up. (Do not get off the machine.)
5. The engine must shut off after approximately 1 second.
6. If it does not stop, consult your local KUBOTA Dealer for this service.

◆ **Test: Switch for the parking brake lever.**
1. Sit on the operator's seat.
2. Start the engine.
3. Engage the rear PTO gear shift lever, and disengage the mid-PTO gear shift lever.
4. Release the parking brake.
5. Stand up. (Do not get off the machine.)
6. The engine must shut off after approximately 1 second.
7. If it does not stop, consult your local KUBOTA Dealer for this service.

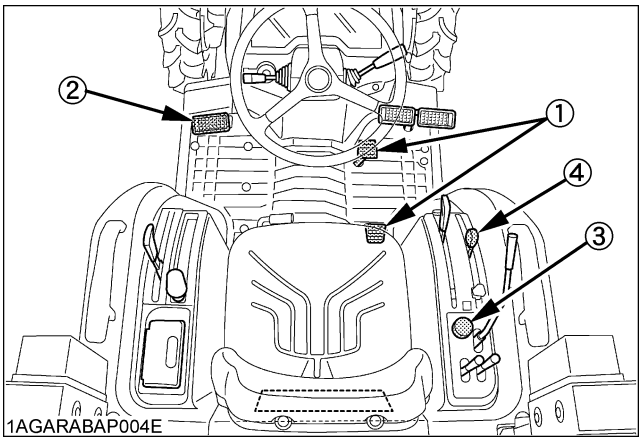

(1) Speed control pedal
(2) Clutch pedal
(3) PTO clutch control switch
(4) Rear PTO gear shift lever

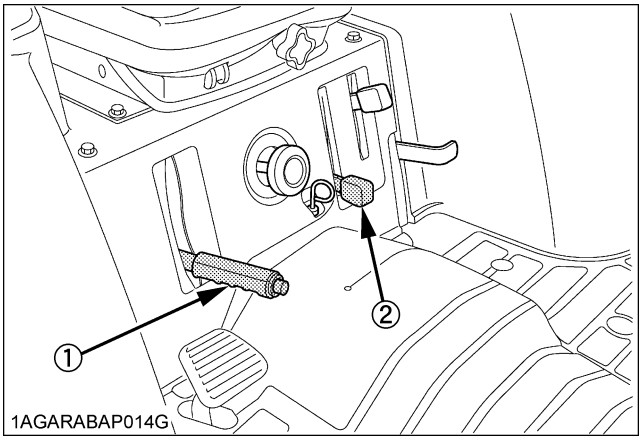

(1) Parking brake lever
(2) Mid-PTO gear shift lever

https://truckmanualshub.com/

■Checking Wheel Bolt Torque

CAUTION

To avoid personal injury:

- **Never operate tractor with a loose rim, wheel, or axle.**
- **Any time bolts and nuts are loosened, retighten to specified torque.**
- **Check all bolts and nuts frequently and keep them tight.**

Check wheel bolts and nuts regularly especially when new. If they are loose, tighten them as follows.

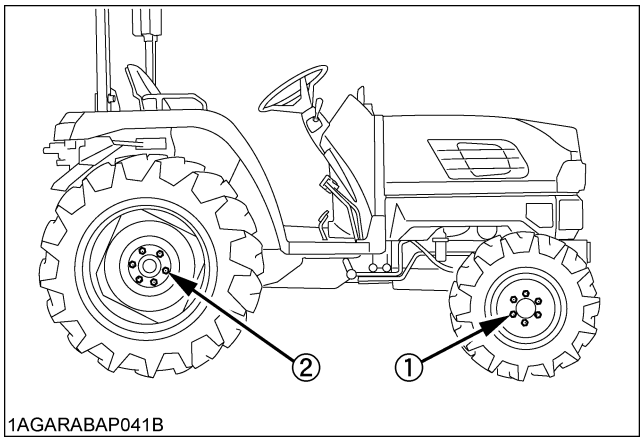

(1) 85 N-m (9 kgf-m)
(2) 215 N-m (22 kgf-m)

EVERY 100 HOURS

■Changing Engine Oil

CAUTION

To avoid personal injury:

- **Be sure to stop the engine before changing the oil.**
- **Allow engine to cool down sufficiently, oil can be hot and can burn.**

1. To drain the used oil, remove the drain plug at the bottom of the engine and drain the oil completely into the oil pan.
   All the used oil can be drained out easily when the engine is still warm.
2. After draining reinstall the drain plug.
3. Fill with the new oil up to the upper notch on the dipstick.
   (See "LUBRICANTS" in "MAINTENANCE" section.)

Oil capacity with filter	6.7 L

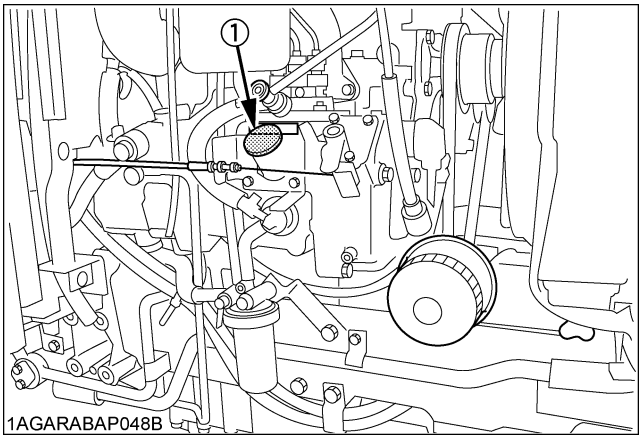

(1) Oil inlet

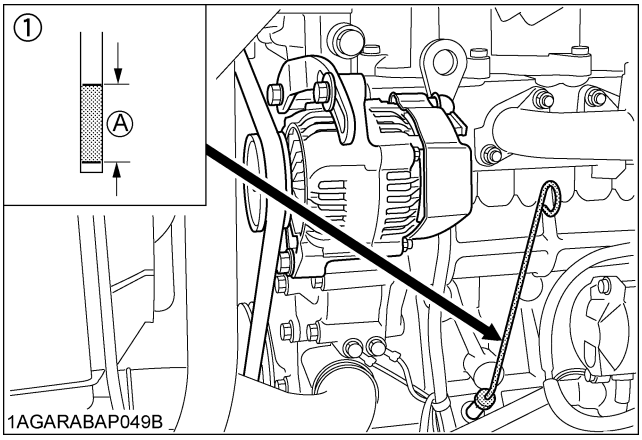

(1) Dipstick *(A) Oil level is acceptable within this range*

https://truckmanualshub.com/

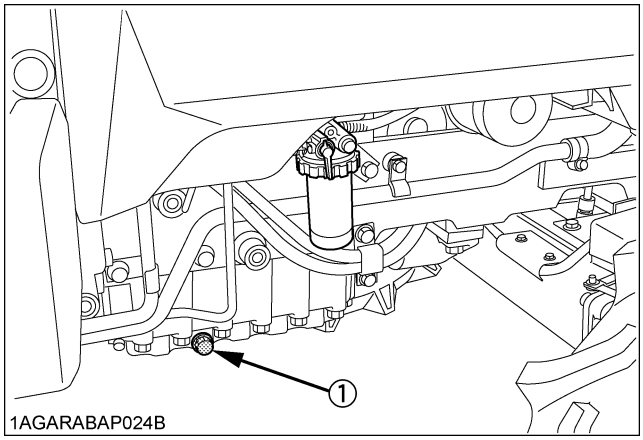

(1) Drain plug (both sides)

■Cleaning Air Cleaner Element [Single Element Type]

1. Remove the air cleaner cover and the element.
2. Clean the element:
   (1) When dry dust adheres to the element, blow compressed air from the inside, turning the element. Pressure of compressed air must be under 205kPa (2.1kgf/cm^2, 30 psi).
   (2) When carbon or oil adheres to the element, soak the element in detergent for 15 minutes then wash it several times in water, rinse with clean water and dry it naturally. After element is fully dried, inspect inside of the element with a light and check if it is damaged or not. (referring to the instructions on the label attached to the case.)
3. Replace air cleaner element:
   Once yearly or after every sixth cleaning, whichever comes first.

NOTE :
- Check to see if the evacuator valve is blocked with dust.

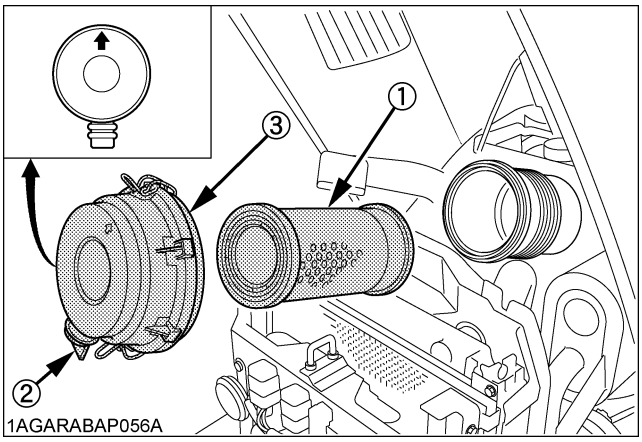

(1) Element
(2) Evacuator valve
(3) Cover

IMPORTANT :
- The air cleaner uses a dry element, never apply oil.
- Do not run the engine with filter element removed.
- Be sure to refit the cover with the arrow ⬆ (on the cover) upright. If the cover is improperly fitted, dust passes by the baffle and directly adheres to the element.

◆ Evacuator Valve

Open the evacuator valve once a week under ordinary conditions - or daily when used in a dusty place - to get rid of large particles of dust and dirt.

https://truckmanualshub.com/

■Cleaning Air Cleaner Primary Element [Double Element Type]

1. Remove the air cleaner cover and primary element.
2. Clean the primary element:
   (1) When dry dust adheres to the element, blow compressed air from the inside, turning the element. Pressure of compressed air must be under 205kPa (2.1kgf/cm^2, 30 psi).
   (2) When carbon or oil adheres to the element, soak the element in detergent for 15 minutes then wash it several times in water, rinse with clean water and dry it naturally. After element is fully dried, inspect inside of the element with a light and check if it is damaged or not.
3. Replace air cleaner primary element:
   Once yearly or after every sixth cleaning, whichever comes first.

NOTE :
- Check to see if the evacuator valve is blocked with dust.

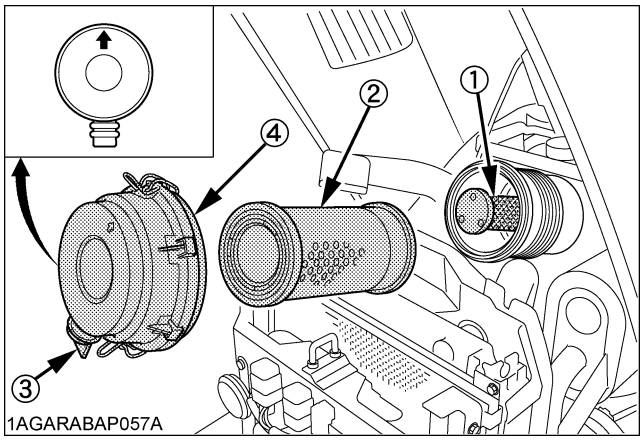

(1) Secondary (safety) element
(2) Primary element
(3) Evacuator valve
(4) Cover

IMPORTANT :
- The air cleaner uses a dry element, never apply oil.
- Do not run the engine with filter element removed.
- Be sure to refit the cover with the arrow ⬆ (on the cover) upright. If the cover is improperly fitted, evacuator valve will not function and dust will adhere to the element.
- Do not touch the secondary element except in cases where replacing is required.
  (See "Replacing Air Cleaner Secondary Element" in Every 1 Year maintenance.)

◆ Evacuator Valve

Open the evacuator valve once a week under ordinary conditions - or daily when used in a dusty place - to get rid of large particles of dust and dirt.

■Cleaning Fuel Filter

This job should not be done in the field, but in a clean place.

1. Close the fuel cock.
2. Unscrew the screw ring and remove the filter bowl, and rinse the inside with kerosene.
3. Take out the element and dip it in the kerosene to rinse.
4. After cleaning, reassemble the fuel filter, keeping out dust and dirt.
5. Bleed the fuel system.
   (See "Bleeding Fuel System" in service as required.)

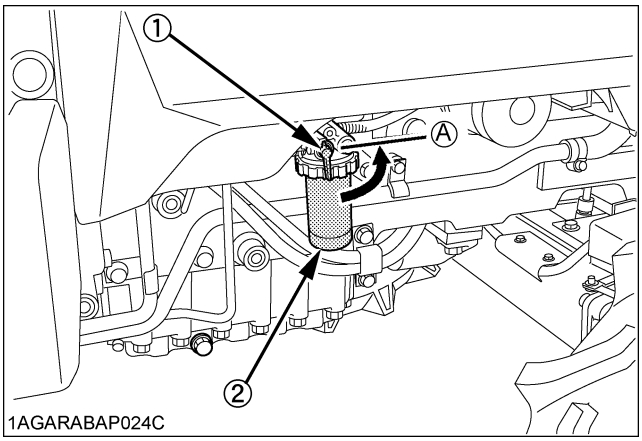

(1) Fuel cock
(2) Fuel filter bowl
(A) "CLOSE"

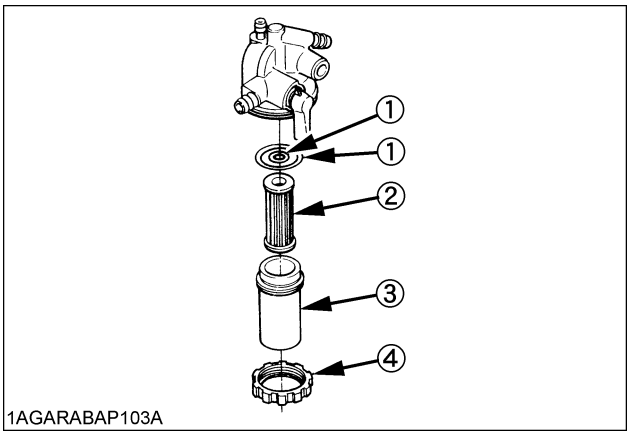

(1) O ring
(2) Filter element
(3) Filter bowl
(4) Screw ring

IMPORTANT :
- If dust and dirt enters the fuel system, the fuel pump and injection nozzles are subject to premature wear. To prevent this, be sure to clean the fuel filter bowl and element periodically.

https://truckmanualshub.com/

■Adjusting Fan Belt Tension

CAUTION

To avoid personal injury:

- **Be sure to stop the engine before checking belt tension.**

Proper fan belt tension	A deflection of between 10 to 12 mm when the belt is pressed in the middle of the span.

1. Stop the engine and remove the key.
2. Apply moderate thumb pressure to belt between pulleys.
3. If tension is incorrect, loosen the alternator mounting bolts and, using a lever placed between the alternator and the engine block, pull the alternator out until the deflection of the belt falls within acceptable limits.
4. Replace fan belt if it is damaged.

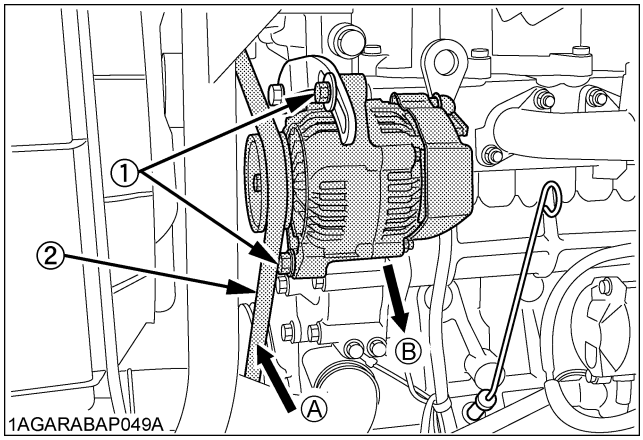

(1) Bolt
(2) Fan belt
(A) Check the belt tension
(B) To tighten

■Checking Fuel Line

1. Check to see that all lines and hose clamps are tight and not damaged.
2. If hoses and clamps are found worn or damaged, replace or repair them at once.

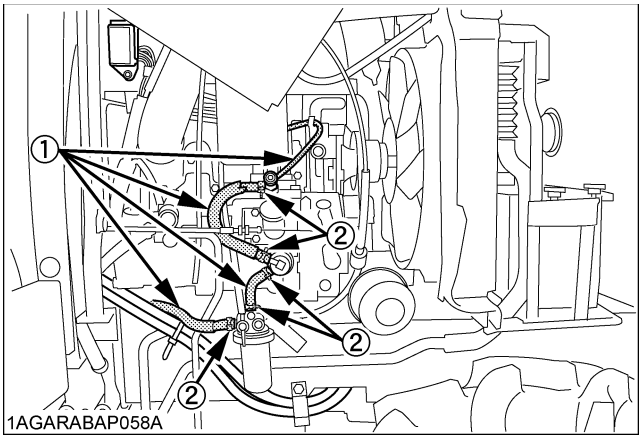

(1) Fuel lines
(2) Clamp bands

NOTE :

- If the fuel line is removed, be sure to properly bleed the fuel system.
  (See "Bleeding Fuel System" in "SERVICE AS REQUIRED" in "PERIODIC SERVICE" section.)

https://truckmanualshub.com/

■Adjusting Clutch Pedal

Proper clutch pedal free travel	20 to 30 mm on the pedal

1. Stop the engine and remove the key.
2. Slightly depress the clutch pedal and measure free travel at top of pedal stroke.
3. If adjustment is needed, loosen the lock nut, and turn the turnbuckle to adjust the rod length within acceptable limits.
4. Retighten the lock nut.

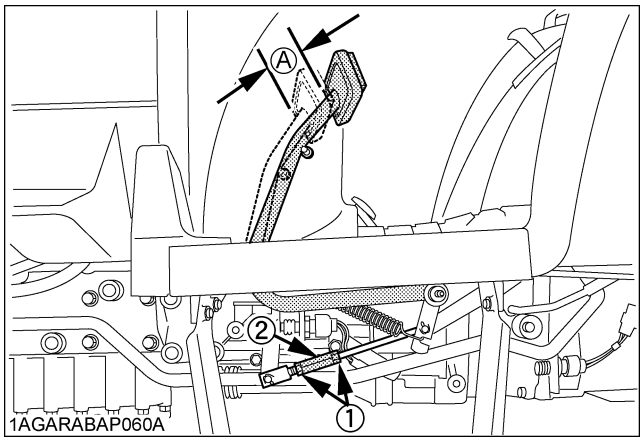

(1) Lock nut
(2) Turn buckle
(A) Free travel

■Adjusting Brake Pedal

CAUTION

To avoid personal injury:

- **Stop the engine and chock the wheels before checking brake pedal.**

Proper brake pedal free travel	20 to 30 mm on the pedal.
	keep the free travel in the right and left brake pedals equal.

1. Release the parking brake.
2. Slightly depress the brake pedals and measure free travel at top of pedal stroke.
3. If adjustment is needed, loosen the lock nut and turn the brake rod to adjust the rod length within acceptable limits.
4. Retighten the lock nut.

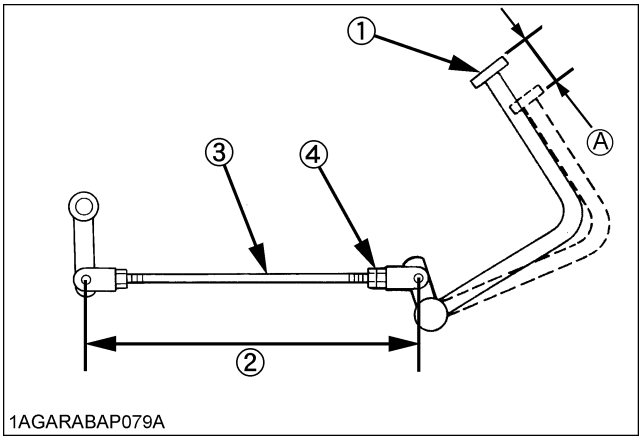

(1) Brake pedal
(2) Length of brake rod
(3) Brake rod
(4) Lock nut
(A) Free travel

https://truckmanualshub.com/

■Checking Battery Condition

DANGER

To avoid the possibility of battery explosion:
For the refillable type battery, follow the instructions below.

- **Do not use or charge the refillable type battery if the fluid level is below the LOWER (lower limit level) mark. Otherwise, the battery component parts may prematurely deteriorate, which may shorten the battery's service life or cause an explosion. Check the fluid level regularly and add distilled water as required so that the fluid level is between the UPPER and LOWER levels.**

CAUTION

To avoid personal injury:

- **Never remove the vent caps while the engine is running.**
- **Keep electrolyte away from eyes, hands and clothes. If you are spattered with it, wash it away completely with water immediately and get medical attention.**
- **Wear eye protection and rubber gloves when working around the battery.**

The factory-installed battery is of non-refillable type. If the indicator turns white, do not charge the battery but replace it with new one.

Mishandling the battery shortens the service life and adds to maintenance costs.
The original battery is maintenance free, but needs some servicing.
If the battery is weak, the engine will be difficult to start and the lights will be dim. It is important to check the battery periodically.

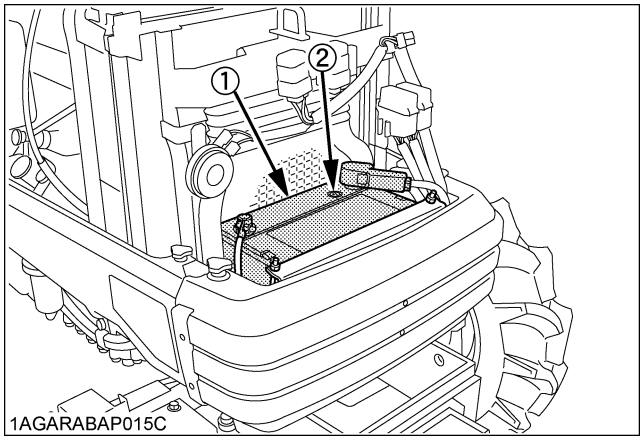

(1) Battery
(2) Indicator

◆ **How to read the indicator**

Check the battery condition by reading the indicator.

State of indicator display	
Green	Specific gravity of electrolyte and quality of electrolyte are both in good condition.
Black	Needs charging battery.
White	Needs replacing battery.

◆ **Battery Charging**

CAUTION

To avoid personal injury:

- **When the battery is being activated, hydrogen and oxygen gases in the battery are extremely explosive. Keep open sparks and flames away from the battery at all times, especially when charging the battery.**
- **When charging the battery, ensure the vent caps are securely in place. (if equipped)**
- **When disconnecting the cable from the battery, start with the negative terminal first.**
  When connecting the cable to the battery, start with the positive terminal first.
- **Never check battery charge by placing a metal object across the posts.**
  Use a voltmeter or hydrometer.

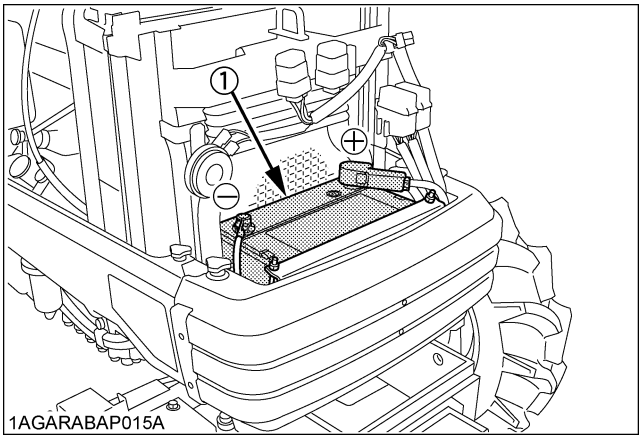

(1) Battery

1. To slow charge the battery, connect the battery positive terminal to the charger positive terminal and the negative to the negative, then recharge in the standard fashion.
2. A boost charge is only for emergencies. It will partially charge the battery at a high rate and in a short time.
   When using a boost-charged battery, it is necessary to recharge the battery as early as possible.
   Failure to do this will shorten the battery's service life.
3. The battery is charged if the indicator display turns green from black.

https://truckmanualshub.com/

4. When exchanging an old battery for a new one, use battery of equal specification shown in **table 1**.

Table 1

Tractor model	Battery TYPE	Volts (V)	Capacity at 5H.R(A.H)
STV32-40	75D26R	12	52

Tractor model	Reserve Capacity (min)	Cold Cranking Amps	Normal Charging Rate (A)
STV32-40	123	490	6.5

◆ **Direction for Storage**

1. When storing the tractor for a long period, remove the battery from tractor, adjust the electrolyte to the proper level and store in a dry place out of direct sunlight.
2. The battery self-discharges while it is stored. Recharge it once every three months in hot seasons and once every six months in cold seasons.

■Adjusting Parking Brake Lever

CAUTION

To avoid personal injury:

- **Stop the engine and chock the wheels before checking parking brake.**

Proper parking brake lever free travel	2 notches (Ratchet sound 2).

1. Raise the parking brake lever to the parking position while counting the ratchet sound made by the parking brake lever.
2. If adjustment is needed, loosen the lock nut and adjust the parking brake rod length with in acceptable limit.
3. Retighten the lock nut.

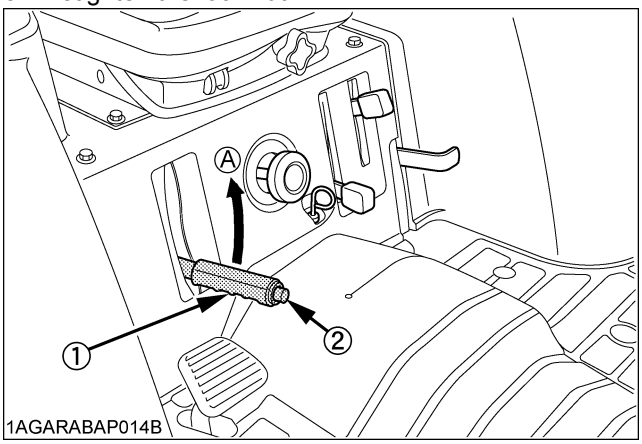

(1) Parking brake lever *(A) "PULL"*
(2) Release button

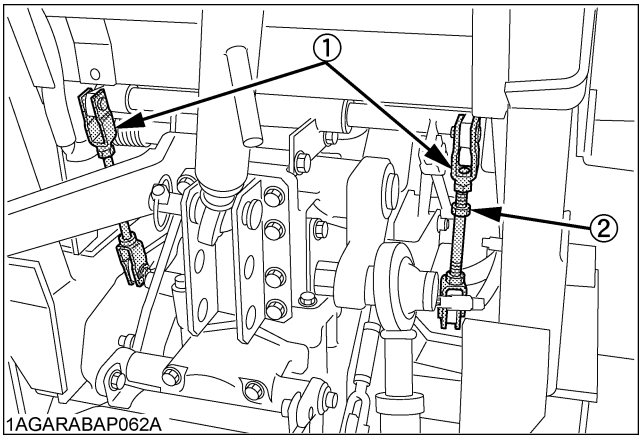

(1) Parking brake rod
(2) Lock nut

https://truckmanualshub.com/

EVERY 200 HOURS

■Replacing Engine Oil Filter

CAUTION

To avoid personal injury:

- **Be sure to stop the engine before changing the oil filter cartridge.**
- **Allow engine to cool down sufficiently, oil can be hot and can burn.**

1. Remove the oil filter.
2. Put a film of clean engine oil on the rubber seal of the new filter.
3. Tighten the filter quickly until it contacts the mounting surface.
   Tighten filter by hand an additional 1/2 turn only.
4. After the new filter has been replaced, the engine oil normally decreases a little. Make sure that the engine oil does not leak through the seal and be sure to check the oil level on the dipstick. Then, replenish the engine oil up to the prescribed level.

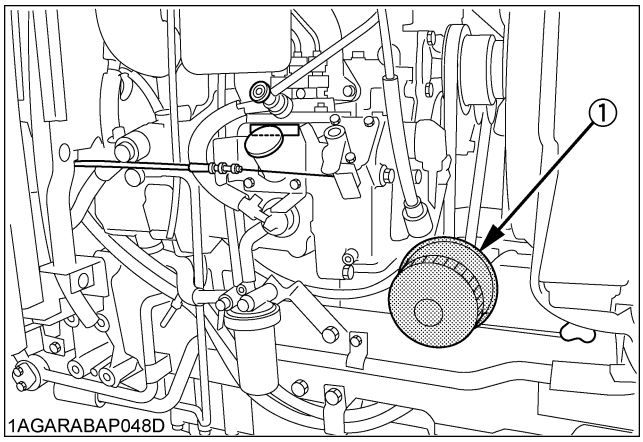

(1) Engine oil filter

IMPORTANT :

- To prevent serious damage to the engine, use only a KUBOTA genuine filter.

■Replacing Hydraulic Oil Filter / Replacing Transmission Oil Filter [HST Type]

CAUTION

To avoid personal injury:

- **Be sure to stop the engine before changing the oil filter cartridge.**
- **Allow engine to cool down sufficiently, oil can be hot and can burn.**

1. Remove the drain plugs at the bottom of the transmission case and drain the oil completely into the oil pan.
2. After draining reinstall the drain plugs.

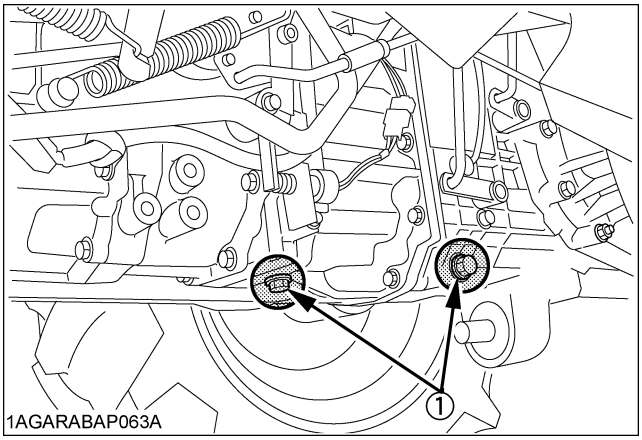

(1) Drain plugs

3. Remove the oil filter.

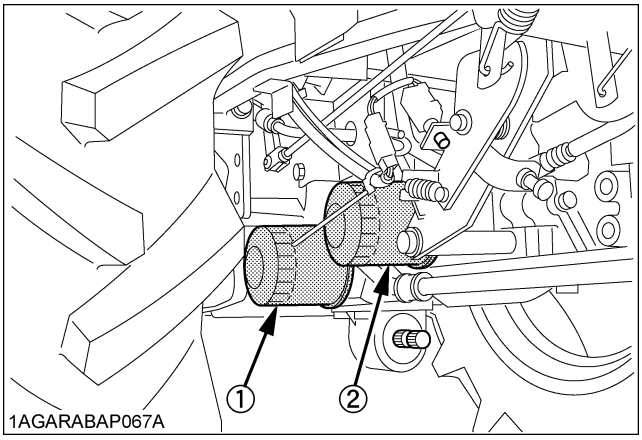

(1) Hydraulic oil filter
(2) Transmission oil filter

4. Put a film of clean transmission oil on the rubber seal of the new filter.

https://truckmanualshub.com/

5. [Hydraulic oil filter]
   Quickly tighten the filter until it contacts the mounting surface, then tighten it by hand an additional 1/2 turn only.
   [Transmission oil filter]
   Quickly tighten the filter until it contacts the mounting surface, then, with a filter wrench, tighten it an additional 1 turn only.
6. After the new filters have been replaced, fill the transmission oil up to the upper notch on the dipstick.

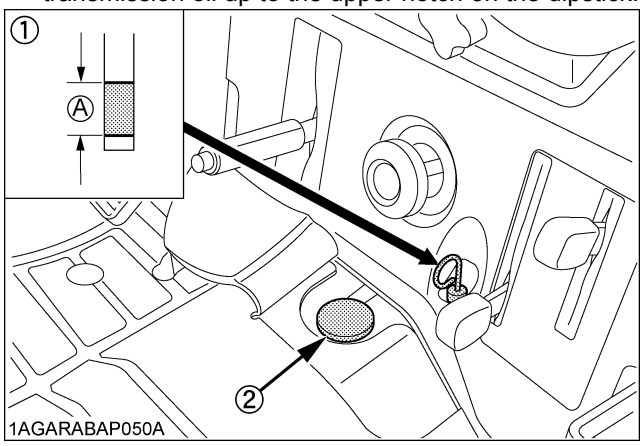

(1) Gauge *(A) Oil level is acceptable within this range.*
(2) Oil inlet

7. After running the engine for a few minutes, stop the engine and check the oil level again, add oil to the prescribed level.
8. Make sure that the transmission fluid doesn't leak past the seal on the filter.

IMPORTANT :
- To prevent serious damage to the hydraulic system, use only a KUBOTA genuine filter.

■Checking Radiator Hose and Clamp

Check to see if radiator hoses are properly fixed every 200 hours of operation or six months, whichever comes first.

1. If hose clamps are loose or water leaks, tighten bands securely.
2. Replace hoses and tighten hose clamps securely, if radiator hoses are swollen, hardened or cracked.

Replace hoses and hose clamps every 2 years or earlier if checked and found that hoses are swollen, hardened or cracked.

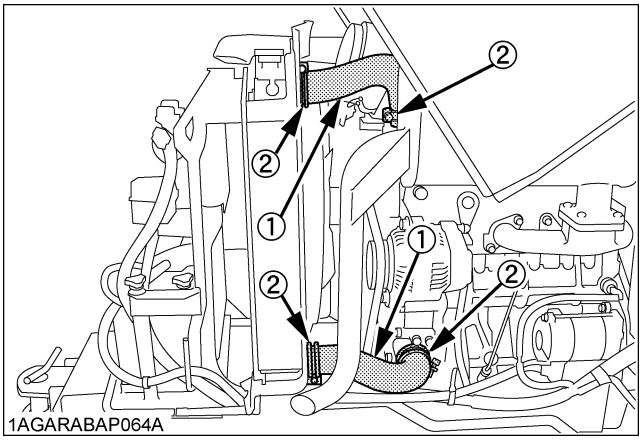

(1) Radiator hoses
(2) Clamp bands

◆ Precaution at Overheating

Take the following actions in the event the coolant temperature is nearly or more than the boiling point, what is called "Overheating"

1. Park the tractor in a safe place and keep the engine unloaded idling.
2. Don't stop the engine suddenly, but stop it after about 5 minutes of unloaded idling.
3. Keep yourself well away from the machine for further 10 minutes or while the steam blows out.
4. Check that there are no dangers such as burns. Get rid of the causes of overheating according to the manual, see "TROUBLESHOOTING" section, and then, start again the engine.

https://truckmanualshub.com/

■Checking HST Oil Line [HST Type] / Checking Power Steering Line

1. Check to see that all lines and hose clamps are tight and not damaged.
2. If hoses and clamps are found worn or damaged, replace or repair them at once.

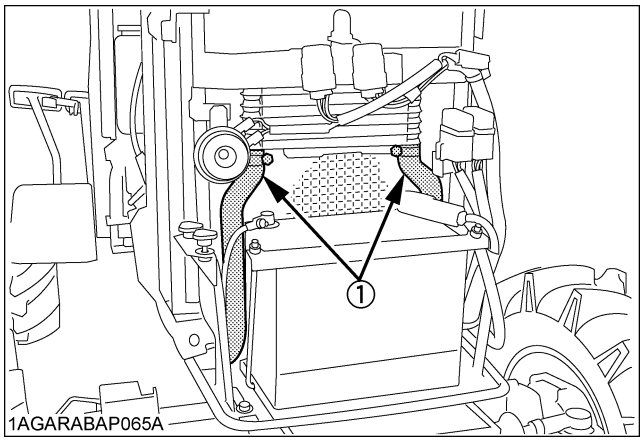

(1) HST oil line

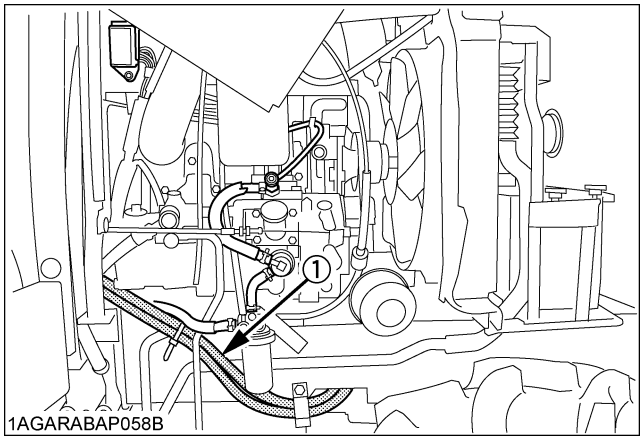

(1) Power steering pressure hoses

■Adjusting Toe-in

1. Park tractor on a flat place.
2. Turn steering wheel so front wheels are in the straight ahead position.
3. Lower the implement, lock the park brake and stop the engine.
4. Measure distance between tire beads at front of tire, hub height.
5. Measure distance between tire beads at rear of tire, hub height.
6. Front distance should be 2 to 8 mm less than rear distance. If not, adjust tie rod length.

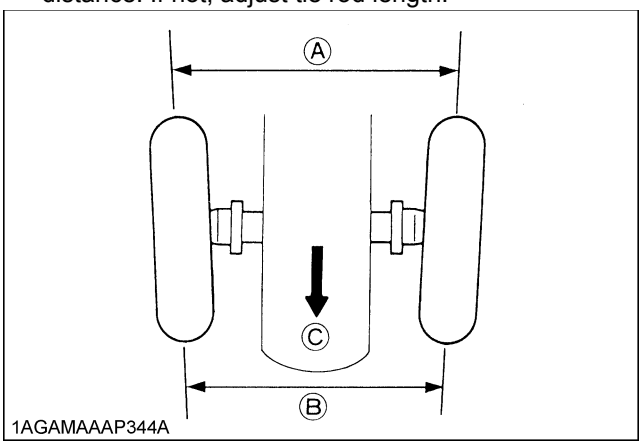

(A) Wheel - to - wheel distance at rear
(B) Wheel - to - wheel distance at front
(C) "FRONT"

◆ Adjusting procedures

1. Detach the snap ring.
2. Loosen the tie-rod nut.
3. Turn the tie-rod joint to adjust the rod length until the proper toe-in measurement is obtained.
4. Retighten the tie-rod nut.
5. Attach the snap ring of the tie-rod joint.

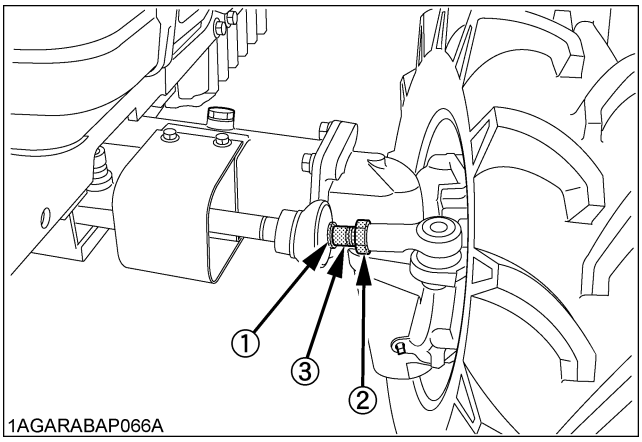

(1) Snap ring
(2) Tie-rod nut
(3) Tie-rod joint

https://truckmanualshub.com/

EVERY 400 HOURS

■Changing Transmission Fluid

CAUTION

To avoid personal injury:

- **Allow engine to cool down sufficiently, oil can be hot and can burn.**

1. To drain the used oil, remove the drain plugs at the bottom of the transmission case and drain the oil completely into the oil pan.
2. After draining reinstall the drain plugs.
3. Fill with the new KUBOTA SUPER UDT fluid up to the upper notch on the dipstick.
   (See "LUBRICANTS" in "MAINTENANCE" section.)
4. After running the engine for a few minutes, stop the engine and check the oil level again; add oil to prescribed level.

Oil Capacity	20 L

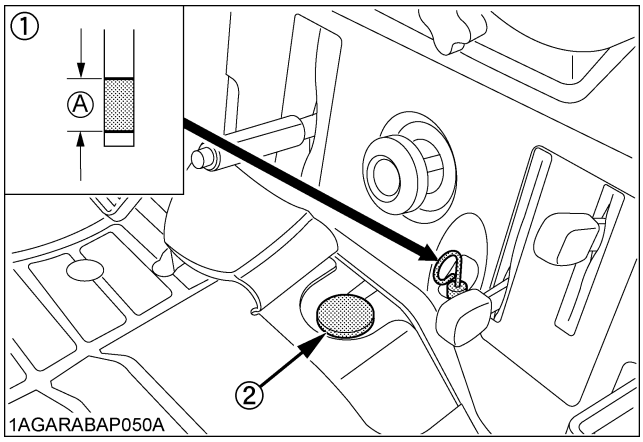

(1) Gauge (A) Oil level is acceptable within this range
(2) Oil inlet

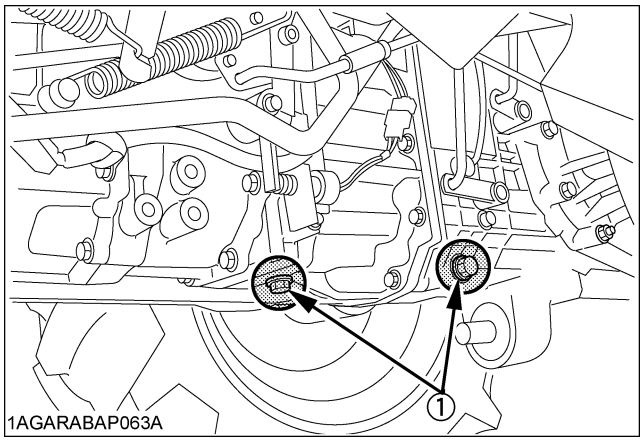

(1) Drain plugs

IMPORTANT :

- Do not operate the tractor immediately after changing the transmission fluid.
  Run the engine at medium speed for a few minutes to prevent damage to the transmission.

■Replacing Fuel Filter Element

(See "Cleaning Fuel Filter" in "EVERY 100 HOURS" in "PERIODIC SERVICE" section.)

■Changing Front Axle Case Oil

1. To drain the used oil, remove the right and left drain plugs and filling plug at the front axle case and drain the oil completely into the oil pan.
2. After draining reinstall the drain plugs.
3. Add new oil through the filler port up to the specified level.
   (See "LUBRICANTS" in Maintenance Section)
4. After filling reinstall the filling plug.

Oil capacity	4.0 L

NOTE :

- Make sure the oil level is at the center of the front axle.

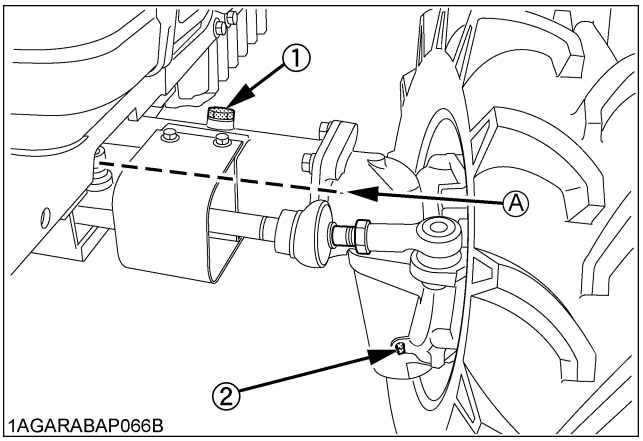

(1) Filling plug (A) Oil level
(2) Drain plug

https://truckmanualshub.com/

EVERY 600 HOURS

■Adjusting Front Axle Pivot

If the front axle pivot pin adjustment is not correct, front wheel vibration can occur causing vibration in the steering wheel.

◆ **Adjusting procedure**

Loosen the lock nut, screw-in the adjusting screw until seated, then tighten the screw with an additional 1/6 turn. Re-tighten the lock nut.

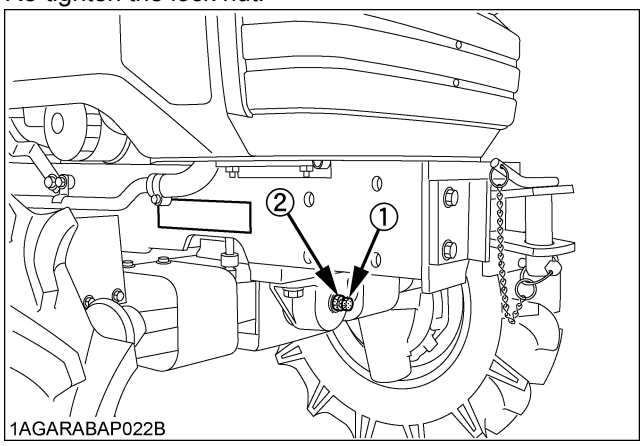

(1) Adjusting screw
(2) Lock nut

EVERY 800 HOURS

■Adjusting Engine Valve Clearance

Consult your local KUBOTA Dealer for this service.

EVERY 1 YEAR

■Replacing Air Cleaner Primary Element and Secondary Element

(See "Cleaning Air Cleaner Primary Element" in "EVERY 100 HOURS" in "PERIODIC SERVICE" section.)

EVERY 2 YEARS

■Flushing Cooling System and Changing Coolant

CAUTION

To avoid personal injury:

- **Do not remove radiator cap while coolant is hot. When cool, slowly rotate cap to the first stop and allow sufficient time for excess pressure to escape before removing the cap completely.**

1. Stop the engine and let cool down.
2. To drain the coolant, open the radiator drain plug and remove radiator cap. The radiator cap must be removed to completely drain the coolant.
3. After all coolant is drained, close the drain plug.
4. Fill with clean soft water and cooling system cleaner.
5. Follow directions of the cleaner instruction.
6. After flushing, fill with clean soft water and anti-freeze until the coolant level is just below the radiator cap. Install the radiator cap securely.
7. Fill with fresh water up to the "FULL" mark on the reserve tank.
8. Start and operate the engine for few minutes.
9. Stop the engine and let cool.
10. Check coolant level of recovery tank and add coolant if necessary.

Coolant capacity	6.1 L

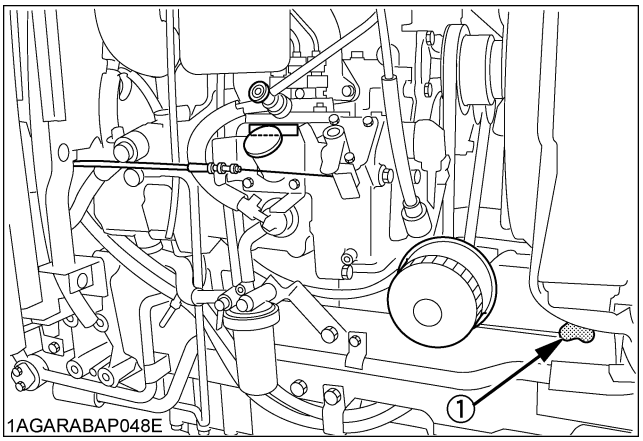

(1) Drain plug

https://truckmanualshub.com/

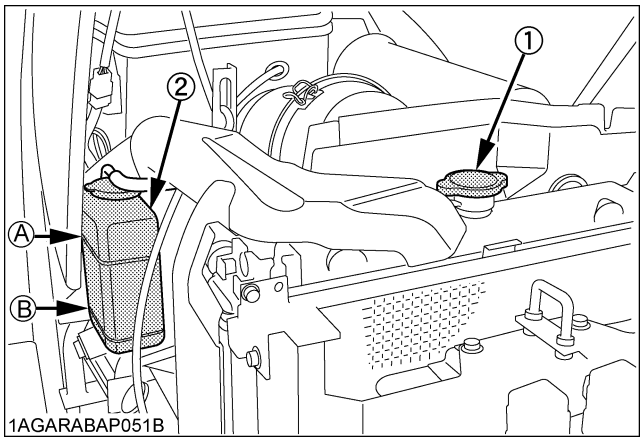

(1) Radiator cap *(A) "FULL"*
(2) Recovery tank *(B) "LOW"*

IMPORTANT :
- Do not start engine without coolant.
- Use clean, fresh soft water and anti-freeze to fill the radiator and recovery tank.
- When the anti-freeze is mixed with water, the anti-freeze mixing ratio must be less than 50%.
- Securely tighten radiator cap. If the cap is loose or improperly fitted, water may leak out and the engine could overheat.

NOTE :
- On cab type machines, fresh water circulates through the heater. This means that one more liter or so of fresh water is required.
  In changing fresh water, pour fresh water up to the filler port of the reserve tank. Turn ON the heater (shift the temperature control lever toward WARM), and run the engine for a while in order to warm fresh water. Then stop the engine.
  When fresh water has cooled down, some of the fresh water in the reserve tank is sucked. Now the reserve tank is appropriately filled with fresh water.

■Anti-Freeze

CAUTION

To avoid personal injury:
- **When using antifreeze, put on some protection such as rubber gloves (Antifreeze contains poison.).**
- **If it is swallowed, seek immediate medical help. Do NOT make a person throw up unless told to do so by poison control or a health care professional. Use standard first aid and CPR for signs of shock or cardiac arrest. Call your local Poison Control Center or your local emergency number for further assistance.**
- **When antifreeze comes in contact with the skin or clothing, wash it off immediately.**
- **Do not mix different types of Antifreeze. The mixture can produce chemical reaction causing harmful substances.**
- **Antifreeze is extremely flammable and explosive under certain conditions. Keep fire and children away from antifreeze.**
- **When draining fluids from the engine, place some container underneath the engine body.**
- **Do not pour waste onto the grounds, down a drain, or into any water source.**
- **Also, observe the relevant environmental protection regulations when disposing of antifreeze.**

Always use a 50/50 mix of long-life coolant and clean soft water in KUBOTA engines.
Consult your local KUBOTA Dealer concerning coolant for extreme conditions.

1. Long-life coolant (hereafter LLC) comes in several types. Use ethylene glycol (EG) type for this engine.
2. Before employing LLC-mixed cooling water, fill the radiator with fresh water and empty it again.
   Repeat this procedure 2 or 3 times to clean up the inside.
3. Mixing the LLC
   Premix 50% LLC with 50% clean soft water. When mixing, stir it up well, and then fill into the radiator.
4. The procedure for the mixing of water and antifreeze differs according to the make of the antifreeze and the ambient temperature. Refer to SAE J1034 standard, more specifically also to SAE J814c.

Vol % Anti-freeze	Freezing Point	Boiling Point*
	℃	℃
50	-37	108

∗ At 1.013 x 10^5Pa (760mmHg) pressure (atmospheric). A higher boiling point is obtained by using a radiator pressure cap which permits the development of pressure within the cooling system.

https://truckmanualshub.com/

5. Adding the LLC
   (1) Add only water if the mixture reduces in amount by evaporation.
   (2) If there is a mixture leak, add the LLC of the same manufacturer and type in the same mixture percentage.
      ∗ Never add any long-life coolant of different manufacturer. (Different brands may have different additive components, and the engine may fail to perform as specified.)
6. When the LLC is mixed, do not employ any radiator cleaning agent. The LLC contains anticorrosive agent. If mixed with the cleaning agent, sludge may build up, adversely affecting the engine parts.
7. Kubota's genuine long-life coolant has a service life of 2 years. Be sure to change the coolant every 2 years.

NOTE :
- The above data represent industry standards that necessitate a minimum glycol content in the concentrated antifreeze.

■Replacing Radiator Hose (Water pipes)

Replace the hoses and clamps.
(See "Checking Radiator Hose and Clamp" in "EVERY 200 HOURS" in "PERIODIC SERVICE" section.)

■Replacing Power Steering Hose

Replace the hoses and clamps.
(See "Checking Power Steering Line" in "EVERY 200 HOURS" in "PERIODIC SERVICE" section.)

■Replacing HST Oil Line [HST Type]

Replace the hoses and clamps.
(See "Checking HST Oil Line" in every 200 hours maintenance)

■Replacing Fuel Hose

Replace the hoses and clamps.
See "Checking Fuel Line" in "EVERY 100 HOURS" in "PERIODIC SERVICE" section.)

SERVICE AS REQUIRED

■Bleeding Fuel System

Air must be removed:
1. When the fuel filter or lines are removed.
2. When tank is completely empty.
3. After the tractor has not been used for a long period of time.

◆ **Bleeding procedure is as follows:**
1. Fill the fuel tank with fuel, and open the fuel cock.

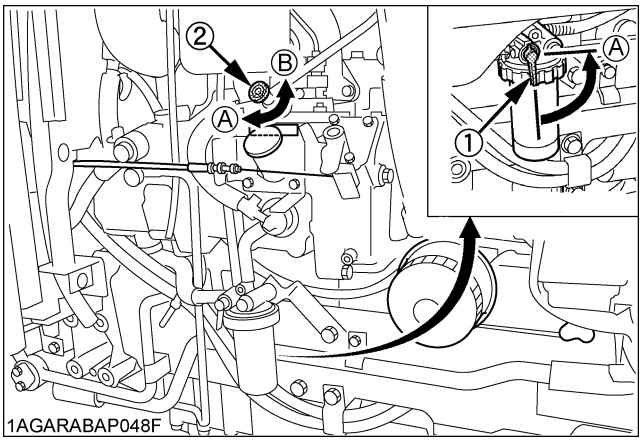

(1) Fuel cock *(A) "CLOSE"*
(2) Air vent cock *(B) "OPEN"*

2. Open the air vent cock on the fuel injection pump.
3. Start the engine and run for about 30 seconds, and then stop the engine.
4. Close the air vent cock.

IMPORTANT :
- Always close the air vent cock except for bleeding fuel lines.
  Otherwise, engine runs irregularly or stalls frequently.

https://truckmanualshub.com/

■Draining Clutch Housing Water

The tractor is equipped with a drain plug under the clutch housing.
After operating in rain, snow or if the tractor has been washed, water may get into the clutch housing.
Remove the drain plug and drain the water, then install the plug again.

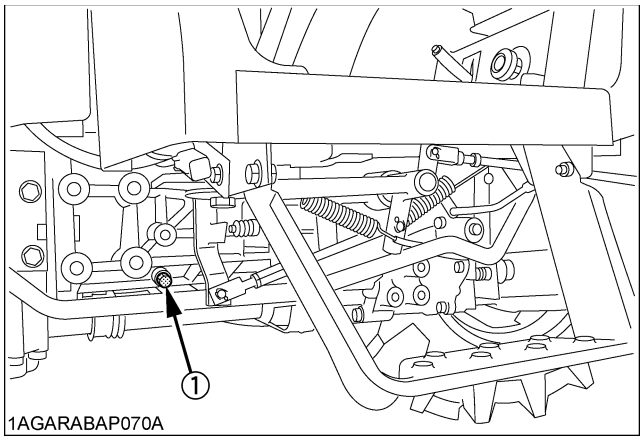

(1) Water drain plug

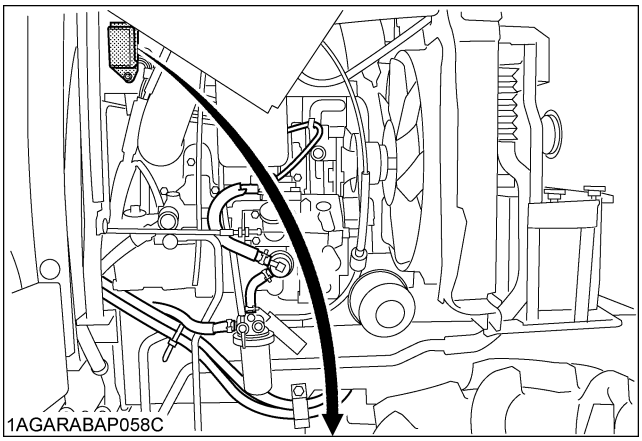

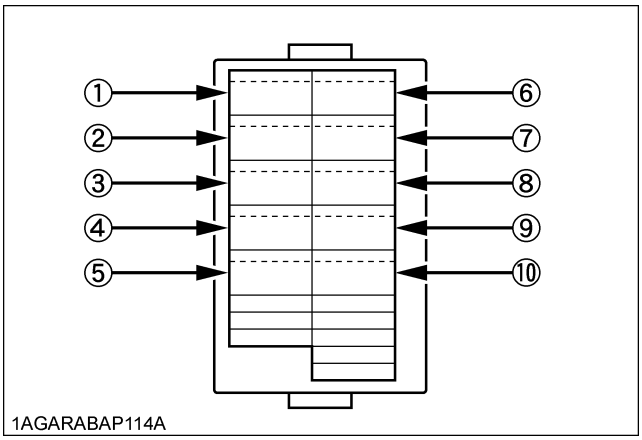

■Replacing Fuse

The tractor electrical system is protected from potential damage by fuses.
A blown fuse indicates that there is an overload or short somewhere in the electrical system.
If any of the fuses should blow, replace with a new one of the same capacity.

IMPORTANT :

- Before replacing a blown fuse, determine why the fuse blew and make any necessary repairs. Failure to follow this procedure may result in serious damage to the tractor electrical system. Refer to the "TROUBLESHOOTING" section of this manual or your local KUBOTA Dealer for specific information dealing with electrical problems.

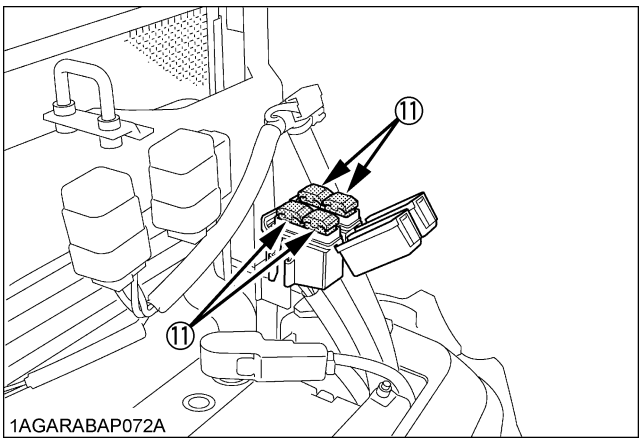

https://truckmanualshub.com/

◆ **Protected circuit**

FUSE No.	CAPACITY (A)	Protected circuit
(1)	30	Starter
(2)	15	Hazard
(3)	10	Position
(4)	10	Alternator panel
(5)	15	Head light / Horn
(6)	10	Control box / PTO solenoid
(7)	5	Key stop
(8)	10	Work light
(9)	10	Brake
(10)	10	Flasher
(11)	Slow blow fuse	
	50	main
	40	Key switch
	40	Key stop
	40	Glow

■Replacing Light Bulb

1. Head light and rear combination lights :
   Take the bulb out of the light body and replace with a new one.
2. Other lights :
   Detach the lens and replace the bulb.

Light	Capacity
Head light	45W / 40W
Tail light	10W
Brake stop light	21W
Turn signal / Hazard light	21W
Front position light	10W
Instrument panel light	1.7W
Work light (if equipped)	-
Number plate light	10W

https://truckmanualshub.com/

STORAGE

CAUTION

To avoid personal injury:

- **Do not clean the machine while the engine is running.**
- **To avoid the danger of exhaust fume poisoning, do not operate the engine in a closed building without proper ventilation.**
- **When storing, remove the key from the key switch to avoid unauthorized persons from operating the tractor and getting injured.**

TRACTOR STORAGE

If you intend to store your tractor for an extended period of time, follow the procedures outlined below.

These procedures will insure that the tractor is ready to operate with minimum preparation when it is removed from storage.

1. Check the bolts and nuts for looseness, and tighten if necessary.
2. Apply grease to tractor areas where bare metal will rust also to pivot areas.
3. Detach the weights from the tractor body.
4. Inflate the tires to a pressure a little higher than usual.
5. Change the engine oil and run the engine to circulate oil throughout the engine block and internal moving parts for about five minutes.
6. Keep the clutch disengaged. If the clutch is left engaged for a long period of time, the clutch plate may rust, making clutch disengagement impossible at the next operation.

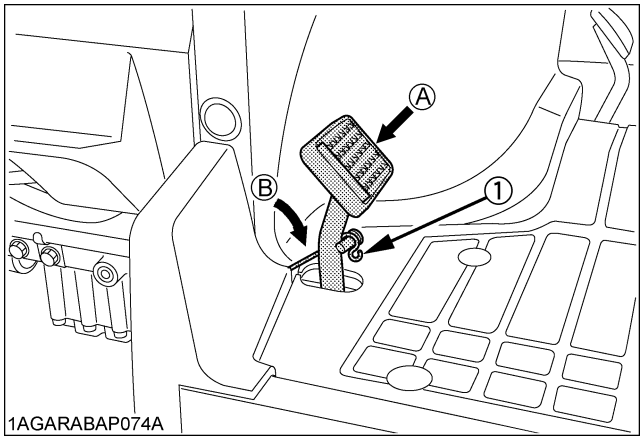

(1) Lock plate *(A) "DEPRESS"*
(B) "HOOK TO LOCK"

7. With all implements lowered to the ground, coat any exposed hydraulic cylinder piston rods with grease.
8. Remove the battery from the tractor. Store the battery following the battery storage procedures.
   (See "Checking Battery Condition" in "EVERY 100 HOURS" in "PERIODIC SERVICE" section.)
9. Keep the tractor in a dry place where the tractor is sheltered from the elements. Cover the tractor.
10. Store the tractor indoors in a dry area that is protected from sunlight and excessive heat. If the tractor must be stored outdoors, cover it with a waterproof tarpaulin.
    Jack the tractor up and place blocks under the front and rear axles so that all four tires are off the ground. Keep the tires out of direct sunlight and extreme heat.

IMPORTANT :

- When washing the tractor, be sure to stop the engine. Allow sufficient time for the engine to cool before washing.
- Cover the tractor after the muffler and the engine have cooled down.

https://truckmanualshub.com/

REMOVING THE TRACTOR FROM STORAGE

1. Check the tire air pressure and inflate the tires if they are low.
2. Jack the tractor up and remove the support blocks from under the front and rear axles.
3. Install the battery. Before installing the battery, be sure it is fully charged.
4. Check the fan belt tension.
5. Check all fluid levels (engine oil, transmission/ hydraulic oil, engine coolant and any attached implements).
6. Start the engine. Observe all gauges. If all gauges are functioning properly and reading normal, move the tractor outside. Once outside, park the tractor and let the engine idle for at least five minutes. Shut the engine off and walk around tractor and make a visual inspection looking for evidence of oil or water leaks.
7. With the engine fully warmed up, release the parking brake and test the brakes for proper adjustment as you move forward. Adjust the brakes as necessary.

https://truckmanualshub.com/

ENGLISH

TROUBLESHOOTING

ENGINE TROUBLESHOOTING

If something is wrong with the engine, refer to the table below for the cause and its corrective measure.

Trouble		Cause	Countermeasure
Engine is difficult to start or won't start.		● No fuel flow.	● Check the fuel tank and the fuel filter. Replace filter if necessary.
		● Air or water is in the fuel system.	● Check to see if the fuel line coupler bolt and nut are tight. ● Bleed the fuel system (See "Bleeding Fuel System" in "SERVICE AS REQUIRED" in "PERIODIC SERVICE" section.)
		● In winter, oil viscosity increases, and engine revolution is slow.	● Use oils of different viscosities, depending on ambient temperatures. ● Use engine block heater. (Option)
		● Battery becomes weak and the engine does not turn over quick enough.	● Clean battery cables & terminals. ● Charge the battery. ● In cold weather, always remove the battery from the engine, charge and store it indoors. Install it on the tractor only when the tractor is going to be used.
Insufficient engine power.		● Insufficient or dirty fuel. ● The air cleaner is clogged.	● Check the fuel system. ● Clean or replace the element.
Engine stops suddenly.		● Insufficient fuel.	● Refuel. ● Bleed the fuel system if necessary.
Exhaust fumes are colored.	Black	● Fuel quality is poor. ● Too much oil. ● The air cleaner is clogged.	● Change the fuel and fuel filter. ● Check the proper amount of oil. ● Clean or replace the element.
	Blue white	● The inside of exhaust muffler is dumped with fuel. ● Injection nozzle trouble. ● Fuel quality is poor.	● Heat the muffler by applying load to the engine. ● Check the injection nozzle. ● Change the fuel and fuel filter.
Engine overheats		● Engine overloaded	● Shift to lower gear or reduce load.
		● Low coolant level	● Fill cooling system to the correct level; check radiator and hoses for loose connections or leaks.
		● Loose or defective fan belt	● Adjust or replace fan belt.
		● Dirty radiator core or grille screens	● Remove all trash.
		● Coolant flow route corroded	● Flush cooling system.

If you have any questions, consult your local KUBOTA Dealer.

https://truckmanualshub.com/

OPTIONS

Consult your local KUBOTA Dealer for further detail.

- Work Light
  High visibility for night work
- Front end weights
  For front ballast
- Mounting Kit (Front end weights)
  To mount Front end weights
- Rear Wheel Weights
  For rear ballast
- Secondary element
  For double air cleaner
- Exhaust Extension Adaptor
  To change the exhaust direction
- Accelerator cooperative KIT

https://truckmanualshub.com/

APPENDICES

MAXIMUM MASSES

■Maximum Permissible Load of The Tire

Tire combination 1. (unit : kg)

	Front tire	Rear tire	Technically permissible maximum laden mass	Tractor payload
Tire size	6.00-12	9.5-22	-	-
Maximum permissible load of the tire	325	690	-	-
Maximum axle load	650	1380	2030	820-980
Minimum limit percentages	25%	55%	100%	-

Tire combination 2. (unit : kg)

	Front tire	Rear tire	Technically permissible maximum laden mass	Tractor payload
Tire size	24x8.50-14	13.6-16	-	-
Maximum permissible load of the tire	425	800	-	-
Maximum axle load	850	1600	2100	870-1030
Minimum limit percentages	25%	55%	100%	-

Tire combination 3. (unit : kg)

	Front tire	Rear tire	Technically permissible maximum laden mass	Tractor payload
Tire size	23x8.50-14	12.4-16	-	-
Maximum permissible load of the tire	460	985	-	-
Maximum axle load	920	1785	2100	840-1000
Minimum limit percentages	25%	55%	100%	-

https://truckmanualshub.com/

■Trailer Load Capacity

	Height above ground h [mm]			Distance from the vertical plane passing through the axis of the rear axle c [mm]	Maximum static vertical load / technically permissible mass on the coupling point S [daN(kg)]
Front tire	6.00-12	24x8.5-14	23x8.5-14		
Rear tire	9.5-22	13.6-16	12.4-16		
Drawbar	350	340	335	505	560
High hitch (AL-KO Kober type)	700	690	685	375	300
High hitch (Scharmuller Type 256010)	690	680	675	395	300
	644.5	634.5	629.5		330
	599	589	584		380
	553.5	543.5	538.5		420
	508	498	493		460
	462.5	452.5	447.5		520
	417	407	402		570
	371.5	361.5	356.5		630
	326	316	311		690

Drawbar (unit : kg)

	Permissible towable masses	Total technically permissible mass of the tractor-trailer combination
Unbraked towable mass	1500	3600
Independently braked towable mass	3500	5600
Inertia-braked towable mass	3500	5600
Towable mass when fitted with hydraulic or pneumatic braking	-	-

https://truckmanualshub.com/

ENGLISH

INDEX

3-point Hitch Lowering Speed 40
Accelerator Auto Throttle System.....31
Air Cleaner Element [Single Element Type].....61
Air Cleaner Primary Element [Double Element Type].....62
Air Cleaner Primary Element and Secondary Element 71
Anti-Freeze.....72
Battery Condition.....65
Bi-speed Turn Switch 24
Brake Pedal.....64
Brake Pedals (Right and Left) 22
Brake Pedals and Clutch Pedal.....57
Check Chains 38
Clutch Pedal 23
Clutch Pedal 64
Cold Weather Starting 13
Coolant Level 56
Coolant Temperature Gauge.....28
Cruise Control Lever 26
Differential Lock.....29
Directions for Use of Power Steering 30
Do not Operate the Tractor at Full Speed for the First 50 Hours 16
Draining Clutch Housing Water 74
Drawbar.....37
Dual Tires 44
Easy Checker(TM) 27
Electrical Outlet 31
Engine Oil.....60
Engine Oil Filter.....67
Engine Oil Level 55
Engine Side Cover and Front Grill.....53
Engine Start System.....59
Engine Valve Clearance.....71
Fan Belt Tension 63
Float Control.....40
Flushing Cooling System and Coolant 71
Front Axle Case Oil 70
Front Axle Pivot 71
Front Ballast 47
Front Wheel Drive Lever 24
Front Wheels (with four wheel drive).....45
Fuel Filter 62
Fuel Filter Element 70
Fuel Gauge.....28
Fuel Hose 73
Fuel Line 63
Fuel System..... 73
Fuse..... 74
Gauges, Meter and Easy Checker(TM)..... 57
Grill, Radiator Screen and Oil Cooler 57
Hand Throttle Lever..... 25
Head Light Switch..... 20
Head Light, Hazard Light etc. 57
High-Hitch 39
Hood 53
Horn Button 21
Hourmeter/Tachometer 28
HST Oil Line [HST Type] 73
HST Oil Line [HST Type] / Power Steering Line 69
Hydraulic Block Type Outlet 41
Hydraulic Control Unit Use Reference Chart... 43
Hydraulic Oil Filter / Transmission Oil Filter [HST Type] 67
Immediately Stop the Engine if:..... 27
Inflation Pressure..... 44
Lifting Rod (Right)..... 37
Light Bulb..... 75
Liquid Ballast in Rear Tires..... 48
Lower link holder 38
Lubricating Grease Fittings..... 58
Lubricating Oil for New Tractors 16
Maximum Masses..... 48
Maximum Permissible Load of The Tire 80
Mid-PTO Gear Shift Lever 33
Movable Parts..... 57
Oiling 58
Operating on Slopes and Rough Terrain..... 30
Operating the Tractor on a Road..... 30
Operator's Seat..... 18
Parking 29
Parking Brake Lever 25
Parking Brake Lever 66
Position Control 40
Position Light Switch 20
Power Steering Hose..... 73
PTO Clutch Control Switch..... 32
PTO Shaft Cover and Shaft Cap 35
Radiator Hose (Water pipes) 73
Radiator Hose and Clamp 68
Range Gear Shift Lever..... 23
Rear Ballast 48
Rear Counter Weight..... 48

https://truckmanualshub.com/

Rear PTO Gear Shift Lever 33
Rear Wheels.....46
Refueling 54
Remote Control Valve 42
Remote Control Valve Lever 41
ROPS and CAB.....57
Selecting the holes of lower links 37
Selecting the top link mounting holes.....37
Speed Control Pedal 26
Stationary PTO.....35
Stopping 27
Tilt Steering Adjustment 19
To Fold the ROPS 16
To Raise the ROPS to Upright Position 17
Toe-in 69
Tool Box [ROPS Type].....54
Top Link.....37
Tractor Lights 21
Trailer Electrical Outlet.....31
Trailer Load Capacity 81
Transmission Fluid 70
Transmission Fluid Level.....56
Transport the Tractor Safely.....30
Turn Signal / Hazard Light Switch.....20
Walk Around Inspection 54
Warm-Up Transmission Oil in the Low Temperature Range 14
Wheel Bolt Torque.....60

https://truckmanualshub.com/

KUBOTA Corporation is···

Since its inception in 1890, KUBOTA Corporation has grown to rank as one of the major firms in Japan.
To achieve this status, the company has through the years diversified the range of its products and services to a remarkable extent, until today, 19 plants and 16,000 employees produce over 1,000 different items, large and small.
All these products and all the services which accompany them, however, are unified by one central commitment. KUBOTA makes products which, taken on a national scale, are basic necessities. Products which are indispensable, products intended to help individuals and nations fulfill the potential inherent in their environment. For KUBOTA is the Basic Necessities Giant.
This potential includes water supply, food from the soil and from the sea, industrial development, architecture and construction, transportation.
Thousands of people depend on KUBOTA's know-how, technology, experience and customer service. You too can depend on KUBOTA.