https://truckmanualshub.com/

WSM

WORKSHOP MANUAL
KUBOTA EXCAVATOR

U48-4, U55-4

Kubota

KiSC issued 03, 2010 A

https://truckmanualshub.com/

CONTENTS

TO THE READER
- TO THE READER

INFORMATION
- CONTENTS
- INFORMATION
  1. SAFETY FIRST I-1
  2. SAFETY DECALS I-4

GENERAL
- CONTENTS
- GENERAL
  1. CHECKING EXCAVATOR IDENTIFICATION G-1
  2. ENGINE IDENTIFICATION G-2
  3. GENERAL PRECAUTIONS.....G-4
  4. HANDLING PRECAUTIONS FOR ELECTRICAL PARTS AND WIRING.....G-8
  5. TIGHTENING TORQUES.....G-12
  6. NEW PRODUCT FEATURE (EUROPEAN VERSION).....G-17
  7. NEW FEATURES OUTLINE.....G-20
  8. QUALITY SPECIFICATIONS G-22
  9. WATER AND OIL QUANTITY G-33
  10. DESCRIPTION OF PARTS G-34
  11. MAINTENANCE CHECK LIST G-41

MACHINE BODY
- CONTENTS
- SERVICING
  1. FRONT OPERATING MACHINE..... 1-S1
  2. SWIVEL FRAME..... 1-S3
  3. TRACK FRAME 1-S21

ENGINE
- CONTENTS
- GENERAL
  1. ENGINE 2-G1
  2. SPECIAL TOOLS 2-G5
- MECHANISM
  1. FEATURE 2-M1
  2. ENGINE BODY 2-M2
  3. LUBRICATING SYSTEM..... 2-M7
  4. COOLING SYSTEM 2-M8
  5. FUEL SYSTEM..... 2-M10
- SERVICING
  1. TROUBLESHOOTING.....2-S1
  2. SERVICING SPECIFICATIONS 2-S4
  3. TIGHTENING TORQUES.....2-S10
  4. CHECKING, DISASSEMBLING AND SERVICING 2-S13

HYDRAULIC SYSTEM
- CONTENTS
- MECHANISM
  1. DIAGRAM OF HYDRAULIC CIRCUIT..... 3-M1
  2. HYDRAULIC DEVICE LAYOUT 3-M3
  3. FEATURES..... 3-M4
  4. PUMP 3-M8
  5. CONTROL VALVE..... 3-M32
  6. SWIVEL MOTOR..... 3-M54
  7. TRAVEL MOTOR..... 3-M60
  8. HYDRAULIC CYLINDER 3-M82
  9. PILOT VALVE 3-M92
  10. UNLOAD VALVE 3-M103
  11. HOLDING VALVE 3-M107
  12. SERVICE PORT 3-M111
- SERVICING
  1. PUMP.....3-S1
  2. CONTROL VALVE.....3-S34
  3. SWIVEL MOTOR.....3-S63
  4. SWIVEL JOINT 3-S77
  5. TRAVEL MOTOR.....3-S81
  6. HYDRAULIC CYLINDER.....3-S140
  7. PILOT VALVE (CONTROL).....3-S153
  8. PILOT VALVE (TRAVEL).....3-S163
  9. PILOT VALVE (BLADE, SWING).....3-S173
  10. UNLOAD VALVE 3-S184
  11. THIRD LINE VALVE ASSEMBLY 3-S189
  12. ROUTING OF HYDRAULIC HOSES 3-S191
  13. BOOM HOLDING VALVE 3-S217
  14. MEASURING HYDRAULIC DEVICE PERFORMANCE 3-S223
  15. TROUBLESHOOTING.....3-S244

ELECTRICAL SYSTEM
- CONTENTS
- SERVICING
  1. ELECTRONIC DEVICE LAYOUT 4-S1
  2. WIRING CIRCUIT 4-S2
  3. TROUBLESHOOTING (START-UP EQUIPMENT VERSION) 4-S13
  4. INSPECTIONS.....4-S15
  5. Instrument Panel Operating Guide 4-S22
  6. TROUBLESHOOTING (METER PANEL EDITION) 4-S77

CABIN
- CONTENTS
- MECHANISM
  1. AIR CONDITIONING SYSTEM..... 5-M1
  2. WIPER 5-M20
- SERVICING
  1. TROUBLESHOOTING.....5-S1
  2. MAINTENANCE AND SERVICE RELATED SPECIFICATIO NS 5-S4
  3. TORQUE.....5-S5
  4. PRECAUTIONS WHEN REPAIRING THE REFRIGERANT SYSTEM 5-S6
  5. INSPECTING AND CHARGING THE REFRIGERANT SYSTEM 5-S12
  6. INSPECTION AND DISASSEMBLY 5-S21
  7. CABIN REMOVAL AND MOUNTING 5-S38
  8. WINDOW WASHER 5-S40
  9. LIGHTING DEVICES (CAB WORK LIGHT, INTERIOR LIGHT) 5-S43
  10. REMOVAL AND INSTALLATION OF GLASS 5-S46
  11. FRONT WINDOW.....5-S49

https://truckmanualshub.com/

TO THE READER

This Workshop Manual provides service personnel with information about the mechanisms, service and maintenance of the construction machinery. This Workshop Manual is divided into 3 sections, General, Mechanisms and Service.

■ General

This section contains information such as engine and equipment ID numbers, general precautions, maintenance schedules, inspections and maintenance items and special tools.

■ Mechanisms

This section describes the structure of mechanisms and explains their functions.Be sure that you fully understand this Mechanisms section prior to performing any service work, such as troubleshooting or when performing any disassembly or assembly work.

■ Service

This section contains information and procedures for performing maintenance on the backhoe, such as troubleshooting, service specification tables, torque specifications, items to be inspected and adjusted, disassembly and assembly procedures, as well as precautions, maintenance standard values and usage limits.

All of the illustrations, specifications and other information in this manual were created based on the latest model at the time of publication.

Please be aware that changes to the content may be made without prior notice.

■ NOTE

- **Corresponding model list**

Machine Model		Engine Model
U48-4 U55-4	For European Union	V2607-DI-E3-BH

March, 2010

© KUBOTA Corporation 2010

https://truckmanualshub.com/

Record of Revisions

Last digit of the Code No.	Date	Main Revised Point and Corrective Measures	Person-in-charge
1			
2			
3			
4			

https://truckmanualshub.com/

I INFORMATION

https://truckmanualshub.com/

INFORMATION

CONTENTS

1. SAFETY FIRST I-1
2. SAFETY DECALS I-4

https://truckmanualshub.com/

1. SAFETY FIRST

⚠ SAFETY FIRST

- **This symbol, the industry's "Safety Alert Symbol", is used throughout this manual and on labels on the machine itself to warn of the possibility of personal injury. Read these instructions carefully.**
- **It is essential that you read the instructions and safety regulations before you attempt to repair or use this unit.**

⚠ DANGER
- **Indicates an imminently hazardous situation which, if not avoided, will result in death or serious injury.**

⚠ WARNING
- **Indicates a potentially hazardous situation which, if not avoided, could result in death or serious injury.**

⚠ CAUTION
- **Indicates a potentially hazardous situation which, if not avoided, may result in minor or moderate injury.**

■ IMPORTANT
- **Indicates that equipment or property damage could result if instructions are not followed.**

■ NOTE
- **Gives helpful information.**

RY9212007INI0001US0

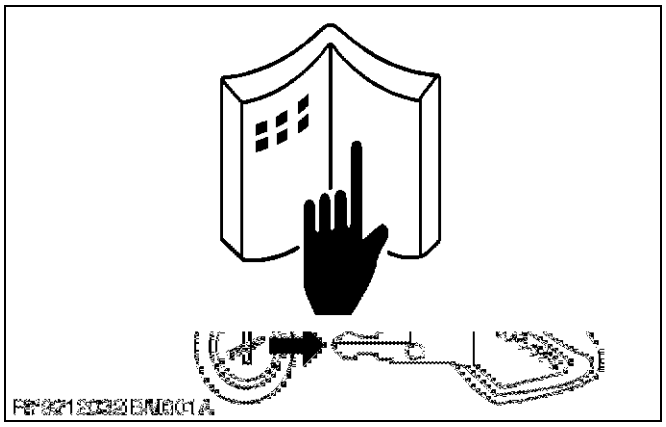

BEFORE SERVICING AND REPAIRING

- Read all instructions and safety instructions in this manual and on your engine safety decals.
- Clean the work area and engine.
- Park the machine on a stable and level ground.
- Let the temperature of the engine decrease before you start a job.
- Stop the engine, then remove the key.
- Disconnect the battery negative cable.
- Hang a **"DO NOT OPERATE"** tag in the operator station.

RY9212007INI0002US0

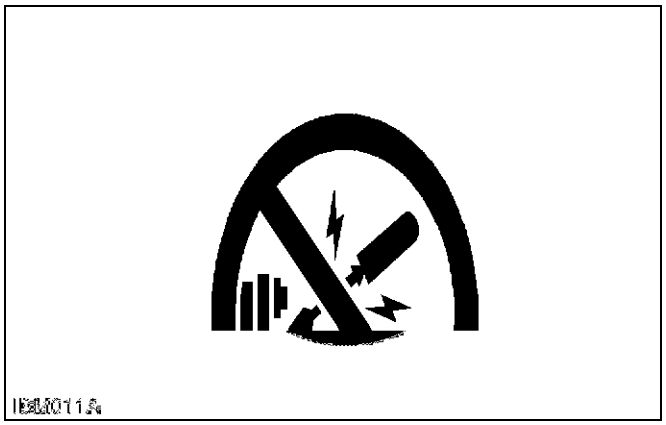

SAFETY STARTING

- Do not do the procedures below when you start the engine.
  - short across starter terminals
  - bypass the safety start switch
- Do not make unauthorized modifications to the engine. This can cause damage and decrease the engine life.

RY9212007INI0003US0

https://truckmanualshub.com/

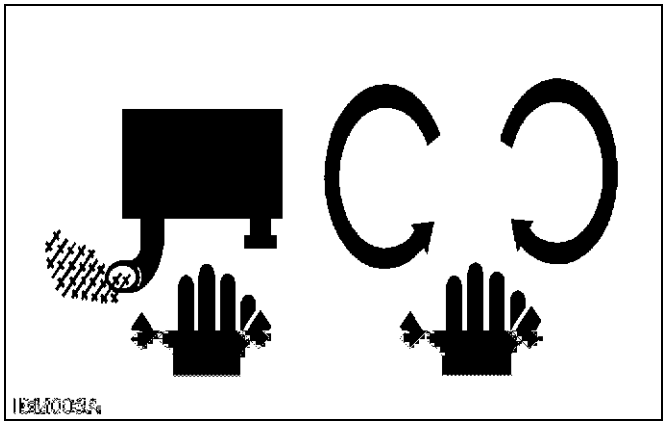

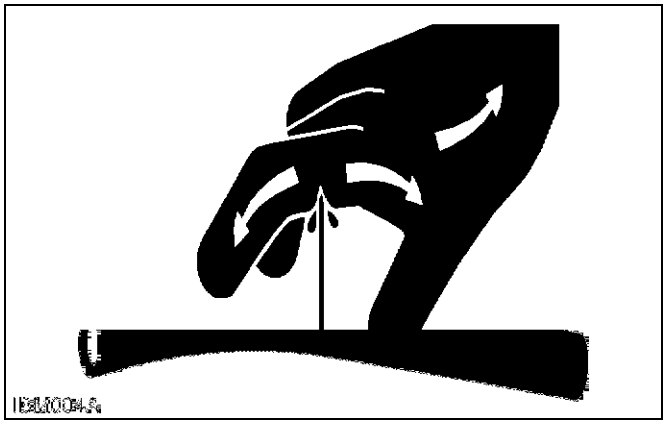

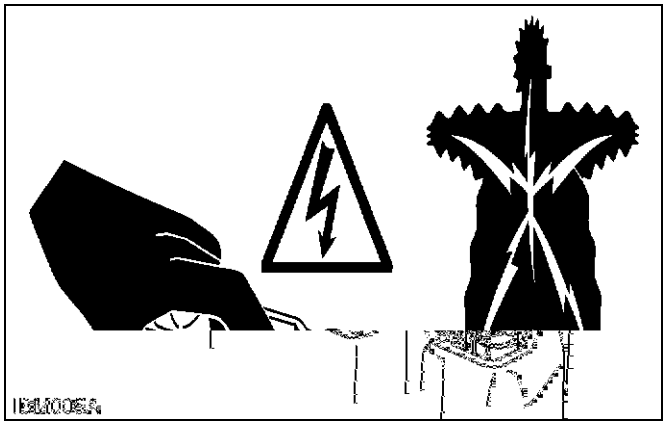

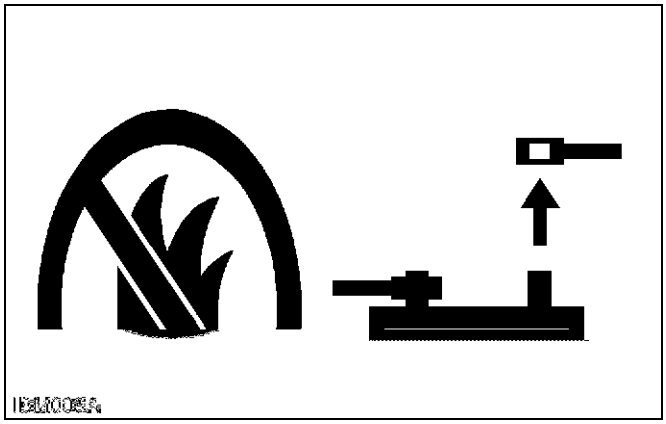

SAFETY WORKING

- Do not use the machine after you consume alcohol or medication or when you are tired.
- Put on applicable clothing and safety equipment.
- Use applicable tools only. Do not use alternative tools or parts.
- When 2 or more persons do servicing, make sure that you do it safely.
- Do not touch the hot parts or parts that turn when the engine operates.
- Do not remove the radiator cap when the engine operates, or immediately after it stops. If not, hot water can spout out from the radiator. Only remove the radiator cap when it is at a sufficiently low temperature to touch with bare hands. Slowly loosen the cap to release the pressure before you remove it fully.
- Released fluid (fuel or hydraulic oil) under pressure can cause damage to the skin and cause serious injury. Release the pressure before you disconnect hydraulic or fuel lines. Tighten all connections before you apply the pressure.
- Do not open a fuel system under high pressure.
  The fluid under high pressure that stays in fuel lines can cause serious injury. Do not disconnect or repair the fuel lines, sensors, or any other components between the fuel pump and injectors on engines with a common rail fuel system under high pressure.
- Put on an applicable ear protective device (earmuffs or earplugs) to prevent injury against loud noises.
- Be careful about electric shock. The engine generates a high voltage of more than DC100 V in the ECU and is applied to the injector.

RY9212007INI0004US0

AVOID FIRES

- Fuel is very flammable and explosive under some conditions. Do not smoke or let flames or sparks in your work area.
- To prevent sparks from an accidental short circuit, always disconnect the battery negative cable first and connect it last.
- The battery gas can cause an explosion. Keep the sparks and open flame away from the top of battery, especially when you charge the battery.
- Make sure that you do not spill fuel on the engine.

RY9212007INI0005US0

https://truckmanualshub.com/

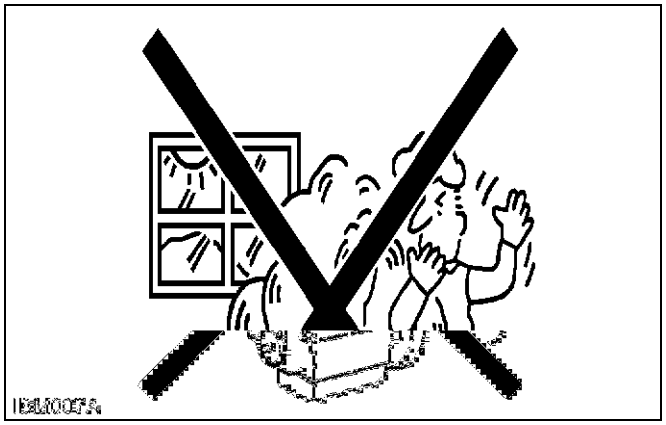

KEEP A GOOD AIRFLOW IN THE WORK AREA

- If the engine is in operation, make sure that the area has good airflow. Do not operate the engine in a closed area. The exhaust gas contains poisonous carbon monoxide.

RY9212007INI0006US0

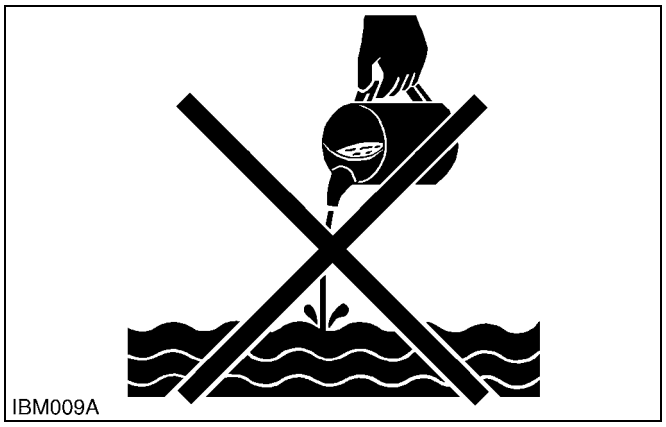

DISPOSE OF FLUIDS CORRECTLY

- Do not discard fluids on the ground, down the drain, into a stream, pond, or lake. Obey related environmental protection regulations when you discard oil, fuel, coolant, electrolyte and other dangerous waste.

RY9212007INI0007US0

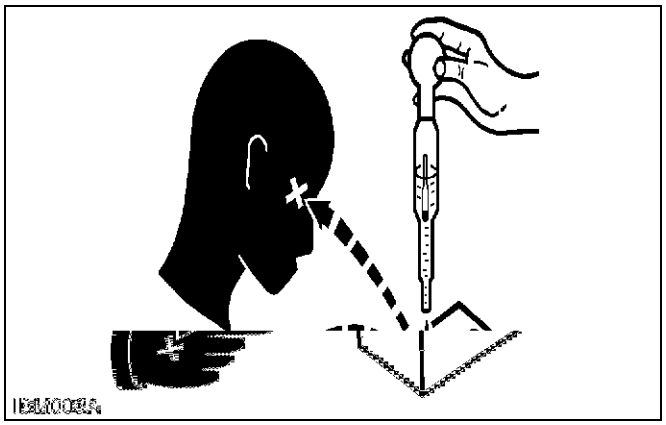

PREVENT ACID BURNS

- Keep electrolyte away from your eyes, hands and clothing. Sulfuric acid in battery electrolyte is poisonous and it can burn your skin and clothing and cause blindness. If you spill electrolyte on yourself, clean yourself with water, and get medical aid immediately.

RY9212007INI0008US0

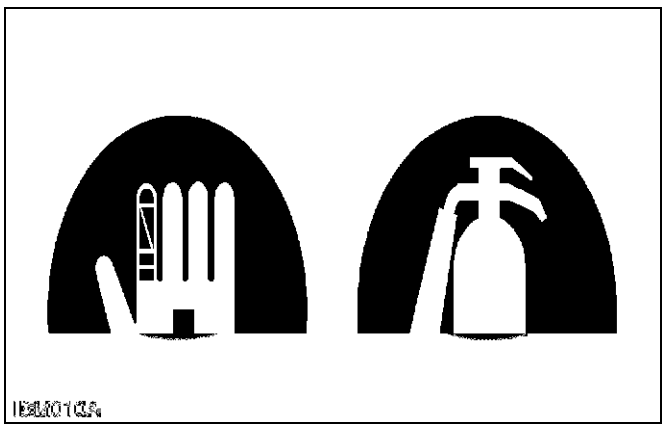

PREPARE FOR EMERGENCIES

- Keep a first aid kit and fire extinguisher ready at all times.
- Keep emergency numbers for doctors, ambulance service, hospital and fire department near your telephone at all times.

RY9212007INI0009US0

https://truckmanualshub.com/

2. SAFETY DECALS

The following safety decals are installed on the machine.
If a decal becomes damaged, illegible or is not on the machine, replace it. The decal part number is listed in the parts list.

RY9212007INI0010US0

DANGER, WARNING AND CAUTION LABELS

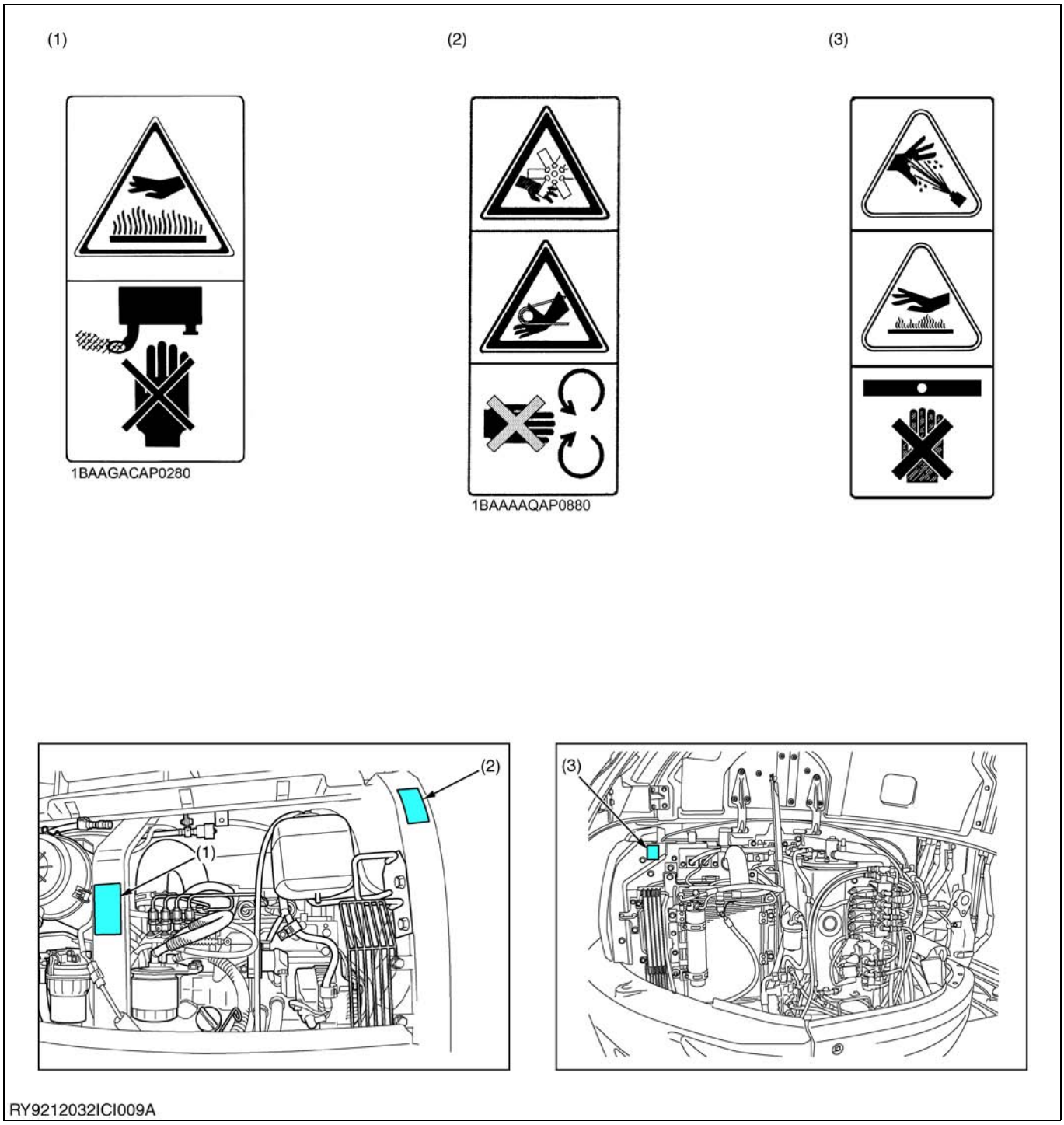

(1) Part No. TA040-49580 - Do not touch hot parts such as exhaust etc.
(2) Part No. RC418-57370 - Keep away from fan and fan belt.
(3) Part No. RA028-57240 - Attention to the danger of burning.

RY9212007INI0011US0

https://truckmanualshub.com/

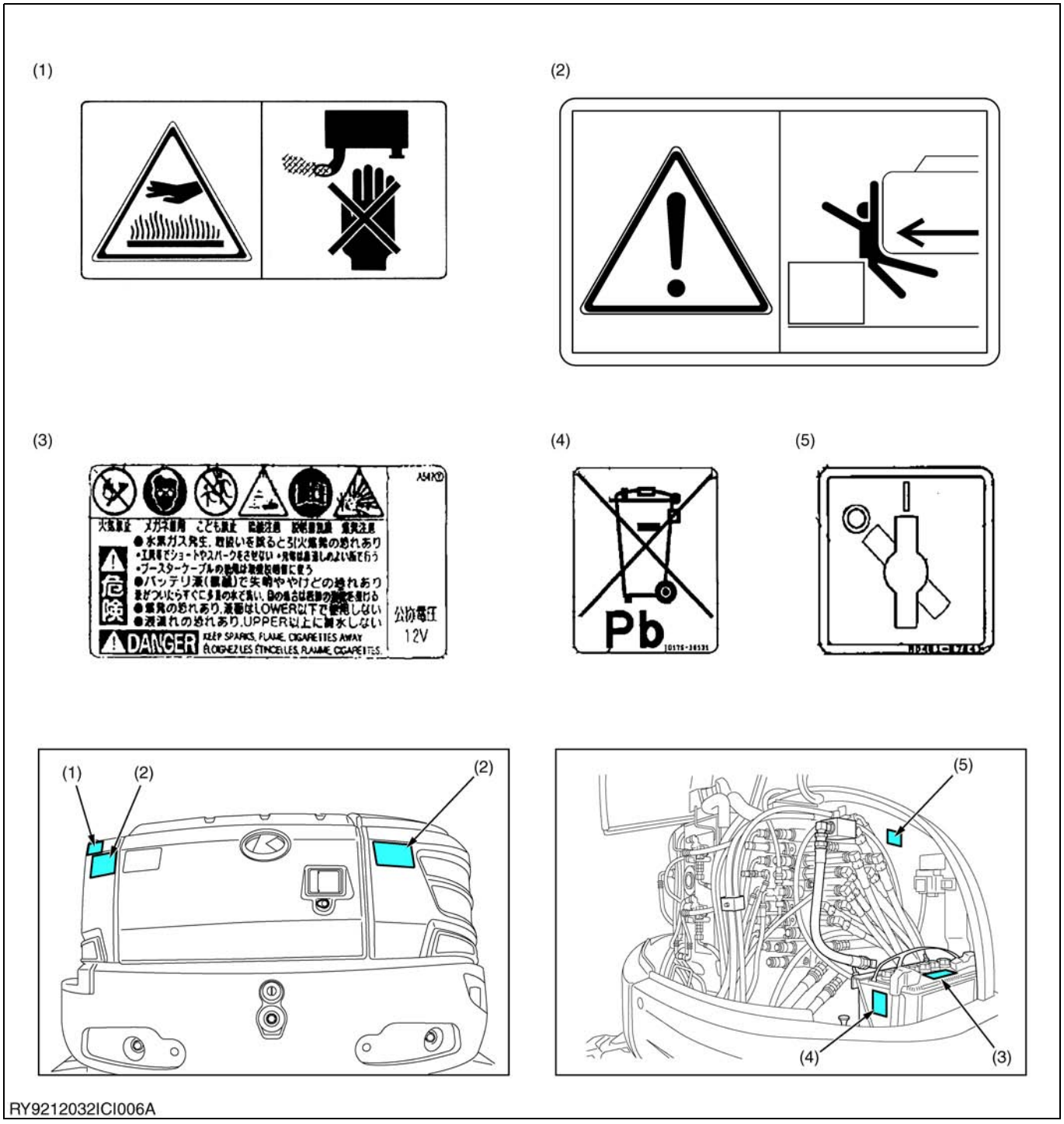

RY9212032ICI006A

(1) Part No. RD809-57450 - Do not touch hot parts such as exhaust etc.
(2) Part No. RD809-57250 - Do not allow any persons within the working range.
(3) Part No. T1060-30090 - Keep sparks, flame, cigarettes away.
(4) Part No. TD179-30130 - Battery recycle label
(5) Part No. RD359-57840 - Battery cut switch label

RY9212007INI0012US0

https://truckmanualshub.com/

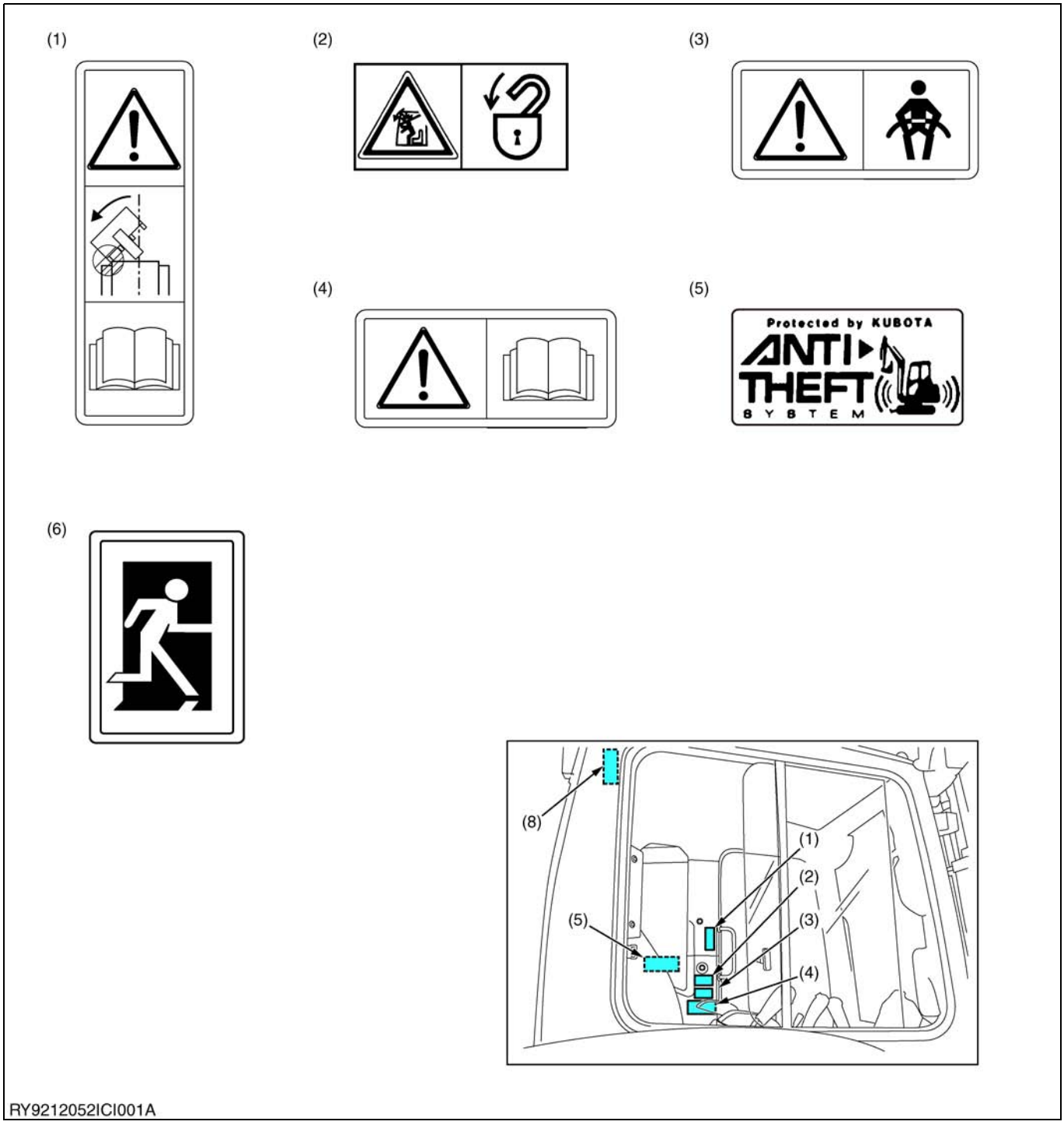

(1) Part No. RD809-57390 - When using a wider or deeper bucket, take good care when swinging or pulling in the front attachments to make sure that the bucket does not hit the cab.
(2) Part No. RB419-57930 - Label front door lock
(3) Part No. RD809-57430 - Fasten the seatbelt.
(4) Part No. 69198-57840 - Label manual
(5) Part No. RA228-93380 - Anti-theft system
(6) Part No. RD809-57140 - Emergency exit

RY9212052INI0001US0

https://truckmanualshub.com/

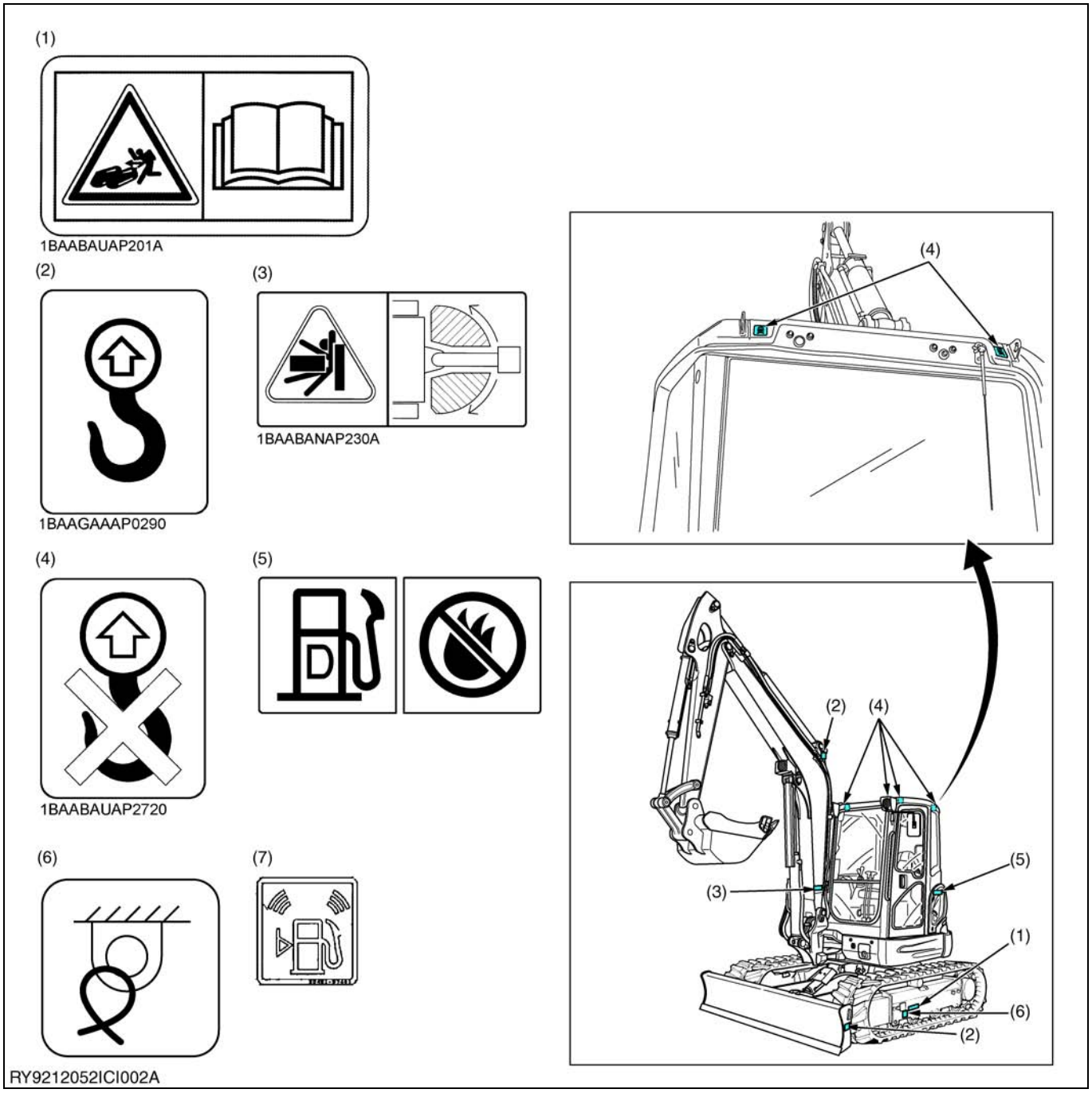

(1) Part No. RD809-57950 - For information about loosening the crawler, consult the operating instructions.
(2) Part No. RC108-57960 - Attachment point for lifting gear.
(3) Part No. RD809-57250 - Do not enter the manoeuvring area.
(4) Part No. RB419-57960 - Not an attachment point for lifting gear!
(5) Part No. RD451-57480 - Diesel fuel only, no open fire.
(6) Part No. RA809-57330 - Use the attachment point only for clamping the excavator securely to a transport vehicle.
(7) Part No. RD359-57260 - Fuel supply label

RY9212052INI0002US0

https://truckmanualshub.com/

CARE OF DANGER, WARNING AND CAUTION LABELS

1. Keep danger, warning and caution labels clean and free from obstructing material.
2. Clean danger, warning and caution labels with soap and water, dry with a soft cloth.
3. Replace damaged or missing danger, warning and caution labels with new labels from your KUBOTA dealer.
4. If a component with danger, warning and caution label(s) affixed is replace with new part, make sure new label(s) is (are) attached in the same locations(s) as the replace component.
5. Mount new danger, warning and caution labels by applying on a clean dry surface and pressure any bubbles to outside edge.

RY9212007INI0015US0

https://truckmanualshub.com/

G GENERAL

https://truckmanualshub.com/

GENERAL

CONTENTS

1. CHECKING EXCAVATOR IDENTIFICATION G-1
2. ENGINE IDENTIFICATION G-2
   [1] MODEL NAME AND SERIAL NUMBER G-2
   [2] E3B ENGINE G-3
   [3] CYLINDER NUMBER G-3
3. GENERAL PRECAUTIONS G-4
4. HANDLING PRECAUTIONS FOR ELECTRICAL PARTS AND WIRING G-8
   [1] WIRING G-8
   [2] FUSES G-10
   [3] CONNECTOR G-10
   [4] WASHING THE EXCAVATOR WITH A HIGH-PRESSURE WASHER G-11
5. TIGHTENING TORQUES G-12
   [1] GENERAL USE SCREWS, BOLTS AND NUTS G-12
   [2] STUD BOLTS G-12
   [3] TORQUE FOR HYDRAULIC HOSE FITTINGS G-13
      (1) Torque for Hydraulic Hose Fittings G-13
      (2) Torques of Lock-Nuts for Elbows with Male Seats and Adaptors with O-rings (Straight Threads) G-14
      (3) Torque for Tapering Adaptors G-14
   [4] HOSE CLAMP SCREW TORQUE G-15
6. NEW PRODUCT FEATURE (EUROPEAN VERSION) G-17
7. NEW FEATURES OUTLINE G-20
8. QUALITY SPECIFICATIONS G-22
9. WATER AND OIL QUANTITY G-33
10. DESCRIPTION OF PARTS G-34
   [1] BUCKET G-34
      (1) Bucket dimensions G-34
      (2) Bucket installation relevant dimensions G-35
   [2] RUBBER CRAWLER G-36
   [3] STEEL CRAWLER G-36
   [4] TRUCK ROLLER, IDLER, SPROCKET G-37
   [5] CYLINDER G-38
   [6] PARTS WEIGHT G-39
11. MAINTENANCE CHECK LIST G-41

https://truckmanualshub.com/

1. CHECKING EXCAVATOR IDENTIFICATION

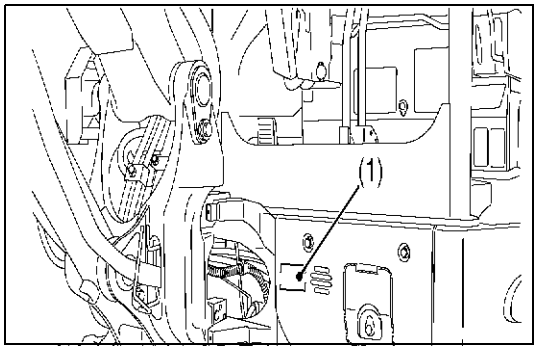

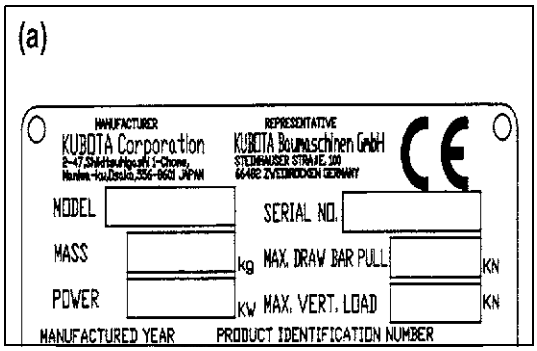

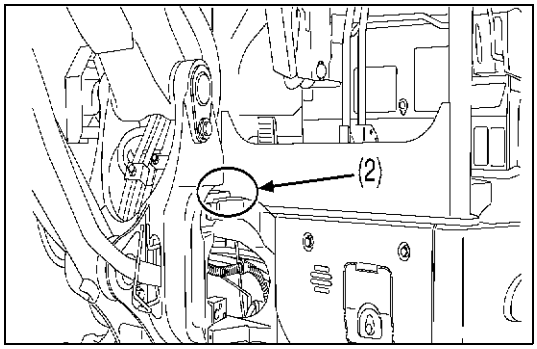

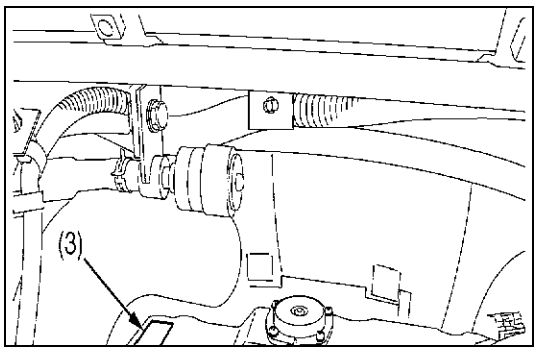

When consulting with your local KUBOTA dealer about this mini-excavator, please provide the model of the mini-excavator, its frame and engine numbers and the number of hours on the hour meter.

(1) Mini-excavator Nameplate (Model, frame number, engine number)
(2) Frame Number
(3) Engine Number

(a) Model Nameplate

RY9212032GEG0003US0

https://truckmanualshub.com/

2. ENGINE IDENTIFICATION

[1] MODEL NAME AND SERIAL NUMBER

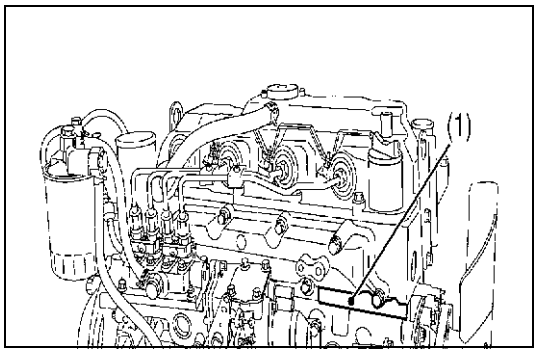

Be sure to check the engine nameplate and serial number when you wish to consult about the engine.

The model and serial number of the engine need to be checked prior to servicing the engine or replacing any of its parts.

■ **Engine Serial No.**

The engine serial number is the numerical ID of the engine and is printed after the engine's model number.

The year and month of manufacture are indicated as follows

Year Manufactured

Letter or Number	Year	Letter or Number	Year
1	2001	F	2015
2	2002	G	2016
3	2003	H	2017
4	2004	J	2018
5	2005	K	2019
6	2006	L	2020
7	2007	M	2021
8	2008	N	2022
9	2009	P	2023
A	2010	R	2024
B	2011	S	2025
C	2012	T	2026
D	2013	V	2027
E	2014		

*The letters **I**, **O**, **Q**, **U** and **Z** are not used.

Month Manufactured

Month	Lot Number	
January	A0001 to A9999	B0001 to BZ999
February	C0001 to C9999	D0001 to DZ999
March	E0001 to E9999	F0001 to FZ999
April	G0001 to G9999	H0001 to HZ999
May	J0001 to J9999	K0001 to KZ999
June	L0001 to L9999	M0001 to MZ999
July	N0001 to N9999	P0001 to PZ999
August	Q0001 to Q9999	R0001 to RZ999
September	S0001 to S9999	T0001 to TZ999
October	U0001 to U9999	V0001 to VZ999
November	W0001 to W9999	X0001 to XZ999
December	Y0001 to Y9999	Z0001 to ZZ999

*The letter **I** and **O** are not used.

(a) (b)(c) (d)
e.g. V2607 - 8 HA001

(a) Engine Model : **V2607-DI**
(b) Year Manufactured : The **8** indicates **2008**.
(c) Month : April is indicated by either **G** or **H**.
(d) Lot Number : (Either **0001 to 9999** or **A001 to Z999**)

(1) Engine Model and Serial Number

RY9212001END0009US0

https://truckmanualshub.com/

[2] E3B ENGINE

[Ex. : Engine Model V2607-DI-E3B-XXXX]

While the exhaust emissions regulations in each country that have been implemented to date to prevent air pollution are constantly changing, regulations governing off-road exhaust emissions are expected to be implemented more quickly. The date that specific off-road exhaust emissions regulations will take effect depends on the output category of the engine.

For some years now KUBOTA has been supplying regulation-compliant diesel engines in countries where off-road exhaust emission regulations have been introduced. KUBOTA's E3B series of engines meet the next phase of exhaust emission regulations. (See the table below.)

Whenever repairs or service is performed on a ###-E3B series engine, E3B engine replacements parts, which are in the applicable E3B KUBOTA Parts List, must be used and the KUBOTA Operator's Manual and E3B Workshop Manual must be used for maintenance. Use of incorrect replacement parts or replacement parts from other emission level engines (for example : E2B engines), may result in emission levels out of compliance with the original E3B design, EPA and/or other applicable regulations. Check the output category and emissions data on the emissions label on the header cover of the engine. E3B engines have the suffix ET after the model name on the EPA label. E3B is not marked on the engine.

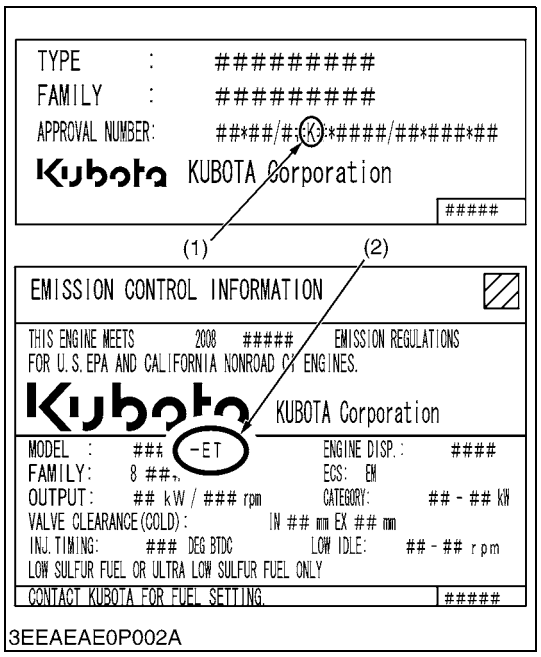

3EEAEAE0P002A

Class (1)	Engine Output Category	EU Regulation
K	19 to/not including 37 kW	STAGE IIIA
J	37 to/not including 75 kW	STAGE IIIA
I	75 to/not including 130 kW	STAGE IIIA

Class (2)	Engine Output Category	EPA Regulation
ET	Less than 19 kW	Tier 4
	19 to/not including 56 kW	Interim Tier 4
	56 to/not including 75 kW	Tier 3
	75 to/not including 130 kW	Tier 3

(1) EU Regulation engine output classification
(2) "E3B engines" have the suffix ET after the model name on the EPA label. "E3B" models meet Tier 3, Interim Tier4 or Tier4 regulations, depending on the engine output category.

RY9212001END0010US0

[3] CYLINDER NUMBER

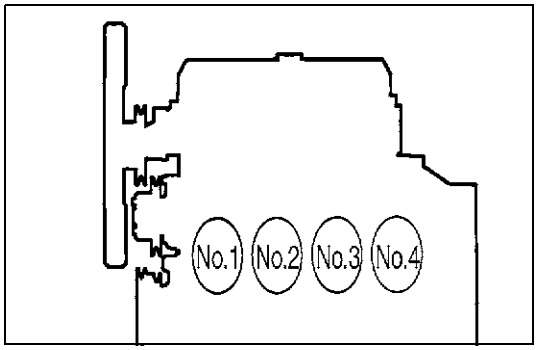

KUBOTA diesel engines are numbered as indicated in the figure.

Cylinders are numbered from the front cover (fan side) in the order 1, 2, 3 and 4.

RY9212001END0011US0

https://truckmanualshub.com/

3. GENERAL PRECAUTIONS

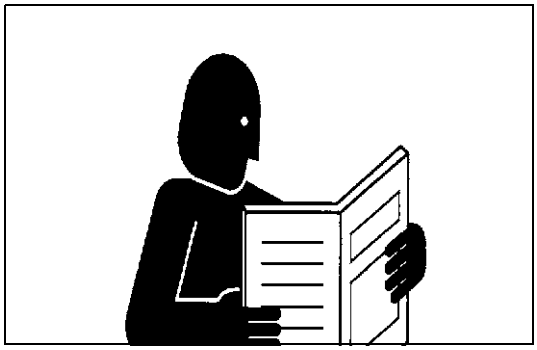

Whenever performing maintenance on the mini-excavator, always read the Safety Precautions in this manual and the Operator's Manual carefully, become familiar with them and perform the work safely.

Before performing any maintenance on the mini-excavator, make sure it is sufficiently clean and choose a sufficiently clean location to perform any disassembly.

Before performing maintenance on the mini-excavator, always disconnect the negative battery cable first.

Whenever a special tool is required, use the special tool that KUBOTA recommends. Make any special tools that are not used very frequently according to the diagrams in this manual.

Always use genuine KUBOTA parts to maintain the performance and safety characteristics of the mini-excavator.

RY9212001GEG0011US0

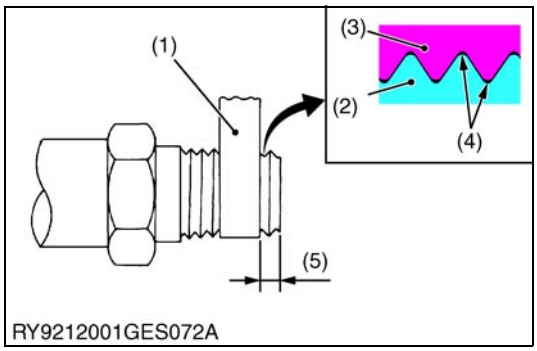

RY9212001GES072A

Plumber's Tape

- Wrap plumber's tape on the threads before tightening taper couplings. After wrapping (2 wraps) the plumber's tape, tighten to the specified torque. Once the coupling is tightened, do not loosen it as this will cause an oil leak.

(1) Plumber's Tape
(2) External Thread
(3) Internal Thread
(4) Gap
(5) Leave 1 to 2 threads

RY9212001GEG0012US0

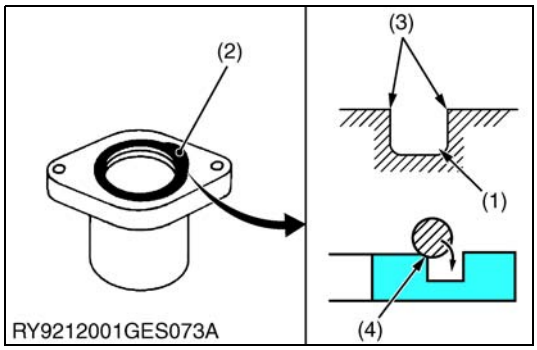

RY9212001GES073A

O-Ring

- Clean the groove the O-ring goes in and remove any burrs. Apply grease on the O-ring when inserting it in the groove. (Except floating seals)
- When putting the O-ring in the groove, be careful as it is easy at the very end to twist the O-ring against the inside of the groove. If it gets twisted, roll it gently with your fingertip to untwist it.

(1) O-ring Groove
(2) O-ring
(3) Check for burrs
(4) If the ring touches this corner, it will twist

RY9212001GEG0013US0

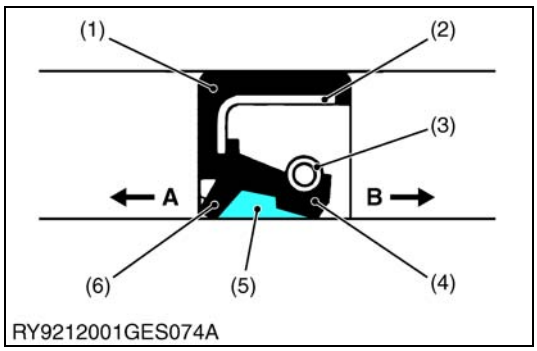

RY9212001GES074A

Oil Seal

- Do not face the lip of the oil seal in the wrong direction. Face the main lip toward the material to be sealed.
- After oil seals are replaced, apply grease to the moving parts around the lip to prevent the dry surfaces from wearing against each other when the engine is started. If the seal has a dust lip, fill the gap between the lips with grease.
- As a general rule, use a press to insert the oil seal in place. If that is not possible, use an appropriate tool to gently and evenly tap it into place, taking care that it does not go in at a slant. Press the seal all the way so it seats in the boss.

(1) Gasket
(2) Metal Ring
(3) Spring
(4) Main Lip
(5) Grease
(6) Dust Lip

A : Air (outside)
B : Hydraulic chamber (inside)

RY9212001GEG0014US0

https://truckmanualshub.com/

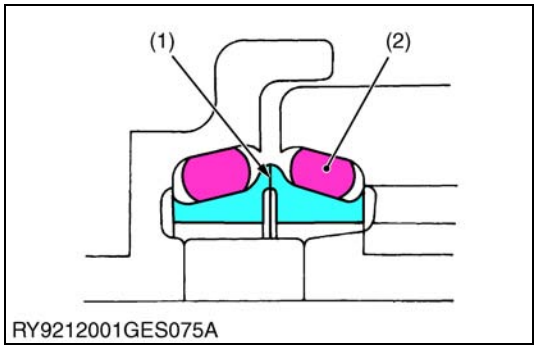

Floating Seal

- Be sure to wipe off any oil from the O-ring or surfaces that touch the O-ring. (For wheel motors, apply a light film)
- When putting an O-ring into a floating seal, make sure the O-ring does not twist.
- Apply a light film of oil to surrounding surfaces when working to get the floating seal with O-ring in place; take care that the surrounding surfaces, O-ring and housing are parallel with each other.
- After getting the seal in place, turn the engine over 2 or 3 revolutions, to both create a film of oil on surrounding surfaces and to properly seat the face of the seal.

(1) Surrounding Surfaces (2) O-ring

RY9212001GEG0015US0

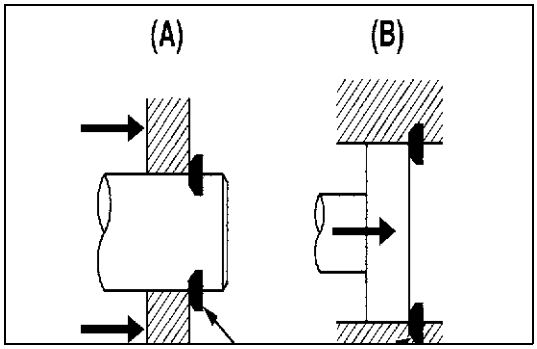

Snap Ring Related

- When installing external or internal snap rings, orient them as shown in the diagram so the angled side faces the direction of force.

(1) Position so the angled part receives the force **(A) External** **(B) Internal**

RY9212001GEG0016US0

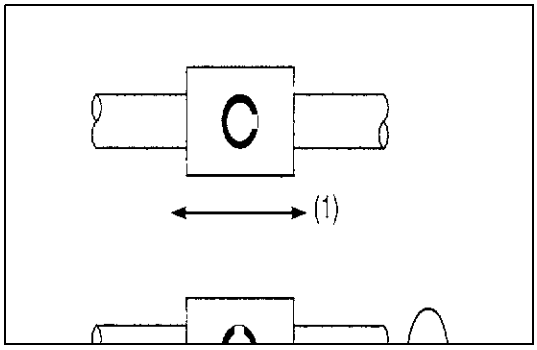

Spring Pins

- When driving a spring pin, face the split in the direction that receives the force, as shown in the diagram.

(1) With lateral movement (2) With rotational movement

RY9212001GEG0017US0

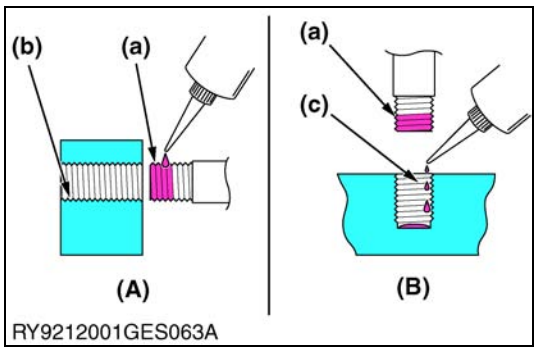

Locktite

- Clean and dry the area where Locktite will be applied with a solvent so it is free of moisture, oil and dirt.
- Apply locktite all around the threads of the bolt except the first set of threads at the tip and fill the grooves between the threads. If the threads or the grooves are large, adjust the amount of locktite accordingly and apply it all around the bolt hole as well.

(A) Bolt Through-hole (nut)
(B) Pocket Bolt Hold (capsule shape, etc.)
(a) Apply here
(b) Do not apply
(c) Drip on

RY9212001GEG0018US0

https://truckmanualshub.com/

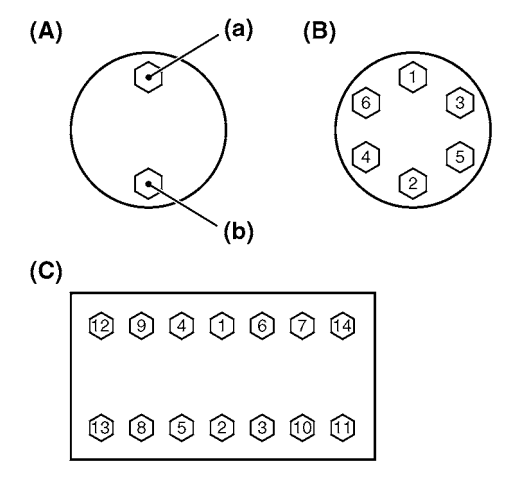

RY9212001GES076A

Tightening Bolts and Nuts

- Tighten bolts and nuts to their specified torque.
- Tighten nuts and bolts alternately top/bottom **(a) (b)**, left/right so the torque is distributed evenly.

(A) Top/bottom alternately
(B) Across diagonally
(C) Diagonally across the center

RY9212001GEG0019US0

Assembling Hydraulic Hoses

- Tighten to their specified torque.
- Before assembling, wipe the inside of metal fittings clean of any dirt.
- After assembly, put the fitting under normal pressure and check that it does not leak.

RY9212001GEG0020US0

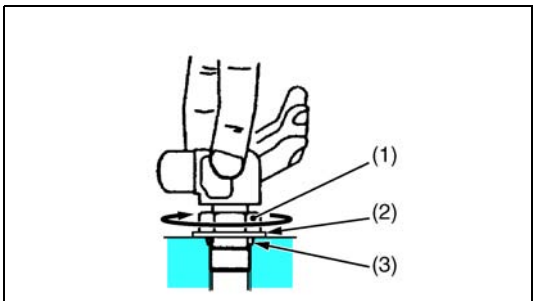

RY9212001GES077A

Elbow with Male Seat Assembly Procedure

When assembling an elbow with male seat, adhere to the following procedures to prevent deformation of O-rings and leaks.

1. Connecting to Valves
   - Clean the blow with male seat and the surface of the seal opposite and mount with the lock-nut on top.
   - Finger tighten till it touches the washer.

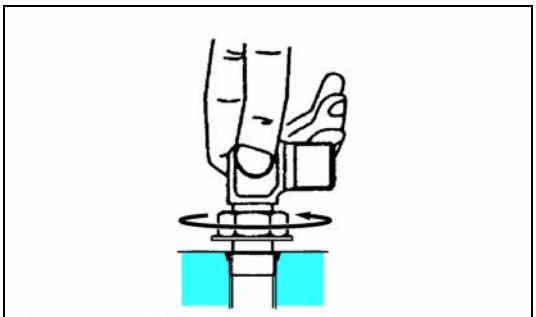
RY9212001GES078A

2. Positioning
   - Turn the mouth of the elbow back so it faces the right direction. (not back over 1 turn)

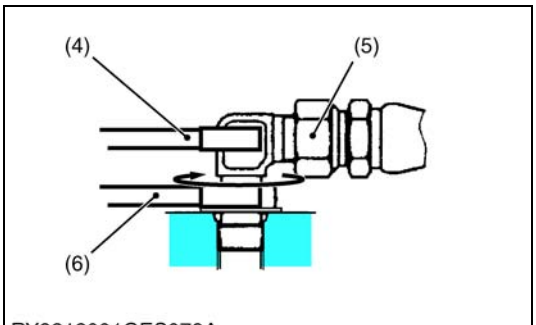

RY9212001GES079A

3. Fasten
   - Tighten the lock-nut to the specified torque with a wrench.

(1) Lock-nut
(2) Washer
(3) Seal (O-ring)
(4) Wrench for holding
(5) Hose
(6) Torque wrench for tightening

RY9212001GEG0021US0

https://truckmanualshub.com/

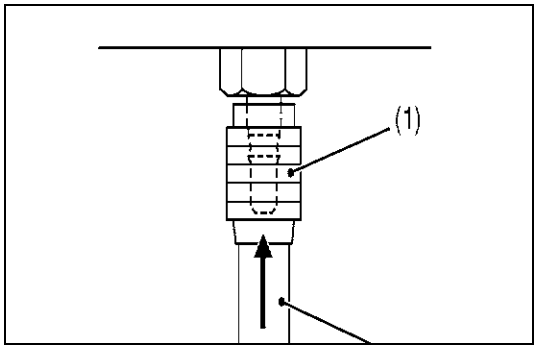

Installing and Removing Quick Couplings

- To remove a quick hose coupling, push the fitting (2) in the direction of the arrow and pull on the plastic part (1) in the opposite direction.
- To attach a quick coupler, push it in firmly in the direction of the arrow. Then check that it will not pull off.

(1) Plastic part (2) Fitting

RY9212001GEG0022US0

https://truckmanualshub.com/

4. HANDLING PRECAUTIONS FOR ELECTRICAL PARTS AND WIRING

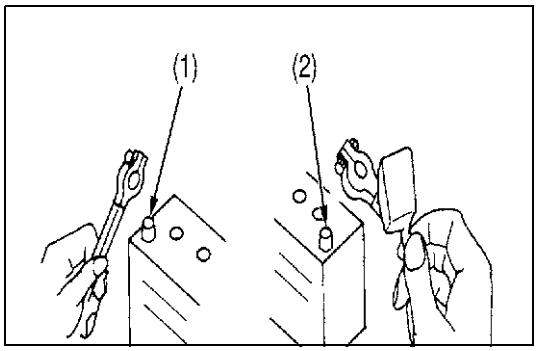

Follow the precautions below for handling electrical parts and wiring to ensure safety and prevent damage to the mini-excavator and nearby equipment.

■ **IMPORTANT**

- **Inspect electrical wiring for damage and/or loose connections.**
- **Do not alter or rewire any electrical parts or wiring.**
- **Always remove the negative battery cable first when disconnecting the battery and attach the positive cable first when connecting it.**

(1) Battery Cable (-) Side (2) Battery Cable (+) Side

RY9212001GEG0023US0

[1] WIRING

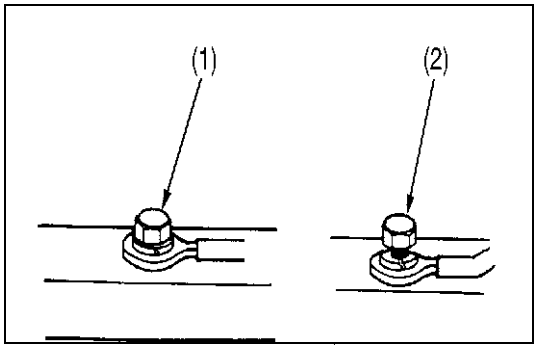

- Tighten wiring terminals securely.

(1) Correct (Tightened securely) (2) Incorrect (Poor contact if loose)

RY9212001GEG0024US0

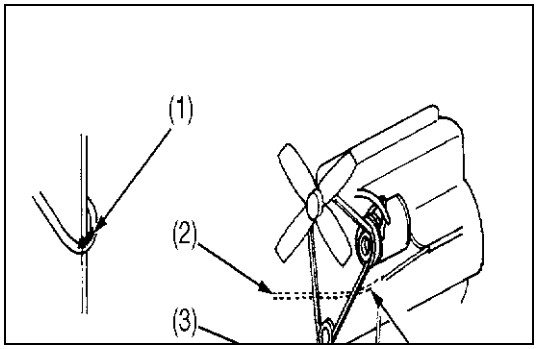

- Keep wiring away from hazards.

(1) Hazardous Positioning
(2) Wiring Position (wrong)
(3) Wiring Position (right)
(4) Hazardous Position

RY9212001GEG0025US0

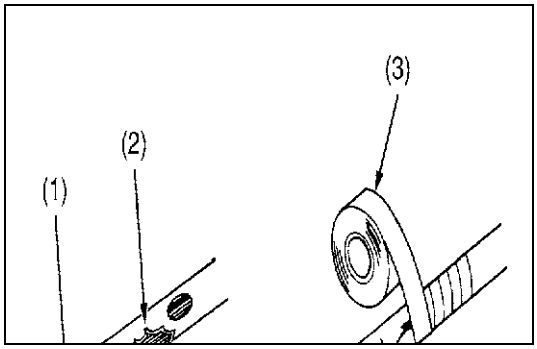

- Immediately repair or replace old or damaged wiring.

(1) Damaged
(2) Torn
(3) Electrical Tape

RY9212001GEG0026US0

https://truckmanualshub.com/

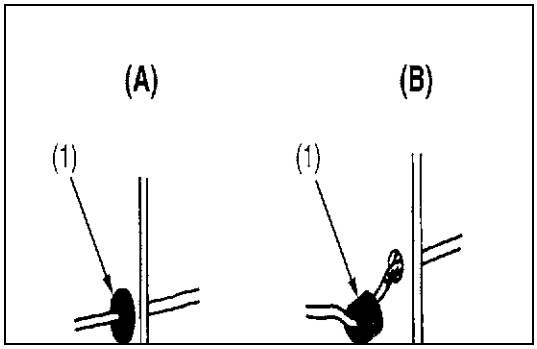

- Insert grommet securely.

(1) Grommet
(A) Correct
(B) Incorrect

RY9212001GEG0027US0

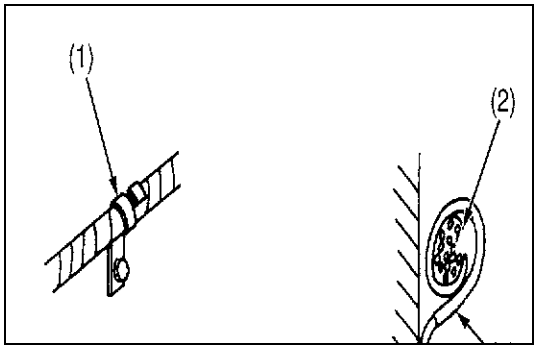

- Clamp wiring securely but do not damage wires with the clamp.

(1) Clamp (Spiral clamp around wire)
(2) Wire
(3) Clamp
(4) Welding Mark

RY9212001GEG0028US0

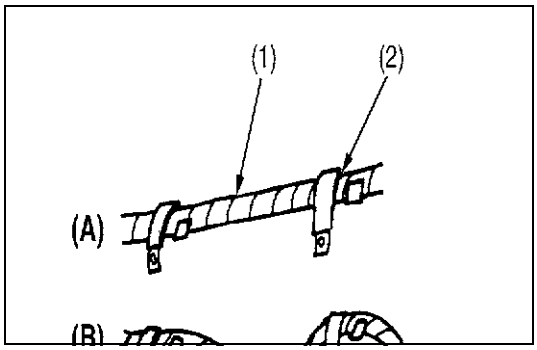

- Clamp wiring so it is not twisted, pulled too tight or sag too much. However, moving parts may require play in the wiring.

(1) Wire
(2) Clamp
(A) Correct
(B) Incorrect

RY9212001GEG0029US0

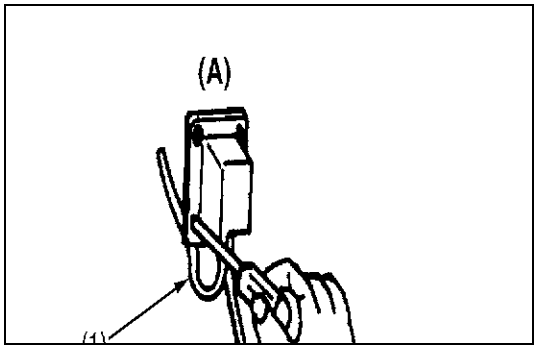

- Do not pinch or bind wiring when installing parts.

(1) Wire
(A) Incorrect

RY9212001GEG0030US0

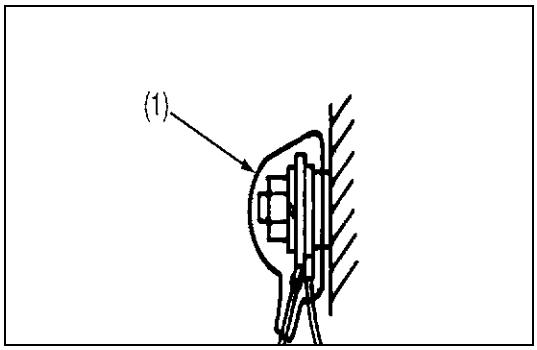

- After wiring, double-check terminal protectors and clamps before connecting battery cables.

(1) Cover (Install covers securely)

RY9212001GEG0031US0

https://truckmanualshub.com/

[2] FUSES

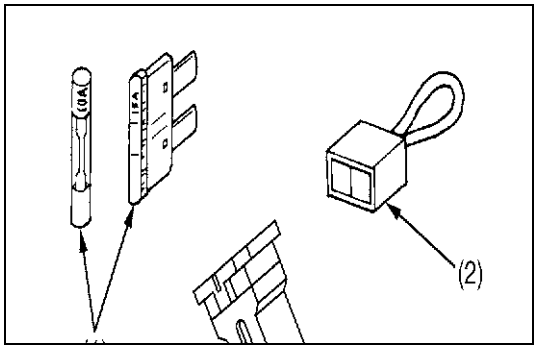

- Always use fuses of the specified capacity.
  Never use over or undersized fuses.
- Never use copper or steel wire in place of a fuse.
- Do not install accessories such as work lights, radios, etc., if your mini-excavator does not have an auxiliary circuit.
- Do not install accessories as they will exceed the capacity of fuses.

(1) Fuse
(2) Fusible Link
(3) Slow-blow Fuse

RY9212001GEG0032US0

[3] CONNECTOR

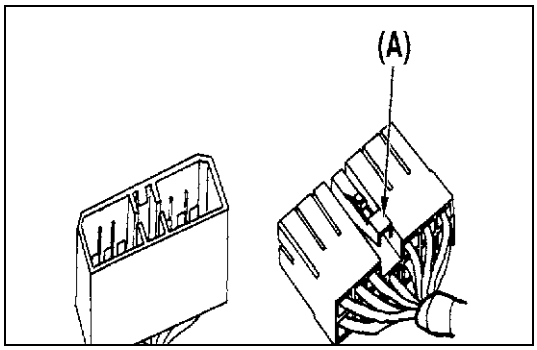

- Press the lock to disconnect locking connectors.

(A) Push

RY9212001GEG0033US0

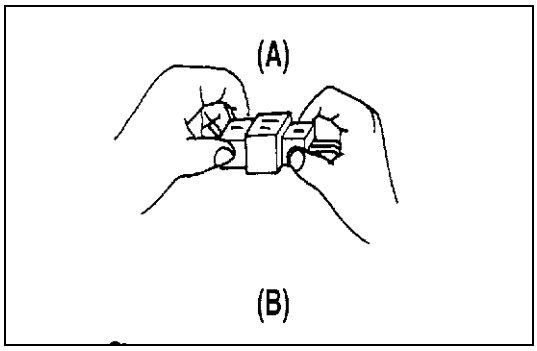

- Hold the connectors when separating them.
- Do not pull on the wire harness to separate the connectors.

(A) Correct
(B) Incorrect

RY9212001GEG0034US0

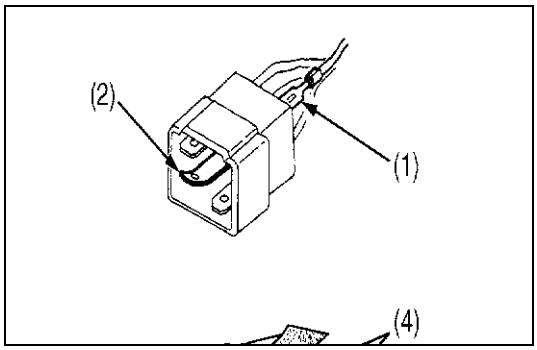

- Straighten bent prongs and make sure none are sticking out or missing.
- Remove corrosion from terminals with sandpaper.

(1) Missing terminal
(2) Bent Prong
(3) Sandpaper
(4) Corrosion

RY9212001GEG0035US0

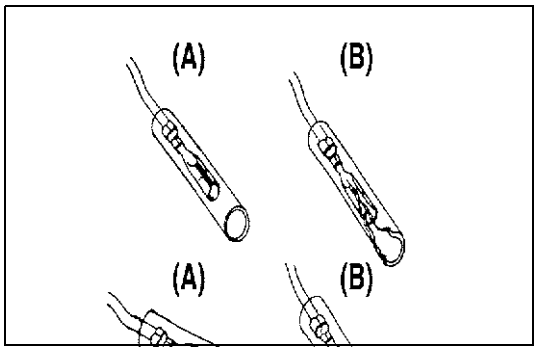

- Female connectors must not be spread too far open

(A) Correct
(B) Incorrect

RY9212001GEG0036US0

https://truckmanualshub.com/

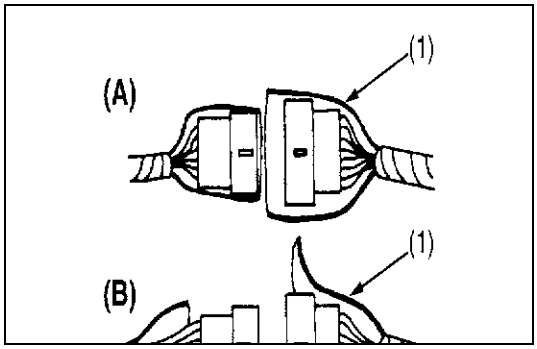

- The plastic covers of connectors must cover them completely.

(1) Cover

(A) Correct
(B) Incorrect

RY9212001GEG0037US0

[4] WASHING THE EXCAVATOR WITH A HIGH-PRESSURE WASHER

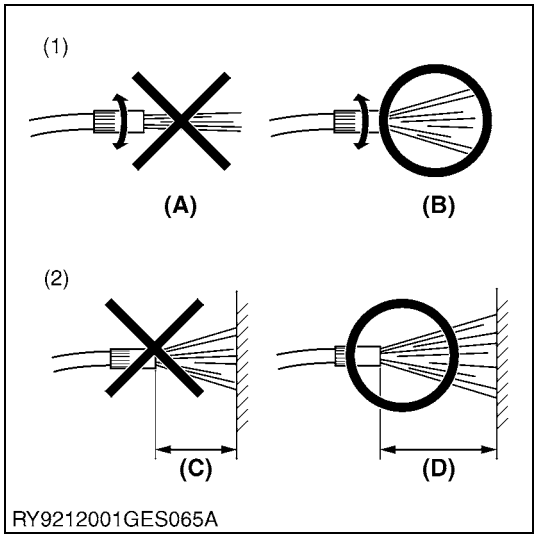

Using a high-pressure washer incorrectly can lead to personal injury and/or damage, break or cause parts of the mini-excavator to fail, so use the power washer properly according to its user's manual and labels.

CAUTION

- **Stand at least 2 meters from the mini-excavator and adjust the nozzle for a wide spray so it does not cause any damage. If you blast the mini-excavator with water or wash it from too close a distance,**

1. **It may cause a fire due to damaged or cuts in the insulation of electrical wiring.**
2. **An injury may result if hydraulic oil gushes out under high pressure, due to damaged hydraulic hoses.**
3. **It may damage, break or cause parts of the mini-excavator to fail.**

(Ex.)
(1) Stickers or labels may come off
(2) Electrical parts or the engine may fail due to water in them.
(3) Damage glass, resins, etc. or the rubber of oil seals.
(4) Tear off paint or the film from plating

(1) Do not blast with water
(2) Never wash from too close

(A) Blasting
(B) Wide Spray
(C) Less than 2 m (80 in.)
(D) Over 2 m (80 in.)

RY9212001GEG0038US0

https://truckmanualshub.com/

5. TIGHTENING TORQUES

[1] GENERAL USE SCREWS, BOLTS AND NUTS

Screws, bolts and nuts whose tightening torques are not specified in this Workshop Manual should be tightened according to the table below.

Indication on top of bolt	4 No-grade or 4T						7 7T						9 9T		
Indication on top of nut	No-grade or 4T												6T		
Material of opponent part	Ordinariness			Aluminum			Ordinariness			Aluminum			Ordinariness		
Unit	N·m	kgf·m	lbf·ft	N·m	kgf·m	lbf·ft	N·m	kgf·m	lbf·ft	N·m	kgf·m	lbf·ft	N·m	kgf·m	lbf·ft
M6	7.9 to 9.3	0.80 to 0.95	5.8 to 6.8	7.9 to 8.8	0.80 to 0.90	5.8 to 6.5	9.81 to 11.2	1.00 to 1.15	7.24 to 8.31	7.9 to 8.8	0.80 to 0.90	5.8 to 6.5	12.3 to 14.2	1.25 to 1.45	9.05 to 10.4
M8	18 to 20	1.8 to 2.1	13 to 15	17 to 19	1.7 to 2.0	13 to 14	24 to 27	2.4 to 2.8	18 to 20	18 to 20	1.8 to 2.1	13 to 15	30 to 34	3.0 to 3.5	22 to 25
M10	40 to 45	4.0 to 4.6	29 to 33	32 to 34	3.2 to 3.5	24 to 25	48 to 55	4.9 to 5.7	36 to 41	40 to 44	4.0 to 4.5	29 to 32	61 to 70	6.2 to 7.2	45 to 52
M12	63 to 72	6.4 to 7.4	47 to 53	–	–	–	78 to 90	7.9 to 9.2	58 to 66	63 to 72	6.4 to 7.4	47 to 53	103 to 117	10.5 to 12.0	76.0 to 86.7
M14	108 to 125	11.0 to 12.8	79.6 to 92.5	–	–	–	124 to 147	12.6 to 15.0	91.2 to 108	–	–	–	167 to 196	17.0 to 20.0	123 to 144
M16	167 to 191	17.0 to 19.5	123 to 141	–	–	–	197 to 225	20.0 to 23.0	145 to 166	–	–	–	260 to 304	26.5 to 31.0	192 to 224
M18	246 to 284	25.0 to 29.0	181 to 209	–	–	–	275 to 318	28.0 to 32.5	203 to 235	–	–	–	344 to 402	35.0 to 41.0	254 to 296
M20	334 to 392	34.0 to 40.0	246 to 289	–	–	–	368 to 431	37.5 to 44.0	272 to 318	–	–	–	491 to 568	50.0 to 58.0	362 to 419

RY9212032GEG0001US0

[2] STUD BOLTS

Material of opponent part	Ordinariness			Aluminum		
Unit	N·m	kgf·m	lbf·ft	N·m	kgf·m	lbf·ft
M8	12 to 15	1.2 to 1.6	8.7 to 11	8.9 to 11	0.90 to 1.2	6.5 to 8.6
M10	25 to 31	2.5 to 3.2	18 to 23	20 to 25	2.0 to 2.6	15 to 18
M12	30 to 49	3.0 to 5.0	22 to 36	31	3.2	23
M14	62 to 73	6.3 to 7.5	46 to 54	–	–	–
M16	98.1 to 112	10.0 to 11.5	72.4 to 83.1	–	–	–
M18	172 to 201	17.5 to 20.5	127 to 148	–	–	–

RY9212032GEG0002US0

https://truckmanualshub.com/

[3] TORQUE FOR HYDRAULIC HOSE FITTINGS

(1) Torque for Hydraulic Hose Fittings

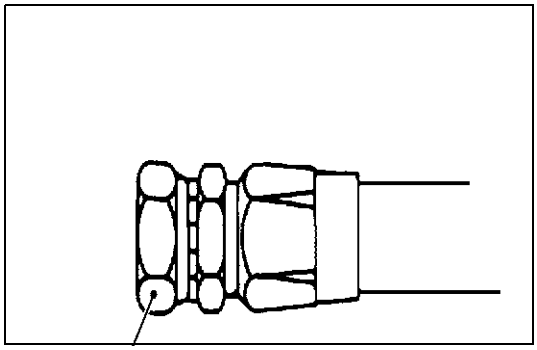

Union Nuts

Torque	1/8	7.8 to 11.8 N·m 0.8 to 1.2 kgf·m 5.7 to 8.7 lbf·ft
	1/4	24.5 to 29.2 N·m 2.5 to 3.0 kgf·m 18.1 to 21.7 lbf·ft
	3/8	37.2 to 42.1 N·m 3.8 to 4.3 kgf·m 27.5 to 31.1 lbf·ft
	1/2	58.8 to 63.7 N·m 6.0 to 6.5 kgf·m 43.4 to 47.0 lbf·ft
	3/4	117.6 to 127.4 N·m 12.0 to 13.0 kgf·m 86.8 to 94.0 lbf·ft
	1	181.3 to 191.1 N·m 18.5 to 19.5 kgf·m 133.8 to 141.0 lbf·ft
	1-1/4	220.5 to 230.3 N·m 22.5 to 23.5 kgf·m 162.8 to 170.0 lbf·ft

(1) Union Nuts

RY9212001GEG0041US0

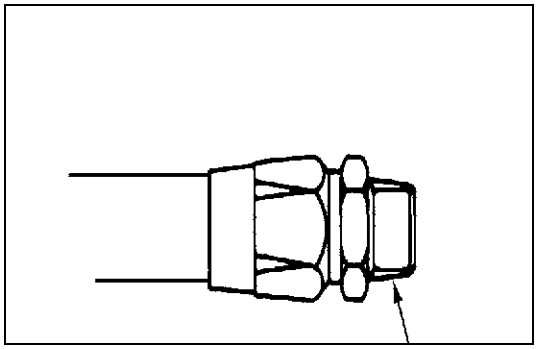

Tapered Nuts

Torque	1/8	19.6 to 29.4 N·m 2.0 to 3.0 kgf·m 14.5 to 21.7 lbf·ft
	1/4	36.6 to 44.1 N·m 3.7 to 4.5 kgf·m 26.8 to 32.5 lbf·ft
	3/8	68.6 to 73.5 N·m 7.0 to 7.5 kgf·m 50.6 to 54.2 lbf·ft
	1/2	83.4 to 88.3 N·m 8.5 to 9.0 kgf·m 61.5 to 65.1 lbf·ft
	3/4	166.6 to 181.3 N·m 17.0 to 18.5 kgf·m 123.0 to 133.8 lbf·ft

(1) Taper

RY9212001GEG0042US0

https://truckmanualshub.com/

(2) Torques of Lock-Nuts for Elbows with Male Seats and Adaptors with O-rings (Straight Threads)

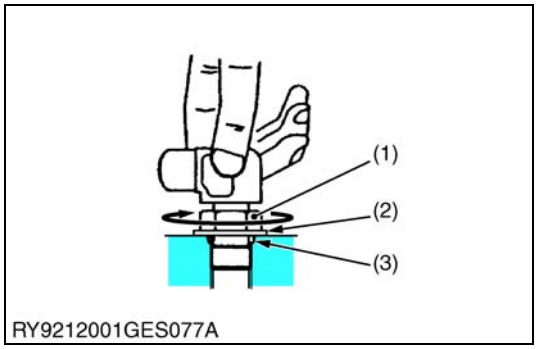

Torque	1/8	15.0 to 16.5 N·m 1.5 to 1.7 kgf·m 11.1 to 12.2 lbf·ft
	1/4	24.5 to 29.4 N·m 2.5 to 3.0 kgf·m 18.1 to 21.7 lbf·ft
	3/8	49.0 to 53.9 N·m 5.0 to 5.5 kgf·m 36.1 to 39.8 lbf·ft
	1/2	58.8 to 63.7 N·m 6.0 to 6.5 kgf·m 43.4 to 47.0 lbf·ft
	3/4, 1	117.6 to 127.4 N·m 12.0 to 13.0 kgf·m 86.8 to 94.0 lbf·ft
	1-1/4	220.5 to 230.3 N·m 22.5 to 23.5 kgf·m 162.8 to 170.0 lbf·ft

(1) Lock-nut
(2) Washer
(3) Seal (O-ring)

RY9212001GEG0043US0

(3) Torque for Tapering Adaptors

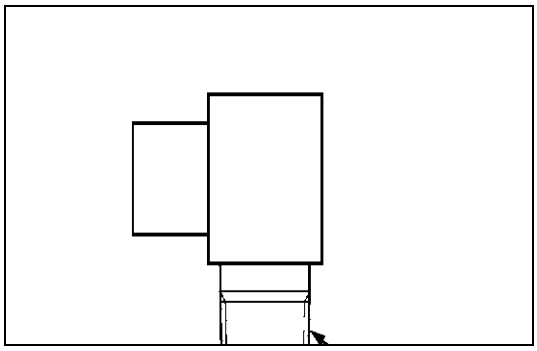

Torque	1/8	19.6 to 29.4 N·m 2.0 to 3.0 kgf·m 14.5 to 21.7 lbf·ft
	1/4	36.6 to 44.1 N·m 3.7 to 4.5 kgf·m 26.8 to 32.5 lbf·ft
	3/8	68.6 to 73.5 N·m 7.0 to 7.5 kgf·m 50.6 to 54.2 lbf·ft
	1/2	83.4 to 88.3 N·m 8.5 to 9.0 kgf·m 61.5 to 65.1 lbf·ft
	3/4	166.6 to 181.3 N·m 17.0 to 18.5 kgf·m 123.0 to 133.8 lbf·ft

(1) Taper

RY9212001GEG0044US0

https://truckmanualshub.com/

[4] HOSE CLAMP SCREW TORQUE

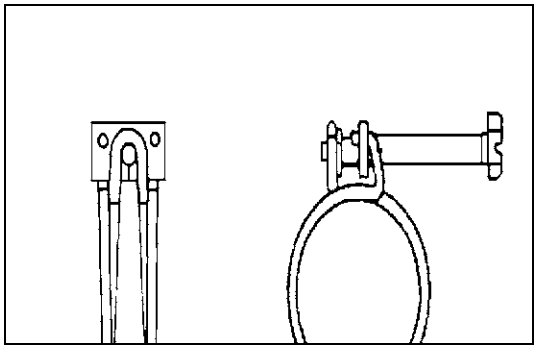

Type 1

Torque	φ10-φ14	6C040-58721	2.5 to 3.4 N·m 25 to 35 kgf·cm 1.8 to 2.5 lbf·ft
	φ12-φ16	09318-89016	2.5 to 3.4 N·m 25 to 35 kgf·cm 1.8 to 2.5 lbf·ft
	φ19-φ25	09318-89024	2.5 to 3.4 N·m 25 to 35 kgf·cm 1.8 to 2.5 lbf·ft
	φ31-φ40	09318-89039	2.5 to 3.4 N·m 25 to 35 kgf·cm 1.8 to 2.5 lbf·ft
	φ36-φ46	09318-89045	2.5 to 3.4 N·m 25 to 35 kgf·cm 1.8 to 2.5 lbf·ft
	φ44-φ53	09318-89052	3.9 to 4.9 N·m 40 to 50 kgf·cm 2.9 to 3.6 lbf·ft
	φ51-φ59	09318-89058	3.9 to 4.9 N·m 40 to 50 kgf·cm 2.9 to 3.6 lbf·ft
	φ86-φ96	RD809-42241	3.9 to 4.9 N·m 40 to 50 kgf·cm 2.9 to 3.6 lbf·ft

RY9212001GEG0045US0

https://truckmanualshub.com/

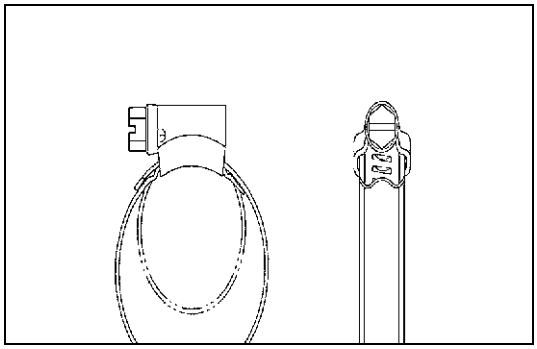

Type 2

Torque	φ13-φ20	RB101-63631	2.5 to 3.4 N·m 25 to 35 kgf·cm 1.8 to 2.5 lbf·ft
	φ15-φ25	RC101-64581	4.9 to 5.9 N·m 50 to 60 kgf·cm 3.6 to 4.3 lbf·ft
	φ19-φ28	R1401-63211	4.9 to 5.9 N·m 50 to 60 kgf·cm 3.6 to 4.3 lbf·ft
	φ22-φ32	R1401-63151	4.9 to 5.9 N·m 50 to 60 kgf·cm 3.6 to 4.3 lbf·ft
	φ26-φ38	68311-72821	4.9 to 5.9 N·m 50 to 60 kgf·cm 3.6 to 4.3 lbf·ft
	φ32-φ44	RD411-63821	4.9 to 5.9 N·m 50 to 60 kgf·cm 3.6 to 4.3 lbf·ft
	φ44-φ56	35820-15181	4.9 to 5.9 N·m 50 to 60 kgf·cm 3.6 to 4.3 lbf·ft
	φ50-φ65	RC401-63191	4.9 to 5.9 N·m 50 to 60 kgf·cm 3.6 to 4.3 lbf·ft
	φ58-φ75	36919-04591	4.9 to 5.9 N·m 50 to 60 kgf·cm 3.6 to 4.3 lbf·ft
	φ60-φ80	RD809-63101	4.9 to 5.9 N·m 50 to 60 kgf·cm 3.6 to 4.3 lbf·ft
	φ68-φ85	RD809-63061	4.9 to 5.9 N·m 50 to 60 kgf·cm 3.6 to 4.3 lbf·ft
	φ77-φ95	69284-63171	4.9 to 5.9 N·m 50 to 60 kgf·cm 3.6 to 4.3 lbf·ft

RY9212001GEG0046US0

https://truckmanualshub.com/

6. NEW PRODUCT FEATURE (EUROPEAN VERSION)

Quick chart - Machine type classification should be defined (L type)

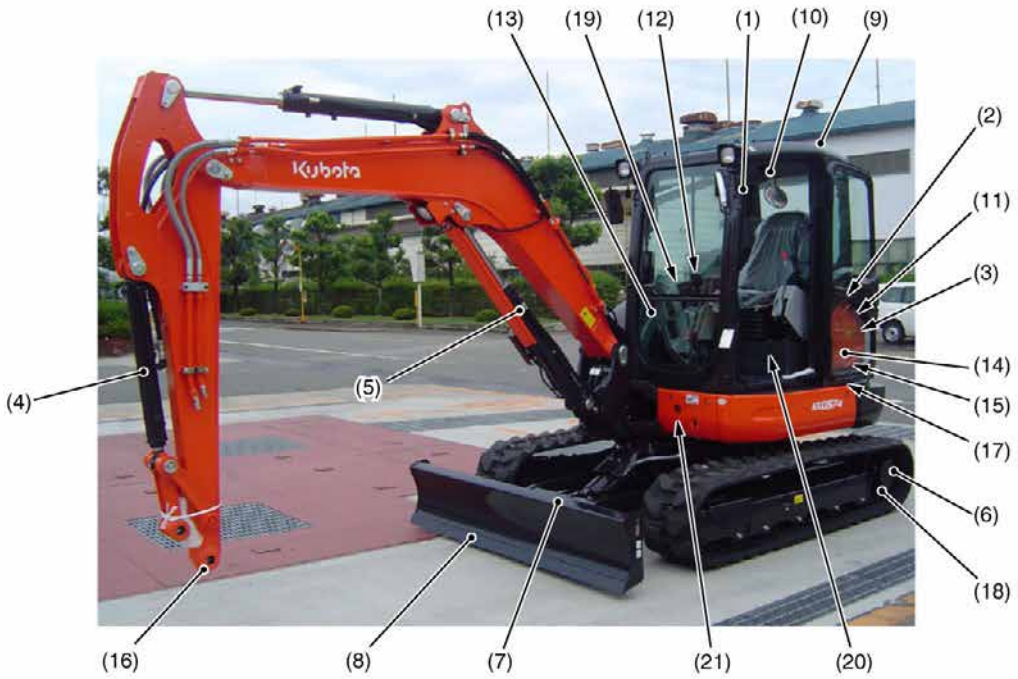

RY9212032GES001B

Basic specification		Operation	
(1)	Robust Machine Weight (Machine class upgraded to 5.5 ton)	(13)	Pilot hydraulic remote-control system for all actuators
(2)	V2607 New DI Engine	Serviceability	
(3)	Advanced Three Pump Load Sensing System *	(14)	Sheet-metal processed covers
(4)	Strong bucket breakout force	(15)	One side engine maintenance
Performance		(16)	Bush with flange at arm tip end
(5)	Bigger Lifting Capacity	(17)	Prolonged return filter life 500 hours → 1000 hours
(6)	Dual Speed with Auto-shift as standard (Bigger travel force)	Safety	
(7)	Higher Blade	(18)	Travel parking brake as standard
(8)	Shortened distance between blade and bucket teeth	Others	
Operator comfort		(19)	KUBOTA original digital panel at the Front *
(9)	Spacious and comfort cabin	(20)	Leading-edge Anti-theft system for greater security
(10)	Powerful Air conditioning	(21)	Battery Isolator *
Versatility			
(11)	AUX1" and "AUX2" with proportional control on joystick is adopted. *		
(12)	The maximum oil flow of both AUX lines can be adjusted by digital panel. *		

* : New Feature

RY9212052GEG0001US0

https://truckmanualshub.com/

Standard Equipment

Safety system
- Engine start safety system on the left console
- Travel motor with disc brake
- Swivel motor with disc brake
- Overload warning buzzer
- KUBOTA original anti-theft system
- Anti-drop valve on the boom (ISO8643)

Working equipment
- Auxiliary hydraulic circuits (SP1 and SP2*) piping to the arm end *for Types L and M.
- 2 working lights on cabin and 1 light on the boom
- 1450 mm arm length (U48-4)
- 1570 mm arm length (U55-4)

Cabin
- ROPS (Roll-over Protective Structure, ISO3471)
- OPG (Operating Protective Guard) Level1
- Wight-adjustable full suspension seat
- Seatbelt
- Hydraulic pilot control levers with wrist rests
- Travel levers with foot pedals
- Air conditioning (Type L)
- Cabin heater for defrosting and demising
- Emergency exit hammer
- Front window power assisted with gas damper
- 12 V power source
- 2 speakers and radio aerial
- Location for radio
- Back mirror (left, right and rear)
- Cup holder

Engine / Fuel system
- Double-element air filter
- Electric fuel injection pump system
- Auto idling system

Undercarriage
- 400 mm rubber track
- 1 x upper track roller
- 5 double-flange track rollers on each track
- 2-speed travel switch on blade lever
- Two-speed travel with auto-shift
- Water separator with drain cock

Hydraulic system
- Pressure accumulator
- Hydraulic pressure checking ports
- Straight travel circuit
- Third line hydraulic return
- Load-sensing hydraulic system
- Adjustable maximum oil flow on auxiliary circuits (SP1 and SP2) *For (Type L and M)
- Double auxiliary circuit accessories
- Auxiliary switch (SP1) on right control lever
- Auxiliary switch (SP2) on left control lever (Type L and M)

RY9212052GEG0002US0

https://truckmanualshub.com/

Optional Equipment

Undercarriage
- 400 mm steel track (+ 100 kg)
- 550 mm steel track (+ 300 kg)

Safety system
- Anti-drop valve unit (arm and blade)
- Bracket and harness for beacon light

Others
- Special paint upon request

RY9212007GEG0003US0

Standard Equipment For Each Type

Type	Air conditioning	SP AUX1 / AUX2
L	●	● / ●
M	–	● / ●
S	–	● / –

RY9212052GEG0003US0

https://truckmanualshub.com/

7. NEW FEATURES OUTLINE

New Design Digital Meter Panel

Features :

1. Large LCD display
2. Display and anti-theft controllers are unified into 1 ECU.
3. Main display and ECU are independent items connected by CAN (Controller Area Network) technology.

(1) GENERAL
*CONTROL ECU
*AUTO IDLE
*ANTI-THEFT
*AUTO SHIFT TRAVELING SPEED

(2) MAIN DISPLAY METER PANAL

(a) CAN

RY9212007GEG0005US0

AUX 1 and 2 Operation Control

Hard-control system

The hydraulic control grip has proportional Flow Control built in. Signals from this sensor activate the proportional solenoid valve to control the flow rate at the hydraulic service port.

(1) Control knob (Auxiliary circuit)

RY9212007GEG0006US0

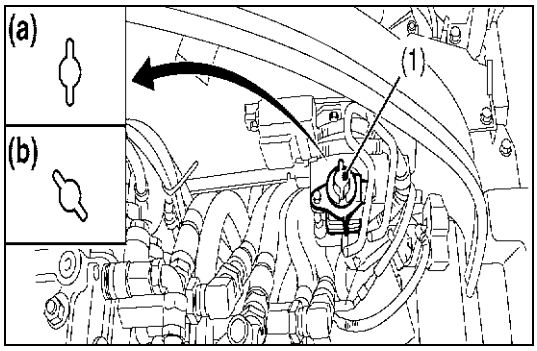

Battery Isolator

(1) Battery cut switch

(a) "ON"
(b) "OFF"

RY9212007GEG0007US0

https://truckmanualshub.com/

Three pump Load Sensing System

Hydraulic operation for all actuators

All actuators are hydraulically locked when the unlock lever is raised.
(travel, swing, blade and AUX are also hydraulically controlled.)
It realizes smoother movement with fine inching control.

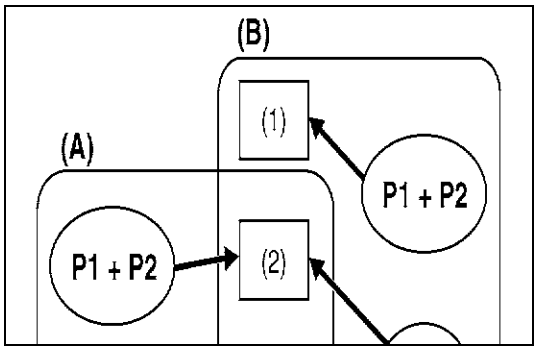

3-pump load sensing system

- U55-4 adopts the same 3-pump load sensing system as KX057-4.
- 1st and 2nd pumps that normally supply the oil to front attachments change the oil flow to travel actuator when travelling in order to realize the strong travel performance.
- The travel slow down while operating front attachments is minimized by adopting 3-pump load sensing system (ex. when blading and travelling.

(1) Travel (R), Travel (L)
(2) Boom, Arm, Bucket, AUX1, Swivel
(3) AUX2, Blade, Swing

(A) When not travelling
(B) When travelling

RY9212052GEG0004US0

https://truckmanualshub.com/

8. QUALITY SPECIFICATIONS

Machine specification : Auxiliary port1, Wrist rest, Cab, Japan STD-bucket [125 kg (277 lbs) with 2 pins 7 kg (15.5 lbs)]

Item		Factory Specification		Remarks
		U48-4	U55-4	
Machine size				
• Total length (Transport)		5330 ± 107 mm 209.8 ± 4.2 in.	5500 ± 110 mm 216.5 ± 4.3 in.	
• Total width		1960 ± 20 mm 77.2 ± 0.8 in.	1960 ± 20 mm 77.2 ± 0.8 in.	
• Total height		2550 ± 25 mm 100.4 ± 1.0 in.	2550 ± 25 mm 100.4 ± 1.0 in.	
Weight				
• Machine weight (Operating weight)	ROPS	–	–	Fuel tank : Full Truck : Rubber, Japan STD Bucket [Including operator's weight 75 kg (170 lbs)]
	CAB	46.8 ± 2 kN 4775 ± 235 kg 10527 ± 517 lbs	53.0 ± 3 kN 5400 ± 270 kg 11905 ± 594 lbs	
Performance				
• Swivel speed	L	9.0 ± 0.9 rpm	9.3 ± 0.9 rpm	Front horizontal bucket crowd with no load Engine Max. speed Oil temp. : 50 ± 5 °C (122 ± 9 °F)
	R	9.0 ± 0.9 rpm	9.3 ± 0.9 rpm	
• Travel speed	Rubber F1	2.8 ± 0.3 km/h 1.74 ± 0.2 mph	2.8 ± 0.3 km/h 1.74 ± 0.2 mph	Traveling stance : Engine Max. speed Oil temp. : 50 ± 5 °C (122 ± 9 °F)
	Rubber F2	4.9 ± 0.5 km/h 3.04 ± 0.3 mph	4.9 ± 0.5 km/h 3.04 ± 0.3 mph	
	Steel F1	2.6 ± 0.3 km/h 1.62 ± 0.2 mph	2.6 ± 0.3 km/h 1.62 ± 0.2 mph	
	Steel F2	4.6 ± 0.5 km/h 2.86 ± 0.3 mph	4.6 ± 0.5 km/h 2.86 ± 0.3 mph	
• Gradeability	F1	30 ° <	30 ° <	Hill-climbing stance, E/G Max speed
Rear end min. tuming radius		990 ± 20 mm 39.0 ± 0.8 in.	1045 ± 21 mm 41.1 ± 0.8 in.	
Swivel frame rear ground clearance		624.5 ± 12.5 mm 24.6 ± 0.5 in.	629 ± 12.6 mm 24.8 ± 0.5 in.	
Tumbler center distance		1990 ± 60 mm 78.3 ± 2.4 in.		
Crawler total length		2500 ± 75 mm 98.4 ± 3.0 in.		
Crawler total width		1960 ± 39 mm 77.2 ± 1.5 in.		
Min. ground clearance		310 ± 9 mm 12.2 ± 0.4 in.		Including bottom plate

https://truckmanualshub.com/

Item		Factory Specification		Remarks
		U48-4	U55-4	
Front attachment				
• Bucket heaped capacity	SAE, JIS	0.16 ± 0.006 m^3 0.2 ± 0.008 yd^3	0.16 ± 0.006 m^3 0.2 ± 0.008 yd^3	Slope angle : 1×1
• Bucket struck capacity		0.11 ± 0.004 m^3 0.1 ± 0.006 yd^3	0.12 ± 0.005 m^3 0.2 ± 0.006 yd^3	
• Bucket width		550 ± 11 mm 21.7 ± 0.4 in.	600 ± 12 mm 23.6 ± 0.5 in.	Without side cutter
• Swing angle	ROPS L			
	ROPS R			
	CAB L	71 ± 2 °	71 ± 2 °	
	CAB R	54 ± 2 °	54 ± 2 °	
• Max. digging radius		5850 ± 88 mm 230.3 ± 3 in.	6105 ± 92 mm 240.4 ± 4 in.	0 ° swing
• Ground level Max. digging radius		5710 ± 86 mm 224.8 ± 3 in.	5960 ± 89 mm 234.6 ± 4 in.	0 ° swing
• Ground level Min. finish radius		1975 ± 40 mm 77.8 ± 2 in.	2045 ± 41 mm 80.5 ± 2 in.	0 ° swing Bucket bottom horizontal
• Max. digging depth		3380 ± 68 mm 133.1 ± 3 in.	3630 ± 73 mm 142.9 ± 3 in.	
• Max. vertical digging depth		2670 ± 80 mm 105.1 ± 3 in.	2830 ± 85 mm 111.4 ± 3 in.	
• Max. digging height	ROPS	–	–	
	CAB	5440 ± 109 mm 214.2 ± 4 in	5665 ± 113 mm 223.0 ± 4 in.	
• Max. dump height	ROPS	–	–	
	CAB	3770 ± 75 mm 148.4 ± 3 in.	4005 ± 80 mm 157.7 ± 3 in.	

https://truckmanualshub.com/

Item		Factory Specification		Remarks
		U48-4	U55-4	
Front attachment				
• Max. dump height (Arm vertical)	ROPS	–	–	
	CAB	1425 ± 43 mm 56.1 ± 2 in.	1825 ± 55 mm 71.9 ± 2 in.	
• Min. turning radius	ROPS	–	–	
	CAB	2390 ± 72 mm 94.1 ± 3 in.	2460 ± 74 mm 96.9 ± 3 in.	
• Min. turning radius (Left swing)	ROPS	–	–	
	CAB	1960 ± 59 mm 77.2 ± 2 in.	2020 ± 61 mm 79.5 ± 2 in.	
Blade				
• Width (STD)		1960 ± 5 mm 77.2 ± 0.2 in.	1960 ± 5 mm 77.2 ± 0.2 in.	
• Height (STD)		408 ± 10 mm 16.1 ± 0.4 in.	408 ± 10 mm 16.1 ± 0.4 in.	
• Max. lift above GL (STD)		440 ± 50 mm 17.3 ± 2 in.	440 ± 50 mm 17.3 ± 2 in.	
• Max. below GL (STD)		410 ± 50 mm 16.1 ± 2 in.	410 ± 50 mm 16.1 ± 2 in.	
Bucket tooth slaggish		73 mm > 2.87 in. >		Without shockless F=30 kgf (66 lbf)
Front boom lateral declination		10 mm > 0.39 in. >		
Blade's lateral declination		10 mm > 0.39 in. >		
Clearance between bucket crow and boom cylinder cover		100 ± 19 mm 4.72 ± 0.7 in.		Boom max. height, Arm crowd
Approach angle	STD	30 ± 3 °		
Crawler height		523 ± 10 mm 20.59 ± 0.4 in.		Include grouser height of the crawler
Max. crawler height		555 ± 11 mm 21.85 ± 0.4 in.		

https://truckmanualshub.com/

This as a preview PDF file from **best-manuals.com**

Best Manuals

Download full PDF manual at **best-manuals.com**