https://truckmanualshub.com/

Table of Contents

Main Body Section

Book No. WLST700LHD3B-00W

			Page
Specifications			
Specifications	700-1-01-00-64	1/6	1
Complete Machine Dimensions	700-1-01-01-59		
Standard Arm (3.55 m)		1/4	7
Short Arm (3.00 m)		2/4	8
Long Arm (4.11 m)		3/4	9
Super Long Arm (5.00 m)		4/4	10
Work Range	700-1-01-02-59		
Standard Arm (3.55 m)		1/4	11
Short Arm (3.00 m)		2/4	12
Long Arm (4.11 m)		3/4	13
Super Long Arm (5.00 m)		4/4	14
Optional Components	700-1-01-03-32		
List of Optional Components		1/1	15
Emission Control Regulation of 3rd-Stage	700-1-01-06-03		
Execution Time Emission Control Regulation		1/12	16
Standard Amount of Exhaust Gas		2/12	17
Measures to be Taken for The Emission Control Regulation		3/12	18
Engine fuel and maintenance of fuel filters		4/12	19
Engine System Diagram		7/12	22
Construction of Engine (ISUZU 6WG1T)		8/12	23
Common Rail Injection System		9/12	24
Suction and Exhaust System		11/12	26

https://truckmanualshub.com/

Table of Contents

		Page
Major Equiment Specifications		
Equipment 700-2-01-00-15		
Overall	1/2	28
Operator's Cab	2/2	29
Lower Mechanism 700-2-01-01-44		
Assembly Drawing	1/3	30
Travel Unit	2/3	31
Take-up Roller	2/3	31
Upper-Roller	2/3	31
Lower Roller	2/3	31
Recoil Spring	3/3	32
Shoes	3/3	32
Upper Mechanism 700-2-01-02-42		
Swing Unit	1/1	33
Engine and Related Areas 700-2-01-03-44		
Engine	1/3	34
Muffler	2/3	35
Air Cleaner (With pre cleaner)	2/3	35
Radiator	2/3	35
Fuel Tank	3/3	36
Hydraulic System 700-2-01-04-45		
Hydraulic Pump	1/3	37
Sump Tank	2/3	38
Rotating Joint	3/3	39
Solenoid Valve	3/3	39
Controls 700-2-01-05-46		
Control Valve	1/2	40
Remote Control Valve (Left / Right, Travel Operations)	2/2	41
Backhoe Attachments 700-2-01-06-52		
Cylinder	1/2	42
Attachments	2/2	43

https://truckmanualshub.com/

Table of Contents

Hydraulic Section

		Page
Hydraulic Pump 700-1-02-01-18		
Operation Principle	1/2	44
Internal Structure Drawing	2/2	45
Contorol Valve 700-1-02-02-15		
Operation Explanation of Each Part	1/16	46
1.Main Relief Valve	2/16	47
2.Overload Relief Valve	4/16	49
3.Foot Relief Valve	7/16	52
4.Load Holding Valve	8/16	53
5.Arm Regenerative	11/16	56
6.Priority Valve	14/16	59
7.Boom Regenerative	16/16	61
Swing Unit 700-1-02-03-12		
Operation Principle	1/6	62
1.Hydraulic Motor	1/6	62
2.Anti-cavitation Check Valve Section	1/6	62
3.Relief Valve	2/6	63
4.Reversal Prevention Valve	4/6	65
5.Brake Section	5/6	66
Internal Structure Drawing	6/6	67
Travel Unit 700-1-02-04-15		
Operation Principle	1/10	68
1.Hydraulic Motor	1/10	68
2.Parking Brake	2/10	69
3.2-Speed Switch Mechanism Oparation Principle	3/10	70
4.Relief Valve	8/10	75
5.Double Counterbalance Value	9/10	76

https://truckmanualshub.com/

Table of Contents

Fan Motor for Hydraulic Drive.....700-1-02-05-02

Outside Drawing 1/7 78
Internal Structure Drawing 2/7 79
Operation Principle 3/7 80
1.Hydraulic Motor 3/7 80
2.Suction Safety Valve 4/7 81
3.Variable Flow Control Valve 6/7 83
4.Operation of Forward / Reverse Changeover Valve 7/7 84

https://truckmanualshub.com/

Table of Contents

Hydraulic Circuits Section

		Page
Port Locations 700-1-03-00-23		
Hydraulic Pump	1/2	85
Control Valve	2/2	86
Pilot Hose Connection Diagrams 700-1-03-01-31		
Pilot P&T Lines	1/4	87
Pilot Control Lines	3/4	89
Functional Explanations 700-1-03-02-21		
Functional Table	1/2	91
Travel Circuits 700-1-03-03-18		
High Speed Travel Circuit	1/6	93
Low Speed Travel Circuit	3/6	95
Straight Travel Circuit	5/6	97
Swing Circuits 700-1-03-04-19		
Swing Parking Circuit (Lever in Neutral / Swing Locked)	1/6	99
Swing Parking Circuit (Brake Released)	3/6	101
Swing Push Digging	5/6	103
Arm Circuits 700-1-03-06-18		
Arm-Out Circuit	1/6	105
Arm-In Load Holding	3/6	107
Arm-In Circuit	5/6	109
Boom Circuits 700-1-03-07-18		
Boom-Up Circuit (Single)	1/8	111
Boom-Up Circuit (Combined)	3/8	113
Boom-Down Load Holding	5/8	115
Boom-Down Circuit	7/8	117
Backup Circuits 700-1-03-09-16		
Combined Circuit (Breaker Circuit)	1/4	119
Combined Circuit (High Speed Confluence Circuit)	3/4	121
Other Circuits 700-1-03-13-03		
High Dump	1/2	123
Circuit Diagrams (Located inside the poket at back of back cover)		
Hydraulic Circuit Diagram (A1)		

https://truckmanualshub.com/

Table of Contents

Electric Circuits Section

		Page
Operation Explanation 700-1-04-01-28		
System Chart of Functons	1/56	125
Engine Control	5/56	139
Work Mode Selection	12/56	136
a)H.S.L Modes	14/56	138
b)Auto Modes	14/56	138
c)Load Prefetch Control	17/56	141
Throttle Control	18/56	142
Idling Control (Auto/One-touch)	21/56	145
Breaker Mode	23/56	147
Auto Preheat (Glow Control)	24/56	148
Auto Warm-up	27/56	151
Overheat Protection	28/56	152
Atmospheric Pressure Compensation	29/56	153
Control When Starting Engine	30/56	154
Control When Stopping Engine	31/56	155
Emergency Stop of the Engine	31/56	155
Engine Protection Function (EPF)	32/56	156
Lever Lock	34/56	158
Auto Boost Control	35/56	159
Swing Lock	36/56	160
Swing Brake Control	36/56	160
Travel Speed Switch-over	38/56	162
Travel Alarm	39/56	163
Power Shut-off Delay	40/56	164
Control of Hydraulic Driven Fan	41/56	165
Fuel Supply Pump Control (Automatic stop) Option	50/56	174
Power Transistor Protection	52/56	176
Monitor Display	53/56	177
a)Nomal Display	53/56	177
b)Message Display	56/56	180

https://truckmanualshub.com/

Table of Contents

		Page
Service Support 800-1-04-04-08		
Summary	1/20	181
Operating Insttructions	1/20	181
Measuring Electrical Device 700-1-04-02-14		
Instruments to be Measured	1/10	201
Equipment for Measuring	1/10	201
Measuring Methods	6/10	206
Initial Controller Settings 700-1-04-05-07		
Verifying the Settings	1/3	211
Resetting Procedures	1/3	211
Setting Procedures	1/3	211
List of Settings	2/3	212
Error Display Functions	3/3	213
Troubleshooting 700-1-04-06-11		
Problem Symptoms	1/12	214
Inspections Prior to Troubleshooting	2/12	215
Troubleshooting Procedures	3/12	216
Using the Flow Chart	4/12	217
Diagnosis	5/12	218
(1) Refilling Fuel	5/12	218
(2) Refilling Coolant	6/12	219
(3) Low Engine Oil Pressure	7/12	220
(4) Overheat	8/12	221
(5) Battery Charging	10/12	223
(6) Faulty Electrical System	11/12	224
Electric Wiring Diagrams 700-1-04-07-20		
Electrical Components and Wiring (Frame)	1/2	226
Electrical Components and Wiring (Cab)	2/2	227
Harness Diagrams 700-1-04-08-24		
Frame Main Harness	1/2	228
Cab Main Harness	2/2	229
Circuit Diagrams (Located inside the poket at back of back cover)		
Electric Circuits Diagram (A1)		

https://truckmanualshub.com/

Table of Contents

Maintenance Section

			Page
New Machine Performance			
Performance Evaluation Check Sheet	000-3-02-00-15	1/2	230
Reference Values	700-3-02-01-21	1/1	232
Instructions for Measuring and Adjusting Pressure	700-1-05-00-24		
Measuring Pressure		1/14	233
1.Basic Conditions		1/14	233
2.Set Values		1/14	233
3.Pressure Measuring Port		2/14	234
4.Preparation for Measuring Pressure		4/14	236
5.Measuring Pressure		6/14	238
6.Measuring Other Pressures		8/14	240
Adjusting Pressure		9/14	241
1.Pressure Adjusting Points		9/14	241
2.Instructions for Adjusting Pressure		11/14	243
Maintenance of The Circumference of Engine	700-1-05-07-03		
1.Circumference Filter Arrangement of Engine		1/3	247
2.Fuel Element System Diagram		2/3	248
Main Body Weight	700-3-01-00-52		
1.Major Component Weight		1/2	250
2.Individual Part Weight		2/2	251
3.Shoe Weight		2/2	251
4.Arm Weight		2/2	251
Attachments Dimensions	700-1-05-04-18	1/1	252
Plastic Shim	000-1-05-08-02	1/1	253
Procedures for Changing Operation Type	000-8-02-01-07		
1.ISO Type		1/4	254
2.Old Sumitomo Type		2/4	255
3.Old Mitsubishi Type		3/4	256
4.Old Kobelco Type		4/4	257

https://truckmanualshub.com/

Table of Contents

Assembly, Disasembly Section

			Page
Summary of Assembling	700-1-06-00-04		
Total Work Process		1/36	258
Major Machines・Tools・Equipment Table		2/36	259
Matters to be Attended		5/36	262
Prior Preparation		5/36	262
Prior Preparation Procedure		7/36	264
Unloading Work		8/39	265
Connection of Lower Sideframes to Upper Swing Body		14/36	271
Mounting Travel Motor Lines		20/36	277
Mounting Counterweight		22/36	279
Mounting Attachments		24/36	281
Checking Work		34/36	291
Confirmation of Movement after Assembling Work		35/36	292
Summary of Disassembling	700-1-06-01-04	1/5	294
Attached Data	700-1-06-02-05	1/8	299
Appendix			
Unit Conversion Table	300-1-08-01-02	1/1	307
New Hydraulic Oil	300-1-08-02-02	1/1	308

https://truckmanualshub.com/

Specifications

	SH700LHD-3B			
1. Main data				
Model name	SH700LHD-3B Hydraulic Excavator			
Operating weight	68100 kg			
Engine output	345 kW / 1800 min^{-1}			
Bucket capacity	Heaped 2.90 m^3 Leveled 2.20 m^3			
2. Performance				
Standard weight	38.8 kN			
Swing speed	6.5 min^{-1}			
Travel speed	Low Speed 3.0 km/h			
	High Speed 4.1 km/h			
Maximum drawbar pull	469kN			
Grade ability	70 % (35 °)			
Ground pressure	100 kPa (650 mm grouser shoe)			
3. Complete machine dimensions				
	Standard arm (3.55 m)	Short arm (3.00 m)	Long arm (4.11 m)	Super Long arm (5.00 m)
Length	13290 mm	13250 mm	13300 mm	13170 mm
Width	4140 mm	4140 mm	4140 mm	4140 mm
Height	4300 mm	4370 mm	4470 mm	5160 mm
4. Main body dimensions				
Main body length	6910 mm			
Main body width	4140 mm (Grouser shoe retracted width : 3990 mm)			
Upper swing body width	3990 mm			
Cab width	1000 mm			
Main body height	3460 mm			
Tail swing radius	4000 mm			
Distance of rear swing body	3970 mm			
Ground clearance for upperstructure	1510 mm			

https://truckmanualshub.com/

	SH700LHD-3B		
Center-to-center of wheels	4700 mm		
Overall track length	5880 mm		
Maximum track width	3900 mm	(Retracted width in transpoting style : 3390 mm)	
Center-to-center for track	3250 mm	(Retracted width in transpoting style : 2740 mm)	
Width of track shoe	650 mm	(Optional : 750 mm, 900 mm)	
Minimum ground clearance	825 mm	(To bottom of lower frame)	
5. Engine			
Name	ISUZU, 6WG1X		
Type	4-cycle, water-cooled, overhead camshaft, commonrail injection (electric control) with air-cooling type inter-cooler turbo		
No. of cylinders - bore x stroke	6-dia. 147 mm x 154 mm		
Cylinder capacity	15.7 L		
Maximum torque	1980N•m / 1500min^{-1}		
Starter	24 V	7 kW	Reduction type
Alternator	24 V	50 A	AC type
Battery	12 V	140 Ah/5 Hr	(2)
6. Hydraulic system			
Hydraulic pump drive system	Directly-coupled to motor (no transmission)		
Hydraulic pump			
Model	Double variable displacement piston pump (1) Gear pump (1)		
Discharge	Piston pump: 2 x 448 L/min Gear pump: 27.8 L/min		
Pump control method	Simultaneous total output horsepower control		
Set pressure of main relief valve	31.4 MPa (power boost 34.3 MPa)		
Set pressure of overload relief valve	27.5 MPa (when boom down) 36.3MPa (other)		
7. Control valve			
Model	4-spool section: integrated (1) or 5-spool section: integrated (1)		
Operation method	Hydraulic pilot method: travel, swing and operating machine		

https://truckmanualshub.com/

	SH700LHD-3B
8. Cooling system	
Fan drive system	Hydraulic drive
Fan type	Diameter 1016 mm, 6 blades, air intake
Radiator capacity	187.7kW
Fin type	Wavy
Fin space	2.0 mm
Oil cooler capacity	145.9 kW
Fin type	Plate
Fin space	3.0 mm
Inter-cooler capacity	61.1 kW
Fin type	Triangular straight
Fin space	2.0 mm
Fuel cooler capacity	3.58 kW
Fin type	Wavy
Fin space	2.0 mm
9. Operating devices	
Operator's seat	
Location	Left side
Structure	KAB515: Low frequency mechanical suspension with helical springs and double acting hydraulic damper
Cab	Smooth and round shape design cab, fabricated by press work safety glass for front window
Levers and pedals	
For travel use	Levers and pedals (hydraulic pilot type) (2)
For operating machine use	Levers (hydraulic pilot type) (2)
Instruments and switches	
Work mode switchover	4 modes (heavy digging, standard, finishing and auto)
Travel speed switchover	Low Speed / High Speed panel switch
One-touch idle	Knob switch type
Monitor device	
Machine status display (full-dot liquid crystal)	
Travel speed selection status	Low Speed / High Speed
Work mode selection status	H/S/L/A
Auto idle selection status	ON/OFF

https://truckmanualshub.com/

	SH700LHD-3B			
Instruments (full-dot liquid crystal, except for hour meter)				
Fuel gauge	Bar graph indicator			
Engine coolant temperature gauge	Bar graph indicator			
Hydraulic oil temperature gauge	Bar graph indicator			
Hour meter	Digital type			
Machine Status and Warning Alarms (full-dot liquid crystal and warning tone) *Items have a warning alarm				
Over heat*	Battery charge*		Faulty electrical system*	
Refill fuel*	Engine oil pressure*		Refill coolant*	
Engine pre-heat	Auto warm-up		Air cleaner*	
Idling	Service interval		Digging power up	
Lighting				
Working light	Tank:	24 V	70 W	(1)
	Boom:	24 V	70 W	(1)
	Cab:	24 V	70 W	(2)
Interior light		24 V	10 W	(1)
Horn	Electric horn (2)			
Other	Wiper with intermittent function (1)			
	Window washer fluid (1)			
	Air conditioner (1)			
	Rear view mirror (right and left side) (1)			
	High dump			
10. Swing unit				
Swing circle	Swing bearing type (with internal gears)			
Swing hydraulic motor	Fixed displacement piston motor (2)			
Reduction gears	Planetary gear 2-stage reduction system			
Swing parking brake	Mechanical lock (operational lever linkage type)			
Swing lock	Mechanical lock (swing lock switch linkage type)			
11. Travel lower body				
Travel hydraulic motor	Variable displacement piston motor (2)			
Reduction gears	Planetary gear 3-stage reduction system			
Travel brake	Hydraulic lock			

https://truckmanualshub.com/

	SH700LHD-3B			
Parking brake	Mechanical lock (travel lever linkage type)			
Track shoe				
Model	Assembly-type double grouser shoe			
Number of shoes (per side)	47			
Shoe width	900 mm(optional : 650 mm, 750 mm)			
Grouser height	50 mm			
Link pitch	260.35 mm			
Roller				
Number of upper rollers (per side)	3			
Number of lower rollers (per side)	8			
Track belt tension adjuster	Grease cylinder type (with cushion spring)			
12. Work Unit				
Model	Backhoe attachment			
Capacity / dimensions / working dimensions:				
Bucket capacity	Heaped 2.9 m^3 (leveled 2.2 m^3)			
Bucket width	1850 mm			
Weight of bucket	2870 kg			
Boom length	7700 mm			
	Standard arm (3.55 m)	Short arm (3.00 m)	Long arm (4.11 m)	Super Long arm (5.00 m)
Arm length	3550 mm	3020 mm	4110 mm	5000 mm
Bucket radius	2100 mm	2100 mm	2100 mm	2100 mm
Bucket wrist angle	175°	175°	175°	175°
Maximum digging radius	13160 mm	12870 mm	13650 mm	14600 mm
Maximum digging radius at groundline	12900 mm	12600 mm	13400 mm	14300 mm
Maximum digging depth	8400 mm	7870 mm	8970 mm	9850 mm
Maximum vertical straight wall digging depth	6870 mm	6850 mm	7360 mm	8630 mm
Maximum reach height	11920 mm	12400 mm	12040 mm	12700 mm
Maximum dump height	8020 mm	8330 mm	8160 mm	8710 mm
Minimum swing radius at front	5810 mm	5860 mm	5680 mm	5700 mm
Overall height with minimum swing radius at front	10040 mm	9990 mm	10030 mm	10030 mm

https://truckmanualshub.com/

	SH700LHD-3B						
13. Hydraulic Cylinder	Quantity	x	Inner diameter of tube	-	Rod diameter	-	Stroke
Boom cylinder	2	x	dia. 190 mm	-	dia.130 mm	-	1805 mm
Arm cylinder	1	x	dia. 200 mm	-	dia. 140 mm	-	2025 mm
Bucket cylinder	1	x	dia. 180 mm	-	dia. 125 mm	-	1465 mm

14. Digging force(New JIS)	Standard arm (3.55 m)	Short arm (3.00 m)	Long arm (4.11 m)	Super Long arm (5.00 m)
Bucket digging force (Standard / Power boost)	290 kN / 317 kN	290 kN / 317 kN	290 kN / 317 kN	290 kN / 317 kN
Arm digging force (Standard / Power boost)	224 kN / 245 kN	244 kN / 267 kN	202 kN / 221 kN	175 kN / 192kN

15. Capacity of coolant and lubricants	
Coolant	112 L
Fuel	900 L
Lubricant for engine	52 L
Lubricant for travel reduction gear (per side)	15 L
Lubricant for swing reduction gear (per side)	13.5 L
Hydraulic oil	650 L
Capacity of hydraulic oil tank	310 L
16. Hydraulic oil filter	
Suction filter (inside tank)	150 mesh
Return filter (inside tank)	10 μm
Nephron filter (inside housing)	1 μm
Pilot line filter (inside housing)	10 μm
17. Fuel filter	
Pre-filter	10 μm
Main filter	4 μm

https://truckmanualshub.com/

Complete Machine Dimensions

Standard Arm (3.55 m)

Note:1 Numerical values may be changed without notice due to design alterations or other reasons.
Note:2 The values in the diagram include the lug height of shoe (50 mm).

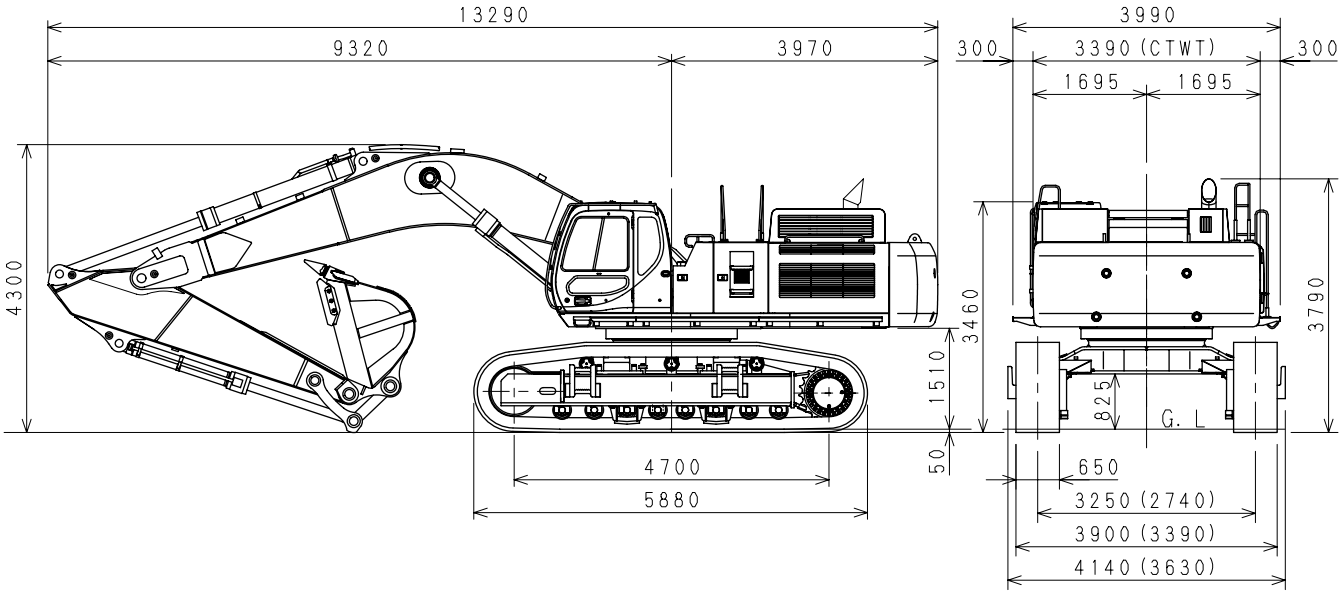

※ ( ) SHOW THE SMALLEST DIMENSION IN THE TRANSPOT.

https://truckmanualshub.com/

Complete Machine Dimensions

Short Arm (3.00 m)

Note:1 Numerical values may be changed without notice due to design alterations or other reasons.
Note:2 The values in the diagram include the lug height of shoe (50 mm).

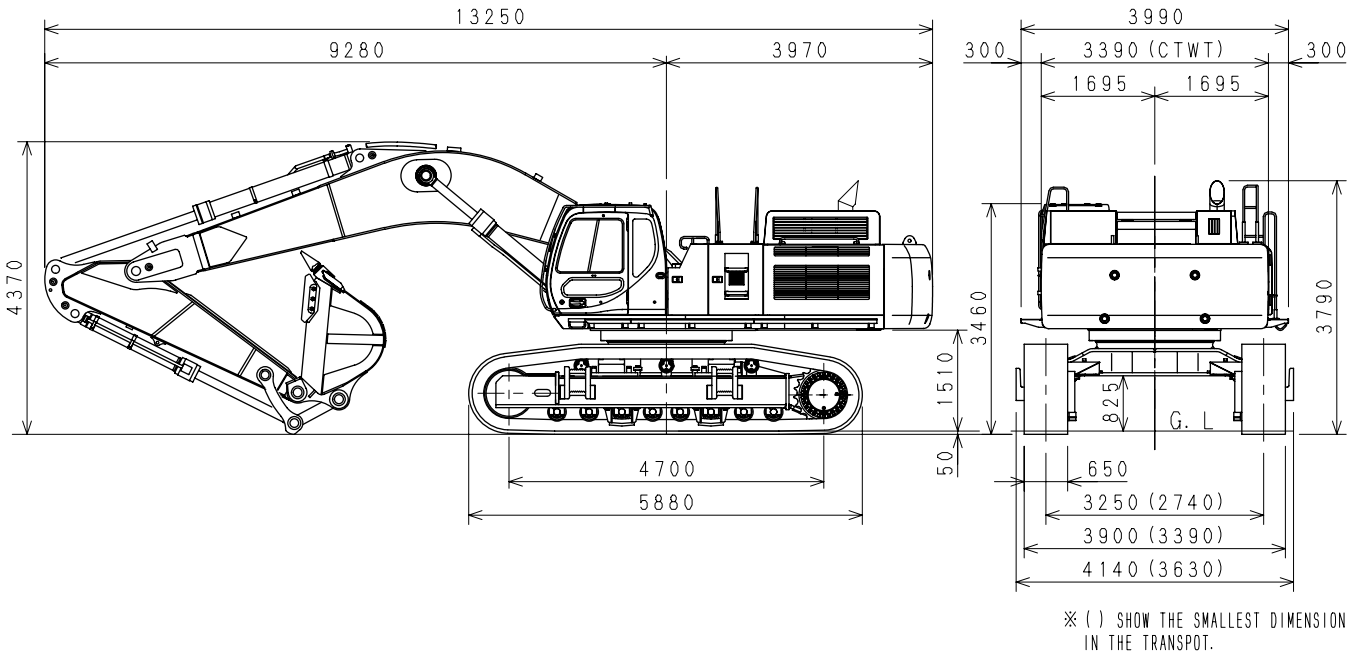

https://truckmanualshub.com/

Complete Machine Dimensions

Long Arm (4.11 m)

Note:1 Numerical values may be changed without notice due to design alterations or other reasons.
Note:2 The values in the diagram include the lug height of shoe (50 mm).

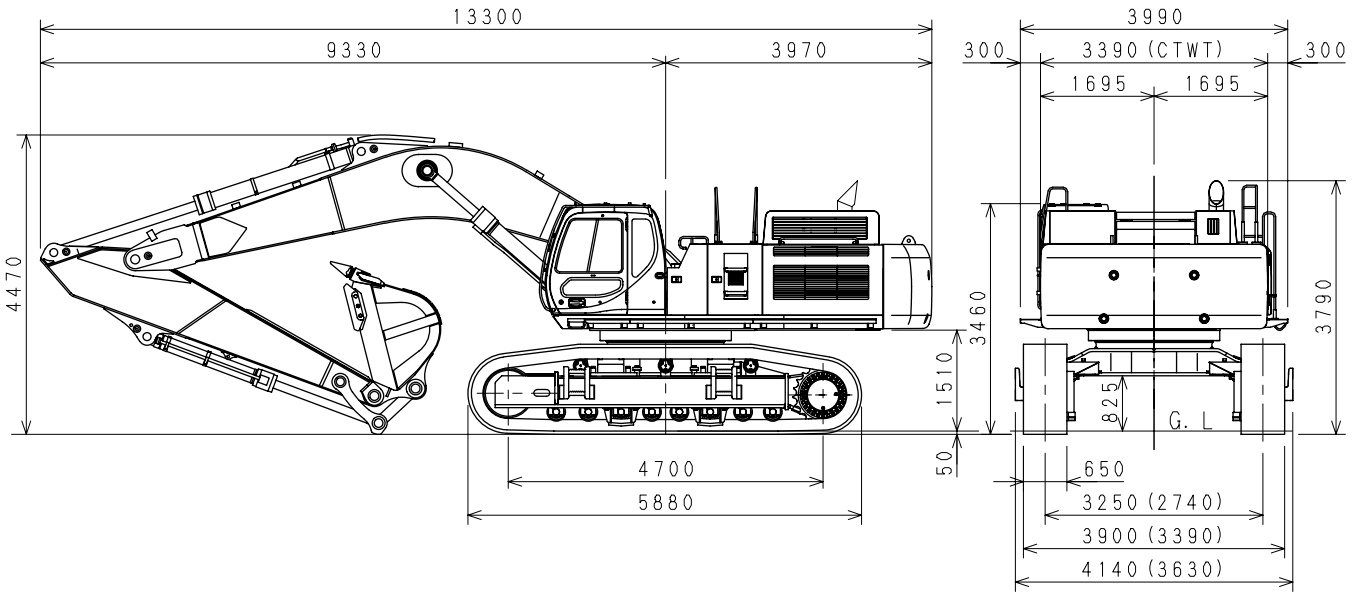

※ ( ) SHOW THE SMALLEST DIMENSION IN THE TRANSPOT.

https://truckmanualshub.com/

Complete Machine Dimensions

Super Long Arm (5.00 m)

Note:1 Numerical values may be changed without notice due to design alterations or other reasons.
Note:2 The values in the diagram include the lug height of shoe (50 mm).

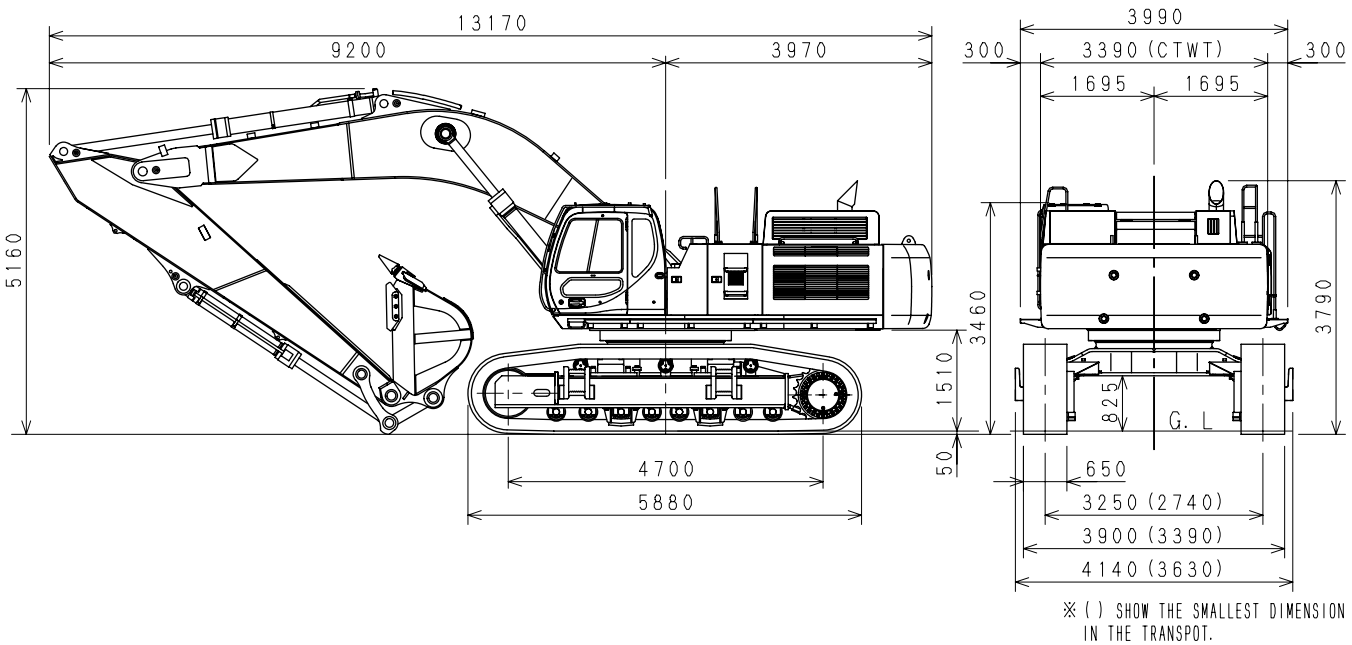

https://truckmanualshub.com/

Work Range

Standard Arm (3.55 m)

Note:1 Numerical values may be changed without notice due to design alterations or other reasons.
Note:2 The values in the diagram include the lug height of shoe (50 mm).

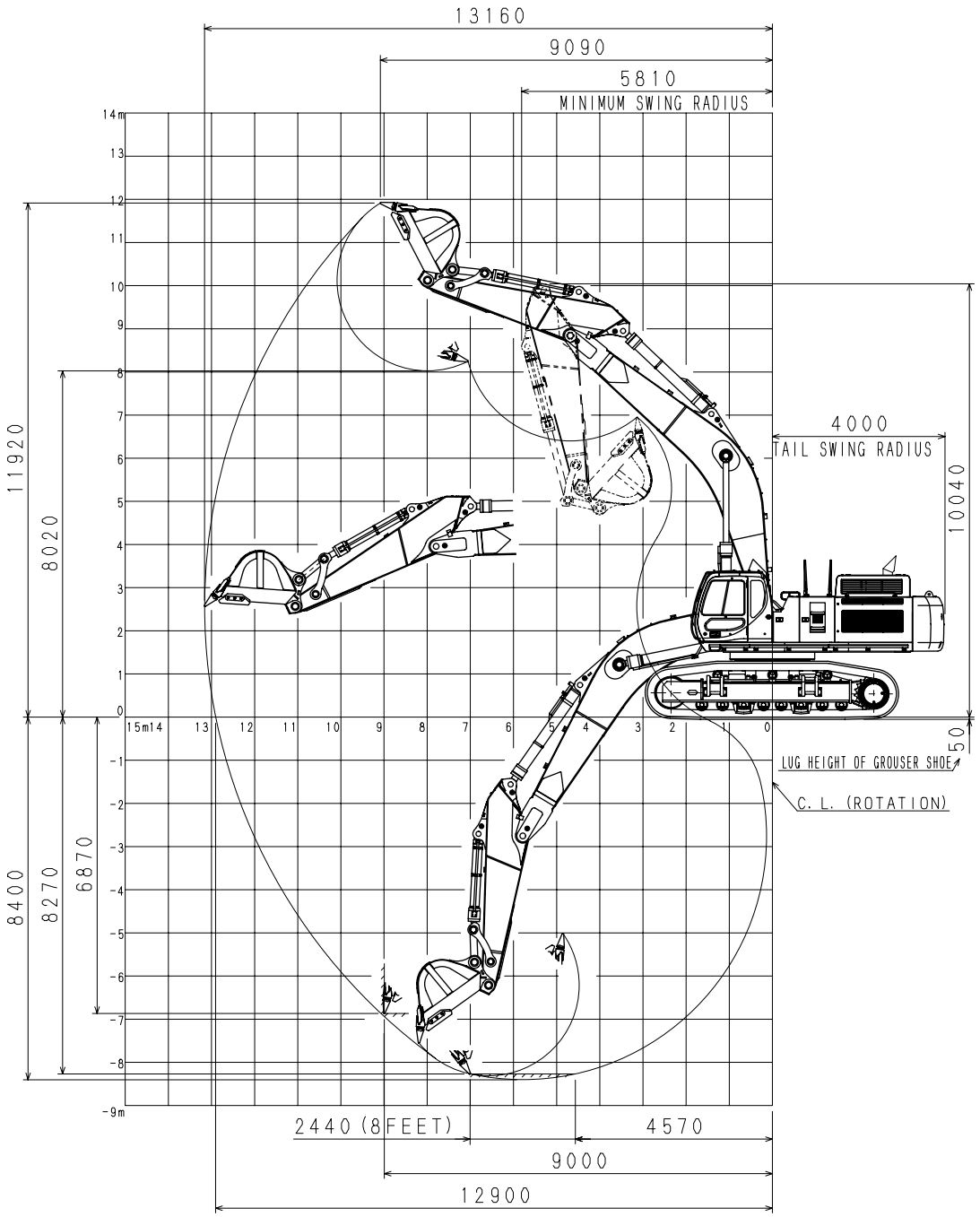

https://truckmanualshub.com/

Work Range

Short Arm (3.00 m)

Note:1 Numerical values may be changed without notice due to design alterations or other reasons.
Note:2 The values in the diagram include the lug height of shoe (50 mm).

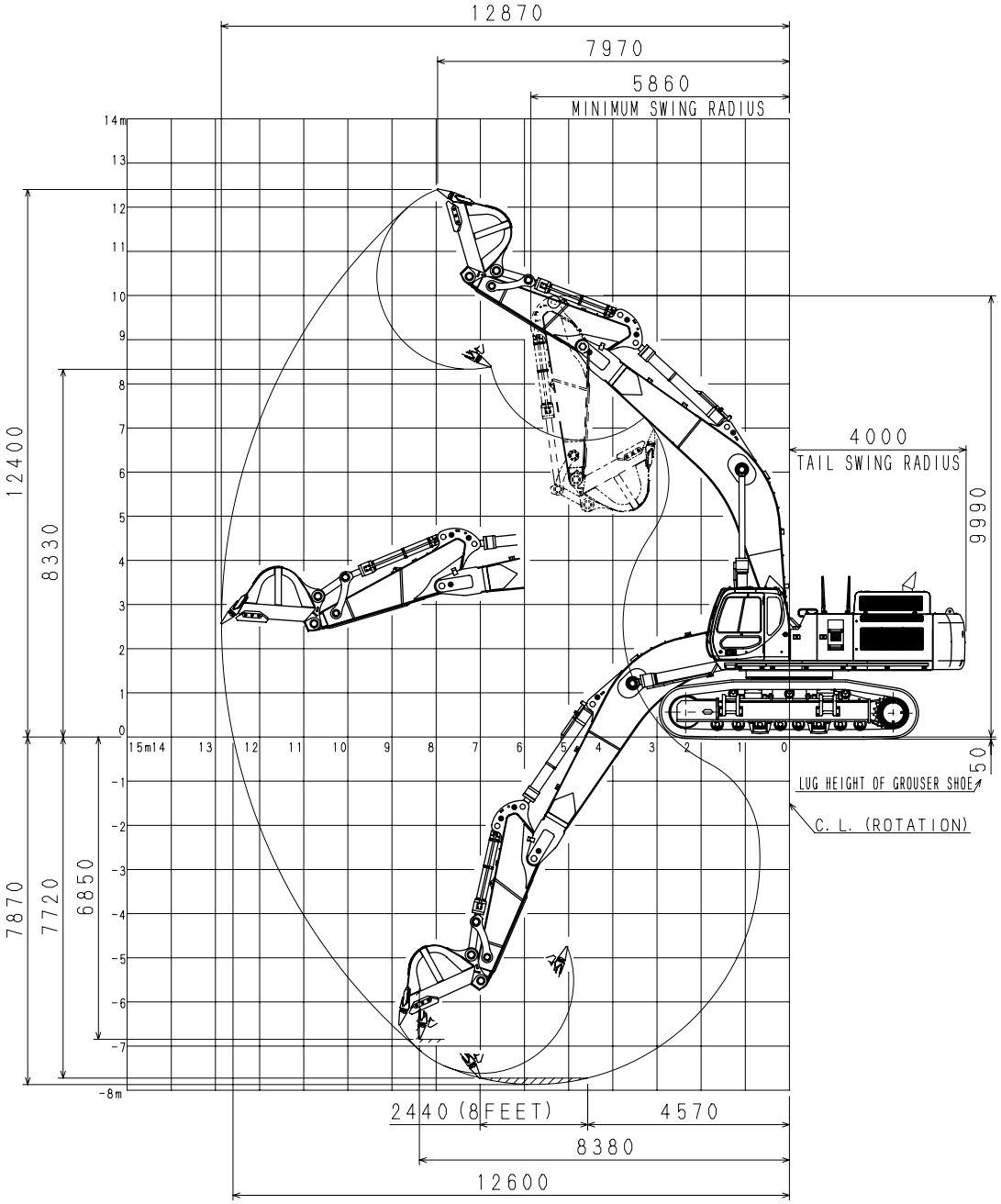

https://truckmanualshub.com/

Work Range

Long Arm (4.11 m)

Note:1 Numerical values may be changed without notice due to design alterations or other reasons.
Note:2 The values in the diagram include the lug height of shoe (50 mm).

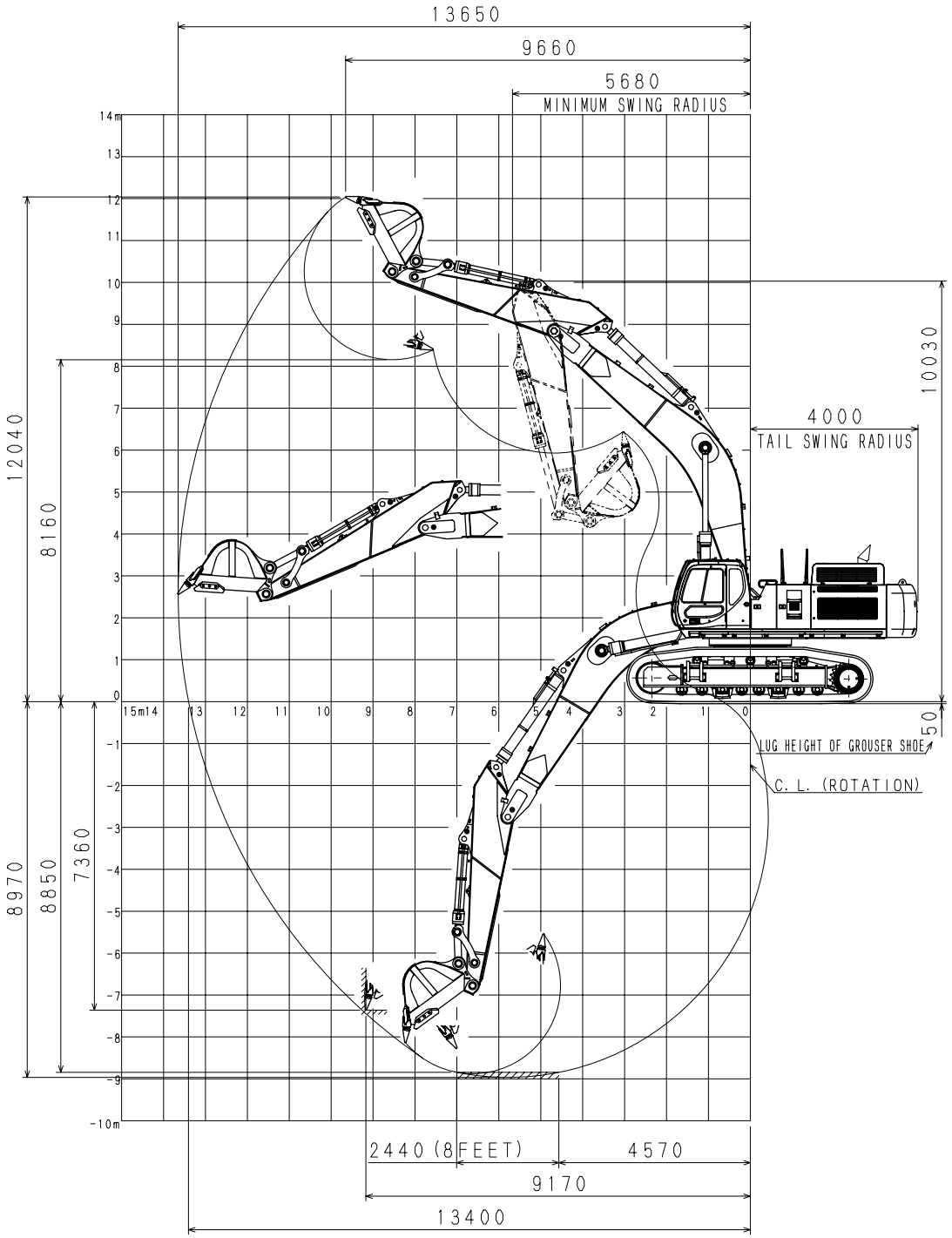

https://truckmanualshub.com/

Work Range

Super Long Arm (5.00 m)

Note:1 Numerical values may be changed without notice due to design alterations or other reasons.
Note:2 The values in the diagram include the lug height of shoe (50 mm).

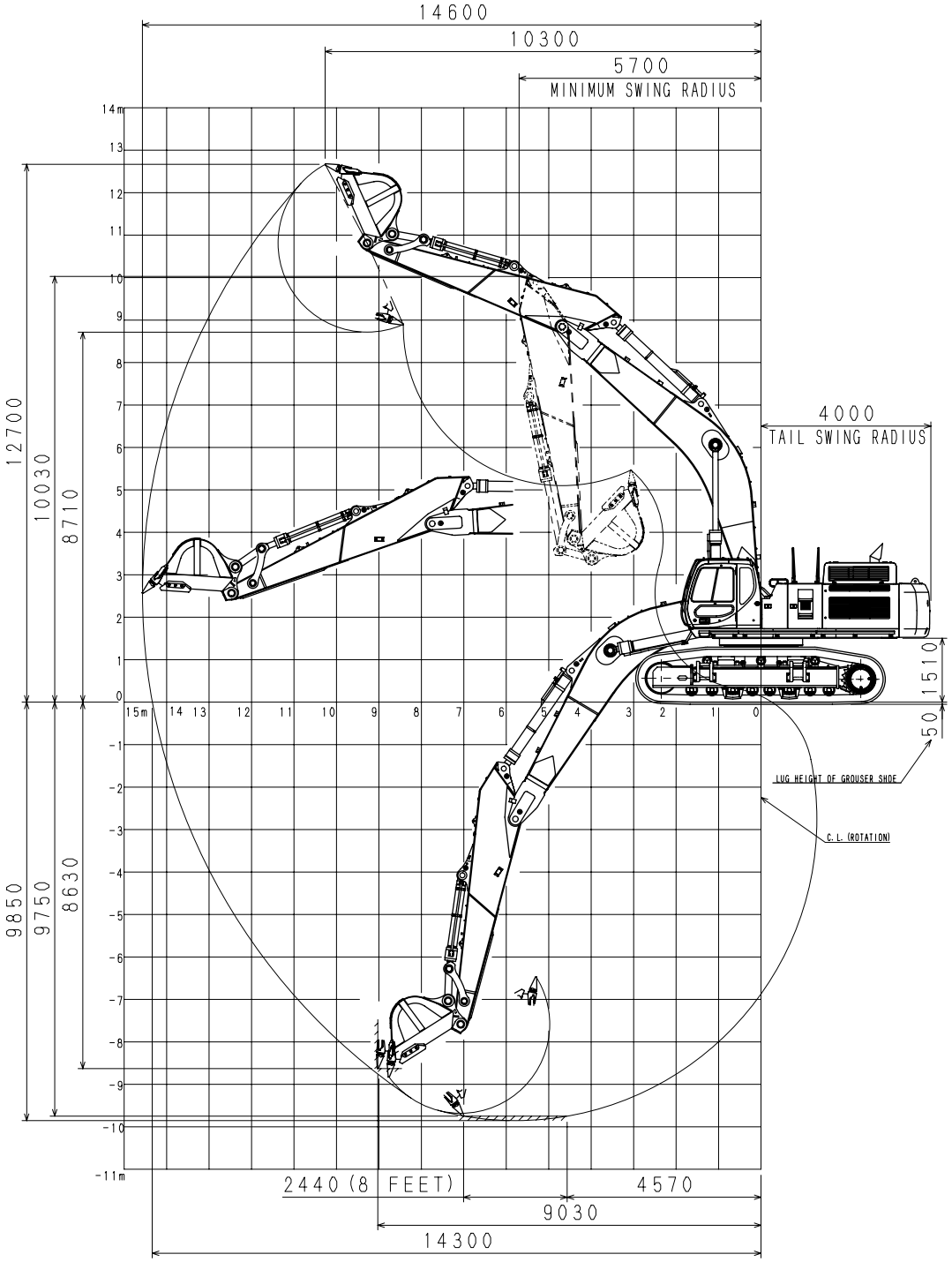

https://truckmanualshub.com/

Optional Components

List of Optional Components

◎ Standard ● Optional

Specifications	SH700LHD-3B
650 G shoe (2-bar)	◎
750 G shoe (2-bar)	●
900 G shoe (2-bar)	●
Track guard (double)	◎
Full track guard	●
Lower under cover	◎
Breaker circuit	●
Compatible circuit	●
Counterweight removal device	●
Catwalk (right and left)	◎
Fuel supply pump	●
Greasing device (electric)	●
Air conditioner	◎
AM/FM Radio	◎
DC - DC Converter	●
Head guard	●
Cab sunvisor	●
Travel alarm	◎
Fuel pre filter	◎

https://truckmanualshub.com/

Execution Time Emission Control Regulation

Regions	Output classification (kW)	Intended models	1999	2000	2001	2002	2003	2004	2005	2006	2007	2008	2009	2010
North America (EPA)	450≦kW＜560													
	225≦kW＜450	SH400~800												
	130≦kW＜225	SH290~350												
	75≦kW＜130	SH160~240												
	37≦kW＜75	SH75~125												
Europe (EU)	130≦kW＜560	SH290~800												
	75≦kW＜130	SH160~240												
	37≦kW＜75	SH75~125												
Japan (Environment Agency)	130≦kW＜560	SH290~800												
	75≦kW＜130	SH160~240												
	37≦kW＜75	SH75~125												
China	130≦kW	SH290~800	Beijing											
	75≦kW＜130	SH160~240												
	75≦kW＜130	SH75~125	Except for Beijing											

Tier 1 (Emission control regulation of 1st-stage)

Tier 2 (Emission control regulation of 2nd-stage)

Tier 3 (Emission control regulation of 3rd-stage)

At present, the emission control regulation of 3rd-stage has been started execution both in North America and in Europe.

In Japan, execution time has not been decided but it will be executed about one year behind.

In addition, execution of production control is expected after the emission control regulation of 3rd-stage.

https://truckmanualshub.com/

Standard Amount of Exhaust Gas

(g/kWh)

Region	Output classification (kW)	Engin models (ISUZU)	Controlled exhaust gas in 2nd-stage				Controlled exhaust gas in 3rd-stage			
			NOx + HC	CO	PM		NOx + HC	CO	PM	
North America (EPA)	450 ≦ kW < 560		6.4	3.5	0.20		4.0	3.5	0.20	
	225 ≦ kW < 450	6W,6U	6.4	3.5	0.20		4.0	3.5	0.20	
	130 ≦ kW < 225	6H	6.6	3.5	0.20		4.0	3.5	0.20	
	75 ≦ kW < 130	4H	6.6	5.0	0.30		4.0	5.0	0.30	
	37 ≦ kW < 75	4J,4JE	7.5	5.0	0.40		-	-	-	
	19 ≦ kW < 37	3L	7.5	5.5	0.60		-	-	-	

Region	Output classification (kW)	Engin models (ISUZU)	Controlled exhaust gas in 2nd-stage					Controlled exhaust gas in 3rd-stage			
			NOx	HC	CO	PM		NOx + HC	CO	PM	
Europe (EU)	130 ≦ kW < 560	6W,6U,6H	6.0	1.0	5.0	0.30		4.0	3.5	0.20	
	75 ≦ kW < 130	4H	6.0	1.0	5.0	0.30		4.0	5.0	0.30	
	37 ≦ kW < 75	4J,4JE	7.0	1.3	5.0	0.40		4.7	5.0	0.40	
	19 ≦ kW < 37	3L	8.0	1.5	5.5	0.80		7.5	5.5	0.60	

Region	Output classification (kW)	Engin models (ISUZU)	Controlled exhaust gas in 2nd-stage					Controlled exhaust gas in 3rd-stage				
			NOx	HC	CO	PM	SM (%)	NOx	HC	CO	PM	SM (%)
Japan (Environment Agency)	130 ≦ kW < 560	6W,6U,6H	6.0	1.0	3.5	0.20	40	3.6	0.4	3.5	0.17	25
	75 ≦ kW < 130	4H	6.0	1.0	5.0	0.30	40	3.6	0.4	5.0	0.20	25
	37 ≦ kW < 75	4J,4JE	7.0	1.3	5.0	0.40	40	4.0	0.7	5.0	0.25	30
	19 ≦ kW < 37	3L	8.0	1.5	5.0	0.80	40	4.0	0.7	5.0	0.30	35

To be decided.

NOx : Nitrogen oxide
HC : Hydrocarbon
CO : Carbon monoxide
PM : Particulate matter
SM : Black smoke

https://truckmanualshub.com/

Measures to be Taken for The Emission Control Regulation

1. Measures to be taken for the emission control regulation of 2nd-stage

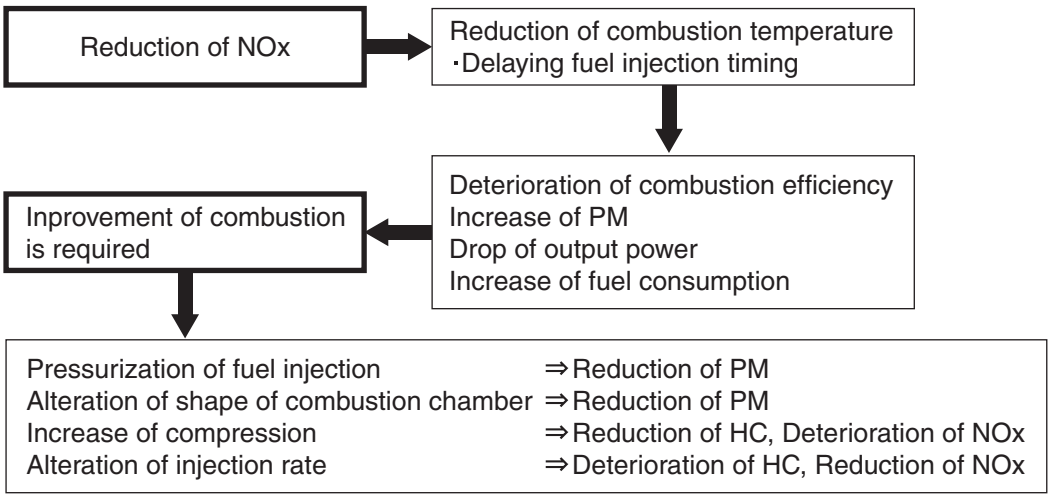

2. Example of measures taken ageinst the emission control regulation of 3rd-stage

In order to reduce NOx and PM simultaneously which are in “trade-of” relationship, more complicated fuel injection is required.

Therefore, electronic control is to be introduced in all the fuel injection. (Combination of pressurized injection, multiple injection, and injection rate control.)

https://truckmanualshub.com/

Engine fuel and maintenance of fuel filters

In order to meet the emission control regulation of 3rd-stage, the engine components have been made precisely and they are to be used under high-pressure conditions.

Therefore, the specified fuel must be used for the engine.

As a matter of course, not only the guarantee will not be given for the use of a fuel other than the specified but also it may invite a serious breakdown.

In addition, since suitable specifications for the fuel filter elements have been established for this engine, use of the genuine filter is essential.

The following describes the specifications and the requirements of the fuel to be applied, and maintenance of the fuel and the fuel elements.

1. Fuel to be applied

(1) Selection of fuel

Following conditions must be met for the diesel engines, that is the one;

[1] In which no dust even fine one is mixed,

[2] With proper viscosity,

[3] With high cetane rating,

[4] With good flow properties in lower temperature,

[5] With not much sulfur content, and

[6] With less content of carbon residue.

(2) Applicable standards for diesel fuel

Applicable Standard	Recommendation
JIS (JAPANESE INDUSTRIAL STANDARD)	NO.2
DIN (DEUTSCHE INDUSTRIE NORMEN)	DIN 51601
SAE (SOCIETY OF AUTOMOTIVE ENGINEERS)	
Based on SAE-J-313C	NO. 2-D
BS (BRITISH STANDARD) Based on BS/2869-1970	Class A-1

If a standard applied to the fuel for the diesel engine is stipulated in your country, check the standard for details.

https://truckmanualshub.com/

(3) Requirements for diesel fuel

Although conditions required for the diesel fuel are illustrated above, there are other requirements exerting a big influence on its service durability and service life.

Be sure to observe the following requirements for selecting fuel.

Sulfur content	2500 ppm or less
HFRR*	460 μm or less
Water content	0.05 wt% or less

* HFRR (High-Frequency Reciprocating Rig.): An index showing lubricating properties of the fuel.

Sulfur content reacts to moisture to change into sulfuric acid after combustion.

Use of a fuel containing much sulfur content allows it to accelerate internal corrosion and wear.

In addition, much sulfur content quickens deterioration of engine oil allowing its cleaning dispersive property to be worse which results in acceleration of wear of sliding portions.

HFRR is an index that indicates lubricating property of a fuel.

Large value of the index means poor lubrication so that seizure of the machine components may result if such a fuel is used.

Since a fuel with high HFRR value also has lower viscosity, it can easily be leaked out.

If the fuel is mixed with the engine oil, the oil is diluted to deteriorate its lubricating property resulting in acceleration of wear.

Water content allows inside of the fuel tank to rust which in turn blocking the fuel line and the fuel filter.

This may also cause wear and seizure of the machine components.

If atmospheric temperature goes below the freezing point, moisture content in the fuel forms fine particle of ice allowing the fuel line to be clogged.

Obtain table of analysis for the fuel you are using from the fuel supplier to confirm that it meets the criteria described above.

Important

If a fuel which does not meet the specifications and the requirements for the diesel engine, function and performance of the engine will not be delivered.

In addition, never use such a fuel because a breakdown of the engine or an accident may be invited.

Guarantee will not be given to a breakdown caused by the use of a improper fuel.

Some fuels are used with engine oil or additives mixed together with diesel engine fuel.

In this case, do not use these fuels because damage to the engine may result as the fuel has been contaminated.

It is natural that the emission control regulation of 3rd-stage will not be cleared in case where a fuel that does not meet the specifications and the requirements is used.

Use the specified fuel for compliance of the exhaust gas control.

https://truckmanualshub.com/

2. Maintenance of fuel filters

(1) Be sure to use the genuine fuel filters.

The fuel injection system is precisely constructed and the genuine filter employs finer mesh than conventional filters to improve protection of machine equipment.

If a filter with coarse mesh is used, foreign object passing through the filter enters into the engine so that machine equipment can wear out in a short period of time.

Important

(1) If a fuel filter other than the genuine filter is used, guaranty will not be applied to a fault caused by the use of a wrong filter.

(2) Two kinds of fuel filter, the pre-filter and the main filter, are mounted on the machine.

Be sure to use the genuine fuel filters and replace them at a periodic intervals.

Replacement criteria

	Every 250 hour of use	Every 500 hour of use
Pre-filter	○	
Main filter		○

Since the pre-filter also has a function of water separation, discharge water and sediment when the float reaches lower part of the filter elements.

(3) Time to replace filters may be advanced according to properties of the fuel being supplied.

Running the engine with the fuel filter blocked may cause the engine to be stopped due to establishment of engine error code.

If much foreign objects are found in the fuel, carry out earlier inspection and regular replacement of the filters.

(4) If dust or water get mixed with the fuel, It may cause the engine trouble and an accident.

Therefore, take measures to prevent dust and/or water from being entered in the fuel tank when supplying fuel.

When supplying fuel directly from a fuel drum can, leave the drum as it stands for a long period of time to supply clean fuel standing above a precipitate.

If it is hard to leave the drum for a long period of time, install a fuel strainer and a water separator before the fuel tank of the machine to supply clean fuel.

(5) Water drain cock is provided on the bottom side of the fuel tank.

Drain water before starting the engine every morning.

In addition, remove the cover under the tank once a year to clean up inside of the tank.

https://truckmanualshub.com/

Engine System Diagram

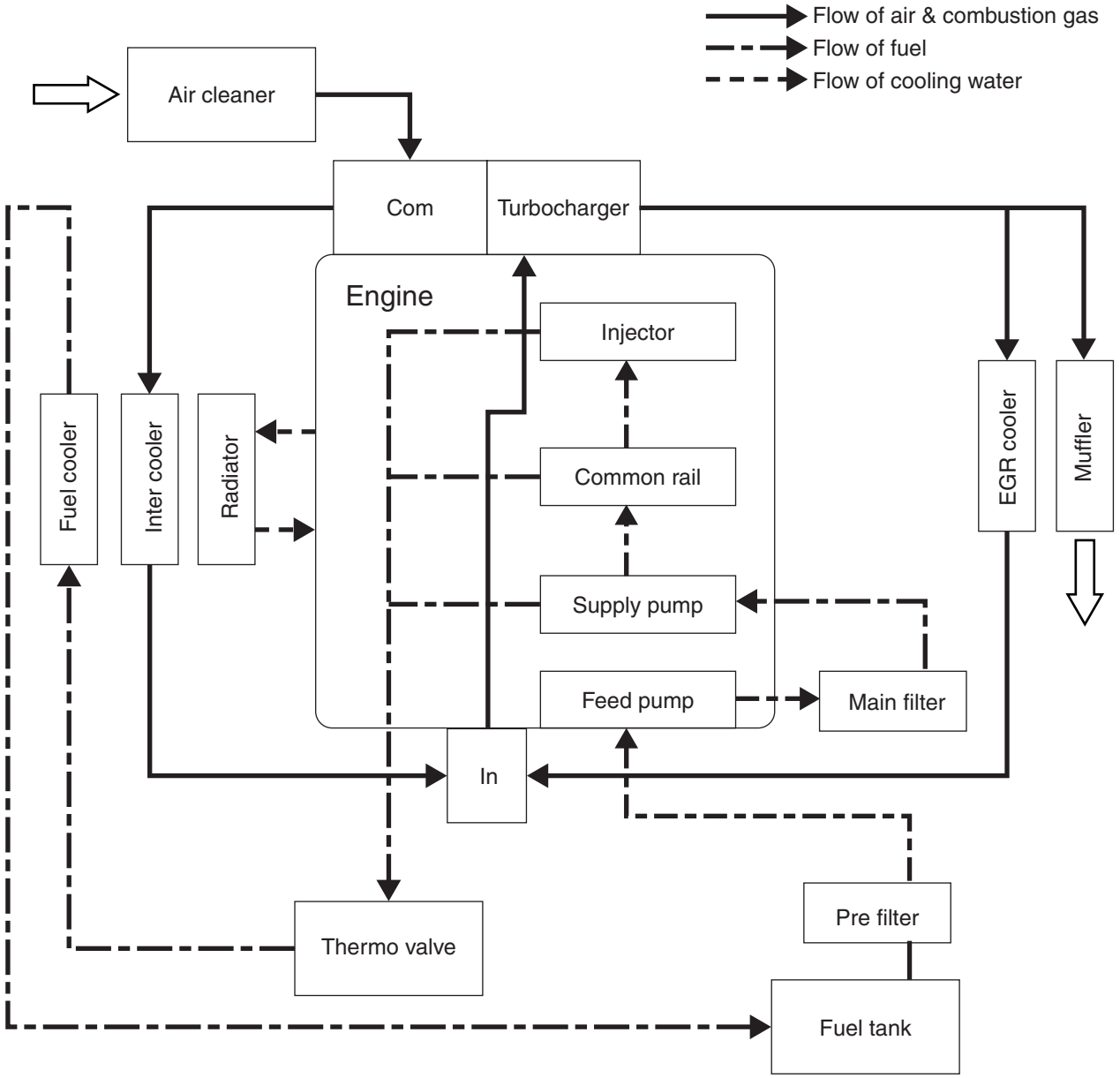

Refer to maintenance section for maintenance of filters.

https://truckmanualshub.com/

Construction of Engine (ISUZU 6WG1T)

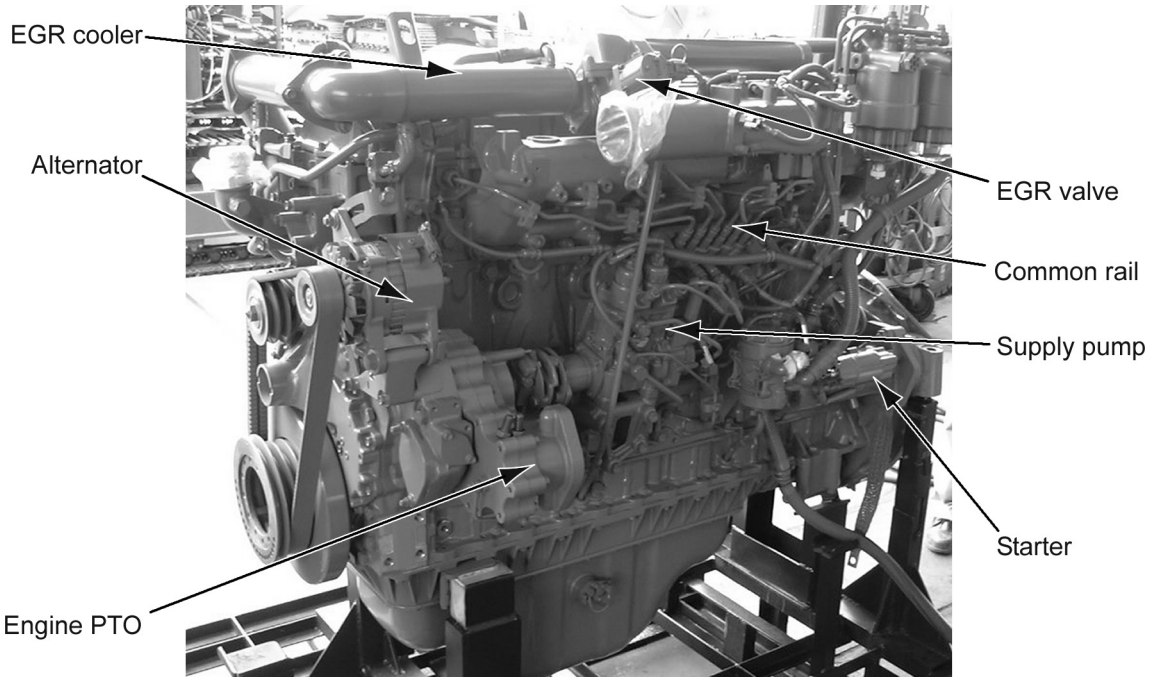

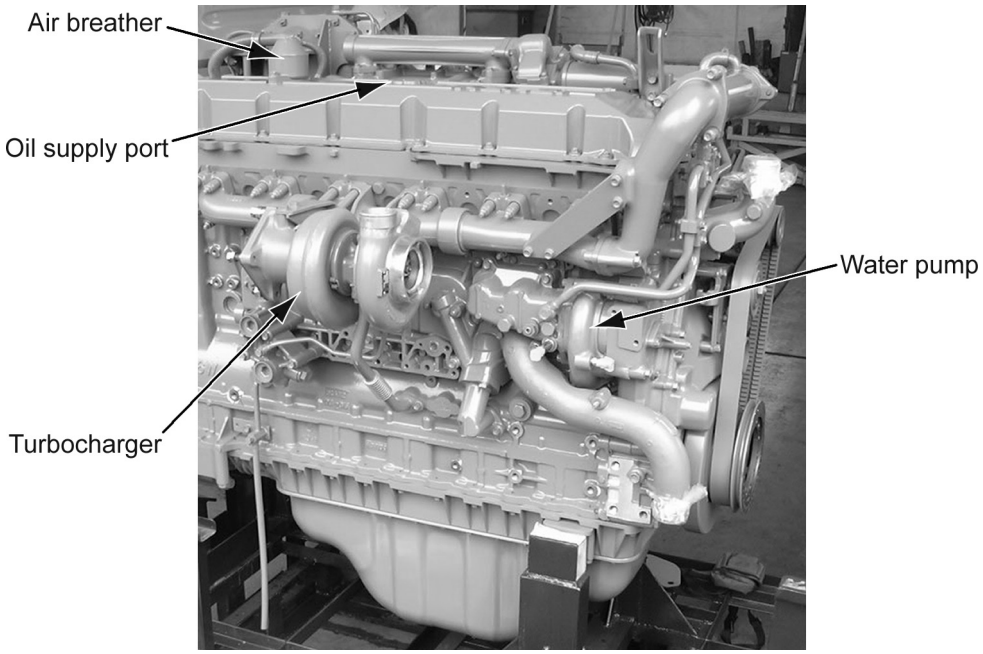

https://truckmanualshub.com/

Common Rail Injection System (High Pressure Injection)

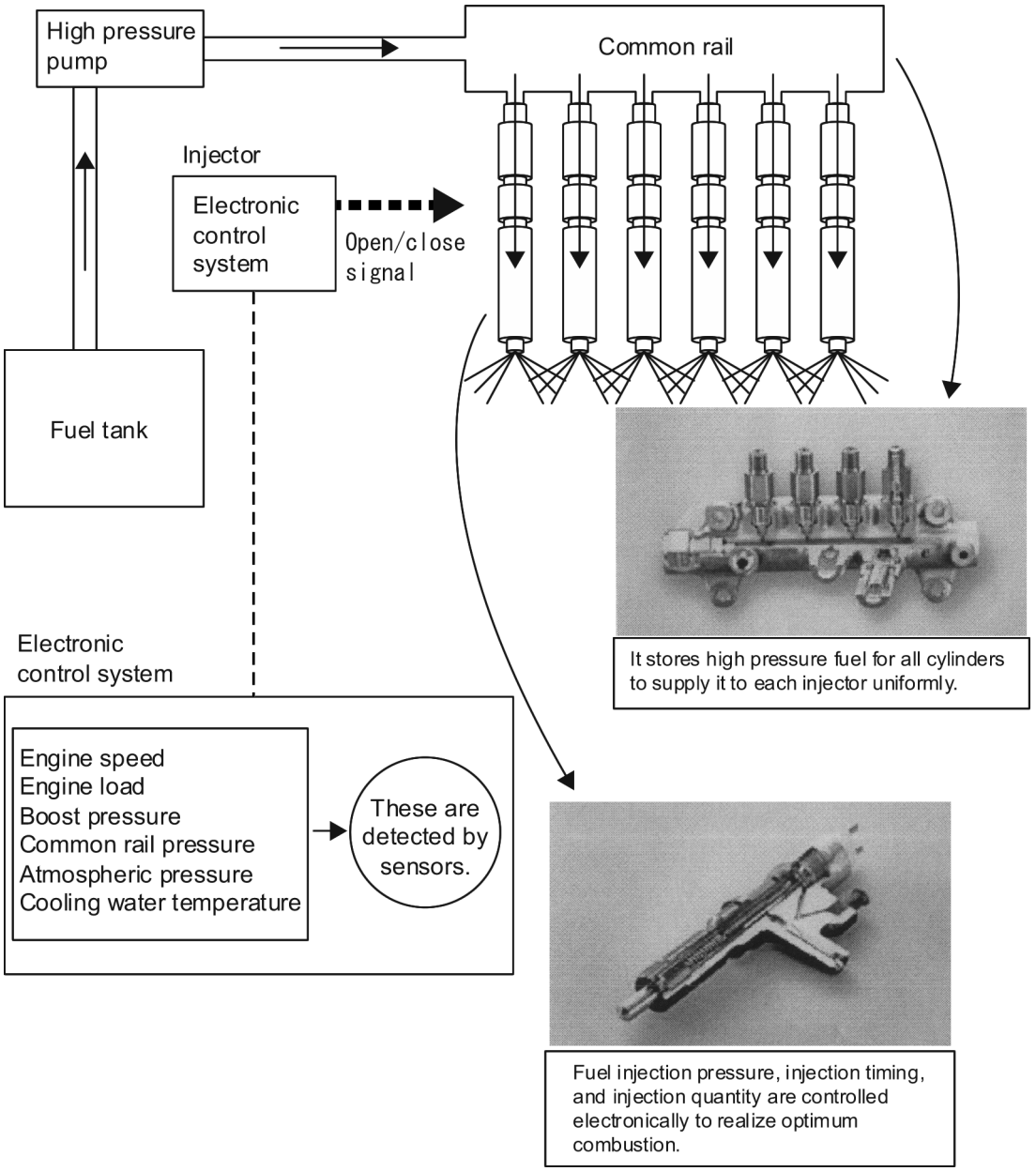

https://truckmanualshub.com/

Common Rail Injection System (Multiple Injection)

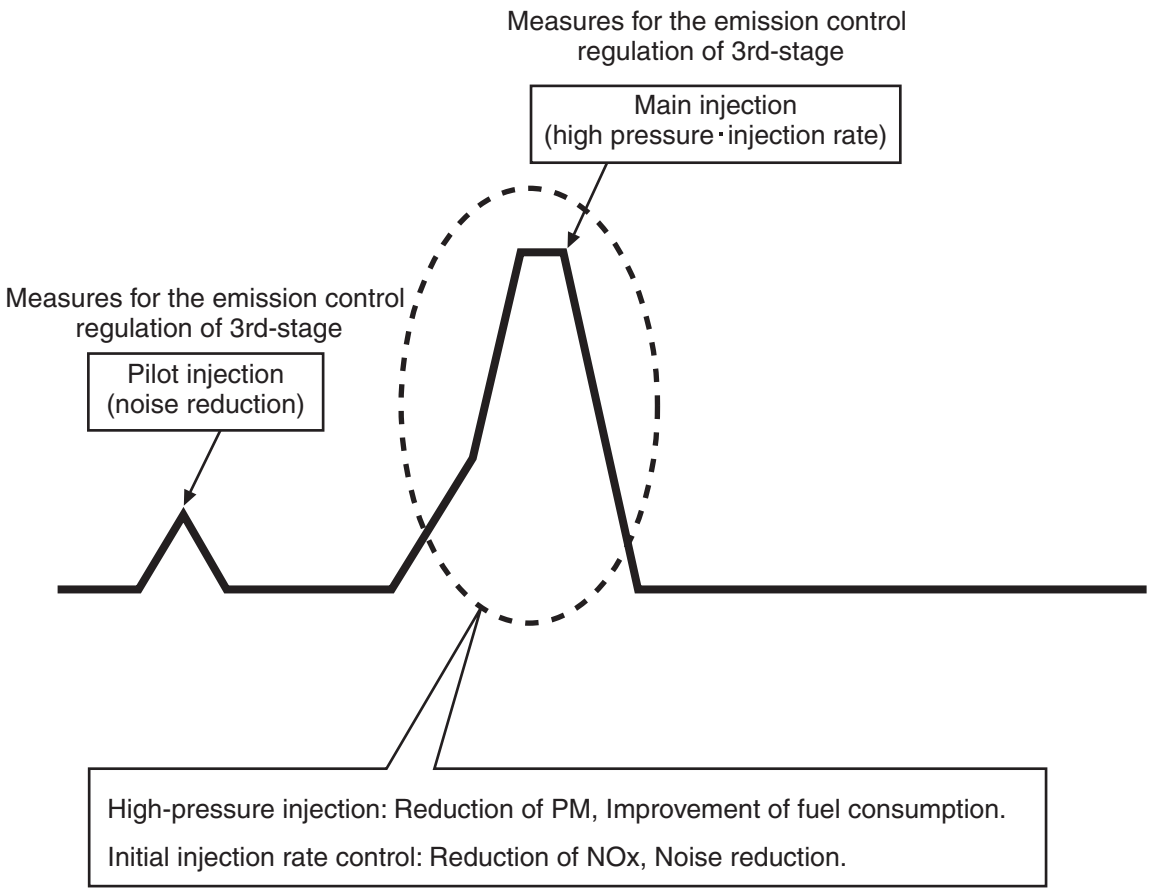

https://truckmanualshub.com/

Suction and Exhaust System (Inter Cooler)

<For models above SH290, this has been introduced in the engines meeting the emission control regulation of 2nd-stage.>

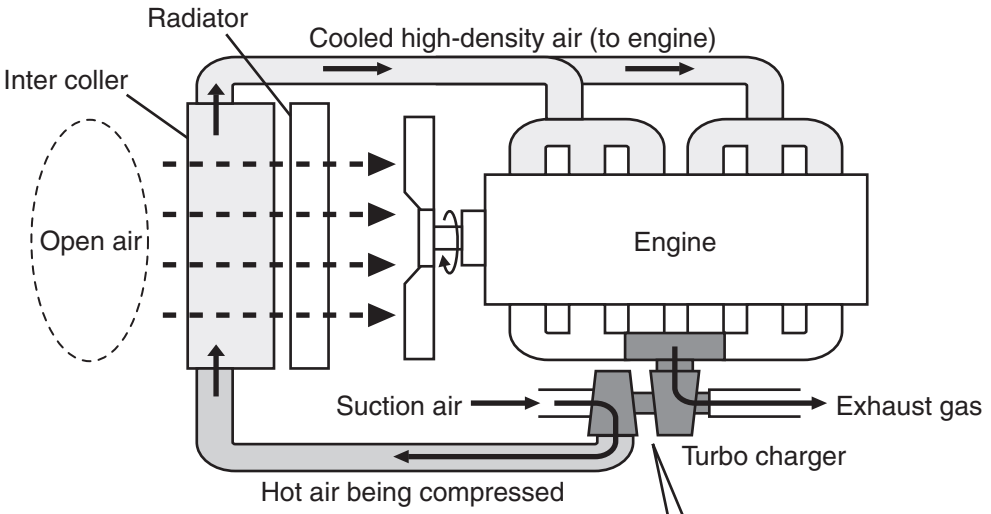

Density of air is increased by cooling suction air which has been heated up to a high temperature by turbo-charging so that raised suction efficiency can result.
This raises combustion efficiency of the engine to realize improvement of fuel consumption (also reduction of CO and CO_2).

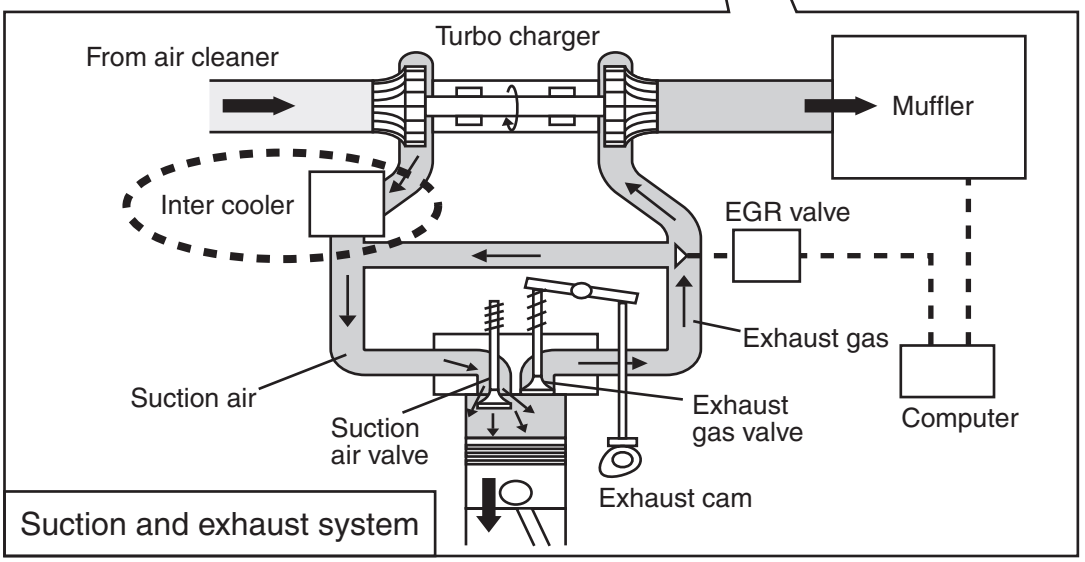

Suction and exhaust system

https://truckmanualshub.com/

Suction and Exhaust System (EGR)

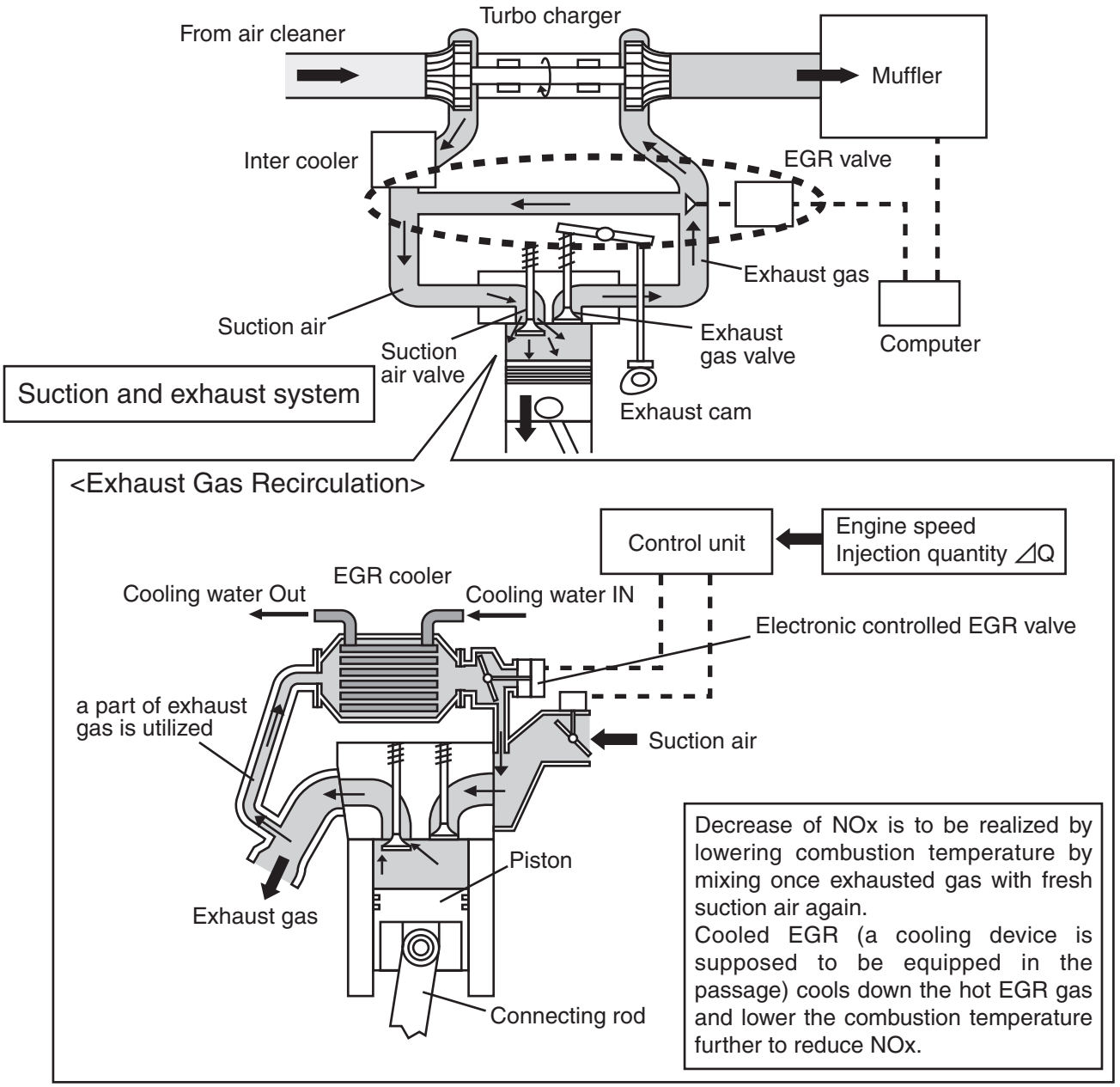

https://truckmanualshub.com/

Equipment

Overall

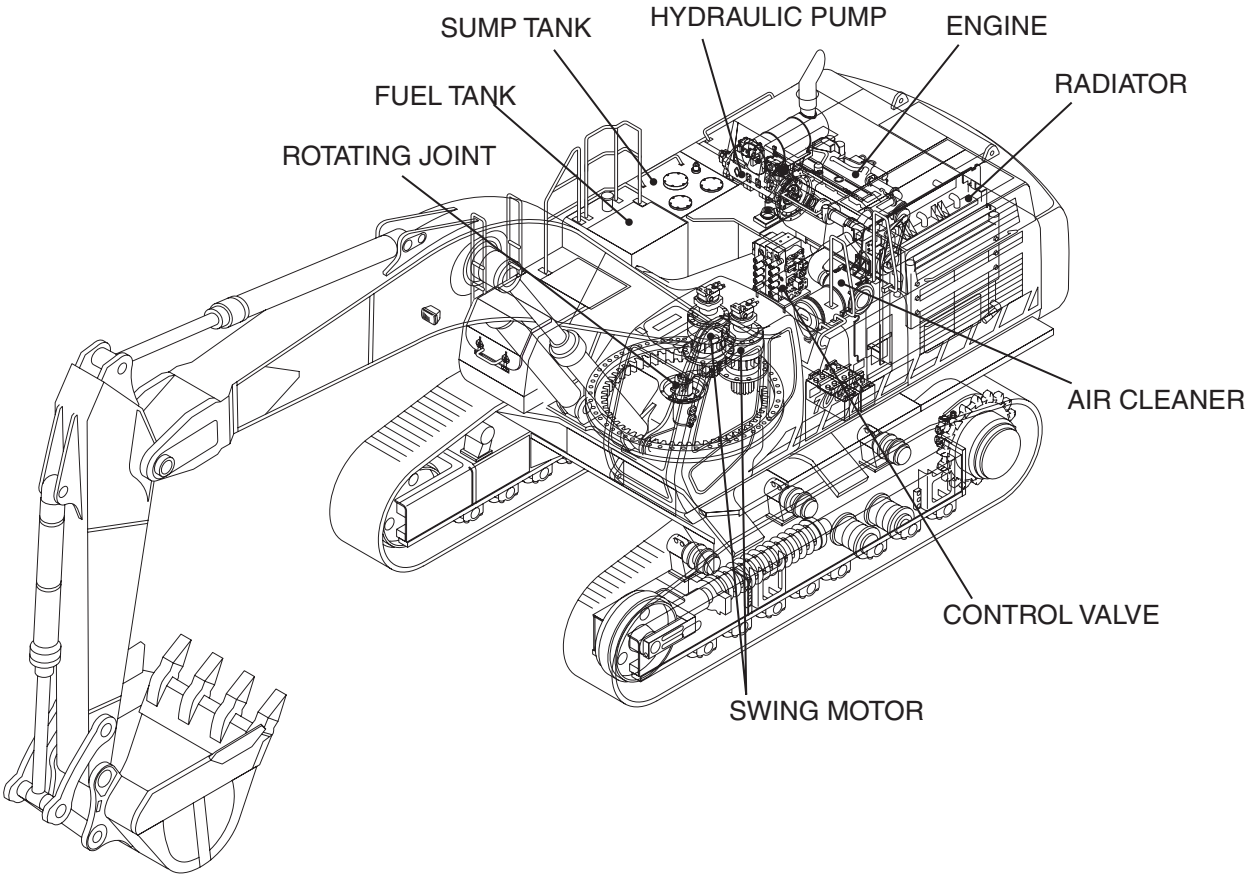

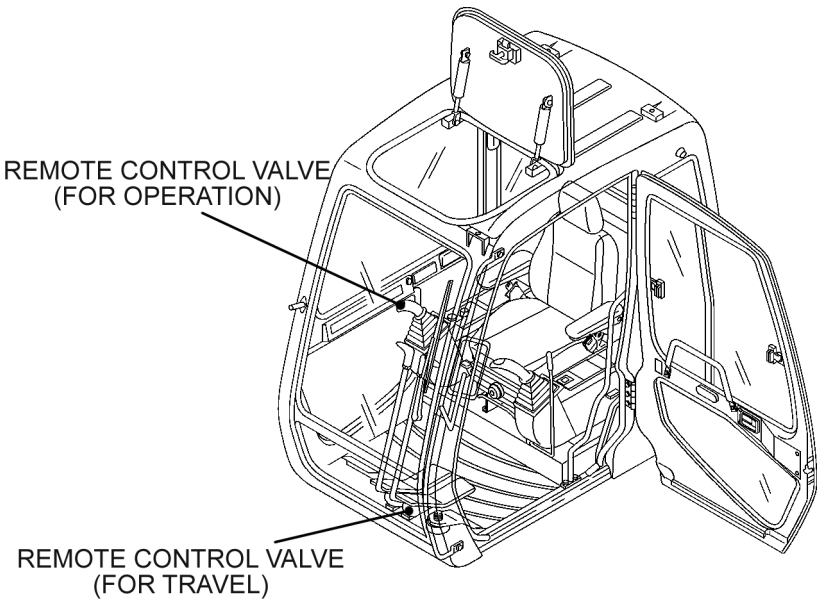

https://truckmanualshub.com/

Operator's Cab

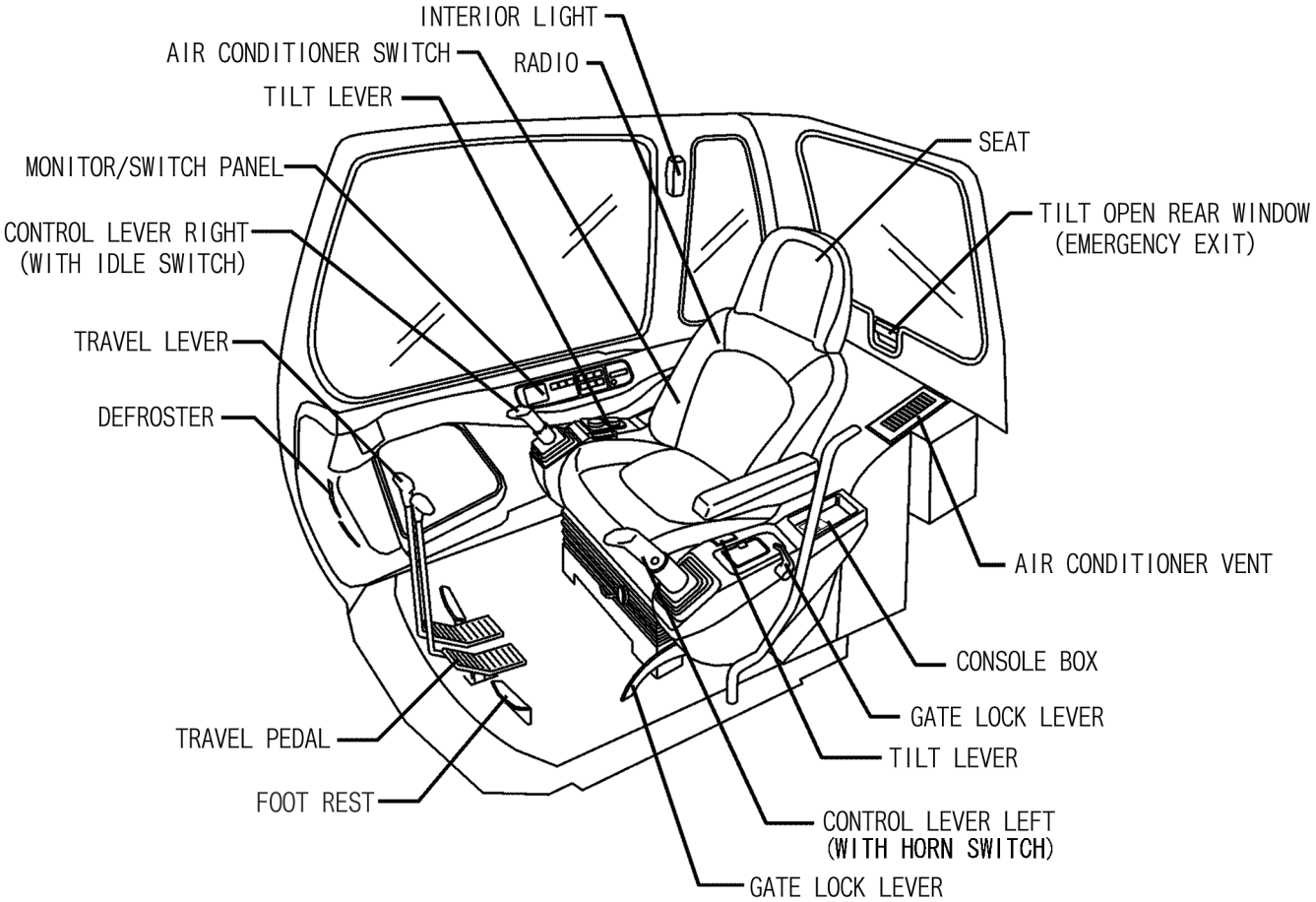

https://truckmanualshub.com/

Main Body

MAJOR EQUIPMENT SPECIFICATIONS

Lower Mechanism

Assembly Drawing

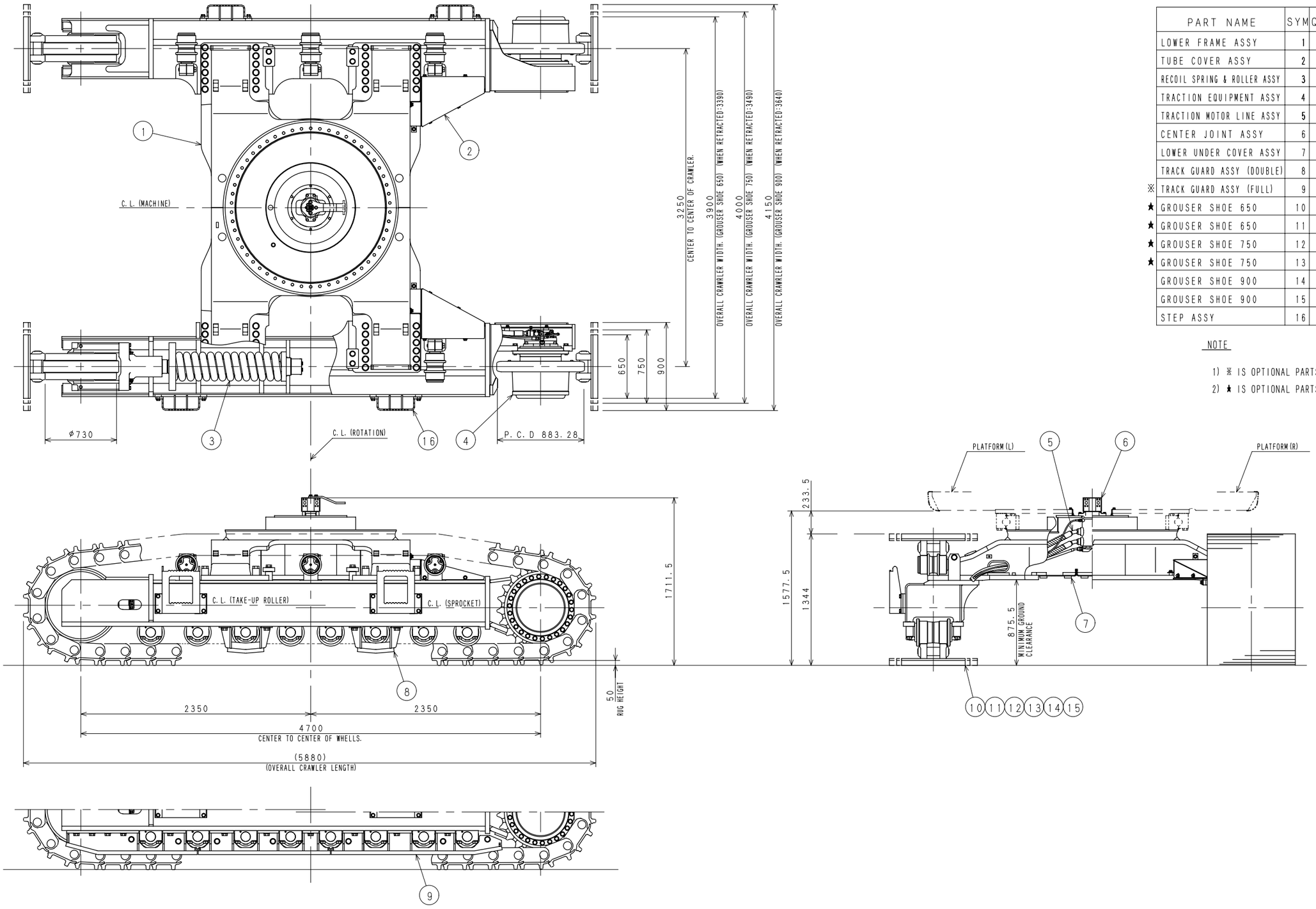

	PART NAME	SYM	QTY	REMARKS
	LOWER FRAME ASSY	1	1	
	TUBE COVER ASSY	2	1	
	RECOIL SPRING & ROLLER ASSY	3	2	
	TRACTION EQUIPMENT ASSY	4	2	
	TRACTION MOTOR LINE ASSY	5	1	
	CENTER JOINT ASSY	6	1	
	LOWER UNDER COVER ASSY	7	1	
	TRACK GUARD ASSY (DOUBLE)	8	2	
※	TRACK GUARD ASSY (FULL)	9	2	
★	GROUSER SHOE 650	10	2	2-BAR(23)
★	GROUSER SHOE 650	11	2	2-BAR(24)
★	GROUSER SHOE 750	12	2	2-BAR(23)
★	GROUSER SHOE 750	13	2	2-BAR(24)
	GROUSER SHOE 900	14	2	2-BAR(23)
	GROUSER SHOE 900	15	2	2-BAR(24)
	STEP ASSY	16	4	

NOTE

1) ※ IS OPTIONAL PARTS.
2) ★ IS OPTIONAL PARTS FOR LBX.

KWA0001Z-D00

https://truckmanualshub.com/

Travel Unit

Traction motor	
Sumitomo Part No.	KWA0018
Manufacturer	KAYABA INDUSTRY Co., Ltd.
Motor type	Variable displacement piston motor automatic 2-speed switch-over with parking brake
Displacement	337.2 / 228.6 cm^3/rev
Operating pressure	34.3 MPa
Operating flow	448 L/min
Brake torque	1120 N•m or over (excluding reduction gear)
Relief set pressure	35.3 MPa at 40 L/min
2-speed control pressure	25.5 ± 1 MPa
Traction reduction gears	
Sumitomo Part No.	KWA0019
Manufacturer	OKUBO GEAR Co., LTD.
Reduction gear type	Planetary gear 3-stage reduction system
Reduction ratio	74.853
Dry weight	761.6 kg

Take-up Roller

Sumitomo Part No.	KWA0029
Weight	454 kg

Upper-Roller

Sumitomo Part No.	KWA0074
Weight	63.4 kg

Lower Roller

Sumitomo Part No.	KWA10170
Weight	136.9 kg

https://truckmanualshub.com/

Recoil Spring

Item	Sumitomo Part No.	
Recoil spring assembly	KWA0036	552.1 kg
Grease cylinder assembly	KUA0275	153.4 kg
Check valve assembly	KHA0026	0.1 kg
Special bolt	KUA0111	0.1 kg
High strength bolt M20X140	102R020Y140R	3.3 kg
High strength washer 20	KHN0298	0.2 kg
Assembly	Total weight	709.2 kg
	Mounting length of spring:	1080 mm

Shoes

	Sumitomo Part No.	
650 Grouser (2-bar)	KWA0070 / KWA0071	3873kg
Link	KWA0082 / KWA0083	23+24
Shoe	KWA10090	47
Bolt	KWA10020	188
Nut	KUA0349	188

	Sumitomo Part No.	
750 Grouser (2-bar)	KWA10050 / KWA10060	4178.6kg
Link	KWA0082 / KWA0083	23+24
Shoe	KWA10100	47
Bolt	KWA10020	188
Nut	KUA0349	188

	Sumitomo Part No.	
900 Grouser (2-bar)	KWA10070 / KWA10080	4578.1kg
Link	KWA0082 / KWA0083	23+24
Shoe	KWA10110	47
Bolt	KWA10020	188
Nut	KUA0349	188

https://truckmanualshub.com/

Upper Mechanism

Swing Unit

Swing moter	
Sumitomo Part No.	KWC10010
Manufacturer	Kasasaki Precision Machinery Ltd.
Motor type	Fixed displacement piston motor with parking brake and reversal prevention valve
Displacement	210.1 cm^3/rev
Operating pressure	27.9 MPa
Operating flow	224 L/min
Brake torque	1161 to 1504 N•m
Brake off pressure	2.6 MPa less than
Relief set pressure	27.9^{0}_{-1} MPa at 215 L/min
Swing reduction gears	
Sumitomo Part No.	KUC0002
Reduction gear type	Planetary gear 2-stage reduction system
Reduction ratio	23.247
Dry weight	410.8 kg

https://truckmanualshub.com/

Engine and Related Areas

Engine

Sumitomo Part No.	KWH10060
Engine model name	ISUZU 6WG1X Diesel Engine
Engine type	4-cycle, water-cooled, overhead camshaft, common-rall injection (electroic control) with air-cooling type in-ter-cooler tubo
Number of cylinders - Bore x Stroke	6-dia. 147 mm x 154 mm
Displacement	15.7 L
Compression ratio	16
Rated output	345 ± 7.0 kW / 1800min^{-1}
Maximum torque	1980 N•m / apprex. 1500min^{-1}
Dry weight	Approximately 1185 kg
Engine dimensions	L 1462 x W 1017 x H1422 mm
Oil pan	All direction 35°, inclinable
Cooling fan	Remote (diameter 1016 mm suction type-6blades resin & steel)
Pulley ratio	—
Alternator	24 V x 50 A AC type
Starter-generator	24 V x 7kW reduction type
Coolant capacity	36 L (engine only)
Oil pan capacity	Maximum : 52 L Mimimum : 37 L (excluding oil filter)
Direction of rotation	Right (viewed from fan side) ; compliant with

https://truckmanualshub.com/

Muffler

Sumitomo Part No.	KWH0004
Manufacturer	NIPPON DONALDSON LTD.
External dimensions	dia. 358 x 924 mm
Weight	21.0 kg

Air Cleaner (With pre cleaner)

Sumitomo Part No.	KWH0003
Manufacturer	NIPPON DONALDSON LTD.
Element (outer)	KWH0029
Element (inner)	KWH0050
Weight	40.3kg

Radiator

Sumitomo Part No.		KWH0002
Manufacturer		TOYO RADIATOR CO., LTD.
Oil cooler	Weight	215.0 kg
	Oil capacity	48.0 L
Radiator	Weight	23.6 kg x 3
	Water capacity	10.0 L x 3
Air cooler	Weight	35.0 kg
	Capacity	32.2 L
Fuel cooler	Weight	6.0 kg
	Capacity	2.1 L
Total weight		601 kg

https://truckmanualshub.com/

Main Body

MAJOR EQUIPMENT SPECIFICATIONS

Fuel Tank

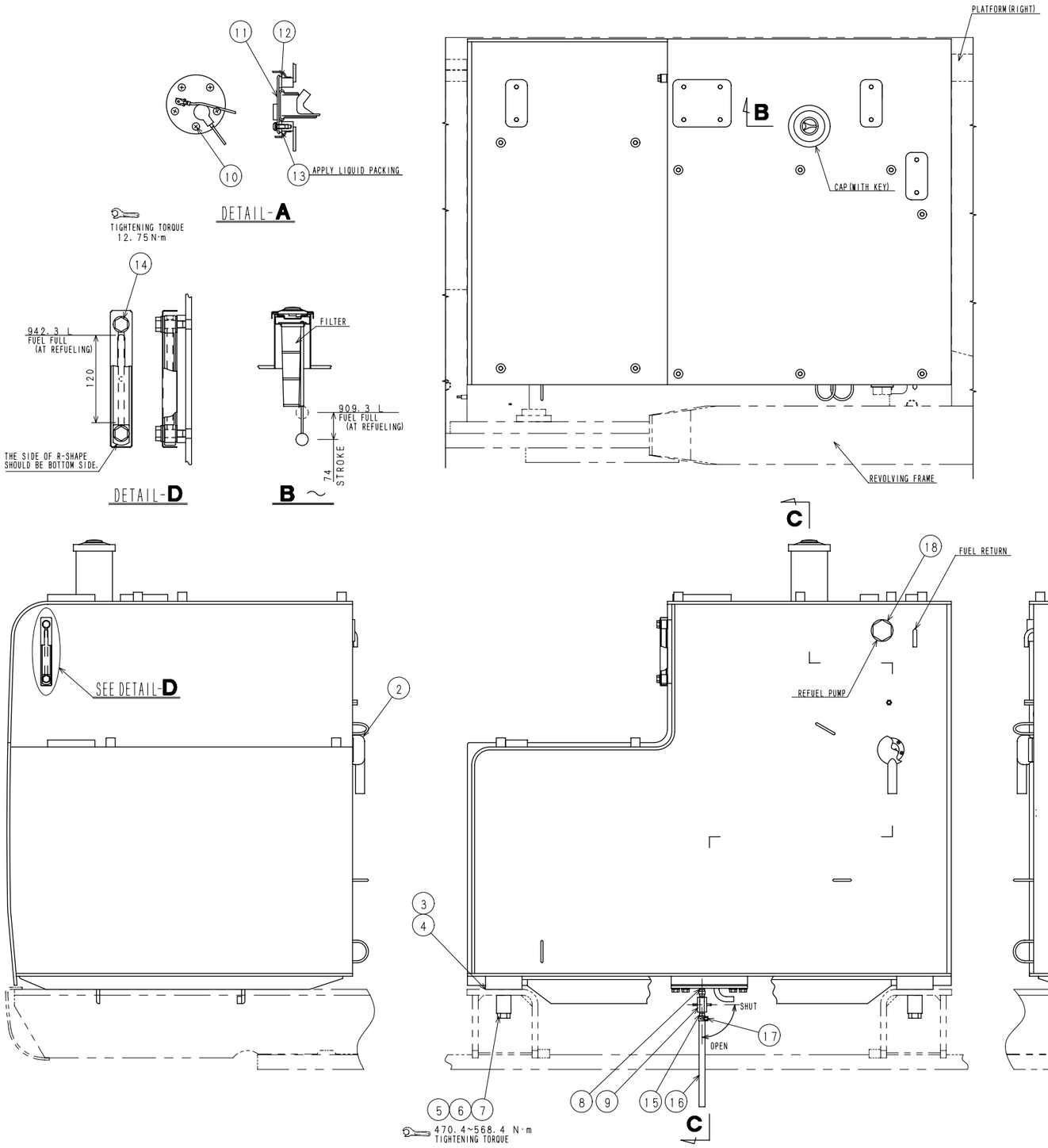

NOTES

1) THE SPECIFCATIONS OF FUEL TANK REFER TO THE BELLOWS.
TANK CAPACITY:900L

2) THE SCM MONITOR FUEL GAUGE IS SHOWN AS FOLLOWING DRAWING.

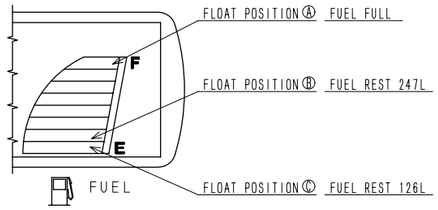

3) TIGHTEN BOLTS Ⓑ TO THE INDICATED TORQUE AFTER APPLYING LOCTITE #262 TO THE THREAD.

4) THE FUEL OIL GAUGE SHOULD BE INSTALLED AS THIS DRAWING.
(THE SIDE OF R-SHAPE SHOULD BE BOTTOM SIDE.)

PART NAME	SYM	QTY
FUEL TANK	1	1
SENSOR COVER	2	1
PLATE SHIM(t=0.8)	3	NEED
PLATE SHIM(t=2.0)	4	NEED
SPACER	5	8
HIGH STRENGTH BOLT M20X90	6	8
LOCTITE 262	7	NEED
NIPPLE	8	1
DRAIN COCK	9	1
PAN HEAD SCREW M5X12	10	5
FUEL SENSOR	11	1
NON-ASBESTOS PACKING	12	1
LIQUID PACKING	13	NEED
OIL LEVEL GAGE	14	1
NIPPLE	15	1
RUBBER HOSE	16	1
HOSE BAND	17	1
PLUG G1-1/4	18	1

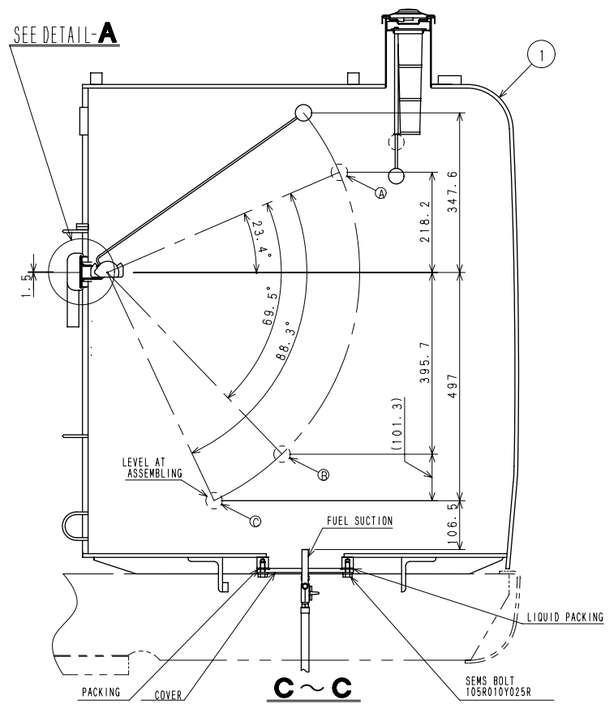

KWH0026Z-D05

https://truckmanualshub.com/

Hydraulic System

Hydraulic Pump

Sumitomo Parts No.	KWJ0003
Manufacturer	Kawasaki Precision Machinery Ltd.
Main pump	
Pump type	Double variable displacement piston pump
Displacement	242 X 2 cm^3/rev
Rated operating pressure	31.4 MPa
Meximum operating pressure	34.3 MPa
Input revolution speed	1850 min-1
Maximum flow	448 X 2 L/min (at 1850 min^{-1})
Input horsepower	282.2 kW
Shaft input horsepower	285 kW (at 1850 min^{-1})
Shaft input torque	1471 N•m (at 1850 min^{-1})
Pilot pump	
Pump type	Gear pump
Displacement	15 cm^3/rev
Operating pressure	$4.4\ ^{+0.2}_{0}$ MPa
Maximum flow	27.8 L/min (at 1850 min^{-1})
Input horsepower	2.8 kW
Control characteristics	Simultaneous output control of overall
	Negative control
	Electric horse power control
Dry weight	300 kg

https://truckmanualshub.com/

Main Body

MAJOR EQUIPMENT SPECIFICATIONS

Sump Tank

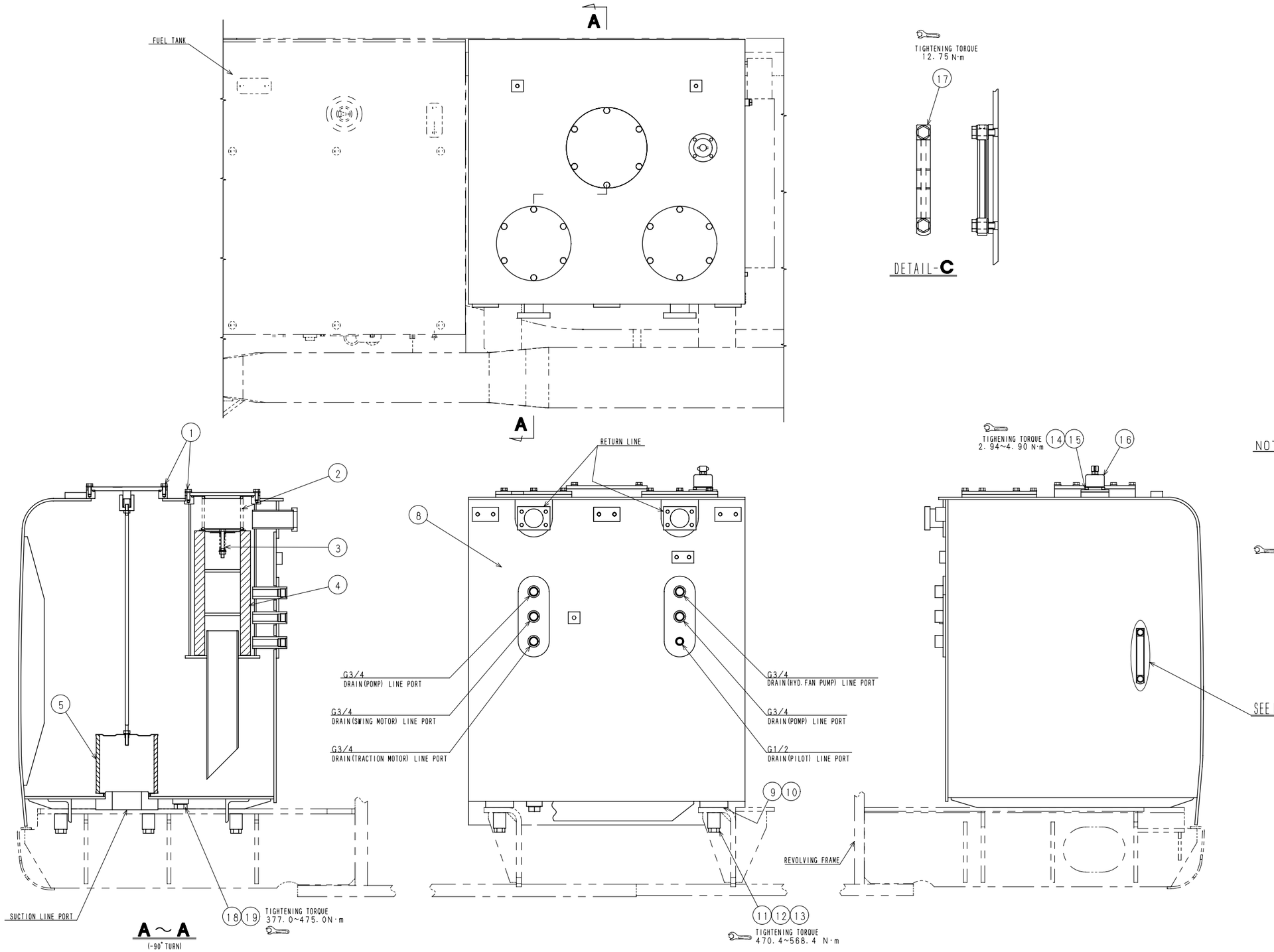

PART NAME	SYM	QTY
SEMS BOLT M10X25	1	18
COMPRESSION SPRING	2	2
RELIEF VALVE	3	2
RETURN FILTER	4	2
STRAINER	5	1
MISSING NUMBER	6	1
MISSING NUMBER	7	1
SUMP TANK	8	1
PLATE SHIM(t=2.0)	9	NEED
PLATE SHIM(t=0.8)	10	NEED
HIGH STRENGTH BOLT M20X90	11	6
SPACER	12	6
LOCTITE 262	13	NEED
HEX SOC HD BOLT M6X16	14	4
SPRING WASHER 6	15	4
AIR BREATHER	16	1
OIL LEVEL GAGE	17	1
HIGH STRENGTH M24X2X40	18	1
SEAL WASHER W24	19	1

NOTES

1) THE SPECIFCATIONS OF SUMP TANK REFER TO THE BELLOWS.
   - TANK CAPACITY:650L
   - OIL QUANTITY:310L
   - RATED PRESSURE RANGE:-4.9~49 kPa
2) TIGHTEN BOLTS ⑪ TO THE INDICATED TORQUE AFTER APPLYING LOCTITE #262 TO THE THREAD.
3) BE CAREFUL THAT PAINT AND GASOLINE NOT ADHERE TO HYD.OIL GAUGE. NO USE THINNER AND LIGHT OIL etc WHEN PAINT AND GASOLINE ADHERE TO HYD. OIL GAUGE.
4) THE HYD.OIL GAUGE SHOULD BE INSTALLED AS THIS DRAWING. (THE SIDE OF R-SHAPE SHOULD BE BOTTOM SIDE.)

KWJ0016Z-D01

https://truckmanualshub.com/

Rotating Joint

Sumitomo Part No.	KUA0387	
Operating pressure	High pressure passage (ABCD)	34.4 MPa
	Drain port (E)	1.0 MPa
	Pilot port (F)	3.9 MPa
Hydrostatic test pressure	High pressure passage (ABCD)	51.5 MPa
	Drain port (E)	2.0 MPa
	Pilot port (F)	5.9 MPa
Flow	High pressure passage (ABCD)	500 L/min
	Drain port (E)	50 L/min
	Pilot port (F)	27.8 L/min
Number of revolutions		15 min^{-1}
Torgue	When pressurizing 2 ports	196 N•m
Port A	Forward right	SAE 6000 psi $1^1/_4$
Port B	Forward left	SAE 6000 psi $1^1/_4$
Port C	Backward right	SAE 6000 psi $1^1/_4$
Port D	Backward left	SAE 6000 psi $1^1/_4$
Port E	Drain port	G3/4-A Class
Port F	Pilot port	G1/4-A Class
Weight	106.7 kg	

Solenoid Valve

Sumitomo Part No.	KHJ2304	
Manufacturer	Uchida Hydraulics CO., Ltd.	
Valve specifications		
Maximum flow	P → B : 30 L / min	Other : 5 L / min
Rated pressure	4.41 MPa	
Solenoid specifications		
Operating voltage	DC 20 to 32 V	
Current	13.0 W (at 24 V, 20° C)	
Weight	10.5 kg	

https://truckmanualshub.com/

Controls

Control Valve

Sumitomo Part No.	KWJ0022
Manufacturer	TOSHIBA MACHINE CO., LTD.
Maximum flow	448 L / min
Pressure setting for overload	27.5 ± 0.5 MPa (at 20 L / min) when boom down
	36.3 ± 0.5 MPa (at 20 L / min) other
Pressure setting for main relief	$31.4^{0}_{-0.49}$MPa (at 435 L / min)
	$34.3^{0}_{-0.49}$MPa (at 385 L / min) at boosting
Pressure setting for foot relief	3.3 ± 0.2MPa (at 66 ± 4 L / min)
Functions	Straight travel circuit
	Boom UP / 2-speed internal confluence for Arm
	Boom/arm load holding circuit
	Boom down regenerative circuit
	Arm IN forced regenerative circuit
	Boom up priority (speed restriction of bucket)
	Boom up priority (Speed restriction of swing)
	Swing priority (Speed restriction of arm)
	Bucket 2-speed internal confiuence
	Resevbe 2-speed internal confluence
Weight	430 kg

https://truckmanualshub.com/

Remote Control Valve (Left / Right, Travel Operations)

Valve for Left / Right Operations		
Sumitomo Part No.		KHJ12430
Manufacturer		Kawasaki Precision Machinery Ltd.
Operating pressure		3.92 MPa
Secondary pressure		0.49 ± 0.1 to 2.89 ± 0.15 MPa: Primary short type
Operating angle	Ports 1, 3	19 ± 1.9°
	Ports 2, 4	25 ± 2.5°
Operating torque	Port 1	0.58 to 2.03 N•m
	Port 3	0.47 to 1.92 N•m
	Ports 2, 4	0.71 to 2.30 N•m
Weight		1.8 kg

Valve for Travel operation		
Sumitomo Part No.		KTJ2034
Manufacturer		Kawasaki Precision Machinery Ltd.
Oparating pressure		3.92 MPa
Secondary pressure		0.49 ± 0.1 to 2.89 : 0.15 MPa: Primary short type
Operating angle		12.4 ± 0.3°
Operating torque	Valve	4.16 to 9.03 N•m
	Damper	4.90 ± 0.98 N•m at 0.0275 m/s
Weight		7.8 kg

https://truckmanualshub.com/

Backhoe Attachments

Cylinder

Boom cylinder	
Sumitomo Part No.	KWV0010 / KWV0011
Manufacturer	ZENOAH
Cylinder bore	dia. 190 mm
Rod diameter	dia. 130 mm
Max. retracted length	2535 ± 3.0 mm
Stroke	1805 ± 2.5 mm
Dry weight	598 kg

Arm cylinder	
Sumitomo Part No.	KWV0012
Manufacturer	ZENOAH
Cylinder bore	dia. 200 mm
Rod diameter	dia. 140 mm
Max. retracted length	2810 ± 3.0 mm
Stroke	2025 ± 2.5 mm
Dry weight	753 kg

Bucket cylinder	
Sumitomo Part No.	KWV0013
Manufacturer	ZENOAH
Cylinder bore	dia. 180 mm
Rod diameter	dia. 125 mm
Max. retracted length	2225 ± 3.0 mm
Stroke	1465 ± 2.0 mm
Dry weight	479 kg

https://truckmanualshub.com/

Attachments

● Standard bucket
◎ For general digging (specific gravity: 2.0 ton/m^3 or less)
○ For light digging (specific gravity: 1.6 ton/m^3 or less)
△ For loading only (specific gravity: 1.2 ton/m^3 or less)
× Do not use

Bucket capacity (m^3)		2.0	2.3	2.9	4.0
Number of teeth				5	5
Width (mm)				1850	2050
Type of arm specified	Super long arm (5.00 m)	●	○	△	×
	Long arm (4.11 m)	◎	●	○	×
	Standard arm (3.55 m)	◎	◎	●	△
	Short arm (3.00 m)	◎	◎	●	△

https://truckmanualshub.com/

Operation Principle

The rotary group consists of the drive shaft F (111), cylinder block (021), piston (151), shoe (152), retainer (153), spherical bush (156), and cylinder spring (157). The drive shaft's ends are supported by the bearing (123, 124).

The shoe forms a spherical joint caulked by the piston. It contains a pocket area in order to reduce the thrust force, which is generated by the loading pressure, and slide lightly on the shoe plate (211). The sub group of the piston shoe is pressed on the shoe plate by the cylinder spring via the retainer and spherical bush in order to move smoothly on the shoe plate. The cylinder block is also pressed on the valve plate (313) by the cylinder spring.

The swash plate group consists of the swash plate (212), shoe plate (211), swash plate support (251), tilting bush (214), tilting pin (531), and servo piston (532). The swash plate is supported on the swash plate support by the cylindrical part formed on the opposite side of the shoe sliding side.

When the servo piston moves to the right and left due to the regulator controlling hydraulic force being led to the hydraulic compartment, the swash plate is able to swing the swash plate support and change the tilting angle (a) via the spherical part of the tilting pin. The hydraulic compartment is located on the both sides of the servo piston.

The valve block group consists of the valve cover (311,312), booster (130), spline coupling (114), valve plate (313, 314), and valve plate pin (885). Spline coupling connects both drive shafts (F) and (R) between valve covers (F) and (R) to transfer torque. Booster is connected to the spline coupling and functions to pressurize suction pressure by centrifugal force for raising the sucton capacity. The valve plate which has two claw shaped ports installed on the valve block. If feeds and collects oil from the cylinder block. Oil which is switched by the valve plate flows to the external pipe through the valve block.

When the drive shaft is driven by the motor (electric motor, engine, or others), the cylinder block rotates simultaneously via the spline connection. If the swash plate is leaned, the piston located inside the cylinder block rotates with the cylinder block and exerts the reciprocal motions in relation to the cylinder correspondingly. Therefore, when focusing on one specific piston. In one full rotation, the piston moves toward the direction which is leaving apart from the valve plate (process of intake oil) during the first 180 degrees, and moves toward the direction which is coming to the valve plate (process of discharging oil) during the remaining 180 degrees. When the swash plate's angle is 0 degrees, the piston does not stroke, and therefore, oil will not be discharged.

https://truckmanualshub.com/

Internal Structure Drawing

NO.	PART NAME	QTY	COUNSTITUENT PART(QTY)
4	GEAR PUMP	1st	ZX15LHRZ1
11	PISTON ASSY	2st	151(9PC),152(9PC)
13	CYLINDER (R) ASSY	1st	012(1PC),313(1PC)
14	CYLINDER (L) ASSY	1st	012(1PC),314(1PC)
30	SWASH PLATE ASSY	2st	212(1PC),214(1PC)
530	TILITING PIN ASSY	2st	531(1PC),548(1PC)

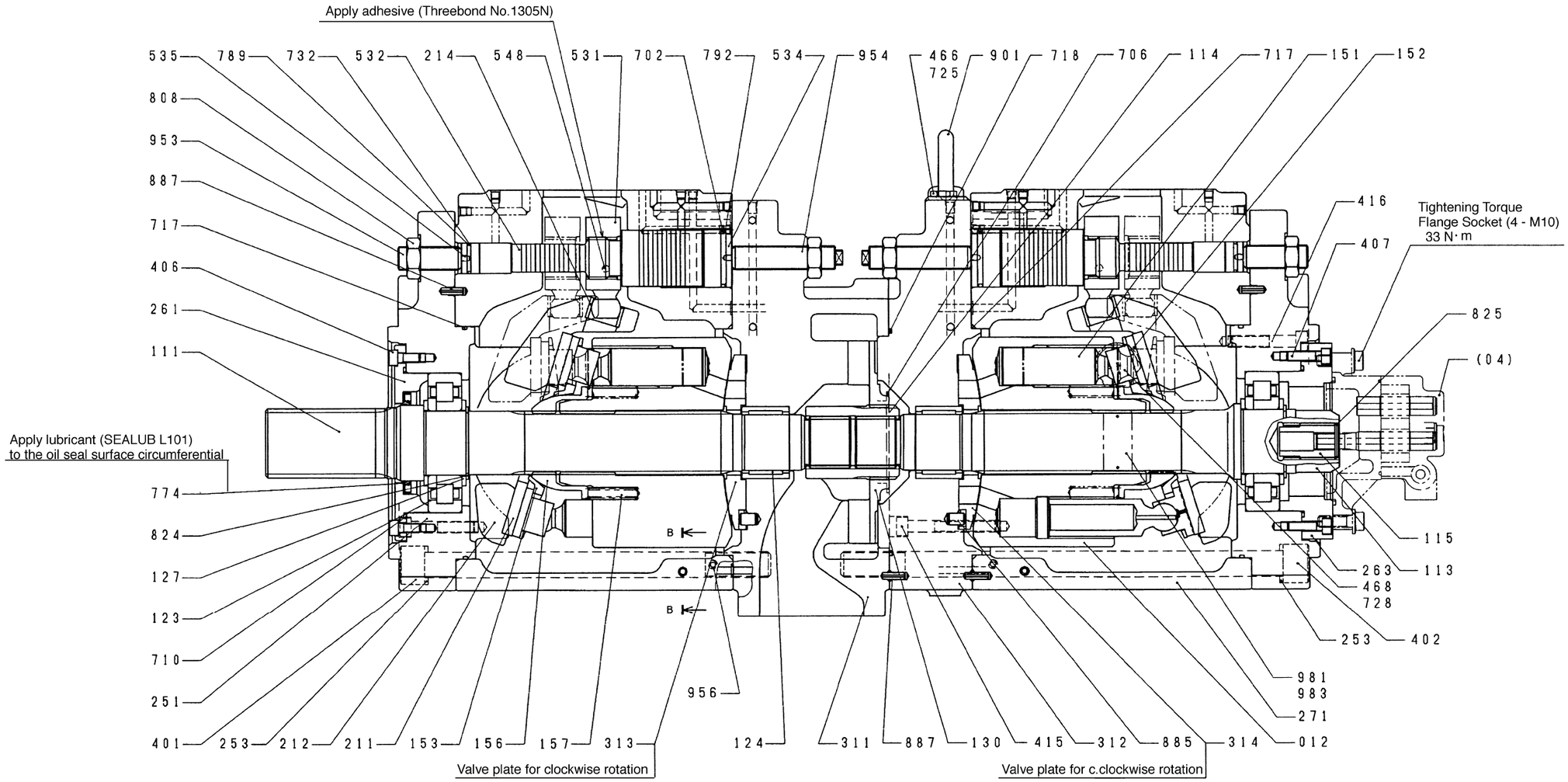

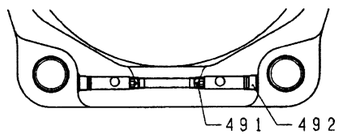

SECTION B - B

NO.	PARTNAME	QTY
111	DRIVE SHAFT (F)	1
113	DRIVE SHAFT (R)	1
114	SPLINE COUPLING	1
115	COUPLING	1
123	ROLLER BEARING	2
124	NEEDLL BEARING	2
127	BEARING SPACER	4
130	BOOSTER	1
012	CYLINDER BLOCK	2
151	PISTON	18
152	SHOE	18
153	RETAINER	2
156	SPHERICAL BUSH	2
157	CYLINDER SPRING	18
211	SHOE PLATE	2
212	SWASH PLATE	2
214	TILTING BUSH	2
251	SWASH PLATE SUPPORT	2
253	WASHER	8
261	FRONT COVER	1
263	REAR COVER	1
271	PUMP CASING	2
311	VALVE COVER (F)	1
312	VALVE COVER (R)	1
313	VALVE PLATE (R)	1
314	VALVE PLATE (L)	1
401	HEX.SOCKET HEAD BOLT	4
402	HEX.SOCKET HEAD BOLT	4
406	HEX.SOCKET HEAD BOLT	4
407	HEX.SOCKET HEAD BOLT	4
415	HEX.SOCKET HEAD BOLT	2
416	HEX.SOCKET HEAD BOLT	4
466	PLUG	2
468	PLUG	4
490	PLUG	31
491	RESTRICTOR	4
492	PLUG	5
531	TILTING PIN	2
532	SERVO PISTON	2
534	STOPPER (L)	2
535	STOPPER (S)	2
548	FEED BACK PIN	2
702	O-RING	2
706	O-RING	1
710	O-RING	2
717	O-RING	4
718	O-RING	1
724	O-RING	19
725	O-RING	2
728	O-RING	2
732	O-RING	2
774	OIL SEAL	1
789	BACK-UP RING	2
792	BACK-UP RING	2
808	NUT	4
824	STOP RING	2
825	LOCKING RING	1
885	VALVE PLATE PIN	2
887	SPRING PIN	5
901	EYE BOLT	2
953	SET SCREW	2
954	SET SCREW	2
956	SET SCREW	8
981	NAME PLATE	1
983	PIN	2

https://truckmanualshub.com/

Operation Explanation of Each Part

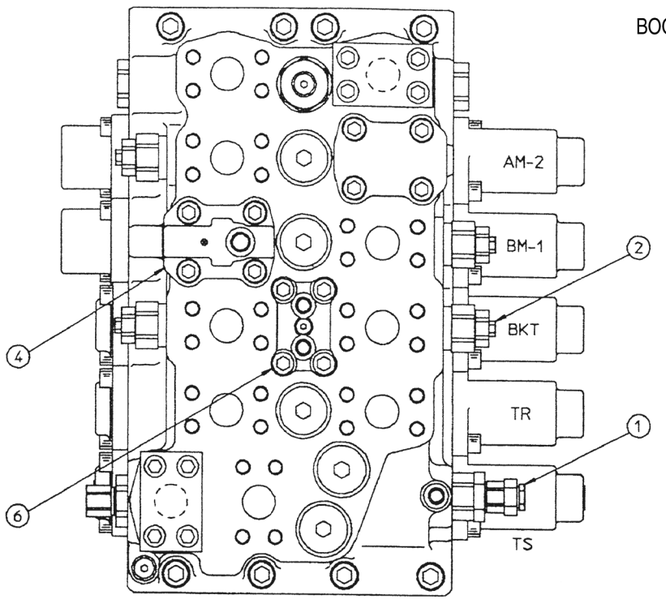

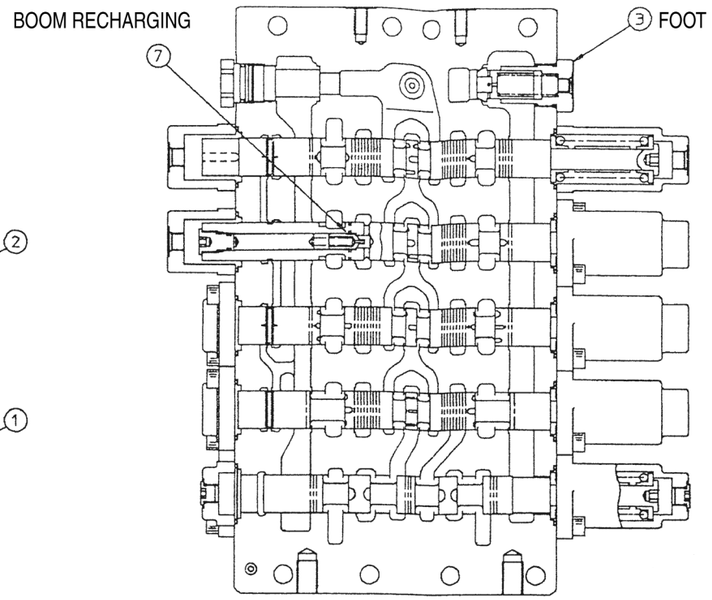

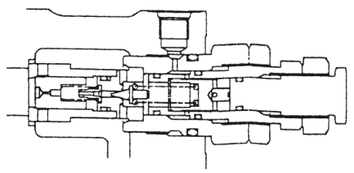

1 MAIN RELIEF VALVE

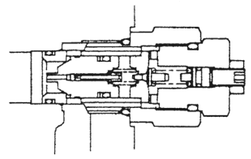

2 OVERLOAD RELIEF VALVE

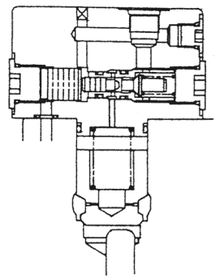

4 LOAD HOLDING VALVE

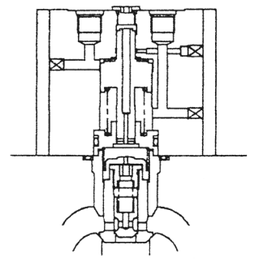

6 PRILORITY VALVE

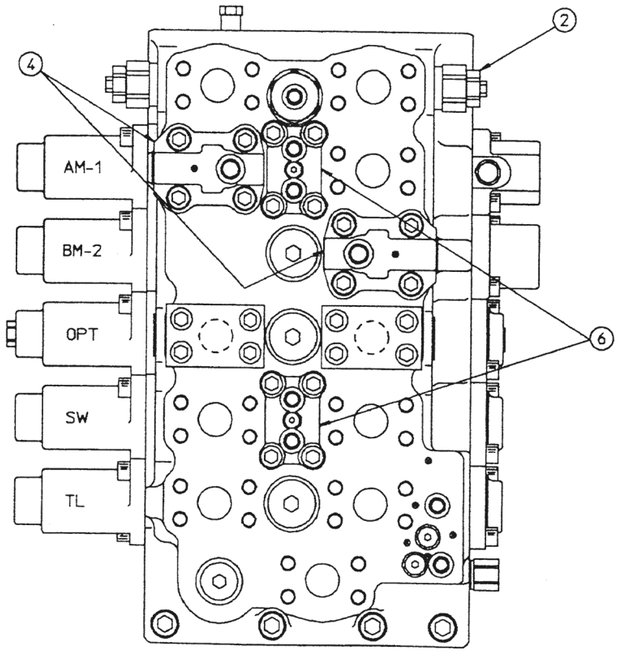

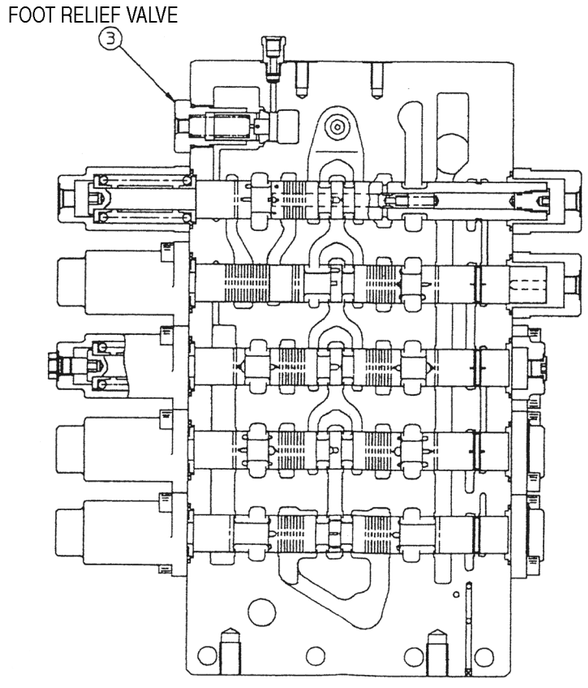

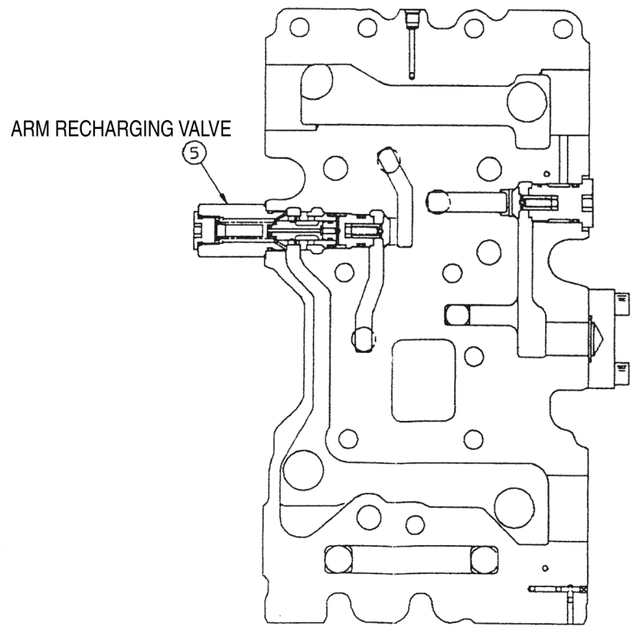

https://truckmanualshub.com/

1. Main Relief Valve

[1] Usuapressure) set time (Pc pilot signal: OFF)

Piston D is located at the right side of the spring C.

1) Pressured oil from the pump runs into the room [3] through the orifice [2] of the main puppet A. Being d1>d2, the main puppet A is entirely seated.

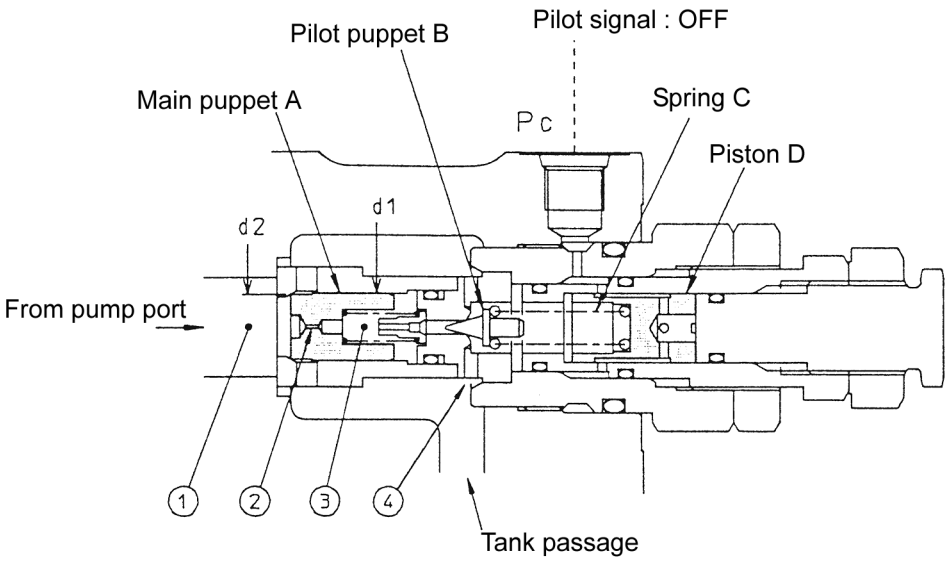

2) When the pressured oil reaches to the pressure that was set by the spring C, the pilot puppet B opens and the oil runs to the tank passage through the horizontal hole [4].

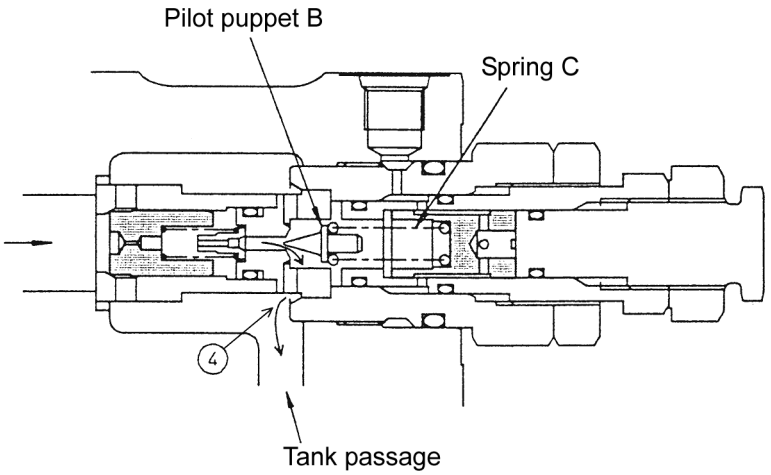

https://truckmanualshub.com/

3) Oil flow is composed and the pressure reduction occurs at the front and the rear of the orifice [2], and when being the pressure in the room [1] x d2 > the pressure in the room [3] x d1, the main puppet A opens and the pressured oil runs into the tank passage and the pressure in the circuit is controlled to the constant amount.

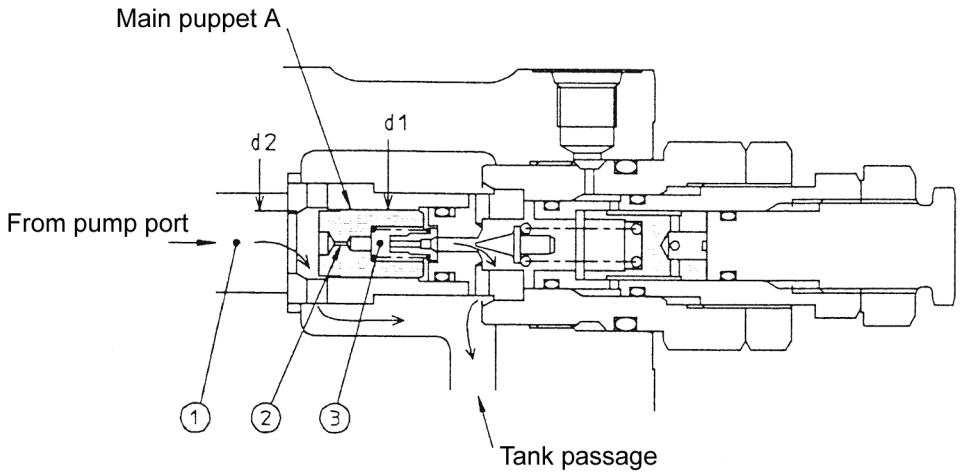

[2] High pressure set time (Pc pilot signal : ON)

The piston D moves to the left, and the set pressure of the spring C increases and turns to the high pressure setting state.

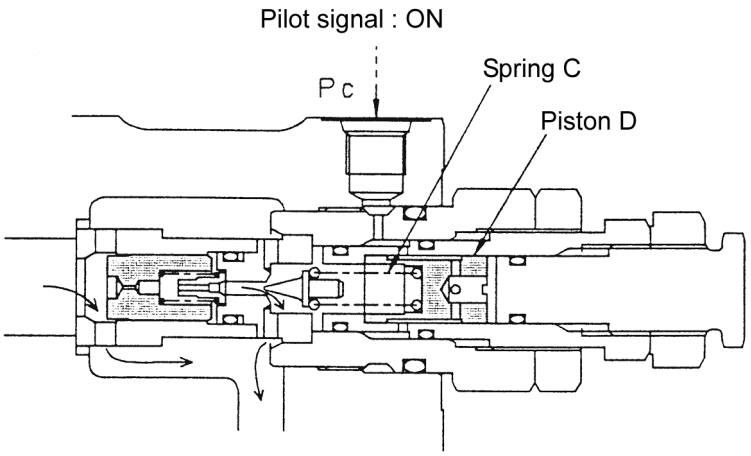

https://truckmanualshub.com/

2. Overload Relief Valve

[1] Operation of overload

1) The pressured oil in the cylinder port runs into the room [2] through the orifice [3] of the piston A and, being d1>d2, the main puppet B is firmly seated.

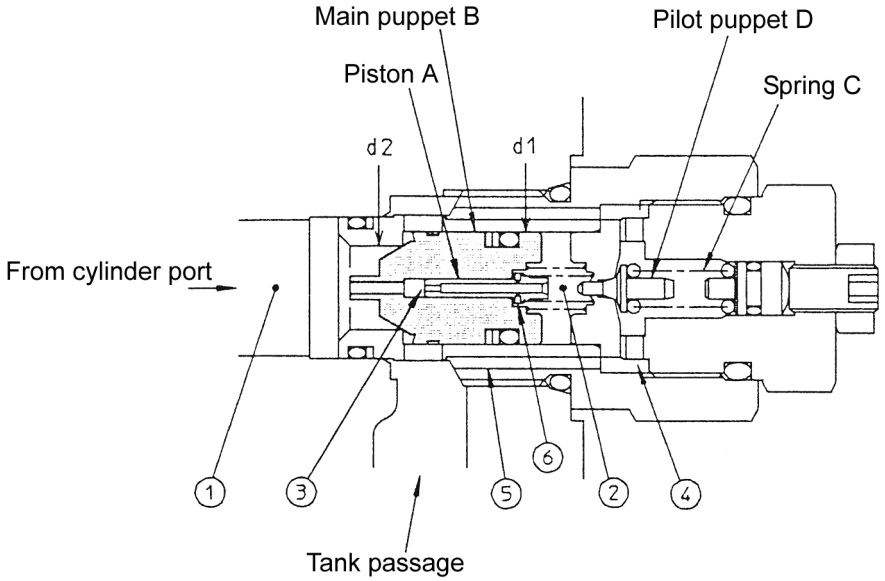

2) When the pressured oil reaches the pressure that was set by the spring C, the pilot puppet D opens, and the oil runs into the tank through the horizontal hole [4] and the passage [5].

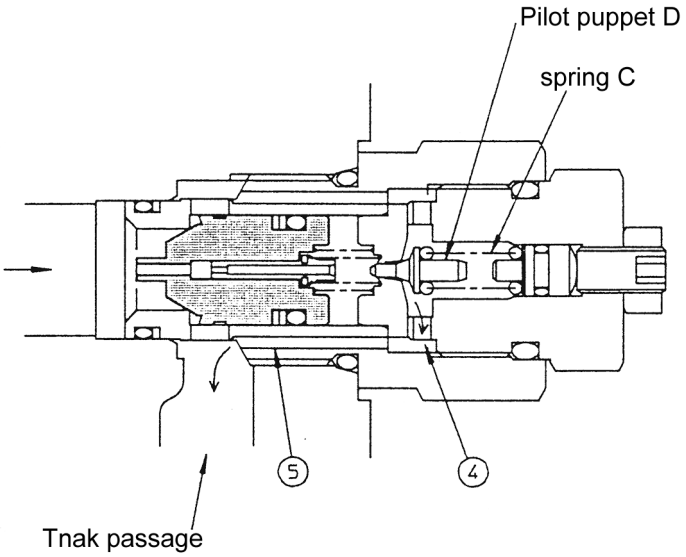

https://truckmanualshub.com/

3) Oil flow is composed and the pressure reduction occurs at the front and the rear of the orifice [3] of the piston A, and the piston A moves to the right and is seated at the top of the pilot puppet D. The oil in the room [1] runs through the orifice [6] of the piston A, the horizontal hole [4] and the passage [5], and runs to the tank passage.

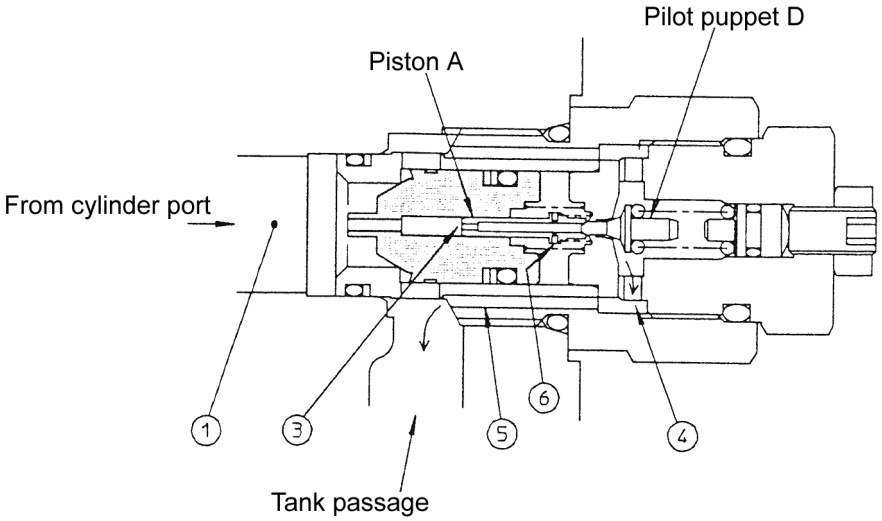

4) The pressure reduction occurs at the front and the rear of the orifice [6] of the piston A and, when becoming to the Pressure in the room [1] x Area of d2 portion > Pressure in the room [2] x Area of d1 portion, the main puppet B opens and the circuit let the pressured oil in the cylinder port run to the tank passage, which protects the actuators.

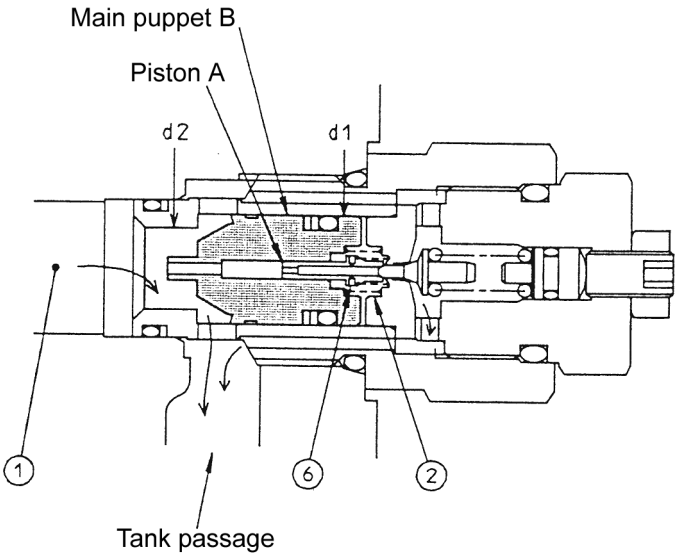

https://truckmanualshub.com/

[2] Operation of make-up

Since the main puppet B having d1 > d2, it is usually seated firmly as the cylinder port pressure is higher than the tank pressure. When the cylinder port pressure going to decrease (near to the minus pressure) and reaches to the Pressure in the cylinder port < the Tank pressure, the main puppet B opens by receiving the tank pressure on the area difference of d1 and d2 portions, and the oil runs to the cylinder port through the tank passage, which prevents from occurring the cavitation.

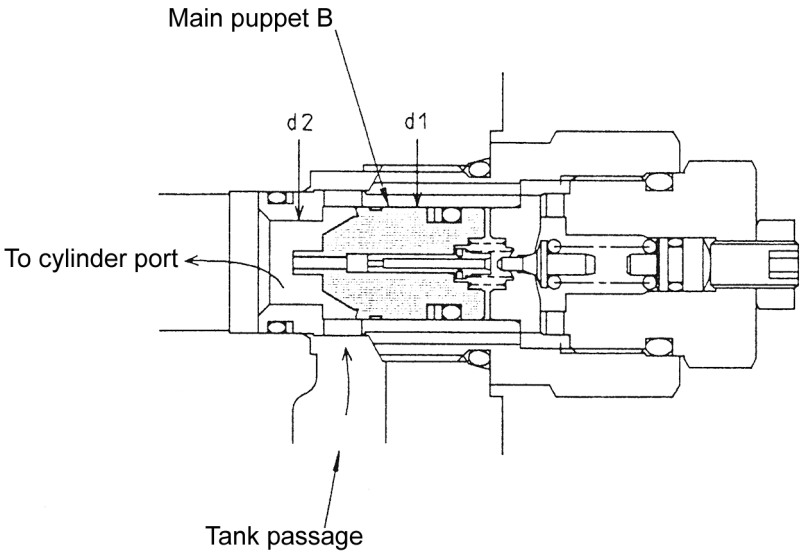

https://truckmanualshub.com/

3. Foot Relief Valve

[1] The oil from the center by-pass passage runs through the orifice A of the puppet and runs into the tank passage. The pressure (fp) generated by the orifice A based on the flow oil volume is led to the pump, which controls the delivery volume of the pump.

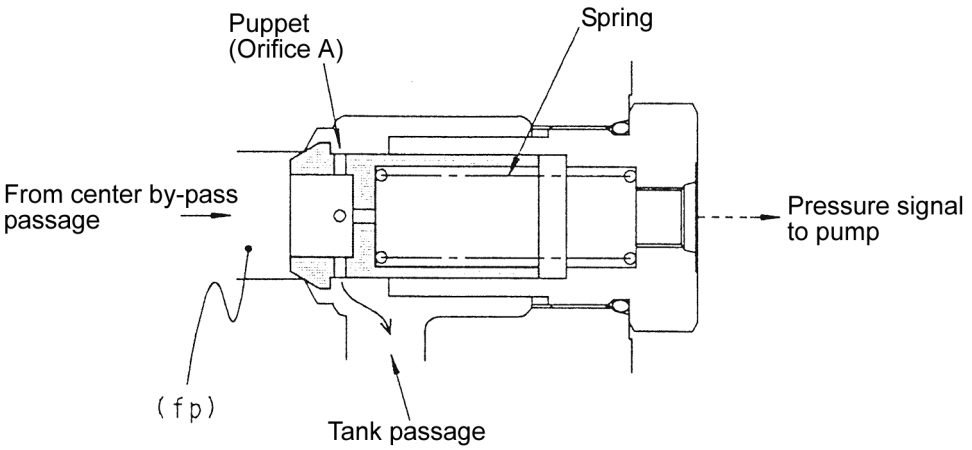

[2] When the large volume of the oil runs due to the late response of the pump and the pressure (fp) becomes higher than the pressure being set by the spring, the puppet opens and the pressured oil runs into the tank passage, which prevents the high pressure from being generated in the signal ports.

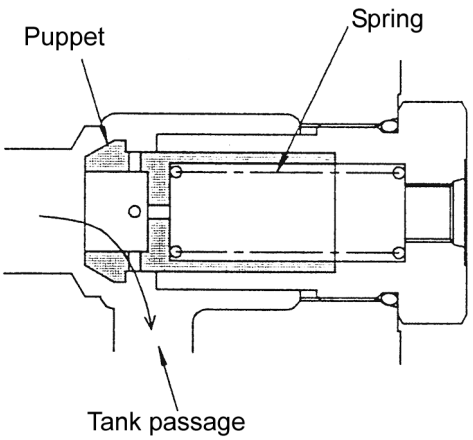

https://truckmanualshub.com/

4. Load Holding Valve

Following is the summary of operation of the boom load holding valve as an example:

[1] When the plunger is in the neutral position (4pc1 Pilot signal: OFF)

The piston A and the puppet B are in the position as shown in the above, and the passage [5] and the drain port (dr2) are cut off by the puppet B. Being the room [1] is connected to the room [2] through the throttle [4], the pressure in the room [1] is equal to the Pc. The puppet C is seated as being d1>d2 here. Accordingly, the rooms [2] and [3] are completely blocked.

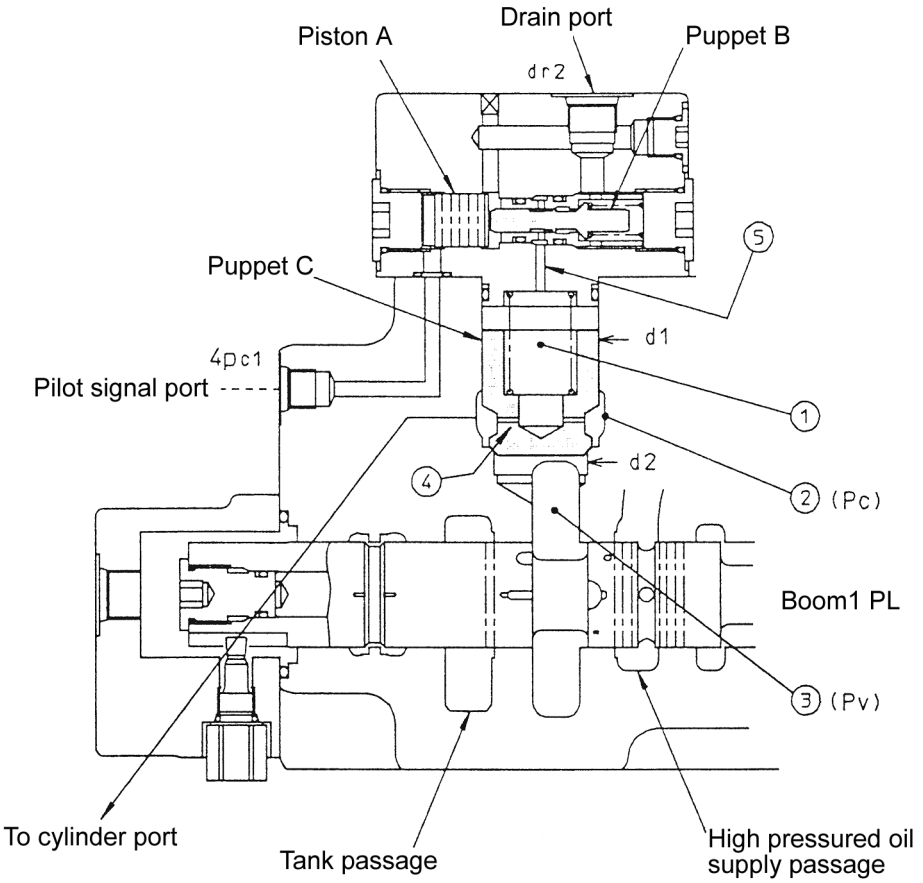

https://truckmanualshub.com/

[2] When the plunger operates.

1) Boom up [Pv>Pc] (4pc1 Pilot signal: OFF)
The plunger moves to the right and the oil in the high pressured oil passage enters into the room [3]. Being the room [1] is connected to the room [2] through the throttle [4], the pressure here is equal in the Pc and the puppet C opens by the pressure Pv, and the oil in the high pressured oil passage is supplied to the cylinder head side.

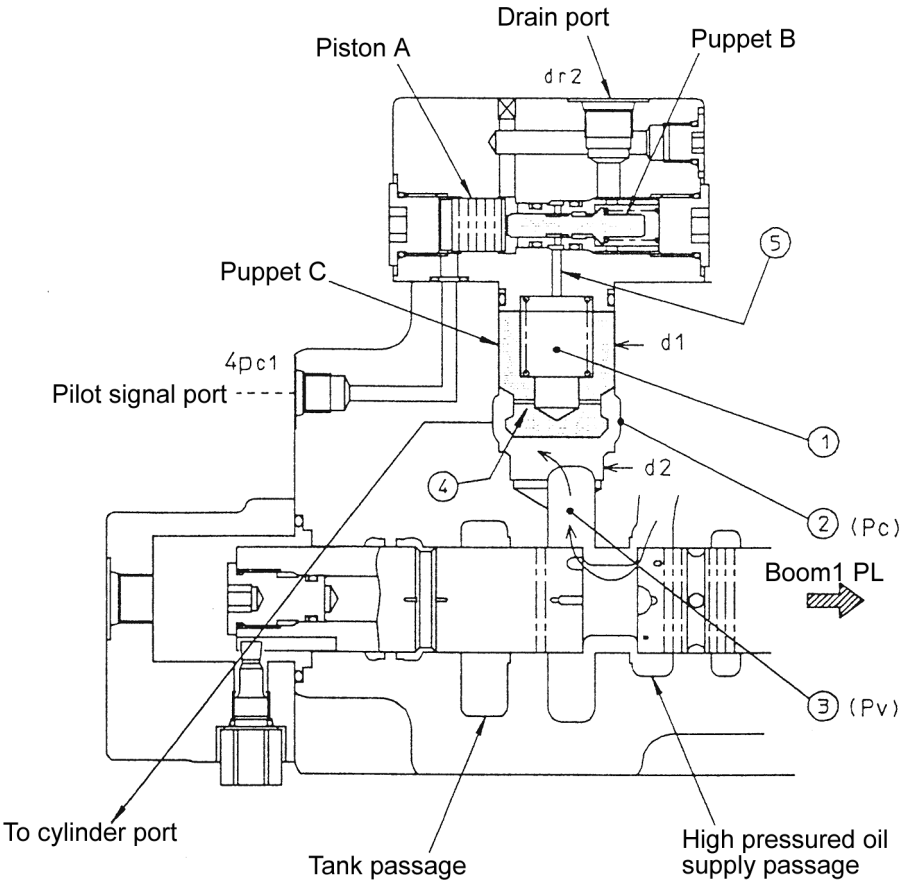

https://truckmanualshub.com/

2) Boom down [Pc>Pv] (4pc1 Pilot signal: ON)

The plunger moves to the left and the room [3] is connected to the tank passage. And, as the plunger operating pressure works to the port 4pc1, the piston A moves to the right and the puppet B opens. The passage [5] and the drain port (dr2) are connected.

Accordingly, the pressure of the room [1] becomes low, and the puppet C opens by the force generated by the pressure Pc working on the area difference between d1 and d2, and the returning oil from the boom cylinder head side runs into the tank passage.

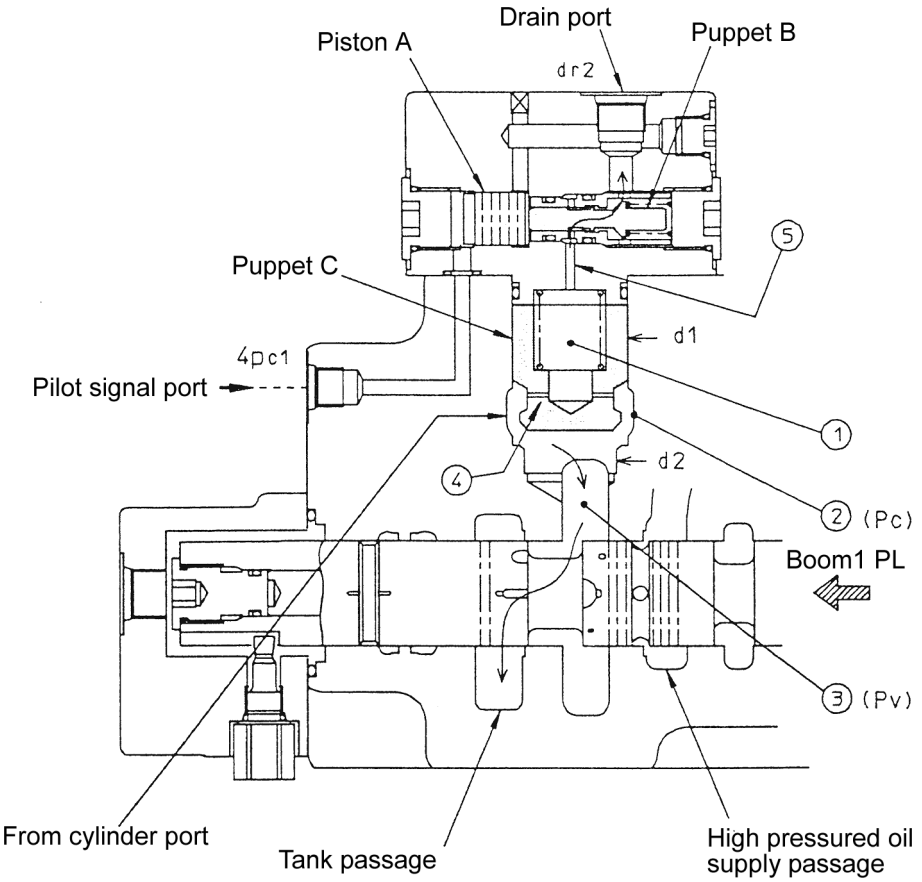

https://truckmanualshub.com/

5. Arm Regenerative

[1] When the arm plunger is controlled to the crowd side, the plunger moves to the left and the center by-pass passage is cut off. The oil let the check C1 open and is supplied to the cylinder head side from the high pressured oil supply passage.

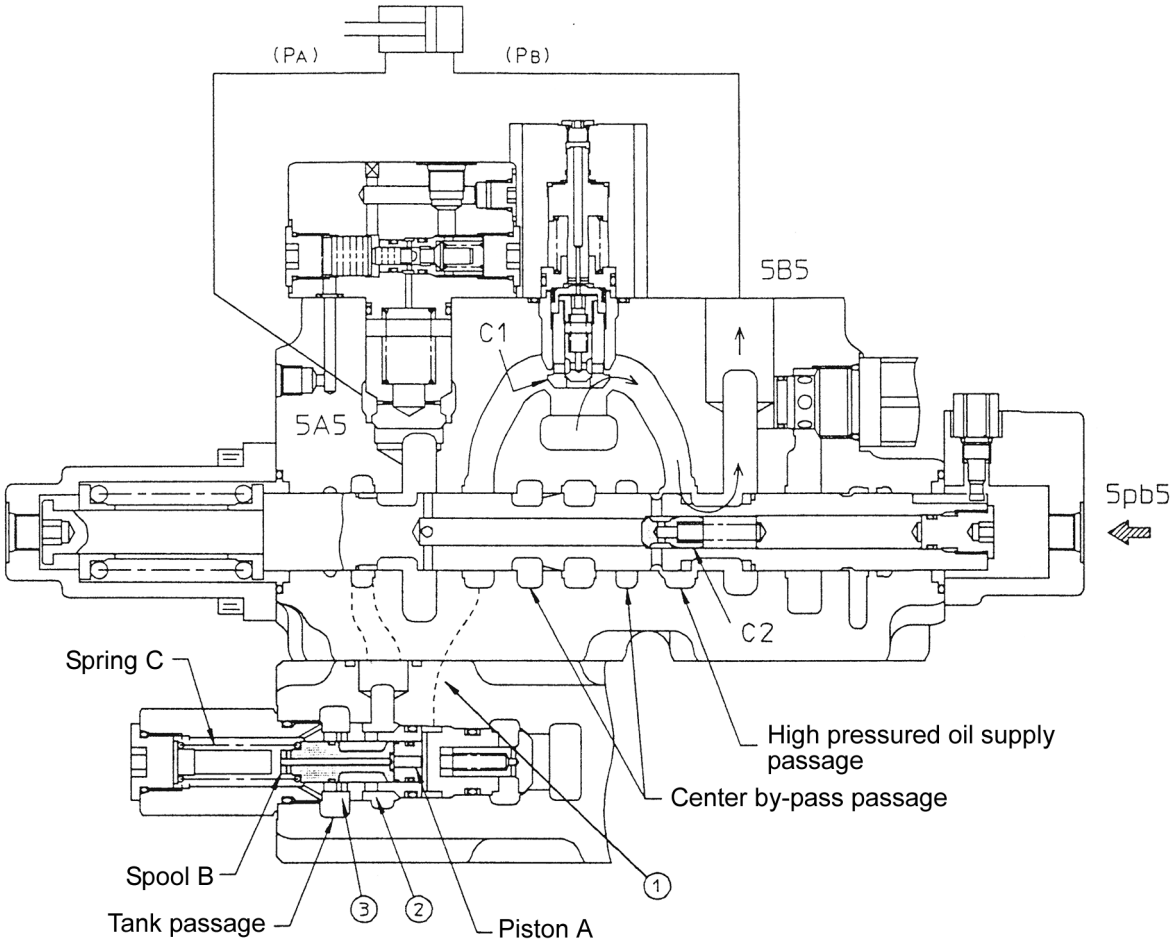

https://truckmanualshub.com/

[2] When the pressure in the rod side is higher [PA>PB].

As the head side pressure is lower, the recharge switching spool is located as shown above and, being the rod side returning oil throttled by the small hole [1], the check C2 in the plunger is let open and the oil is again supplied to the head side through the high pressured oil supply passage.

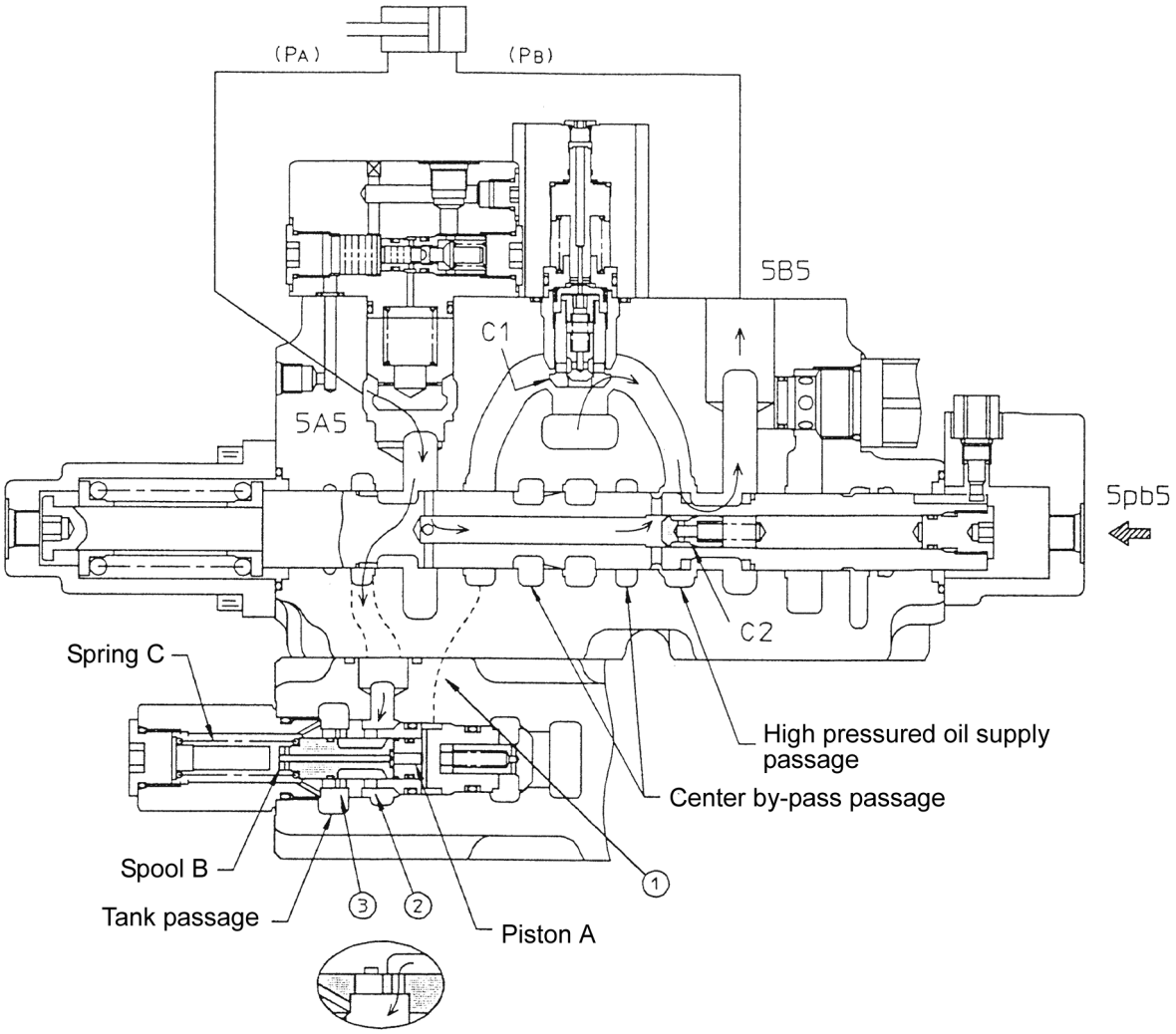

https://truckmanualshub.com/

[3] When the head pressure is higher [PB>PA].

The rod side returning oil is cut off by the check C2 in the plunger. The head side pressure works on the right end face of the piston A from the passage [2] in the recharge switching portion. When this pressure exceeds the pressure being set by the spring C, the spool B is pushed to the left by the piston A, which makes the opening of the throttle [1] larger and the rod returning oil runs to the tank passage through the low pressure oil passage.

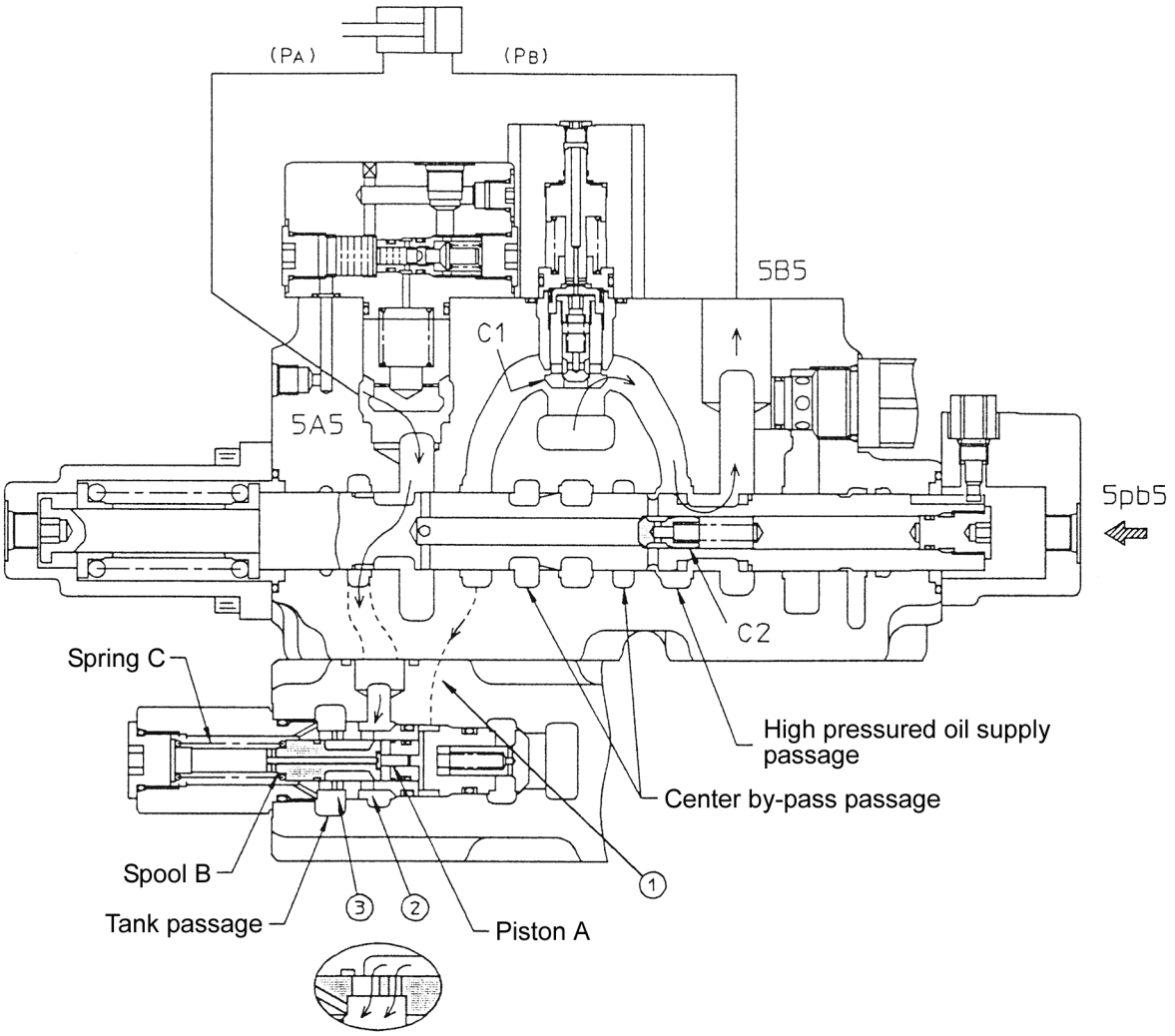

https://truckmanualshub.com/

6. Priority Valve

Following is an example of the summary of the operation in the swing priority valve furnished in the arm switching valve:

[1] When the swing spool is not operated.

1) When the Parallel passage pressure £ Supply passage pressure
The piston (1) is positioned by the spring A, the puppet (2) positioned by the spring B, and the check (3) positioned by spring C as shown in the above sketch.
They are seated firmly. Accordingly, no reversing flow from the supply passage to the parallel passage can be occurred.

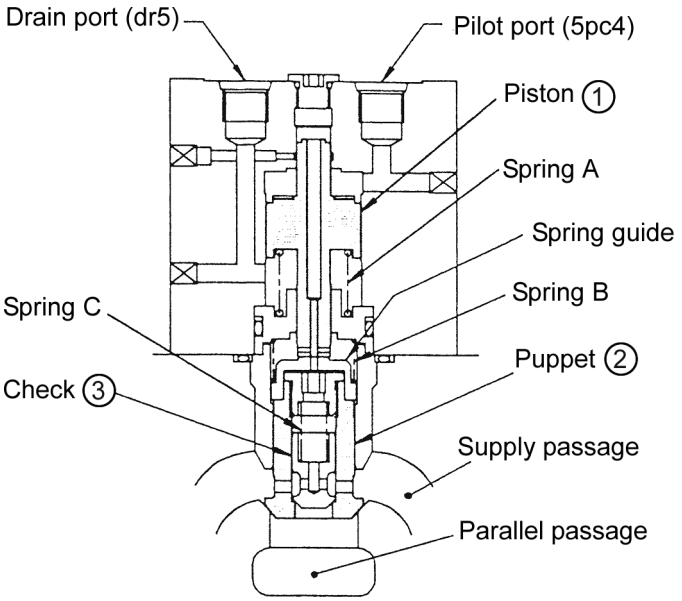

2) When Parallel passage pressure > Supply passage pressure
Being the forces of the spring B and of the spring C small, the puppet (2) and the check (3) are lifted as shown in the above sketch, and the oil of the parallel passage connected to the pump supplied to the arm cylinder through the supply passage, which drives the arm cylinder.

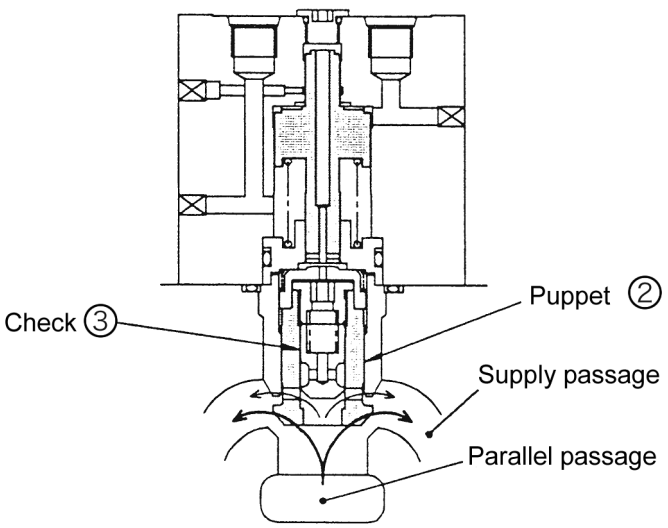

https://truckmanualshub.com/

[2] When the swing spool is operated.

1) When Parallel passage pressure £ Supply passage pressure
When the swing spool control pilot pressure becomes higher than 0.1 to 0.15 MPa, the piston moves to the position shown above by the pressure working on the X surface, but, as same in the above item 1, the puppet (2) is positioned by the spring B and the check (3) positioned by the spring C as shown in the above sketch, which are firmly seated. Accordingly, no reversing flow from the supply passage to the parallel passage ca be occurred.

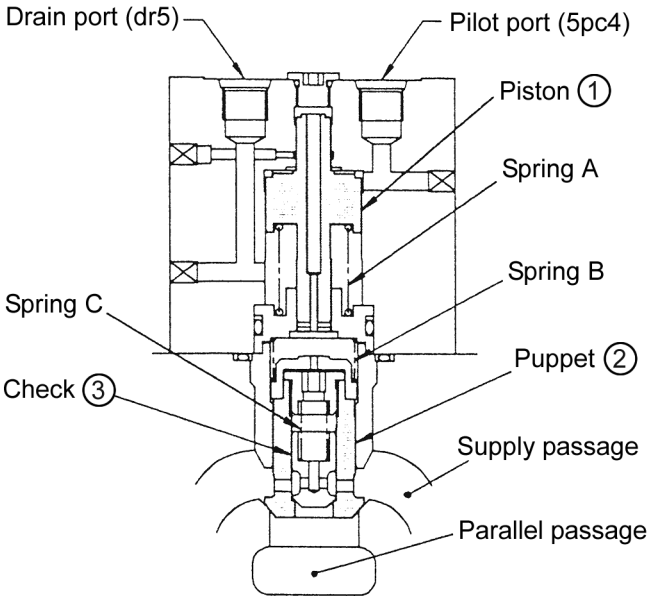

2) When Parallel passage pressure > Supply passage pressure.
Being Seat diameter (d1) > Puppet diameter (d2), but d1 ª d2.
Accordingly, the pilot pressure works on the piston, which pushes the puppet (2) through the spring guide. Then the puppet (2) cannot lift with the pilot pressure even though it is the comparatively low. At this time, the check (3) lifts and the oil runs as the allow sign in the above sketch indicates, and is supplied to the arm cylinder, but, due to the effect by the throttle furnished in the puppet (2), the flow volume becomes small and accordingly, most of the flow oil delivered from the pump is supplied to the swing motor by priority.

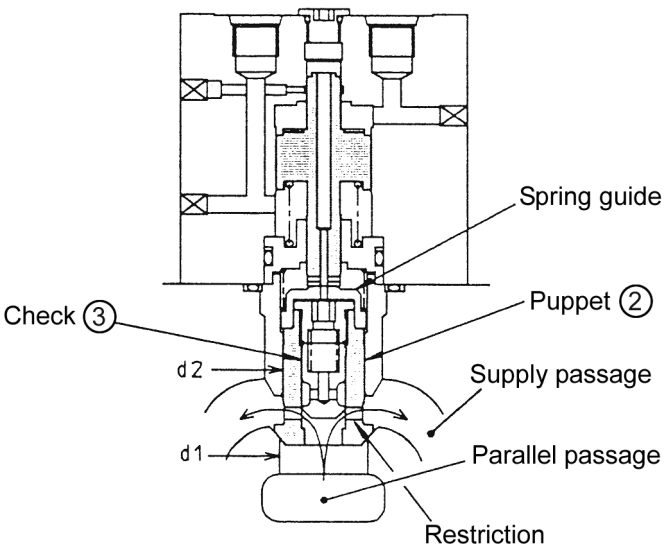

https://truckmanualshub.com/

7. Boom Regenerative

[1] Boom down operation

The plunger shifts to the left so that the center by-pass passage is shut off and oil from the pump opens the load check from the parallel passage supplying to the rod side of cylinder passing through the high-pressure supply passage.

Although return oil on the head side flows into the tank passage, the passage is narrowed down by the plunger notch to increase the pressure so that it opens the check A and the oil passing through the plunger is supplied again to the rod side from the high-pressure supply passage.

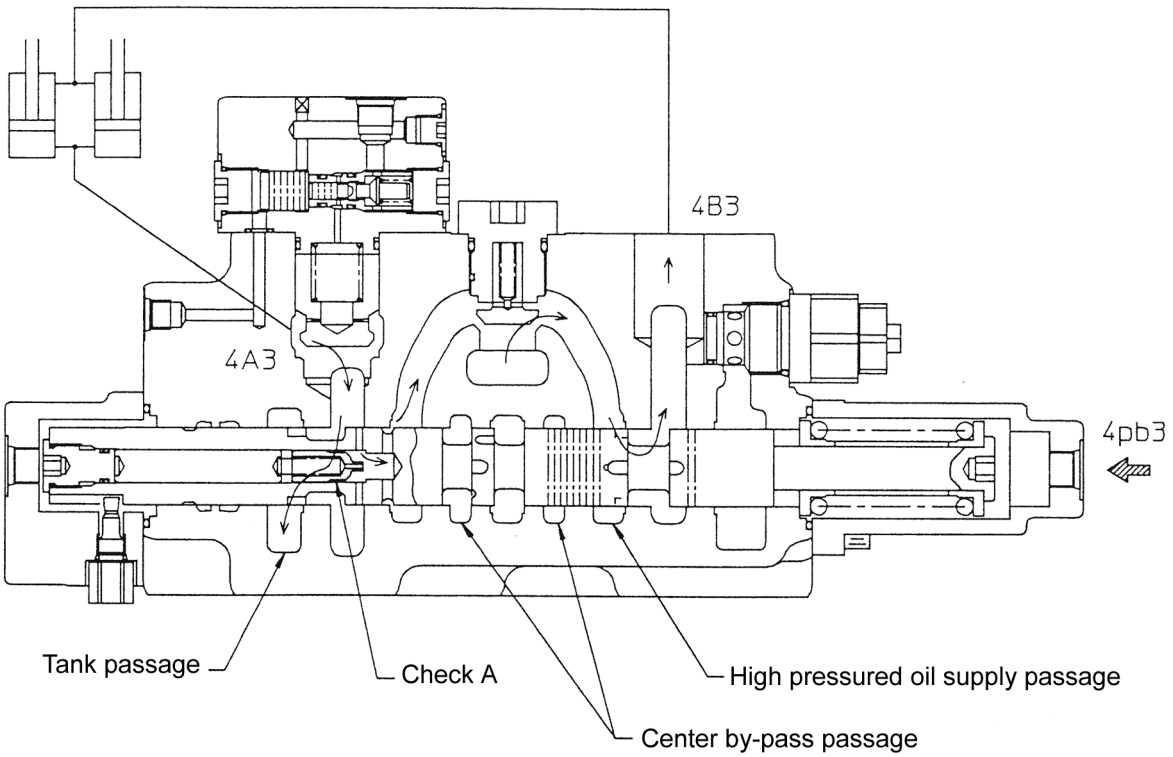

https://truckmanualshub.com/

Operation Principle

1. Hydraulic Motor

The high pressurized oil showing on the drawing below, flow into the cylinder through inlet port (a) of the valve plate (1), the pressurized oil force F acts on the shoe is vector analyzed as the vertical force F1 and the force F2 crossing the shaft. The force F2 acts on the piston and is transmitted to the cylinder block (4), produce the totaling couple around the output shaft.

There are 9 pistons evenly locating at the inner side of the cylinder block, the rotating torque is transmitted orderly to the output shaft by multiple numbers of pistons connecting with the inlet ports of high pressurized oil. Alternate the direction of the oil outlet and inlet, the rotation of the output shaft will be opposite.

The theoretical output torque T is given by the next diagram.

$$T = \frac{p \times q}{2 \times \pi}$$

p: effective differential pressure MPa
q: capacity per 1 rotation cm^3/rev

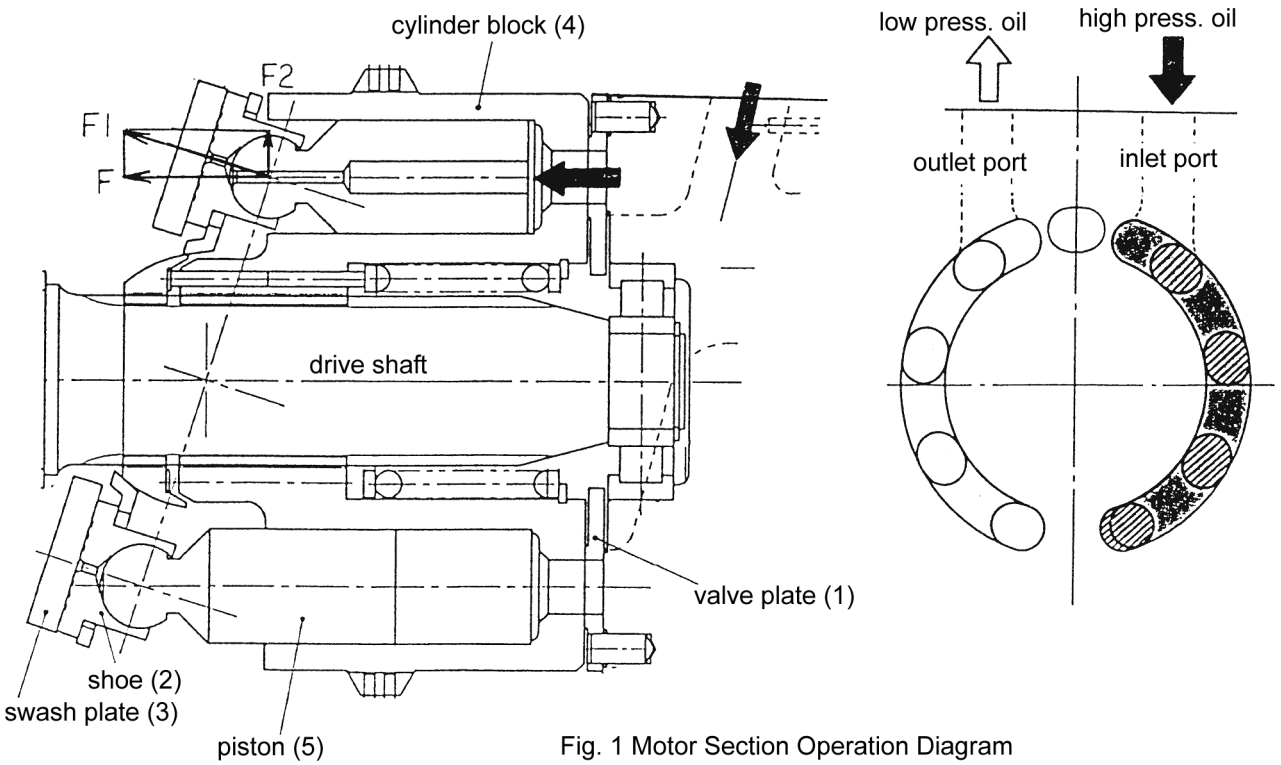

Fig. 1 Motor Section Operation Diagram

2. Anti-cavitation Check Valve Section

With the system using such type motor, if there is no valve with counterbalance function, the motor rotation will sometime over burn the oil supplied.

To prevent from cavitation because of oil shortage, the check valve is used to suck the shorted oil.

https://truckmanualshub.com/

3. Relief Valve (Refer to fig. 2)

[1] Consider the P port is pressurized by the tank pressure, There are initial pressure acting on P,R ports as showing on fig. 2-A).

The relief valve begin to work under the summary of the force by multiplying of the pressurized area (A1) of the plunger (301) and the pressure P, the spring (321) force, the pushing force to the plunger (301) by the pressure of “g” chamber (Pg). First, the pressure of “g” chamber remains certain value during the period that the piston 2 (303) begins moving and ends stroking, P remains the low pressure as P2. Next, the spring (321) force gets stronger during the period that the piston 1 (302) is moving, P raises gradually.

According to such action, raise of the relief pressure P is controlled by the pressure raising time t1 from P1 to Ps. The sequent is shown on fig. 2-B) to D), the following explain the relation between the moving condition of each part and the relief pressure.

[2] Status showing on fig. 2-B)

The P port is pressurized and the pressure in “g” chamber is produced with action from restriction “m” inside the plunger (301). This pressure acts on the pressurized area (A2-A3) of the piston 2 (303), the right forward force and the spring (322) force produce the pressure (Pg1), the plunger (301) moves to right. The relationship shows on the next diagram.

$P1 \times A1 = Fsp1 + Pg1 \times A2$ Fsp1: the initial set force of the spring (321).

During raising of the piston 2 (303), the exhausting oil of the dumping chamber h exhaust from the R port side with acting of the slit around the piston 2.

[3] Status showing on fig. 2-C)

After the piston 2 (303) reaches the stroke end, the force caused by the pressure in “g” chamber acting on the pressurized area A4 of the piston 1 (302) overcomes the spring (321) force, the piston 1 (302) begins to move.

When the moving of the piston 1 (302) begins, the f chamber acts to the dumping chamber with the adjusting plug (401) and the exhausting shaft setting on the sliding part of the piston 1 (302). So that the pressure of “g” chamber raises smoothly until the piston 1 (302) reaches the end of adjusting plug (401). Also, the spring (321) is pressed, the deflection increases, the installation load expands.

The relief pressure P raises smoothly from P2 to Ps.

[4] Status showing on fig. 2-D)

To stop the piston 1 (302) from moving left beyond the end of the adjusting plug (401), the pressure of “g” chamber is Ps, as well as the relief pressure. The normal relief operation is under such status.

As per the above sequence of [1] to [4], the relief pressure varies as fig. 2-E).

The following explain the action during relief pressure reduction.

When there is no additional pressure acting to the P port, the P port pressure as well as the “g” chamber pressure drop to the tank pressure. So that the opening plunger (301) moves left and sets on the seat (341). In the meantime, the piston 1 (302) is moved right by the spring and back to formal status. Also the piston 2 (303) is moved left by the spring and turned back. In this case, the ball check valve installed above is opening, oil supplied from R port, the piston 2 (303) is made with a slow returning structure.

https://truckmanualshub.com/

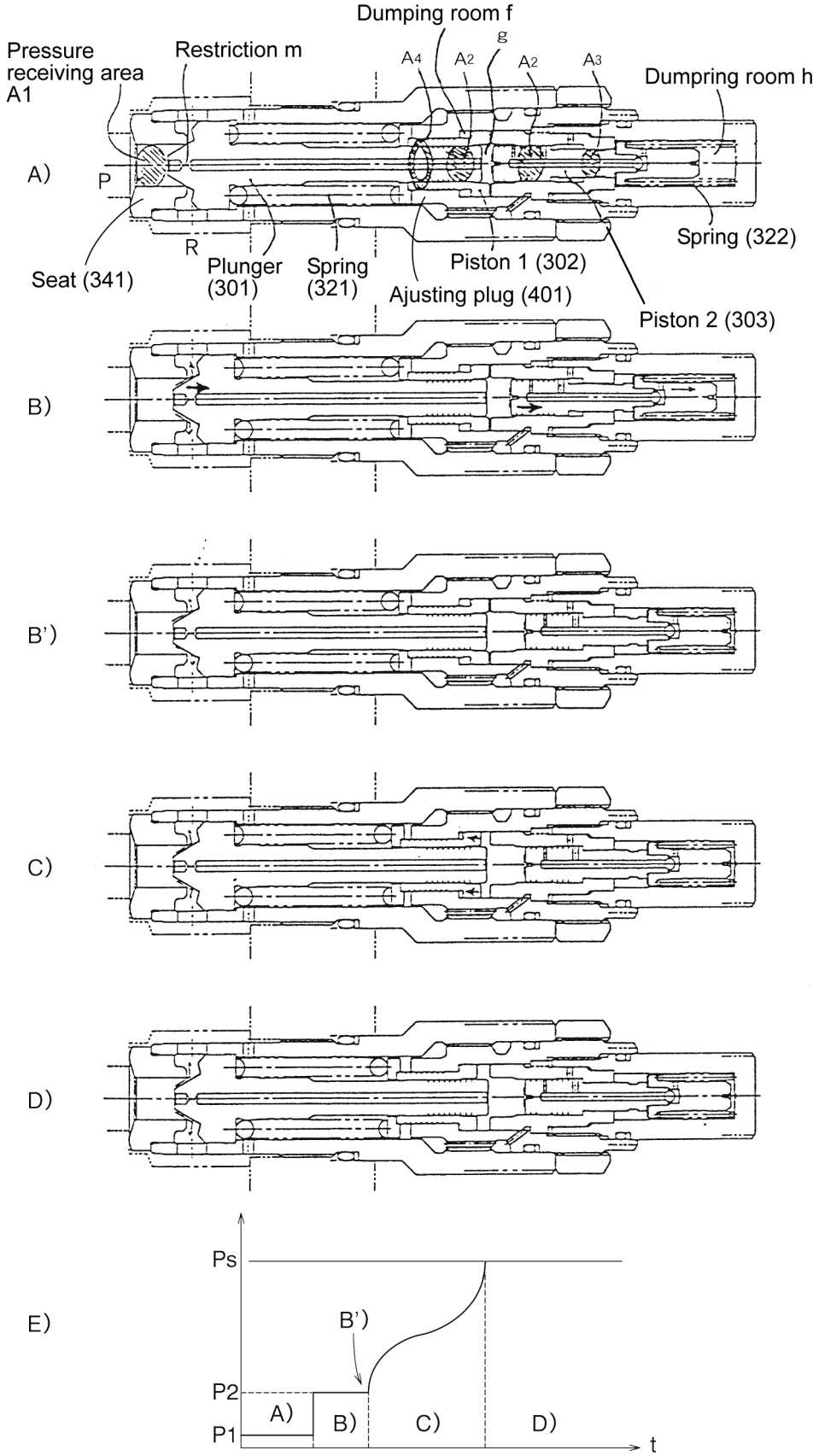

Fig. 2 Relief Valve Operation Diagram

https://truckmanualshub.com/

4. Reversal Prevention Valve

Fig. A) illustrates relationship between neutral state of the reversal prevention valve and the hydraulic circuit.

Now, let's consider a condition in which braking pressure is generated on the side of port A.

Pressure generated in the port A is transferred into the chamber "n" passing through the passage "l", the hole on the shaft in hr seat [313], and the passage "m" in the plunger [311].

When the pressure P goes beyond the pressure set at the spring [321], the plunger [311] distorts the spring [321] to move to the left.

The plunger [311] pushes the seat [313] which in turn distorts the weak spring [322] to move to the left (shown in Fig. B)).

When the inertia load stops moving (point Y in Fig. D), braking pressure is to be decreased.

If it becomes P<Ps, the plunger [311] is shifted to the right or to return side by the spring [321].

Although the seat [313] also tends to be shifted to the right by the spring [322], return of the seat has a time-lag against return of the plunger as the chamber "p" has damping effect by constriction "g".

Therefore, section "t" in the seat opens and the passage, “l” → “t” → “r” → “k”, connecting ports A to B or ports on both sides of hydraulic motor is formed.

This makes pressure in the ports A and B to be equal abruptly allowing the condition to be point Z in Fig. D) and prevent the hydraulic motor from being reversed by trapped pressure in the port A. (Refer to Fig. C)

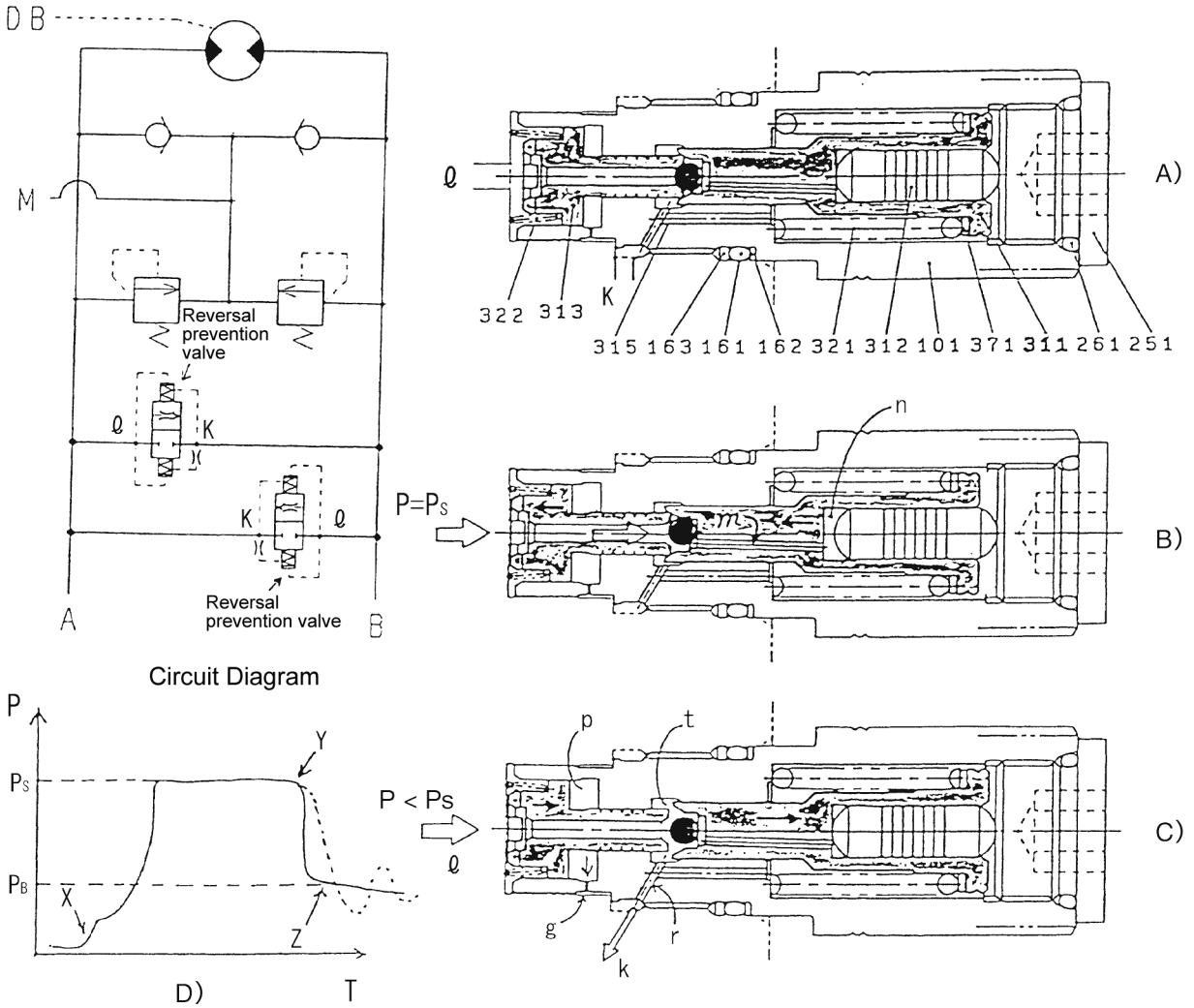

https://truckmanualshub.com/

5. Brake Section

The cylinder (111) is connecting with the tooth gear of the drive shaft (101), the separator plate (743) is tapped to the casing and the circle rotation around the cave is banned.

The friction plate (742) connecting with the tooth gear around outer circle of the cylinder, is pushed into the casing (301) by the brake spring (712) with acting of the separator plate (743) and the brake piston (702), which produce the frictional force between the friction plate and the casing, the separator plate and the brake piston. This frictional force bans the drive shaft and makes the brake action.

To change the releasing pressure in the oil chamber formed between the brake piston and the casing, the oil pressure overcomes the spring force, makes the brake piston move, the friction plate is not pushed by the casing, the brake is released

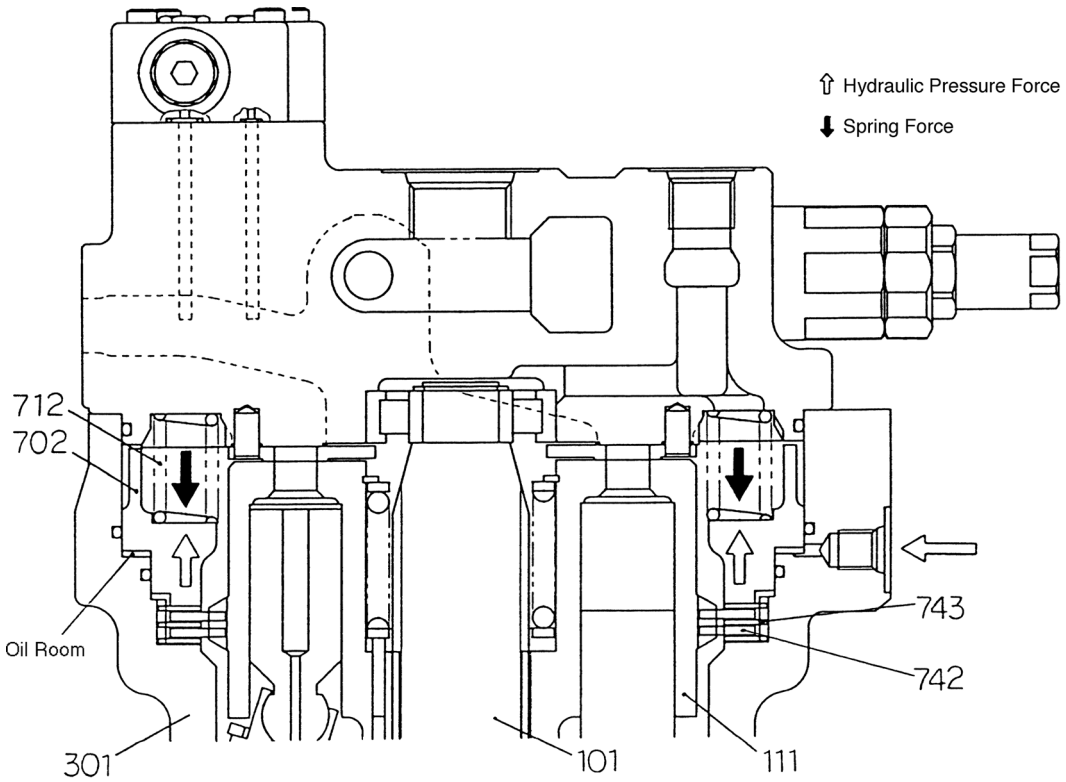

Fig. 3 Brake Operation Diagram

https://truckmanualshub.com/

Internal Structure Drawing

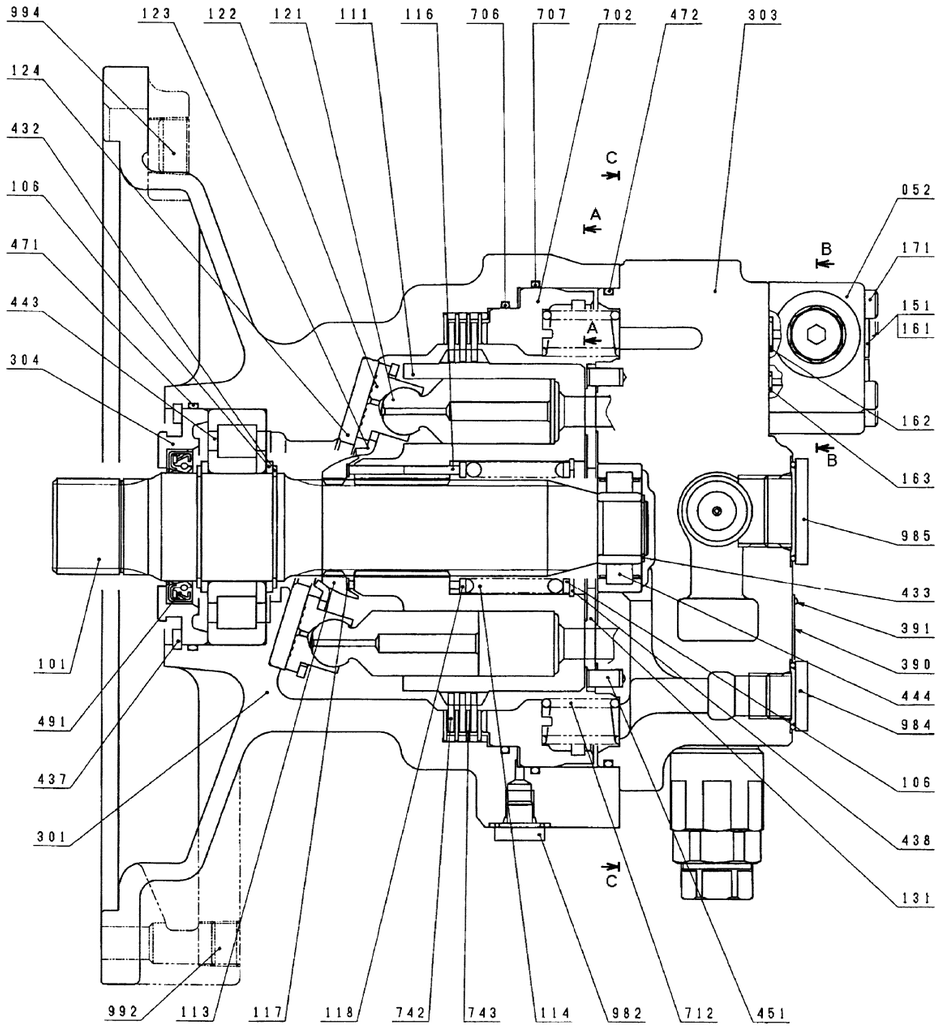

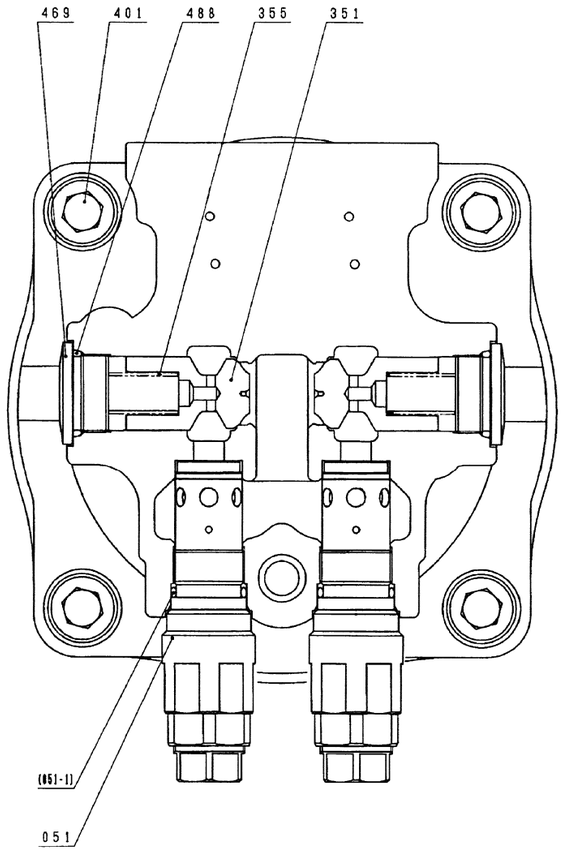

NO.	PART NAME	QTY
052	REVERSAL PREVENTION VALVE ASSY	1st
100	CASING	1
151	PLUG	2
161	O-RING	2
162	O-RING	2
163	O-RING	2
171	HEX.SOCKET HEAD BOLT	4
400	REVERSAL PREVENTION VALVE	2
(400-1)	O-RING	2
(400-2)	BACK-UP RING	2

NO.	PARTNAME	QTY
11	PISTON ASSY	1st
121	PISTON	9
122	SHOE	9
20	VALVE CASING ASSY	1st
303	VALVE CASING	1
451	PIN	2
101	DRIVE SHAFT	1
106	SPACER	3
111	CYLINDER	1
113	SPHERICAL BUSH	1
114	CYLINDER SPRING	1
116	PUSH ROD	12
117	SPACER(F)	1
118	SPACER(R)	1
123	RETAINER	1
124	SHOE PLATE	1
131	VALVE PLATE	1
301	CASING	1
304	FRONT COVER	1
351	PLUNGER	2
355	SPRING	2
390	NAME PLATE	1
391	PIN	2
401	HEX.SOCKET HEAD BOLT	4
432	STOP RING	2
433	SNAP RING	1
437	LOCKING RING	1
438	LOCKING RING	1
443	ROLLER BEARING	1
444	NEEDLE BEARING	1
464	PLUG	1
469	PLUG	2
471	O-RING	1
472	O-RING	1
485	O-RING	1
488	O-RING	2
491	OIL SEAL	1
702	BRAKE PISTON	1
706	O-RING	1
707	O-RING	1
712	BRAKE SPRING	18
742	FRICTION PLATE	3
743	SEPARATOR PLATE	4
982	PLUG	1
984	PLUG	1
985	PLUG	1
992	PLUG	1
994	PLUG	1
51	RELIEF VALVE	2st
(051-1)	O-RING	2

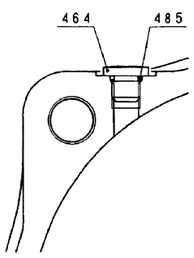

SECTION A - A

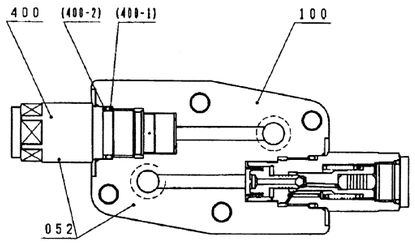

SECTION B - B

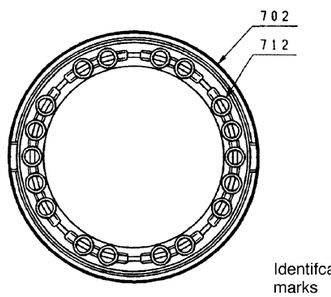

The disdosition of brake spring

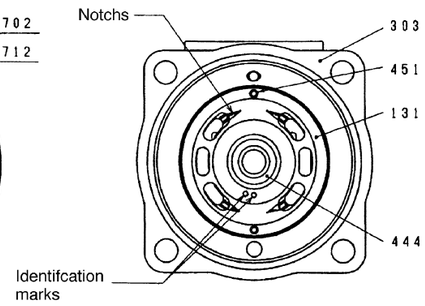

SECTION C - C

https://truckmanualshub.com/

Operation Principle

1. Hydraulic Motor

Refer to Fig. 1 which illustrates the basic motor structure.

Nine pistons S/A are integrated it the cylinder block. The valve plate which has spherical two half-moon ports B and C (High/low pressure switching distributing valve) is in contact with the face of the cylinder block.

Torque Generating Principle

Opposite to the above, the high pressurized oil is guide into the C prot, the reverse rotation against the above action is occurred.

When high-pressure oil (pressure P) is guided to port B, the force is pressed against the swash plate at the rate of force F=P x A, (A: cross-sectional area of piston) per piston. The corresponding reaction force of the slant face works on the piston and the rotation direction force is generated. The total of the rotary forces of the pistons on the high-pressure side generates rotation of the cylinder block. Through the spline, torque is transmitted to the shaft and the shaft rotates.

Opposite to the above, the high pressurized oil is guide into the C prot, the reverse rotation against the above action is occurred.

The piston motor's output torque and revolution speed gained being calculated in the following form.

·Output torque (T)

$$T = \frac{P \times D \times \eta m}{2 \times \pi} \quad [N \cdot m]$$

·Revelotion speed (N)

$$N = \frac{Q \times 1000 \times \eta v}{D \times i} \quad [min^{-1}]$$

D: Displacement volume (cm^3/rev)

P: Effective drive pressure (MPa)

Q: Flow-in rate (L/min)

ηm: Machine efficiency (% x 10^{-2})

ηv: Volume efficiency (% x 10^{-2})

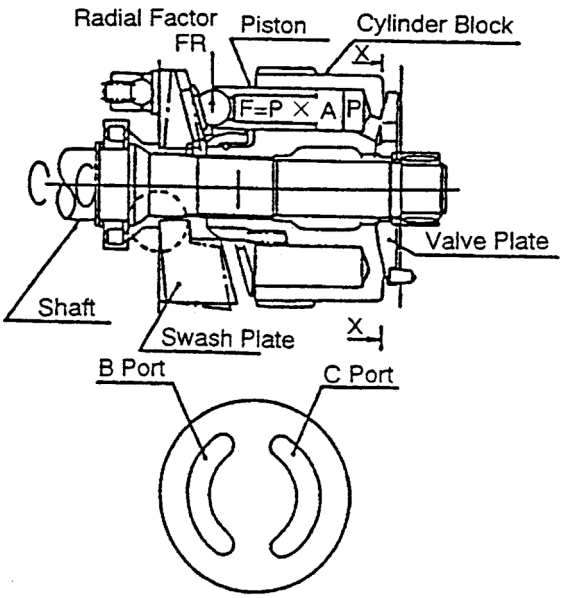

Distributing Valve Section X-X

Fig.1 Motor Basic Structure

https://truckmanualshub.com/

2. Parking Brake

The parking brake is the negative brake with wet multiplied structure by open hydraulic type. To release the pressure, the motor drive pressure is guided into P port, push the piston of the brake cylinder chamber and overcome the spring force, so that the brake is released. To stop and park the machine, return the plunger of the counter balance valve to neutral position, the tank is opened by the plunger of the counter balance valve in the cylinder chamber, the spring force acts on the brake so that the motor axial is mechanically locked and the main body is detained.

[1] When Parking Brake is ON

When there is no signal pressure occurred, the spring force is transmitted to the frictional plate, connected beside the case and the disc plate connected around the outer side of the cylinder block by the plunger of the brake piston and the machine is fixed by the frictional force. Then the connected cylinder block and case are fixed to suck the opposite torque and lock the axial.

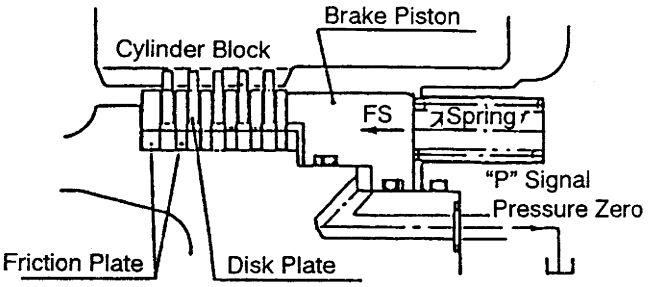

[2] When Parking Brake is OFF

Since the brake releasing signal pressure is produced, for defending of the brake piston against the spring force, the frictional force is released by the spring force acting on the frictional plate and the disc plate, the free cylinder block itself rotates by the pressurized oil and the opposite torque from outside.

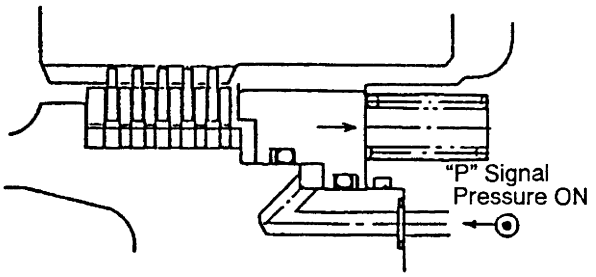

https://truckmanualshub.com/

3. 2-Speed Switch Mechanism Oparation Principle

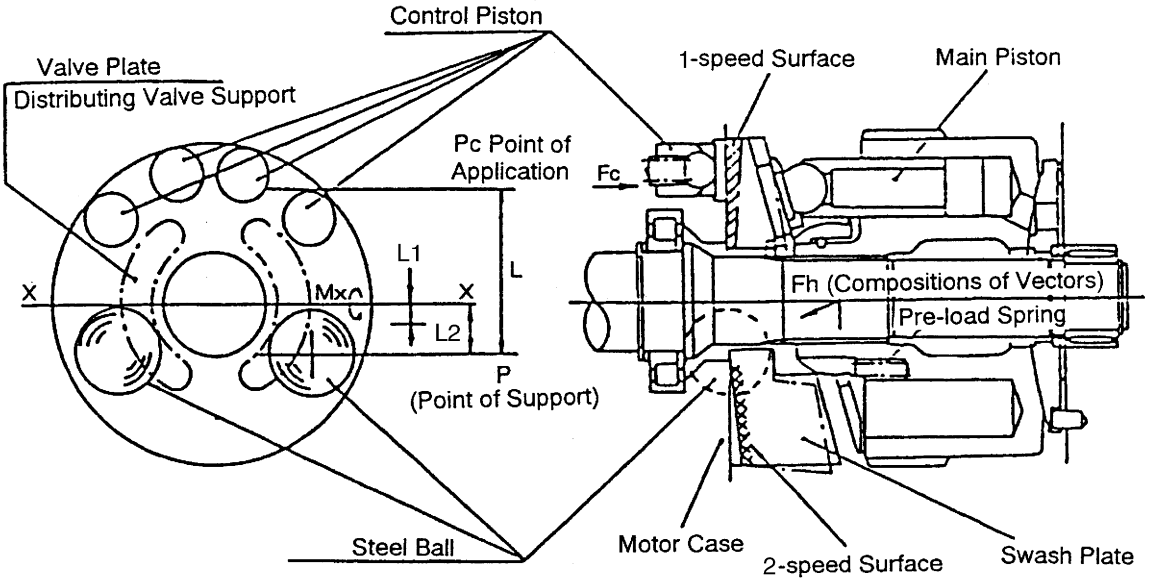

Fig. 2

There are two kinds of surfaces on the automatic 2-speed switch which are none sliding surface of the cam plate and the fixed surface (facing to the motor case). The big volume (1-speed) and the small volume (2-speed) are separated with the fixation on the various surfaces, to operate the cam plate tilt, with acting of the selecting valve of the 1, 2-speed switch, push the control piston by the self pressure of the running motor and tilt the cam plate. There are 2 of each kinds of the control pistons varying with the ports of the high-low pressure regulating valve, to transmit the thrust force to the cam plate.

The following drawing explains the fixing principle of the cam plate under different volumes

As Fig. 2, the support points of the cam plate tilt are made of the steel balls located at the position where L2 to X axial is offset, the support points are located on the ball central line parallel to the X axial.

During 1-speed, there is no pressurized oil guided into the control piston, the thrust force of the piston Fc ≈ 0N. Then the moment Mx acting on the cam plate and rotating around the X axial acts to the main piston by the summary of the oil pressure and presetting spring force Fh, in order to locate the support point L1 of Fh according to the offset point P, the cam plate is fixed on the 1-speed surface.

During 2-speed, the oil is supplied to the control piston by self pressure and the moment MS=FcxL acts on the cam plate where P is the support point, this moment overcomes the moment Mx by the pressurized oil force Fh, tilt the cam plate and keep the moment balance on the 2-speed surface and fix it.

The indication of the cam plate (torque reversal, radial reversal) is shown by 2 steel balls.

https://truckmanualshub.com/

Opration State in 1- Speed <Pilot Pressure Pi=0>

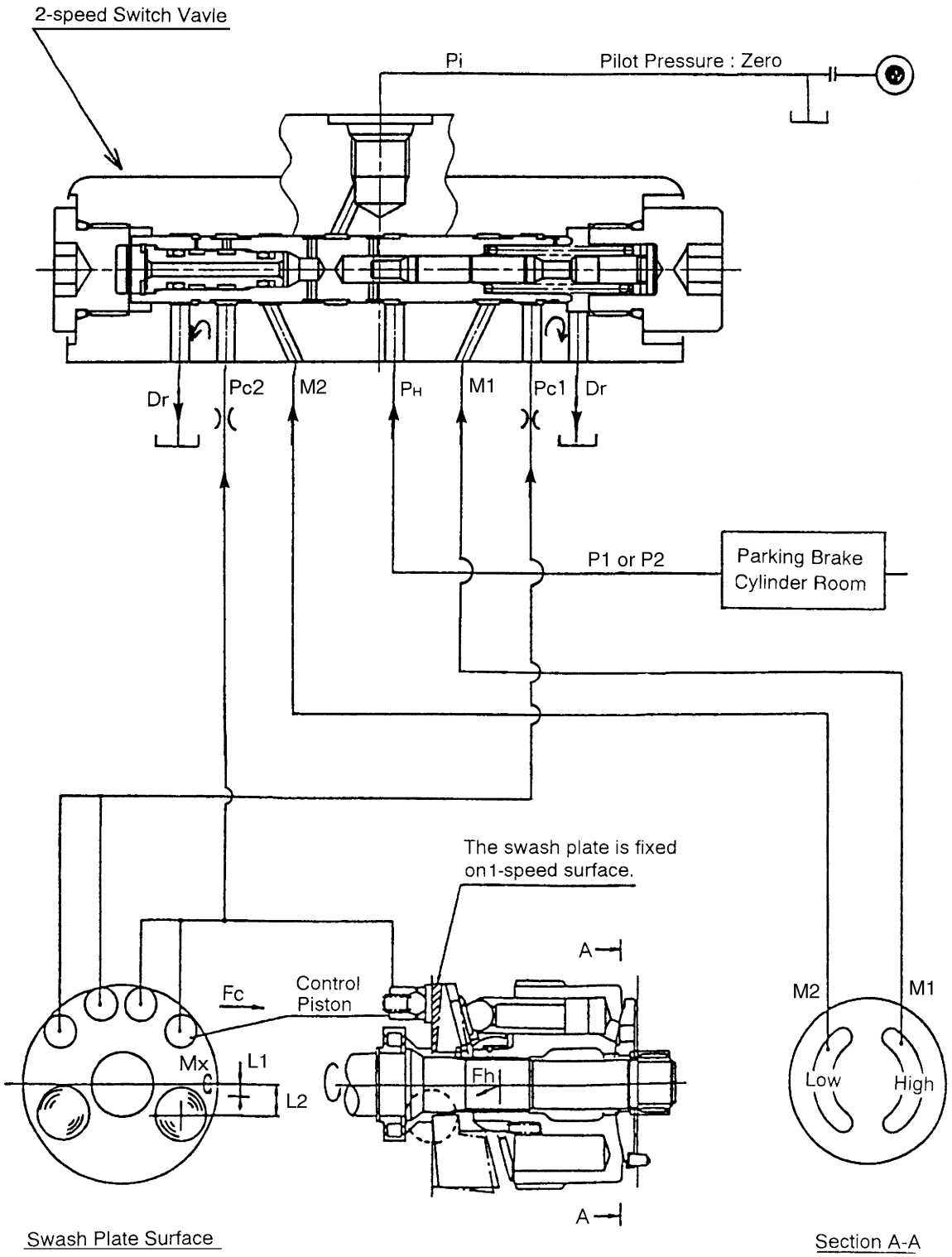

https://truckmanualshub.com/

Circuit Diagram

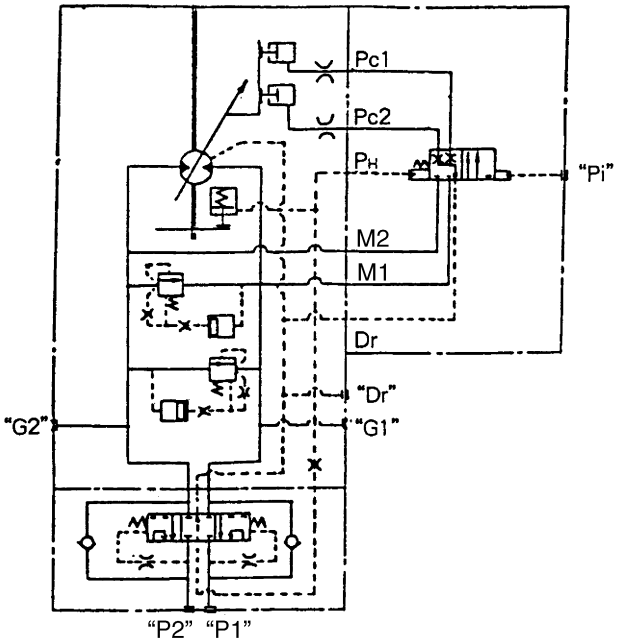

When the pilot pressure shows zero, the spool of 2-speed switch valve is switched and remains the status showing on the drawing.

At this moment, the control piston chamber is drained inside the motor case by using the spool, so that there is no tilt thrust force acting on the cam plate.

Under such condition, the moment acting on the cam plate and rotating around the X axial acts as Mx with pressurized oil force and spring force. With the relationship of the moment arm L1 < offset volume L2, the cam plate remains the stable status on the 1-speed surface.

https://truckmanualshub.com/

Opration State in 2- Speed (Automatic 2-speed)<Pilot Signal ON>

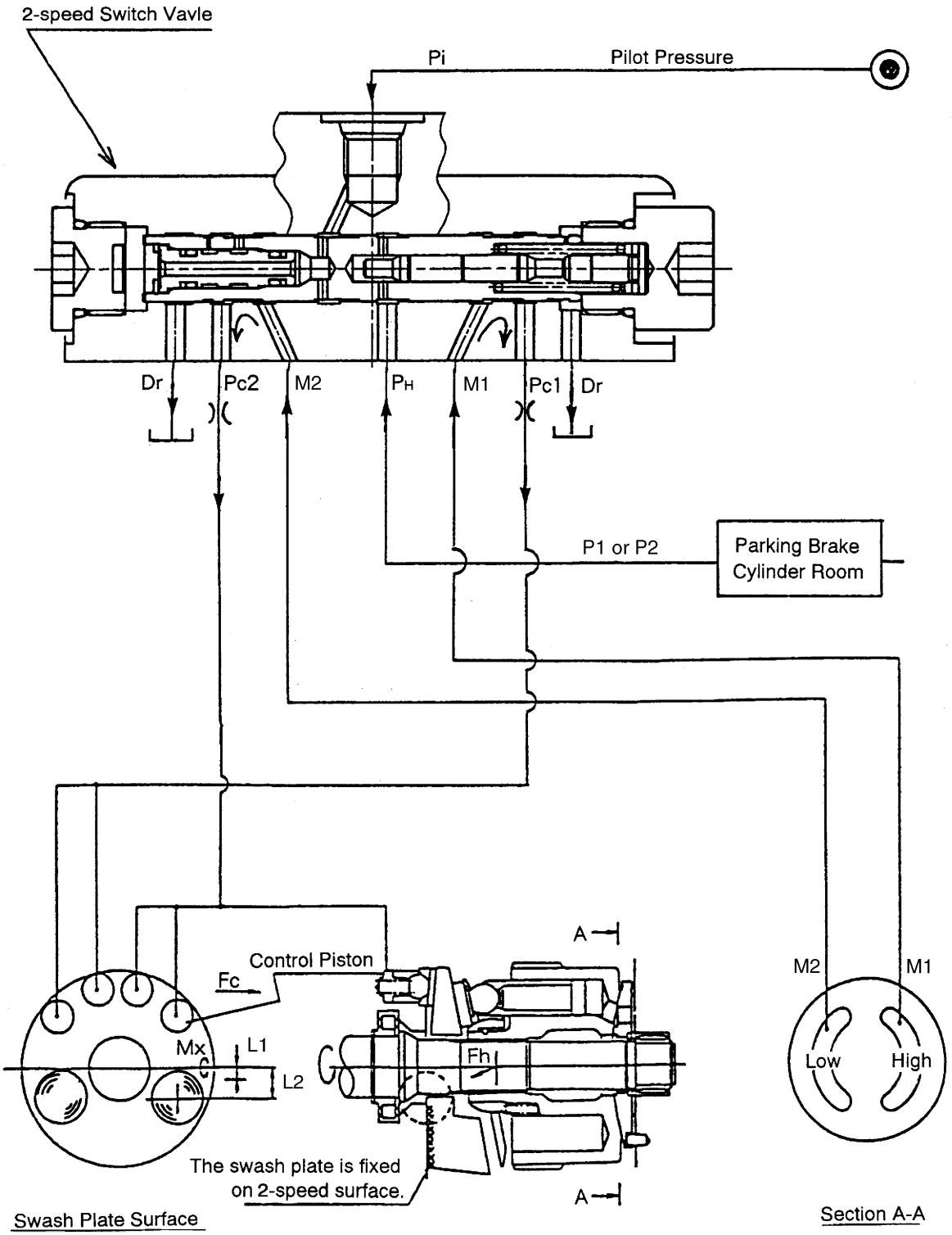

https://truckmanualshub.com/

Circuit Diagram

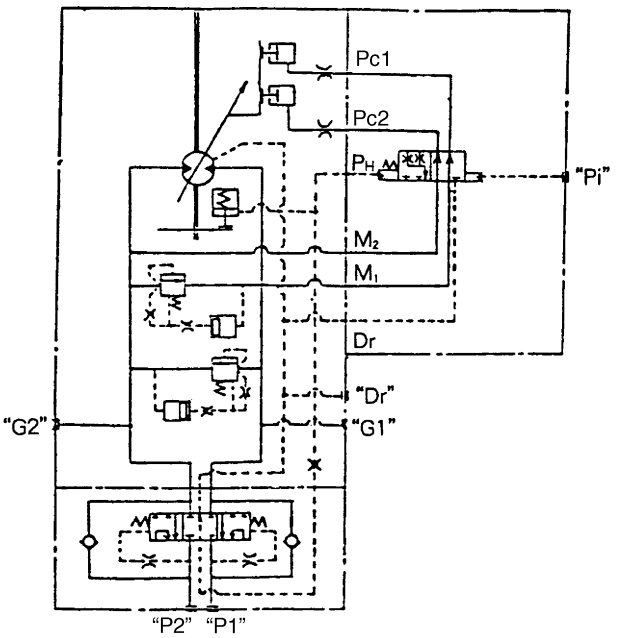

When the pilot signal (Pi) is on, it changes the volume automatically according to the drive pressure of the motor.

Force balance of the 2-speed switch valve

F1 (the force push the spool A at the left side (2-speed side))
= A1 (pressurized area of the spool A) x Pi

F2(the force push the spool A at the right side (1-speed side))
= A3 (pressurized area of the spool C) x P_H
(drive pressure of the motor)+spring force

[1] When travelling on the flat ground, the motor drive pressure is low, F1 > F2, the A spool is pushed to left side, the main pressure (M1, M2) acts on the A spool and is guided to the control piston chamber, with acting of the thrust force of the control piston Fc, the cam plate overcomes the moment Mx by pressurized oil force and tilts, so that the moment balance on the 2-speed surface is kept.

[2] When staying or climbing, the motor drive pressure is high, beyond the set pressure, F1< F2, the A spool is pushed to left side, the main pressure (M1, M2) acts on the A spool and drains inside the motor case, similar to Pi = 0, 1-speed status is caused.

Automatic 2-speed switch pressure 2→1-speed 24.7±1.4MPa
1→2-speed 21.4±1.3MPa [when Pi = 4.4MPa]

https://truckmanualshub.com/

4. Relief Valve

The relief valve determines the drive force and brake force which controls the hydraulic shovel travel and is located on the cross line.

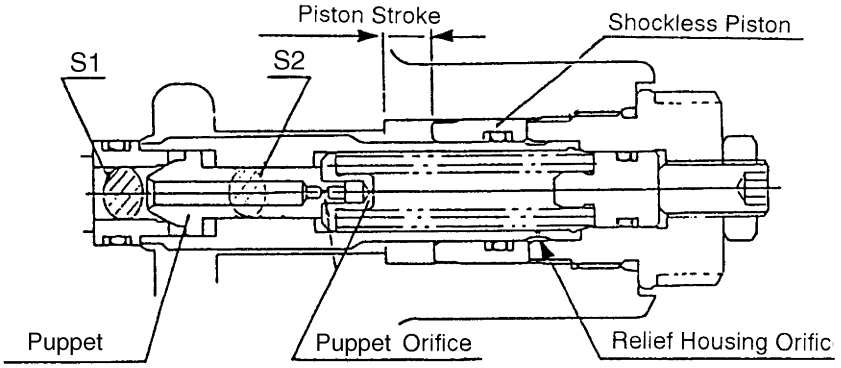

This valve also provides the shockless function (pressure raising in two stages) which reduces shock at the deceleration (shutdown) starting time.

The relief valve is constructed of the following.

a) Area differential type directly driven relief valve

b) Shockless piston

With the shockless type relief valve, reduction of shock and stress on the reinforced parts is achieved.

To operate the control valve, during the tentative period from the beginning of speed reducing, the following explains various functions of the relief valve.

First Stage; When beginning to operate the relief valve, lift the puppet valve so that the pressurized area is the puppet sheet area S1. In this case, the pressurized area is bigger than the area set (S1-S2), the relief working pressure is under a low pressure status which is about 14.7MPa. Such status will remain until the end of moving the shockless piston (about 0.45 seconds). The low pressure remaining time, pressure are determined by the puppet orifice diameter, the relief housing orifice diameter, the acting volume of the piston (pressurized area stroke).

Second Stage; When the movement of the shockless piston is completed, the pressure in the spring room of the relief valve increases to make the pressures before and after the puppet equal and the relief valve works at the normal set pressure.

- Relation of relief valve set pressure and adjuster amount Per one rotation approx. 7.8MPa

  [*] Since the pressure has been set by factory before being shipped out of the factory, do not adjust it unless necessary.

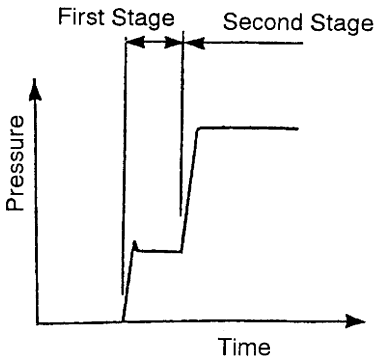

https://truckmanualshub.com/

5. Double Counterbalance Valve

Refer to Fig. 4
Two valves, (1) counter balance valve and (2) check valve are mounted in the valve body.
Each valve is described as follows;

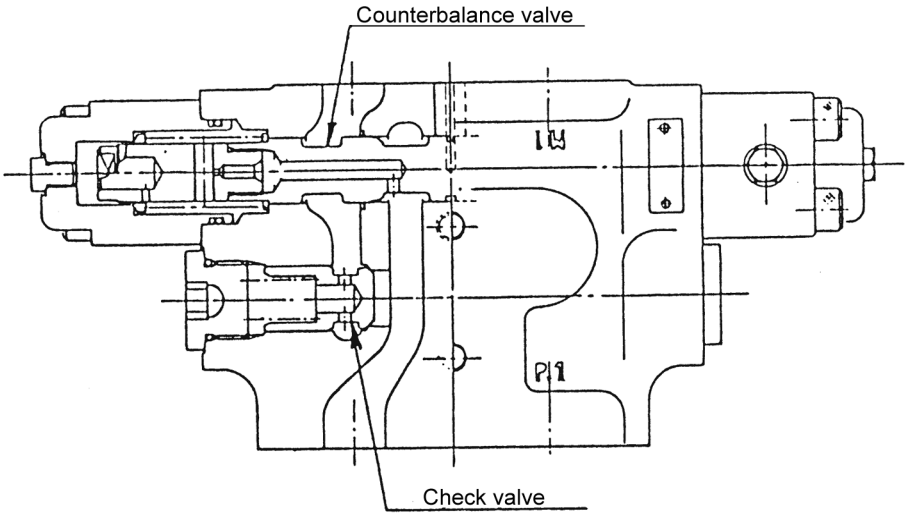

Fig. 4 Structural Drawing

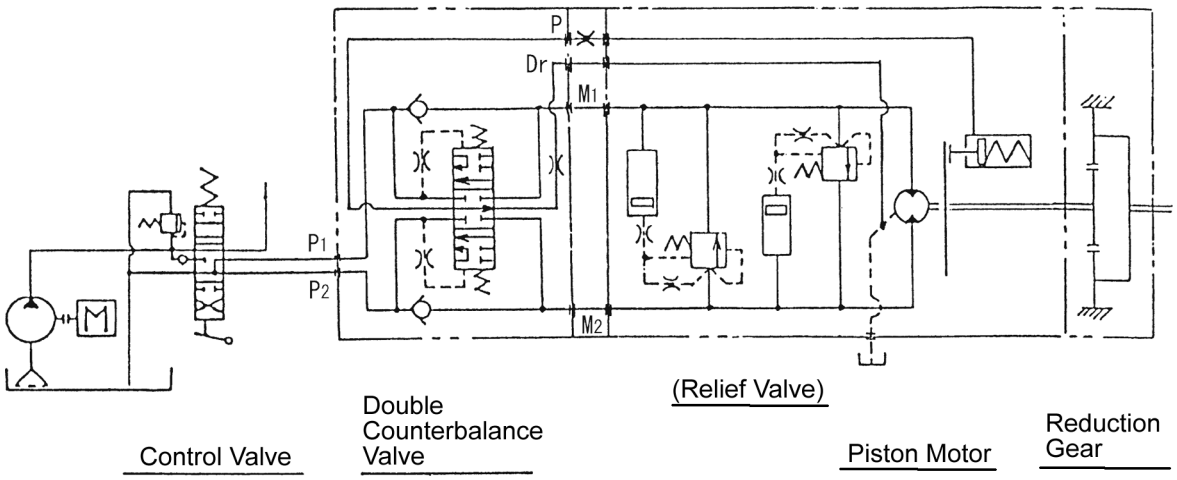

Fig.5 Hydraulic Circuit Diagram

https://truckmanualshub.com/

[1] Counter balance valve

Counter balance valve is the valve to prevent the piston motor from stopping and overrunning.

When controlling counter load speed during pumping operation of the piston motor, it controls oil quantity on the return side to keep the primary pressure (P1 or P2) of valve constant and maintains traveling speed reflecting oil quantity supplied by the motor and as a result, preventing the vehicle from deviation of traveling speed.

In addition, since pressure will not be generated in both ports of P1 and P2 when the control valve is at its neutral, the plunger of counter balance valve is at neutral position so that vehicle will not move as the motor port is blocked.

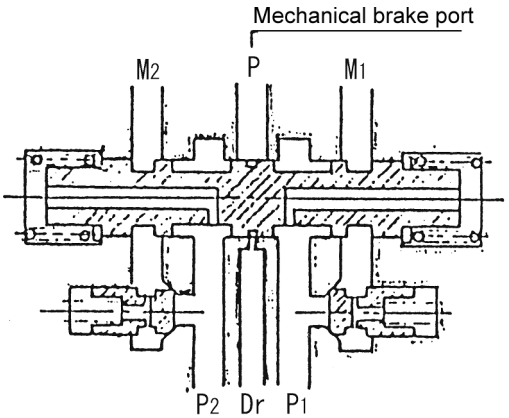

When braking

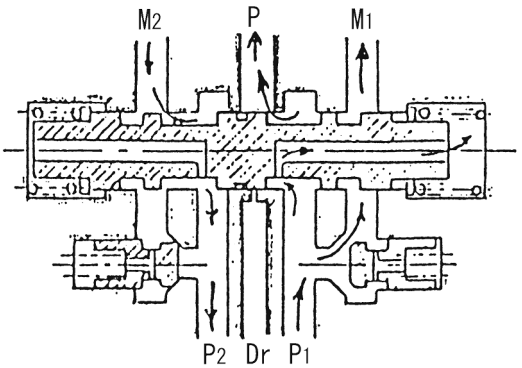

When Operating
(P_1) When high pressure

Shuttle function

When plunger in counter balance valve is in actuation:

Pressurized oil (P1 or P2) is introduced into the cylinder chamber for releasing parking brake in the piston motor from the port P to release the parking brake.

When plunger in counter balance valve is at neutral:

Pressurized oil is directed to the tank passing through the cylinder chamber for releasing parking brake and the port Dr to actuate the parking brake.

[2] Check valve

Check valve is the valve for preventing cavitation generated by overrunning of the piston motor.

When the piston motor is rotated from the vehicle body and the speed on pumping operation surpasses the speed matching the oil quantity supplied to the motor, insufficient oil is sucked up from the control valve into the hydraulic circuit via check valve and avoids vacuum generating in the circuit to prevent the vehicle from deviation of vehicle speed.

https://truckmanualshub.com/

Outside Drawing

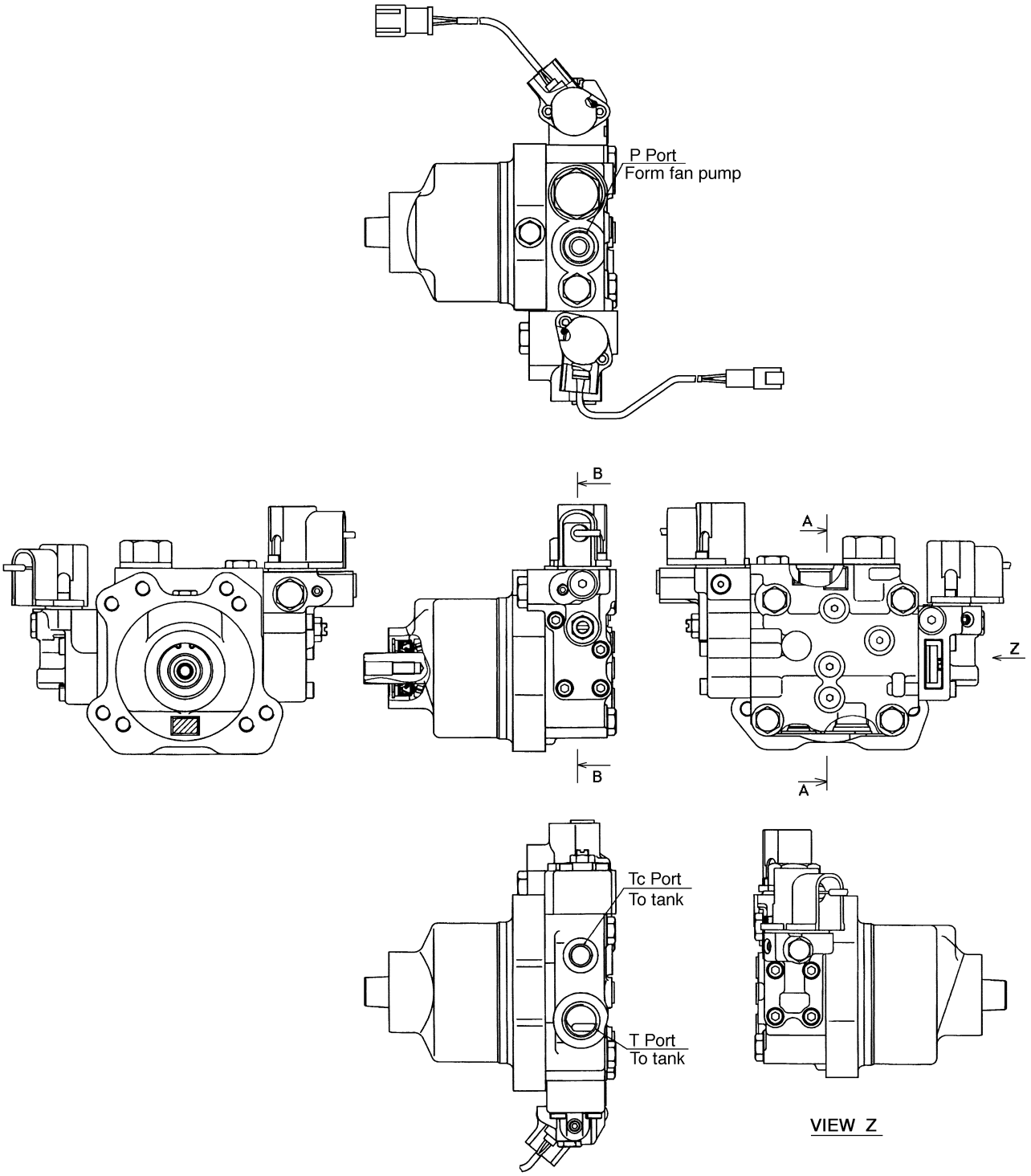

https://truckmanualshub.com/

Internal Structure Drawing

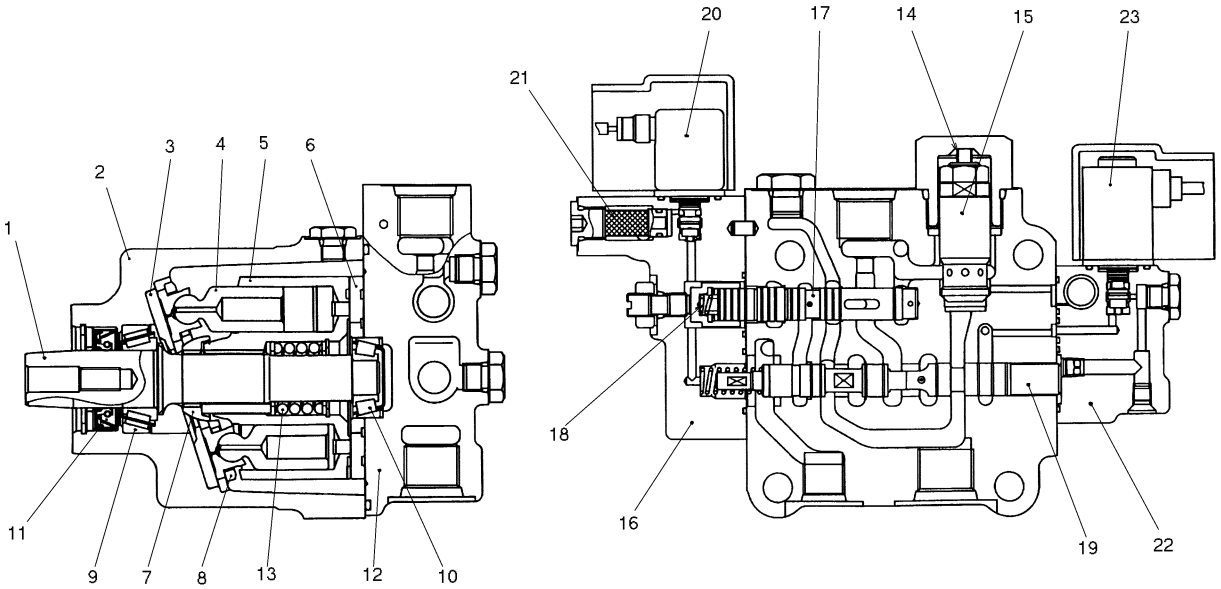

SECTION A- A

SECTION B - B

No.	Part Name
1	Output shaft
2	Case
3	Thrust plate
4	Piston assembly
5	Cylinder block
6	Valve plate
7	Retainer guide
8	Retainer shoe
9	Main bearing
10	Sub bearing
11	Oil seal
12	End cover
13	Center spring
14	Spring for suction safety valve
15	Suction safety valve
16	Variable flow control pilot valve
17	Flow control spool
18	Flow control spool spring
19	Main spool
20	Proportional solenoid
21	Filter
22	Forward/reverse changeover pilot valve
23	ON-OFF solenoid

https://truckmanualshub.com/

Operation Principle

1. Hydraulic Motor

Function

- The hydraulic motor is called as swash plate axial piston motor and it converts force of pressure oil transferred from the hydraulic pump into rotation.

Operation Principle

- Oil flown out of the hydraulic pump is introduced into the cylinder block [5] through the valve plate [7].

  It has been so designed that the oil is to be introduced in the one side area of the line Y-Y connecting the top dead center to the bottom dead center in the piston [4] stroke.
- Pressure oil entered in the one side part in the cylinder block [5] pushes each piston [4] (2 pistons or 3 pistons) to generate force F1. (F1 N=P MPa x π/4 D^2 cm^2)
- Although the force works to the thrust plate [2], the force is divided to F2 and F3 as the thrust plate [2] is fixed with a certain angle of $\alpha°$ against the output shaft [1].
- Of the component of a force, the radial force F3 generates each torque of (T=F3 x ri) against the line Y-Y connecting the top dead center to the bottom dead center.
- The resultant force of the torque [T= Σ(F3 x ri)] allows the cylinder block [5] to be rotated via piston as a turning force.
- Since the cylinder block [5] makes a spline connection with the output shaft, the output shaft rotates to transfer the torque.

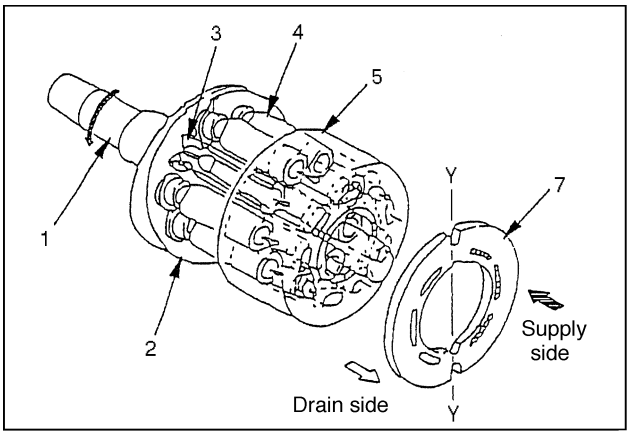

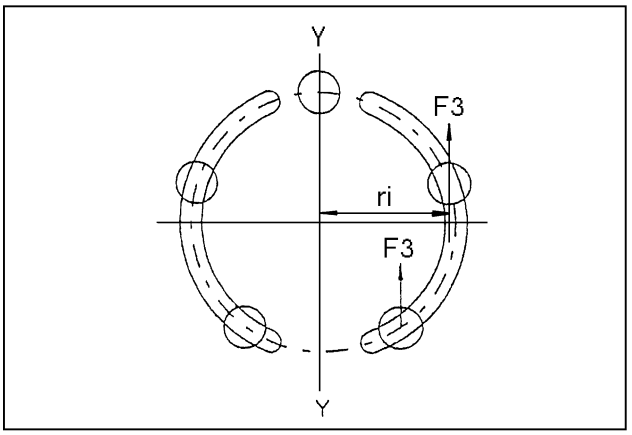

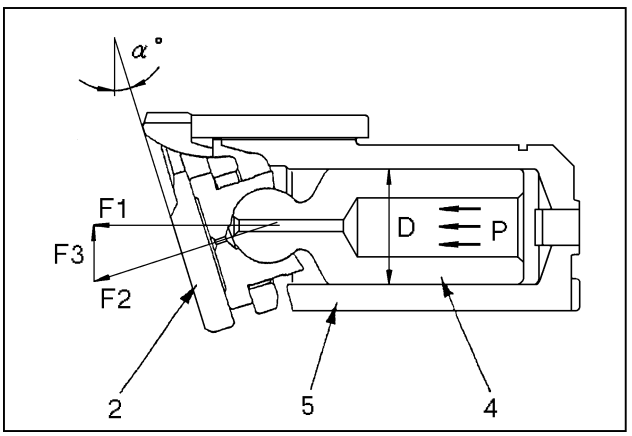

https://truckmanualshub.com/

2. Suction Safety Valve (Safety Valve with Suction)

1) Function of Suction

- Negative pressure in the inlet port of motor generates cavitation.
  When pressure in the inlet port of the motor becomes negative, the suction valve has a function preventing cavitation from generating by supplying pressure oil from the outlet port.

Operation

[1] When starting

- When pressure oil flown out of the pump is suplied to the port P and pressure on MA side increases to generate staring torque in the motor, the motor starts rotation.
  Oil on MB side of the outlet port of motor will returns from port T to thetank.

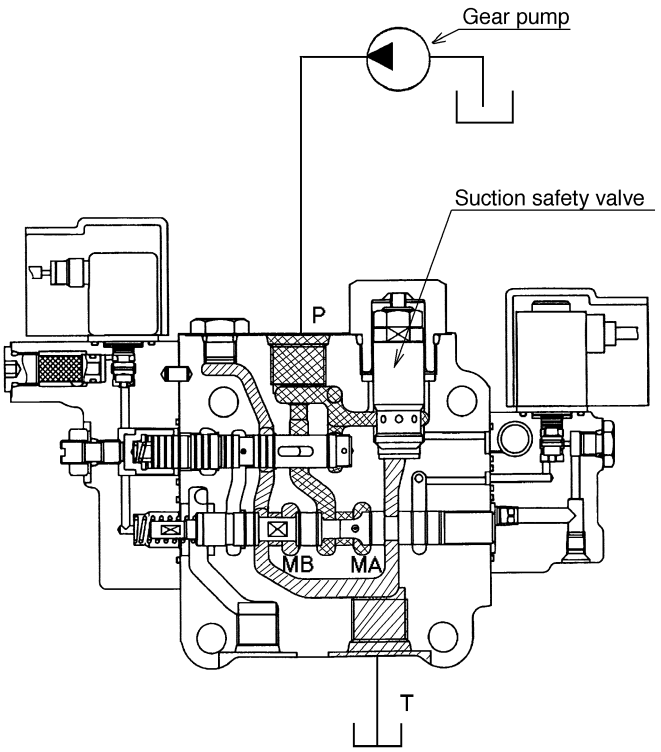

[2] When stopping

- When input speed of the fan pump gets to 0 min^{-1} due to engine stop, pressure oil from the pump fails to be supplied to port P.
  Since pressure oil will not be flown in MA side of the motor, the motor speed is being slowed down gradually to make it a stop.
- When motor shaft is rotated by inertia with pressure oil flowing to port P being decreased, pressure in the inlet port becomes negative.
  In such case, the suction safety valve prevents cavitation from being generated by supplying pressure oil in port T on the outlet side to Ma side.

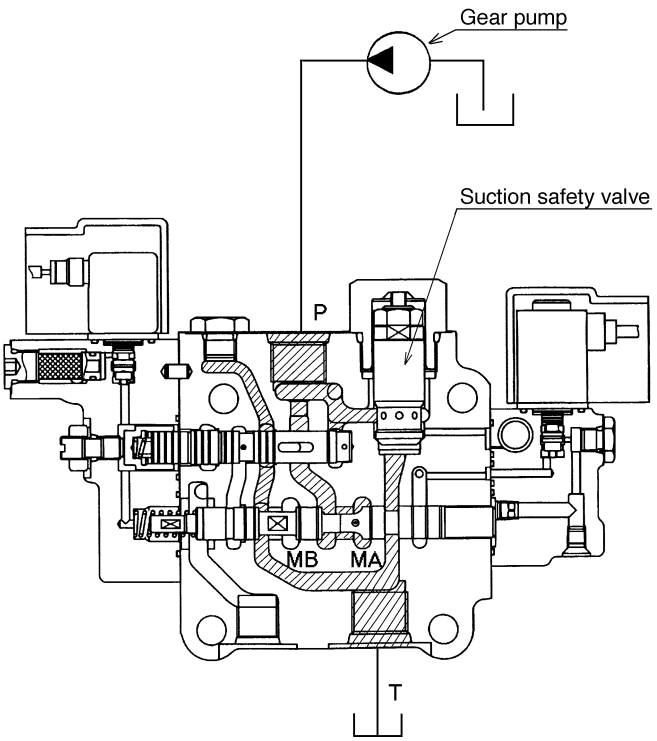

https://truckmanualshub.com/

2) Function of Safety Valve

Function

- Discharge pressure of the fan pump may be raised in such case where the engine is started.
- In order to protect fan system circuit, safety valve is installed.
- When discharge pressure goes beyond the pressure set at the safety valve, the seat of safety valve opens to allow the oil to be escaped into the passage to port T to prevent unusual high pressure from being generated.

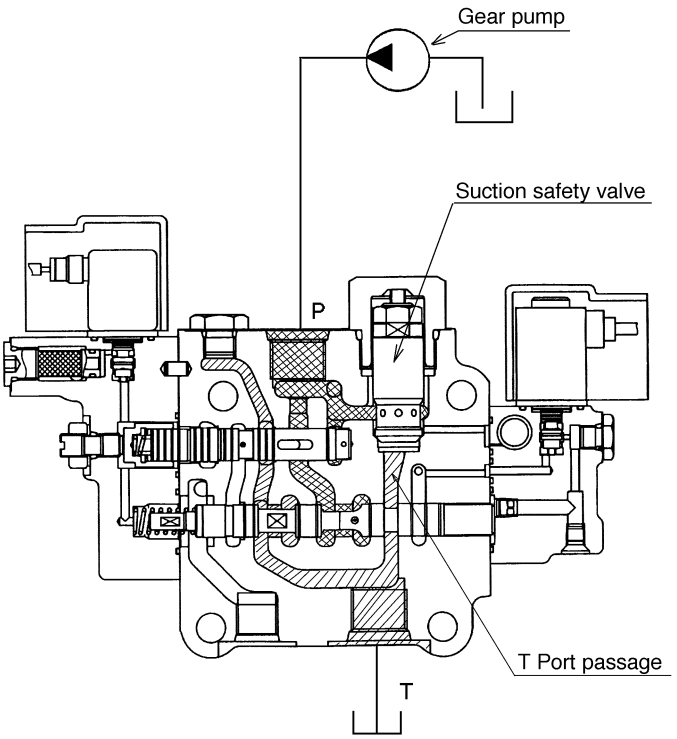

https://truckmanualshub.com/

3. Variable Flow Control Valve

Function

It supplies oil discharged out of the pump to the motor as necessary and allows surplus oil to return to the tank.

- The motor speed is increasing in proportion to inflow quantity Q as illustrated in Fig. 1.

  The pump rotates at Ⓑ min^{-1} at inflow of Q1.

  In order to aim at noise reduction and loss reduction as a function of fan motor, it is necessary to control fan speed for maintaining necessary constant speed regardless of inflow.

  A flow control valve is built-in as the function meeting the requirements mentioned above.

(Even when inflow increases from Q0 to Q1, motor speed keeps constant as Ⓐ to Ⓒ min-1 as illustrated in Fig.1)

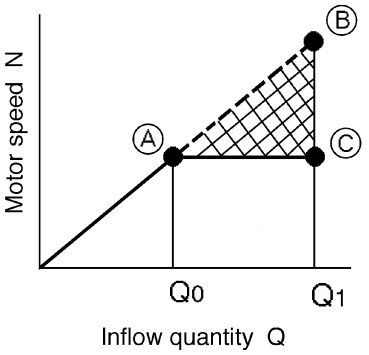

Fig. 1

Operation

- Basic operation of flow control is that pressure difference in front and rear of the constriction against the inflow works to the flow control spring with constricted upstream pressure applied to Ⓐ side and constricted downstream pressure applied to Ⓑ side of flow control spool.

  In Fig. 1, if inflow surpasses Q0, pressure difference in front and rear of the flow control spool becomes larger than load at mounting in flow control spring.

  This allows opening P to T to open and surplus flow in the section marked as ▩ is discarded out of the flow control valve for which the motor speed is to be kept constant in the range between Ⓐ and Ⓒ.

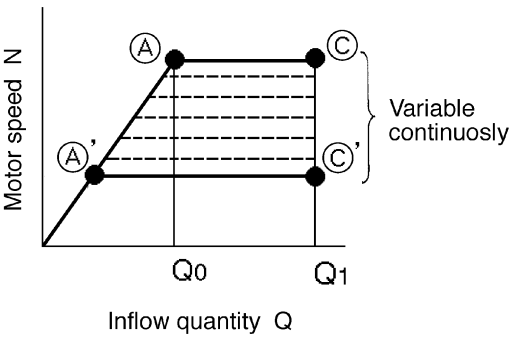

Fig. 2

- The motor mounts electromagnetic proportional variable flow control valve.

  The flow control valve of this type makes it possible to change continuously the plateau between Ⓐ and Ⓒ as in in Fig. 2 to constant speed of the motor in the range between Ⓐ' and Ⓒ' altering the command current.

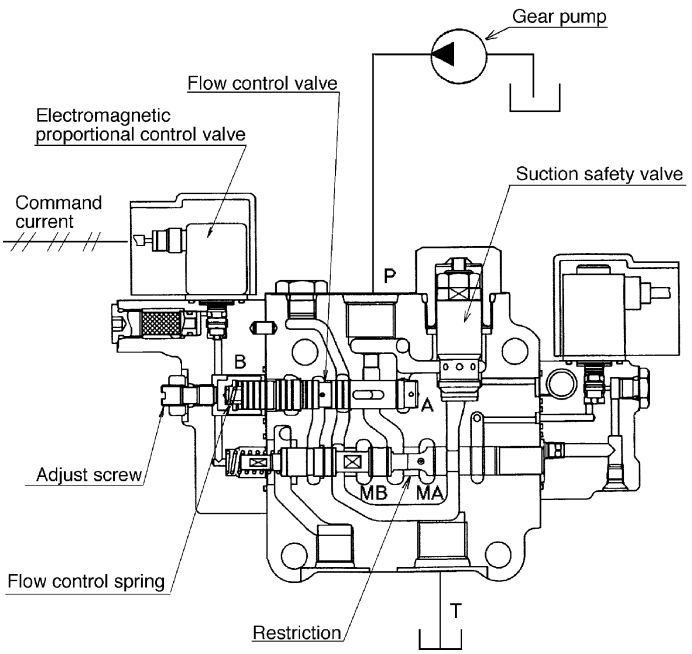

https://truckmanualshub.com/

4. Operation of Forward / Reverse Changeover Valve

[1] When ON-OFF solenoid for changeover valve is demagnetized

- When ON-OFF solenoid for changeover valve [1] is demagnetized, pressure oil from the pump is shut off by ON-OFF changeover valve [2] allowing port C to lead to the tank circuit.
- This allows the changeover spool [3] to be pushed to the right by the changeover spool spring [4] and the motor port MA opens to let the pressure oil flow in and as a result the motor makes forward rotation (CW).

[2] When ON-OFF solenoid for changeover valve is magnetized

- When ON-OFF solenoid for changeeser valve [1] is magnetized, ON-OFF change over valve [2] switches over and pressure oil from the pump enters in the port C to let it flow into the chamber D.
- Pressure oil in thei chamber D overcomes the changeover spool spring [4] to push the changeover spool [3] to the left.

  This allows the motor port MB to open and pressure oil flows in and as a result the motor makes reverse rotation (C.C.W.).

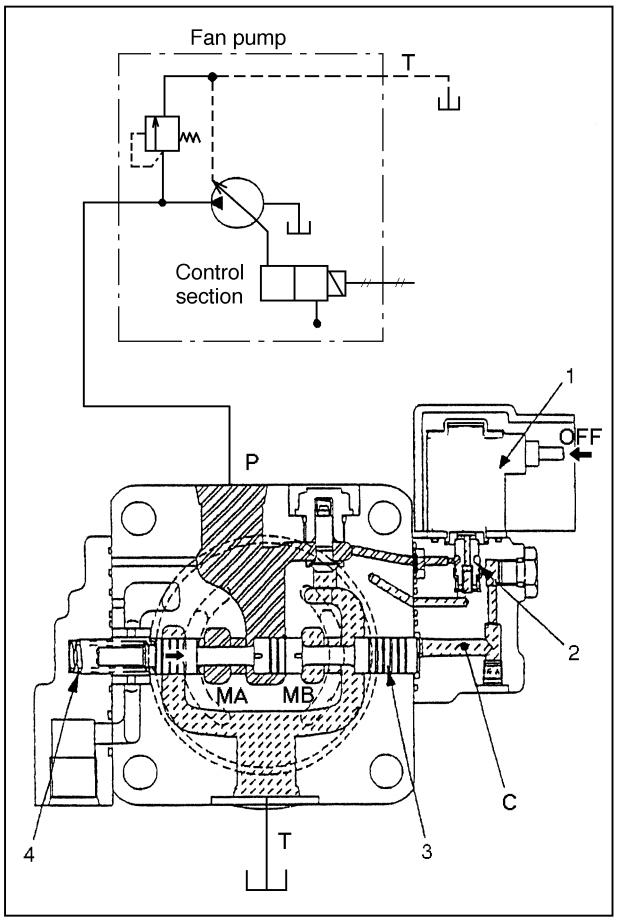

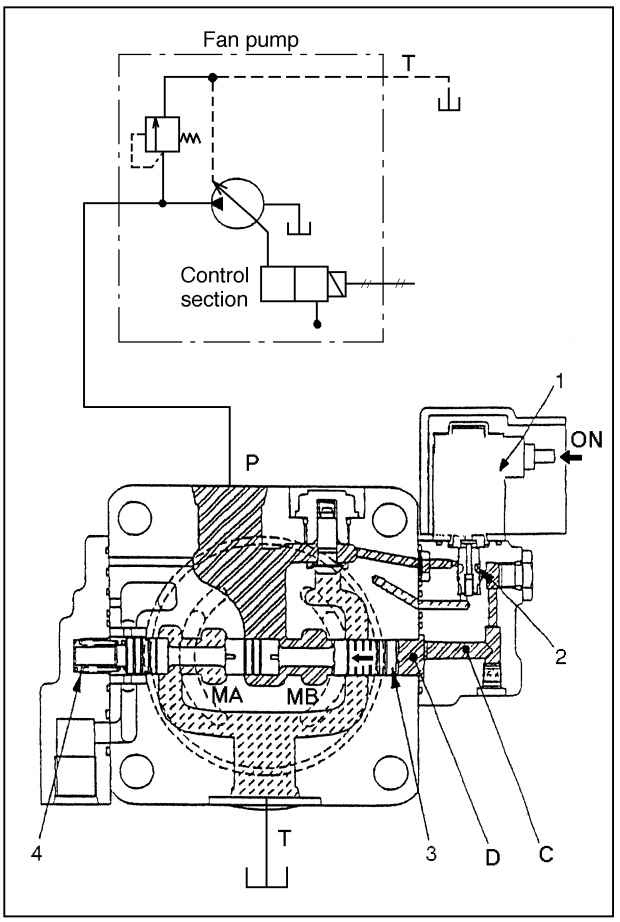

https://truckmanualshub.com/

Hydraulic Circuits

PORT LOCATIONS

Hydraulic Pump

	Port name	Port size
$A_{1,2}$	Delivery port	SAE6000 psi $1^1/_4$"
B_1	Suction port	SAE2500 psi $3^1/_2$"
$Dr_{1\sim4}$	Drain port	G 3/4 - 23
$P_{i1,\ i2}$	Negative control port	G 1/4 - 15
$P_{SV1,\ SV2}$	Serbo assist port	G 1/4 - 15
$a_{1,2}$	Gauge port	G 1/4 - 15
a_3	Gauge port	G 1/4 - 14
a_4	Gauge port	G 1/4 - 13
A_3	Gear pump delivery port	G 1/2 - 19
B_3	Gear pump suction port	G 3/4 - 20.5
P_B	Gauge port	RC 1/8 - 12

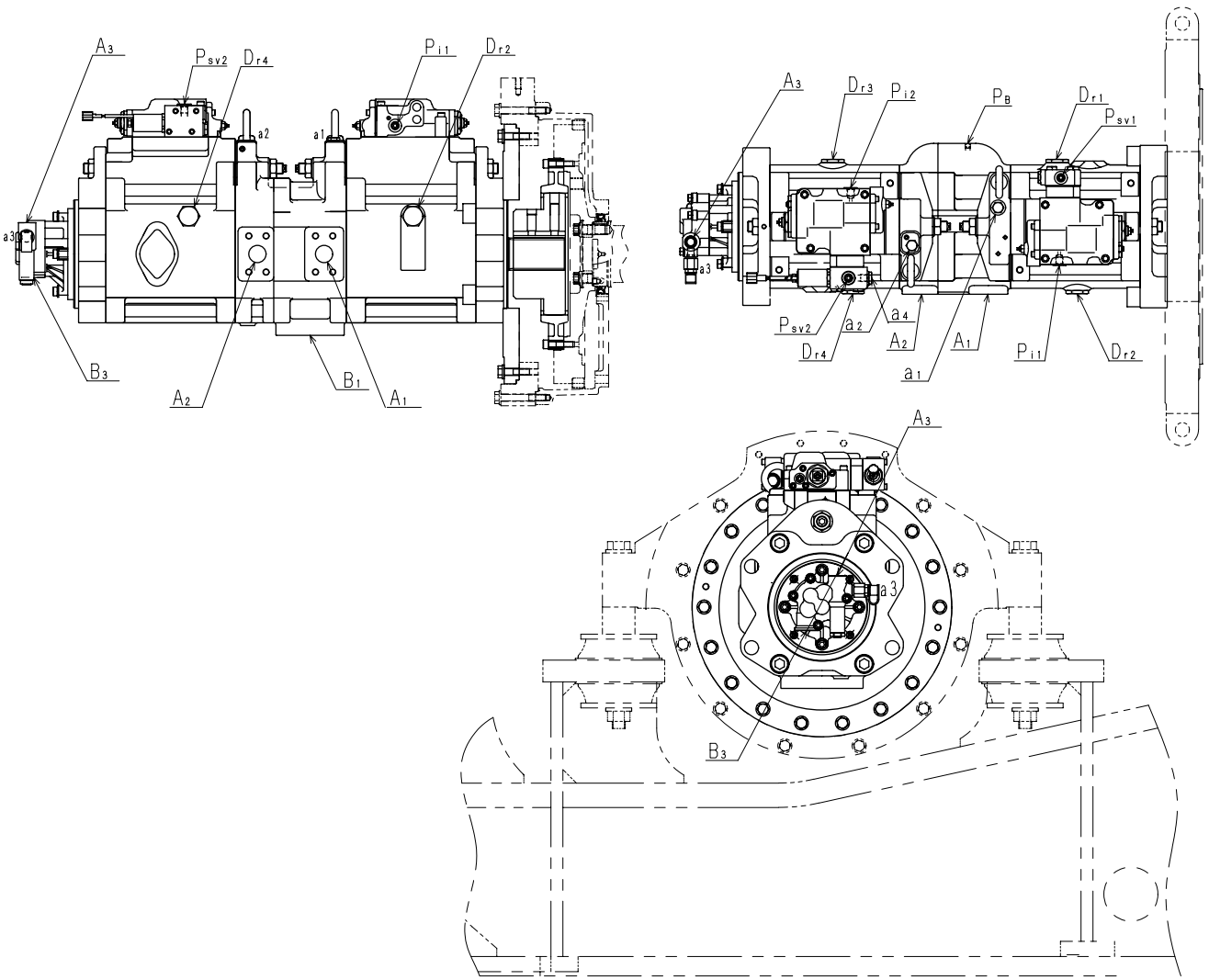

https://truckmanualshub.com/

Hydraulic Circuits

PORT LOCATIONS

Control Valve

Line name	Main port	Line name	Port
Arm-out line	5A5	Negative control	4pf, 5pf
Arm-in line	4A4, 5B5	Swing priority	5pc4
Boom up line	4A3, 5B4	Travel priority	Pp, Px, Py
Boom down line	4B3	Drain	dr1~dr7
Bucket open line	4B2	Boom up priority (Speed restriction of bucket section)	4pc4
Bucket close line	4A2	Two pump flow is joined valve at bucket section	5pc3
Travel right forward line	4B1	Boom up priority (Speed restriction of swing section)	5pc5
Travel right backward line	4A1	Load holding cancellation at boom	5pc2, 4pc1
Option line	5A3, 5B3	Load holding candellation at arm	5pc1
Swing right line	5A2	Two pump flow is joined valve at option section	4pc2
Swing left line	5B2	Raised pressure	Pc
Trave left forward line	5A1	Main pressure measurement	Ps1, Ps2
Travel left backward line	5B1		
Pressure line	P1, P2		
Return line	R1, R2		
Swing motor make up line	R3		

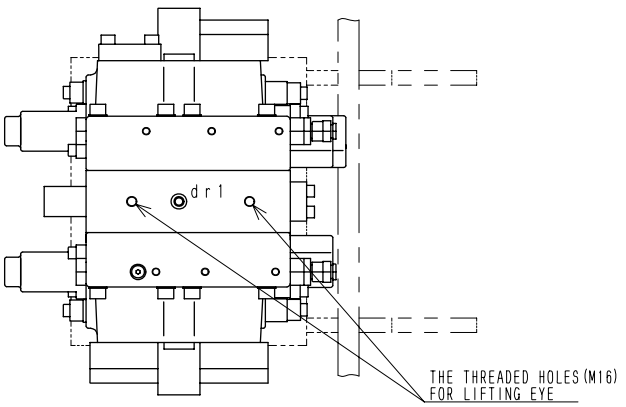

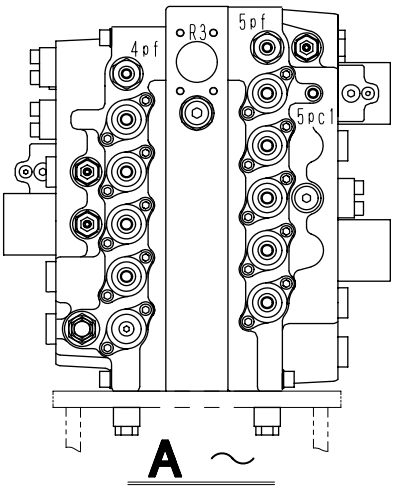

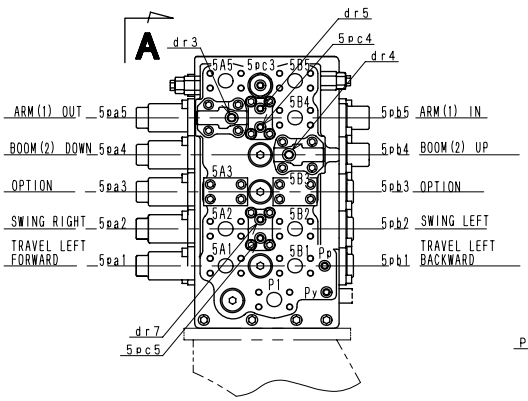

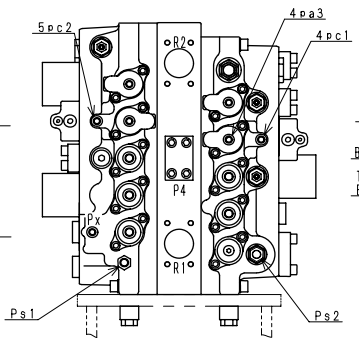

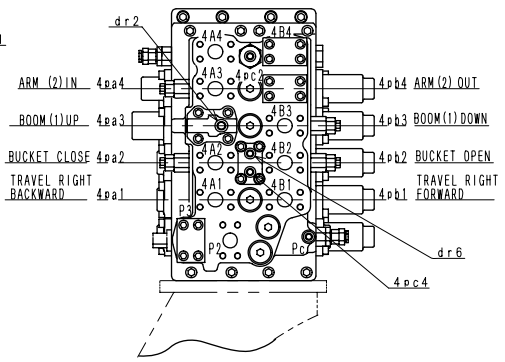

https://truckmanualshub.com/

Hydraulic Circuits

PILOT HOSE CONNECTION DIAGRAMS

Pilot P&T Lines

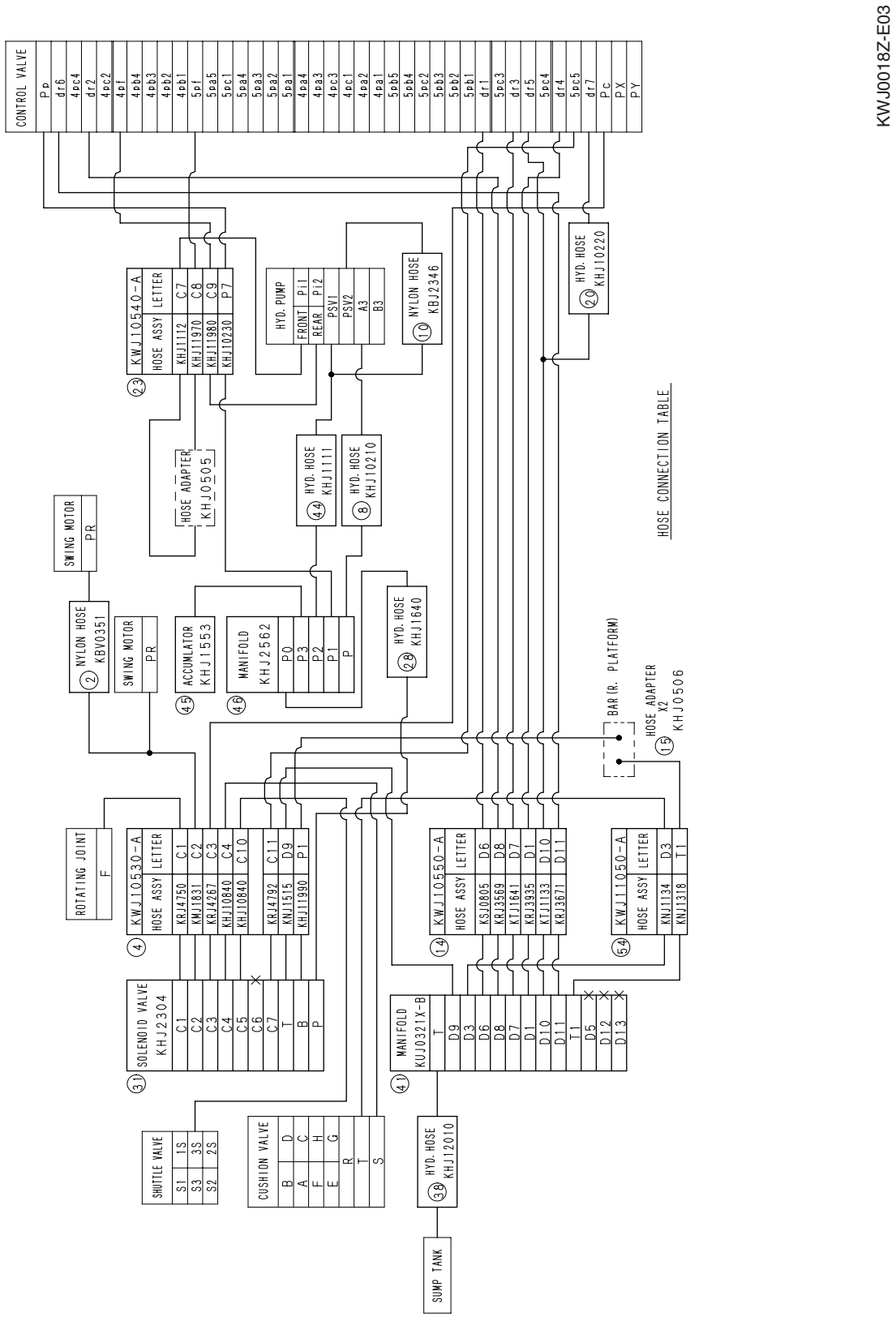

https://truckmanualshub.com/

Hydraulic Circuits

PILOT HOSE CONNECTION DIAGRAMS

Pilot P&T Lines

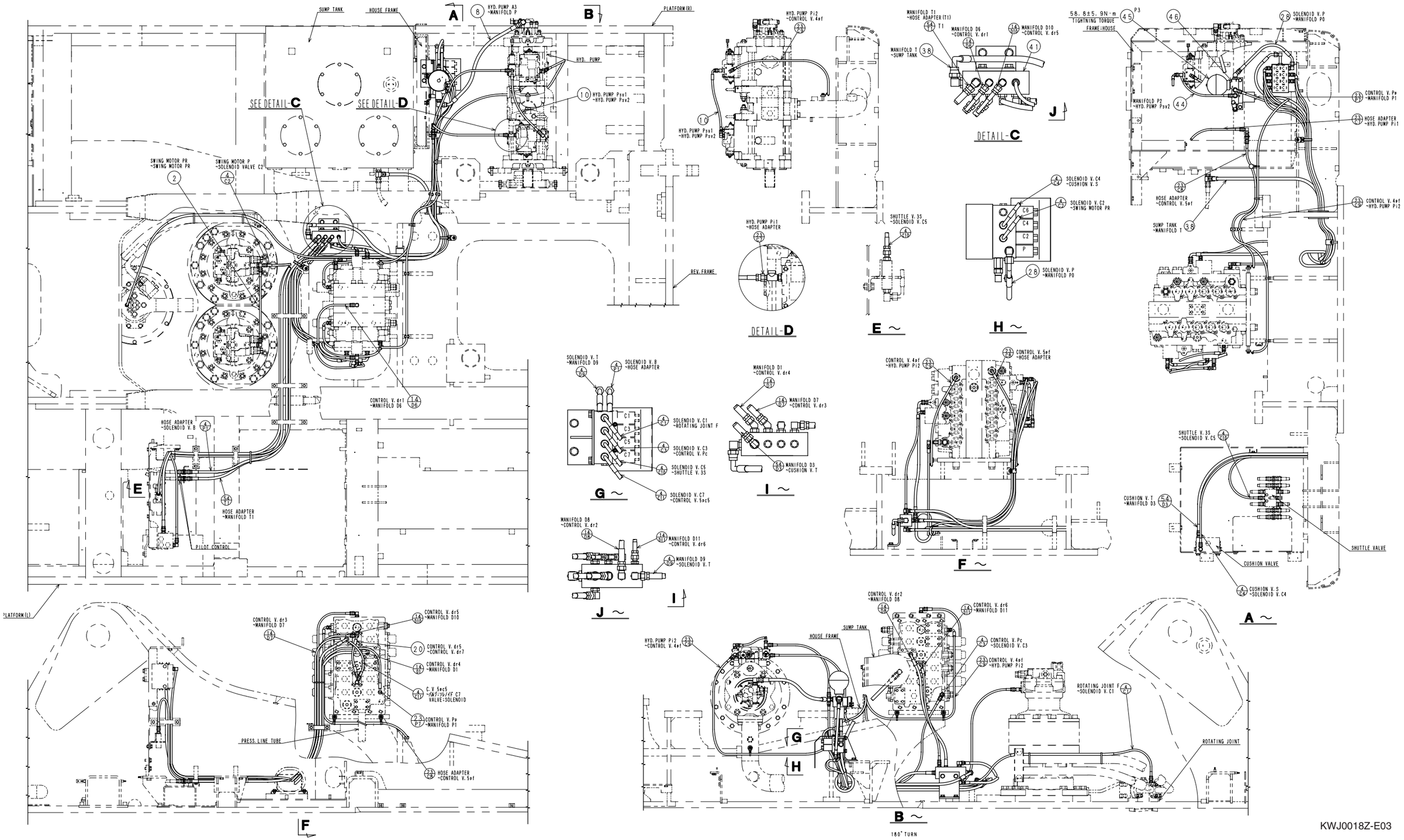

https://truckmanualshub.com/

Pilot Control Lines

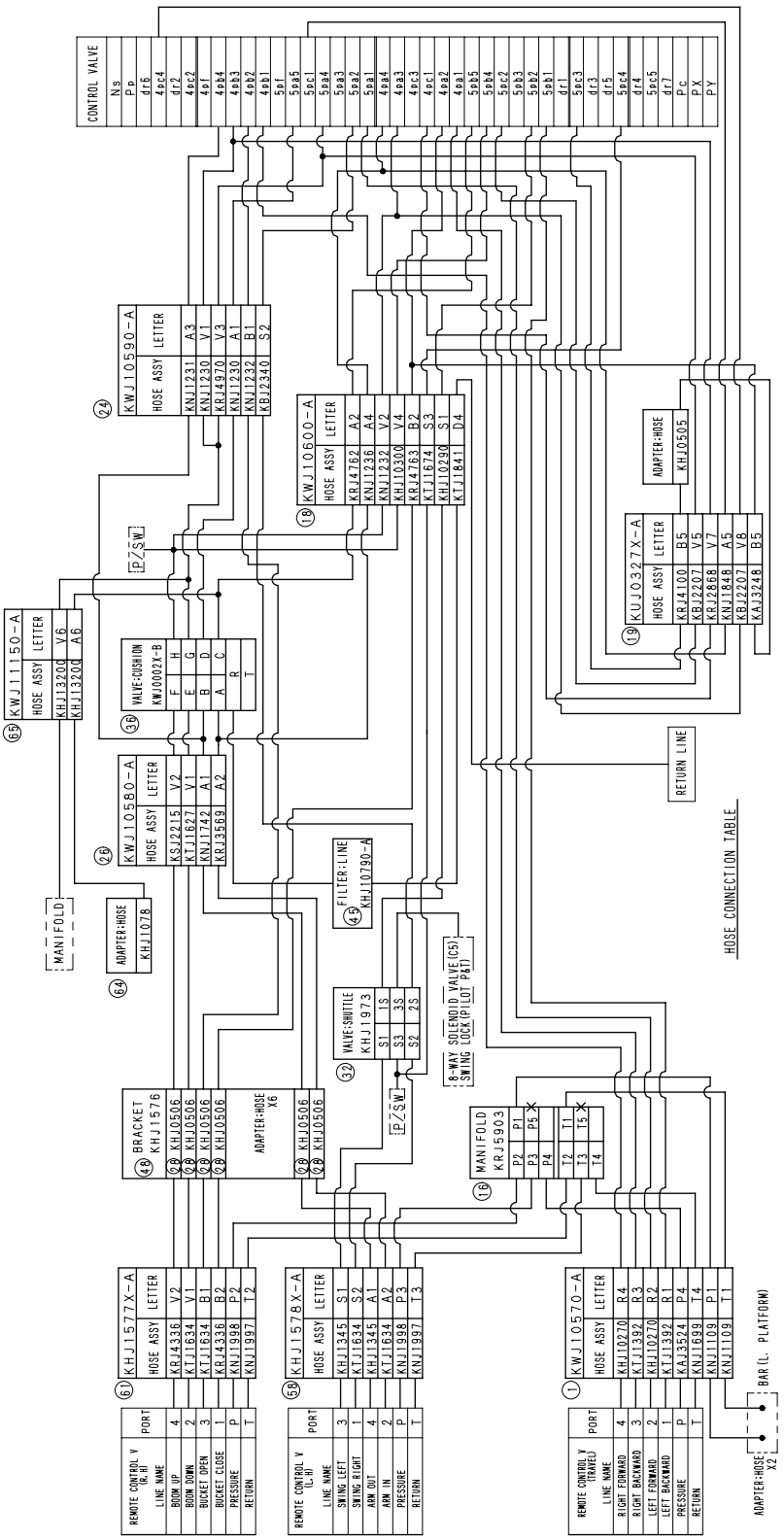

https://truckmanualshub.com/

Hydraulic Circuits

PILOT HOSE CONNECTION DIAGRAMS

Pilot Control Lines

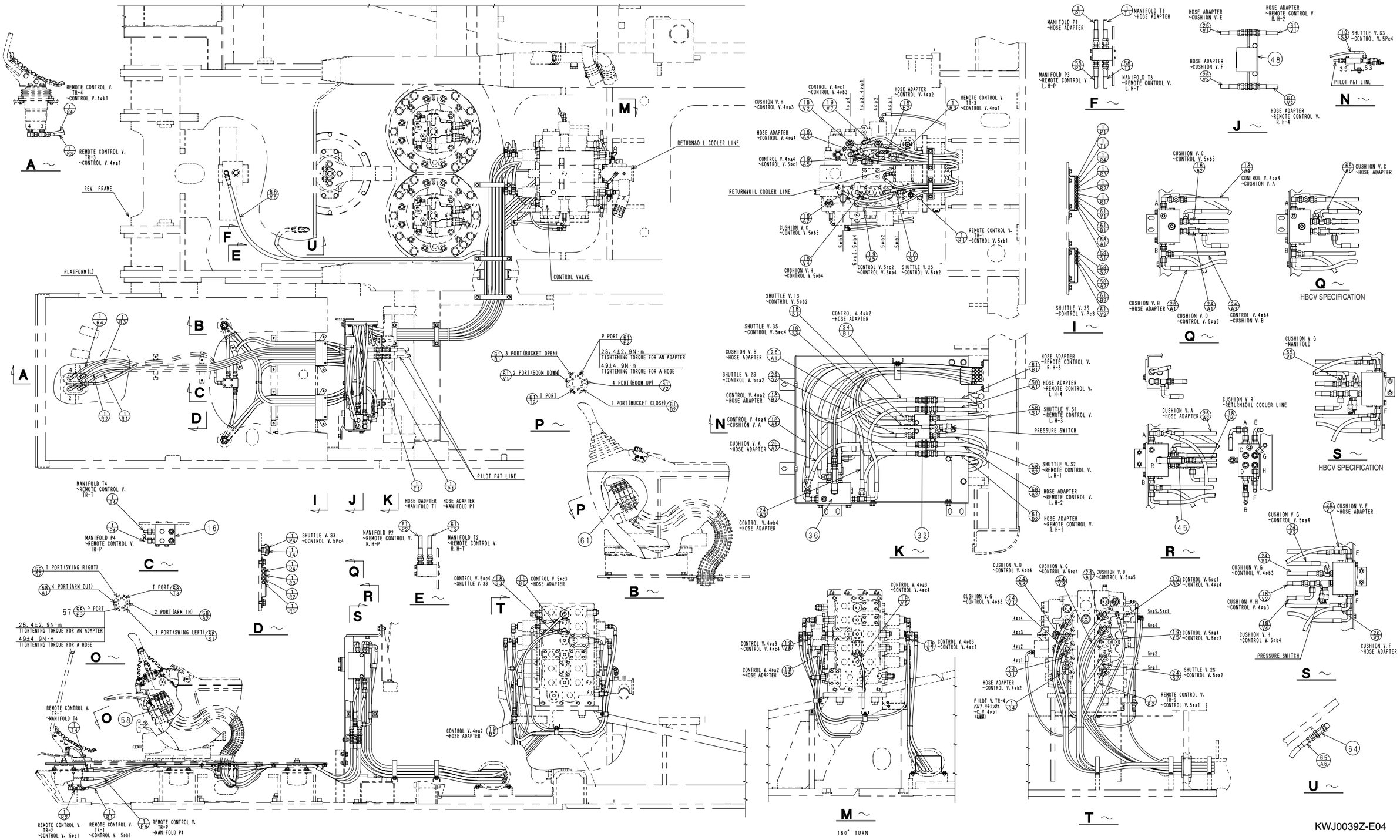

https://truckmanualshub.com/

Functional Table

Item	Functional Explanation	Operation Explanation
Travel Circuits: 700-1-03-03-18		
High speed travel circuit	1. High speeds can be achieved by setting the two-step inclinatory angle of the travel motor to the smaller angle side. 2. Load pressure applied to the travel motor automatically changes the speed to a lower one. 3. Travel load pressure does not control the controller.	Page 1/6
Low speed travel circuit	Low speeds can be achieved by setting the two-speed inclinatory angle of the travel motor to the larger angle side.	Page 3/6
Straight travel circuit	Maintains machine's straight travel even when attachment or swing operations are performed during its travel.	Page 5/6
Swing Circuits: 700-1-03-04-19		
Swing parking circuit	1. When the swing lever is in neutral, the swing parking is activated and the swing is fully held. 2. When the swing lever is operated, the parking brake is released by signals from the pressure switch. 3. When the swing lever is in neutral, the parking brake is released by load pressure generated by attachment operation. 4. The parking brake starts to operate 5 seconds after the swing lever comes in neutral and after the load pressure has become lower than the specified values. 5. When the swing lock switch is turned on, the parking brake starts to operate. At the same time, pilot pressure works on both ends of the swing spool.	Page 1/6
Swing push digging	When swinging and arm operation are conducted simultaneously, swing pushing function can be obtained by the swing override throttle valve integrated in the control valve.	Page 5/6
Vibration backlash	The reversal prevention valve attached to the swing motor reduces backlashes that occur when the swing stops.	-
Arm Circuits:700-1-03-06-18		
Arm-out circuit	Switching over arm (1) and (2) spools makes hydraulic oil flows merge, achieving faster speed.	Page 1/6
Arm-in load holding	1. Load holding valve integrated in the control valve reduces natural drop on the arm-in side. 2. Arm-in pilot pressure enables arm-in operation by releasing the load holding valve.	Page 3/6
Arm-in circuit	The regenerative circuit and forced regenerative release valve in the arm (1) spool function achieves faster arm speed.	Page 5/6

https://truckmanualshub.com/

Hydraulic Circuits

FUNCTIONAL EXPLANATIONS

Item	Functional Explanation	Operation Explanation
Boom Circuits: 700-1-03-07-18		
Boom-up circuit	1. Switching over boom (1) and (2) spools makes hydraulic oil flows merge, achieving faster speed. 2. When operating in combination with the the bucket, flow rate to the boom side is secured by the priority valve for boom.	Page 1/8
Boom-down load holding	1. Load holding valve integrated in the control valve reduces natural drop of the boom. 2. Boom-down pilot pressure enables boom-down operation by releasing the load holding valve.	Page 5/8
Boom-down circuit	1. The regenerative circuit in the boom (1) spool serves to improve the boom's speed and prevent negative pressure from occurring. 2. Although the boom (2) spool operates, it is center-bypassed.	Page 7/8
Backup Circuits: 700-1-03-09-16		
Combined circuit	1. Backup circuit section is provided at control valve. 2. Switching over the spool in the control valve creates internal confluence.	Page 1/4
Other		
High dump	When operations of swinging and raising boom are carried out simultaneously, allow speed of boom-up to be faster.	
Cushion	1. A cushion valve with heat circuit is attached to the pilot line to reduce shocks when the arm or boom movement stops. 2. There is no soft/hard switch.	-
Auto power boost	Through the engine load ratio and circuit pressure, the pressure of the main relief will be raised from 31.4 MPa to 34.3 MPa.	-
Negative control	This is designed to reduce power consumption by minimizing the flow of the discharge from the hydraulic pump when operating with no load.	-

https://truckmanualshub.com/

High Speed Travel Circuit

With High Speed Travel, high speeds can be achieved by setting the two-level inclinatory angle of the travel motor to the smaller angle side. The circuit has a travel motor that automatically switches over to lower speed by utilizing load pressure on the travel motor when traveling at high speed.

Discharged oil from the hydraulic pump A1 enters the Port P1 of control valve while discharged oil from the hydraulic pump A2 enters the Port P2 of control valve. Each flow goes into the travel motor by switching between the right and left travel spools. By these flows, the machine travels forward and backward.

By operating the travel mode switch, electric signals are sent to the controller, and from the controller, electric signals are sent to the solenoid valve for 2-speed (high speed) travel in the 8-way solenoid valve. By the switchover of the solenoid valve, the original pilot pressure (4.4 MPa) from Port C1 on the 8-way solenoid valve enters Port P of right and left travel motors via the rotating joint to set the inclinatory angle of the travel motor to the smaller angle side, which enables high speeds.

https://truckmanualshub.com/

High Speed Travel Circuit

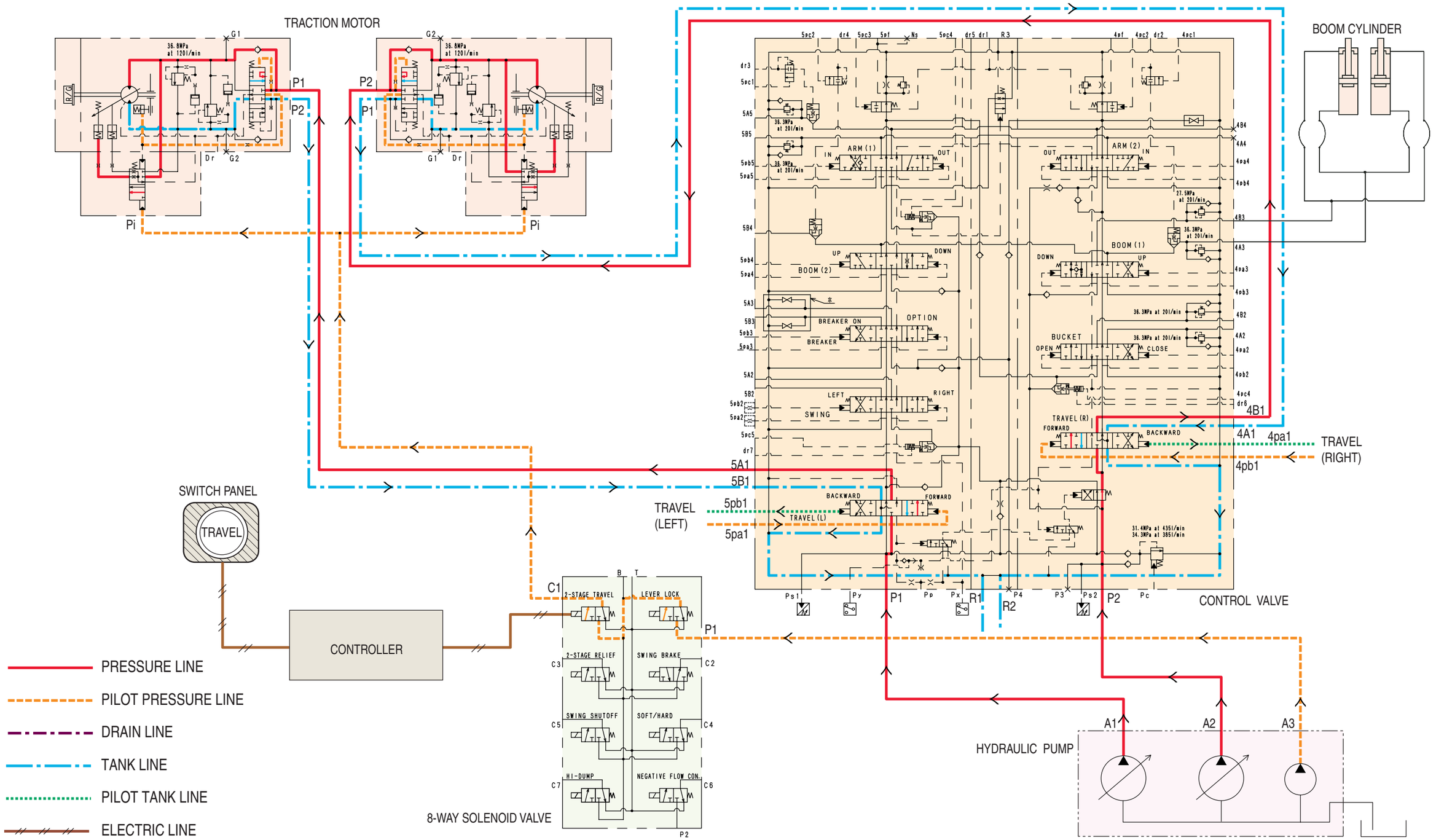

https://truckmanualshub.com/

Low Speed Travel Circuit

The two-level inclinatory angle in the travel motor is set to the larger angle side. When the travel status is set to high speed and the key switch is turned off and turned on again, the speed setting will always return to Low Speed.

Discharged oil from the hydraulic pump A1 enters the Port P1 of control valve while discharged oil from the hydraulic pump A2 enters the Port P2 of control valve. Each flow goes into the travel motor by switching between the right and left travel spools. By these flows, the machine travels forward and backward.

The solenoid valve for high speed travel is turned off and the oil in Port P of the travel motor enters the tank line and establishes a connection. As a result, the inclinatory angle of the travel motor is set to the larger angle side.

https://truckmanualshub.com/

Low Speed Travel Circuit

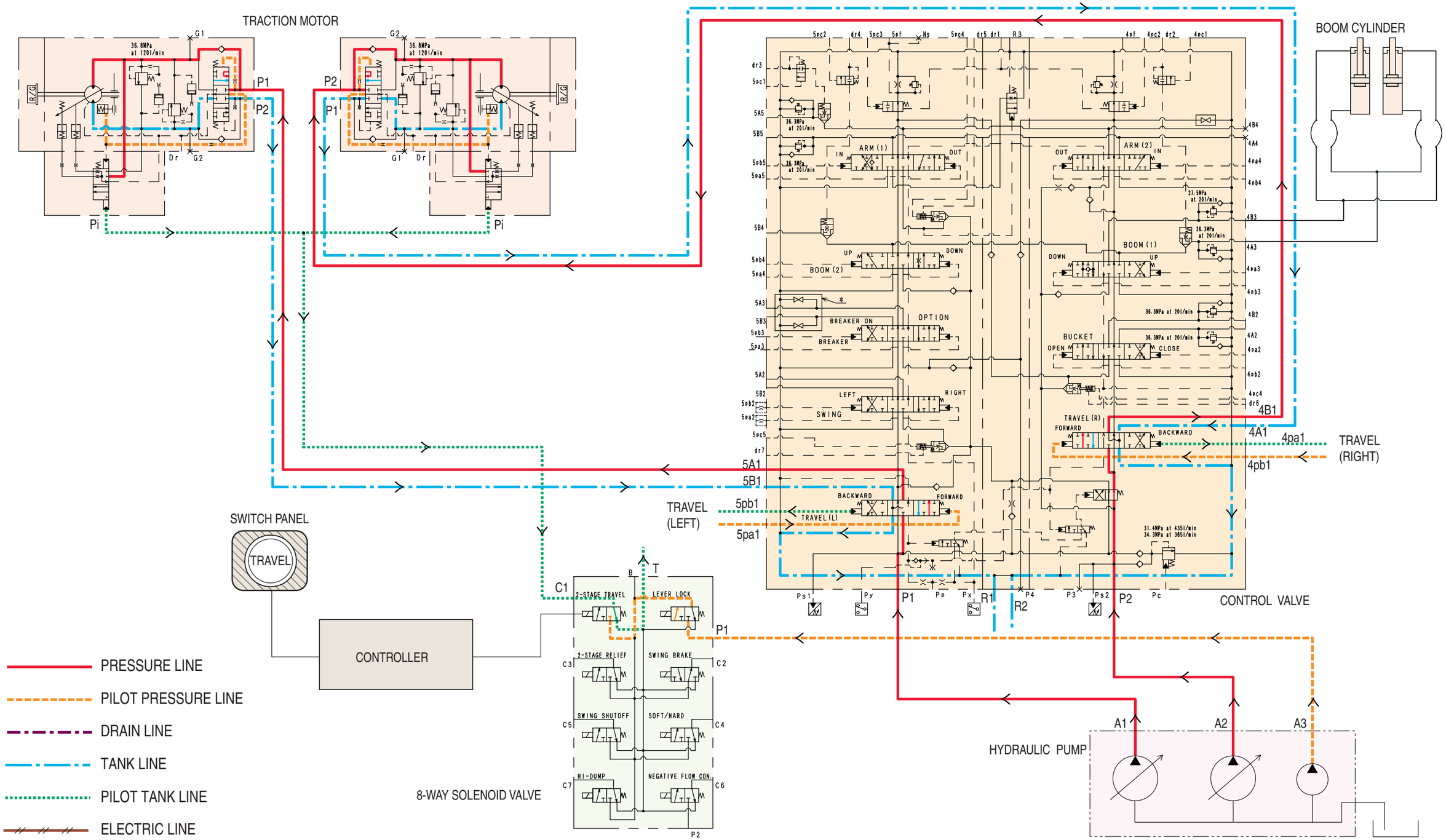

https://truckmanualshub.com/

Straight Travel Circuit

As an example, we describe the operation where travel and boom up are operated at the same time.

The pilot oil pressure enters from Port PP of the control valve and communicates with the tank side via passages of travel spool and spools for attachments (boom, arm, bucket and swing). When travel and boom-up operations are performed simultaneously, all circuits, which have been communicating with the tank, will be shut off by spools. This makes pilot pressure oil entered from the port PP to lose where to flow and original pressure (4.4MPa) switches over the straight travel selector valve. The pressure works to the pilot chamber in straight travel valve allowing the valve to be switched over.

As the result of the switchover of the straight travel valve, the pressurized oil in the control valve P1 drives the right and left travel motors and the pressurized oil in the control valve P2 drives the attachments. The right and left pressures become equal because one pump drives both the right and left motors. This realizes straight travel. Additionally, extra hydraulic oil from P2 is supplied via the check with travel confluence restriction to the travel side, and speed reduction is minimized. The same theory applies and the circuits operate the same way when upper actuators other than boom and travel are operated at the same time.

https://truckmanualshub.com/

Straight Travel Circuit

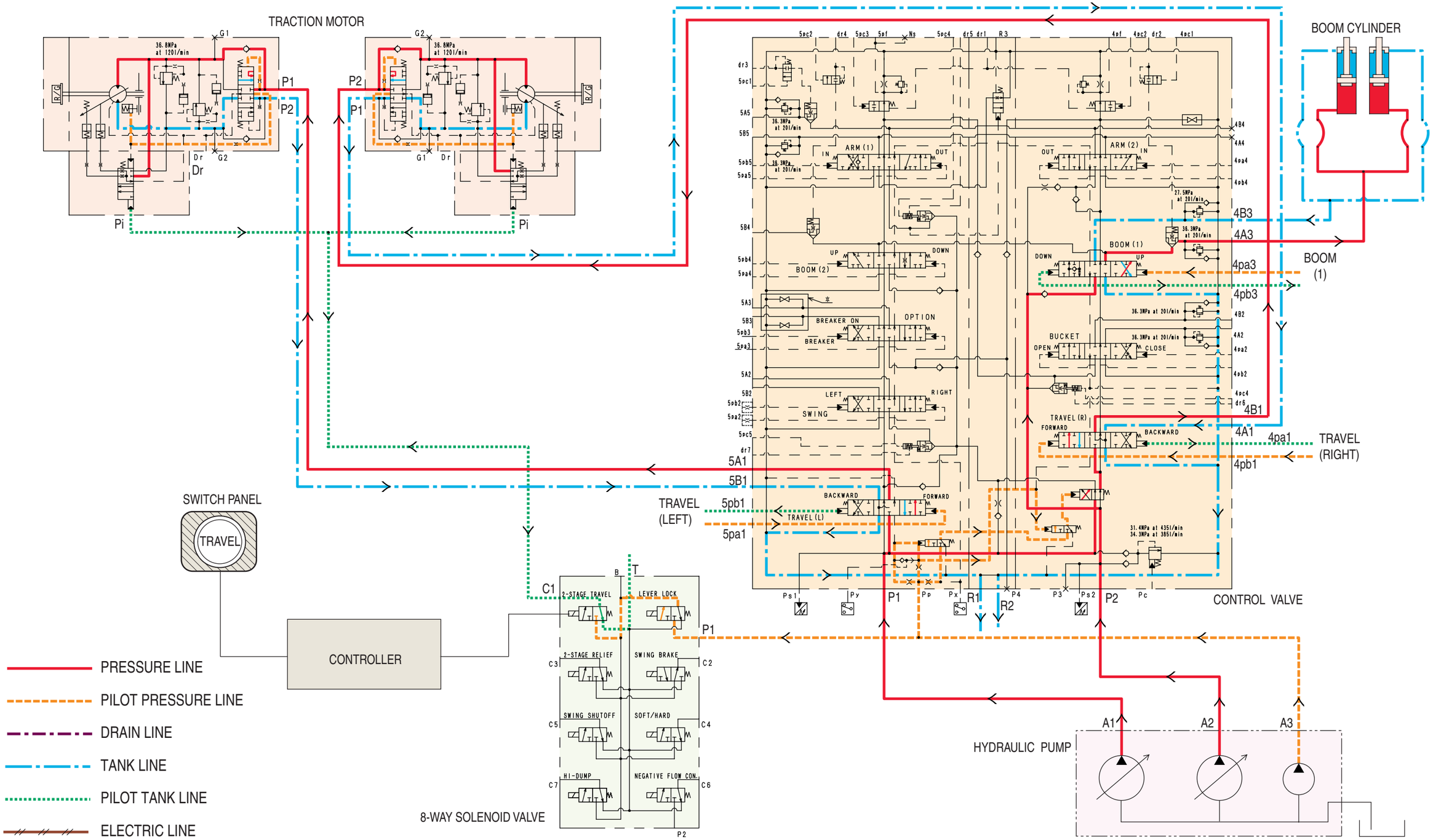

https://truckmanualshub.com/

Swing Parking Circuit (Lever in Neutral / Swing Locked)

When the engine is started and the swing lever is in neutral, the swing brake solenoid valve becomes turned on (24 V input) and the swing parking brake is activated.

When the swing lock switch is on, even if the swing pressure switch or attachment pressure switch is turned on, the swing lock switch overrides and the parking brake remains unreleased. Since pressure oil out of the port C5 of 8-way solenoid valve works on both sides of the swing spool while the swing is being locked, the spool in the control valve will not be switched over even if the swing control lever is engaged.

https://truckmanualshub.com/

Swing Parking Circuit (Lever in Neutral / Swing Locked)

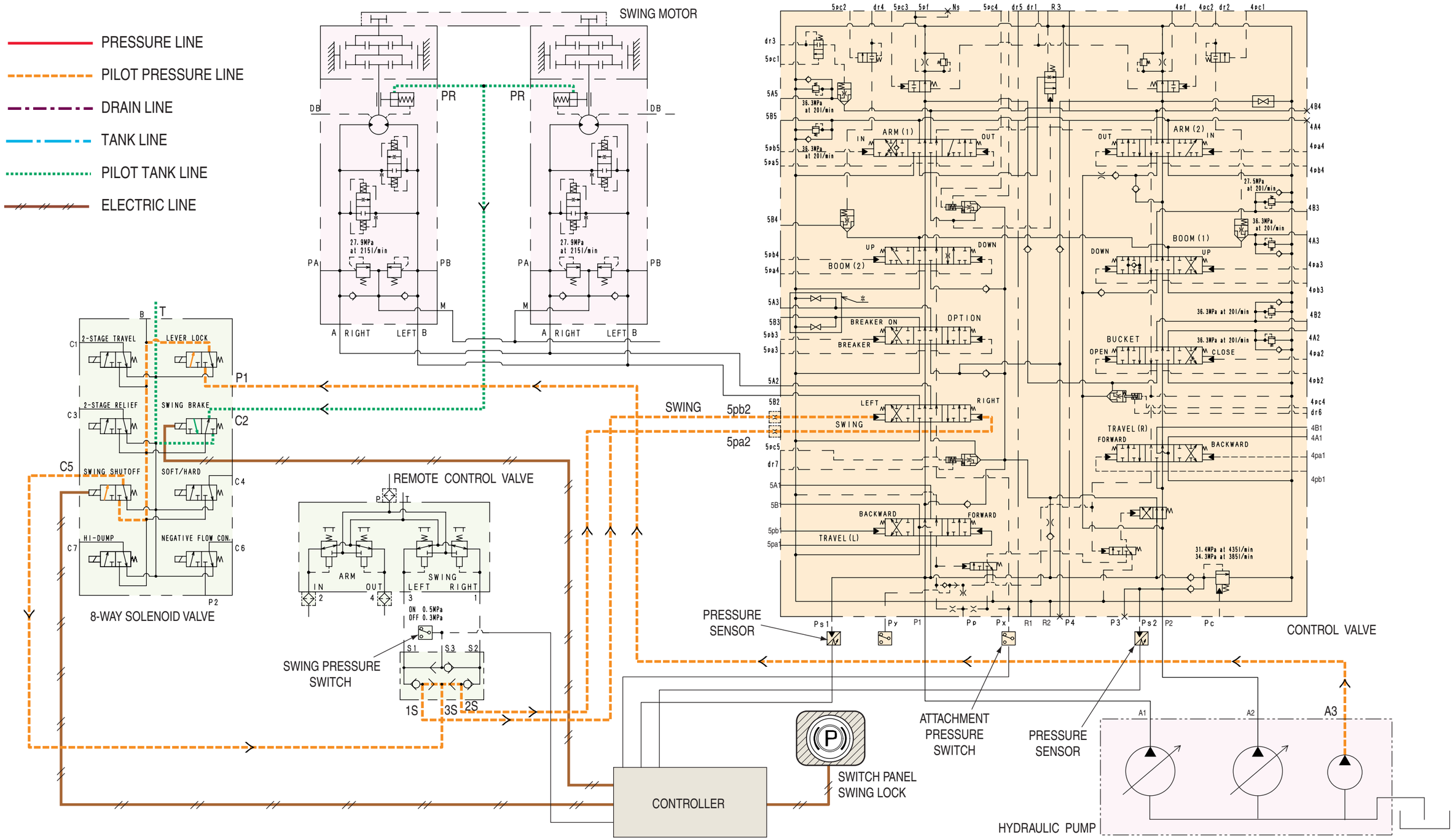

https://truckmanualshub.com/

Swing Parking Circuit (Brake Released)

When the swing pressure switch is turned on by operating the lever, output to the swing brake solenoid valve from the controller is turned off and the swing parking brake is released by pilot pressure. Also, in order to prevent brake dragging caused by swing lateral force that is generated when digging attachments are moved with the swing lever being in neutral, a mechanism which senses main pressure and releases the parking brake is introduced. Signals from the pressure sensor on Port Ps1 or Port Ps2 of the hydraulic pump enter the controller. When either pressure reaches 15 MPa, the output to swing brake solenoid valve from the controller is turned off. This releases the swing parking brake.

When the pressure switch for attachments is kept off for more than 5 seconds, the swing pressure switch will be turned off. Then 5 seconds after the pressure of the hydraulic pumps Ps1 and/or Ps2 becomes 15 MPa or less, the solenoid valve turns on and the swing parking brake starts operating. When the pressure on Ps1 and/or Ps2 becomes 15 MPa or more, the swing brake is released. However, if the attachment switch was kept off for more than 5 seconds, the swing parking brake works. (When traveling)

Key switch	Swing pressure switch	Pressure received on Ps1 or Ps2 pressure sensor	Swing brake solenoid valve	Swing motor parking brake
OFF	OFF	0	OFF	Operates
ON	OFF	15 MPa or less	ON	Operates
		15 MPa or more	OFF	Released
			Turns on 5 seconds after attachment pressure switch is turned OFF.	Operates
	ON	15 MPa or less	OFF	Released
		15 MPa or more	OFF	Released

https://truckmanualshub.com/

Swing Parking Circuit (Brake Released)

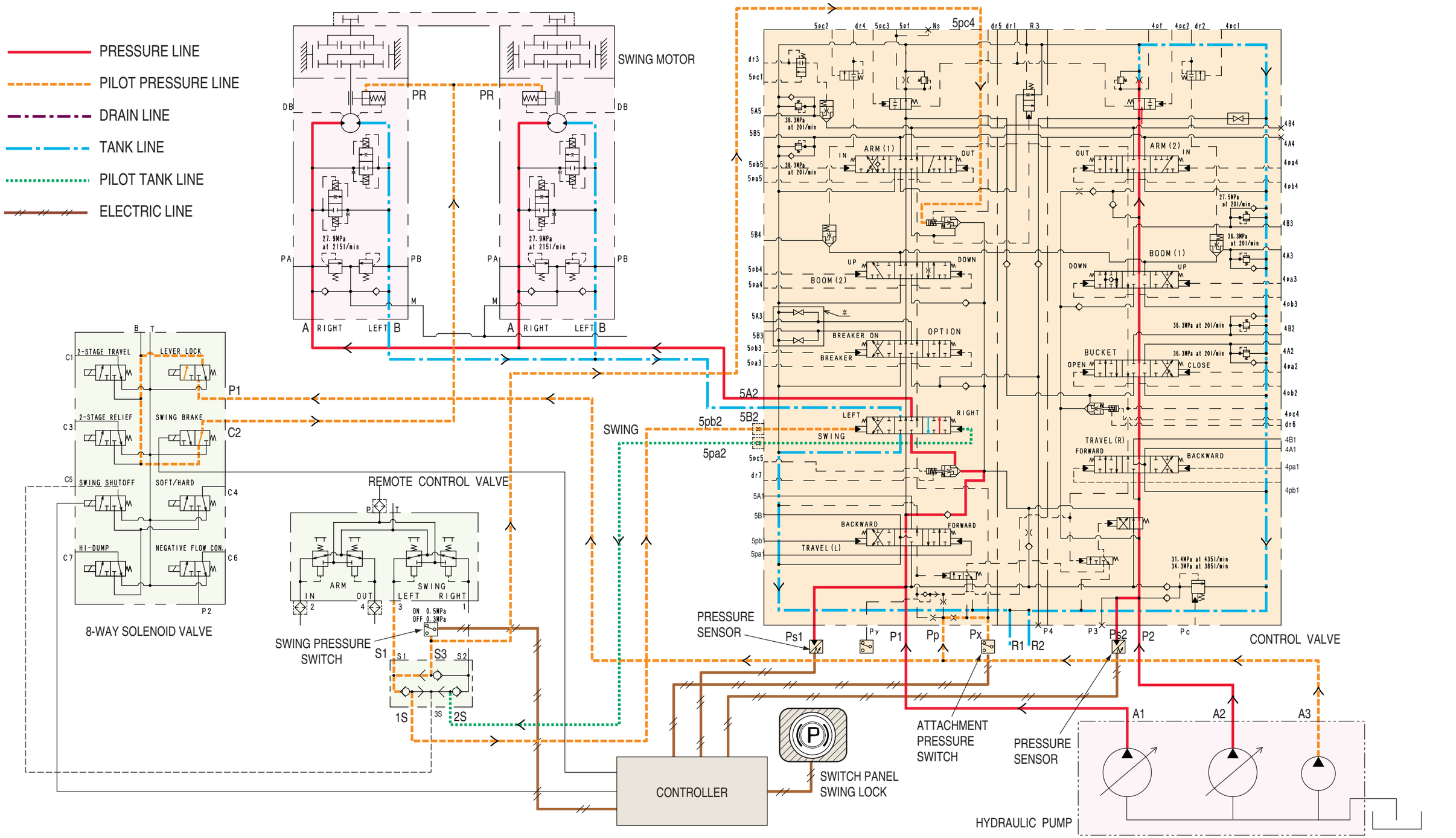

https://truckmanualshub.com/

Swing Push Digging

Pilot pressure for swing is fed in the port 5pc4 via shuttle valve and restricts stroke of large puppet in the swing priority valve allowing discharged oil to the arm to flow via the constriction.

In simultaneous operation of arm and swing, constriction of parallel circuit allows swing pressure to increase and secure power of swing during press digging opreation.

https://truckmanualshub.com/

Swing Push Digging

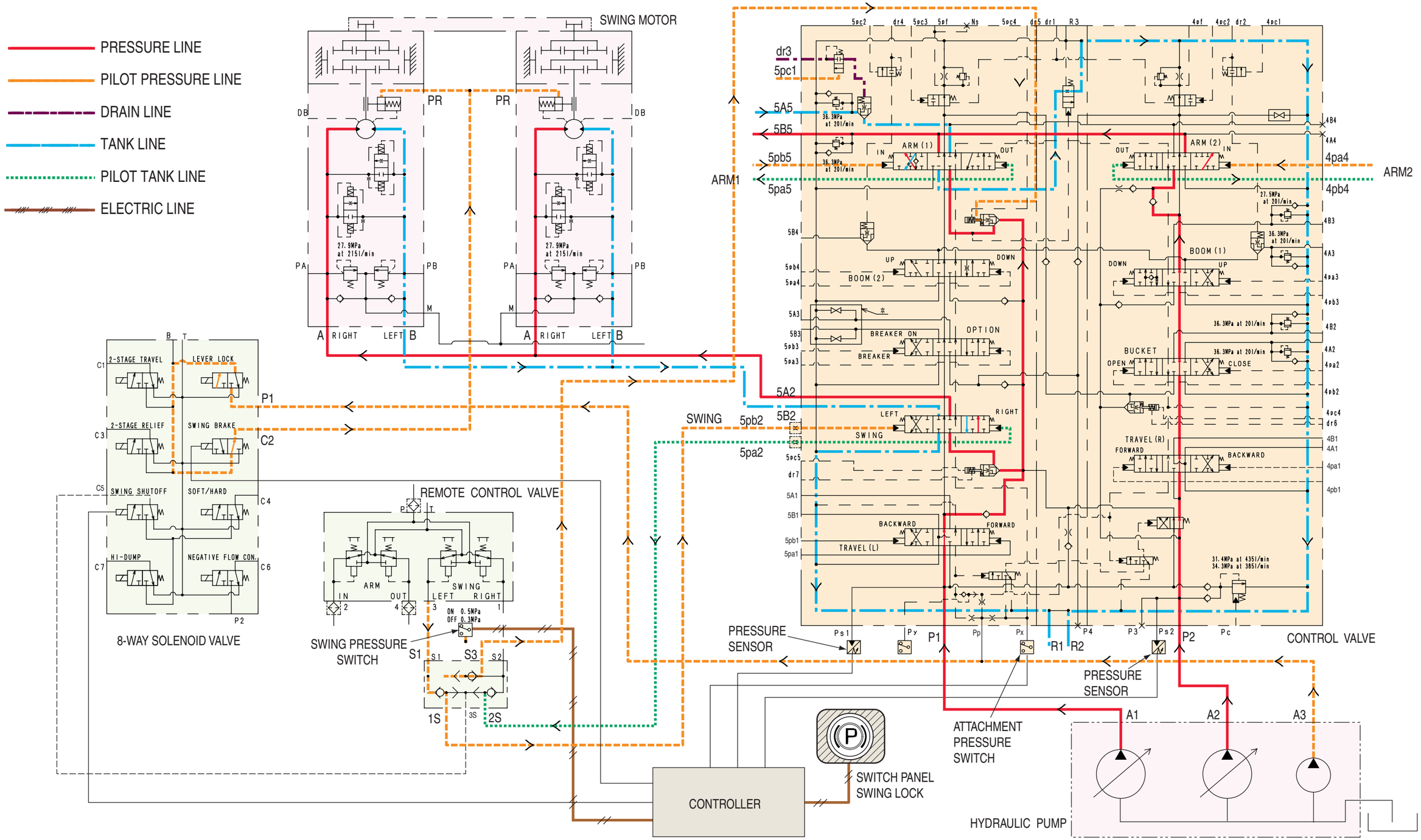

https://truckmanualshub.com/

Arm-Out Circuit

Oil discharged from hydraulic pump A1 is supplied to the arm (1) spool through the center bypass oil passage in the control valve. Oil discharged from hydraulic pump A2 is also supplied to the arm (2) spool through the parallel oil passage, and merges at the upstream of the arm (1) spool, then flows into the rod side of the arm cylinder via the load holding valve. Oil returning from the bottom returns to the tank oil passage via the arm (1) and (2) spools.

https://truckmanualshub.com/

Arm-Out Circuit

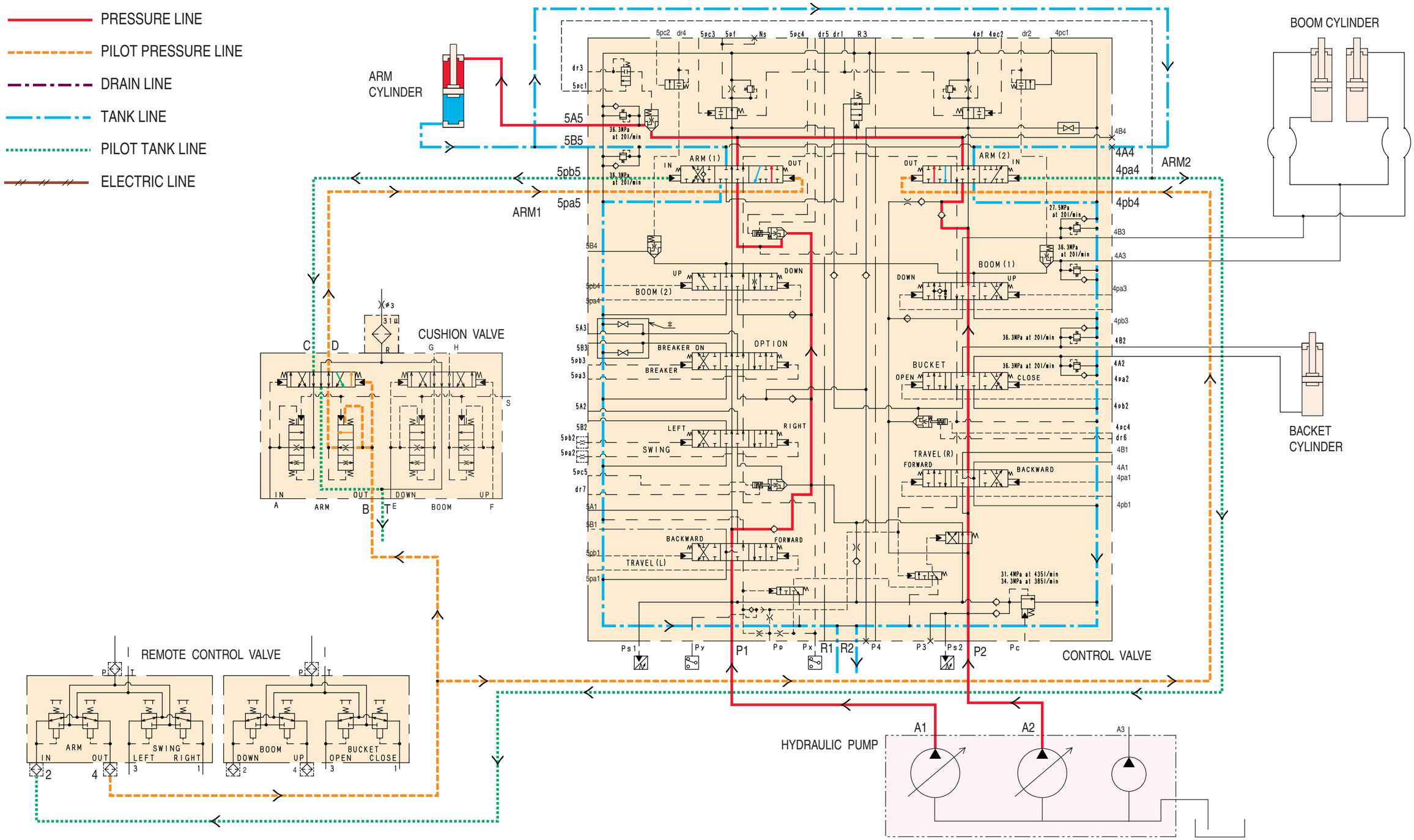

https://truckmanualshub.com/

Arm-In Load Holding

When the arm is in neutral, oil on the arm cylinder rod side is sealed by the load holding valve check. This mechanism reduces internal leakage from the main spool.

When the arm-in is operated, the pilot pressure enters Port 5pb5 and 4pa4 of the control valve and moves arm (1) spool to the arm-in side. Also, the pilot pressure separated from Port 4pa4 enters Port 5pc1 and moves the load holding valve spool to the right. Through this mechanism, the oil in the spring chamber of the load holding valve check is connected to the tank line passing the load holding valve spool. As a result, the pressure on the spring chamber decreases and the load holding valve check is released. The hydraulic oil in the rod of the arm cylinder is returned to the tank line, the arm cylinder extends and the arm moves in.

https://truckmanualshub.com/

Arm-In Load Holding

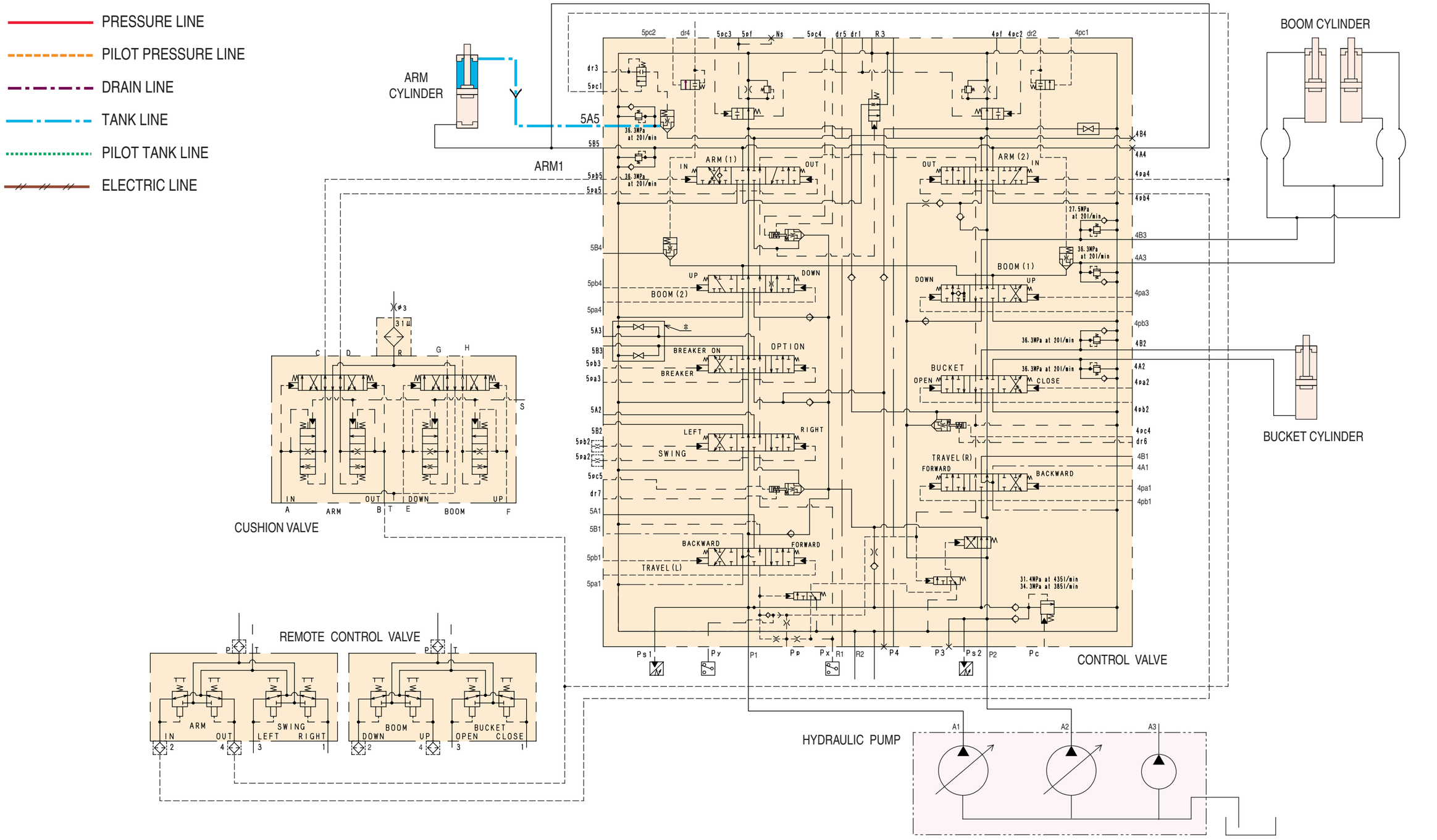

https://truckmanualshub.com/

Arm-In Circuit

For arm-in operation, pilot pressure is supplied to Port 5pb5 and 4pa4 of the control valve and the arm spool moves to the arm-in side.

At the same time, the arm load holding valve is released by the pilot pressure, and the discharged oil on the cylinder rod side is restricted by the forced regenerative release valve. This forces the returned oil to be regenerated into the cylinder bottom side via the check within arm (1) spool, securing the arm speeds required for floor digging work. When the load pressure rises on the cylinder bottom side, the forced regenerative release valve switches over to the large diameter restriction side. As a result, the orifice for return becomes large and returned oil on the rod side stops recycling.

https://truckmanualshub.com/

Arm-In Circuit

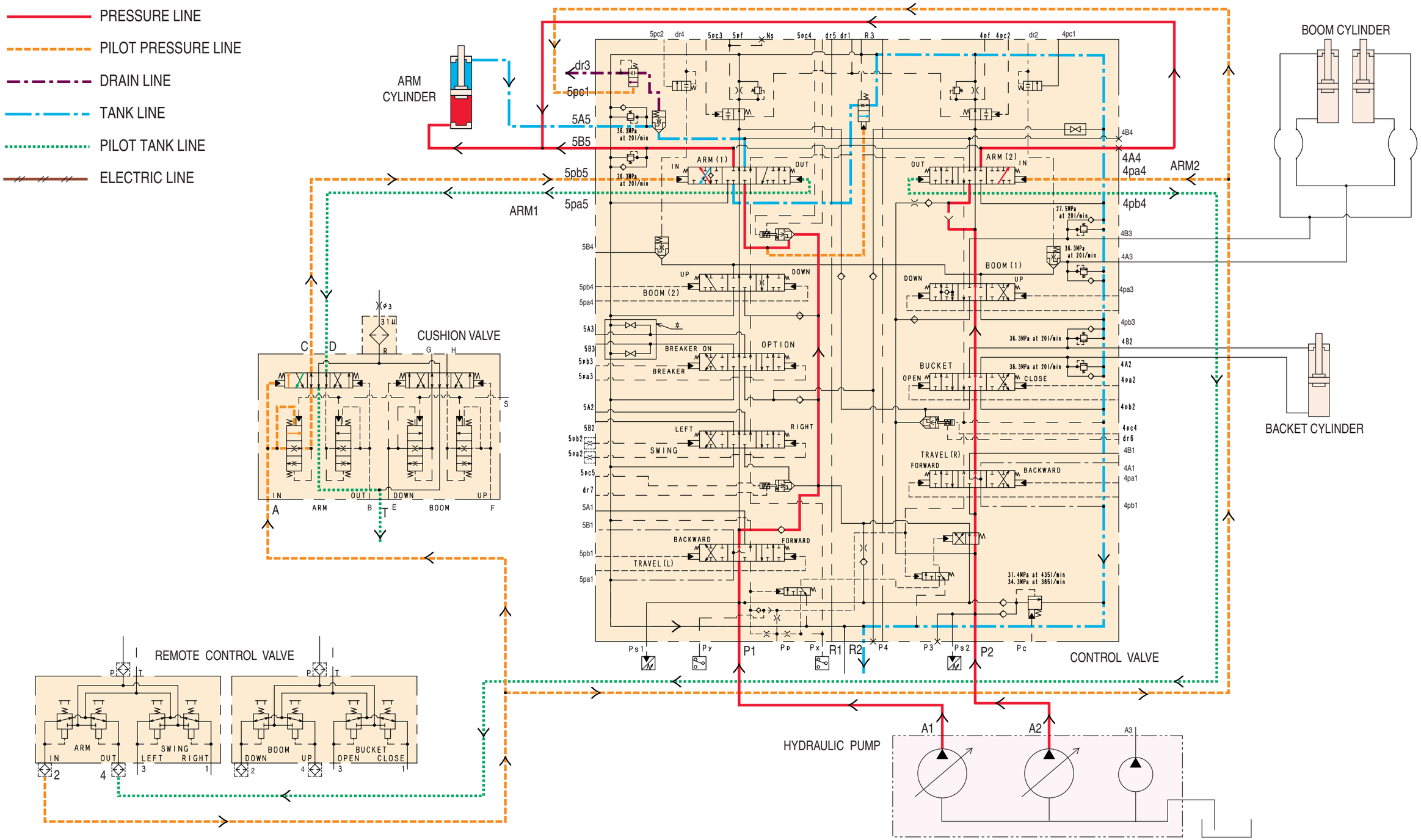

https://truckmanualshub.com/

Boom-Up Circuit (Single)

Oil discharged from hydraulic pump A1 is supplied to the boom (2) spool from the parallel oil passage via the control valve and merges at the downstream of the boom (1) spool. Oil discharged from hydraulic pump A2 merges with the discharged oil from the boom (2) via the boom (1) spool through the parallel oil passage and flows into the bottom side of the boom cylinder via the holding valve.

https://truckmanualshub.com/

Boom-Up Circuit (Single)

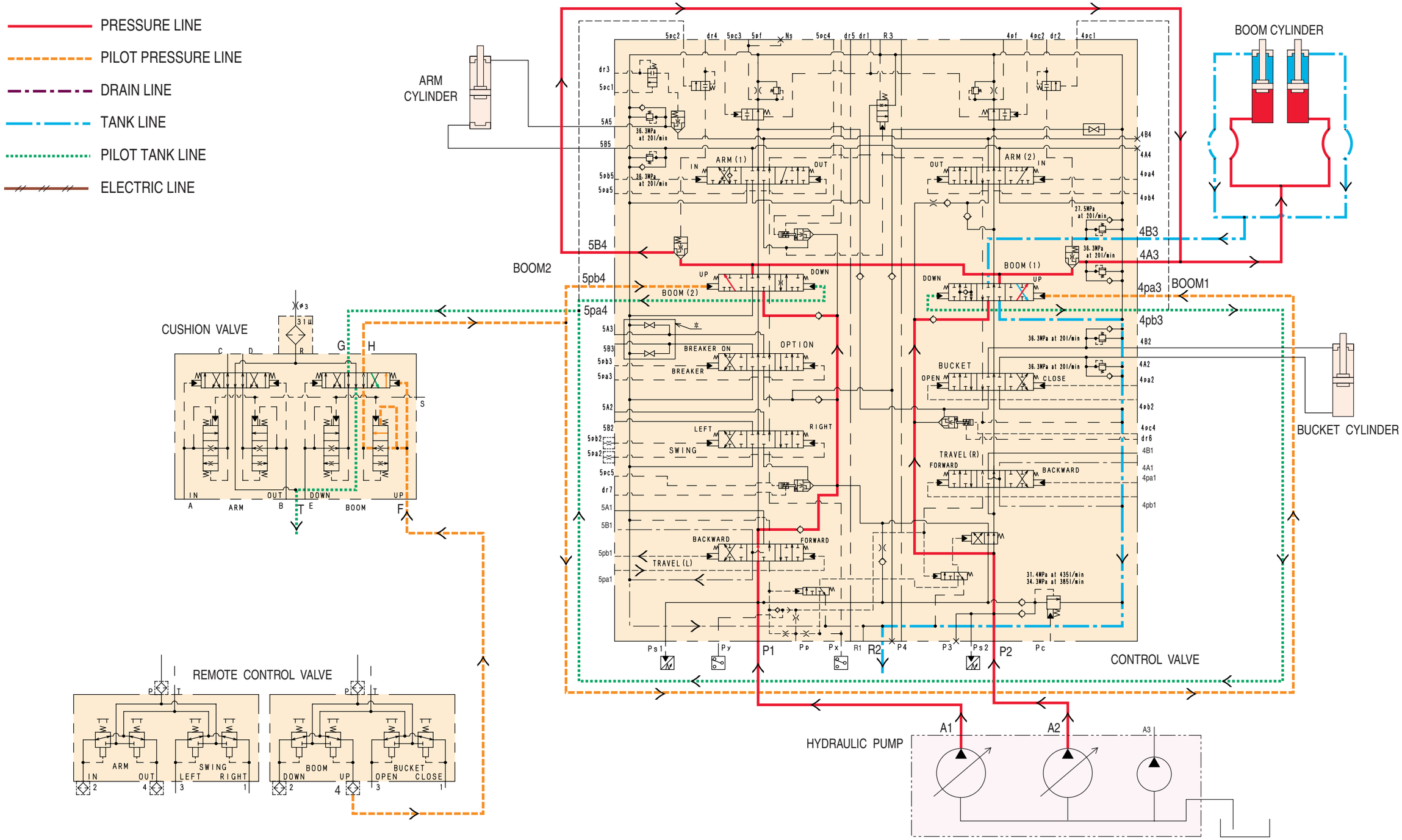

https://truckmanualshub.com/

Boom-Up Circuit (Combined)

When floor digging operation is performed, the boom-up pilot pressure is fed in the port 4pc4 and restricts stroke of large puppet in the priority valve for boom allowing discharged oil to the bucket to flow via constriction.

This constricts flow to the bucket cylinder during multiple operations to allow the boom-up to be smooth.

https://truckmanualshub.com/

Boom-Up Circuit (Combined)

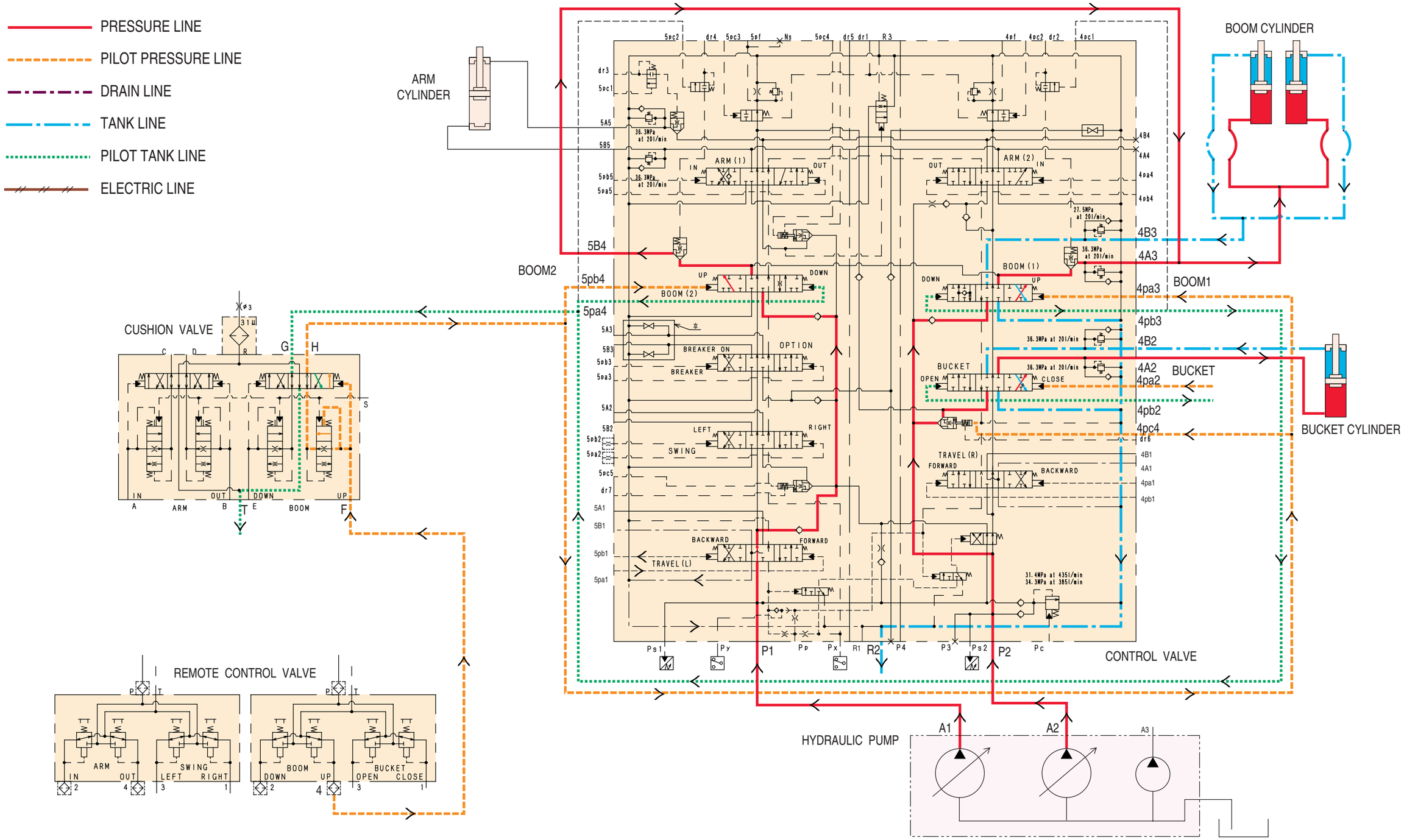

https://truckmanualshub.com/

Boom-Down Load Holding

When the boom is in neutral, oil on the boom cylinder bottom side is sealed by the load holding valve check. This mechanism reduces internal leakage from the main spool. For boom-down operation, the pilot pressure enters Port 4pb3 and 5pa4 of the control valve and moves the spool of the control valve to the boom-down side. Also, the pilot pressure enters Port 4pc1 and 5pc2 and moves the load holding valve spool to the left. Through this mechanism, the oil in the spring chamber of the load holding valve check passes the load holding valve spool creating a connection to the tank. Consequently, the pressure on the spring chamber decreases and the load holding valve check is released. The hydraulic oil at the bottom side of the boom cylinder is returned to the tank line, the rod of the boom cylinder shrinks, and the boom is lowered.

https://truckmanualshub.com/

Boom-Down Load Holding

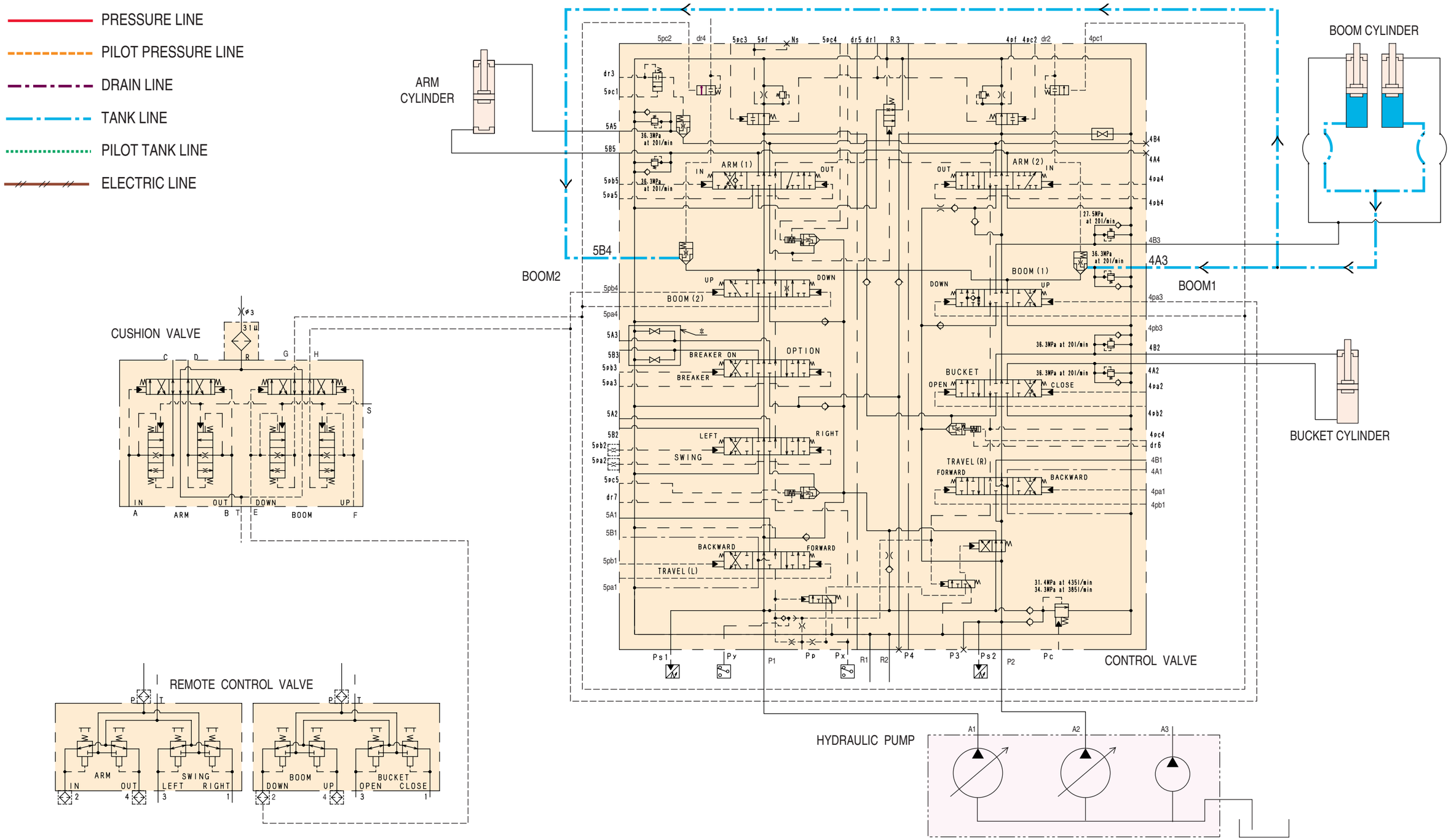

https://truckmanualshub.com/

Boom-Down Circuit

For boom-down operation, pilot pressure is supplied at Port 4pb3 and 5pa4 of the control valve, and the boom spool moves to the boom-down side. At the same time, the pilot pressure opens the boom load holding valve and partially regenerates the discharged oil from the bottom side of boom cylinder at the rod side via the check in the spool.

Although the boom (2) spool is changed over, oil will not be supplied to the cylinder as it is center-bypassed.

https://truckmanualshub.com/

Boom-Down Circuit

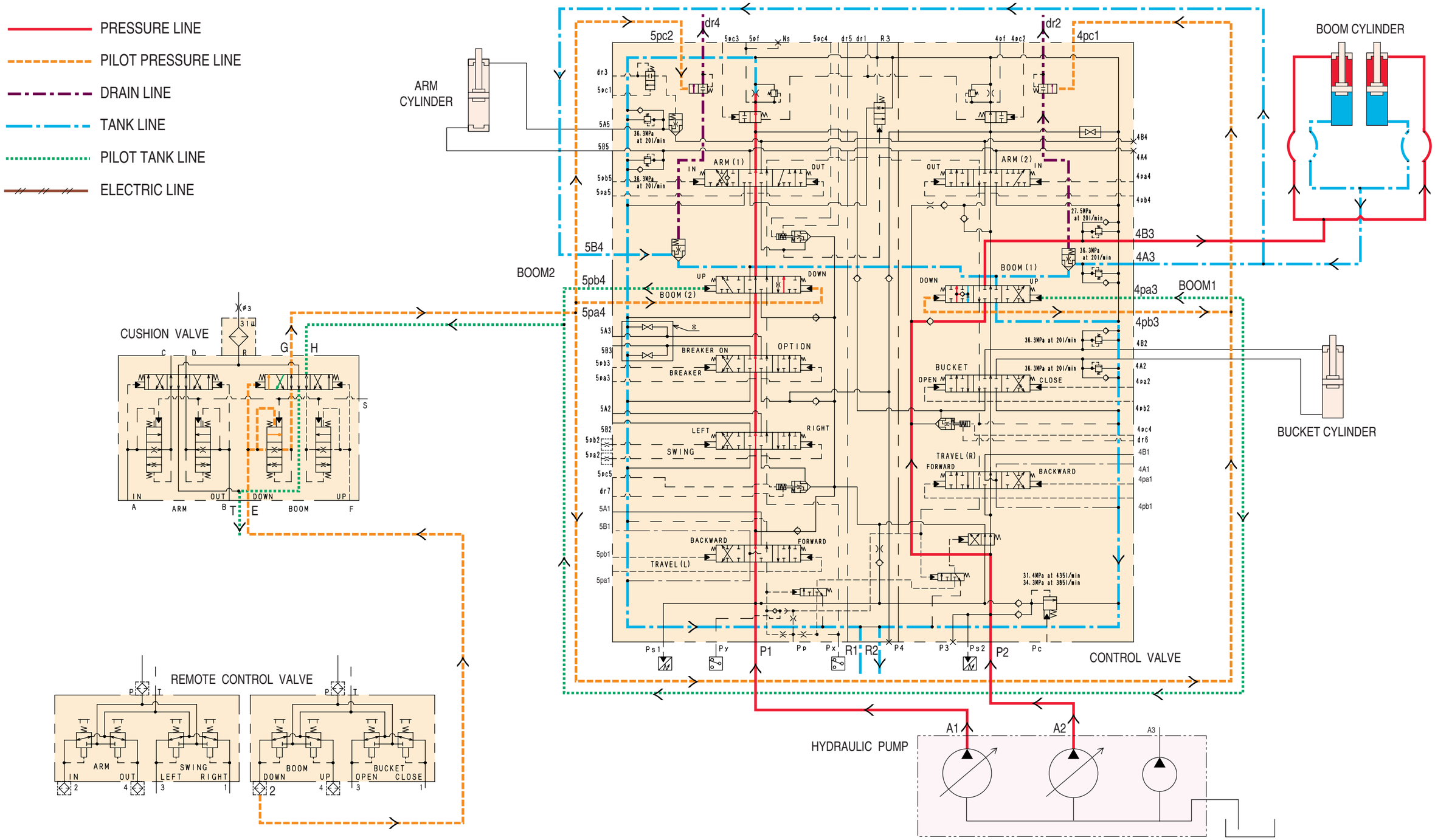

https://truckmanualshub.com/

Combined Circuit (Breaker Circuit)

Through remote control operation, the pilot pressure that is supplied to Port 5A3 of the control valve switches the backup spool. This allows the discharged oil from the hydraulic pump A1 to flow into the breaker.

The pilot pressure operates the pressure switch at the same time. When the change-over switch in the cab is turned to breaker mode, the controller directs the engine controller by signal from pressure switch so that the speed can match the previously set engine speed.

Return oil from the breaker passes by way of 3-direction valve, and oil exceeding the set pressure flows from the stop valve via the relief valve to return to the hydraulic oil tank.

https://truckmanualshub.com/

Combined Circuit (Breaker Circuit)

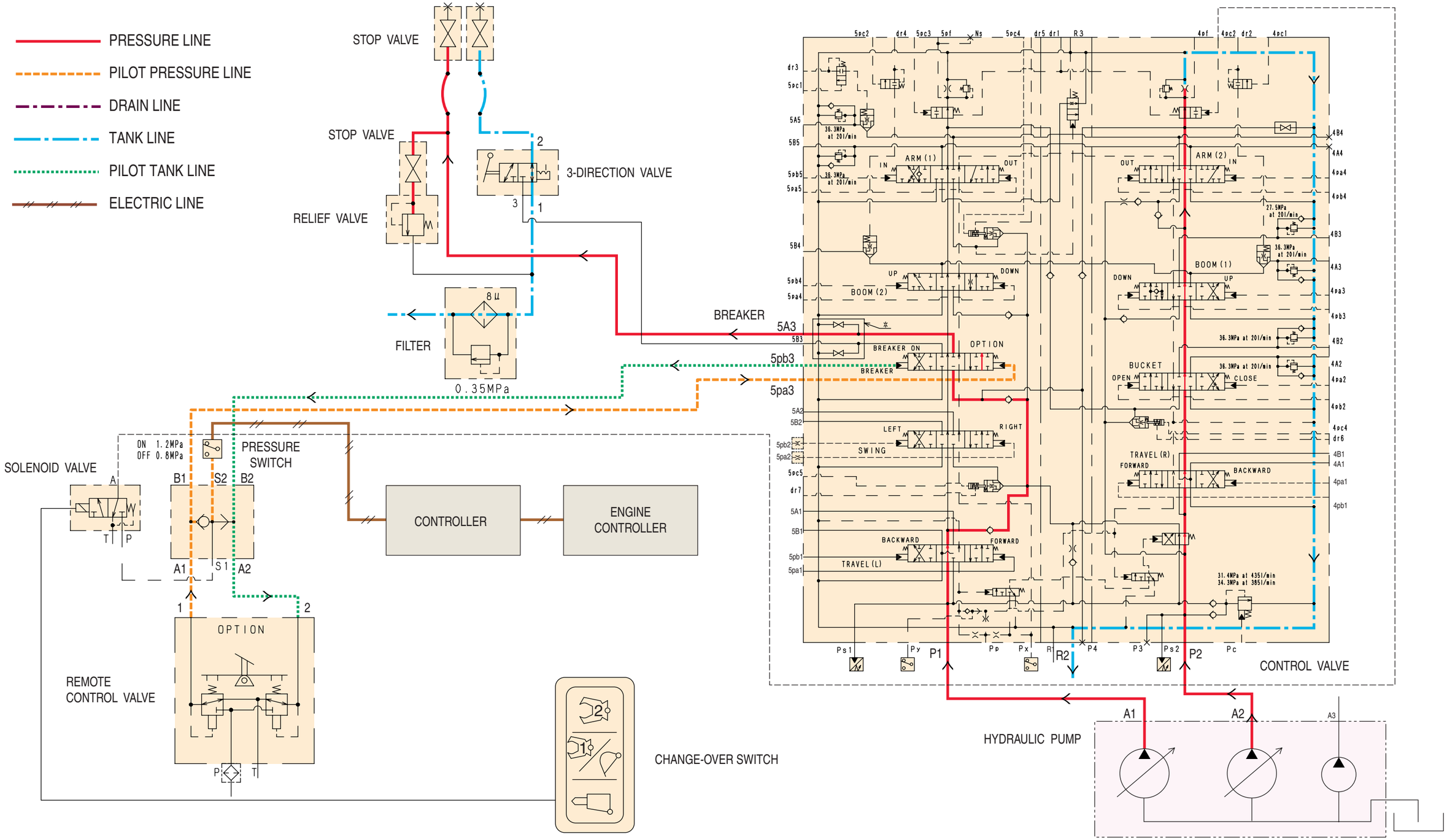

https://truckmanualshub.com/

Combined Circuit (High Speed Confluence Circuit)

Through remote control operation, the pilot pressure that is supplied to Port 5A3 (or 5B3) of the control valve switches the backup spool. This allows the discharged oil from the hydraulic pump A1 to flow into the end attachment.

Turning the change-over switch in the cab to crusher (2) energizes the solenoid valve so that the valve is switched over.

Pilot pressure divided via remote control valve is fed in the port 4pc2 by way of solenoid valve.

This changes over the spool to block the ceter-bypass circuit.

The blocked discharge oil of hydraulic pump A2 flows by way of merging passage to be combined together with the dischaged oil out of hydraulic pump A1 at upper flow course of the spare spool.

https://truckmanualshub.com/

Combined Circuit (High Speed Confluence Circuit)

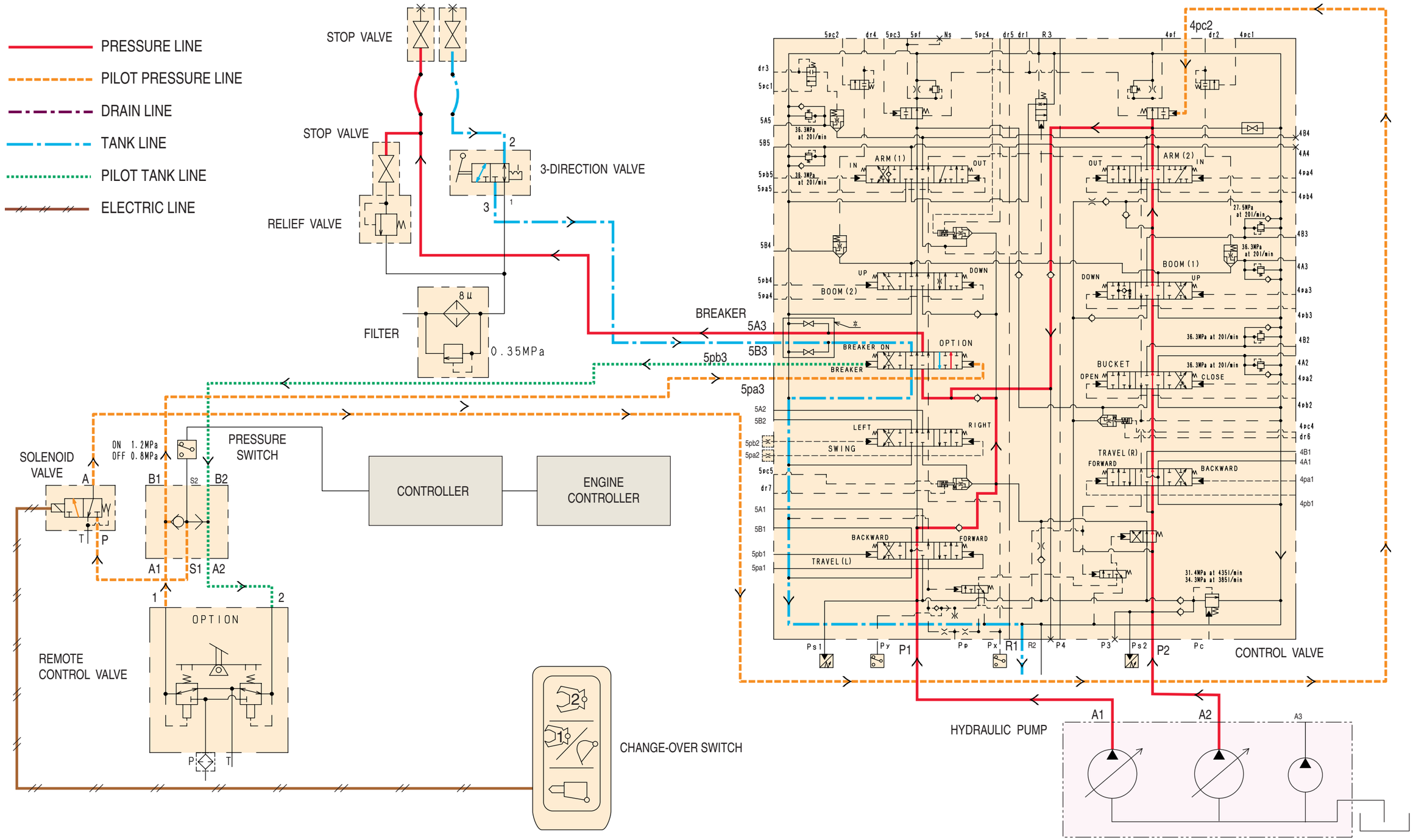

https://truckmanualshub.com/

High Dump

When carrying out swing and boom-up operating simultaneously, switching the throttle valve in the swing line constricts the flow to the swing motor and an extra oil is supplied to the boom-up circuit to allow boom-up speed to be faster.

When tuning ON the high dump switch, electric signal is transferred to the controller.

Boom-up operation allows the pressure switch for boom-up to be turned ON and electric signal is sent to the controller for which the pilot pressure is fed in the port 5pc5 of the control valve from the port C7 in the 8-way solenoid valve.

The pressure restricts stroke of large puppet in the high dump valve to allow discharged oil to the swing to flow via the constriction.

This allows flow rate to the swing spool to be constricted and more oil to be supplid to 2nd speed of boom making the boom-up speed to be faster.

https://truckmanualshub.com/

Hydraulic Circuits

OTHER CIRCUITS

High Dump

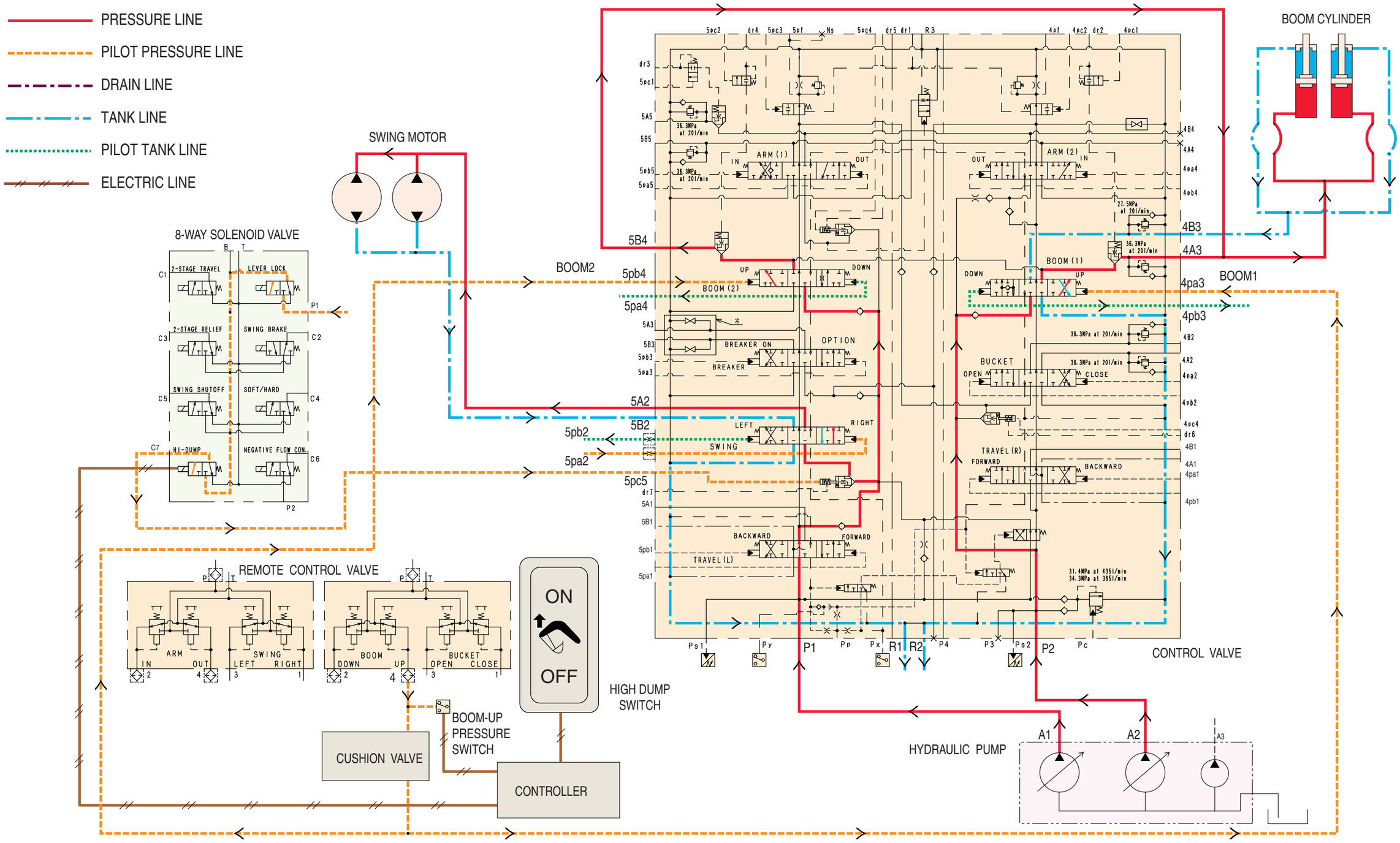

https://truckmanualshub.com/

System Chart of Functons

1) Engin control — Electronic control (common-rail)

ITEM	FUNCTION	METHOD
2) Work mode selection	a) H/S/L mode Machine setting can be selected according to conditions such as of workload or fuel efficiency preference, and lifting operation.	Maximum engine speed, pump current, and pressurizing solenoid valve are controlled according to the selectied work mode.
	b) Auto-mode Suitable work mode is automatically selected.	Selection of auto-mode allows the load to be calculated with pressure of negative control P1 and P2 which in turn work mode is switched.
	c) Load prefetch control Pump current is kept at 0mA while machine is not being operated.	Pump current and engine controller are controlled by signal from pressure switch.
3) Throttle control	Engine can be controlled continuously from idling to high-idling speed by operator's instruction.	Engine speed is adjusted by control of throttle valve.
4) Idling control	Engine speed can be switched to/form idling by control of one-touch switch.	Pushing knob of switch on the right allows the engine to run idle and pushing it again to return it as it was.
	It makes engine to run idle while machine is not being operated.	Selection of auto-idle allows the engine to run at idling speed automatically in 5 minites after the lever is shifted to its neutral. Shifting lever makes the engine to return to its normal speed automatically.
5) Breaker mode	Pressing the breaker pedal allows the engine to run at the set speed automatically and boosting pressure will be cut.	Turning ON the pressure switch in breaker pilot line allows the engine to run at previously set speed. Also, pump current will be set as that in S-mode and boosting pressure is to be cut.
6) Auto preheat	It helps the engine to start easily at a low temperature. Also, it stabilizes engine speed immediately after atart of the engine to reduce exhausting smoke.	Depending on cooling water temperature at the time when the key switch is turned ON, the glow plug is energized for a period of time being set. It is to be energized for a certain period of set time after the engine has been started to reduce exhausting smoke.

https://truckmanualshub.com/

	ITEM	FUNCTION	METHOD
7)	Auto warm-up	When coolant temperature is low, it allows the engine to start warming-up automatically after it has been started.	In case where no operation of the machine after the engine has been started is carried out when coolant temperature is low, it automatically increases engine speed gradually to warm it up.
8)	Overheat protection	When engine coolant temperature has been increased, reduce injection quantity to protect engine.	When coolant temperature goes over 108, reduce fuel injection quantity. Coolant temperature sensor to ECM.
9)	Atmospheric pressure correction	It prevents black smoke and engine damage when intake air quantity is decreased such as operating in highland.	Fuel is to be restricted by an atmospheric sensor when altitude is over 3000 meters.
10)	Control when starting engine	▪ It increases fuel injection according to coolant temperature to improve starting performance. ▪ It improves starting performance when sufficient fuel fails to be injected due to wear in the machine as it has been operated for a long time.	▪ It monitors coolant temperature when it is under 0℃. ▪ It watches a lapse of time after cranking has been started.
11)	Control when stopping engine	Engine controller (ECM) recognizes engine key OFF by turning key switch OFF.	It stops fuel injection from injector. It insructs pressure control valve to opened fully. It makes EGR valve to be fully open.
12)	Emergency stop of the engine	Emergency stop switch is set up with no engine stop by key switch in mind.	Signal of emergency stop switch is transferred to engine controller (ECM) to perform engine stop control.
13)	Engine protection function	When the engine is operated with water temperature, boost temperature, and engine oil pressure exceeded the level respectively specified, it is to protect by limitation of the engine output or by stopping the engine.	Water temperature, boost temperature, and engine oil pressure are supervised, and engine is protected.
14)	Lever lock	It allows the machine not to be operated by control of levers while cab is being moved Up/Down or when the machine will not be needed for operation.	When the lever is raised by control of the gate lever on the left console, the lever lock solenoid turns OFF which in turn pilot pressure is cut off.

https://truckmanualshub.com/

	ITEM	FUNCTION	METHOD
15)	Auto boost control	Boost control It increases main relief pressure by approx. 10%.	Whether boost of pressure is needed or not is judged by the input data on load factor of the engine and on pump discharge pressure. (Boosting for 8 seconds.)
		Boost-cut control It does not allow boosting according to a certain condition to protect machine and equipment.	Boosting will not function when traveling and reserve pressure switches are turned OFF.
16)	Swing lock	It disables swing even when the swing lever is mistakenly controlled.	Turning ON the swing lock switch allows the swing brake solenoid to be energized to actuate mechanical brake.
17)	Swing brake control	When swing lock is OFF, in order to protect swing device, it controls swing mechanical brake ON/OFF automatically according to operating conditions.	It controls swing brake solenoid valve by the data obtained from switches of swing, attachments, and travel pressure, and also from pump discharge pressure.
18)	Travel speed switching-over	It allows travel speed to switch to either one of 2 levels.	It controls solenoid valve by the travel mode switch to switch over tilt angle of swash plate in the traction motor.
19)	Travel alarm	Alarm buzzer functions when traveling.	Travel pressure switch controls the buzzer.
20)	Power shut-off delay	This ensures power supply for engine stop function.	It allows a time-lag until main relay shuts off after key switch has been turned OFF.
21)	Hydraulic driven fan control	It performs proper cooling control while monitoring coolant temperatur by driving cooling fan hydraulically. With cleaning mode. Low noise and low fuel consumption.	It controls fan motor speed by current output obtained by entering coolant temperature. Attached reversing function allows radiator fan to be cleaned.
22)	(Option) Fuel supply pump control	It makes an automatic stop when fuel tank becomes full on refueling.	Enter signal of fuel sensor to turn OFF switch.
23)	Power transistor protection	It protects controller in case where a circuit connected to transistor output is short-circuited.	Over-current detection shuts off transistor output.

https://truckmanualshub.com/

ITEM	FUNCTION	METHOD
24) Monitor disprey	a) Normal display It displays current status of the machine.	Temperature of hydraulic oil and of coolant temperature, and fuel level are displayed in bar graphs on LCD monitor and work/travel mode is also displayed.
	b) Massage display ・Warning ・Functioning operation ・When to service the machine	Each information is to be displayed by letters on LCD monitor

https://truckmanualshub.com/

Engine Control

Fuel Injection Control (Common rail type)

1. Precess to determine quantity of fuel injection

[1] System diagram

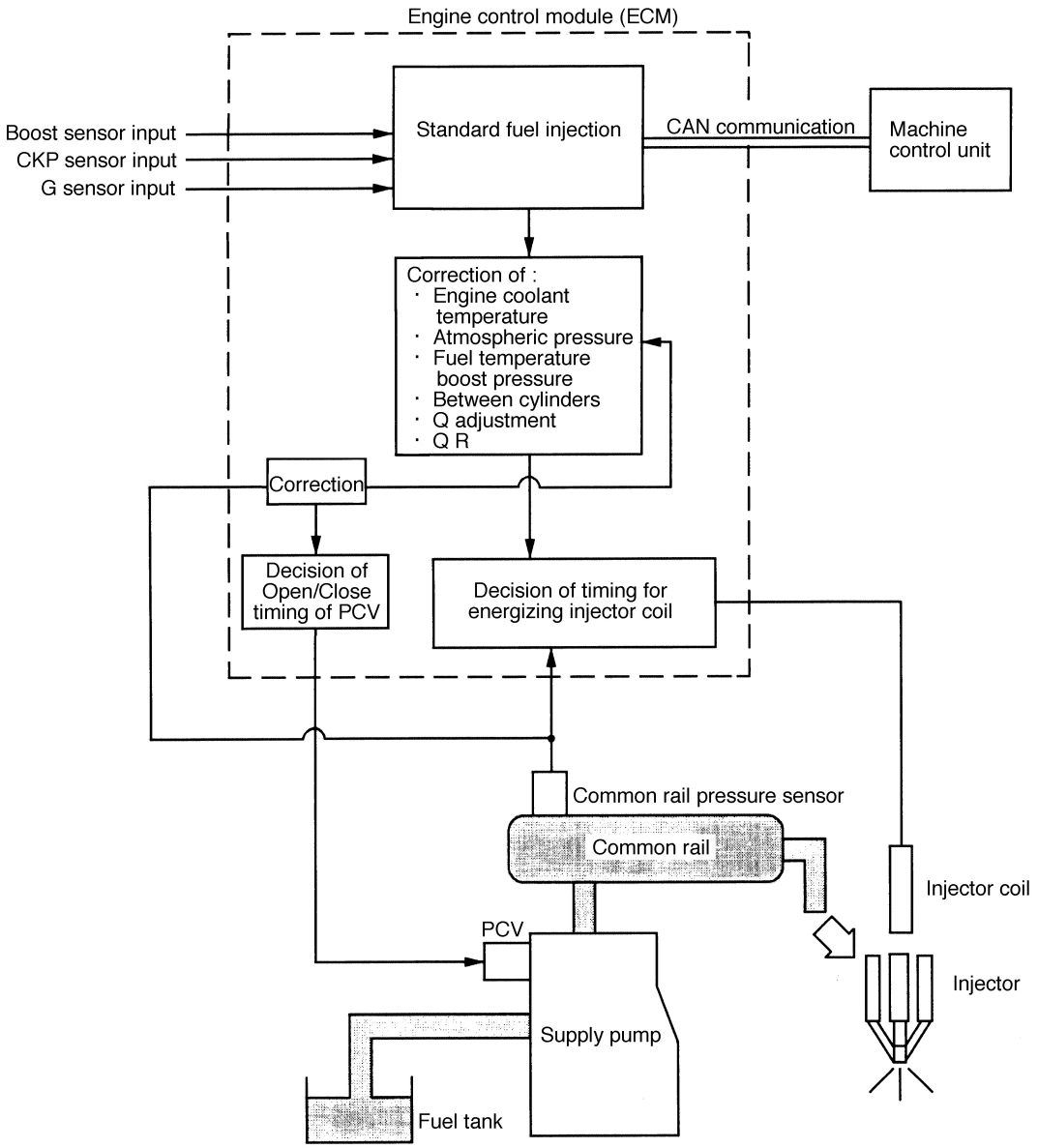

https://truckmanualshub.com/

[2] Operation

Engine controller (ECM) gets information (signal from mounted sensors) such as engine speed and engine load.

Based on the information, ECM sends electric signals to supply pump and to injector to make a proper control of fuel injection quantity and injection timing for each cylinder.

1) Injection quantity control

Based mainly on engine speed and load given to actual machine, Injection rate control is carried out for optimum injection by controlling fuel injector.

2) Injection pressure control

Injection pressure is controlled by control of fuel pressure in the common-rail.

The right pressure in the common-rail is calculated by using engine speed and fuel injection quantity.

The supply pump and the pressure control valve are controlled according to the calculated pressure so that it can discharge proper quantity of fuel to pressure-feed into the common-rail for control.

3) Injection timing control

The control substitutes timer function and an appropriate fuel injection timing is calculated by mainly using engine speed and fuel injection quantity to control the injector.

4) Injection rate control

In order to improve fuel consumption in the cylinder, a small amount of fuel is injected (pre-injection) for ignition at first, then 2nd time injection (main injection) into the ignited cylinder is carried out.

In this control, the injection quantity control in section 1) and the injection timing control in section 3) are carried out by controlling injector.

https://truckmanualshub.com/

2. Mouting postion of accessories related to engine

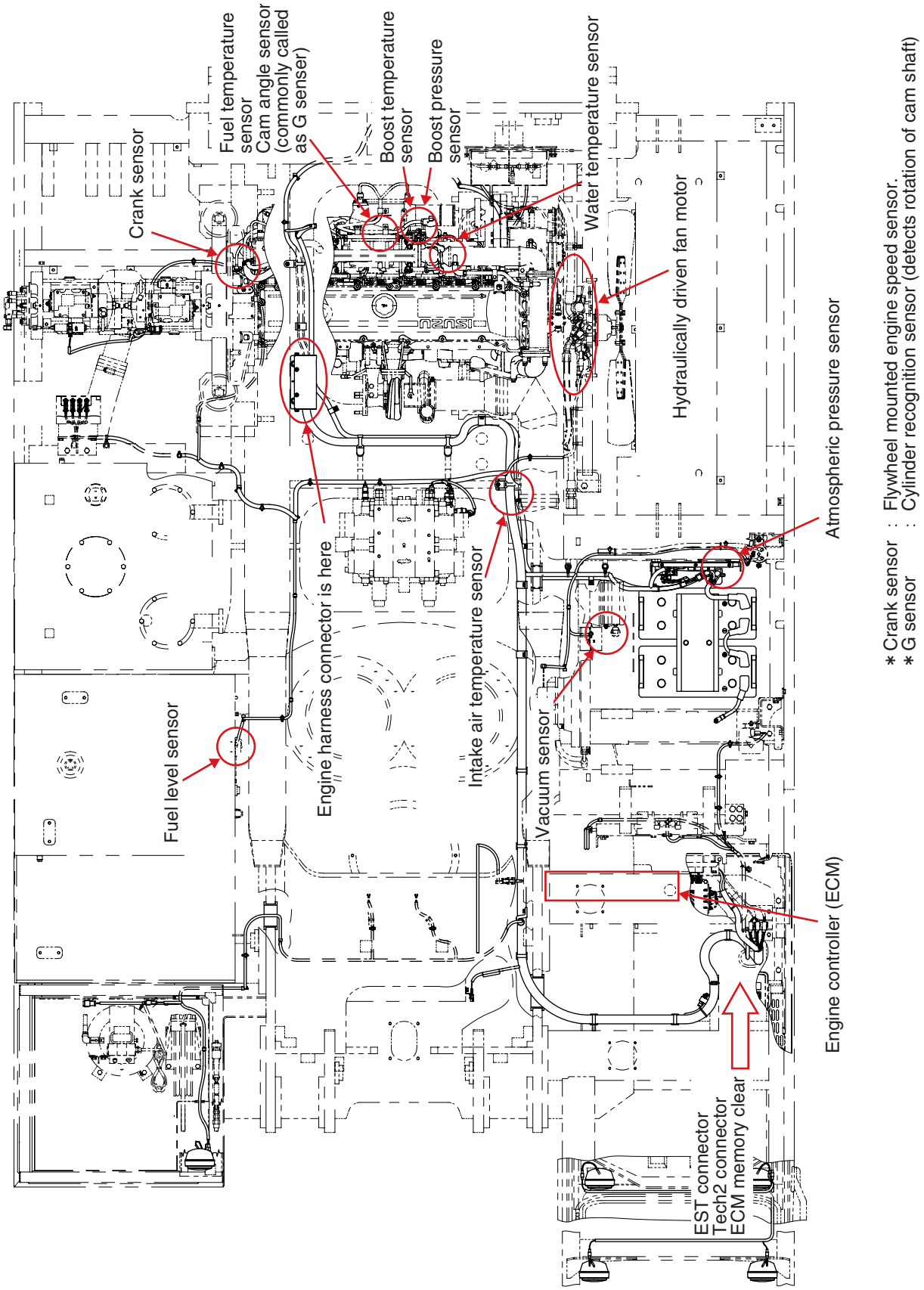

https://truckmanualshub.com/

3. Accessories related to the engine meeting emission control regulation of 3rd-Stage Enginecontroller (ECM)

[1] Appearance

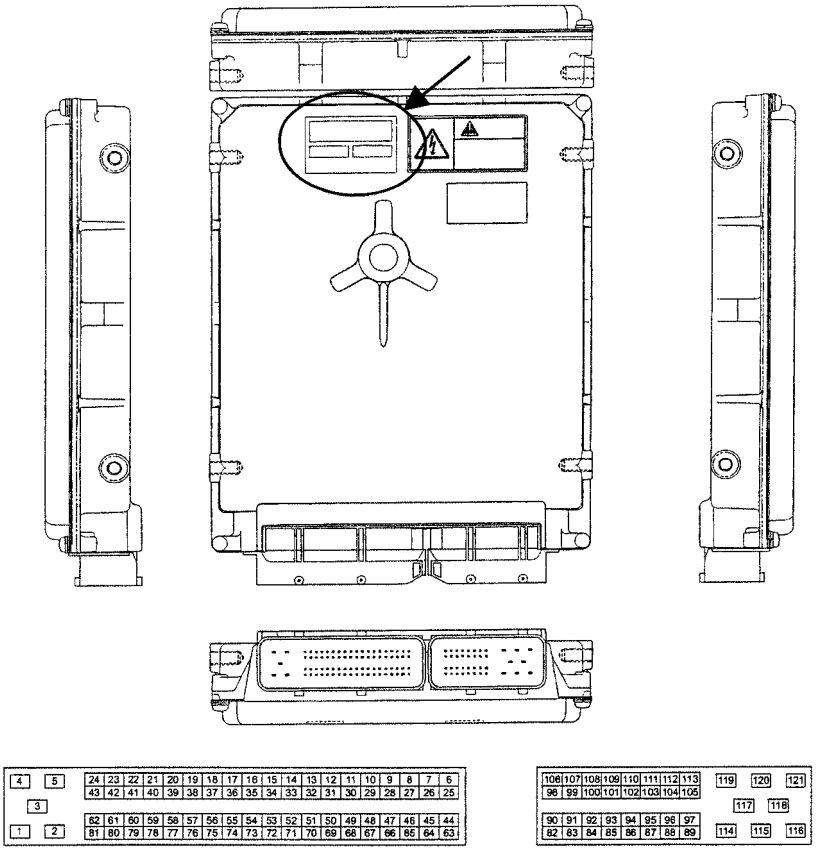

[2] Outline

- Controller for the engine meeting emission control regulation of 3rd-stage (hardware is common to the vehicle).
- Quantity of pin is 121 as against 104 for the engine meeting emission control regulation of 2nd-stage.
- Reliability is equivalent to the unit for current engine meeting emission control regulation of 2nd-stage (evaluation of single unit has been completed).
- In area indicated by an arrow, ISUZU part number and TRANSTRON part number, and serial number are recorded.

Water temperature sensor

[1] Appearance

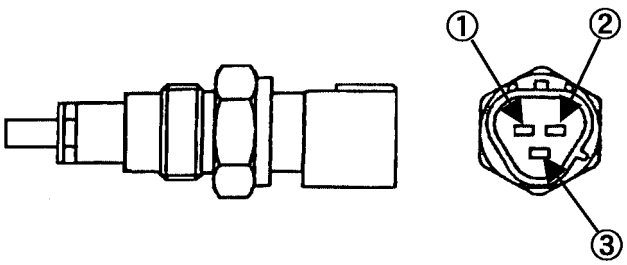

1: Power, positive (+)
2: Power, negative (-)
3: For water temperature indicator (not in use)

https://truckmanualshub.com/

Intake air temperature sensor, Boost temperature sensor

[1] Appearance

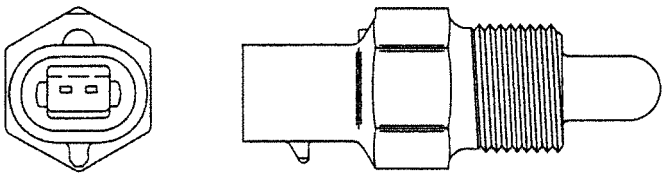

Fuel temperature sensor

[1] Appearance

<Fuel supply pump>

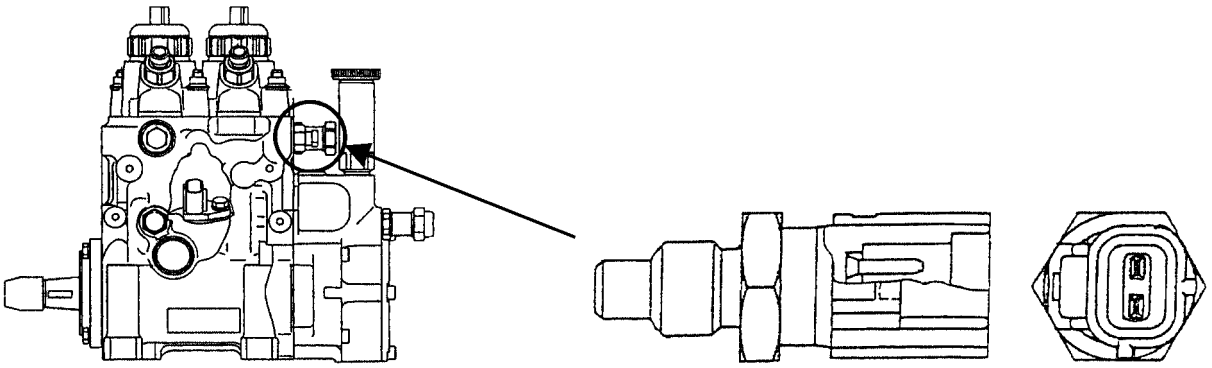

Atmospheric pressure sensor

[1] Appearance

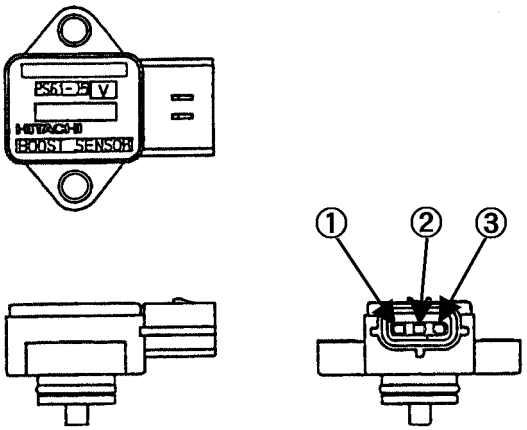

1: Power, positive (+)
2: Power, negative (-)
3: Output

https://truckmanualshub.com/

Boost pressure sensor

[1] Appearance

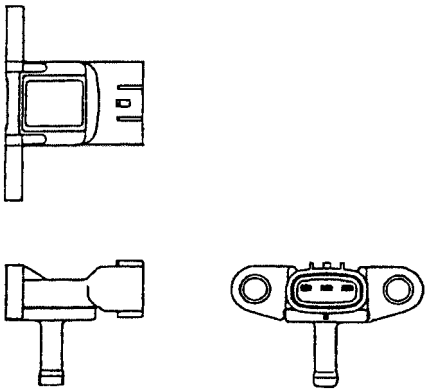

Crank sensor

[1] Appearance

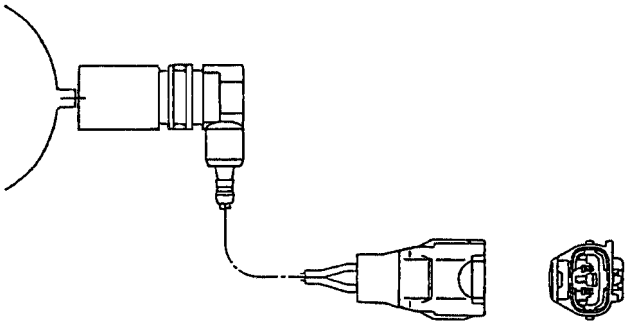

Cam angle sensor (Commonly called as G sensor)

[1] Appearance

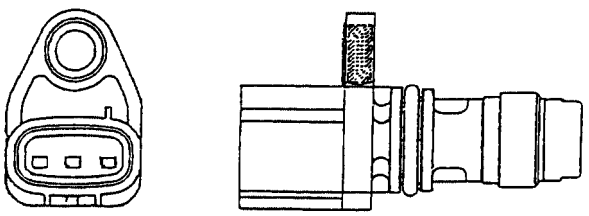

https://truckmanualshub.com/

Vacuum sensor

[1] Appearance

* Reliability enhanced product against harness and connector used in type2.

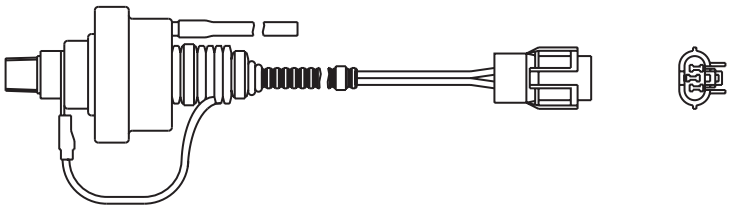

[2] Operating negative pressure : 6.27 ± 0.29kPa

Fuel level sensor

[1] Appearance

This is identical to the fuel level sensor used in current type 3.

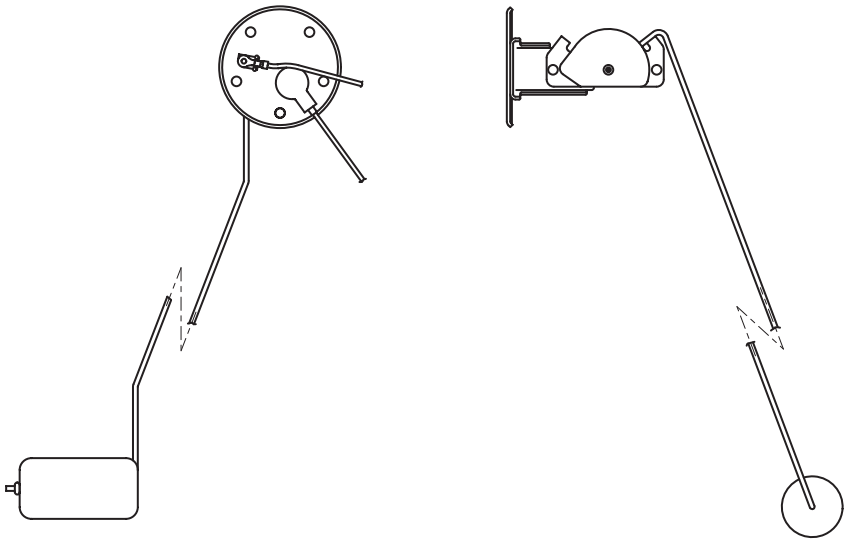

https://truckmanualshub.com/

Work Mode Selection

[1] Circuit configuration

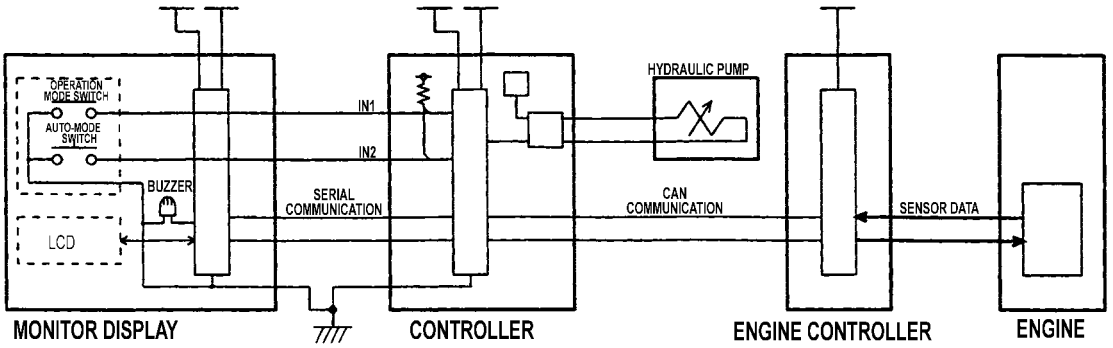

[2] Time chart

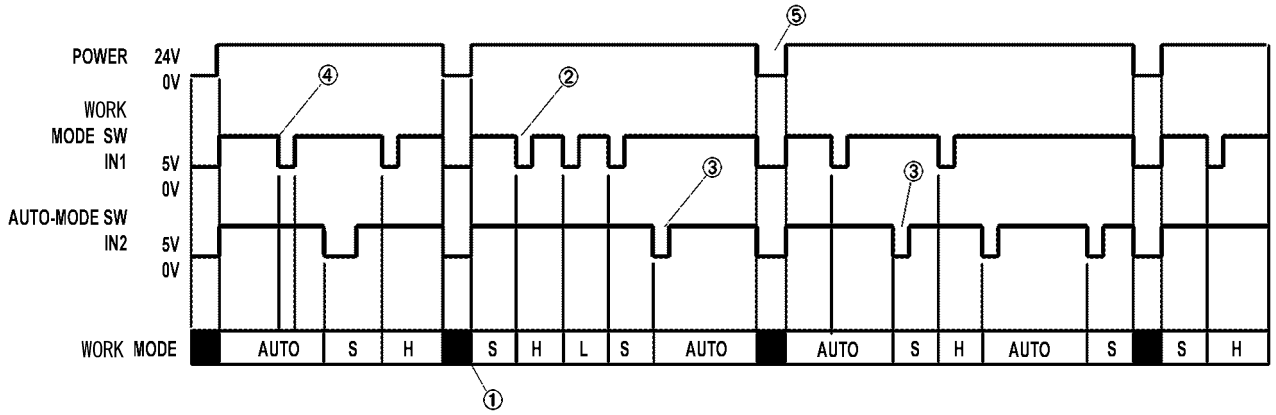

[3] Switching modes

1) If the machine was in H/S/L mode and was turned off by the key switch, it will restart in S-Mode when it is turned on through the key switch again. (The previous data is reset.)
2) By pressing the work mode switch, the modes alternate as follows: S→H→L→S→H.
3) No matter what mode is selected to start with, pushing the auto-mode switch once will switch the mode to "auto". Pushing the switch again will switch the auto-mode to S-mode, regardless of the mode that was selected prior to auto-mode.
4) During the auto-mode operation, the work mode switch stays deactivated. The switch will not work to change modes.
5) After the machine has been turned off with auto-mode selected, it will restart in the auto-mode even when the key switch is turned on. (Previous data is retained.)

[4] Operation

1) Pushing the mode switch on the monitor display will send a signal to the controller. The controller then switches modes according to the signal it received.
2) The controller signals the currently selected mode to the monitor via serial communication. The LCD screen switches according to the data sent.
3) The controller transmits the current mode to the engine controller via CAN communication. The engine controller regulates the engine governor according to the data.
   Also, the engine controller transmits via CAN communication the data on current mode and the actual engine speed.

https://truckmanualshub.com/

4) The controller determines the pump current based on the following data: current mode, actual engine speed, target engine speed. The controller then transmits the result to the pump.
5) The LCD on the monitor switches, reflecting the transmission received from controller via serial communication.

[5] Switches and LCD

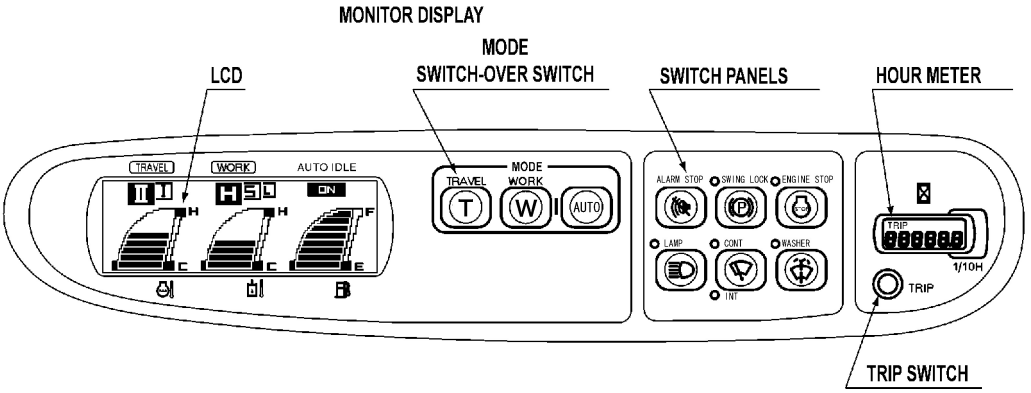

LCD DISPLAY DURING H-MODE

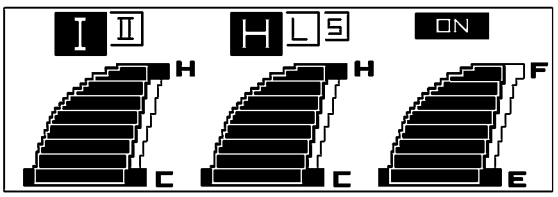

LCD DISPLAY DURING S-MODE

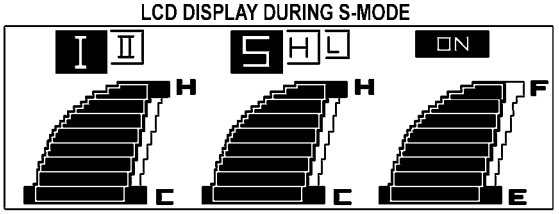

LCD DISPLAY DURING L-MODE

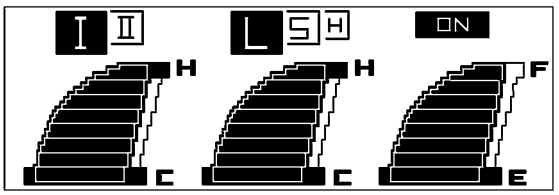

LCD DISPLAY DURING AUTO-MODE

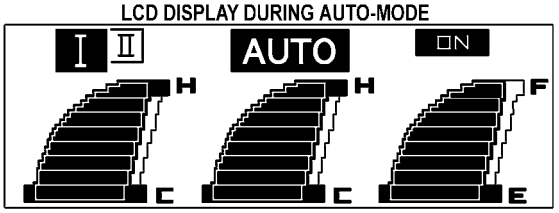

https://truckmanualshub.com/

a) H.S.L Modes

b) Auto Modes

[1] Alteration

- The current value of "I min" in mode H is changed to that value equivalent in mode L.
- The engine speed sensing control is carried out even in mode S and "I max" is set to the current value equivalent in mode S and "I min" to that equivalent in mode L.
- The engine speed sensing control is carried out even in auto mode and control it within the range from "I max" to "I min" (equivalent in mode L) for both Sa and La.

[2] Purpose

- It lowers pump output automatically to cope with drop of engine power due to use of poor quality fuel and operation in highland.
- It applies optimum load with fuel cost and cycle time in mind when operated in automatic mode.

[3] Circuit connfiguration

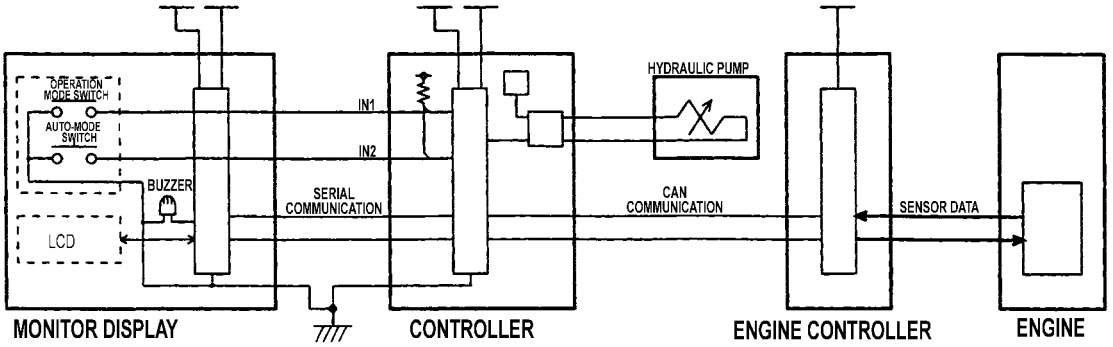

https://truckmanualshub.com/

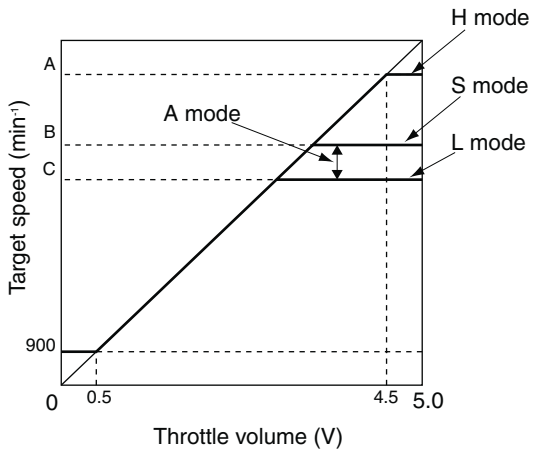

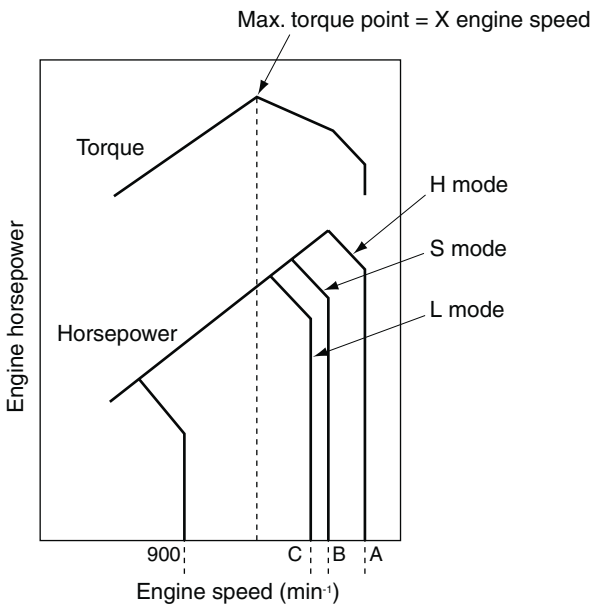

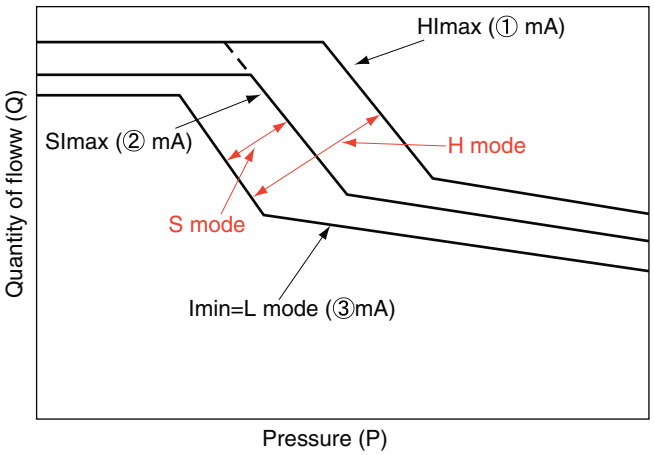

P-Q chart of pump

Mode H: When engine speed is between A rotation and X rotation at maximum torque point, it controls current value range from HI max (① mA) to I min (③ mA).

Mode S: When engine speed is between B rotation and X rotation at maximum torque point, it controls current value range from SI max (② mA) to I min (③ mA).

Mode L: When engine speed is C rotation, current value is of mode L (③ mA).

Auto mode

Sa: When engine speed is between B rotation and X rotation at maximum torque point, it controls current value range from HI max (① mA) to I min (③ mA).

La: When engine speed is between C rotation and X rotation at maximum torque point, it controls current value range from HI max (① mA) to I min (③ mA).

[4] Operation in mode H, S, and L * Identical to current type 3.

1) When the target speed of the engine is lower than the speed at maximum torque, the pump current comes to the current value in mode L even if it is operated in mode H or S. (To prevent engine stop.)
2) When operating travel alone even it is operated in mode L, the current value in mode S is to be taken (to prevent endless traveling).
3) When using a backup line (breaker, crusher etc.), the current value in mode S is to be taken.
4) Even if it applies to the section 2) or 3) above, the current value in mode L is to be taken in the case of section 1). (To prevent engine stop.)
5) When in auto idling, put the idling engine speed at 1200 min^{-1}. (For measures against black smoke generated when restoring engine speed by manual control of lever.)
6) When temperature of engine cooling water is too low or when power-supply voltage applied to the engine controller is too low, increase the idling speed to prevent over-cooling and/or running out of battery.

https://truckmanualshub.com/

[5] Operation in auto mode * Identical to current type 3.

1) When auto mode has been selected, start the machine with mode La first then select mode Sa according to working conditions.
   In addition, the mode can be changed automatically from Sa to La.
2) When water temperature is less than 50°C and oil temperature is less than 25°C, control in auto mode will not be carried out even if the auto mode has been selected and the mode is fixed to La selected on starting.
   Once water temperature reaches more than 50°C and oil temperature more than 25°C however, control in auto mode starts and continues operating in this mode if water and/or oil temperature is dropped again.
3) If travel pressure switch is turned ON during control in auto mode, work mode will not be changed over while it is being turned ON.
   (If travel pressure switch is turned ON during control in mode Sa, mode Sa is to be held, and similarly if the switch is turned ON during control in mode La, this mode is to be held.)

<<Set value in each mode>>

Mode	Designation		Unit	Set value
H	Engine speed	(MAX)	min^{-1}	1870
		(When traveling)	min^{-1}	-
	Pump current	(I MAX)	mA	540
		(I MIN)	mA	380
		(When in no control)	mA	< 50
S	Engine speed	(MAX)	min^{-1}	1750
	Pump current	(I MAX)	mA	480
		(I MIN)	mA	380
		(When in no control)	mA	< 50
L	Engine speed	(MAX)	min^{-1}	1650
	Pump current	(STD)	mA	380
		(When in no control)	mA	< 50
Mode Sa	Engine speed	(MAX)	min^{-1}	1750
	Pump current	(I MAX)	mA	540
		(I MIN)	mA	380
Mode La	Engine speed	(MAX)	min^{-1}	1650
	Pump current	(I MAX)	mA	540
		(I MIN)	mA	380
		(When in no control)	mA	< 50
Engine speed in idling			min^{-1}	900
Engine speed in auto idling			min^{-1}	1200
Engine speed at maximum torque			min^{-1}	1500

https://truckmanualshub.com/

c) Load Prefetch Control

[1] Purpose

Pump current is controlled as measures against black smoke.

* Since engine response has been improved, control applied to current type 3 that increase of target speed by 100 min^{-1} for 0.3 seconds from the moment when ON signal of pressure switch is received will not be carried out any more.

[2] Circuit configuration

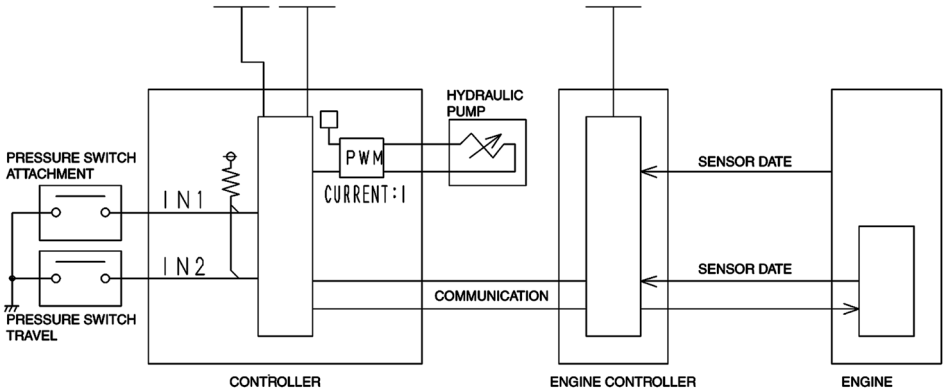

[3] Operation

1) When no operation is carried out (attachment and travel pressure switches OFF), the pump current is always 0 mA regardless of operation mode and engine speed.
2) When attachment or travel pressure switch is turned ON, the controller provides pump current so that it can get to the set current for the work mode being selected after 0.8 second.

* No control for decreasing transient load has been employed for machines above current model of SH300-3.

Control for decreasing transient load is illustrated below:

Since engine response (or returning property) has been improved (or no difference between target speed and actual speed), if an abrupt engagement of the lever from inching operation is carried out, and when difference between target speed and actual speed reaches within 150 min^{-1}, pump current of 0 mA is to be applied to ease the engine load.

This is for the purpose of taking measures against black smoke and of prevention from engine stop.

https://truckmanualshub.com/

Throttle Control

[1] Alteration

- In current type 3, selected work mode is transferred to the engine controller (ECU) via CAN communication circuit from the controller in the machine.
  Target speed is calculated by using the engine output map according to the work mode and the analog voltage signal from throttle potentiometer directly inputted to ECU, then the target rack position is provided to the electronic governor to adjust quantity of fuel injection.
- In the next version of the machine, the analog voltage signal from throttle potentiometer is provided to the controller in the machine to transfer it to the engine controller (ECU) via CAN communication circuit together with work mode.
- Engine controller for type 3 machine is called as ECU (engine control unit).
- Engine controller for next type of machine is called as ECM (engine control module).

[2] Purpose

Engine speed can be set by no dependence of the engine controllers on ISUZU side.

[3] Circuit configuration

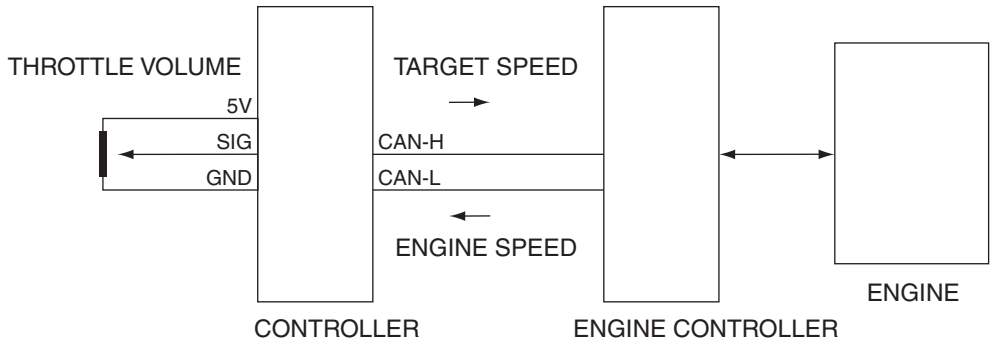

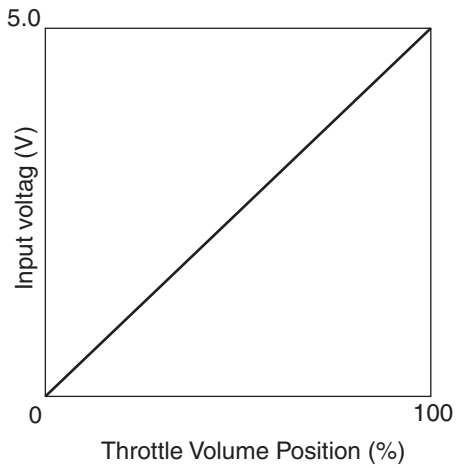

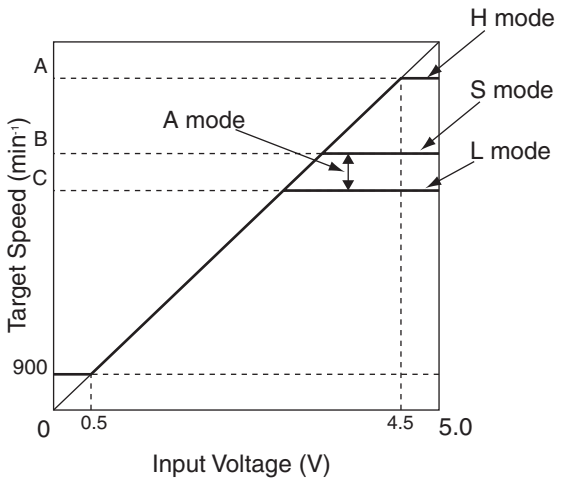

https://truckmanualshub.com/

[4] Operation

1) The controller determines the target speed from the position of throttle potentiometer and the work mode currently being entered to transfer the data to the engine controller (ECM) via CAN communication circuit.
2) ECM determines fuel injection quantity from the calculated target speed and the data obtained from each sensor (such as actual engine speed, fuel temperature, and boost temperature) to transfer it to the supply pump and to the injector for engine control.
3) When the engine is rotated at a speed less than that at the maximum torque by controlling throttle potentiometer, the pump current becomes that of mode L even if work mode is selected either to mode S or to mode H.
4) When CAN communication linking between the controller and the engine controller (ECM) is stopped, the engine speed is fixed to a certain specified speed and the throttle potentiometer specifying engine speed will not be functioning. (Specified speed : 1250 min^{-1})
   The specified speed, for the purpose of emergency escape, has been set as the engine speed which will not damage the breaker while the engine is running.

https://truckmanualshub.com/

[5] Throttle Control Relation Electric Circuit Diagram

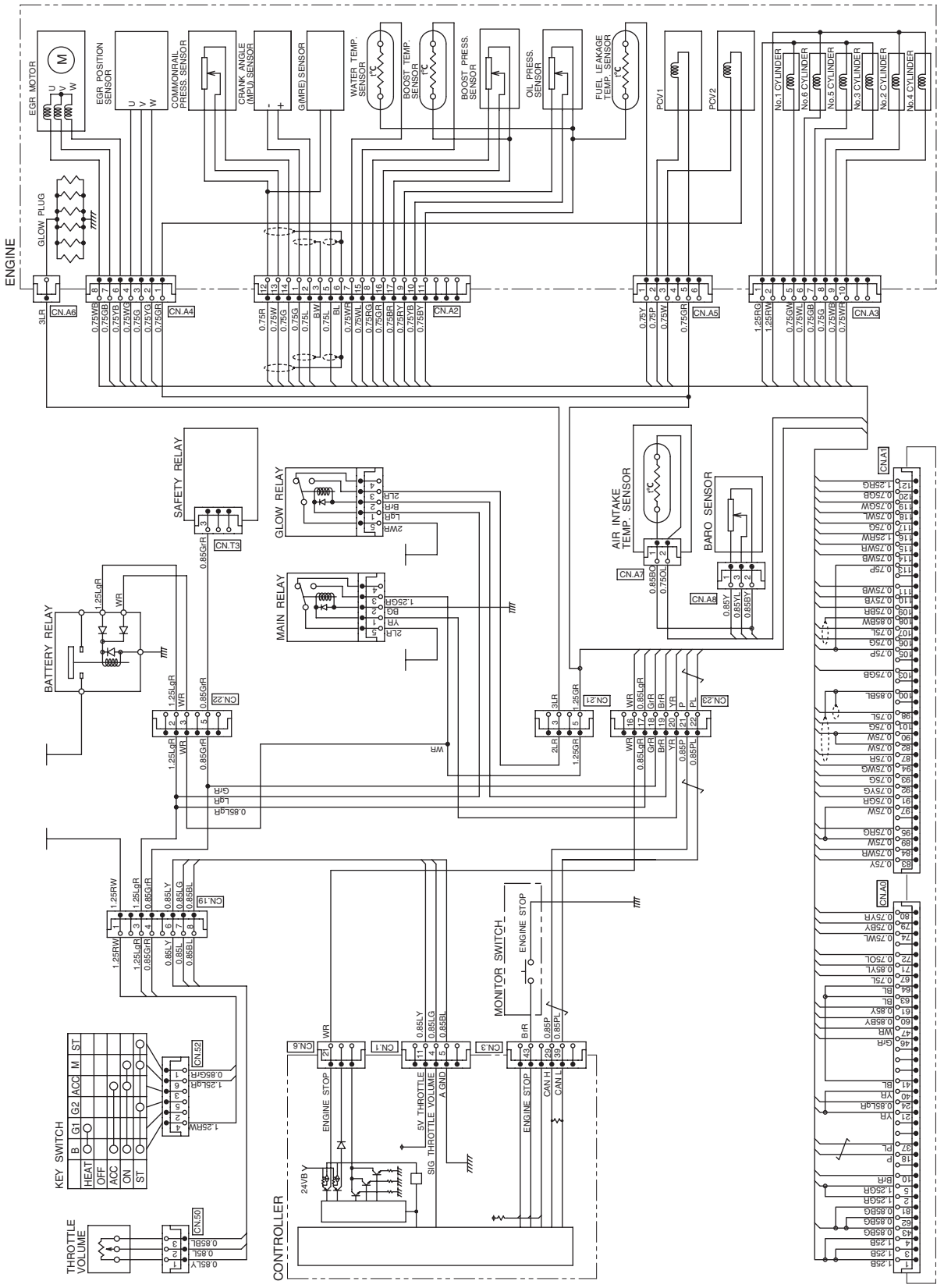

https://truckmanualshub.com/

Idling Control (Auto/One-touch)

[1] Circuit configuration

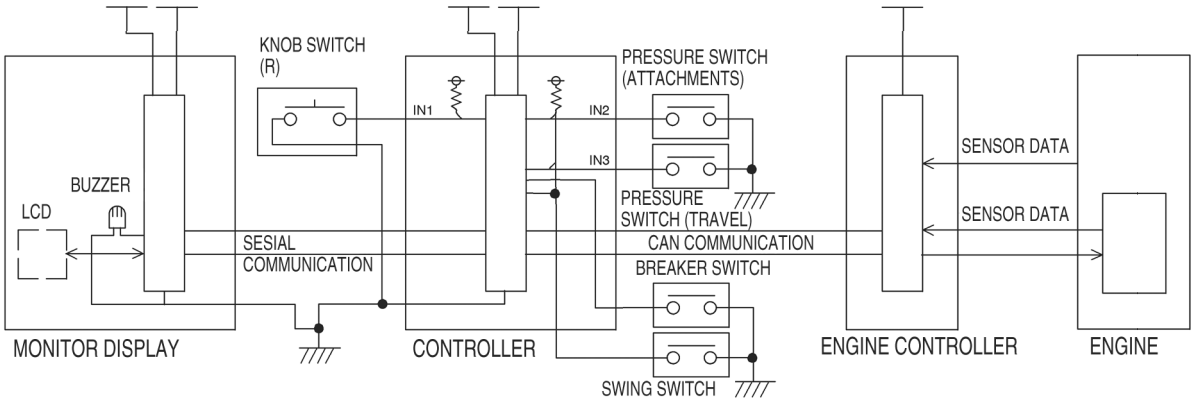

[2] Switching between auto idle and one-touch idle

1) Pushing the knob switch (IN1) down and holding it for 3 seconds will trigger the modes to toggle between auto and one-touch.
   When the mode switches, the ON/OFF display on the auto idle section of the LCD also switches, and the buzzer buzzes for 3 seconds.
2) At the time of auto idle/one-touch idle selection, the previous setting will still prevail even after the key switch was turned ON. (Previous data is retained.)
3) The LCD will display ON/OFF status of auto idle. ON on the display indicates the auto idle, OFF indicates one-touch idle.
4) If there occurs no handling through the lever for 5 seconds with auto idle turned ON (both attachment pressure switch and travel pressure switches are OFF), the engine speed automatically goes back to the idling state.
   (For 5 seconds, the initial setting prevails. Programming is possible through adjusting settings on the back panel for the duration between 1 and 30 seconds.)
5) During auto idle, if operated via lever while engine is idling (either attachment pressure switch or travel pressure switch is on), the engine speed automatically goes back to the previous rate.
6) Even during auto idle, idling/recovery operation is attained by pressing the knob switch (one-touch switch).
7) When auto idle is OFF (i.e. during one-touch idle), idling/recovery is attained by simply operating the knob switch (one-touch idle switch), whether or not the machine was maneuvered though the lever.
8) LCD displays “IDLING” on the monitor during idling control.

[3] Operation

1) When setting idling revolutions based on conditions described in [2]. *Switching between auto idle and one-touch idle*, the controller transmits an idling signal to the engine controller via CAN communication.
   Also, a signal is sent to the monitor display via serial communication to display “IDLING” on the screen.
2) The engine controller, upon receiving the signal, selects idling mode and adjusts engine speed to that of the idling state.
3) The monitor displays “IDLING” on the LCD according to the signal sent.

https://truckmanualshub.com/

4) When recovering from idle control based on the conditions described in [2]. *Circuit configuration*, the controller transmits a signal to the engine controller via CAN communication conveying the previous engine mode selection.
   Also, the serial transmission that has been sent to the monitor for displaying “IDLING” on the screen will be terminated.
5) The engine controller, depending on the mode signal received, switches the idling mode back to the previous mode and adjusts the engine speed.
6) The monitor recognizes the termination of the idling signal transmission and stops the “IDLING” display on LCD.

[4] Time chart

1) Time chart for auto idle ON/OFF selection

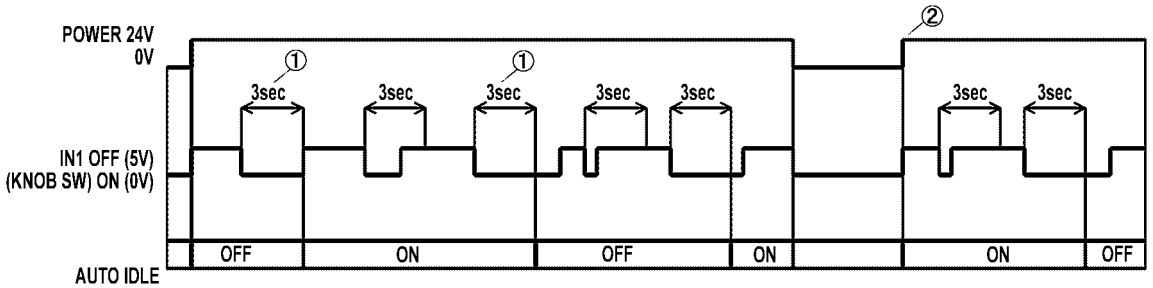

2) Time chart when auto idle is ON

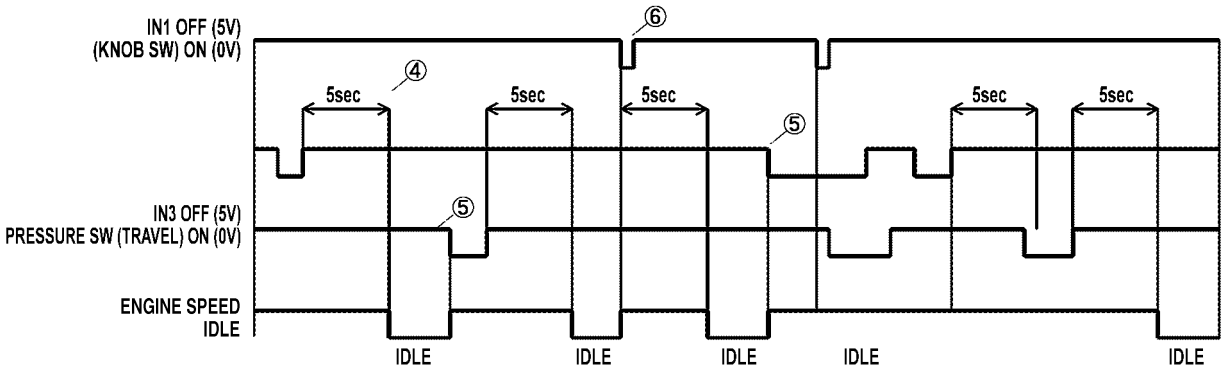

3) Time chart when auto idle is OFF

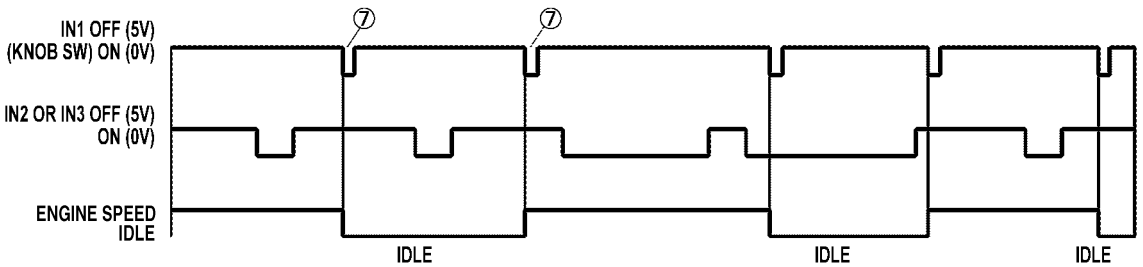

https://truckmanualshub.com/

Breaker Mode

[1] Alteration

Optimization of pump current in mode S and in mode L at the engine speed with the breaker being used. Pump current at engine speed of between 1200 and 1500min^{-1} is applied from that in mode L to that in mode S.

[2] Purpose

Although in the breaker mode up to now, pump current in mode S is to be applied at engine speed of more than 1500 min^{-1}, It spreads the speed range in mode S so that the machine can be operated in less than that of the flow-rate.

[3] Circuit configuration

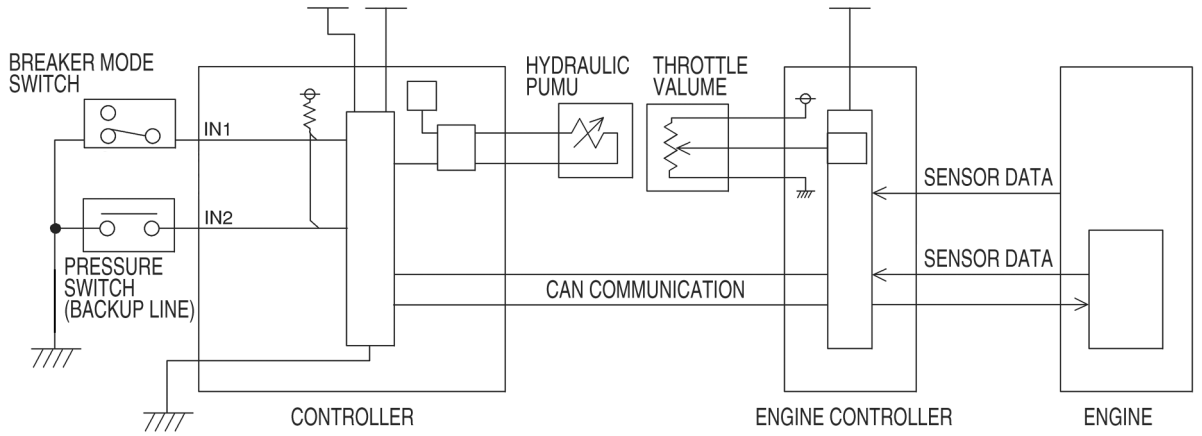

[4] Operation

1) When the breaker mode switch is turned ON by locker switch on the console (left side) and the pressure switch in backup line is turned ON, it controls to rotation of the breaker.
2) When the engine is rotated at a speed less than that set for the breaker by controlling the throttle potentiometer, engine speed will not be increased to the speed set for the breaker even if the breaker is operated.
3) If the pressure switch in backup line is turned ON regardless of breaker mode switch input, the pump current is to be at the current value in mode S irrespective of operation of at that time. (However, when the engine speed is less than 1200min^{-1}, pump current becomes that in mode L.)

https://truckmanualshub.com/

Auto Preheat (Glow Control)

[1] Alteration

Only the circuit structure and the pre-glow control are different. (Refer to time chart attached) It is the same that the pre-glow starts, according to water temperature, at the same time when the key switch is turned ON.

[2] Circuit configuration

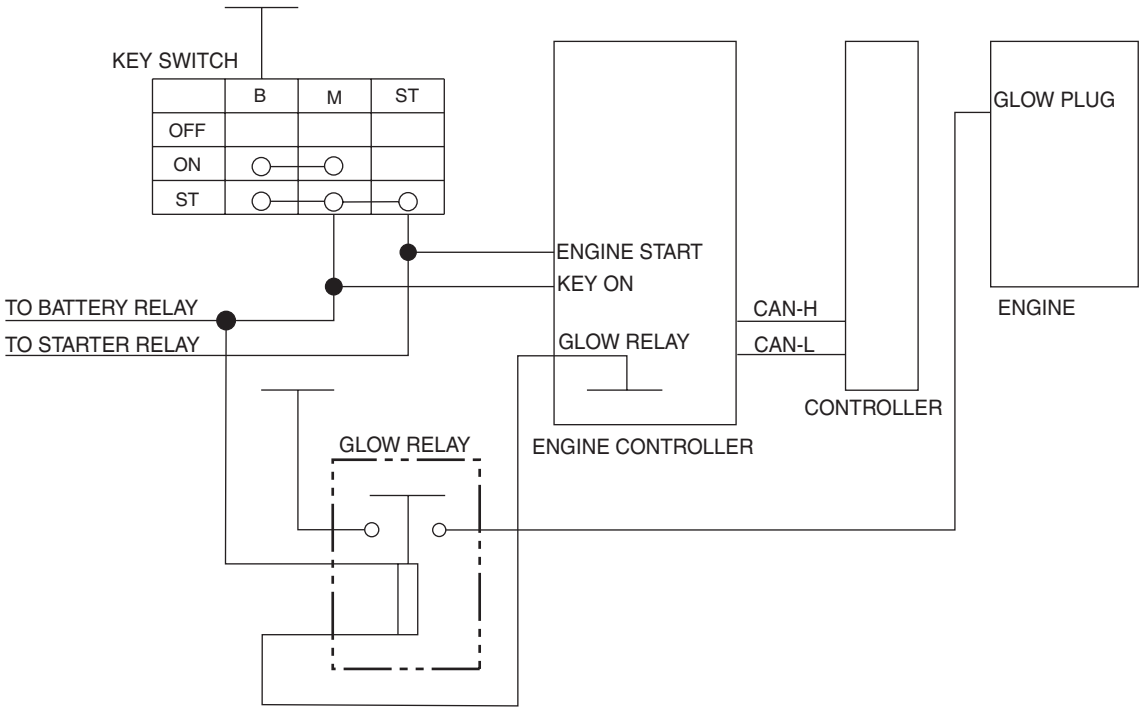

[3] Operation

1) When the key switch is turned ON, the engine controller (ECM) calculates pre-glow time from engine cooling water by using the attached map.
2) ECM turns ON the glow relay output during calculated pre-glow time to transfer the glow lamp signal through CAN communication circuit to the controller displaying "ENG PREHEAT" on the monitor.
3) The glow relay output continues regardless of ON/OFF of the glow lamp signal.
4) After the engine has been started, it turns ON the glow relay output again only when cranking the engine.
   The glow lamp signal will not be transferred at this time.
5) When the key switch returns to ON from the "start" (when cranking is completed), it calculates after-glow time by using the attached map.
   The glow lamp signal will not fee transferred at this time.
6) Since the control mentioned above starts immediately after the key switch has been turned ON, "ENG PREHEAT" will not be displayed on the monitor unless the pre-glow time passes more than 3 seconds (below -5°C).

* The glow lamp time map is added from the engines meeting the emission control regulation of 3rd-stage.

* Refer to attached sheets for the glow control time according to water temperature and for the time chart.

https://truckmanualshub.com/

[4] Water temperature control map

1) Glow lamp time (It transmits by CAN commumication)

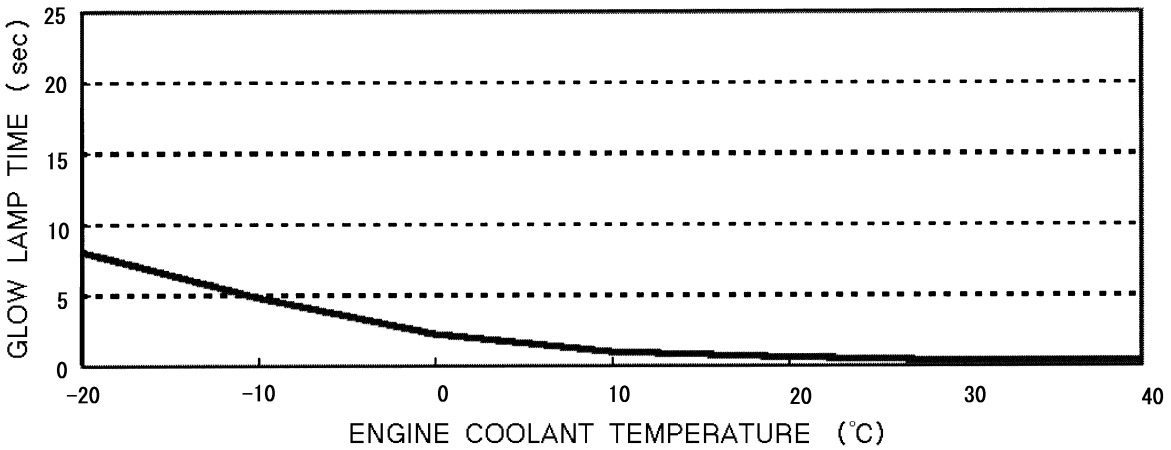

2) Pre glow time

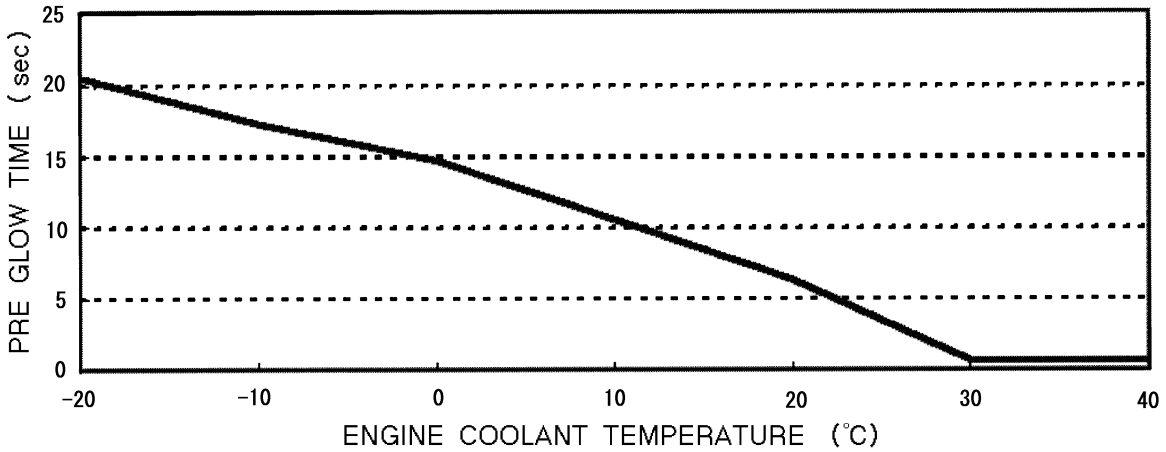

3) After glow time

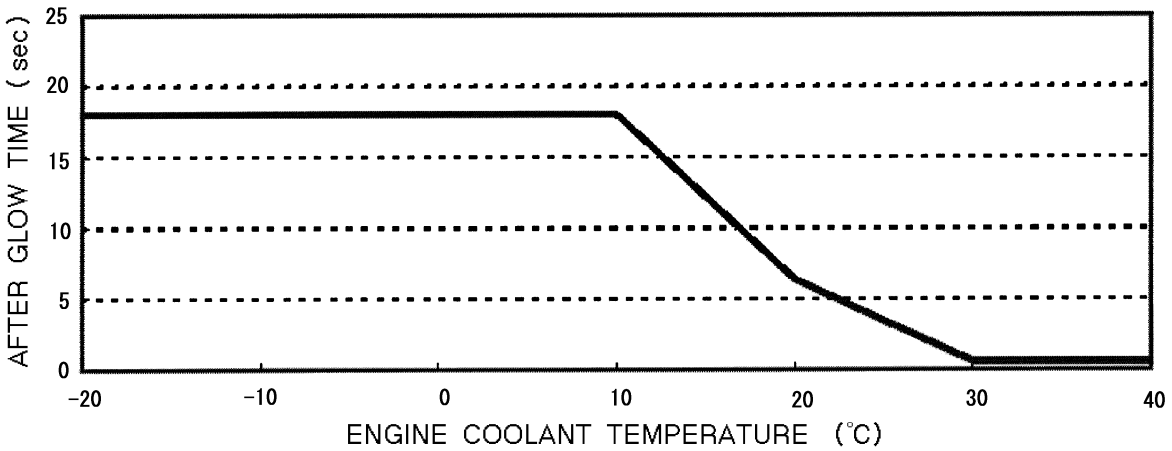

https://truckmanualshub.com/

[5] Time chart

1) When in normal operation

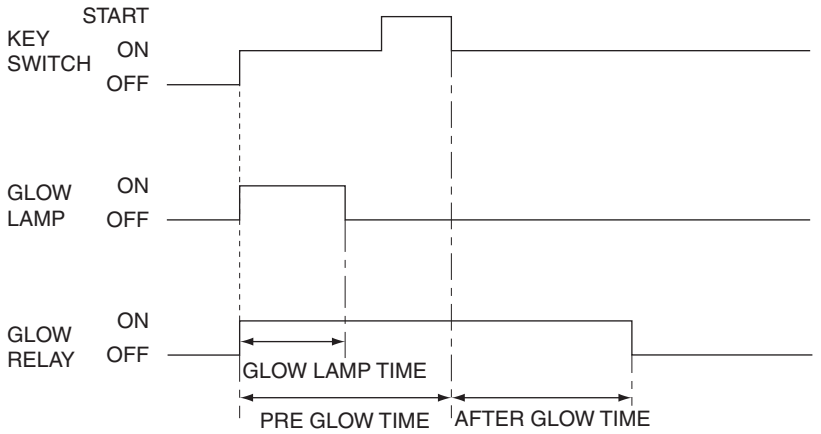

2) When the engine has been started after pre glow is completed

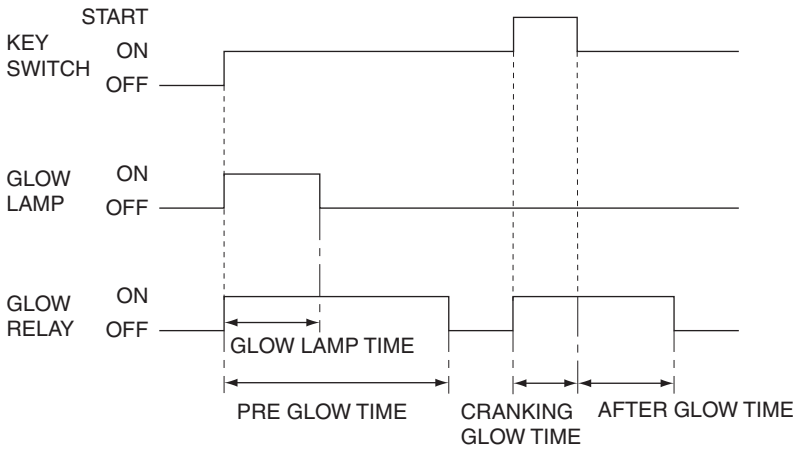

3) When the engine has been started before glow lamp gose off

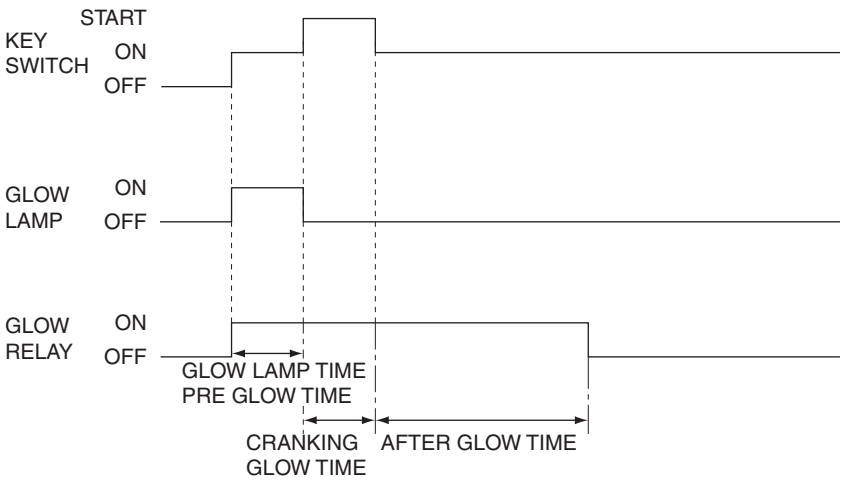

https://truckmanualshub.com/

Auto Warm-up

[1] Circuit configuration

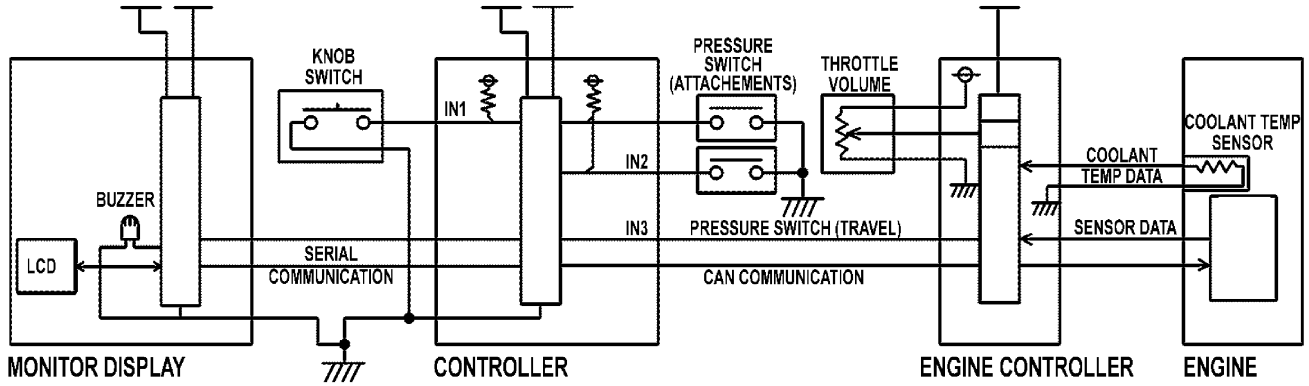

[2] Operation

1) A coolant temperature sensor is installed inside the engine. The signal from this sensor goes out to the engine controller and is converted into a temperature value. The engine controller then transmits the coolant temperature data to the controller via CAN communication.
2) If the coolant temperature is below 50°C after engine starts, the controller transmits the auto warm-up signal to the engine controller via CAN communication.
3) The engine controller executes the auto warm-up control upon receiving the signal transmission from the controller.
4) The controller terminates the auto warm-up control on the following conditions.
   The engine controller terminates the auto warm-up control once the command is cancelled.
   - When one of the following switches turns on : attachment pressure switch, travel pressure switch, and knob switch (one-touch idle switch).
   - When throttle volume is changed.
   - When engine speed stays above 1800 min^{-1} for 3 minutes.
5) Once auto warm-up control is cancelled, the controller does not initiate auto warm-up control again unless key switch is turned from OFF to ON.
6) While controller is executing the auto warm-up control, an “AUTO WARM UP” message is displayed on the monitor's LCD.

[3] Auto warm-up control

Details of auto warm-up control are the same as those for model 2 machines. They are as follows:

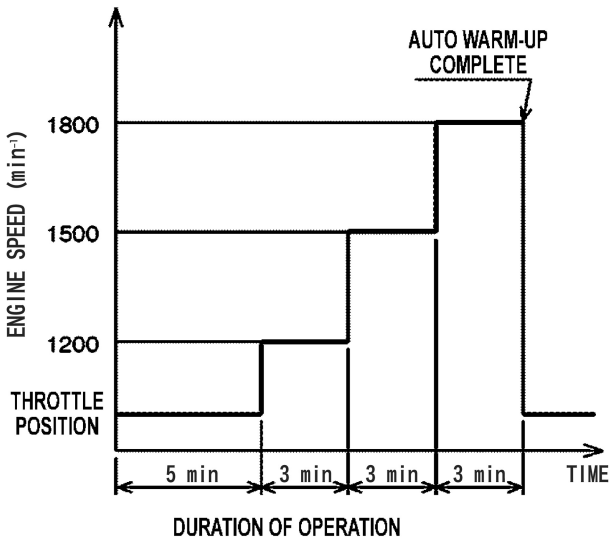

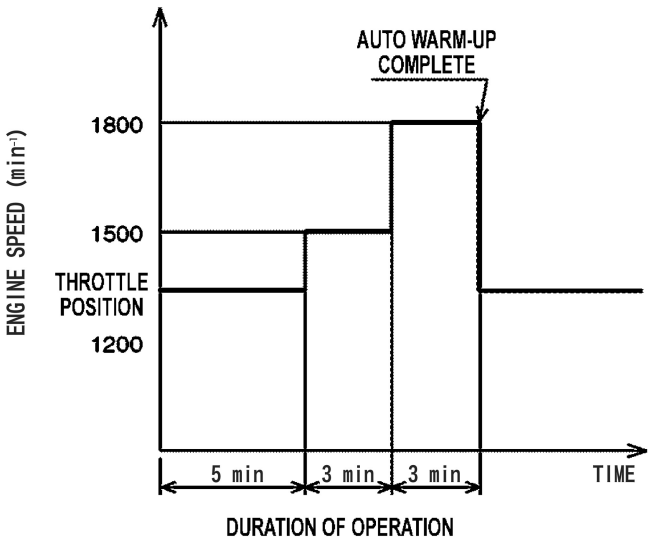

https://truckmanualshub.com/

Overheat Protection

[1] Purpose

It is the function protecting the engine by restriction of fuel injection quantity which in turn reduces engine output forcibly when water temperature has kept on rising.

The control starts functioning at the moment when water temperature exceeds 100°C.

* Waning "OVER HEAT" is to be displayed on the monitor in actual machine when temperature exceeds 105°C.

[2] Water temperature-Fuel injection quantity

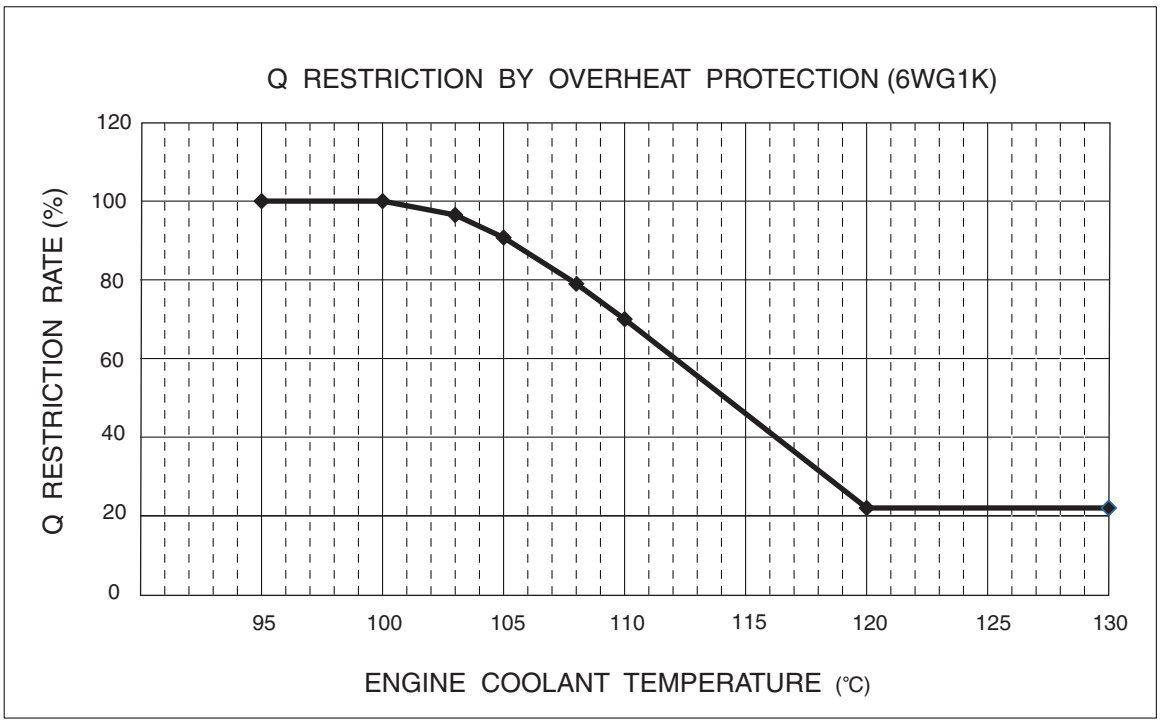

https://truckmanualshub.com/

Atmospheric Pressure Compensation

[1] Purpose

Purpose is to prevent black smoke from increasing because an excessive fuel is fed in the combustion chamber of the engine due to lack of intake air and to prevent the engine from being damaged (prevention of over-revolution of turbo) due to temperature rise of exhaust gas.

[2] Map

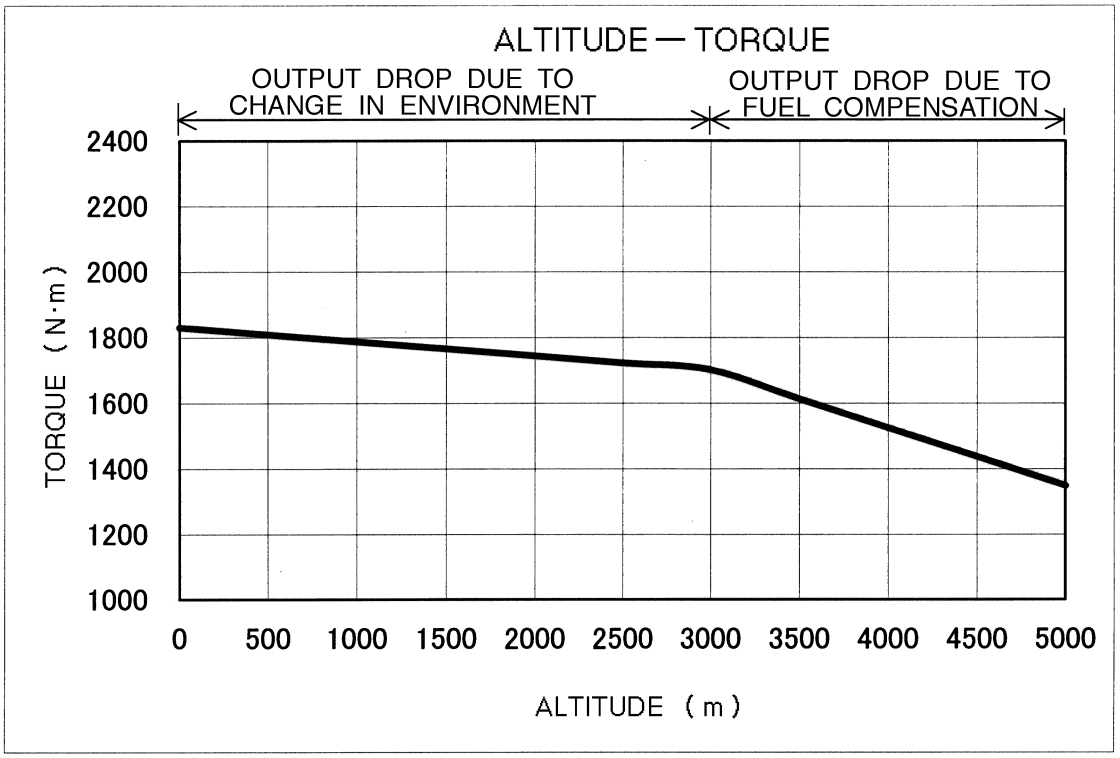

https://truckmanualshub.com/

Control When Starting Engine

1. 1.Starting control (by monitoring water temperature)

[1] Purpose

When water temperature is below 0°C, Purpose is to ensure starting performance of the engine in cold temperature by making fuel injection according to water temperature.

2. Long cranking control

[1] Purpose

While aiming at reduction of black smoke when starting engine, the purpose is to improve starting performance by increasing starting Q (fuel injection) by fixed quantity, as a backup when sufficient starting Q (fuel injection) will not be injected in such case where an injector is worn out, after the specified time has passed from the time when cranking was started.

[2] Time chart

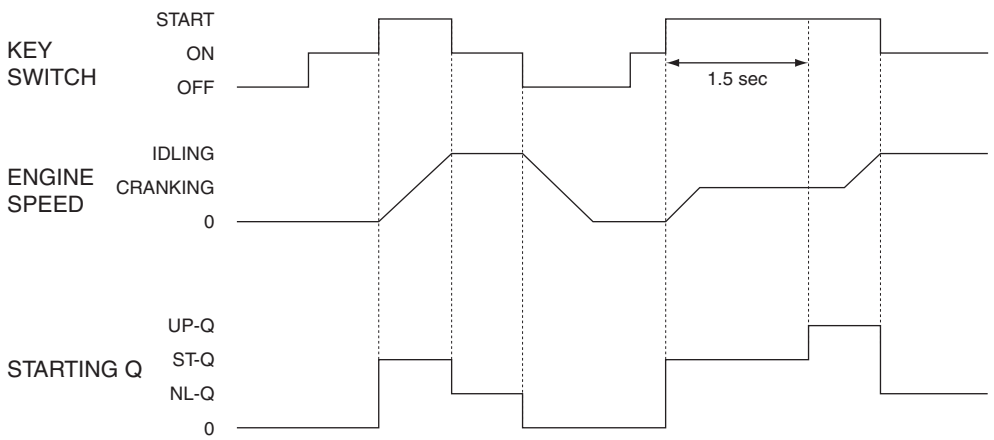

※ST-Q: Standard starting Q, UP-Q: Starting Q after increase of quantity, NL-Q: Q in no lord

3. Starting control when number of effective cylinders is reduced

[1] Purpose

Purpose is to correct fuel injection quantity to assure starting performance of the engine with a view to escaping in an emergency when a certain number of stopped injectors are detected by trouble diagnosis.

[2] Operation

1) Fuel quantity to be injected by faulty injectors is allotted to other normal injectors (total quantity is to be the same).
2) In case where number of faulty cylinders is over half of the total numbers, increase of fuel injection quantity will not be performed (to prevent the engine from being damaged by forcible starting).

[3] Number of cylinders- Correction factor

Number of effecive cylinders	6	5	4	3	2	1	0
Correction factor	1.0	1.2	1.5	2.0	1.0	1.0	1.0

https://truckmanualshub.com/

Control When Stopping Engine

[1] Operation

1) Turn OFF the key switch.
2) When the engine controller recognizes that the key is turned OFF, steps 3) through 5) below are carried out simultaneously.
3) Fuel injection quantity stops to be calculated.
4) Pressure control valve (PCV) is instructed so that it is fully closed.
5) EGR valve is instructed so that it is fully closed and its initial point is corrected.
6) After steps 3) through 5) have been completed, information such as history offailure is written in EPROM in the ECM.
7) Turn OFF the main relay and turn OFF the power supplied to ECM.

Emergency Stop of the Engine

[1] Alteration

In current type 3 (engine meeting emission control regulation of 2nd-stage), depression of the emergency stop switch allows the engine stop motor to rotate to the stop position by way of the relay and allows the engine governor to control for stopping engine by the engine stop signal from the engine controller (ECU).

In the next type (engine meeting emission control regulation of 3rd-stage), depression of the emergency stop switch allows the controller to transfer engine stop signal to ECM controlling the engine to be stopped.

[2] Circuit configuration

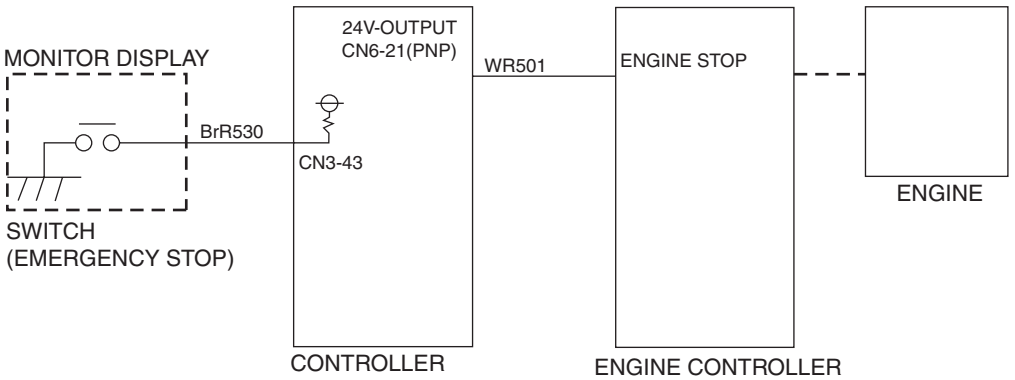

[3] Operation

1) Depression of emergency stop switch on the monitor display allows the output signal from transistor in the controller to be turned ON and at the same time, the engine stop signal is transferred from the controller to the engine controller (ECM)
2) ECM performs stopping control for the engine.

https://truckmanualshub.com/

Engine Protection Function (EPF)

[1] Purpose

When the engine is operated with water temperature, boost temperature, and engine oil pressure exceeded the level respectively specified, it is to protect by limitation of the engine output or by stopping the engine.

[2] Operation

1) Water temperature monitoring

Setting	Time	Engine control	Error codes	Reset	Monitor message
100°C	-	ECM: Decrease of fuel injection rate Machine controller: Normal	-	-	-
105°C	Indication in bar graph for water temperature: At 8th graduation		M00F0	Indication in bar graph for water temperature: Below 8th graduation	OVER HEAT
110°C	5 sec.	ECM: Decrease of fuel injection rate Machine controller: Idling	M00F1		
120°C	5 sec.	ECM: Decrease of fuel injection rate Machine controller: Engine stop	M00F2	Turn ON key after engine has been stopped.	

- Engine protection will not function if error codes, E0117 (water temperature sensor low voltage abnormality) and E0118 (water temperature sensor high voltage abnormality), are indicated.
- Engine protection will not function if error codes, E2104 (CAN-bus abnormality), E2106 (CAN time-out abnormality), and M0090 (CAN communication error), are indicated.
- Engine protection by water temperature will start functioning 1 minute after the engine has been started (in order to detect water temperature in steady state).

2) Boost temperature monitoring

Setting	Time	Engine control	Error codes	Reset	Monitor message
80°C	5 sec.	ECM: Normal Machine controller: Idling	M00F3	When temperature below 70°C continues for 30 sec.	OVER HEAT
90°C	5 sec.	ECM: Normal Machine controller: Engine stop	M00F4	Turn ON key after engine has been stopped	

- Engine protection will not function if error codes, E1112 (boost temperature sensor low voltage abnormality) and E1113 (boost temperature sensor high voltage abnormality), are indicated.
- Engine protection will not function if error codes, E2104 (CAN-bus abnormality), E2106 (CAN time-out abnormality), and M0090 (CAN communication error), are indicated.
- Engine protection by boost temperature will start functioning 1 minute after the engine has been started (in order to detect boost temperature in steady state).

https://truckmanualshub.com/

3) Engine oil pressure monitoring

Setting	Time	Engine control	Error codes	Reset	Monitor message
40KPa	5 sec.	ECM: Normal Machine controller: Engine stop	M00F5	Turn ON key after engine has been stopped	LOW OIL PRESS

- Engine protection will not function if error codes, E0522 (engine oil pressure sensor low voltage abnormality) and E0523 (engine oil pressure sensor high voltage abnormality), are indicated.
- Engine protection will not function if error codes, E2104 (CAN-bus abnormality), E2106 (CAN time-out abnormality), and M0090 (CAN communication error), are indicated.
- Engine protection will not function if error code of E1633 (5V power supply 3 voltage abnormality) is indicated.
- Engine protection by engine oil pressure will start functioning 30 seconds after the engine has been started (in order to detect engine oil pressure in steady state).

* Introduce failure codes of machine system for setting error codes.
* Pump output is always functioning according to “L” mode while idling.
* Turning key switch OFF allows function of engine protection to be reset. (Engine runs for 30 sec. even if something is wrong.)
* Error codes are to be recorded as well as recording other codes.
* The engine is to be stopped by means of emergency engine stop signal from PNP output.
* The engine is to be judged as started if it runs at a speed of more than 500 min^{-1}.

4) Select for setting of engine protection function
Since engine protection function has been set as standard, the setting can also be cancelled.

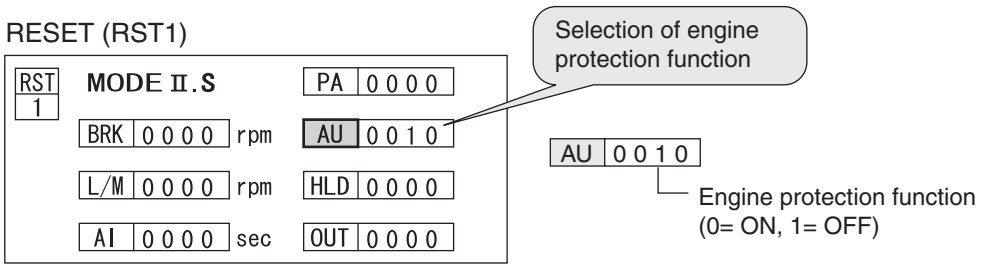

1. Every time the traveling mode switch turns ON, the setting at “AU” is to be shifted as in the order of 0000Æ0001Æ0010Æ0011Æ0000 repeatedly.
2. Turn ON the operation mode switch for 10 seconds.
3. Buzzer sounds to indicate that the settings have been memorized.
4. Turn the OFF key switch.

* If “NO against engine protection function” is chosen, function of engine output limitation/engine stop is cancelled but error codes are displayed and saved as records.

<Note>
At “AU” selection, auto boost control and engine protection function can be set at the same time.

https://truckmanualshub.com/

Lever Lock

[1] Circuit configuration

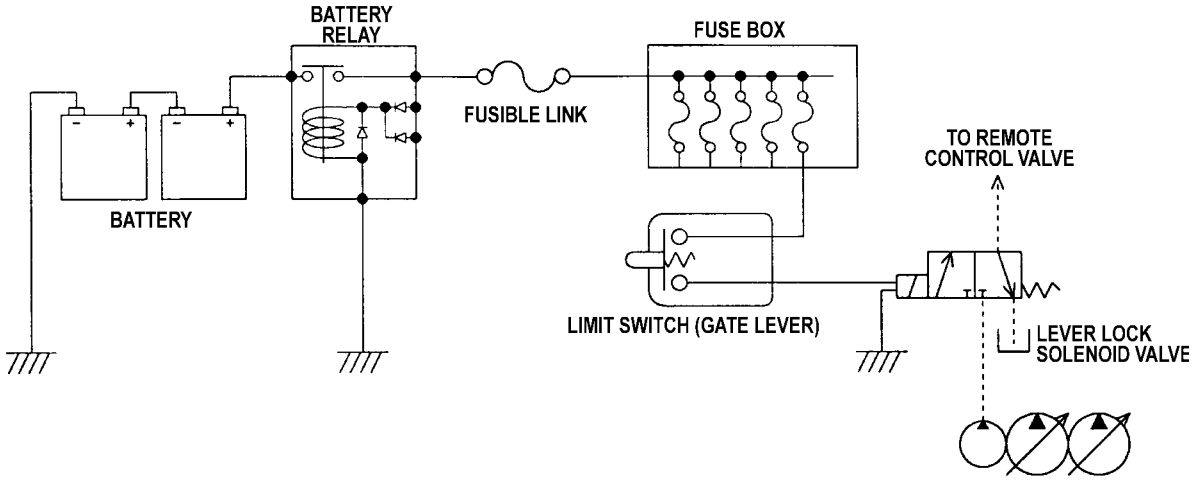

[2] Time chart

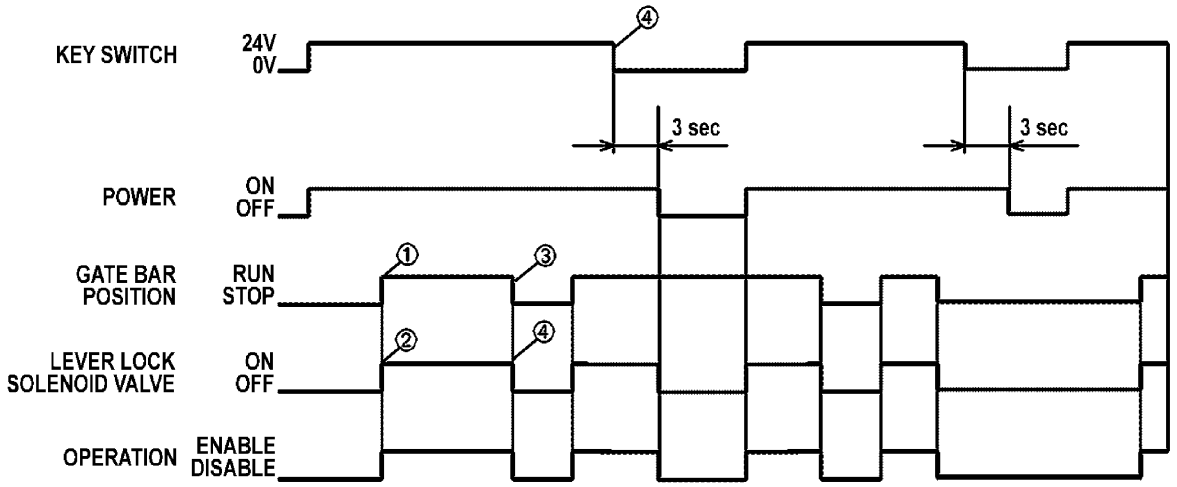

[3] Operation

1) By positioning the gate lever on cab console (left) toward operation (gate lever sticks out when this is done) while the machine is powered on, the limit switch will be turned ON (closed) and the lever lock solenoid valve will be ON.
2) When the lever lock solenoid valve is ON, pressure can reach the pilot line, enabling the machine to operate.
3) By positioning the gate lever toward entering/leaving cab (gate lever stays housed), the limit switch will be turned OFF (open) and the lever lock solenoid valve turns OFF.
4) When the lever lock solenoid valve turns off, pressure cannot reach the pilot line. Thus the operation of the machine will be disabled.

https://truckmanualshub.com/

Auto Boost Control

[1] Auto boost control during each operation mode

Mode	The state of boost
H-Mode (Pressure setting)	Auto boost (31.4 / 34.3 MPa)
S-Mode (Pressure setting)	↑
L-Mode (Pressure setting)	Constant boost

Note: Boosting is cut when travel pressure switch or backup line pressure switch is on.

[2] Auto boost control

1) Circuit configuration

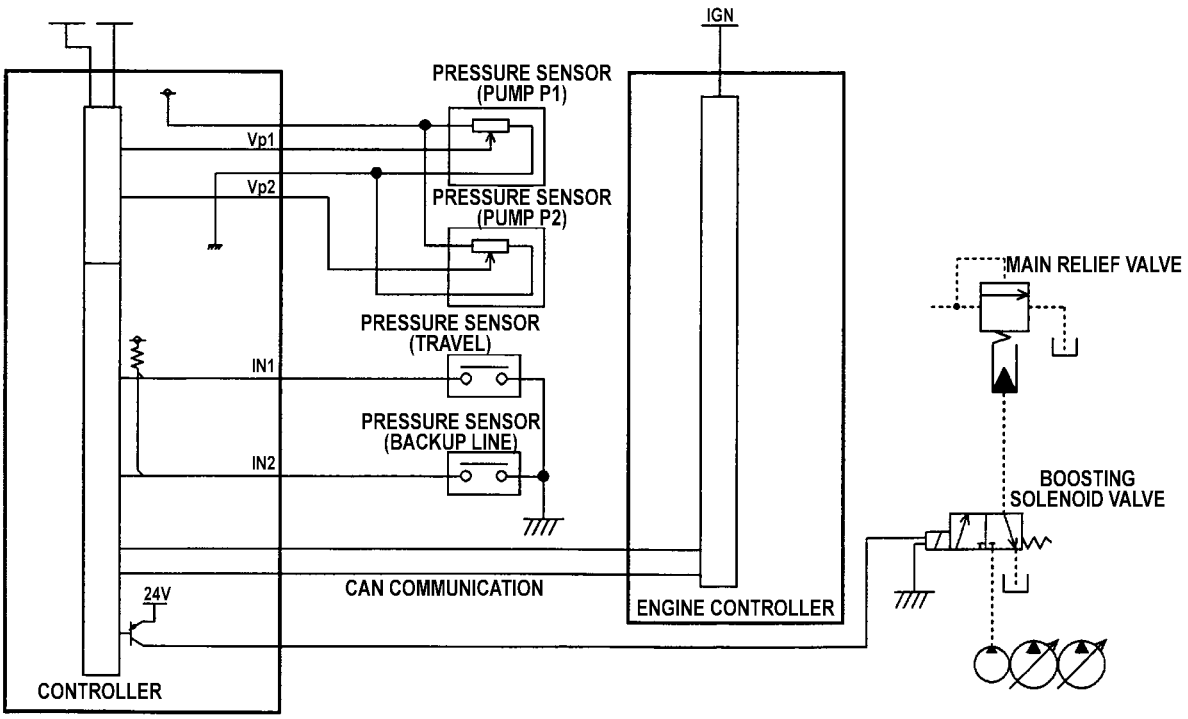

2) Overview of auto boost control

During H/S modes, the controller calculates the operational load from the engine load data transmitted from engine controller via CAN communication and the main pressure P1/P2 data obtained from pressure sensor installed in the main pump. If necessary, the controller turns on the boost solenoid valve to boost the main pressure.

The duration of the boost is limited to 8 seconds to prevent the boost from lasting too long.

The output to boost solenoid valve will immediately be terminated to stop boosting when the travel pressure switch or the backup line pressure switch turns on. This is to protect the actuators (travel motor, crusher, etc.) which cannot run during boost.

https://truckmanualshub.com/

Swing Lock

Swing Brake Control

[1] Circuit configuration

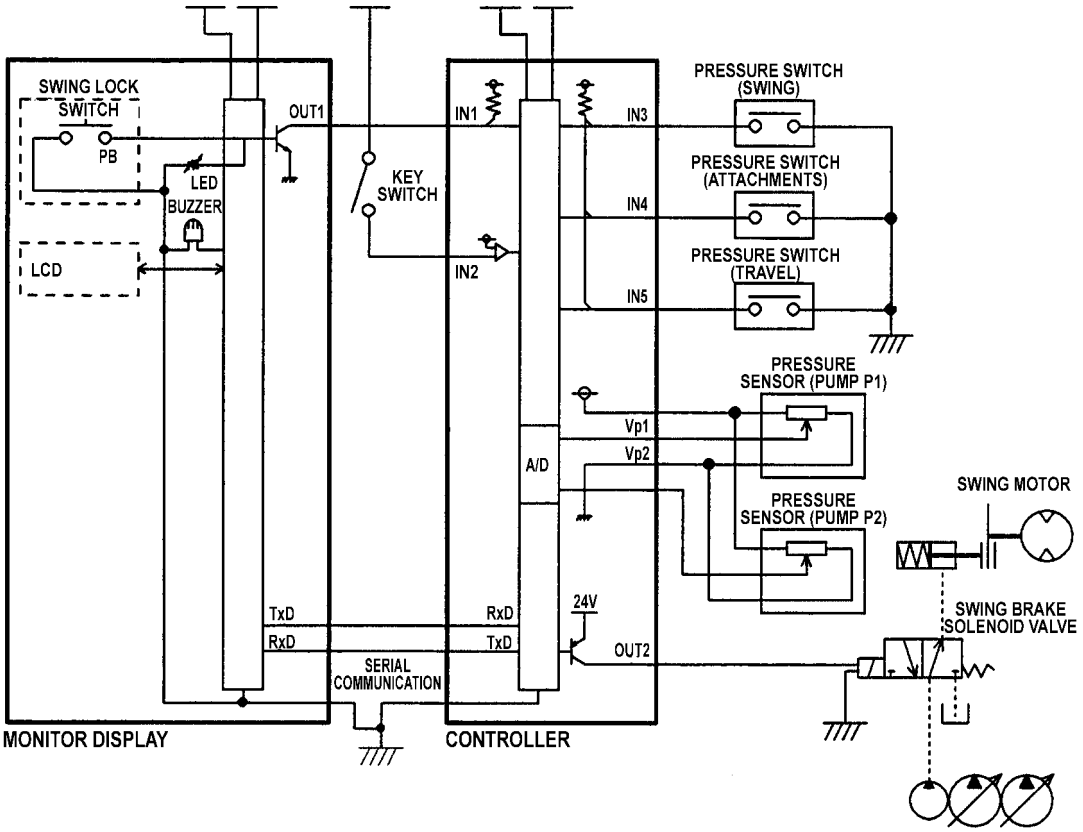

[2] Operation of swing lock

1) Overview

1. Pressing the swing lock switch on monitor display will turn on the red LED, activating the swing lock control. Pressing the swing lock switch again will turn off the LED, and the swing lock is de-activated.
2. During swing lock control, controller's transistor output turns on and the mechanical brake that is built in the swing motor turns on.
3. The ON/OFF state of the swing lock holds when turning the key switch from OFF to ON.

https://truckmanualshub.com/

2) Time chart

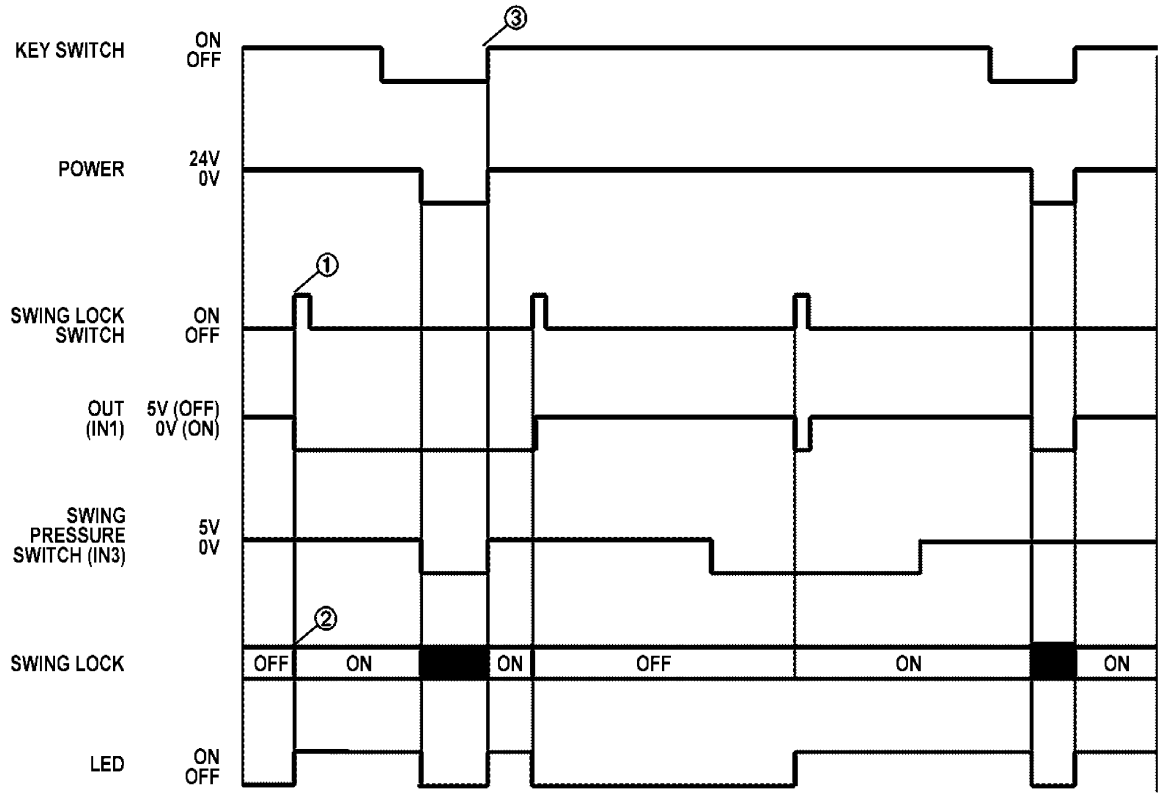

[3] Swing brake auto control

1) Overview

The auto control of the swing brake takes place when the swing lock is OFF.

The auto control also releases the mechanical brake automatically during a digging operation as well as during swing operation. If the operation is halted, the auto control turns on the mechanical brake automatically.

The detailed conditioning for ON/OFF of the swing mechanical brake is shown below.

- The swing brake will be turned OFF based on the following conditions.
  a)Pressure switch (swing) is ON
  b)P1>15 MPa or P2>15 MPa
- The swing brake will be turned ON based on the following conditions.
  a)Pressure switch (attachment) stays OFF for 5 seconds
  b)Key switch is OFF
- The swing mechanical brake will be deactivated once when the pump delivery pressure (P1 or P2) grows over 15 MPa during travel. However, it will take effect in 5 seconds.

https://truckmanualshub.com/

Travel Speed Switch-over

Low-speed travel function will be deactivated.

Travel		The state of motor inclines
II	High speed	Inclines toward high-speed of the travel motor (switches automatically)
I	Low speed	Inclines toward low-speed of the travel motor

[1] Circuit configuration

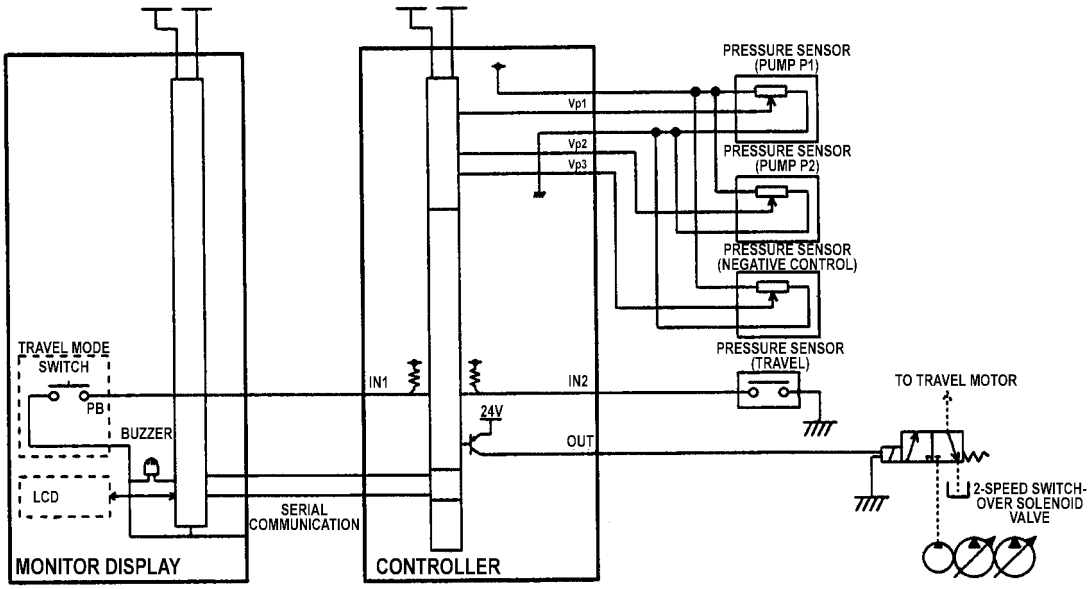

[2] Time chart

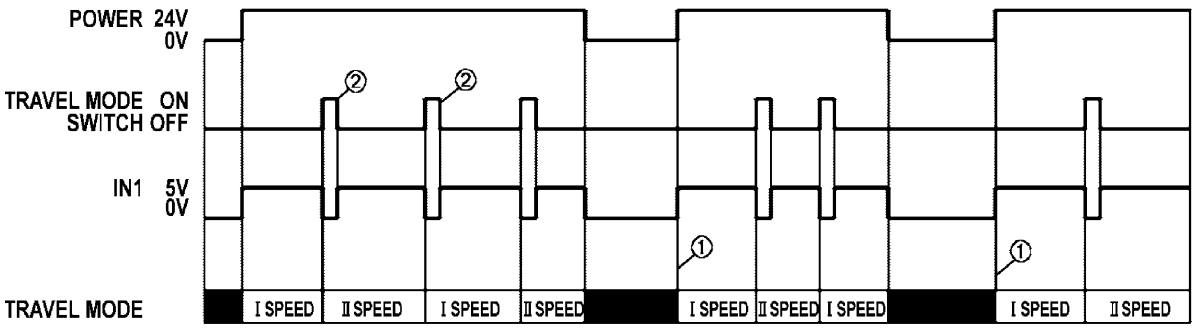

[3] Switching travel modes

1) Regardless of the mode the machine was in when the key switch was off, the mode will always be Travel I (low speed) when the switch is turned on. (The previous data will be reset.)
2) By pressing the travel mode switch, signal (IN1: 0 V) will be sent out to the controller, and the modes will toggle between I and II (low and high).
3) The controller transmits to the monitor the necessary updates to be displayed.
4) The monitor display receives transmission and reflects the updated content on LCD.

https://truckmanualshub.com/

[4] Operation

1) When Travel I (low speed) is selected
   - The controller output (OUT) and the 2-speed travel switch-over solenoid valve stay OFF at all times. Also the travel motor will always incline toward low-speed.
2) When Travel II (high speed) is selected
   Even when the controller's output is on, if the travel motor's drive pressure is high, the mode will be switched over to low-speed through the function of the motor itself (auto 2-speed function).

Travel Alarm

[1] Circuit configuration

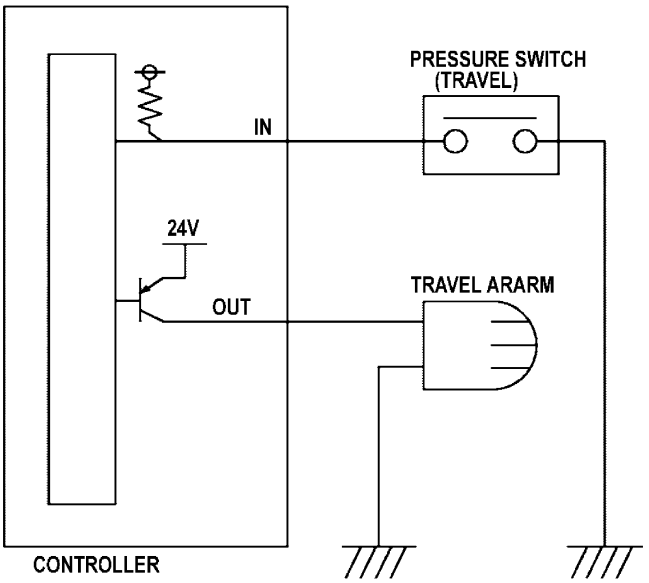

[2] Time chart

The pressure switch (travel) will be turned ON through the travel lever operation. The travel alarm will sound for 10 seconds, then stop.

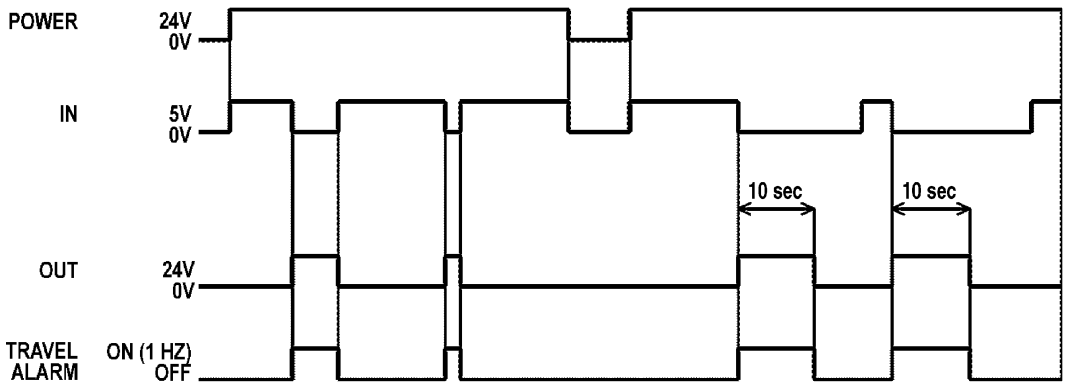

https://truckmanualshub.com/

Power Shut-off Delay

[1] Alteration

In current type 3, the battery relay is to be energized for 3 seconds by PNP output signal from the controller after the key has been turned OFF.

In the next type, in compliance with the request of ISUZU, power being supplied to the engine controller is shut off via main relay and at the same time, the battery relay stops to be energized shutting off the power to the machine.

Delayed operation time is 4 seconds (immediately after 0 min^{-1} of engine speed) from the key is turned ON to OFF, and approximately 7 seconds after starting to stopping the engine.

[2] Circuit configuration

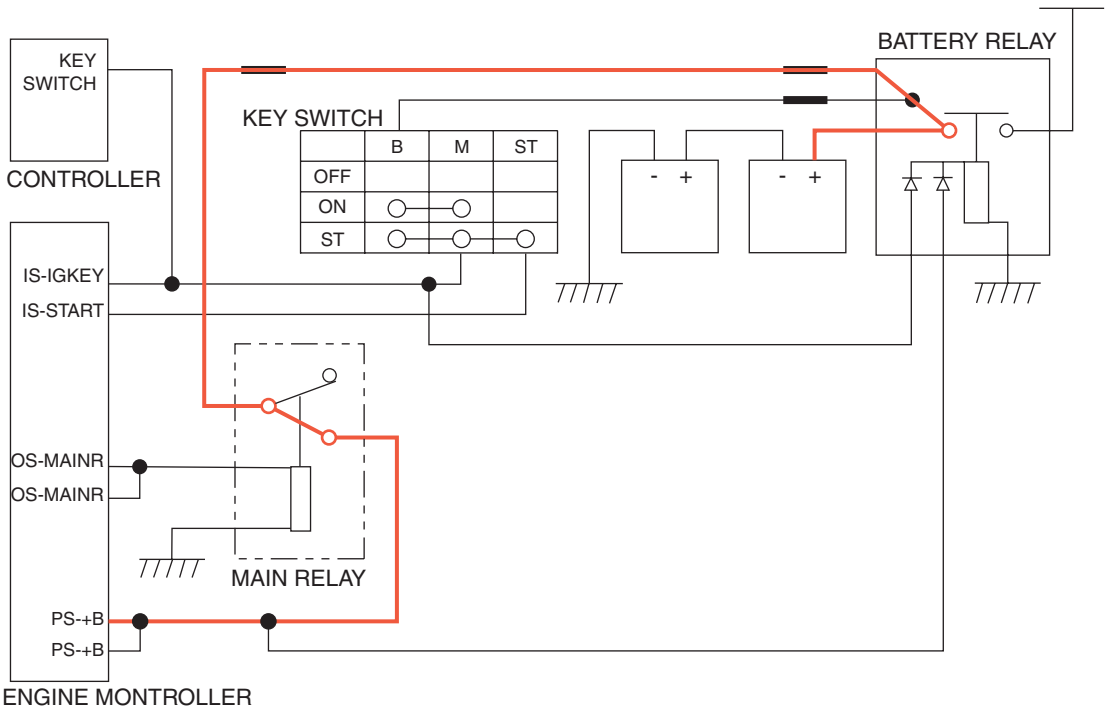

[3] Time chart

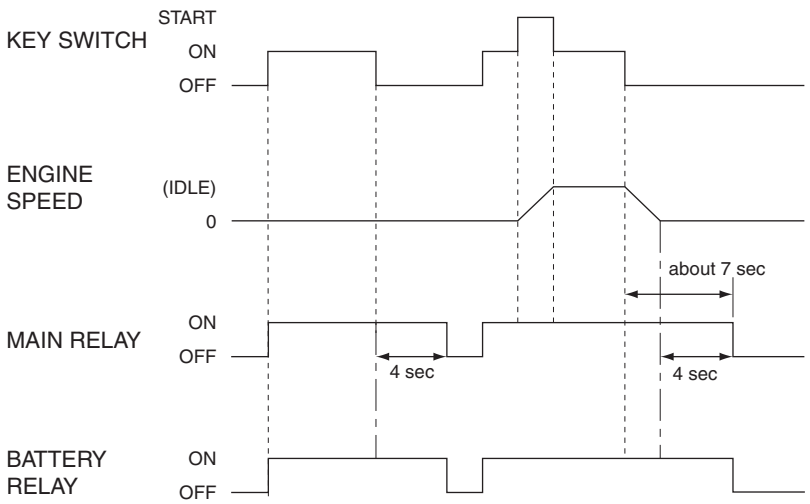

https://truckmanualshub.com/

Control of Hydraulic Driven Fan

[1] Outline of control

Main control of hydraulic driven fan is illustrated below.
Detailed description for each section is shown after next section.

1) Fan speed control according to water temperature
2) Spool stick prevention control
3) Engine start/stop control
4) Reversing fan control (cleaning mode)
5) Actual fan speed checking mode

[2] Basic circuit configuration

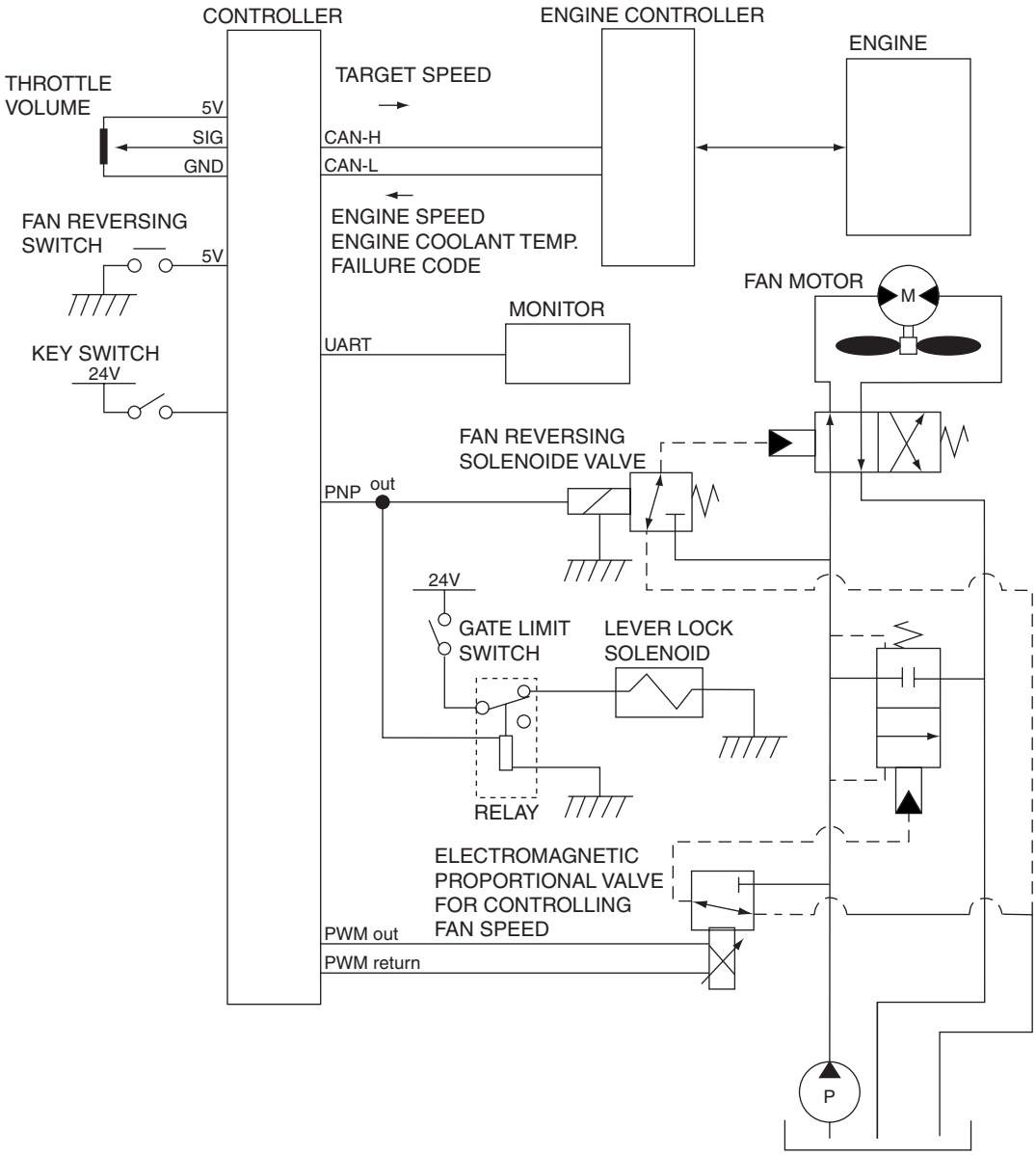

https://truckmanualshub.com/

1. Fan speed control according to water temperature

Set the fan rotation at a low speed to prevent over-cooling and carry out quicker warming-up when engine cooling water temperature is low, and conversely, set the fan at a proper speed to realize low noise and low fuel consumption when engine cooling water temperature is high.

[1] Outline

1) The controller calculates command current value from the map illustrated below according to engine cooling water temperature transferred from the engine controller through CAN communication circuit and then transfers the command current to "PWM out" (electromagnetic proportional valve for controlling fan speed) so that the fan may rotate at a speed in response to the command current.

2) Judged value of fan speed at the command current value is to be decided only at the maximum and at the minimum rotation (values shown in Fig. below are both at oil temperature of 50°C), therefore, the fan speed at medium range varies from fan to fan.

[2] Engine cooling water- Command current characteristics

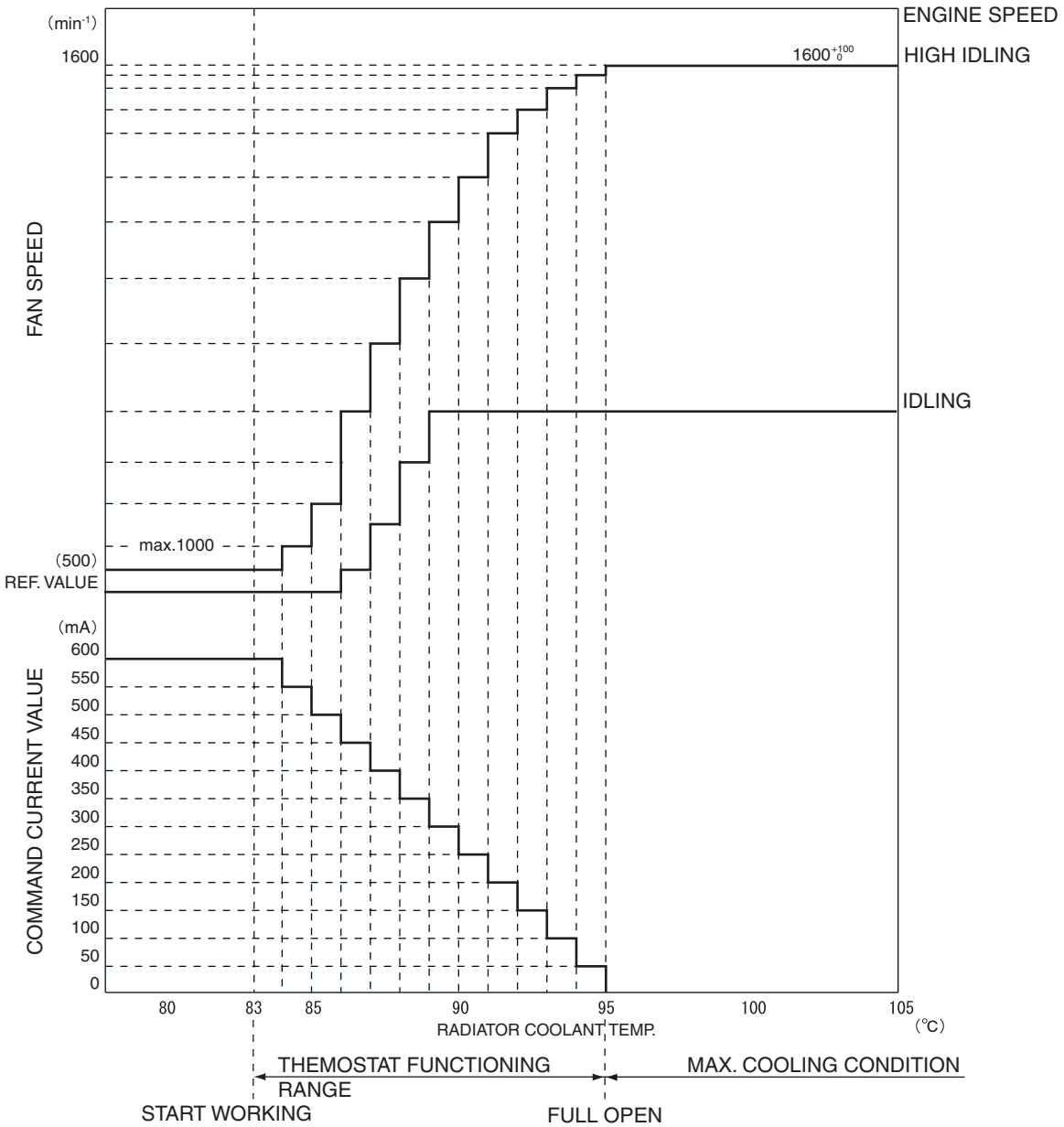

https://truckmanualshub.com/

[3] Back-up operation

1) When failure code illustrated below appears, it allows the command current supplied from the controller to the electromagnetic proportional valve for control fan speed to be 0 mA.
   In addition, when failure code illustrated below occurs, the error will not be returned as fan rotation may become unstable due to poor connection and the like.

   Failure codes related to engine system

E0335	:	Crank sensor trouble
E0340	:	G sensor trouble
E2104	:	CAN-bus trouble
E2106	:	CAN time-out
E0117	:	Trouble with water temperature sensor in low voltage
E0118	:	Trouble with water temperature sensor in high voltage

   Failure codes related to mechanism

E0070	:	Key switch error
E0090	:	CAN communication error

2) When the message "ELEC PROBLEM" is displayed on the monitor due to functioning of "power transistor protection", it allows the command current stated above to be 0mA.

[4] Time chart (back-up operation)

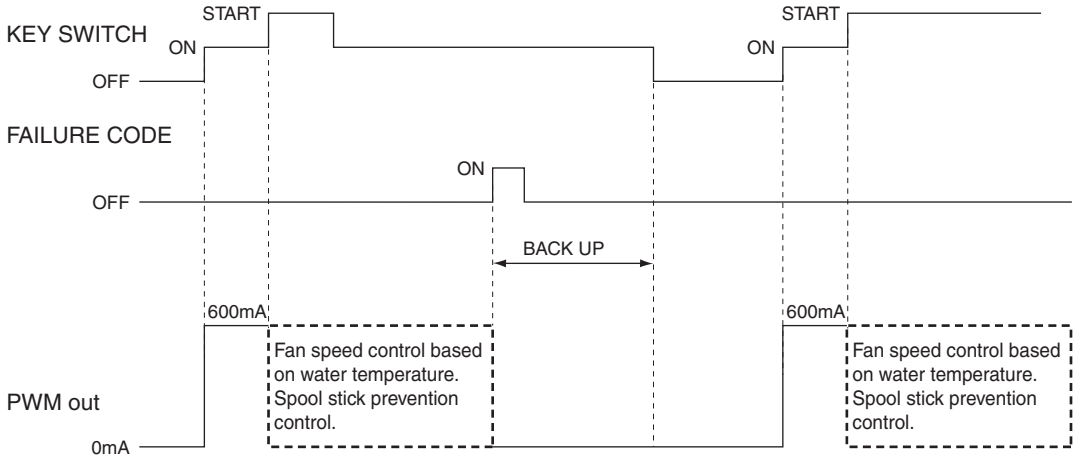

https://truckmanualshub.com/

2. Spool stick prevention control

Spool stick is a phenomenon that the spool with clearance seal is stuck because actuating force of the spool is increased by building-up of fine particles in the oil to the clearance seal when a certain position in the spool is loaded with hydraulic force for a long time.

In order to avoid this, following control is carried out.

Spool stick prevention control for electromagnetic proportional valve for control fan speed

[1] Outline

1) When the engine is started by key switch and the engine speed increases to reach $300min^{-1}$ (engine is judged as started) or more, spool stick prevention current (100mA) is delivered from "PWM out" in the controller at regular intervals (every 1min.) for a certain time (50msec.).

2) Although the spool stick prevention current is delivered at regular intervals (every 1min.), when command current value obtained by "fan speed control according to water temperature" is larger than that of spool stick prevention current, the control becomes invalid and the spool stick prevention current stated above will not be delivered. (Refer to figure below.)

[2] Time chart

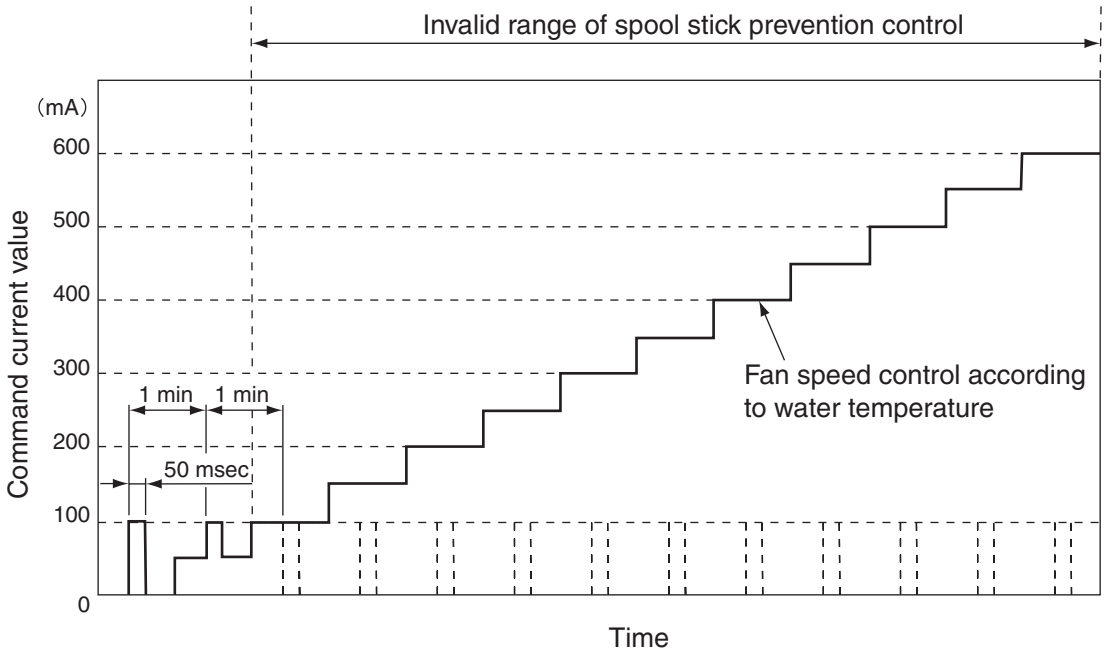

https://truckmanualshub.com/

Solenoid valve for reversing fan Spool stick prevention control

[1] Outline

Engine key ON/OFF mode

1) When the key switch is turned ON and 2 seconds have passed, spool stick prevention signal is delivered from "PNP out" in the controller for a certain period of time (20msec.).
2) When the engine is started within 2 seconds after the key switch has been turned ON, the spool stick prevention signal stated above will not be delivered.
3) Similarly, after the key switch has been turned OFF too, the spool stick prevention signal is delivered from "PNP out" in the controller for a certain period of time (20msec.).

[2] Time chart

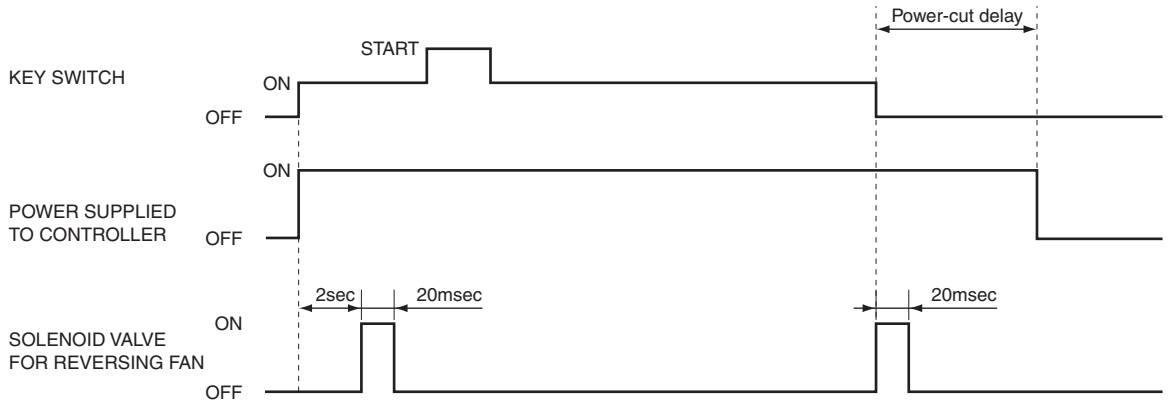

3. Engine start/stop control

[1] Engine start control

When the engine has been started, lower the fan speed (to restrain surge pressure on discharging side of pump) to carry out following control for easing load in starting engine.

1) Turning the key switch ON allows the controller to supply current of 600mA to "PWM out" (electromagnetic proportional valve for control fan speed).
2) When the engine is started by key switch and the engine speed increases to reach 300min^{-1} (engine is judged as started) or more, "PWM out" in the controller shifts to "fan speed control according to water temperature" and "spool stick prevention control".

[2] Engine stop control

In order to prevent cavitation due to fan rotation by inertia when the engine has been stopped, following control is carried out.

1) Turning the key switch OFF allows the controller to supply current of 600 mA to "PWM out" (electromagnetic proportional valve for controlling fan speed).
2) "PWM out" in the controller keeps on supplying current of 600mA while "Dower-cut delav" is functioning.

https://truckmanualshub.com/

[3] Time chart

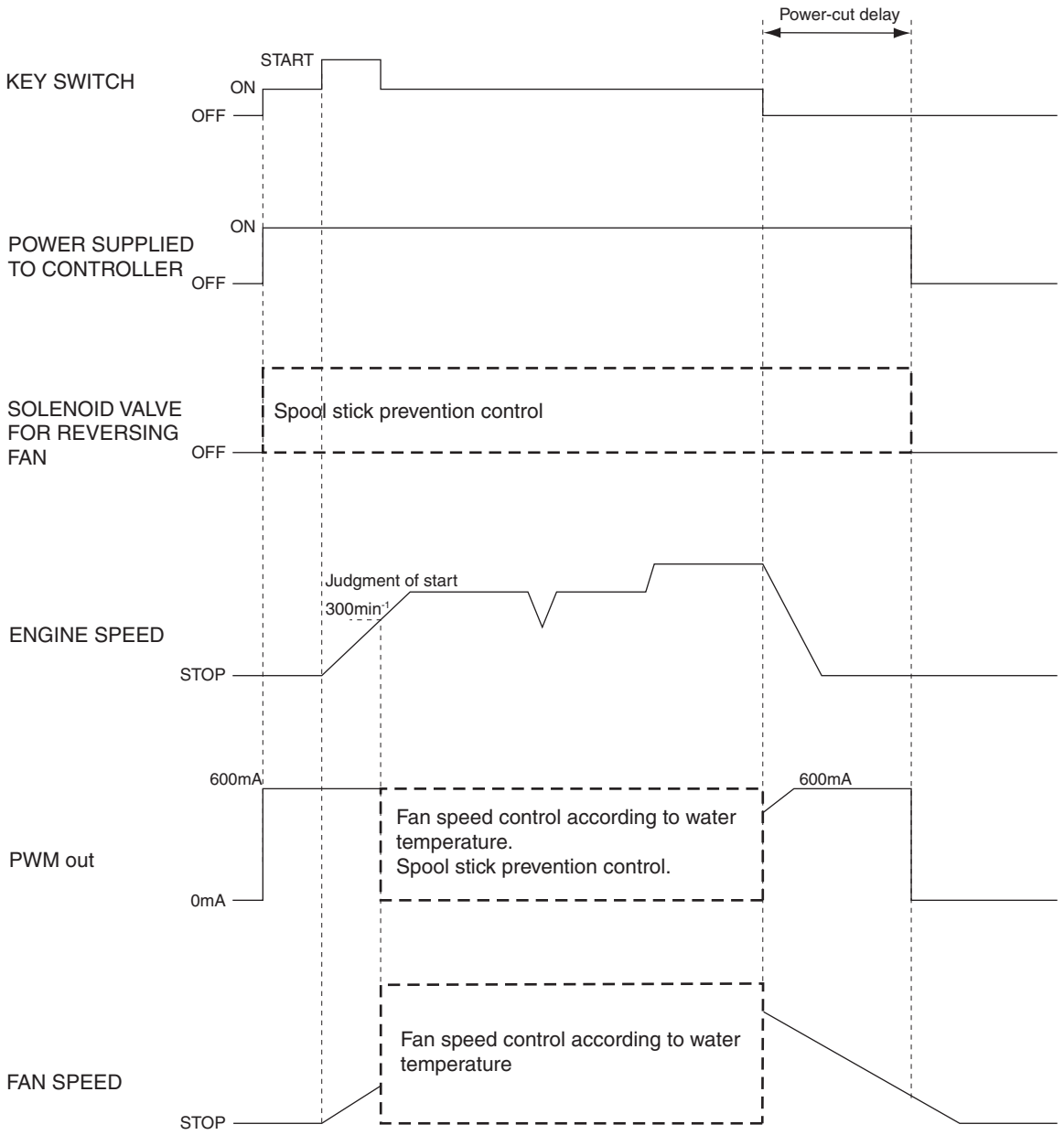

https://truckmanualshub.com/

4. Reversing fan control

Flowing direction of air is reversed by reversing fan revolution so that trifling dust clogged in the radiator core is possible to be removed.

Since heat radiation capacity declines while the fan rotation is being reversed by which overheat of the engine becomes possible, do not operate any control lever.

Change over of mode

[1] Outline

1) Turning ON fan reversing switch (momentary) after the key switch has been turned ON allows the fan to change rotation from normal mode to reverse mode.
   During this period, the buzzer gives warning sound of 2Hz from the monitor to inform that the fan is rotated in reverse mode.
   When the reversing switch is turned ON again, it changes rotation from reverse to normal and the buzzer stops sounding.
2) For reverse mode, previous data are to be reset.
   This means that turning OFF the key switch in either of mode, reverse or normal, allows it to be operated in normal mode when the key switch is turned ON next time.
3) When warning message "OVER HEAT" is displayed on the monitor, it will not be operated in reverse mode.
   The fan reversing switch functions and the mode can be switched over after overheated condition is released and warning message "OVER HEAT" is disappeared from the monitor.
4) When the message "ELEC PROBLEM" is displayed on the monitor due to functioning of "power transistor protection", it will not be operated in reverse mode as stated above.

[2] Time chart

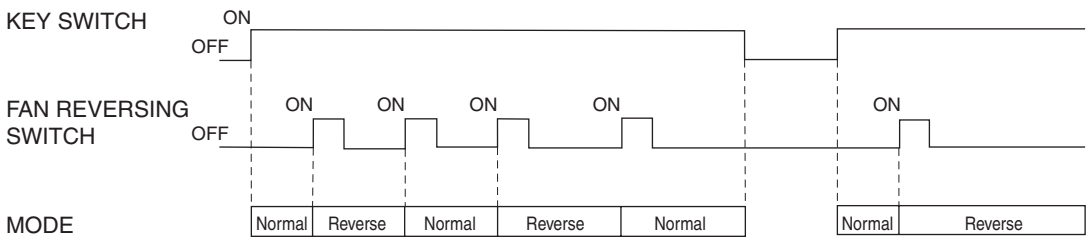

Function of reversing fan

[1] Outline

1) When the fan reversing switch (momentary) is turned ON after the key switch has been turned ON, reversing signal is delivered to the fan reversing solenoid valve to allow the fan to change rotation from normal mode to reverse mode.
   And at the same time, a signal is transferred to the lever lock relay from "PNP out" in the controller and the lever lock solenoid valve turns OFF.
   This allows the machine operation to be impossible regardless of where the gate lever is positioned.
   At this time, command current from "PWM out" in the controller drops from 600mA to 0 mA.
2) Starting the key switch in the situation above allows the engine to be started in fan reverse mode and the fan rotates at maximum speed as the command current value from "PWM out" in the controller is 0 mA.

https://truckmanualshub.com/

3) When the key switch is turned OFF in reverse mode, it switches to be operated in normal mode when the key switch is turned ON again because previous data are to be reset.

4) Even if it has set up the auto-idle during reversal operation, an auto-idle dose not function.

[2] Time Chart

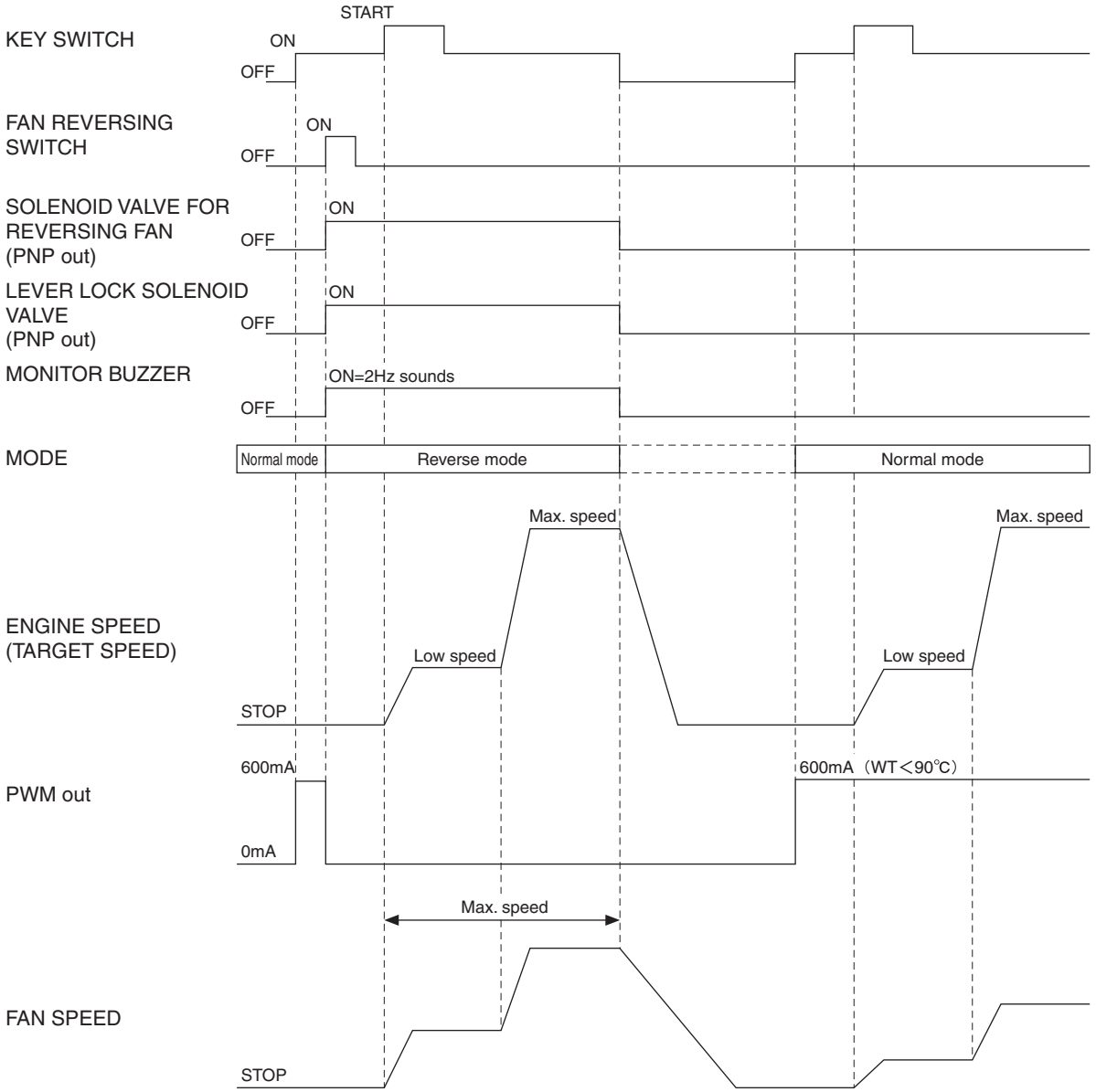

https://truckmanualshub.com/

5. Checking mode of actual fan speed

The actual fan sped is possible to be checked as the fan speed can be set at any point within a certain range by operation of the switch.

[1] Outline

1) Command current of “PWM out” in the controller can be set at any point by 10mA pitch within the range of between 100mA and 600mA at "OUT" in "RST1 (reset)" screen in "Service support indication" (refer to service support items for operation) on the monitor.
2) After "OUT" is selected on the reset screen (refer to figure below) with the buzzer stop switch, displayed figures change every time the travel mode switch is turned ON.
   Displayed figures show command current and indication immediately after selection is command current value at present.
   Once the travel mode switch is turned ON, it shows figures "0100" and every time switch is turned ON, the figures change by 10 as illustrated below.

→0100→0110→0120→0130→0140→0150→……→0550→0560→0570→0580→0590→0600→Current value at present

3) For confirmed fan rotation check mode, data in last time are reset.
   That is, even if the key switch has been turned OFF with the current set at a certain value, it will be turned in normal mode when the key switch is turned ON next time.

[2] Service support screen

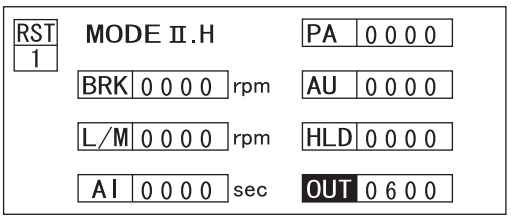

This mode is to be used to check if the fan speed changes according to current variation.

https://truckmanualshub.com/

Fuel Supply Pump Control (Automatic stop) (Option)

[1] Control outline

The controller detects fuel quantity by fuel sensor allowing the fuel supply pump to make an automatic stop when the fuel tank is filled up.

[2] Circuit configration

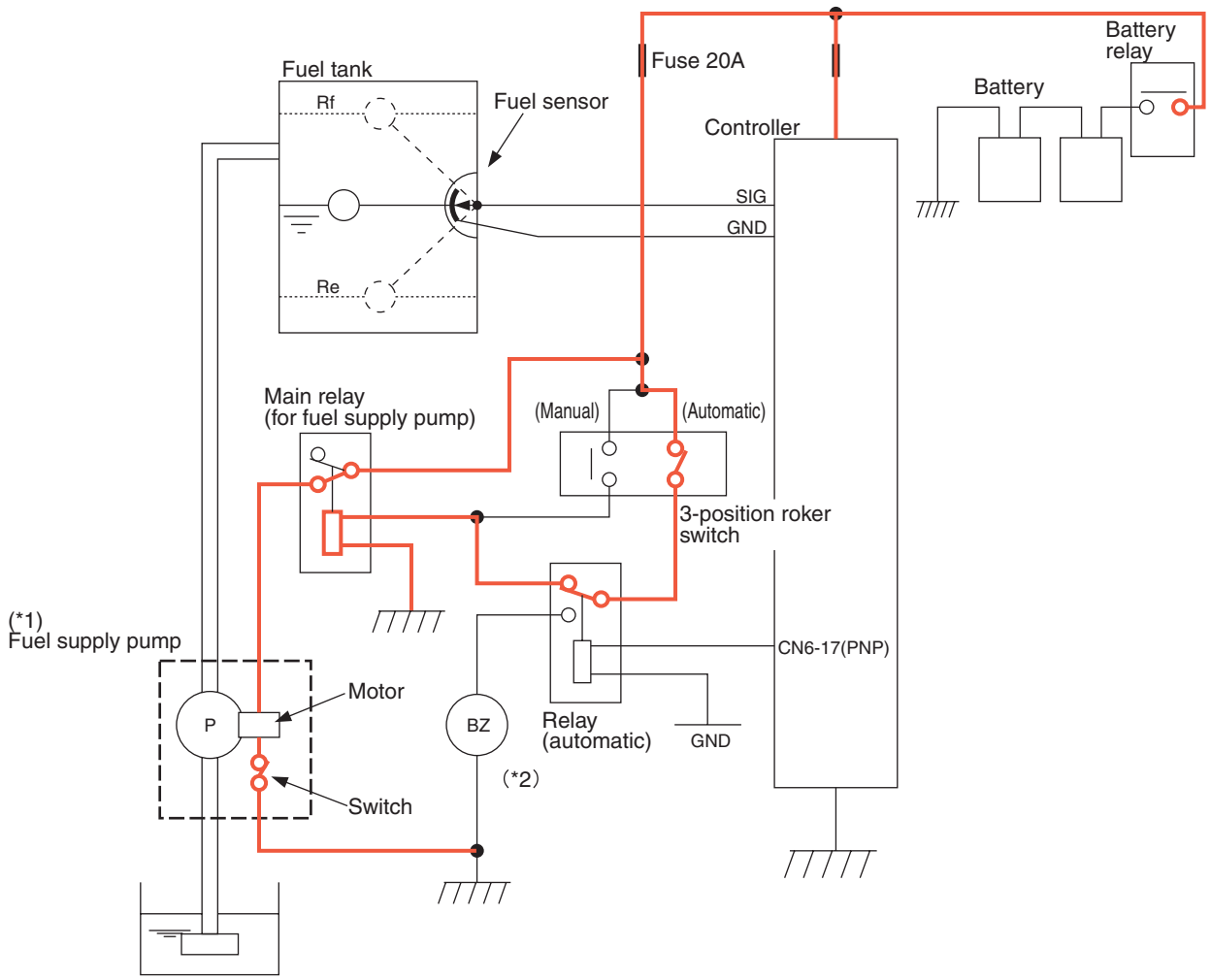

(*1) Fuel supply pump: Made by JABSCO (manufacturer in UK).
(*2) Buzzer: Same buzzer used as traveling alarm to MSR.

* All components other than controller, battery, and fuel level sensor are stored in the tool box (in house in front-right).

https://truckmanualshub.com/

[3] Operation

1) Automatic stop

1. Assemble it with the switch built-in the fuel supply pump turned ON. (No control is required for customers.)
2. Put the 3-position rocker switch to Automatic side after the key switch has been turned ON. (Center: OFF, Automatic Alternate : ON, Manual : Momentary ON.)
3. This operation allows electric power to be supplied to the fuel supply pump by way of both relays of "auto" and "main" so that fuel is pumped up into the fuel tank out of an fuel drum.
4. The controller is always monitoring quantity of fuel remained in the tank by using fuel sensor.
5. When the fuel sensor comes to the full level (Rf) position or above, the controller gives output signal to the relay (auto). (NPN output.)
6. The relay (auto) is switched over by the output signal allowing the power supplied to the fuel pump to be shut off.
7. At the same time, the buzzer sounds to inform that refueling has been made an automatic stop.
8. When the 3-position rocker switch is turned OFF, the buzzer stops sounding and automatic refueling mode is released.
9. Even if the automatic refueling mode has been released, the controller keeps on sending output signal to the relay (auto) if the position of fuel sensor is at the full level (Rf) or above.
10. The controller stops giving the output signal to the relay (auto) when the fuel sensor comes down below the full level (Rf) position.

2) Manual refueling

1. In case where automatic refueling fails functioning due to troubles such as in the fuel sensor, the controller, and the relay (auto).
2. In case where a machine cannot fill up the fuel to its full by automatic refueling.
3. Supply fuel while monitoring fuel gauge with the 3-position rocker switch turned to manual side (momentary).
4. Power is supplied to the fuel supply pump via the relay (main) from the manual switch so that fuel can be supplied to the tank.

https://truckmanualshub.com/

Power Transistor Protection

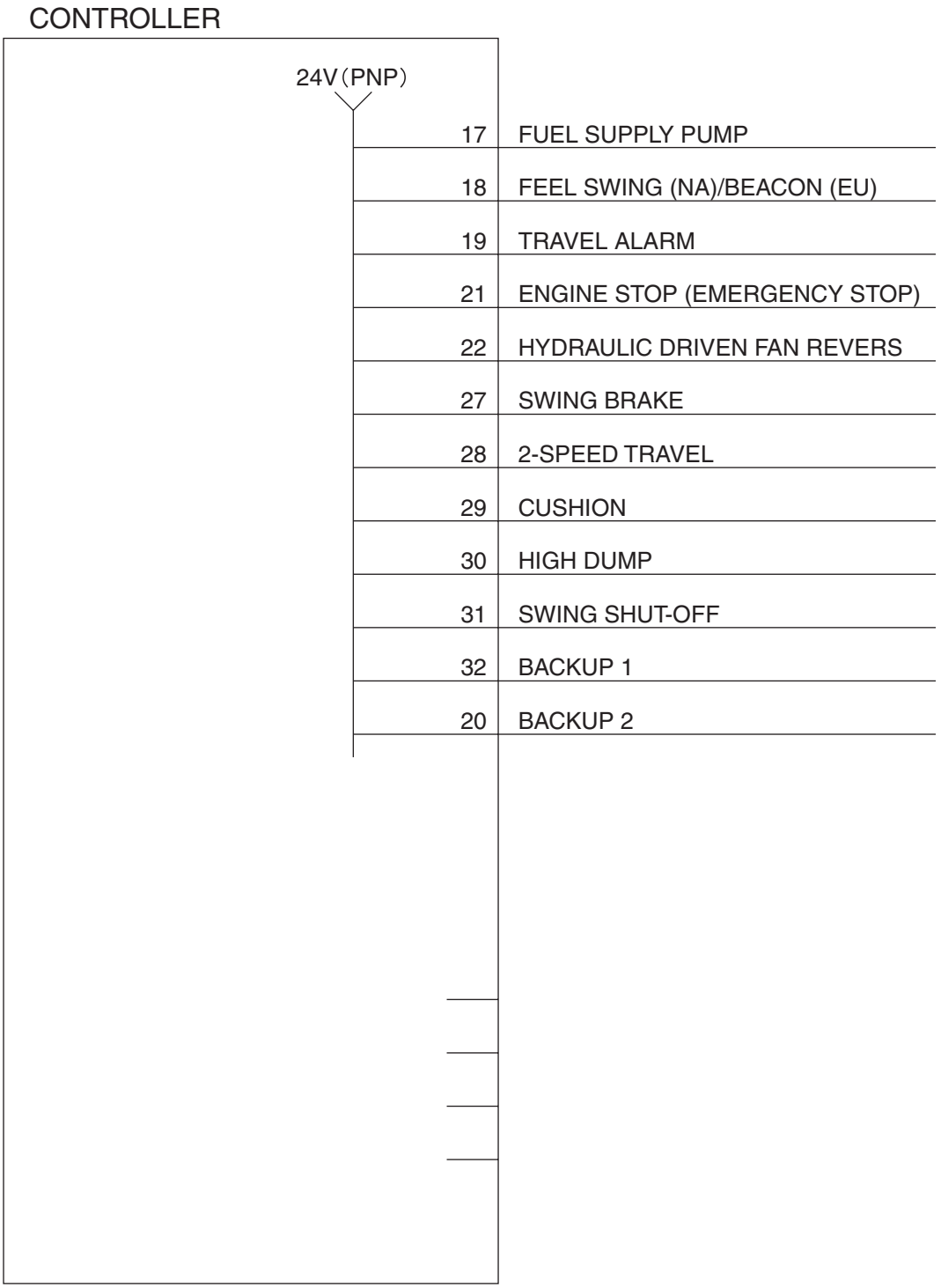

In the event that a solenoid valve or a relay develops a short circuit, the power transistor output will be shut off in order to protect the controller. A "ELEC PROBLEM" message will be displayed during the failure. Perform the service support check to have the location of failure pinpointed and displayed.

Then follow the display result and inspect the wire or the equipment that seems to be experiencing the failure.

https://truckmanualshub.com/

Monitor Display

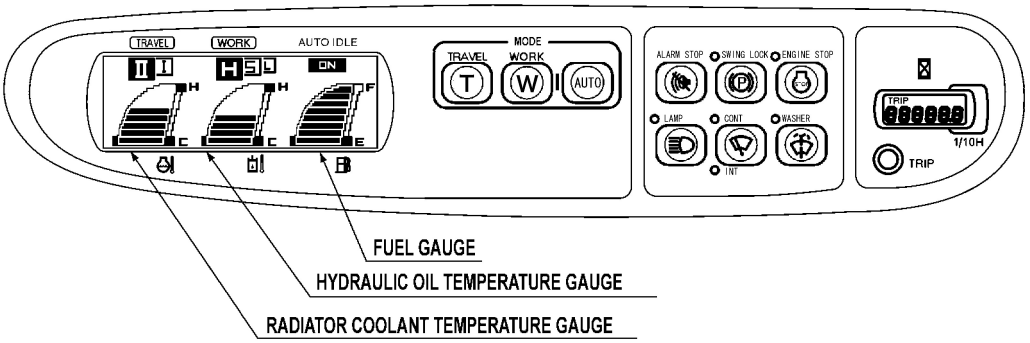

a) Nomal Display

1. Radiator coolant temperature

[1] Circuit configuration

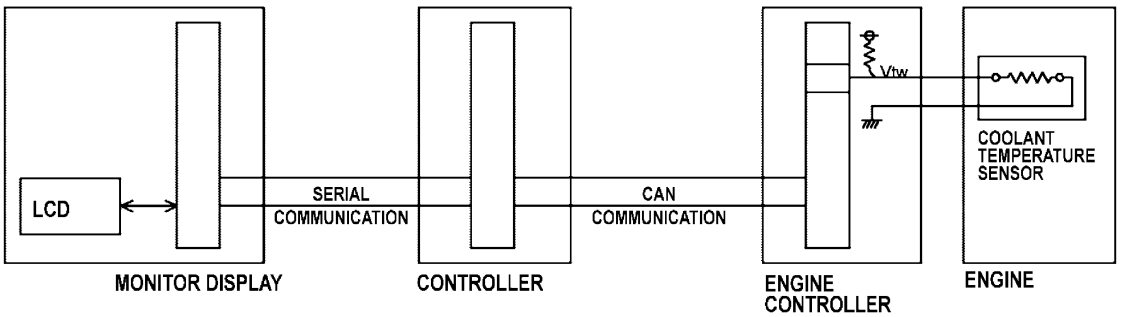

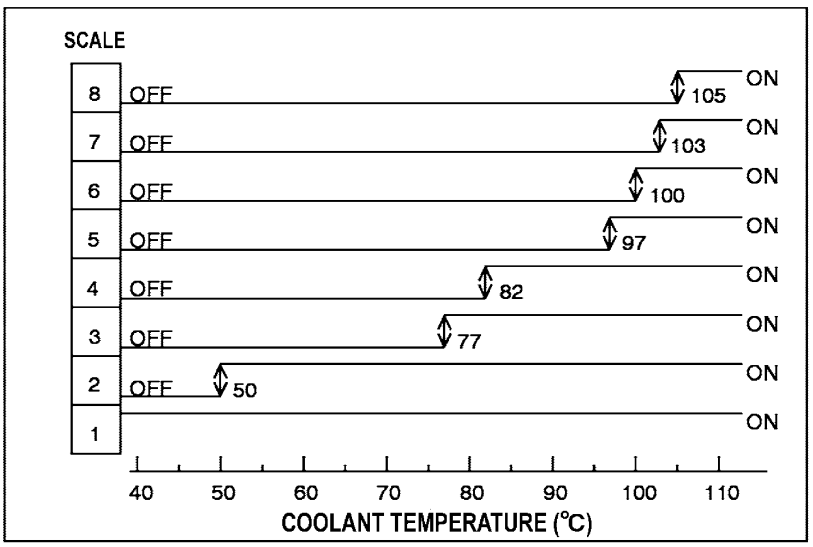

[2] Operation

1) Coolant temperature sensor is installed inside the engine. The signal from this sensor (Vtw) will be transmitted to engine controller as an analog signal (voltage).
2) The engine contoroller converts the transmitted signal into a temperature value. It then transmits this coolant temperature data to the controller via CAN communication.
3) When the controller receives the signal, it uses to the graph shown above to determine the bar graph display level for the signal level. The controller then transmits the data to monitor display via serial communication.
4) When the monitor display receives transmission, it reflects the data received as a bar graph on the display.
5) "OVER HEAT" will be displayed when level 8 lights up on the scale.
(The engine does not stop.)

https://truckmanualshub.com/

2. Hydraulic oil temperature

[1] Circuit configuration

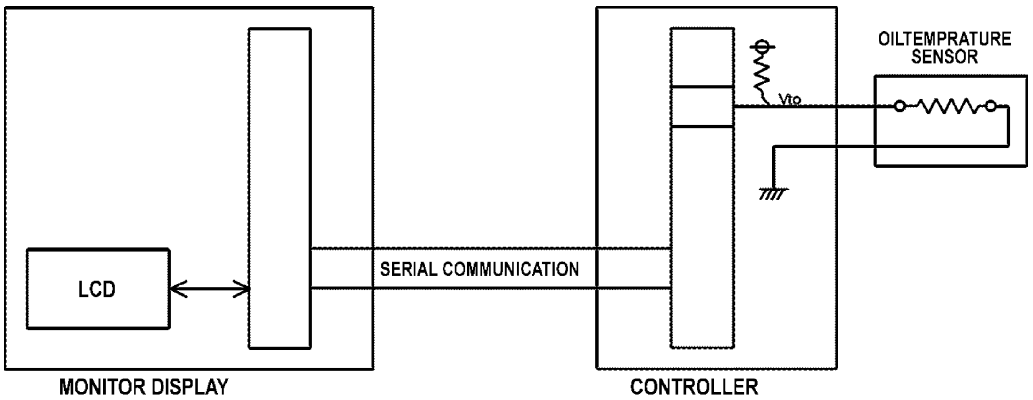

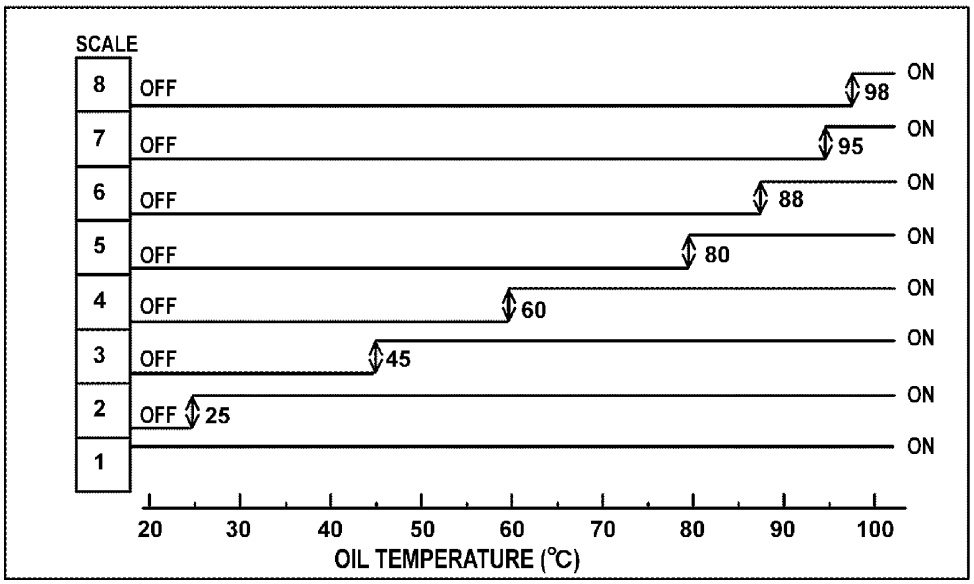

[2] Operation

1) Hydraulic oil temperature sensor is installed inside the suction piping. The signal from this sensor (Vto) will be transmitted to controller as an analog signal (voltage).
2) When the controller receives the signal, it first converts it into a temperature value. The controller then uses to the graph shown above to determine the bar graph display level for the signal level. The controller then transmits the data to monitor display via serial communication.
3) When the monitor display receives transmission, it reflects the data received as a bar graph on the display.
4) "OVER HEAT" will be displayed when level 8 lights up on the scale.

https://truckmanualshub.com/

3. Fuel level

[1] Circuit comfigration

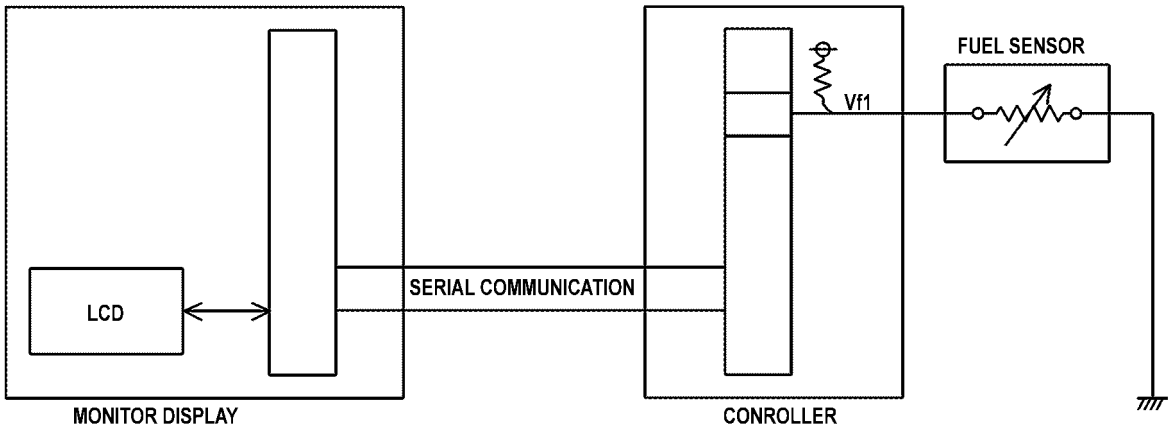

Remaining fuel (L)	Fuel sensor resistance (W)	Input voltage Vfl (V)	Bar graph
865 <	6 to 17	0.283 to 0.802	8
740 to 864	17 to 28	0.802 to 1.321	7
616 to 739	28 to 36	1.321 to 1.698	6
493 to 615	36 to 45	1.698 to 2.123	5
370 to 492	45 to 55	2.123 to 2.594	4
247 to 369	55 to 68	2.594 to 3.208	3
126 to 246	68 to 80	3.208 to 3.774	2
< 125	80.0 <	3.774 <	1 (Refill fuel)

[2] Operation

1) Fuel sensor is installed inside the fuel tank. The signal from this sensor (Vfl) will be transmitted to the controller as an analog signal (voltage).
2) When the controller receives the signal, it uses to the graph shown above to determine the bar graph display level for the signal level. The controller then transmits the data to monitor display via serial communication.
3) When the monitor display receives transmission, it reflects the data received as a bar graph on the display.

https://truckmanualshub.com/

b) Message Display

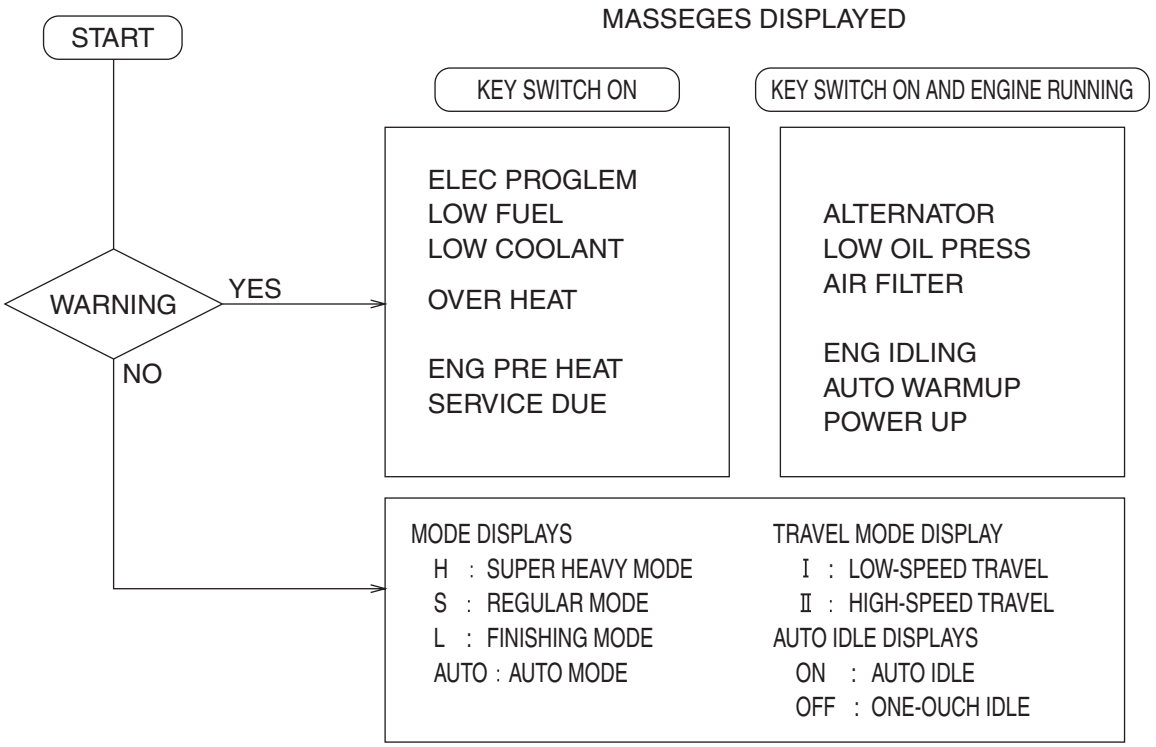

Buzzer	Message Display	Meaning and Measures to be Taken
	ENG PRE HEAT	Engine warm up (glow) is indicated.
	AUTO WARN UP	Indicates automatic warming of the engine. Theautomatic warming is released by moving the throttle volume or operation levers.
	ENG IDLING	Indicates the engine is running at low idling.
	POWER UP	Indicates the system is in automatic digging power up.
	SERVICE DUE	At the time of every 500 hour service intervals, one minute indication appearts for 5 times when the engine starts.
Sounds	LOW FUEL	Indicates the fuel level is very low. Add fuel.
Sounds	LOW COOLANT	Indicates the coolant water level is low. Add coolant water.
Sounds	LOW OIL PRESS	Indicates the engine oil pressure is abnormally low. Stop the engine, check engine oil level and add oil.
Sounds	OVER HEAT	Indicates the engine coolant temperature or hydraulic oil temperature abnormally rises. Put the engine in low idling and reduce water or oil temperatures. Check the radiator & oil cooler.
Sounds	ALTERNATOR	Indicates problems in battery charging system. Check the electric circuit.
Sounds	ELEC PROBLEM	Indicates electric problems (short circuit or disconnection) in the electric system. Check the electric circuit.
Sounds	AIR FILTER	Indicates the air filter clogged. Air fiter are cleaned or exchanged promptly.

https://truckmanualshub.com/

Electric Circuits

SERVICE SUPPORT

Summary

[1] Machine status display	:	Displays the current operating status of the machine.
[2] Trouble diagnosis display	:	Displays current trouble code and the time when trouble codes have been recorded in the past.
[3] Usage history display	:	Displays history of each operation of the machine.
[4] Reset display	:	Displays the current function setting to change it according to customer request.
[5] Machine information display	:	Displays information such as the machine model being set and the serial number of software installed.
[6] Resetting of engine information	:	Enters QR code when injector has been replaced.

Operating Insttructions

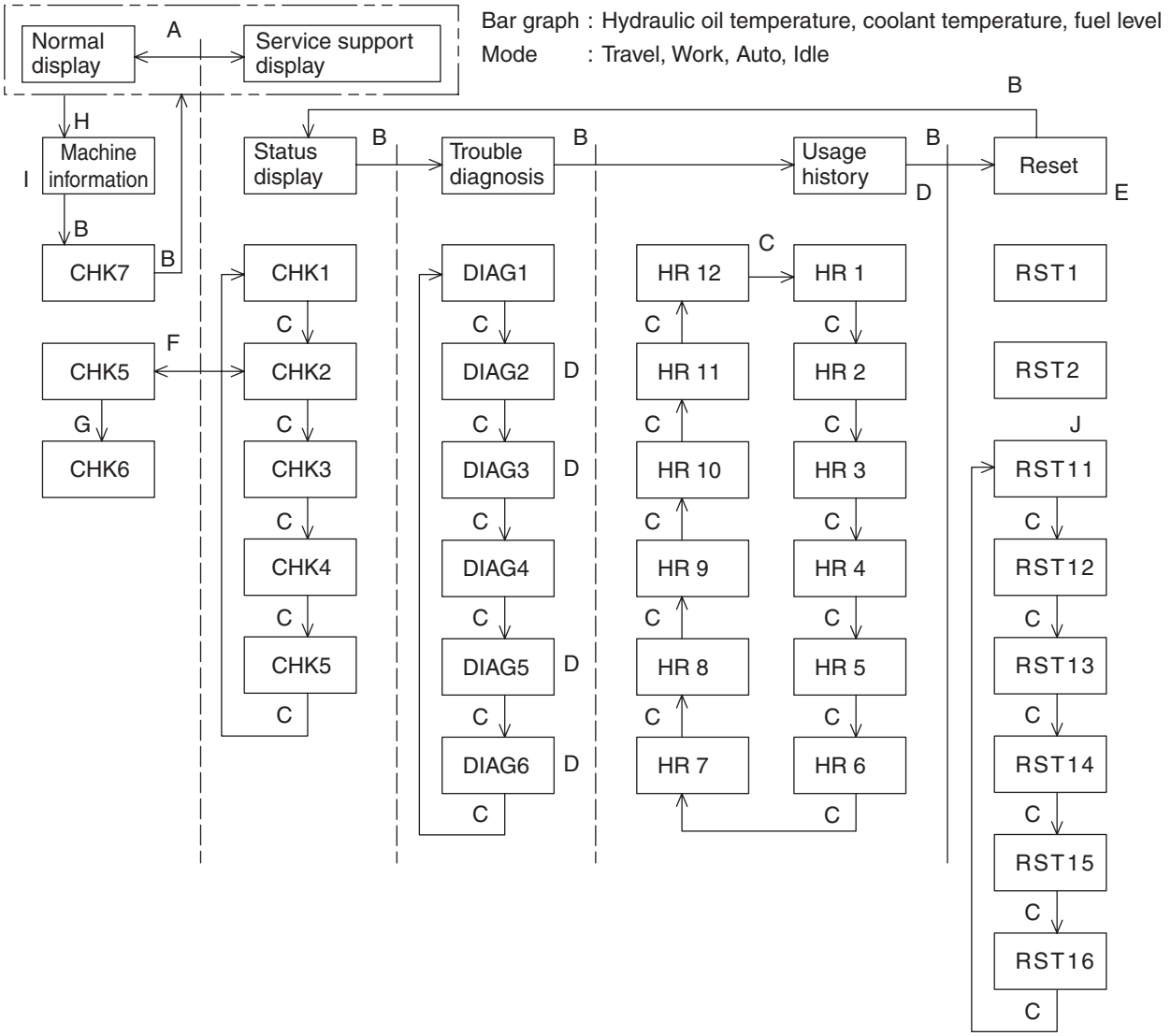

https://truckmanualshub.com/

Operating Switches

A: To be switched after the travel & work mode switch has been turned ON for more than 3 seconds.
B: To be switched when the auto mode switch is turned ON.
C: To be switched when the buzzer stop switch is turned ON.
D: Data is to be cleared after the work mode switch has been turned ON for more than 10 seconds (buzzer sounds when the data have been cleared).
E: Reset function is to be selected when the buzzer stop switch is turned ON, the selected function is to be reset when the travel mode switch is turned ON, and the data are to be reset after the work mode switch has been turned ON for more than 10 seconds (buzzer sounds when the data have been reset).
F: Output with the protection circuit actuated is to be checked when the travel mode switch is turned ON.
G: Automatic detection of short circuit is to be indicated after the travel mode switch has been turned ON for more than 10 seconds.
H: To be switched after the auto mode switch has been turned ON for more than 10 seconds.
I: Selected machine model is be cleared after the auto mode switch has been turned ON for further 10 seconds (buzzer sounds when it has been cleared).
J: To be switched after the one-touch idle switch has been turned ON for more than 10 seconds at any-time while the service support screen is being displayed.

https://truckmanualshub.com/

1. Machine status display (CHK1 to 6)

[1] Status display (CHK1)

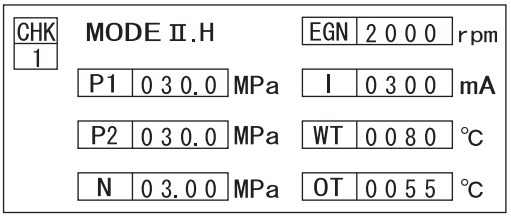

MODE	: Travel mode, work mode
P1	: Main pump (P1) pressure
P2	: Main pump (P2) pressure
N	: Negative control (N) pressure
ENG	: Engine speed
I	: Pump control current value
	: Fan motor current value (when Travel Mode switch ON)
WT	: Radiator coolant temperature
OT	: Hydraulic oil temperature
	: Intake air temperature (only when Travel Mode switch ON)

[2] Status display (CHK2)

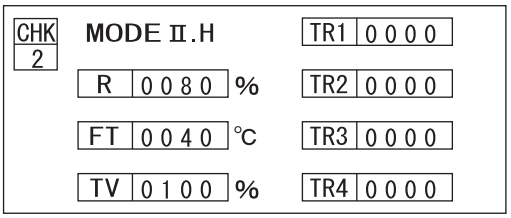

R	: Engine load ratio
FT	: Fuel temperature
	: Boost temperature (only when Travel Mode switch ON)
TV	: Throttle volume degree of opening
TR1	: Controller transistor output
TR2	: Controller transistor output
TR3	: Controller transistor output
TR4	: Controller transistor output

(Transistor output "0" = OFF; "1" = ON)

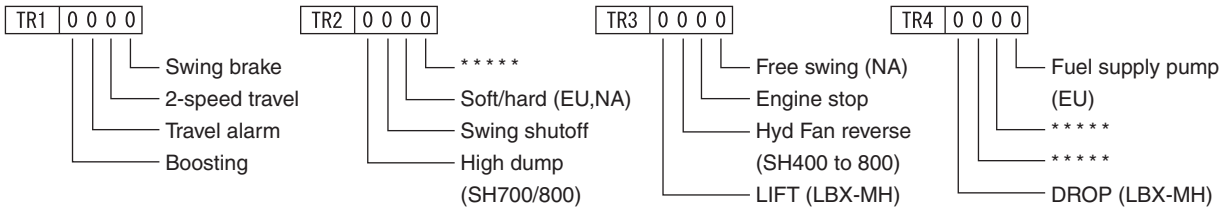

https://truckmanualshub.com/

[3] Status display (CHK3)

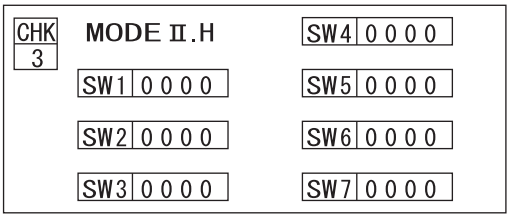

SW1 : Controller switch input (sensor switch)
SW2 : Controller switch input (sensor switch)
SW3 : Controller switch input (sensor switch)
SW4 : Controller switch input (operation switch)
SW5 : Controller switch input (operation switch)
SW6 : Controller switch input (operation switch)
SW7 : Controller switch input (operation switch)

(Switch input "0" = OFF; "1" = ON)

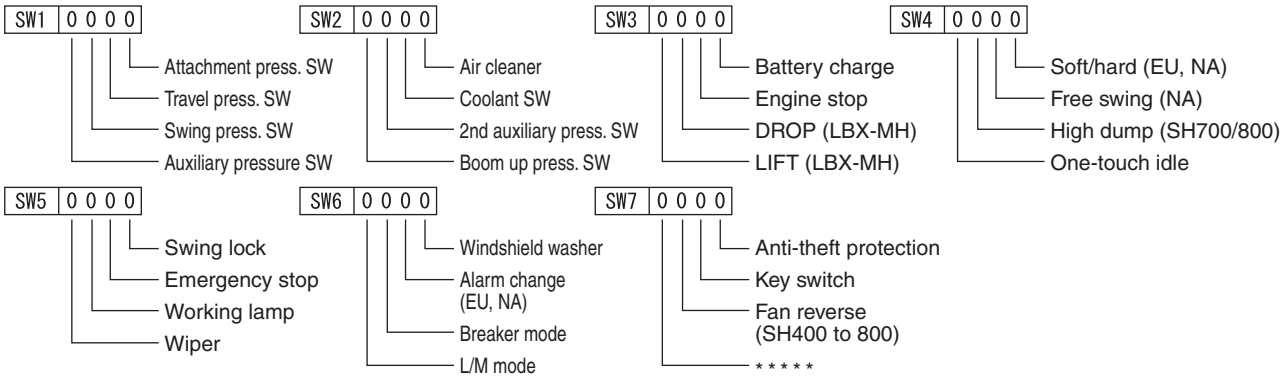

[4] Status display (CHK4)

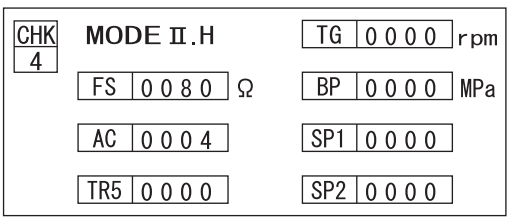

FS : Fuel sensor resistance
AC : Air conditioning temperature information
TR5 : Engine oil pressure
TG : Target engine speed
BP : Boom bottom pressure (EU)
: Overload alarm pressure display (only when beacon switch ON)
SP1 : Atmospheric pressure
SP2 : Boost pressure

AC 0 0 0 4 The following is displayed only for the rightmost column.

- 1: WT＜30℃
- 2: 30℃≦WT＜45℃
- 3: 45℃≦WT＜65℃
- 4: 65℃≦WT＜75℃

<Setting of unit for each shipping territory>

	TR5, SP1, SP2	
	Default	When switched
Japan	kPa	kgf/cm²
Export	kgf/cm²	kPa
North America	psi	kPa
Europe	kPa	-

<Note>

Below a decimal point is not displayed but it is as follows.

□□□□. kPa
□□.□□ kgf/cm²
□□□.□ psi

https://truckmanualshub.com/

[5] Status display (CHK5)

CHK 5	MODE Ⅱ.H		TR1	0101	
R	0080	%	TR2	0001	
FT	0040	℃	TR3	0000	
TV	0100	%	TR4	0000	

R : Engine load ratio
FT : Fuel temperature
TV : Throttle volume degree of opening
TR1 : Transistor output status when over-current detected
TR2 : Transistor output status when over-current detected
TR3 : Transistor output status when over-current detected
TR4 : Transistor output status when over-current detected

1) While the travel mode switch is ON on the "CHK2" screen, the output status when over-current has been detected in the past is displayed.
2) Data is cleared by resetting the trouble code on the trouble diagnosis screen.
3) The example in the figure above shows that a travel alarm, swing braking, and battery relay output were being carried out when over-current was detected.

[6] Status display (CHK6)

CHK 6	MODE Ⅱ.H		TR1	0010	
R	0080	%	TR2	0000	
FT	0040	℃	TR3	0000	
TV	0100	%	TR4	0000	

R : Engine load ratio
FT : Fuel temperature
TV : Throttle volume degree of opening
TR1 : Results of automatic short detection
TR2 : Results of automatic short detection
TR3 : Results of automatic short detection
TR4 : Results of automatic short detection

1) Shorts are automatically detected if the key switch is turned ON while the one-touch idle switch is ON.
   (* The engine must not be running.)
2) If you switch to the "CHK2" screen and turn ON the travel mode switch for 10 seconds, the automatic detection results are displayed.
3) The example in the figure above shows that the 2-speed travel line is currently shorted.
4) This data is cleared when the key switch is turned OFF.
   * For CHK1 to 6, the units can be switched with the work lamp switch. Status held as is when key OFF

https://truckmanualshub.com/

2. Trouble diagnosis display (DIAG 1 to 6)

[1] Trouble diagnosis (DIAG1), Engine system current trouble status (trouble code)

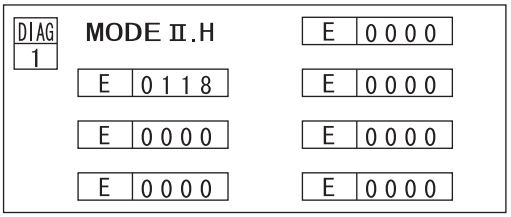

E : Engine system trouble code
For the engine error code list, refer to Page 8

Example : Water temperature sensor abnormality

[2] Trouble diagnosis (DIAG2), Engine system past trouble status (trouble code)

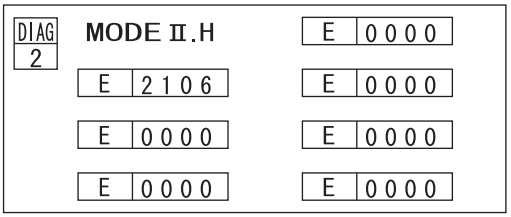

E : Engine system trouble code

Example : CAN time-out abnormality

[3] Trouble diagnosis (DIAG3), Engine system past trouble status
(time of trouble: controller hour meter value)

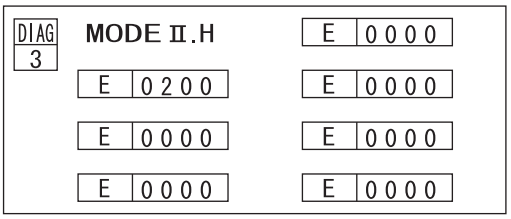

E : Engine system trouble code truble code.

Example : CAN time-out abnormality: Abnormality occurred at 200 hours

1) Switching the work mode switch ON for longer than 10 seconds clears the data on past trouble codes and their times of occurrence.
2) The time displayed with "DIAG3" is the time at which the first trouble code occurred after the data was cleared. (The times for the second and subsequent trouble codes are not recorded.)
3) When the data is cleared, the "DIAG2" and "DIAG3" data is stored into EEPROM.

https://truckmanualshub.com/

[4] Trouble diagnosis (DIAG5), Machine main unit system Current trouble status (trouble code)

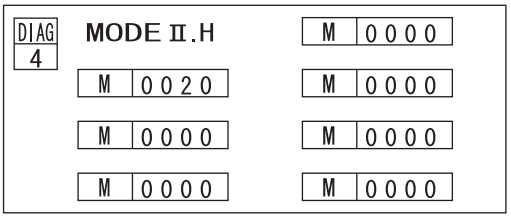

M : Machine main unit system truble code

Example : Oil temperature sensor abnormality

M0000: No abnormality
M0010: Transistor output short
M0020: Oil temperature sensor
M0030: Fuel sensor
M0040: Pressure sensor (P1)
M0050: Pressure sensor (P2)
M0060: Pressure sensor (N)
M0070: Key switch
M0080: Pressure switch (attachments or travel)
M0090: CAN communications error

M00A0: Controller reset
M00B0: Engine controller mismatch
M00C0: Boom pressure sensor (Europe)
M00F0: Overheat (at cooling water temperature of over 105°C)
M00F1: Overheat (at cooling water temperature of over 110°C)
M00F2: Overheat (at cooling water temperature of over 120°C)
M00F3: Overheat (at cooling water temperature of over 80°C)
M00F4: Overheat (at cooling water temperature of over 90°C)
M00F5: Engine oil pressure drop (at pressure of below 40kPa)

[5] Trouble diagnosis (DIAG5), Machine main unit system Past trouble status (trouble code)

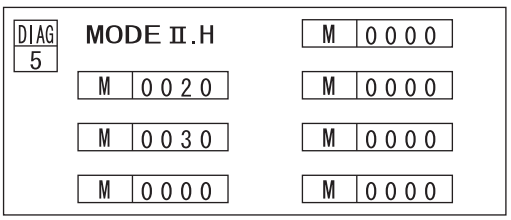

M : Machine main unit ststem trouble code

Example : Oil temperature sensor abnormality, fuel sensor abnormality

Fuel sensor abnormality: Abnormality occurred at 1000 hours

[6] Trouble diagnosis (DIAG6), Machine main unit system Past trouble status (time of trouble: controller hour meter value)

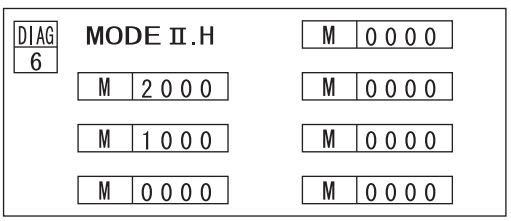

M : Machine main unit ststem trouble code

Example : Oil temperature sensor abnormality : Abnormality occurred at 2000 hours
Fuel sensor abnormality: Abnormality occurred at 1000 hours

1) Switching the work mode switch ON for longer than 10 seconds clears the data on past trouble codes and their times of occurrence.
2) The time displayed with "DIAG6" is the time at which the first trouble code occurred after the data was cleared. (The times for the second and subsequent trouble codes are not recorded.)
3) When the data is cleared, the "DIAG5" and "DIAG6" data is stored into EEPROM.

https://truckmanualshub.com/

[7] Engine error code list

	Trouble code	Trouble contents	4H	6H	6U/6W	Monitor display	Restoration from troubles
	0087	No pump pressure send (fuel leak)	○	○	○	ELEC PROBLEM	1
	0088	Common rail pressure abnormality (1st stage. 2nd stage)	○	○	○	ELEC PROBLEM	1
	0089	Common rail pressure abnormality (pump overpressure send)	○	○	○	ELEC PROBLEM	1
	0090	SCV drive system cut line, +B short, ground short PCV1 drive system cut line or ground snort	○	○	○	ELEC PROBLEM	2
	0092	PCV1 drive system +B short	—	—	○	ELEC PROBLEM	1
	0107	Atmospheric pressure sensor abnormality (low voltage abnormality)	○	○	○	ELEC PROBLEM	2
	0108	Atmospheric pressure sensor abnormality (high voltage abnormality)	○	○	○	ELEC PROBLEM	2
*	0112	Intake air temperature sensor abnormality (low voltage abnormality)	○	○	○	ELEC PROBLEM	2
*	0113	Intake air temperature sensor abnormality (high voltage abnormality)	○	○	○	ELEC PROBLEM	2
*	0117	Water temperature sensor abnormality (low voltage abnormality)	○	○	○	ELEC PROBLEM	2
*	0118	Water temperature sensor abnormality (high voltage abnormality)	○	○	○	ELEC PROBLEM	2
*	0182	Fuel temperature sensor abnormality (low voltage abnormality)	○	○	○	—	2
*	0183	Fuel temperature sensor abnormality (high voltage abnormality)	○	○	○	—	2
	0192	Common rail pressure sensor abnormality (low voltage abnormality)	○	○	○	ELEC PROBLEM	2
	0193	Common rail sensor abnormality (high voltage abnormality)	○	○	○	ELEC PROBLEM	2
	0201	Injection nozzle #1 drive system open line	○	○	○	ELEC PROBLEM	1
	0202	Injection nozzle #2 drive system open line	○	○	○	ELEC PROBLEM	1
	0203	Injection nozzle #3 drive system open line	○	○	○	ELEC PROBLEM	1
	0204	Injection nozzle #4 drive system open line	○	○	○	ELEC PROBLEM	1
	0205	Injection nozzle #5 drive system open line	—	○	○	ELEC PROBLEM	1
	0206	Injection nozzle #6 drive system open line	—	○	○	ELEC PROBLEM	1
	0219	Overrun	○	○	○	ELEC PROBLEM	2
	0237	Boost pressure sensor abnormality (low voltage abnormality)	○	○	○	ELEC PROBLEM	2
	0238	Boost pressure sensor abnormality (nigh voltage abnormality)	○	○	○	ELEC PROBLEM	2
	0335/ 0336	Crank sensor abnormality (no signal, abnormal signal)	○	○	○	ELEC PROBLEM	1
	0340/ 0341	Cam (G) sensor abnormality (no signal, abnormal signal)	○	○	○	ELEC PROBLEM	1
	0380	Glow relay abnormality	○	○	○	ELEC PROBLEM	1
	0487	EGR position sensor abnormality	○	○	○	ELEC PROBLEM	1
	0488	EGR valve control abnormality	○	○	○	ELEC PROBLEM	2
	0522	Engine oil pressure sensor abnormality (low voltage abnormality)	○	○	○	ELEC PROBLEM	1

https://truckmanualshub.com/

	Trouble code	Trouble contents	4H	6H	6U/6W	Monitor display	Restoration from troubles
	0523	Engine oil pressure sensor abnormality (high voltage abnormality)	○	○	○	ELEC PROBLEM	2
	0601	ROM abnormality	○	○	○	ELEC PROBLEM	2
	0603	EEPROM abnormality	○	○	○	ELEC PROBLEM	2
	0606	CPU abnormality	○	○	○	ELEC PROBLEM	2
	0611	Charge circuit 1 abnormality	○	○	○	ELEC PROBLEM	2
	0612	Charge circuit 2 abnormality	○	○	○	ELEC PROBLEM	2
	1093	No pump pressure send (2nd stage)	—	—	○	ELEC PROBLEM	1
	1095	Pressure limiter open	○	○	○	ELEC PROBLEM	1
*	1112	Boost temperature sensor abnormality (low voltage abnormality)	○	○	○	—	2
*	1113	Boost temperature sensor abnormality (high voltage abnormality)	○	○	○	—	2
	1173	Overheating	○	○	○	—	2
	1261	Injection nozzle common 1 drive system abnormality	○	○	○	ELEC PROBLEM	1
	1262	Injection nozzle common 2 drive system abnormality	○	○	○	ELEC PROBLEM	1
	1291	PCV2 drive system cut line or ground short	—	—	○	ELEC PROBLEM	2
	1292	PCV2 drive system +B short	—	—	○	ELEC PROBLEM	1
	1345	Cam (G) sensor out of phase	○	○	○	ELEC PROBLEM	1
	1625	Main relay system abnormality	○	○	○	ELEC PROBLEM	2
	1630	A/D conversion abnormality	○	○	○	ELEC PROBLEM	2
	1631	5V power supply 1 voltage abnormality	○	○	○	—	2
	1632	5V power supply 2 voltage abnormality	○	○	○	ELEC PROBLEM	2
	1633	5V power supply 3 voltage abnormality	○	○	○	ELEC PROBLEM	2
	1634	5V power supply 4 voltage abnormality	○	○	○	ELEC PROBLEM	2
	1635	5V power supply 5 voltage abnormality	○	○	○	ELEC PROBLEM	2
	2104	CAN bus abnormality	○	○	○	ELEC PROBLEM	2
	2106	CAN timeout abnormality	○	○	○	ELEC PROBLEM	2

Note :

1. Item marked with " ○ " in the table means that it can be applied.
2. Restoration from troubles.
   There are 2 ways as illustrated below to restore it from troubles.
   In order to clear an error code depending on circumstances, control of main switch is necessary as follows:.
   1: Turn ON the key switch to start the engine, hold the switch for 10 second as it is turned ON, and then turn it OFF to restore it to be normal.
   2: Turn ON the key switch, hold the switch for 10 second as it is, and then turn it OFF to restore it to be normal.

For temperature sensors marked with "*" in the table however, hold the key switch for 3 minutes after it has been turned ON, then turned it OFF.

https://truckmanualshub.com/

3. Usage history display (HR1 - 12)

[1] Usage history (HR1)

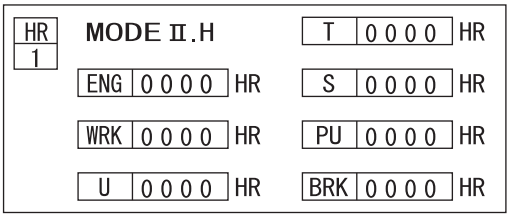

ENG : Hour meter (alternator generation time)
WRK : Machine operation time (attachment ON or travel ON)
U : Attachment operation time
T : Travel operation time
S : Swing operation time
PU : Boost time
BRK : Breaker usage time

[2] Usage history (HR2)

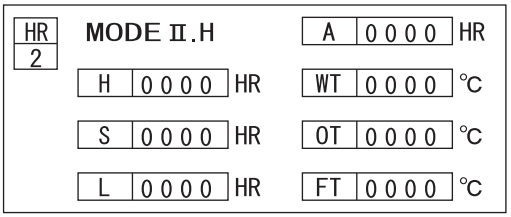

H : H mode usage time
S : S mode usage time
L : L mode usage time
A : A mode usage time
WT : Maximum coolant temperature
OT : Maximum hydraulic oil temperature
FT : Maximum fuel temperature

[3] Usage history (HR3)

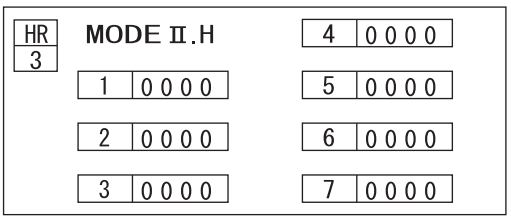

1 : Controller power supply ON time
2 : 1-speed mode usage time
3 : 2-speed mode usage time
4 : Travel hydraulic only time
5 : Maintenance time
6 : *****
7 : *****

[4] Usage history (HR4)

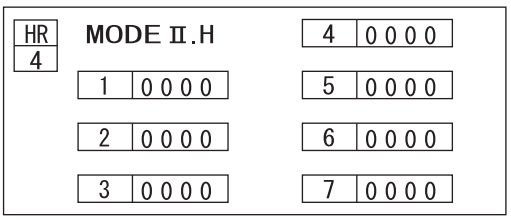

[P1 pressure distribution]
1 : Time P1 10 MPa or less
2 : Time P1 10 to 15 MPa
3 : Time P1 15 to 20 MPa
4 : Time P1 20 to 25 MPa
5 : Time P1 25 to 30 MPa
6 : Time P1 30 to 25 MPa
7 : Time P1 35 MPa

https://truckmanualshub.com/

[5] Usage history (HR5)

HR 5	MODE Ⅱ.H			
	1	0000	4	0000
	2	0000	5	0000
	3	0000	6	0000
			7	0000

[P2 pressure distribution]

1 : Time P2 10 MPa or less
2 : Time P2 10 to 15 MPa
3 : Time P2 15 to 20 MPa
4 : Time P2 20 to 25 MPa
5 : Time P2 25 to 30 MPa
6 : Time P2 30 to 35 MPa
7 : Time P2-35 MPa

[6] Usage history (HR6)

HR 6	MODE Ⅱ.H			
	1	0000	4	0000
	2	0000	5	0000
	3	0000	6	0000
			7	0000

[Engine speed distribution]

1 : Time N 1175 min^{-1} or less
2 : Time N 1175 to 1375 min^{-1}
3 : Time N 1375 to 1575 min^{-1}
4 : Time N 1575 to 1775 min^{-1}
5 : Time N 1775 to 1975 min^{-1}
6 : Time N 1975 to 2175 min^{-1}
7 : Time N 2175 min^{-1} or more

[7] Usage history (HR7)

HR 7	MODE Ⅱ.H			
	1	0000	4	0000
	2	0000	5	0000
	3	0000	6	0000
			7	0000

[Coolant temperature distribution]

1 : Time TW 77°C or less (Marks 1 and 2 on the bar graph)
2 : Time TW 77 to 82°C (Mark 3 on the bar graph)
3 : Time TW 82 to 97°C (Mark 4 on the bar graph)
4 : Time TW 97 to 100°C (Mark 5 on the bar graph)
5 : Time TW 100 to 103°C (Mark 6 on the bar graph)
6 : Time TW 103 to 105°C (Mark 7 on the bar graph)
7 : Time TW 105°C or more (Mark 8 on the bar graph)

[8] Usage history (HR8)

HR 8	MODE Ⅱ.H			
	1	0000	4	0000
	2	0000	5	0000
	3	0000	6	0000
			7	0000

[Hydraulic oil temperature distribution]

1 : Time TO 45×C or less (Marks 1 and 2 on the bar graph)
2 : Time TO 45 to 60°C (Mark 3 on the bar graph)
3 : Time TO 60 to 80°C (Mark 4 on the bar graph)
4 : Time TO 80 to 88°C (Mark 5 on the bar graph)
5 : Time TO 88 to 95°C (Mark 6 on the bar graph)
6 : Time TO 95 to 98°C (Mark 7 on the bar graph)
7 : Time TO 98°C or more (Mark 8 on the bar graph)

https://truckmanualshub.com/

[9] Usage history (HR9)

HR 9	MODE Ⅱ.H			
	1	0000	4	0000
	2	0000	5	0000
	3	0000	6	0000
			7	0000

[Fuel temperature distribution]
1 : Time TF 30°C or less
2 : Time TF 30 to 40°C
3 : Time TF 40 to 50°C
4 : Time TF 50 to 60°C
5 : Time TF 60 to 70°C
6 : Time TF 70 to 80°C
7 : Time TF 80°C or more

[10]Usage history (HR10)

HR 10	MODE Ⅱ.H			
	1	0000	4	0000
	2	0000	5	0000
	3	0000	6	0000
			7	0000

[Load ratio distribution]
1 : Time R 30% or less
2 : Time R 30 to 40%
3 : Time R 40 to 50%
4 : Time R 50 to 60%
5 : Time R 60 to 70%
6 : Time R 70 to 80%
7 : Time R 80% or more

[11] Usage history (HR11)

HR 11	MODE Ⅱ.H			
	1	0000	4	0000
	2	0000	5	0000
	3	0000	6	0000
			7	0000

[H mode high idle load ratio distribution]
1 : Time R 30% or less
2 : Time R 30 to 40%
3 : Time R 40 to 50%
4 : Time R 50 to 60%
5 : Time R 60 to 70%
6 : Time R 70 to 80%
7 : Time R 80% or more

[12]Usage history (HR12)

HR 12	MODE Ⅱ.H			
	1	0000	4	0000
	2	0000	5	0000
	3	0000	6	0000
			7	0000

[S mode high idle load ratio distribution]
1 : Time R 30% or less
2 : Time R 30 to 40%
3 : Time R 40 to 50%
4 : Time R 50 to 60%
5 : Time R 60 to 70%
6 : Time R 70 to 80%
7 : Time R 80% or more

Switching any of the work mode switches for the HR1 to 12 display ON for longer than 10 seconds clears all the usage history data.

https://truckmanualshub.com/

4. Reset (RST1, 2)

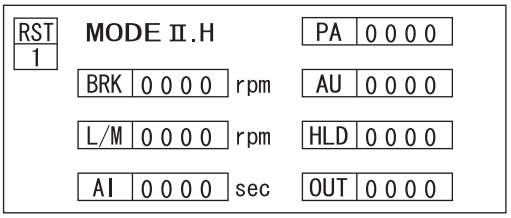

MODE : Travel mode, work mode
BRK : Breaker engine speed set
L/M : Lifting magnet engine speed set
AI : Auto idle time set (1 to 30 sec.)
PA : Pump output adjustment
AU : Automatic boost rise
HLD : Previous data hold set
OUT : Oil pressure drive fan inspection mode

[1] Breaker speed set

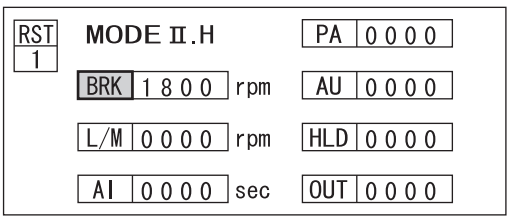

1) Select the breaker speed set (BRK) with the Buzzer Stop switch. (The selected item switches from light-on-dark display to dark-on-light display.)
2) Now, set the breaker speed (BRK) to 1800 min^{-1}. While watching the monitor, adjust the engine speed with the throttle volume. When the adjustment is complete, turn ON the work mode switch for 10 seconds. Buzzer sounds to indicate that the settings have been memorized.
3) Turn OFF the key switch.
4) To check, see the "CHK1" engine speed.

[2] Lifting magnet speed set

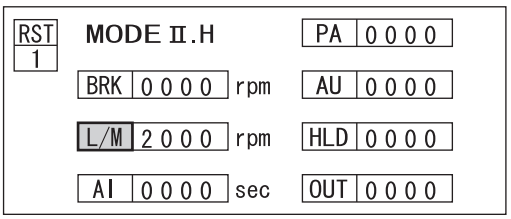

1) Select the lifting magnet speed set (L/M) with the buzzer stop switch. (The selected item switches from light-on-dark display to dark-on-light display.)
2) Now, set the lifting magnet speed (BRK) to 2000 min^{-1}. While watching the monitor, adjust the engine speed with the throttle volume. When the adjustment is complete, turn ON the work mode switch for 10 seconds. Buzzer sounds to indicate that the settings have been memorized.
3) Turn OFF the key switch.
4) To check, see the "CHK1" engine speed.

https://truckmanualshub.com/

[3] Auto idle time change

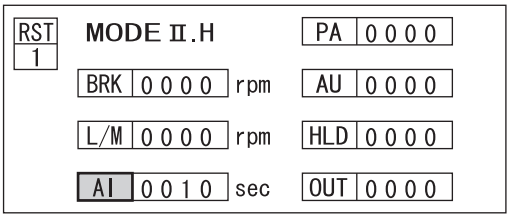

1) Select the auto idle time change (AI) with the buzzer stop switch. (The selected item switches from light-on-dark display to dark-on-light display.)
2) Now, set the auto idle time to 10 seconds. Turn ON the travel mode switch until the number reaches 10. The number increases each time the switch is switched ON and can be set from 1 to 30. When the setting is complete, turn ON the work mode switch for 10 seconds. Buzzer sounds to indicate that the settings have been memorized.
3) Turn OFF the key switch.

[4] Pump output change

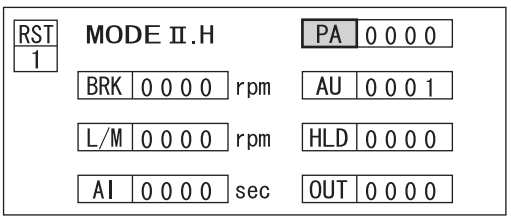

PA=0000 : Normal output mode
PA=0001 : Low output mode 1 (-100 mA)
PA=0002 : Low output mode 2 (-150 mA)
PA=0003 : Low output mode 3 (-200 mA)

1) Select the pump output adjustment (PA) with the buzzer stop switch. (The selected item switches from light-on-dark display to dark-on-light display.)
2) Now, set the pump output to low-output mode. Turn ON the travel mode switch so that the number reaches 1, 2, or 3. Each time the switch is switched ON, the number displayed moves to the next step in the sequence 0, 1, 2, 3, …… When the setting is complete, turn ON the work mode switch for 10 seconds. Buzzer sounds to indicate that the settings have been memorized.
3) Turn OFF the Key switch.

[5] Automatic boost rise release and engine protection function release setting

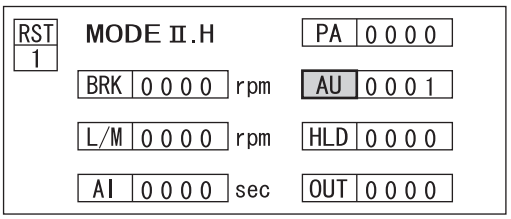

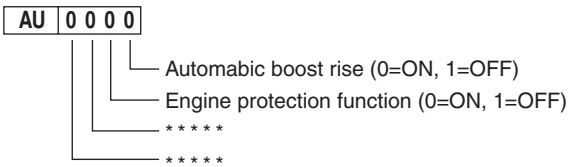

1) Select the automatic boost rise release and engine protection function release (AU) with the buzzer stop switch. (The selected item switches from light-on-dark display to dark-on-light display.)
2) Now, set the automatic boost rise engine protection fanction to none. Turn ON the travel mode switch so that the number reaches 1. Each time the switch is switched ON, the number displayed moves to the next step in the sequence: 0000 → 0001 → 0010 → 0011 → 0000. When the setting is complete, turn ON the work mode switch for 10 seconds. Buzzuer sounds to indicate that the setteings have been memorized.
3) Turn OFF the key switch.

https://truckmanualshub.com/

[6] Previous data hold condition change

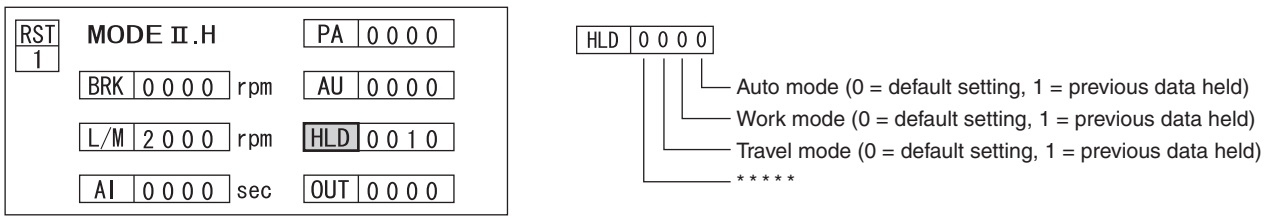

1) Select the previous data hold (HLD) with the buzzer stop switch. (The selected item switches from light-on-dark display to dark-on-light display.)
2) Now, set the work mode to previous data hold. Turn ON the travel mode switch so that the number reaches 1. Each time the switch is turned ON, the number displayed moves to the next step in the sequence:

→0000→0001→0010→0011→0100→0101→0110→0111→1000→1001→1010→1011→1100→1101→1110→1111

When the setting is complete, turn ON the work mode switch for 10 seconds. Buzzuer sounds to indicate that the settings have been memorized.

3) Turn OFF the key switch.

[7] Hydraulic drive fan inspection mode (only for specifications with hydraulic drive fan)

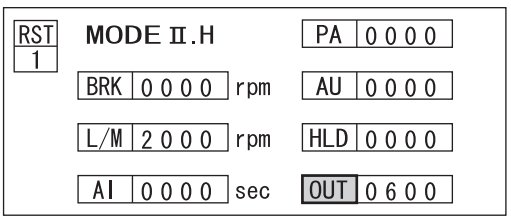

1) Select the previous data hold (OUT) with the buzzer stop switch. (The selected item switches from light-on-dark display to dark-on-light display.)
2) The number displayed shows the command current value. The display immediately after the selection is the command current value. When the travel mode switch is turned ON once, the display becomes "0100" and each time the switch is turned ON, the value displayed moves to the next step in the sequence:

0100 → 0110 → 0120 → 0130 → 0140 → 0150 → 0160 → 0170
↓
Current value ← 0600← 0590← 0580← ····· ← 0190 ← 0180

3) For the hydraulic drive fan inspection mode, the previous time's data is reset. In other words, even if the key switch is switched OFF with some current value set, the next time the Key switch is turned ON, the mode is normal mode.

https://truckmanualshub.com/

[8] Maintenance time setting

RST 2	MODE Ⅱ.H			
1	0000	4	0000
2	0500	5	0000
3	0000	6	0000
		7	0000

1) Move to RST2 with the buzzer stop switch and select (2). (The selected item switches from light-on-dark display to dark-on-light display.)
2) The number displayed shows the time for displaying "Maintenance time". The display immediately after the selection is the default maintenance time. Each time the travel mode switch is turned ON, the number displayed moves one step through the cycle "0050 → 0250 → 0500 → 1000 → 2000 → 5000 → 0050 → 0250…".
   When the setting is complete, turn ON the work mode switch for 10 seconds. Buzzuer sounds to indicate that the settings have been memorized.
3) Turn OFF the key switch.

* If the buzzer stop switch is held ON for 20 seconds, the time until maintenance display (1) is reset.

[9] Injector test mode

RST 2	MODE Ⅱ.H		
1	0000	4	0000
2	0000	5	0000
3	0001	6	0000
		7	0000

1) Move to RST2 with the buzzer stop switch and select (3). (The selected item switches from light-on-dark display to dark-on-light display.)
2) Now, after the engine has been started, injector test mode is to be set here. Turn ON the travel mode switch so that the number reaches 1. The number toggles between 0 and 1 each time you switch ON the switch.
   When the number reaches 1, the engine speed is fixed at 500 min^{-1}.
3) For the injector test mode, the previous time's data is reset. In other words, even if the key switch is turned OFF with a value set, the next time the Key switch is turned ON, the mode is normal mode.

https://truckmanualshub.com/

5.Machine information

[1] Setting of machine model

MACHINE : SH300-4

TERRITORY : 0 LANGUAGE : 1

CONT. P/N	KHR2689

MACHINE	: Machine model
TERRITORY	: Shipping territory
LANGUAGE	: Language
CONT. P/N	: Controller part number

[2] Display of engine information

CHK 7	MODE Ⅱ ,S		4	0 0 6 0
	1	0 0 8 9	5	4 0 0 5
	2	8 0 0 8	6	0 0 0 0
	3	9 5 4 3	7	0 A 7 9

Example)

Engine controller (ECM) number	: 898008-9543
Engine serial number	: 604005
Q adjustment number	: A79

Engine controller (ECM) number: A to J
*2 places of figure on the left at the 1st line are fixed to 0.

1	0 0 A B
2	C D E F
3	G H I J

Engine serial number: K to P
*2 places of figure on the left at the 4th line are fixed to 0.

4	0 0 K L
5	M N O P

Q adjustment number: Q to S
* 1 place of figure on the left at the 7th line is fixed to 0.

7	0 Q R S

https://truckmanualshub.com/

6.Re-setting of engine information

RST 11	MODE Hi ,S		4	6 B 1 8
	1	5 5 3 A	5	3 0 1 7
	2	3 6 1 F	6	5 2 0 0
	3	1 9 4 4	7	4 F 0 0

RST : Injector number
MODE : Selection places when entering ID code

		4	e f g h
1	a b c d	5	m n o p
2	i j k l	6	u v 0 0
3	q r s t	7	w x 0 0

Ab: Engine code
C to x: QR code
* 2 places of figure on the left both at the 6th and the 7th lines are fixed to 0.

Example)

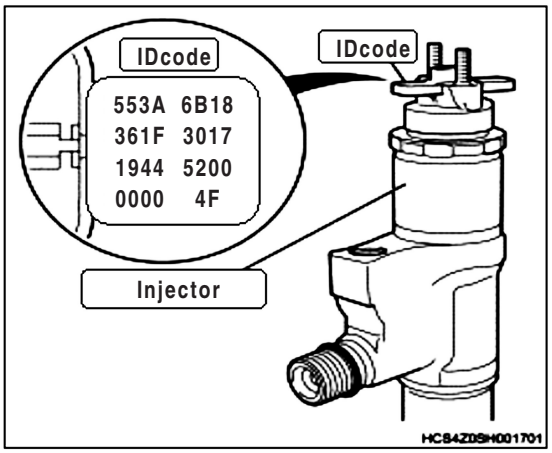

<List of engine codes・emachine models applied>

ab	Engine codes	4	Machine models
55	6HK1	5	SH330
5B	6UZ1	6	SH400
63	6WG1	7	SH700/800

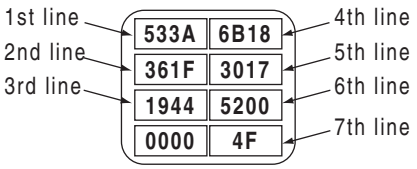

[1] Selection of injector (for checking ID code entered)

RST 11	MODE Hi ,S		4	6 B 1 8
	1	5 5 3 A	5	3 0 1 7
	2	3 6 1 F	6	5 2 0 0
	3	1 9 4 4	7	4 F 0 0

RST11 : Injector number 1
RST12 : Injector number 2
RST13 : Injector number 3
RST14 : Injector number 4
RST15 : Injector number 5
RST16 : Injector number 6

1) Select an injector number (RST11 → RST12 . . . → RST116) intending to check or enter with the buzzer stop switch.
2) The injector number on the fan side is assigned as 1 and the one on the pump side as 6 (refer to the figure below).

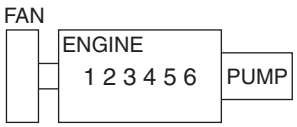

https://truckmanualshub.com/

<Remarks>

1. Engine information re-setting screen will appear from any service support screen by turning the one-touch idle switch ON for more than 10 seconds.
2. Once you have entered the engine information re-setting screen, you cannot exit the screen until the key switch is turned OFF.
3. While the engine is running, you cannot access the engine information re-setting screen even if the remarks "1" above has been carried out.
4. Although the engine can be started while the engine information re-setting screen is being displayed, the ID code cannot be entered.

[2] Entering injector ID code (after injector has been replaced)

MODE Hi : Upper 2 places of figure on each line
MODE Lo : Lower 2 places of figure on each line

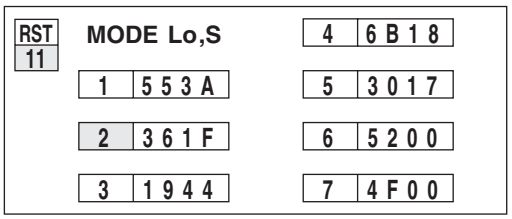

Injection ID code

533A	6B18
361F	3017
1944	5200
0000	4F

1) Select the replaced injector number 1 (RST11) with the buzzer stop switch.
2) Each time the auto mode switch is turned ON, 2 places of figure to be selected will shift in the order of "1Hi → 1Lo → 2Hi → 2Low → 3Hi → 3Lo → 4Hi → 4Lo → 5Hi → 5Lo → 6Hi → 7Hi → 1Hi . . ." .
   (Selected line will change from "light-on-dark" to "dark-on-light" indication.)
3) Keep on entering the ID code and enter lower 2 places of figure on 2nd line here.
   (At this time, the 2nd line is indicated "light-on-dark "and the mode shows "Lo".)
   For setting the upper place of 2 places, since the figure shifts in the order of "0 → 1 → 2 . . . 9→ A → B → C → D → E → F → 0 . . ." each time the travel mode switch is turned ON, select "1" here.
   For setting the lower place of 2 places, since the figure shifts in the order of "0 → 1 → 2 . . . 9 → A → B → C → D → E → F → 0 . . ." each time the travel mode switch is turned ON, select "F" here.
4) Check that any line does not indicate "light-on-dark " after completion of entering all ID codes by repeating steps 2) and 3) above, then turn the work mode switch ON for more than 10 seconds to allow data communication with the engine controller (ECM).
   The buzzer sounds when the data have been written correctly.
   Note: The buzzer will not sound in case where any one of figures has been mistakenly entered.
   : When the key is turned OFF without sounding the buzzer, the ID codes already memorized remain unchanged.
5) Turn OFF the key switch.
6) Access the engine information setting screen again to check that the data have been rewritten correctly .

https://truckmanualshub.com/

[3] Entering sheet of ID code of injector

Example)

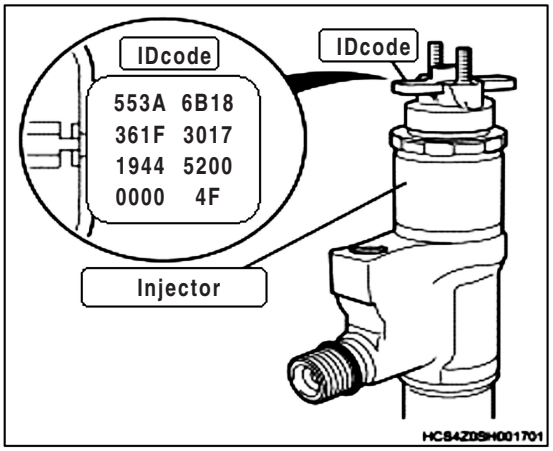

Injection ID code

abcd	efgh
ijkl	mnop
qrst	uv00
0000	wx

Injection No.

RST			
		4	efgh
1	abcd	5	mnop
2	ijkl	6	uv00
3	qrst	7	wx00

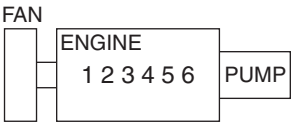

Injection No. 1

RST 11			
		4	
1		5	
2		6	00
3		7	00

Injection No. 2

RST 12			
		4	
1		5	
2		6	00
3		7	00

Injection No. 3

RST 13			
		4	
1		5	
2		6	00
3		7	00

Injection No. 4

RST 14			
		4	
1		5	
2		6	00
3		7	00

Injection No. 5

RST 15			
		4	
1		5	
2		6	00
3		7	00

Injection No. 6

RST 16			
		4	
1		5	
2		6	00
3		7	00

https://truckmanualshub.com/

Instruments to be Measured

[1] Electromagnetic proportional valve of hydraulic pump
[2] Solenoid valve
[3] Oil temperature sensor
[4] Pressure sensor
[5] Fuel sensor
[6] Atmosphenic pressure sensor
[7] Intake air temperature sensor
[8] Electromagnetic proportional valve of controlling fan speed
[9] Fan reversing solenoid valve
[10] Glow
[11] Fuel pump
[12] EGR
[13[Injector
[14] In addition, a sensor with engine

Equipment for Measuring

[1] Tester

[2] Service connector

1) For solenoide valve — Part No. :WDB0055-5

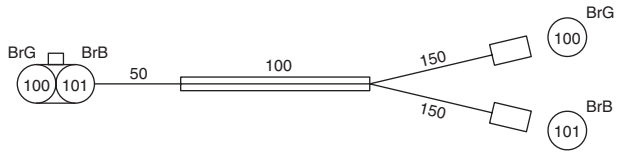

・Solenoid valve
・Fuel sensor

2) For electromagnetic proportional valve of hydraulic pump — Part No. :WDB0055-6

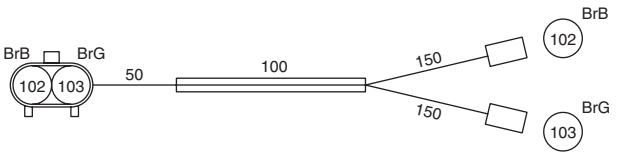

3) For electromagnetic proportional valve of hydraulic pump — Part No. :WDB0055-7

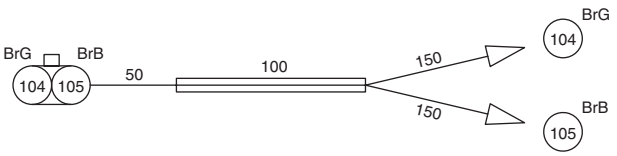

4) For pressure switch — Part No. :WDB0055-8

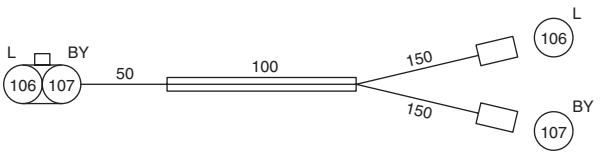

https://truckmanualshub.com/

5) For the harness side of pressure switch Part No. :WDB0055-9

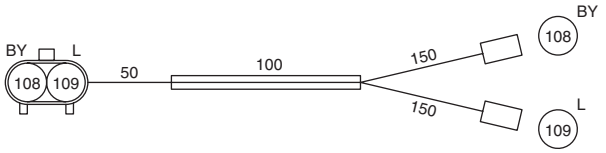

6) For receiver dryer (2P) Part No. :WDB0055-10

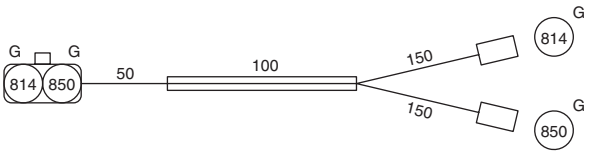

7) For oil temperature sensor Part No. :KHP1575X-B00

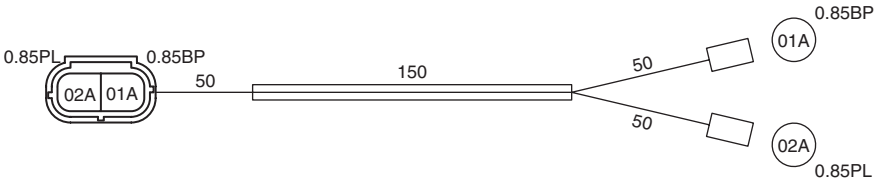

8) For pressure sensor (3P) Part No. :KHP1577X-B01

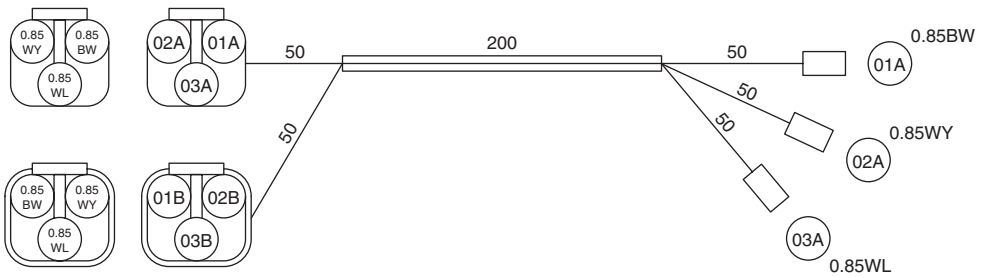

https://truckmanualshub.com/

9) For atmosphenic pressure sensor Part No. :KHP11020-B00

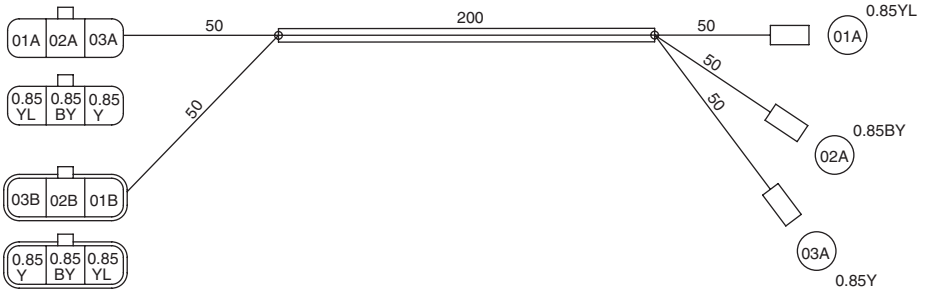

10) For intake air temperature sensor Part No. :KHP11030-B00

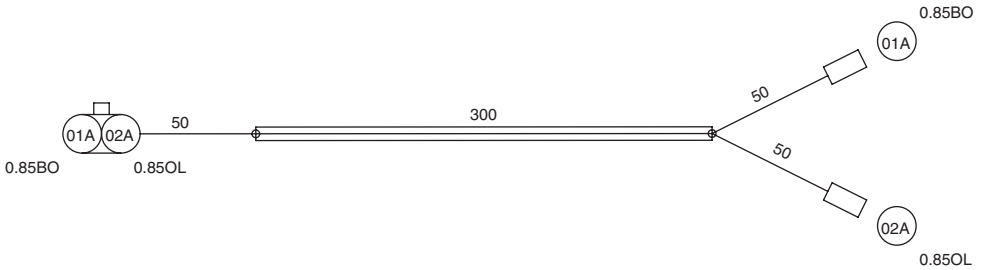

11) For electromagnetic proportional valve of controlling fan speed (2P) Part No. :KHP11040-B00

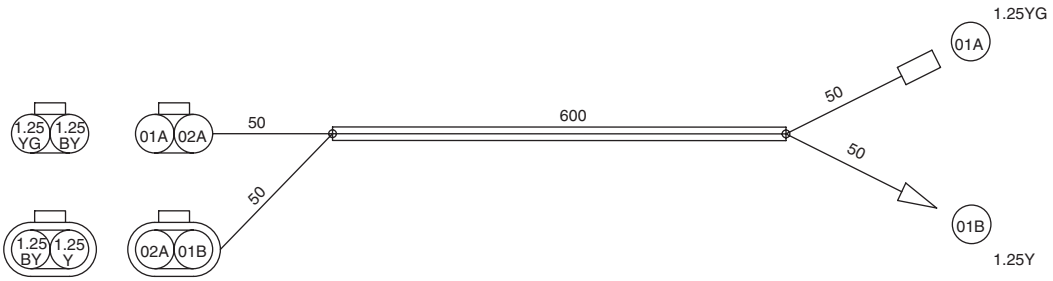

12) For fan reversing solenoid valve (2P) Part No. :KHP11050-B00

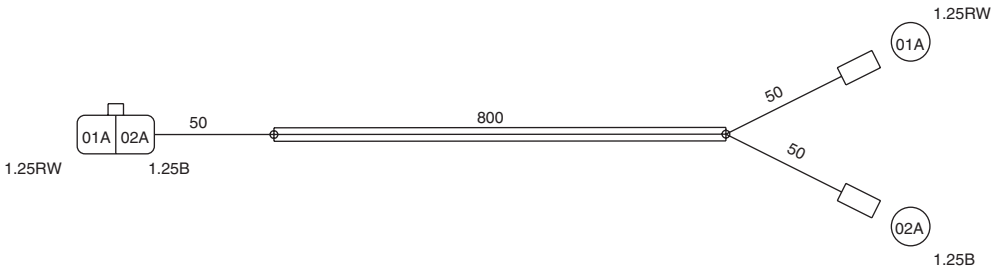

https://truckmanualshub.com/

13) For glow (1P) Part No. :KHP11060-B00

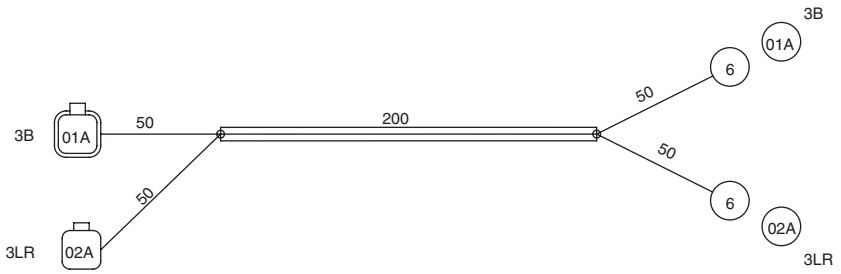

14) For fuel pump (6P) Part No. :KHP11070-C00

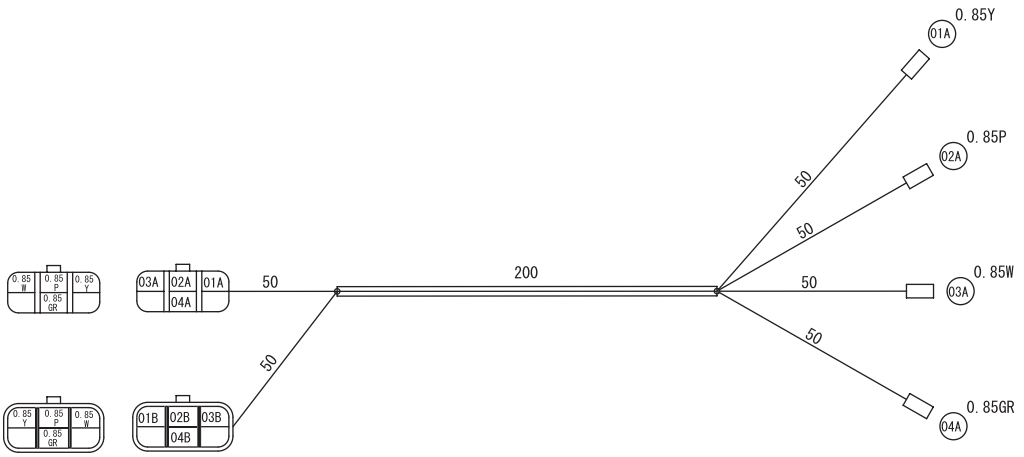

15) EGR (8P) Part No. :KHP11080-C00

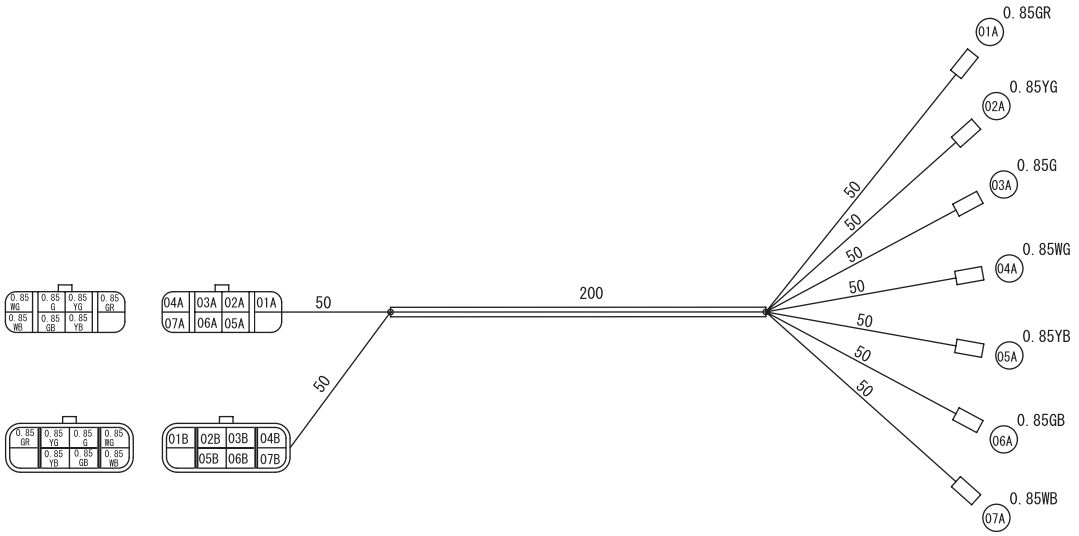

https://truckmanualshub.com/

16) For injector (12P) Part No. :KHP11090-C00

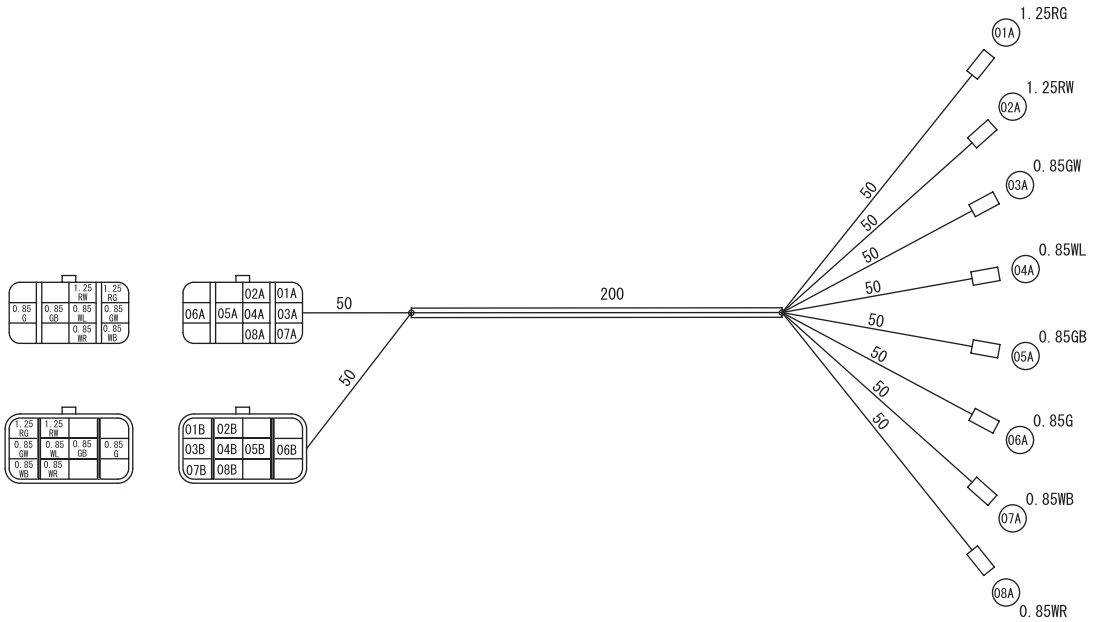

17) For sensor (20P) Part No. :KHP11100-C00

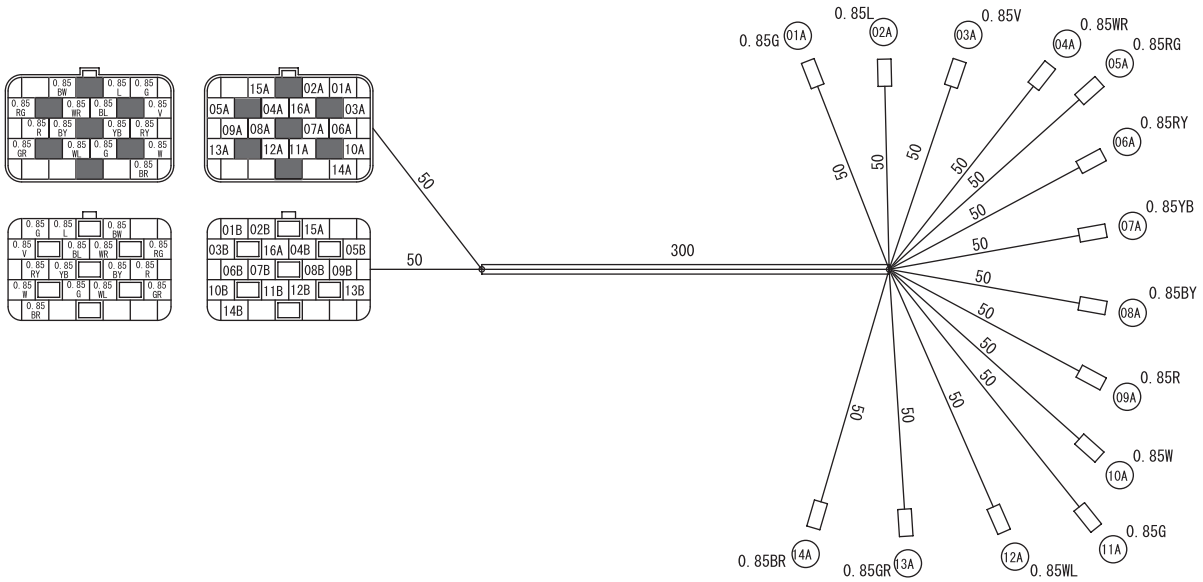

https://truckmanualshub.com/

Measuring Methods

1. Electromagnetic Proportional Valve of Hydraulic pump

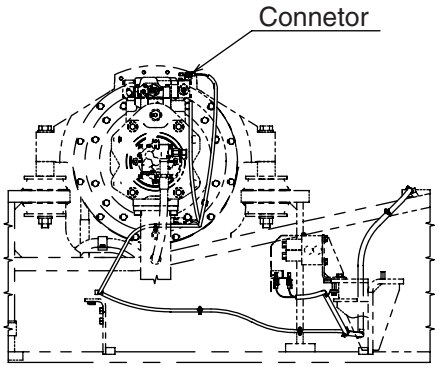

- Remove the connector on the electromagnetic proportional valve that is attached to the hydraulic pump.

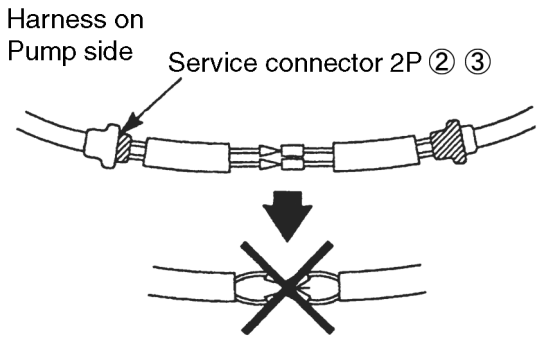

- Connect service connector 2P on the connector that was just removed.
- Do not let the plug terminals cross at this point.

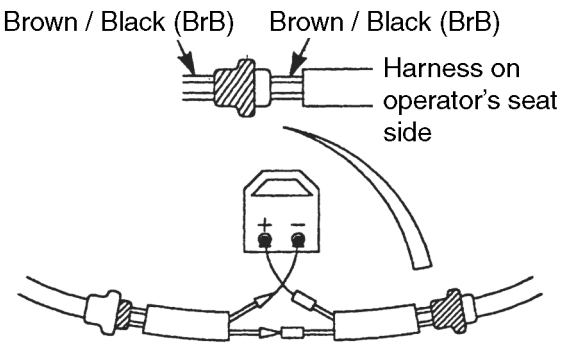

- Ensure the brown/black harness from the cab side is selected (the service connector side has the same colors).
  Connect tester's red terminal to the cab side, and the black terminal to the hydraulic pump side.
- When connected properly, start the engine and check the current value of each mode at maximum speed.

Carrent value for each mode — unit : mA

Mode	H		S		L	Auto	
	MAX	MIN	MAX	MIN		S	L
Current Value	540	380	480	380	380	540	540

https://truckmanualshub.com/

2. Solenoid Valve (8-way)

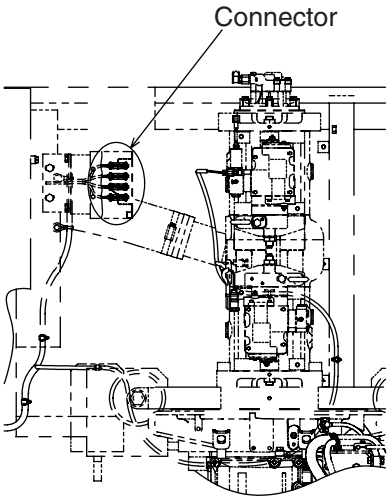

- Remove a connector that is attached to the solenoid valve.
  (The procedures here are given for lever lock solenoid.)

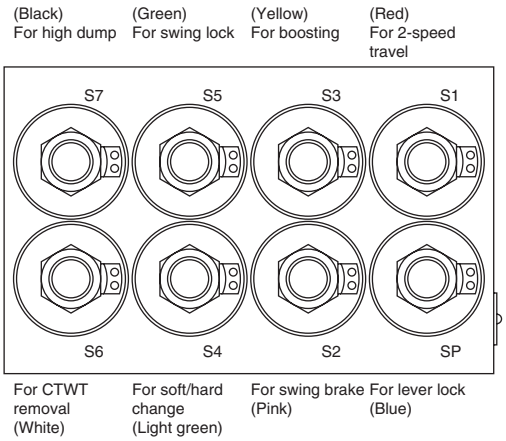

- There are eight solenoid valves. Refer to the illustration on the left for intended use for each valve (viewed from the front).
  Connectors have strips with different colors on them.
  Be aware of the color-coded functions when measuring the device.

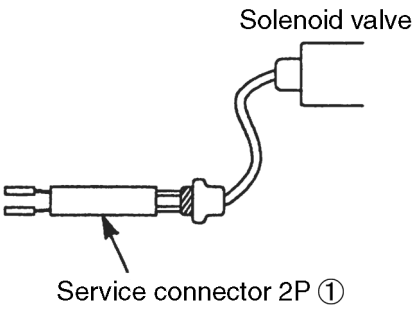

- Connect service connector 2P on the connector that was just removed (solenoid valve side only).

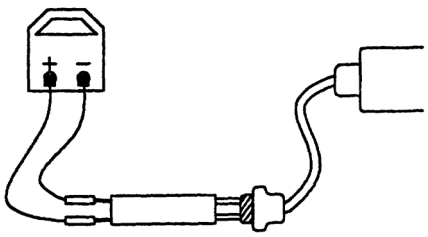

- Connect the red and black terminals to the plug terminal of service connector.
- When connected properly, check the resistance.
  Resistance 45 Ω (at 20°C)

  Note:
  There will be slight variations in resistance depending on the temperature.

https://truckmanualshub.com/

3. Oil Temperature Sensor

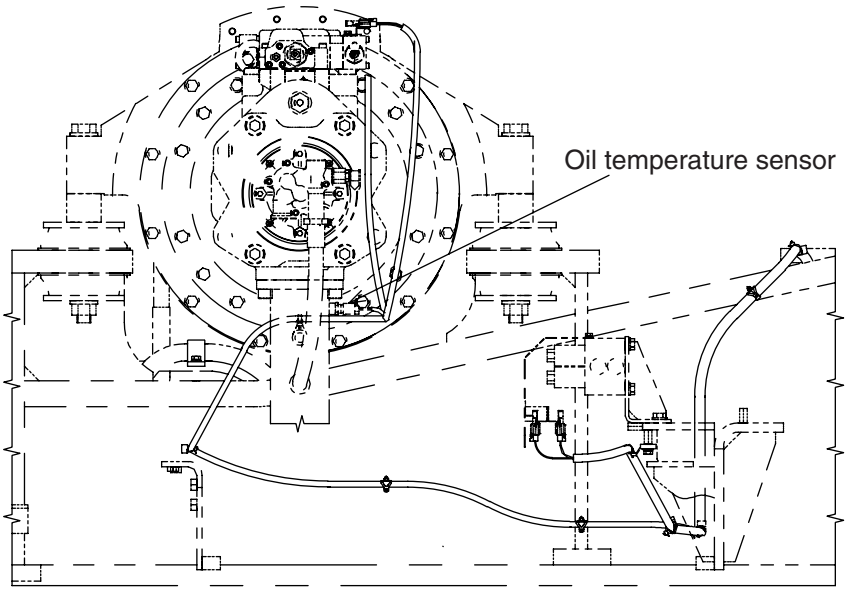

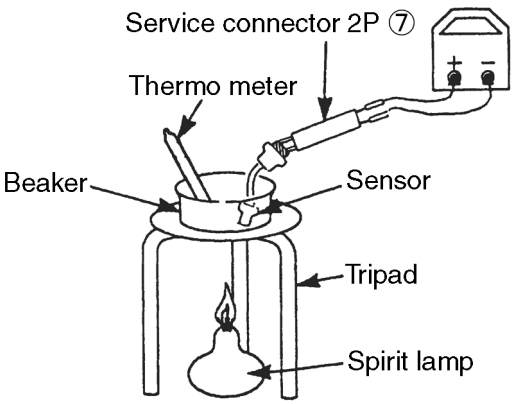

- Connect service connector 2P on the sensor that was just uninstalled.
- Connect the red and black terminals to the plug terminal of service connector.
- When connected properly, gradually increase the temperature and check the resistance.

Temprature versus resistance Unit : kΩ

Oil temperature	Oil temperature sensor
20 °C	2.45
30 °C	1.66
40 °C	1.15
50 °C	0.81
60 °C	0.58
70 °C	0.43
80 °C	0.32

https://truckmanualshub.com/

4. Pressure Sensor

- Remove the connector on pressure sensor that is attached to the hydraulic pump.

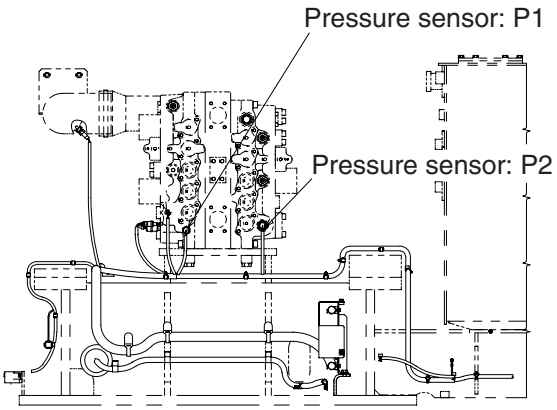

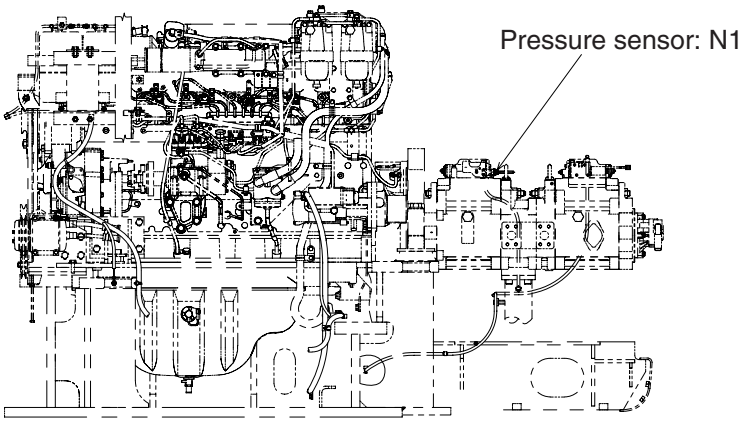

Pump pressure sensor side

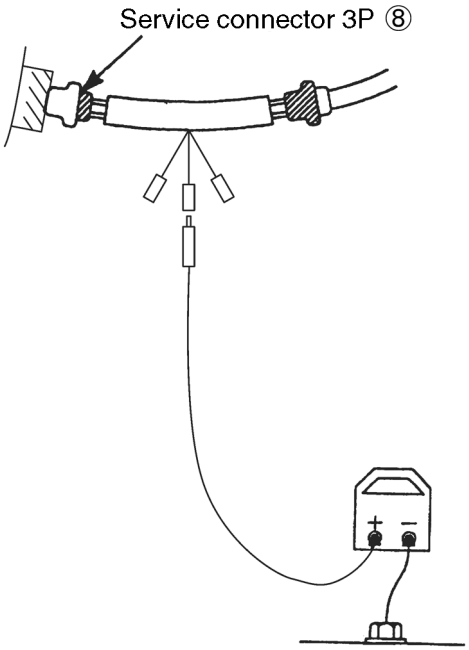

- Connect service connector 3P on the connector that was just removed.
- Connect the red terminal to the plug terminal YL (Yellow/Blue) of service connector. Ground the black terminal.
- When connected properly, turn the key switch ON and check the voltage.

Refer to the engine troubleshooting mamual for the quality judging of the sensor by the engine side.

https://truckmanualshub.com/

Voltage of pressure sensor
Pressure and Voltage

Formula for converting pressure:

1MPa = 1.019 x 10 kgf/cm^2

Example: 30 MPa = 30 x 1.019 x 10
= 305.7 kgf/cm^2
2 MPa = 2 x 1.019 x 10
= 20.28 kgf/cm^2

(1)Pressure sensor for P 1, P 2

Pressure MPa	Voltage (V)
50	4.5
43.7	4
37.5	3
25.0	2
17.5	1
0	0.5

(2)Pressure sensor for negative control

Pressure MPa	Voltage (V)
5.0	4.5
4.37	4
3.75	3
2.5	2
1.25	1
0	0.5

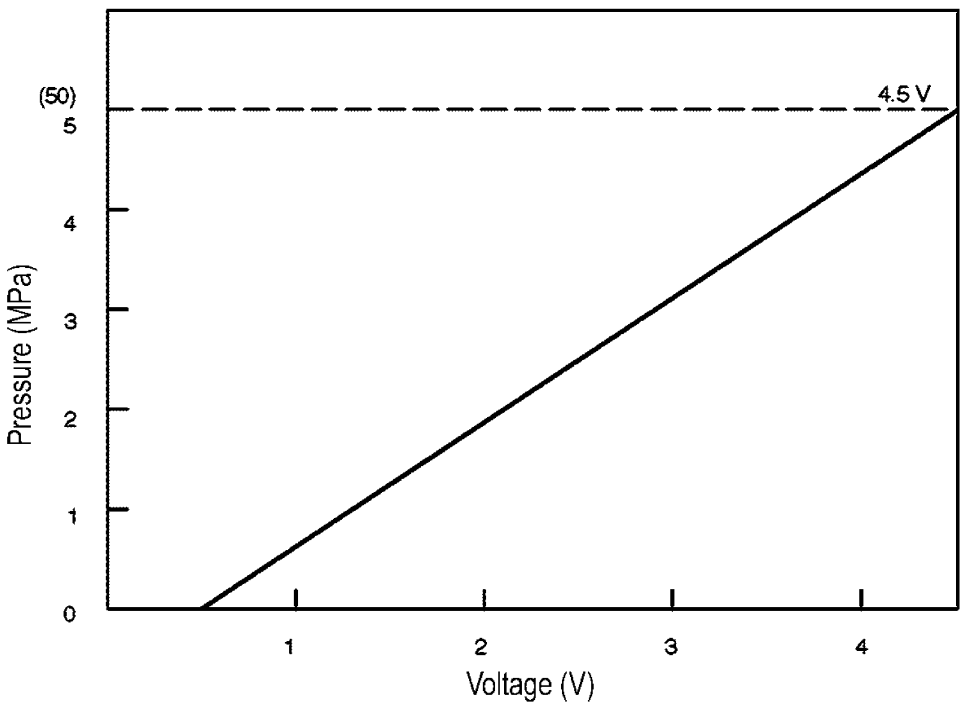

https://truckmanualshub.com/

Verifying the Settings

When the machine is started for the first time after having the settings reset (the resetting procedures will be described later), the machine model, the operational locale and the specific language needs to be set again.

[1] Verifying controller settings/Resetting

The current settings will be displayed by pressing down the auto mode switch for 10 seconds. (This is just for verifying the settings and not for resetting them.)

Resetting Procedures

[1] If the auto mode switch is pressed down for another 10 seconds after the verifying state described in *Verifying the Settings*, a buzzer will sound continuously.

Because the starter switch is turned OFF, the settings are all cleared. Now the controller is ready for resetting. (By pressing the auto mode switch for a shorter period of time (less than10 seconds) while settings are displayed, display will switch to normal.)

Setting Procedures

[1] When the starter switch is turned on after resetting the controller, the following will be displayed on the LCD screen on the monitor.

```
MACHINE：SH300-4
TERRITORY：3   LANGUAGE：1
CONT.P/N       KHR3320
```

[2] By utilizing the travel mode switch, work mode switch and the auto mode switch on the monitor, select the MACHINE, the TERRITORY and the LANGUAGE

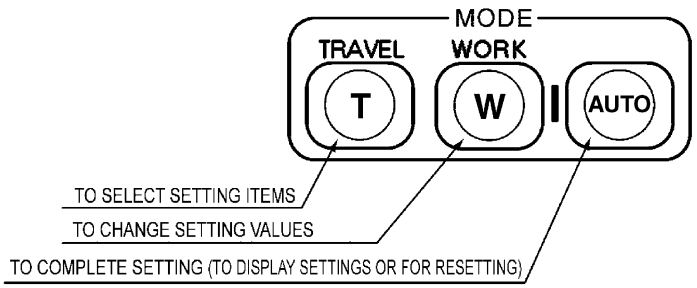

1) Each time the work mode switch is pressed, the items alternate between MACHINE, TERRITORY and LANGUAGE. (The selected item will be highlighted.)
2) Each time the travel mode switch is pressed, the individual setting in each item switches.
   If MACHINE is selected, for example, the display will change as follows: SH300-4→SH400-4→SH700-4→SH800-4→SH300-4...
   When TERRITORY is selected, the display will switch as follows: 0→1→2→3→4→0... (0: for use inside Japan)
   When LANGUAGE is selected, the display will switch as follows: 0→1→2→...13→14→0→1... (0: Japanese).

https://truckmanualshub.com/

3) As the auto mode switch is pressed after the three items are reset, the settings are saved. Now the resetting is complete and the display goes back to normal. (If set for domestic use in Japan, for example, the display shows bar graphs after displaying PAX logo for 3 seconds.)
Once the MACHINE setting is complete, the machine does not display the screen for this setting any more. The machine will start in normal display screen from the next time it is turned on.

List of Settings

MACHINE	: SH300-4	
	: SH400-4	
	: SH700-4	
	: SH800-4	
TERRITORY	: 0.....	SUMITOMO
	: 1.....	LBX
	: 2.....	CASE (North America)
	: 3.....	CASE (Europe)
	: 4.....	No Brand
LANGUAGE	: 0.....	Japanese
	: 1.....	English
	: 2.....	Thai
	: 3.....	Chinese
	: 4.....	German
	: 5.....	French
	: 6.....	Italian
	: 7.....	Spanish
	: 8.....	Portuguese
	: 9.....	Dutch
	: 10.....	Danish
	: 11.....	Norwegian
	: 12.....	Swedish
	: 13.....	Finnish
	: 14.....	Pictographs only

***How to change setting only language.**

[1] When depression of the auto mode switch for more than 10 seconds after the key switch has been turned ON, "function selection screen" appears.

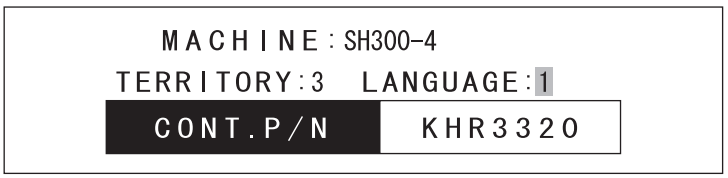

[2] In this screen, depression of travel mode switch allows "LANGUAGE" only to be switched in the order of such as 1 → 2 → 3...

[3] Select the required language and depress the work mode switch to complete the setting.

https://truckmanualshub.com/

Standard switch setting according to destination of machine

Destination	Work mode	Travel mode	Idling start
SUMITOMO	S or Auto (*1)	Lo (*2)	ON
LBX	H	Lo	ON
CASE (North America)	H	Lo	ON
CASE (Europe)	Auto	Lo (*2)	ON
No Brand	Auto	Lo (*2)	ON

(*1): When key is turned OFF with auto mode selected, the next starts in "AUTO" mode.
When key is turned OFF with HSL selected, the next starts in "S" mode.

(*2): "I" is displayed on the monitor.

Note: For auto idling and one-touch idling, previous data are to be held.

Error Display Functions

While setting the controller, the part number of the controller installed on the machine will be displayed on LCD screen of the monitor.

When the wrong model is selected and an attempt is made to save this by pressing the auto mode switch, a buzzer sounds continuously and an error massage will be displayed.

If this happens, the starter switch must be turned OFF once for further inputs to be accepted. Do this first, then check the part number of the engine controller. Turn the starter switch ON again and start the setting procedures.

```
MACHINE:SH  ? -4
TERRITORY:?  LANGUAGE:?
CONT.P/N | KHR3320
E.CONT ERROR
```

https://truckmanualshub.com/

Problem Symptoms

[1] This section is on troubleshooting. If a warning message continues to be displayed even after taking the appropriate measures suggested for the problem, refer to the procedures in this section.

Messages Displayed	Problem Symptoms	Problem No.
LOW FUEL	Message still showing after refilling fuel.	1
LOW COOLANT	Message still showing after adding coolant.	2
LOW OIL PRESS	Message still showing after oil pressure is corrected.	3
OVER HEAT	Message still showing when the hydraulic oil temperature is 84°C or below, or the engine coolant temperature is 92°C or below.	4
ALTERNATOR	Message still showing.	5
ELEC PROBLEM	Message still showing.	6

[2] The following is for troubleshooting a problem that does not get displayed on the monitor screen.

1) Engine controls

Problem Symptoms	Problem No.
Engine does not start → Monitor indicates faulty electrical system. YES →	Refer to Problem No. 6.
Monitor indicates faulty electrical system. NO →	Problem No. 7

[3] When a failure code related to engine system is appeared in the service support screen, refer to the engine troubleshooting manual.

https://truckmanualshub.com/

Inspections Prior to Troubleshooting

	Item	Criterion	Remedies
GENERAL CHECKLIST			
LUBRICANTS / COOLANT	1. Check fuel level.	—	Add fuel.
	2. Make sure fuel is not contaminated.	—	Clean/drain.
	3. Check hydraulic oil level.	—	Add oil.
	4. Check hydraulic oil strainer.	—	Clean/drain.
	5. Check lubrication of each reduction gear.	—	Lubricate.
	6. Check engine oil level (oil level in pan).	—	Add oil.
	7. Check coolant level.	—	Add coolant.
ELECTRICAL DEVICES	8. Make sure battery terminal wiring is not loose or corroded.	—	Tighten or replace.
	9. Make sure alternator terminal wiring is not loose or corroded.	—	Tighten or replace.
	10. Make sure starter terminal wiring is not loose or corroded.	—	Tighten or replace.
OTHER ITEMS TO BE CHECKED			
HYDRAULICS / MECHANICAL DEVICES	11. Check for abnormal noise and odor.	—	Repair.
	12. Make sure there is no oil leakage.	—	Repair.
	13. Bleed air.	—	Bleed air.
ELECTRICAL SYSTEM OR DEVICES	14. Check battery voltage (with engine stopped).	23 to 36 V	Replace.
	15. Check battery electrolyte level.	—	Add or replace electrolyte.
	16. Check wires for discoloration or burning. Also check sheath for damage.	—	Replace.
	17. Check for disconnected wire clamps and hanging wires.	—	Repair.
	18. Make sure there is no water leakage onto wiring. (Pay particular attention to water on connectors and terminals.)	—	Disconnect to dry in case there was water on connectors.
	19. Check fuse for breakage or corrosion.	—	Replace.
	20. Check alternator voltage (with engine running at 1/2 throttle or higher). (When battery is low, voltage may start around 25 V upon start-up.)	27.5 to 29.5 V	Replace.
	21. Check sound from battery relay (with starter switch both ON and OFF).	—	Replace.

https://truckmanualshub.com/

Troubleshooting Procedures

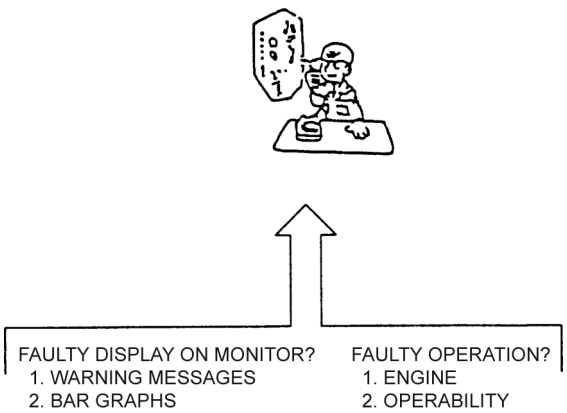	1. When a user contacts for repairs or problems, be sure to get the following information. a. User name b. Machine type, Model No., Hour meter c. Work site
	2. Get an understanding of the problem while you are speaking with the user. a. Status of the problem b. Specific type of task/operation being performed when the problem occurred c. Work environment d. History of past repairs and maintenance
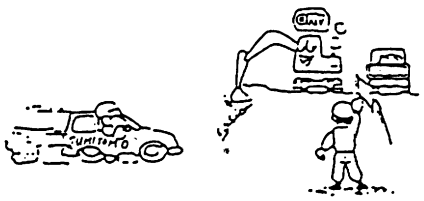	3. Get the required tools: Crimp pliers (for plug terminals, for round-shaped terminals) Nipper Plug terminals (for connection) AJ wires including pins for connectors
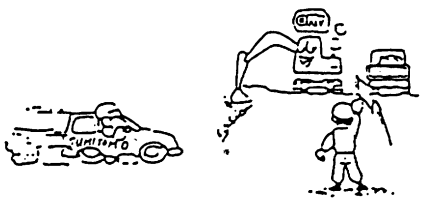	4. Go to the work site, re-enact the incident and perform the self-tests to check diagnosis on display. a. Try operating each function/task on the machine to verify the problem. b. Check the self-test display.
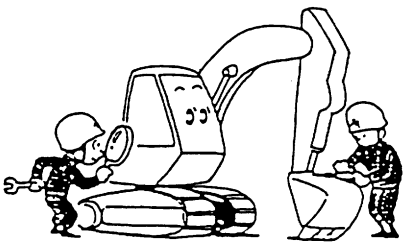	5. Follow the “Inspections Prior to Troubleshooting” to determine the problems beforehand where possible and to conduct simple repairs. Refer to: a. General checklist b. Other items to be checked

https://truckmanualshub.com/

Using the Flow Chart

[1] Problem number and symptoms

The problem number and problem symptoms are provided above each flow chart.

Problem No.	Problem Symptoms
1	Message still showing after refilling.
2	Message still showing after adding coolant.

[2] About Inspection Prior to Troubleshooting

Check the items in the “Inspections Prior to Troubleshooting” list before trying to determine the cause of the problem.

[3] Procedure

- Follow what the appropriate box says and perform inspection or take measurements. According to the result, choose YES or NO to move on to the next part in the flow chart.
- If, as a result of checking or measuring, the YES or NO leads directly to the CAUSE column, refer to the description under CAUSE and perform the troubleshooting procedures shown to the right.
- Inspection/measurement methods are described in the boxes.
- Choose YES if the situation matches the criteria or if the answer to the question is yes; NO if not.
- Required preparatory work, operational methods or criteria are provided below the boxes. Skipping the preparatory procedures or not following the actual procedures properly may result in damage to the machine. Thoroughly read all the related procedures before starting work. Also start with the first procedure and follow the rest in the exact order of the book.

[4] Wire colors

Refer to the table below for the wire colors of measuring locations. (The connector numbers will start on the following page.)

Wire color chart

Symbol	B	W	Br	P	V	G	O
Color	Black	White	Brown	Pink	Purple	Green	Orange
Symbol	R	Y	Lg	Sb	L	Gr	
Color	Red	Yellow	Light green	Sky blue	Blue	Gray	

Note:Two letters combined (ex. AB) indicates a stripe color B on a wire color A.

Example: BR indicates red stripe on black wire.

[5] Always turn OFF the key switch before connecting or disconnecting connectors.

https://truckmanualshub.com/

Diagnosis

(1) Refilling Fuel

Problem symptom

- Message still shows after refilling

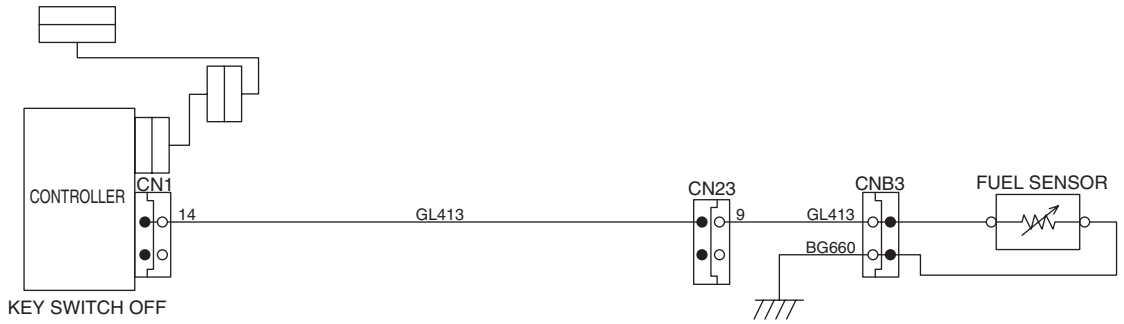

Troubleshooting	Cause	Remedy
Key switch ON: Run service support CHK 4 to measure resistance on sensor. (Refer to the following table for resistance.) — YES	Defective controller	Replace controller.
NO → Key switch OFF: Disconnect CNB3 connector from sensor to measure resistance on the sensor side. (Refer to the following table for resistance.) — NO	Defective fuel sensor	Replace or check sensor.
YES → Disconnect CN23 connector to measure resistance between female terminal GL and GND (ground). (Refer to the following table for resistance.) — NO	Loose connection on fuel sensor	Clean connector terminal.
YES → Disconnect CN1 connector to measure resistance between female terminal GL and GND (ground). (Refer to the following table for resistance.) — NO	Loose connection on CN23	Clean CN23 connector terminal.
YES	Defective controller or loose connection on CN1	Replace controller or clean CN1 connector terminal.

Note: Bar indicator lights will all be off when there is a break in wiring.

Resistance between GL and BG

Monitor	1 Refill fuel	2	3	4	5	6	7	8
Resistance (OHM)	80 <	68 to 80	55 to 68	45 to 55	36 to 45	28 to 36	17 to 28	6 to 17

https://truckmanualshub.com/

(2) Refilling Coolant

Problem symptom

- Message still shows after adding coolant.

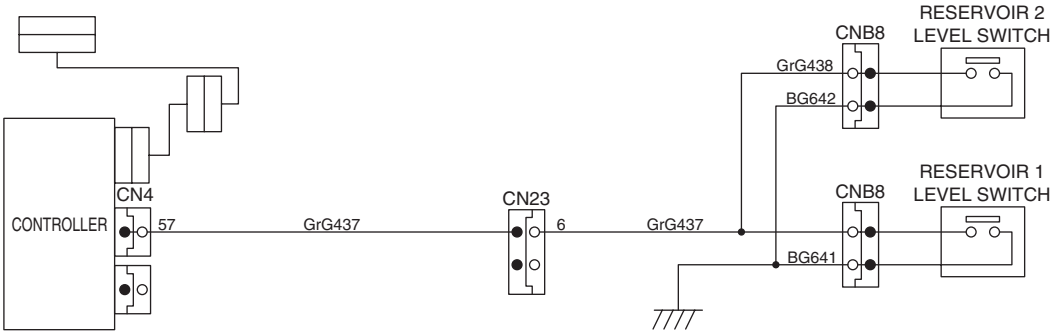

Troubleshooting	Cause	Remedy
Key switch ON Disconnect connector CNB8 on reservoir level switch to see if message turns off. — YES	Defective reservoir level switch	Replace reservoir.
NO → Disconnect CN23 connector to see if message turns off. — YES	Short circuit on wire between reservoir level switch and CN23	Repair wire.
NO → Disconnect CN4 connector to see if message turns off. — YES	Short circuit on wire between CN23 and CN4	Repair wire.
NO	Defective controller	Replace controller.

https://truckmanualshub.com/

(3) Low Engine Oil Pressure

Problem symptom

- Message still shows after correcting engine oil pressure

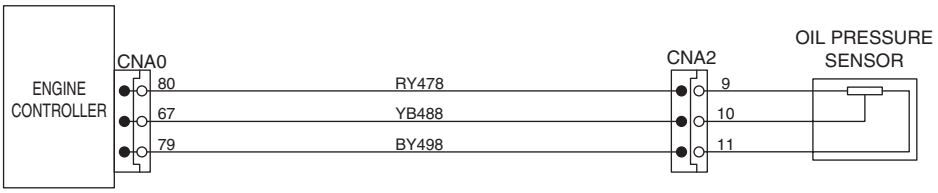

Troubleshooting	Cause	Remedy
Check 12 sec. after engine starts.		
Disconnect connector on oil pressure sensor to see if message turns off. — YES	Defective oil pressure sensor	Replace.
NO → Disconnect CNA0 connector to see if message turns off. — YES	Short circuit on wire between CNA0 and CNA2	Repair wire.
NO	Defective engin controller	Replace engine controller.

https://truckmanualshub.com/

(4) Overheat

Problem symptom

- Message still shows when the hydraulic oil temperature is 98°C or below and engine coolant temperature is 105°C or below.

Prior point to be checked: Make sure that the bar indicator for coolant temperature or oil temperature is at 8.

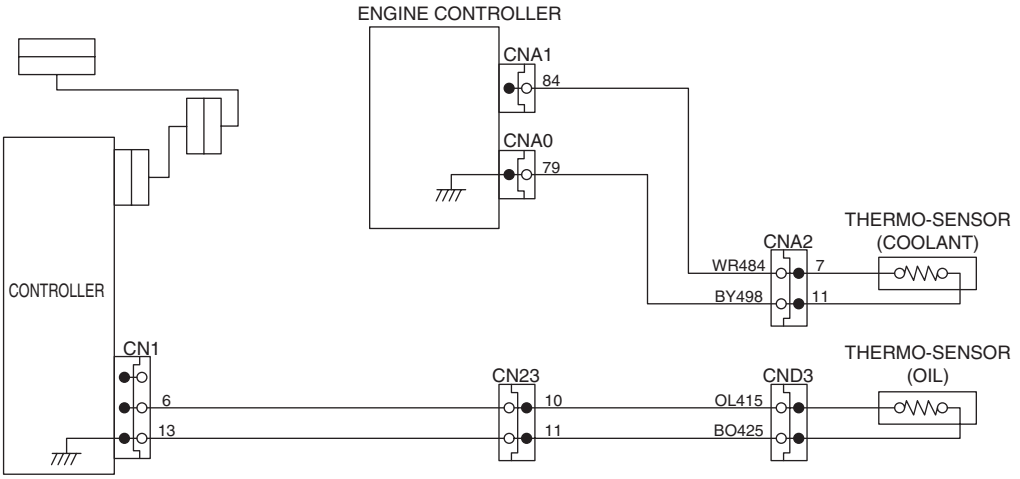

Troubleshooting	Cause	Remedy
1) Bar indicator for coolant temperature is at 8.		
Key Switch ON		
Service support CHK 1 detects abnormal indication of temperature (coolant) by thermo-sensor (actual temperature versus indicated temperature)		
YES		
* Run CHK 1 WT to display coolant temperature. * Measure actual temperature. Verify that error code for coolant temperature sensor is displayed on service support error diagnosis (DIAG 1).		
YES		
Disconnect connector CNA2 on thermo-sensor (coolant) to measure resistance of connector on the sensor side. (Refer to the next table for resistance.)	Defective thermo-sensor (coolant)	Replace sensor.
NO		
YES		
Disconnect connectors CNA0 and CNA1 to measure resistance between male terminals. (Refer to the next table for resistance.)	Loose connection on connector of thermo-sensor (coolant)	Clean connector terminal on sensor.
NO		
YES	Defective controller or loose connection on CNA0, CNA1	Replace controller, or clean CNA0, CNA1 connector terminal.
Note: Bar indicator lights will all be off when there is a break in wiring.		

https://truckmanualshub.com/

Troubleshooting	Cause	Remedy
2) Bar indicator for hydraulic oil temperature is at 8.		
Service support CHK 1 detects abnormal indication of temperature (oil) by thermo-sensor. (actual temperature versus indicated temperature)		
* Run CHK 1 OT to display coolant temperature. * Measure actual temperature.		
YES → Verify that error code M0020 for oil temperature sensor is displayed on service support error diagnosis (DIAG 4).		
YES → Disconnect connector CND3 on thermo-sensor (oil) to measure resistance on the sensor side. (Refer to the following table for resistance.)		
NO →	Defective thermo-sensor (oil)	Replace sensor.
YES → Disconnect connector CN23 to measure resistance between male terminals OL and BO. (Refer to the following table for resistance.)		
NO →	Loose connection on connector for thermo-sensor (oil)	Clean connector terminal on sensor.
YES → Disconnect connector CN1 to measure resistance between female terminals OL and BO. (Refer to the following table for resistance.)		
NO →	Loose connection on CN23	Clean CN23 connector terminal.
YES →	Defective controller or loose connection on CN1	Replace controller or clean CN1 connector terminal.
Note: Bar indicator lights will all be off when there is a break in wiring.		

Sensor resistance

Note: Resistance may vary slightly depending on the temperature.

Unit: kΩ

Coolant (Oil) temperature	Coolant temperature sensor	Oil temperature sensor
20°C	2.50	2.45
30°C	1.73	1.66
40°C	1.20	1.15
50°C	0.84	0.81
60°C	0.61	0.58
70°C	0.45	0.43
80°C	0.31	0.32

https://truckmanualshub.com/

(5) Battery Charging

Problem symptom

- Message still shows

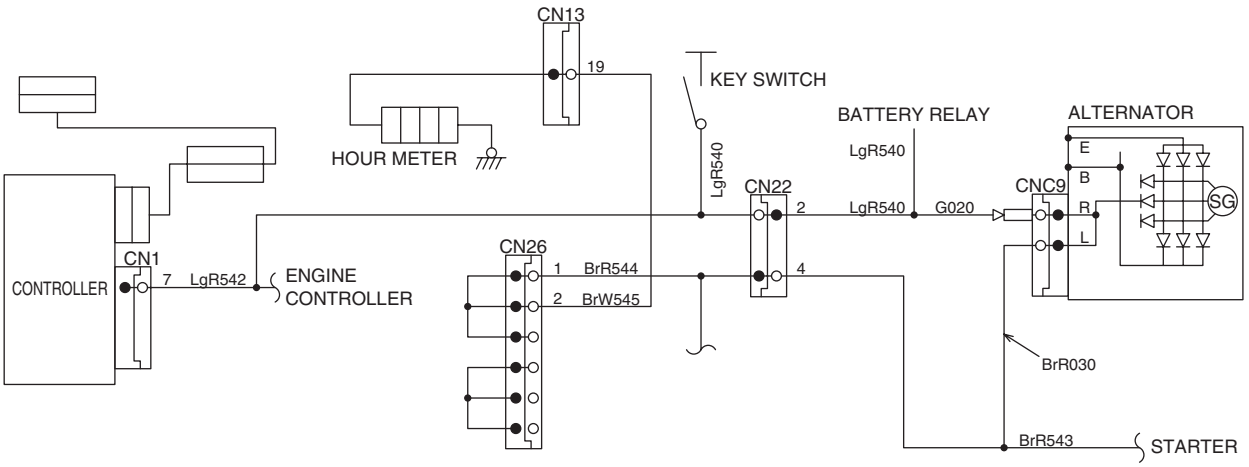

Troubleshooting	Cause	Remedy
Hour meter is not functioning. → NO → Disconnect connector CN1 to measure voltage between female terminal WR and Ground. 10 V or above → NO	Break in wire between CN1 and CN22	Repair wire
Disconnect connector CN1 to measure voltage between female terminal WR and Ground. 10 V or above → YES	Loose connection on CN1 or defective controller	Clean CN1 connector terminal or replace controller.
Hour meter is not functioning. → YES → Disconnect connector CNC9 on alternator R terminal to measure voltage between alternator side and Ground. 10 V or above → NO	Defective alternator	Replace alternator.
Disconnect connector CNC9 on alternator R terminal to measure voltage between alternator side and Ground. 10 V or above → YES → Disconnect connector CN22 to measure voltage between male terminal LgR and Ground. 10 V or above → NO	Break in wire between CN22 and alternator, or loose connection on alternator connector terminal of alternator	Repair wire between CN22 and alternator, or clean the connector
Disconnect connector CN22 to measure voltage between male terminal LgR and Ground. 10 V or above → YES		

https://truckmanualshub.com/

(6) Faulty Electrical System

Problem symptom

- Massage still shows.

Prior point to be checked

- Check the error code and if it is related to engine system, refer to the engine troubleshooting manual.

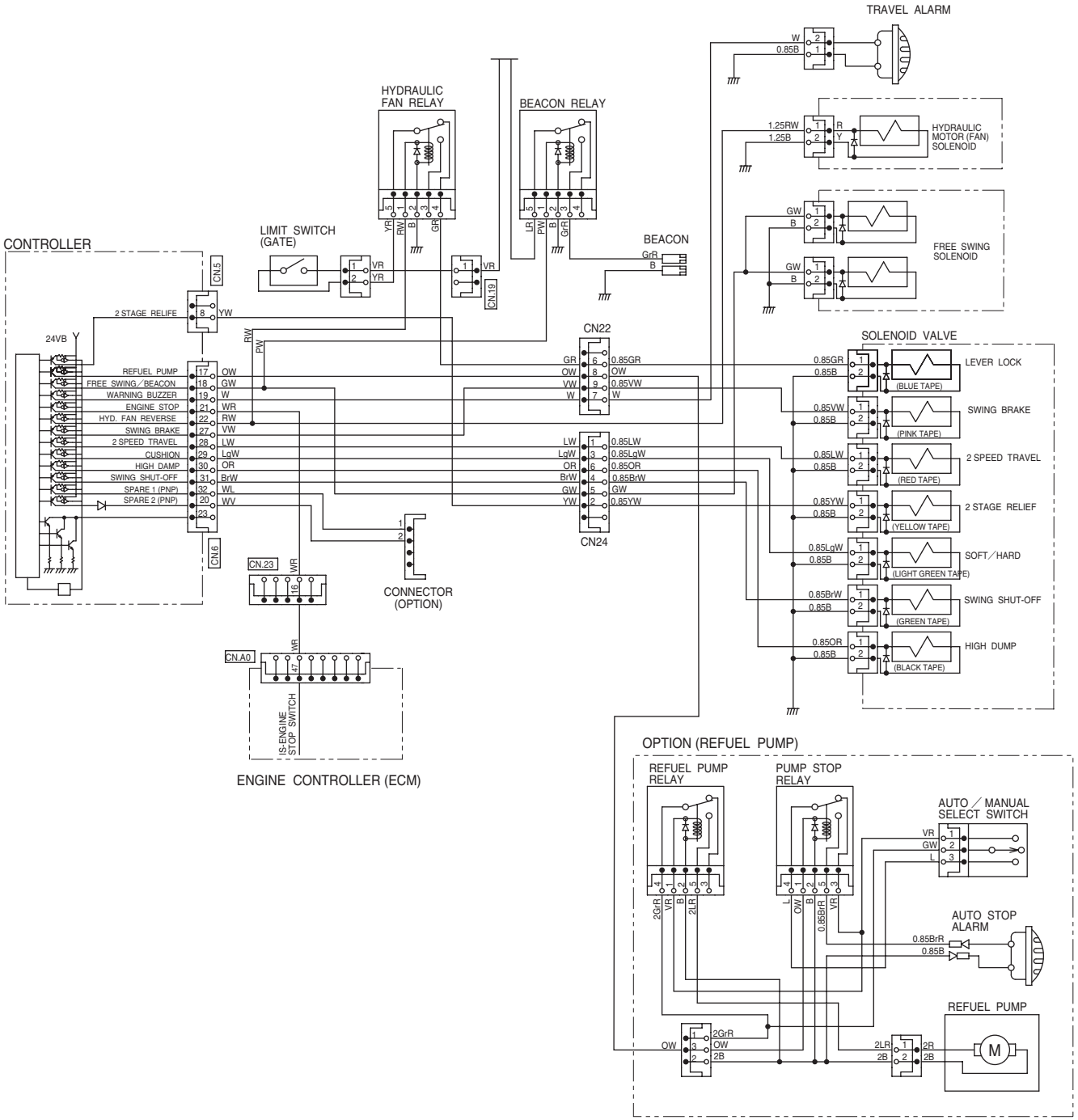

https://truckmanualshub.com/

Troubleshooting	Cause	Remedy
Confirm the trouble by service replacement trouble diagnosis.		
Key switch ON		
Find troubled location by DIAG1 → YES → Refer to the engine troubleshooting manual		
NO ↓		
Find troubled location by DIAG4		
YES (M0020 appears) ↓		
To CHK2		
↓		
With automatic detection for shortcircuit		
YES ↓		
Message disppears when connector of solenoid valve in shortcircuit is disconnected. → YES	Defective solenoid	Replace solenoid valve
NO ↓		
Message disappears when either one of connectors CN21, CN22, CN23 in shortcircuit line is disconnected. → YES	Short circuit on wire	Repair wire
NO ↓		
Message disappears when connector CN6 of controller is disconnected. → YES		
NO →	Defective controller	Replace controller

https://truckmanualshub.com/

Electrical Components and Wiring (Frame)

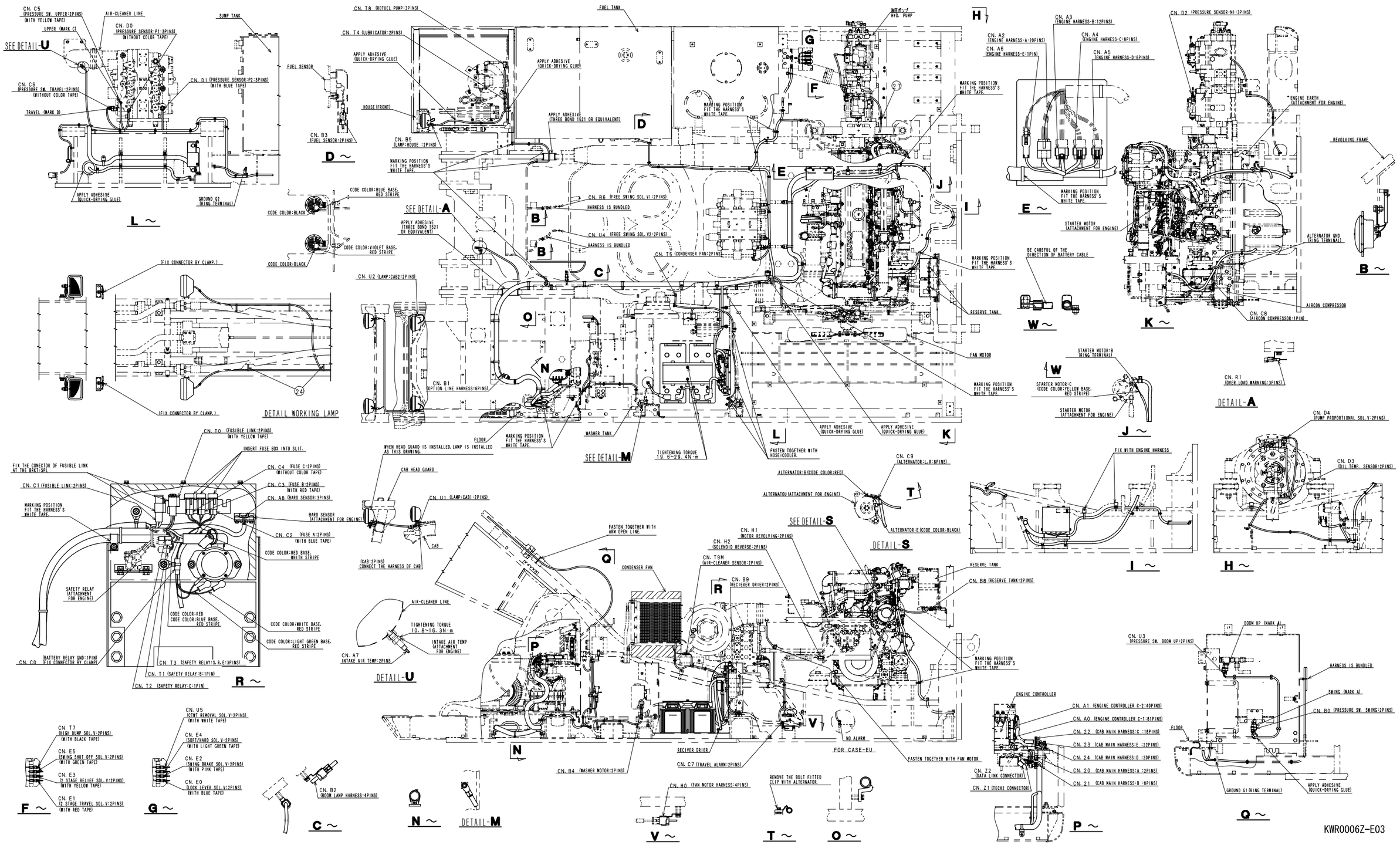

https://truckmanualshub.com/

Electrical Components and Wiring (Cab)

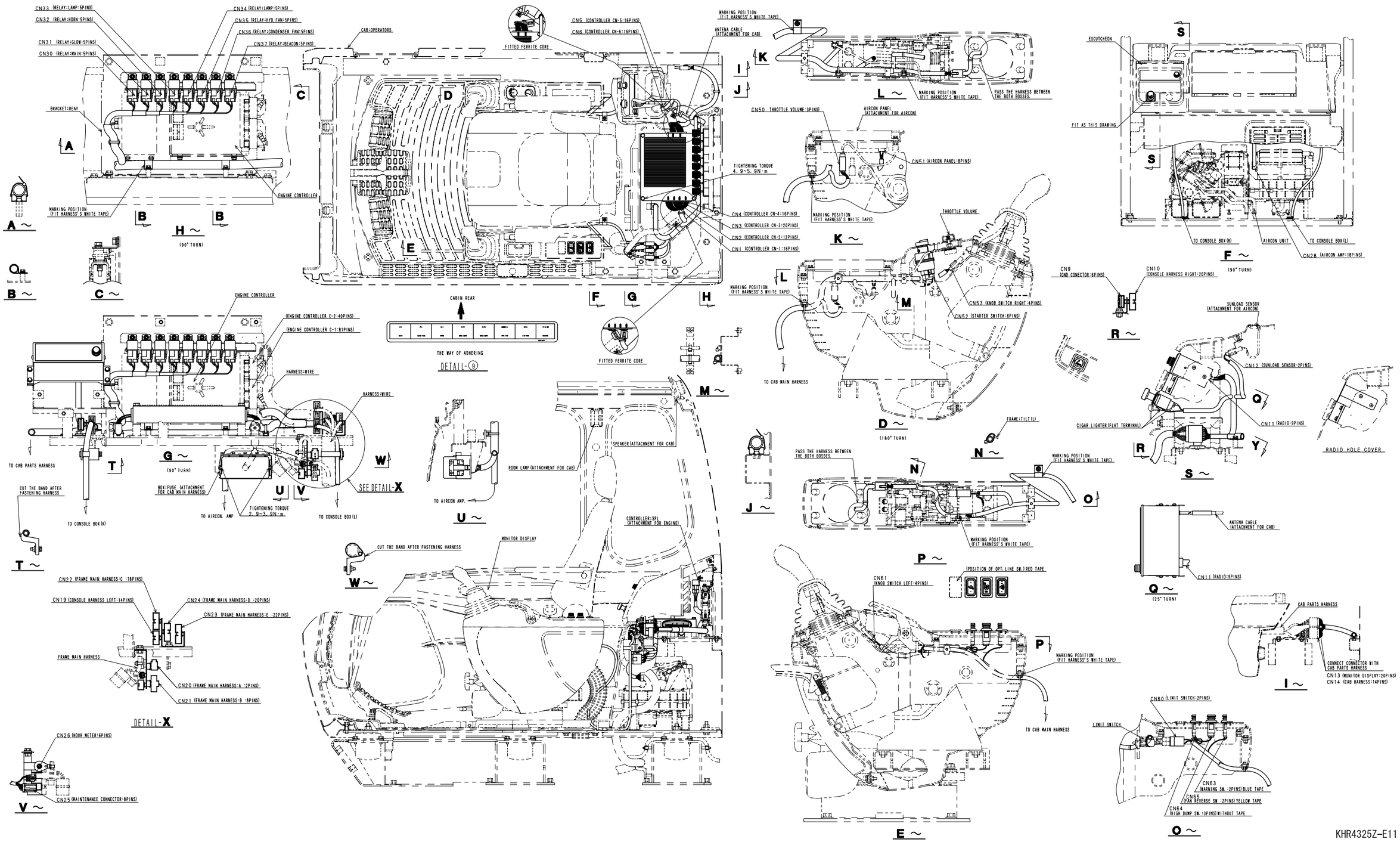

https://truckmanualshub.com/

Electric Circuits

HARNESS DIAGRAMS

First Edition : 03/2006

Frame Main Harness

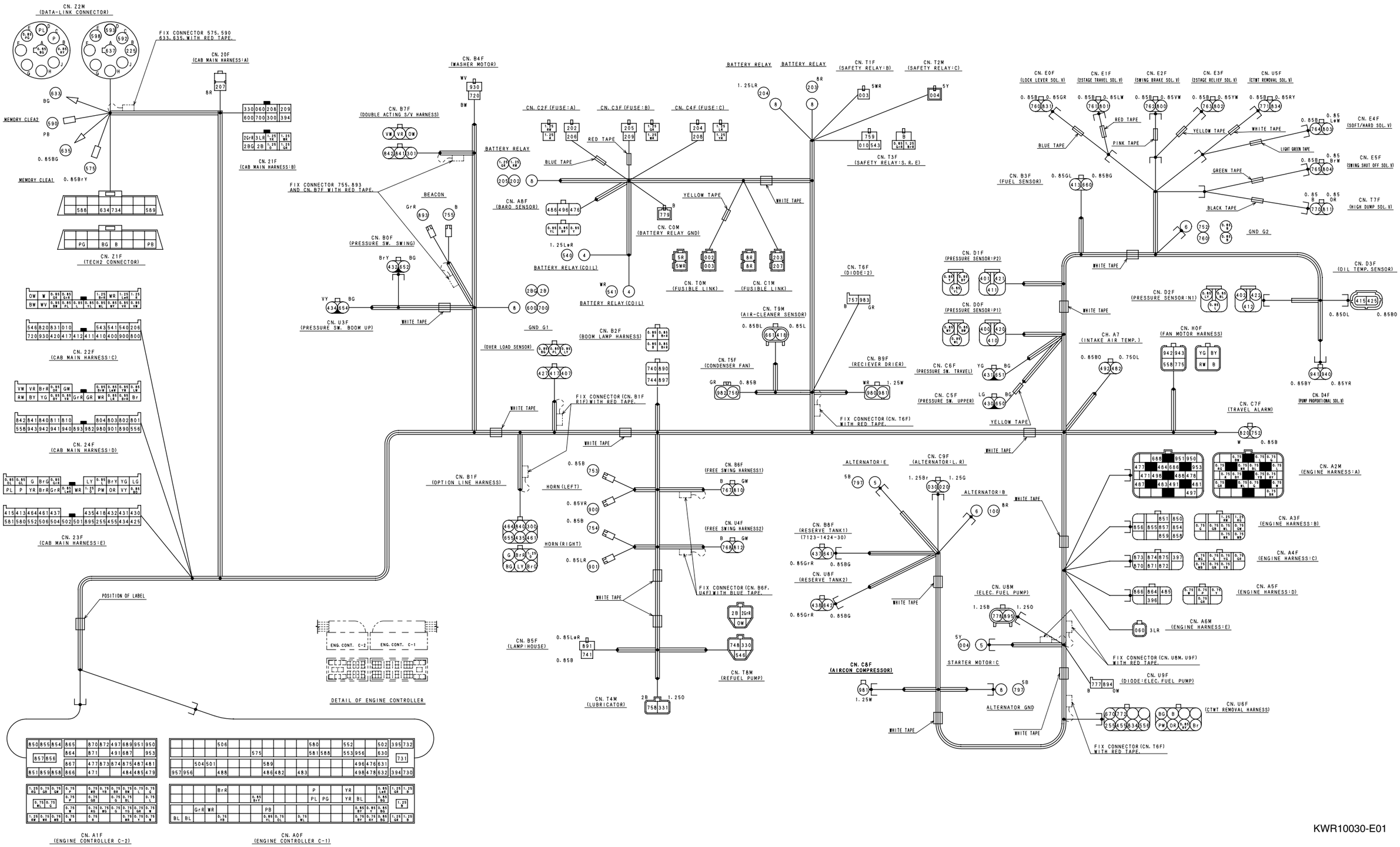

KWR10030-E01

https://truckmanualshub.com/

Cab Main Harness

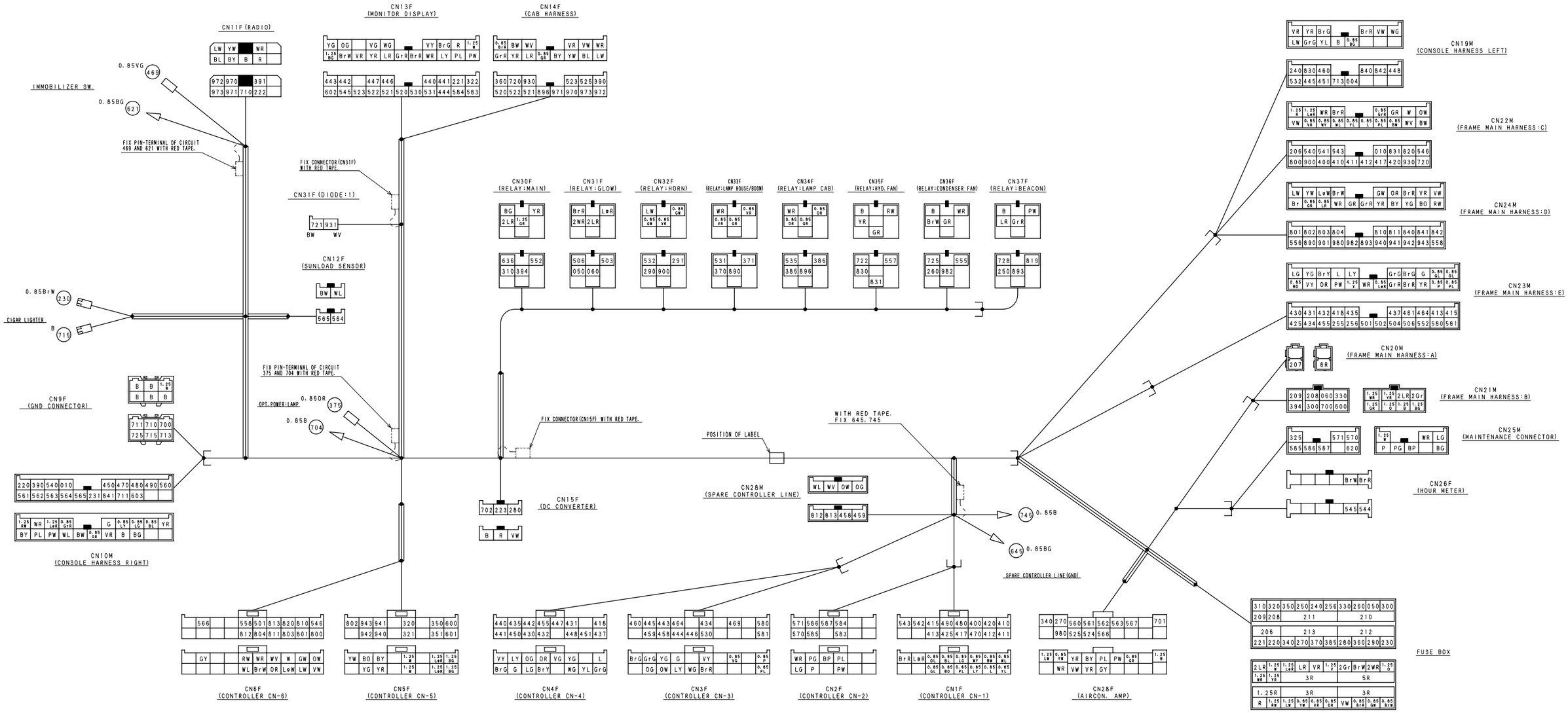

KHR13130-E02

https://truckmanualshub.com/

Performance Evaluation Check Sheet

√= Confirmation, S = Measurement, A = Adjustment

Inspection Item	Confirm	Remarks
Fluid/Oil Level Inspection		
1. Radiator fluid level		
2. Engine oil level		
3. Hydraulic oil level		
Brake-in Operation Inspection		
1. Engine start/stop		
2. Air bleeding		
3. Individual operation		
4. Oil leakage		
Hydraulic Oil Contamination Inspection		
Electrical System Inspection		
1. Machine type choice		
2. ndicator lights		
3. Monitor display (1)		
4. Monitor display (2)		
5. Mode change functions		
6. One-touch/Auto idle function		
7. Lever lock function		
8. Swing brake function		
9. 2-speed travel function		
10.Swing lock function		
11.Travel alarm function		
12.Auto glow (GT)		
13.Power shut-off delay function		
1. Accessories operation (1)Radio (2)Air conditioning (3)Windshield wiperblades (4)Vehicle horn (5)Working light (6)Interior lights (7)Clock (8)Hour meter (9)Backup lights		

Inspection Item	Confirm	Remarks
Engine inspection		(As required)
1. Engine speed Idling min^{-1} Maximum with no load min^{-1}		
2. Conditions of engine rotation (1)When idling (2)Without load		
3. Engine exhaust hue		
4. Engine sound and vibration		
5. Engine stop (1)Turning off the key switch (2)Emergency stop switch		
Hydraulic Equipment Inspection		(As required)
1. Pressure of each component (refer to separate sheet)		
2. Abnormal sounds of each part		
3. Natural lowering level of each cylinder (refer to separate sheet)		
4. Operation speed of each cylinder (refer to separate sheet)		
5. Swing speed (refer to separate sheet)		
6. Swing brake performance (refer to separate sheet)		
7. Condition and sound of swing motions		
8. Travel speed (refer to separate sheet)		
9. Turns		
10.Condition and sound of travelling		
Operation Inspection		
1. Operation condition of each lever		
Shoe Tension		
Others		
1. Oil leaks at each part		
2. Oil leaks at rubber hoses or piping		
3. Looseness or fall off of bolts and nuts		
4. Cab inspection		
5. Cylinder inspection		
6. Nephron filter inspection		

https://truckmanualshub.com/

Performance Evaluation Recording Sheet

Model of Machine:		Model Number:			Evaluation Date (mm/dd/yy)		Evaluated by	
Hour Meter:		Attachment Armm^3 Bucket			Remarks			
1	Engine speed	Idling speed			min^{-1}			
		Maximum engine speed without load			min^{-1}			
2	Pressure check of each component (Evaluate as required)	Relief Name		Operation	Measured pressure			
		Main relief		Standard	MPa			
				Boosting	MPa			
		Swing relief		Left/Right	MPa			
		Pilot relief		æ	MPa			
	For measurement and adjustment methods, refer to procedures for hydraulic oil pressure measurement and adjustment in Service Manual.							
3	Drift for each cylinder (10 minutes)	Boom cylinder			mm			
		Arm cylinder			mm			
		Bucket cylinder (when open)			mm			
		Overall (10 minutes)			mm			
4	Operation speed for each cylinder (sec)			1st Reading	2nd Reading	3rd Reading	Total	Average
		Boom	Up					
			Down					
		Arm	Out					
			In					
		Bucket	Open					
			Closed					
5	Swing speed (sec/1 revolution)			1st Reading	2nd Reading	3rd Reading	Total	Average
		Swing Left						
		Swing Right						
6	Swing angle 180×, neutral brake flow angle (degrees)			1st Reading	2nd Reading	3rd Reading	Total	Average
7	Travel speed (sec/6 m)			1st Reading	2nd Reading	3rd Reading	Total	Average
			Forward					
			Reverse					
8	Number of drive sprocket revolutions (sec/10 revolutions)			1st Reading	2nd Reading	3rd Reading	Total	Average
			Front low					
			Back low					
			Front high					
			Back high					
9	Degree of turntable bearing shift		Horizontal		mm			
			Vertical		mm			
10	Amount of shoe tension ranging from the bottom side frame to shoe surface				mm			

https://truckmanualshub.com/

Reference Values

Numerical values for performance may change without notice due to product improvement.

Items				Reference values	Conditions
1	Engine speed (min^{-1})	Idling		900 ± 10	Mode: H
		Maximum without load		1870 ± 10	
2	Pressure of each part (MPa)	Main Relief	Standard	31.4 ± 1.0	Mode: S
			Boosting	34.3 ± 1.0	
		Swing relief	Vertical	27.9 ± 1.0	
		Pilot relief		4.4 ± 0.2	
3	Natural lowering level of each cylinder (mm)	Boom cylinder		10 or below	No load for 10 minutes
		Arm cylinder		15 or below	
		Bucket cylinder (when open)		20 or below	
		Overall		225 or below	No load for 10 minutes
4	Operational speed of each cylinder (sec)	Boom	Up	5.6 ± 0.6	Mode: S
			Down	4.1 ± 0.4	
		Arm	Open	3.8 ± 0.4	
			Close	4.4 ± 0.4	
		Bucket	Open	3.4 ± 0.3	
			Close	3.4 ± 0.3	
5	Swing speed (sec/1 revolution)			6.3 ± 0.3	Mode: S
6	Swing angle 180°, neutral brake flow angle (degrees)			50° or below	No load
7	Travel speed (sec/6 m)		High	6.5 ± 0.3	Mode: S
8	Number of drive sprocket revolutions (sec/10 revolutions)		High	23.5 ± 1.8	Mode: S
			Low	16.3 ± 1.8	
9	Amount of turntable bearing shift (mm)		Horizontal	13.5 or below	Mode: S
			Vertical	2.1 or below	
10	Amount of shoe tension ranging from the side frame bottom to shoe surface (mm)			410 to 430	

https://truckmanualshub.com/

Measuring Pressure

1. Basic Conditions

Work mode	S Mode
Oil temperature	45 to 55°C
No load engine speed	1750 ± 10 min^{-1}

2. Set Values

The values below are measured on an actual machine and are not standard values

		Relief valve set pressure (as single component)	Values measured on actual machine	Measuring methods
Main relief pressure	Standard	$31.4^{0}_{-0.5}$ MPa at 435 L / min	31.9 MPa	Arm relief
	Power boost	$34.3^{0}_{-0.5}$ MPa at 385 L / min	34.8 MPa	Arm relief
Boom overload relief	Up	36.3 ± 0.5 MPa at 20 L /min	38.5 MPa (36.8 MPa)	Fastening main relief 180° + Boom up relief
	Down	27.5 ± 0.5 MPa at 20 L /min	—	—
Arm In/Out overload relief		36.3 ± 0.5 MPa at 20 L /min	37.2 MPa (36.8 MPa)	Fastening main relief 180° + Arm relief
Bucket Open/Close overload relief		36.3 ± 0.5 MPa at 20 L /min	37.3 MPa (36.8 MPa)	Fasteming main relief 180° + Bucket relief
Swing relief		27.9^{0}_{-1} MPa at 215 L /min	34.5 MPa (28.9 MPa)	Swing relief
Pilot relief		4.4 ± 0.2 MPa	4.2 MPa	Lever neutral

( ) An inner numerical value is at the idling time.

https://truckmanualshub.com/

3. Pressure Measuring Port

1) Main pressure

A pressure sensor is mounted on the control valve and the circuit pressure can be displayed on the monitor (except for pilot pressure).

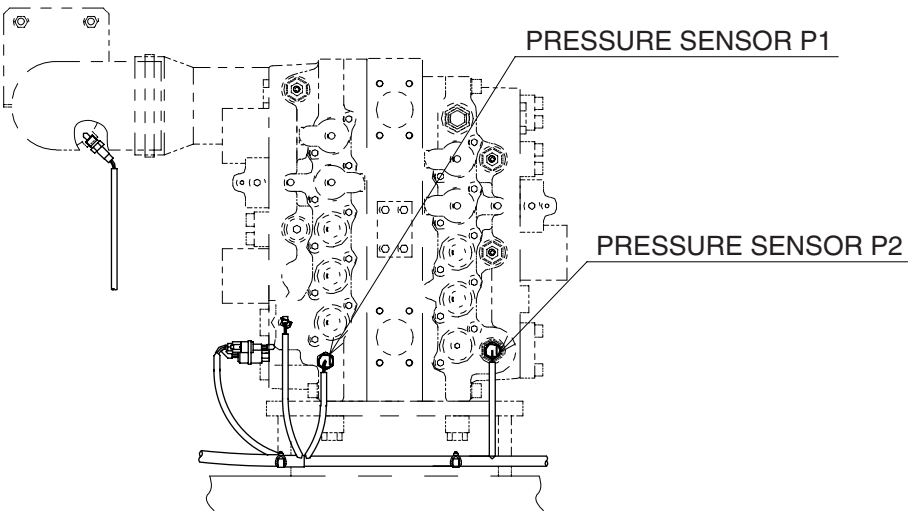

Pressure on each relief valve (except for pilot pressure) can be confirmed on the monitor display.

[1] How to display the pressure on the monitor display

Use the mode-changing switch on the monitor display to display the pressure.

Monitor and switch panels

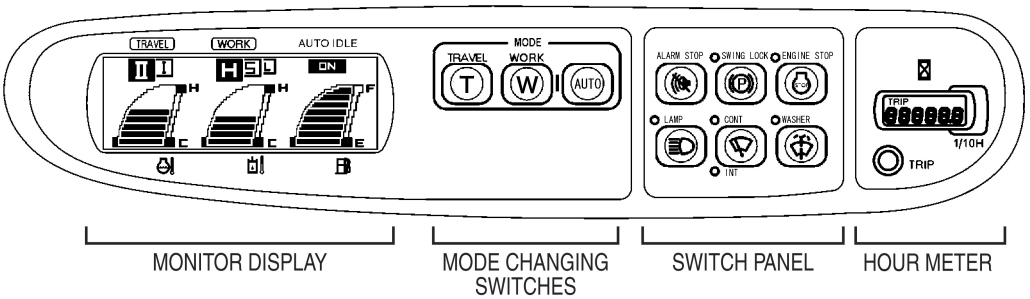

How to operate

Operating button	Monitor display
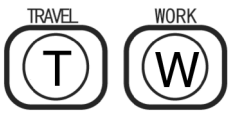 Travel and work mode Press the switch for at least 3 seconds.	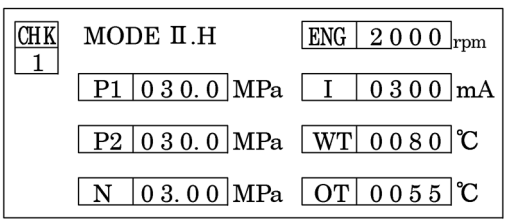 P1 indicates the front pump pressure and P2 the rear pump pressure. Units are MPa (mega pascal).

https://truckmanualshub.com/

2) Pilot pressure

Measure the pressure at port a3 (G1/4) on the pilot pump.

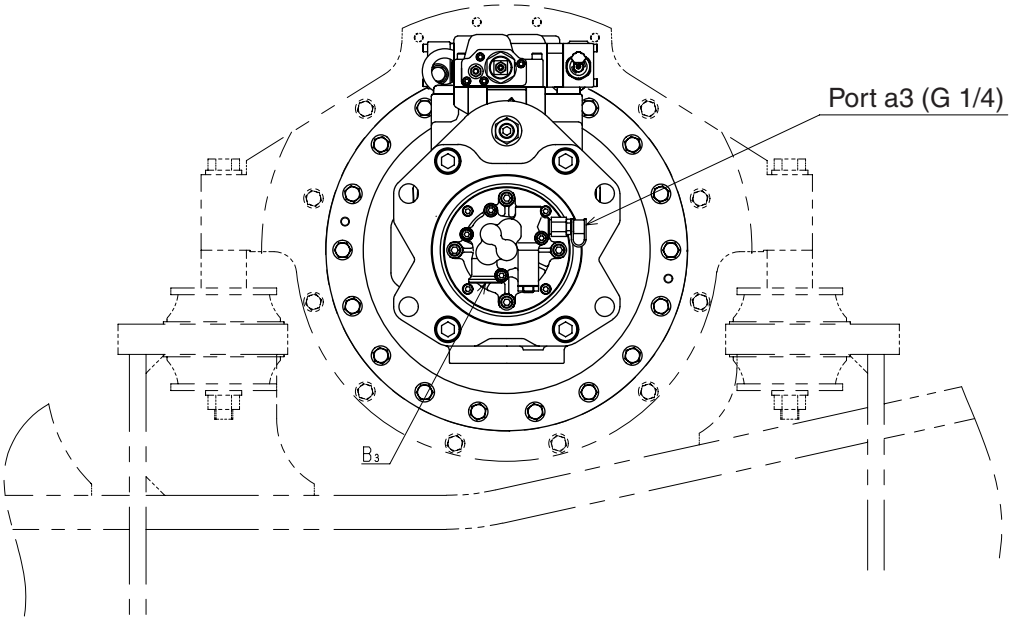

https://truckmanualshub.com/

4. Preparation for Measuring Pressure

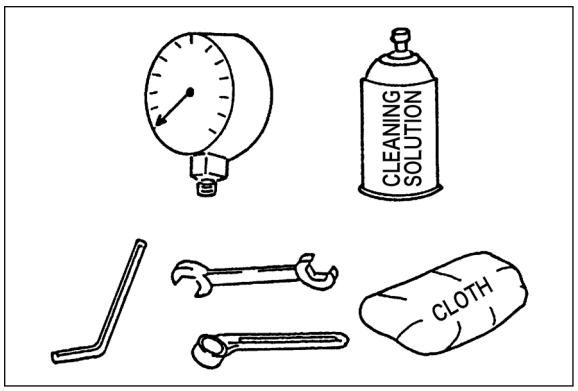

[1] Items to prepare

1) Pressure gauge For 9.8 MPa use
2) Tools Spanner (closed wrench) 17 mm
   Hexagon wrench 6 mm
3) Other Cloth, Cleaning solution

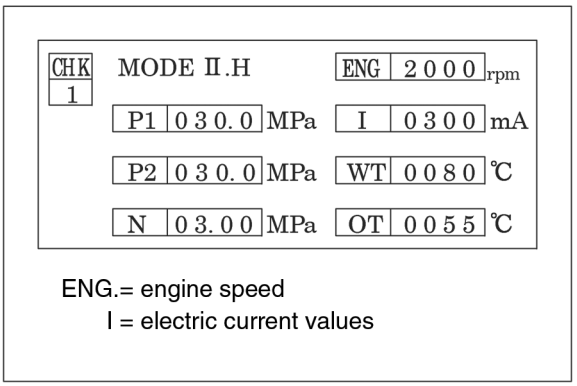

[2] Monitor check

- In the Service Check, check the engine maximum speed with no load and the input current value of the pump in S mode.

Maximum Engine speed	S Mode current value
1750 ± 10 min^{-1}	480 mA (when operating)

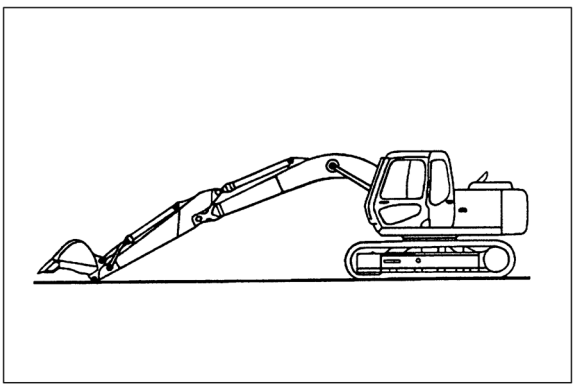

[3] Machine positioning

- Position the machine on solid level ground, lower the boom allowing the arm end to touch the ground with the bucket cylinder OUT at stroke end and the arm cylinder OUT at stroke end.

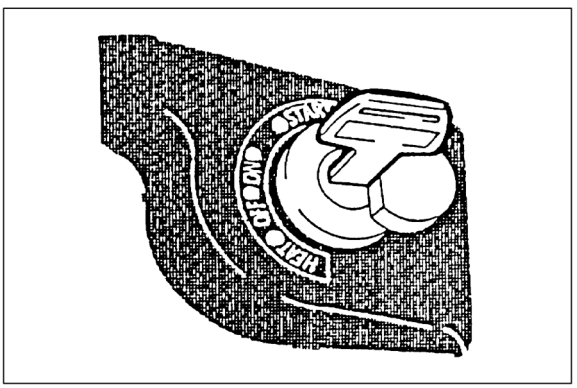

[4] Pressure relief in circuit

- Turn off the ignition key and confirm the engine has stopped. Turn on the key again.

  Note: Do not start the engine.

- Operate each lever more than 10 times and make sure that the attachments do not move. Then, turn off the key.

https://truckmanualshub.com/

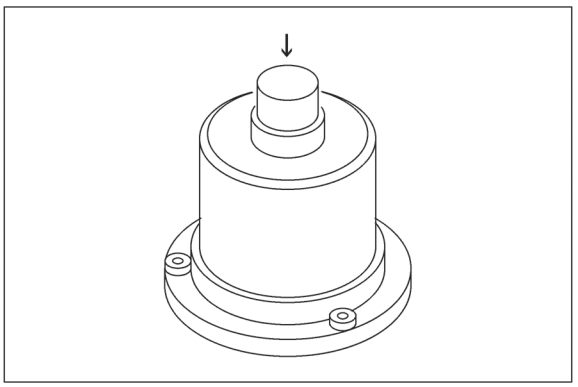

[5] Pressure relief in hydraulic oil tank

- Press the air breather button, located on the hydraulic oil tank, to release the pressure in the tank.

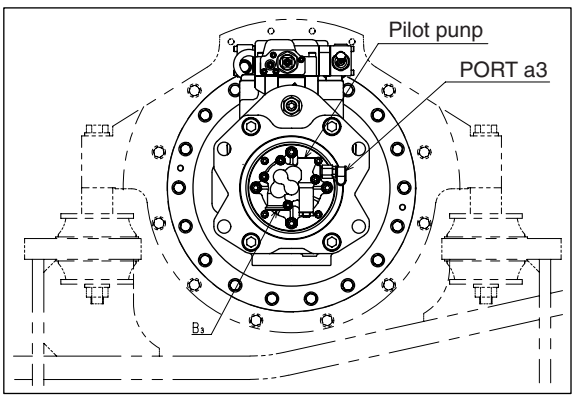

[6] Install pressure gauge

- Install a pressure gauge to the pilot pressure measuring port.

Pressure gauge	For 9.8 MPa use
Port size	G1/4

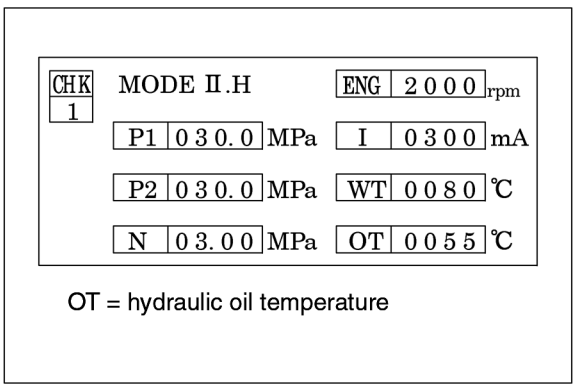

[7] Check oil temperature

- Following the Service Check, confirm hydraulic oil temperatures.

Oil temperature	45 to 55℃

- If the oil temperature is low, follow the instructions for warming up in the Operator's Manual to increase the oil temperature.

Now, the preparation is completed.

https://truckmanualshub.com/

5. Measuring Pressure

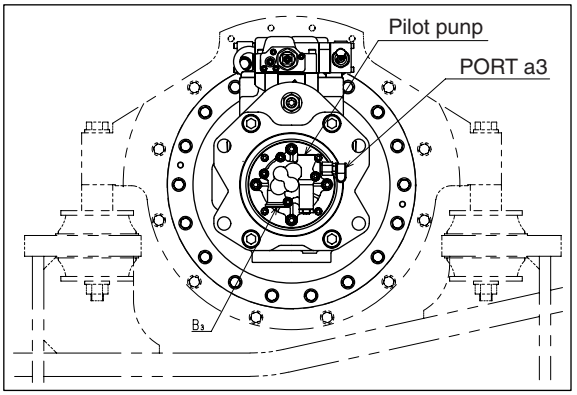

[1] Pilot relief pressure

Lever operation Neutral

Pressure gauge For 9.8 MPa use

Set pressure 4.4 ± 0.2 MPa

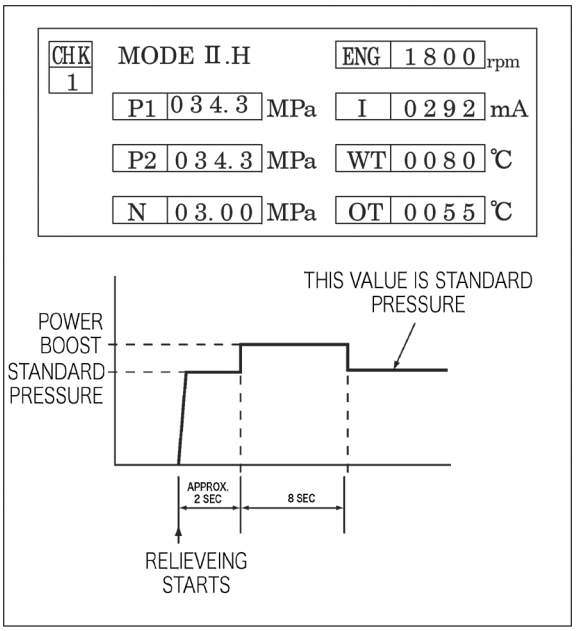

[2] Main relief pressure

Lever operation Arm IN relief

The value is displayed on the monitor display.

See 3.-[1]. *Pressure Measuring Port*

Check P1 and P2 on the monitor display.

- Standard set pressure $31.4^{0}_{-0.5}$ MPa
  After relieving arm in, the power boost is displayed for 8 seconds and then the pressure goes down to standard. Read the value.
- Power boost set pressure $34.3^{0}_{-0.5}$ MPa
  About 2 seconds after starting relieving, the power boost set pressure is displayed for 8 seconds. Read the value.

The pressure on the swing motor is displayed in P1 section on the monitor display.

[3] Swing relief pressure

Lever operation Swing relief

The value is displayed on the monitor display.

Set pressure 27.9^{0}_{-1} MPa

When measuring pressures while swinging, the measurement should be carried out after activating the mechanical brake by pushing the swing lock switch to lock the swing.

Note: Press the swing lock switch and decrease the engine speed to about 1000 min-1 when first operating the swing lever. After making sure that the swing does not move, increase the engine speed to the maximum.

https://truckmanualshub.com/

[4] Other overload relief pressure

Lever operation: Put the attachments to be measured in a relieved condition.

The value is displayed on the monitor display.

Temporary adjustments are required because the overload relief pressure of the attachment is higher than the pressure for the main relief. (excluding boom down)

Refer to *Adjusting Pressure*.

	Boom Down	Boom Up	Arm Out	Arm In	Bucket Open	Bucket Closed
Measured pressure	27.5 ± 0.5 MPa	36.3 ± 0.5 MPa				
Where displayed	P2	P2	P1	P1	P2	P2

https://truckmanualshub.com/

6. Measuring Other Pressures

Secondary pressure on the electromagnetic proportional pressure reduction valve of the hydraulic pump.

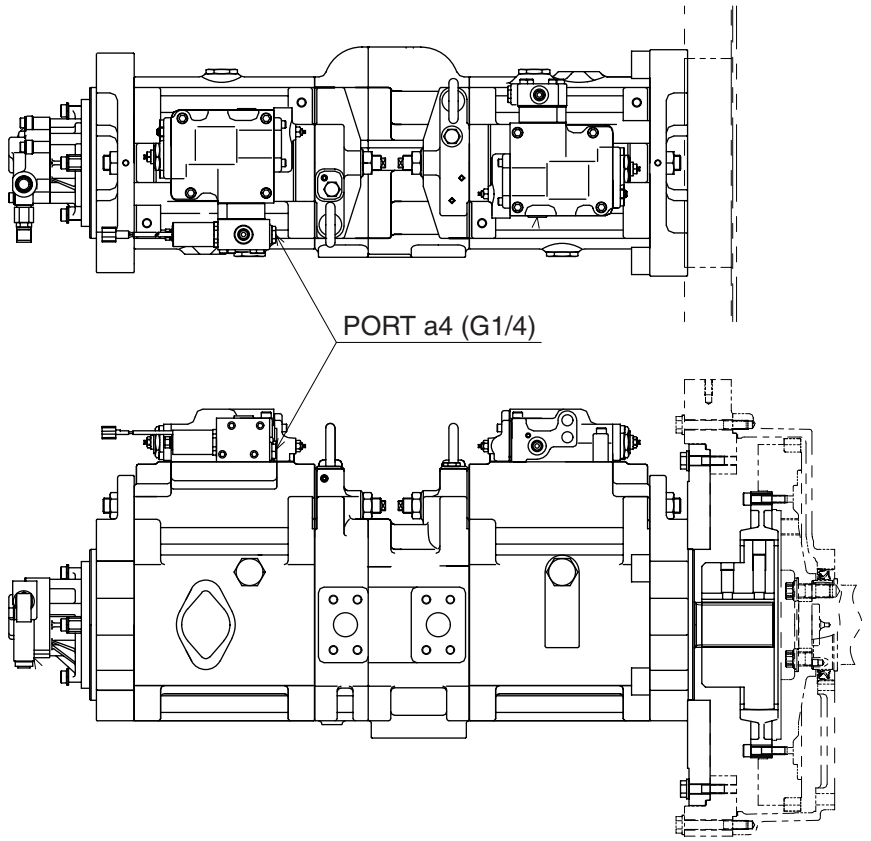

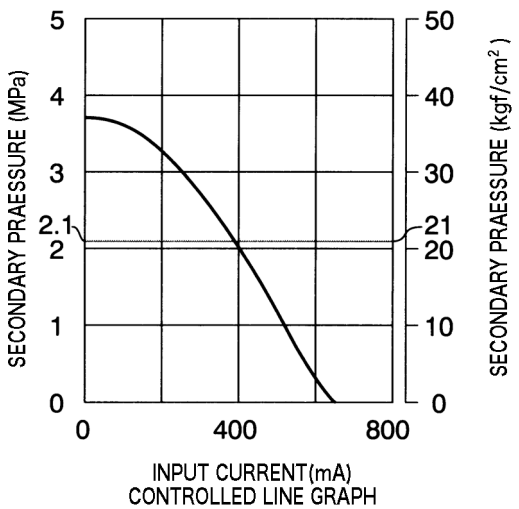

Mode		
H	Current (mA)	Max. 540
	Secondary pressure (MPa)	0.98
S	Current (mA)	480
	Secondary pressure (MPa)	1.6

Measuring conditions:
No load engine maximum speed

https://truckmanualshub.com/

Adjusting Pressure

1. Pressure Adjusting Points

1) Control valve

Item		Tool used		Set pressure	Adjusting screw per turn
		Lock nut	Adjusting screw		
1	Main standard	30 mm	22 mm	$31.4^{0}_{-0.5}$ MPa	17.6 MPa
2	Main power boost	41 mm	27 mm	$34.3^{0}_{-0.5}$ MPa	
3	Boom up	13 mm	Hexagon wrench 4 mm	36.3 ± 0.5 MPa	36.3 MPa
4	Boom down			27.5 ± 0.5 MPa	27.5 MPa
5	Arm out			36.3 ± 0.5 MPa	36.3 MPa
6	Arm in				
7	Bucket open				
8	Bucket close				

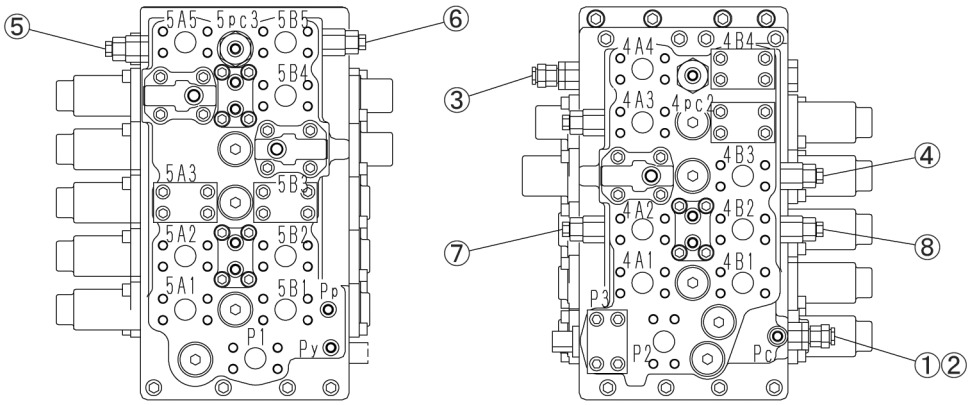

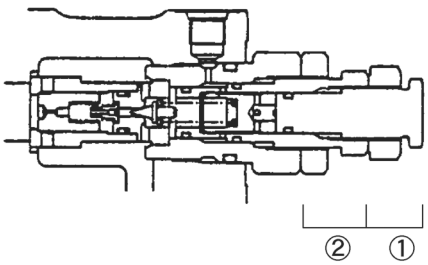

Main Relief Valve

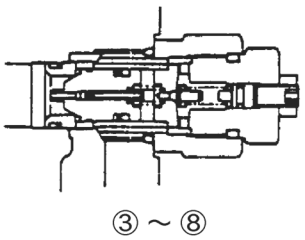

Overload Relief Valve

https://truckmanualshub.com/

2) Hydraulic pump

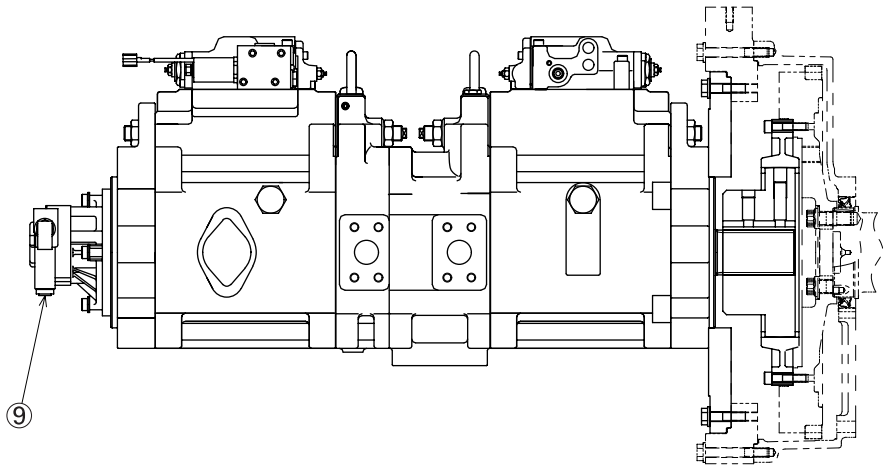

3) Swing motor

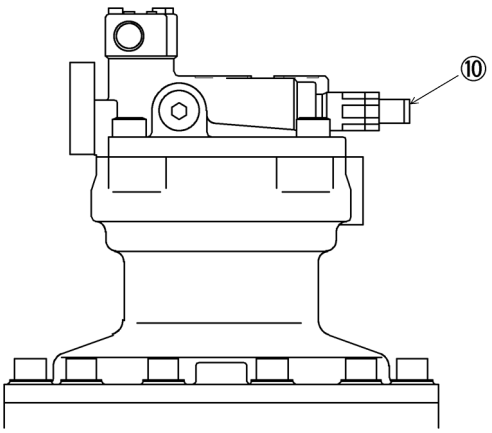

Item		Tool used		Set pressure	Adjusting screw per turn
		Lock nut	Adjusting screw		
9	Pilot	24 mm	Hexagon wrench 6 mm	$4.4^{+0.2}_{0}$ MPa	2.1 MPa
10	Swing motor	38 mm	30 mm	27.9 ± 0.5 MPa	4.4 MPa

https://truckmanualshub.com/

2. Instructions for Adjusting Pressure

1) Pilot pressure

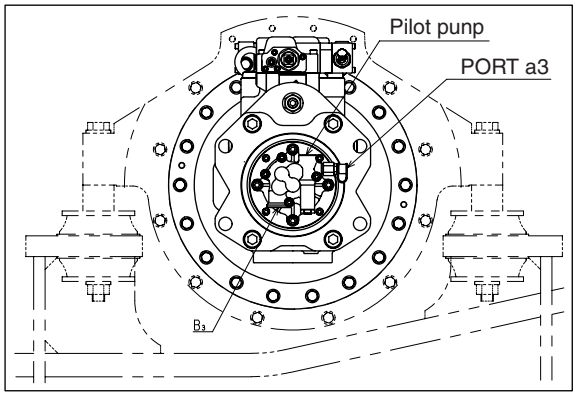

Engine speed	S Mode maximum speed
Lever operation	Neutral
Oil temperature	45 to 55°C
Tools	Spanner 19 mm Hexagon wrench 6 mm
Measuring port	Pilot pump a3 port
Pressure gauge used	For 9.8 MPa use
Set pressure	4.4 ± 0.2 MPa

Instructions for adjusting pressure:

a. Loosen the lock nut on the pilot relief.
b. Adjust to the set pressure by fastening the adjusting screw.
c. Secure the adjusting screw with wrench and fasten the lock nut.
d. After locking, check the pressure once again.

https://truckmanualshub.com/

2) Main relief pressure

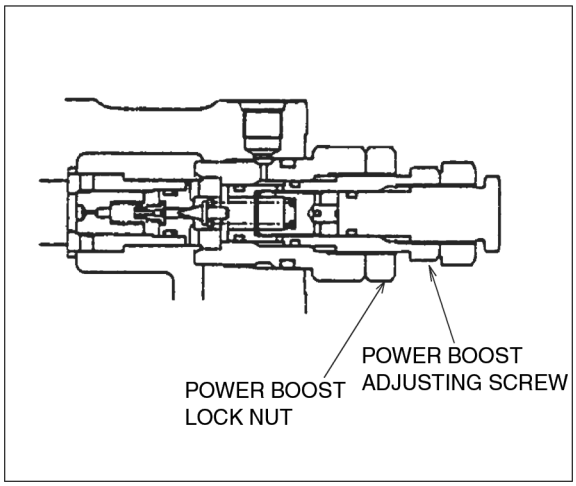

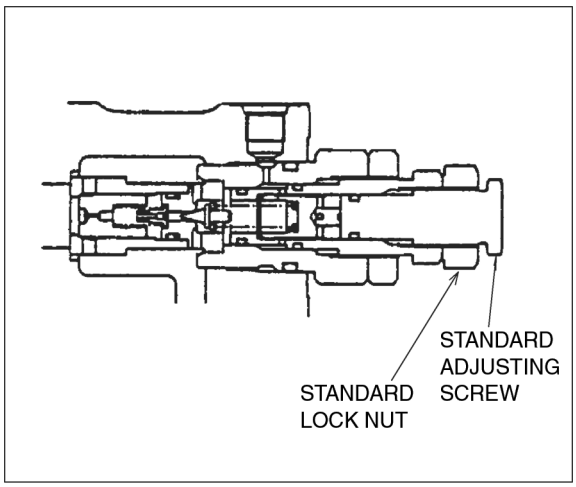

Engine speed		S Mode maximum speed
Lever operation		Arm IN relief
Oil temperature		45 to 55°C
Tools		Spanner 22, 27, 30, 41 mm
Measuring port		Monitor P1
Set pressure	Standard pressure	$31.4^{0}_{-0.5}$ MPa
	Power boost	$34.3^{0}_{-0.5}$ MPa

Pressure adjusting instructions

Before adjusting, install main relief valve.

Remove power boost signal pilot hose and plug the hose side.

Power boost

a. Loosen standard lock nut 30, tighten adjusting screw 22. Fasten it with spanner 27 mm so that the power boost adjusting screw does not turn.
b. After tightening the adjusting screw until it will no longer turn, tighten the lock nut.
c. Start the engine and run it at the maximum speed.
d. Put the arm lever into IN to bring it to relief condition and hold it.
e. Loosen the power boost lock nut 41 and adjust it at a set pressure with adjusting screw 27.
   - If it is lower than the set pressure, tighten it.
   - If it is higher than the set pressure, lower it once and adjust by tightening it.
f. After adjusting pressure, secure the adjusting screw with spanner 27 mm and fasten the lock nut.
g. After locking it, check the pressure at the power boost side.
   If a desired value has not been achieved, repeat steps e and f.

Standard

h. Loosen the standard lock nut.
i. Loosen the adjusting screw to lower the pressure below the set pressure and adjust it by tightening it.
j. After adjusting pressure, secure the adjusting screw with a spanner and fasten the lock nut.
k. After locking it, check the pressure.
   If a desired value has not been achieved, repeat steps h, i and j.
l. Stop the engine.

Rechecking

m. Start the engine, press the right lever power boost switch with the engine at maximum speed and verify no oil leakage at the adjusting area.
n. Set the arm in relief condition at the arm IN side and check standard pressure. Then press the power boost switch and check the power boost.
o. If a desired pressure has not been achieved, repeat the steps starting at a.

https://truckmanualshub.com/

3) Overload relief pressure

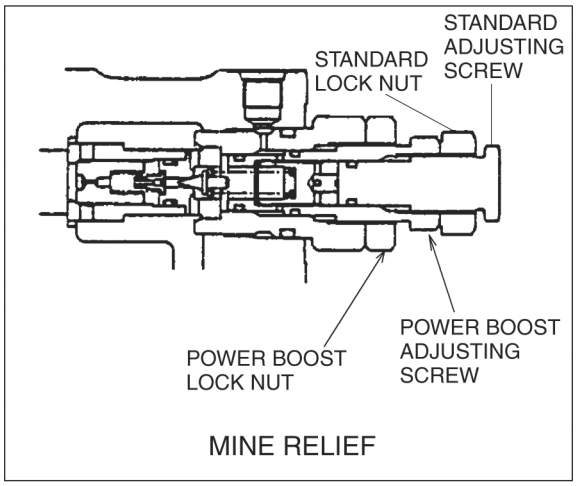

MINE RELIEF

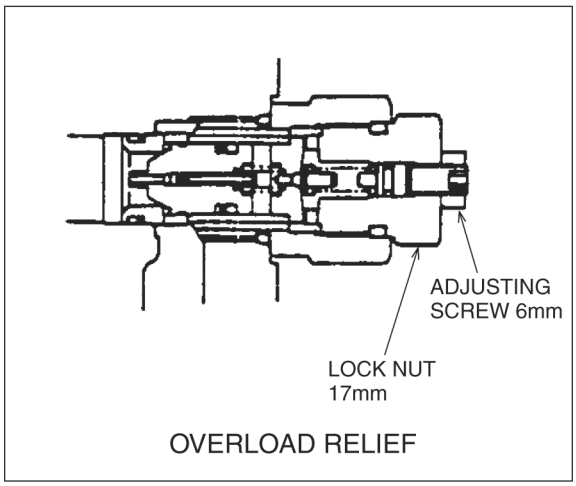

OVERLOAD RELIEF

Engine speed		S Mode maximum speed
Oil temperature		45 to 55°C
Tools		Hexagon wrench 4 mm Spanner 13, 27, 41 mm
Measuring port		Monitor P1
Set pressure	Boom down	27.5 ± 0.5 MPa
	other	36.3 ± 0.5 MPa

Note: It is necessary to temporarily set the main relief pressure higher than the overload pressure because the overload relief pressure is set higher than the main relief pressure.

Main relief pressure temporary setting

a) Loosen the power boost lock nut, and fasten the power boost adjusting screw 180° and tighten the lock nut.

b) After adjusting overload relief pressure, loosen power boost lock nut and also loosen power boost adjusting screw 180° or greater to lower the pressure below the standard set pressure. Then adjust by tightening it.

Note: Standard adjusting screw cannot be used for adjustment.

Note: Power boost adjusting screw should be used for adjustment. However, the set pressure is measured at the standard pressure side.

Pressure adjustment

The overload relief pressure for the boom, arm and bucket should be adjusted referring to the previous section 1). Control valve in the 1. *Pressure adjusting points*.

After the adjustment is completed, the main relief pressure should be set at a standard pressure.

For set pressure of each port, refer to set pressures in the previous section.

https://truckmanualshub.com/

4) Swing motor relief pressure

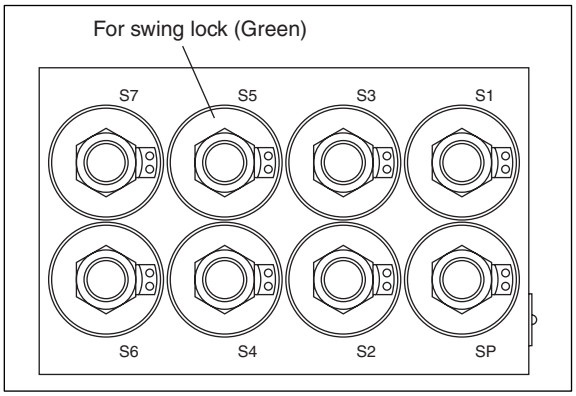

Disconnect the connector for swing lock (green) in 8-way solenoid valve.

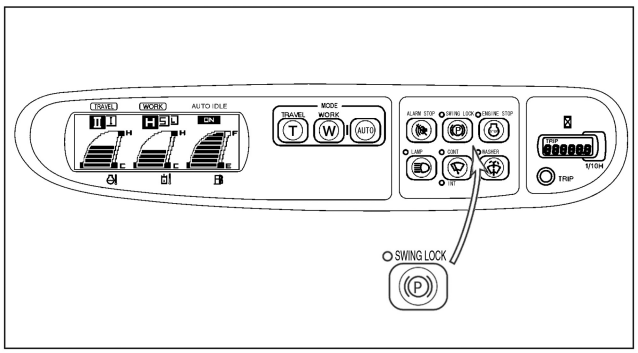

Swing lock instructions

Press the swing lock switch located on the right-hand switch panel in the cab and confirm that the lamp next to the switch is turned on.

When the swing lever is first put in place, the engine speed should be reduced to about 1000min^{-1}.

After making sure that the swing does not move, increase the engine speed to the maximum.

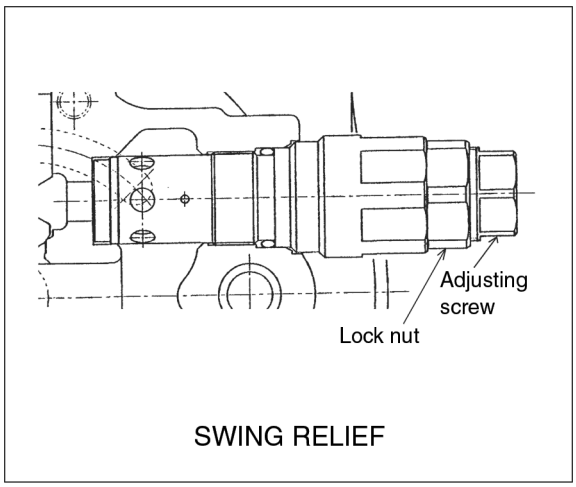

Engine speed	S mode maximum speed
Oil temperature	45~55°C
Tools	Spanner 30, 38 mm
Set pressure	27.9 ± 0.5 MPa

a) Check the current set pressure.
b) If the set pressure is different from the current pressure, adjust the adjusting screw.

https://truckmanualshub.com/

1. Circumference Filter Arrangement of Engine

Fuel Pre-filter

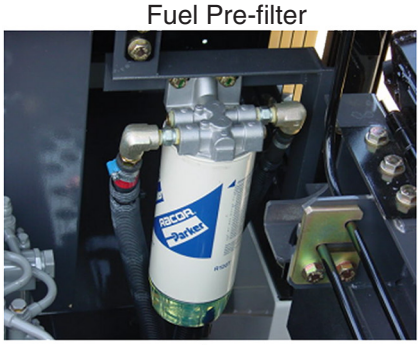

Fuel main filter

Engine oil level gauge

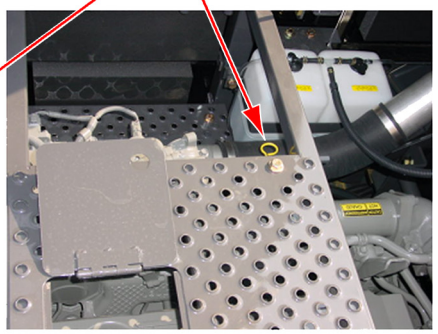

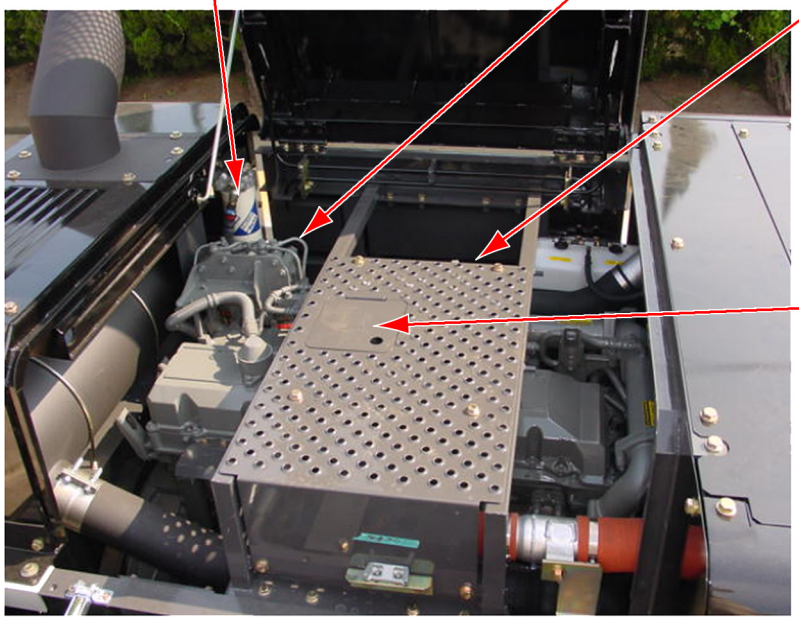

Engine oil supply port

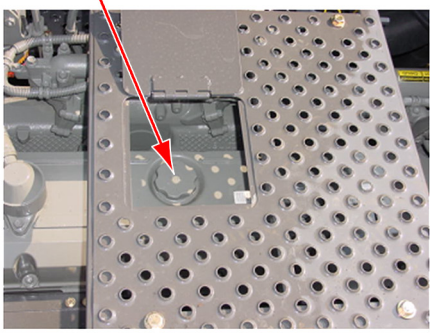

Engine oil filter (front button of engine)

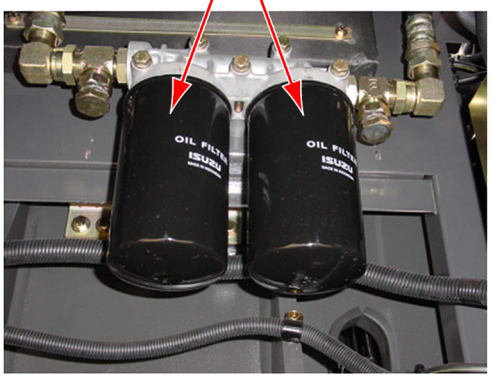

Engine oil drain couple (with oil pan)

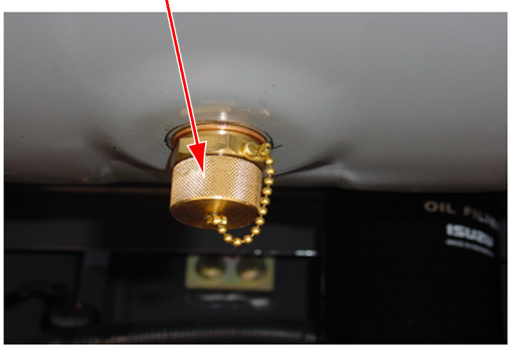

https://truckmanualshub.com/

2. Fuel Element System Diagram

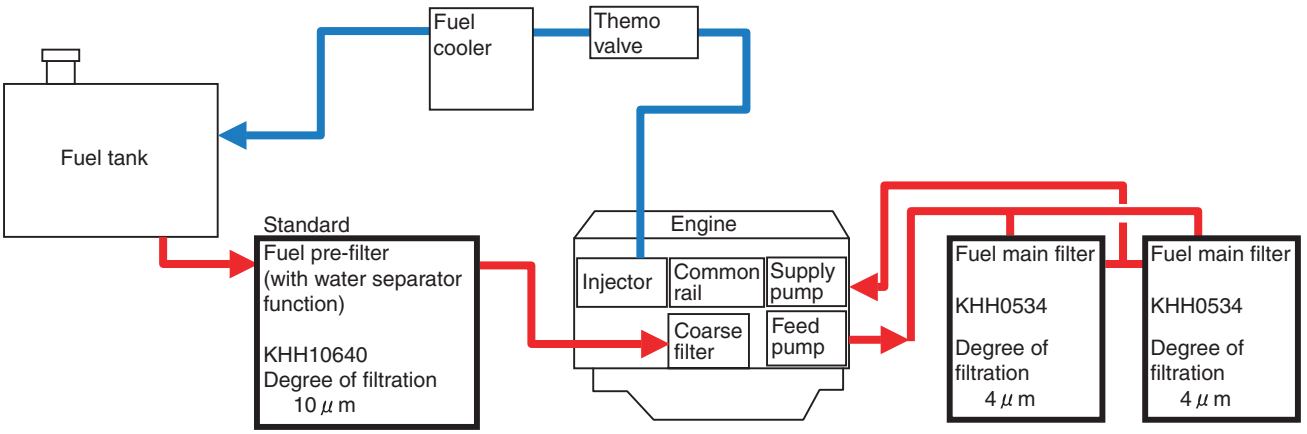

2 identical units are used.

The fuel pump and the injector are precision component, therefore, when moisture and/or dust are got mixed in the fuel, the injector is seized up causing engine damage leading to an accident. Be sure to use genuine filters and perform periodic check and maintenance.

Standard specifications

With fuel pre-filter (for measures against poor quality fuel) Replacement interval : 250 Hr

Fuel main filters (useing 2 units) Replacement interval : 500 Hr

Replacement intervals

	Every 250Hr	Every 500Hr
Fuel pre-filter	○	
Fuel main filter		○

https://truckmanualshub.com/

Procedures for bleeding air

If air gets in the fuel system, it may cause the engine to be hard to start and to be in poor working.

When fuel tank is emptied, water in fuel is drained, or filter or filter element is replaced, be sure to carry out bleeding air.

[1] Loosen the air bleeding plug in the fuel filter.

[2] Operate the feed pump in the supply pump on the engine body side to bleed air in the fuel pump, then fix the feedP pump.

[3] Operate the feed pump in the fuel pump to bleed remained air. Number of pumping might be more than 100 when the system is emptied.

[4] Tighten the air bleeding plug in the fuel main filter.

[5] Loosen the air bleeding plug in the supply pump to operate the feed pump in the supply pump until air bubbles will not be coming out.

[6] Close the air bleeding plug in the supply pump.

[7] After all the air bleeding plugs have been tightened, operate the feed pump in the supply pump until it is felt heavy.

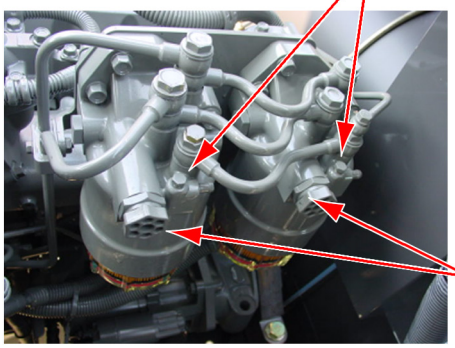

Fuel main filter

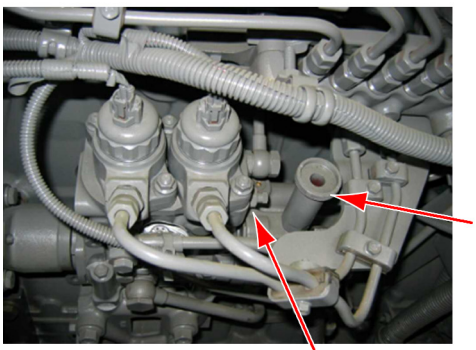

(Caution)

Since common-rail engine is operated under high pressure, the fuel pump and the injector have been made up precisely. Be sure to use light oil as they extremely dislike dust from being entered.

Even if light oil is used in addition, replace filters ahead of time if much contaminant is mixed in the oil.

https://truckmanualshub.com/

1. Major Component Weight

The weight information is approximate.

Overall Machine
(weight of transpoting style)
67600 kg

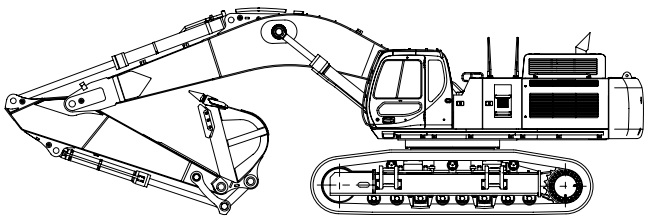

Machine Main Body
53300 kg

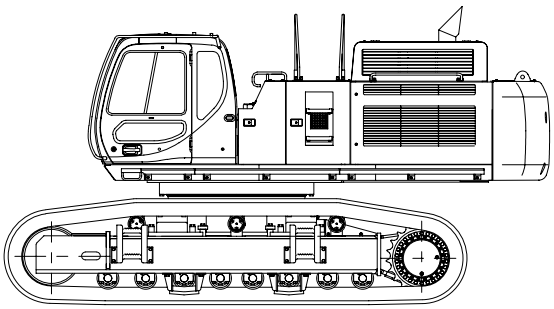

Upper Weight
22400 kg

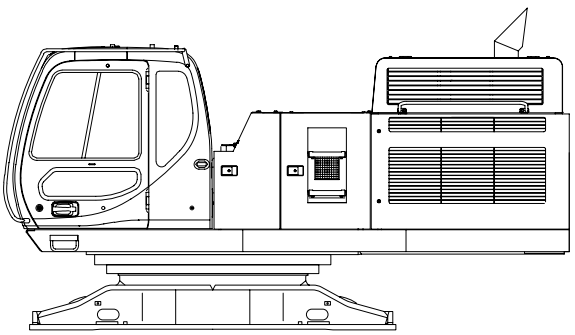

Counterweight
10500 kg

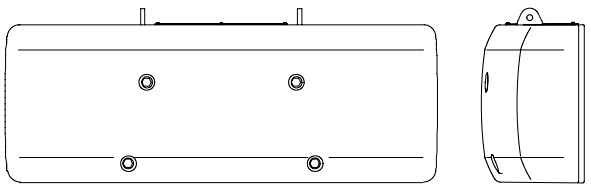

Side Frame
(one side)

650G : 10200 kg
750G : 10500 kg
900G : 10900 kg

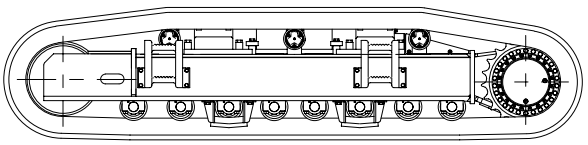

Boom (including arm cylinder)
6600 kg

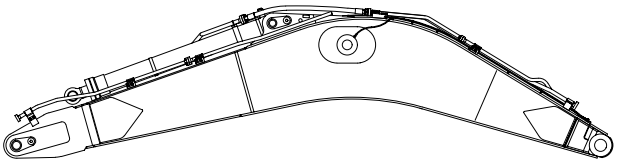

Arm (including bucket cylinder and linkage)
3430 kg

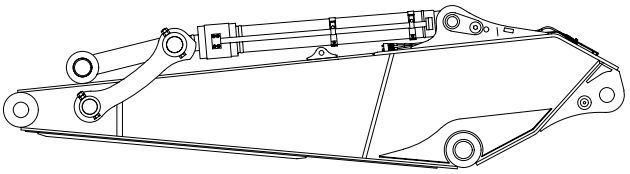

Bucket (2.9 m^3)
2870 kg

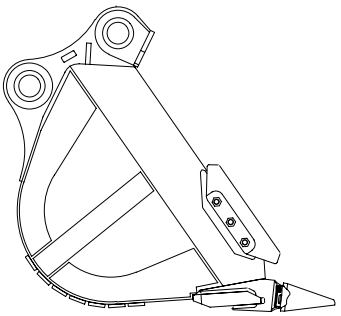

Boom Cylinder (one piece)
700 kg

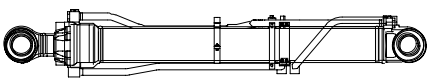

https://truckmanualshub.com/

2. Individual Part Weight

Dry weight for each part is shown in the table below.

	Part Name	Weight (kg)	Note
1	Travel unit	761	motor + reduction gear
2	Take-up roller	611	excluding grease cylinder
3	Recoil spring	553	
4	Upper roller	64	
5	Lower roller	137	
6	Swing unit	463	excluding pinion
7	Turntable bearing	1196	
8	Engine	1214	
9	Radiator	600	
10	Hydraulic pump	300	
11	Fuel tank	510	
12	Sump tank	422	
13	Control valve	430	
14	Rotating joint	107	
15	Boom	5210	

3. Shoe Weight (One side)

	Part Name	Weight (kg)	Note
1	650 mm grouse shoe	3870	
2	750 mm grouse shoe	4180	
3	900 mm grouse shoe	4580	

4. Arm Weight

	Part Name	Weight (kg)	Note
1	Standard arm (3.55 m)	2170	
2	Short arm (3.00 m)	2105	
3	Long arm (4.20 m)	2420	
4	Super long arm (5.00 m)	2810	

https://truckmanualshub.com/

Maintenance

ATTACHMENTS DIMENSIONS

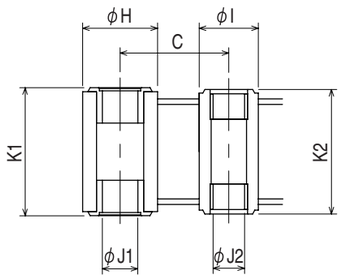

Boss of arm point

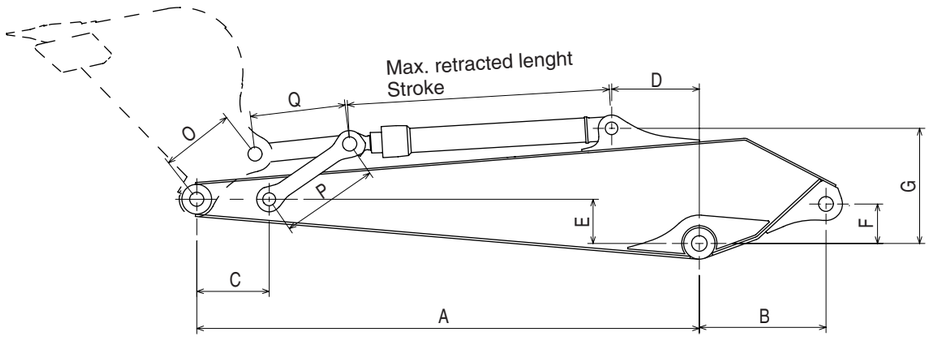

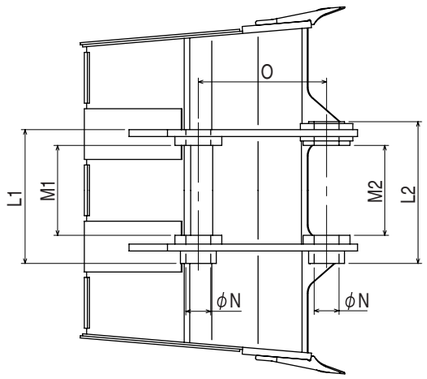

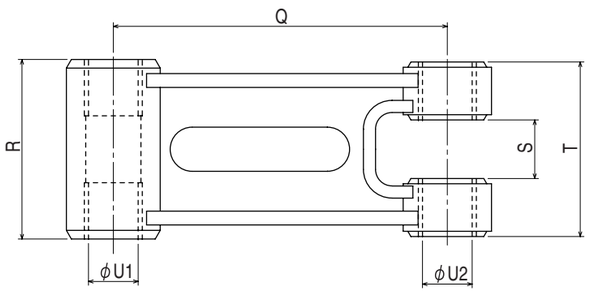

Bucket link

Item	Standard arm													Bucket						Arm Link	Bucket Link					
	A	B	C	D	E	F	G	H	I	J1	J2	K1	K2	L1	L2	M1	M2	N	O	P	Q	R	S	T	U1	U2
Dimension(mm)	3535	1145	550	90	320	440	1024.8	280	220	130	120	507	466	772	783	508	508	130	625	840	755	507	156	466	130	130

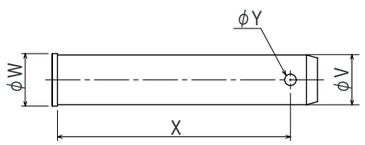

Bucket pin

Item	Bucket Pin								Bucket cylinder		
	Bucket and arm mounting sedtion				Bucket and bucket link mounting section				Max. retracted length	stroke	width at top section
Item	V	W	X	Y	V	W	X	Y			
Dimension(mm)	130	130	792	37	130	130	737	37	2225	1465	155

https://truckmanualshub.com/

Maintenance

PLASTIC SHIM

Plastic shims have been introduced in the joint of attachment.
They are assembled in 2 places, boom foot and joint of boom with arm.
Plastic shim is made of material for use in sliding part belonging to fiber reinforced polyurethane resin family having special features as follows:

1. No biting and unusual noise will occur because it is made of plastic.
2. It is effective on resistance to shock, sound deadening, and vibration

absorption because it has a special feature of polyurethane family resin (having elastic properties of rubber).
Refer to the following for test result of plastic shim and steel shim.
In case of steel shim, friction coefficient is gradually increasing even if frequent lubrication is applied.
In case of plastic shim to the contrary, it will not be increased so much even if less frequencies of lubrication is applied.

<Test result on condition that lubrication on assembly is applied>

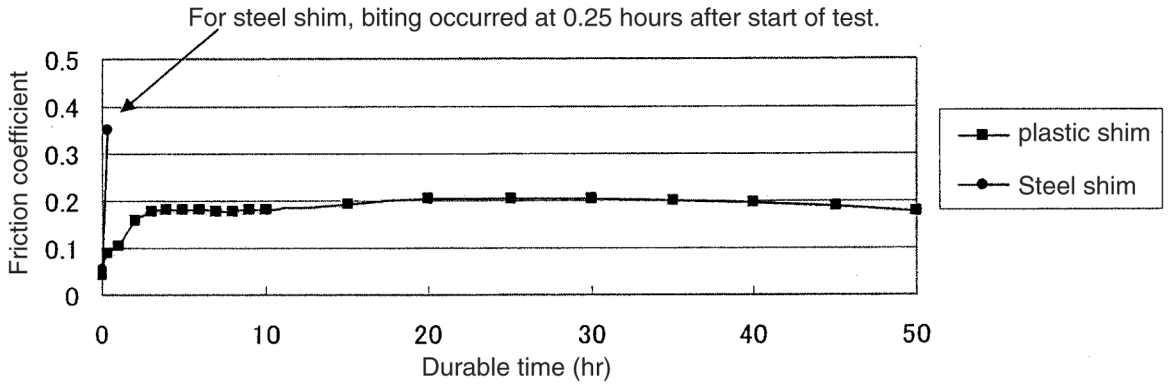

<For steel shim material, test result on condition that periodic lubrication is applied>

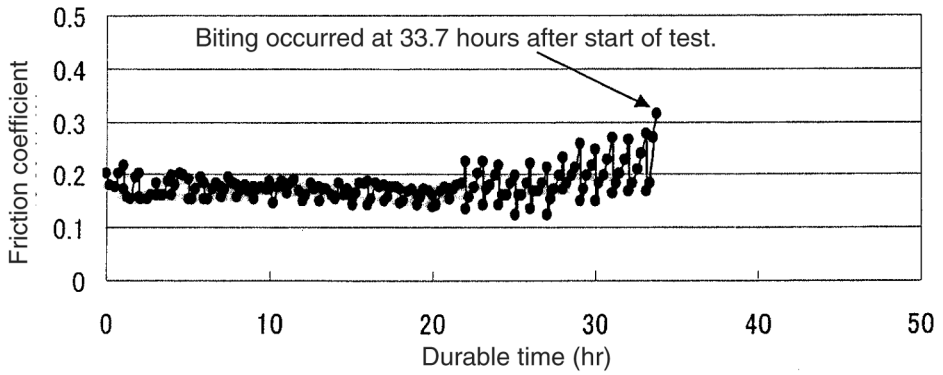

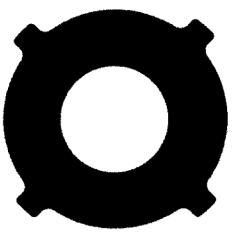

Shape of shim

https://truckmanualshub.com/

Maintenance

PROCEDURES FOR CHANGING OPERATOIN TYPE

Select operation type by changing hoses located under the bulkhead joint behind the cab.
After it has been changed, replace the instraction sticker for operation and take off ISO approved label.

1. ISO Type

Adopted manufacturs : KATO, IHI, YUTANI, CAT, LBCE

Operation Levers

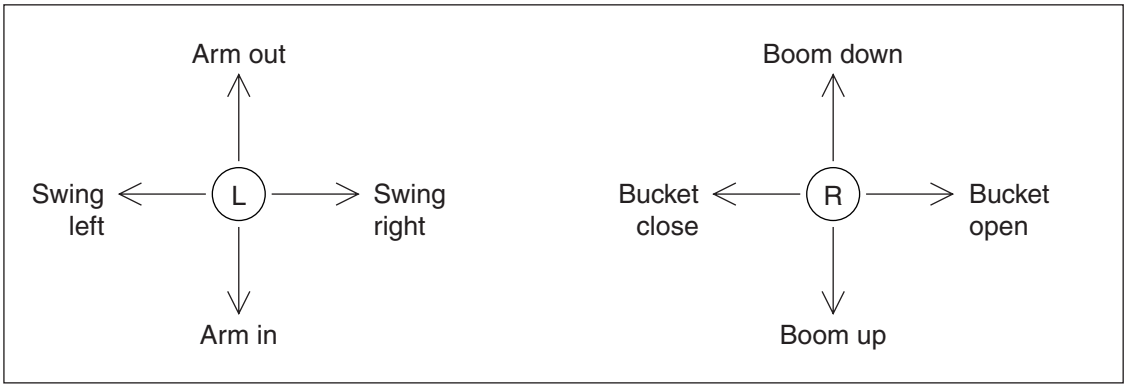

Illustration of changing hose

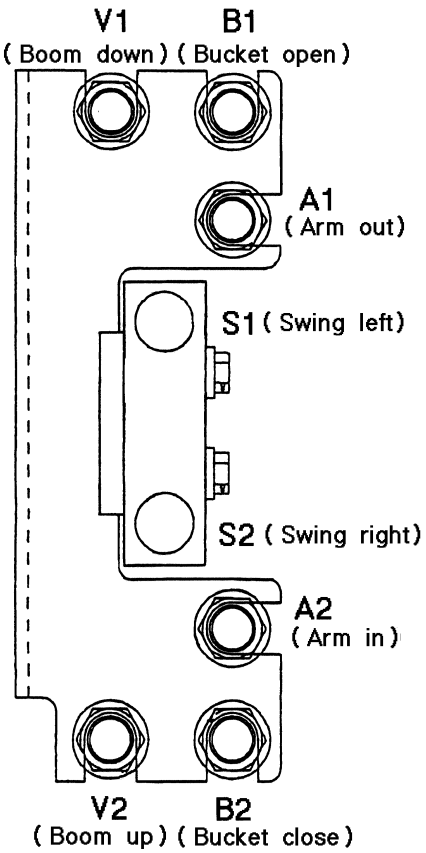

https://truckmanualshub.com/

2. Old SumitomoType

Adopted manufacturs : SUMITOMO, KOMATSU, HITACHI

Operation Levers

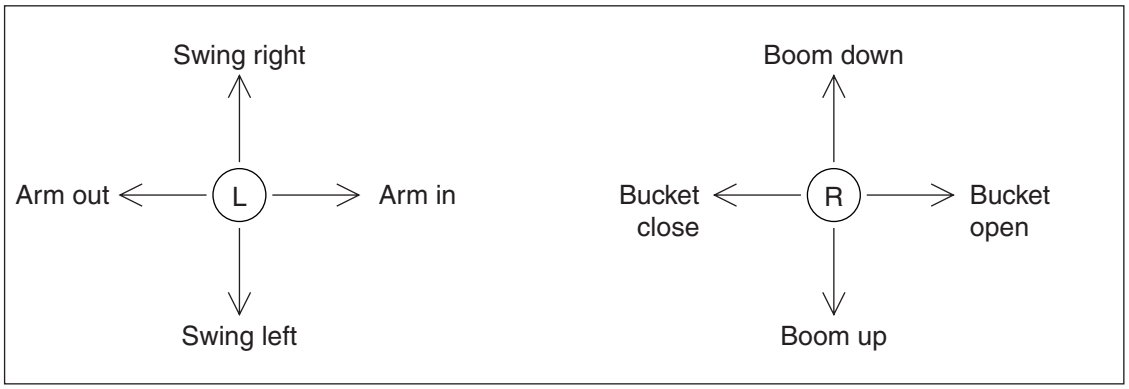

Illustration of changing hose

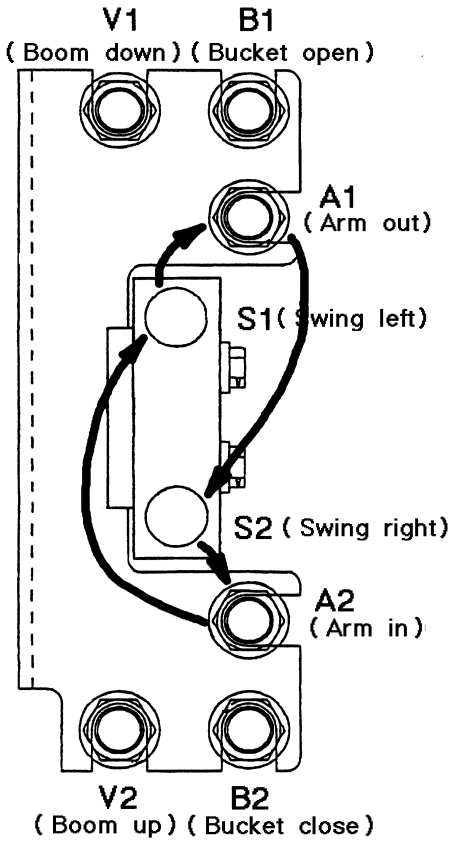

https://truckmanualshub.com/

3. Old Mitsubishi Type

Adopted manufacturs : MITSUBISHI, NIKO

Operation Levers

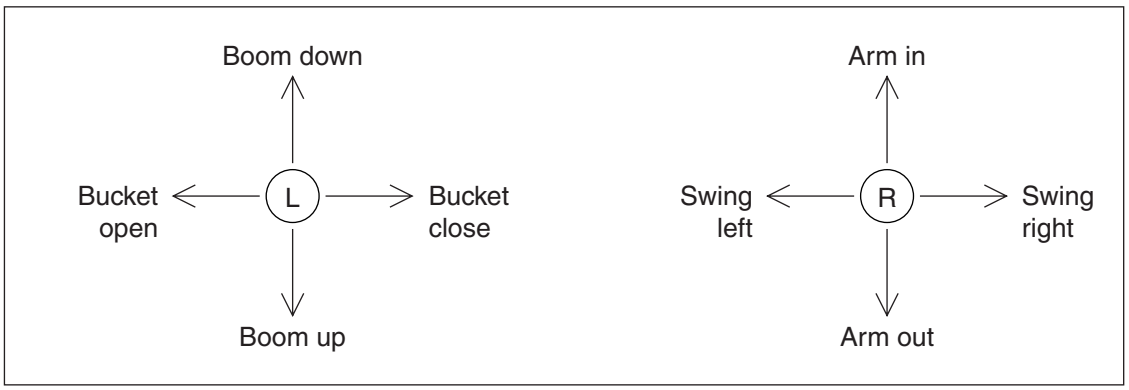

Illustration of changing hose

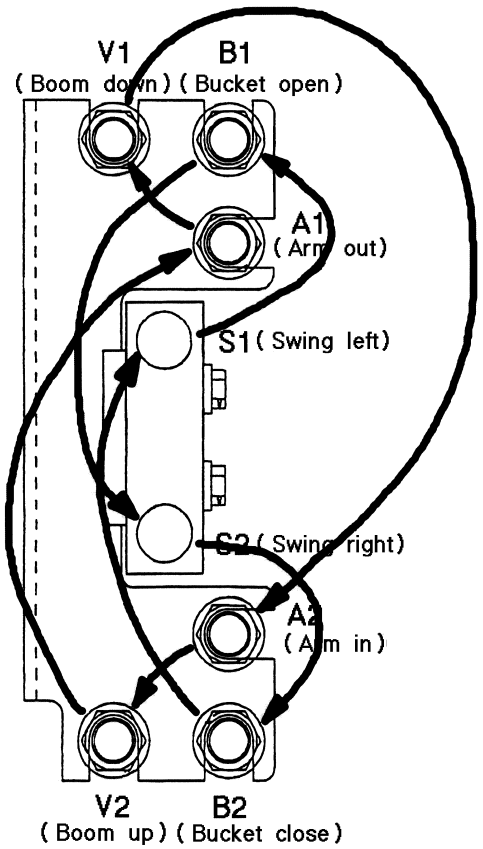

https://truckmanualshub.com/

4. Old Kobelco Type

Adopted manufacturs : KOBELCO, FURUKAWA

Operation Levers

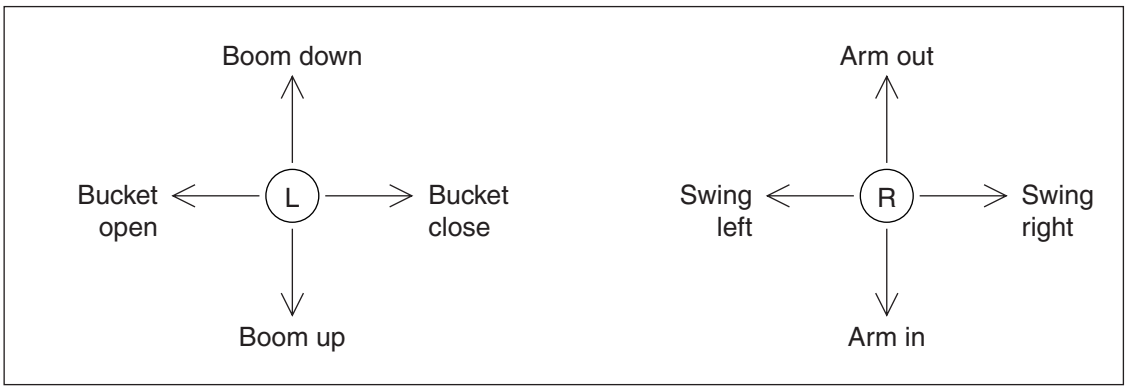

Illustration of changing hose

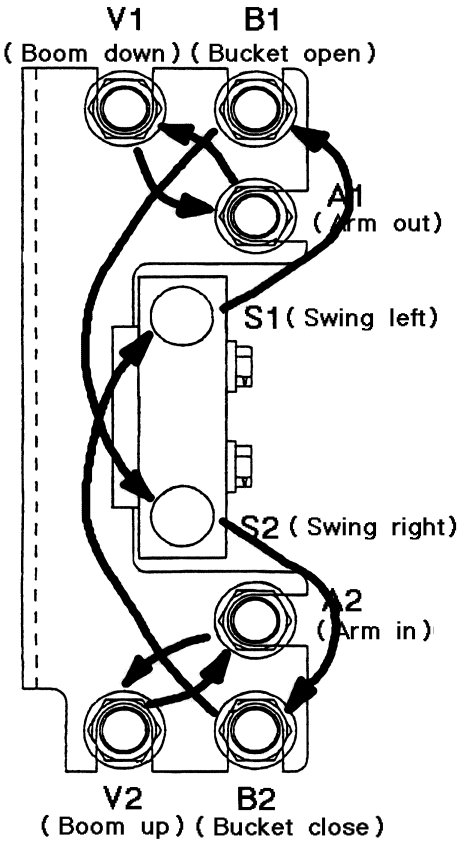

https://truckmanualshub.com/

Total Work Process

Days	First day	Second day	Third day
Progress process	Preparation. Unloading Work No. 1. Unloading Work No. 2. Connection of lower sideframes into upper swing body. Mounting travel motor lines.	Counterweight mounting Attachments mounting: ・ Arm. ・ Boom. ・ Bucket. ・ Other accessories and small parts.	Checking work: ・ Fill up with hydraulic oil. ・ Greasing and oiling. ・ Paint touch-up. ・ Machine checking. ・ Confirmation of movement.
Major device	45 T Rough terrain crane 2 sets. 2.9 T Crane 1 set. Generator with cable 1 set. Torque wrench. Hydraulic lifter (2T x 200 mm st.) 2 pcs.	45 T Rough terrain crane 1 set. 2.9 T Crane 1 set. Elevated platform vehicle Generator with cable 1 set. Torque wrench.	2.9 T Crane 1 set. Generator with cable 1 set. Torque wrench. Compressor 1 set. Paint toll 1 set.
Major tools and equipment.	Chalk Tape measure Wire Shackle Nylon sling Chain block Shoe lifting jig Steel plates Scare lumber Lumber block Wooden board Scraps of old tire Generator with cable 1 set. Torque wrench Spanner (M30, M36) Footstool Plywood Motor fitting tools 1 set. ・ Platter for waste oil ・ Tank for waste oil ・ General tools ・ Cleaning liquid ・ Wire band Stool Eyebolt (M16)	Wire Shackle Nylon sling Chain block Lumber block Generator with cable 1 set. Torque wrench Spanner (M65) Stool Eyebolt (M16) Wooden board	Tools for checking work: ・ 200 lit drum can ・ Hand pump ・ Grease pump ・ Grease gun ・ Brush ・ Compressor set. 1 set. ・ Painting tool set. 1 set. ・ Grease ・ Oil ・ Cloth Torque wrench

Note: Standard equipment is not stated in the above.

https://truckmanualshub.com/

Major Machines・Tools・Equipment Table

[1] Machinery

Machinery	Q'ty	Usage
45 T Rough Terrain Crane (with operator)	2 sets.	Unloading machine component.
2.9 T Crane (4 T class)	1 set.	Unloading machine component.
Generator (100V, 1 kW)	1 set.	For torque wrench (Dram code)
Compressor (For painting.)	1 set.	For paint touching. (Finish paint)
Elevated platform vehicle (with operator)	1 set.	For 2nd day work for attachment.
Hydraulic lifer (2T x 200 mm st.)	2 pcs.	For link shoe lifting.

[2] Tools

Tools	Q'ty	Usage
Standard tools (with 5 pound hammer)	1 set.	
Hexagon bar wrench (For M16) + pipe.	1 set.	For connecting boom foot bucket and arm cylinder hose.
Copper hammer (10 pound class).	1 pc.	For driving the pin
Hydraulic torque wrench(Power wrench).	1 set.	For tightening counterweight mounting bolt.
Bar for supporting reaction force.	1 pc.	
Extension. (For M16 Box)	2 pcs.	L=300. For mounting piping cover of travel motor lines.
Power wrench (10 times) + Box. (For M42)	1 pc.	For tightening counterweight mounting bolt.
Single ended wrench:		
M14 (22 mm width for faces)	1 pc.	
M16 (24 mm width for faces)	1 pc.	
M20 (30 mm width for faces)	1 pc.	
M24 (36 mm width for faces)	2 pcs.	
M30 (46 mm width for faces)	1 pc.	
M36 (55 mm width for faces)	2 pcs.	
M42 (65 mm width for faces)	1 pc.	
Eye-wrench (55)	1 pc.	

https://truckmanualshub.com/

[3] Necessary parts

Parts		Q'ty	Usage
Nylon sling	(For 5 T, 150 x 6 m)	1 pc.	For lifting
	(For 1.6 T, 50 x 5 m)	2 pcs.	For lifting
	(For 5 T, 150 x 4 m)	1 pc.	For lifting
Wire	(For 10 T x 3 m)	4 pcs.	For lifting
	(For 5 T x 1 m)	2 pcs.	For lifting
	(For 5 T x 2 m)	4 pcs.	For lifting
Shackle	(For 2.5 T)	1 pc.	For lifting
	(For 5 T)	4 pcs.	For lifting
	(For 15 T)	4 pcs.	For lifting
Eye bolt	(For M16)	2 pcs.	
Stool		2 sets.	
Board for stool (2 kinds)		2 sheets each	For preventing damage.
Steel plate t19 x 1524 x 3048		1 sheet	Floor plate for soft ground.
Plywood t12 x 90 x 180		3 sheets	For tool storage area.
Chain block (For 0.75 T)		2 pcs.	
Dummy pin (50 dia. x 1200)		1 pc.	Use for bucket fitting.
Shoe lifting jig		4 sheets	Use for unloading lower sideframes.
Bolt and nut (M24)		1 set.	For extracting boom foot pin・boom top pin.

https://truckmanualshub.com/

[4] Others

Other equipment	Q'ty	Usage
Additional hyd.oil 200 L drum	1 drum	For work checking
Waste oil 200 L drum	1 drum	For work checking
Hand pump (For oil supply)	1 set.	For work checking
Grease pump	1 set.	For work checking
Grease (Extra high pressure), (Bellows type)	24 pcs.	For work checking
Grease gun (with nozzle)	2 sets.	For work checking
Touch paint and paint tools	1 set.	For work checking
Cloth	12 bundles	For work checking
Cleaning liquid	12 bottles	Use when motor lines fitted.
Oil tray	2 pcs.	Use when motor lines fitted.
Loctite	1 pc.	Use when motor lines fitted.
Wire band	Some	Use when motor lines fitted.
Chalk	Some	Use for preparation work
Tape measure	1 pc.	Use for preparation work
Square lumber for stocking parts	Abt 20 pcs.	For preventing damage/dust.
(For transportation + 10 pcs spares)		
Molybdenum disulfide	Some	For preventing bolt seizure.
Wooden board	1 pc.	For preventing deforming boom foot pin.
PRY Bar (Claw)	1 set.	For adjusting hole position.
Protection rubber for boom cylinder foot pin.	2 pcs.	Waste tire cut piece
Pedestal for holding boom cylinder	2 pcs.	Use when boom cylinder fitted.
Ladder	1 set.	In and out from operator cab
Board plate (t30 x 280 x 280)	2 sheets	Mat for pedestal

Note:
Above are major necessary machinery, tools and equipment. Prepare by your side if any other goods are found necessary.

https://truckmanualshub.com/

Matters to be Attended

- To refrain from coming into the lifting area under the load lifted. Or this may cause accident in case the load happens to fall.
- For the work in the high position, take special care not to drop any tools or parts from the work place.
- To refrain from coming into the machine working radius while it operates. Or this may cause accident or personal injury.
- Take special care for any accident such as something is put in the tools or machinery.
- Make sure to carry out the Safety confirmation . Check prior to the start of the work before the engine starts:
  1) Be always sure to make safety confirmation for the surrounding environment.
  2) Make sure to confirm the hydraulic oil quantity.
- For preventing any dust contamination, take off your gloves when connecting hoses.
- When tightening the nuts for the attachment connecting pins and the detent bolts, loosen one pitch first and then start tightening.
- Confirm the designated torque amount for any portion where the tightening torque is specified.
- Refer to the discharging pressure in the Pressure Measurement and Adjustment Procedure.

Prior Preparation

Ensuring assembly/disassembly work place

[1] Securing the access road

[2] Major layout and position

Purpose
- To ensure assembly/disassembly work place. (The space needs 20 m x 35 m area and the desired ground is level and firm.)
- To secure the access road. (Access road is required for large trailer truck, attention to the width and gradient.)
- To set up major layout in the work place. (Securing heavy machinery and operating place for them)

Matters to be attended
- Preparation and care before the shovel components are brought in.
  When the shovel is disassembled and is loaded, the upper swing body are to be placed in such position where the machine body and the lower frame sit sideways.
  (Since they are assembled in the sideway position.)
- Securing the area for assembling.
- Since the crane is used for lifting work, the site must be of firm and level ground.
- Space:
  1) Total about 35 m x 20 m is needed.
  2) Working space needs 6.5 m width x 8 x length area.

https://truckmanualshub.com/

Major layout

Fig. 1

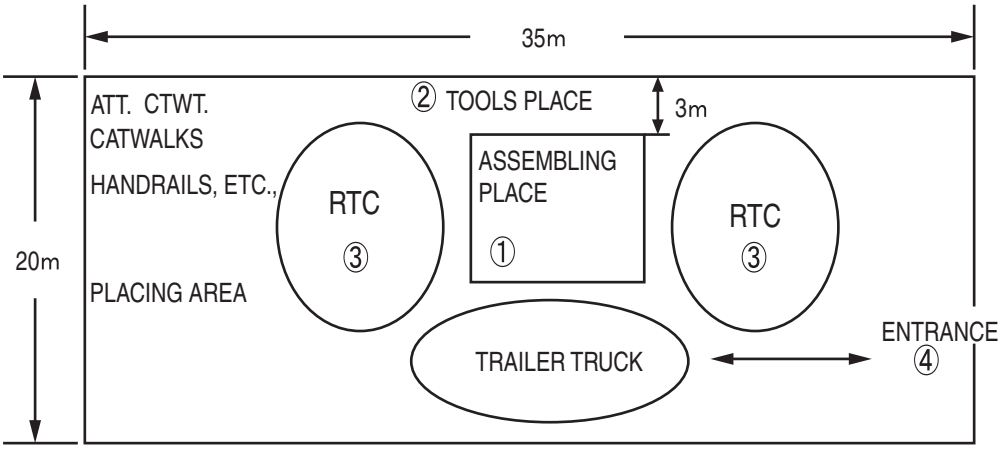

Note: ①Space for assembling needs 6.5 m x 8 m.

②Compound plywood is placed on the area for tools and jigs for preventing dirt and dust.

③RTC must extend outriggers.

④Entrance/Exit is always clear from any disturbing objects for trucks passage.

Working place area must have a warning "No person other than the concerned is prohibited from entering this area".

Major machinery: RTC 45 T 2 sets.
(One set is for unloading the steel plates and setting the stools, another set is for setting the components.

Tools and equipment	Usage	Q'ty
Steel plate (t19 x 1524 x 3048)	For use as floor plate.	1 sheet
Eye bolts (M16)	For setting stools.	2 pcs.
Compound plywood (t12 x 90 x 180)	For placing tools/jigs.	3 sheets
Stool	Placing on the steel plate.	2 sets.
Board for stools	For preventing dirt and dust.	2 sheets
Tape measure	For position setting for major machinery.	1 pc.
Chalk	For position marking-off.	Some

https://truckmanualshub.com/

Prior Preparation Procedure

[1] Securing delivery route

1) Be sure to check delivery route beforehand.
   Pay attention to road width, road edge, and road surface.
   - 9 m is required as the turning radius for a trailer.
     (Table on the right illustrates ratio of possible turning street width for trailer.)
   - In case of low body trailer, choose the route with the slope of less than 6 % because it scrapes the bottom if the slope of passage is more than 6 %.
   - Take measures in advance againse a level difference along the road edge so that the trailer can pass without obstruction.

Ratio of possible turning street width

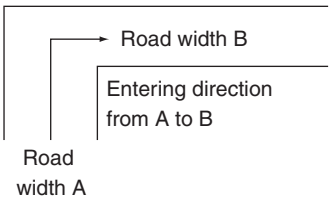

Road width A	Road width B
6.0 m	12.0 m
7.0 m	10.0 m
9.0 m	9.0 m
11.0 m	8.0 m
13.0 m	7.5 m

[2] Positioning for major components layout.

1) Refer to the Fig. 1 on the previous page for the major machinery/component positions. (Space area about 35 m x 20 m)
   1. Assembly place is in center of the space area. Need 6.5 m x 8 m.
   2. RTCs are set to the left and right sides of the assembly place.
   3. Trailer trucks stop at the area showing in the Fig. 1.
   4. Securing the area for tools/jigs, attachments and other parts, and are placed as shown in the Fig. 1.
2) Layout in the assembling space
   The detailed layout is made per Fig. 2.
   1. First to decide area for placing the floor steel plate.
   2. To decide area for placing sideframes.
   3. To decide place for the stools on the floor steel plate.
3) lace for Tools/Jigs per ② of Fig. 1
   Place the compound plywood as the floor board, on which Tools/Jigs are placed.
4) 2 sets of RTC positioning
   Layout is per ③ of Fig. 1. To be positioned to the both sides of the shovel assembling space.
   To extend the outriggers fully. And RTCs do not enter into the shovel assembling space.

Fig. 2
LAYOUT DETAL IN THE ASSEMBLING PLACE

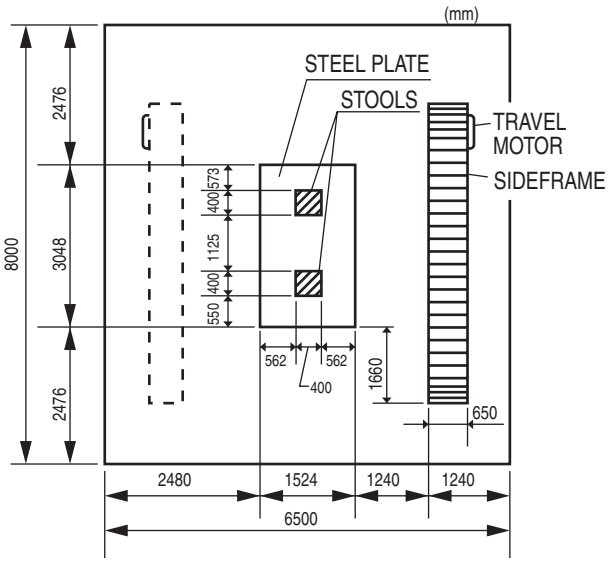

https://truckmanualshub.com/

Unloading Work

Unloading Work No. 1

- Attachments (Boom, Arm, Bucket)
- Counterweight
- Boom cylinder and small accessories.

Purpose
- To unload the attachments (boom, arm. bucket) and counterweight from the trailer truck.

Caution
- To pay such care for placing the counterweight on the ground as using square lumbers under the counterweight for preventing from falling down on its side.
- Never enter into the area under the load lifted.
- On the first day, catwalks and handrails are fitted.
  Boom, arm, bucket and counterweight are fitted on the 2nd day.
  When unloading, place each component, attachments and other accessories at the location most suitable to the reassembling work, considering the order of the assembly.
- Square lumber must be used under the boom, arm, etc., when they are placed on the ground.

Fig. 3

W

BOOM +ARM CYLINDER WEIGHT ABOUT 8.3 TONS

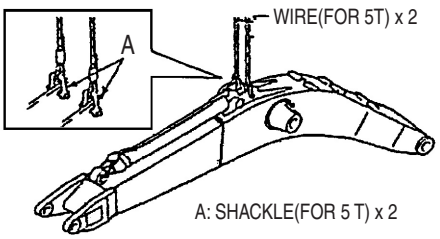

ARM + BUCKET CYLINDER WEIGHT ABOUT 4.1 TONS
(WITH LIFTING HOOK: ABOUT 4.2 TONS)

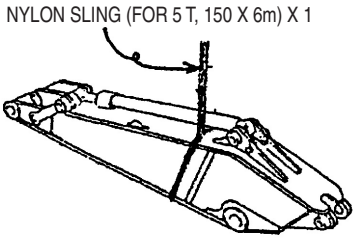

BUCKET WEIGHT ABOUT 3.0 TONS

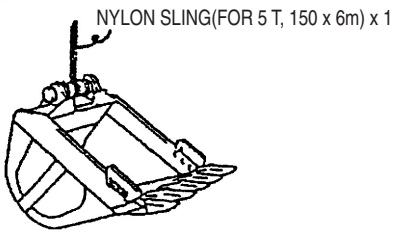

COUNTERWEIGHT WEIGHT ABOUT 12.5 TONS

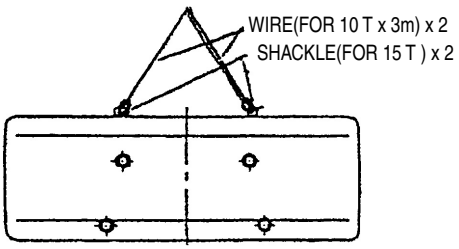

Major machinery:	45 T RTC	2 units
	Crane 2.9 T	1 unit
	Trailer truck	several units

https://truckmanualshub.com/

Tools and equipment		Usage	Q'ty
Boom:	Wire (For 5 T x 1 m)	For unloading.	2 pcs.
	Shackle (For 5 T)	For unloading.	2 pcs.
Arm:	Nylon sling (For 5 T, 150 x 6 m)	For unloading.	1 pc.
Bucket:	Nylon sling (For 5 T, 150 x 6 m)	For unloading.	1 pc.
Counterweight:	Wire (For 10 T x 3 m)	For unloading.	2 pcs.
	Shackle (For 15 T)	For unloading.	2 pcs.
Lumbers:	(For transportation + about 10 pcs.)	For preventing damage, dust, etc.	20 pcs.

Procedure for Unloading Work No. 1

Procedure

To confirm the setting position for RTCs.

[1] To confirm the sling position by the wire or the nylon sling.

[2] To check no damage on the wires, ropes and shackles. To make sure of firm application by them.

[3] To take a measure for not to enter to the area under the load lifting.

[4] To lift slowly the load.

[5] To take such care as placing the protector lumbers under the load when the load is lowered on the ground.

Attachments:

[1] Boom + Arm cylinder

1) To fix the arm cylinder on the boom for preventing any damage by the arm movement.

2) To apply shackle and wire to the hole furnished at the side of the arm cylinder foot, and to lift the boom + arm cylinder.

[2] Arm + Bucket cylinder

1) To apply the nylon sling to the center portion of the arm and lift it.
(Sling application position is referred to the Figure in the previous page.)

[3] Bucket

1) To apply the nylon sling to the bucket pin and lift it.

[4] Counterweight

1) To apply the shackles and the wires to the counterweight and lift it.

[5] Unloading the boom cylinder and the small accessories.

1) To unload the boom cylinder, catwalks, handrails and other small parts.

Note:
As the catwalks and handrails are picked up on the first day for assembling work, in case of unloading from the truck, to place them at the easiest picking up location by the crane for the assembling work.

https://truckmanualshub.com/

Unloading Work No. 2

Unloading the lower sideframes from the trailer truck.

Purpose
- To unload the lower sideframes from the trailer truck.

Caution
- To unload the left/right lower sideframes to the designated position.
- To apply molybdenum disulfide to the connecting bolts of the lower sideframes for prevention of the seizure.

Fig. 4

① WIRE (2m FOR 5T) x 4 pcs.
② SHACKLE (FOR 5T) x 4 pcs.
③ CHAIN BLOCK (0.75T) x 4 pcs.
④ SHOE LIFTING JIG x 4 pcs.

SIDE FRAME WEIGHT ABOUT 10.2 TONS (with 650 G)
10.5 TONS (with 750 G)
10.9 TONS (with 900 G)

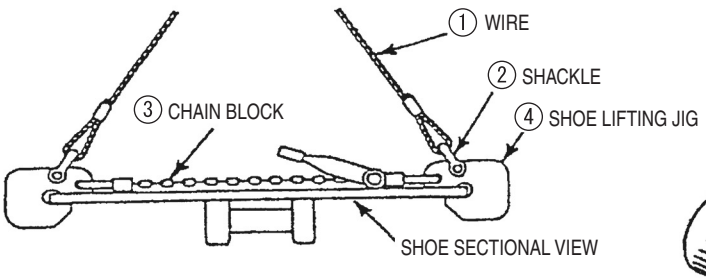

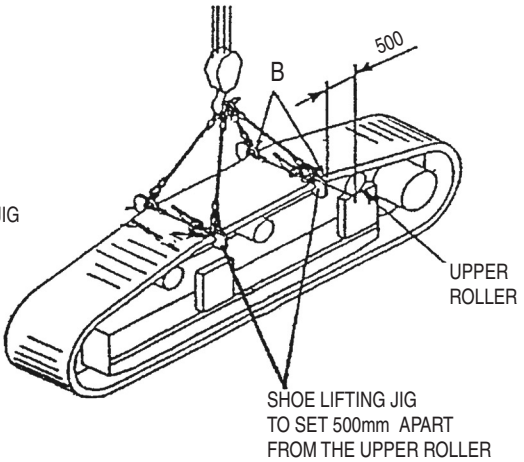

Major machinery: 45 T RTC One set.

Tools and equipment	Usage	Q'ty
Wire (For 5 T x 2 m)	For lifting sideframes.	4 pcs.
Shackle (For 5 T)	For lifting sideframes.	4 pcs.
Chain block (0.75 T)	For fixing shoelifting jig.	2 sets.
Shoe lifting jig	Jig for lifting sidefrmaes (shoes).	4 sets.
Molybdenum disulfide	For prevention of bolt seizure.	Some

https://truckmanualshub.com/

Procedure for Unloading Work No. 2

Unloading the lower sideframes.

[1] Items to be confirmed before lifting work

- The floor steel plates are sheeted in the designated position.
- The stools are set in the designated position.
- Position for placing the lower sideframes is confirmed.

[2] Unloading work for the lower sideframes

1) The shoe lifting jigs are set on the shoes 500 mm apart from the upper roller.
   Refer to the Fig. 4. After setting, fix them by the chain block.
2) To lift the lower sideframe by RTC. How to lift is shown in the Fig. 4
3) To unload the lower sideframe in the designated position. Refer to the Fig. 5 below.
4) To take off the spacers and the connecting bolts of the lower center frame. The bolts have been fitted temporarily on the lower sideframes.
5) To put those bolts and spacers on the lower sideframes temporarily for the purpose of preventing mixing up with other parts and bolts at the time of reassembling work.

LAYOUT DETAL INTHE ASSEMBLING PLACE

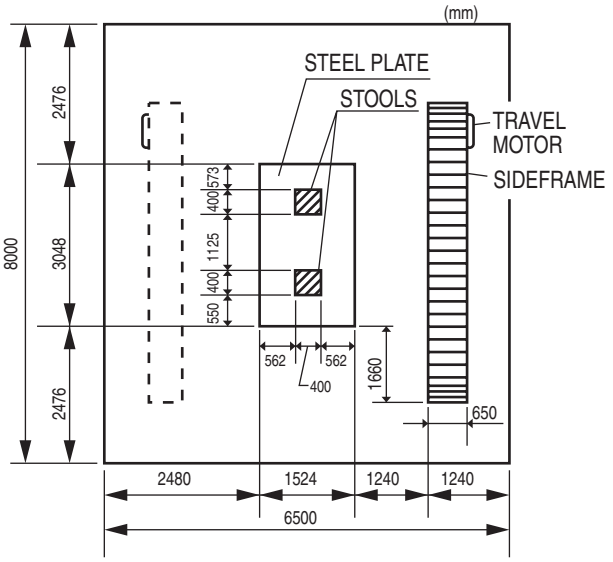

Lower sideframes bolts and spacers

	(Q'ty for one side)
①High strength bolt (M30 x 190)	4 pcs.
②High strength bolt (M36 x 180)	24 pcs.
③Slide plate	2 pcs.
④Spacer (For M36 x 180)	24 pcs.
⑤Spacer (For slide plates)	4 pcs.
⑥High strength washer	4 pcs.

Lower frame connecting portion
Showing one connection portion per below drawing:

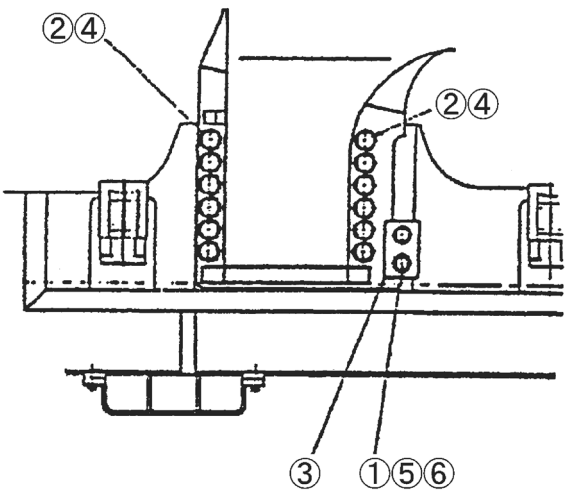

https://truckmanualshub.com/

Unloading Work No. 3

Unloading the upper swing body

Purpose
- To unload the upper swing body.
  To make alignment of the position of the connecting bolts of the upper swing body (CTWT is taken off) with those of the lower sideframes.

Caution
- Trailer truck comes in to such direction as the piping side of the travel mechanism of the lower center frame of the swing body faces to the assembling place.
- RTC 2 sets make lifting work together. To take a special caution for the crane control with low lifting speed.

Unloading work of the upper swing body

Fig. 6 Unloading work of the upper swing body

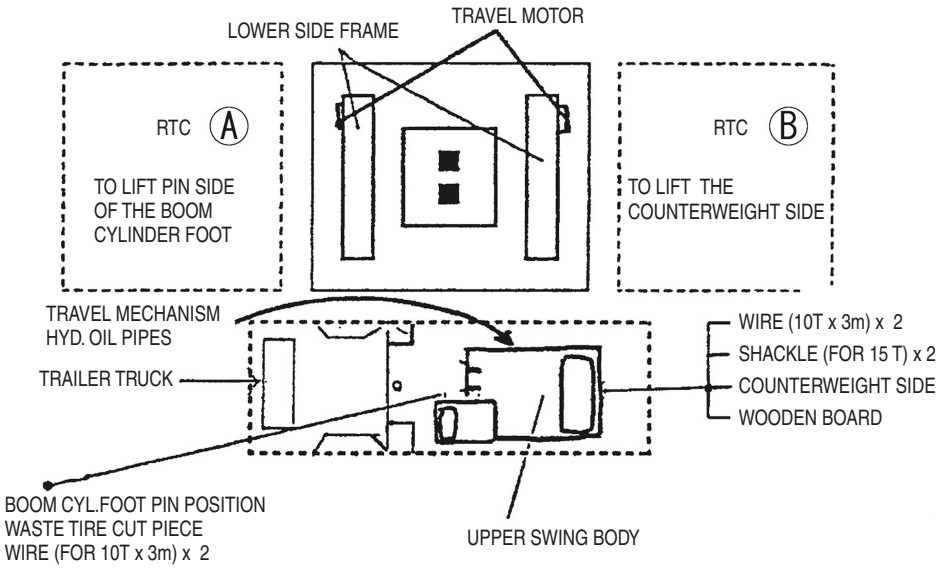

Major machinery: 45 T Class RTC 2 sets.

Tools and equipment	Usage	Q'ty
Wire (For 10 T x 3 m)	For lifting upper swing body (CTWT side).	4 pcs.
Shackle (For 15 T)	For lifting upper swing body (CTWT side).	2 pcs.
Buffer material (Waste tire cut piece, etc.)	For protection of boom cylinder foot pin.	2 pcs.
Wooden board (Around 5 x 100 x 2000)	For preventing interference between rope and cover.	1 pc.
Accessory: Boom cylinder foot pin	For lifting upper for CTWT side.	2 pcs.

https://truckmanualshub.com/

Procedure for Unloading Work No. 3

Preparation for unloading the lower swing body (Refer to Fig. 6.)

[1] Items to be confirmed before lifting work.
- To confirm no damage on the lifting device such as wires, shackles, etc.

[2] To position the trailer truck so that the piping side of the travel mechanism of the lower center frame faces to the assembling place.

[3] To confirm lifting position by the each RTC.

When the upper swing body is positioned, the travel mechanism piping of the upper swing body comes to the side of the travel motor on the lower sideframe.

1) One set RTC for the boom cylinder foot side.
2) Another RTC for the counterweight side.

[4] To put the wires on the boom cylinder foots. (Refer to the Fig. 7)
1) To give the patch protector (buffer material) between the wire and the pin for preventing any damage on the pins by the wire.
2) To put the sling wire (10 T x 3 m) x 2 sets on the pins

[5] To put the wires on the counterweight. (Refer to the Fig. 7)
1) To put the wooden protector between the wire and the engine food for preventing interference between the wires and the food.
2) Use the shackles (For 15 T. lift) (2 sets) for both ends of the sling wires (10 T lift x 3 m) (2 sets).

[6] To lift the upper swing body with the 2 set of RTC.

[7] To move the upper swing body to the fitting position to the lower sideframes.

Fig. 7

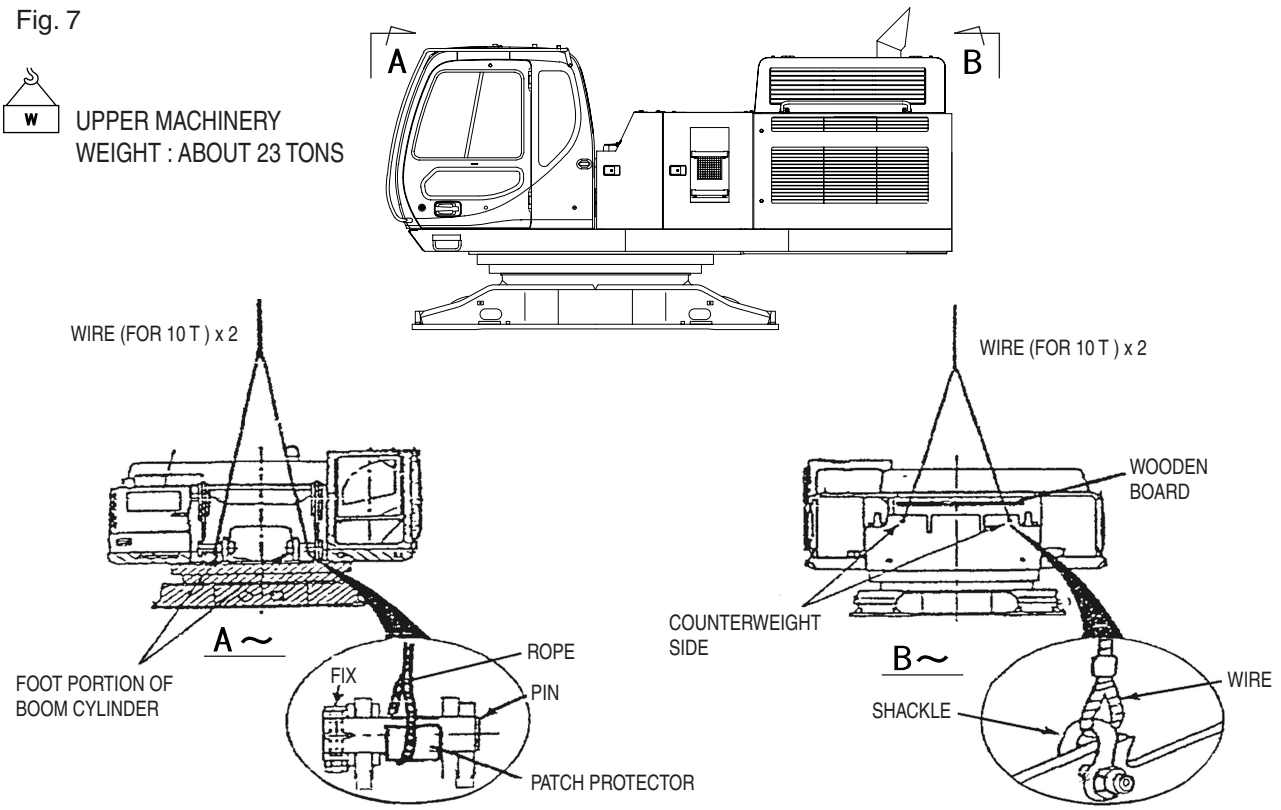

https://truckmanualshub.com/

Connection of Lower Sideframes to Upper Swing Body

Assembling work No. 1 (One side)

Purpose
- Fitting work (Connection with bolts of the one lower sideframe to the upper swing body)

Caution
- Lifting work with 2 RTCs. Lifting speed must be low and take an extreme care for the work.
- Tightening torque of the blots connecting the center frame to the lower sideframe:
  M36 2750 N•m,
  M30 1960 N•m

Fig. 8
Lift the upper swing body and align the position of the connecting bolt holes of the lower sideframe and of the center frame.

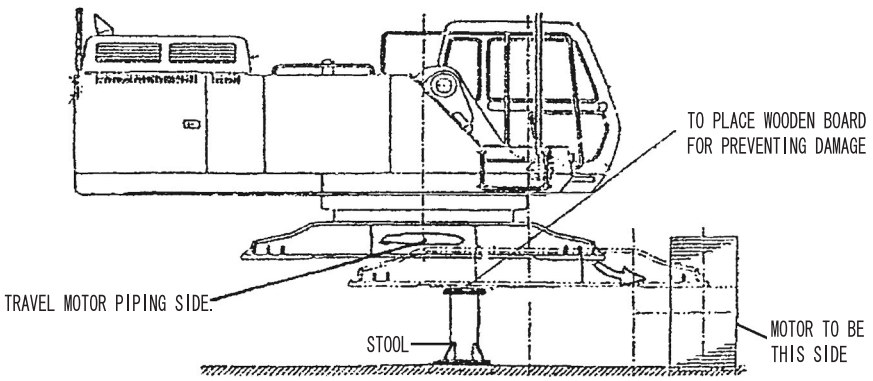

Major machinery: 45 T class RTC 2 sets.
Hydraulic lifter 2 pcs.

https://truckmanualshub.com/

Tools and equipment	Usage	Q'ty
Shackle (For 15 T)	For lifting upper: Counterweight side.	2 pcs.
Wire (For 10 T x 3 m)	For lifting upper: Counterweight side.	4 pcs.
Power wrench	For connecting the blots of the sideframe.	1 set.
	(For M30, N36)	
Spanner 55 x 2 . 46 x 1	For bolts fitting.	1 set.
Generator (For 100 V)	For power wrench.	1 set.
Drum code	Electric supply from gen. to power wrench.	1 pc.
Ladder	For wire sling and for mounting to the machine.	1 pc.
Accessories with the lower sideframe:		
High strength bolt (M30 x 190)	Tightening torque 1960 N•m	4 pcs.
High strength bolt (M36 x 180)	Tightening torque 2750 N•m	24 pcs.
Slide plate		2 pcs.
Spacer	For high strength bolts (M36 x 180).	24 pcs.
Spacer	For slide plate.	4 pcs.
High strength washer		4 pcs.

Procedure for Mounting No. 1

Connection of the sideframe to the center frame.

[1] To confirm the bolts of the lower sideframe already taken off.

[2] While the upper swing body is lifted and held horizontally, to adjust it so that the position of the connecting bolt holes of both sides of the center frame and of the sideframe are in line.

[3] After the bolt holes are in line,

1) Insert the bolts and align the hole positions.
2) While lifting, tighten the bolts once. (Shoes float.)
3) Unload the (upper swing body + center frame) onto the stool.
   Fit the slide plate and, next, insert by no mistake the connection bolts between the center frame and the sideframe and tighten them.
4) After raising a link with a hydraulic lifter, to tighten each bolt with the power wrench with the specified torque amount.
   * At this time, not to tighten the bolts of the slide plate portion.
5) To take off the wires under the RTCs.
6) Again to tighten the connection bolts with the power wrench upto the specified torque amount.
7) Finally, to tighten the loose bolts of the slide plate portion with the power wrench upto the specified torque amount.
   A hydraulic lifter is removed after tighten.

https://truckmanualshub.com/

Fig. 9 Reference data

Necessary Tools: Power wrench (including box)
Electric code reel
Generator
Spanners 55 x 1
46 x 1

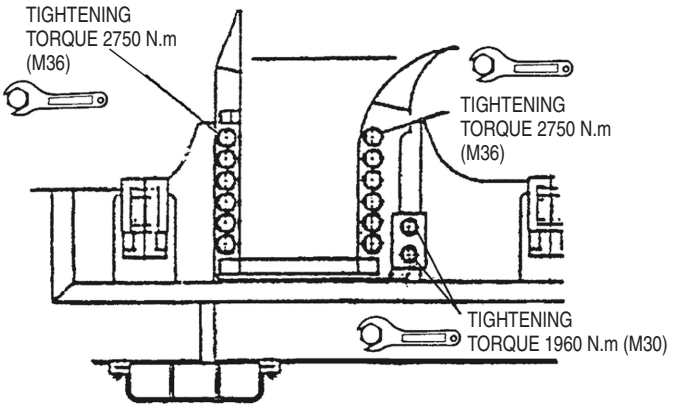

Lower sideframe bolts:	(Q'ty for one side)
① High strength bolt (M30 x 190)	4 pcs.
② High strength bolt (M36 x 180)	24 pcs.
③ Slide plate 2 pcs.	
④ Spacer (For M36 x 180)	24 pcs.
⑤ Spacer (For slide plate)	4 pcs.
⑥ High strength washer	4 pcs.

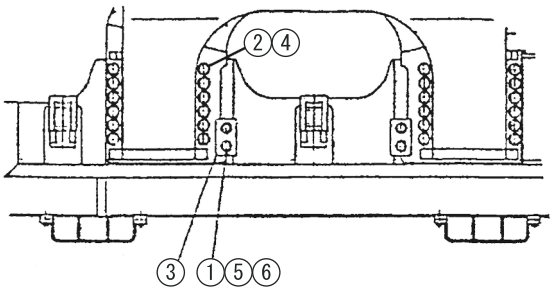

https://truckmanualshub.com/

Assembling work No. 2 (Remaining one sideframe)

Purpose
- To turn the swing frame 180 degrees, and fit the sideframe to the upper swing body.

Caution
- To check the checking items before the engine starts (to confirm the hyd. oil amount, no oil leak, etc.), and to starts the engine with the low revolution.
- To confirm the surrounding environmental safety.
  1) No interference danger within the swing radius area.
  2) No wire interference.
  3) Since the half side of the lower of the swing body is on the stool, swing motion must be controlled slowly by inching speed.

Fitting work of the counter side.

Again to lift up the upper swing body (together with the one side of the lower sideframe), and connect it to the remaining lower sideframe.

Fig. 10

1. To lift by using RTC x 2 after swing mode.
2. To connect.

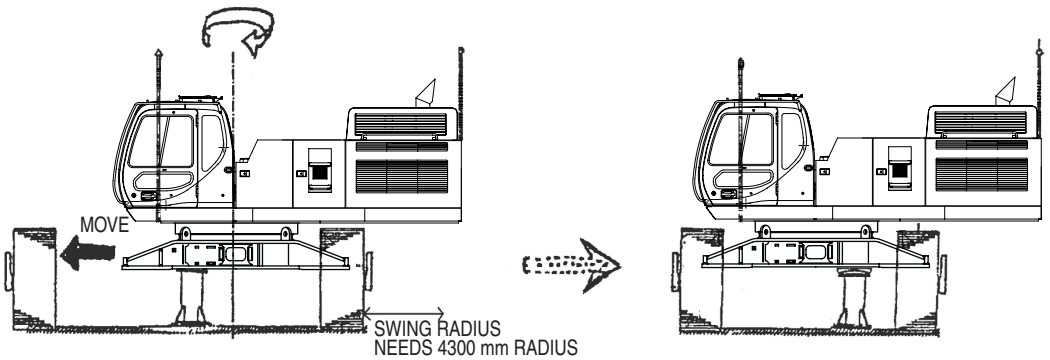

Major machinery: 45 T class RTC 2 sets.

https://truckmanualshub.com/

Tools and equipment	Usage	Q'ty
Shackle (For 15 T)	For lifting upper: Counterweight side.	2 pcs.
Wire (For 10 T x 3 m)	For lifting upper: Counterweight side.	4 pcs.
Power wrench	For connecting the blots of the sideframe.	1 set.
	(For M30, N36)	
Spanner 55 x 1 . 46 x 1	For bolts fitting.	1 set.
Generator (For 100 V)	For power wrench.	1 set.
Drum code	Electric supply from gen. to power wrench.	1 set.
Ladder	For wire sling and for mounting to the machine.	1 pc.
Accessories with the lower sideframe:		
High strength bolt (M30 x 190)	Tightening torque 1960 N•m	4 pcs.
High strength bolt (M36 x 180)	Tightening torque 2750 N•m	24 pcs.
Slideplate		2 pcs.
Spacer	For high strength bolt (M36 x 180).	24 pcs.
Spacer	For slide plate.	4 pcs.
High strength washer		4 pcs.

Procedure for Mounting No. 2.

Connection of the counter side sideframe to the center frame (after swing motion is made).

[1] To take off the wires from the RTCs. (To confirm the wires have been already taken off.)

[2] To start the engine and swing the upper swing body.

* As the swing radius needs 4000 mm distance, take into consideration of such space with the RTCs,

[3] To apply the wires on the RTCs.

[4] To lift up with the 2 RTCs the (Upper swing body + Sideframe) until the shoes of the sideframe make clear the ground

[5] To move while keeping it horizontally until the holes of the connection bolts of the lower center frame are aligned with the connection bolt holes of the sideframe.

[6] After the position of the holes match,

1) Insert the bolts.
2) While lifting, tighten the bolts once. (until shoes float.)
3) Fit the slide plate and insert the connection bolts of the center frame and of the sideframe and tighten them. To confirm the correct position of the bolts.
   * At this time, not to tighten the bolts of the slide plate portion.
4) After raising a link with a hydraulic lifter, again to tighten the connection bolts with the power wrench upto the specified torque amount.
5) To take off the wires of the RTCs.
6) Finally, to tighten the loose bolts of the slide plate portion with the power wrench upto the specified torque amount.
   A hydraulic lifter is removed after tighten.
7) To take off the stools.

https://truckmanualshub.com/

Fig. 11 Reference data

Necessary Tools: Power wrench (including box)
Electric code reel
Generator
Spanners 55 x 1
46 x 1

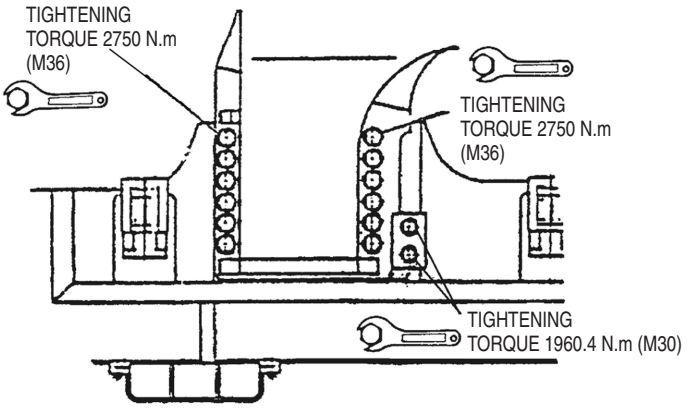

Lower sideframe bolts:	(Q'ty for one side)
① High strength bolt (M30 x 190)	4 pcs.
② High strength bolt (M36 x 180)	24 pcs.
③ Slide plate	2 pcs.
④ Spacer (For M36 x 180)	24 pcs.
⑤ Spacer (For slide plate)	4 pcs.
⑥ High strength washer	4 pcs.

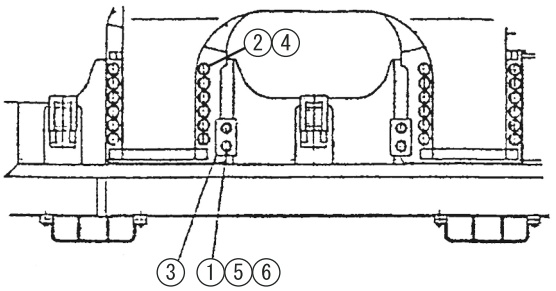

https://truckmanualshub.com/

Mounting Travel Motor Lines

- **Procedure for Mounting**

[1] To take off the motor piping cover.

[2] To connect the hose to the travel motor.

[3] To fit the cover of the motor piping.

[4] Others fitting. (Catwalk, handrails, etc.)

Purpose
- To mount the travel motor lines and to fit the catwalk, handrails, etc.

Caution
- Hose connection work must be carried out without hand gloves for prevention of dust/dirt contamination.
- After the piping connection is completed, start the engine and confirm no oil leakage.
- Since the right side handrail for the operators cab interrupts the mounting work of the boom, it is not necessary to fit it at this time.
- Tightening torque for the piping cover bolts is 137.3 N•m.

Fig. 12
Refer to the assembly drawing KWA0022.

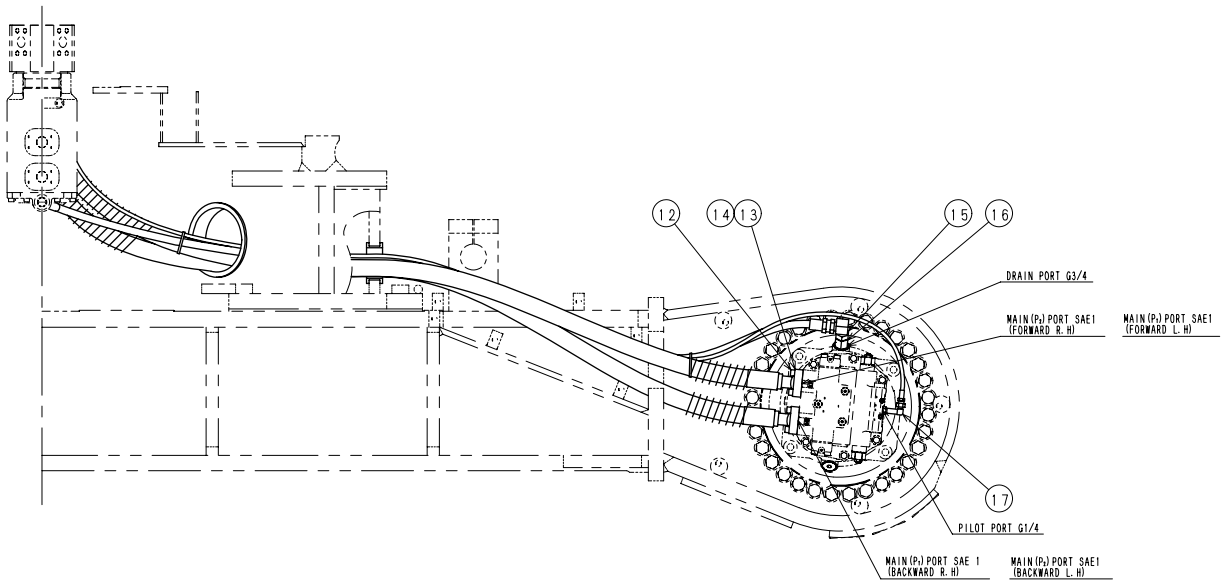

Major machinery: RTC or Crane 1 set.

https://truckmanualshub.com/

Tools and equipment	Accessories or Parts sent separately
Hose connection work • Waste oil tray. • Tank for above. • General tools. • Extension ratchet. (300 x 2) • Cleaning liquid. • Wire band x some • Hexagon bar wrench (For M16) x 1 • Torque wrench (For 275 N•m) (Tightening torque 137 N•m) • Loctite (Use when piping covers are fitted.)	When the motor piping covers are fitted, • Motor piping covers x 4. • High strengh bolt (M16 x 35) x 16 Handrails. Catwalks.

Procedure for Mounting

[1] To connect the piping of the travel motor.

・To take off the piping cover.

・To connect the hoses of the travel motor line to the pipes. (Refer to the attached data Assembly drawing KWA0022.)

1) Prepare oil tray before the hoses are taken off.
2) Connect the hoses.
3) To fix the hoses with the band and to clean the hoses with the cleaning liquid to take off oil.
4) To check the hydraulic oil amount and, if necessary, add the oil.
5) To start the engine with the low speed. To check no oil leakage after shifting the control lever to the forward and backward travel positions.

[2] To fit the lower piping covers.

1) To fit the piping covers.
2) To apply Loctite on the bolts. To tighten them with the tightening torque of 137 N•m. (Refer to the attached data Assembly drawing KWA0049)

[3] Others fitting.

1) To fit the catwalks. (Use crane. Refer to the attached data Assembly drawing KWB0001)
2) To fit the handrails. (Refer to the attached data Assembly drawing KWN10051)

https://truckmanualshub.com/

Mounting Counterweight

Purpose
- To mount the counterweight.

Caution
- No person must not be present under the counterweight lifted.
- Tightening torque for the counterweight is 2256 to 2550 N•m.

Fig. 13
Refer to the assembly drawing KWB10300.

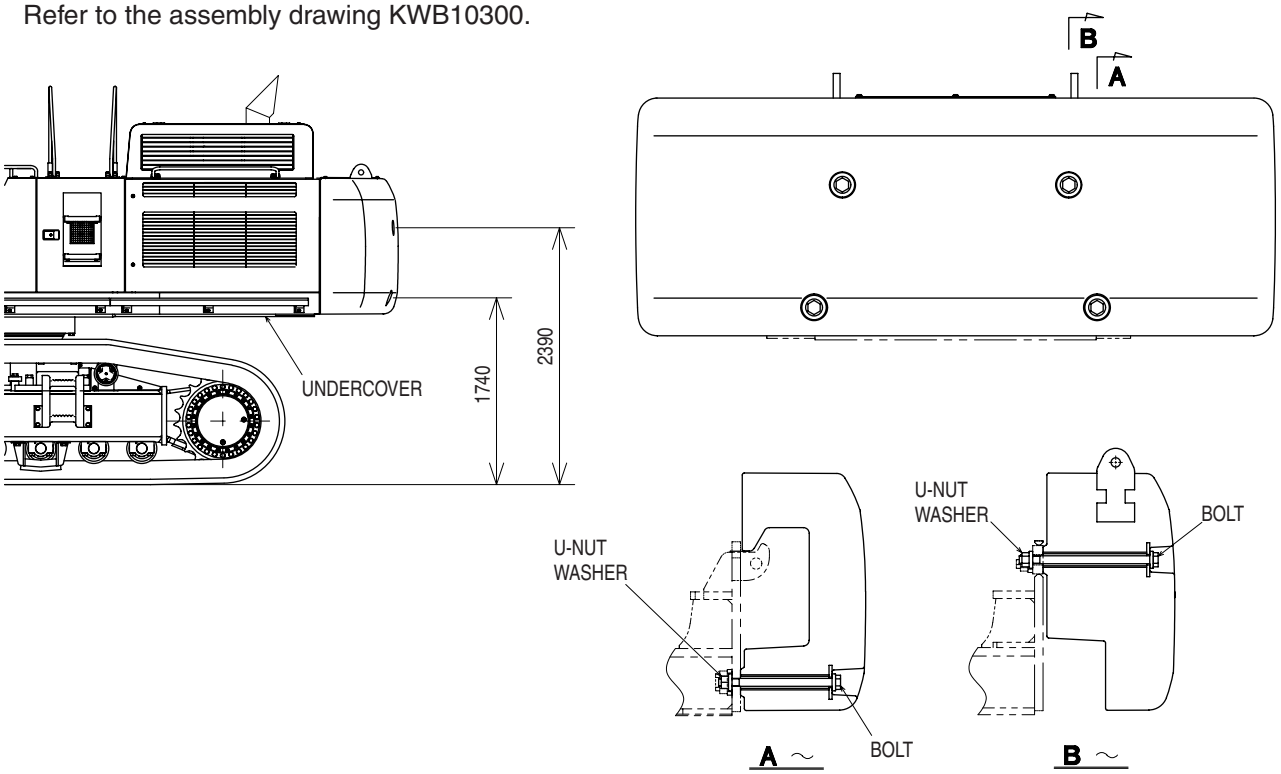

Major machinery:	Crane	1 set.	For lifting counterweight.
	Elevated platform vehicle	1 unit	For tightening CTWT fitting bolts.

Tools and equipment	Usage	Q'ty
Wire (For 10 T x 3 m)	For lifting CTWT	2 pcs.
Shackle (For 15 T)	For lifting CTWT	2 pcs.
Torque wrench (Tightening torque 2256 N•m)	For CTWT fitting bolts.	1 set.
Box, Extension	For CTWT fitting bolts.	1 set.
Power wrench (4 times, 10 times power)	For CTWT fitting bolts.	1 set.
Bar for receiving reaction force of wrench	For CTWT fitting bolts.	1 set.
Spanner (65)	For detent.	1 pc.

https://truckmanualshub.com/

Procedure for Mounting

Mounting counterweight

[1] To take off the undercover fitted under the counterweight of the swing frame.

[2] To lift counterweight.

[3] To hang the counterweight to the link furnished on the machine body.

[4] To fix temporally with 4 CTWT fitting bolts.

[5] To tighten the above 4 fitting bolts fully. (Tightening torque: 2256 to 2550 N•m)

Fig.14 Refer to the assembly drawing KWB10300.

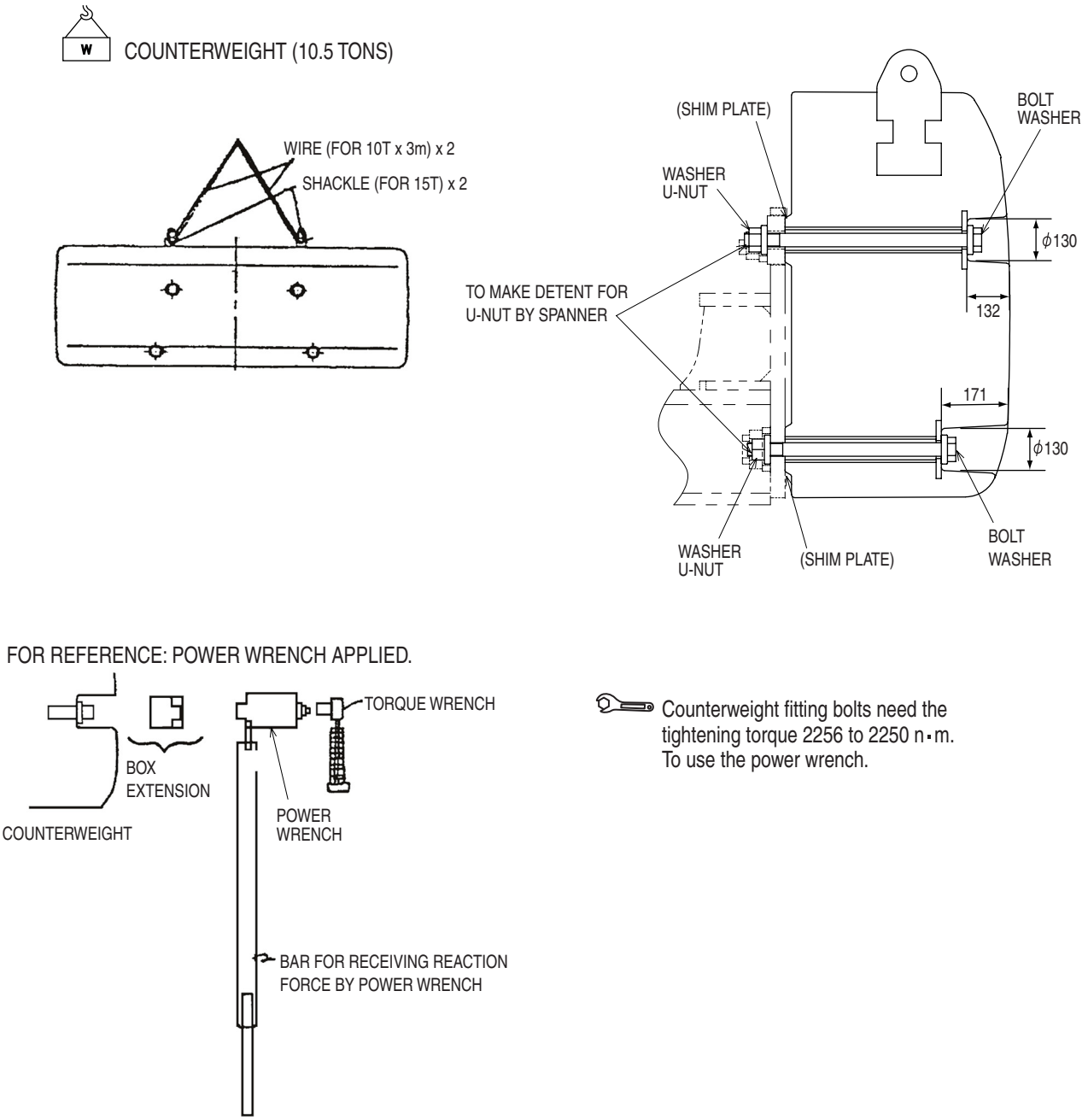

https://truckmanualshub.com/

Mounting Attachments

1. Mounting Boom Cylinders

Purpose
- To mount boom cylinders.

Caution
- After to confirm the right and left side boom cylinders, start the mounting work. For both cylinders, cylinder pipings run in its below side and the connection ports of both cylinders face each other toward the center between the cylinders.
- Take off hand gloves for the hose connection work to prevent it from dust contamination.

Fig. 15 Reference data
Nylon sling (For 1.6 T x 5 m) x 2 pcs.
Stool 2 pcs.

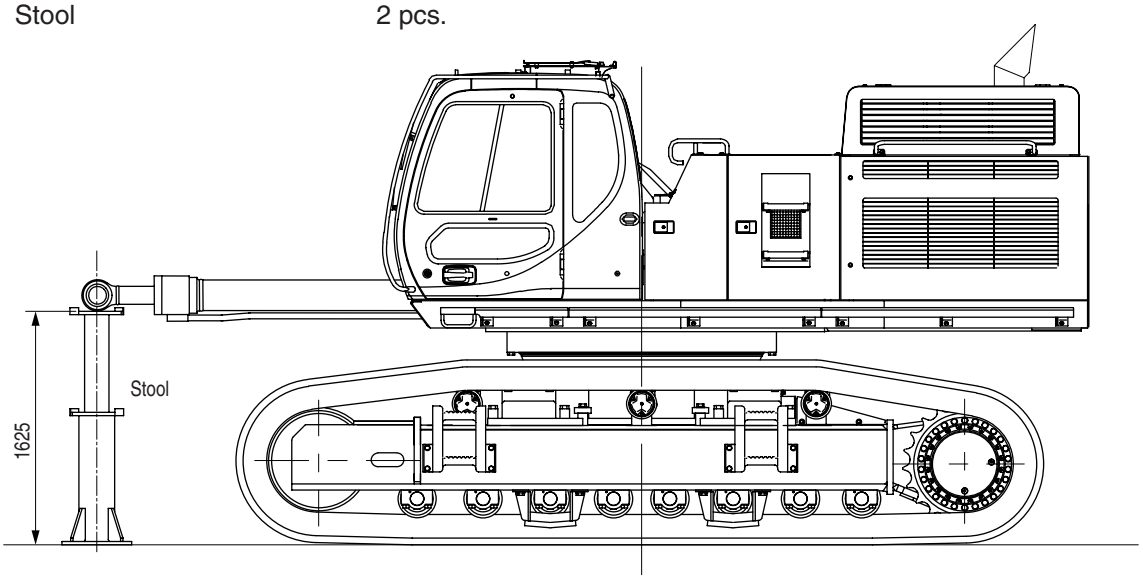

Major machinery: Crane 1 set.
RTC 1 set.

Tools and equipment	Accessories or Parts sent separately
Nylon sling (For 1.6 T x 5 m) x 2 pcs. Stool 2 pcs.	Foot pin

https://truckmanualshub.com/

Procedure for Mounting

Mounting boom cylinders

[1] To apply grease on the boom cylinder foot pin.

[2] To lift the left side boom cylinder with the nylon sling with the crane.

[3] To align the boss hole of the swing frame with the boom cylinder.

[4] To drive the boom cylinder foot pin.

[5] To please unite the circle boss of a swing frame with the hole for fixation of a pin, and fix with a bolt.

[6] To place the stool and to put the top side of the boom cylinder on the stool.

[7] To mount the right side boom cylinder in the same manner as above.

[8] To place the stool and to put the top side of the right boom cylinder.

Fig. 16
Refer to the assembly drawing KWV0031.

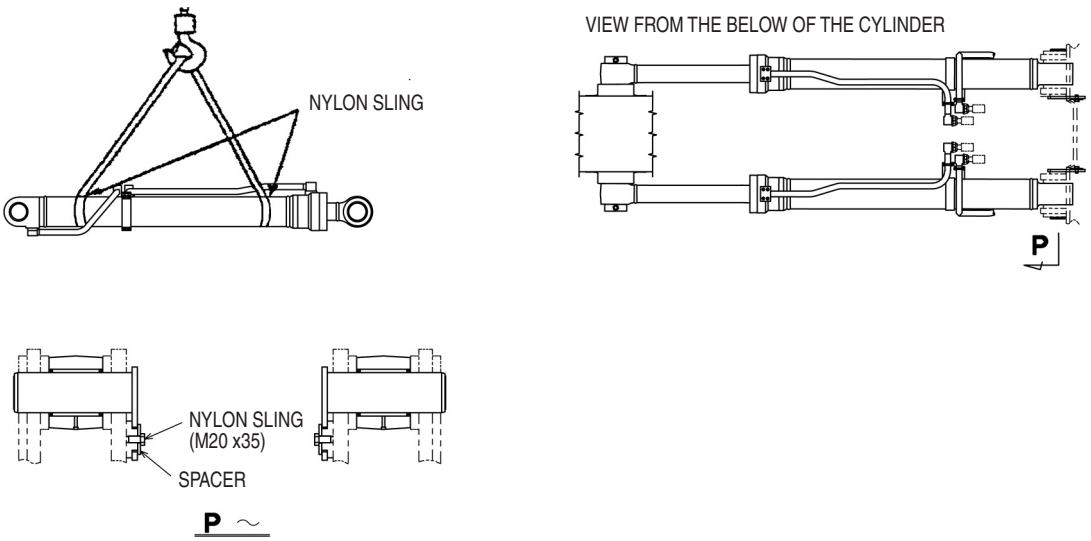

https://truckmanualshub.com/

2. Mounting Boom and Connecting Cylinder Hose

Purpose
- To mount the boom.
- To connect the cylinder hose (Boom, Arm and Bucket).

Caution
- To make preventive measurement for fall by the person. (To apply the safety belt on the working person.)
- Hose connection work must be done without the hand gloves to prevent it from dust contamination.

Fig. 17 Reference data

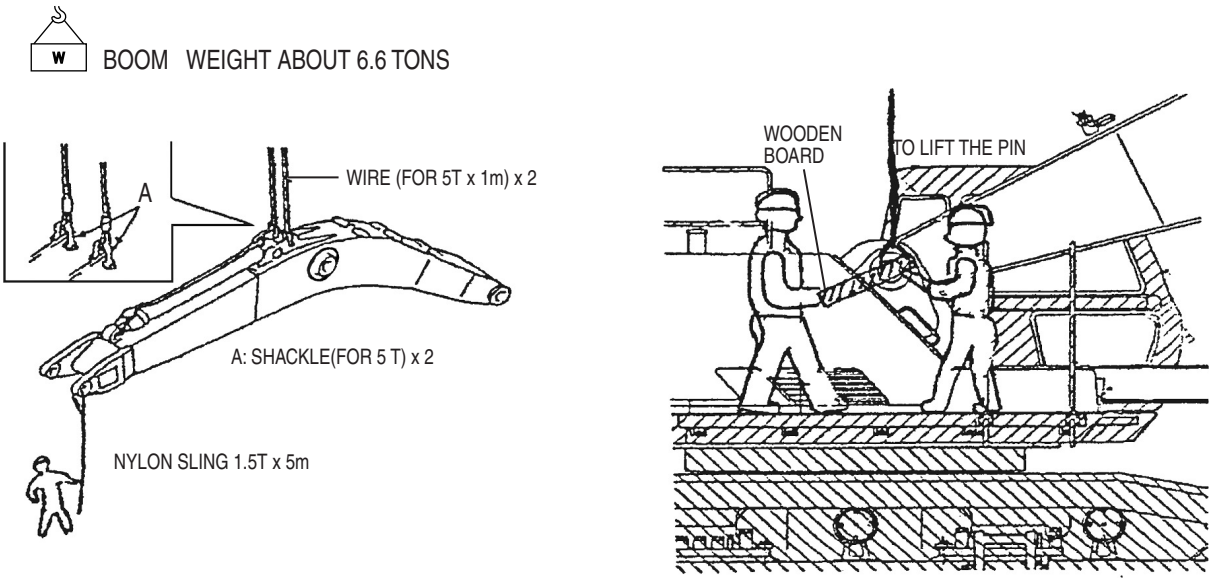

Major machinery: Crane 2 sets. (For boom mounting)

Elevated platform vehicle 1 unit (For boom mounting)

Tools and equipment	Usage	Q'ty
For boom mounting:		
・Bolts M30 with nut M24	For extracting boom foot pin.	1 pc.
・Nylon sling (For 1.6 T x 5 m)	For lifting boom foot pin and to adjust boom position.	2 pcs.
・Wire (For 5 T x 1 m)	For lifting boom.	2 sets
・Shackle (For 5 T x 1 m)	For lifting boom.	2 pcs.
・Copper hammer	For driving boom foot pin.	1 pc.
・Wooden board	For preventing deformation of boom foot pin.	1 pc.
・Hexagon bar wrench (M16 ² 14) x 1		1 set.
For hose connection:		
・Nylon sling (For 1.6 T x 5 m)		1 pc.
・Wooden board (100 x 100 x 400)		4 pcs.
・Chain block (0.7 T)		1 set.

https://truckmanualshub.com/

Procedure of Mounting

Mounting boom

[1] To take off the boom foot pin fitted on the upper swing body. M24 bolt is furnished.

[2] To apply grease on the pin for preparation of mounting.

[3] Arm cylinder mounted on the boom must be fixed on it. (Refer to Fig. 18)

[4] To lift the boom.
Shackle (for 5 T) x 2 pcs.
Wire (for 5 T x 1 m) x 2 sets.
Nylon sling (for 1.6 T x 5 m) x 1 set.

[5] To align the boss holes of the boom and of the swing body.

[6] To lift up the boom foot pin by crane and to align it to the hole position.

[7] To insert the boom foot pin. When driving the pin, place the wooden board for the pin to prevent from deforming.

[8] To please unite the circle boss of a swing frame with the hole for fixation of a pin, and fix with a bolt.

[9] To insert the shim according to the amount of clearance of the boom.

[10] To put the boom top on the spool placed on the ground.
To take off the wire from the crane.

Connecting cylinder hose

[1] To fix the arm cylinder top on the boom to prevent from moving due to its self-weight during the hose fitting work.

1) To lift up the arm cylinder for about 50 cm and insert the protector log between the boom and the cylinder.
Protector log 100 x 100 x 400

2) To fix the arm cylinder. Use followings:
Nylon sling (For 1.6 T x 5 m) x 1 set.
Chain block (0.75 T) x 1 set.

[2] To release off the pressure inside the pipings.

[3] To connect the boom cylinder hoses (4 pcs.). (Use the hexagon bar wrench M14)

[4] To connect the arm a bucket cylinder hoses (each 2 pcs.) on the boom foot portion.
(Use the hexagon bar wrench M14 and M16)

Fig. 18

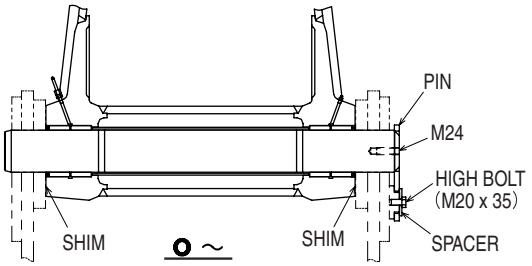

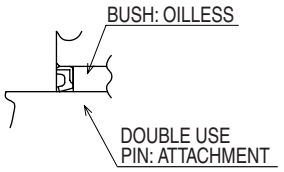

DETAIL OF DUST SEAL FITTING PORTION

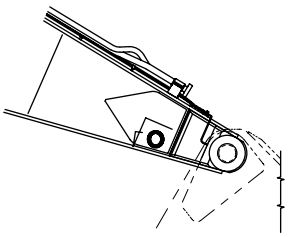

https://truckmanualshub.com/

3. Mounting Boom Cylinder Top Pin

Purpose
- To mount the boom cylinder top pin.

Caution
- For connecting the grease piping hose, taken off the grease hose once and refit it when it is already fitted on the boom.
- When fitting the bolt, to adjust the hole alignment with the PRY Bar beforehand.

Fig. 19

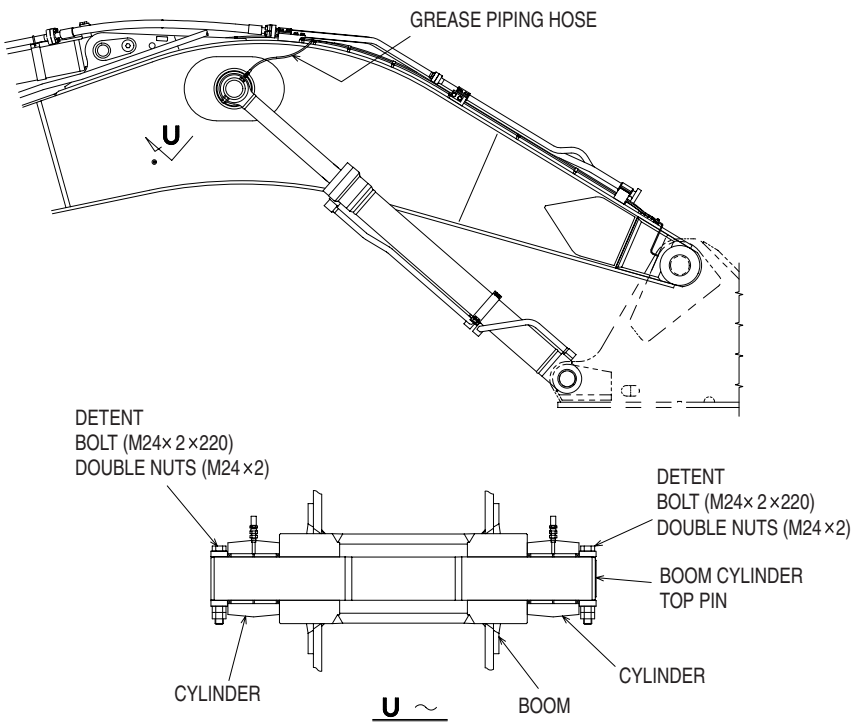

Major machinery:	Elevated platform vehicle	1 unit
	Crane	1 unit

Tools and equipment	Usage	Q'ty
Nylon sling (For 1.6 T x 5 m)	For lifting boom cylinder.	1 pc.
PRY Bar	For hole position adjustment.	1 set.
Spanner (36 x 2, 19 x 2)	For fitting bolts and grease hose.	1 set.
Wooden board	For preventing deformation of pin.	1 pc.

https://truckmanualshub.com/

Procedure of Mounting

Mounting Boom Cylinder Top Pin

[1] To take off the detent bolt of the boom cylinder top pin, which was fitted for the transportation purpose.

[2] To pull the pin, so that the boom cylinder top can be inserted. (Do not fully pull out the pin.)
It strikes, after applying a wooden board to a pin.(For preventing defomation of pin)

[3] To turn the boom cylinder top until the grease supply port faces upward, and lift it.

[4] To take out air in the boom cylinder. Refer to Fig. 20 (B).
After confirmed with the hydraulic oil quantity, start the engine and slowly move the boom cylinder, thus take out air from the cylinder.

[5] To align the boom cylinder top to the fitting hole on the boom, and connect the cylinder top to the boom by inserting the pin into the hole.

1) To extend the boom cylinder top and to put it to the fitting hole.
2) To insert the pin.
3) By using the PRY Bar, to put the detent bolt to the fitting hole on the pin and insert the bolt.
4) To start to tighten the detent nut after the dent bolt is untightened for one pitch

[6] To connect the grease piping hose.

Fig. 20

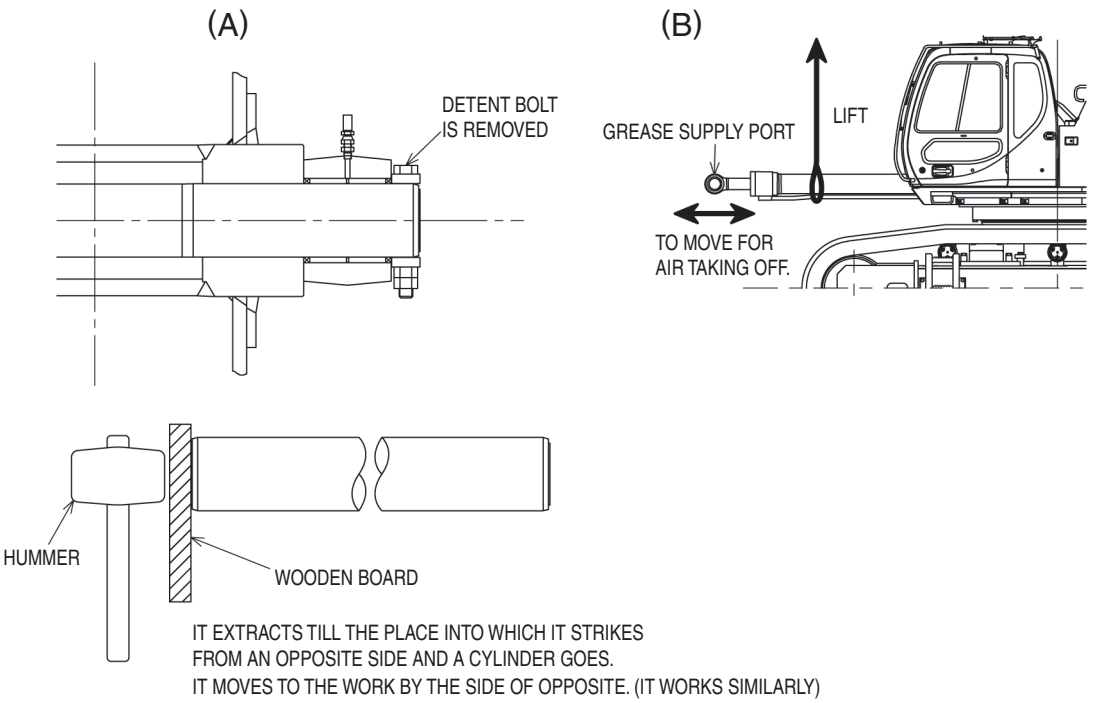

https://truckmanualshub.com/

4. Mounting ARM

Purpose
- To mount the arm.

Caution
- Since the grease piping is furnished on the right side of the arm, take care for handling the piping in this mounting work.
- To fix the bucket link and hose.
- To check the hydraulic oil quantity prior to the engine start.

Fig. 21

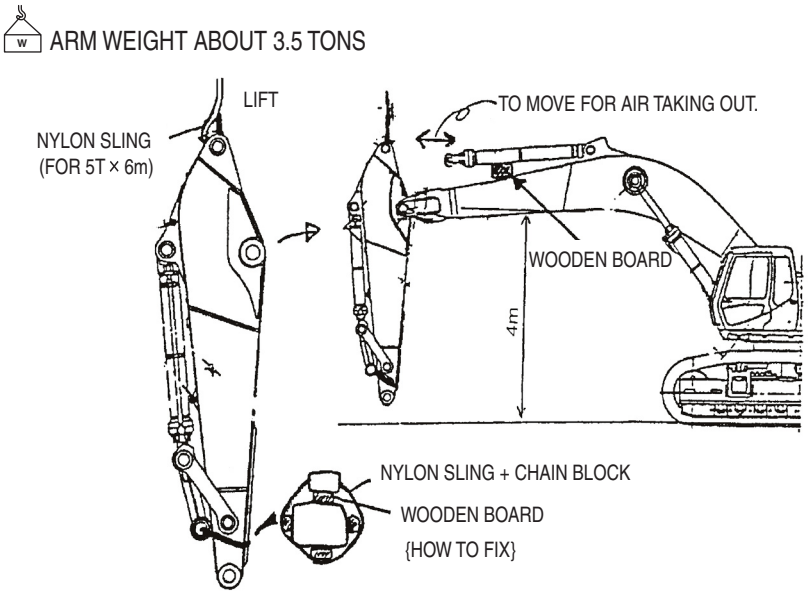

Major machinery:	Crane	1 unit
	Elevated platform vehicle	1 unit
	RTC	1 unit

Tools and equipment	Usage	Q'ty
Nylon sling (For 5 T x 6 m)	For lifting arm.	1 pc.
Nylon sling (For 1.6 T x 5 m)	For fixed the bucket hose.	1 pc.
Nylon sling (For 1.6 T x 5 m)	For fixed the bucket link.	1 pc.
Chain block (0.75 T)	For fixed the bucket link.	1 pc.
Wooden board	For preventing deformation of pin.	1 set.

https://truckmanualshub.com/

Procedure of Mounting

Mounting arm

[1] To take off the fixture of the arm cylinder. Leave the protector lumber as it is. Refer to the Fig. 22, Sketch 1.

[2] To take off the pin furnished at the boom top.

[3] To fix the bucket links and the bucket cylinder hoses. Refer to the Fig. 21.

[4] To start the engine and lift up the boom slowly. (Lifting the top until 4 m height)

[5] To pull out air from the arm cylinder.

[6] To apply the nylon sling to the position of the arm cylinder top pin attached on the arm, and lift the arm horizontally.

[7] To connect the arm to the boom.

1) To adjust the position of the both holes, and drive the pin. Use elevated platform vehicle. Please unite the circle boss of a boom top with the hole for fixation of a pin, and fixwith a bolt.

[8] To take off the nylon sling and to fit the arm to the arm cylinder.

[9] To pull out the top pin of the arm cylinder given on the arm.

[10]To align both positions of the holes of the arm cylinder top and of the arm, and fit them by driving the pin.

Fig. 22 Arm cylinder top fixing

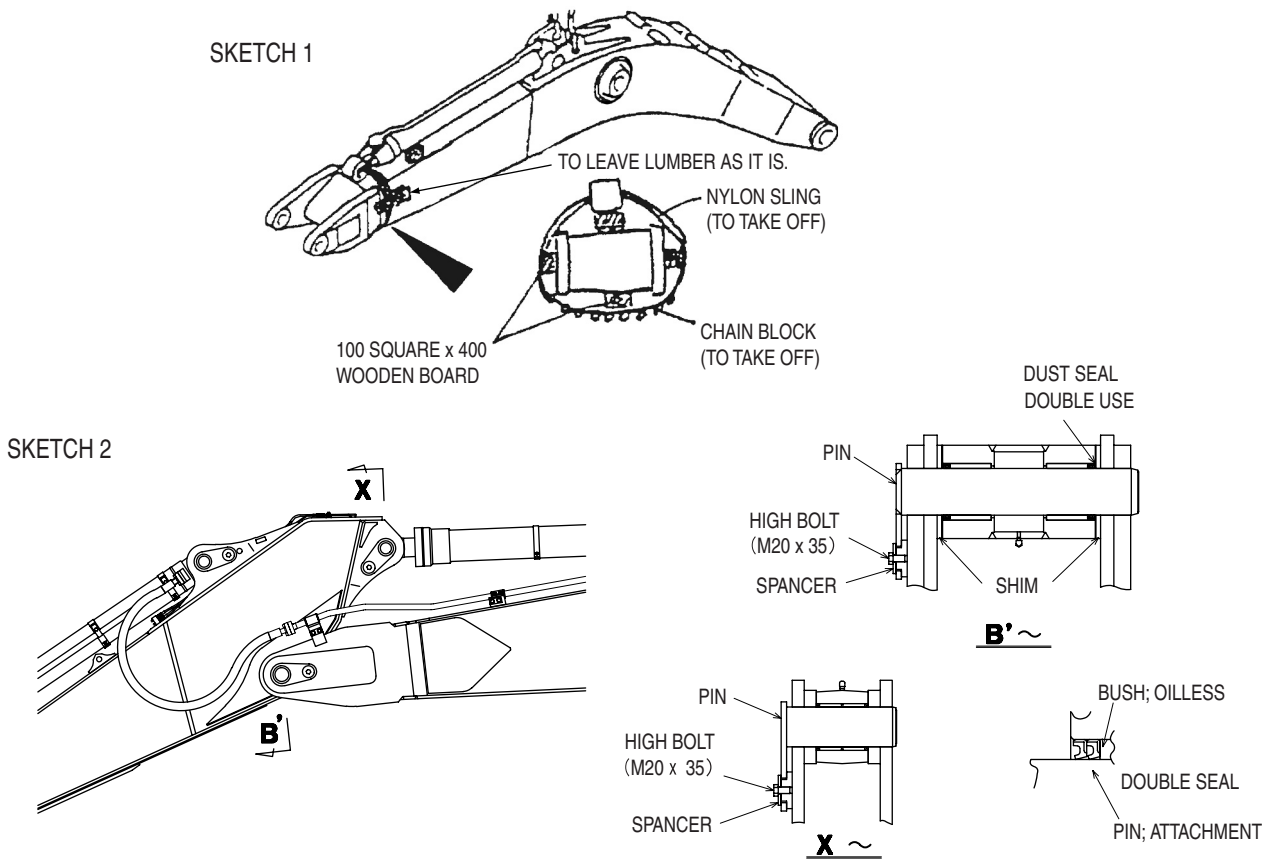

https://truckmanualshub.com/

5. Connecting Bucket Cylinder Hose and Mounting Bucket

Purpose
- To connect the bucket cylinder hose.
- To fit bucket.

Caution
- Use protector lumber, when the arm end is lowered on the ground.

Fig. 23

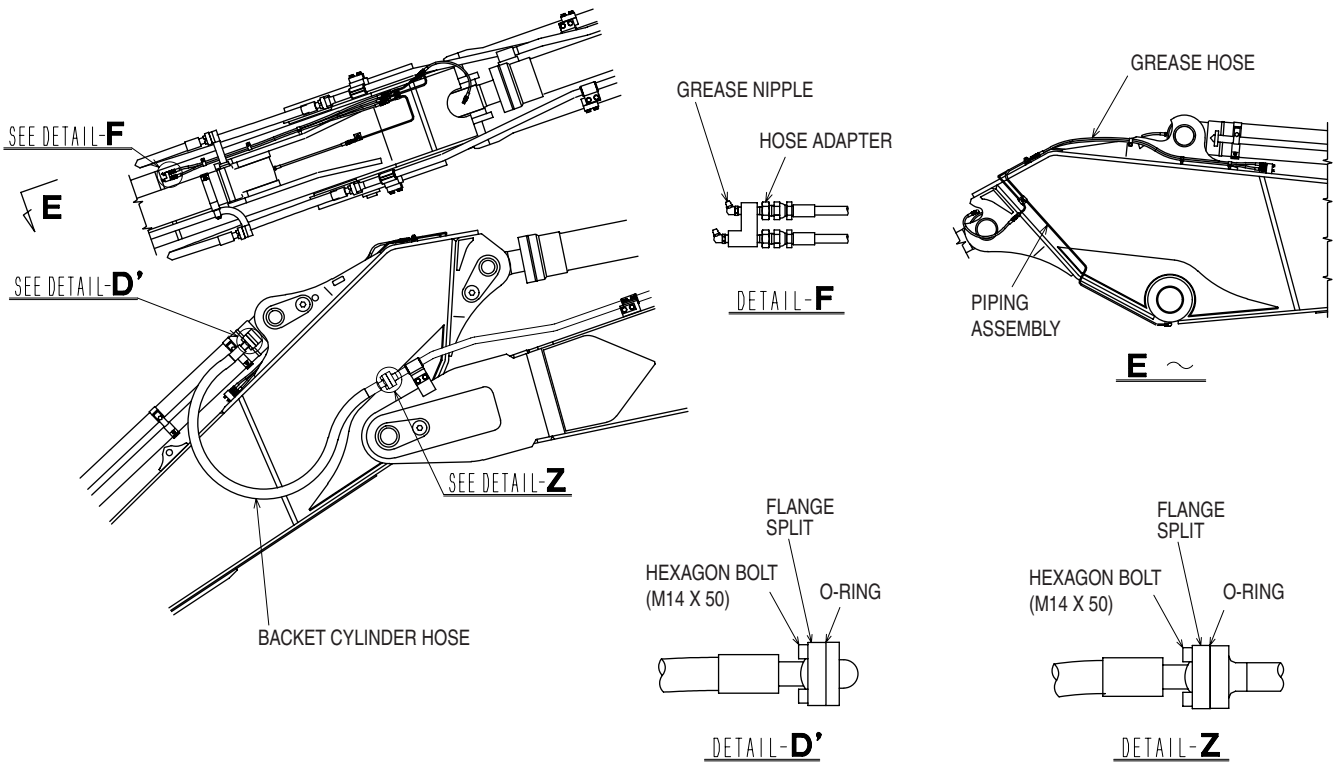

Major machinery: Elevated platform vehicle

Tools and equipment	Usage	Q'ty
Wooden board (100 x 100 x 400)	Use when the arm top is unloaded.	1 set.
Hammer		1 pc.
Dummy pin (50 dia. x 120)		1 pc.

https://truckmanualshub.com/

Procedure of Mounting

Connection bucket cylinder hose

[1] To confirm the wooden board (100 x 100 x 400) is place on the ground when the arm top is lowered on the ground.

[2] To hold down the arm and lower the top on the wood board. (Refer to Sketch 1)

[3] To connect the grease hose on the arm cylinder top. (Refer to Sketch 1)

[4] To connect the bucket cylinder hose.

[5] To take off the fixture of the bucket linkage.

[6] To pull out air inside the cylinder by slowly extending and retracting the bucket cylinder. (Refer to Sketch 2)

1) To raise the boom.

2) To open the arm.

3) To move the arm to the vertical position. (Use Elevated platform vehicle.)

Fig. 24

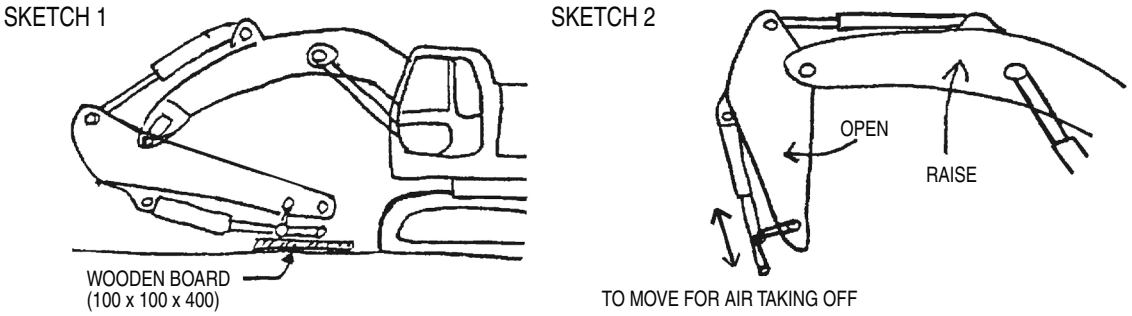

Mounting bucket

[1] To insert the dummy pin (50 dia. x 120) to the bucket link and bucket pin holes.

[2] To raise the bucket and to make alignment in line between the arm top and the bucket.

[3] To align the position of both holes of the arm top boss and the bucket boss. (To furnish with the O-ring.)

[4] To apply grease to the arm top pin.

[5] To drive the arm top pin.

[6] To insert the detent pin and fix with ring.

[7] To place the bucket on the ground and take off the dummy pin.

[8] To align the position of the boss holes of the bucket link and of the bucket by extending and retracting the bucket cylinder.

[9] At the same time, to furnish with the O-ring.

[10] To apply grease to the bucket pin.

[11] To drive the bucket pin.

[12] To insert the detent pin and fix with ring.

Fig. 25

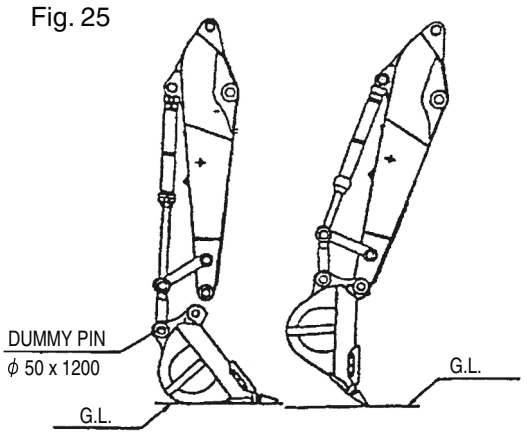

ARM AND BUCKET ARE CONNECTED AFTER THE ALIGNMENT IS MADE WITH THE DUMMY PIN.

https://truckmanualshub.com/

Checking Work

To check no abnormality on the machine after it is assembled.

[1] To check the oil quantity at the transportation style, and to supply oil if necessary.
- 200 liter drum
- Hand pump

[2] To supply grease.
- Grease pump
- Grease gun (with 10 cartridge)

[3] Touch paint
- To wipe out dirt.
- Paint by brush
- Paint by gun
- Compressor
- Set of Paint tool

[4] Front side of the right platform
- Fitting handrails.

[5] Machine body check
- Engine oil
- Water
- Reduction gear oil
- Any other abnormal point

[6] Confirmation of operation of machine

https://truckmanualshub.com/

Confirmation of Movement after Assembling Work

1. Attended items when assembling work is done.
   [1] To actuate each actuator and to assemble the machine, while the engine must be in the minimum speed.
   [2] When each actuator starts, to confirm the correct movement direction by making inching control with the control lever.
   (Caution: When control for each movement starts, to confirm no person is located around the machine.)
2. Procedure for confirmation of movement and the items to be attended after the assembling work is completed.

Procedure for Movement confirmation	Confirmation method • Caution items	Checked by:
1. Alarm device(Horn)	To operate horn switch while engine key is ON (no engine start), and to confirm alarm sound.	
2. Emergency stop	During engine started and low idling condition, to control emergency stop switch on. Confirm engine stops. Caution: To confirm no working people is located around the machine when engine starts. (Hereafter this caution notice is applied to all items in this procedure.)	
3. Gatelock	After engine starts and during its low idling condition, to confirm the bucket does not move when bucket control lever is in inching position with the following condition of the device: Gate rock lever is upright, Left console is upright, Gate lock is switched on.	
4. Swing motion parking brake	To confirm no swing motion, when swing parking switch is ON and left/right swing control lever is in inching position when engine started and is in low idling condition.	
5. Initial running for each actuator. (including air breathing) • Initial oil leakage	To confirm following movements by each actuator after engine starts and is in middle engine speed: 1) To raise and lower the boom 5 times each (in the transportation style) 2) To extend and retract arm 5 times each. 3) To open and close bucket 5 times each. 4) To swing left and right for 5 rotations each. 5) To travel for 10 meters with low speed, back and forward, 5 times each. Caution: Take care not to make any cylinder stroke end movement in order to prevent from raising shock on the machine.	

https://truckmanualshub.com/

Procedure for Movement confirmation	Confirmation method • Caution items	Checked by:
6. Oil leak from the fitting portion. • Secondary oil leakage	To make following movements under engine full (H mode) running: 1) Making relief for boom raising, relief for arm retracting, relief for bucket closing, for 5 minutes. 2) Relief for arm extending, relief for bucket opening, for 5 minutes. 3) To raise/lower the boom at the maximum working radius for 5 minutes. (Keeping bucket untouched on the ground.) 4) To travel with high speed, back/forward, for 10 meters for 5 minutes.	
7. Cooling water in LLC tank.	To confirm the level of the cooling water is between L-H.	
8. Hydraulic oil quantity	To confirm that the level gauge of hyd. oil tank is in between middle to 1 cm less than the maximum in the transportation style.	

https://truckmanualshub.com/

Basically Disassembly Work is in Opposite Order of the Assembly Work.

1. Bucket removal

[1] Preparation

1) To put lightly the back of the bucket on the ground, and stop the engine.
2) To pull out pressure.

[2] Work procedure 1 (Removal)

1) To remove the detent bolts.
2) To pull out the pin by using the pulling device.
   - Steel pipe (1.5 m long) is necessary for pulling of the pin.
3) After the pin is taken off, to put together all the O-rings in one place for preventing from missing.
4) To give antirust treatment to the pin and to put it together with the bucket.

2. Arm removal

[1] Preparation

1) To lower the arm and to put its top end on the ground.
2) To stop the engine and pull out the hydraulic oil pressure.
3) To set position.

[2] Work procedure 1 (Removal)

1) To prepare the oil tray and to remove the bucket cylinder hose.
2) To give the nylon sling to the arm cylinder and make it ready for lifting.
   (Use Elevated platform vehicle Elevated platform vehicle ?)
3) To pull out the arm cylinder top pin.
4) To lift slightly the arm cylinder. To return the pin and fix it with the bolt.
5) To pull out the cylinder side end of the hose furnished between the bucket cylinder and the arm.
6) To connect the pulled-out hose to the end of the spare piping.
7) To be ready for lifting the arm with the wire.
8) To pull out the boom top pin, and disconnect the arm from the boom.
9) To give the pin back to the boom top, and fix it with the bolt.
10) To lower the lifted arm while keeping its balance.

3. Boom cylinder removal

[1] Preparation

1) To lower the boom top end on the ground slowly.
2) To prepare 2 sets of the stool, on which the boom cylinders are going to be placed.
3) To prepare board plate in order to prevent any interference between the stool and the boom cylinder.
4) To place the board on the stools, and to confirm the position of each stool.

https://truckmanualshub.com/

[2] Work procedure 1 (Removal of boom cylinder hose and arm cylinder hose)

1) To give the nylon sling to the boom cylinder and be ready for lifting.
2) To prepare a waste oil tray.
3) To retract the boom cylinder.
4) To unload the boom cylinder top on the stools slowly.
5) To remove each 2 pieces of the boom cylinder hose and the arm cylinder hose while load being added.
6) To put a cover on the removed hose end. (Load is still kept added.).

[3] Work procedure 2 (Boom cylinder top pin removal and lowering of boom cylinder)

1) To take off the boom cylinder top pin.
2) To pull out the detent bolt on the boom cylinder foot pin.
3) To unload the boom cylinder on the stool. (Cylinder is still retracted.)
4) To take off the boom cylinder foot pin.
5) To lower the boom cylinder on the ground slowly.
6) To put back the boom cylinder foot pin and fix it with the bolt.

4. Boom removal

[1] Preparation

1) To fix the arm cylinder top portion for preventing the arm cylinder from moving by its self-weight.
2) To lift the arm cylinder for about 50 cm and insert the protection lumber between the boom and the cylinder.
   - Nylon sling (For 1.6 T x 5 m) x 1
   - Chain block (0.75 T) x 1
   - Wooden board (100 x 100 x 400)

[2] Work procedure 1 (Arm cylinder hose removal)

1) To prepare waste oil tray.
2) To remove the arm cylinders one by one (Both sides)
3) To put the transportation cover to the joint mouth of the pulled out hose.

[3] Work procedure 2 (Boom foot pun removal)

1) To pull out some extend the boom foot pin by using the slide hammer.
2) To pull the boom foot pin with the shovel and to make balance for the lifting load.
3) Connect the chain block to the slide hammer and to the shovel arm, and to pull slowly.
4) To make balance for RTC lifting and shovel pulling.
5) When both loading are balanced, at the same time to draw the pin by pulling with shovel.
6) To pull the boom foot pin off little by little.

[4] Work procedure 3 (Boom removal)

1) To stop pulling the boom foot pin just before it pulled out.
2) To remove the boom by going backward slowly. (Take care for the stability.)
3) To lower the removed boom on the ground slowly.
4) To push the boom foot pin back to the original position by pounding with hammer.

https://truckmanualshub.com/

5. Counterweight removal

[1] Preparation

1) To prepare the jig.
   - Wire (For 10 T x 3 m) x 2
   - Shackle (For 15 T) x 2
   - Elevated platform vehicle
   - RTC 45 T
   - Spanner M42 (65 width between faces)

[2] Work procedure 1 (Counterweight removal)

1) To attach the wire and the shackle to the counterweight.
2) To remove the upper cover.
3) To be in the condition being ready for lifting by taking off the washer and the eccentric nut.
4) To lower the counterweight to the set location slowly and as keeping balance.

6. Removal of travel motor piping and their small accessories.

[1] Preparation (For removing the travel motor piping.)

1) To prepare space for placing screws, etc.
2) To prepare tools such as hydraulic torque wrench, etc.

[2] Work procedure 1 (Travel motor piping removal)

1) To take off cover.
2) To remove the hydraulic hoses of motor side.

[3] Work procedure 2 (Small accessories removal)

1) To remove the catwalks.
2) To confirm the hydraulic oil quantity level. (to add oil if necessary.)
3) To remove the handrails.

7. Separation of upper body and lower, and loading

[1] Preparation (For loading attachments.)

1) To load the removed attachments on the trailer truck.
2) To set the 2 sets of RTC.
   - 1 set placed at the boom cylinder foot side.
   - Another set placed at the counterweight side.
3) To prepare the lifting tools.
   - Wire (For 10 T x 3 m) x 4
   - Shackle (For 15 T) x 2
   - Protector (Waste tire cut pieces)
     * For prevention of damage for boom cylinder foot pin.
4) To prepare stool (2 sets)
5) Followings are used when the shoe lifting jigs are applied:
   - Wire (For 5 T x 2 m) x 4
   - Shackle (For 5 T) x 4
   - Chain block (0.75 T) x 2
   - Shoe lifting jig x 4

https://truckmanualshub.com/

[2] Work procedure 1 (Wire rope sling)

1) To make ready for applying the lifting tools by swinging the upper body 90 degrees.
2) To prepare waste tire cut pieces for applying the lifting tool to the boom cylinder foot side.
3) To apply the tools to the boom cylinder foot pin by inserting the tire cut pieces for preventing damage. (Boom foot side)
4) To prepare the wooden board for prevention of the inference between the engine hood portion and the wires. (Counterweight side)
5) To fix the wooden board on the counterweight tentatively and to apply the lifting tools to the counterweight.
6) To prepare stool.

[3] Work procedure 2 (Removal of the lower one by one.)

1) To add load slightly.
2) To prepare the stool x 2 sets.
3) After raising a link with a hydraulic lifter, to take off the bolts of the lower sideframe in one side. (Load is still added.)
4) To set the stools while the balance is being kept for the upper body.
5) To lower the lifted upper body on the stools.
6) To confirm the shoes are slightly lifted over the ground.
7) To disengage once the lifting tools applied to the boom foot portion.
8) To prepare for moving the shoes.
9) To apply to the shoe lifting jigs the wires disengaged from the boom foot side.
10) To fit the shoe lifting jigs to the shoes.
11) Their attached position is 500 mm toward the center from the upper roller.
12) To lift up the lower sideframe (shoes) slowly and move. To lower it on the ground.

[4] Work procedure 3 (Upper body swing 180 degrees and loading on trailer truck)

1) To take off the lifting tools applied on the counterweight side.
2) To swing the upper body 180 degrees.
3) To apply again the lifting tools to the counterweight side and to the boom foot pin side.
4) To add load.
5) After raising a link with a hydraulic lifter, to remove the remaining bolts of the lower sideframe.
6) To prepare for loading to the trailer truck.
7) To lift up the upper body slowly. (Becoming suspended condition.)
8) To insert the trailer truck under the suspended upper body, and load it on the truck while being kept balanced.
   In this time, loading work is made in such way that the travel device piping of the upper comes to the same location where the travel motor of the lower sideframe is located.
9) To take off the lifting tools.
10) To apply retainer for preventing dropping.

https://truckmanualshub.com/

[5] Work procedure 4 (Lower side frames loading on trailer truck)

1) To fit the removed bolts, spacers and piping cover to the lower sideframe.
2) To apply the shoe lifting jigs to the shoes
3) To prepare the trailer truck for loading.
4) To lower the sideframe on the truck slowly while being kept balanced
5) To take same manner for dismounting the another sideframe as above.
6) To take off the lifting tools and apply the retainer to them for preventing from dropping.
7) To apply the centerframe to the piping cover of centerframe side.
8) Finally, to load the small accessories such as catwalks and handrails, etc., to the truck and fix them on it.

https://truckmanualshub.com/

Stool Assembly Drawing(BKWA4024-B01)

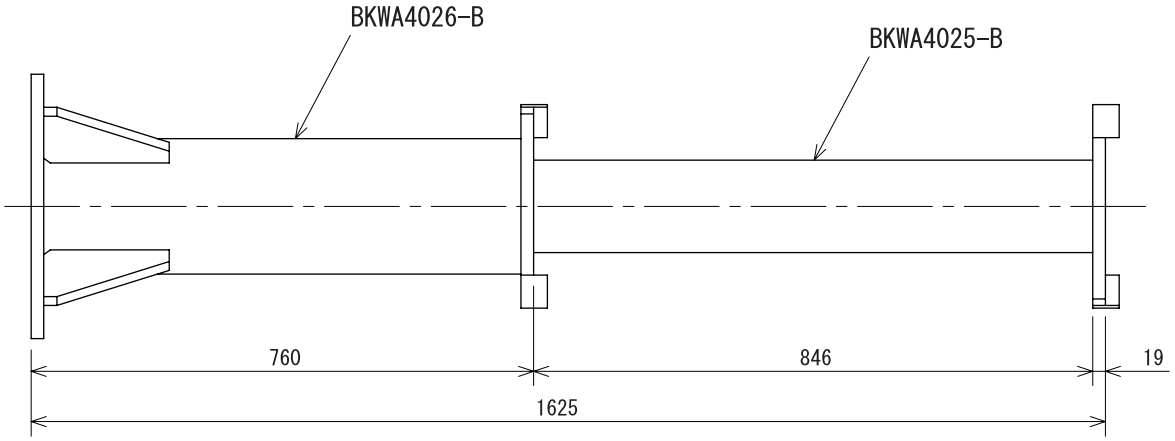

Stool (Upper) (BKWA4025-B01)

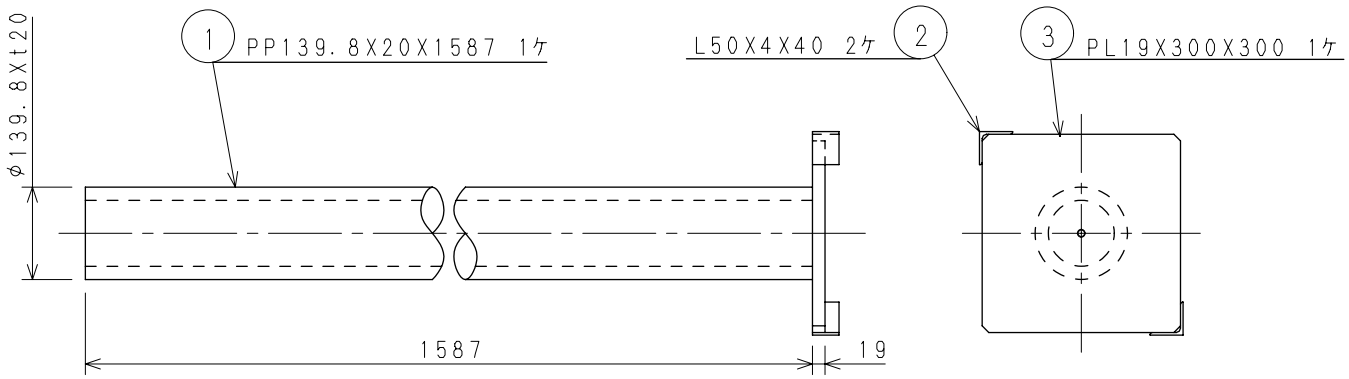

Stool (Under) (BKWA4026-B01)

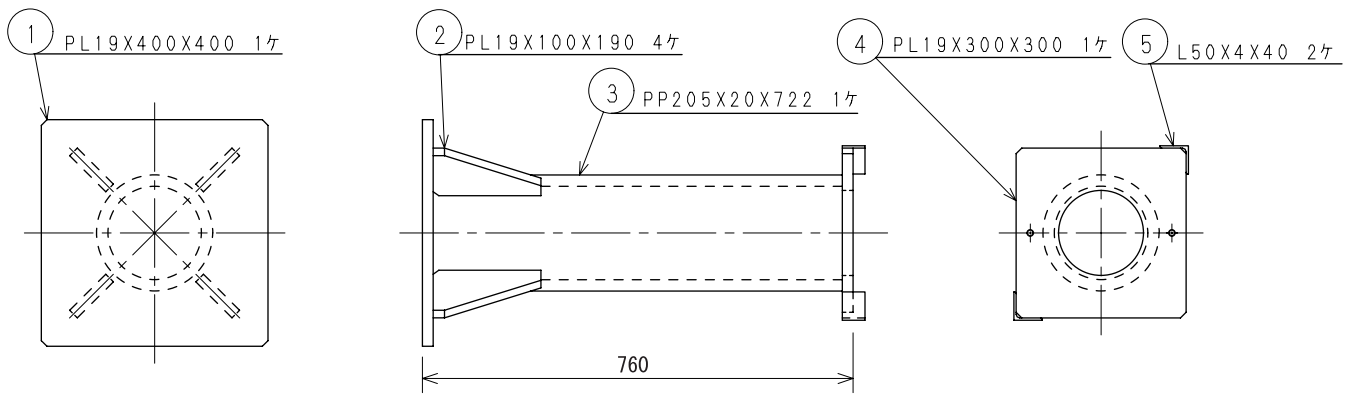

https://truckmanualshub.com/

Lower Frame Assembly Drawing

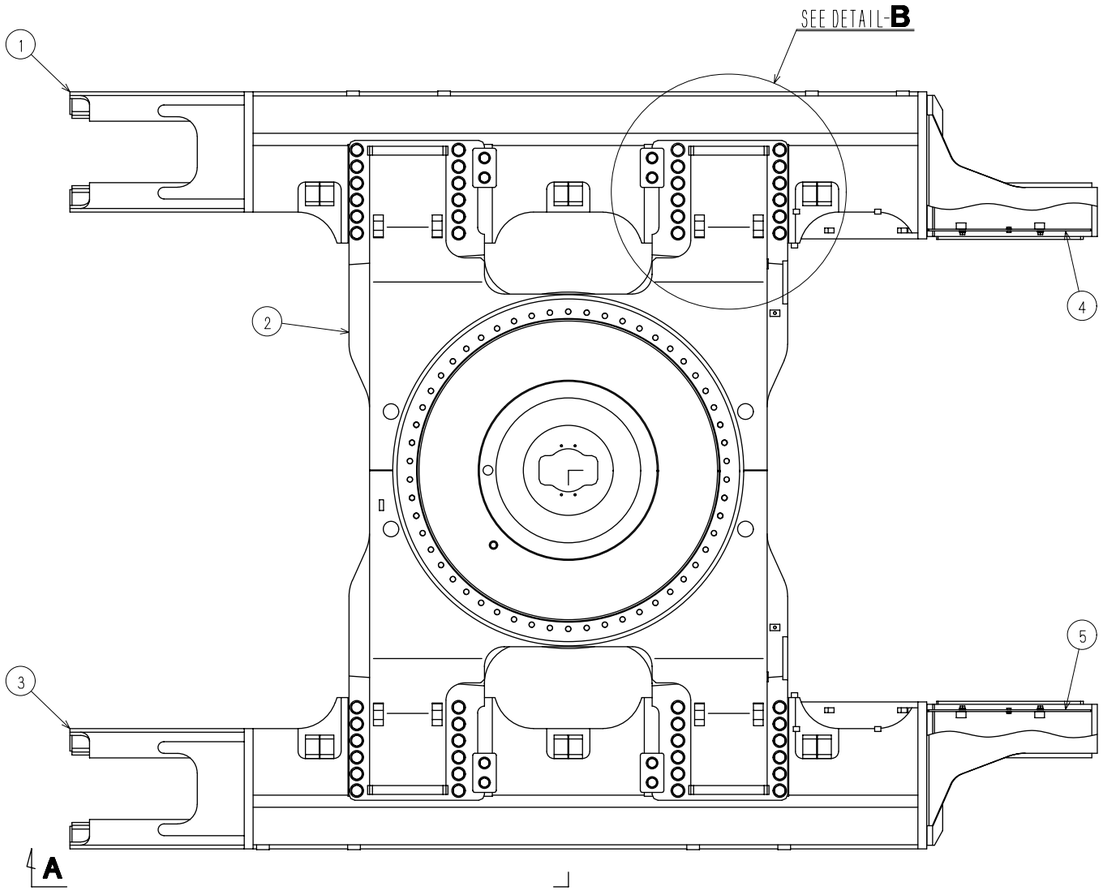

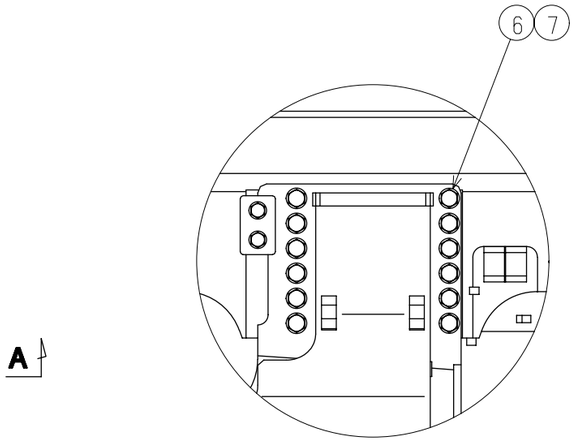

WHEN OPERATE

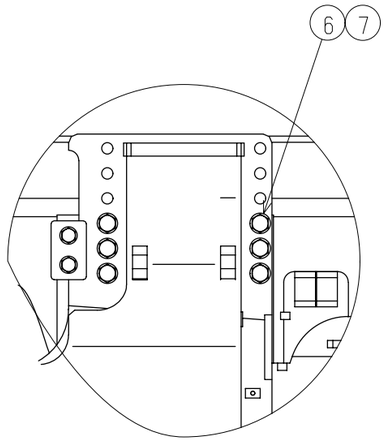

WHEN RETRACTED

DETAIL-B

PART NAME	SYM	QTY
SIDE FRAME(R)	1	1
LOWER FRAME(CENTER)	2	1
SIDE FRAME(L)	3	1
MOTOR COVER(R)	4	1
MOTOR COVER(L)	5	1
HIGH STRENGTH BOLT M36X180	6	48
PIPE SPACER	7	48
PULG	8	1
HIGH STRENGTH BOLT M30X190	9	8
HIGH STRENGTH WASHER 30	10	8
PLATE	11	4
PIPE SPACER	12	8
HIGH STRENGTH BOLT M12X20	13	2
HIGH STRENGTH BOLT M16X50	14	10
SPRING WASHER 16	15	10
HIGH STRENGTH WASHER 16	16	10
LOCTITE 262	17	NEED

NOTES

1) APPLY LOCTITE ⑰ TO THE BOLTS ⑭ RETAINING COVER:MOTOR④⑤ (10 PLACES).

2) TIGHTENING TORQUE IS INDICATED FOLLOWING.

⑥ M36 2550~2942 N·m

⑨ M30 1781~2078 N·m

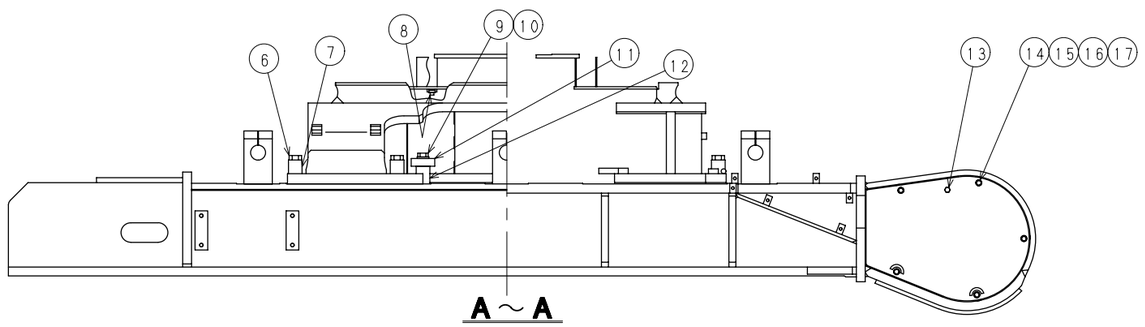

KWA0002Z-D03

https://truckmanualshub.com/

Piping Cover Assembly Drawing

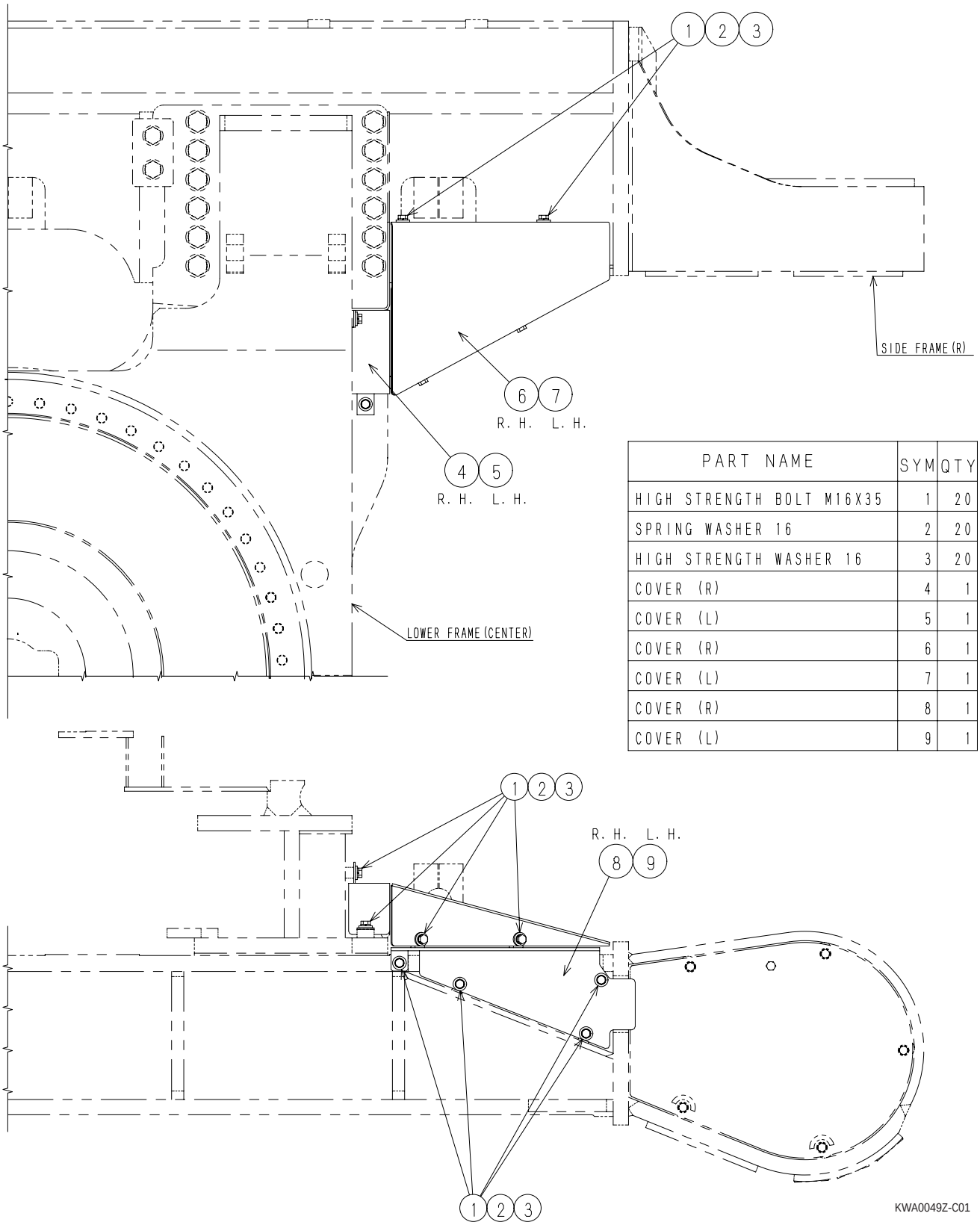

PART NAME	SYM	QTY
HIGH STRENGTH BOLT M16X35	1	20
SPRING WASHER 16	2	20
HIGH STRENGTH WASHER 16	3	20
COVER (R)	4	1
COVER (L)	5	1
COVER (R)	6	1
COVER (L)	7	1
COVER (R)	8	1
COVER (L)	9	1

https://truckmanualshub.com/

Traction Motor Line Assembly Drawing

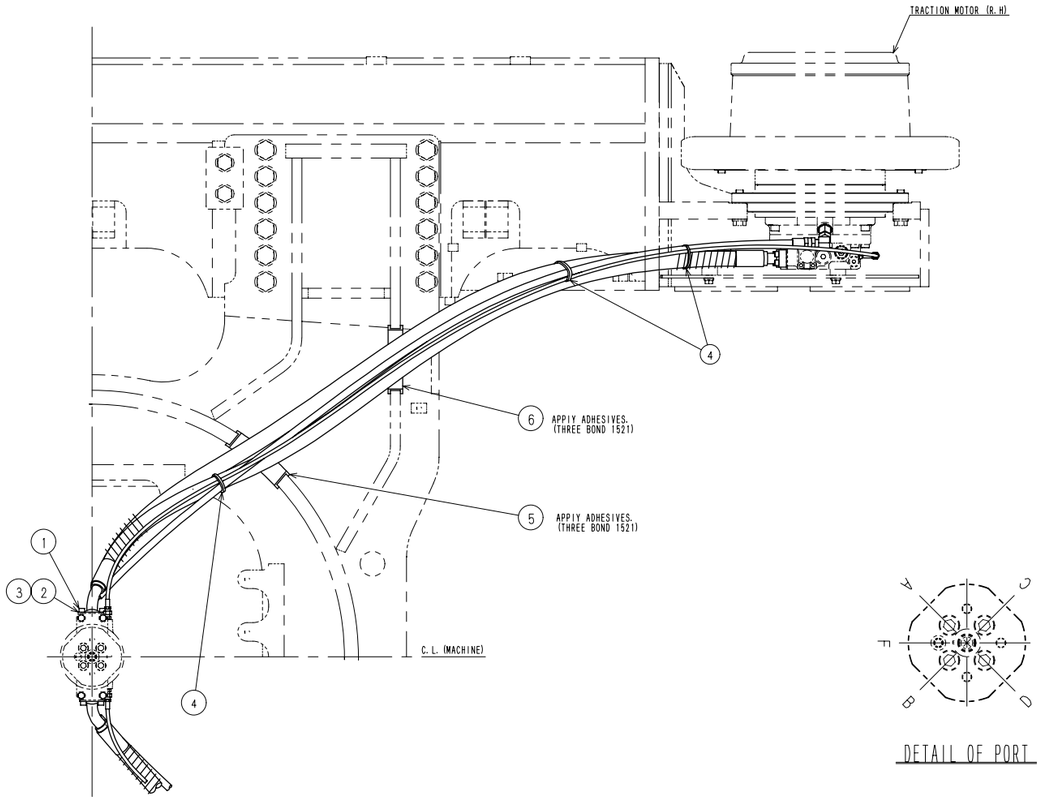

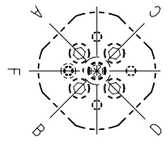

DETAIL OF PORT

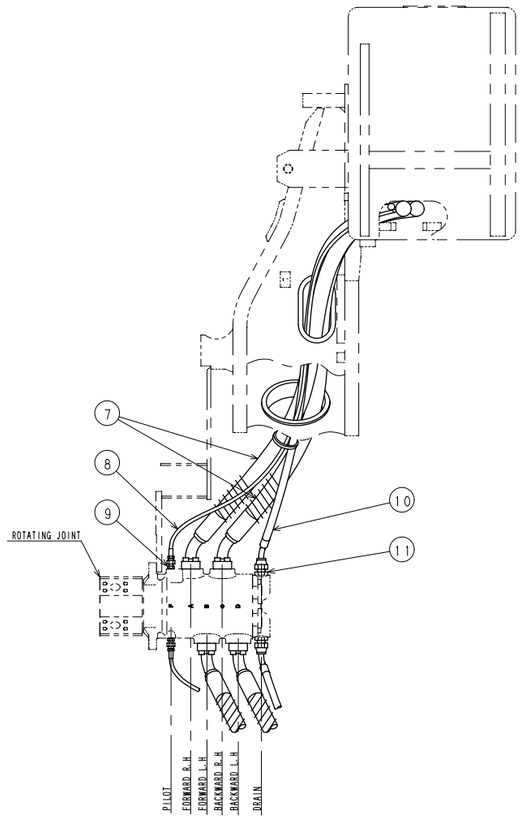

PART NAME	SYM	QTY
HEX SOC HD BOLT M14X45	1	16
O-RING AN6227-27	2	4
SPLIT FLANGE 1-1/4	3	8
HARNESS BAND L=380	4	6
CUSHION RUBBER	5	2
CUSHION RUBBER	6	2
HYDRAULIC HOSE	7	4
NYLON HOSE	8	2
HOSE ADAPTER	9	2
HYDRAULIC HOSE	10	2
HOSE ADAPTER	11	2
HEX SOC HD BOLT M12X40	12	16
O-RING AN6227-24	13	4
SPLIT FLANGE 1	14	8
ELBOW	15	2
SOCKET	16	2
ELBOW	17	2

NOTES

1) WHEN ASSEMBLING HOSES ⑦. CHECK BOTH SIDE FITTINGS OF UPPER HOSES (PORT A, B) TO PREVENT MISASSEMBLING.

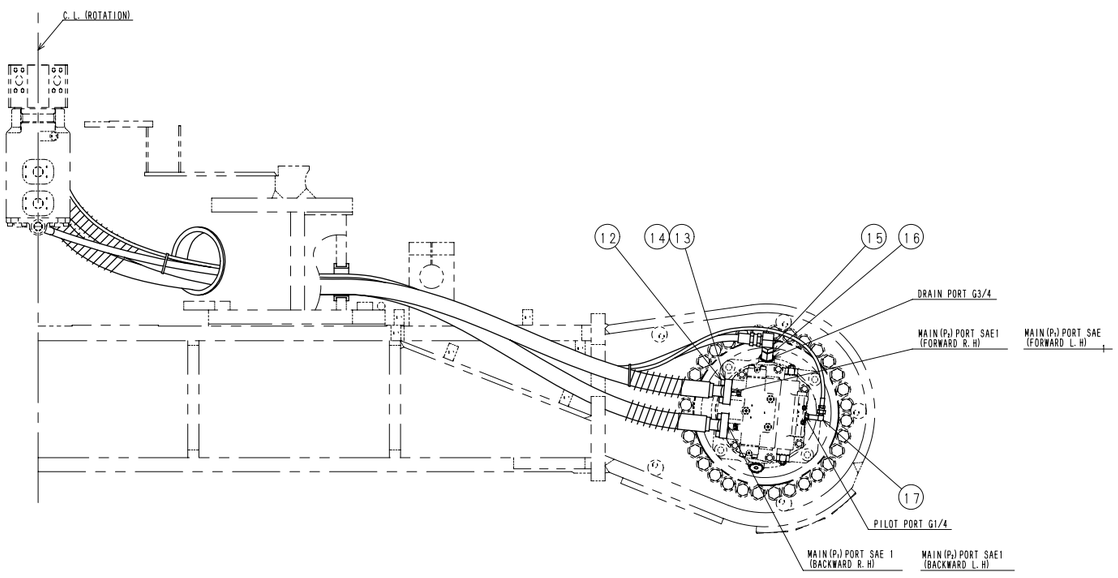

KWA0022Z-D01

https://truckmanualshub.com/

Counterweight Assembly Drawing

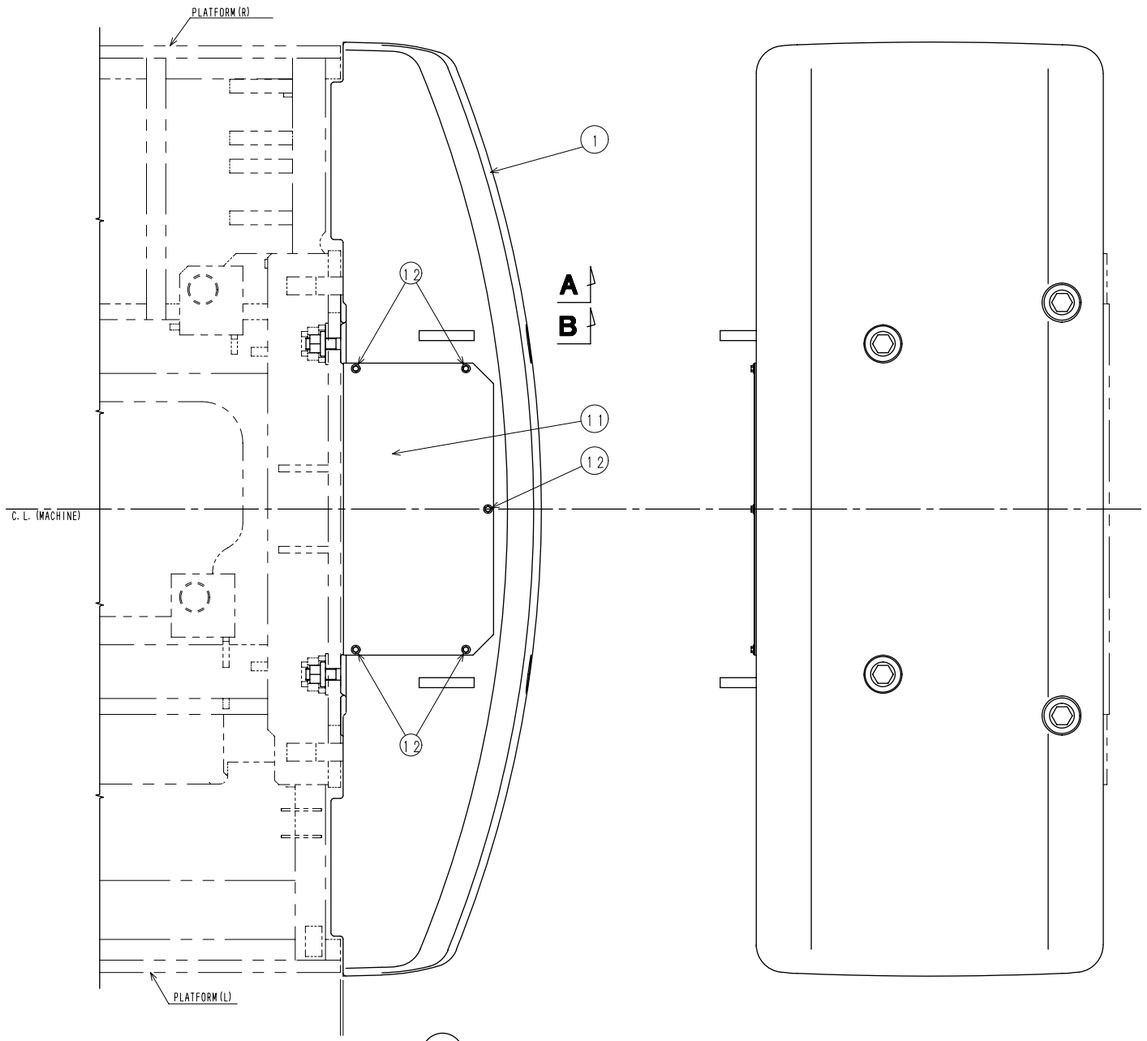

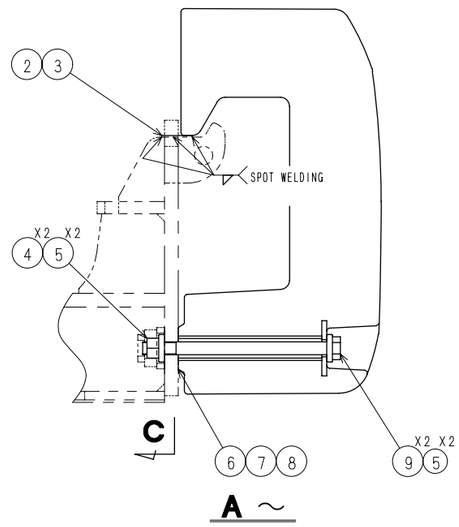

PART NAME	SYM	QTY
COUNTERWEIGHT	1	1
SHIM (t=2.3)	2	NEED
SHIM (t=3.2)	3	NEED
U-NUT M42	4	4
HIGH STRENGTH WASHER 42	5	8
PLATE SHIM (t=2.0)	6	NEED
PLATE SHIM (t=3.2)	7	NEED
PLATE SHIM (t=4.5)	8	NEED
HIGH STRENGTH BOLT M42X620	9	2
HIGH STRENGTH BOLT M42X710	10	2
COVER	11	1
SEMS BOLT M12X25	12	5

NOTES

1) TORQUE REQUIRED WHEN TIGHTENING THE BOLTS ⑨⑩ IS 2256N·m~2550N·m.

2) USE THE LIFTING SLING AND LIFT THE COUNTERWEIGHT VERTICALLY AS SHOWN ON THE LEFT HAND SIDE. (THE ANGLE AS SHOWN ON THE LEFT HAND SIDE IS MORE THAN 60° WITHOUT LIFTING SLING)

3) ADJUST WITH SHIMS ⑥⑦⑧ AS REQUIRED, AND WELD THEM ON THE REVOLVING FRAME.

4) ADJUST WITH SHIMS ②③ AS REQUIRED, AND WELD THEM ON THE REVOLVING FRAME.

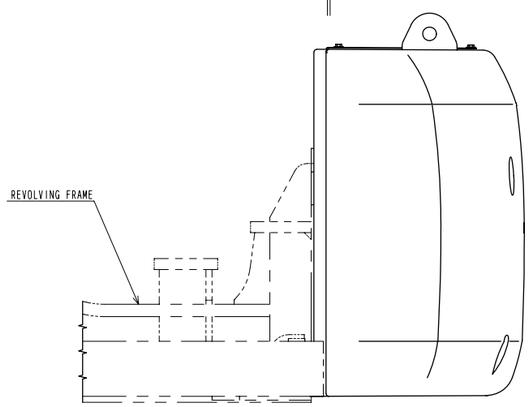

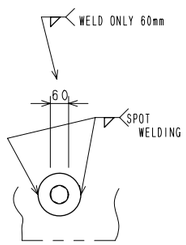

C ~

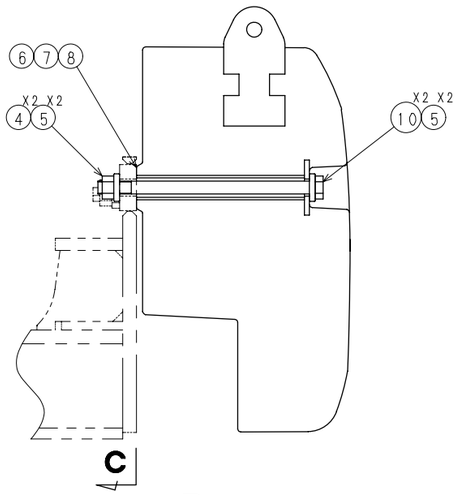

B ~

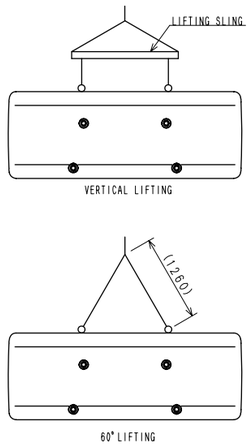

KWB10300-D01

https://truckmanualshub.com/

Catwalk Assembly Drawing

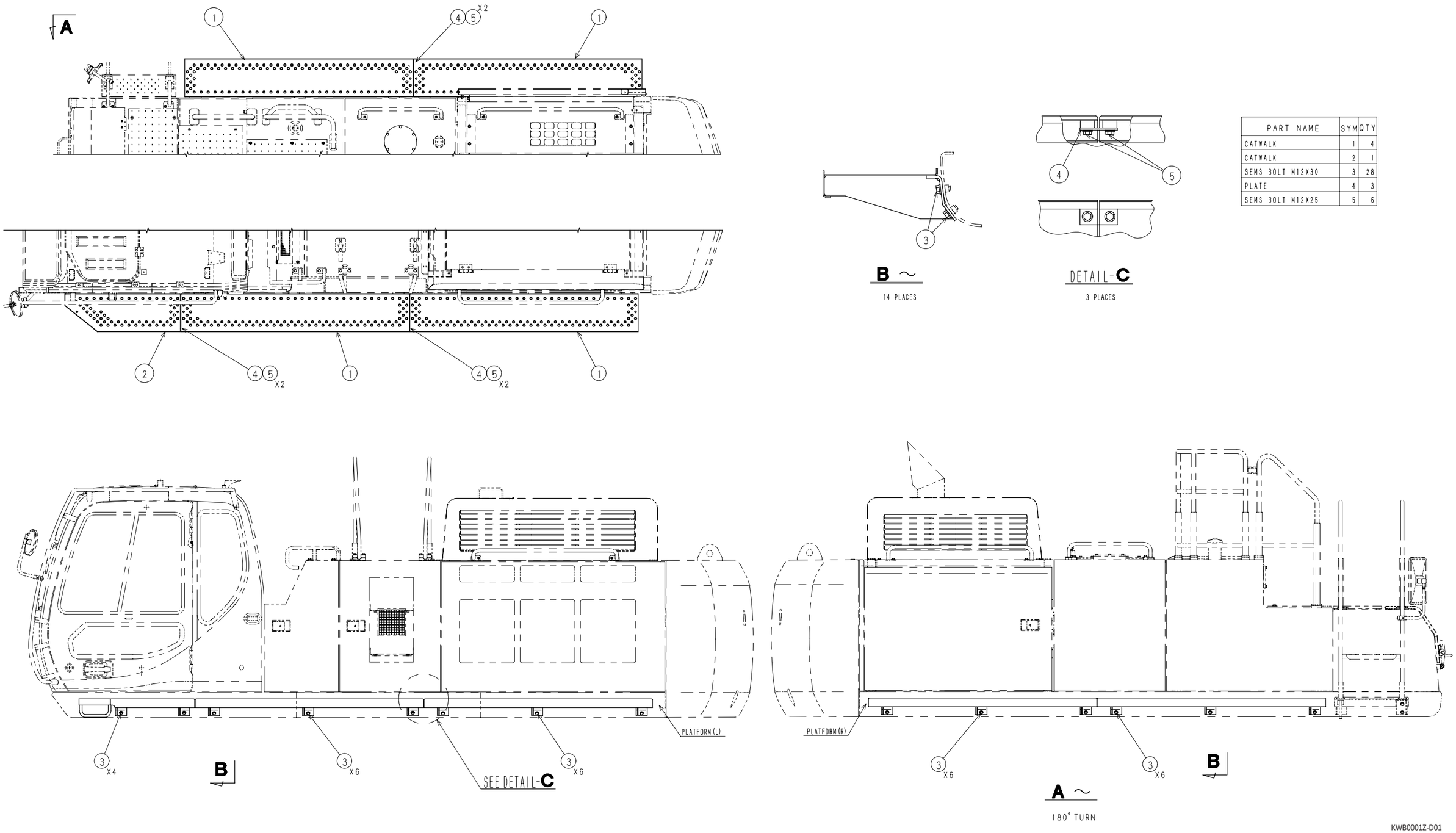

PART NAME	SYM	QTY
CATWALK	1	4
CATWALK	2	1
SEMS BOLT M12X30	3	28
PLATE	4	3
SEMS BOLT M12X25	5	6

https://truckmanualshub.com/

House Assembly Drawing

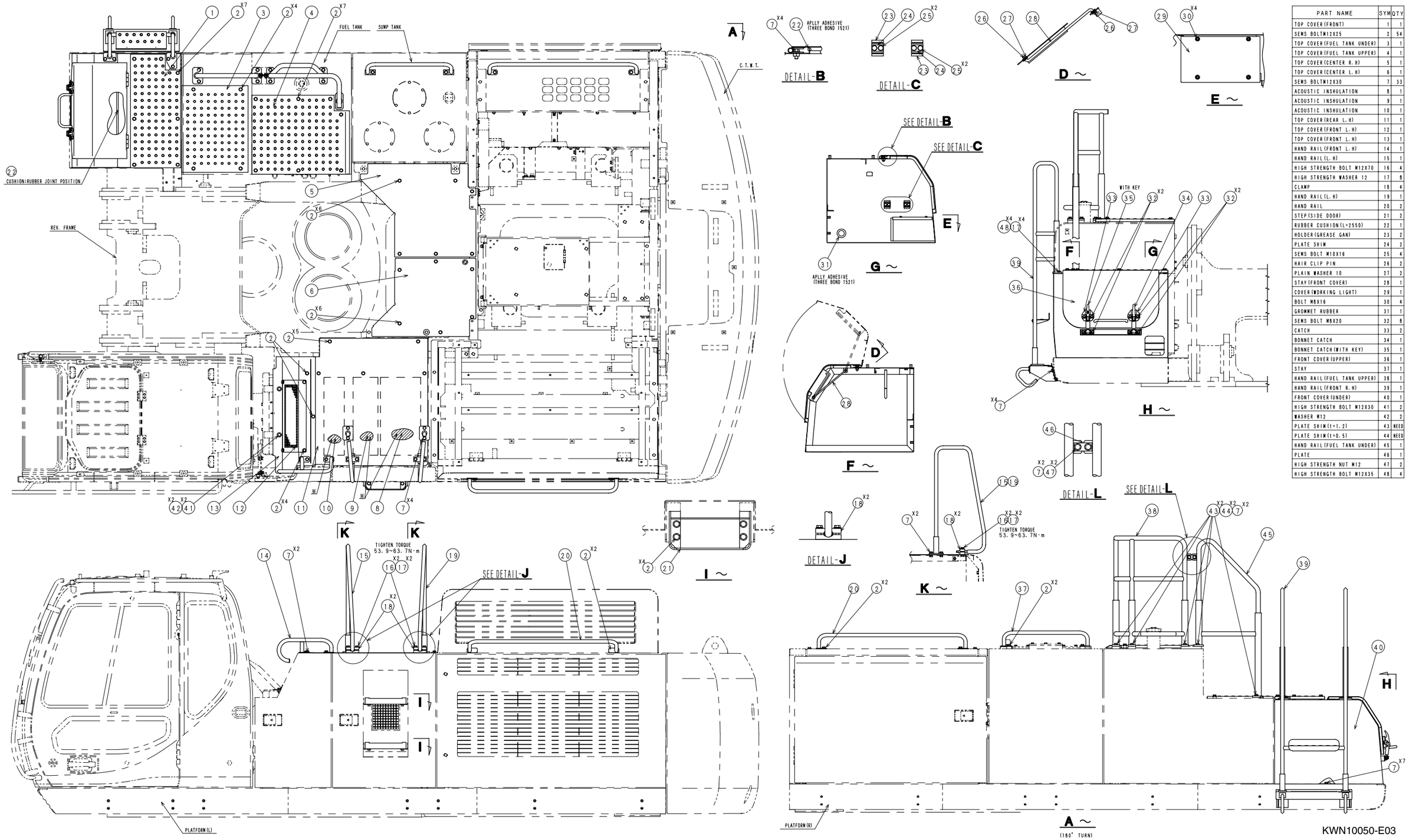

PART NAME	SYM	QTY
TOP COVER(FRONT)	1	1
SEMS BOLTM12X25	2	54
TOP COVER(FUEL TANK UNDER)	3	1
TOP COVER(FUEL TANK UPPER)	4	1
TOP COVER(CENTER R.H)	5	1
TOP COVER(CENTER L.H)	6	1
SEMS BOLTM12X30	7	33
ACOUSTIC INSHULATION	8	1
ACOUSTIC INSHULATION	9	1
ACOUSTIC INSHULATION	10	1
TOP COVER(REAR L.H)	11	1
TOP COVER(FRONT L.H)	12	1
TOP COVER(FRONT L.H)	13	1
HAND RAIL(FRONT L.H)	14	1
HAND RAIL(L.H)	15	1
HIGH STRENGTH BOLT M12X70	16	4
HIGH STRENGTH WASHER 12	17	8
CLAMP	18	4
HAND RAIL(L.H)	19	1
HAND RAIL	20	2
STEP(SIDE DOOR)	21	2
RUBBER CUSHION(L=2550)	22	1
HOLDER(GREASE GAN)	23	2
PLATE SHIM	24	2
SEMS BOLT M10X16	25	4
HAIR CLIP PIN	26	2
PLAIN WASHER 10	27	2
STAY(FRONT COVER)	28	1
COVER(WORKING LIGHT)	29	1
BOLT M8X16	30	4
GROMMET RUBBER	31	1
SEMS BOLT M8X20	32	8
CATCH	33	2
BONNET CATCH	34	1
BONNET CATCH(WITH KEY)	35	1
FRONT COVER(UPPER)	36	1
STAY	37	1
HAND RAIL(FUEL TANK UPPER)	38	1
HAND RAIL(FRONT R.H)	39	1
FRONT COVER(UNDER)	40	1
HIGH STRENGTH BOLT M12X30	41	2
WASHER M12	42	2
PLATE SHIM(t=1.2)	43	NEED
PLATE SHIM(t=0.5)	44	NEED
HAND RAIL(FUEL TANK UNDER)	45	1
PLATE	46	1
HIGH STRENGTH NUT M12	47	2
HIGH STRENGTH BOLT M12X35	48	4

KWN10050-E03

https://truckmanualshub.com/

Attachment Assembly Drawing

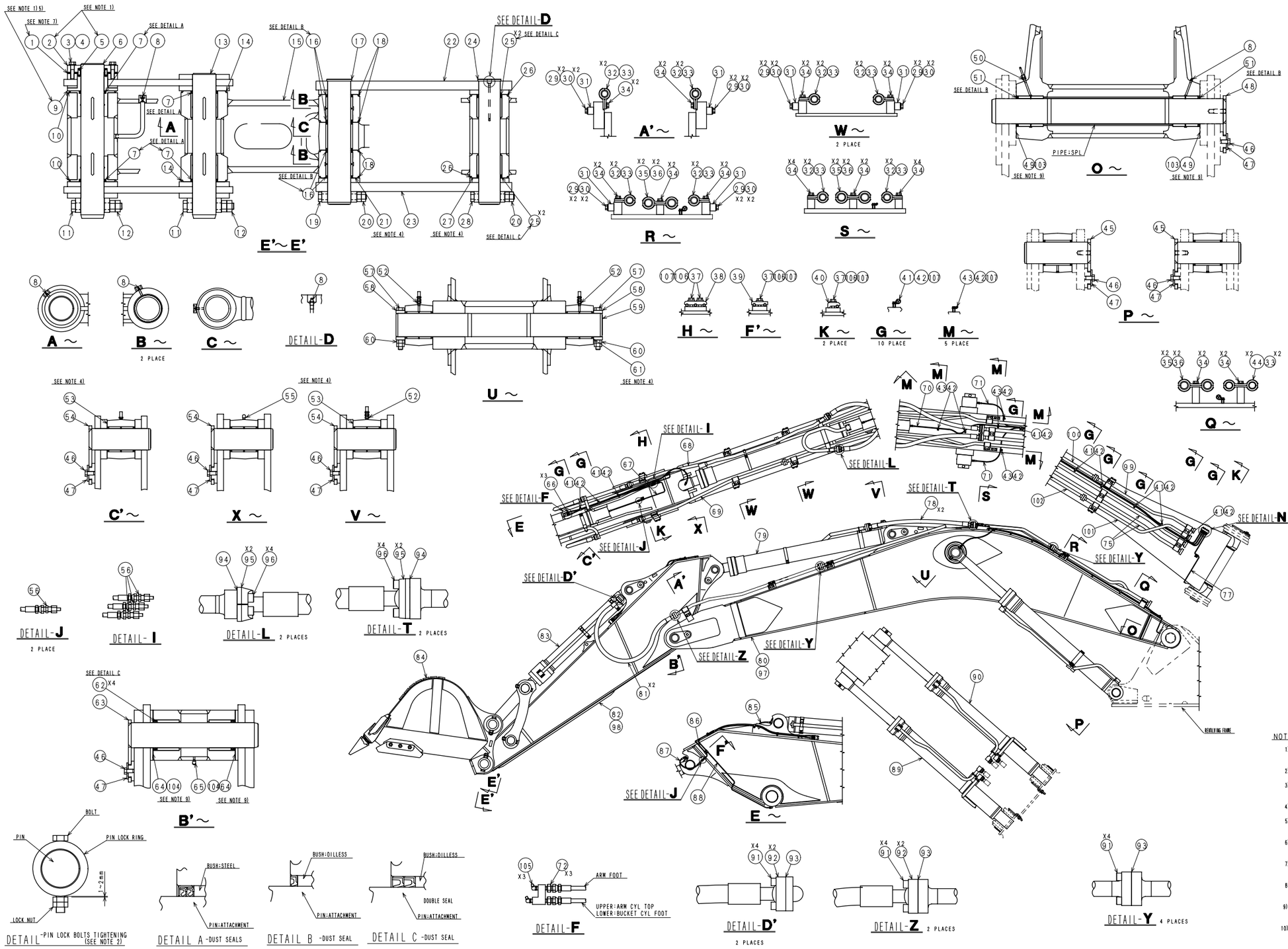

PART NAME	SYM	QTY
ATTACHMENT PIN	63	1
PLATE SHIM	64	NEED
ELBOW	65	1
NYLON HOSE	66	3
TUBE ASSY	67	1
TUBE ASSY	68	1
TUBE ASSY	69	1
NYLON HOSE	70	1
NYLON HOSE	71	2
HOSE ADAPTER	72	6
MISSING NUMBER	73	
MISSING NUMBER	74	
TUBE ASSY	75	2
MISSING NUMBER	76	
TUBE ASSY	77	1
HYDRAULIC HOSE	78	2
ARM CYLINDER	79	1
BOOM	80	1
HYDRAULIC HOSE	81	2
STANDARD ARM	82	1
BUCKET CYLINDER	83	1
BACK-HOE BUCKET(2.9m3)	84	1
NYLON HOSE	85	1
TUBE ASSY	86	1
NYLON HOSE	87	1
TUBE ASSY	88	1
BOOM CYLINDER(R)	89	1
BOOM CYLINDER(L)	90	1
HEX SOC HD BOLT M14X50	91	32
SPLIT FLANGE 1-1/4	92	8
O-RING	93	8
O-RING	94	4
SPLIT FLANGE 1-1/2	95	8
HEX SOC HD BOLT M16X50	96	16
BOOM	97	1
STANDARD ARM	98	1
TUBE ASSY	99	1
TUBE ASSY	100	1
TUBE ASSY	101	1
TUBE ASSY	102	1
PLATE SHIM	103	NEED
PLATE SHIM	104	NEED
GREASE NIPPLE(C-R1/8)	105	3
HIGH STRENGTH WASHER 8	106	5
LOCTITE	107	NEED

PART NAME	SYM	QTY
PLATE SHIM	1	6
PLATE	2	1
HIGH STRENGTH BOLT M20X75	3	4
HIGH STRENGTH WASHER 20	4	4
PIN 12X32	5	2
ATTACHMENT PIN	6	1
DUST SEAL	7	4
GREASE NIPPLE(A-R1/8)	8	10
STEEL BUSH	9	1
O-RING	10	2
HIGH STRENGTH BOLT M36X2X260	11	2
HIGH STRENGTH NUT M36X2	12	4
ATTACHMENT PIN	13	1
O-RING	14	2
BUCKET LINK	15	1
DUST SEAL	16	4
ATTACHMENT PIN	17	1
O-RING	18	4
HIGH STRENGTH BOLT M30X2X250	19	1
HIGH STRENGTH NUT M30X2	20	4
PLATE SHIM	21	NEED
ARM LINK(R)	22	1
ARM LINK(L)	23	1
ATTACHMENT PIN	24	1
DUST SEAL	25	4
O-RING	26	2
PLATE SHIM	27	NEED
HIGH STRENGTH BOLT M30X2X230	28	1
HIGH STRENGTH BOLT M16X70	29	16
HIGH STRENGTH WASHER 16	30	16
SPACER	31	8
PIPE CLAMP	32	20
RUBBER CUSHION	33	12
SEMS BOLT M16X50	34	32
PIPE CLAMP	35	6
RUBBER CUSHION	36	6
SEMS BOLT M8X30	37	5
CLAMP	38	1
PIPE CLAMP	39	1
CLAMP	40	2
CLAMP CLIP(D18)	41	9
SEMS BOLT M8X20	42	14
CLAMP CLIP(D12)	43	5
PIPE CLAMP	44	2
ATTACHMENT PIN	45	2
HIGH STRENGTH BOLT M20X35	46	7
SPACER	47	7
ATTACHMENT PIN	48	1
PLATE SHIM	49	NEED
CONNECTOR	50	2
DUST SEAL	51	2
HOSE ADAPTER	52	3
PLATE SHIM	53	NEED
ATTACHMENT PIN	54	3
HOSE ADAPTER	55	1
UNION	56	5
HIGH STRENGTH BOLT M24X220	57	2
LOCK RING	58	2
ATTACHMENT PIN	59	1
HIGH STRENGTH NUT M24X2	60	4
PLATE SHIM	61	NEED
DUST SEAL	62	4

NOTES

1) BE ASSEMBLED WITH PAYING ATTENTION AT BUCKET CLEARANCE ADJUSTING UNITS. ESPECIALLY ON THE OPPOSITE LOCATION OF BUSHING㉙, PIN㊺ AND PLATE ㉒.

2) BE KEPT CLEARANCE ABOUT 2mm BETWEEN LOCKNUT & PIN LOCK RING AFTER TIGHTENED.

3) COAT INNER BUSHINGS & PINS WITH ANTI-SCORING GREASE(SUMICO .LUBRICANT CO.,LTD. ROCOL PASTE OR EQIVALENT) PRIOR TO ASSEMBLED.AND COAT SHOULDERS WITH GREASE AT TOUCHED TO O-RINGS.

4) BE ADJUSTED CLEARANCE BY SHIMMING㉑㉒㉓㉔ AS POSSIBLE.BUT NOT ADJUSTING IF 1.2mm OR LESS.

5) COAT OUTER BUSH(FOR BUCKET ADJUST.㉙)&INNER BOSS WITH ANTI-SCORING GREASE (SUMICO LUBRICANT CO.,LTD.ROCOL PASTE OR EQIVALENT)

6) AFTER ASSEMBLING FINISHED, GREASE THE INNER BOSS THROUGH THE GREASE NIPPLES UNTIL SUPPLIED GREASE IS OOZED OUT.

7) BE ADJUSTED CLEARANCE BY SHIMMING①AT BUCKET CLEARANCE ADJUSTING UNITS AS POSSIBLE.BUT NOT ADJUSTING IF 1.2mm OR LESS.

8) TORQUE OF BOLT IN USE FLANGE:SPLIT IS BELOW.
M14: 93.2± 5N·m M16:169.7±12N·m

9) INSERT RESINOUS SHIMMING㊱㊲BOTH SIDES.
BE ADJUSTED CLEARANCE BY SHIMMING㊱㊲ AS POSSIBLE.BUT NOT ADJUSTING IF 1.2mm OR LESS.

10) SLIT OF CUSHION:RUBBER IS UNITED WITH OPENING OF CLAMP:PIPE.

KWV0031Z-E08

https://truckmanualshub.com/

Unit Conversion Table

Gravitational unit	− (x) → ← (÷) −	SI units
Kgf	9.807	N
lbf	4.448	N
Kgf•cm	0.0981	N•m
lbf•ft	1.356	N•m
lbf•in	0.113	N•m
kgf/cm^2	0.0981	MPa
atm	0.1013	MPa
$lbf•in^2$	0.0069	MPa
mmHg	133.3	Pa
inHg	3386	Pa
Kgf•m/s	0.00981	KW
lbf•ft/s	0.00136	KW
PS	0.7355	KW
HP	0.746	KW
Kgf•m	9.807	J
Kcal	4186	J
$Kgf•s/cm^2$	98067	Pa•s
cP	0.001	Pa•s
P	0.1	Pa•s
cSt	1×10^{-6}	m^2/s
St	0.0001	m^2/s

https://truckmanualshub.com/

New Hydraulic Oil

Long-life hydraulic oil (IDEMITSU Daphne Super Hydro 46SX)

Features

Currently used oil

Zinc (referred as Zn-DTP afterwards) is used in the abrasive resistant hydraulic oil (Zn type hydraulic oil), which is currently used, as a wear prevention agent (extreme pressure additive agent) and anti-oxidation agent. However, it is prone to thermally decompose rapidly and generate sludge since in recent years hydraulic devices have become smaller and use higher pressure. As a result, it becomes impossible to use these devices for a long period because there is a risk of failure occurrence such as filter blockage, sludge substance accumulation at the bottom of the tank, misoperation of control valves, quicker wear in devices, etc.

About new hydraulic oil

Two types of additives are used: one is an anti-wear agent that generates less thermal-decomposed sludge, the other is an anti-oxidation agent that controls partial oxidation deterioration at high temperatures. Because of the usage of these additives, heat resistance and oxidation stability have improved two or more times as much as the ones for the currently used oil. In addition, other performance such as lubricating and defoaming characteristics have maintained the same or higher level as the ones for the currently used oil. By achieving this, the life has been extended.

Adopted non-zinc type additives which have excellent heat resistance → [1] Reduced sludge generation
[2] Low copper corrosion
As a result, the extended exchange period has been realized.

Table 1. The Results of High Pressure Circulation Deterioration Test (Source: IDEMITSU Test Results)

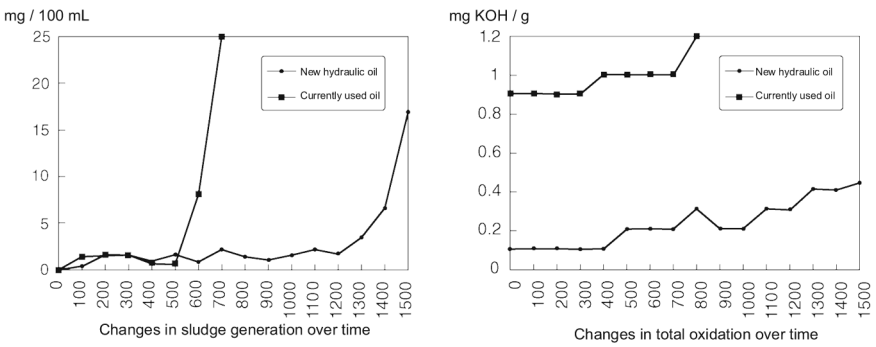

The life of hydraulic oil is usually determined by the changes in three factors below:

1. Changes in kinematic viscosity over time (No significant difference is found between new hydraulic oil and currently used oil.)
2. Changes in total oxidation over time (Considerable improvement has been made. See Table 1)
3. Changes in sludge generation over time (Considerable improvement has been made. See Table 1)

To evaluate the heat resistance and oxidation stability of hydraulic oil, high pressure circulation tests are generally used. Judging from the results above, it can be concluded that the new hydraulic oil has a life period twice as long as the one for the currently used oil.

Note: If new oil is mixed with 10% or more of the currently used oil (MOBILE DTE25B), its properties will turn back to the ones of the currently used oil.