https://truckmanualshub.com/

Eaton Hybrid Drive Systems MY08 TRTS1000 EN-US

October 2015

EH-8E306A-U
EH-8E306A-UPG
EH-8E306A-UP
EH-8E306A-CD
EH-8E306A-T
EH-6E606B-CD

Powering Business Worldwide

BACKED BY
Roadranger
SUPPORT

An Eaton Green Solution

https://truckmanualshub.com/

https://truckmanualshub.com/

Table of Contents

General Information

Warnings & Cautions 1
High-Voltage Warnings & Cautions 2
Insulated Rubber Glove Test and High-Voltage Work Area 3
Insulated Rubber Glove Test. 3
High-Voltage Work Area Requirements 3
High-Voltage Service Shutdown and Power-Up Procedure 4
High-Voltage Service Shutdown Procedures 5
High-Voltage Service Power-Up Procedure 5
Diagnostic Tools/Service Publications 6
Eaton Tools. 6
SPX/OTC Tools 6
Service Publications 7
Hybrid Diagnostic Procedure 8
Hybrid Component and Connector Locations. 9
Transmission Wiring Connections 9
Component Wiring Connections. 11
Fault Code Retrieval and Clearing. 13
View Active and Inactive Faults 13
Clear Inactive Faults 13
Fault Code Isolation Procedure Index. 14
Symptom-Driven Diagnostics Index. 18
Product Diagnostic Mode (PDM) 19
PDM only works with the following Inactive codes: 19
Hybrid Light and Gear Display Descriptions. 20
Red “Service” Light 20
Amber “Check Hybrid” Light 20
Red “Stop Hybrid” Light. 20
Blinking Amber “Check Hybrid” Light. 20
“ST” in Gear Display. 20
“PD” in Gear Display 20
“CA” in Gear Display 21
“OS” in Gear Display 21
“F” in Gear Display 21
Dash “-” in Gear Display. 21
Double Stars “**” in Gear Display 21
Double Dashes “- -” in Gear Display. 21
Blank Gear Display 21

Electrical Pretest Procedures

Power-Up Sequence Test. 22
Electrical Pretest 25
Hybrid Electrical Pretest. 29

Fault Isolation Procedures

Fault Code 1 - Motor/Generator Current Sensor. 33
Fault Code 2 - Motor/Generator Temperature Sensor 38
Fault Code 3 - Motor/Generator Temperature 42
Fault Code 4 - Motor/Generator Rotation Speed Sensor 48
Fault Code 5 - Motor/Generator AC Cable 52
Fault Code 6 - No HCM Operation 57
Fault Code 7 - Improper HCM Configuration 60
Fault Code 8 - Loss of Switched Ignition Power (HCM) 63
Fault Code 9 - Weak Battery Voltage 66
Fault Code 10 - Low Battery Voltage (HCM). 69
Fault Code 11 - No TECU Operation 72
Fault Code 12 - Improper TECU Configuration. 75
Fault Code 14 - Invalid Shifter Range. 78
Fault Code 16 - High Integrity Link (HIL) Test 83
Fault Code 17 - Start Enable Relay 89
Fault Code 18 - ECA Communication 94
Fault Code 24 - J1939 HCM Message (TECU) 97
Fault Code 26 - Clutch Slip. 101
Fault Code 27 - Clutch Disengagement 105
Fault Code 32 - Loss of Switched Ignition Power (TECU) 108
Fault Code 33 - Low Battery Voltage (TECU) 111
Fault Code 34 - Weak Battery Voltage Fault (TECU) . 114
Fault Code 35 - J1939 Communication Link (TECU) 117
Fault Code 36 - J1939 Engine Message (TECU). . . . 122
Fault Code 37 - Power Supply (TECU) 125
Fault Code 38 - Battery Fan Relay 129
Fault Code 39 - Heat Exchanger Relay 135
Fault Code 40 - Cooling Pump Relay 140
Fault Code 47 - J1939 ABS Message (HCM) 146
Fault Code 48 - J1939 Transmission Message (HCM) 149

© 2015 Eaton. All rights reserved

Fault Isolation Procedures - continued

Fault Code 49 - J1939 Engine Message (HCM) 153
Fault Code 50 - J1939 Body Controller Message (HCM) 156
Fault Code 51 - Rail Position Sensor 159
Fault Code 52 - Gear Position Sensor 164
Fault Code 53 - DC/DC Converter. 169
Fault Code 54 - DC/DC Converter Output Voltage . . 172
Fault Code 56 - Input Shaft Speed Sensor 177
Fault Code 58 - Output Shaft Speed Sensor. 181
Fault Code 59 - J1939 Communication Link (HCM). 185
Fault Code 60 - CAN Communication Link (HCM) . . 190
Fault Code 61 - Rail Select Motor 194
Fault Code 63 - Gear Select Motor 197
Fault Code 64 - ECA Fault 201
Fault Code 65 - ECA Speed Sensor 204
Fault Code 66 - ECA Battery Voltage 208
Fault Code 67 - ECA Ignition Voltage 211
Fault Code 70 - Engine Failed to Respond (HCM) . . 215
Fault Code 71 - Failed to Disengage a Gear 218
Fault Code 72 - Failed to Select Rail. 222
Fault Code 73 - Failed to Engage a Gear. 225
Fault Code 74 - Engine Failed to Respond (TECU) . . 228
Fault Code 75 - Power Down in Gear 231
Fault Code 76 - High Voltage Battery 1 Potential Voltage. 234
Fault Code 77 - High Voltage Battery 2 Potential Voltage. 237
Fault Code 78 - High Voltage Battery 1 Current 240
Fault Code 79 - High Voltage Battery 2 Current 243
Fault Code 82 - High Voltage Battery 1 Temperature 246
Fault Code 83 - Invalid Shifter Range. 250
Fault Code 84 - Shift Control Device Not Configured 255
Fault Code 85 - Shift Control Device Incompatible. . 261
Fault Code 86 - High Voltage Battery 2 Temperature 265
Fault Code 87 - CAN ECA Message (HCM). 269
Fault Code 88 - CAN Inverter Message (HCM). 273
Fault Code 89 - CAN BCU 1 Message (HCM) 277
Fault Code 90 - CAN BCU 2 Message (HCM) 281
Fault Code 91 - APG Unit 1 CAN 285
Fault Code 95 - 12-Volt Cranking Relay 289
Fault Code 96 - Accelerator Pedal Offset 293
Fault Code 97 - PTO Engagement 296
Fault Code 101 - High Voltage Battery 1 303
Fault Code 102 - High Voltage Battery 2 307
Fault Code 103 - High Voltage Battery 1 Control Unit Communication 311
Fault Code 104 - High Voltage Battery 2 Control Unit Communication 314
Fault Code 105 - High Voltage Battery 1 Control Unit 318
Fault Code 106 - High Voltage Battery 2 Control Unit 322
Fault Code 107 - High Voltage Battery Leak Detection 325
Fault Code 108 - High Voltage Battery 1 Control Unit Power Supply. 334
Fault Code 109 - High Voltage Battery 2 Control Unit Power Supply. 338
Fault Code 110 - Inverter 342
Fault Code 111 - Inverter Communication 345
Fault Code 112 - Inverter Voltage 349
Fault Code 113 - Inverter Current 353
Fault Code 114 - Inverter Power Supply 358
Fault Code 115 - Inverter Temperature 362
Fault Code 116 - High Voltage Relays 367
Fault Code 117 - BCU Relay Cut Request. 374
Fault Code 118 - Auxiliary High-Voltage Relay Control Circuit 379
Fault Code 120 - APG Unit 1 AC Voltage 385
Fault Code 122 - APG UNIT 1 Output. 388
Fault Code 123 - APG Unit 1 High Voltage Battery. . 393
Fault Code 125 - APG Unit 1 Over Temperature. . . . 396
Fault Code 126 - APG Unit 1 Configuration 399
Fault Code 127 - APG Unit 1 Ambient Air Over Temperature 402
Fault Code 128 - APG Unit 1 Ambient Air Temperature Sensor 405
Fault Code 129 - APG Unit 1 Communication 408
Fault Code 131 - APG Unit 1 Configuration Error. . . 412

© 2015 Eaton. All rights reserved

Symptom Procedures

Front Box Test 416
Engine Crank Test 420
Hybrid Performance Test 424
ServiceRanger Test 427
Gear Engagement Test 432
ePTO Test 436

Appendix

Wiring Diagrams 444
Hybrid Transmission ECU System Harness 445

Connector Pin Descriptions 446
Hybrid and Transmission Connector Pins 446
TECU and HCM Connectors 446
Transmission Controller 38-Way (Vehicle Interface Connector) 447
Hybrid Controller 38-Way (Vehicle Interface Connector) 448
Hybrid Controller 38-Way (Hybrid System Interface Connector) 449
Inverter connectors 450
Inverter 56-Way Connector 451
Power Electronics Carrier (PEC) Connectors . . . 452
PEC 19-Way Connector 453
PEC High-Voltage (DC) Connector to Inverter . . 453
PEC High-Voltage (DC) Connector to DC/DC Converter 453
Inverter High-Voltage (AC) Connector 453
Inverter High-Voltage (DC) Connector 453
Electric Clutch Actuator (ECA) Connectors 454
ECA 3-Way Connector 454
ECA 8-Way Connector 454
Motor/Generator Connectors 455
Typical DC/DC Converter Circuit 457

© 2015 Eaton. All rights reserved

Warnings & Cautions

Throughout this service manual there are paragraphs that are marked with a title of **Danger**, **Warning**, or **Caution**. These special paragraphs contain specific safety information and must be read, understood, and heeded before continuing the procedure or performing the step(s).

Danger: Danger indicates you will be severely injured or killed if do not follow the indicated procedure.

Warning: Warning indicates an immediate hazard, which could result in severe personal injury if you do not follow the indicated procedure.

Caution: Caution indicates vehicle or property damage could occur if you do not follow the indicated procedure.

Note: Note indicates additional detail that will aid in the diagnosis or repair of a component/system.

Follow the specified procedures in the indicated order to avoid personal injury:

1. If the high-voltage cones are around the vehicle and the lockout is installed on the PEC, the only person that should be allowed to start the vehicle is the person who signed the lockout tag.
2. Before working on a vehicle or leaving the cab while the engine is running, you should place the shift lever in “N” set the parking brake, and block the wheels.
3. For safety reasons, always engage the service brakes prior to selecting gear positions from “N.”
4. Before starting a vehicle always be seated in the driver's seat, select “N” on the shift control, and set the parking brakes.
5. In vehicles with ePTO, the engine and/or Motor/Generator can start in ePTO mode. Never perform any maintenance or work on vehicle, while in this mode.
6. 12-Volt Battery positive (+) and negative (-) must be disconnected prior to any welding on any Hybrid equipped vehicle.

Caution: Follow the specified procedures in the indicated order to avoid equipment malfunction or damage.

Caution: Do not release the parking brake or attempt to select a gear until the air pressure is at the correct level.

Caution: To avoid damage to the transmission during towing place the shift lever in “N” and lift the drive wheels off the ground or disconnect the driveline.

© 2015 Eaton. All rights reserved

High-Voltage Warnings & Cautions

- Use CO_2 or Dry Chemical Fire Extinguishers.
- The high-voltage wiring is covered in orange insulation or convoluted tubing and marked with warning labels at the connectors.
- All Eaton® Hybrid Diesel/Electric vehicles will be marked 'Hybrid' on the outside of the vehicle, along with the shift label on the dash.
- Refer to OEM for specific location of chassis mounted hybrid components.
- Do NOT cut into the orange high-voltage cables.
- Do NOT cut into or open the PEC.
- Do NOT cut into or open the DC/DC Converter.
- Do NOT cut into or open the Inverter.

A buffer zone must be set up and high-voltage insulated rubber gloves (class 0 with leather protectors) are required prior to working on high-voltage. Failure to follow these instructions may result in **severe personal injury or death**.

The rubber-insulated gloves that must be worn while working on the high-voltage system are class 0 with leather protectors. The rubber gloves should be tested before **EVERY** use following the rubber insulation gloves testing procedure found in “Diagnostic Tools/Service Publications” on page 6. Failure to follow these instructions may result in **severe personal injury or death**.

Before inspecting or working on any high-voltage cables or components the “High-Voltage Service Shutdown and Power-Up Procedure” on page 4 should be followed. Failure to follow these instructions may result in **severe personal injury or death**.

The Lockout and Tagout devices should only be removed by the technician that placed the Lockout and Tagout devices on the vehicle. Failure to follow these instructions may result in **severe personal injury or death**.

High-voltage rubber insulated gloves (class 0 with leather protectors) must be worn when working on any high-voltage cables. The “High-Voltage Service Shutdown and Power-Up Procedure” on page 4 must be followed prior to removing any high-voltage cables. Failure to follow these instructions may result in **severe personal injury or death**.

High-voltage cables and wiring are orange and contain a warning label at the connectors. High-voltage components are marked with a label. High-voltage rubber insulated gloves (class 0 with leather protectors) must be used when working on any of these components. Failure to follow these instructions may result in **severe personal injury or death.**

© 2015 Eaton. All rights reserved

Insulated Rubber Glove Test and High-Voltage Work Area

Insulated Rubber Glove Test

Warning: The rubber-insulated gloves that must be worn while working on the high-voltage system are class 0 with leather protectors. The rubber gloves should be tested before EVERY use following the rubber insulation gloves testing procedure found in “Diagnostic Tools/Service Publications” on page 6. Failure to follow these instructions may result in severe personal injury or death.

The insulated rubber gloves that must be worn while working on the high-voltage system are class 0 rated. They must be inspected before each use and must always be worn in conjunction with the leather outer glove. Any hole in the insulated rubber glove is a potential entry point for high-voltage.

- Roll the glove up from the open end until the lower portion of the glove begins to balloon from the resulting air pressure. If the glove leaks any air it must not be used.
- The gloves should not be used if they exhibit any signs of wear and tear.
- The leather gloves must always be worn over the rubber insulating gloves to protect them.
- The rubber insulating gloves must be class 0 and meet all of the American Safety Testing Materials standards.

High-Voltage Work Area Requirements

Warning: A buffer zone must be set up and high-voltage insulated rubber gloves (class 0 with leather protectors) are required prior to working on any high voltage. Failure to follow these instructions may result in severe personal injury or death.

The buffer zone is required only when working on the high-voltage DC or AC systems and is called out both in the “High-Voltage Service Shutdown and Power-Up Procedure” on page 4 and the individual repair procedure.

- Position the vehicle in the service bay.
- Position 4 orange cones around the corners of the vehicle to mark off a 3' (1m) perimeter around the vehicle.
- Do not allow any unauthorized personnel into the buffer zone during repairs involving high voltage. Only personnel trained for service on the high-voltage system are to be permitted in the buffer zone.

© 2015 Eaton. All rights reserved

https://truckmanualshub.com/

High-Voltage Service Shutdown and Power-Up Procedure

A buffer zone must be set up and ASTM Class 0 electrical insulating rubber gloves with leather protectors are required prior to working on high-voltage. Failure to follow these instructions may result in **severe personal injury or death**.

The rubber-insulated gloves that must be worn while working on the high-voltage system are class 0 with leather protectors. The rubber gloves should be tested before **EVERY** use following the rubber insulation gloves testing procedure found in the “Tool Specification” section. Failure to follow these instructions may result in **severe personal injury or death**.

Before inspecting or working on any high-voltage cables or components this “High-Voltage Service Shutdown Procedure” should be followed. Failure to follow these instructions may result in **severe personal injury or death**.

The lockout tagout devices should only be removed by the technician that placed the lockout tagout devices on the vehicle. Failure to follow these instructions may result in **severe personal injury or death**.

ASTM Class 0 electrical insulating rubber gloves with leather protectors must be worn when working on any high-voltage cables. This “High-Voltage Service Shutdown Procedure” must be followed prior to removing any high-voltage cables. Failure to follow these instructions may result in **severe personal injury or death**.

High-voltage cables and wiring are orange and contain a warning label at the connectors. High-voltage components are marked with a label. ASTM Class 0 electrical insulating rubber gloves with leather protectors must be used when working on any of these components. Failure to follow these instructions may result in **severe personal injury or death.**

© 2015 Eaton. All rights reserved

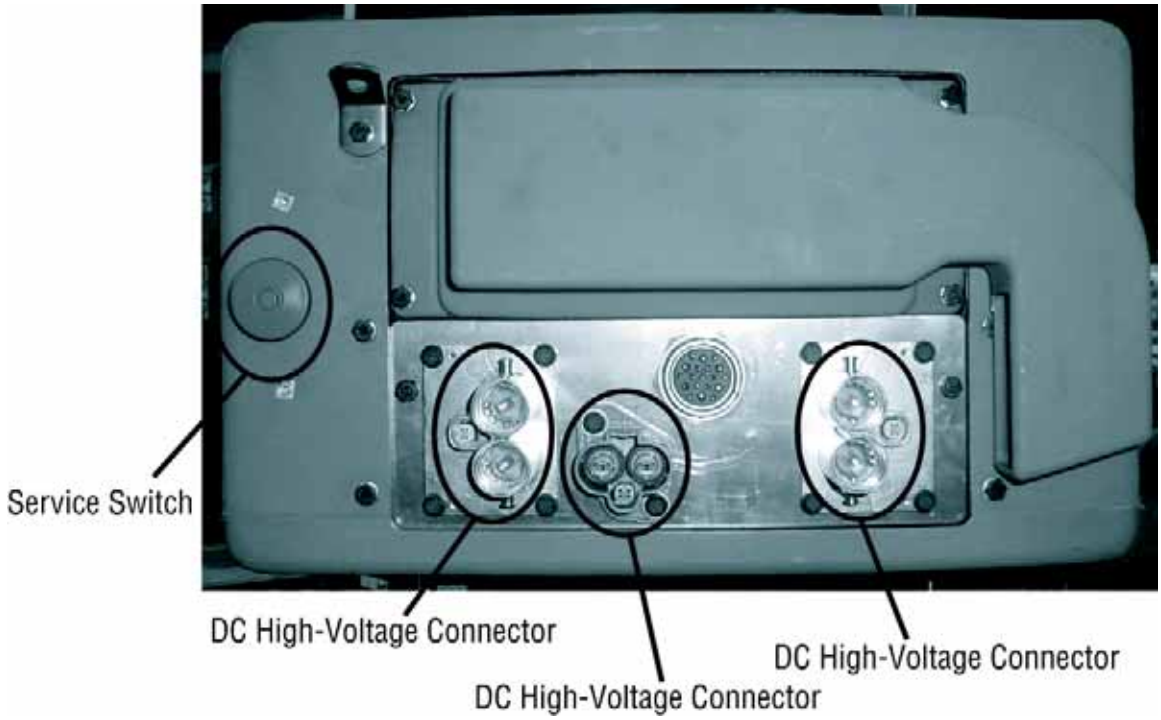

High-Voltage Service Shutdown Procedures

1. Follow “High-Voltage Work Area” procedure.
2. Locate the red PEC Service Switch on the front of the PEC and push switch off.
3. Remove the Service Switch Cover and install the Lockout Bracket (J48506).
4. Fasten tag to the Lockout Bracket.
5. Ensure the PEC Service Switch can not move from the off position.
6. Allow the system to set for a minimum of 5 minutes to discharge high voltage.
7. Connect ServiceRanger and view the Data Monitor PID 116 called “High-Voltage Battery Potential.” Use SPN 520323 for J1939 connection “Battery Voltage RB” (Relay Box).
8. The voltage should be 30 volts or less. If the voltage is above 30 volts, do not work on the vehicle and contact Eaton® at 1-800-826-HELP (4357).
9. Turn ignition key off and proceed to repair or troubleshooting step.

Note: The voltage drops to zero when the key is off.

High-Voltage Service Power-Up Procedure

1. Install all high-voltage connectors into their locked positions.
2. If you are the person working on the vehicle, remove the Lockout Bracket and tag.
3. Reinstall the Lockout Bracket over the Service Switch.
4. Pull the Service Switch out and let vehicle set for 2 minutes.
5. Start vehicle when appropriate.

© 2015 Eaton. All rights reserved

https://truckmanualshub.com/

Diagnostic Tools/Service Publications

Eaton Tools

- Visit Roadranger.com

Tool	Description
ServiceRanger version 3	ServiceRanger PC based Diagnostic Tool

SPX/OTC Tools

- Contact SPX / OTC at (800) 328-6657

Tool	Description
J49818	Eaton Hybrid Tool Safety Kit - Basic PPE (Items listed below can be ordered separately)
J48603	ASTM Class 0 electrical insulating rubber gloves with leather protectors (1000 volt)
J48605	Hybrid Safety Cones (set of 4)
J48506	Lockout Switch Plate
J48906	Lockout Tags (per 25)

Tool	Description
J49819	Eaton Hybrid Tool Safety Kit - Basic Plus PPE (Items listed below can be ordered separately)
J48603	ASTM Class 0 electrical insulating rubber gloves with leather protectors (1000 volt)
J48605	Hybrid Safety Cones (set of 4)
J48506	Lockout Switch Plate
J48906	Lockout Tags (per 25)
J48907	Orange Magnetic Sign
J48608	Hybrid Non-Conductive Safety Pole
J48908	Glove Bag

© 2015 Eaton. All rights reserved

https://truckmanualshub.com/

Misc. Service Tools	Items listed below are ordered separately
J48624	Nexiq USB-Link Communication Adapter
J43318-A*	Pin Adapter Kit - Interface Harness Diagnostics
J48735*	Alignment Pins - Hybrid Motor/Gen to Transmission Main Case
AMB-45*	Digital Megohmmeter - High-Voltage Leakage Detection
J49111*	Clutch Alignment Tool
J46708*	Fluke Digital Multimeter
J48505	Input Shaft Turning Socket
J48507	Lifting Fixture - Power Electronics Carrier
J48502	Jack Adapter Plate - Hybrid Drive Unit
5019	Transmission Jack - Low Lift
5078	Transmission Jack - High Lift
J48577	Engine/Transmission Stand Adapter Plate - Hybrid Drive Unit
J29109-A	Engine/Transmission Stand - 6000 lb. Rating

Tool	Description
J48893	Hybrid PPE / Service Tool Kit (includes J49819 kit and items from Miscellaneous Service Tools highlighted with *)

Service Publications

- Visit Roadranger.com

TRSM1000	Service Manual (covers external components on transmission and Hybrid components)
TRSM0110	Service Manual (covers internal transmission repairs only)
TRTS1000	Troubleshooting Guide
TRDR1000	Drivers Instructions
TRDR1110	First Responder Guide
CLMT-0365	Eaton 365 mm Clutch Installation Procedure

© 2015 Eaton. All rights reserved

https://truckmanualshub.com/

Hybrid Diagnostic Procedure

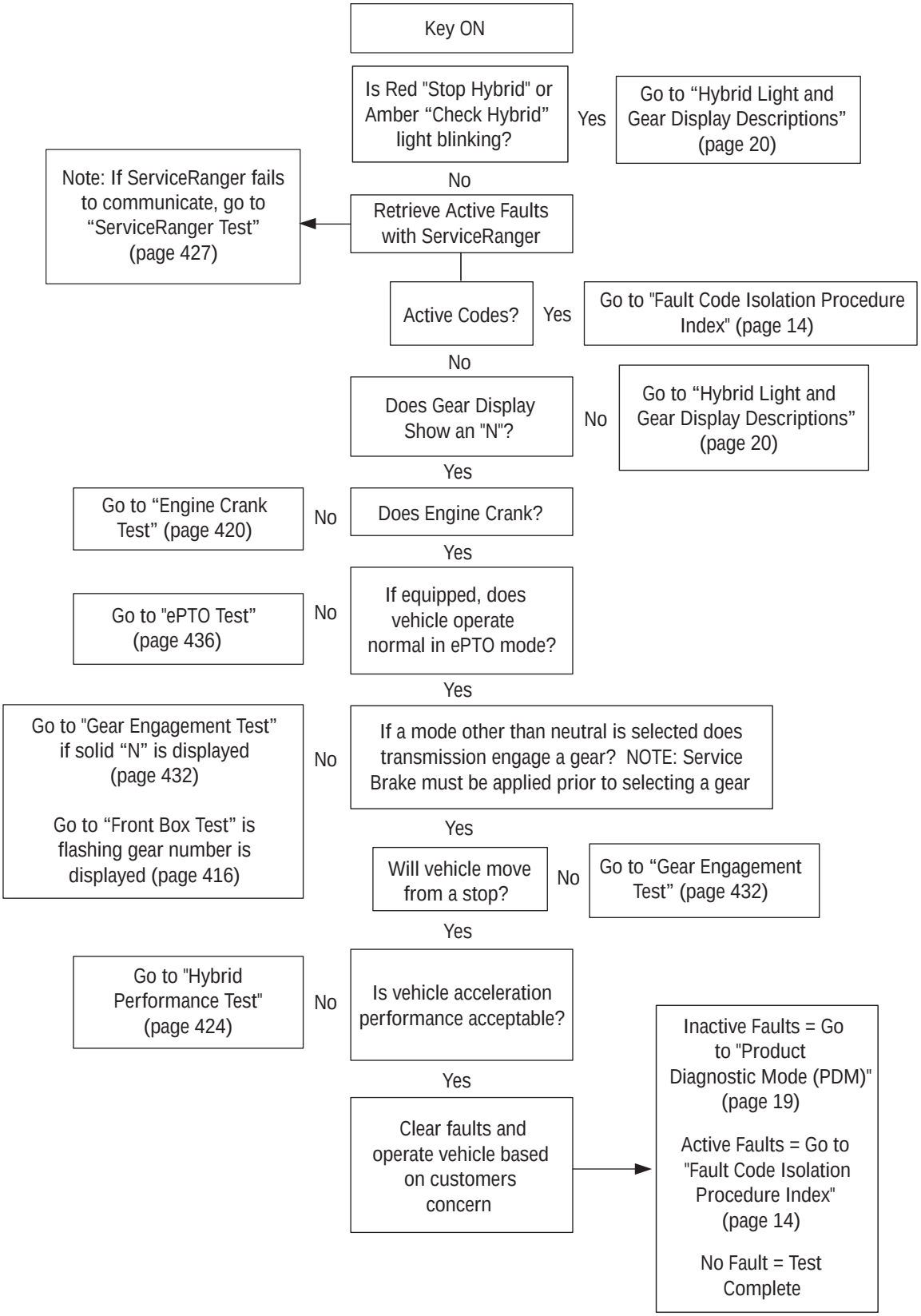

© 2015 Eaton. All rights reserved

Hybrid Component and Connector Locations

Transmission Wiring Connections

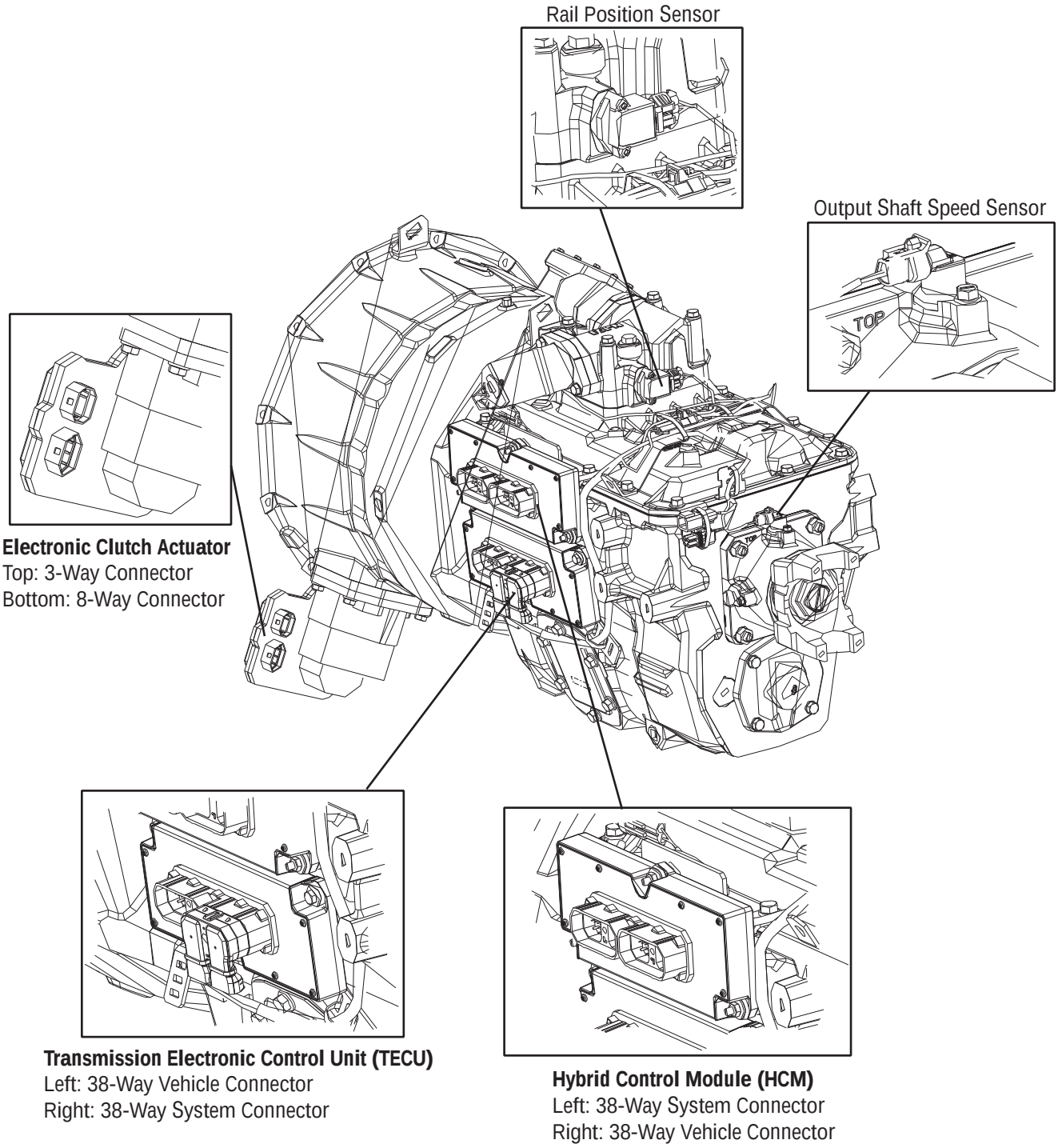

© 2015 Eaton. All rights reserved

https://truckmanualshub.com/

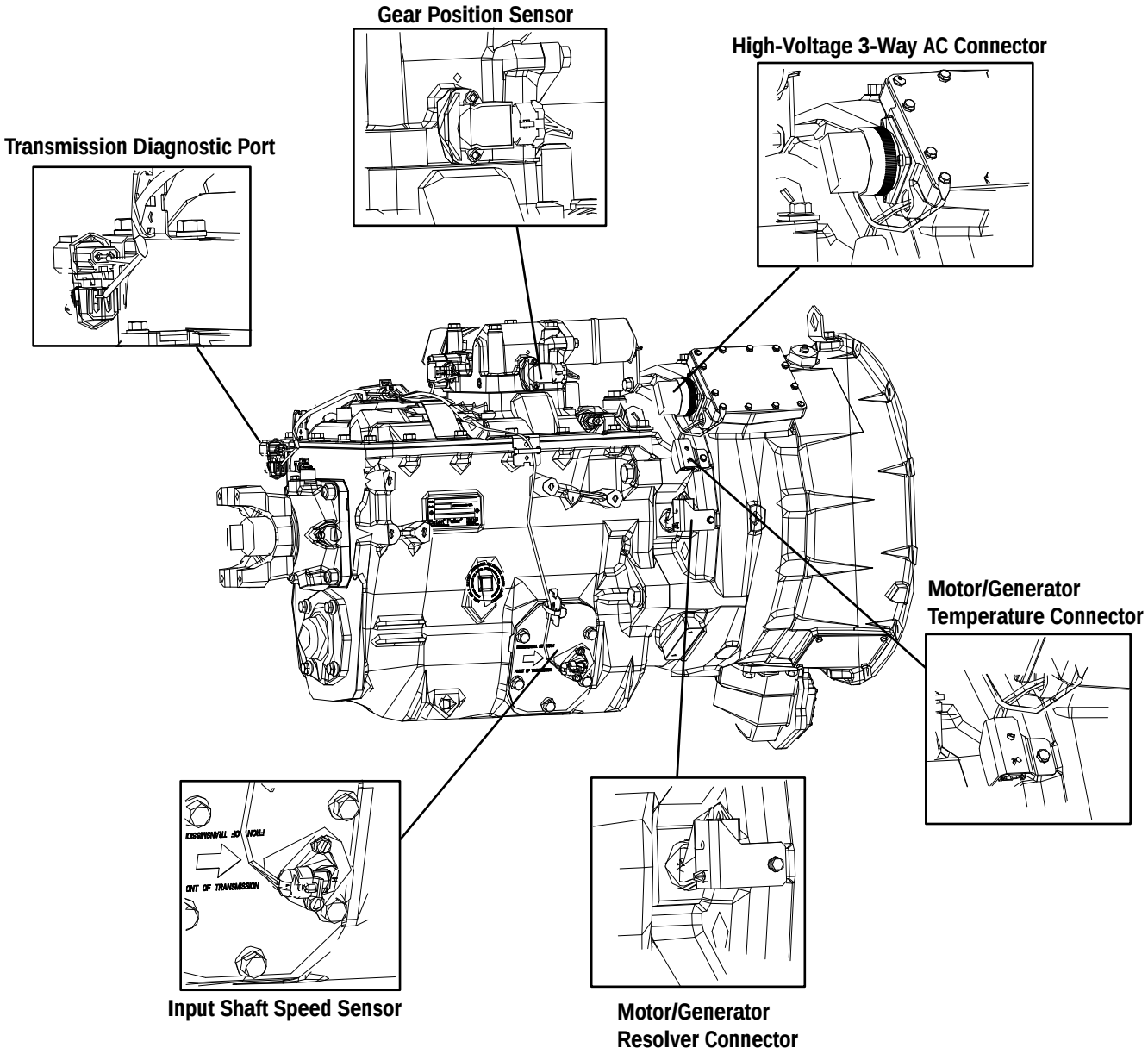

© 2015 Eaton. All rights reserved

Component Wiring Connections

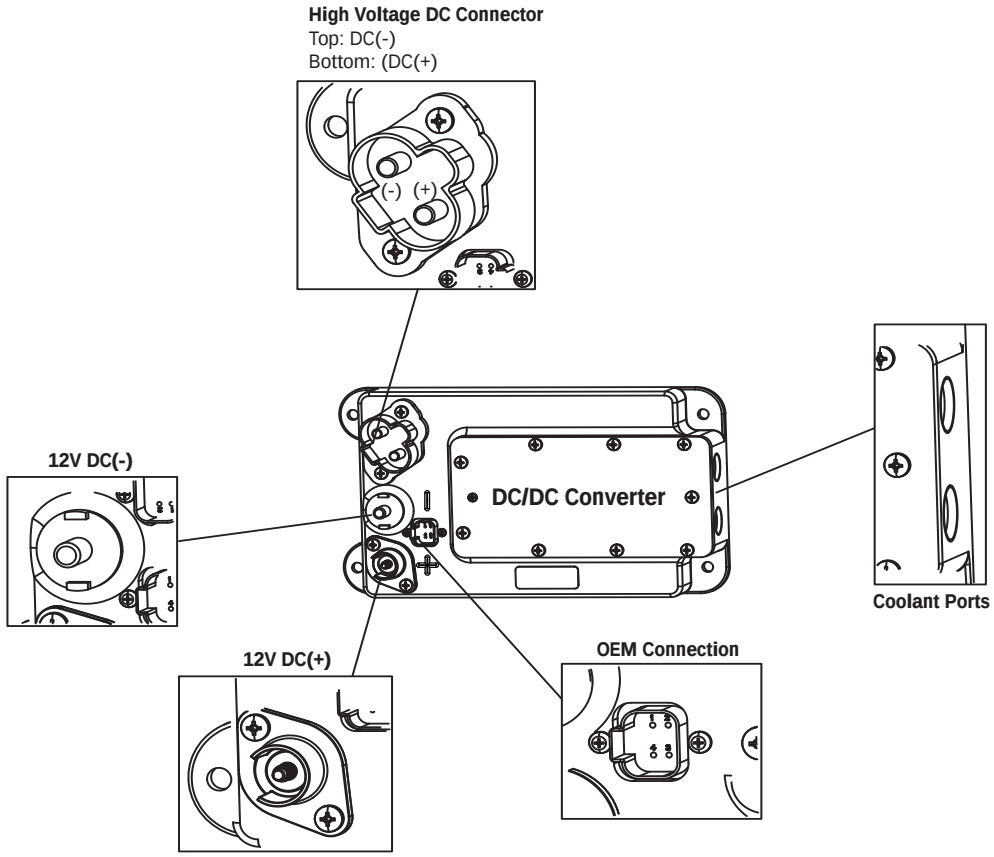

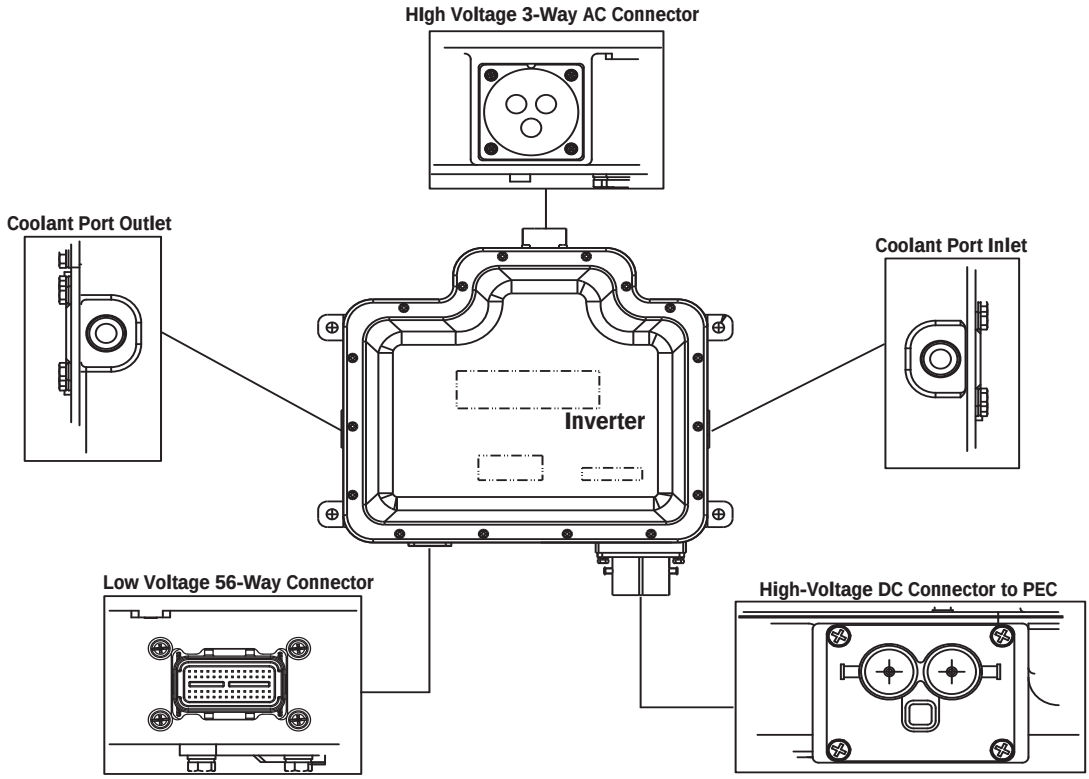

© 2015 Eaton. All rights reserved

https://truckmanualshub.com/

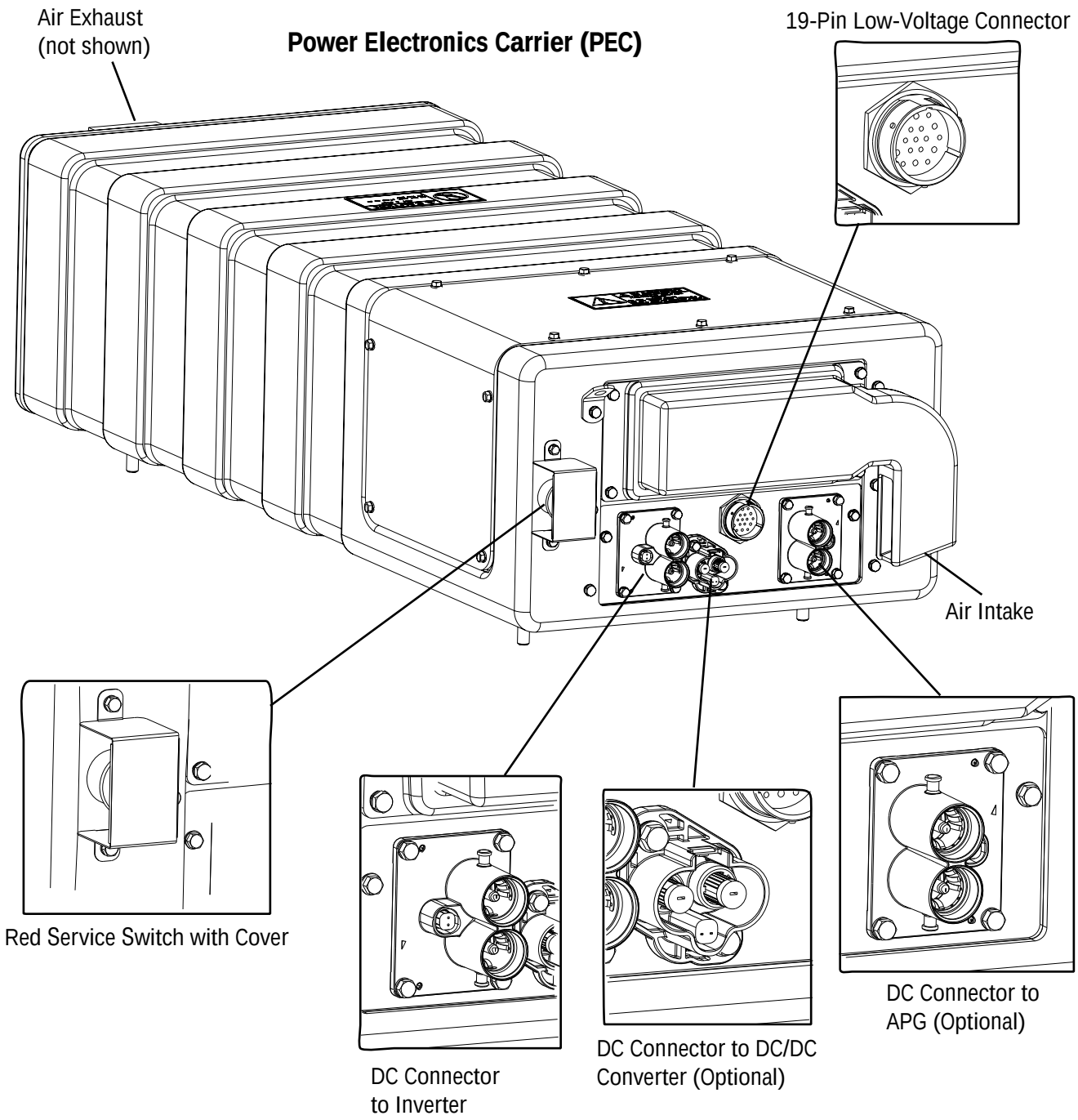

© 2015 Eaton. All rights reserved

https://truckmanualshub.com/

Fault Code Retrieval and Clearing

All Eaton® hybrid systems require ServiceRanger for all diagnostics. To view fault codes or to clear them, follow the procedures below.

View Active and Inactive Faults

1. Connect ServiceRanger to the 9-Way Diagnostic Connector.
2. Go to the “Tools” menu and select the “Communication” tab.
3. Select the appropriate communication device for J1587 and J1939.
4. Select “Connect” on the main page.
5. Select the “View Fault Codes” tab.

Note: Initial use requires all steps; however subsequent uses require only Step 4 and Step 5.

Clear Inactive Faults

1. Connect ServiceRanger to the 9-Way Diagnostic Connector.
2. Go to the “Tools” menu and select the “Communication” tab.
3. Select the appropriate communication device for J1587 and J1939.
4. Select “Connect” on the main page.
5. Select the “View Fault Codes” tab.
6. Select the “Clear Faults” button.

Note: Initial use requires all steps, however subsequent uses require only Step 4 and Step 5.

© 2015 Eaton. All rights reserved

https://truckmanualshub.com/

Fault Code Isolation Procedure Index

Fault Code	FMI	Description	Page Number
1	0, 6	Motor/Generator Current Sensor	page 33
2	3	Motor/Generator Temperature Sensor	page 38
3	0	Motor/Generator Temperature	page 42
4	0, 2, 22–27	Motor/Generator Rotation Speed Sensor	page 48
5	22–29	Motor/Generator AC Cable	page 52
6	12	No ECU Operation (HCM)	page 57
7	13	Improper ECU Configuration (HCM)	page 60
8	4	Loss of Switched Ignition Power (HCM)	page 63
9	14	Weak Battery Voltage (HCM)	page 66
10	4	Low Battery Voltage (HCM)	page 69
11	12	No ECU Operation (TECU)	page 72
12	13	Improper ECU Configuration (TECU)	page 75
14	2, 3, 4	Invalid Shifter Range	page 78
16	2	High Integrity Link (HIL)	page 83
17	3, 4	Start Enable Relay	page 89
18	9, 2	ECA Communication	page 94
24	9	J1939 HCM Message (TECU)	page 97
26	10, 23	Clutch Slip	page 101
27	7, 13	Clutch Disengagement	page 105
32	2	Loss of Switched Ignition Power (TECU)	page 108
33	4	Low Battery Voltage (TECU)	page 111
34	14	Weak Battery Voltage (TECU)	page 114
35	2	J1939 Communication Link	page 117
36	14	J1939 Engine Message (TECU)	page 122
37	5	Power Supply (TECU)	page 125
38	3, 4, 14	Battery Fan Relay	page 129
39	3, 4, 5	Heat Exchanger Relay	page 135

© 2015 Eaton. All rights reserved

https://truckmanualshub.com/

Fault Code	FMI	Description	Page Number
40	3, 4, 5, 14	Cooling Pump Relay	page 140
47	9, 2	J1939 ABS Message (HCM)	page 146
48	9, 2	J1939 Transmission Message (HCM)	page 149
49	9, 2	J1939 Engine Message (HCM)	page 153
50	9, 2	J1939 Body Controller Message (HCM)	page 156
51	2, 3, 4	Rail Position Sensor	page 159
52	2, 3, 4	Gear Position Sensor	page 164
53	12, 14	DC/DC Converter	page 169
54	2, 4	DC/DC Converter Output Voltage	page 172
56	2, 3, 4, 5, 10	Input Shaft Speed Sensor	page 177
58	2, 3, 4, 5	Output Shaft Speed Sensor	page 181
59	9, 2	J1939 Communication Link (HCM)	page 185
60	9, 2	CAN Communication Link (HCM)	page 190
61	5, 6	Rail Select Motor	page 194
63	5, 6	Gear Select Motor	page 197
64	12, 21–28	ECA	page 201
65	2, 5	ECA Speed Sensor	page 204
66	3, 4, 14	ECA Battery Voltage	page 208
67	3, 4, 5	ECA Ignition Voltage	page 211
70	0, 1, 2, 7	Engine Failed to Respond (HCM)	page 215
71	7	Failed to Disengage Gear	page 218
72	7	Failed to Select Rail	page 222
73	7	Failed to Engage Gear	page 225
74	7	Engine Failed to Respond (TECU)	page 228
75	14	Power Down In Gear	page 231
76	3, 4, 16, 18	High-Voltage Battery 1 Potential Voltage	page 234
77	3, 4, 16, 18	High-Voltage Battery 2 Potential Voltage	page 237
78	6	High-Voltage Battery 1 Current	page 240
79	6	High-Voltage Battery 2 Current	page 243
82	0, 16	High-Voltage Battery 1 Temperature	page 246
83	12, 13	Invalid Shifter Range	page 250

© 2015 Eaton. All rights reserved

https://truckmanualshub.com/

Fault Code	FMI	Description	Page Number
84	13	Shift Control Device Not Configured	page 255
85	12	Shift Control Device Incompatible	page 261
86	0, 16	High-Voltage Battery 2 Temperature	page 265
87	9, 2	CAN ECA Message (HCM)	page 269
88	9, 2	CAN Inverter Message (HCM)	page 273
89	9, 2	CAN BCU 1 Message (HCM)	page 277
90	9, 2	CAN BCU 2 Message (HCM)	page 281
91	9	APG Unit 1 - CAN Fault	page 285
95	3, 4	12-Volt Cranking Relay	page 289
96	2	Accelerator Pedal Offset	page 293
97	7, 14	PTO Engagement	page 296
101	0, 22–31	High-Voltage Battery 1	page 303
102	22–31	High-Voltage Battery 2	page 307
103	22–26	High-Voltage Battery 1 Control Unit Communication	page 311
104	22–26	High-Voltage Battery 2 Control Unit Communication	page 315
105	22–30	High-Voltage Battery 1 Control Unit	page 319
106	22–30	High-Voltage Battery 2 Control Unit	page 323
107	1	High-Voltage Battery Leak Detection	page 326
108	3, 4	High-Voltage Battery 1 Control Unit Power Supply	page 336
109	3, 4	High-Voltage Battery 2 Control Unit Power Supply	page 340
110	22–29	Inverter	page 344
111	22–26	Inverter Communication	page 347
112	3, 4	Inverter Voltage	page 351
113	6	Inverter Current	page 355
114	3, 4	Inverter Power Supply	page 360
115	0	Inverter Temperature	page 364
116	10, 14	High-Voltage Relays	page 369
117	3, 14	BCU Relay Cut Request	page 376
118	3, 4, 5	Auxiliary High-Voltage Relay Control Circuit	page 381
120	3, 4	APG Unit 1 - AC Voltage	page 387
122	6, 14, 15	APG Unit 1 - Output	page 390

© 2015 Eaton. All rights reserved

https://truckmanualshub.com/

Fault Code	FMI	Description	Page Number
123	3, 4, 14	APG Unit 1 - High Voltage Battery	page 395
125	0	APG Unit 1 - Over Temperature	page 398
126	22–27	APG Unit - Configuration	page 401
127	0	APG Unit 1 - Ambient Air Over Temperature	page 404
128	3	APG Unit 1 - Ambient Temperature Sensor	page 407
129	9	APG Unit 1 - Communication	page 410
131	13	APG Unit 1 - Configuration Error	page 414

© 2015 Eaton. All rights reserved

https://truckmanualshub.com/

Symptom-Driven Diagnostics Index

Symptom	Isolation Procedure	Page Number
Power up no crank and gear display shows a dash "-"	Front Box Test	page 418
Power up no crank and gear display shows a "N"	Engine Crank Test	page 422
Power up no crank and gear display shows a double dash (--), double star, (**), or blank	Power Up Sequence Test	page 22
Power up vehicle cranks and gear display shows (--), (**), or blank	Refer to OEM for gear display issue	N/A
Vehicle acceleration performance is not acceptable	Hybrid Performance Test	page 426
ServiceRanger doesn't communicate with vehicle	ServiceRanger Test	page 429
Transmission will not engage a gear from neutral and warning tone sounds (solid "N" in gear display)	Gear Engagement Test	page 434
Transmission will not move from a stop (solid gear number in gear display)	Gear Engagement Test	page 434
Transmission will not engage a gear from neutral (flashing gear number in gear display)	Front Box Test	page 418
Red "Service" light on the Push Button Shift Control is on and blinking	Fault Code Retrieval and Clearing	page 13
Amber "Check Hybrid" light is on	Fault Code Retrieval and Clearing	page 13
Red "Stop Hybrid" light is on	Fault Code Retrieval and Clearing	page 13
ePTO mode does not operate as expected	ePTO Test	page 438

© 2015 Eaton. All rights reserved

https://truckmanualshub.com/

Product Diagnostic Mode (PDM)

Product Diagnostic Mode (PDM) is used to help diagnose Inactive codes that may have set during normal driving. This diagnostic mode increases the sensitivity of the fault sensing capabilities.

This procedure tests loose, degraded and intermittent connections. See “Fault Code Isolation Procedure Index” on page 14. Use the Index as a guide to the wiring and connectors associated with the Inactive fault codes. Flex the wiring harness and connectors in an attempt to recreate the fault after activating PDM.

PDM is only to be used by a trained service technician in an authorized dealer.

To enter PDM mode:

Note: The vehicle will not start in Product Diagnostic Mode (PDM). Turn the key off and allow the system to power down to exit PDM.

1. Vehicle must be stationary, engine must not be running, vehicle parking brake must be set.
2. Connect ServiceRanger to the 9-Way Diagnostic Connector.
3. Select the “View Fault Codes” screen.
4. Perform 2 key clicks of the ignition switch starting in the on position and ending in the on position.

   Note: An "88" may show up in the dash at key on, which is a normal power-up test of the display.
5. The gear display flashes a solid “PD” (Product Diagnostic Mode) and the mode is activated.
6. Flex the wiring harness and connectors and attempt to recreate the fault.
7. If a fault becomes Active during PDM, ServiceRanger will display the fault with a status of Active.
8. If a fault is detected, exit PDM mode and perform the corresponding fault code troubleshooting procedure. See “Fault Code Isolation Procedure Index” on page 14.

   Note: Active codes set during PDM mode will not be stored as Inactive.
9. To exit PDM mode, power the system down by turning the key off.

PDM only works with the following Inactive codes:

8, 9, 10, 13, 14, 16, 17, 18, 24, 33, 34, 35, 36, 38, 39, 40, 43, 44, 46, 47, 48, 49, 50, 51, 52, 56, 57, 58, 59, 60, 61, 63, 87, 88, 89, 90, 95

© 2015 Eaton. All rights reserved

https://truckmanualshub.com/

Hybrid Light and Gear Display Descriptions

All Eaton® hybrid systems use a combination of 3 lights to indicate failures of different operating systems and the ability of the vehicle to drive. These lights include the red “Service” light, amber “Check Hybrid” light, and the red “Stop Hybrid” light.

Red “Service” Light

- Light is located on the Push Button Shift Control and reads “Service”.
- Light is turned on and off by the Transmission Electronic Control Unit (TECU) for automated transmissions faults over the High Integrity Link (HIL).
- Light also comes on momentarily at key on as part of the TECU self-test.

Amber “Check Hybrid” Light

- Light is located near the middle of the dash. It is amber and reads “Check Hybrid.”
- Light is turned on and off indirectly by the Hybrid Control Module (HCM) and directly by the Body Controller over J1939.
- Light is turned on when a hybrid system fault is Active.
- When the amber light is on, the vehicle can still be driven; however, the vehicle may operate without hybrid electric assist.

Red “Stop Hybrid” Light

- Light is located near the middle of the dash. The light is red and reads “Stop Hybrid”.
- Light is turned on and off indirectly by the HCM and directly by the Body Controller over J1939.
- Light is turned on when a hybrid system fault is Active.
- When the light is on, vehicle should not be driven. Transport the vehicle to the OEM truck dealership.

Blinking Amber “Check Hybrid” Light

The majority of vehicles have a red Stop Switch on the front of the Power Electronics Carrier (PEC). If this switch is pushed in, the amber “Check Hybrid” light will blink.

- To reset, pull switch out and turn key off for 2 minutes. Continue to the diagnostic test for the fault that is currently Active.
- If the light remains on, go to “Hybrid Diagnostic Procedure” on page 8 and start with step 3 “Retrieve Active Faults with ServiceRanger.”
- There should be an Active Fault Code 76 FMI 4, or Fault Code 116, FMI 10.

“ST” in Gear Display

A “ST” in the gear display indicates a driver-triggered snapshot was recorded. Snapshot is a diagnostic tool that is used to capture specific data at the time a fault occurs. It is triggered through two different means listed below:

- Fault code triggered - Specific faults will trigger the HCM or TECU to capture a snapshot file for later retrieval. This method will not display an “ST” in the gear display.
- Driver triggered - If the driver chooses to capture a snapshot of an event, he needs to decide if he wants TECU or HCM data. To capture a TECU snapshot select, Low and the Up button twice. To capture a HCM snapshot select, Drive or Low and the Up button and the Down button.

“PD” in Gear Display

A “PD” in the gear display indicates the TECU and HCM are in a special diagnostic mode called Product Diagnostic Mode (PDM).For more details on the mode and its operation, see “Product Diagnostic Mode (PDM)” on page 19.

© 2015 Eaton. All rights reserved

https://truckmanualshub.com/

“CA” in Gear Display

“CA” in gear display indicates HCM is detecting a clutch abuse situation.

- If the HCM detects a clutch abuse situation it will first tone the Push Button Shift Control and flash a “CA” in the gear display.
- If the clutch abuse situation continues, the hybrid system will allow only an electric launch in addition to continuing the tone and the “CA.”
- If the clutch abuse continues while driving, the hybrid system will open the clutch when vehicle speed is below 5 MPH and allow the clutch to cool.

“OS” in Gear Display

“OS” in the gear display indicates the HCM is detecting a motor overspeed situation. The vehicle will upshift in Drive and Low automatically; however, if the vehicle is in manual mode, close to motor overspeed and the driver fails to upshift, the vehicle will:

- Display an “OS” indicating the driver needs to depress the service brake pedal to slow the vehicle; or,
- The HCM will either upshift the vehicle or reduce torque to prevent the motor from going overspeed.

“F” in Gear Display

“F” in the gear display indicates the TECU has detected an Active fault. This fault can be accessed with ServiceRanger. See “Fault Code Isolation Procedure Index” on page 14.

Dash “-” in Gear Display

A dash “-” in the gear display indicates the transmission is stuck in gear. See “Symptom-Driven Diagnostics Index” on page 18.

Double Stars “**” in Gear Display

Two stars “**” in the gear display indicates the gear display has power, but no communication on the data link. See “Symptom-Driven Diagnostics Index” on page 18.

Double Dashes “- -” in Gear Display

Two dashes “- -” in the gear display indicates the gear display has power, and there is no communication present on the data link, or the TECU isn’t communicating with the display. See “Symptom-Driven Diagnostics Index” on page 18.

Blank Gear Display

A blank gear display indicates the display has lost power, or the TECU isn’t communicating with the gear display. See “Symptom-Driven Diagnostics Index” on page 18.

© 2015 Eaton. All rights reserved

https://truckmanualshub.com/

Power-Up Sequence Test

Overview

This test must be performed only when experiencing a “vehicle won’t crank” with a double dash “- -”, double star“**”, or blank gear display. The Electrical Pretest must be performed prior to this procedure (see “Electrical Pretest” on page 25.)

Detection

The power-up self-check is performed automatically at every key on. Turn key on and watch the “Service” light. If power up stops with the “Service” light constantly on, or it never comes on, self-check has failed.

Fallback

There is no fallback for this concern and the vehicle does not crank if the Transmission Electronic Control Unit (TECU) or Power Supply Harness has failed.

Possible Causes

This may be caused by any of the following:

- TECU Power Supply
- TECU

Additional Tools

- Basic hand tools
- Battery load tester
- Eaton® Test Adapter Kit J43318
- Digital Volt/Ohm Meter J46708

© 2015 Eaton. All rights reserved

https://truckmanualshub.com/

Component Identification

see “Wiring Diagrams” on page 446.

© 2015 Eaton. All rights reserved

https://truckmanualshub.com/

Power-Up Sequence Test

A ***Purpose:*** *Perform the Electrical Pretest.*

1. Perform the “Electrical Pretest” on page 25.
2. Is problem still present after the Electrical Pretest?
   - Yes, replace the **Transmission Electronic Control Unit (TECU)**, then return to the “Hybrid Diagnostic Procedure” on page 8.
   - No, test is complete. Return to the “Hybrid Diagnostic Procedure” on page 8.

© 2015 Eaton. All rights reserved

https://truckmanualshub.com/

Electrical Pretest

Overview

This test must be performed prior to diagnosing certain specific faults. This test verifies the quality of the standard battery system and the main power and ground supplies to the Hybrid Control Module (HCM), Transmission Electronic Control Unit (TECU), and Electronic Clutch Actuator (ECA).

Note: This test is called out in the procedures where it is required.

Detection

There is no detection process specifically for the basic electrical supply; however, failures of this type are generally detected by the transmission or driver as some other type of fault code or symptom.

Fallback

A weak power supply can cause many issues such as shift performance, power up or failure to crank.

Possible Causes

Low-voltage can be caused by the following:

- Low batteries
- Charging System
- Power harness connections or fuses to TECU, HCM or ECA

Additional Tools

- Basic hand tools
- Battery load tester
- Eaton® Test Adapter Kit J43318
- Digital Volt/Ohm Meter J46708
- ServiceRanger

© 2015 Eaton. All rights reserved

Component Identification

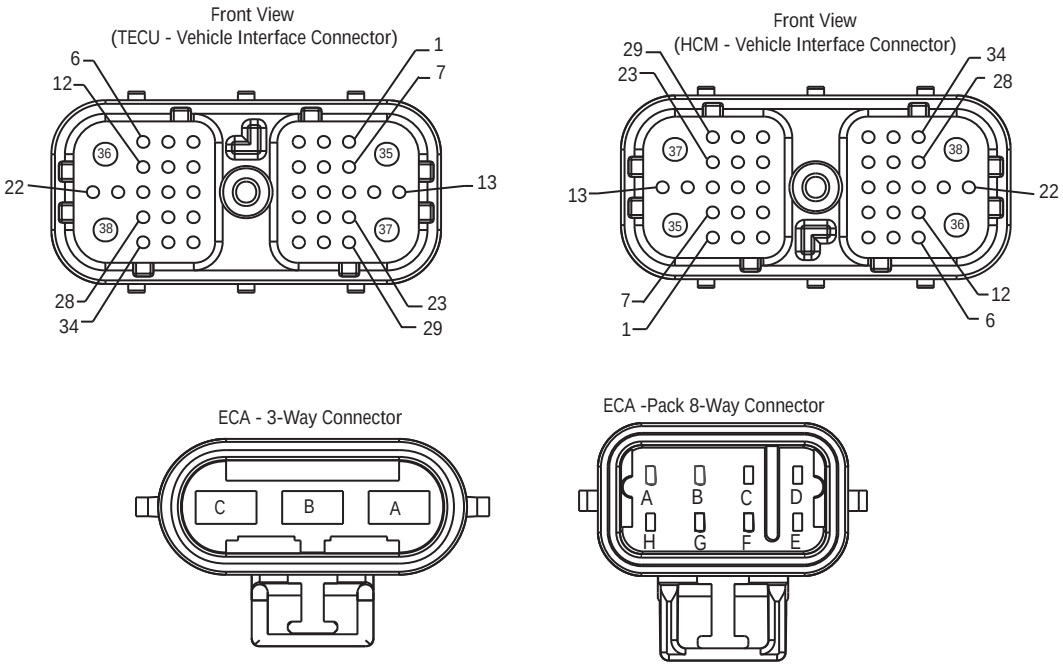

NOTE: Refer to the Eaton Hybrid Component and Connector Location page for Connector Locations

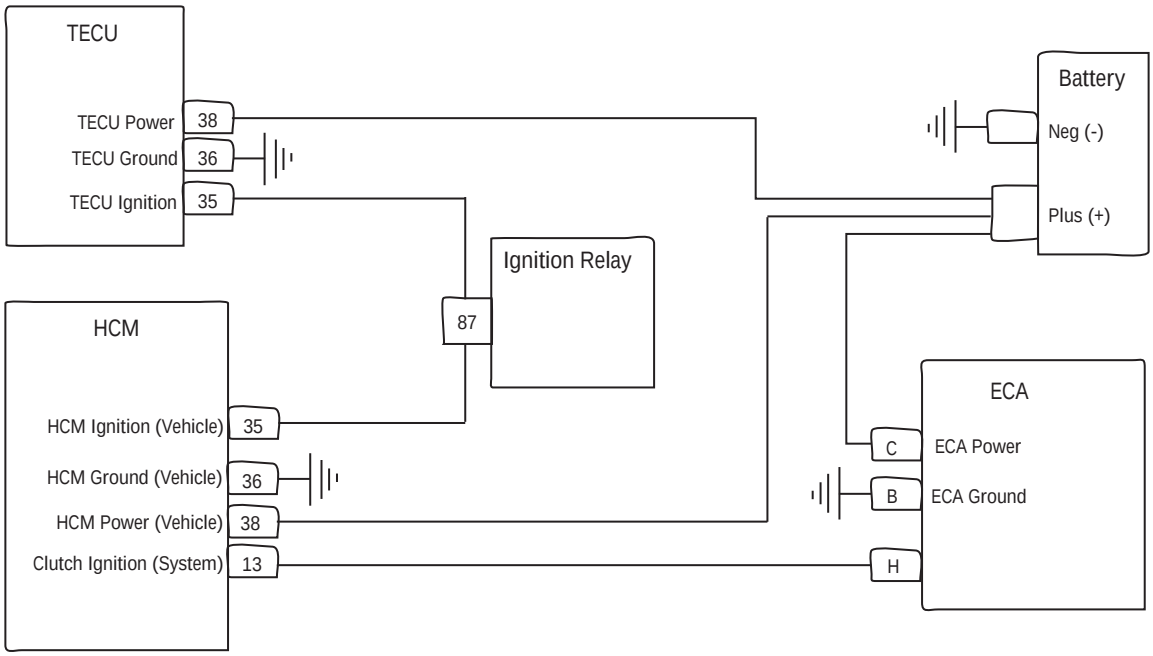

© 2015 Eaton. All rights reserved

Electrical Pretest

A ***Purpose:*** *Verify chassis battery voltage.*

1. Key off.
2. Inspect starter/battery and Inline fuse holder connections on Electronic Clutch Actuator (ECA), Hybrid Control Module (HCM) and Transmission Electronic Control Unit (TECU) for integrity.

   Note: ECA, HCM and TECU use a 30-amp fuse. Refer to OEM for locations.
3. Measure voltage across batteries.
   - If voltage is 11–13 volts on a 12-volt system, proceed with battery load test. Repair or replace batteries as required. Go to **Step B.**
   - If voltage is outside of range, repair or replace batteries and charging system as required. Repeat this step.

Connection	Measurement
Starter Battery to ECA	
Starter Battery to HCM	
Starter Battery to TECU	

B ***Purpose:*** *Verify ECA battery voltage and ignition status.*

1. Key on.
2. Connect ServiceRanger to 9-Way Diagnostic Connector in the cab.
3. Select the “Data Monitor” option and view the following parameters under the hybrid (clutch actuator) list:

   - PID 132 “Clutch Actuator Battery Voltage.”

   - PID 160 “Clutch Actuator Ignition Switch Status.”

   Note: If the clutch parameters can not be viewed on ServiceRanger, check the power supply to the ECA with a voltmeter.
   - If PID 132 is within 0.6 volts of battery voltage and PID 160 reads "1", go to **Step C.**
   - If either voltage is out of range, repair main power or ignition supply to the ECA. Repeat this step.

Parameter	Reading
PID 132 “Clutch Actuator Battery Voltage”	
PID 160 “Clutch Actuator Ignition Switch Status”	

© 2015 Eaton. All rights reserved

C

Purpose: *Verify HCM battery voltage and ignition status.*

1. Select the “Data Monitor” option and view the following parameters under the HCM list:

- PID 165 “Battery Potential Voltage.”
- PID 166 “Ignition Switch Status.”

Note: If the “Battery Potential Voltage” or “Ignition Switch Status” can not be viewed on ServiceRanger, check the power supply to the HCM with a voltmeter.

- If PID 165 is within 0.6 volts of battery voltage and PID 166 reads "1", go to **Step D.**
- If either voltage is out of range, repair the main power or ignition supply to the HCM. Repeat this step.

Parameter	Reading
PID 165 “Battery Potential Voltage”	
PID 166 “Ignition Switch Status”	

D

Purpose: *Verify TECU battery and switched voltage.*

1. Select the “Data Monitor” option and view the following parameters under the hybrid (Transmission) list:

- PID 168 “Battery Potential Voltage.”
- PID 158 “Battery Potential Voltage Switched.”

Note: If the “Battery Potential Voltage” or “Battery Potential Voltage Switched” can not be viewed on ServiceRanger, check the power supply to the TECU with a voltmeter.

- If PID 168 is within 0.6 volts of battery voltage and PID 158 is within 0.6 volts of ignition voltage, test is complete. Return to the fault or symptom procedure that referenced this step.
- If either voltage is out of range, repair main power or ignition supply to the TECU. Repeat this step.

Parameter	Reading
PID 168 “Battery Potential Voltage”	
PID 158 “Battery Potential Voltage Switched”	

© 2015 Eaton. All rights reserved

https://truckmanualshub.com/

Hybrid Electrical Pretest

Overview

This test must be performed prior to diagnosing select hybrid faults. This test verifies the power supply for the Inverter and Battery Control Unit (BCU).

Note: The Electrical Pretest must be performed before the Hybrid Electrical Pretest.

Note: This test will be called out in the procedures where it is required.

Detection

There is no detection process specifically for the basic electrical supply; however, failures of this type are generally detected by the hybrid system or driver as some other type of fault code or symptom.

Fallback

Loss of ignition power causes the hybrid system to be inoperable. The vehicle runs under diesel power only.

Possible Causes

Low-voltage can be caused by Power Harness connections from Inverter or BCU.

Additional Tools

- Basic hand tools
- ASTM Class 0 electrical insulating rubber gloves with leather protectors J48603
- Lockout bracket J48506
- Lockout tags
- Battery load tester
- Eaton® Test Adapter Kit J43318
- Digital Volt/Ohm Meter J46708
- ServiceRanger

© 2015 Eaton. All rights reserved

https://truckmanualshub.com/

Component Identification

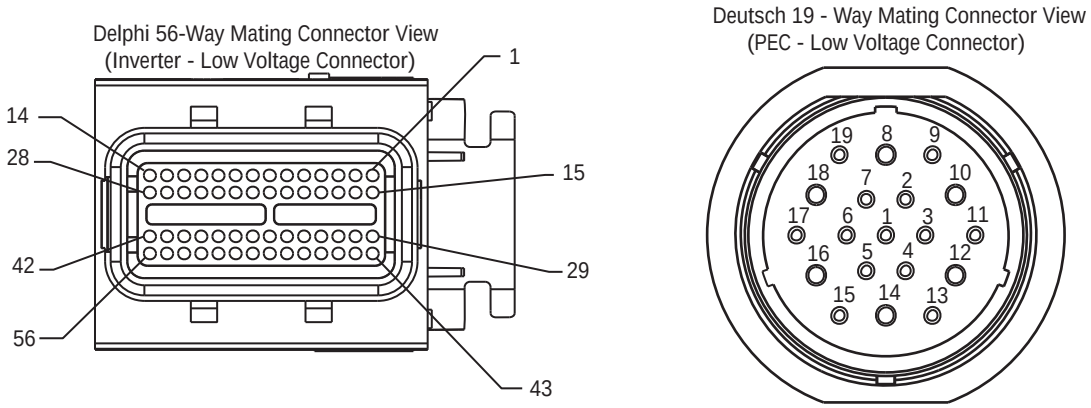

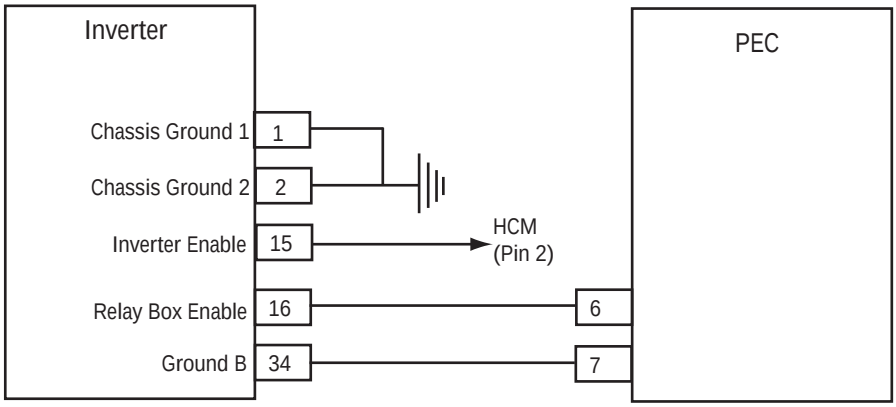

NOTE: Refer to the Eaton Hybrid Component and Connector Location page for Connector Locations

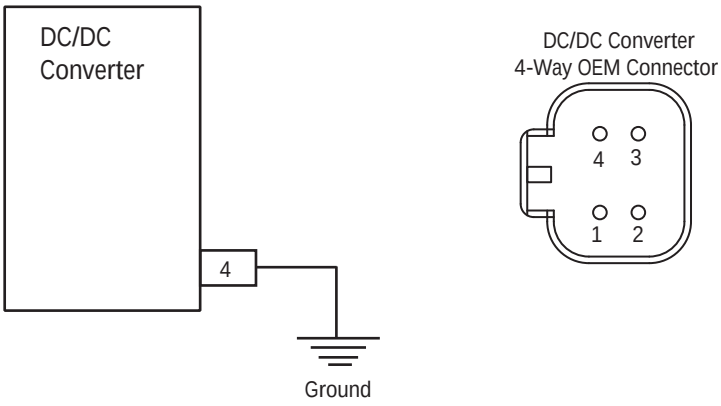

© 2015 Eaton. All rights reserved

https://truckmanualshub.com/

Hybrid Electrical Pretest

A ***Purpose:*** *Verify Inverter ground continuity.*

1. Perform the Electrical Pretest (see “Electrical Pretest” on page 25.), then continue to step 2.
2. Key off.

Warning: See “High-Voltage Service Shutdown and Power-Up Procedure” on page 4. Follow the procedures to avoid shock, burn or death from improperly handled high-voltage.

3. Disconnect the Inverter 56-Way Connector.
4. Measure resistance from Pin 1 to battery negative and then from Pin 2 to battery negative:
   - If resistance is 0–0.3 ohms from Pin 1 to battery negative and from Pin 2 to battery negative, go to **Step B.**
   - If resistance is outside of range, repair the Inverter Ground Harness, then repeat this step.

Connection	Measurement
Pin 1 to battery negative	
Pin 2 to battery negative	

B ***Purpose:*** *Verify voltage at Inverter 56-Way Connector.*

1. Connect a multimeter to the Inverter 56-Way Connector Pin 15 and Pin 1.
2. Key on.
3. Observe multimeter voltage reading:
   - If voltage is 11–13 volts, go to **Step C.**
   - If voltage is outside of range, repair the Harness from the HCM, then repeat this step.

Connection	Measurement
Pin 15 to Pin 1	

C ***Purpose:*** *Verify continuity of Inverter to PEC Ground Wire.*

1. Key off.
2. Reconnect the Inverter 56-Way Connector.
3. Disconnect the PEC 19-Way Connector.
4. Measure resistance from PEC Pin 7 to battery negative:
   - If resistance from Pin 7 to battery negative is 0–0.3 ohms, go to **Step D.**
   - If resistance is outside of range, repair the Inverter to PEC Ground Wire, then repeat this step.

Connection	Measurement
Pin 7 to battery negative	

© 2015 Eaton. All rights reserved

https://truckmanualshub.com/

D

Purpose: *Verify voltage at PEC 19-Way Connector.*

1. Connect a multimeter to the PEC 19-Way Connector Pin 6 and Pin 7.
2. Key on.
3. Observe multimeter voltage reading.
   - If voltage is 11–13 volts, and vehicle has ePTO feature on Push Button, go to **Step E.**
   - If vehicle does not have ePTO feature, test is complete. Reconnect PEC 19-Way Connector. See “Fault Code Isolation Procedure Index” on page 14.
   - If voltage is outside of range, repair the Power Supply Harness from the Inverter, then repeat this step.

Connection	Measurement
6 to 7	

E

Purpose: *Verify continuity of DC/DC Ground Wire.*

1. Key off.
2. Reconnect PEC 19-Way Connector.
3. Disconnect DC/DC Converter 4-Way Connector.
4. Measure resistance from DC/DC Converter 4-Way Connector Pin 4 to battery negative:
   - If resistance between Pin 4 and battery negative is 0–0.3 ohms, test is complete. Reconnect the 4-Way Connector. See “Fault Code Isolation Procedure Index” on page 14.
   - If resistance is outside of range, repair the Ground Harness from the DC/DC Converter to battery negative, then repeat this step.

Connection	Measurement
Pin 4 to battery negative	

© 2015 Eaton. All rights reserved

Fault Code 1 - Motor/Generator Current Sensor

J1939: SA 239 SPN 520225 FMI 0, 6

Overview

The High-Voltage Motor/Generator Assembly is connected to the Inverter Assembly through an AC High-Voltage Cable that contains 3 separate cables. During operation, the Inverter monitors the amperage in the AC cables through a current sensor, which is mounted inside the Inverter. The inductive sensor produces an output based on amperage present in the cables.

Detection

The Inverter ignition voltage is greater than 7 volts and less than 16 volts.

Conditions to Set Fault Code Active

Conditions to Set Fault:

- FMI 6 is set when Inverter detects current input from the Motor/Generator greater than 100 amps for 150 MS.
- FMI 0 is set when the Inverter detects current input from the Motor/Generator greater than 200 amps for 0.3 MS.

Fallback

When Fault Code 1 is set the following conditions occurs:

- Amber “Check Hybrid” light illuminates.
- Fault is stored in Hybrid Control Module (HCM) memory.
- Electric Motor/Generator Assist and Regeneration are disabled; however, the high-voltage relays remain powered.
- HCM continues to control the hybrid vehicle in a diesel-only mode.
- Transmission defaults start gear to 1st.

Conditions to Set Fault Code Inactive

Only Inactive faults can be cleared from the Transmission Electronic Control Unit (TECU) or HCM history using ServiceRanger. The TECU automatically clears the faults from history after 200 hours and the HCM automatically clears the faults from history after the fault has stayed Inactive for 200 hours.

Possible Causes

This fault code can be caused by any of the following:

- FMI 0, 6
  - Inverter
  - Motor/Generator
  - AC cable

© 2015 Eaton. All rights reserved

https://truckmanualshub.com/

Component Identification

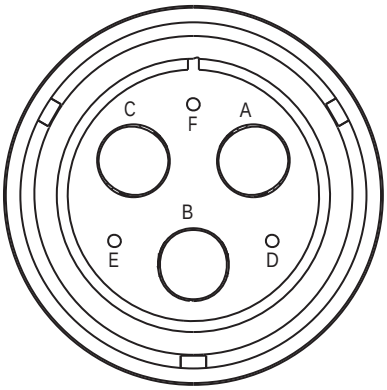

High-Voltage AC Harness Connector View
(Amphenol Connector)

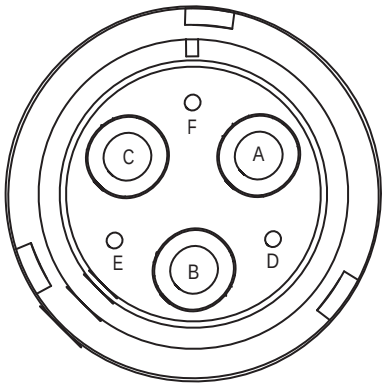

High-Voltage AC Motor/Gen Connector View
(Amphenol Connector)

NOTE: Refer to the Eaton Hybrid Component and Connector Location page for Connector Locations

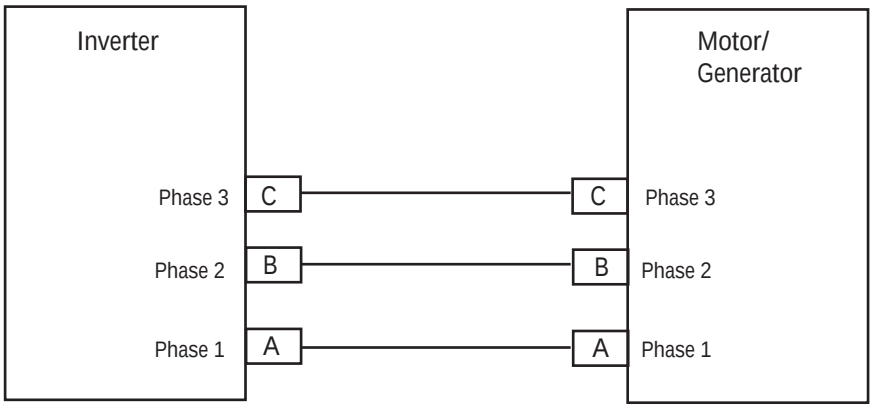

© 2015 Eaton. All rights reserved

Fault Code 1 - Motor/Generator Current Sensor Test

A ***Purpose:*** *Check for fault code status and continuity of high-voltage circuitry.*

1. Review and follow the “Warnings & Cautions” on page 1.
2. Retrieve Active fault codes and FMIs with ServiceRanger using the 9-Way Diagnostic Connector.
3. Key off.

Danger: See “High-Voltage Service Shutdown and Power-Up Procedure” on page 4. Follow the procedures to avoid shock, burn or death from improperly handled high-voltage.

4. Remove the AC Cable from the Motor/Generator and Inverter.
5. Measure resistance of each circuit in the AC High-Voltage Cable Pins A-A, B-B and C-C:
   - If resistance for each circuit is less than 1 ohm, go to **Step B.**
   - If resistance is outside of range, replace the AC High-Voltage Cable, then go to **Step V.**

Connection	Measurement
Pin A to Pin A	
Pin B to Pin B	
Pin C to Pin C	

B ***Purpose:*** *Verify continuity of high-voltage circuitry to ground.*

1. Measure resistance of each circuit to ground in the AC High-Voltage Cable:
   - If resistance between each circuit and ground is 5M ohms or greater, go to **Step C.**
   - If resistance is outside of range, replace the AC High-Voltage Cable, then go to **Step V.**

Connection	Measurement
Pin A to ground	
Pin B to ground	
Pin C to ground	

© 2015 Eaton. All rights reserved

https://truckmanualshub.com/

C

Purpose: *Verify continuity of high-voltage circuitry.*

1. Key off.
2. Measure the resistance between the following AC High-Voltage Cable Pins A-B, B-C and C-A:
   - If resistance of each phase is 5M or greater, go to **Step D.**
   - If resistance is outside of range, replace the AC High-Voltage Cable, then go to **Step V.**

Connection	Measurement
Pin A to Pin B	
Pin B to Pin C	
Pin C to Pin A	

D

Purpose: *Verify continuity of Motor/Generator phases.*

1. Measure resistance of each Motor/Generator phase at the following Pins: A-B, B-C and C-A:
   - If resistance of each phase is less than 10 ohms, replace the **Inverter**, then go to **Step V.**
   - If resistance is outside of range, replace the **Motor/Generator**, then go to **Step V.**

Connection	Measurement
Pin A to Pin B	
Pin B to Pin C	
Pin C to Pin A	

© 2015 Eaton. All rights reserved

V ***Purpose:*** *Verify repair.*

1. Key off.
2. Reconnect all connectors and the negative battery cable.
3. Key on.
4. Clear codes, see “Clear Inactive Faults” on page 13.
5. Drive the vehicle and attempt to reset the code.
6. Check for codes, see “View Active and Inactive Faults” on page 13.
   - If no codes, test is complete.
   - If Fault Code 1 appears, find error in testing, go to **Step A.**
   - If a code other than 1 appears, see “Fault Code Isolation Procedure Index” on page 14.

© 2015 Eaton. All rights reserved

https://truckmanualshub.com/

Fault Code 2 - Motor/Generator Temperature Sensor

J1939: SA 239 SPN 520226 FMI 3

Overview

The Motor/Generator Temperature Sensor is a thermistor located inside the Motor/Generator that changes in value based on the temperature. The Inverter supplies a 5-volt reference voltage to the sensor and measures the volt drop in the circuit. When the Motor/Generator temperature is warm, the sensor resistance is low and the Inverter detects low-voltage (0.2 volts equals 536 °F [280 °C]). When the Motor/Generator is cold the sensor resistance is high and the Inverter detects high voltage (4.1 volts equals or 32 °F [0 °C]).

Detection

The following preconditions must be met before the system detects the fault:

- Inverter ignition voltage is greater than 7 volts and less than 16 volts.

Conditions to Set Fault Code Active

The following conditions must be met to set the fault code Active:

- FMI 3 is set when the sensor voltage is greater than 4.1 volts for 10 seconds, while the Inverter temperature is over 35 °C or 95 °F, or if the sensor output voltage is less than 0.2 volts for 10 seconds.

Fallback

When Fault Code 2 is set the following conditions occur:

- Amber “Check Hybrid” light illuminates.
- Fault is stored in Hybrid Control Module (HCM) memory.
- High-Voltage Motor/Generator Assist is available, but at a reduced amount.

Conditions to Set Fault Code Inactive

Only Inactive faults can be cleared from the Transmission Electronic Control Unit (TECU) or HCM history using ServiceRanger. The TECU automatically clears the faults from history after 200 hours and the HCM automatically clears the faults from history after the fault has been Inactive for 200 hours.

Possible Causes

This fault code can be caused by any of the following:

- FMI 3
  - Motor/Generator
  - Short/open Temperature Sensor wires between the Motor/Generator and the Inverter
  - Inverter

Additional Tools

- Basic hand tools
- ASTM Class 0 electrical insulating rubber gloves with leather protectors J48603
- Lockout bracket J48506
- Lockout tags
- Eaton® Test Adapter Kit J43318
- Digital Volt/Ohm Meter J46708
- ServiceRanger

© 2015 Eaton. All rights reserved

Component Identification

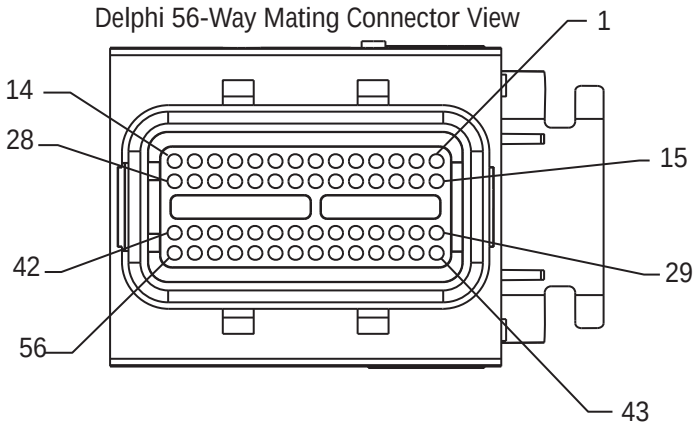

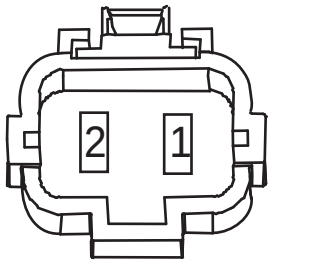

NOTE: Refer to the Eaton Hybrid Component and Connector Location page for Connector Locations

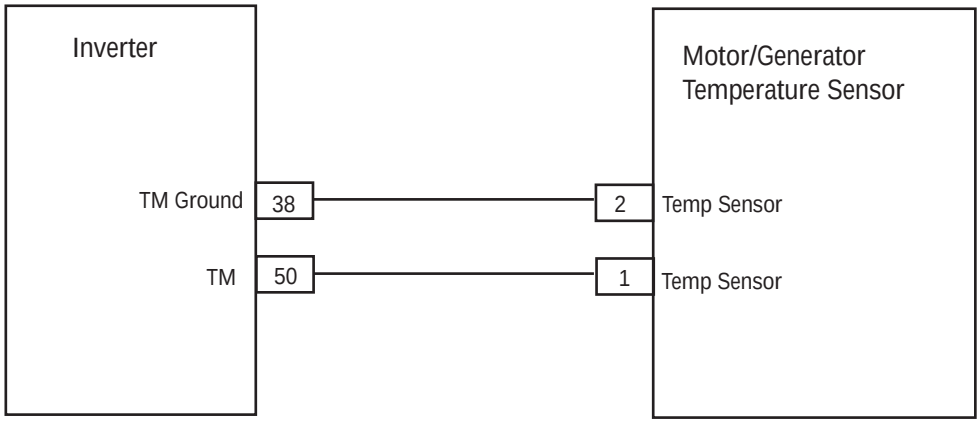

© 2015 Eaton. All rights reserved

https://truckmanualshub.com/

Fault Code 2 - Motor/Generator Temperature Sensor Test

A ***Purpose:*** *Check for fault code status and continuity of Motor/Generator Temperature Sensor circuit*

1. Review and follow the "Warnings & Cautions" on page 1.
2. Retrieve Active fault codes and FMIs with ServiceRanger using the 9-Way Diagnostic Connector.
3. Key off.
4. Disconnect the Temperature Sensor Connector at the Motor/Generator.

Warning: See "High-Voltage Service Shutdown and Power-Up Procedure" on page 4. Follow the procedures to avoid shock, burn or death from improperly handled high-voltage.

5. Measure resistance at the Motor/Generator 2-Way Temperature Sensor Connector from Pin A to Pin B:
   - If resistance is 0.8K ohms to 301.7K ohms, go to **Step B.**
   - If resistance is outside of range, replace the **Motor/Generator**, then go to **Step V.**

Connection	Measurement
Pin A to Pin B	

B ***Purpose:*** *Verify continuity of Inverter and Motor/Generator Temperature Sensor circuit.*

1. Key off.
2. Disconnect the Inverter 56-Way Connector.
3. Reconnect the Motor/Generator 2-Way Temperature Sensor Connector.
4. Measure resistance at the following:
   - Inverter 56-Way Connector Pin 50 to Pin 38
   - Inverter 56-Way Connector Pin 50 to ground

Note: Gently flex the Inverter 56-Way Harness near the Connector while monitoring the resistance values.

- If resistance is 0.8K–301.7K ohms between Pin 50 and Pin 38 and resistance between Pin 50 and ground is 10K ohms or greater, replace the **Inverter**, then go to **Step V.**
- If resistance is outside of range, repair the open or short to ground in the harness between the Inverter 56-Way Connector and the Motor/Generator 2-Way Connector, then go to **Step V.**

Connection	Measurement
Pin 50 to Pin 38	
Pin 50 to ground	

© 2015 Eaton. All rights reserved

V ***Purpose:*** *Verify repair.*

1. Key off.
2. Key on.
3. Reconnect all connectors and the negative battery cable.
4. Clear codes, see “Fault Code Retrieval and Clearing” on page 13.
5. Drive vehicle and attempt to reset the code.
6. Check for codes, see “View Active and Inactive Faults” on page 13.
   - If no codes, test is complete.
   - If Fault Code 2 appears, find error in testing, go to **Step A.**
   - If a code other than 2 appears, see “Fault Code Isolation Procedure Index” on page 14.

© 2015 Eaton. All rights reserved

https://truckmanualshub.com/

Fault Code 3 - Motor/Generator Temperature

J1939: SA 239 SPN 520227 FMI 0

Overview

The Motor/Generator temperature is measured through a thermistor sensor, which is located internal to the unit. The sensor changes value based on the temperature. The Inverter supplies a 5-volt reference voltage to the sensor and measures the volt drop in the circuit.

When the Motor/Generator temperature is warm the sensor resistance is low and the Inverter detects a low-voltage (0.2 volts equals 536 °F [280 °C]). When the Motor/Generator is cold, the sensor resistance is high and the Inverter detects a high voltage (4.1 volts equals 32 °F [0 °C]).

Detection

Inverter ignition voltage is greater than 7 volts and less than 16 volts.

Conditions to Set Fault Code Active

When the Motor/Generator temperature is warm the sensor resistance is low and the Inverter detects a low-voltage (0.2 volts equals 536 °F [280 °C]). When the Motor/Generator is cold the sensor resistance is high and the Inverter detects a high-voltage (4.1 volts equals 32 °F [0 °C]).

Fallback

When Fault Code 3 is set the following conditions occur:

- Amber “Check Hybrid” light illuminates.
- Fault is stored in Hybrid Control Module (HCM) memory.
- Electric Motor/Generator Assist and Regeneration are disabled; however, high-voltage relays remain powered.
- HCM continues to control the hybrid vehicle in a diesel-only mode.
- Transmission defaults start gear to 1st.

Conditions to Set Fault Code Inactive

Only Inactive faults can be cleared from the Transmission Electronic Control Unit (TECU) or HCM history using ServiceRanger. The TECU automatically clears the faults from history after 200 hours and the HCM automatically clears the faults from history after they have been Inactive for 200 hours.

Possible Causes

This fault code can be caused by any of the following:

- FMI 0 (FMI 0 is set when the temperature sensor value is greater than 365 °F [185 °C] for 1 second):
  - Motor/Generator
  - Inverter
  - Liquid cooling system (low coolant, no coolant flow, Coolant Pump, Radiator, Radiator Fan, reservoir)

Additional Tools

- Basic hand tools
- ASTM Class 0 electrical insulating rubber gloves with leather protectors J48603
- Lockout bracket J48506
- Lockout tags
- Eaton® Test Adapter Kit J43318
- Digital Volt/Ohm Meter J46708
- ServiceRanger

© 2015 Eaton. All rights reserved

Component Identification

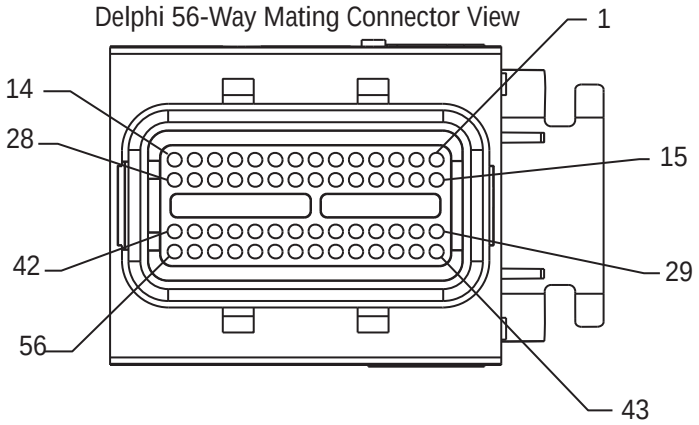

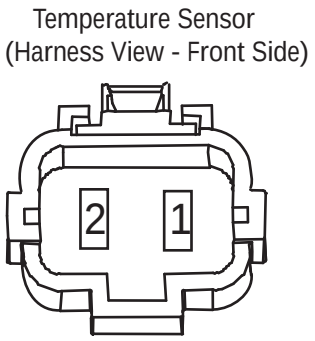

NOTE: Refer to the Eaton Hybrid Component and Connector Location page for Connector Locations

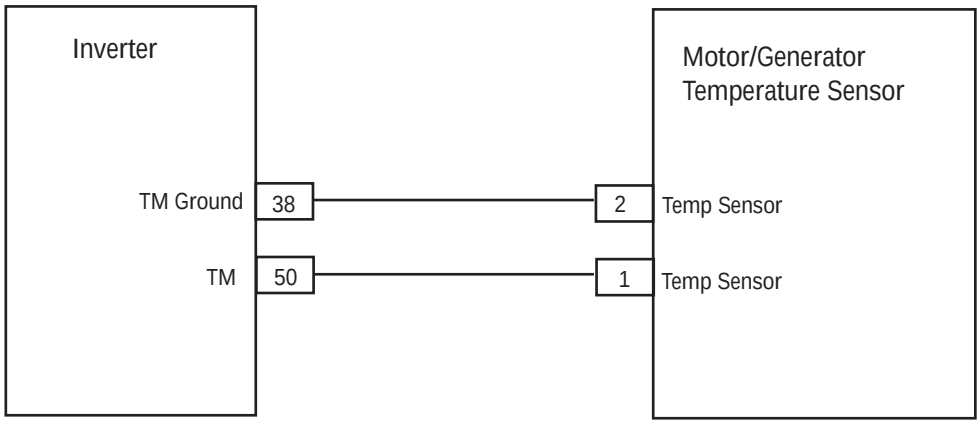

© 2015 Eaton. All rights reserved

https://truckmanualshub.com/

Fault Code 3 - Motor/Generator Temperature Test

A ***Purpose:*** *Check for Active or Inactive fault code status.*

1. Review and follow the “Warnings & Cautions” on page 1.
2. Retrieve Active fault codes and FMIs with ServiceRanger using the 9-Way Diagnostic Connector.

Warning: See “High-Voltage Service Shutdown and Power-Up Procedure” on page 4. Follow the procedures to avoid shock, burn or death from improperly handled high-voltage.

3. Key on.
4. Find initial temperature by selecting the “Data Monitor” option and view PID 113 “Motor/Generator Temperature” in the “Power Electronics” list.
5. View PID 113 again after 20 minutes:
   - If PID 113 “Motor/Generator Temperature” dropped from the first reading, go to **Step B.**
   - If PID 113 “Motor/Generator Temperature” remained the same, go to **Step H.**

Time	Temperature
Initial check	
20 minute	

B ***Purpose:*** *Verify level of hybrid system coolant.*

1. Key off.
2. Observe the coolant level after the system has cooled down to ensure if is filled to the proper level:
   - If coolant is within the recommended limits, go to **Step C.**
   - If coolant is below the recommended limits, refer to the OEM for coolant type and fill procedures. Check for source of coolant leak. When refilling the system it should be pressurized or vacuum bleed of air to ensure the coolant flows properly during normal operation.

C ***Purpose:*** *Verify integrity of hybrid cooling system components.*

1. Key off.
2. Visually inspect the hybrid liquid cooling system radiator for debris, obstruction to airflow, or sharp bends in the coolant lines:
   - If the radiator is free of debris and the coolant lines are not bent sharply, go to **Step D.**
   - If the radiator has debris, the air flow is obstructed, or the coolant lines are bent sharply, repair the concern, then go to **Step V.**

© 2015 Eaton. All rights reserved

D

Purpose: *Verify operation of hybrid Coolant Pump.*

1. Key on.
2. Connect ServiceRanger to the 9-Way Connector in the cab.
3. Select the Advanced Product Functions option and select the “Cooling Pump” option.
4. Enable the “Cooling Pump” option:
   - If the Coolant Pump turns on, go to **Step E.**
   - If the Coolant Pump does not turn on, go to **Step F.**

E

Purpose: *Verify operation of hybrid Heat Exchanger Fan.*

1. Select the Advanced Product Functions option and select the “Heat Exchanger Fan” option.
2. Enable the Heat Exchanger Fan option:
   - If the Heat Exchanger Fan turns on, the system needs to be purged of air, allowing the coolant to flow. Bleed the air by using a coolant system pressurizing tool or a vacuum tool, then go to **Step V.**
   - If the Heat Exchanger Fan does not turn on, go to **Step G.**

F

Purpose: *Verify voltage at hybrid Coolant Pump.*

1. Key on.
2. Disconnect the Coolant Pump 2-Way Connector.
3. Select the “Advanced Products Function” option and select “Cooling Pump.”
4. Enable the Cooling Pump option.
5. Measure voltage at the 2-Way Connector from Pin A to Pin B:
   - If voltage between Pin A and Pin B is ±0.2 volts of battery voltage, refer to OEM for Coolant Pump concern.
   - If voltage between Pin A and Pin B is outside of range, refer to OEM for repair procedures on Cooling Pump Power Harness or damaged fuse.

Connection	Measurement
Pin A to Pin B	

© 2015 Eaton. All rights reserved

https://truckmanualshub.com/

G

Purpose: *Verify voltage at hybrid Heat Exchanger Fan.*

1. Key on.
2. Disconnect the Heat Exchanger Fan 2-way connector.
3. Select the “Advanced Products Function” option and select the “Heat Exchanger Fan.”
4. Enable the Heat Exchanger Fan option.
5. Measure voltage at the 2-Way Connector from Pin A to Pin B:
   - If voltage between Pin A and Pin B is ±0.2 volts of battery voltage, refer to OEM for Heat Exchanger Fan concern.
   - If voltage between Pin A and Pin B is outside of range, refer to OEM for repair procedures on Heat Exchanger Fan Power Harness or damaged fuse.

Connection	Measurement
Pin A to Pin B	

H

Purpose: *Verify continuity of Inverter circuitry.*

1. Key off.
2. Disconnect the Inverter 56-Way Connector.
3. Measure resistance between Pin 38 and Pin 50, and Pin 50 to ground of the Inverter 56-Way Connector.
   - If resistance is 0.8K–301.7K ohms between Pin 50 and Pin 38 and resistance between Pin 50 and ground is 10K ohms or greater, replace the **Inverter**, then go to **Step V.**
   - If resistance is outside the range, go to **Step I.**

Connection	Measurement
Pin 50 to Pin 38	
Pin 50 to ground	

© 2015 Eaton. All rights reserved

I

Purpose: *Verify continuity of Temperature Sensor circuit.*

1. Key off.
2. Disconnect the Motor/Generator Temperature Sensor 2-Way Connector located on the right side of the Motor/Generator.
3. Measure resistance between the 2-Way Temperature Sensor Connector from Pin A to Pin B:
   - If resistance is 0.8K–301.7K ohms, repair the shorted HCM System Harness between the Inverter 56-Way Connector and Motor/Generator 2-Way Connector.
   - If resistance is outside the range, replace the **Motor/Generator**, then go to **Step V.**

Connection	Measurement
Pin A to Pin B	

V

Purpose: *Verify repair.*

1. Key off.
2. Reconnect all connectors and negative battery cable.
3. Key on.
4. Clear codes, see “Clear Inactive Faults” on page 13.
5. Drive the vehicle and attempt to reset the code.
6. Check for codes, see “View Active and Inactive Faults” on page 13.
   - If no codes, test is complete.
   - If Fault Code 3 appears, find error in testing, go to **Step A.**
   - If a code other than 3 appears, see “Fault Code Isolation Procedure Index” on page 14.

© 2015 Eaton. All rights reserved

https://truckmanualshub.com/

Fault Code 4 - Motor/Generator Rotation Speed Sensor

J1939: SA 239 SPN 520228 FMI 0, 2, 22–27

Overview

The Motor/Generator Rotation Speed Sensor is mounted to the back of the Motor/Generator around the Input Shaft. The sensor (two-piece design) is a rotor mounted to the Input Shaft and a Sensing Ring mounted to the motor housing. The Sensing Ring is supplied with low-voltage during operation. The rotor turns inducing a voltage fluctuation into the Sensing Ring, which is then converted into a digital signal for Motor/Generator RPM. Voltage output and frequency is low at idle and increases with RPM.

Detection

Fault is detected when:

- Inverter ignition voltage is greater than 7 volts and less than 16 volts.
- FMI 2 does not set if there is an Active Transmission Input Shaft Speed Sensor fault.

Conditions to Set Fault Code Active

The following conditions must be met to set the fault code Active:

- FMI 0 is set when the Motor/Generator speed exceeds the normal allowable range.
- FMI 2 is set when the Motor/Generator speed is different than Transmission Input Shaft Speed by more than 100 RPM for at least 10 seconds.
- FMI 22, 24, 25 are set when the combination of analog-to-digital converter signals are a mismatch.
- FMI 27 is set when the Inverter detects an error during the initial check.
- FMI 23 is set when there is an analog-to-digital converter output error signal for 100 MS.
- FMI 26 is set when the rotation sensor speed is greater than 6000 min-1 for 10 MS.

Fallback

When Fault Code 4 is set the following conditions occur:

- Amber “Check Hybrid” light illuminates.
- Fault is stored in Hybrid Control Module (HCM) memory.
- Electric Motor/Generator Assist and Regeneration are disabled; however, the high-voltage relays remain powered.
- HCM continues to control the hybrid vehicle in a diesel-only mode.
- Transmission defaults start gear to 1st.

Conditions to Set Fault Code Inactive

Only Inactive faults can be cleared from the Transmission Electronic Control Unit (TECU) or HCM history using ServiceRanger. The TECU automatically clears the faults from history after 200 hours. The HCM automatically clears the faults from history after the fault has been Inactive for 200 hours.

Possible Causes

This fault code can be caused by any of the following:

- FMI 0
  - Long extended grades may require intermittent use of the service brakes to slow the vehicle
- FMI 22, 24, 25, 27
  - Inverter
- FMI 2, 23, 26
  - Inverter
  - Motor/generator
  - Resolver Harness between the Motor/Generator and Inverter

Additional Tools

- Basic hand tools
- ASTM Class 0 electrical insulating rubber gloves with leather protectors J48603
- Lockout bracket J48506
- Lockout tags
- Eaton® Test Adapter Kit J43318
- Digital Volt/Ohm Meter J46708
- ServiceRanger

© 2015 Eaton. All rights reserved

Component Identification

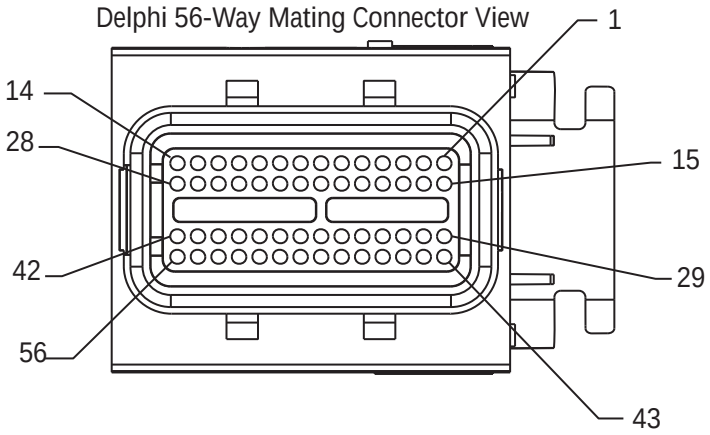

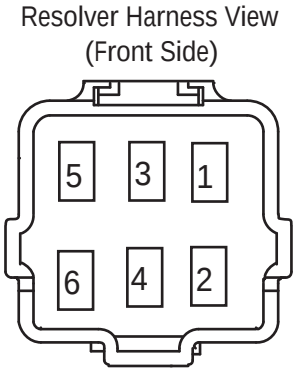

NOTE: Refer to the Eaton Hybrid Component and Connector Location page for Connector Locations

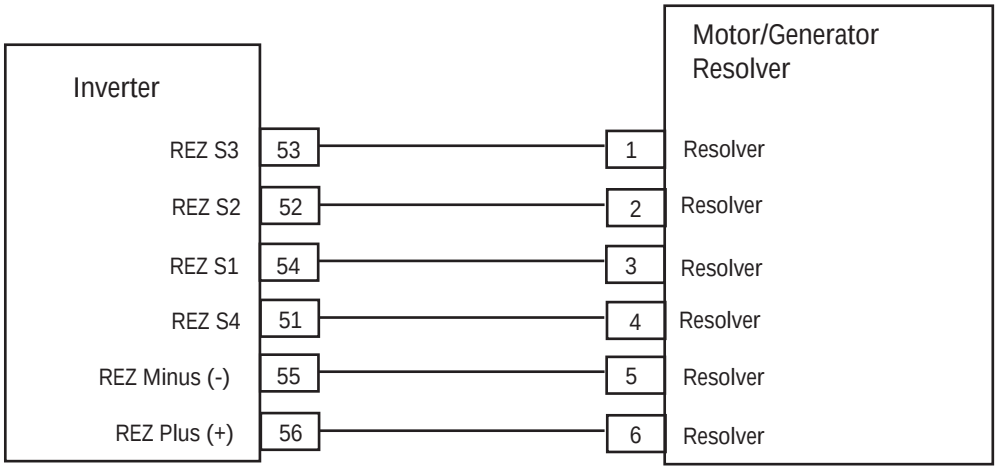

© 2015 Eaton. All rights reserved

https://truckmanualshub.com/

Fault Code 4 - Motor/Generator Rotation Speed Sensor Test

A

Purpose: *Check for Active or Inactive fault code status.*

1. Review and follow the "Warnings & Cautions" on page 1.
2. Retrieve Active fault codes and FMIs with ServiceRanger using the 9-Way Diagnostic Connector.
3. Key off.

Warning: See "High-Voltage Service Shutdown and Power-Up Procedure" on page 4. Follow the procedures to avoid shock, burn or death from improperly handled high-voltage.

4. Which FMIs are present?
   - If FMI 22, 24, 25, or 27 are listed, replace the **Inverter**, then go to **Step V.**
   - If FMI 2, 23, or 26 are listed, go to **Step B.**
   - If FMI 0 is listed, Using ServiceRanger select the Advanced Product Functions and download the TECU and HCM snapshots then contact Eaton® at 1-800-826-HELP (4357).

B

Purpose: *Verify continuity of Resolver and Inverter components.*

1. Disconnect the 56-Way Low-Voltage Connector at the Inverter.
2. Measure Resolver resistance at the 56-Way Harness Connector between the following pins:
   - Pin 55 to Pin 56
   - Pin 53 to Pin 54
   - Pin 51 to Pin 52

Note: Gently flex the Inverter 56-Way Connector Harness near the Connector while monitoring the resistance values.

Resistance ranges for the pins are:

- Pins 55 to Pin 56: 10.5–8.6 ohms
- Pins 53 to Pin 54: 34–28 ohms
- Pins 51 to Pin 52: 27–23 ohms

- If the above resistances are found, and FMI 2 is Active, contact Eaton at 1-800-826-HELP (4357).
- If the above resistances are found, and FMI 26 or 23 are Active, replace the **Inverter**, then go to **Step V.**
- If resistance is outside of range for any of the readings, go to **Step C.**

Connection	Measurement
Pin 55 to Pin 56	
Pin 53 to Pin 54	
Pin 51 to Pin 52	

© 2015 Eaton. All rights reserved

C

Purpose: *Verify continuity of Resolver Harness circuitry.*

1. Disconnect the 6-Way Motor/Generator Resolver Connector.
2. Measure the Resolver resistance at the 6-Way Harness Connector between the following pins:
   - Pin 5 to Pin 6
   - Pin 1 to Pin 3
   - Pin 2 to Pin 4

   Note: An auto-ranging digital Volt/Ohm Meter must be used.

   Resistance ranges for the pins are:
   - Pins 5 to Pin 6: 10.5–8.6 ohms
   - Pins 1 to Pin 3: 34–28 ohms
   - Pins 2 to Pin 4: 27–23 ohms

   - If the above resistances are found, repair the open harness between the Inverter 56-Way Connector and the Motor/Generator 6-Way Resolver Connector, then go to **Step V.**
   - If resistance is outside of range, replace the **Motor/Generator**, then go to **Step V.**

Connection	Measurement
Pin 5 to Pin 6	
Pin 1 to Pin 3	
Pin 2 to Pin 4	

V

Purpose: *Verify repair.*

1. Key off.
2. Reconnect all connectors and the negative battery cable.
3. Key on.
4. Clear codes, see “Clear Inactive Faults” on page 13.
5. Drive the vehicle and attempt to recreate the code.
6. Check for codes, see “View Active and Inactive Faults” on page 13.
   - If no codes, test is complete.
   - If Fault Code 4 appears, contact Eaton at 1-800-826-HELP (4357).
   - If a code other than 4 appears, see “Fault Code Isolation Procedure Index” on page 14.

© 2015 Eaton. All rights reserved

https://truckmanualshub.com/

Fault Code 5 - Motor/Generator AC Cable

J1939: SA 239 SPN 520229 FMI 22–29

Overview

The Motor/Generator AC Cables are connected from the Motor/Generator to the Inverter. These cables carry up to 500 volts AC 3 phase when the vehicle is in operation.

Detection

The following preconditions must be met before the system detects the fault:

- Inverters ignition voltage is greater than 7 volts and less than 16 volts.
- FMI 25–27 require the Motor/Generator RPM to be greater than 500 RPM.
- FMI 28 requires the Motor/Generator RPM to be less than 500 RPM.
- FMI 29 requires the Motor/Generator RPM to be less than 50 RPM.

Conditions to Set Fault Code Active

The following conditions must be met to set the fault code Active:

- FMI 22, 23, 24 are set when the 2-phase motor current is more than 360 amps for 0.9 MS.
- FMI 25, 26, 27 are set when the Inverter detects a single open wire and motor current is less than 8 amps for 200 MS at speeds greater than or equal to 500 RPM and current command from the Inverter is greater than 20 amps.
- FMI 28 is set when Motor/Generator current is less than 8 amps for 200 MS at speed less than 500 RPM and current command is greater than 20 amps.
- FMI 29 is set during initialization. The Inverter determines if the AC Cable is connected between the motor and Inverter by sending out 20 amps for 200 MS and checking the feedback.

Fallback

When Fault Code 5 is set the following conditions occur:

- Red “Stop Hybrid” light illuminates.
- Fault is stored in Hybrid Control Module (HCM) memory.
- Inverter shuts high-voltage system off.
- HCM continues to control the hybrid vehicle in a diesel-only mode.
- If FMI 28, or 29 is present at power up, the vehicle does not crank.

Conditions to Set Fault Code Inactive

Only Inactive faults can be cleared from the Transmission Electronic Control Unit (TECU) or HCM history using ServiceRanger. The TECU automatically clears the faults from history after 200 hours. The HCM automatically clears the faults from history after the fault code has been Inactive for 200 hours.

Possible Causes

This fault code can be caused by any of the following:

- FMI 22, 23, 24
  - Inverter
  - Motor/generator
  - AC cable
- FMI 25, 26, 27, 28, 29
  - Motor/generator
  - AC cable

Additional Tools

- Basic hand tools
- ASTM Class 0 electrical insulating rubber gloves with leather protectors J48603
- Lockout bracket J48506
- Lockout tags
- Eaton® Test Adapter Kit J43318
- Digital Volt/Ohm Meter J46708
- ServiceRanger

© 2015 Eaton. All rights reserved

Component Identification

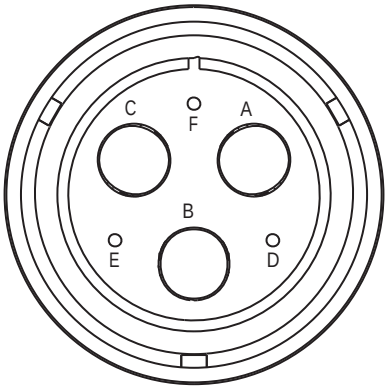

High-Voltage AC Harness Connector View
(Amphenol Connector)

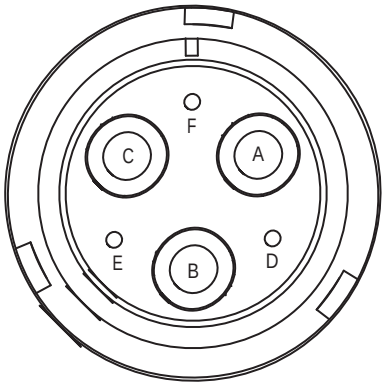

High-Voltage AC Motor/Gen Connector View
(Amphenol Connector)

NOTE: Refer to the Eaton Hybrid Component and Connector Location page for Connector Locations

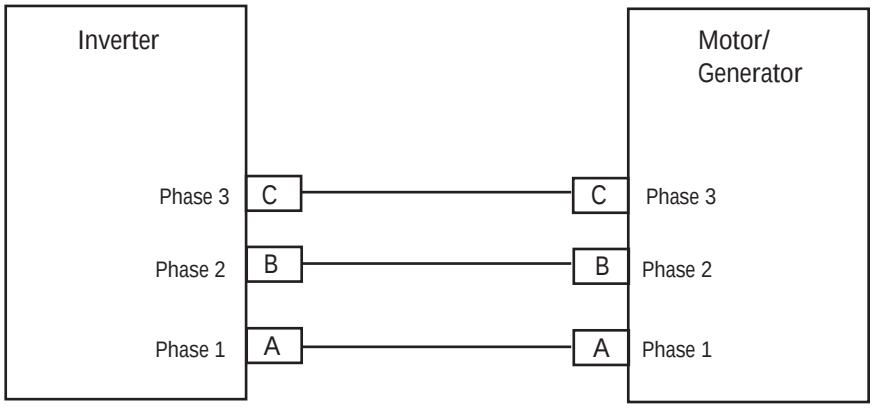

© 2015 Eaton. All rights reserved

https://truckmanualshub.com/

Fault Code 5 - Motor/Generator AC Cable Test

A

Purpose: *Check for Active or Inactive fault code status.*

1. Review and follow the "Warnings & Cautions" on page 1.
2. Retrieve Active fault codes and FMIs with ServiceRanger using the 9-Way Diagnostic Connector.
3. Key off.

Warning: See "High-Voltage Service Shutdown and Power-Up Procedure" on page 4. Follow the procedures to avoid shock, burn or death from improperly handled high-voltage.

4. Which faults are present?
   - If Fault Code 5 FMI 22, 23, or 24 are Active, go to **Step B.**
   - If Fault Code 5 FMI 25, 26, 27, 28, or 29 are Active, go to **Step C.**

B

Purpose: *Verify continuity of high-voltage cable.*

1. Key off.
2. Remove the AC high-voltage cable at the Motor/Generator and Inverter.
3. Measure the resistance between the following AC cable pins:
   - Pin A to Pin B
   - Pin B to Pin C
   - Pin C to Pin A
   - If resistance between each phase is 5M ohms or greater, replace the **Inverter**, then go to **Step V.**
   - If resistance is outside of range, replace the AC high-voltage cable, then go to **Step V.**

Connection	Measurement
Pin A to Pin B	
Pin B to Pin C	
Pin C to Pin A	

© 2015 Eaton. All rights reserved

C

Purpose: *Verify continuity of high-voltage cable.*

1. Disconnect the AC high-voltage cable from the Inverter and Motor/Generator.
2. Measure the resistance of the AC High-Voltage Cable from the Inverter Connector to the Motor/Generator Connector on each of the following pins:
   - Pin A to Pin A
   - Pin B to Pin B
   - Pin C to Pin C

   Note: An auto-ranging digital Volt/Ohm Meter must be used.

   - If the resistance of each circuit is 1 ohm or less, go to **Step D.**
   - If resistance is outside of range, replace the AC High-Voltage Cable, then go to **Step V.**

Connection	Measurement
Pin A to Pin A	
Pin B to Pin B	
Pin C to Pin C	

D

Purpose: *Verify continuity of high-voltage cable.*

1. Measure the resistance of each Motor/Generator phase at the following pins:
   - Pin A to Pin B
   - Pin B to Pin C
   - Pin C to Pin A

   Note: An auto-ranging digital Volt/Ohm Meter must be used.

   - If the resistance of each phase is 10 ohms or less, replace the **Inverter**, then go to **Step V.**
   - If resistance is outside of range, replace the **Motor/Generator**, then go to **Step V.**

Connection	Measurement
Pin A to Pin B	
Pin B to Pin C	
Pin C to Pin A	

© 2015 Eaton. All rights reserved

https://truckmanualshub.com/

V ***Purpose:*** *Verify repair.*

1. Key off.
2. Reconnect all connectors and the negative battery cable.
3. Key on.
4. Clear codes, see “Clear Inactive Faults” on page 13.
5. Drive the vehicle and attempt to reset the code.
6. Check for codes, see “View Active and Inactive Faults” on page 13.
   - If no codes, test is complete.
   - If Fault Code 5 appears, find error in testing, go to **Step A.**
   - If a code other than 5 appears, see “Fault Code Isolation Procedure Index” on page 14.

© 2015 Eaton. All rights reserved

https://truckmanualshub.com/

Fault Code 6 - No HCM Operation

J1939: SA239 SPN 629 FMI 12, 14

Overview

The Hybrid Control Module (HCM) is mounted to the transmission and it contains all of the software to control both the hybrid power electronics as well as the transmission operation.

Detection

The following preconditions must be met before the system detects the fault:

- HCM ignition voltage is greater than 7 volts and less than 16 volts.

Conditions to Set Fault Code Active

The following conditions must be met to set the fault code Active:

- FMI 12 is set at key on if the HCM detects an internal failure.
- FMI 14 is set when HCM can not complete write of EEPROM during shut down.

Fallback

When Fault Code 6 is set the following conditions occur:

- Amber “Check Hybrid” light illuminates if the HCM sets the fault after power up.
- If the fault occurs at power up the vehicle may not crank.

Conditions to Set Fault Code Inactive

Only Inactive faults can be cleared from the Transmission Electronic Control Unit (TECU) or HCM history using ServiceRanger. The TECU automatically clears the faults from history after 200 hours. The HCM automatically clears the faults from history after the fault has been Inactive for 200 hours.

Possible Causes

This fault code can be caused by any of the following:

- FMI 12, 14: HCM

Additional Tools

- Basic hand tools
- ServiceRanger

© 2015 Eaton. All rights reserved

https://truckmanualshub.com/

Component Identification

Note: No Schematic for this code.

Note: For component location refer to the OEM service literature.

© 2015 Eaton. All rights reserved

Fault Code 6 - No HCM Operation Test

A ***Purpose:*** *Check for Active and Inactive fault code status.*

1. Retrieve Active fault codes and FMIs with ServiceRanger using the 9-Way Diagnostic Connector:
   - If Fault Code 6 is Active, replace the **Hybrid Control Module (HCM)**.
   - If Fault Code 6 is Inactive, test is complete.

© 2015 Eaton. All rights reserved

https://truckmanualshub.com/

Fault Code 7 - Improper HCM Configuration

J1939: SA 239 SPN 629 FMI 13

Overview

The Hybrid Control Module (HCM) is mounted to the transmission and contains all of the software to control both the hybrid power electronics as well as the transmission operation.

Detection

The following preconditions must be met before the system detects the fault:

- HCM ignition voltage is greater than 7 volts and less than 16 volts.

Conditions to Set Fault Code Active

The following conditions must be met to set the fault code Active:

- FMI 13 is set at key on if the HCM data is not read from memory within 1 second.

Fallback

When Fault Code 7 is set the following conditions occur:

- Amber “Check Hybrid” light illuminates.
- Fault is stored in HCM memory.
- If this fault occurs at power up, the vehicle does not crank.

Only Inactive faults can be cleared from the Transmission Electronic Control Unit (TECU) or HCM history using ServiceRanger. The TECU automatically clears faults from history after 200 hours. The HCM automatically clears faults from history after the fault has been Inactive for 200 hours.

Possible Causes

This fault code can be caused by any of the following:

- FMI 13: Improper ECU configuration software

Additional Tools

- Basic hand tools
- ServiceRanger

© 2015 Eaton. All rights reserved

https://truckmanualshub.com/

Component Identification

Note: No Schematic for this code.

Note: For component location refer OEM service literature.

© 2015 Eaton. All rights reserved

https://truckmanualshub.com/

Fault Code 7 - Improper HCM Configuration

A ***Purpose:*** *Check for Active or Inactive fault code status.*

1. Retrieve Active fault codes and FMIs with ServiceRanger using the 9-Way Diagnostic Connector.
2. Turn ignition off for 2 seconds.
3. Key on:
   - If Fault Code 7 is Active, replace the **Hybrid Control Module (HCM)**.
   - If Fault Code 7 is Inactive, test is complete.

© 2015 Eaton. All rights reserved

Fault Code 8 - Loss of Switched Ignition Power (HCM)

J1939: SA 239 SPN 158 FMI 4

Overview

The Hybrid Control Module (HCM) is mounted to the transmission and contains all of the software to control both the hybrid power electronics as well as the transmission operation. The HCM ignition power is a fused, single 12-volt feed that runs through the HCM 38-Way Vehicle Connector.

Detection

The following preconditions must be met before the system detects the fault:

- Output Shaft speed must be greater than 0 RPM.

Conditions to Set Fault Code Active

The following conditions must be met to set the fault code Active:

- FMI 4 is set when the HCM loses ignition power during operation for 2 seconds or greater.

Note: When troubleshooting an Inactive code refer to the "Product Diagnostic Mode (PDM)" on page 19.

Fallback

When Fault Code 8 is set the following conditions occurs:

- Amber "Check Hybrid" light illuminates only if the vehicle is moving.
- Fault is stored in HCM memory.
- Red "Service" light illuminates and an "F" flashes in the gear display, if the fault occurs prior to power up.
  - Fault is stored in Transmission Electronic Control Unit (TECU) memory due to lack of communication with the HCM.
- If fault occurs while the vehicle is moving, the transmission remains in place and the clutch opens when the vehicle comes to an idle. The clutch closes and the vehicle will operate in 1st and reverse from stop.
- If this fault occurs at power up, the vehicle does not crank.

Conditions to Set Fault Code Inactive

Only Inactive faults can be cleared from the TECU or HCM history using ServiceRanger. The TECU automatically clears the faults from history after 200 hours. The HCM automatically clears a fault from history after that fault has been Inactive for 200 hours.

Possible Causes

This fault code can be caused by any of the following:

- FMI 4
  - Ignition Power Supply to HCM
  - HCM

Additional Tools

- Basic hand tools
- Eaton® Test Adapter Kit J43318
- Digital Volt/Ohm Meter J46708
- ServiceRanger

© 2015 Eaton. All rights reserved

https://truckmanualshub.com/

Component Identification

NOTE: Refer to the Eaton Hybrid Component and Connector Location page for Connector Locations

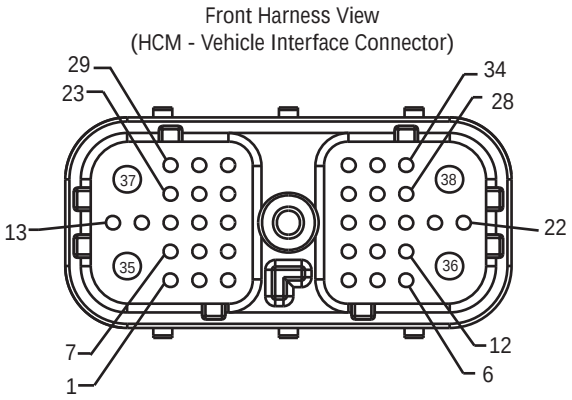

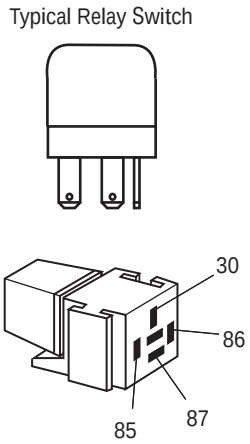

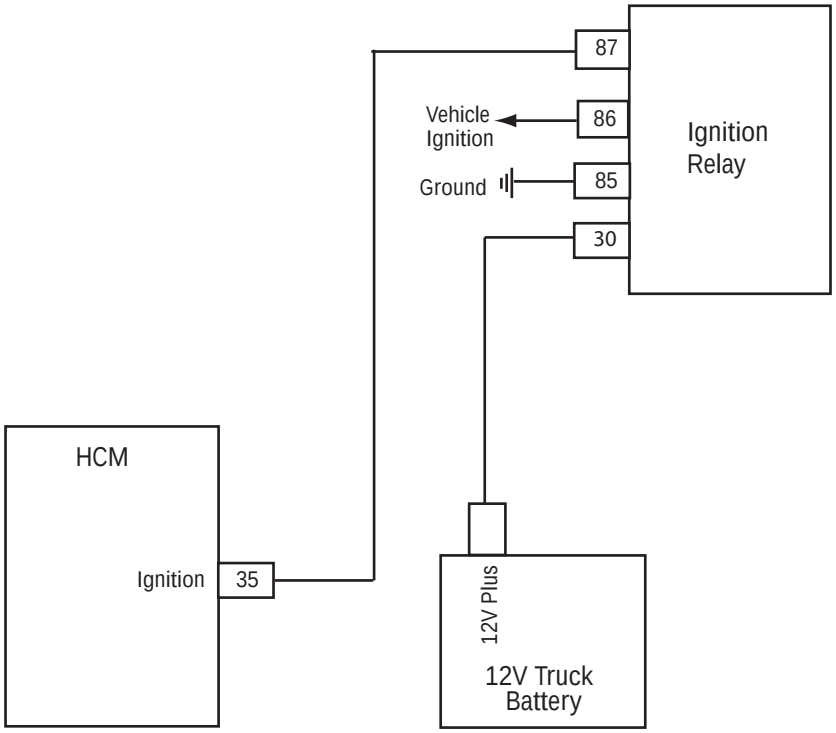

© 2015 Eaton. All rights reserved

Fault Code 8 - Loss of Switched Ignition Power (HCM) Test

A ***Purpose:*** *Check for Active or Inactive fault code status and perform electrical pretest.*

1. Review and follow the “Warnings & Cautions” on page 1.
2. Retrieve Active fault codes and FMIs with ServiceRanger using the 9-Way Diagnostic Connector.
3. Perform the “Electrical Pretest” on page 25:
   - If Fault Code 8 is Active after performing the Electrical Pretest, replace the **Hybrid Control Module (HCM)**, then go to **Step V.**
   - If Fault Code 8 is Inactive after performing the Electrical Pretest, go to **Step V.**

V ***Purpose:*** *Verify repair.*

1. Key off.
2. Reconnect all connectors and the negative battery cable.
3. Key on.
4. Clear codes, see “Clear Inactive Faults” on page 13.
5. Drive the vehicle and attempt to reset the code.
6. Check for codes, see “View Active and Inactive Faults” on page 13.
   - If no codes, test is complete.
   - If Fault Code 8 appears, find error in testing, go to **Step A.**
   - If a code other than 8 appears, see “Fault Code Isolation Procedure Index” on page 14.

© 2015 Eaton. All rights reserved

https://truckmanualshub.com/

Fault Code 9 - Weak Battery Voltage

J1939: SA 239 SPN 168 FMI 14

Overview

The Hybrid Control Module (HCM) is mounted to the transmission and contains all of the software to control both the hybrid power electronics as well as the transmission operation. The HCM main battery power is fused 12-volt feed that runs through the HCM 38-Way Vehicle Connector with the main ground wire returning to the battery negative terminal.

Detection

The following preconditions must be met before the system detects the fault:

- HCM ignition voltage is greater than 7 volts and less than 16 volts.
- HCM System Battery Voltage Low Fault is Inactive.

Conditions to Set Fault Code Active

The following conditions must be met to set the fault code Active:

- FMI 14 is set when the HCM battery voltage drops below 9 volts for 10 seconds.

Note: When troubleshooting an Inactive code refer to the "Product Diagnostic Mode (PDM)" on page 19.

Fallback

When Fault Code 9 is set the following conditions occur:

- Amber "Check Hybrid" light illuminates.
- Red "Hybrid Stop" lamp will display if there are additional fault codes caused by the low or weak voltage. This feature was added with HCM Software 1107 and higher.
- Fault is stored in HCM memory.

Conditions to Set Fault Code Inactive

Only Inactive faults can be cleared from the Transmission Electronic Control Unit (TECU) or HCM history using ServiceRanger. The TECU automatically clears the faults from history after 200 hours. The HCM automatically clears a fault from history after that fault has been Inactive for 200 hours.

Possible Causes

This fault code can be caused by any of the following:

- FMI 14
  - Power Supply Harness to the HCM
  - Low batteries or bad main power connection
  - Charging system

Additional Tools

- Basic hand tools
- Eaton® Test Adapter Kit J43318
- Digital Volt/Ohm Meter J46708
- ServiceRanger

© 2015 Eaton. All rights reserved

Component Identification

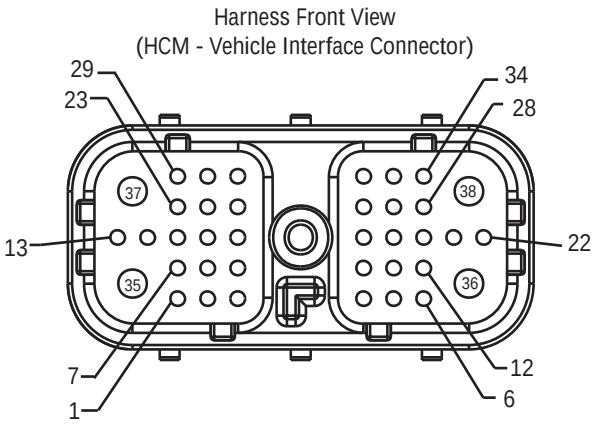

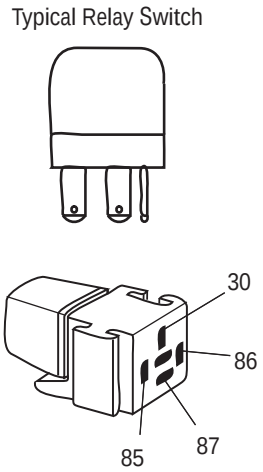

NOTE: Refer to the Eaton Hybrid Component and Connector Location page for Connector Locations

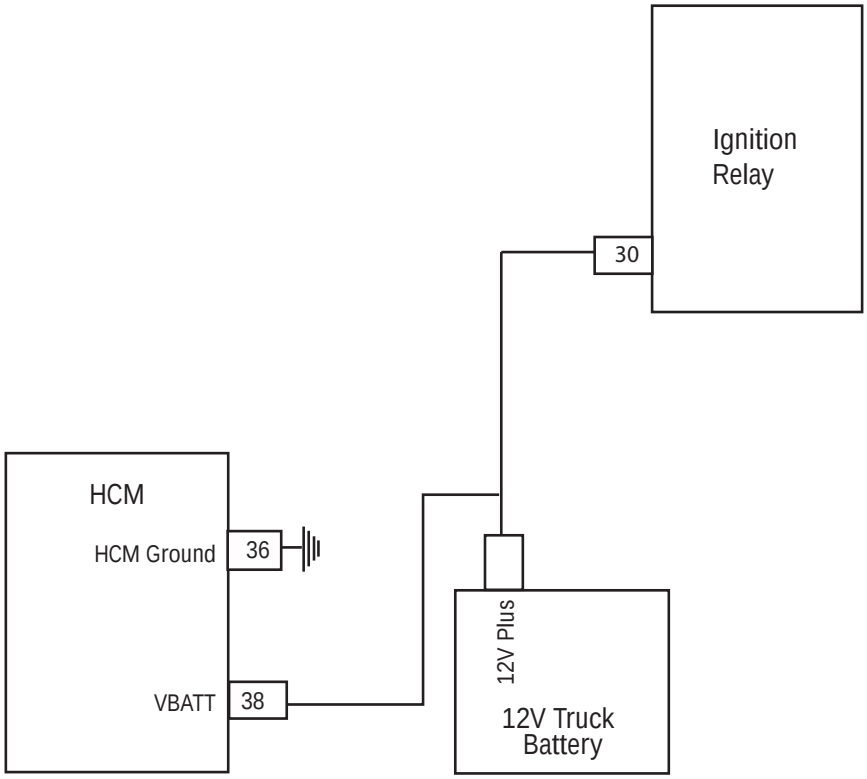

© 2015 Eaton. All rights reserved

https://truckmanualshub.com/

Fault Code 9 - Weak Battery Voltage

A ***Purpose:*** *Check for Active or Inactive fault code status and perform Electrical Pretest.*

1. Review and follow the "Warnings & Cautions" on page 1.
2. Retrieve Active fault codes and FMIs with ServiceRanger using the 9-Way Diagnostic Connector.
3. Perform the "Electrical Pretest" on page 25:
   - If Fault Code 9 is Active after performing the Electrical Pretest, replace the **Hybrid Control Module (HCM)**, then go to **Step V.**
   - If Fault Code 9 is Inactive after performing the Electrical Pretest, clear codes (see "Clear Inactive Faults" on page 13.) Go to **Step V.**

V ***Purpose:*** *Verify repair.*

1. Key off.
2. Key on.
3. Clear codes, see "Clear Inactive Faults" on page 13.
4. Reconnect all connectors and the negative battery cable.
5. Drive the vehicle and attempt to reset the code.
6. Check for codes, see "View Active and Inactive Faults" on page 13.
   - If no codes, test is complete.
   - If Fault Code 9 appears, find error in testing, go to **Step A.**
   - If a code other than 9 appears, see "Fault Code Isolation Procedure Index" on page 14.

© 2015 Eaton. All rights reserved

Fault Code 10 - Low Battery Voltage (HCM)

J1939: SA 239 SPN 168 FMI 4

Overview

The Hybrid Control Module (HCM) is mounted to the transmission and contains the software that controls both the hybrid power electronics as well as the transmission operation. The HCM main battery power is a fused, 12-volt feed and runs through the HCM 38-Way Vehicle Connector with the main ground wire returning to the battery negative terminal.

Detection

The following preconditions must be met before the system detects the fault:

- HCM ignition voltage is greater than 7 volts and less than 16 volts.

Conditions to Set Fault Code Active

The following conditions must be met to set the fault code Active:

- FMI 4 is set when the HCM battery voltage drops below 7 volts for more than 1 second.

Note: When troubleshooting an Inactive code refer to the "Product Diagnostic Mode (PDM)" on page 19

Fallback

When Fault Code 10 is set the following conditions occur:

- Amber "Check Hybrid" light illuminates.
- Red "Hybrid Stop" lamp will display if there are additional fault codes caused by the low or weak voltage. This feature was added with HCM Software 1107 and higher.
- Fault is stored in HCM memory.

Conditions to Set Fault Code Inactive

Only Inactive faults can be cleared from the Transmission Electronic Control Unit (TECU) or HCM history using ServiceRanger. The TECU automatically clears the fault from history after 200 hours. The HCM automatically clears a fault from history after it has been Inactive for 200 hours.

Possible Causes

This fault code can be caused by any of the following:

- FMI 4
  - Power Supply Harness to the HCM.
  - Low batteries or bad main power connection.
  - Charging system.

Additional Tools

- Basic hand tools
- Eaton® Test Adapter Kit J43318
- Digital Volt/Ohm Meter J46708
- ServiceRanger

© 2015 Eaton. All rights reserved

https://truckmanualshub.com/

Component Identification

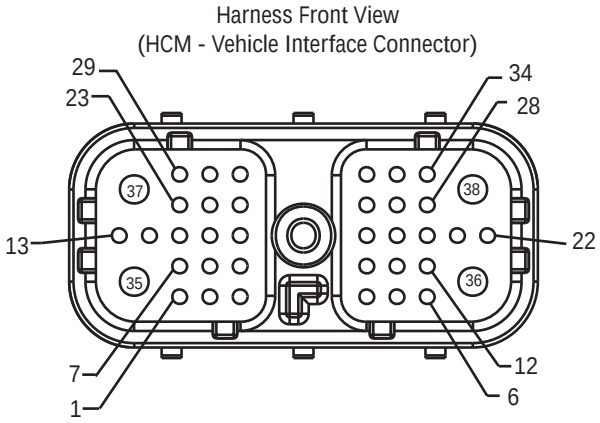

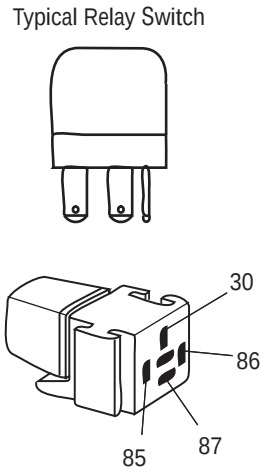

NOTE: Refer to the Eaton Hybrid Component and Connector Location page for Connector Locations

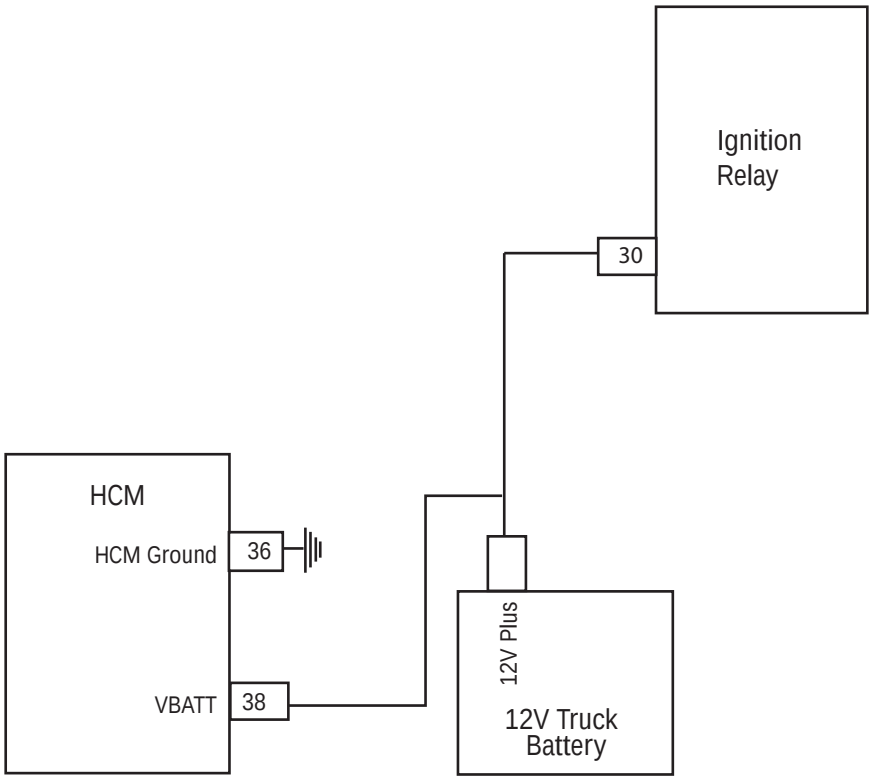

© 2015 Eaton. All rights reserved

Fault Code 10 - Low Battery Voltage (HCM) Test

A ***Purpose:*** *Check for Active or Inactive fault code status and perform Electrical Pretest.*

1. Review and follow the “Warnings & Cautions” on page 1.
2. Retrieve Active fault codes and FMIs with ServiceRanger using the 9-Way Diagnostic Connector.
3. Perform the “Electrical Pretest” on page 25:
   - If Fault Code 10 is Active after performing the Electrical Pretest, replace the **Hybrid Control Module (HCM)**, then go to **Step V.**
   - If Fault Code 10 is Inactive after performing the Electrical Pretest, see “Clear Inactive Faults” on page 13. Go to **Step V.**

V ***Purpose:*** *Verify repair.*

1. Key off.
2. Key on.
3. Clear codes, see “Clear Inactive Faults” on page 13.
4. Reconnect all connectors and the negative battery cable.
5. Drive the vehicle and attempt to reset the code.
6. Check for codes, see “View Active and Inactive Faults” on page 13.
   - If no codes, test is complete.
   - If Fault Code 10 appears, find error in testing, go to **Step A.**
   - If a code other than 10 appears, see “Fault Code Isolation Procedure Index” on page 14.

© 2015 Eaton. All rights reserved

https://truckmanualshub.com/

Fault Code 11 - No TECU Operation

J1587:MID 130 SID 254 FMI 12
J1939: SA 3 SPN 629 FMI 12

Overview

The Transmission Electronic Control Unit (TECU) is mounted to the transmission and contains all of the software to control the transmission; however, the hybrid Control Module (HCM) controls the operation of the TECU during hybrid operation.

Detection

The following preconditions must be met before the system detects the fault:

- TECU ignition voltage is greater than 7 volts and less than 16 volts.

Conditions to Set Fault Code Active

The following conditions must be met to set the fault code Active:

- FMI 12 is set if the TECU detects an intermittent failure in the Electronic Shifter position.

Fallback

When Fault Code 11 is set the following conditions occur:

- Red “Service” light illuminates and an “F” flashes in the gear display (only if the fault occurs after power up).
- Fault is stored in TECU memory.
- If the fault code occurs after power up, the transmission remains in the current gear and the clutch opens.

Conditions to Set Fault Code Inactive

Only Inactive faults can be cleared from the TECU or HCM history using ServiceRanger. The TECU automatically clears the faults from history after 200 hours. The HCM automatically clears a fault from history after it has been Inactive for 200 hours.

Possible Causes

This fault code can be caused by any of the following:

- FMI 12: Electric Shifter

Additional Tools

- Basic hand tools
- ServiceRanger

© 2015 Eaton. All rights reserved

https://truckmanualshub.com/

Component Identification

Note: No Schematic for this code.

Note: For component location refer to the OEM service literature.

© 2015 Eaton. All rights reserved

https://truckmanualshub.com/

Fault Code 11 - No TECU Operation Test

A ***Purpose:*** *Check for Active or Inactive fault code status.*

1. Retrieve Active fault codes and FMIs with ServiceRanger using the 9-Way Diagnostic Connector:
   - If Fault Code 11 is Active, replace the **Electric Shifter**.
   - If Fault Code 11 is Inactive, test is complete.

© 2015 Eaton. All rights reserved

Fault Code 12 - Improper TECU Configuration

J1587: MID130 SID 254 FMI 13
J1939: SA 3 SPN 629 FMI 13

Overview

The Transmission Electronic Control Unit (TECU) is mounted to the transmission and contains all of the software to control the transmission operation; however, the Hybrid Control Module (HCM) controls the operation of the TECU during hybrid operation.

Detection

The following preconditions must be met before the system detects the fault:

- TECU is powered and ignition voltage is greater than 7 volts and less than 16 volts.

Conditions to Set Fault Code Active

The following conditions must be met to set the fault code Active:

- FMI 13 is set when the TECU is not reading valid information from memory, including the transmission table and calibration values within 1 second of power up.

Fallback

When Fault Code 12 is set the following conditions occur:

- Red “Service” light illuminates and “F” flashes in the gear display.
- If the fault occurs at power up the vehicle does not crank.

Conditions to Set Fault Code Inactive

Only Inactive faults can be cleared from the TECU or HCM history using ServiceRanger. The TECU automatically clears the fault from history after 200 hours. The HCM automatically clears the fault from history after it has been Inactive for 200 hours.

Possible Causes

This fault code can be caused by any of the following:

- FMI 13: Improper TECU configuration software

Additional Tools

- Basic hand tools
- ServiceRanger

© 2015 Eaton. All rights reserved

https://truckmanualshub.com/

Component Identification

Note: No Schematic for this code.

Note: For component location refer to the OEM service literature.

© 2015 Eaton. All rights reserved

Fault Code 12 - Improper TECU Configuration Test

A ***Purpose:*** *Check for Active or Inactive fault code status.*

1. Retrieve Active fault codes and FMIs with ServiceRanger using the 9-Way Diagnostic Connector:
   - If Fault Code 12 is Active, replace the **Transmission Electronic Control Unit (TECU)**.
   - If Fault Code 12 is Inactive, test is complete.

© 2015 Eaton. All rights reserved

https://truckmanualshub.com/

Fault Code 14 - Invalid Shifter Range

J1587: MID 130 SID 18, 19 FMI 2, 3, 4
J1939: SA 3 SPN 751 FMI 2, 3, 4

Overview

The Transmission Electronic Control Unit (TECU) is connected to the shift device, which transmits driver mode selection data. The only compatible shift devices are the Eaton® Push Button Shift Control (PBSC) and OEM-supplied shift lever (if equipped with park). The TECU checks the vehicle for the type of shift device during the first power up.

Detection

The following preconditions must be met before the system detects the fault:

- TECU ignition voltage is greater than 7 volts and less than 16 volts.
- TECU System Battery Voltage Low Fault is Inactive.
- TECU is being powered up for the first time and no shift device has been configured.

Conditions to Set Fault Code Active

The following conditions must be met to set the fault code Active:

- FMI 2 is set when the shifter is not returning a valid position (PRNDH1)
- FMI 3 is set when the sensor voltage is higher than expected
- FMI 4 is set when the sensor voltage is lower than expected

Fallback

When Fault Code 14 is set the following conditions occur:

- “F” appears in the gear display.
- Fault is stored in TECU memory.
- TECU changes to AutoShift control.
- Engine does not crank.

Conditions to Set Fault Code Inactive

Only Inactive faults can be cleared from the TECU or HCM history using ServiceRanger. The TECU automatically clears faults from history after 200 hours. The HCM automatically clears a fault from history after it has been Inactive for 200 hours.

Possible Causes

This fault code can be caused by any of the following:

- FMI 2: Shifter is in between detent positions or sensor is out of calibration.
- FMI 3: Sensor input is shorted high or sensor ground in open
- FMI 4: Sensor input is open circuit or shorted to ground

Additional Tools

- Basic hand tools
- Eaton Test Adapter Kit
- Digital Volt/Ohm Meter
- ServiceRanger

© 2015 Eaton. All rights reserved

Component Identification

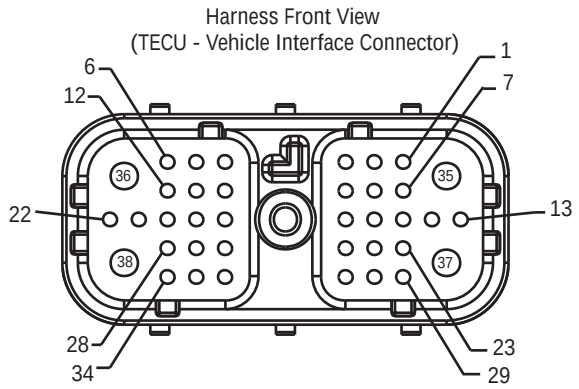

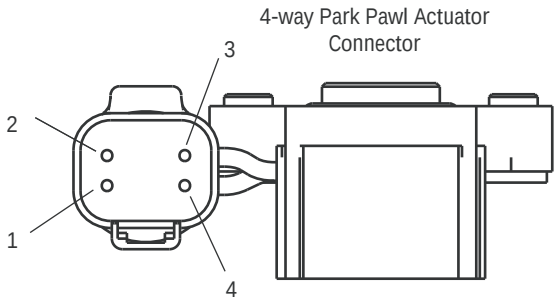

NOTE: Refer to the Eaton Hybrid Component and Connector Location page for Connector Locations

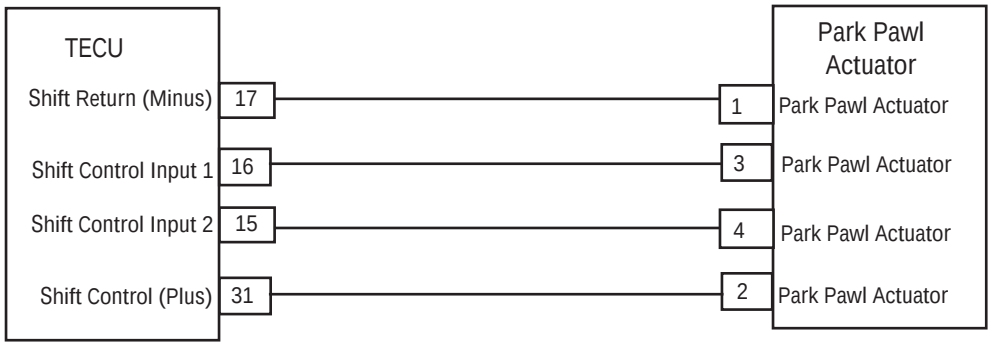

© 2015 Eaton. All rights reserved

https://truckmanualshub.com/

Fault Code 14 - Invalid Shifter Range Test

A

Purpose: *Verify supply voltage at Shift Lever.*

1. Review and follow the "Warnings & Cautions" on page 1.
2. Disconnect the 4-Way Connector to the Park Pawl Actuator.
3. Key on.
4. Check for 12-volt supply at 4-Way Connector at Pin 1 and Pin 2:
   - If voltage between Pin 1 and Pin 2 is ±0.2 volts of battery voltage, go to **Step B.**
   - If voltage is outside the range, go to **Step D.**

Connection	Measurement
Pin 1 to Pin 2	

B

Purpose: *Verify voltage of Shift Lever in neutral position.*

1. With the Actuator/Shift Lever in neutral, check voltage on the following pins:
   - Pin 3 to ground
   - Pin 4 to ground
   - If voltage is between 2.25–2.75, go to **Step C.**
   - If voltage is outside the range, replace the **Park Pawl Mechanism Sensor**, then go to **Step V.**

Connection	Measurement
Pin 3 to ground	
Pin 4 to ground	

© 2015 Eaton. All rights reserved

C

Purpose: *Verify continuity of TECU Harness.*

1. Disconnect the TECU Vehicle Harness 38-way connector.
2. Check continuity between:
   - 38-Way Connector Pin 15 and 4-Way Connector Pin 4
   - 38-Way Connector Pin 16 and 4-Way Connector Pin 3
     - If continuity is complete, replace the **Transmission Electronic Control Unit (TECU)**, then go to **Step V.**
     - If an open is found, repair the Vehicle Harness, then go to **Step V.**

Connection	Measurement
Pin 15 to Pin 4	
Pin 16 to Pin 3	

D

Purpose: *Verify continuity of TECU Harness.*

1. Disconnect the TECU Vehicle Harness 38-way connector.
2. Check continuity between:
   - 38-Way Connector Pin 17 and 4-Way Connector Pin 1
   - 38-Way Connector Pin 31 and 4-Way Connector Pin 2
     - If continuity is complete, replace the **Transmission Electronic Control Unit (TECU)**, then go to **Step V.**
     - If an open is found, repair the Vehicle Harness, then go to **Step V.**

Connection	Measurement
Pin 17 to Pin 1	
Pin 31 to Pin 2	

© 2015 Eaton. All rights reserved

https://truckmanualshub.com/

V ***Purpose:*** *Verify repair.*

1. Key off.
2. Reconnect all connectors.
3. Key on.
4. Clear Codes, see “Clear Inactive Faults” on page 13.
5. Drive the vehicle and attempt to reset the code.
6. Check for codes, see “View Active and Inactive Faults” on page 13.
   - If no codes, test is complete.
   - If Fault Code 14 appears, find error in testing, go to **Step A.**
   - If a fault code other than 14 appears, see “Fault Code Isolation Procedure Index” on page 14.

© 2015 Eaton. All rights reserved

Fault Code 16 - High Integrity Link (HIL) Test

J1939: SA 3 SPN 625 FMI 2
J1587: MID 130 SID 248 FMI 2

Overview

The High Integrity Link (HIL) is a high-speed twisted pair 500K proprietary data link that connects the Transmission Electronic Control Unit (TECU) to the Push Button Shift Control (PBSC). Each module contains an internal 120 ohm resistor. The HIL carries information such as driver mode selection and fault information to illuminate the "Service" light.

Detection

The following preconditions must be met before the system detects the fault:

- TECU ignition voltage is greater than 7 volts and less than 16 volts.
- TECU System Battery Voltage Low Fault is Inactive.
- TECU driver interface configuration is set to HIL.

Conditions to Set Fault Code Active

FMI 2 is set when the TECU loses communication for 5 seconds or more with the PBSC.

Note: When troubleshooting an Inactive code refer to the "Product Diagnostic Mode (PDM)" on page 19.

Fallback

When Fault Code 16 sets the following conditions occur:

- An "F" appears in the gear display.
- Push Button Mode Light flashes next to the selected mode and the "Service" light remains off.
- Push Button lights come on and then remains off if the data link fails at power up.
- Fault is stored in TECU memory.
- Operation mode changes to AutoShift Fallback mode.
- If the code is Active during power up, transmission does not engage a gear.
- If the fault is Active while driving, transmission remains in the current gear. It then shifts into the default gear once the vehicle stops. Clutch opens at idle and closes if the throttle is pressed. The vehicle moves into the default start gear only.

Conditions to Set Fault Code Inactive

Only Inactive faults can be cleared from the TECU or HCM history using ServiceRanger. The TECU automatically clears faults from history after 200 hours. The HCM automatically clears faults from history after that fault has been Inactive for 200 hours.

Possible Causes

This fault code can be caused by any of the following:

- FMI 2
  - HIL Data Link
  - PBSC
  - TECU
  - Power Supply Harness from TECU to PBSC

Additional Tools

- Basic hand tools
- Eaton® Test Adapter Kit J43318
- Digital Volt/Ohm Meter J46708
- ServiceRanger

© 2015 Eaton. All rights reserved

https://truckmanualshub.com/

Component Identification

Harness Front View
TECU - Vehicle Interface Connector

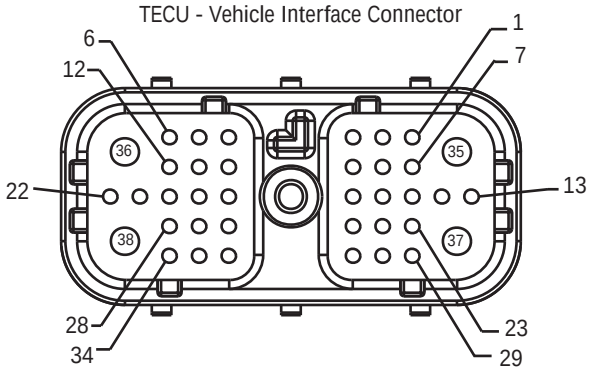

Harness Front View
Push Button Shift Control Connector

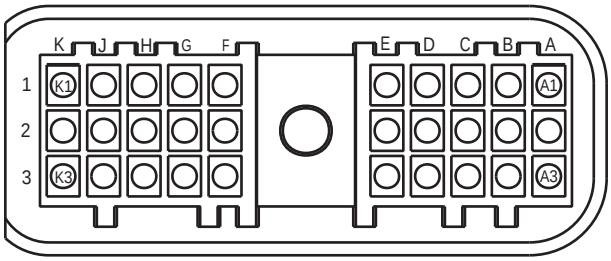

NOTE: Refer to the Eaton Hybrid Component and Connector Location page for Connector Locations

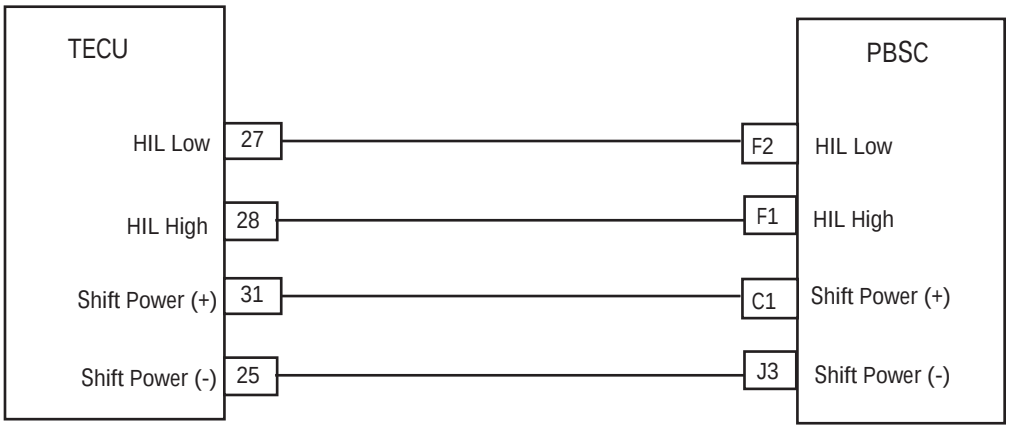

© 2015 Eaton. All rights reserved

Fault Code 16 - High Integrity Link (HIL) Test

A

Purpose: *Check for Active or Inactive fault code status.*

1. Review and follow the “Warnings & Cautions” on page 1.
2. Retrieve Active fault codes and FMIs with ServiceRanger using the 9-Way Diagnostic Connector.
3. Key on and observe the red Push Button “Service” light.
   - If the red “Service” light turns on, go to **Step C.**
   - If the red “Service” light does not turn on, go to **Step B.**

B

Purpose: *Verify voltages at Vehicle Harness.*

1. Disconnect Shift Control 30-Way Connector.
2. Key on.
3. Measure voltage on 30-Way Connector between Pin J3 and Pin C1.
   - If voltage is within 0.6 volts of battery voltage, go to **Step C.**
   - If out of range, go to **Step D.**

Connection	Measurement
Pin J3 to Pin C1	

C

Purpose: *Verify voltage at Push Button Shift Controller.*

1. Key off.
2. Disconnect the 30-Way Push Button Shift Control Connector.
3. Key on.
4. Connect voltmeter leads to Pin F1 and Pin F2.

   Note: Make sure the Volt/Ohm Meter is on the proper scale (around 10 volts AC).

   - If the voltage is 0.10 volts AC or greater, replace the **Shift Control** (only if fault code is Active), then go to **Step V.**
   - If the voltage is out of range, go to **Step F.**

Connection	Measurement
Pin F1 to Pin F2	

© 2015 Eaton. All rights reserved

https://truckmanualshub.com/

D

Purpose: *Verify continuity from Vehicle Harness to Push Button Shift Controller.*

1. Key off.
2. Disconnect negative battery cable.
3. Disconnect Vehicle Harness 38-Way Connector.

   Note: On Peterbilts, disconnect gear display.
4. Measure resistance between:
   - Shift Control 30-Way Connector Pin J3 and Vehicle Harness 38-Way Connector Pin 25.
     - If resistance between Pin J3 and Pin 25 is 0–0.3 ohms, go to **Step E.**
     - If any of the above conditions are not met, repair the Vehicle Harness between the Shift Control and TECU, then go to **Step V.**

Connection	Measurement
Pin J3 to Pin 25	

E

Purpose: *Verify continuity from Push Button Shift Controller circuits to ground.*

1. Key off.
2. Measure the resistance between:
   - Shift Control 30-Way Connector Pin C1 and Vehicle Harness 38-Way Connector Pin 31.
   - Shift Control 30-Way Connector Pin C1 and ground.
     - If resistance between Pin C1 and Pin 31 is 0–0.3 ohms and resistance between Pin C1 and ground is 10K ohms or greater, replace **Transmission Electronic Control Unit (TECU)** (Only if Fault Code is Active).
     - If any of the above conditions are not met, repair the Vehicle Harness between the TECU and Shift Control, then go to **Step V.**

Connection	Measurement
Pin C1 to Pin 31	
Pin C1 to ground	

© 2015 Eaton. All rights reserved

F

Purpose: *Verify continuity from Push Button Shift Controller circuits to ground.*

1. Key off.
2. Disconnect negative battery cable.
3. Disconnect Vehicle Harness 38-Way Connector.
4. Measure resistance between:
   - Shift Control 30-Way Connector Pin F1 and Vehicle Harness 38-Way Connector Pin 28.
   - Shift Control 30-Way Connector Pin F1 and ground.
     - If resistance between Pin F1 and Pin 28 is 0–0.3 ohms and if resistance between Pin F1 and ground is 10K ohms or greater, go to **Step G.**
     - If any of the above conditions are not met, repair the Vehicle Harness between the Shift Control and TECU, then go to **Step V.**

Connection	Measurement
Pin F1 to Pin 28	
Pin F1 to ground	

G

Purpose: *Verify continuity from Vehicle Harness to Push Button Shift Controller.*

1. Key off.
2. Measure resistance between:
   - Shift Control 30-Way Connector Pin F2 and Vehicle Harness 38-Way Connector Pin 27.
   - Shift Control 30-Way Connector Pin F2 and ground.
     - If resistance between Pin F2 and Pin 27 is 0–0.3 ohms and resistance between Pin F2 and ground is 10K ohms or greater, replace **Transmission Electronic Control Unit (TECU)** (Only if Fault Code is Active). Go to **Step V.**
     - If any of the above conditions are not met, repair the Vehicle Harness between the Shift Control and TECU, then go to **Step V.**

Connection	Measurement
Pin F2 to Pin 27	
Pin F2 to ground	

© 2015 Eaton. All rights reserved

https://truckmanualshub.com/

V ***Purpose:*** *Verify repair.*

1. Key off.
2. Reconnect all connectors and negative battery cable.
3. Key on.
4. Clear codes, see “Clear Inactive Faults” on page 13.
5. Drive the vehicle and attempt to reset the code.
6. Check for codes see “View Active and Inactive Faults” on page 13.
   - If no codes, test is complete.
   - If Fault Code 16 appears, find error in testing, go to **Step A.**
   - If a code other than 16 appears, see “Fault Code Isolation Procedure Index” on page 14.

© 2015 Eaton. All rights reserved

https://truckmanualshub.com/

Fault Code 17 - Start Enable Relay

J1939:SA 3	**SPN 626**	**FMI 3, 4**
J1587:MID 130	**SID 237**	**FMI 3, 4**

Overview

The Start Enable Relay is wired into the Transmission Electronic Control Unit (TECU) on the coil side of the relay. At key on, the HCM determines which starting method to use (high-voltage Motor/Generator or Engine Starter). If the HCM uses the standard engine Starter, the 12-volt Cranking Relay is energized supplying battery power to the Start Enable Relay main feed, which then powers the Starter Solenoid.

Detection

The following preconditions must be met before the system detects the fault:

- Transmission Electronic Control Unit (TECU) ignition voltage is greater than 7 volts and less than 16 volts.

Conditions to Set Fault Code Active

The following conditions must be met to set the fault code Active:

- FMI 3 is set when the TECU detects an open or short in the control circuit of the Start Enable Relay for 1 second or greater.
- FMI 4 is set if the TECU detects a short to ground in the control circuit of the Start Enable Relay for 1 second or greater.

Note: When troubleshooting an Inactive code refer to the “Product Diagnostic Mode (PDM)” on page 19.

Fallback

When Fault Code 17 is set the following conditions occur:

- Red “Service” light illuminates and an “F” flashes in the gear display.
- Fault is stored in TECU memory.
- If the fault sets at power up the engine still cranks, provided the high-voltage batteries have a sufficient State of Charge (SOC).
- If the fault sets while driving, the vehicle continues to operate.

Conditions to Set Fault Code Inactive

Only Inactive faults can be cleared from the TECU or HCM history using ServiceRanger. The TECU automatically clears the faults from history after 200 hours. The HCM automatically clears a fault from history after it has been Inactive for 200 hours.

Possible Causes

This fault code can be caused by any of the following:

- FMI 3, 4
  - Loose or corroded connections, bent or burnt pins, short to ground, open, or short to VBATT on the circuit.
  - Start Enable Relay
  - TECU

Additional Tools

- Basic hand tools
- Eaton® Test Adapter Kit J43318
- Digital Volt/Ohm Meter J46708
- ServiceRanger

© 2015 Eaton. All rights reserved

https://truckmanualshub.com/

Component Identification

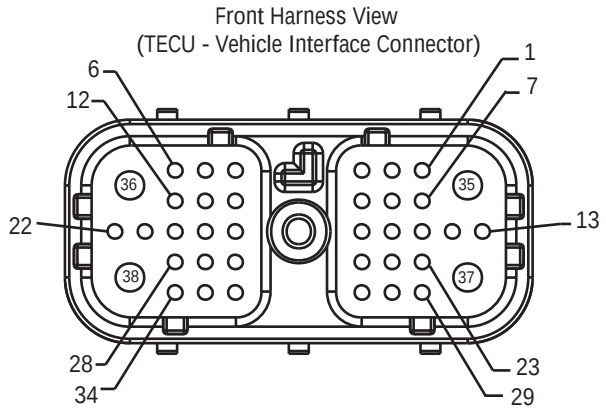

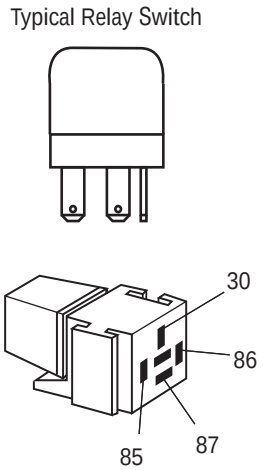

NOTE: Refer to the Eaton Hybrid Component and Connector Location page for Connector Locations

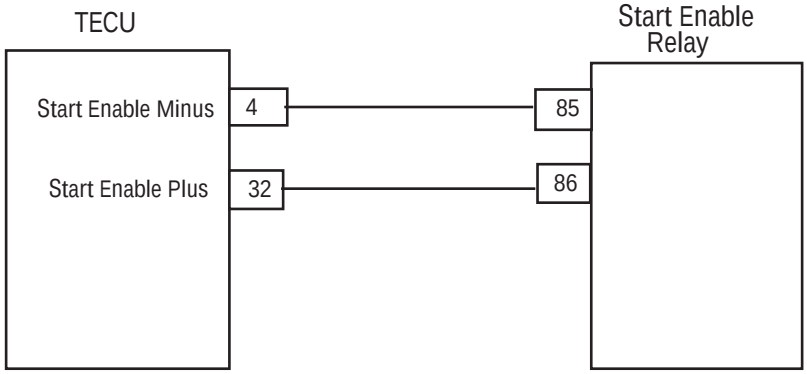

© 2015 Eaton. All rights reserved

Fault Code 17 - Start Enable Relay Test

A

Purpose: *Check for Active or Inactive fault code status.*

1. Review and follow the “Warnings & Cautions” on page 1.
2. Retrieve Active fault codes and FMIs with ServiceRanger using the 9-Way Diagnostic Connector. View FMIs present.
3. Exchange the current Start Enable Relay with another relay and see if fault returns:
   - If fault does not return with new relay, replace the Start Enable Relay (only if fault code is Active), then go to **Step V.**
   - If fault returns with new relay, go to **Step B.**

B

Purpose: *Verify FMI set.*

1. Which FMIs were listed from Step A?
   - If FMI 3 is listed, go to **Step C.**
   - If FMI 4 is listed, go to **Step E.**

C

Purpose: *Verify continuity of Transmission Harness circuits.*

1. Key off.
2. Disconnect negative battery cable.
3. Disconnect the Transmission Harness 38-way connector.
4. Measure resistance between Vehicle Harness 38-Way Connector Pin 32 and Pin 4:
   - If resistance between Pin 32 and Pin 4 is 40–120 ohms, go to **Step D.**
   - If resistance is outside of range, repair the Vehicle Harness for an open circuit, then go to **Step V.**

Connection	Measurement
Pin 32 to Pin 4	

© 2015 Eaton. All rights reserved

https://truckmanualshub.com/

D

Purpose: *Verify voltages at Transmission Harness.*

1. Key on.
2. Measure voltage between Vehicle Harness 38-Way Connector Pin 32 and ground:

   Note: The voltage reads 5 volts for only 1–2 seconds.

   - If the voltage between Pin 32 and ground is 5 volts, replace the **Transmission Electronic Control Unit (TECU)** (only if fault code is Active), then go to **Step V.**
   - If the voltage between Pin 32 and ground is 12 volts, repair the short to VBATT on the harness. Voltage should remain at 5 volts for 1–2 seconds after initial key on. Go to **Step V.**

Connection	Measurement
Pin 32 to ground	

E

Purpose: *Verify continuity of Transmission Harness circuits to ground.*

1. Key off.
2. Disconnect battery cable.
3. Disconnect the Transmission Harness 38-Way Connector.
4. Measure the resistance between Vehicle Harness 38-Way Connector Pin 32 and ground:
   - If the resistance between 32 and ground is 10K ohms or greater, replace the **Transmission Electronic Control Unit (TECU)** (only if fault code is Active), then go to **Step V.**
   - If the resistance is outside of range, repair the Vehicle Harness for a short to ground, then go to **Step V.**

Connection	Measurement
Pin 32 to ground	

© 2015 Eaton. All rights reserved

V ***Purpose:*** *Verify repair.*

1. Key off.
2. Reconnect all connectors and negative battery cable.
3. Key on.
4. Clear codes, see “Clear Inactive Faults” on page 13.
5. Drive the vehicle and attempt to reset the code.
6. Check for codes, see “View Active and Inactive Faults” on page 13.
   - If no codes, test is complete.
   - If Fault Code 17 appears, find error in testing, go to **Step A.**
   - If a code other than 17 appears, see “Fault Code Isolation Procedure Index” on page 14.

© 2015 Eaton. All rights reserved

https://truckmanualshub.com/

Fault Code 18 - ECA Communication

J1939: SA 239 SPN 520200 FMI 2, 9

Overview

The Electric Clutch Actuator (ECA) controls the position of the clutch assembly. The ECA communicates with the Hybrid Control Module (HCM) over the proprietary Controller Area Network (CAN) data link to change position, show faults or transmit other operation information.

Detection

The following preconditions must be met before the system detects the fault:

- HCM ignition voltage is greater than 7 volts and less than 16 volts.
- ECA ignition voltage is greater than 8.5 volts.
- HCM CAN data link error is Inactive.

Conditions to Set Fault Code Active

The following conditions must be met to set the fault code Active:

- FMI 9 is set when the ECA loses communication on the CAN Data Link for 2 seconds.

Fallback

When Fault Code 18 is set the following conditions occur:

- Red “Stop Hybrid” light illuminates.
- Fault is stored in HCM memory.
- ECA maintains current clutch position or moves to the last position commanded by the HCM. Upon approaching idle, the clutch opens and remains in this state.
- If the fault occurs at power up, the vehicle does not crank.

Conditions to Set Fault Code Inactive

Only Inactive faults can be cleared from the Transmission Electronic Control Unit (TECU) or HCM history using ServiceRanger. The TECU automatically clears faults from history after 200 hours. The HCM automatically clears a fault from history after that fault has been Inactive for 200 hours.

Possible Causes

This fault code can be caused by any of the following:

- FMI 9
  - CAN Data Link from the ECA to the link
  - ECA
  - HCM

Additional Tools

- Basic hand tools
- Eaton® Test Adapter Kit J43318
- Digital Volt/Ohm Meter J46708
- ServiceRanger

© 2015 Eaton. All rights reserved

Component Identification

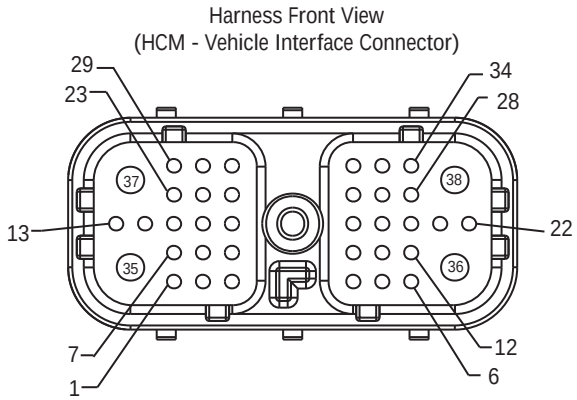

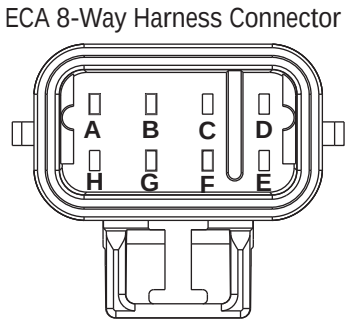

NOTE: Refer to the Eaton Hybrid Component and Connector Location page for Connector Locations

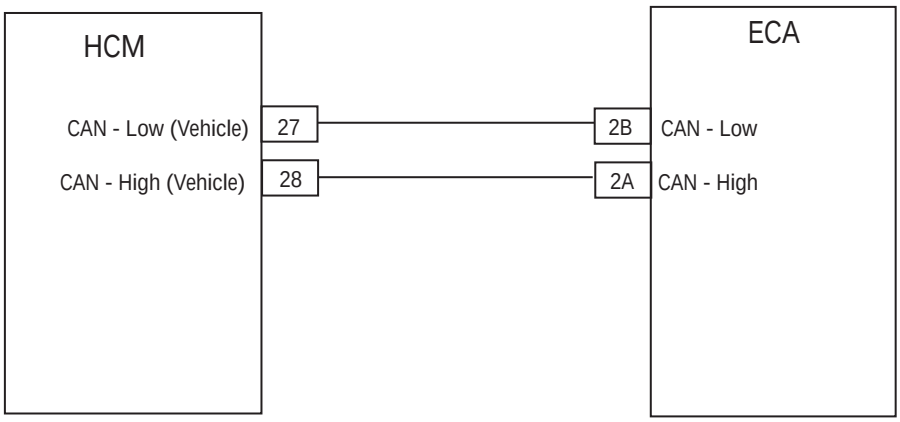

© 2015 Eaton. All rights reserved

https://truckmanualshub.com/

Fault Code 18 - ECA Communication Test

A ***Purpose:*** *Check for Active or Inactive fault code status.*

1. Retrieve Active fault codes and FMIs with ServiceRanger using the 9-Way Diagnostic Connector.
2. Which FMIs are present?
   - If Fault Code 18 FMI 9 is Active, see “Fault Code 87 - CAN ECA Message (HCM)” on page 269.
   - If Fault Code 18 FMI 9 is Inactive, test is complete. Go to **Step V.**

V ***Purpose:*** *Verify repair.*

1. Key off.
2. Reconnect all connectors and the negative battery cable.
3. Key on.
4. Clear codes, see “Clear Inactive Faults” on page 13.
5. Drive the vehicle and attempt to reset the code.
6. Check for codes, see “View Active and Inactive Faults” on page 13.
   - If no codes, test is complete.
   - If Fault Code 18 appears, go to **Step A.** Find error in testing.
   - If a code other than 18 appears, see “Fault Code Isolation Procedure Index” on page 14.

© 2015 Eaton. All rights reserved

Fault Code 24 - J1939 HCM Message (TECU)

J1587: MID 130 SID 231 FMI 9
J1939: SA 3 SPN 525 FMI 9

Overview

The Transmission Electronic Control Unit (TECU) communicates with the Hybrid Control Module (HCM) over the J1939 data link during vehicle operation to exchange requested gear and current gear information.

Detection

The following preconditions must be met before the system detects the fault:

- TECU ignition voltage is greater than 7 volts and less than 16 volts.
- No J1939 data link fault currently Active in the TECU.

Conditions to Set Fault Code Active

The following conditions must be met to set the fault code Active:

- FMI 9 is set when the TECU fails to receive transmission data (such as a requested gear) for 2 seconds or greater from the HCM, and it is still communicating with other modules on J1939.

Note: When troubleshooting an Inactive code refer to the) "Product Diagnostic Mode (PDM)" on page 19.

Fallback

When Code 24 is set the following conditions occur:

- Red "Service" light illuminates, and an "F" flashes in the gear display.
- Fault is stored in TECU memory.
- Operation mode changes to AutoShift Fallback mode.
- If the fault sets at power up, the engine does not crank.
- If the fault sets while driving, the vehicle remains in current gear. When the vehicle stops the clutch opens and remains in this position.
- Amber "Check Hybrid" light may display on the dash due to an Active Fault Code 48.

Conditions to Set Fault Code Inactive

Only Inactive faults can be cleared from the TECU or HCM history using ServiceRanger. The TECU automatically clears faults from history after 200 hours. The HCM automatically clears a fault from history after it has been Inactive for 200 hours.

Possible Causes

This fault code can be caused by any of the following:

- FMI 9
  - J1939 Data Link
  - HCM

Additional Tools

- Basic hand tools
- Eaton® Test Adapter Kit J43318
- Digital Volt/Ohm Meter J46708
- ServiceRanger

© 2015 Eaton. All rights reserved

https://truckmanualshub.com/

Component Identification

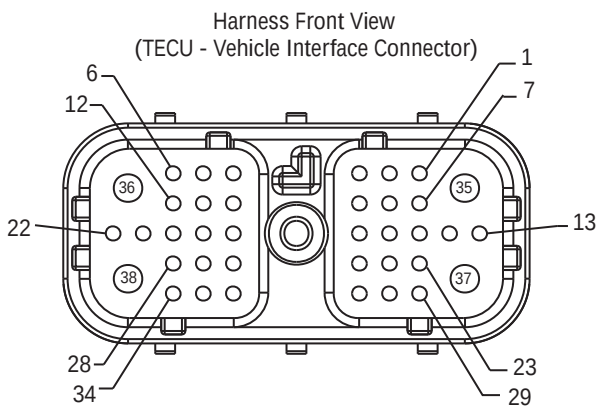

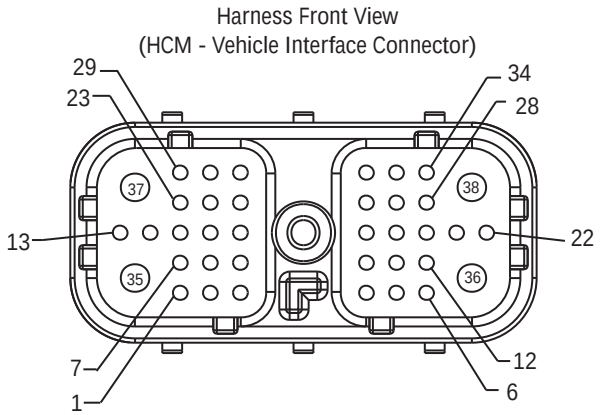

NOTE: Refer to the Eaton Hybrid Component and Connector Location page for Connector Locations

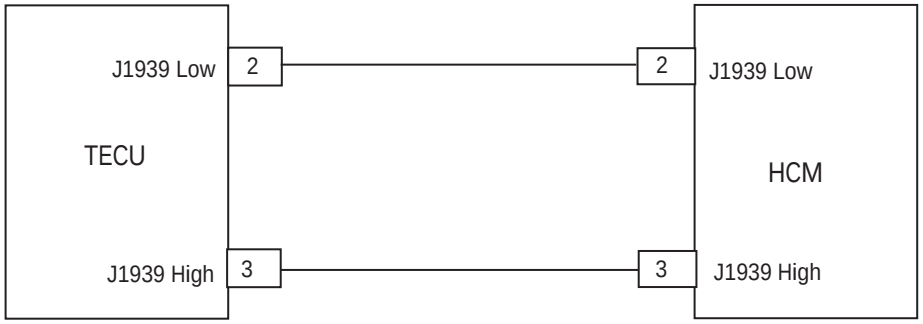

© 2015 Eaton. All rights reserved

Fault Code 24 - J1939 HCM Message (TECU) Test

A ***Purpose:*** *Check for Active or Inactive fault code status and perform Electrical Pretest.*

1. Retrieve Active fault codes and FMIs with ServiceRanger using the 9-Way Diagnostic Connector.
2. Perform the “Electrical Pretest” on page 25:
   - If no issues found during the Electrical Pretest, go to **Step B.**
   - If issue was repaired during the Electrical Pretest, go to **Step V.**

B ***Purpose:*** *Verify continuity of Vehicle Harness.*

1. Key off.
2. Disconnect negative battery cable.
3. Disconnect HCM Vehicle Harness 38-Way Connector.
4. Measure resistance between HCM Vehicle Harness 38-Way Connector Pin 2 and Pin 3:

   Note: Make sure the Volt/Ohm Meter is on the proper scale (around 200 ohm scale).

   - If resistance between Pin 2 and Pin 3 is between 50–70 ohms, replace the **Hybrid Control Module (HCM)**, then go to **Step V.**
   - If resistance is outside of range, repair J1939 Data link Harness, then go to **Step V.**

Connection	Measurement
Pin 2 to Pin 3	

© 2015 Eaton. All rights reserved

https://truckmanualshub.com/

V ***Purpose:*** *Verify repair.*

1. Key off.
2. Reconnect all connectors and the negative battery cable.
3. Key on.
4. Clear codes, see “Clear Inactive Faults” on page 13.
5. Drive the vehicle and attempt to reset the code.
6. Check for codes, see “View Active and Inactive Faults” on page 13.
   - If no codes, test is complete.
   - If Fault Code 24 appears, find error in testing, go to **Step A.**
   - If a code other than 24 appears, see “Fault Code Isolation Procedure Index” on page 14.

© 2015 Eaton. All rights reserved

https://truckmanualshub.com/

Fault Code 26 - Clutch Slip

J1939: SA 239 SPN 522 FMI 10, 23

Overview

The mechanical clutch assembly is controlled through the Electric Clutch Actuator (ECA) which is mounted on the clutch housing. The Hybrid Control Module (HCM) controls the ECA position and monitors several variables to determine if there is a slip concern in the clutch when it is in the closed position.

Detection

The following preconditions must be met before the system detects the fault:

- HCM ignition voltage is greater than 7 volts and less than 16 volts.
- ECA ignition voltage is greater than 7 volts and less than 16 volts.
- There is no Active fault code 18 or 87 present.

Conditions to Set Fault Code Active

The following conditions must be met to set the fault code Active:

- FMI 10 is set when the gear position is not neutral, the clutch is in the engaged position and the difference between the transmission Input Shaft Speed Sensor and the engine speed is greater than 150 RPM for 1 second or longer.
- FMI 23 is set when the HCM detects a clutch overheat situation.

Note: A “CA” appears if the clutch is allowed to slip and create heat beyond a set point. Do not use the throttle as a hill hold device as it causes clutch damage and a “CA.”

Fallback

When Fault Code 26 is set the following conditions occurs:

- Red “Stop Hybrid” light or amber “Check Hybrid” light illuminates.
- Fault is stored in HCM memory.

Conditions to Set Fault Code Inactive

Only Inactive faults can be cleared from the Transmission Electronic Control Unit (TECU) or HCM history using ServiceRanger. The TECU automatically clears the faults from history after 200 hours. The HCM automatically clears a fault from history after it has been Inactive for 200 hours.

Possible Causes

This fault code can be caused by any of the following:

- FMI 10
  - Clutch Assembly
- FMI 23

Additional Tools

- Basic hand tools
- ServiceRanger

© 2015 Eaton. All rights reserved

https://truckmanualshub.com/

Component Identification

Note: No Schematic for this code.

© 2015 Eaton. All rights reserved

https://truckmanualshub.com/

Fault Code 26 - Clutch Slip

A

Purpose: *Check for Active or Inactive fault code status.*

1. Retrieve Active fault codes and FMIs with ServiceRanger using the 9-Way Diagnostic Connector.
2. Which FMIs are present?
   - If FMI 10 is listed, go to **Step B.**
   - If FMI 23 is listed, FMI 23 is set due to excessive clutch heat. This can occur when the throttle is being used as a hill hold or a worn clutch is slipping on long/steep grades. Contact Eaton at 1-800-826-HELP (4357).

B

Purpose: *Verify fault codes present.*

1. Is Fault Code 64 Active?
   - If Fault Code 64 is Active, see “Fault Code 64 - ECA Fault” on page 201.
   - If Fault Code 64 is Inactive, go to **Step C.**

C

Purpose: *Verify fault codes present.*

1. Is Fault Code 27 FMI 13 Active?
   - If Fault Code 27 FMI 13 is Active, see “Fault Code 27 - Clutch Disengagement” on page 105.
   - If Fault Code 27 FMI 13 is Inactive, go to **Step D.**

D

Purpose: *Verify operation of the clutch.*

1. Key on.
2. Start engine.
3. Drive the vehicle under load in highest gear possible. At a steady speed, quickly and fully press and hold the throttle:
   - If Fault Code 26 is Active, replace the Clutch. See CLMT-0365 for installation procedures. Go to **Step V.**
   - If Fault Code 26 is Inactive, test is complete. Go to **Step V.**

© 2015 Eaton. All rights reserved

https://truckmanualshub.com/

V ***Purpose:*** *Verify repair.*

1. Key off.
2. Key on.
3. Clear codes, see “Clear Inactive Faults” on page 13.
4. Reconnect all connectors and the negative battery cable.
5. Drive the vehicle and attempt to reset the code.
6. Check for codes, see “View Active and Inactive Faults” on page 13.
   - If no codes, test is complete.
   - If Fault Code 26 appears, find error in testing, go to **Step A.**
   - If a code other than 26 appears, see “Fault Code Isolation Procedure Index” on page 14.

© 2015 Eaton. All rights reserved

Fault Code 27 - Clutch Disengagement

J1939: SA 239 SPN522 FMI 7, 13

Overview

The mechanical clutch assembly is controlled through the Electric Clutch Actuator (ECA) that is mounted on the clutch housing. The Hybrid Control Module (HCM) controls the ECA position and monitors several variables to determine if their is a slip concern in the clutch when it is in the closed position.

Detection

The following preconditions must be met before the system detects the fault:

- HCM ignition voltage is greater than 7 volts and less than 16 volts.
- ECA ignition voltage is greater than 7 volts and less than 16 volts.

Conditions to Set Fault Code Active

The following conditions must be met to set the fault code Active:

- FMI 7 is set when the engine torque is greater than 400 N•m, engine torque commanded is less than 0 for 0.3 seconds and the clutch position commanded is open for 1 second with the gear position confirmed in neutral. Or, if the clutch input speed is greater than 300 RPM, the clutch output speed is greater than 300 RPM, the clutch is commanded open for 1 second, and the selected gear is neutral with everything above being true for 10 seconds.
- FMI 13 is set when the ECA fails to calibrate during power up due to a mechanical binding issue and there are no other ECA faults present.

Fallback

When Fault Code 27 is set the following conditions occur:

- Red “Stop Hybrid” light illuminates.
- Fault is stored in HCM memory.
- If this fault occurs while driving, the vehicle continues to operate and the transmission will shift to neutral once the vehicle stops.

Conditions to Set Fault Code Inactive

Only Inactive faults can be cleared from the TECU or HCM history using ServiceRanger. The TECU automatically clears faults from history after 200 hours. The HCM automatically clears a fault from history after it has been Inactive for 200 hours.

Possible Causes

This fault code can be caused by any of the following:

- FMI 7
  - Clutch Assembly
  - ECA
- FMI 13
  - Clutch Assembly
  - Cross-Shafts

Additional Tools

- Basic hand tools
- ServiceRanger

© 2015 Eaton. All rights reserved

https://truckmanualshub.com/

Component Identification

Note: No Schematic for this code.

© 2015 Eaton. All rights reserved

Fault Code 27 - Clutch Disengagement Test

A

Purpose: *Check for Active or Inactive fault code status.*

1. Retrieve Active fault codes and FMIs with ServiceRanger using the 9-Way Diagnostic Connector.
2. If Fault Code 64 is listed:
   - If Fault Code 27 FMI 7 or 13 are listed with an Active Fault Code 64, see “Fault Code 64 - ECA Fault” on page 201.
   - If Fault Code 27 FMI 7 is listed with no Active fault code 64, go to **Step B.**
   - If Fault Code 27 FMI 13 is listed with no Active Fault Code 64, go to **Step C.**

B

Purpose: *Verify FMI set.*

1. Key on.
2. Start engine.
3. Launch vehicle and drive until 6th gear is obtained. Then slow down to a stop.
4. Repeat the launch 5 times.
5. Is FMI 7 Active?
   - If FMI 7 is Active, replace the Clutch. See CLMT0365 for installation procedure. Go to **Step V.**
   - If FMI 7 is Inactive, test is complete. Go to **Step V.**

C

Purpose: *Verify integrity of the Cross-Shaft Assembly.*

1. Key off.
2. Remove Electric Clutch Actuator from Transmission Housing.
3. Attempt to rotate the Cross-Shaft and Yoke Assembly by hand.
   - If the Cross-Shaft Assembly rotates by hand from the Release Bearing to the Transmission Case, replace the Clutch. See CLMT0365 for installation procedure. Go to **Step V.**
   - If the Cross-Shaft Assembly does not rotate by hand, replace the Cross-Shaft, bushings, and grease. Repeat this step.

V

Purpose: *Verify repair.*

1. Key off.
2. Key on.
3. Clear codes, see “Clear Inactive Faults” on page 13.
4. Reconnect all connectors and the negative battery cable.
5. Drive the vehicle and attempt to reset the code.
6. Check for codes, see “View Active and Inactive Faults” on page 13.
   - If no codes, test is complete.
   - If Fault Code 27 appears, find error in testing, go to **Step A.**
   - If a code other than 27 appears, see “Fault Code Isolation Procedure Index” on page 14.

© 2015 Eaton. All rights reserved

https://truckmanualshub.com/

Fault Code 32 - Loss of Switched Ignition Power (TECU)

J1939: SA 3 SPN 43 FMI 2
J1587: MID130 PID 43 FMI 2

Overview

The Transmission Electronic Control Unit (TECU) is mounted to the transmission and it contains all of the software to control the transmission operation; however, the Hybrid Control Module (HCM) controls the operation of the TECU during hybrid operation. Ignition power is fused and provided from the Key Switch. Application of this input initiates the power-up sequence.

Detection

The following preconditions must be met before the system detects the fault:

- Output Shaft Speed must be greater than 0 RPM.

Conditions to Set Fault Code Active

The following conditions must be met to set the fault code Active:

- FMI 2 is set when the TECU loses ignition power during operation for 2 seconds or greater.

Note: When troubleshooting an Inactive code refer to the "Product Diagnostic Mode (PDM)" on page 19.

Fallback

When Fault Code 32 is set the following conditions occur:

- Red "Service" light displays and an "F" flashes in the gear display.
- Fault is stored in TECU memory.
- Operation mode changes to AutoShift Fallback mode.
- If the fault sets at power up, engine does not crank.
- If the fault sets while driving, the vehicle remains in the current gear and the clutch opens when the vehicle approaches idle. If the throttle is pressed, the default start gear engages and the clutch will close.
- No lights are illuminated on the Push Button if the fault occurs prior to power up or while in neutral. Only the current Mode light will be illuminated if the fault occurs while driving.The Push Button starts to tone when the vehicle approaches a stop and continues until power is returned.

Conditions to Set Fault Code Inactive

Only Inactive faults can be cleared from the TECU or HCM history using ServiceRanger. The TECU automatically clears faults from history after 200 hours. The HCM automatically clears a fault from history after it has been Inactive for 200 hours.

Possible Causes

This fault code can be caused by any of the following:

- FMI 2
  - Ignition power supply to TECU
  - TECU

Additional Tools

- Basic hand tools
- Eaton® Test Adapter Kit J43318
- Digital Volt/Ohm Meter J46708
- ServiceRanger

© 2015 Eaton. All rights reserved

Component Identification

NOTE: Refer to the Eaton Hybrid Component and Connector Location page for Connector Locations

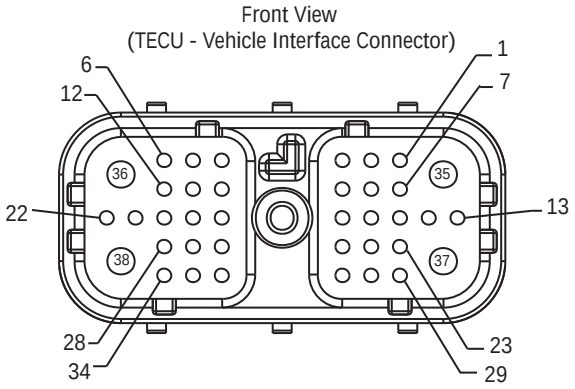

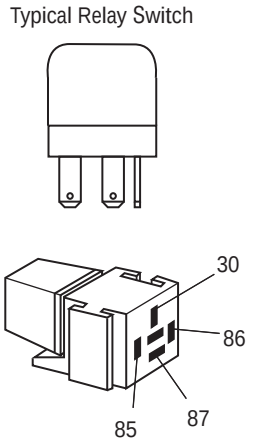

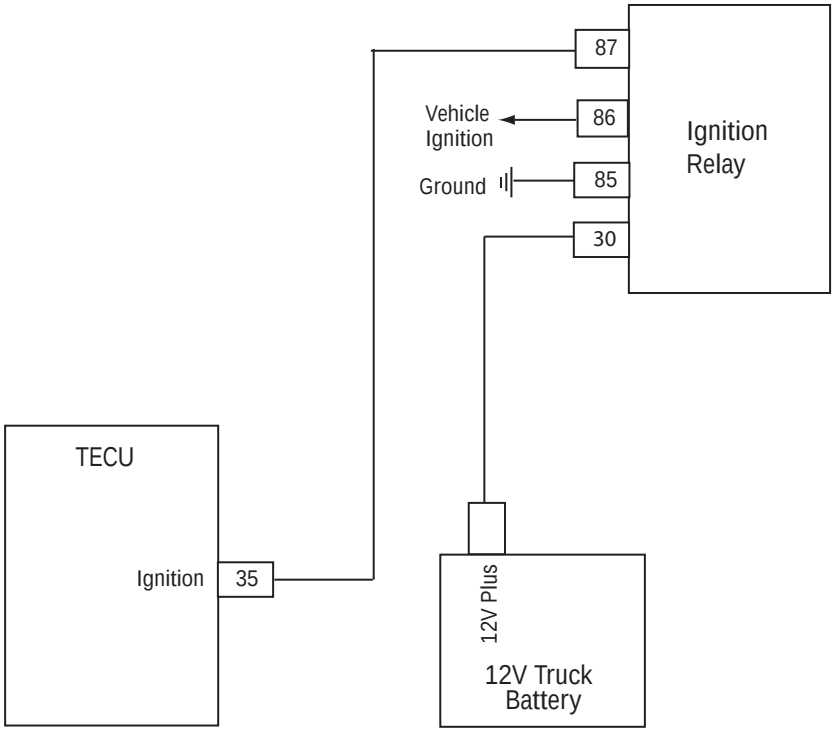

© 2015 Eaton. All rights reserved

https://truckmanualshub.com/

Fault Code 32 - Loss of Switched Ignition Power (TECU)

A ***Purpose:*** *Check for Active or Inactive fault code status and perform Electrical Pretest.*

1. Retrieve Active fault codes and FMIs with ServiceRanger using the 9-Way Diagnostic Connector.
2. Perform the Electrical Pretest (see “Electrical Pretest” on page 25).
   - If Fault Code 32 is Active after performing Electrical Pretest, replace the **Transmission Electronic Control Unit (TECU)** (only if fault code is Active), then go to **Step V.**
   - If Fault Code 32 is Inactive after performing the Electrical Pretest, clear codes (see “Clear Inactive Faults” on page 13), then go to **Step V.**

V ***Purpose:*** *Verify repair.*

1. Key off.
2. Key on.
3. Clear codes, see “Clear Inactive Faults” on page 13.
4. Reconnect all connectors and the negative battery cable.
5. Drive the vehicle and attempt to reset the code.
6. Check for codes, see “View Active and Inactive Faults” on page 13.
   - If no codes, test is complete.
   - If Fault Code 32 appears, go to **Step A.** Find error in testing.
   - If a code other than 32 appears, go to “Fault Code Isolation Procedure Index” on page 14.

© 2015 Eaton. All rights reserved

Fault Code 33 - Low Battery Voltage (TECU)

J1587: MID 130 PID 168 FMI 4
J1939: SA 3 SPN168 FMI 4

Overview

The Transmission Electronic Control Unit (TECU) is mounted to the transmission and contains the software to control the transmission operation; however, the Hybrid Control Module (HCM) controls the operation of the TECU during normal hybrid mode operation. The HCM main battery power is a fused 12-volt feed that runs through the HCM 38-Way Vehicle Connector with the main ground wire returning to the battery negative terminal.

Detection

The following preconditions must be met before the system detects the fault:

- TECU ignition voltage is greater than 7 volts and less than 16 volts.

Conditions to Set Fault Code Active

The following conditions must be met to set the fault code Active:

- FMI 4 is set when the TECU battery voltage drops below 7 volts for more than 1 second.

Note: When troubleshooting an Inactive code refer to the "Product Diagnostic Mode (PDM)" on page 19.

Fallback

When Fault Code 33 is set the following conditions occur:

- Fault is stored in TECU memory.
- TECU switches to AutoShift Fallback mode.
- No lights are illuminated on the Push Button. If this fault occurs prior to power up, the vehicle will not crank. If this fault occurs while driving, the vehicle maintains the current gear. The clutch opens when the vehicle stops.

Conditions to Set Fault Code Inactive

Only Inactive faults can be cleared from the TECU or HCM history using ServiceRanger. The TECU automatically clears faults from history after 200 hours. The HCM automatically clears a fault from history after it has been Inactive for 200 hours.

Possible Causes

This fault code can be caused by any of the following:

- FMI 4 has several areas that may cause this fault:
  - Power supply to TECU
  - Low batteries or bad main power connection
  - Charging system
  - TECU

Additional Tools

- Basic hand tools
- Eaton® Test Adapter Kit J43318
- Digital Volt/Ohm Meter J46708
- ServiceRanger

© 2015 Eaton. All rights reserved

https://truckmanualshub.com/

Component Identification

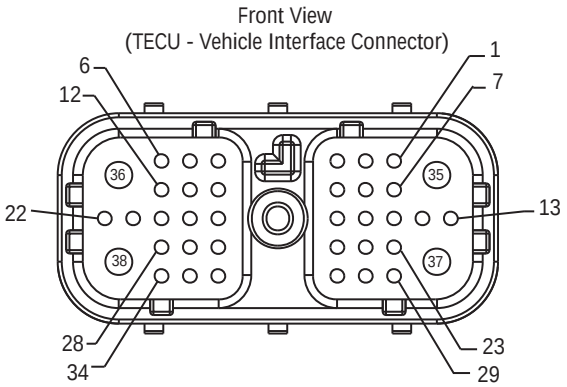

NOTE: Refer to the Eaton Hybrid Component and Connector Location page for Connector Locations

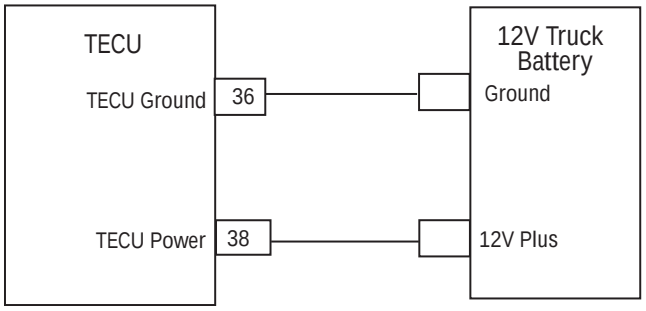

© 2015 Eaton. All rights reserved

Fault Code 33 - Low Battery Voltage (TECU)

A ***Purpose:*** *Check for Active or Inactive fault code status and perform Electrical Pretest.*

1. Retrieve Active fault codes and FMIs with ServiceRanger using the 9-Way Diagnostic Connector.
2. Perform the Electrical Pretest (see “Electrical Pretest” on page 25):
   - If Fault Code 33 is Active after performing the Electrical Pretest, replace **Transmission Electronic Control Unit (TECU)** (only if Fault Code is Active), then go to **Step V.**
   - If Fault Code 33 is Inactive after performing the Electrical Pretest, clear codes (see “Clear Inactive Faults” on page 13.) Go to **Step V.**

V ***Purpose:*** *Verify repair.*

1. Key off.
2. Key on.
3. Clear codes, see “Clear Inactive Faults” on page 13.
4. Reconnect all connectors and the negative battery cable.
5. Drive the vehicle and attempt to reset the code.
6. Check for codes, see “View Active and Inactive Faults” on page 13.
   - If no codes, test is complete.
   - If Fault Code 33 appears, find error in testing, go to **Step A.**
   - If a code other than 33 appears, go to “Fault Code Isolation Procedure Index” on page 14.

© 2015 Eaton. All rights reserved

https://truckmanualshub.com/

Fault Code 34 - Weak Battery Voltage Fault (TECU)

J1587: MID 130 PID 168 FMI 14
J1939: SA 3 SPN 168 FMI 14

Overview

The Transmission Electronic Control Unit (TECU) is mounted to the transmission and contains the software that controls transmission operation. The Hybrid Control Module (HCM) controls the operation of the TECU during normal hybrid mode operation. The HCM main battery power is a fused 12-volt feed that runs through the HCM 38-Way Vehicle Connector with the main ground wire returning to the battery negative terminal.

Detection

The following preconditions must be met before the system detects the fault:

- TECU ignition voltage is greater than 7 volts and less than 16 volts.
- TECU System Battery Voltage Low Fault is Inactive.

Conditions to Set Fault Code Active

The following conditions must be met to set the fault code Active:

- FMI 14 is set when the TECU battery voltage drops below 9 volts for 10 seconds.

Note: When troubleshooting an Inactive code refer to the “Product Diagnostic Mode (PDM)” on page 19.

Fallback

When Fault Code 34 is set the following conditions occur:

- Fault is stored in TECU memory.
- TECU switches to AutoShift Fallback mode.
- If this fault occurs while moving, it causes a 1-speed fallback.
- If the vehicle is stopped, the starting gear and reverse can be engaged.

Conditions to Set Fault Code Inactive

Only Inactive faults can be cleared from the TECU or HCM history using ServiceRanger. The TECU automatically clears faults from history after 200 hours. The HCM automatically clears a fault from history after it has been Inactive for 200 hours.

Possible Causes

This fault code can be caused by any of the following:

- FMI 14 has several areas that may cause this fault:
  - Power supply to TECU
  - Low batteries or bad main power connection
  - Charging system
  - TECU

Additional Tools

- Basic hand tools
- Eaton® Test Adapter Kit J43318
- Digital Volt/Ohm Meter J46708
- ServiceRanger

© 2015 Eaton. All rights reserved

Component Identification

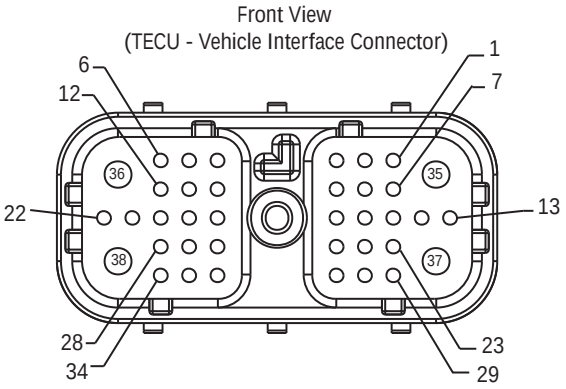

NOTE: Refer to the Eaton Hybrid Component and Connector Location page for Connector Locations

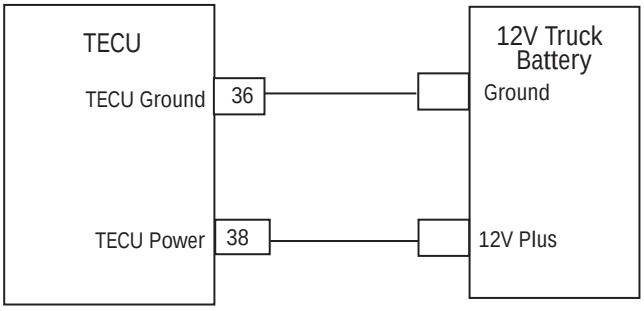

© 2015 Eaton. All rights reserved

https://truckmanualshub.com/

Fault Code 34 - Weak Battery Voltage Fault (TECU)

A ***Purpose:*** *Check for Active or Inactive fault code status and perform Electrical Pretest.*

1. Retrieve Active fault codes and FMIs with ServiceRanger using the 9-Way Diagnostic Connector.
2. Perform the Electrical Pretest (see “Electrical Pretest” on page 25):
   - If Fault Code 34 is Active after performing the Electrical Pretest, replace **Transmission Electronic Control Unit (TECU)** (only if Fault Code is Active), then go to **Step V.**
   - If Fault Code 34 is Inactive after performing the Electrical Pretest, clear codes (see “Clear Inactive Faults” on page 13.) Go to **Step V.**

V ***Purpose:*** *Verify repair.*

1. Key off.
2. Key on.
3. Clear codes, see “Clear Inactive Faults” on page 13.
4. Reconnect all connectors and the negative battery cable.
5. Drive the vehicle and attempt to reset the code.
6. Check for codes, see “View Active and Inactive Faults” on page 13.
   - If no codes, test is complete.
   - If Fault Code 34 appears, go to **Step A.** Find error in testing.
   - If a code other than 34 appears, go to “Fault Code Isolation Procedure Index” on page 14.

© 2015 Eaton. All rights reserved

Fault Code 35 - J1939 Communication Link (TECU)

J1587: MID 130 SID 231 FMI 2
J1939: SA 3 SPN 639 FMI 2

Overview

J1939 is a high-speed twisted pair 250K data link with one 120 ohm resistor at each end of the link. The Transmission Electronic Control Unit (TECU) is connected to the J1939 data link at the 38-Way Connector. This link is used to transmit information to the Hybrid Control Module (HCM) as well as communicate with or receive data from the other modules on the network such as the Electronic Control Unit (ECU).

Detection

The following preconditions must be met before the system detects the fault:

- TECU ignition voltage is greater than 7 volts and less than 16 volts.
- TECU Battery Voltage Low fault is Inactive.

Conditions to Set Fault Code Active

The following conditions must be met to set the fault code Active:

- FMI 2 is set when the TECU loses communication with all modules on the J1939 data link for 5 or more seconds.

Note: When troubleshooting an Inactive code refer to the "Product Diagnostic Mode (PDM)" on page 19.

Fallback

When Fault Code 35 is set the following conditions occur:

- Red "Service" light illuminates and an "F" flashes in the gear display.
- Fault is stored in TECU memory.
- The operation mode changes to AutoShift Fallback mode.
- If the fault sets at power up, the engine will not crank.
- If the fault sets while driving, the vehicle remains in current gear and the clutch opens when vehicle speed approaches idle.

Conditions to Set Fault Code Inactive

Only Inactive faults can be cleared from the TECU or HCM history using ServiceRanger. The TECU automatically clears faults from history after 200 hours. The HCM automatically clears a fault from history after it has been Inactive for 200 hours.

Possible Causes

This fault code can be caused by any of the following:

- FMI 2
  - J1939 Data Link
  - TECU

Additional Tools

- Basic hand tools
- Eaton® Test Adapter Kit J43318
- Digital Volt/Ohm Meter J46708
- ServiceRanger

© 2015 Eaton. All rights reserved

https://truckmanualshub.com/

Component Identification

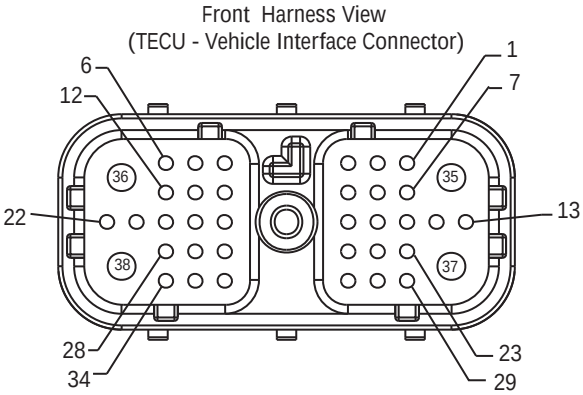

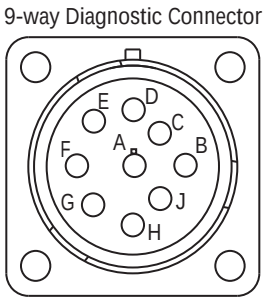

NOTE: Refer to the Eaton Hybrid Component and Connector Location page for Connector Locations

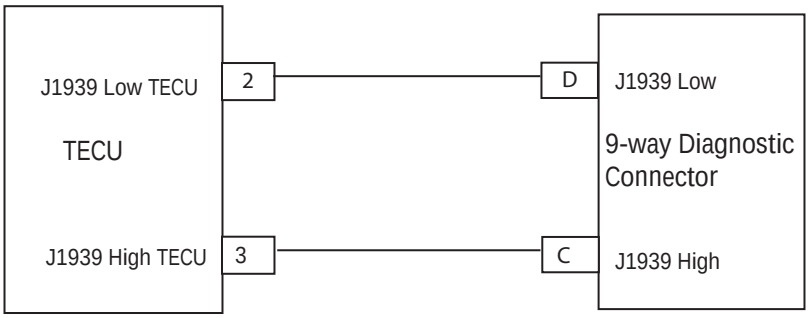

© 2015 Eaton. All rights reserved

Fault Code 35 - J1939 Communication Link (TECU)

A

Purpose: *Check for Active or Inactive fault code status.*

1. Retrieve Active fault codes and FMIs with ServiceRanger using the 9-Way Diagnostic Connector.
2. Key on.
3. Select the "Vehicle Components" screen and view the various modules reporting on the J1939 link:
   - If the TECU is not reporting on J1939, but the HCM is listed, go to **Step B.**
   - If neither the HCM nor the TECU are reporting on J1939, go to **Step C.**

B

Purpose: *Verify continuity of Vehicle Interface circuits.*

1. Key off.
2. Disconnect negative battery cable.
3. Disconnect TECU Vehicle Harness 38-way connector.
4. Measure resistance between TECU Vehicle Harness 38-Way Connector Pin 2 and Pin 3:

   Note: Make sure the Volt/Ohm Meter is on the proper scale (around 200 ohm scale).

   - If resistance between Pin 2 and Pin 3 is between 50–70 ohms, replace **Transmission Electronic Control Unit (TECU)**, then go to **Step V.**
   - If resistance is outside of range, repair the J1939 Data link Harness, then go to **Step V.**

Connection	Measurement
Pin 2 and Pin 3	

© 2015 Eaton. All rights reserved

https://truckmanualshub.com/

C

Purpose: *Verify continuity of Transmission Harness diagnostic connector.*

1. Key off.
2. Measure resistance between the diagnostic connector 9-Way Pin C and Pin D.
   - If resistance between Pin C and Pin D is between 50–70 ohms, go to **Step D.**
   - If resistance is 70 ohms or greater, one or more of the terminating resistors on the J1939 Data Link Harness is missing or out of range, or there is an open in the link. Go to **Step V.**
   - If resistance is 50 ohms or less, there is an additional terminating resistor present. Repair the OEM J1939 Data Link Harness, then go to **Step V.**

Connection	Measurement
Pin C and Pin D	

D

Purpose: *Verify continuity of Transmission Harness diagnostic connector circuits to ground.*

1. Key off.
2. Measure the resistance between the following 9-Way Diagnostic Connector Pins:
   - Pin C to ground
   - Pin D to ground
   - If resistance between Pin C to ground and Pin D to ground are both 10K ohms or greater, attempt to communicate with another vehicle to ensure ServiceRanger is working. If ServiceRanger fails to communicate with another vehicle, call 1-800-826-HELP (4357).
   - If resistance is outside of range, repair J1939 Data Link Harness for a short to ground, then go to **Step V.**

Connection	Measurement
Pin C to ground	
Pin D to ground	

© 2015 Eaton. All rights reserved

V ***Purpose:*** *Verify repair*

1. Key off.
2. Key on.
3. Clear codes, see “Clear Inactive Faults” on page 13.
4. Reconnect all connectors and the negative battery cable.
5. Drive the vehicle and attempt to reset the code.
6. Check for codes, see “View Active and Inactive Faults” on page 13.
   - If no codes, test is complete.
   - If Fault Code 35 appears, find error in testing, go to **Step A.**
   - If a code other than 35 appears, go to “Fault Code Isolation Procedure Index” on page 14.

© 2015 Eaton. All rights reserved

https://truckmanualshub.com/

Fault Code 36 - J1939 Engine Message (TECU)

J1587: MID 130 SID 231 FMI 14
J1939: SA 3 SPN 639 FMI 14

Overview

J1939 is a high-speed twisted pair 250K data link with one 120 ohm resistor at each end of the link. The Transmission Electronic Control Unit (TECU) is connected to the J1939 data link at the 38-Way Connector. This link is used to transmit information to the Hybrid Control Module (HCM) and communicate with other modules on the network such as the Engine Control Unit (ECU).

Detection

The following preconditions must be met before the system detects the fault.

- TECU ignition voltage is greater than 7 volts and less than 16 volts.
- TECU Battery Voltage Low fault is Inactive.
- TECU J1939 data link fault is Inactive.

Conditions to Set Fault Code Active

The following conditions must be met to set the fault code Active:

- FMI 14 is set when the TECU fails to receive engine ECU data like engine torque for 5 seconds or greater, and it is still communicating with other modules on J1939.

Note: When troubleshooting an Inactive code refer to the “Product Diagnostic Mode (PDM)” on page 19.

Fallback

When Fault Code 36 is set the following conditions occur.

- Red “Service” light illuminates and an “F” flashes in the gear display.
- Fault is stored in TECU memory.
- If the fault occurs while moving, the TECU goes into AutoShift Fallback mode.
- Once the vehicle stops, start and reverse gears can be selected and the transmission operates in AutoSelect mode.
- If the fault occurs at power up, the vehicle will crank.

Conditions to Set Fault Code Inactive

Only Inactive faults can be cleared from the TECU or HCM history using ServiceRanger. The TECU automatically clears faults from history after 200 hours. The HCM automatically clears a fault from history after it has been Inactive for 200 hours.

Possible Causes

This fault code can be caused by any of the following:

- FMI 14
  - J1939 data link
  - ECU

Additional Tools

- Basic hand tools
- Eaton® Test Adapter Kit
- Digital Volt/Ohm Meter
- ServiceRanger

© 2015 Eaton. All rights reserved

Component Identification

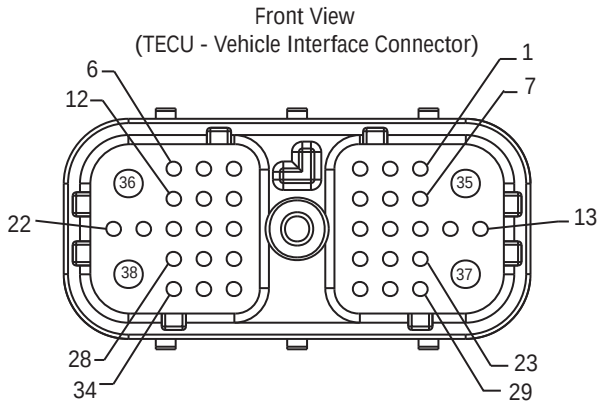

NOTE: Refer to the Eaton Hybrid Component and Connector Location page for Connector Locations

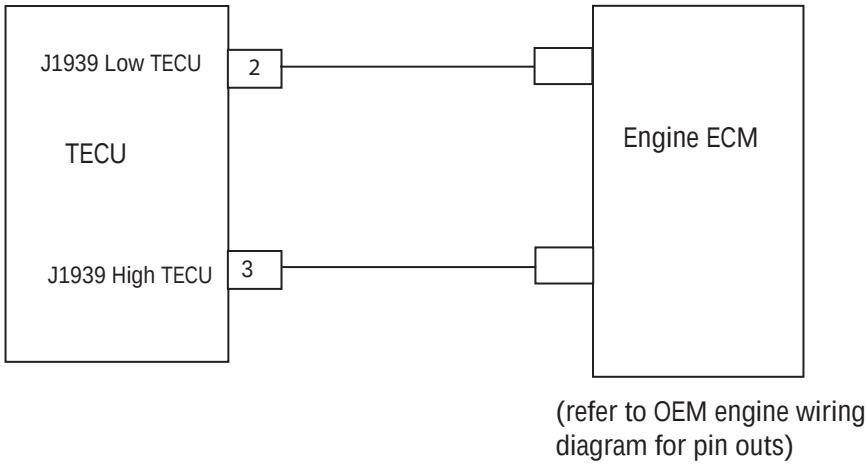

© 2015 Eaton. All rights reserved

https://truckmanualshub.com/

Fault Code 36 - J1939 Engine Message (TECU)

A

Purpose: *Check for Active or Inactive fault code status.*

1. Retrieve Active fault codes and FMIs with ServiceRanger using the 9-Way Diagnostic Connector:
   - If Fault Code 36 is Active, concern is either the ECU or the Data Link from Engine ECU to J1939 Data Link Backbone. Refer to OEM for repair procedure.
   - If Fault Code 36 is Inactive, test is complete.

© 2015 Eaton. All rights reserved

https://truckmanualshub.com/

Fault Code 37 - Power Supply (TECU)

J1587: MID 130 SID 251 FMI 5
J1939: SA 3 SPN 610 FMI 5

Overview

The Transmission Electronic Control Unit (TECU) is mounted to the transmission and contains the software that controls the transmission operation; however, the Hybrid Control Module (HCM) controls the operation of the TECU during normal hybrid mode. The TECU main battery power is a fused, 12-volt feed that runs through the TECU 38-Way Vehicle Connector with the main ground wire returning to the battery negative terminal.

Detection

The following preconditions must be met before the system detects the fault:

- TECU ignition voltage is greater than 7 volts and less than 16 volts.
- TECU only runs this test if the Electric Shifter is being cycled from N to gear.

Note: Changing the start gear from N allows this test to run.

Conditions to Set Fault Code Active

The following conditions must be met to set the fault code Active:

- FMI 5 is set when the TECU power supply resistance is measured before and during an electric shifter test and the results show a measurement of 0.4 ohms or greater.

Fallback

When Fault Code 37 is set the following conditions occur:

- Fault is stored in TECU memory.

Conditions to Set Fault Code Inactive

Only Inactive faults can be cleared from the TECU or HCM history using ServiceRanger. The TECU automatically clears faults from history after 200 hours. The HCM automatically clears a fault from history after that fault has been Inactive for 200 hours.

Possible Causes

This fault code can be caused by any of the following:

- FMI 5
  - Power supply to TECU
  - Low batteries or bad main power connection
  - Broken or corroded battery interconnect straps may also be the cause of high resistance readings

Additional Tools

- Basic hand tools
- Eaton® Test Adapter Kit J43318
- Digital Volt/Ohm Meter J46708
- ServiceRanger

© 2015 Eaton. All rights reserved

https://truckmanualshub.com/

Component Identification

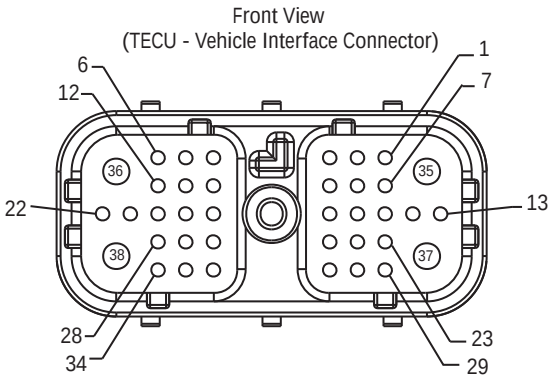

NOTE: Refer to the Eaton Hybrid Component and Connector Location page for Connector Locations

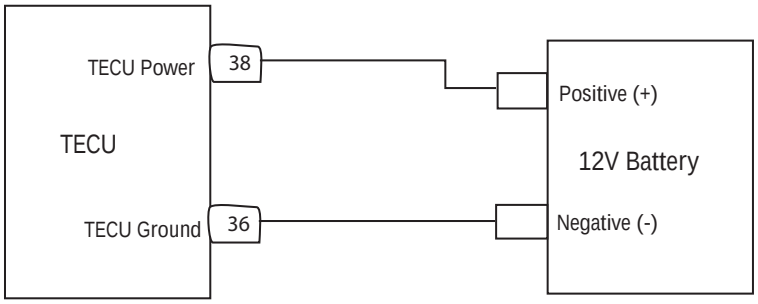

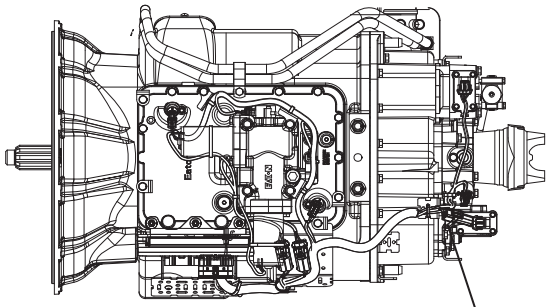

Warning! - Do Not Load Test at Diagnostic Port

4-Way Diagnostics Port

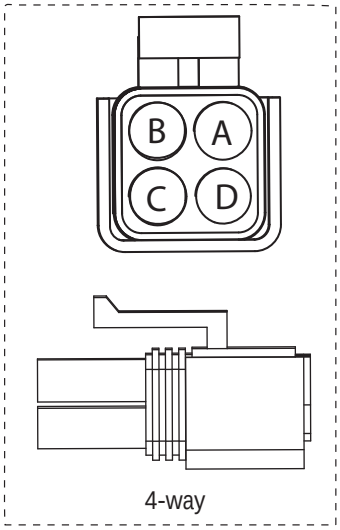

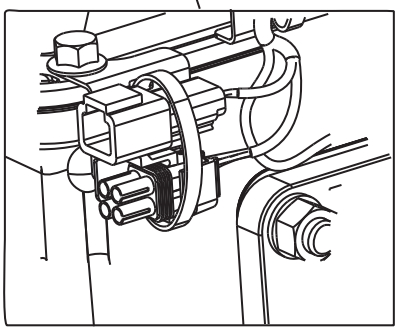

4-Way Diagnostic Port
(Located at the left rear
corner of the transmission.)

B - Service Bat. +
C - Service Bat. -
A - Service Ignition +

© 2015 Eaton. All rights reserved

Fault Code 37 - Power Supply (TECU)

A

Purpose: *Check for Active or Inactive fault code status and perform Electrical Pretest.*

1. Retrieve Active fault codes and FMIs with ServiceRanger using the 9-Way Diagnostic Connector.
2. Perform the Electrical Pretest (see “Electrical Pretest” on page 25).
   - If Fault Code 37 is Active after performing the Electrical Pretest, go to **Step B.**
   - If Fault Code 37 is Inactive after performing the Electrical Pretest, clear codes, see “Clear Inactive Faults” on page 13. Go to **Step V.**

B

Purpose: *Verify voltage at Transmission Harness Diagnostic Connector.*

1. Locate diagnostic port on Transmission Harness.
2. Key on.
3. Measure voltage between Pin C and the battery negative post.
   - If voltage between Pin C and battery negative post is 0.70 volts or less, go to **Step C.**
   - If voltage is outside of range, repair battery ground supply to TECU, then go to **Step V.**

Connection	Measurement
Pin C to negative	

C

Purpose: *Verify voltages at Transmission Harness diagnostic connector.*

1. Locate diagnostic port on Transmission Harness.
2. Key on.
3. Measure voltage between Pin B and Pin C.
   - If voltage between Pin B and Pin C is within 0.6 volts of battery voltage, go to **Step D.**
   - If voltage is outside of range, repair battery power supply to TECU. Fuse may be blown. Repeat test.

Connection	Measurement
Pin B to Pin C	

D

Purpose: *Verify voltages at Transmission Harness diagnostic connector.*

1. Key on.
2. Measure voltage between Pin A and Pin C.
   - If voltage between Pin A and Pin C is within 0.6 volts of battery voltage, go to **Step E.**
   - If voltage is outside of range, repair Ignition Power Supply to ECU. Fuse may be blown. Repeat test.

Connection	Measurement
Pin A to Pin C	

© 2015 Eaton. All rights reserved

https://truckmanualshub.com/

E ***Purpose:*** *Verify integrity of Vehicle Interface Harness connections.*

1. Key off.
2. Disconnect negative battery cable.
3. Disconnect the Vehicle Harness 38-Way Connector.
4. Inspect main power 38-Way Connector Terminals Pin 36 and Pin 38, inline fuse holder, and power supply connections for integrity and corrosion.
   - If no problem found, go to **Step V.**
   - If problem is found, repair power/ground path for the Main Power Supply, then go to **Step V.**

V ***Purpose:*** *Verify repair.*

1. Key off.
2. Clean and reconnect all connectors.
3. Key on.
4. Clear codes, see “Clear Inactive Faults” on page 13.
5. Drive vehicle and attempt to reset the code.
6. Check for codes, see “View Active and Inactive Faults” on page 13.
   - If no codes, test is complete.
   - If Fault Code 37 appears, go to **Step A.** Find error in testing.
   - If a code other than 37 appears, go to “Fault Code Isolation Procedure Index” on page 14.

© 2015 Eaton. All rights reserved

Fault Code 38 - Battery Fan Relay

J1939: SA 3 SPN 520243 FMI 3, 4, 5, 14

Overview

The Battery Fan Relay is normally an open relay connected to the Hybrid Control Module (HCM) on the control side. When the HCM powers the control circuit, it closes the relay contacts and turns on the relay. The Battery Fan Relay powers the Battery Fan located in the Power Electronics Carrier (PEC), cooling the high-voltage batteries.

Detection

The following preconditions must be met before the system detects the fault:

- The HCM ignition voltage is greater than 7 volts and less than 16 volts.

Conditions to Set Fault Code Active

The following conditions must be met to set the fault code Active:

- FMI 3 is set when the HCM detects a short to battery in the coil circuit of the Battery Fan Relay.
- FMI 4 is set when the HCM detects a short to ground in the coil circuit of the Battery Fan Relay.
- FMI 5 is set when the HCM detects an open in the coil circuit of the Battery Fan Relay.
- FMI 14 is set when the following conditions are true for 10 minutes:
  - High-voltage battery temperature is greater than 131 °F (55 °C)
  - Difference between the minimum and maximum battery temperatures is less than 33 °F (1 °C)
  - No battery temperature faults from the Battery Control Module

Note: When troubleshooting an Inactive code refer to the “Product Diagnostic Mode (PDM)” on page 19.

Fallback

When Fault Code 38 is set the following conditions occur:

- Amber “Check Hybrid” light illuminates.
- Fault is stored in HCM memory.

Conditions to Set Fault Code Inactive

Only Inactive faults can be cleared from the TECU or HCM history using ServiceRanger. The TECU automatically clears faults from history after 200 hours. The HCM automatically clears a fault from history after that fault has been Inactive for 200 hours.

Possible Causes

This fault code can be caused by any of the following:

- FMI 3, 4, 5
  - Vehicle Harness from HCM to Battery Fan Relay
  - Battery Fan Relay
  - HCM
- FMI 14
  - Battery Fan Relay
  - Battery Fan
  - Plugged Air Filter
  - Battery Fan Relay Main Power Supply

Additional Tools

- Basic hand tools
- Eaton® Test Adapter Kit
- Digital Volt/Ohm Meter
- ServiceRanger

© 2015 Eaton. All rights reserved

https://truckmanualshub.com/

Component Identification

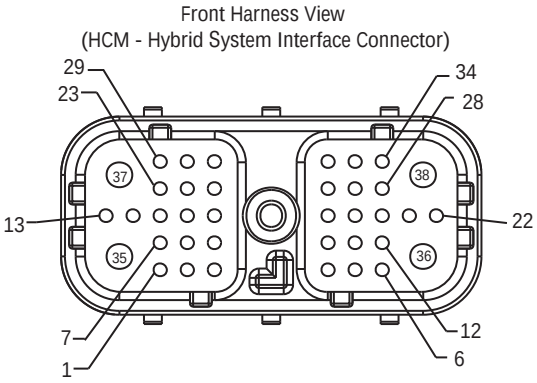

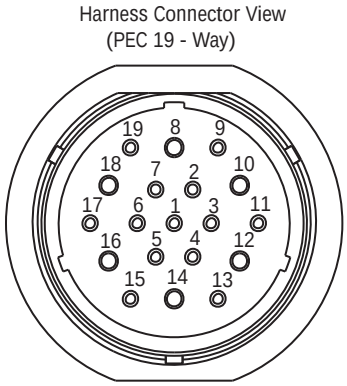

NOTE: Refer to the Eaton Hybrid Component and Connector Location page for Connector Locations

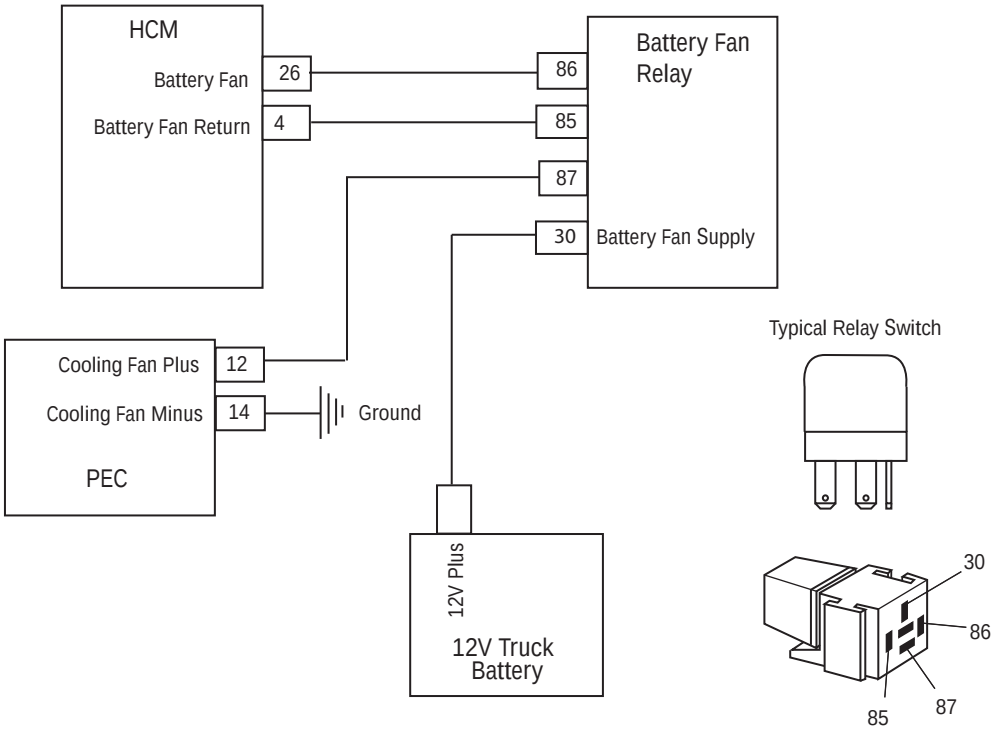

© 2015 Eaton. All rights reserved

Fault Code 38 - Battery Fan Relay

A

Purpose: *Check for Active or Inactive fault code status.*

1. Review and follow the “Warnings & Cautions” on page 1.
2. Retrieve Active fault codes and FMIs with ServiceRanger using the 9-Way Diagnostic Connector.

Warning: See “High-Voltage Service Shutdown and Power-Up Procedure” on page 4. Follow the procedures to avoid shock, burn or death from improperly handled high-voltage.

3. Exchange Battery Fan Relay with another relay to see if fault returns.
   - If fault does not return with new relay, replace the Battery Fan Relay, then go to **Step V.**
   - If fault returns with new relay, go to **Step B.**

B

Purpose: *Verify FMI present.*

1. Which FMIs were listed in Step A?

Note: The Battery Fan Relay must be wired according to Eaton® requirements (shown on previous page) for this test to work properly. If wired differently, consult OEM for correct wiring schematic.

- If FMI 5 is listed, go to **Step C.**
- If FMI 3 is listed, go to **Step D.**
- If FMI 4 is listed, go to **Step E.**
- If FMI 14 is listed, go to **Step F.**

C

Purpose: *Verify continuity of HCM Harness circuits.*

1. Key off.
2. Disconnect negative battery cable.
3. Disconnect the HCM Harness 38-Way Connector.
4. Measure the resistance between the HCM Harness 38-Way Connector Pin 26 and Pin 4:
   - If the resistance between Pin 26 and Pin 4 is 40–120 ohms, replace **Hybrid Control Module (HCM)** (Only if Fault Code is Active), then go to **Step V.**
   - If the resistance is outside the range, repair the Vehicle Harness for an open circuit, then go to **Step V.**

Connection	Measurement
Pin 26 to Pin 4	

© 2015 Eaton. All rights reserved

https://truckmanualshub.com/

D

Purpose: *Verify voltages of HCM Harness circuits.*

1. Key on.
2. Measure voltage between HCM Harness 38-Way Connector Pin 26 and ground at key on:
   - If voltage between Pin 26 and ground is 0 volts, replace the **Hybrid Control Module (HCM)** (only is fault code is Active), then go to **Step V.**
   - If voltage between Pin 26 and ground is 12 volts, repair the short to VBATT on the Harness, then go to **Step V.**

Connection	Measurement
Pin 26 to ground	

E

Purpose: *Verify continuity of HCM Harness circuits.*

1. Key off.
2. Disconnect negative battery cable.
3. Disconnect the HCM Harness 38-Way Connector.
4. Measure the resistance between HCM System Harness 38-Way Connector Pins 26 and ground:
   - If resistance between Pin 26 and ground is 10K ohms or greater, replace the **Hybrid Control Module (HCM)** (only is fault code is Active), then go to **Step V.**
   - If resistance is outside of range, repair the Vehicle Harness for a short to ground, then go to **Step V.**

Connection	Measurement
Pin 26 to ground	

© 2015 Eaton. All rights reserved

F

Purpose: *Verify condition of PEC Air Filter Element.*

1. Key off.
2. Remove and inspect the Air Filter* on the PEC Inlet and the Exhaust Screen on the PEC Outlet.
   - If the Air Filter and Exhaust Screen are clean and free from debris, go to **Step G.**
   - If the Air Filter is dirty or the Exhaust Screen is plugged, replace the **Air Filter** and clean the Exhaust Screen. Go to **Step V.**
   - * See **Air Filter**.

G

Purpose: *Verify operation of PEC Battery Fan.*

1. Key off.
2. Connect ServiceRanger to the 9-Way Diagnostic Connector in the cab.
3. Key on.
4. Go to Product Tests and select Battery Fan Relay.
5. Check for airflow from the front and rear air ports in the PEC.
   - If airflow can be felt from the PEC air inlet and exhaust, If Fault Code is Active contact Eaton® at 1-800-826-4357.
   - If airflow can not be felt from the PEC Air Inlet and Exhaust, go to **Step H.**

H

Purpose: *Verify voltages of PEC Harness circuits.*

1. Key on.
2. Disconnect the 19-Way Connector at the PEC.
3. Measure voltage at the 19-Way Connector from Pin 12 to Pin 14:
   - If voltage between Pin 12 and Pin 14 is ±0.2 volts of battery voltage, replace the **Power Electronics Carrier (PEC)**, then go to **Step V.**
   - If voltage between Pin 12 and Pin 14 is outside of range, repair wiring or relay problem. Refer to OEM.

Connection	Measurement
Pin 12 to Pin 14	

© 2015 Eaton. All rights reserved

https://truckmanualshub.com/

V ***Purpose:*** *Verify repair.*

1. Key off.
2. Reconnect all connectors and negative battery cable.
3. Key on.
4. Clear codes, see “Clear Inactive Faults” on page 13.
5. Drive the vehicle and attempt to reset the code.
6. Check for codes, see “View Active and Inactive Faults” on page 13.
   - If no codes, test is complete.
   - If Fault Code 38 appears, go to **Step A.** Find error in testing.
   - If a code other than 38 appears, go to “Fault Code Isolation Procedure Index” on page 14.

© 2015 Eaton. All rights reserved

Fault Code 39 - Heat Exchanger Relay

J1939: SA 239 SPN 520247 FMI 3, 4, 5

Overview

The Heat Exchanger Fan Relay is an open relay connected to the Hybrid Control Module (HCM) on the control side. When the HCM turns on the relay, it powers the control circuit, closing the relay contacts. The Heat Exchange Fan Relay powers the Heat Exchanger Fan located on the hybrid liquid cooling system radiator. The fan provides additional airflow in certain situations such as slow driving or ePTO operation.

Detection

The following preconditions must be met before the system detects the fault:

- The HCM ignition voltage is greater than 7 volts and less than 16 volts.

Conditions to Set Fault Code Active

The following conditions must be met to set the fault code Active:

- FMI 3 is set when the HCM detects a short to battery in the coil circuit of the Heat Exchanger Fan Relay.
- FMI 4 is set when the HCM detects a short to ground in the coil circuit of the Heat Exchanger Fan Relay.
- FMI 5 is set when the HCM detects an open in the coil circuit of the Heat Exchanger Fan Relay.

Note: When troubleshooting an Inactive code refer to the "Product Diagnostic Mode (PDM)" on page 19.

Fallback

When Fault Code 39 is set the following conditions occur:

- Amber "Check Hybrid" light illuminates.
- Fault is stored in HCM memory.

Conditions to Set Fault Code Inactive

Only Inactive faults can be cleared from the TECU or HCM history using ServiceRanger. The TECU automatically clears faults from history after 200 hours. The HCM automatically clears a fault from history after that fault has been Inactive for 200 hours.

Possible Causes

This fault code can be caused by any of the following:

- FMI 3, 4, 5
  - Vehicle Harness from HCM to Heat Exchanger Relay
  - Heat Exchanger Relay
  - HCM
  - Heat Exchanger Relay fuse

Additional Tools

- Basic hand tools
- Eaton® Test Adapter Kit
- Digital Volt/Ohm Meter
- ServiceRanger

© 2015 Eaton. All rights reserved

https://truckmanualshub.com/

Component Identification

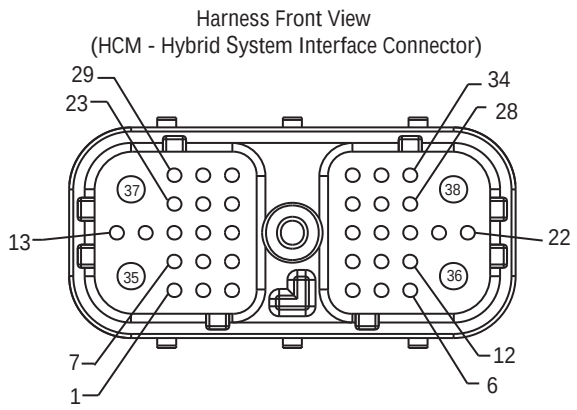

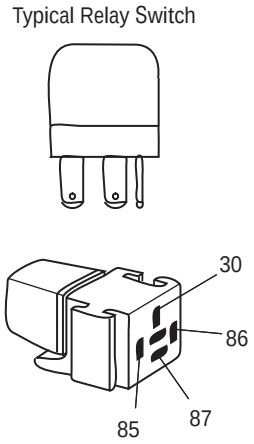

NOTE: Refer to the Eaton Hybrid Component and Connector Location page for Connector Locations

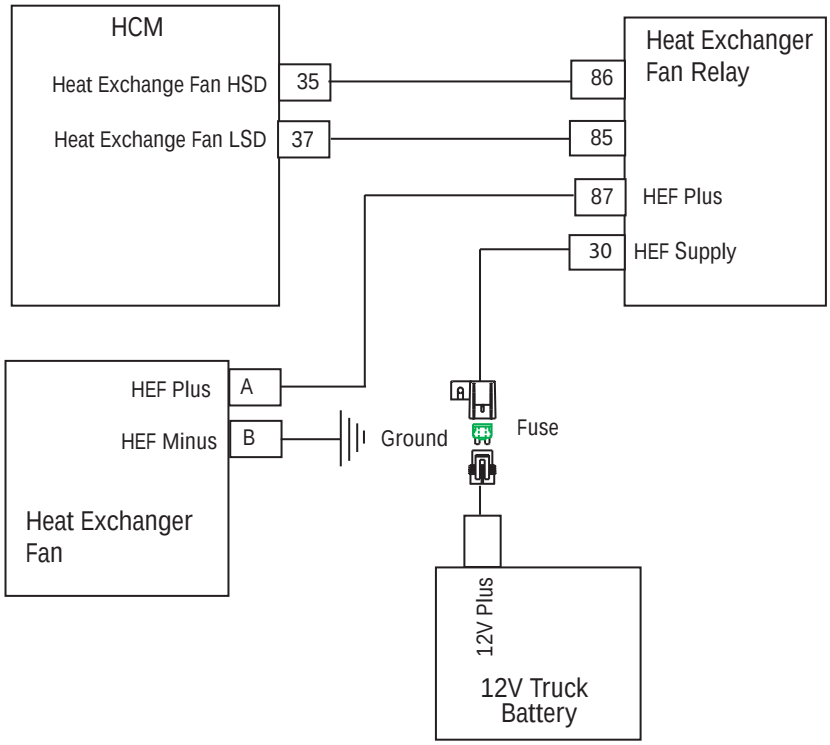

© 2015 Eaton. All rights reserved

Fault Code 39 - Heat Exchanger Relay

A

Purpose: *Check for Active or Inactive fault code status.*

1. Retrieve Active fault codes and FMIs with ServiceRanger using the 9-Way Diagnostic Connector.
2. Exchange Heat Exchanger Fan Relay with another relay and see if the fault returns:
   - If fault does not return with new relay, replace the Heat Exchanger Fan Relay, then go to **Step V.**
   - If fault returns with new relay, go to **Step B.**

B

Purpose: *Verify configuration of HCM.*

1. Key on.
2. Connect ServiceRanger to the 9-Way Diagnostic Connector.
3. Select “Configurations” menu and pick the “Hybrid Control Module” option.
4. Is there an option for Heat Exchanger Fan?
   - The Heat Exchanger Fan option is shown and the vehicle has the Hybrid Cooling System Heat Exchanger Fan installed. Go to **Step C.**
   - The Heat Exchanger Fan option is shown and the vehicle does not have the Hybrid Cooling System Heat Exchanger Fan installed, Write down the Model Number on the Transmission Tag and contact Eaton at 1-800-826-HELP (4357).

C

Purpose: *Verify FMIs present.*

1. Which FMIs were listed from Step A?

   Note: The Heat Exchanger Fan Relay must be wired according to Eaton requirements (shown on previous page) for this test to work properly. If wired differently consult OEM for correct wiring schematic.

   - If FMI 5 is listed, go to **Step D.**
   - If FMI 3 is listed, go to **Step E.**
   - If FMI 4 is listed, go to **Step F.**

© 2015 Eaton. All rights reserved

https://truckmanualshub.com/

D

Purpose: *Verify continuity of HCM Harness circuits.*

1. Key off.
2. Disconnect negative battery cable.
3. Disconnect the HCM Harness 38-Way Connector.
4. Measure the resistance between HCM Harness 38-Way Connector Pin 35 and Pin 37.
   - If resistance between Pins 35 and 37 is 40–120 ohms, replace the **Hybrid Control Module (HCM)** (only if fault code is Active), then go to **Step V.**
   - If resistance is outside of range, repair the Vehicle Harness for an open circuit or blown fuse, then go to **Step V.**

Connection	Measurement
Pin 35 to Pin 37	

E

Purpose: *Verify voltages of HCM Harness circuits to ground.*

1. Key on.
2. Measure the voltage between HCM System Harness 38-Way Connector Pin 35 and ground.
   - If voltage between Pin 35 and ground is 0 volts, replace the **Hybrid Control Module (HCM)** (only if fault code is Active), then go to **Step V.**
   - If voltage between Pin 35 and ground is 12 volts, repair the short to VBATT on the harness, then go to **Step V.**

Connection	Measurement
Pin 35 to ground	

© 2015 Eaton. All rights reserved

F

Purpose: *Verify continuity of HCM Harness circuits to ground.*

1. Key off.
2. Disconnect negative battery cable.
3. Disconnect the HCM Harness 38-Way Connector.
4. Measure the resistance between HCM System Harness 38-Way Connector Pin 35 and ground.
   - If resistance between Pin 35 and ground is 10K ohms or greater, replace the **Hybrid Control Module (HCM)** (only if fault code is Active), then go to **Step V.**
   - If resistance is outside of range, repair the Vehicle Harness for a short to ground, then go to **Step V.**

Connection	Measurement
Pin 35 to ground	

V

Purpose: *Verify repair.*

1. Key off.
2. Reconnect all connectors and negative battery cable.
3. Key on.
4. Clear codes, see “Clear Inactive Faults” on page 13.
5. Drive the vehicle and attempt to reset the code.
6. Check for codes, see “View Active and Inactive Faults” on page 13.
   - If no codes, test is complete.
   - If Fault Code 39 appears, go to **Step A.** Find error in testing.
   - If a code other than 39 appears, go to “Fault Code Isolation Procedure Index” on page 14.

© 2015 Eaton. All rights reserved

https://truckmanualshub.com/

Fault Code 40 - Cooling Pump Relay

J1939: SA 239 SPN 520248 FMI 3, 4, 5, 14

Overview

The Cooling Pump Relay is an open relay connected to the Hybrid Control Module (HCM) on the control side. When the HCM powers the control circuit, it closes the relay contacts and turns on the relay. The Cooling Pump Relay powers the Cooling Pump that circulates the coolant on the hybrid liquid system.

Detection

The following preconditions must be met before the system detects the fault:

- The HCM ignition voltage is greater than 7 volts and less than 16 volts.

Conditions to Set Fault Code Active

The following conditions must be met to set the fault code Active:

- FMI 3 is set when the HCM detects a short to battery in the coil circuit of the Cooling Pump Relay.
- FMI 4 is set when the HCM detects a short to ground in the coil circuit of the Cooling Pump Relay.
- FMI 5 is set when the HCM detects an open in the coil circuit of the Cooling Pump Relay.
- FMI 14 is set when the following occur for 10 minutes or longer:
  - Inverter temperature is greater than 122 °F (50 °C)
  - The difference between the maximum battery temperature and the Inverter temperature is greater than 68 °F (20 °C)
  - No battery temperature or motor temperature faults

Note: When troubleshooting an Inactive code refer to the “Product Diagnostic Mode (PDM)” on page 19.

Fallback

When Fault Code is set the following conditions occur:

- Amber “Check Hybrid” light illuminates.
- Fault is stored in HCM memory.

Conditions to Set Fault Code Inactive

Only Inactive faults can be cleared from the TECU or HCM history using ServiceRanger. The TECU automatically clears faults from history after 200 hours. The HCM automatically clears a fault from history after that fault has been Inactive for 200 hours.

Possible Causes

This fault code can be caused by any of the following:

- FMI 3, 4, 5
  - Vehicle Harness from HCM to Cooling Pump Relay
  - Cooling Pump Relay
  - HCM
- FMI 14
  - Cooling Pump Relay
  - Cooling Pump
  - Cooling Pump Relay main power supply
  - Low coolant, Low coolant flow, plugged radiator, fan operation

Additional Tools

- Basic hand tools
- Eaton® Test Adapter Kit
- Digital Volt/Ohm Meter
- ServiceRanger

© 2015 Eaton. All rights reserved

Component Identification

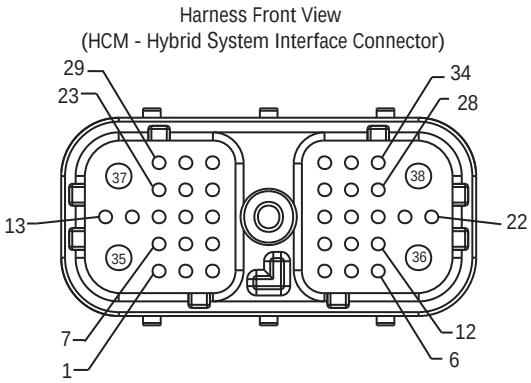

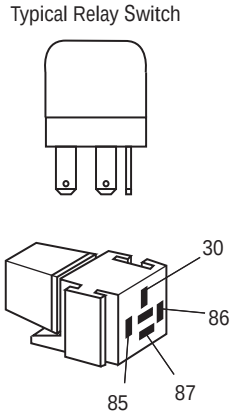

NOTE: Refer to the Eaton Hybrid Component and Connector Location page for Connector Locations

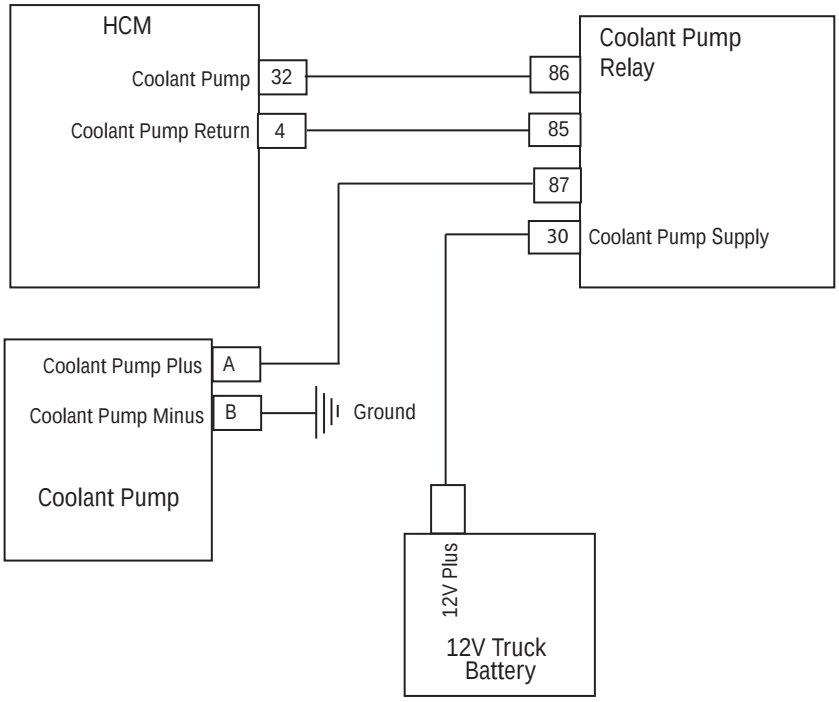

© 2015 Eaton. All rights reserved

https://truckmanualshub.com/

Fault Code 40 - Cooling Pump Relay

A

Purpose: *Check for Active or Inactive fault code status.*

1. Review and follow the "Warnings & Cautions" on page 1.
2. Retrieve Active fault codes and FMIs with ServiceRanger using the 9-Way Diagnostic Connector.

Warning: See "High-Voltage Service Shutdown and Power-Up Procedure" on page 4. Follow the procedures to avoid shock, burn or death from improperly handled high-voltage.

3. Exchange Cooling Pump Relay with another relay and see if fault returns:
   - If fault does not return with new relay, replace the Cooling Pump Relay, then go to **Step V.**
   - If fault returns with new relay, go to **Step B.**

B

Purpose: *Verify FMI present.*

1. Which FMIs were listed from Step A?

Note: The Cooling Pump Relay must be wired according to Eaton® requirements (shown on previous page) for this test to work properly. If wired differently, consult OEM for correct wiring schematic.

- If FMI 5 is listed, go to **Step C.**
- If FMI 3 is listed, go to **Step D.**
- If FMI 4 is listed, go to **Step E.**
- If FMI 14 is listed, go to **Step F.**

C

Purpose: *Verify continuity of HCM Harness circuits.*

1. Key off.
2. Disconnect negative battery cable.
3. Disconnect the HCM Harness 38-Way Connector.
4. Measure the resistance between the HCM Harness 38-Way Connector Pin 32 and Pin 4.
   - If resistance between Pin 32 and Pin 4 is 40–120 ohms, replace **Hybrid Control Module (HCM)** (only if fault code is Active), then go to **Step V.**
   - If resistance is outside of range, repair the Vehicle Harness for an open circuit, then go to **Step V.**

Connection	Measurement
Pin 32 to Pin 4	

© 2015 Eaton. All rights reserved

D

Purpose: *Verify voltages of HCM Harness circuits to ground.*

1. Key on.
2. Measure voltage between HCM Harness 38-Way Connector Pin 32 and ground at key on.
   - If voltage between Pin 32 and ground is 0 volts, replace the **Hybrid Control Module (HCM)** (only if fault code is Active), then go to **Step V.**
   - If voltage between Pin 32 and ground is 12 volts, repair the short to VBATT on the harness, then go to **Step V.**

Connection	Measurement
Pin 32 to ground	

E

Purpose: *Verify continuity of HCM Harness circuits to ground.*

1. Key off.
2. Disconnect negative battery cable.
3. Disconnect the HCM System Harness 38-Way Connector.
4. Measure the resistance between the HCM System Harness 38-Way Connector Pins 32 and ground:
   - If resistance between Pin 32 and ground is 10K ohms or greater, replace the **Hybrid Control Module (HCM)** (only if fault code is Active), then go to **Step V.**
   - If resistance is outside of range, repair the Vehicle Harness for a short to ground, then go to **Step V.**

Connection	Measurement
Pin 32 to ground	

F

Purpose: *Verify level of Hybrid System coolant.*

1. Key off.
2. Note the level of the coolant in the Hybrid Liquid Cooling System:
   - If the coolant is within the recommended limits, go to **Step G.**
   - If the coolant is below the recommended limits, refer to OEM for coolant type and fill procedure. Go to **Step V.**

© 2015 Eaton. All rights reserved

https://truckmanualshub.com/

G

Purpose: *Verify operation of Hybrid System Coolant Pump.*

1. Key off.
2. Connect ServiceRanger to the 9-Way Diagnostic Connector in the cab.
3. Key on.
4. Go to “Product Tests” and select “Coolant Pump Relay.”
5. Listen for the Coolant Pump to turn on and watch coolant flow in the reservoir.
   - If the Coolant Pump runs with coolant moving through the reservoir, and the Fault Code is Active, contact Eaton® at 1-800-826-4357.
   - If the Coolant Pump does not run, go to **Step H.**
   - If the Coolant Pump runs and coolant does not flow, check for kinks or sharp bends in the coolant lines. If okay, contact OEM for concerns with Coolant Pump.

H

Purpose: *Verify voltages at Hybrid System Coolant Pump.*

1. Key on.
2. Disconnect the 2-Way Connector at the Coolant Pump.
3. Measure voltage at the 2-Way Connector from Pin A to Pin B.
   - If voltage between Pin A and Pin B is ±0.2 volts of battery voltage, refer to OEM for Coolant Pump problem.
   - If voltage between Pin A and Pin B is outside of range, repair wiring or relay problem. Refer to OEM.

Connection	Measurement
Pin A to Pin B	

© 2015 Eaton. All rights reserved

https://truckmanualshub.com/

V ***Purpose:*** *Verify repair.*

1. Key off.
2. Reconnect all connectors and negative battery cable.
3. Key on.
4. Clear codes, see “Clear Inactive Faults” on page 13.
5. Drive the vehicle and attempt to reset the code.
6. Check for codes, see “View Active and Inactive Faults” on page 13.
   - If no codes, test is complete.
   - If Fault Code 40 appears, go to **Step A.** Find error in testing.
   - If a code other than 40 appears, go to “Fault Code Isolation Procedure Index” on page 14.

© 2015 Eaton. All rights reserved

https://truckmanualshub.com/

Fault Code 47 - J1939 ABS Message (HCM)

J1939: SA 239 SPN 563 FMI 2, 9, 14

Overview

J1939 is a high-speed twisted pair 250K data link with one 120 ohm resistor at each end of the link. The HCM is connected to the J1939 data link at the 38-Way Connector. This link is used to transmit information to the HCM and communicate with the other modules on the network such as the Anti-lock Braking System (ABS) module.

Detection

The following preconditions must be met before the system detects the fault:

- HCM ignition voltage is greater than 7 volts and less than 16 volts.
- J1939 data link communication fault is Inactive.

Conditions to Set Fault Code Active

The following conditions must be met to set the fault code Active:

- FMI 9 is set when the HCM fails to receive ABS message “Anti-Lock Braking Active” for 30 consecutive messages or greater, while it continues communicating with other modules on J1939.
- FMI 14 is set when the HCM detects messages coming from the ABS module; however, the “Anti-Locking Braking Active” message is received as an error or not available.

Note: When troubleshooting an Inactive code refer to the “Product Diagnostic Mode (PDM)” on page 19.

Fallback

When Fault Code 47 is set the following conditions occur:

- Amber “Check Hybrid” light illuminates.
- Fault is stored in HCM memory.
- If the fault occurs while moving, the operation goes into AutoShift Only mode.
- Electric Motor/Generator Assist and Regeneration are disabled; however, the high-voltage relays remain powered.
- Transmission defaults start gear to 1st.

Note: If the vehicle experiences an ABS event, the hybrid regenerative braking is stopped until ABS communication continues, but the vehicle will still have motor assist.

Conditions to Set Fault Code Inactive

Only Inactive faults can be cleared from the TECU or HCM history using ServiceRanger. The TECU automatically clears faults from history after 200 hours. The HCM automatically clears a fault from history after that fault has been Inactive for 200 hours.

Possible Causes

This fault code can be caused by any of the following:

- FMI 9
  - J1939 Data Link
  - ABS Module
- FMI 14
  - ABS module configured to communicate on J1708 or analog instead of J1939.
  - ABS Module

Additional Tools

- Basic hand tools
- Eaton® Test Adapter Kit
- Digital Volt/Ohm Meter
- ServiceRanger

© 2015 Eaton. All rights reserved

Component Identification

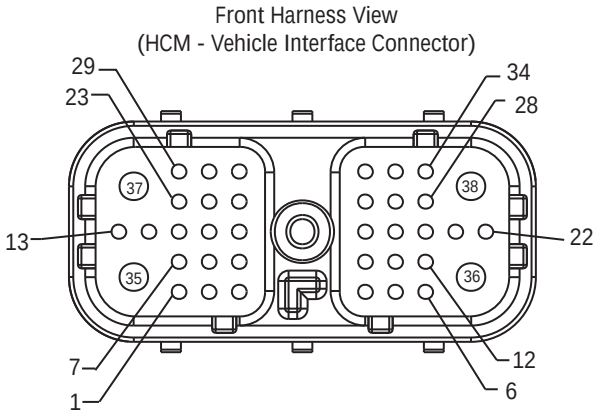

NOTE: Refer to the Eaton Hybrid Component and Connector Location page for Connector Locations

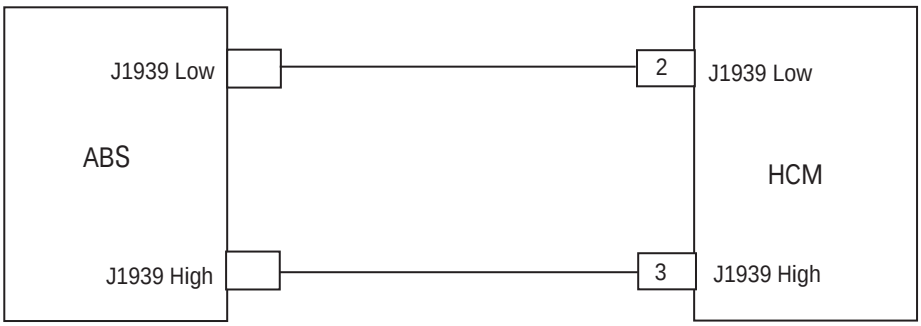

© 2015 Eaton. All rights reserved

https://truckmanualshub.com/

Fault Code 47 - J1939 ABS Message (HCM)

A

Purpose: *Verify Active and Inactive fault code status and present FMIs.*

1. Retrieve the Active fault codes and FMIs with ServiceRanger using the 9-Way Diagnostic Connector.
2. Which FMIs are present?
   - If Fault Code 47 FMI 9 is listed, concern is either with the ABS Module or the J1939 Data Link from ABS Module to J1939 Data Link Backbone. Refer to OEM for repair procedures.
   - If Fault Code 47 FMI 14 is listed, concern is with the ABS Module being configured for J1708 instead of J1939 communication, or with the ABS Module. Refer to OEM for repair procedures.

© 2015 Eaton. All rights reserved

Fault Code 48 - J1939 Transmission Message (HCM)

J1939: SA 239 SPN 523 FMI 2, 9

Overview

J1939 is a high-speed twisted pair 250K data link with one 120 ohm resistor at each end of the link. The Hybrid Control Module (HCM) is connected to the J1939 data link at the 38-Way Connector. This link transmits information to the HCM and communicates with other modules on the network such as the Transmission Electronic Control Unit (TECU).

Detection

The following preconditions must be met before the system detects the fault:

- HCM ignition voltage is greater than 7 volts and less than 16 volts.
- J1939 data link communication fault is Inactive.

Conditions to Set Fault Code Active

The following conditions must be met to set the fault code Active:

- FMI 9 is set when the HCM fails to receive TECU data for 30 consecutive messages or greater, while it continues communicating with other modules on J1939.

Note: When troubleshooting an Inactive code refer to the "Product Diagnostic Mode (PDM)" on page 19.

Fallback

When Fault Code 48 is set the following conditions occur:

- Amber "Check Hybrid" light illuminates.
- Fault is stored in HCM memory.
- Red "Service" light may illuminate and a "F" may flash in the gear display due to an Active Fault Code 24.
- Operation mode changes to "AutoShift Only" mode.
- Electric Motor/Generator Assist and Regeneration are disabled; however, the high-voltage relays remain powered.
- If the fault sets at power up, the engine will not crank.
- If the fault sets while driving, the vehicle will shift; however, when the vehicle stops the clutch opens and remains in the open position.
- Transmission defaults start gear to 1st.

Conditions to Set Fault Code Inactive

Only Inactive faults can be cleared from the TECU or HCM history using ServiceRanger. The TECU automatically clears faults from history after 200 hours. The HCM automatically clears a fault from history after that fault has been Inactive for 200 hours.

Possible Causes

This fault code can be caused by any of the following:

- FMI 9
  - J1939 Data Link
  - TECU

Additional Tools

- Basic hand tools
- Eaton® Test Adapter Kit
- Digital Volt/Ohm Meter
- ServiceRanger

© 2015 Eaton. All rights reserved

https://truckmanualshub.com/

Component Identification

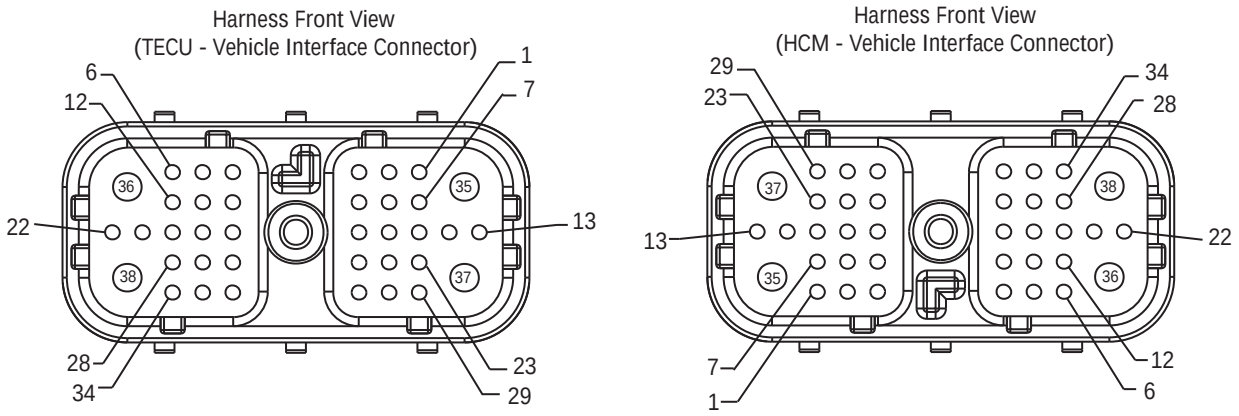

NOTE: Refer to the Eaton Hybrid Component and Connector Location page for Connector Locations

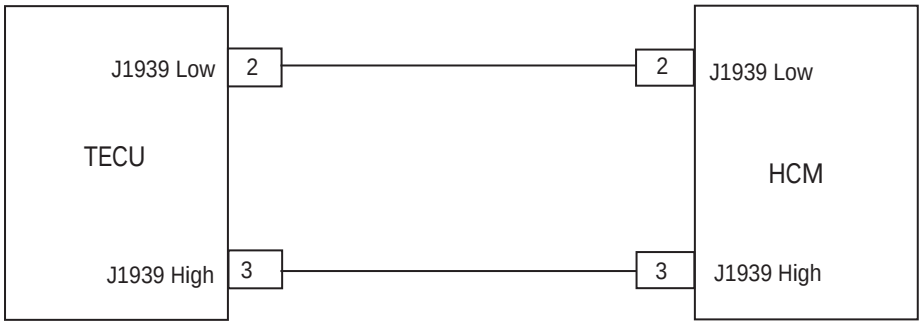

© 2015 Eaton. All rights reserved

Fault Code 48 - J1939 Transmission Message (HCM)

A ***Purpose:*** *Verify Active and Inactive fault code status and perform Electrical Pretest.*

1. Retrieve Active fault codes and FMIs with ServiceRanger using the 9-Way Diagnostic Connector.
2. Perform the Electrical Pretest (see “Electrical Pretest” on page 25):
   - If no issues found during the Electrical Pretest, go to **Step B.**
   - If issue was repaired during the Electrical Pretest, go to **Step V.**

B ***Purpose:*** *Verify continuity of TECU Harness circuits.*

1. Key off.
2. Disconnect negative battery cable.
3. Disconnect TECU Harness 38-Way Connector.
4. Measure the resistance between the TECU Harness 38-Way Connector Pin 2 and Pin 3:

   Note: Make sure the Volt/Ohm Meter is on the proper scale (around 200 ohm scale).

   - If resistance between Pin 2 and Pin 3 is between 50–70 ohms, replace the **Transmission Electronic Control Unit (TECU)**, then go to **Step V.**
   - If resistance is outside of range, repair J1939 Data Link Harness, then go to **Step V.**

Connection	Measurement
Pin 2 to Pin 3	

© 2015 Eaton. All rights reserved

https://truckmanualshub.com/

V ***Purpose:*** *Verify repair.*

1. Key off.
2. Reconnect all connectors and the negative battery cable.
3. Key on.
4. Clear codes, see “Clear Inactive Faults” on page 13.
5. Drive the vehicle and attempt to reset the code.
6. Check for codes, see “View Active and Inactive Faults” on page 13.
   - If no codes, test is complete.
   - If Fault Code 48 appears, go to **Step A.** Find error in testing.
   - If a code other than 48 appears, go to “Fault Code Isolation Procedure Index” on page 14.

© 2015 Eaton. All rights reserved

Fault Code 49 - J1939 Engine Message (HCM)

J1939: SA 239 SPN 190 FMI 2, 9

Overview

J1939 is a high-speed twisted pair 250K data link with one 120 ohm resistor at each end of the link. The Hybrid Control Module (HCM) is connected to the J1939 data link at the 38-Way Connector. This link transmits information to the HCM and communicate with other modules on the network such as the Electronic Control Unit (ECU).

Detection

The following preconditions must be met before the system detects the fault:

- HCM ignition voltage is greater than 7 volts and less than 16 volts.
- J1939 data link communication fault is Inactive.

Conditions to Set Fault Code Active

The following conditions must be met to set the fault code Active:

- FMI 9 is set when the HCM fails to receive Engine ECU data (like engine torque) for 30 consecutive messages or greater, while still communicating with other modules on J1939.

Note: When troubleshooting an Inactive code refer to the "Product Diagnostic Mode (PDM)" on page 19.

Fallback

When Fault Code 49 is set the following conditions occur:

- Amber "Check Hybrid" light illuminates.
- Fault is stored in HCM memory.
- Operation mode changes to "AutoShift Only" mode.
- Electric Motor/Generator Assist and Regeneration are disabled; however, high-voltage relays remain powered.
- Transmission defaults start gear to 1st.

Conditions to Set Fault Code Inactive

Only Inactive faults can be cleared from the TECU or HCM history using ServiceRanger. The TECU automatically clears faults from history after 200 hours. The HCM automatically clears a fault from history after that fault has been Inactive for 200 hours.

Possible Causes

This fault code can be caused by any of the following:

- FMI 9
  - J1939 Data Link from Engine ECU
  - ECU

Additional Tools

- Basic hand tools
- Eaton® Test Adapter Kit
- Digital Volt/Ohm Meter
- ServiceRanger

© 2015 Eaton. All rights reserved

https://truckmanualshub.com/

Component Identification

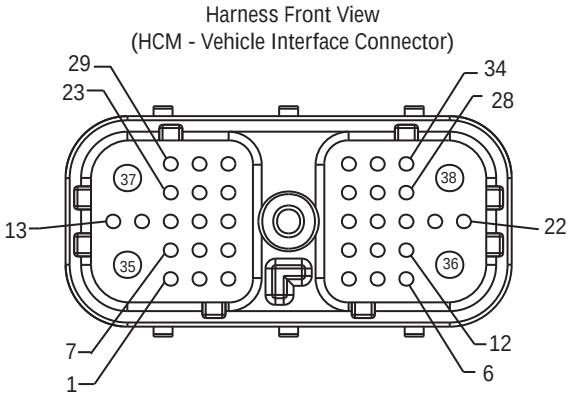

NOTE: Refer to the Eaton Hybrid Component and Connector Location page for Connector Locations

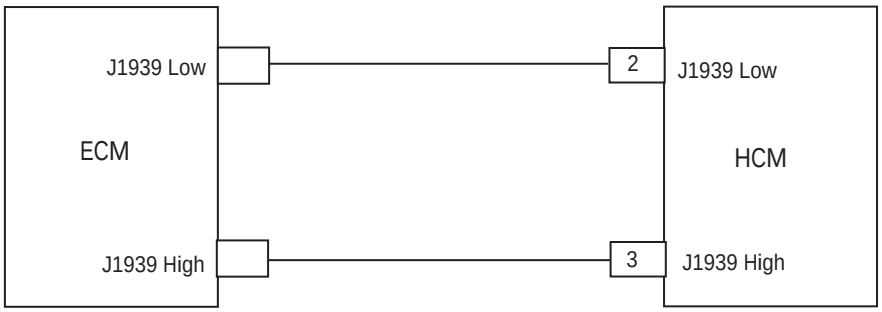

© 2015 Eaton. All rights reserved

Fault Code 49 - J1939 Engine Message (HCM)

A ***Purpose:*** *Check for Active and Inactive fault code status.*

1. Retrieve Active fault codes and FMIs with ServiceRanger using the 9-Way Diagnostic Connector:
   - If Fault Code 49 is Active, concern is either with the Engine ECU or the Data Link from Engine ECU to J1939 Data Link Backbone. Refer to OEM for repair procedure.
   - If Fault Code 49 is Inactive, test is complete.

© 2015 Eaton. All rights reserved

https://truckmanualshub.com/

Fault Code 50 - J1939 Body Controller Message (HCM)

J1939: SA 239 SPN 701 FMI 2, 9

Overview

J1939 is a high-speed twisted pair 250K data link with one 120 ohm resistor at each end of the link. The Hybrid Control Module (HCM) connects to the J1939 data link at the 38-Way Connector. This link transmits information to the HCM and communicates with the other modules on the network such as the Body Controller.

Detection

The following preconditions must be met before the system detects the fault:

- HCM ignition voltage is greater than 7 volts and less than 16 volts.
- J1939 data link communication fault is not active.

Conditions to Set Fault Code Active

The following conditions must be met to set the fault code Active:

- FMI 9 is set when the HCM fails to receive Body Controller data for 5 seconds or greater, while it is still communicating with other modules on J1939.

Note: When troubleshooting an Inactive code refer to the "Product Diagnostic Mode (PDM)" on page 19.

Fallback

When Fault Code 50 is set the following conditions occur:

- Amber and red lights do not illuminate since the Body Controller activates the lights.
- Fault is stored in HCM memory.
- HCM disables ePTO operation, since parameters like hydraulic demand are unavailable.

Conditions to Set Fault Code Inactive

Only Inactive faults can be cleared from the Transmission Electronic Control Unit (TECU) or HCM history using ServiceRanger. The TECU automatically clears faults from history after 200 hours. The HCM automatically clears a fault from history after that fault has been Inactive for 200 hours.

Possible Causes

This fault code can be caused by any of the following:

- FMI 9
  - J1939 Data Link
  - Body Controller

Additional Tools

- Basic hand tools
- Eaton® Test Adapter Kit
- Digital Volt/Ohm Meter
- ServiceRanger

© 2015 Eaton. All rights reserved

Component Identification

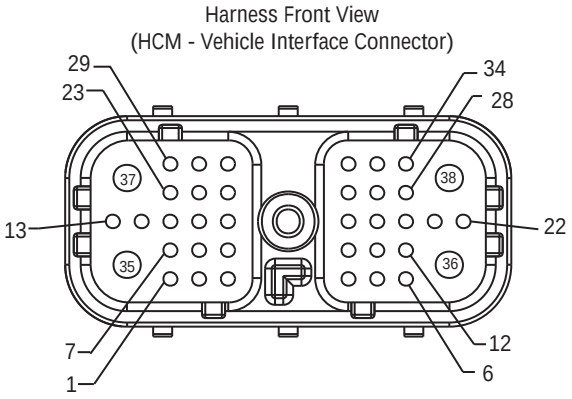

NOTE: Refer to the Eaton Hybrid Component and Connector Location page for Connector Locations

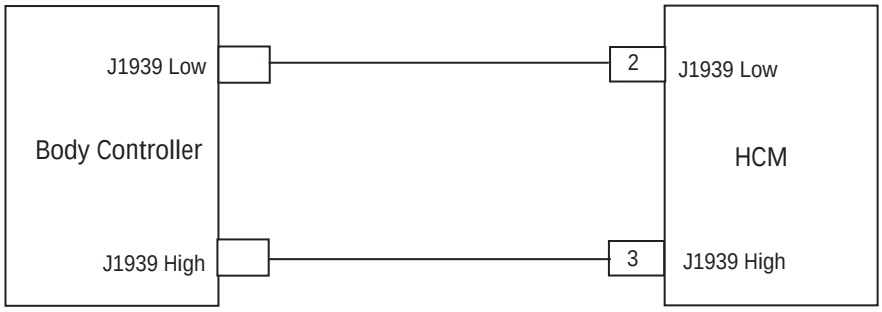

© 2015 Eaton. All rights reserved

https://truckmanualshub.com/

Fault Code 50 - J1939 Body Controller Message (HCM)

A ***Purpose:*** *Verify Active or Inactive fault code status.*

1. Retrieve Active fault codes and FMIs with ServiceRanger using the 9-Way Diagnostic Connector:
   - If Fault Code 50 is Active, concern is either with the Body Controller or the Data Link from Body Controller to J1939 Data Link Backbone. Refer to OEM for repair procedure.
   - If Fault Code 50 is Inactive, test is complete.

© 2015 Eaton. All rights reserved

Fault Code 51 - Rail Position Sensor

J1587: MID 130	**PID 60**	**FMI 2, 3, 4, 10**
J1939: SA 3	**SPN 60**	**FMI 2, 3, 4, 10**

Overview

The Rail Position Sensor is a Hall Effect position sensor that provides feedback on the position of the shift finger. The Transmission Electronic Control Unit (TECU) delivers a constant 5-volt reference to 1 terminal of the Rail Position Sensor. The signal output from sensor provides a regulated voltage signal from 0.5–4.5 volts. The last terminal provides a ground for the Rail Position Sensor to the TECU.

Detection

The following preconditions must be met before the system detects the fault:

- TECU ignition voltage is greater than 7 volts and less than 16 volts.
- FMIs 3 and 4 do not set if the TECU System Battery Voltage Low fault is Active. FMI 2 do not set if FMI 3, 4 is Active.

Conditions to Set Fault Code Active

The following conditions must be met to set the fault code Active:

- FMI 2 sets when the transmission controller detects the Rail Sensor voltage is above 4.5 volts or below 0.5 volts for 1 second of longer.
- FMI 3 sets when the transmission controller detects the Rail Sensor supply voltage is 5% above the expected supply voltage for 1 second or longer.
- FMI 4 set when the transmission controller detects the Rail Sensor supply voltage is 5% below the expected supply voltage for 1 second or longer.
- FMI 10 (refer to troubleshooting guide TRTS0930)

Note: When troubleshooting an Inactive code refer to the "Product Diagnostic Mode (PDM)" on page 19.

Fallback

When Fault Code 51 is set the following conditions occur:

- Red "Service" light illuminates and an "F" flashes in the gear display.
- Fault is stored in TECU memory.
- If this fault occurs while moving, the transmission remains in the current gear and the clutch opens when the vehicle stops.
- The operation mode changes to "AutoShift Fallback" mode.

Conditions to Set Fault Code Inactive

Only Inactive faults can be cleared from the TECU or HCM history using ServiceRanger. The TECU automatically clears faults from history after 200 hours. The HCM automatically clears a fault from history after that fault has been Inactive for 200 hours.

Possible Causes

This fault code can be caused by any of the following:

- FMI 2, 10
  - Transmission Harness
  - Rail Position Sensor
  - TECU
- FMI 3, 4
  - TECU

Additional Tools

- Basic hand tools
- Eaton® Test Adapter Kit
- Digital Volt/Ohm Meter
- ServiceRanger

© 2015 Eaton. All rights reserved

https://truckmanualshub.com/

Component Identification

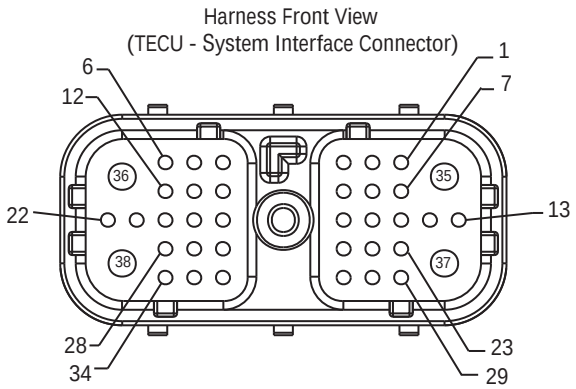

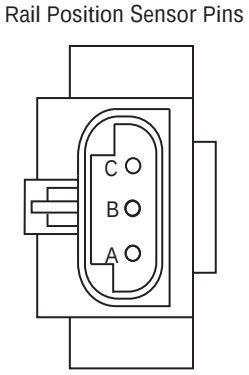

NOTE: Refer to the Eaton Hybrid Component and Connector Location page for Connector Locations

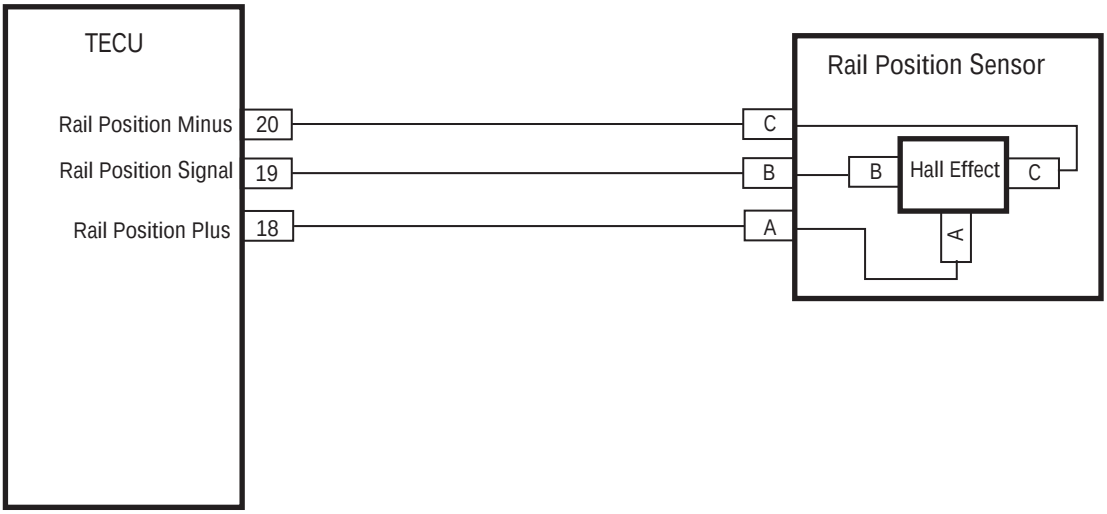

© 2015 Eaton. All rights reserved

Fault Code 51 - Rail Position Sensor

A ***Purpose:*** *Verify Active and Inactive fault code status and FMIs.*

1. Retrieve Active fault codes and FMIs with ServiceRanger using the 9-Way Diagnostic Connector.
2. Key off.
3. Which FMIs are present?
   - If FMI 3 or 4 is listed, replace the **Transmission Electronic Control Unit (TECU)**, then go to **Step V.**
   - If FMI 2, 10 is listed, go to **Step B.**

B ***Purpose:*** *Verify continuity of Transmission Harness circuits.*

1. Key off.
2. Disconnect negative battery cable.
3. Disconnect the Transmission Harness 38-Way Connector.
4. Measure resistance between the Transmission Harness 38-Way Connector Pins:
   - 18 and 19
   - 18 and 20

   Note: An auto-ranging digital Volt/Ohm Meter must be used.

   - If Pin 18 and Pin 19 resistance is 100–200 ohms and if Pin 18 and 20 resistance is 5K to 7K ohms, go to **Step C.**
   - If any of the above conditions are not met, go to **Step D.**

Connection	Measurement
Pin 18 to Pin 19	
Pin 18 to Pin 20	

© 2015 Eaton. All rights reserved

https://truckmanualshub.com/

C

Purpose: *Verify continuity of Transmission Harness circuits to ground.*

1. Measure resistance between Transmission Harness 38-Way Connector Pin 18 to ground.
   - If resistance is 10K ohms or greater, replace the **Transmission Electronic Control Unit (TECU)** (Only if Fault Code is Active), then go to **Step V.**
   - If resistance is less than 10K ohms, go to **Step D.**

Connection	Measurement
Pin 18 to ground	

D

Purpose: *Verify continuity of Transmission Harness Rail Position Sensor circuit.*

1. Disconnect Transmission Harness from Rail Select Sensor.
2. Measure resistance between Rail Select Sensor Pins:
   - A and C
   - A and B

   Note: An auto-ranging digital Volt/Ohm Meter must be used.

   - If Pin A and Pin C resistance is 5K–7K and if Pin A and Pin B resistance is 100–200 ohms, replace the **Transmission Harness**, then go to **Step V.**
   - If any to the above conditions are not met, replace **Electric Shifter**, then go to **Step V.**

Connection	Measurement
Pin A to Pin C	
Pin A to Pin B	

© 2015 Eaton. All rights reserved

https://truckmanualshub.com/

V ***Purpose:*** *Verify repair.*

1. Key off.
2. Reconnect all connectors and the negative battery cable.
3. Key on.
4. Clear codes, see “Clear Inactive Faults” on page 13.
5. Drive the vehicle and attempt to reset the code.
6. Check for codes, see “View Active and Inactive Faults” on page 13.
   - If no codes, test is complete.
   - If Fault Code 51 appears, go to **Step A.** Find error in testing.
   - If a code other than 51 appears, go to “Fault Code Isolation Procedure Index” on page 14.

© 2015 Eaton. All rights reserved

https://truckmanualshub.com/

Fault Code 52 - Gear Position Sensor

J1587: MID 130	**PID 59**	**FMI 2, 3, 4**
J1939: SA 3	**SPN 59**	**FMI 2, 3, 4**

Overview

The Rail Position Sensor is a Hall Effect position sensor that provides feedback on the position of the shift finger. The Transmission Electronic Control Unit (TECU) delivers a constant 5-volt reference to 1 terminal of the Rail Position Sensor. The signal output from sensor provides a regulated voltage signal from 0.5–4.5 volts. The last terminal provides a ground for the Rail Position Sensor to the TECU.

Detection

The following preconditions must be met before the system detects the fault:

- TECU ignition voltage is greater than 7 volts and less than 16 volts.
- FMI 3, 4 does not set if the TECU System Battery Voltage Low fault is Active. FMI 2 does not set if FMI 3, 4 is Active.

Conditions to Set Fault Code Active

The following conditions must be met to set the fault code Active:

- FMI 2 sets when the transmission controller detects the Rail Sensor voltage is above 4.5 volts or below 0.5 volts for 1 second of longer.
- FMI 3 sets when the transmission controller detects the Rail Sensor supply voltage is 5% above the expected supply voltage for 1 second or longer.
- FMI 4 set when the transmission controller detects the Rail Sensor supply voltage is 5% below the expected supply voltage for 1 second or longer.

Note: When troubleshooting an Inactive code refer to the “Product Diagnostic Mode (PDM)” on page 19

Fallback

When Fault Code 51 is set the following conditions occur:

- Red “Service” light illuminates and an “F” flashes in the gear display.
- Fault is stored in TECU memory.
- If this fault occurs while moving, the transmission remains in the current gear and the clutch opens when the vehicle stops.
- Operation mode changes to “AutoShift Fallback” mode.

Conditions to Set Fault Code Inactive

Only Inactive faults can be cleared from the Transmission Electronic Control Unit (TECU) or HCM history using ServiceRanger. The TECU automatically clears faults from history after 200 hours. The HCM automatically clears a fault from history after that fault has been Inactive for 200 hours.

Possible Causes

This fault code can be caused by any of the following:

- FMI 2
  - Transmission Harness
  - Rail Position Sensor
  - TECU
- FMI 3, 4
  - TECU

Additional Tools

- Basic hand tools
- Eaton® Test Adapter Kit
- Digital Volt/Ohm Meter
- ServiceRanger

© 2015 Eaton. All rights reserved

Component Identification

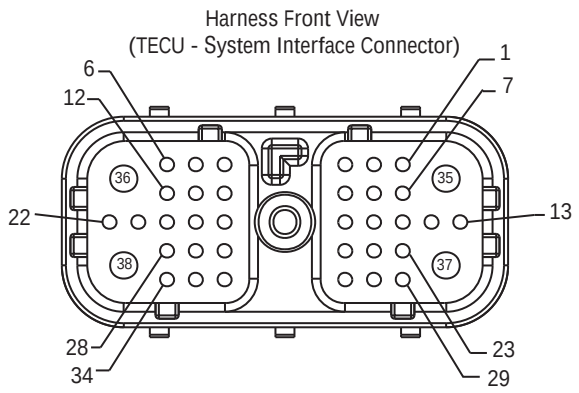

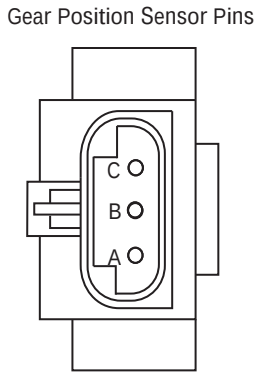

NOTE: Refer to the Eaton Hybrid Component and Connector Location page for Connector Locations

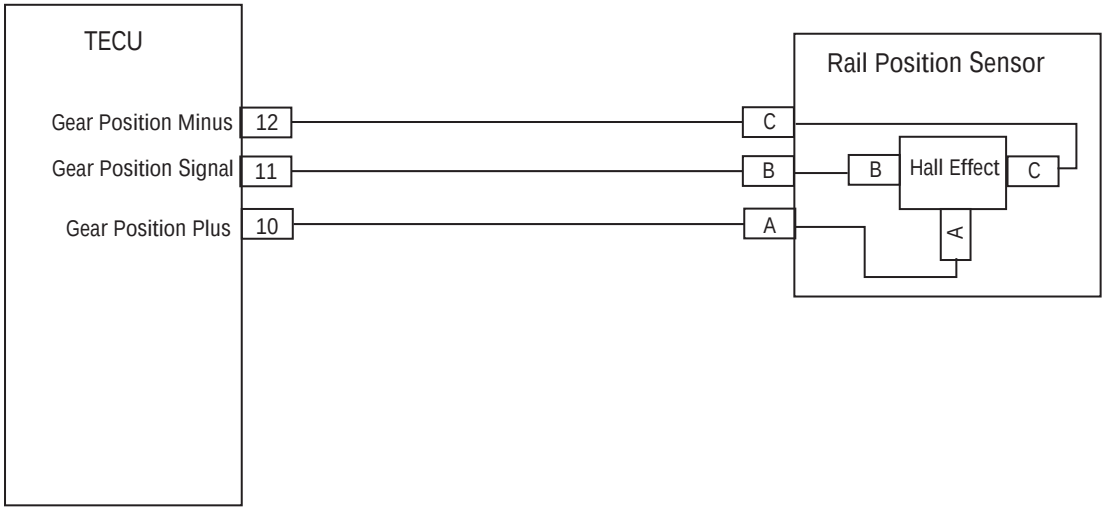

© 2015 Eaton. All rights reserved

https://truckmanualshub.com/

Fault Code 52 - Gear Position Sensor

A

Purpose: *Check for Active or Inactive fault code status.*

1. Retrieve Active fault codes and FMIs with ServiceRanger using the 9-Way Diagnostic Connector.
2. Key off.
3. Which FMIs are present?
   - If FMI 3 or 4 is listed, replace the **Transmission Electronic Control Unit (TECU)**, then go to **Step V.**
   - If FMI 2 is listed, go to **Step B.**

B

Purpose: *Verify continuity of Transmission Harness sensor circuits.*

1. Key off.
2. Disconnect negative battery cable.
3. Disconnect the Transmission Harness 38-Way Connector.
4. Measure resistance between the Transmission Harness 38-Way Connector Pins:
   - 18 and 19
   - 18 and 20

Note: An auto-ranging digital Volt/Ohm Meter must be used.

- If Pin 18 and Pin 19 resistance is 100–200 ohms and if Pin 18 and Pin 20 resistance is 5K–7K ohms, go to **Step C.**
- If any of the above conditions are not met, go to **Step D.**

Connection	Measurement
Pin 18 to Pin 19	
Pin 18 to Pin 20	

© 2015 Eaton. All rights reserved

C

Purpose: *Verify continuity of Transmission Harness sensor circuits to ground.*

1. Measure resistance between Transmission Harness 38-Way Connector Pin 18 to ground.
   - If resistance is 10K ohms or greater, replace the **Transmission Electronic Control Unit (TECU)** (Only if Fault Code is Active), then go to **Step V.**
   - If resistance is less than 10K ohms, go to **Step D.**

Connection	Measurement
Pin 18 to ground	

D

Purpose: *Verify continuity of Transmission Harness Gear Position Sensor circuit.*

1. Disconnect Transmission Harness from Rail Select Sensor.
2. Measure resistance between the following Rail Select Sensor Pins:
   - A and C
   - A and B

Note: An auto-ranging digital Volt/Ohm Meter must be used.

- If Pin A and Pin C resistance is 5K–7K and if Pin A and Pin B resistance is 100–200 ohms, replace the **Transmission Harness**, then go to **Step V.**
- If any to the above conditions are not met, replace **Electric Shifter**, then go to **Step V.**

Connection	Measurement
Pin A to Pin C	
Pin A to Pin B	

© 2015 Eaton. All rights reserved

https://truckmanualshub.com/

V ***Purpose:*** *Verify repair.*

1. Key off.
2. Reconnect all connectors and the negative battery cable.
3. Key on.
4. Clear codes, see “Clear Inactive Faults” on page 13.
5. Drive the vehicle and attempt to reset the code.
6. Check for codes, see “View Active and Inactive Faults” on page 13.
   - If no codes, test is complete.
   - If Fault Code 52 appears, find error in testing, go to **Step A.**
   - If a code other than 52 appears, go to “Fault Code Isolation Procedure Index” on page 14.

© 2015 Eaton. All rights reserved

Fault Code 53 - DC/DC Converter

J1939: SA 239 SPN 520244 FMI 12, 14

Overview

The DC/DC Converter is connected to the high-voltage Power Electronics Carrier (PEC), which provides 340 volts DC. The voltage is stepped down to 12-volts DC and used to maintain the 12-volt system during engine off PTO operation. The DC/DC maintains a steady 12.6 volts output and increases the amperage with vehicle demand up to 1.5 kw or 120 amps.

Detection

The following preconditions must be met before the system detects the fault:

- HCM ignition voltage is greater than 7 volts and less than 16 volts.

Conditions to Set Fault Code Active

The following conditions must be met to set the fault code Active:

- FMI 12 sets if vehicle voltage drop is greater than 0.7 volts from the start of ePTO mode, or if the vehicle battery is equal to or less than 11.3 volts. If there is no DC/DC to battery cable fault, this fault will set if the power drop across the DC/DC is less than 900W.
- FMI 14 sets if vehicle voltage drop is greater than 0.7 volts from the start of ePTO mode, or if the vehicle battery is equal to or less than 11.3 volts. If there is no DC/DC to battery cable fault, this fault will set if the power drop across the DC/DC is greater than 1500W.

Fallback

When Fault Code 53 is set the following conditions occur:

- Amber “Check Hybrid” light illuminates.
- Fault is stored in HCM memory.
- HCM requires the engine to power the PTO and maintain the 12-volt system.

Conditions to Set Fault Code Inactive

Only Inactive faults can be cleared from the Transmission Electronic Control Unit (TECU) or HCM history using ServiceRanger. The TECU automatically clears faults from history after 200 hours. The HCM automatically clears a fault from history after that fault has been Inactive for 200 hours.

Possible Causes

This fault code can be caused by any of the following:

- FMI 12
  - DC/DC Converter
- FMI 14
  - Vehicle load is above the maximum 1.5 kw output of the Converter

Additional Tools

- Basic hand tools
- ASTM Class 0 electrical insulating rubber gloves with leather protectors J48603
- Lockout bracket J48506
- Lockout tags
- ServiceRanger

© 2015 Eaton. All rights reserved

https://truckmanualshub.com/

Component Identification

Note: No Schematic for this code.

Note: For component location refer to the OEM service literature.

© 2015 Eaton. All rights reserved

Fault Code 53 - DC/DC Converter

A ***Purpose:*** *Verify Active and Inactive fault code status.*

1. Review and follow the “Warnings & Cautions” on page 1.
2. Retrieve Active fault codes and FMIs with ServiceRanger using the 9-Way Diagnostic Connector.
3. Key off.

Warning: See “High-Voltage Service Shutdown and Power-Up Procedure” on page 4. Follow the procedures to avoid shock, burn or death from improperly handled high-voltage.

4. Which FMIs are present?
   - If FMI 12 is listed, replace the **DC/DC Converter**, then go to **Step V.**
   - If FMI 14 is listed, the vehicle 12-volt demand exceeds the capacity of the DC/DC Converter. Loads must be removed from the 12-volt system to maintain a maximum of 1.5 kw total usage.

V ***Purpose:*** *Verify repair.*

1. Key off.
2. Key on.
3. Clear codes, see “Clear Inactive Faults” on page 13.
4. Reconnect all connectors and the negative battery cable.
5. Drive the vehicle and attempt to reset the code.
6. Check for codes, see “View Active and Inactive Faults” on page 13.
   - If no codes, test is complete.
   - If Fault Code 53 appears,go to **Step A.** Find error in testing.
   - If a code other than 53 appears, go to “Fault Code Isolation Procedure Index” on page 14.

© 2015 Eaton. All rights reserved

https://truckmanualshub.com/

Fault Code 54 - DC/DC Converter Output Voltage

J1939: SA 239 SPN 520245 FMI 2, 4

Overview

The DC/DC Converter is connected to the Power Electronics Carrier (PEC), which provides 340 volts DC. The voltage is reduced to 12-volts DC and maintains the 12-volt system during engine off PTO operation. The DC/DC maintains a steady 14.2 (±0.2) volts output and increases the amperage with vehicle demand up to 1.5 kw or 120 amps.

The DC/DC Converter also produces a feedback voltage from the 4-Way Connector. The voltage output is a 0–5 volt signal, which shows 5 volts when the Converter is at 14.2 (±0.2) volts on the output. If the Converter output drops, the feedback signal drops accordingly.

Detection

The following preconditions must be met before the system detects the fault:

- Hybrid Control Module (HCM) ignition voltage is greater than 7 volts and less than 16 volts.

Conditions to Set Fault Code Active

The following conditions must be met to set the fault code Active:

- FMI 2 is set whenever DC/DC voltage feedback signal reads greater than 15 volts or less than 10 volts and ePTO mode is engaged.
- FMI 4 is set if the voltage feedback is less than 15 volts and greater than 10 volts and the difference between the voltage feedback and the vehicle battery voltage is greater than 0.5 volts for 1 second or more.

Fallback

When Fault Code 54 is set the following conditions occur:

- Amber “Check Hybrid” light illuminates.
- Fault is stored in HCM memory.
- Depending on the voltage of the vehicle battery, the engine may operate to maintain the 12-volt system in ePTO mode.

Conditions to Set Fault Code Inactive

Only Inactive faults can be cleared from the Transmission Electronic Control Unit (TECU) or HCM history using ServiceRanger. The TECU automatically clears faults from history after 200 hours. The HCM automatically clears a fault from history after that fault has been Inactive for 200 hours.

Possible Causes

This fault code can be caused by any of the following:

- FMI 2
  - Voltage Feedback wire from DC/DC Converter to HCM
- FMI 4
  - 12-volt power cables from the 12-volt battery to the DC/DC Converter
  - Power supply to HCM

Additional Tools

- Basic hand tools
- ASTM Class 0 electrical insulating rubber gloves with leather protectors J48603
- Lockout bracket J48506
- Lockout tags
- Eaton® Test Adapter Kit J43318
- Digital Volt/Ohm Meter J46708
- ServiceRanger

© 2015 Eaton. All rights reserved

Component Identification

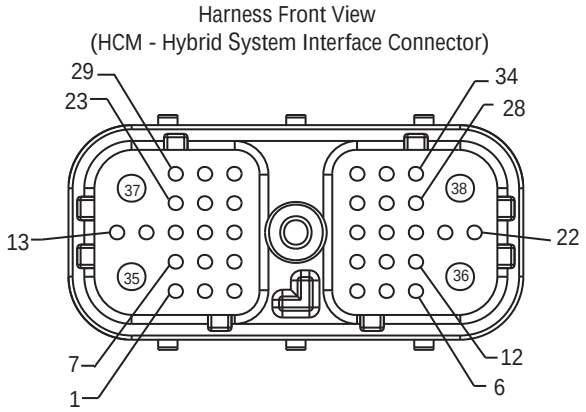

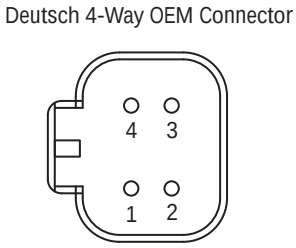

NOTE: Refer to the Eaton Hybrid Component and Connector Location page for Connector Locations

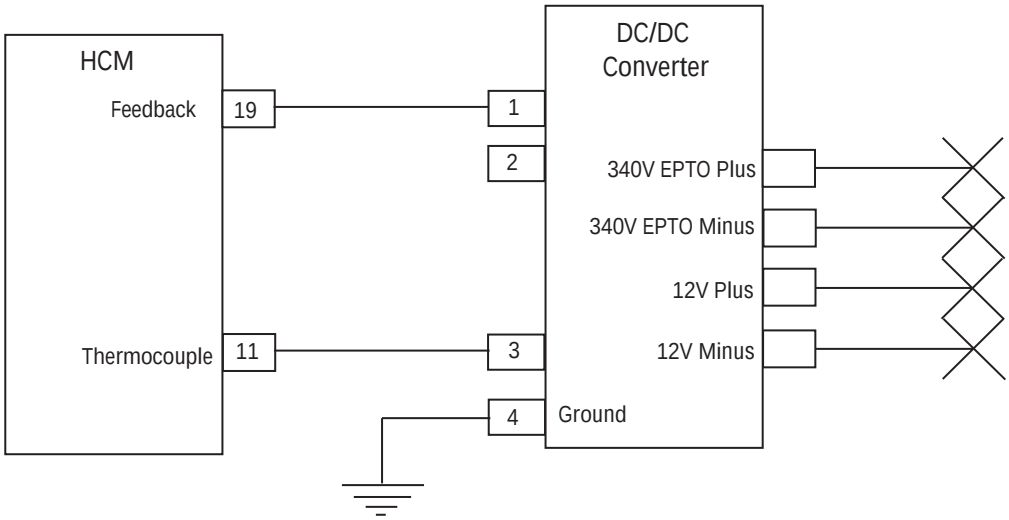

© 2015 Eaton. All rights reserved

https://truckmanualshub.com/

Fault Code 54 - DC/DC Converter Output Voltage

A ***Purpose:*** *Verify Active or Inactive fault code status and FMIs present.*

1. Review and follow the "Warnings & Cautions" on page 1.
2. Retrieve Active fault codes and FMIs with ServiceRanger using the 9-Way Diagnostic Connector.
3. Key off.

Warning: See "High-Voltage Service Shutdown and Power-Up Procedure" on page 4. Follow the procedures to avoid shock, burn or death from improperly handled high-voltage.

4. Which FMIs are present?
   - If FMI 2 is listed, go to **Step B.**
   - If FMI 4 is listed, go to **Step C.**

B ***Purpose:*** *Verify voltage from DC/DC Converter to HCM.*

1. Key on.
2. Select ePTO Mode on the Pushbutton.
3. Measure voltage at the DC/DC Converter 12-Volt Output Terminals:
   - If voltage is greater than 10 volts, repair the open or shorted harness from Pin 1 of the DC/DC Converter to Pin 19 of the HCM, then go to **Step V.**
   - If voltage is less than 10 volts, replace the **DC/DC Converter**, then go to **Step V.**

Connection	Measurement
DC/DC Converter Output Terminals	

© 2015 Eaton. All rights reserved

C

Purpose: *Verify DC/DC Converter output voltage.*

1. Key on.
2. Connect ServiceRanger to the 9-Way Diagnostic Connector in cab.
3. View the following Data Monitor parameters in neutral:
   - PID 121 “DC/DC Converter Output Voltage.”
   - PID 165 “Battery Potential Voltage.”
   - If voltage at the DC/DC Converter is 12–14 volts, go to **Step D.**
   - If voltage is outside of range, repair the open harness or fuse in the Main Power Supply from the DC/DC Converter to the 12-Volt Battery. Go to **Step V.**

Connection	Measurement
DC/DC Converter Output Voltage	
Battery Potential Voltage	

D

Purpose: *Verify voltage of DC/DC Converter.*

1. Key on.
2. View the following Data Monitor parameters:
   - PID 121 “DC/DC Converter Output Voltage.”
   - PID 165 “Battery Potential Voltage.”
   - If PID 165 is 0.5 volts less than PID 121, repair or replace the DC/DC Converter Power Supply Harness that powers the 12-Volt Battery System, then go to **Step V.**
   - If PID 121 is 0.5 volts less than PID 165, repair the voltage feedback wire that goes from Pin 1 of the DC/DC Converter to Pin 19 of the HCM. Go to **Step V.**

Connection	Measurement
DC/DC Converter Output Voltage	
Battery Potential Voltage	

© 2015 Eaton. All rights reserved

https://truckmanualshub.com/

V ***Purpose:*** *Verify repair.*

1. Key off.
2. Key on.
3. Clear codes, see “Clear Inactive Faults” on page 13.
4. Reconnect all connectors and the negative battery cable.
5. Drive the vehicle and attempt to reset the code.
6. Check for codes, see “View Active and Inactive Faults” on page 13.
   - If no codes, test is complete.
   - If Fault Code 54 appears, find error in testing, go to **Step A.**
   - If a code other than 54 appears, go to “Fault Code Isolation Procedure Index” on page 14.

© 2015 Eaton. All rights reserved

Fault Code 56 - Input Shaft Speed Sensor

J1587: MID 130 PID 161 FMI 2, 3, 4, 5, 10
J1939: SA 3 SPN 161 FMI 2, 3, 4, 5, 10

Overview

The Input Shaft Speed Sensor is located on the 6-bolt PTO Cover, which is standard on the right side of the transmission. The sensor is a magnetic pickup that produces an AC voltage as the countershaft gear teeth moves past the end of the sensor. At idle the speed sensor output is low and increases as the speed of the countershaft increases.

Detection

The following preconditions must be met before the system detects the fault:

- Transmission Electronic Control Unit (TECU) ignition voltage is greater than 7 volts and less than 16 volts.
- FMI 10 requires the transmission to be in neutral and the vehicle speed must be within range.
- FMI 2 does not set if there is already an Active FMI 5 for the Input or Output Shaft Speed Sensors.

Conditions to Set Fault Code Active

The following conditions must be met to set the fault code Active:

- FMI 2 is set when the TECU input shaft speed is compared to the output shaft speed and it produces an inconsistent reading for 1 second or greater.
- FMI 3 and 4 are set when the TECU detects a short to ground, short to battery, and the input shaft speed is 0 for 1 second or greater.
- FMI 5 is set when the TECU detects an open circuit and the Input Shaft Speed Sensor is 0 for 1 second or greater.
- FMI 10 is set when the TECU detects a 200 RPM or greater speed difference between the input shaft speed and the raw input shaft speed for 10 ms or greater.

Fallback

When Fault Code 56 is set the following conditions occur:

- Red “Service” light illuminates and an “F” flashes in the gear display.
- Fault is stored in TECU memory.
- The operation mode changes to “AutoShift Fallback” mode.
- If this fault occurs while moving, the transmission remains in current gear and the clutch opens when the vehicle stops.
- If this fault occurs at power up, the vehicle cranks but the transmission does not engage a gear.

Conditions to Set Fault Code Inactive

Only Inactive faults can be cleared from the Transmission Electronic Control Unit (TECU) or HCM history using ServiceRanger. The TECU automatically clears faults from history after 200 hours. The HCM automatically clears a fault from history after that fault has been Inactive for 200 hours.

Possible Causes

This fault code can be caused by any of the following:

- FMI 2, 10
  - Input Shaft Speed Sensor
  - TECU
  - Transmission Harness
  - Damaged transmission gearing
  - Contamination on the Input Shaft Speed Sensor
- FMI 3, 4, 5
  - Input Shaft Speed Sensor
  - TECU
  - Transmission Harness

Additional Tools

- Basic hand tools
- Eaton® Test Adapter Kit
- Digital Volt/Ohm Meter
- ServiceRanger

© 2015 Eaton. All rights reserved

https://truckmanualshub.com/

Component Identification

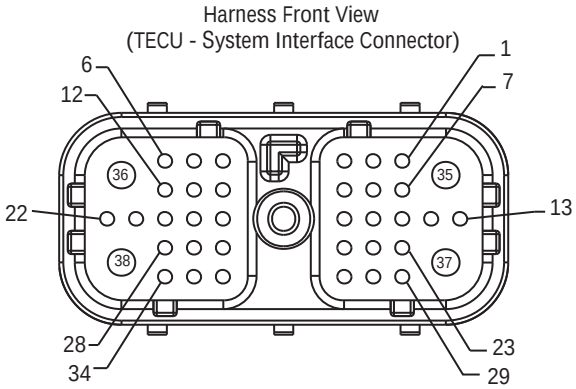

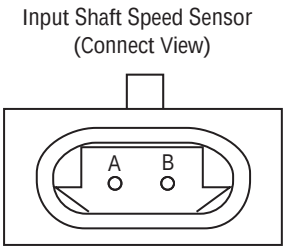

NOTE: Refer to the Eaton Hybrid Component and Connector Location page for Connector Locations

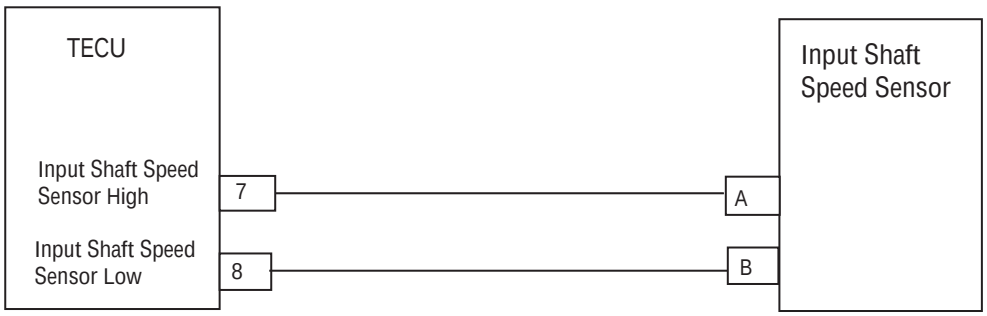

© 2015 Eaton. All rights reserved

Fault Code 56 - Input Shaft Speed Sensor

A

Purpose: *Verify continuity of Transmission Harness sensor circuits.*

1. Retrieve Active fault codes and FMIs with ServiceRanger using the 9-Way Diagnostic Connector.
2. Key off.
3. Disconnect negative battery cable.
4. Disconnect the Transmission Harness 38-Way Connector.
5. Measure the resistance between the Transmission Harness 38-Way Connector Pin 7 and Pin 8 and Pin 7 and ground.
   - If resistance is 2K–4.5K ohms and Pin 7 to ground is 10K ohms or greater, go to **Step B.**
   - If resistance is outside of the range, go to **Step D.**

Connection	Measurement
Pin 7 to Pin 8	
Pin 7 to ground	

B

Purpose: *Verify voltages of Transmission Harness sensor circuits and ground.*

1. Key on.
2. Measure the voltage from between the Transmission Harness 38-Way Connector Pin 7 and ground.
   - If voltage is 0 volts, go to **Step C.**
   - If voltage is 11–13 volts, repair the short to battery in the Vehicle Harness, then go to **Step V.**

Connection	Measurement
Pin 7 to ground	

C

Purpose: *Verify integrity of Input Shaft Speed Sensor.*

1. Inspect Input Shaft Speed Sensor for contamination or damage:
   - If no problem found, replace **Transmission Electronic Control Unit (TECU)** (Only if Fault Code is Active), then go to **Step V.**
   - If problem is found or were sent here from Step D or Step E, replace **Input Shaft Speed Sensor** and inspect the Countershaft Gear for damage. Go to **Step V.**

© 2015 Eaton. All rights reserved

https://truckmanualshub.com/

D

Purpose: *Verify continuity of Input Shaft Speed Sensor.*

1. Disconnect the Transmission Harness from Input Shaft Speed Sensor.
2. Measure resistance between Input Shaft Speed Sensor Pin A and Pin B:
   - If resistance is 2K–4.5K ohms, go to **Step E.**
   - If resistance is outside of range, go to **Step C.**

Connection	Measurement
Pin A to Pin B	

E

Purpose: *Verify continuity of Input Shaft Speed Sensor to ground.*

1. Measure resistance between Input Shaft Speed Sensor Pin A and ground:
   - If resistance is 10K ohms or greater, replace the **Transmission Harness**, then go to **Step V.**
   - If resistance is less than 10K ohms, go to **Step C.**

Connection	Measurement
Pin A to ground	

V

Purpose: *Verify repair.*

1. Key off.
2. Reconnect all connectors and the negative battery cable.
3. Verify proper installation of speed sensor.
4. Key on.
5. Clear codes, see “Clear Inactive Faults” on page 13.
6. Drive the vehicle and attempt to reset the code.
7. Check for codes, see “View Active and Inactive Faults” on page 13.
   - If no codes, test is complete.
   - If Fault Code 56 appears, go to **Step A.** Find error in testing.
   - If a code other than 56 appears, go to “Fault Code Isolation Procedure Index” on page 14.

© 2015 Eaton. All rights reserved

Fault Code 58 - Output Shaft Speed Sensor

J1587: MID 130 PID 191 FMI 2, 3, 4, 5
J1939: SA 3 SPN 191 FMI 2, 3, 4, 5

Overview

The Output Shaft Speed Sensor is located on the rear bearing cover at the 12 o'clock position. The sensor is a magnetic pickup that produces an AC voltage as the tone wheel teeth moves past the end of the sensor. At idle, the Speed Sensor output is low and it increases as the speed of the output shaft increases.

Detection

The following preconditions must be met before the system detects the fault:

- Transmission Electronic Control Unit (TECU) ignition voltage is greater than 7 volts and less than 16 volts.
- FMI 2 does not set if there is already an Active FMI 5 for the Input or Output Shaft Speed Sensors.

Conditions to Set Fault Code Active

The following conditions must be met to set the fault code Active:

- FMI 2 is set when the TECU output shaft speed is compared to the input shaft speed and it produces an inconsistent reading for 1 second or greater.
- FMI 3, 4 are set when the TECU detects a short to ground, short to battery, or the output shaft speed is 0 for 1 second or greater.
- FMI 5 is set when the TECU detects an open and the Output Shaft Speed Sensor is 0 for 1 second or greater.

Fallback

When Fault Code 58 is set the following conditions occur:

- Red "Service" light illuminates and an "F" flashes in the gear display.
- Fault is stored in TECU memory.
- Operation mode changes to "AutoShift Fallback" mode.
- If this fault occurs while moving, the transmission remains in the current gear and the clutch opens when the vehicle stops.

Conditions to Set Fault Code Inactive

Only Inactive faults can be cleared from the TECU or HCM history using ServiceRanger. The TECU automatically clears faults from history after 200 hours. The HCM automatically clears a fault from history after that fault has been Inactive for 200 hours.

Possible Causes

This fault code can be caused by any of the following:

- FMI 2
  - Output Shaft Speed Sensor
  - TECU
  - Transmission Harness
  - Damaged Transmission Gearing
  - Contamination on the Output Shaft Speed Sensor
- FMI 3, 4, 5
  - Output Shaft Speed Sensor
  - TECU
  - Transmission Harness

Additional Tools

- Basic hand tools
- Eaton® Test Adapter Kit
- Digital Volt/Ohm Meter
- ServiceRanger

© 2015 Eaton. All rights reserved

https://truckmanualshub.com/

Component Identification

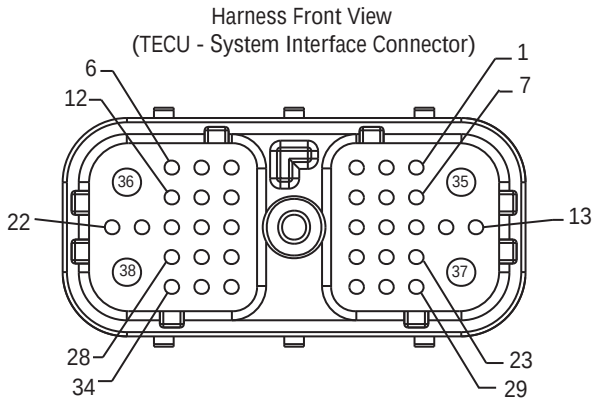

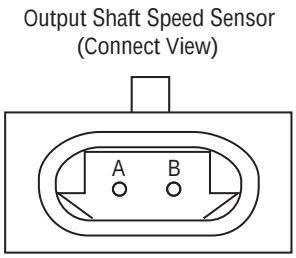

NOTE: Refer to the Eaton Hybrid Component and Connector Location page for Connector Locations

© 2015 Eaton. All rights reserved

Fault Code 58 - Output Shaft Speed Sensor

A

Purpose: *Verify continuity of Transmission Harness sensor circuits.*

1. Retrieve Active fault codes and FMIs with ServiceRanger using the 9-Way Diagnostic Connector.
2. Key off.
3. Disconnect negative battery cable.
4. Disconnect the Transmission Harness 38-Way Connector.
5. Measure resistance between the Transmission Harness 38-Way Connector Pin 23 and Pin 24 and Pin 23 and ground:
   - If resistance is 2K–4.5K ohms and Pin 23 to ground is 10K ohms or greater, go to **Step B.**
   - If resistance is outside of the range, go to **Step D.**

Connection	Measurement
Pin 23 to Pin 24	
Pin 23 to ground	

B

Purpose: *Verify voltage of Transmission Harness sensor circuits to ground.*

1. Key on.
2. Measure voltage between the Transmission Harness 38-Way Connector Pin 23 and ground.
   - If voltage is 0 volts, go to **Step C.**
   - If voltage is 11–13 volts, repair the short to battery in the Vehicle Harness, then go to **Step V.**

Connection	Measurement
Pin 23 to ground	

C

Purpose: *Verify integrity of Output Shaft Speed Sensor.*

1. Inspect Output Shaft Speed Sensor for contamination or damage.
   - If no problem found, replace **Transmission Electronic Control Unit (TECU)** (only if fault code is Active), then go to **Step V.**
   - If problem is found or were sent here from Step D or E, replace **Output Shaft Speed Sensor** and inspect the Tone Wheel for damage, looseness or corrosion. Go to **Step V.**

© 2015 Eaton. All rights reserved

https://truckmanualshub.com/

D

Purpose: *Verify continuity of Output Shaft Speed Sensor.*

1. Disconnect the Transmission Harness from the Output Shaft Speed Sensor.
2. Measure resistance between Output Shaft Speed Sensor Pin A and Pin B:
   - If resistance is 2K–4.5K ohms, go to **Step E.**
   - If resistance is outside of range, go to **Step C.**

Connection	Measurement
Pin A to Pin B	

E

Purpose: *Verify continuity of Output Shaft Speed Sensor and ground.*

1. Measure resistance between Output Shaft Speed Sensor Pin A and ground:
   - If resistance is 10K ohms or greater, replace the **Transmission Harness**, then go to **Step V.**
   - If resistance is less than 10K ohms, go to **Step C.**

Connection	Measurement
Pin A to ground	

V

Purpose: *Verify repair.*

1. Key off.
2. Reconnect all connectors and the negative battery cable.
3. Verify proper installation of Speed Sensor.*
4. Key on.
5. Clear codes, see “Clear Inactive Faults” on page 13.
6. Drive the vehicle and attempt to reset the code.
7. Check for codes, see “View Active and Inactive Faults” on page 13.
   - If no codes, test is complete.
   - If Fault Code 58 appears, go to **Step A.** Find error in testing.
   - If a code other than 58 appears, go to “Fault Code Isolation Procedure Index” on page 14.

- * See **Output Shaft Speed Sensor**.

© 2015 Eaton. All rights reserved

Fault Code 59 - J1939 Communication Link (HCM)

J1939: SA 239 SPN 639 FMI 2, 9

Overview

J1939 is a high-speed twisted pair 250K data link with one 120 ohm resistor at each end of the link. The Hybrid Control Module (HCM) is connected to the J1939 data link at the 38-Way Connector. This link is used to transmit or receive operation information from other modules on the network like the Transmission Electronic Control Unit (TECU) or Electronic Control Unit (ECU).

Detection

The following preconditions must be met before the system detects the fault:

- HCM ignition voltage is greater than 7 volts and less than 16 volts.

Conditions to Set Fault Code Active

The following conditions must be met to set the fault code Active:

- FMI 9 is set when the HCM loses communication with all modules on the J1939 data link for 30 consecutive messages or greater.

Note: When troubleshooting an Inactive code refer to the "Product Diagnostic Mode (PDM)" on page 19.

Fallback

When Fault Code 59 is set the following conditions occur:

- Amber "Check Hybrid" and red "Stop Hybrid" lights do not display, since the lights are driven over the J1939 Data Link.
- Fault is stored in HCM memory.
- Operation mode changes to "AutoShift Only" mode.
- If the fault sets at power up, the engine will not crank.
- If the fault sets while driving, the vehicle will shift, however; when the vehicle stops the clutch opens and remains open.
- Electric Motor/Generator Assist and Regeneration are disabled; however, the high-voltage relays remain powered.
- Red "Service" light and an "F" flashing in the gear display may appear due to the Active fault code 24, 35, or 36.

Conditions to Set Fault Code Inactive

Only Inactive faults can be cleared from the TECU or HCM history using ServiceRanger. The TECU automatically clears faults from history after 200 hours. The HCM automatically clears a fault from history after that fault has been Inactive for 200 hours.

Possible Causes

This fault code can be caused by any of the following:

- FMI 2
  - J1939 Data Link
  - HCM

Additional Tools

- Basic hand tools
- Eaton® Test Adapter Kit
- Digital Volt/Ohm Meter
- ServiceRanger

© 2015 Eaton. All rights reserved

https://truckmanualshub.com/

Component Identification

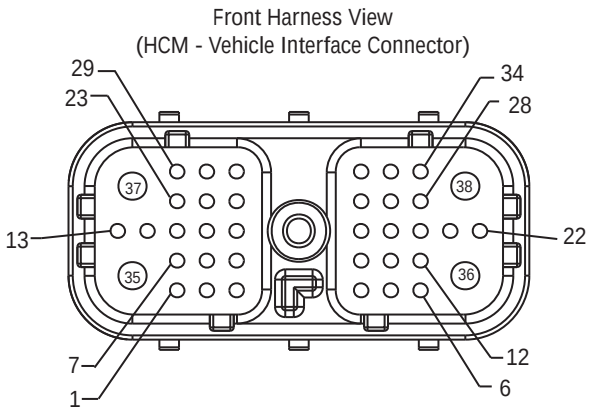

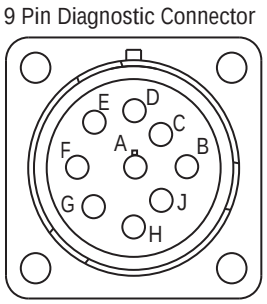

NOTE: Refer to the Eaton Hybrid Component and Connector Location page for Connector Locations

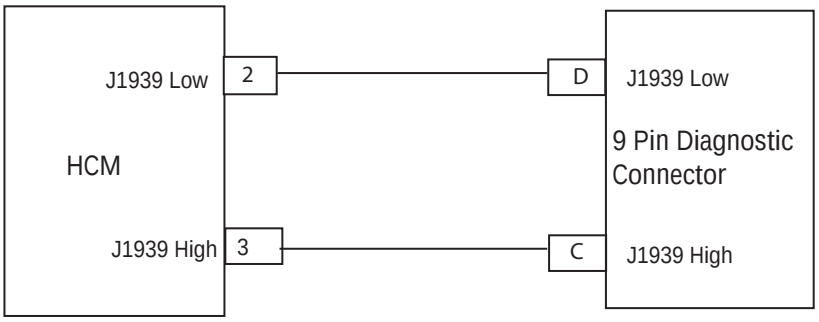

© 2015 Eaton. All rights reserved

Fault Code 59 - J1939 Communication Link (HCM)

A

Purpose: *Check for Active or Inactive fault code status.*

1. Retrieve Active fault codes and FMIs with ServiceRanger using the 9-Way Diagnostic Connector.
2. Key on.
3. Select the “Vehicle Components” screen and view the various modules that are reporting on the J1939 link:
   - If the HCM is not reporting on J1939 but the TECU is listed, go to **Step B.**
   - If the HCM and TECU are not reporting on J1939, go to **Step C.**

B

Purpose: *Verify continuity of Vehicle Harness circuits.*

1. Key off.
2. Disconnect negative battery cable.
3. Disconnect HCM Harness 38-way connector.
4. Measure resistance between HCM Harness 38-Way Connector Pin 2 and Pin 3:

   Note: Make sure the Volt/Ohm Meter is on the proper scale (around 200 ohm scale).

   - If resistance between Pin 2 and Pin 3 is between 50–70 ohms, replace the **Hybrid Control Module (HCM)**, then go to **Step V.**
   - If resistance is outside of range, repair J1939 Data link Harness, then go to **Step V.**

Connection	Measurement
Pin 2 to Pin 3	

© 2015 Eaton. All rights reserved

C

Purpose: *Verify continuity of Diagnostic Connector J1939 circuits.*

1. Key off.
2. Measure the resistance between Pin C and Pin D on the 9-Way Diagnostic Connector:
   - If resistance between Pin C and Pin D is 50–70 ohms, go to **Step D.**
   - If resistance is 70 ohms or greater, one or more of the terminating resistors on the J1939 Data Link Harness is missing, out of range, or there is an open in the link. Repair the OEM J1939 Data Link Harness, then go to **Step V.**
   - If resistance is 50 ohms or less, there is an additional terminating resistor present. Repair the OEM J1939 Data Link Harness, then go to **Step V.**

Connection	Measurement
Pin C to Pin D	

D

Purpose: *Verify continuity of Diagnostic Connector J1939 circuits.*

1. Key off.
2. Measure resistance between Pin C and ground on the 9-Way Diagnostic Connector:
   - If resistance between Pin C and ground is 10K ohms or greater, attempt to communicate with another vehicle and ensure ServiceRanger is working. If ServiceRanger fails to communicate with another vehicle, call 1-800-826-HELP (4357).
   - If resistance is outside of range, repair J1939 Data link Harness for a short to ground, then go to **Step V.**

Connection	Measurement
Pin C to ground	

© 2015 Eaton. All rights reserved

V ***Purpose:*** *Verify repair.*

1. Key off.
2. Key on.
3. Clear codes, see “Clear Inactive Faults” on page 13.
4. Reconnect all connectors and the negative battery cable.
5. Drive the vehicle and attempt to reset the code.
6. Check for codes, see “View Active and Inactive Faults” on page 13.
   - If no codes, test is complete.
   - If Fault Code 59 appears, go to **Step A.** Find error in testing.
   - If code other than 59 appears, go to “Fault Code Isolation Procedure Index” on page 14.

© 2015 Eaton. All rights reserved

https://truckmanualshub.com/

Fault Code 60 - CAN Communication Link (HCM)

J1939: SA 239 SPN 625 FMI 2, 9

Overview

The Controller Area Network (CAN) is a high-speed twisted pair 500K proprietary data link that connects the HCM to the Electric Clutch Actuator (ECA), Battery Control Module and Inverter. The link contains one 120 ohm resistor at each end. The link is used to transmit information specific to clutch position or power electronics operations.

Detection

The following preconditions must be met before the system detects the fault:

- HCM is powered and ignition voltage is greater than 7 volts and less than 16 volts.

Conditions to Set Fault Code Active

The following conditions must be met to set the fault code Active:

- FMI 9 is set when the HCM loses communication with all modules on the CAN data link for 30 consecutive messages or greater.

Note: When troubleshooting an Inactive code refer to the "Product Diagnostic Mode (PDM)" on page 19.

Fallback

When Fault Code 60 is set the following conditions occur:

- Red "Stop Hybrid" light illuminates.
- Fault is stored in HCM memory.
- Operation mode changes to "AutoShift Only" mode.
- If the fault sets at power up, the engine will not crank.
- Electric Motor/Generator Assist and Regeneration are disabled; however, high-voltage relays remain powered.
- If the fault sets while driving, the clutch will either close or open and remain in this position permanently.
- Transmission defaults start gear to 1st.

Conditions to Set Fault Code Inactive

Only Inactive faults can be cleared from the TECU or HCM history using ServiceRanger. The TECU automatically clears faults from history after 200 hours. The HCM automatically clears a fault from history after that fault has been Inactive for 200 hours.

Possible Causes

This fault code can be caused by any of the following:

- FMI 9
  - CAN Data Link
  - HCM

Additional Tools

- Basic hand tools
- Eaton® Test Adapter Kit
- Digital Volt/Ohm Meter
- ServiceRanger

© 2015 Eaton. All rights reserved

Component Identification

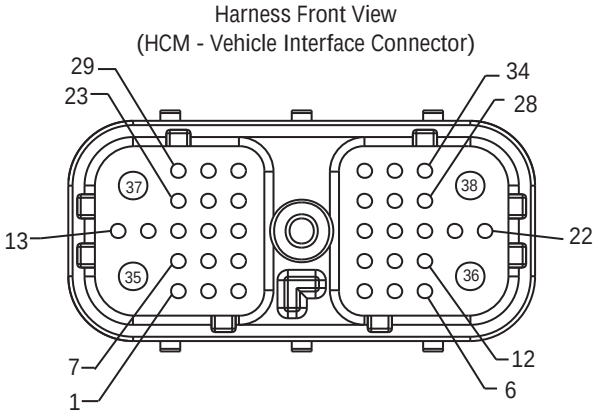

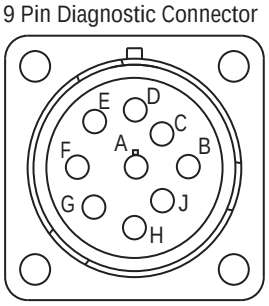

NOTE: Refer to the Eaton Hybrid Component and Connector Location page for Connector Locations

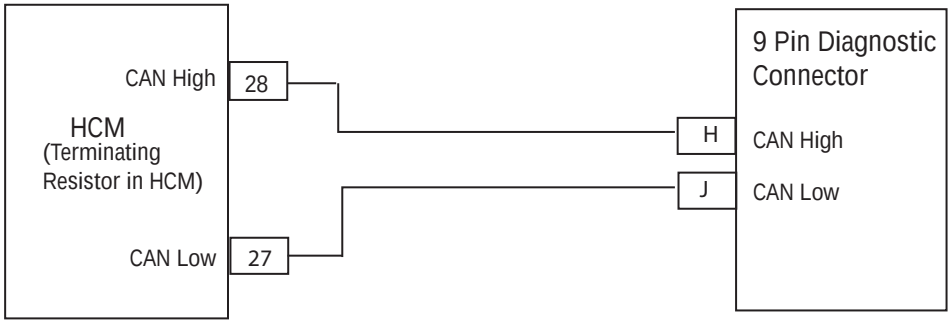

© 2015 Eaton. All rights reserved

https://truckmanualshub.com/

Fault Code 60 - CAN Communication Link (HCM)

A ***Purpose:*** *Verify continuity of Diagnostic Connector circuits.*

1. Retrieve Active fault codes and FMIs with ServiceRanger using the 9-Way Diagnostic Connector.
2. Key off.
3. Measure the resistance between one of the following:
   - Pin H and Pin J on the 9-Way Connector.
   - Pin A and Pin B on the 3-Way Connector.
   - Pin 1 and Pin 2 on the 2-Way Connector.

   Note: The 3-Way and 2-Way Data Link Connectors are located next to the 9-Way Diagnostic Connector.

   Note: Make sure the Volt/Ohm Meter is on the proper scale (around 200 ohm scale).

   - If resistance between Pin H and Pin J, Pin A and Pin B, or Pin 1 and Pin 2 is between 50 to 70 ohms, go to **Step B.**
   - If resistance is more than 70 ohms, one or more of the terminating resistors on the CAN Data Link Harness is either missing or out of range, or there is an open in the link. Repair OEM CAN Data Link Harness, then go to **Step V.**
   - If resistance is less than 50 ohms, there is an additional terminating resistor present. Repair the OEM CAN Data Link Harness, then go to **Step V.**

Connection	Measurement
Pin H to Pin J on 9-Way Connector	
Pin A to Pin B on 3-Way Connector	
Pin 1 to Pin 2 on 2-Way Connector	

B ***Purpose:*** *Verify continuity of Vehicle Harness J1939 circuits.*

1. Key off.
2. Disconnect negative battery cable.
3. Disconnect HCM Harness 38-Way Connector.
4. Measure resistance between HCM Harness 38-Way Connector Pin 27 and Pin 28:

   Note: Make sure the Volt/Ohm Meter is on the proper scale (around 200 ohm scale).

   - If resistance between Pin 27 and Pin 28 is between 110–130 ohms, replace the **Hybrid Control Module (HCM)**, then go to **Step V.**
   - If resistance is outside of range, repair the CAN Data Link Harness, then go to **Step V.**

Connection	Measurement
Pin 27 to Pin 28	

© 2015 Eaton. All rights reserved

V ***Purpose:*** *Verify repair.*

1. Key off.
2. Key on.
3. Clear codes, see “Clear Inactive Faults” on page 13.
4. Reconnect all connectors and the negative battery cable.
5. Drive the vehicle and attempt to reset the code.
6. Check for codes, see “View Active and Inactive Faults” on page 13.
   - If no codes, test is complete.
   - If Fault Code 60 appears, go to **Step A.** Find error in testing.
   - If a code other than 60 appears, go to “Fault Code Isolation Procedure Index” on page 14.

© 2015 Eaton. All rights reserved

https://truckmanualshub.com/

Fault Code 61 - Rail Select Motor

J1587: MID 130 SID 39 FMI 5, 6
J1939: SA 3 SPN 772 FMI 5, 6

Overview

The Electric Shifter contains two electric motors—the Rail motor and Gear motor. These motors move a shift finger between the various rails which engage the shift rails. Power is supplied from the Transmission Electronic Control Unit (TECU).

Detection

The following preconditions must be met before the system detects the fault:

- TECU ignition voltage is greater than 7 volts and less than 16 volts.
- TECU System Battery Voltage Low Fault is Inactive.
- TECU System Battery Voltage Weak Fault is Inactive.
- Electric Shifter is not energized and the shift finger is not moving.

Conditions to Set Fault Code Active

The following conditions must be met to set the fault code Active:

- FMI 5 and 6 are set when the TECU detects 5 continuous open or short conditions on the Electric Shifter while the motor drive circuit is idle in a 500 ms interval.

Fallback

When Fault Code 61 is set the following conditions occur:

- Red “Service” light illuminates and an “F” flashes in the gear display.
- Fault is stored in TECU memory.
- The operation mode changes to “AutoShift Fallback” mode.
- If this fault occurs while moving, the transmission remains in the current gear and the clutch opens when the vehicle stops.

Conditions to Set Fault Code Inactive

Only Inactive faults can be cleared from the TECU or HCM history using ServiceRanger. The TECU automatically clears faults from history after 200 hours. The HCM automatically clears a fault from history after that fault has been Inactive for 200 hours.

Possible Causes

This fault code can be caused by any of the following:

- FMI 5, 6
  - Electric Shifter
  - TECU
  - Transmission Harness

Additional Tools

- Basic hand tools
- Eaton® Test Adapter Kit
- Digital Volt/Ohm Meter
- ServiceRanger

© 2015 Eaton. All rights reserved

Component Identification

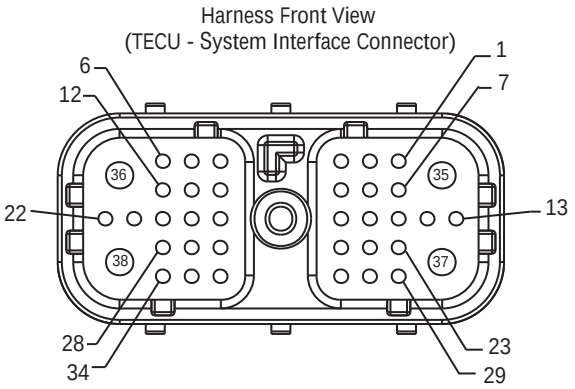

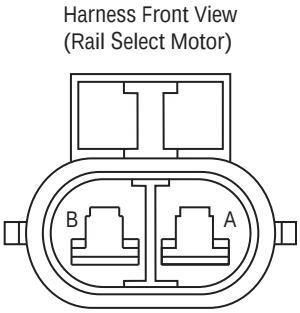

NOTE: Refer to the Eaton Hybrid Component and Connector Location page for Connector Locations

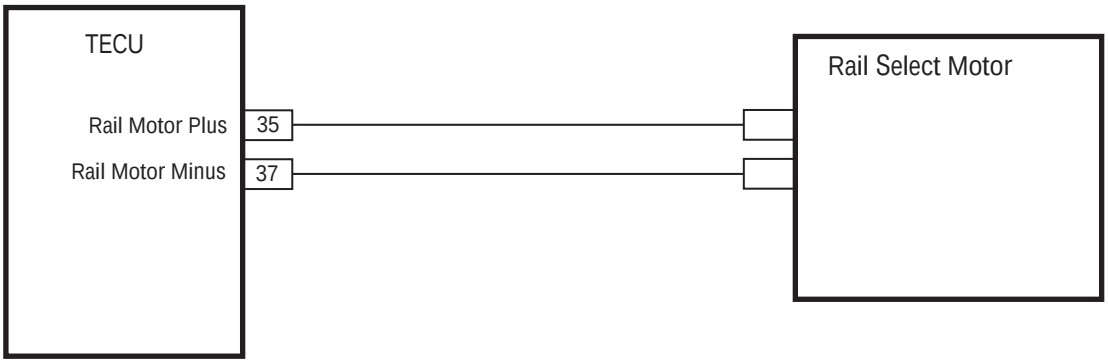

© 2015 Eaton. All rights reserved

https://truckmanualshub.com/

Fault Code 61 - Rail Select Motor

A

Purpose: *Verify continuity of Transmission Harness circuits.*

1. Retrieve Active fault codes and FMIs with ServiceRanger using the 9-Way Diagnostic Connector.
2. Key off.
3. Disconnect negative battery cable.
4. Disconnect the Transmission Harness 38-Way Connector from the TECU.
5. Measure resistance between the Transmission Harness 38-Way Connector Pin 35 and Pin 37:
   - If resistance is 0.3–150 ohms, go to **Step B.**
   - If resistance is outside of range, go to **Step C.**

Connection	Measurement
Pin 35 to Pin 37	

B

Purpose: *Verify continuity of Transmission Harness circuits to ground.*

1. Measure resistance between the Transmission Harness 38-Way Connector Pin 35 and ground:
   - If resistance is 10K ohms or greater, replace **Transmission Electronic Control Unit (TECU)** (Only if Fault Code is Active), then go to **Step V.**
   - If resistance is less than 10K ohms, go to **Step C.**

C

Purpose: *Verify continuity of Rail Select Motor Harness circuit.*

1. Disconnect 2-Way Rail Select Motor Connector from the Transmission Harness.
2. Measure resistance between Rail Select Motor Harness 2-Way Connector Pin A and Pin B and Pin A to ground:
   - If resistance between Pin A and Pin B is 0.3–150 ohms and Pin A to ground is 10K ohms or greater, replace **Transmission Harness**, then go to **Step V.**
   - If resistance is outside of range, replace **Electric Shifter**, then go to **Step V.**

Connection	Measurement
Pin 35 to Pin 37	
Pin B and ground	

V

Purpose: *Verify repair.*

1. Key off.
2. Reconnect all connectors and the negative battery cable.
3. Key on.
4. Clear codes, see “Clear Inactive Faults” on page 13.
5. Drive the vehicle and attempt to reset the code.
6. Check for codes, see “View Active and Inactive Faults” on page 13.
   - If no codes, test is complete.
   - If Fault Code 61 appears, go to **Step A.** Find error in testing.
   - If a code other than 61 appears, go to “Fault Code Isolation Procedure Index” on page 14.

© 2015 Eaton. All rights reserved

Fault Code 63 - Gear Select Motor

J1587: MID 130 SID 40 FMI 5, 6
J1939: SA 3 SPN 773 FMI 5, 6

Overview

The Electric Shifter contains two electric motors called the Rail and Gear motors. These motors move a shift finger between the various rails which engage the shift rails. Power is supplied from the Transmission Electronic Control Unit (TECU).

Detection

The following preconditions must be met before the system detects the fault:

- TECU ignition voltage is greater than 7 volts and less than 16 volts.
- TECU System Battery Voltage Low Fault is Inactive.
- TECU System Battery Voltage Weak Fault is Inactive.
- Electric Shifter is not energized and the shift finger is not moving.

Conditions to Set Fault Code Active

The following conditions must be met to set the fault code Active:

- FMI 5 and 6 are set when the TECU detects 5 continuous open or short conditions on the Electric Shifter while the motor drive circuit is idle in a 500 MS interval.

Fallback

When Fault Code 63 is set the following conditions occur:

- Red “Service” light illuminates and an “F” flashes in the gear display.
- Fault is stored in TECU memory.
- Operation mode changes to “AutoShift Fallback” mode. If this fault occurs while moving, transmission remains in the current gear position and the clutch opens when the vehicle stops.

Conditions to Set Fault Code Inactive

Only Inactive faults can be cleared from the TECU or HCM history using ServiceRanger. The TECU automatically clears faults from history after 200 hours. The HCM automatically clears the faults from history after the fault has been Inactive for 200 hours.

Possible Causes

This fault code can be caused by any of the following:

- FMI 5, 6
  - Electric Shifter
  - TECU
  - Transmission Harness

Additional Tools

- Basic hand tools
- Eaton® Test Adapter Kit
- Digital Volt/Ohm Meter
- ServiceRanger

© 2015 Eaton. All rights reserved

https://truckmanualshub.com/

Component Identification

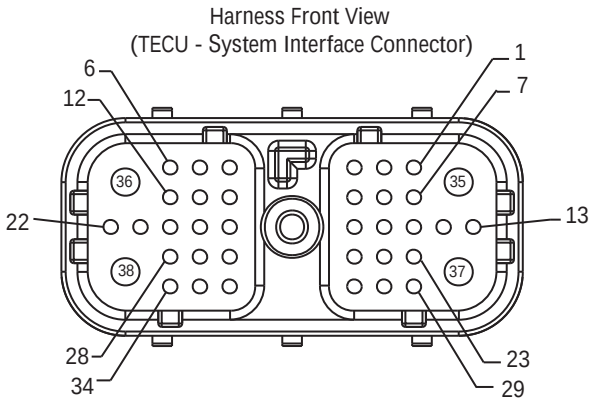

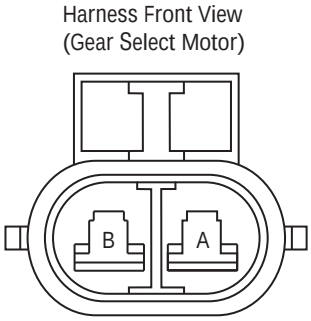

NOTE: Refer to the Eaton Hybrid Component and Connector Location page for Connector Locations

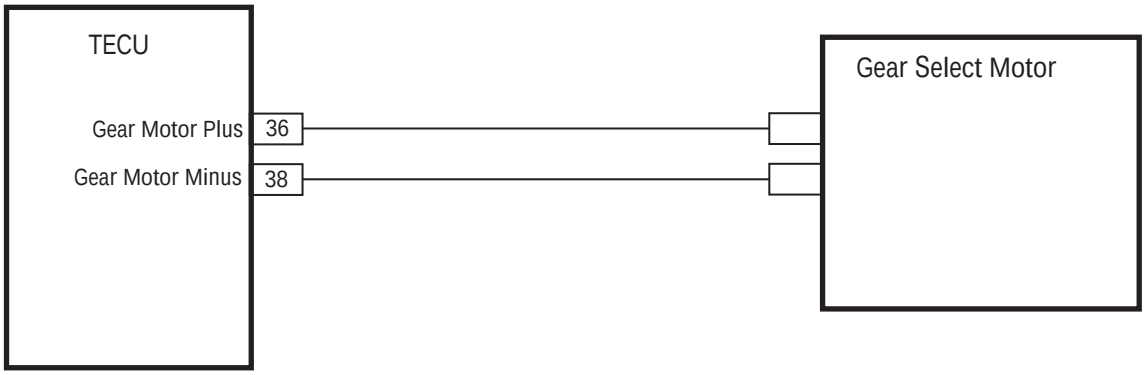

© 2015 Eaton. All rights reserved

Fault Code 63 - Gear Select Motor

A ***Purpose:*** *Verify continuity of Transmission Harness circuits*

1. Retrieve Active fault codes and FMIs with ServiceRanger using the 9-Way Diagnostic Connector.
2. Key off.
3. Disconnect negative battery cable.
4. Disconnect the Transmission Harness 38-Way Connector from the TECU.
5. Measure resistance between the Transmission Harness 38-Way Connector Pin 36 and Pin 38:
   - If resistance is 0.3–150 ohms, go to **Step B.**
   - If resistance is outside of range, go to **Step C.**

Connection	Measurement
Pin 36 to Pin 38	

B ***Purpose:*** *Verify continuity of Transmission Harness circuits and ground.*

1. Measure resistance between the Transmission Harness 38-Way Connector Pin 36 and ground.
   - If resistance is 10K ohms or greater, replace **Transmission Electronic Control Unit (TECU)** (Only if Fault Code is Active), then go to **Step V.**
   - If resistance is less than 10K ohms, go to **Step C.**

Connection	Measurement
Pin 36 to ground	

© 2015 Eaton. All rights reserved

https://truckmanualshub.com/

C

Purpose: *Verify continuity of Gear Select Motor Harness circuit.*

1. Disconnect 2-Way Gear Select Motor Connector from the Transmission Harness.
2. Measure resistance between Gear Select Motor Harness 2-Way Connector Pin A and Pin B and Pin A to ground.
   - If resistance between Pin A and Pin B is 0.3–150 ohms and Pin A to ground is 10K ohms or greater, replace **Transmission Harness**, then go to **Step V.**
   - If resistance is outside of range, replace **Electric Shifter**, then go to **Step V.**

Connection	Measurement
Pin A to Pin B	
Pin A to ground	

V

Purpose: *Verify repair.*

1. Key off.
2. Reconnect all connectors and the negative battery cable.
3. Key on.
4. Clear codes, see “Clear Inactive Faults” on page 13.
5. Drive the vehicle and attempt to reset the code.
6. Check for codes, see “View Active and Inactive Faults” on page 13.
   - If no codes, test is complete.
   - If Fault Code 63 appears, go to **Step A.** Find error in testing.
   - If a code other than 63 appears, go to “Fault Code Isolation Procedure Index” on page 14.

© 2015 Eaton. All rights reserved

https://truckmanualshub.com/

Fault Code 64 - ECA Fault

J1939: SA 239 SPN 788 FMI 12, 21–28

Overview

The Electric Clutch Actuator (ECA) controls the position of the clutch assembly. The ECA has a main power 3-Way Connector connected to the 12-volt battery and an 8-Way Connector connected to inputs such as the Hybrid Control Module (HCM) and the Engine Speed Sensor. The ECA communicates with the HCM over the proprietary Controller Area Network (CAN) data link to change position, show faults or include other operation information.

Detection

The following preconditions must be met before the system detects the fault:

- ECA ignition voltage is greater than 8.5 volts.
- ECA Battery Voltage is greater than 7.8 when ignition voltage is greater than 8.5 volts.

Conditions to Set Fault Code Active

The following conditions must be met to set the fault code Active:

- FMI 12 is set for various internal ECA failures.
- FMI 22–28 can be set for excessive motor current, excessive motor temperature, or incorrect motor position.

Fallback

When Fault Code 64 is set the following conditions occur:

- Red Stop Hybrid light illuminate.
- Fault is stored in HCM memory.
- If the fault occurs while driving, the ECA either maintains current clutch position or moves to the last position commanded by the HCM.
- If the fault occurs at power up, the vehicle will not crank.

Conditions to Set Fault Code Inactive

Only Inactive faults can be cleared from the TECU or HCM history using ServiceRanger. The TECU automatically clears faults from history after 200 hours. The HCM automatically clears a fault from history after that fault has been Inactive for 200 hours.

Possible Causes

This fault code can be caused by any of the following:

- FMI 12
  - ECA
- FMI 21–28
  - Excessive debris buildup on or around the ECA.
  - Damaged exhaust heat shielding near ECA.
  - Binding Cross-Shafts.

Additional Tools

- Basic hand tools
- Eaton® Test Adapter Kit
- Digital Volt/Ohm Meter
- Service Ranger

© 2015 Eaton. All rights reserved

https://truckmanualshub.com/

Component Identification

Note: No Schematic for this code.

Note: For component location refer to the OEM service literature.

© 2015 Eaton. All rights reserved

https://truckmanualshub.com/

Fault Code 64 - ECA Fault

A

Purpose: *Verify FMIs present.*

1. Retrieve Active fault codes and FMIs with ServiceRanger using the 9-Way Diagnostic Connector.
2. Key off.
3. Disconnect negative battery cable.
4. Which FMIs are present?
   - If FMI 12 is listed, replace the **Electric Clutch Actuator (ECA)**, then go to **Step V.**
   - If FMI 21–28 are listed, go to **Step B.**

B

Purpose: *Verify integrity of ECA Motor.*

1. Check the ECA for any debris build-up, damaged exhaust, or missing Exhaust Heat Shields near the ECA:
   - ECA has no debris build-up or damaged exhaust by the unit, go to **Step C.**
   - ECA has debris build-up or exhaust damage next to the unit, remove the debris build-up, or repair the exhaust damage, then go to **Step V.**

C

Purpose: *Verify no binding on Cross-Shafts.*

1. Disconnect the ECA 8-Way and 3-Way Connectors.
2. Remove the ECA*.

   Note: For additional information on ECA removal, see the Hybrid Service Manual (TRSM1000).
3. Rotate the Cross-Shafts by grabbing the exposed Lower Cross-Shaft and rotating it:
   - If the Cross-Shafts rotate without any binding, replace the **Electric Clutch Actuator (ECA)**, then go to **Step V.**
   - If the Cross-Shafts bind when rotated, replace the Cross-Shafts and Bushings, then go to **Step V.**

   - * See **Electric Clutch Actuator (ECA)**.

V

Purpose: *Verify repair.*

1. Key off.
2. Key on.
3. Clear codes, see “Clear Inactive Faults” on page 13.
4. Reconnect all connectors and the negative battery cable.
5. Drive the vehicle and attempt to reset the code.
6. Check for codes, see “View Active and Inactive Faults” on page 13.
   - If no codes, test is complete.
   - If Fault Code 64 appears, go to **Step A.** Find error in testing.
   - If a code other than 64 appears, go to “Fault Code Isolation Procedure Index” on page 14.

© 2015 Eaton. All rights reserved

https://truckmanualshub.com/

Fault Code 65 - ECA Speed Sensor

J1939: SA 239 SPN 520203 FMI 2, 5

Overview

The Electric Clutch Actuator (ECA) controls the position of the clutch assembly. The ECA has a main power 3-Way Connector that is directly connected to the 12-Volt Battery and an 8-Way Connector that is connected to inputs like the Hybrid Control Module (HCM) and the Engine Speed Sensor. The ECA communicates with the HCM over the proprietary Controller Area Network (CAN) data link to change position, show faults, or include other operation information.

Detection

The following preconditions must be met before the system detects the fault:

- ECA ignition voltage is greater than 8.5 volts.
- Fault Code 18 or 87 are Active.

Conditions to Set Fault Code Active

The following conditions must be met to set the fault code Active:

- FMI 2 is set when the HCM detects engine speed at idle, but does not detect ECA engine speed.
- FMI 5 is set when the ECA detects an open on the ECA Speed Sensor signal circuit at key on.

Fallback

When Fault Code 65 is set the following conditions occur:

- Amber “Check Hybrid” light illuminates.
- Fault is stored in HCM memory.

Conditions to Set Fault Code Inactive

Only Inactive faults can be cleared from the TECU or HCM history using ServiceRanger. The TECU automatically clear the faults from history after 200 hours. The HCM automatically clears a fault from history after that fault has been Inactive for 200 hours.

Possible Causes

This fault code can be caused by any of the following:

- FMI 2, 5
  - ECA Speed Sensor
  - ECA Speed Sensor Harness
  - ECA

Additional Tools

- Basic hand tools
- Eaton® Test Adapter Kit
- Digital Volt/Ohm Meter
- ServiceRanger

© 2015 Eaton. All rights reserved

Component Identification

ECA 3-Way Connector

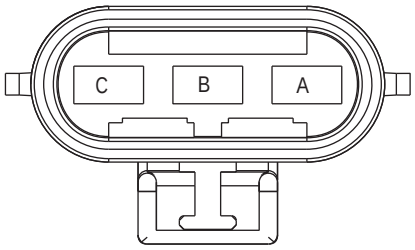

ECA Speed Sensor
(Connect View)

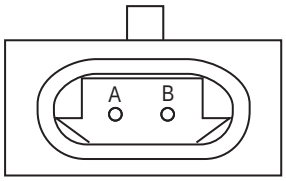

ECA 8-Way Connector

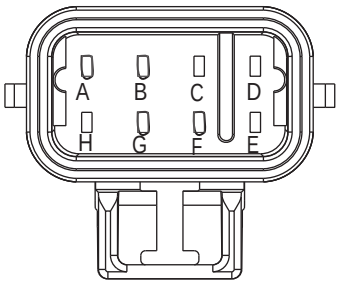

NOTE: Refer to the Eaton Hybrid Component and Connector Location page for Connector Locations

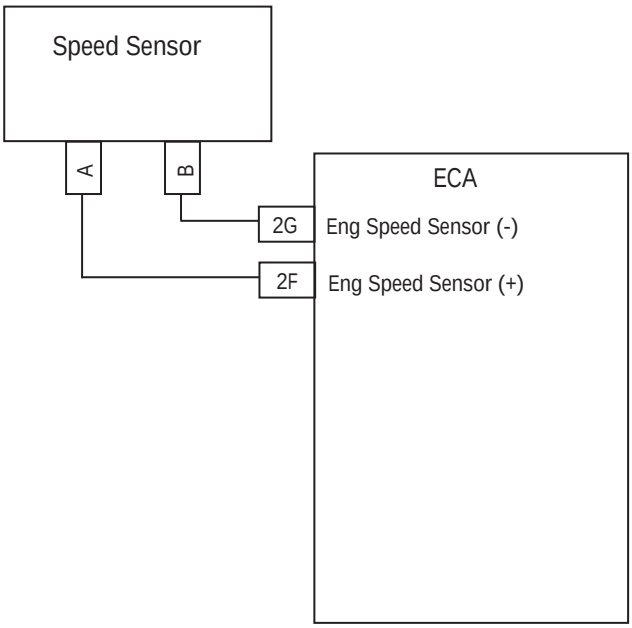

© 2015 Eaton. All rights reserved

https://truckmanualshub.com/

Fault Code 65 - ECA Speed Sensor

A

Purpose: *Verify FMIs present.*

1. Retrieve Active fault codes and FMIs with ServiceRanger using the 9-Way Diagnostic Connector.
2. Which FMIs are listed?
   - If FMI 5 is listed, go to **Step B.**
   - If FMI 2 is listed, go to **Step C.**

B

Purpose: *Verify continuity of ECA Harness.*

1. Check resistance between ECA 8-Way Connector Pin F and Pin G:
   - If resistance between ECA 8-Way Connector Pin F and Pin G is 140–180 ohms, go to **Step C.**
   - If resistance is out of range, repair the open in the sensor or the harness from the ECA to the Sensor, then go to **Step V.**

Connection	Measurement
Pin F to Pin G	

C

Purpose: *Verify continuity of ECA Harness and ground.*

1. Key off.
2. Check resistance between ECA 8-Way Connector Pin F and ground:
   - If resistance is 10K or greater, go to **Step D.**
   - If resistance is out of range, repair the short to ground in the Sensor or the harness from the ECA to the Sensor, then go to **Step V.**

Connection	Measurement
Pin F to ground	

© 2015 Eaton. All rights reserved

D

Purpose: *Verify voltage of ECA Harness and ground.*

1. Key on.
2. Measure voltage from the ECA 8-Way Connector Pin G and ground:
   - If voltage is 0 volts at key on and FMI 5 is Active, replace the **Electric Clutch Actuator (ECA)** (only if Fault Code is Active), then go to **Step V.**
   - If voltage is 0 volts at key on and FMI 2 is Active, go to **Step E.**
   - If voltage is greater than 0 volts at key on, repair the short to power on the ECA Speed Sensor Harness, then go to **Step V.**

Connection	Measurement
Pin G to ground	

E

Purpose: *Verify integrity of ECA Speed Sensor.*

1. Key off.
2. Remove the ECA Speed Sensor and examine the sensor end for signs of damage or debris buildup:
   - If the Sensor shows no cracks or signs of metallic debris buildup on the end, go to **Step F.**
   - If the Sensor is damaged or has debris buildup, replace or clean the ECA Sensor, then go to **Step V.**

F

Purpose: *Verify integrity of engine Flywheel.*

1. Inspect the engine Flywheel to ensure there are no missing or damaged teeth:
   - If flywheel teeth are all intact and in good condition, reinstall Flywheel Sensor until it touches the Flywheel then rotate counterclockwise 1/2 to 1 full turn. Tighten Jam Nut and drive vehicle. If fault returns, replace the Sensor, then go to **Step V.**
   - If flywheel teeth are damaged or missing, concern is with the Flywheel. Contact OEM for repair procedures.

V

Purpose: *Verify repair.*

1. Key off.
2. Key on.
3. Clear codes, see “Clear Inactive Faults” on page 13.
4. Reconnect all connectors and the negative battery cable.
5. Drive the vehicle and attempt to reset the code.
6. Check for codes, see “View Active and Inactive Faults” on page 13.
   - If no codes, test is complete.
   - If Fault Code 34 appears, go to **Step A.** Find error in testing.
   - If a code other than 34 appears, go to“Fault Code Isolation Procedure Index” on page 14.

© 2015 Eaton. All rights reserved

https://truckmanualshub.com/

Fault Code 66 - ECA Battery Voltage

J1939: SA 239 SPN 520271 FMI 3, 4, 14

Overview

The Electric Clutch Actuator (ECA) controls the position of the clutch assembly. The ECA has a main power 3-Way Connector that is directly connected to the 12-volt battery positive and negative terminals.

Detection

The following preconditions must be met before the system detects the fault:

- HCM ignition voltage is greater than 7 volts and less than 16 volts.
- ECA ignition voltage is greater than 8.5 volts.

Conditions to Set Fault Code Active

The following conditions must be met to set the fault code Active:

- FMI 3 is set when the ECA battery voltage is above 17 volts for 10 MS or greater.
- FMI 4 is set when the ECA battery voltage is below 8.5 volts for 10 MS or greater.
- FMI 14 is set when the ECA battery voltage is below 8.5 volts for 10 MS or greater, but the HCM reports the battery voltage is within range.

Fallback

When Fault Code 66 is set the following conditions occur:

- Red “Stop Hybrid” light illuminates.
- Fault is stored in HCM memory. If the fault occurs while driving, the ECA either maintains current clutch position or moves to the last position commanded by the HCM. Then the ECA holding device engages. If the fault occurs at power up, the vehicle will not crank.

Conditions to Set Fault Code Inactive

Only Inactive faults can be cleared from the TECU or HCM history using ServiceRanger. The TECU automatically clears the faults from history after 200 hours. The HCM automatically clears a fault from history after it has been Inactive for 200 hours.

Possible Causes

This fault code can be caused by any of the following:

- FMI 3
  - Charging System
  - ECA
- FMI 4
  - ECA Power Supply Harness, connections and fuse holder
  - Low batteries or bad main power connection
  - Charging system
  - ECA
- FMI 14
  - ECA Power Supply Harness, connections and fuse holder

Additional Tools

- Basic hand tools
- Eaton® Test Adapter Kit
- Digital Volt/Ohm Meter
- ServiceRanger

© 2015 Eaton. All rights reserved

Component Identification

ECA 3-Way Connector

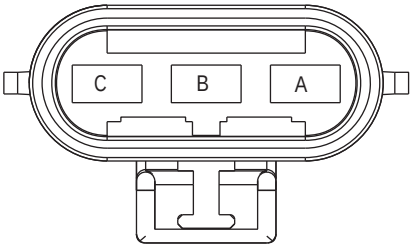

NOTE: Refer to the Eaton Hybrid Component and Connector Location page for Connector Locations

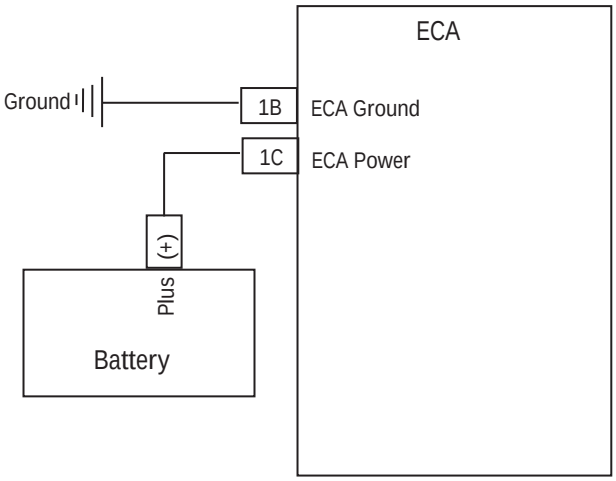

© 2015 Eaton. All rights reserved

https://truckmanualshub.com/

Fault Code 66 - ECA Battery Voltage

A ***Purpose:*** *Verify FMI present and perform Electrical Pretest.*

1. Retrieve Active fault codes and FMIs with ServiceRanger using the 9-Way Diagnostic Connector.
2. Perform the Electrical Pretest (see “Electrical Pretest” on page 25).
   - If FMI 3 or 4 is Active after performing the Electrical Pretest, replace the **Electric Clutch Actuator (ECA)**, then go to **Step V.**
   - If FMI 14 is Active after performing the Electrical Pretest, replace the ECA Power Supply Harness, then go to **Step V.**

V ***Purpose:*** *Verify repair.*

1. Key off.
2. Key on.
3. Clear codes, see “Clear Inactive Faults” on page 13.
4. Reconnect all connectors and the negative battery cable.
5. Drive the vehicle and attempt to reset the code.
6. Check for codes, see “View Active and Inactive Faults” on page 13.
   - If no codes, test is complete.
   - If Fault Code 66 appears, go to **Step A.** Find error in testing.
   - If a code other than 66 appears, go to “Fault Code Isolation Procedure Index” on page 14.

© 2015 Eaton. All rights reserved

Fault Code 67 - ECA Ignition Voltage

J1939: SA 239 SPN 520274 FMI 3, 4, 5

Overview

The Electric Clutch Actuator (ECA) controls the position of the clutch assembly. The ECA has a 8-Way Connector that supplies ignition power to the ECA from the Hybrid Control Module (HCM).

Detection

The following preconditions must be met before the system detects the fault:

- HCM ignition voltage is greater than 7 volts and less than 16 volts.

Conditions to Set Fault Code Active

The following conditions must be met to set the fault code Active:

- FMI 3 is set when the ECA ignition voltage is shorted to the 12-volt system which is detected through the HCM prior to powering the ignition supply for the ECA.
- FMI 4 is set when the ECA ignition voltage is shorted to ground during key on operation which is detected by the HCM.
- FMI 5 is set when the ECA ignition voltage is open circuit after the key is on.

Fallback

When Fault Code 68 is set the following conditions occur:

- Red “Stop Hybrid” light illuminates.
- Fault is stored in HCM memory. If the fault occurs while driving, the ECA either maintains current clutch position or moves to the last position commanded by the HCM, then the ECA holding device will engage. If the fault occurs at power up, the vehicle will not crank.

Conditions to Set Fault Code Inactive

Only Inactive faults can be cleared from the TECU or HCM history using ServiceRanger. The TECU automatically clears faults from history after 200 hours. The HCM automatically clears a fault from history after that fault has been Inactive for 200 hours.

Possible Causes

This fault code can be caused by any of the following:

- FMI 3, 4, 5
  - ECA Ignition Supply Harness from HCM
  - HCM
  - ECA

Additional Tools

- Basic hand tools
- Eaton® Test Adapter Kit
- Digital Volt/Ohm Meter
- ServiceRanger

© 2015 Eaton. All rights reserved

https://truckmanualshub.com/

Component Identification

Note: No schematic for this code.

© 2015 Eaton. All rights reserved

Fault Code 67 - ECA Ignition Voltage

A

Purpose: *Verify FMIs present.*

1. Retrieve Active fault codes and FMIs with ServiceRanger using the 9-Way Diagnostic Connector.
2. Key off.
3. Which FMIs are present?
   - If FMI 3 is listed, go to **Step B.**
   - If FMI 4 is listed, go to **Step C.**
   - If FMI 5 is listed, go to **Step E.**

B

Purpose: *Verify voltage of ECA Harness and ground.*

1. Key off.
2. Disconnect the ECA 8-Way Connector.
3. Measure voltage on the ECA 8-Way Connector from Pin H to ground:
   - If voltage is less than 0 volts, replace the **Hybrid Control Module (HCM)**, then go to **Step V.**
   - If voltage is 11–13 volts, repair the short to battery in the Vehicle Harness, then go to **Step V.**

Connection	Measurement
Pin H to ground	

C

Purpose: *Verify voltage of ECA Harness and ground.*

1. Key off.
2. Disconnect the ECA 8-Way Connector.
3. Key on.
4. Measure voltage from the ECA 8-Way Connector from Pin H to ground:
   - If voltage from H to ground is 11–13 volts, replace the **Hybrid Control Module (HCM)**, then go to **Step V.**
   - If voltage is outside of range, go to **Step D.**

Connection	Measurement
Pin H to ground	

D

Purpose: *Verify continuity of HCM System Harness and ground.*

1. Key off.
2. Disconnect the HCM 38-Way System Harness Connector.
3. Measure the resistance between the HCM System Harness 38-Way Connector Pin 13 and ground.
   - If resistance from Pin 13 to ground is 10K ohms or greater, replace the **Hybrid Control Module (HCM)**, then go to **Step V.**
   - If resistance is outside of range, repair the Vehicle Harness from the ECA to the HCM, then go to **Step V.**

Connection	Measurement
Pin 13 to ground	

© 2015 Eaton. All rights reserved

https://truckmanualshub.com/

E

Purpose: *Verify continuity of HCM Harness and ECA Harness.*

1. Key off.
2. Disconnect the HCM 38-Way System Harness Connector.
3. Measure the resistance between the HCM Harness 38-Way Connector and the ECA 8-Way Connector on the following pins:
   - HCM Pin 13 to ECA Pin H
   - If the resistance between Pin 13 and Pin H is 0–0.3 ohms, replace the **Electric Clutch Actuator (ECA)** (only if Fault Code is Active), then go to **Step V.**
   - If resistance is outside of range, repair the open in the harness between the ECA and HCM, then go to **Step V.**

Connection	Measurement
HCM Connector Pin 13 to ECA Connector Pin H	

V

Purpose: *Verify repair.*

1. Key off.
2. Key on.
3. Clear codes, see “Clear Inactive Faults” on page 13.
4. Reconnect all connectors and the negative battery cable.
5. Drive the vehicle and attempt to reset the code.
6. Check for codes, see “View Active and Inactive Faults” on page 13.
   - If no codes, test is complete.
   - If Fault Code 67 appears, go to **Step A.** Find error in testing.
   - If a code other than 67 appears, go to “Fault Code Isolation Procedure Index” on page 14.

© 2015 Eaton. All rights reserved

Fault Code 70 - Engine Failed to Respond (HCM)

J1939: SA 239 SPN 93, 188, 539, 544 FMI 0, 1, 2, 7

Overview

The Hybrid Control Module (HCM) communicates with the Engine Electronic Control Unit (ECU) over the J1939 data link during normal operation to control the engine torque and speed for transmission shifting.

Detection

The following preconditions must be met before the system detects the fault:

- HCM ignition voltage is greater than 7 volts and less than 16 volts.
- J1939 Communication Link Fault (HCM) is Inactive.
- J1939 Engine Message Fault (HCM) is Inactive.

Conditions to Set Fault Code Active

The following conditions must be met to set the fault code Active:

- FMI 7 is set when the HCM commanded engine torque is less than 80% Max Engine Torque, HCM commanded engine torque is greater than 100 ft. lbs, and the difference between commanded engine torque and engine torque feedback is greater than 80 lb-ft for more than 1 second. Or, if the engine speed or torque maps are received with an error.

Fallback

When Fault Code 70 is set the following conditions occur:

- Amber “Check Hybrid” light illuminates.
- Fault is stored in HCM memory.
- If the fault is set while driving, the vehicle may experience shifting concerns.

Conditions to Set Fault Code Inactive

Only Inactive faults can be cleared from the TECU or HCM history using ServiceRanger. The TECU automatically clears faults from history after 200 hours. The HCM automatically clears faults from history after that fault has been Inactive for 200 hours.

Possible Causes

This fault code can be caused by any of the following:

- FMI 7
  - Engine
  - Fuel system
  - Exhaust back pressure
  - Turbo charger
  - Air Intake/filter restriction
  - Unreported engine loads
  - Incorrect engine configuration settings for transmission assembly

Additional Tools

- Basic hand tools
- Eaton® Test Adapter Kit
- Digital Volt/Ohm Meter
- ServiceRanger

© 2015 Eaton. All rights reserved

https://truckmanualshub.com/

Component Identification

Note: No Schematic for this code.

Note: For component location refer to OEM service literature.

© 2015 Eaton. All rights reserved

Fault Code 70 - Engine Failed to Respond (HCM)

A ***Purpose:*** *Check for Active or Inactive fault code status.*

1. Retrieve Active fault codes and FMIs with ServiceRanger using the 9-Way Diagnostic Connector.
2. Key on.
3. Retrieve codes, see “View Active and Inactive Faults” on page 13.
   - If Fault Code 70 is Active, contact the OEM because the engine is failing to respond to the HCMs command during a shift or the maps were received in error.
   - If Fault Code 70 is Inactive, test is complete.

© 2015 Eaton. All rights reserved

https://truckmanualshub.com/

Fault Code 71 - Failed to Disengage a Gear

J1587: MID 130 SID 60 FMI 7
J1939: SA 3 SPN 520275 FMI 7

Overview

The Transmission Electronic Control Unit controls the Electric Shifter, which engages the different rails and gear positions. The Electric Shifter is comprised of two electric motors; one changes the rail position and the other changes the gear position.

Detection

The following preconditions must be met before the system detects the fault:

- TECU ignition voltage is greater than 7 volts and less than 16 volts.
- TECU System Battery Voltage Low Fault is Inactive.
- TECU System Battery Voltage Weak Fault is Inactive.
- TECU J1939 Communication Link Fault is Inactive.
- J1939 engine torque is zero ± 5% and J1939 engine speed is within 50 RPM of synchronous.

Conditions to Set Fault Code Active

The following conditions must be met to set the fault code Active:

- FMI 7 is set when the Electric Shifter fails three consecutive attempts to disengage a gear.

Fallback

When Fault Code 71 is set the following conditions occur:

- Fault is stored in TECU memory
- If the fault sets while driving, the vehicle maintains the current gear and clutch opens when the vehicle stops.

Conditions to Set Fault Code Inactive

Only Inactive faults can be cleared from the TECU or HCM history using ServiceRanger. The TECU automatically clears faults from history after 200 hours. The HCM automatically clears a fault from history after that fault has been Inactive for 200 hours.

Possible Causes

This fault code can be caused by any of the following:

- FMI 7
  - Dragging Clutch
  - ECA
  - Shift Bar Housing
  - Electric Shifter
  - Gear Select Sensor
  - Yoke, Sliding Clutch, Mainshaft
  - TECU
  - Torque locked in gear

Additional Tools

- Basic hand tools
- Eaton® Test Adapter Kit
- Digital Volt/Ohm Meter
- ServiceRanger

© 2015 Eaton. All rights reserved

Component Identification

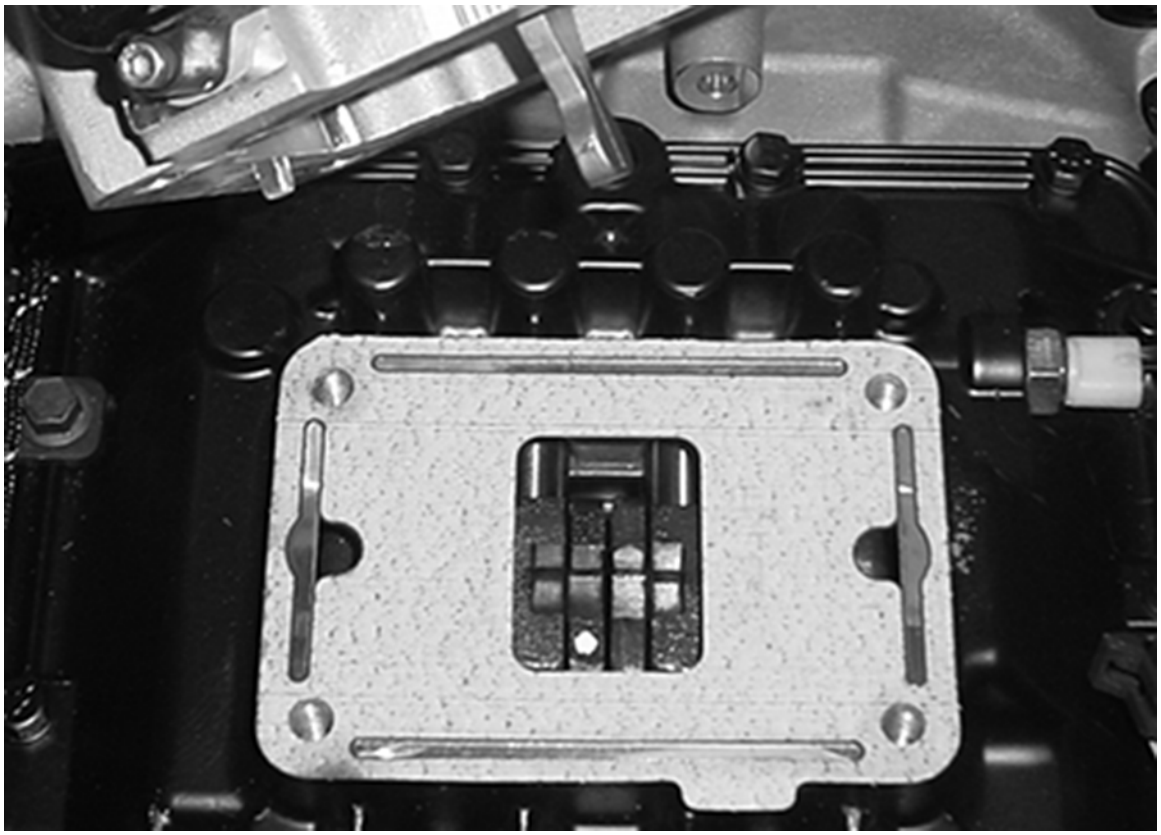

Note: The picture above shows the Shift Forks in the neutral position.

Note: For component location refer to the OEM service literature.

© 2015 Eaton. All rights reserved

https://truckmanualshub.com/

Fault Code 71 - Failed to Disengage a Gear

A

Purpose: *Verify gear display in neutral gear position.*

1. Retrieve Active fault codes and FMIs with ServiceRanger using the 9-Way Diagnostic Connector.
2. Key on.
3. Press N on the Push Button Shift Control.
4. Observe Gear Display:
   - If gear display shows: “N”, go to **Step V.**
   - If gear display shows: “71”, go to **Step B.**

Parameter	Reading
Gear Display	

B

Purpose: *Perform Electrical Pretest.*

1. Perform the Electrical Pretest (see “Electrical Pretest” on page 25):
   - If no issues found during the Electrical Pretest, go to **Step C.**
   - If issue was repaired during the Electrical Pretest, go to **Step A.**

C

Purpose: *Perform manual Shift Bar Housing inspection.*

1. Key off.
2. Remove Electric Shifter* from Shift Bar Housing to see what gear position is currently engaged.
3. Attempt to move the engaged rail back to neutral:
   - If rails move from the engaged position to neutral, go to **Step D.**
   - If rails do not move from the engaged position, attempt to take the torque off the driveline. If concern is still present, inspect the Main Case for a damaged Mainshaft, sliding Clutch, or Fork. Go to **Step V.**
   - * See **Electric Shifter** in TRSM1000 Manual.

D

Purpose: *Verify integrity of Shift Bar Housing components.*

1. Key off.
2. Inspect the following:
   - Shift blocks are fastened to Shift Rails securely
   - Electric Shifter is free from any excessive lube contamination buildup
   - Two gear positions can not be engaged at the same time
   - If no problem found, replace the **Electric Shifter**, then go to **Step V.**
   - If problem is found, repair as required, then go to **Step V.**

© 2015 Eaton. All rights reserved

V ***Purpose:*** *Verify repair.*

1. Key off.
2. Reconnect all connectors and the negative battery cable.
3. Key on.
4. Clear codes, see “Clear Inactive Faults” on page 13.
5. Drive the vehicle and attempt to reset the code.
6. Check for codes, see “View Active and Inactive Faults” on page 13.
   - If no codes, test is complete.
   - If Fault Code 71 appears, go to **Step A.** Find error in testing.
   - If a code other than 71 appears, go to “Fault Code Isolation Procedure Index” on page 14.

© 2015 Eaton. All rights reserved

https://truckmanualshub.com/

Fault Code 72 - Failed to Select Rail

J1587: MID 130 SID 59 FMI 7
J1939: SA 3 SPN 520277 FMI 7

Overview

The Transmission Electronic Control Unit controls the Electric Shifter, which engages the different rails and gear positions. The Electric Shifter is comprised of two electric motors; one changes the rail position and the other changes the gear position.

Detection

The following preconditions must be met before the system detects the fault:

- TECU ignition voltage is greater than 7 volts and less than 16 volts.
- TECU System Battery Voltage Low Fault is Inactive.
- TECU System Battery Voltage Weak Fault is Inactive.
- This fault may occur at power up after 15 seconds.

Conditions to Set Fault Code Active

The following conditions must be met to set the fault code Active:

- FMI 7 is set when the Electric Shifter fails five consecutive attempts to engage a particular rail position.

Fallback

When Fault Code 72 is set the following conditions occur:

- Fault is stored in TECU memory.
- If the fault sets while driving, the vehicle continues to select the proper rail position.

Conditions to Set Fault Code Inactive

Only Inactive faults can be cleared from the TECU or HCM history using ServiceRanger. The TECU automatically clears the faults from history after 200 hours. The HCM automatically clears a fault from history after it has been Inactive for 200 hours.

Possible Causes

This fault code can be caused by any of the following:

- FMI 7
  - Shift Bar Housing
  - Electric Shifter
  - Rail Select Sensor
  - TECU

Additional Tools

- Basic hand tools
- Eaton® Test Adapter Kit
- Digital Volt/Ohm Meter
- ServiceRanger

© 2015 Eaton. All rights reserved

https://truckmanualshub.com/

Component Identification

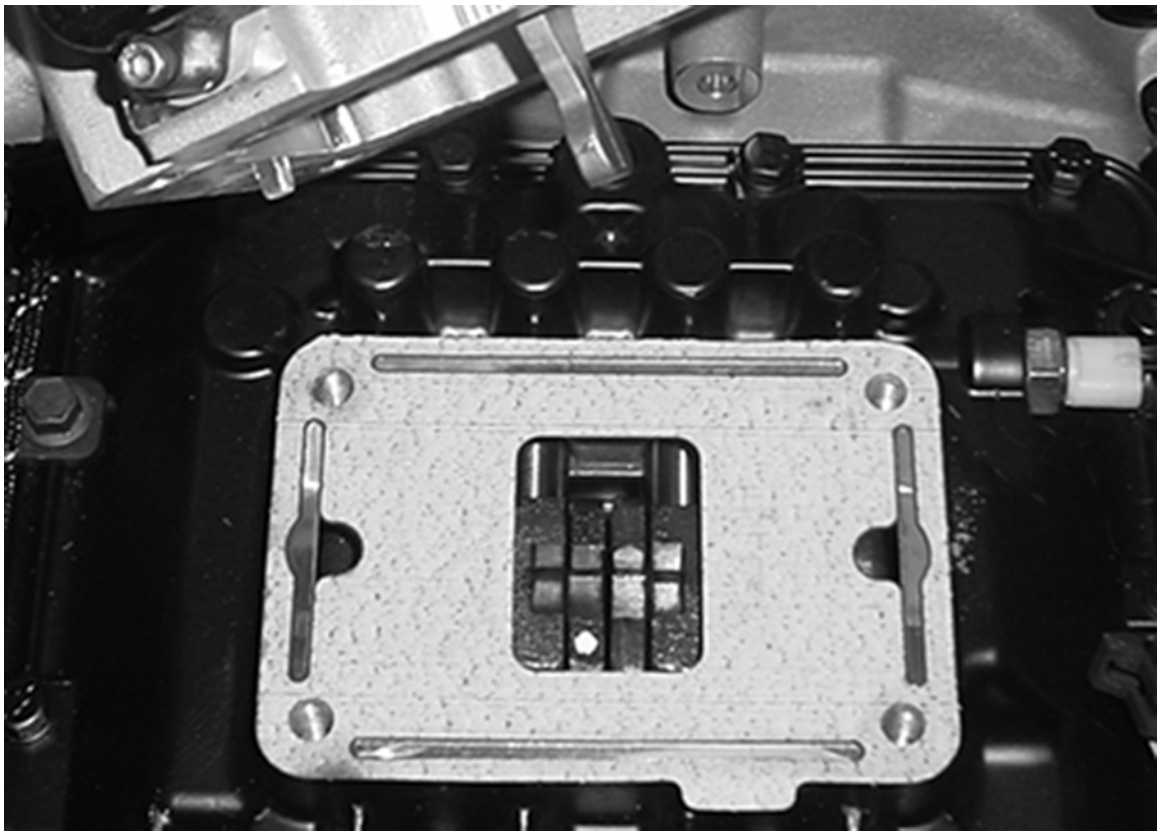

Note: The picture above shows the Shift Forks in the neutral position.

Note: For component location refer to the OEM service literature.

© 2015 Eaton. All rights reserved

https://truckmanualshub.com/

Fault Code 72 - Failed to Select Rail

A

Purpose: *Verify gear display in neutral gear position.*

1. Retrieve Active fault codes and FMIs with ServiceRanger using the 9-Way Diagnostic Connector.
2. Key on.
3. Place Shift Device in neutral.
4. Press Service Brake.
5. Select Drive.
6. Observe gear display:
   - If there is an Active Fault Code 72, go to **Step B.**
   - If Gear Display shows solid gear, go to **Step V.**

Parameter	Reading
Gear Display	

B

Purpose: *Perform Electrical Pretest.*

1. Perform the Electrical Pretest (see “Electrical Pretest” on page 25).
   - If no issues found during the Electrical Pretest, go to **Step C.**
   - If issue was repaired during the Electrical Pretest, go to **Step A.**

C

Purpose: *Verify integrity of Shift Bar Housing components.*

1. Key off.
2. Remove Electric Shifter* from Shift Bar Housing.
3. Inspect the following:
   - Shift Blocks are fastened to Shift Rails securely
   - Shift Rails move into each gear position
   - Electric Shifter is free from any excessive lube contamination buildup
   - Two gear positions can not be engaged at the same time
   - If no problem found, replace the **Electric Shifter**, then go to **Step V.**
   - If problem is found, repair as required, then go to **Step V.**
   - * See **Electric Shifter**.

V

Purpose: *Verify repair.*

1. Key off.
2. Reconnect all connectors and the negative battery cable.
3. Key on.
4. Clear codes, see “Clear Inactive Faults” on page 13.
5. Drive the vehicle and attempt to reset the code.
6. Check for codes, see “View Active and Inactive Faults” on page 13.
   - If no codes, test is complete.
   - If Fault Code 72 appears, go to **Step A.** Find error in testing.
   - If a code other than 72 appears, go to “Fault Code Isolation Procedure Index” on page 14.

© 2015 Eaton. All rights reserved

Fault Code 73 - Failed to Engage a Gear

J1587: MID 130 SID 58 FMI 7
J1939: SA 3 SPN 520278 FMI 7

Overview

The Transmission Electronic Control Unit controls the Electric Shifter, which engages the different rails and gear positions. The Electric Shifter is comprised of two electric motors—the Rail motor and Gear motor. The Rail motor changes the rail position and the Gear motor changes the gear position.

Detection

The following preconditions must be met before the system detects the fault:

- TECU ignition voltage is greater than 7 volts and less than 16 volts.
- TECU System Battery Voltage Low Fault is Inactive.
- TECU System Battery Voltage Weak Fault is Inactive.

Conditions to Set Fault Code Active

The following conditions must be met to set the fault code Active:

- FMI 7 is set when the Electric Shifter fails 5 consecutive attempts to engage a particular gear position.

Fallback

When Fault Code 73 is set the following conditions occur:

- Fault is stored in TECU memory.
- If the fault sets while driving, the vehicle maintains the current position.

Conditions to Set Fault Code Inactive

Only Inactive faults can be cleared from the TECU or HCM history using ServiceRanger. The TECU automatically clears faults from history after 200 hours. The HCM automatically clears a fault from history after that fault has been Inactive for 200 hours.

Possible Causes

This fault code can be caused by any of the following:

- FMI 7
  - Dragging Clutch
  - ECA
  - Shift Bar Housing
  - Electric Shifter
  - Gear Select Sensor
  - Yoke, Sliding Clutch, Mainshaft
  - TECU

Additional Tools

- Basic hand tools
- Eaton® Test Adapter Kit
- Digital Volt/Ohm Meter
- ServiceRanger

© 2015 Eaton. All rights reserved

https://truckmanualshub.com/

Component Identification

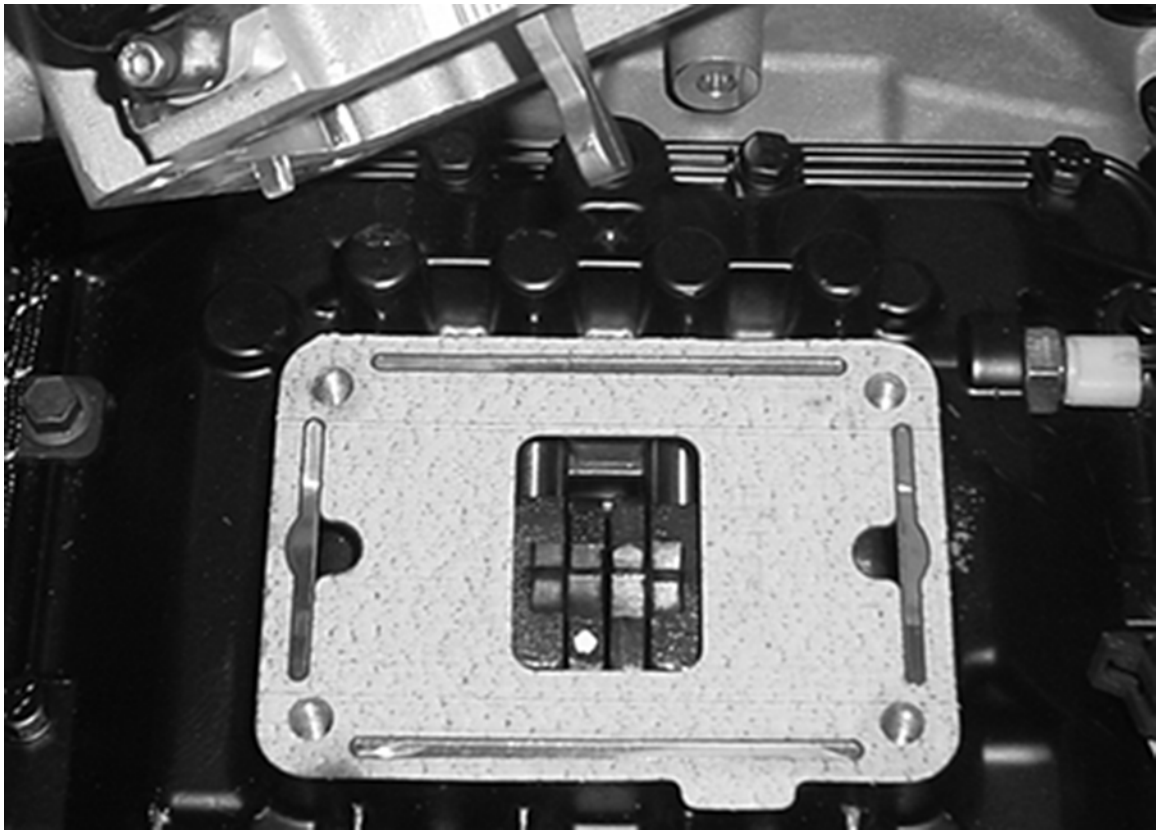

Note: The picture above shows the Shift Forks in the neutral position.

© 2015 Eaton. All rights reserved

Fault Code 73 - Failed to Engage a Gear

A

Purpose: *Verify gear display in neutral gear position.*

1. Retrieve Active fault codes and FMIs with ServiceRanger using the 9-Way Diagnostic Connector.
2. Key on.
3. Place Shift Device in neutral.
4. Press Service Brake.
5. Select Drive.
6. Observe Gear Display:
   - If there is an Active Fault Code 73, go to **Step B.**
   - If gear display shows solid gear, go to **Step V.**

Parameter	Reading
Gear Display	

B

Purpose: *Perform Electrical Pretest.*

1. Perform the Electrical Pretest (see “Electrical Pretest” on page 25):
   - If no issues found during the Electrical Pretest, go to **Step C.**
   - If issue was repaired during the Electrical Pretest, go to **Step A.**

C

Purpose: *Verify integrity of Shift Bar Housing components.*

1. Key off.
2. Remove Electric Shifter* from Shift Bar Housing.
3. Inspect the following:
   - Shift Blocks are fastened to Shift Rails securely
   - Electric Shifter is free from any excessive lube contamination buildup
   - Two gear positions can not be engaged at the same time
   - If no problem is found, replace the **Electric Shifter**, then go to **Step V.**
   - If problem is found, repair as required, then go to **Step V.**
   - * See **Electric Shifter**.

V

Purpose: *Verify repair.*

1. Key off.
2. Reconnect all connectors and the negative battery cable.
3. Key on.
4. Clear codes, see “Clear Inactive Faults” on page 13.
5. Drive the vehicle and attempt to reset the code.
6. Check for codes, see “View Active and Inactive Faults” on page 13.
   - If no codes, test is complete.
   - If Fault Code 73 appears, go to **Step A.** Find error in testing.
   - If a code other than 73 appears, go to “Fault Code Isolation Procedure Index” on page 14.

© 2015 Eaton. All rights reserved

https://truckmanualshub.com/

Fault Code 74 - Engine Failed to Respond (TECU)

J1587: MID 130 PID 93, 190 FMI 7
J1939: SA 3 SPN 93, 190 FMI 7

Overview

The Transmission Electronic Control Unit (TECU) communicates with the Electronic Control Unit (ECU) over the J1939 data link during normal operation; however, engine control is accomplished by the ECU during hybrid mode. The TECU changes mode to AutoShift Only or AutoShift Fallback mode. Then the TECU requests changes in engine speed and torque instead of the Hybrid Control Module (HCM).

Detection

The following preconditions must be met before the system detects the fault:

- TECU ignition voltage is greater than 7 volts and less than 16 volts.
- J1939 Communication Link Fault (TECU) Inactive.
- J1939 Engine Message Fault (TECU) Inactive.
- J1939 engine speed is greater than 300 RPM if the TECU is in speed control mode, or greater than 1000 RPM if the TECU is in torque control mode.
- Desired engine speed is less than J1939 engine configuration map speed.

Conditions to Set Fault Code Active

The following conditions must be met to set the fault code Active:

- FMI 7 is set when the difference between actual engine percent torque and desired engine percent torque is greater than 50 for 2 continuous seconds, or when the difference between desired engine speed and actual engine speed is greater than 400 RPM for four continuous seconds.

Fallback

When Fault Code 74 is set the following conditions occur:

- Fault is stored in TECU memory.
- If the fault sets while driving, the vehicle remains in the current gear position. Once the vehicle stops, start and reverse gears can be engaged.
- TECU changes to “AutoShift Fallback” mode.

Conditions to Set Fault Code Inactive

Only Inactive faults can be cleared from the TECU or HCM history using ServiceRanger. The TECU automatically clears faults from history after 200 hours. The HCM automatically clears a fault from history after that fault has been Inactive for 200 hours.

Possible Causes

This fault code can be caused by any of the following:

- FMI 7
  - Engine
  - Fuel system
  - Exhaust back pressure
  - Turbo charger
  - Air Intake/filter restriction
  - Unreported engine loads
  - Incorrect engine configuration settings for transmission assembly

Additional Tools

- Basic hand tools
- Eaton® Test Adapter Kit
- Digital Volt/Ohm Meter
- ServiceRanger

© 2015 Eaton. All rights reserved

https://truckmanualshub.com/

Component Identification

Note: No Schematic for this code.

Note: For component location refer to the OEM service literature.

© 2015 Eaton. All rights reserved

https://truckmanualshub.com/

Fault Code 74 - Engine Failed to Respond (TECU)

A ***Purpose:*** *Check for Active or Inactive fault code status.*

1. Retrieve Active fault codes and FMIs with ServiceRanger using the 9-Way Diagnostic Connector.
2. Key on.
3. Retrieve codes, see “View Active and Inactive Faults” on page 13.
   - If Fault Code 74 is Active, contact the OEM because the engine is failing to respond to the transmission commands during a shift.
   - If Fault Code 74 is Inactive, test is complete.

© 2015 Eaton. All rights reserved

Fault Code 75 - Power Down in Gear

J1587: MID 130 SID 60 FMI 14
J1939: SA 3 SPN 520276 FMI 14

Overview

The Push Button Shift Control (PBSC) is connected to the Transmission Electronic Control Unit (TECU) over the High Integrity Link (HIL) to communicate driver mode selection and fault status. At power down the PBSC should be placed in “N” to perform the proper calibration sequence and to prevent a torque locked transmission.

Detection

The following preconditions must be met before the system detects the fault:

- TECU ignition voltage is greater than 7 volts and less than 16 volts.
- PBSC ignition voltage is greater than 7 volts and less than 16 volts.

Conditions to Set Fault Code Active

The following conditions must be met to set the fault code Active:

- FMI 14 is set when the TECU goes into the power-down sequence and a drive mode selection other than “N” is confirmed.

Fallback

When Fault Code 75 is set the following conditions occur:

- Fault is stored in TECU memory only as an Inactive fault, since it only sets during the power-down sequence.

Conditions to Set Fault Code Inactive

Only Inactive faults can be cleared from the TECU or HCM history using ServiceRanger. The TECU automatically clears faults from history after 200 hours. The HCM automatically clears a fault from history after that fault has been Inactive for 200 hours.

Possible Causes

This fault code can be caused by any of the following:

- FMI 14: Driver powered down in non-neutral mode

Additional Tools

- Basic hand tools
- Eaton® Test Adapter Kit
- Digital Volt/Ohm Meter
- ServiceRanger

© 2015 Eaton. All rights reserved

https://truckmanualshub.com/

Component Identification

Note: No Schematic for this code.

Note: For component location refer to the OEM service literature.

© 2015 Eaton. All rights reserved

Fault Code 75 - Power Down in Gear

A ***Purpose:*** *Check for Active and Inactive fault code status.*

1. Retrieve Active fault codes and FMIs with ServiceRanger using the 9-Way Diagnostic Connector.
2. Key on.
3. Retrieve Codes, see “View Active and Inactive Faults” on page 13.
   - If Fault Code 75 is Inactive, no action necessary. This code indicates the driver powered down the system prior to selecting neutral.
   - Explain to driver, “N” must be selected on the Push Button Shift Control before powering down to prevent a stuck in gear situation and/or a power up no crank situation.

© 2015 Eaton. All rights reserved

https://truckmanualshub.com/

Fault Code 76 - High Voltage Battery 1 Potential Voltage

J1939: SA 239 SPN 520250 FMI 3, 4, 16, 18

Overview

The high-voltage batteries are 172 volts each. They are connected in a series to produce 340 volts DC. The Battery Control Unit, located in the Relay Box, communicates with each battery to determine temperature, State Of Charge (SOC) and voltage. This information is then sent to the Inverter.

Detection

The following preconditions must be met before the system detects the fault:

- Inverter ignition voltage is greater than 7 volts and less than 16 volts.
- Battery Control Unit ignition voltage is greater than 7 volts and less than 16 volts.

Conditions to Set Fault Code Active

The following conditions must be met to set the fault code Active:

- FMI 3 is set when the BCU detects the high-voltage battery is greater than 417 volts for 240 MS.
- FMI 16 is set when the BCU detects the high-voltage battery is greater than 408 volts for 240 MS.
- FMI 4 is set when the BCU detects the high-voltage battery is less than 211 volts for 240 ms.
- FMI 18 is set when the BCU detects the high-voltage battery is less than 240 volts for 240 ms.

Note: When troubleshooting an Inactive code refer to the “Product Diagnostic Mode (PDM)” on page 19.

Fallback

When Fault Code 76 is set the following conditions occur:

- Amber “Check Hybrid” light blinks for FMI 4 and displays solid for FMI 3.
- Fault is stored in HCM memory.
- Inverter shuts high-voltage system off.
- HCM continues to control the hybrid vehicle in a diesel-only mode.
- Transmission defaults start gear to 1st.

Conditions to Set Fault Code Inactive

Only Inactive faults can be cleared from the TECU or HCM history using ServiceRanger. The TECU automatically clears a fault from history after 200 hours. The HCM automatically clears a fault from history after that fault has been Inactive for 200 hours.

Possible Causes

This fault code can be caused by any of the following:

- FMI 3, 4
  - PEC
  - DC cable
  - DC Interlock Loop
  - Inverter
  - Service Switch
  - Inertia Switch

Additional Tools

- Basic hand tools
- ASTM Class 0 electrical insulating rubber gloves with leather protectors J48603
- Lockout bracket J48506
- Lockout tags
- Eaton® Test Adapter Kit J43318
- Digital Volt/Ohm Meter J46708
- ServiceRanger

© 2015 Eaton. All rights reserved

Component Identification

Note: No schematic for this code.

Note: Check to see if the red Service Switch on the front of the PEC is pulled out. If the switch is pushed in pull the switch out and turn the key off. After 2 minutes turn the key on.

© 2015 Eaton. All rights reserved

https://truckmanualshub.com/

Fault Code 76 - High Voltage Battery 1 Potential Voltage

A ***Purpose:*** *Check for Active or Inactive fault code status.*

1. Review and follow the “Warnings & Cautions” on page 1.
2. Key off.
3. Key on.
4. Retrieve Active fault codes and FMIs with ServiceRanger using the 9-Way Diagnostic Connector.
5. Key off.

Warning: See “High-Voltage Service Shutdown and Power-Up Procedure” on page 4. Follow the procedures to avoid shock, burn or death from improperly handled high-voltage.

6. Which FMIs are present?
   - If Fault Code 76 is listed with an Active Fault Code 101 FMI 27, 28, go to “Fault Code 101 - High Voltage Battery 1” on page 303.
   - If Fault Code 76 is listed with an Active Fault Code 101 FMI 29, go to “Fault Code 101 - High Voltage Battery 1” on page 303.
   - If Fault Code 76 FMI 3 or 4 are listed with no other Active hybrid fault codes, contact Eaton at 1-800-826-HELP (4357).
   - If Fault Code 76 FMI 3 or 4 are listed with other Active hybrid fault codes, go to “View Active and Inactive Faults” on page 13 to look up Active hybrid fault code(s).
   - If Fault Code 76 FMI 16 or 18 are listed, test is complete. FMIs 16 and 18 require no action or replacement.

V ***Purpose:*** *Verify repair.*

1. Key off.
2. Key on.
3. Clear codes, see “Clear Inactive Faults” on page 13.
4. Reconnect all connectors and the negative battery cable.
5. Drive the vehicle and attempt to reset the code.
6. Check for codes, see “View Active and Inactive Faults” on page 13.
   - If no codes, test is complete.
   - If Fault Code 76 appears, go to **Step A.** Find error in testing.
   - If a code other than 76 appears, go to “Fault Code Isolation Procedure Index” on page 14.

© 2015 Eaton. All rights reserved

Fault Code 77 - High Voltage Battery 2 Potential Voltage

J1939: SA 239 SPN 520262 FMI 3, 4, 16, 18

Overview

The high-voltage batteries are 172 volts each connected in series to produce 340 volts DC. The Battery Control Unit, located in the Relay Box, communicates with each battery to determine temperature, State Of Charge (SOC) and voltage. This information is then sent to the Inverter.

Detection

The following preconditions must be met before the system detect the fault:

- Inverter ignition voltage is greater than 7 volts and less than 16 volts.
- Battery Control Unit ignition voltage is greater than 7 volts and less than 16 volts.

Conditions to Set Fault Code Active

The following conditions must be met to set the fault code Active:

- FMI 3 is set when the BCU detects the high-voltage battery is greater than 417 volts for 240 MS.
- FMI 16 is set when the BCU detects the high-voltage battery is greater than 408 volts for 240 MS.
- FMI 4 is set when the BCU detects the high-voltage battery is less than 211 volts for 240 MS.
- FMI 18 is set when the BCU detects the high-voltage battery is less than 240 volts for 240 MS.

Note: When troubleshooting an Inactive code refer to the “Product Diagnostic Mode (PDM)” on page 19.

Fallback

When Fault Code 77 is set the following conditions occur:

- Amber “Check Hybrid” light blinks for FMI 4 and displays solid for FMI 3
- Fault is stored in HCM memory
- Inverter shuts high-voltage system off.
- HCM continues to control the hybrid vehicle in a diesel-only mode
- Transmission defaults start gear to 1st

Conditions to Set Fault Code Inactive

Only Inactive faults can be cleared from the TECU or HCM history using ServiceRanger. The TECU automatically clears faults from history after 200 hours. The HCM automatically clears a fault from history after that fault has been Inactive for 200 hours.

Possible Causes

This fault code can be caused by any of the following:

- FMI 3, 4
  - PEC
  - DC cable
  - DC Interlock Loop
  - Inverter
  - Service Switch
  - Inertia Switch

Additional Tools

- Basic hand tools
- ASTM Class 0 electrical insulating rubber gloves with leather protectors J48603
- Lockout bracket J48506
- Lockout tags
- Eaton® Test Adapter Kit J43318
- Digital Volt/Ohm Meter J46708
- ServiceRanger

© 2015 Eaton. All rights reserved

https://truckmanualshub.com/

Component Identification

Note: No Schematic for this Code.

Note: For component location refer to the OEM service literature.

Check to see if the red Service Switch on the front of the PEC is pulled out. If the switch is pushed in, pull the switch out and turn the key off. After 2 minutes, turn the key on.

© 2015 Eaton. All rights reserved

Fault Code 77 - High Voltage Battery 2 Potential Voltage

A ***Purpose:*** *Check for Active or Inactive fault code status.*

1. Review and follow the “Warnings & Cautions” on page 1.
2. Key off.
3. Key on.
4. Retrieve Active fault codes and FMIs with ServiceRanger using the 9-Way Diagnostic Connector.
5. Key off.

Warning: See “High-Voltage Service Shutdown and Power-Up Procedure” on page 4. Follow the procedures to avoid shock, burn or death from improperly handled high-voltage.

6. Which FMIs are present?
   - If Fault Code 77 is listed with an Active Fault Code 102 FMI 27 or 28, go to “Fault Code 102 - High Voltage Battery 2” on page 307.
   - If Fault Code 77 is listed with an Active Fault Code 102 FMI 29, go to go to “Fault Code 102 - High Voltage Battery 2” on page 307.
   - If Fault Code 77, FMI 3 or 4 are listed with no other Active hybrid fault codes, contact Eaton at 1-800-826-HELP (4357).
   - If Fault Code 77, FMI 3 or 4 are listed with other Active hybrid fault codes, go to “View Active and Inactive Faults” on page 13 to look up Active hybrid fault code(s).
   - If Fault Code 77, FMI 16 or 18 are listed, test is complete. FMIs 16 and 18 require no action or replacement.

V ***Purpose:*** *Verify repair.*

1. Key off.
2. Key on.
3. Clear codes, see “Clear Inactive Faults” on page 13.
4. Reconnect all connectors and the negative battery cable.
5. Drive the vehicle and attempt to reset the code.
6. Check for codes, see “View Active and Inactive Faults” on page 13.
   - If no codes, test is complete.
   - If Fault Code 77 appears, go to **Step A.** Find error in testing.
   - If a code other than 77 appears, go to “Fault Code Isolation Procedure Index” on page 14.

© 2015 Eaton. All rights reserved

https://truckmanualshub.com/

Fault Code 78 - High Voltage Battery 1 Current

J1939: SA 239 SPN 520232 FMI 6

Overview

The high-voltage batteries are 172 volts each connected in series to produce 340 volts DC. The Battery Control Unit (BCU), located in the Relay Box, communicates with each battery to determine temperature, State Of Charge and voltage. This information is then sent to the Inverter.

Detection

The following preconditions must be met before the system detects the fault:

- Inverter ignition voltage is greater than 7 volts and less than 16 volts.
- Battery Control Unit ignition voltage is greater than 7 volts and less than 16 volts.

Conditions to Set Fault Code Active

The following conditions must be met to set the fault code Active:

- FMI 6 is set when the BCU detects high-voltage battery current is greater than 200 amps for 1 second.

Fallback

When Fault Code 78 is set the following conditions occur:

- Amber “Check Hybrid” light illuminates.
- Fault is stored in Hybrid Control Module (HCM) memory.
- Inverter shuts high-voltage system off, HCM continues to control the hybrid vehicle in a diesel-only mode.
- Transmission defaults start gear to 1st.

Conditions to Set Fault Code Inactive

Only Inactive faults can be cleared from the TECU or HCM history using ServiceRanger. The TECU automatically clears faults from history after 200 hours. The HCM automatically clears a fault from history after that fault has been Inactive for 200 hours.

Possible Causes

This fault code can be caused by any of the following:

- FMI 6 PEC

Additional Tools

- Basic hand tools
- ASTM Class 0 electrical insulating rubber gloves with leather protectors J48603
- Lockout bracket J48506
- Lockout tags
- Eaton® Test Adapter Kit J43318
- Digital Volt/Ohm Meter J46708
- ServiceRanger

© 2015 Eaton. All rights reserved

Component Identification

Note: No schematic for this code.

© 2015 Eaton. All rights reserved

https://truckmanualshub.com/

Fault Code 78 - High Voltage Battery 1 Current

A ***Purpose:*** *Check for Active or Inactive fault code status.*

1. Review and follow the "Warnings & Cautions" on page 1.
2. Retrieve Active fault codes and FMIs with ServiceRanger using the 9-Way Diagnostic Connector.
3. Key off.

Warning: See "High-Voltage Service Shutdown and Power-Up Procedure" on page 4. Follow the procedures to avoid shock, burn or death from improperly handled high-voltage.

4. Which faults are present?
   - If Fault Code 78 is listed with an Active Fault Code 113, go to "Fault Code 113 - Inverter Current" on page 355, FMI 6.
   - If Fault Code 78 is listed with no Fault Code 113, replace the **Power Electronics Carrier (PEC)**, then go to **Step V.**

V ***Purpose:*** *Verify repair.*

1. Key off.
2. Key on.
3. Clear codes, see "Clear Inactive Faults" on page 13.
4. Reconnect all connectors and the negative battery cable.
5. Drive the vehicle and attempt to reset the code.
6. Check for codes, see "View Active and Inactive Faults" on page 13.
   - If no codes, test is complete.
   - If Fault Code 78 appears, go to **Step A.** Find error in testing.
   - If a code other than 78 appears, go to "Fault Code Isolation Procedure Index" on page 14.

© 2015 Eaton. All rights reserved

Fault Code 79 - High Voltage Battery 2 Current

J1939: SA 239 SPN 520263 FMI 6

Overview

The high-voltage batteries are 172 volts each and are connected in series to produce 340 volts DC. The Battery Control Unit (BCU), located in the Relay Box, communicates with each battery to determine temperature, State Of Charge (SOC) and voltage. This information is then sent to the Inverter.

Detection

The following preconditions must be met before the system detects the fault:

- Inverter ignition voltage is greater than 7 volts and less than 16 volts.
- Battery Control Unit ignition voltage is greater than 7 volts and less than 16 volts.

Conditions to Set Fault Code Active

The following conditions must be met to set the fault code Active:

- FMI 6 is set when the BCU detects high-voltage battery current is greater than 200 amps for 1 second.

Fallback

When Fault Code 79 is set the following conditions occur:

- Amber “Check Hybrid” light illuminates.
- Fault is stored in Hybrid Control Module (HCM) memory.
- Inverter shuts high-voltage system off.
- HCM continues to control the hybrid vehicle in a diesel-only mode.
- Transmission defaults start gear to 1st.

Conditions to Set Fault Code Inactive

Only Inactive faults can be cleared from the TECU or HCM history using ServiceRanger. The TECU automatically clears faults from history after 200 hours. The HCM automatically clears the faults from history after that fault has been Inactive for 200 hours.

Possible Causes

This fault code can be caused by any of the following:

- FMI 6: PEC

Additional Tools

- Basic hand tools
- ASTM Class 0 electrical insulating rubber gloves with leather protectors J48603
- Lockout bracket J48506
- Lockout tags
- Eaton® Test Adapter Kit J43318
- Digital Volt/Ohm Meter J46708
- ServiceRanger

© 2015 Eaton. All rights reserved

https://truckmanualshub.com/

Component Identification

Note: No schematic for this code.

© 2015 Eaton. All rights reserved

Fault Code 79 - High Voltage Battery 2 Current

A ***Purpose:*** *Check for Active or Inactive fault code status.*

1. Review and follow the "Warnings & Cautions" on page 1.
2. Retrieve Active fault codes and FMIs with ServiceRanger using the 9-Way Diagnostic Connector.
3. Key off.

Warning: See "High-Voltage Service Shutdown and Power-Up Procedure" on page 4. Follow the procedures to avoid shock, burn or death from improperly handled high-voltage.

4. Which faults are present?
   - If Fault Code 79 is listed with an Active Fault Code 113, go to "Fault Code 113 - Inverter Current" on page 355, FMI 6.
   - If Fault Code 79 is listed with no Active Fault Code 113, replace the **Power Electronics Carrier (PEC)**, then go to **Step V.**

V ***Purpose:*** *Verify repair.*

1. Key off.
2. Key on.
3. Clear codes, see "Clear Inactive Faults" on page 13.
4. Reconnect all connectors and the negative battery cable.
5. Drive the vehicle and attempt to reset the code.
6. Check for codes, see "View Active and Inactive Faults" on page 13.
   - If no codes, test is complete.
   - If Fault Code 79 appears, go to **Step A.** Find error in testing.
   - If a code other than 79 appears, go to "Fault Code Isolation Procedure Index" on page 14.

© 2015 Eaton. All rights reserved

https://truckmanualshub.com/

Fault Code 82 - High Voltage Battery 1 Temperature

J1939: SA 239 SPN 1800 FMI 0, 16

Overview

The high-voltage batteries are 172 volts each and are connected in series to produce 340 volts DC. The Battery Control Unit, located in the Relay Box, communicates with each battery to determine temperature, State Of Charge, and voltage. This information is then sent to the Inverter.

Detection

The following preconditions must be met before the system detects the fault:

- Inverter ignition voltage is greater than 7 volts and less than 16 volts.
- Battery Control Unit ignition voltage is greater than 7 volts.

Conditions to Set Fault Code Active

The following conditions must be met to set the fault code Active:

- FMI 0 is set when the BCU detects high-voltage battery temperature is greater than 158 °F (70 °C) for 6.4 seconds.
- FMI 16 is set when the BCU detects high-voltage battery temperature is greater than 140 °F (60 °C) for 6.4 seconds.

Fallback

When Fault Code 82 is set the following conditions occur:

- Amber “Check Hybrid” light illuminates.
- Fault is stored in HCM memory.
- Inverter shuts high-voltage system off.
- HCM continues to control the hybrid vehicle in a diesel-only mode.
- Transmission defaults start gear to 1st.

Note: The conditions above are only present for FMI 0.

Conditions to Set Fault Code Inactive

Only Inactive faults can be cleared from the TECU or HCM history using ServiceRanger. The TECU automatically clears faults from history after 200 hours. The HCM automatically clears a fault from history after that fault has been Inactive for 200 hours.

Possible Causes

This fault code can be caused by any of the following:

- FMI 0
  - PEC
  - Battery Fan
  - Battery Fan Air Filter
  - Battery Fan Relay Power Supply Harness
  - Battery Fan Relay
  - Battery Fan Exhaust Screen

Additional Tools

- Basic hand tools
- ASTM Class 0 electrical insulating rubber gloves with leather protectors J48603
- Lockout bracket J48506
- Lockout tags
- Eaton® Test Adapter Kit J43318
- Digital Volt/Ohm Meter J46708
- ServiceRanger

© 2015 Eaton. All rights reserved

Component Identification

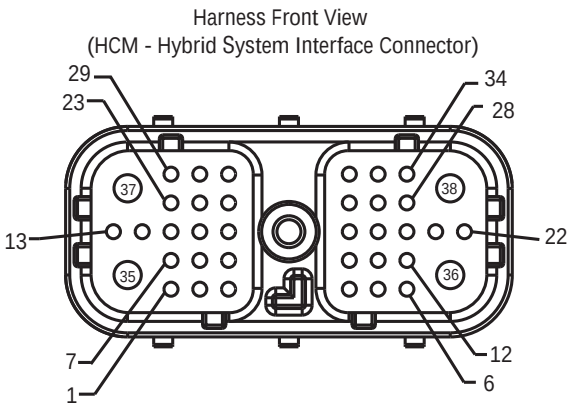

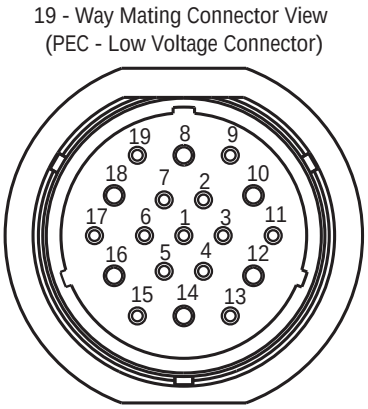

NOTE: Refer to the Eaton Hybrid Component and Connector Location page for Connector Locations

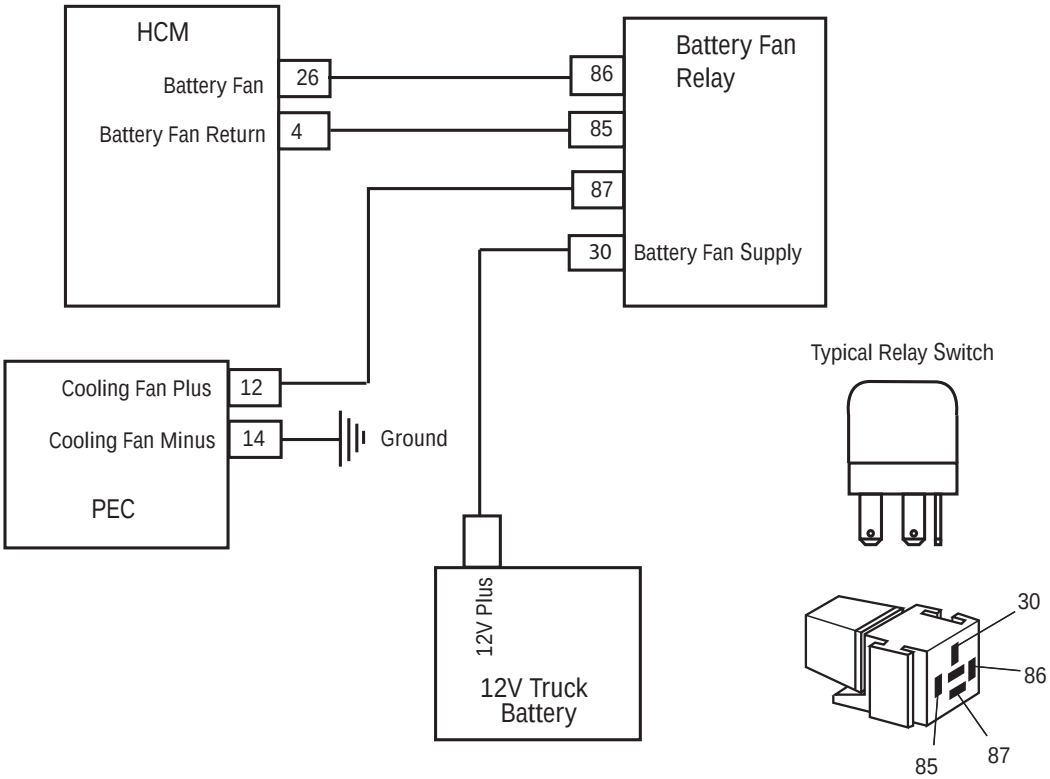

© 2015 Eaton. All rights reserved

https://truckmanualshub.com/

Fault Code 82 - High Voltage Battery 1 Temperature

A

Purpose: *Check for Active or Inactive fault code status.*

1. Review and follow the “Warnings & Cautions” on page 1.
2. Retrieve Active fault codes and FMIs with ServiceRanger using the 9-Way Diagnostic Connector.
3. Key off.

Warning: See “High-Voltage Service Shutdown and Power-Up Procedure” on page 4. Follow the procedures to avoid shock, burn or death from improperly handled high-voltage.

4. Which faults are present?
   - If Fault Code 82 FMI 0 is listed, go to **Step B.**
   - If Fault Code 82 FMI 16 is listed, test is complete. FMI 16 requires no action or replacement.

B

Purpose: *Verify integrity of PEC Air Filter Element.*

1. Remove and inspect the Air Filter* on the PEC Inlet and the Exhaust Screen on the PEC Outlet:
   - If the Air Filter and Exhaust Screen are clean and free from debris, go to **Step C.**
   - If the Air Filter is dirty or the Exhaust Screen is plugged, replace the **Air Filter** and clean the Exhaust Screen, then go to **Step V.**
   - * See **Air Filter**.

C

Purpose: *Verify operation of PEC fan.*

1. Key off.
2. Connect ServiceRanger to the 9-Way Diagnostic Connector in the cab.
3. Key on.
4. Go to “Product Tests” and select “Battery Fan Relay.”
5. Check for airflow from the front and rear air ports in the PEC:
   - If airflow can be felt from the PEC Air Inlet and exhaust, go to **Step E.**
   - If airflow can not be felt from the PEC Air Inlet and exhaust, go to **Step D.**

© 2015 Eaton. All rights reserved

D

Purpose: *Verify voltage at PEC connector.*

1. Key on.
2. Disconnect the 19-Way Connector at the PEC.
3. Measure voltage at the 19-Way Connector from Pin 12 to Pin 14:
   - If voltage between Pin 12 and Pin 14 is ±0.2 volts of battery voltage, replace the **Power Electronics Carrier (PEC)**, then go to **Step V.**
   - If voltage between Pin 12 and Pin 14 is outside of range, repair Battery Fan Relay circuit. Refer to OEM.

Connection	Measurement
Pin 12 to Pin 14	

E

Purpose: *Verify fault code present.*

1. Is Fault Code 105 FMI 29 listed Active?
   - Fault Code 105 FMI 29 is Active, replace the **Power Electronics Carrier (PEC)**, then go to **Step V.**
   - Fault Code 105 FMI 29 is Inactive. Using ServiceRanger, go to “Advanced Product Functions” menu and select the HCM option. Download the Snapshot file and contact Eaton at 1-800-826-HELP (4357).

V

Purpose: *Verify repair.*

1. Key off.
2. Reconnect all connectors and negative battery cable.
3. Key on.
4. Clear codes, see “Clear Inactive Faults” on page 13.
5. Drive the vehicle and attempt to reset the code.
6. Check for codes, see “View Active and Inactive Faults” on page 13.
   - If no codes, test is complete.
   - If Fault Code 82 appears, go to **Step A.** Find error in testing.
   - If a code other than 82 appears, go to “Fault Code Isolation Procedure Index” on page 14.

© 2015 Eaton. All rights reserved

https://truckmanualshub.com/

Fault Code 83 - Invalid Shifter Range

J1587: MID 130 SID 18 FMI 12, 13
J1939: SA 3 SPN 751 FMI 12, 13

Overview

The Transmission Electronic Control Unit (TECU) is connected to the shift device, which sends driver mode selection data. The only compatible shift devices are the Eaton® Push Button Shift Control (PBSC) and OEM supplied shift lever (if equipped with park). The TECU checks the vehicle for the type of shift device during the first power up.

Detection

The following preconditions must be met before the system detects the fault:

- TECU ignition voltage is greater than 7 volts and less than 16 volts.
- TECU System Battery Voltage Low Fault is Inactive.
- TECU is being powered up for the first time and no shift device has been configured.

Conditions to Set Fault Code Active

The following conditions must be met to set the fault code Active:

- Fault Code 83 is set when redundant sensor voltages do not agree.

Fallback

When Fault Code 83 is set the following conditions occur:

- “F” appears in the gear display.
- Fault is stored in TECU memory.
- TECU changes to “AutoShift” control.
- Engine does not crank.

Conditions to Set Fault Code Inactive

Only Inactive faults can be cleared from the TECU or HCM history using ServiceRanger. The TECU automatically clears faults from history after 200 hours. The HCM automatically clears a fault from history after the fault has been Inactive for 200 hours.

Possible Causes

This fault code can be caused by any of the following:

- FMI 12, 13
  - Faulty Sensors
  - Harness
  - TECU

Additional Tools

- Basic hand tools
- Eaton Test Adapter Kit
- Digital Volt/Ohm Meter
- ServiceRanger

© 2015 Eaton. All rights reserved

Component Identification

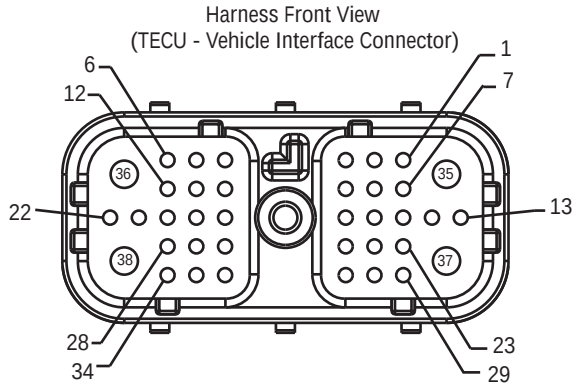

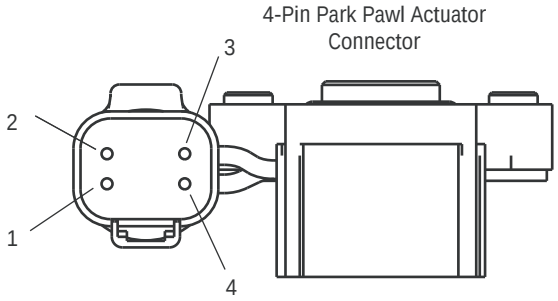

NOTE: Refer to the Eaton Hybrid Component and Connector Location page for Connector Locations

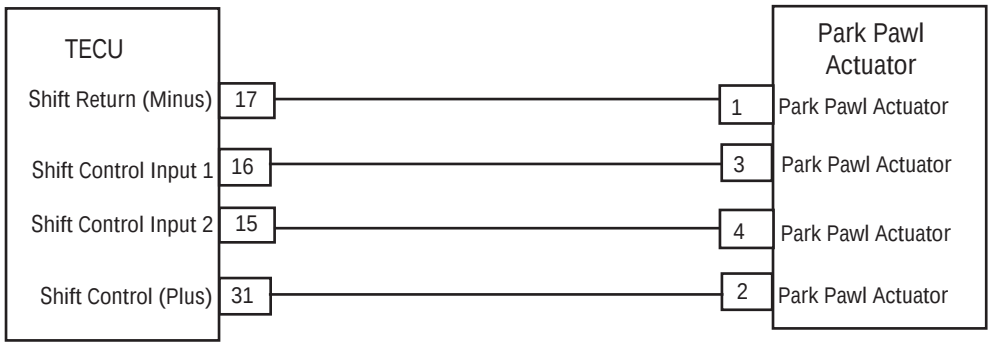

© 2015 Eaton. All rights reserved

https://truckmanualshub.com/

Fault Code 83 - Invalid Shifter Range

A ***Purpose:*** *Verify supply voltage to Shift Lever.*

1. Review and follow the "Warnings & Cautions" on page 1.
2. Disconnect the 4-Way Connector to the Park Pawl Actuator.
3. Key on.
4. Check for 12-volt supply at 4-Way Connector at Pin 1 and Pin 2:
   - If voltage between Pin 1 and Pin 2 is ±0.2 volts of battery voltage, go to **Step B.**
   - If voltage is outside the range, go to **Step D.**

Connection	Measurement
Pin 1 to Pin 2	

B ***Purpose:*** *Verify voltage to Shift Lever in neutral gear position.*

1. With the actuator/shift lever in the Neutral position check voltage on pins:
   - 3 to ground
   - 4 to ground
   - If measurement is between 2.25–2.75 volts, go to **Step C.**
   - If voltage is outside the range, replace the **Park Pawl Mechanism Sensor**, then go to **Step V.**

Connection	Measurement
Pin 3 to ground	
Pin 4 to ground	

© 2015 Eaton. All rights reserved

C

Purpose: *Verify continuity of Shift Lever circuits in Vehicle Harness.*

1. Disconnect the TECU Harness 38-Way Connector.
2. Check continuity between:
   - 38-Way Connector Pin 15 and 4-Way Connector Pin 4
   - 38-Way Connector Pin 16 and 4-Way Connector Pin 3
     - If continuity is okay, replace the **Transmission Electronic Control Unit (TECU)**, then go to **Step V.**
     - If an open is found, repair or replace the Harness, then go to **Step V.**

Connection	Measurement
38-Way Pin 15 to 4-Way Pin 4	
38-Way Pin 16 to 4-Way Pin 3	

D

Purpose: *Verify continuity of Shift Lever circuits in Vehicle Harness.*

1. Disconnect the TECU Vehicle Harness 38-way connector.
2. Check continuity between:
   - 38-Way Connector Pin 17 and 4-Way Connector Pin 1
   - 38-Way Connector Pin 31 and 4-Way Connector Pin 2
     - If continuity is okay, replace the **Transmission Electronic Control Unit (TECU)**, then go to **Step V.**
     - If an open is found, repair or replace the Harness, then go to **Step V.**

Connection	Measurement
38-Way Pin 17 to 4-Way Pin 1	
38-Way Pin 31 to 4-Way Pin 2	

© 2015 Eaton. All rights reserved

https://truckmanualshub.com/

V ***Purpose:*** *Verify repair.*

1. Key off.
2. Reconnect all connectors.
3. Key on.
4. Clear codes, see “Clear Inactive Faults” on page 13.
5. Drive the vehicle and attempt to reset the code.
6. Check for codes, see “View Active and Inactive Faults” on page 13.
   - If no codes, test is complete.
   - If Fault Code 83 appears, go to **Step A.** Find error in testing.
   - If a code other than 83 appears, go to “Fault Code Isolation Procedure Index” on page 14.

© 2015 Eaton. All rights reserved

Fault Code 84 - Shift Control Device Not Configured

J1587: MID 130 SID 18 FMI 13, 14
J1939: SA 3 SPN 751 FMI 13, 14

Overview

The Transmission Electronic Control Unit (TECU) is connected to the shift device, which sends driver mode selection data. The only compatible shift device is the Eaton® Push Button Shift Control (PBSC) and OEM supplied shift lever (if equipped with park). The TECU checks the vehicle for the type of shift device during the first power up.

Note: This fault code will only be set Active.

Detection

The following preconditions must be met before the system detects the fault:

- TECU ignition voltage is greater than 7 volts and less than 16 volts.
- TECU System Battery Voltage Low Fault is Inactive.
- TECU is being powered up for the first time and no shift device has been configured.

Conditions to Set Fault Code Active

The following conditions must be met to set the fault code Active:

- FMI 13 is set when the TECU powers-up the first time and fails to recognize any valid shift device connected to the vehicle within five seconds.

Fallback

When Fault Code 84 is set the following conditions occur:

- Red “Service” light may or may not come on depending on the failure.
- Fault is stored in TECU memory.
- TECU changes to “AutoShift Fallback” mode.
- The engine does not crank.

Conditions to Set Fault Code Inactive

Only Inactive faults can be cleared from the TECU or HCM history using ServiceRanger. The TECU automatically clears faults from history after 200 hours. HCM automatically clears a fault from history after that fault has been Inactive for 200 hours.

Possible Causes

This fault code can be caused by any of the following:

- FMI 13
  - OEM Wiring Harness between TECU and shift control device is disconnected
  - PBSC
- FMI 14
  - OEM Wiring Harness between TECU and shift control device is disconnected
  - Shift Lever

Additional Tools

- Basic hand tools
- Eaton® Test Adapter Kit
- Digital Volt/Ohm Meter
- ServiceRanger

© 2015 Eaton. All rights reserved

https://truckmanualshub.com/

Component Identification

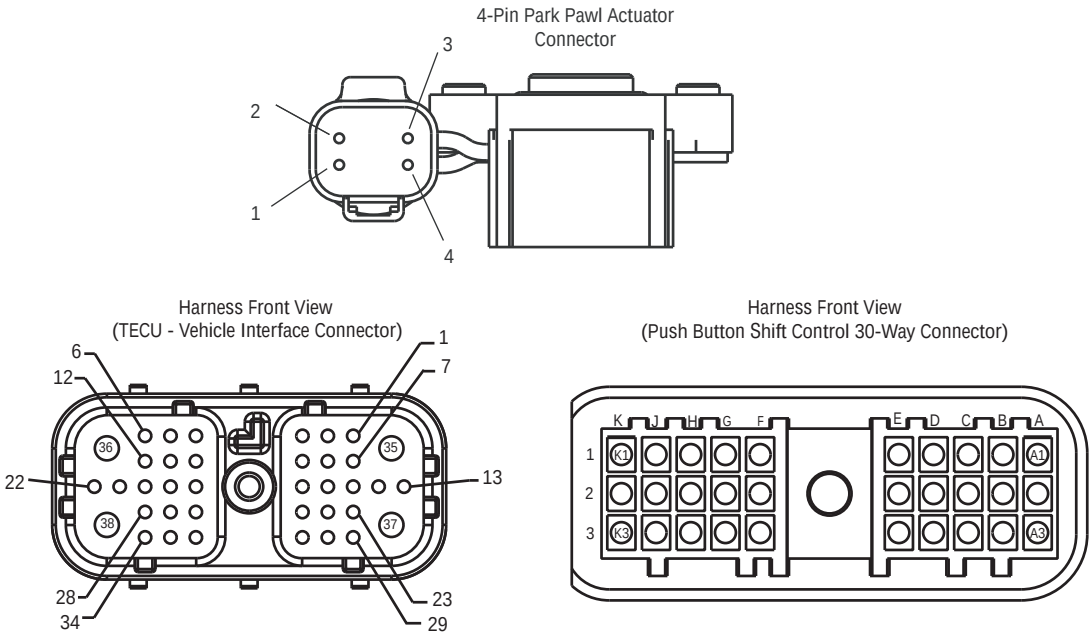

NOTE: Refer to the Eaton Hybrid Component and Connector Location page for Connector Locations

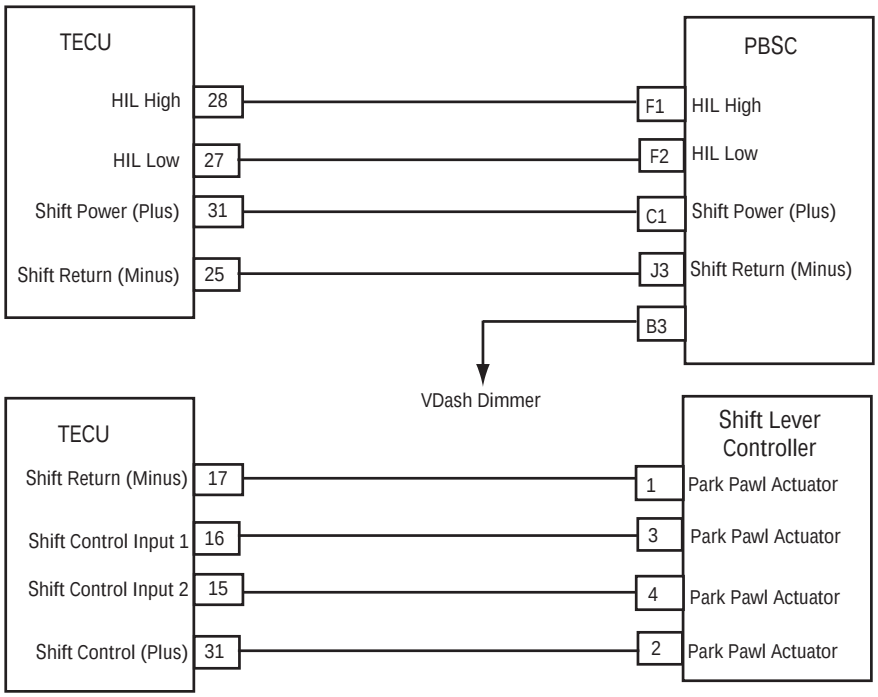

© 2015 Eaton. All rights reserved

Fault Code 84 - Shift Control Device Not Configured

A

Purpose: *Verify status of Transmission Service light.*

1. Retrieve Active fault codes and FMIs with ServiceRanger using the 9-Way Diagnostic Connector.
2. Key on and observe the Push Button Service Light.
   - If red “Service” light comes on, go to **Step B.**
   - If red “Service” light does not turn on, go to **Step C.**
   - If FMI 14 is present, Call 1-800-826-HELP (4357). Go to **Step V.**

B

Purpose: *Verify operation of PBSC Mode Lights.*

1. Key off and on while observing the green “Mode” lights on the PBSC:
   - If green Mode lights turn on, go to **Step F.**
   - If green Mode lights do not turn on, replace PBSC (see **Shift Control**), then go to **Step V.**

C

Purpose: *Verify voltage to PBSC.*

1. Key off.
2. Disconnect the PBSC 30-Way Connector.
3. Key on.
4. Measure the voltage between Pin J3 and Pin C1 on the 30-Way Connector:
   - If voltage is within 0.6 volts of battery voltage, replace the PBSC (see **Shift Control**), then go to **Step V.**
   - If voltage is out of range, go to **Step D.**

Connection	Measurement
Pin J3 to Pin C1	

© 2015 Eaton. All rights reserved

https://truckmanualshub.com/

D

Purpose: *Verify continuity of Shift Lever circuits in Vehicle Harness.*

1. Key off.
2. Disconnect negative battery cable.
3. Disconnect Vehicle Harness 38-Way Connector.
4. Measure the resistance between Pin J3 on the Shift Control 30-Way Connector and the Pin 25 on the Vehicle Harness 38-Way Connector.
   - If resistance between Pins J3 and Pin 25 is 0–0.3 ohms, go to **Step E.**
   - If resistance is out of range, repair the Vehicle Harness between the PBSC and the TECU, then go to **Step V.**

Connection	Measurement
30-Way Pin J3 to 38-Way Pin 25	

E

Purpose: *Verify continuity of Shift Lever circuits in Vehicle Harness.*

1. Key off.
2. Disconnect negative battery cable.
3. Disconnect Vehicle Harness 38-Way Connector.
4. Measure the resistance between the following:
   - Pin C1 on the Shift Control 30-Way Connector and Pin 31 on the Vehicle Harness 38-Way Connector
   - Pin C1 on the Shift Control and ground
   - If resistance between Pin C1 and Pin 31 is 0–0.3 ohms and resistance between Pin C1 and ground is 10K ohms or greater, replace the **Transmission Electronic Control Unit (TECU)** (only if fault code is Active). Go to **Step V.**
   - If resistance is out of range, repair the Vehicle Harness between the PBSC and the TECU, then go to **Step V.**

Connection	Measurement
30-Way Pin C1 to 38-Way Pin 31	
30-Way Pin C1 to ground	

© 2015 Eaton. All rights reserved

F

Purpose: *Verify AC voltage at PBSC.*

1. Key off.
2. Disconnect the Shift Control 30-Way Connector.
3. Key on.
4. Measure the AC voltage between Pin F1 and Pin F2:

   Note: Make sure the meter is on the AC auto feature or set to the AC 10 volts scale.

   - If voltage is 0.10 volts AC or greater, replace the Push Button Shift Control (PBSC) (see **Shift Control**), then go to **Step V.**
   - If voltage is 0.10 volts AC or less, go to **Step G.**

Connection	Measurement
Pin F1 to Pin F2	

G

Purpose: *Verify continuity between PBSC Harness and Vehicle Harness.*

1. Key off.
2. Disconnect negative battery cable.
3. Disconnect Vehicle Harness 38-Way Connector.
4. Measure the resistance between the following:
   - Pin F1 on the Shift Control 30-Way Connector and Pin 28 on the Vehicle Harness 38-Way Connector
   - Pin F1 on the Shift Control 30-Way Connector and ground

   - If resistance between Pin F1 and Pin 28 is 0–0.3 ohms and resistance between Pin F1 and ground is 10K ohms or greater, go to **Step H.**
   - If resistance is out of range, repair the Vehicle Harness between the PBSC and the TECU, then go to **Step V.**

Connection	Measurement
30-Way Pin F1 to 38-Way Pin 28	
30-Way Pin F1 to ground	

© 2015 Eaton. All rights reserved

https://truckmanualshub.com/

H

Purpose: *Verify continuity between PBSC Harness and Vehicle Harness.*

1. Key off.
2. Disconnect negative battery cable.
3. Disconnect Vehicle Harness 38-Way Connector.
4. Measure the resistance between the following:
   - Pin F2 on the Shift Control 30-Way Connector and Pin 27 on the Vehicle Harness 38-Way Connector
   - Pin F2 on the Shift Control 30-Way Connector and ground
     - If resistance between Pin F2 and Pin 27 is 0–0.3 ohms and resistance between Pin F2 and ground is 10K ohms or greater, replace the **Transmission Electronic Control Unit (TECU)**. Go to **Step V.**
     - If resistance is out of range, repair the Vehicle Harness between the PBSC and the TECU, then go to **Step V.**

Connection	Measurement
30-Way Pin F2 to 38-Way Pin 27	
30-Way Pin F2 to ground	

V

Purpose: *Verify repair.*

1. Key off.
2. Reconnect all connectors and negative battery cable.
3. Key on.
4. Clear codes, see “Clear Inactive Faults” on page 13.
5. Drive the vehicle and attempt to reset the code.
6. Check for codes, see “View Active and Inactive Faults” on page 13.
   - If no codes, test is complete.
   - If Fault Code 84 appears, go to **Step A.** Find error in testing.
   - If a code other than 84 appears, go to “Fault Code Isolation Procedure Index” on page 14.

© 2015 Eaton. All rights reserved

Fault Code 85 - Shift Control Device Incompatible

J1587: MID 130 SID 18 FMI 12
J1939: SA 3 SPN 639 FMI 12

Overview

The Transmission Electronic Control Unit (TECU) is connected to the shift device, which sends driver mode selection data. The TECU checks the vehicle for the type of Push Button Shift Control (PBSC) device during the first power up to determine if a compatible model is being used.

Detection

The following preconditions must be met before the system detects the fault:

- TECU ignition voltage is greater than 7 volts and less than 16 volts.
- TECU System Battery Voltage Low Fault is Inactive.
- HIL Link Fault is Inactive.

Conditions to Set Fault Code Active

The following conditions must be met to set the fault code Active:

- FMI 12 is set anytime the TECU powers up and detects a non-compatible shift control device, or it does not receive a component identification 10 seconds after power up.

Fallback

When Fault Code 85 is set the following conditions occur:

- Fault is stored in TECU memory.
- TECU changes to “AutoShift Fallback” mode.
- Engine does not crank.

Conditions to Set Fault Code Inactive

Only Inactive faults can be cleared from the TECU or HCM history using ServiceRanger. The TECU automatically clears faults from history after 200 hours. The HCM automatically clears a fault from history after that fault has been Inactive for 200 hours.

Possible Causes

This fault code can be caused by any of the following:

- FMI 12: Shift Control Device

Additional Tools

- Basic hand tools
- Eaton® Test Adapter Kit
- Digital Volt/Ohm Meter
- ServiceRanger

© 2015 Eaton. All rights reserved

https://truckmanualshub.com/

Component Identification

Note: No Schematic for this Code.

Note: For component location refer to the OEM service literature.

© 2015 Eaton. All rights reserved

Fault Code 85 - Shift Control Device Incompatible

A

Purpose: *Verify PBSC configuration.*

1. Retrieve Active fault codes and FMIs with ServiceRanger using the 9-Way Diagnostic Connector.
2. Select the “Roadranger Configurations” menu and view the “Transmission” selection.
3. View the “Pushbutton Type” field for one of the following options:
   - EARNDM = Used with EH-8E306A-UPG transmissions (shown on transmission tag)
   - ERNDM = Used with EH-8E306A-UP transmissions (shown on transmission tag)
   - RNDML = Used with EH-8E306A-CD and EH-8E306A-U transmissions (shown on transmission tag)
     - If the “Pushbutton Type” field matches the Pushbutton installed in the vehicle, go to **Step B.**
     - If the “Pushbutton Type” field does not match the Pushbutton installed in the vehicle, change the “Pushbutton Type Field” or Pushbutton to match the transmission model number shown on the transmission tag. Use this step (Step A.3.) to determine correct pushbutton for each model.

B

Purpose: *Verify HCM configuration.*

1. View the Hybrid Control Module (HCM) selection under the Roadranger Configurations option in ServiceRanger.
2. View the System Configuration field for one of the following options:
   - UPG = Used in EH-8E306A-UPG transmission
   - UP = Used in EH-8E306A-UP transmissions
   - CD or U = Used in EH-8E306A-CD and EH-8E306A-U transmissions
3. Compare the HCM System Configurations selection to the TECU Pushbutton Type selection:
   - If HCM System Configuration and TECU Pushbutton Type are the same, contact Eaton at 1-800-826-HELP (4357).
   - If HCM System Configuration and TECU Pushbutton Type are different, install a **Hybrid Control Module (HCM)** with the correct configuration to match the transmission tag, then go to **Step V.**

© 2015 Eaton. All rights reserved

https://truckmanualshub.com/

V ***Purpose:*** *Verify repair.*

1. Key off.
2. Reconnect all connectors and negative battery cable.
3. Key on.
4. Clear codes, see “Clear Inactive Faults” on page 13.
5. Drive the vehicle and attempt to reset the code.
6. Check for codes, see “View Active and Inactive Faults” on page 13.
   - If no codes, test is complete.
   - If Fault Code 85 appears, go to **Step A.** Find error in testing.
   - If a code other than 85 appears, go to “Fault Code Isolation Procedure Index” on page 14.

© 2015 Eaton. All rights reserved

Fault Code 86 - High Voltage Battery 2 Temperature

J1939: SA 239 SPN 1801 FMI 0, 16

Overview

The high-voltage batteries are 172 volts each and are connected in series to produce 340 volts DC. The Battery Control Unit, located in the Relay Box, communicates with each battery to determine temperature, State Of Charge (SOC) and voltage. This information is then sent to the Inverter.

Detection

The following preconditions must be met before the system detects the fault:

- Inverter ignition voltage is greater than 7 volts and less than 16 volts.
- Battery Control Unit ignition voltage is greater than 7 volts.

Conditions to Set Fault Code Active

The following conditions must be met to set the fault code Active:

- FMI 0 is set when the BCU detects high-voltage battery temperature is greater than 70 °C for 6.4 seconds. FMI 16 is set when the BCU detects high-voltage battery temperature is greater than 60 °C for 6.4 seconds.

Fallback

When Fault Code 86 is set the following conditions occur:

- Amber “Check Hybrid” light illuminates.
- Fault is stored in HCM memory.
- Inverter shuts high-voltage system off.
- HCM continues to control the hybrid vehicle in a diesel-only mode.
- Transmission defaults start gear to 1st.

Note: The conditions above are only present for FMI 0.

Conditions to Set Fault Code Inactive

Only Inactive faults can be cleared from the TECU or HCM history using ServiceRanger. The TECU automatically clears faults from history after 200 hours. The HCM automatically clears a fault from history after that fault has been Inactive for 200 hours.

Possible Causes

This fault code can be caused by any of the following:

- FMI 0
  - PEC
  - Battery Fan
  - Battery Fan Air Filter
  - Battery Fan Relay Power Supply Harness
  - Battery Fan Relay
  - Battery Fan Exhaust Screen

Additional Tools

- Basic hand tools
- ASTM Class 0 electrical insulating rubber gloves with leather protectors J48603
- Lockout bracket J48506
- Lockout tags
- Eaton® Test Adapter Kit J43318
- Digital Volt/Ohm Meter J46708
- ServiceRanger

© 2015 Eaton. All rights reserved

https://truckmanualshub.com/

Component Identification

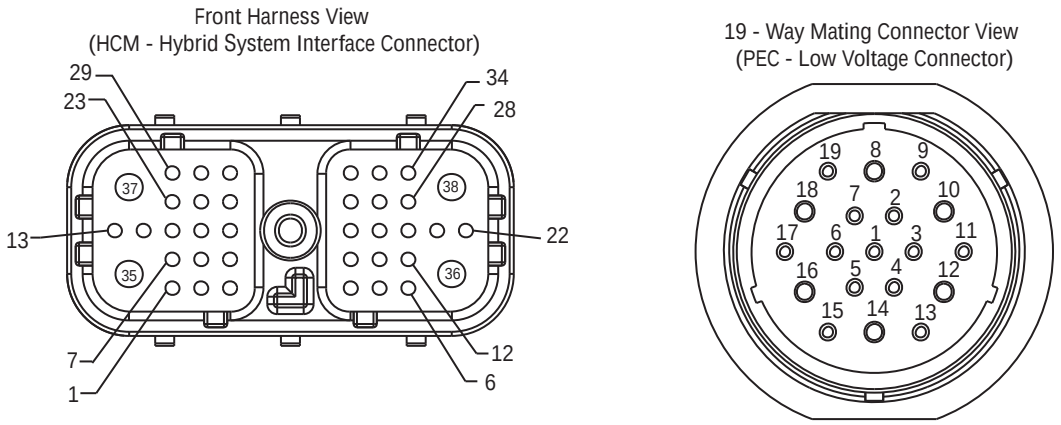

NOTE: Refer to the Eaton Hybrid Component and Connector Location page for Connector Locations

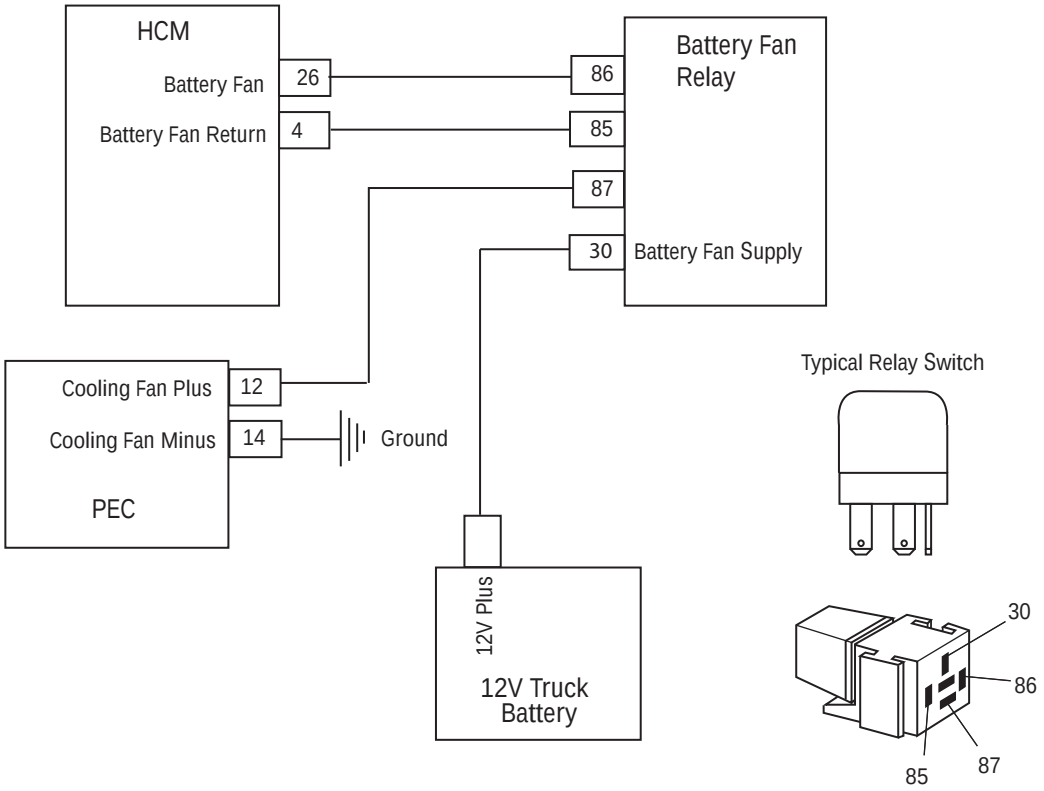

© 2015 Eaton. All rights reserved

Fault Code 86 - High Voltage Battery 2 Temperature

A

Purpose: *Verify FMIs present.*

1. Review and follow the “Warnings & Cautions” on page 1.
2. Retrieve Active fault codes and FMIs with ServiceRanger using the 9-Way Diagnostic Connector.
3. Key off.

Warning: See “High-Voltage Service Shutdown and Power-Up Procedure” on page 4. Follow the procedures to avoid shock, burn or death from improperly handled high-voltage.

4. Which faults are present?
   - If Fault Code 86 FMI 0 is listed, go to **Step B.**
   - If Fault Code 86 FMI 16 is listed, test is complete. FMI 16 requires no action or replacement.

B

Purpose: *Inspect PEC Air Filter.*

1. Remove and inspect the Air Filter* on the PEC Inlet and the Exhaust Screen on the PEC Outlet:
   - If the Air Filter and Exhaust Screen are clean and free from debris, go to **Step C.**
   - If the Air Filter is dirty or the Exhaust Screen is plugged, replace the **Air Filter** and clean the Exhaust Screen, then go to **Step V.**
   - * See **Air Filter**.

C

Purpose: *Verify that PEC Fan operates.*

1. Key off.
2. Connect ServiceRanger to the 9-Way Diagnostic Connector in the cab.
3. Key on.
4. Go to “Product Tests” and select “Battery Fan Relay.”
5. Check for airflow from the front and rear air ports in the PEC:
   - If airflow can be felt from the PEC Air Inlet and exhaust, go to **Step E.**
   - If airflow can not be felt from the PEC Air Inlet and exhaust, go to **Step D.**

© 2015 Eaton. All rights reserved

https://truckmanualshub.com/

D

Purpose: *Verify voltage for fan circuit on PEC 19-Way Connector.*

1. Key on.
2. Disconnect the 19-Way Connector at the PEC.
3. Measure voltage at the 19-Way Connector from Pin 12 to Pin 14:
   - If voltage between Pin 12 and Pin 14 is ±0.2 volts of battery voltage, replace the **Power Electronics Carrier (PEC)**, then go to **Step V.**
   - If voltage between Pin 12 and Pin 14 is outside of range, repair Battery Fan Relay circuit. Refer to OEM.

Connection	Measurement
Pin 12 to Pin 14	

E

Purpose: *Verify if code 106 FMI 29 is Active too.*

1. Is Fault Code 106 FMI 29 listed Active?
   - If Fault Code 106 FMI 29 is Active, replace the **Power Electronics Carrier (PEC)**, then go to **Step V.**
   - If Fault Code 106 FMI 29 is Inactive, using ServiceRanger, go to the “Advanced Product Functions” menu and select the “HCM” option. Download the Snapshot file and contact Eaton at 1-800-826-HELP (4357).

V

Purpose: *Verify repair.*

1. Key off.
2. Reconnect all connectors and negative battery cable.
3. Key on.
4. Clear codes, see “Clear Inactive Faults” on page 13.
5. Drive the vehicle and attempt to reset the code.
6. Check for codes, see “View Active and Inactive Faults” on page 13.
   - If no codes, test is complete.
   - If Fault Code 86 appears, go to **Step A.** Find error in testing.
   - If a code other than 86 appears, go to “Fault Code Isolation Procedure Index” on page 14.

© 2015 Eaton. All rights reserved

Fault Code 87 - CAN ECA Message (HCM)

J1939: SA 239 SPN 520273 FMI 2, 9

Overview

Controller Area Network (CAN) is a high-speed twisted pair 500K proprietary data link with one 120 ohm resistor at each end of the link. The Hybrid Control Module (HCM) is connected to the CAN data link at the 38-Way Connector. This link is used to transmit information to the HCM as well as communicate or receive data from the other modules on the network like the Electric Clutch Actuator (ECA).

Detection

The following preconditions must be met before the system detects the fault:

- HCM ignition voltage is greater than 7 volts and less than 16 volts.
- HCM CAN Communication Link Fault is Inactive.

Conditions to Set Fault Code Active

The following conditions must be met to set the fault code Active:

- FMI 9 is set when the HCM fails to receive ECA data (like clutch position) for 30 consecutive messages or greater, and it is still communicating with other modules on CAN.

Note: When troubleshooting an Inactive code refer to the "Product Diagnostic Mode (PDM)" on page 19.

Fallback

When Fault Code 87 is set the following conditions occur:

- Red "Stop Hybrid" light illuminates.
- Fault is stored in HCM memory.
- Operation mode changes to "AutoShift Only" mode.
- If the fault sets at power up, the engine will not crank.
- Electric Motor/Generator Assist and Regeneration are disabled; however, the high-voltage relays remain powered.
- If the fault occurs while driving, the ECA either maintains current clutch position or moves to the last position commanded by the HCM.
- Transmission defaults start gear to 1st.

Conditions to Set Fault Code Inactive

Only Inactive faults can be cleared from the TECU or HCM history using ServiceRanger. The TECU automatically clears faults from history after 200 hours. The HCM automatically clears a fault from history after that fault has been Inactive for 200 hours.

Possible Causes

This fault code can be caused by any of the following:

- FMI 9
  - CAN Data Link
  - ECA

Additional Tools

- Basic hand tools
- Eaton® Test Adapter Kit
- Digital Volt/Ohm Meter
- ServiceRanger

© 2015 Eaton. All rights reserved

https://truckmanualshub.com/

Component Identification

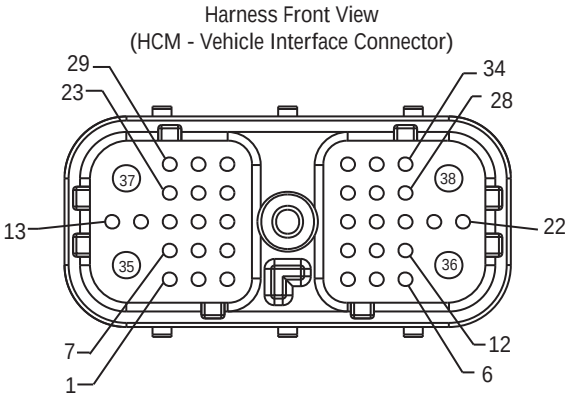

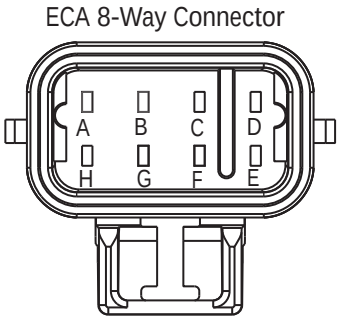

NOTE: Refer to the Eaton Hybrid Component and Connector Location page for Connector Locations

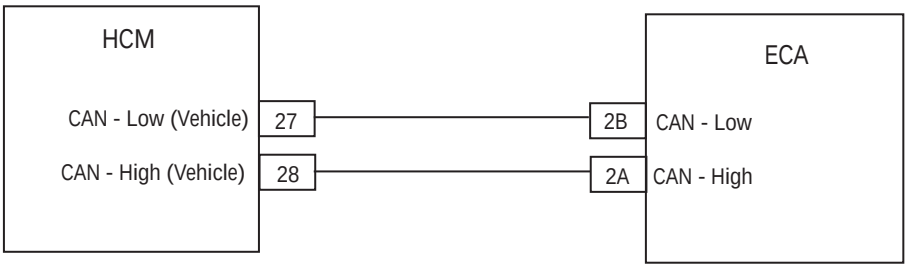

© 2015 Eaton. All rights reserved

Fault Code 87 - CAN ECA Message (HCM)

A ***Purpose:*** *Verify Active and Inactive fault code status.*

1. Retrieve Active fault codes and FMIs with ServiceRanger using the 9-Way Diagnostic Connector.
2. Perform the Electrical Pretest (see “Electrical Pretest” on page 25).
   - If no issues found during the Electrical Pretest, go to **Step B.**
   - If issue was repaired during the Electrical Pretest, go to **Step V.**

B ***Purpose:*** *Verify resistance on ECA 8-Way CAN Harness.*

1. Key off.
2. Disconnect negative battery cable.
3. Disconnect ECA 8-Way Connector.
4. Measure resistance between ECA 8-Way Connector Pin A and Pin B:

   Note: Make sure the Volt/Ohm Meter is on the proper scale (around 200 ohm scale).

   - If resistance between Pin A and Pin B is between 50–70 ohms, replace **Electric Clutch Actuator (ECA)**, then go to **Step V.**
   - If resistance is outside of range, repair CAN Data Link Harness, then go to **Step V.**

Connection	Measurement
Pin A to Pin B	

© 2015 Eaton. All rights reserved

https://truckmanualshub.com/

V ***Purpose:*** *Verify repair.*

1. Key off.
2. Reconnect all connectors and the negative battery cable.
3. Key on.
4. Clear codes, see “Clear Inactive Faults” on page 13.
5. Drive the vehicle and attempt to reset the code.
6. Check for codes, see “View Active and Inactive Faults” on page 13.
   - If no codes, test is complete.
   - If Fault Code 87 appears, go to **Step A.** Find error in testing.
   - If a code other than 87 appears, go to “Fault Code Isolation Procedure Index” on page 14.

© 2015 Eaton. All rights reserved

Fault Code 88 - CAN Inverter Message (HCM)

J1939: SA 239 SPN 520223 FMI 2, 9

Overview

The Inverter communicates with the Battery Control Unit (BCU) located in the Power Electronics Carrier (PEC) and the Hybrid Control Module (HCM) on the Controller Area Network (CAN) high-speed proprietary data link. The data link is a two wire twisted pair with two 120 ohm resistors located in the link.

Detection

The following preconditions must be met before the system detects the fault:

- HCM ignition voltage is greater than 7 volts and less than 16 volts.
- HCM CAN data link fault is Inactive.

Conditions to Set Fault Code Active

The following conditions must be met to set the fault code Active:

- FMI 9 is set when the HCM has not received a Inverter message for 30 consecutive message cycles.

Fallback

When Fault Code 88 is set the following conditions occur:

- Amber “Check Hybrid” light illuminates.
- Fault is stored in HCM memory.
- Electric Motor/Generator Assist and Regeneration are disabled; however, the high-voltage relays remain powered.
- HCM continues to control the hybrid vehicle in a diesel-only mode.
- Transmission defaults start gear to 1st.

Conditions to Set Fault Code Inactive

Only Inactive faults can be cleared from the TECU or HCM history using ServiceRanger. The TECU automatically clears faults from history after 200 hours. The HCM automatically clears a fault from history after the fault has been Inactive for 200 hours.

Possible Causes

This fault code can be caused by any of the following:

- FMI 9
  - Inverter
  - CAN Data Link

Additional Tools

- Basic hand tools
- Eaton® Test Adapter Kit
- Digital Volt/Ohm Meter
- ServiceRanger

© 2015 Eaton. All rights reserved

https://truckmanualshub.com/

Component Identification

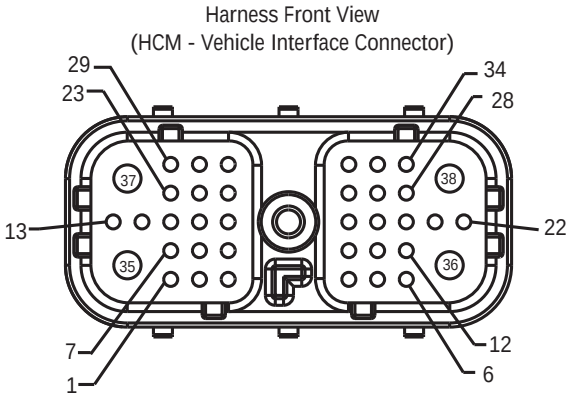

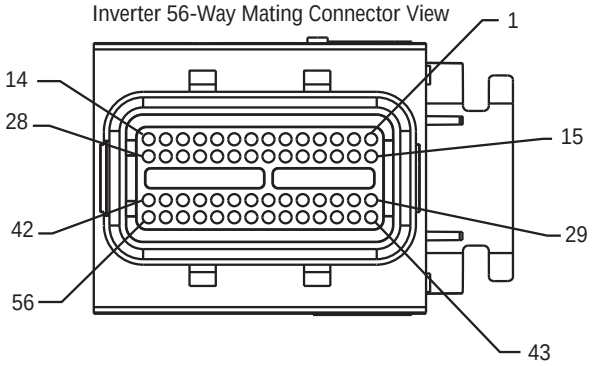

NOTE: Refer to the Eaton Hybrid Component and Connector Location page for Connector Locations

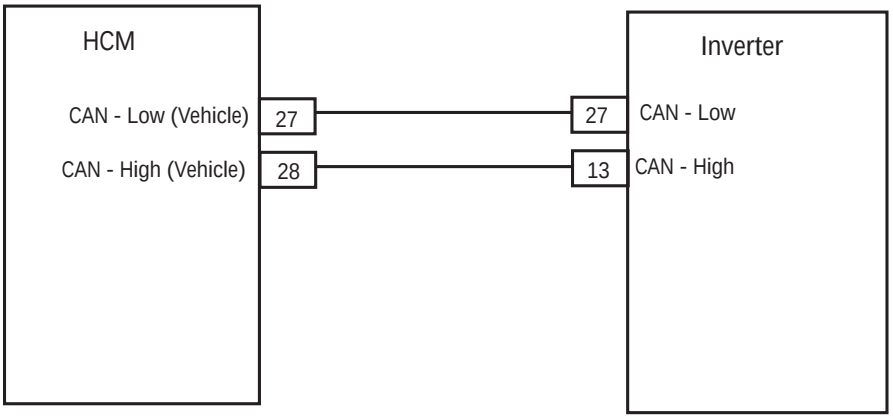

© 2015 Eaton. All rights reserved

Code 88 - CAN Inverter Message (HCM)

A ***Purpose:*** *Check for Active or Inactive code status and perform Electrical Pretest.*

1. Retrieve Active fault codes and FMIs with ServiceRanger using the 9-Way Diagnostic Connector.
2. Perform the Electrical Pretest (see “Electrical Pretest” on page 25) and Hybrid Electrical Pretest (see “Hybrid Electrical Pretest” on page 29):
   - If no issues are found during the Hybrid Electrical Pretest, go to **Step B.**
   - If issue was repaired during the Hybrid Electrical Pretest, go to **Step V.**

B ***Purpose:*** *Verify continuity of Inverter circuits.*

1. Key off.

Warning: See “High-Voltage Service Shutdown and Power-Up Procedure” on page 4. Follow the procedures to avoid shock, burn or death from improperly handled high-voltage.

2. Disconnect Inverter 56-Way Connector.
3. Measure resistance between Inverter 56-Way Connector Pin 27 and Pin 13.

   Note: Make sure the Volt/Ohm Meter is on the proper scale (around 200 ohm scale).

   Note: Gently flex the Inverter 56-Way Connector Harness near the Connector while monitoring the resistance values:

   - If resistance between Pin 27 and Pin 13 is between 50–70 ohms, replace **Inverter**, then go to **Step V.**
   - If resistance is outside of range, repair CAN Data Link Harness, then go to **Step V.**

Connection	Measurement
Pin 27 to Pin 13	

© 2015 Eaton. All rights reserved

https://truckmanualshub.com/

V ***Purpose:*** *Verify repair.*

1. Key off.
2. Reconnect all connectors and the negative battery cable.
3. Key on.
4. Clear codes, see “Clear Inactive Faults” on page 13.
5. Drive the vehicle and attempt to reset the code.
6. Check for codes, see “View Active and Inactive Faults” on page 13.
   - If no codes, test is complete.
   - If Fault Code 88 appears, go to **Step A.** Find error in testing.
   - If a code other than 88 appears, go to “Fault Code Isolation Procedure Index” on page 14.

© 2015 Eaton. All rights reserved

Fault Code 89 - CAN BCU 1 Message (HCM)

J1939: SA 239 SPN 1800 FMI 2, 9

Overview

The Hybrid Control Module (HCM) communicate with the Inverter communicates with the Battery Control Unit (BCU) located in the Power Electronics Carrier (PEC) and the HCM on the Controller Area Network (CAN) high-speed proprietary data link. The data link is a two wire twisted pair with two 120 ohm resistors located in the link.

Detection

The following preconditions must be met before the system detects the fault:

- HCM ignition voltage is greater than 7 volts and less than 16 volts.
- HCM CAN data link fault is Inactive.

Conditions to Set Fault Code Active

The following conditions must be met to set the fault code Active:

- FMI 9 is set when the HCM has not received a BCU 1 message for 30 consecutive message cycles.

Fallback

When Fault Code 89 is set the following conditions occur:

- Amber “Check Hybrid” light illuminates.
- Fault is stored in HCM memory.
- Electric Motor/Generator Assist and Regeneration are disabled; however, the high-voltage relays remain powered.
- HCM continues to control the Hybrid vehicle in a diesel-only mode.
- Transmission defaults start gear to 1st.

Conditions to Set Fault Code Inactive

Only Inactive faults can be cleared from the TECU or HCM history using ServiceRanger. The TECU automatically clears faults from history after 200 hours. The HCM automatically clears a fault from history after that fault has been Inactive for 200 hours.

Possible Causes

This fault code can be caused by any of the following:

- FMI 9
  - Inverter
  - CAN Data Link from PEC to Inverter
  - PEC

Additional Tools

- Basic hand tools
- Eaton® Test Adapter Kit
- Digital Volt/Ohm Meter
- ServiceRanger

© 2015 Eaton. All rights reserved

https://truckmanualshub.com/

Component Identification

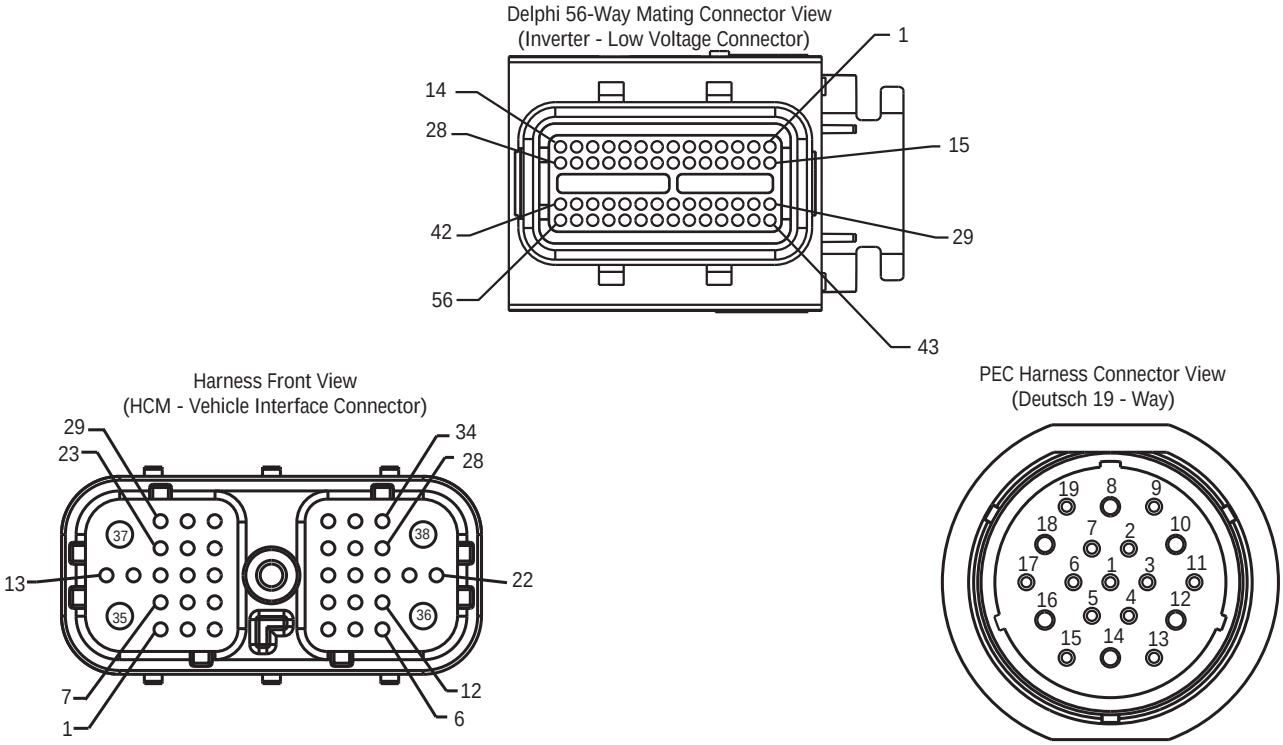

NOTE: Refer to the Eaton Hybrid Component and Connector Location page for Connector Locations

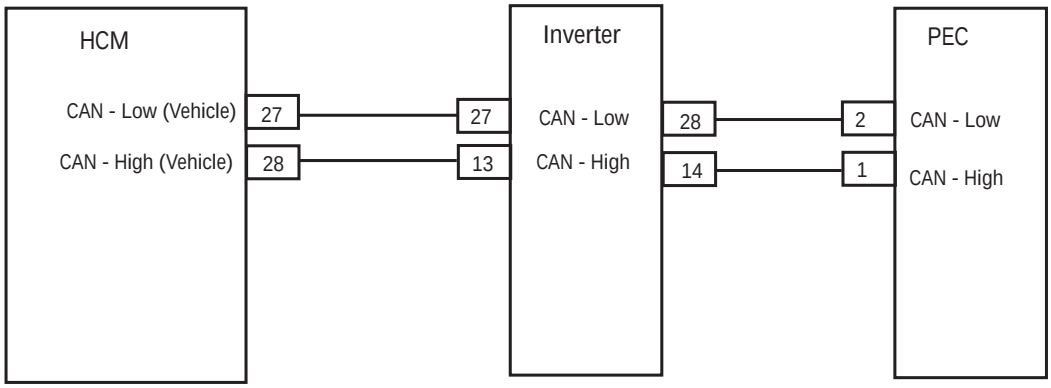

© 2015 Eaton. All rights reserved

Fault Code 89 - CAN BCU 1 Message (HCM)

A ***Purpose:*** *Verify Active and Inactive fault code status.*

1. Retrieve Active fault codes and FMIs with ServiceRanger using the 9-Way Diagnostic Connector.
2. Perform the Electrical Pretest (see “Electrical Pretest” on page 25) and Hybrid Electrical Pretest (see “Hybrid Electrical Pretest” on page 29):
   - If no issues are found during the Hybrid Electrical Pretest, go to **Step B.**
   - If issue was repaired during the Hybrid Electrical Pretest, go to **Step V.**

B ***Purpose:*** *Verify continuity of PEC circuits.*

1. Key off.

Warning: See “High-Voltage Service Shutdown and Power-Up Procedure” on page 4. Follow the procedures to avoid shock, burn or death from improperly handled high-voltage.

2. Disconnect PEC 19-Way Connector.
3. Measure resistance between PEC 19-Way Connector Pin 1 and Pin 2:

   Note: Make sure the Volt/Ohm Meter is on the proper scale (around 200 ohm scale)

   Note: Gently flex the Inverter 56-Way Connector Harness near the Connector while monitoring the resistance values.

   - If resistance between Pin 1 and Pin 2 is between 50–70 ohms, replace **Power Electronics Carrier (PEC)**, then go to **Step V.**
   - If resistance is outside of range, go to **Step C.**

Connection	Measurement
Pin 1 to Pin 2	

© 2015 Eaton. All rights reserved

https://truckmanualshub.com/

C

Purpose: *Verify continuity between Inverter circuits and PEC circuits.*

1. Disconnect Inverter 56-Way Connector.
2. Measure resistance between:
   - Inverter 56-Way Connector Pin 28 and PEC 19-Way Connector Pin 2
   - Inverter 56-Way Connector Pin 14 and PEC 19-Way Connector 1

   Note: Make sure the Volt/Ohm Meter is on the proper scale (around 200 ohm scale).

   - If resistance between Pin 28 and Pin 2 is between 0–0.2 ohms, and resistance between Pin 14 and Pin 1 is between 0–0.2 ohms, replace **Inverter**, then go to **Step V.**
   - If resistance is outside of range, repair CAN Data Link Harness between Inverter and PEC, then go to **Step V.**

Connection	Measurement
56-Way Pin 28 to 19-Way Pin 2	
56-Way Pin 14 to 19-Way Pin 1	

V

Purpose: *Verify repair.*

1. Key off.
2. Reconnect all connectors and the negative battery cable.
3. Key on.
4. Clear codes, see “Clear Inactive Faults” on page 13.
5. Drive the vehicle and attempt to reset the code.
6. Check for codes, see “View Active and Inactive Faults” on page 13.
   - If no codes, test is complete.
   - If Fault Code 89 appears, go to **Step A.** Find error in testing.
   - If a code other than 89 appears, go to “Fault Code Isolation Procedure Index” on page 14.

© 2015 Eaton. All rights reserved

Fault Code 90 - CAN BCU 2 Message (HCM)

J1939: SA 239 SPN 1801 FMI 2, 9

Overview

The Hybrid Control Module (HCM) communicate with the Inverter communicates with the Battery Control Unit (BCU) located in the Power Electronics Carrier (PEC) and the HCM on the Controller Area Network (CAN) high-speed proprietary data link. The data link is a two wire twisted pair with two 120 ohm resistors located in the link.

Detection

The following preconditions must be met before the system detect the fault:

- HCM ignition voltage is greater than 7 volts and less than 16 volts.
- HCM CAN data link fault is Inactive.

Conditions to Set Fault Code Active

The following conditions must be met to set the fault code Active:

- FMI 9 is set when the HCM has not received an BCU 2 message for 30 consecutive message cycles.

Fallback

When Fault Code 90 is set the following conditions occur:

- Amber “Check Hybrid” light illuminates.
- Fault is stored in HCM memory.
- Electric Motor/Generator Assist and Regeneration are disabled; however, high-voltage relays remain powered.
- HCM continues to control the hybrid vehicle in a diesel-only mode.
- Transmission defaults start gear to 1st.

Conditions to Set Fault Code Inactive

Only Inactive faults can be cleared from the TECU or HCM history using ServiceRanger. The TECU automatically clears faults from history after 200 hours. The HCM automatically clears a fault from history after that fault has been Inactive for 200 hours.

Possible Causes

This fault code can be caused by any of the following:

- FMI 9
  - Inverter
  - PEC
  - CAN Data Link from PEC to Inverter

Additional Tools

- Basic hand tools
- Eaton® Test Adapter Kit
- Digital Volt/Ohm Meter
- ServiceRanger

© 2015 Eaton. All rights reserved

https://truckmanualshub.com/

Component Identification

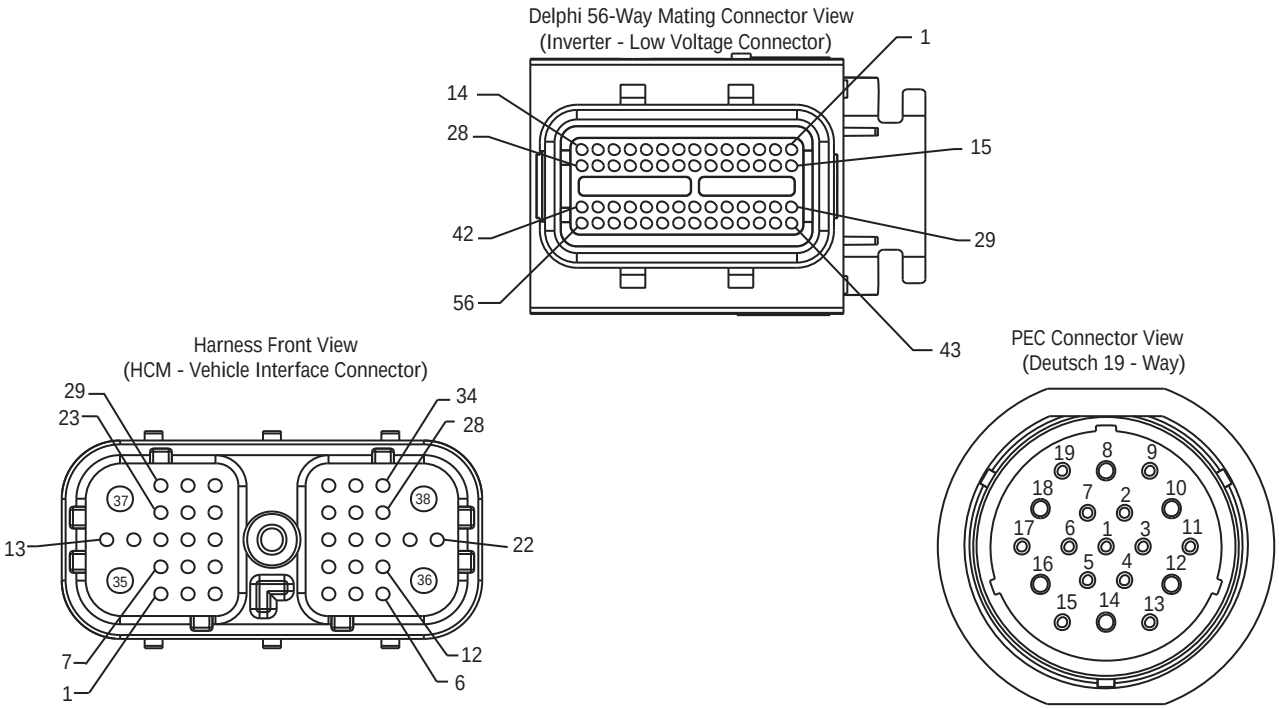

NOTE: Refer to the Eaton Hybrid Component and Connector Location page for Connector Locations

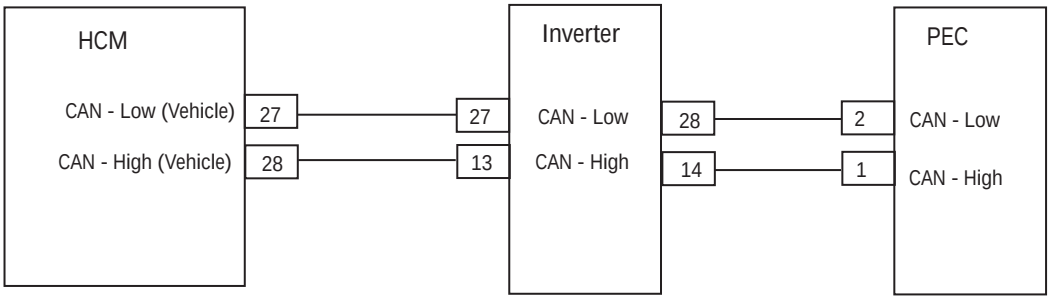

© 2015 Eaton. All rights reserved

Fault Code 90 - CAN BCU 2 Message (HCM)

A ***Purpose:*** *Verify Active and Inactive fault code status.*

1. Retrieve Active fault codes and FMIs with ServiceRanger using the 9-Way Diagnostic Connector.
2. Perform the Electrical Pretest (see “Electrical Pretest” on page 25) and Hybrid Electrical Pretest (see “Hybrid Electrical Pretest” on page 29):
   - If no issues are found during the Hybrid Electrical Pretest, go to **Step B.**
   - If issue was repaired during the Hybrid Electrical Pretest, go to **Step V.**

B ***Purpose:*** *Verify CAN resistance on PEC 19-Way Connector.*

1. Key off.

Warning: See “High-Voltage Service Shutdown and Power-Up Procedure” on page 4. Follow the procedures to avoid shock, burn or death from improperly handled high-voltage.

2. Disconnect the PEC 19-Way Connector.
3. Measure the resistance between PEC 19-Way Connector Pin 1 and Pin 2:

   Note: Make sure the Volt/Ohm Meter is on the proper scale (around 200 ohm scale).

   - If resistance between Pin 1 and Pin 2 is between 50–70 ohms, replace **Power Electronics Carrier (PEC)**, then go to **Step V.**
   - If resistance is outside of range, go to **Step C.**

Connection	Measurement
Pin 1 to Pin 2	

© 2015 Eaton. All rights reserved

https://truckmanualshub.com/

C

Purpose: *Verify continuity on PEC to Inverter CAN Harness.*

1. Disconnect Inverter 56-Way Connector.
2. Measure resistance between:
   - Inverter 56-Way Connector Pin 28 and PEC 19-Way Connector Pin 2.
   - Inverter 56-Way Connector Pin 14 and PEC 19-Way Connector Pin 1.

   Note: Make sure the Volt/Ohm Meter is on the proper scale (around 200 ohm scale).

   Note: Gently flex the Inverter 56-Way Connector Harness near the Connector while monitoring the resistance values.

   - If resistance between Pin 28 and Pin 2 is between 0–0.2 ohms, and resistance between Pin 14 and Pin 1 is between 0–0.2 ohms, replace **Inverter**, then go to **Step V.**
   - If resistance is outside of range, repair CAN Data Link Harness between Inverter and PEC, then go to **Step V.**

Connection	Measurement
56-Way Pin 28 to 19-Way Pin 2	
56-Way Pin 14 to 19-Way Pin 1	

V

Purpose: *Verify repair.*

1. Key off.
2. Reconnect all connectors and the negative battery cable.
3. Key on.
4. Clear codes, see “Clear Inactive Faults” on page 13.
5. Drive the vehicle and attempt to reset the code.
6. Check for codes, see “View Active and Inactive Faults” on page 13.
   - If no codes, test is complete.
   - If Fault Code 90 appears, go to **Step A.** Find error in testing.
   - If a code other than 90 appears, go to “Fault Code Isolation Procedure Index” on page 14.

© 2015 Eaton. All rights reserved

https://truckmanualshub.com/

Fault Code 91 - APG Unit 1 CAN

J1939: SA 239 SPN 520283 FMI 9

Overview

The Auxiliary Power Generator (APG) is a 5kW/5kVA DC/AC Inverter that is connected to the high voltage DC bus of the Eaton Hybrid electric vehicle system, and generates 60 Hz single-phase 120V AC power for utility applications. The Controller Area Network (CAN) is a high-speed twisted pair 500K proprietary data link that connects the HCM to the Electric Clutch Actuator (ECA), Battery Control Module, Inverter and APG. The link contains one 120 ohm resistor at each end. The link is used to transmit information specific to clutch position or power electronics operations.

Detection

The following preconditions must be met before the system detects the fault:

- HCM is powered and ignition voltage is greater than 7 volts and less than 16 volts.
- HCM data link fault (FC60) is Inactive.

Conditions to Set Fault Code Active

The following conditions must be met to set the fault code Active:

- FMI 9 is set if communication from the APG unit is not received for 7.5 seconds and it is expected to be received based on the configuration settings: Vehicle Type = UPG and Number of APGs.

Fallback

When Fault Code 91 is set the following conditions occur:

- Amber “Check Hybrid” light illuminate.
- Fault is stored in HCM memory.
- If the fault sets at command on the APG remains off.
- If the fault sets during operation the APG shuts off.

Conditions to Set Fault Code Inactive

Only Inactive faults can be cleared from the TECU or HCM history using ServiceRanger. The TECU automatically clears faults from history after 100 hours. The HCM automatically clears a fault from history after that fault has been Inactive for 200 hours.

Possible Causes

This fault code can be caused by any of the following:

- FMI 9
  - CAN Data Link near APG
  - APG

Additional Tools

- Basic hand tools
- ASTM Class 0 electrical insulating rubber gloves with leather protectors J48603
- Lockout bracket J48506
- Lockout tags
- Digital Volt/Ohm Meter J46708
- ServiceRanger

© 2015 Eaton. All rights reserved

https://truckmanualshub.com/

Component Identification

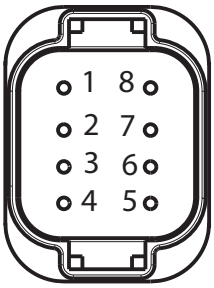

APG 8-way low-voltage harness connector

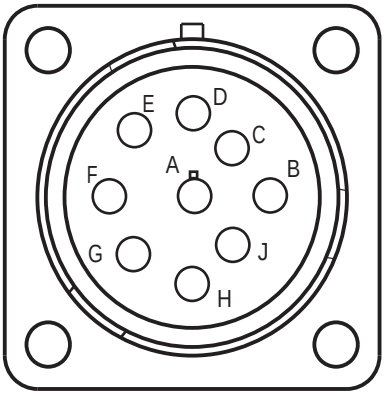

9-way diagnostic connector

© 2015 Eaton. All rights reserved

https://truckmanualshub.com/

Fault Code 91 - APG Unit 1 CAN

A ***Purpose:*** *Verify Active and Inactive fault code status and FMIs present.*

1. Review and follow the “Warnings & Cautions” on page 1.
2. Retrieve Active fault codes and FMIs with ServiceRanger using the 9-Way Diagnostic Connector.
3. Key off.

Warning: See “High-Voltage Service Shutdown and Power-Up Procedure” on page 4. Follow the procedures to avoid shock, burn or death from improperly handled high-voltage.

4. Which FMIs are present?
   - If FMI 9 is Active, go to **Step B.**

B ***Purpose:*** *Verify resistance on APG CAN Harness.*

1. Measure the resistance between the following:
   - Diagnostic 9-Way Connector Pins H and J
   - 2-Way Data Link Connector Pins 1 and 2
   - 3-Way Data Link Connector Pins A and B

   Note: The 3-Way and 2-Way Data Link Connectors are located next to the 9-Way Diagnostic Connector.

   Note: Make sure the Volt/Ohm meter is on the proper scale (around 200 ohm scale).

   - If the resistance between Pin H and Pin J, Pin A and Pin B, or Pin 1 and Pin 2 is between 50–70 ohms, go to **Step C.**
   - If the resistance is more than 70 ohms, one or more of the terminating resistors on the CAN Data Link Harness is either missing or out of range, or there is an open in the link. Repair the OEM CAN Data Link Harness, then go to **Step V.**
   - If the resistance is less than 50 ohms, there is an additional terminating resistor present. Repair the OEM CAN Data Link Harness, then go to **Step V.**

Connection	Measurement
Pin H to Pin J on 9-Way Connector	
Pin 1 to Pin 2 on 2-Way Connector	
Pin A to Pin B on 3-Way Connector	

© 2015 Eaton. All rights reserved

https://truckmanualshub.com/

C

Purpose: *Verify resistance on APG CAN Harness.*

1. Key off.
2. Disconnect the negative battery cable.
3. Disconnect the APG 8-Way Connector at the APG.
4. Measure the resistance between APG 8-Way Connector Pin 4 and Pin 5:

   Note: Make sure the Volt/Ohm Meter is on the proper scale (around 200 ohm scale).

   - If the resistance between Pin 4 and Pin 5 is between 110–130 ohms, replace the **Auxiliary Power Generator (APG) Inverter**, then go to **Step V.**
   - If the resistance is outside the range, repair the CAN Data Link Harness, then go to **Step V.**

Connection	Measurement
Pin 4 to Pin 5	

V

Purpose: *Verify repair.*

1. Key off.
2. Reconnect all connectors.

Warning: See “High-Voltage Service Shutdown and Power-Up Procedure” on page 4. Follow the procedures to avoid shock, burn or death from improperly handled high-voltage.

3. Key on.
4. Operate the APG and attempt to reset the code.
5. Check for codes, see “View Active and Inactive Faults” on page 13.
   - If no codes, test is complete.
   - If Fault Code 91 appears, go to **Step A.** Find error in testing.
   - If a code other than 91 appears, go to “Fault Code Isolation Procedure Index” on page 14.

© 2015 Eaton. All rights reserved

Fault Code 95 - 12-Volt Cranking Relay

J1939: SA 239 SPN 520249 FMI 3, 4

Overview

The 12-volt Cranking Relay is wired into the Hybrid Control Module (HCM) on the coil side of the relay. At key on, the HCM determines which starting method to use either High-Voltage Motor/Generator, or Engine Starter.

If the HCM uses the Motor/Generator to start the engine, the clutch is closed, the 12-Volt Cranking Relay is de-energized, which disconnects the main battery power supply to the Start Enable Relay. If the HCM uses the standard engine starter, the 12-Volt Cranking Relay is energized supplying battery power to the Start Enable Relay main feed, which then powers the Starter Solenoid.

Detection

The following preconditions must be met before the system detects the fault:

- The HCM ignition voltage is greater than 7 volts and less than 16 volts.
- Engine speed is 0 RPM or unknown.

Conditions to Set Fault Code Active

The following conditions must be met to set the fault code Active:

- FMI 3 if the HCM detects am open or short to VBATT in the control circuit of the 12-Volt Cranking Relay for 1 second or greater.
- FMI 4 is set if the HCM detects a short to ground in the control circuit of the 12-Volt Cranking Relay for 1 second or greater.

Note: When troubleshooting an Inactive code refer to the “Product Diagnostic Mode (PDM)” on page 19.

Fallback

When Fault Code 95 is set the following conditions occur:

- Amber “Check Hybrid” light illuminates.
- Fault is stored in HCM memory.
- If the fault sets at power up, the engine will crank, provided the high-voltage batteries have a sufficient State of Charge (SOC).
- If the fault sets while driving, the vehicle will continue to operate.

Conditions to Set Fault Code Inactive

Only Inactive faults can be cleared from the TECU or HCM history using ServiceRanger. The TECU automatically clears faults from history after 200 hours. The HCM automatically clears a fault from history after the fault has been Inactive for 200 hours.

Possible Causes

This fault code can be caused by any of the following:

- FMI 3, 4
  - Vehicle Harness from HCM to 12-volt Cranking Relay
  - 12-volt Cranking Relay
  - HCM

Additional Tools

- Basic hand tools
- Eaton® Test Adapter Kit
- Digital Volt/Ohm Meter
- ServiceRanger

© 2015 Eaton. All rights reserved

https://truckmanualshub.com/

Component Identification

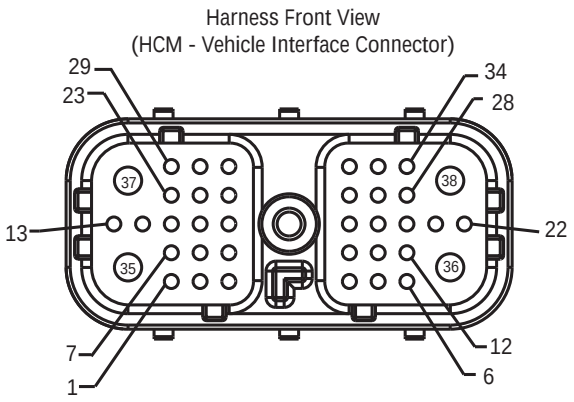

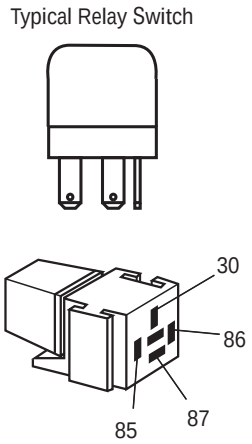

NOTE: Refer to the Eaton Hybrid Component and Connector Location page for Connector Locations

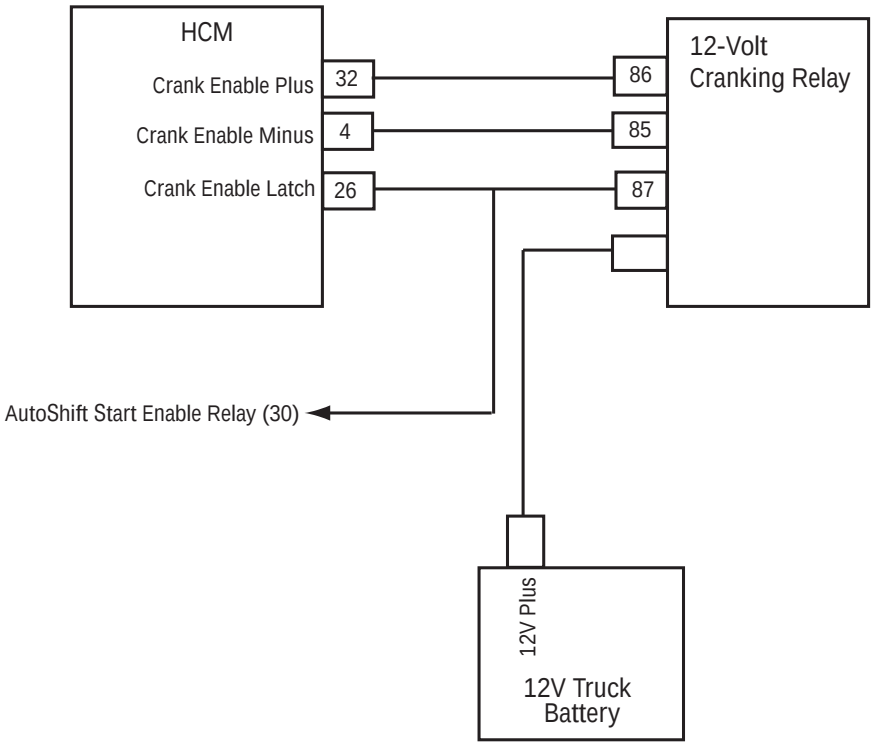

© 2015 Eaton. All rights reserved

Fault Code 95 - 12-Volt Cranking Relay

A

Purpose: *Verify operation of Cranking Relay.*

1. Retrieve Active fault codes and FMIs with ServiceRanger using 9-Way Diagnostic Connector.
2. Exchange the 12-Volt Cranking Relay with another relay and see if the fault returns:
   - If the fault does not return with new relay, replace 12-Volt Cranking Relay, then go to **Step V.**
   - If the fault returns with new relay, go to **Step B.**

B

Purpose: *Verify FMIs present.*

1. Which FMIs were listed from Step A?

   Note: The 12-Volt Cranking Relay must be wired according to Eaton® Hybrid requirements (shown on previous page) for this test to work properly. If wired differently, consult OEM for correct wiring schematic.

   - If FMI 3 is listed, go to **Step C.**
   - If FMI 4 is listed, go to **Step E.**

C

Purpose: *Verify continuity of Vehicle Harness circuits.*

1. Key off.
2. Disconnect negative battery cable.
3. Disconnect the HCM Harness 38-Way Connector.
4. Measure the resistance between HCM Vehicle Harness 38-Way Connector Pin 32 and Pin 4:
   - If resistance between Pin 32 and Pin 4 is 40–120 ohms, go to **Step D.**
   - If resistance is outside of range, repair the Vehicle Harness for an open circuit, then go to **Step V.**

D

Purpose: *Verify voltage between Vehicle Harness circuits and ground.*

1. Key on.
2. Measure voltage between HCM Harness 38-Way Connector Pin 32 and ground at key on:
   - If voltage between Pin 32 and ground is 5 volts, replace the **Hybrid Control Module (HCM)** (only if fault code is Active), then go to **Step V.**
   - If voltage between Pin 32 and ground is 12 volts, repair the short to VBATT on the Harness, then go to **Step V.**

Connection	Measurement
Pin 32 to ground	

© 2015 Eaton. All rights reserved

https://truckmanualshub.com/

E

Purpose: *Verify voltage between Vehicle Harness circuits and ground.*

1. Key off.
2. Disconnect negative battery cable.
3. Disconnect the HCM Harness 38-Way Connector.
4. Measure voltage between HCM Harness 38-Way Connector Pin 32 and ground:
   - If voltage between Pin 32 and ground is 10K ohms or greater, replace the **Hybrid Control Module (HCM)** (only if fault code is Active), then go to **Step V.**
   - If resistance is outside of range, repair the Vehicle Harness for a short to ground, then go to **Step V.**

Connection	Measurement
Pin 32 to ground	

V

Purpose: *Verify repair.*

1. Key off.
2. Reconnect all connectors and negative battery cable.
3. Key on.
4. Clear codes, see “Clear Inactive Faults” on page 13.
5. Drive the vehicle and attempt to reset the code.
6. Check for codes, see “View Active and Inactive Faults” on page 13.
   - If no codes, test is complete.
   - If Fault Code 95 appears, go to **Step A.** Find error in testing.
   - If a code other than 95 appears, go to “Fault Code Isolation Procedure Index” on page 14.

© 2015 Eaton. All rights reserved

Fault Code 96 - Accelerator Pedal Offset

J1939: SA 239 SPN 91 FMI 2

Overview

The Hybrid Control Module (HCM) uses the vehicle Accelerator Pedal position as input for the Hybrid Electric Motor/Generator torque demand.

Detection

The following preconditions must be met before the system detects the fault:

- HCM ignition voltage is greater than 7-volts and less than 16-volts.
- There is no Active Fault Code 48.

Conditions to Set Fault Code Active

The following conditions must be met to set the fault code Active:

- If the accelerator pedal is detected to be depressed to a position between 0.01 and 0.1 and held to a near constant position and the vehicle is stopped for 30 seconds and there are no Engine message faults Active, the fault shall be latched Active.

Fallback

When Fault Code 96 is set the following conditions occur:

- Fault is stored in HCM memory.

Conditions to Set Fault Code Inactive

Only Inactive faults can be cleared from the TECU or HCM history using ServiceRanger. The TECU automatically clears faults from history after 200 hours. The HCM automatically clears a fault from history after the fault has been Inactive for 200 hours.

Possible Causes

This fault code can be caused by any of the following:

- FMI 2: This fault indicates the Accelerator Pedal position is not returning to the “Non-Applied’ state.

Additional Tools

- ServiceRanger

© 2015 Eaton. All rights reserved

https://truckmanualshub.com/

Component Identification

Note: No schematic for this code.

© 2015 Eaton. All rights reserved

Fault Code 96 - Accelerator Pedal Offset

A ***Purpose:*** *Verify Active and Inactive fault code status.*

1. Key on.
2. Retrieve Codes, see “View Active and Inactive Faults” on page 13.
   - If Fault Code 96 is Active, concern is with the Accelerator Pedal reading a value above 0% when there is no driver demand. This value can be seen by selecting the “Engine and Brake Data Monitor” list from ServiceRanger and viewing the Accelerator Pedal Position SPN 91. Refer to OEM.
   - If Fault Code 96 is Inactive, test is complete.

© 2015 Eaton. All rights reserved

https://truckmanualshub.com/

Fault Code 97 - PTO Engagement

J1939: SA 239 SPN 976 FMI 7, 14

Overview

The PTO is an optional installation on the transmission. The PTO is an electric-over-air unit. The PTO is controlled either by the Hybrid Control Module (HCM) or the Body Controller.

Note: This fault is only set if the HCM is directly wired to the PTO. This can be determined by checking the HCM configuration. The “PTO Feedback” will read analog.

HCM-Controlled PTO:

The HCM controlled PTO energizes the electric solenoid and air pressure engages the PTO. The PTO feedback signal is a 12-volt signal. Less than 1 volt indicates the PTO is engaged, and greater than 3 volts indicates the PTO is disengaged.

Body Controller Operated PTO:

The Body Controller operated PTO energizes the electric solenoid and air pressure engages the PTO. When the user selects the ePTO option the Hybrid Control Module (HCM) sends a request to the Body Controller to activate the PTO. When the PTO is engaged, the Body Controller sends back a confirmation message.

Note: When determining which module is controlling the PTO, connect ServiceRanger and view the “Configurations” screen. Under the “Hybrid Control Module” is a listing for PTO Feedback, which is either Analog Controlled (HCM), or J1939 Controlled (Body Controller). The “PTO Engaged” parameter provides the input from the HCM or the Body Controller on the current state of the PTO. This parameter is available in ServiceRanger under the Data Monitor “Hybrid ePTO” list.

Detection

The following preconditions must be met before the system detects the fault:

- HCM ignition voltage is greater than 7 volts and less than 16 volts.

Conditions to Set Fault Code Active

The following conditions must be met to set the fault code Active:

- FMI 3 is set when the HCM detects a short to the VBATT in the PTO control circuit.
- FMI 4 is set when the HCM detects a short to ground in the PTO control circuit.
- FMI 5 is set when the HCM detects an open in the PTO control circuit.
- FMI 7 is set when the HCM detects the transmission is in neutral and, if after 8 seconds from requesting PTO mode the PTO engaged signal reads “Disengaged.”
- FMI 14 is set when the ePTO option on the Push Button Shift Control is selected and the HCM detects the transmission is not in neutral based on output shaft speed.

Fallback

When Fault Code 97 is set the following conditions occur:

- Fault is stored in HCM memory.
- If the PTO is engaged and the fault occurs, the PTO remains engaged until the ePTO request changes, or the air pressure drops below a set limit.
- If the PTO is not engaged the ePTO light flashes on the Push Button Shift Console.

Conditions to Set Fault Code Inactive

Only Inactive faults can be cleared from the TECU or HCM history using ServiceRanger. The TECU automatically clears faults from history after 200 hours. The HCM automatically clears a fault from history after that fault has been Inactive for 200 hours.

© 2015 Eaton. All rights reserved

https://truckmanualshub.com/

Possible Causes

This fault code can be caused by any of the following:

- FMI 7:
  - PTO Air Solenoid
  - Low air pressure
  - PTO control circuit wires
  - PTO
  - PTO feedback circuit
  - HCM (only on HCM controlled PTOs)
  - PTO Ball Switch

Note: These FMIs only set if the HCM is directly wired to the PTO. This can be determined by selecting the Roadranger Configuration option and then view the HCM option. The PTO Feedback will read Analog.

Additional Tools

- Basic hand tools
- Eaton® Test Adapter Kit
- Digital Volt/Ohm Meter
- ServiceRanger

© 2015 Eaton. All rights reserved

https://truckmanualshub.com/

Component Identification

Note: No Schematic for this code.

Note: For component location refer to the OEM service literature.

© 2015 Eaton. All rights reserved

Fault Code 97 - PTO Engagement

A

Purpose: *Verify FMIs present.*

1. Retrieve Active fault codes and FMIs with ServiceRanger using the 9-Way Diagnostic Connector.
2. Key off.
3. Which FMIs are present?
   - If Fault Code 97 FMI 3 is listed, go to **Step B.**
   - If Fault Code 97 FMI 4 or 5 are listed, go to **Step C.**
   - If Fault Code 97 FMI 7 is listed, go to **Step F.**
   - If Fault Code 97 FMI 14 is listed, contact Eaton at 1-800-826-HELP (4357).

B

Purpose: *Verify voltage output at HCM 38-Way.*

1. Key off.
2. Disconnect the negative battery cable.
3. Disconnect the HCM Harness 38-Way Connector.
4. Key on.
5. Measure the voltage from Pin 34 to ground on the HCM Harness 38-Way Connector:
   - If voltage from Pin 34 to ground is 0 volts, replace the **Hybrid Control Module (HCM)** (only if fault code is Active), then go to **Step V.**
   - If voltage from Pin 34 to ground is 11–13 volts, repair the Hybrid System Harness for a short to battery, then go to **Step V.**

Connection	Measurement
Pin 34 to ground	

© 2015 Eaton. All rights reserved

https://truckmanualshub.com/

C

Purpose: *Verity continuity of PTO solenoid circuit.*

1. Key off.
2. Disconnect the negative battery cable.
3. Disconnect the HCM Harness 38-way connector.
4. Measure the resistance between the HCM Harness 38-Way Connector and the following pins:
   - Pin 34 to Pin 6
   - Pin 34 to ground
     - If resistance between Pin 34 and Pin 6 is 0–0.3 ohms and resistance between Pin 34 and ground is 10K ohms or greater, replace the **Hybrid Control Module (HCM)** (only if fault code is Active). Go to **Step V.**
     - If resistance is out of range, go to **Step D.**

Connection	Measurement
Pin 34 to Pin 6	
Pin 34 to ground	

D

Purpose: *Verity continuity of PTO solenoid circuit.*

1. Key off.
2. Disconnect the PTO 2-Way Connector at the PTO.
3. Measure the resistance between the PTO 2-Way Connector at the following pins:
   - Pin A to Pin B
   - Pin A to ground
     - If resistance between Pin A and Pin B is 0–0.3 ohms and resistance between Pin A and ground is 10K ohms or greater, repair the Hybrid System Harness for an open or short to ground, then go to **Step V.**
     - If resistance is outside of range, replace the PTO Switch, then go to **Step V.**

Connection	Measurement
Pin A to Pin B	
Pin A to ground	

E

Purpose: *Check for Active FMIs*

1. If Fault Code 97 FMI 3, 4, or 5 are Active:
   - Go to **Step A.**

© 2015 Eaton. All rights reserved

F

Purpose: *Verify voltage at PTO.*

1. Disconnect the PTO single signal wire at the PTO.
2. Key on.
3. Measure the voltage from the PTO Signal Wire Connector to ground.
   - If the voltage is 12 volts at key on, concern is with the faulty PTO Engagement Signal Switch in the PTO. Contact OEM for repair procedures.
   - If the voltage is less than 1 volt at key on, go to **Step G.**

Connection	Measurement
Signal Wire to ground	

G

Purpose: *Verify continuity on PTO signal wire.*

1. Key off.
2. Disconnect the negative battery cable.
3. Disconnect the HCM Harness 38-Way Connector.
4. Measure the resistance from the HCM Harness 38-Way Connector Pin 18 to the opposite PTO end of the Signal Wire.
   - If the resistance from Pin 18 to the PTO end of the signal wire is 0–0.3 ohms, replace the **Hybrid Control Module (HCM)**, then go to **Step V.**
   - If the resistance is outside of range, repair the open in the PTO signal wire from the HCM to the PTO, then go to **Step V.**

Connection	Measurement
HCM Harness to Signal Wire	

© 2015 Eaton. All rights reserved

https://truckmanualshub.com/

V ***Purpose:*** *Verify repair.*

1. Key off.
2. Key on.
3. Clear codes, see “Clear Inactive Faults” on page 13.
4. Reconnect all connectors and the negative battery cable.
5. Drive the vehicle and attempt to reset the code.
6. Check for codes, See “View Active and Inactive Faults” on page 13.
   - If no codes, test is complete.
   - If Fault Code 97 appears, go to **Step A.** Find error in testing.
   - If a code other than 97 appears, go to “Fault Code Isolation Procedure Index” on page 14.

© 2015 Eaton. All rights reserved

Fault Code 101 - High Voltage Battery 1

J1939: SA 239 SPN 520238 FMI 0, 22–31

Overview

The High-Voltage Batteries are 172 volts each connected in series to produce 340 volts DC. The Battery Control Unit located in the Relay Box communicates with each battery to determine temperature, State Of Charge (SOC), and voltage. This information is then sent to the Inverter.

Detection

The following preconditions must be met before the system detect the fault:

- Inverter ignition voltage is greater than 7 volts and less than 16 volts.
- Battery Control Unit ignition voltage is greater than 7 volts and less than 16 volts.

Conditions to Set Fault Code Active

The following conditions must be met to set the fault code Active:

- FMI 0, 22–31 are set for various internal High-Voltage Battery failures.

Fallback

When Fault Code 101 is set the following conditions occur:

- Red “Stop Hybrid” light illuminates for FMI 0.
- Amber “Check Hybrid” light illuminates for FMI 22–29.
- Fault is stored in HCM memory.
- Depending on the FMI the Inverter or HCM shuts the high-voltage system off.
- HCM continues to control the hybrid vehicle in a diesel-only mode.
- Transmission defaults start gear to 1st.

Conditions to Set Fault Code Inactive

Only Inactive faults can be cleared from the TECU or HCM history using ServiceRanger. The TECU automatically clears faults from history after 200 hours. The HCM automatically clears a fault from history after the fault has been Inactive for 200 hours.

Possible Causes

This fault code can be caused by any of the following:

- FMI 22–25, 27–29
  - PEC
- FMI 0
  - PEC
  - Software

Additional Tools

- Basic hand tools
- ASTM Class 0 electrical insulating rubber gloves with leather protectors J48603
- Lockout bracket J48506
- Lockout tags
- Eaton® Test Adapter Kit J43318
- Digital Volt/Ohm Meter J46708
- ServiceRanger

© 2015 Eaton. All rights reserved

https://truckmanualshub.com/

Component Identification

Note: No schematic for this code.

Note: For component location refer to OEM service literature.

© 2015 Eaton. All rights reserved

Fault Code 101 - High Voltage Battery 1

A

Purpose: *Check for Active or Inactive fault code status.*

1. Review and follow the “Warnings & Cautions” on page 1.
2. Retrieve Active fault codes and FMIs with ServiceRanger using the 9-Way Diagnostic Connector.
3. Key off.

Warning: See “High-Voltage Service Shutdown and Power-Up Procedure” on page 4. Follow the procedures to avoid shock, burn or death from improperly handled high-voltage.

4. Which FMIs are present?
   - If Fault Code 101, FMI 27 or 28 are listed with an Active Fault Code 101 FMI 26, replace the **Power Electronics Carrier (PEC)**, then go to **Step V.**
   - If Fault Code 101, FMI 27 or 28 are not listed with an Active Fault Code 101 FMI 26, go to **Step B.**
   - If Fault Code 101 FMI 22–25 are listed, replace the **Power Electronics Carrier (PEC)**, then go to **Step V.**
   - If Fault Code 101 FMI 29 is listed, go to **Step C.**
   - If Fault Code 101 FMI 30 or 31 are listed, test is complete. FMIs 30 and 31 require no action or replacement.

B

Purpose: *Verify Battery State of Charge.*

1. View the Data Monitor parameter PID 133 “Battery SOC”:
   - If PID 133 “Battery SOC” is less than 80 percent, replace the **Power Electronics Carrier (PEC)**, then go to **Step V.**
   - If PID 133 “Battery SOC” is greater than 80% contact Eaton at 1-800-826-HELP (4357).

Parameter	Reading
PID 133 “Battery SOC”	

C

Purpose: *Verify Battery State of Charge.*

1. View the Data Monitor parameter PID 133 “Battery SOC”:
   - If PID 133 “Battery SOC” is greater than 10% replace the **Power Electronics Carrier (PEC)**, then go to **Step V.**
   - If PID 133 “Battery SOC” is less than 10%, contact Eaton at 1-800-826-HELP (4357).

Parameter	Reading
PID 133 “Battery SOC”	

© 2015 Eaton. All rights reserved

https://truckmanualshub.com/

V ***Purpose:*** *Verify repair.*

1. Key off.
2. Key on.
3. Clear codes, see “Clear Inactive Faults” on page 13.
4. Reconnect all connectors and the negative battery cable.
5. Drive the vehicle and attempt to reset the code.
6. Check for codes, see “View Active and Inactive Faults” on page 13.
   - If no codes, test is complete.
   - If Fault Code 101 appears, find error in testing, go to **Step A.**
   - If a code other than 101 appears, go to “Fault Code Isolation Procedure Index” on page 14.

© 2015 Eaton. All rights reserved

Fault Code 102 - High Voltage Battery 2

J1939: SA 239 SPN 520264 FMI 22–31

Overview

The high-voltage batteries are 172 volts each connected in series to produce 340 volts DC. The Battery Control Unit located in the Relay Box communicates with each battery to determine temperature, State Of Charge, and voltage. This information is then sent to the Inverter.

Detection

The following preconditions must be met before the system detects the fault:

- Inverter ignition voltage is greater than 7 volts and less than 16 volts.
- Battery Control Unit ignition voltage is greater than 7 volts and less than 16 volts.

Conditions to Set Fault Code Active

The following conditions must be met to set the fault code Active:

- FMI 22–31 are set for various internal High-Voltage Battery failures.

Fallback

When Fault Code 102 is set the following conditions occur:

- Amber “Check Hybrid” light illuminates.
- Fault is stored in HCM memory.
- Depending on the FMI the Inverter or the HCM shuts high-voltage system off.
- HCM continues to control the hybrid vehicle in a diesel-only mode.
- Transmission defaults start gear to 1st.

Conditions to Set Fault Code Inactive

Only Inactive faults can be cleared from the TECU or HCM history using ServiceRanger. The TECU automatically clear faults from history after 200 hours. The HCM automatically clears a fault from history after that fault has been Inactive for 200 hours.

Possible Causes

This fault code can be caused by any of the following:

- FMI 22–25, 27–29: PEC

Additional Tools

- Basic hand tools
- ASTM Class 0 electrical insulating rubber gloves with leather protectors J48603
- Lockout bracket J48506
- Lockout tags
- Eaton® Test Adapter Kit J43318
- Digital Volt/Ohm Meter J46708
- ServiceRanger

© 2015 Eaton. All rights reserved

https://truckmanualshub.com/

Component Identification

Note: No schematic for this code.

© 2015 Eaton. All rights reserved

Fault Code 102 - High Voltage Battery 2

A

Purpose: *Verify Active and Inactive fault code status.*

1. Review and follow the “Warnings & Cautions” on page 1.
2. Retrieve Active fault codes and FMIs with ServiceRanger using the 9-Way Diagnostic Connector.
3. Key off.

Warning: See “High-Voltage Service Shutdown and Power-Up Procedure” on page 4. Follow the procedures to avoid shock, burn or death from improperly handled high-voltage.

4. Which FMIs are present?
   - If Fault Code 102 FMI 27 or 28 are listed with an Active Fault Code 102 FMI 26, replace the **Power Electronics Carrier (PEC)**, then go to **Step V.**
   - If Fault Code 102 FMI 27 or 28 are not listed with an Active Fault Code 102 FMI 26, go to **Step B.**
   - If Fault Code 102 FMI 22–25 are listed, replace the **Power Electronics Carrier (PEC)**, then go to **Step V.**
   - If Fault Code 102 FMI 29 is listed, go to **Step C.**
   - If Fault Code 102 FMI 30 or 31 are listed, test is complete. FMIs 30 and 31 require no action or replacement.

B

Purpose: *Verify Battery State of Charge.*

1. View the Data Monitor parameter PID 133 “Battery State Of Charge (SOC)”:
   - If PID 133 “Battery SOC” is less than 80 percent, replace the **Power Electronics Carrier (PEC)**, then go to **Step V.**
   - If PID 133 “Battery SOC” is greater than 80 percent, contact Eaton at 1-800-826-HELP (4357).

Parameter	Reading
PID 133 “Battery SOC”	

C

Purpose: *Verify Battery State of Charge.*

1. View the Data Monitor parameter PID 133 “Battery SOC”:
   - If PID 133 “Battery SOC” is greater than 10 percent, replace the **Power Electronics Carrier (PEC)**, then go to **Step V.**
   - If PID 133 “Battery SOC” is less than 10 percent, contact Eaton at 1-800-826-HELP (4357).

Parameter	Reading
PID 133 “Battery SOC”	

© 2015 Eaton. All rights reserved

https://truckmanualshub.com/

V ***Purpose:*** *Verify repair.*

1. Key off.
2. Key on.
3. Clear codes, see “Clear Inactive Faults” on page 13.
4. Reconnect all connectors and the negative battery cable.
5. Drive the vehicle and attempt to reset the code.
6. Check for codes, see “View Active and Inactive Faults” on page 13.
   - If no codes, test is complete.
   - If Fault Code 102 appears, find error in testing, go to **Step A.**
   - If a code other than 102 appears, go to “Fault Code Isolation Procedure Index” on page 14.

© 2015 Eaton. All rights reserved

Fault Code 103 - High Voltage Battery 1 Control Unit Communication

J1939: SA 239 SPN 520265 FMI 22–26

Overview

The high-voltage batteries each contain a cell controller that communicates over a twisted pair data link to the Battery Control Unit (BCU). The Battery Control Unit located in the Relay Box communicates with each battery to determine temperature, State Of Charge, and voltage. This information is then sent to the Inverter.

Detection

The following preconditions must be met before the system detects the fault:

- Inverter ignition voltage is greater than 7 volts and less than 16 volts.
- Battery Control Unit ignition voltage is greater than 7 volts and less than 16 volts.

Conditions to Set Fault Code Active

The following conditions must be met to set the fault code Active:

- FMI 22 is set when the BCU fails to communicate over the CAN data link for 30 ms.
- FMI 23 is set when the BCU fails to receive HCM data over the CAN data link for 2.5 seconds or greater after communication is established.
- FMI 24 is set when the BCU fails to receive Inverter data over the CAN data link for 2.5 seconds or greater after communication is established.
- FMI 25 is set when the BCU detects an error on initial check.
- FMI 26 is set when the BCU fails to transmit anything over the data link for 2 seconds.

Fallback

When Fault Code 103 is set the following conditions occur:

- Amber “Check Hybrid” light illuminates.
- Fault is stored in HCM memory.
- Inverter shuts high-voltage system off.
- HCM continues to control the hybrid vehicle in a diesel-only mode.
- Transmission defaults start gear to 1st.

Conditions to Set Fault Code Inactive

Only Inactive faults can be cleared from the TECU or HCM history using ServiceRanger. The TECU automatically clears faults from history after 200 hours. The HCM automatically clears a fault from history after it has been Inactive for 200 hours.

Possible Causes

This fault code can be caused by any of the following:

- FMI 26
  - PEC
- FMI 22, 25
  - PEC
  - CAN Data Link between PEC and Inverter
- FMI 23
  - PEC
  - CAN Data Link between PEC and HCM
- FMI 24
  - PEC
  - Inverter
  - CAN Data Link between PEC and Inverter

Additional Tools

- Basic hand tools
- ASTM Class 0 electrical insulating rubber gloves with leather protectors J48603
- Lockout bracket J48506
- Lockout tags
- Eaton® Test Adapter Kit J43318
- Digital Volt/Ohm Meter J46708
- ServiceRanger

© 2015 Eaton. All rights reserved

https://truckmanualshub.com/

Component Identification

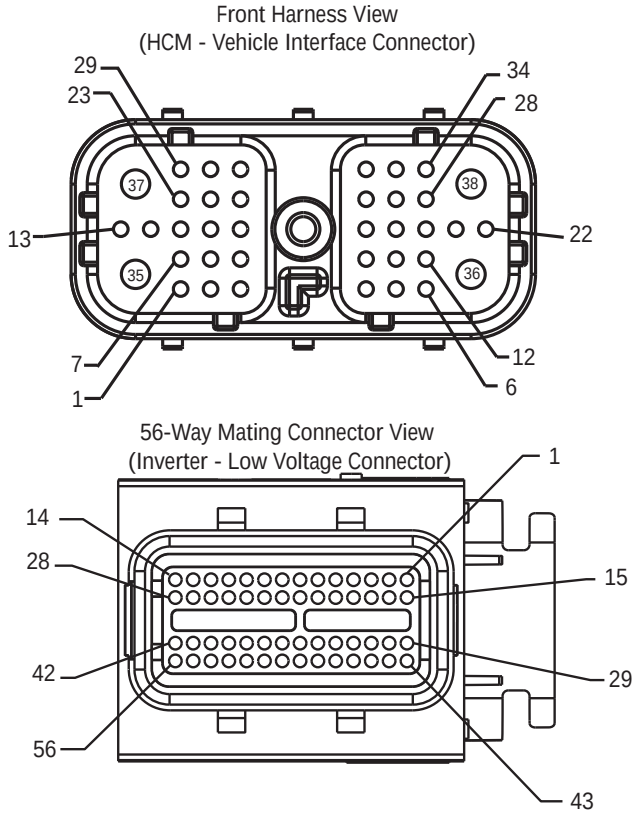

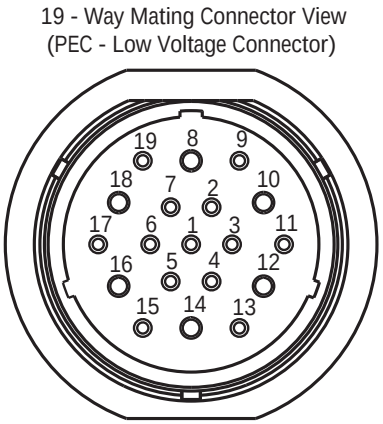

NOTE: Refer to the Eaton Hybrid Component and Connector Location page for Connector Locations

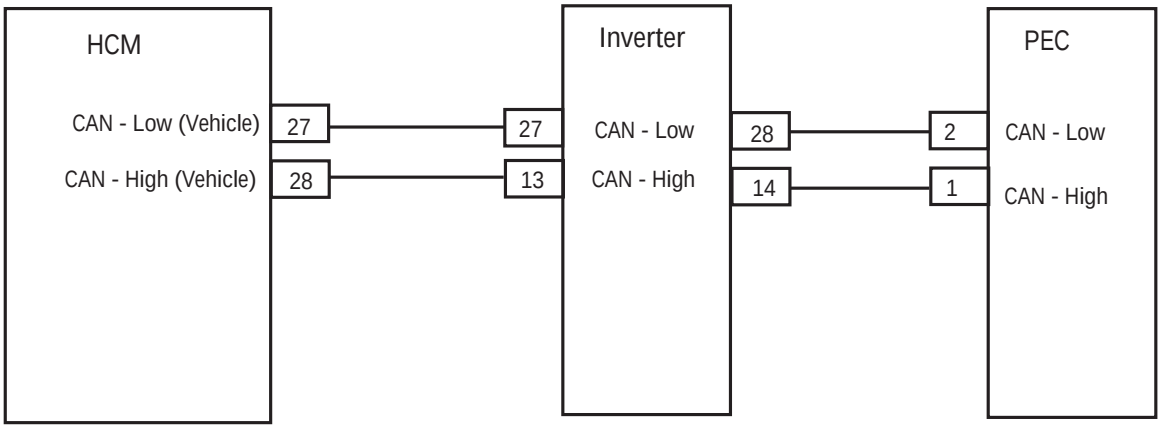

© 2015 Eaton. All rights reserved

Fault Code 103 - High Voltage Battery 1 Control Unit Communication

A ***Purpose:*** *Verify Active or Inactive fault code status and perform Electrical Pretest.*

1. Review and follow the “Warnings & Cautions” on page 1.
2. Key off.
3. Key on.
4. Retrieve Active fault codes and FMIs with ServiceRanger using the 9-Way Diagnostic Connector.
5. Perform the Electrical Pretest (see “Electrical Pretest” on page 25) and Hybrid Electrical Pretest (see “Hybrid Electrical Pretest” on page 29):
   - If no issues are found during either Electrical Test, go to **Step B.**
   - If issue was repaired during either Electrical Test, go to **Step V.**

B ***Purpose:*** *Verify FMIs present.*

1. Key off.

Warning: See “High-Voltage Service Shutdown and Power-Up Procedure” on page 4. Follow the procedures to avoid shock, burn or death from improperly handled high-voltage.

2. Which faults are present?
   - If Fault Code 103 FMI 26 is listed, replace **Power Electronics Carrier (PEC)**, then go to **Step V.**
   - If Fault Code 103 FMI 22, 23, 24, or 25 are listed, go to procedure for Fault Code 89 (see “Fault Code 89 - CAN BCU 1 Message (HCM)” on page 277.).

© 2015 Eaton. All rights reserved

https://truckmanualshub.com/

V ***Purpose:*** *Verify repair.*

1. Key off.
2. Reconnect all connectors and the negative battery cable.
3. Key on.
4. Clear codes, see “Clear Inactive Faults” on page 13.
5. Drive the vehicle and attempt to reset the code.
6. Check for codes, see “View Active and Inactive Faults” on page 13.
   - If no codes, test is complete.
   - If Fault Code 103 appears, find error in testing, go to **Step A.**
   - If a code other than 103 appears, go to “Fault Code Isolation Procedure Index” on page 14.

© 2015 Eaton. All rights reserved

https://truckmanualshub.com/

Fault Code 104 - High Voltage Battery 2 Control Unit Communication

J1939: SA 239 SPN 520266 FMI 22–26

Overview

The high-voltage batteries each contain a cell controller that communicates over a twisted pair data link to the Battery Control Unit (BCU). The Battery Control Unit located in the Relay Box communicates with each battery to determine temperature, State Of Charge (SOC), and voltage. This information is then sent to the Inverter.

Detection

The following preconditions must be met before the system detects the fault:

- Inverter ignition voltage is greater than 7 volts and less than 16 volts.
- Battery Control Unit ignition voltage is greater than 7 volts and less than 16 volts.

Conditions to Set Fault Code Active

The following conditions must be met to set the fault code Active:

- FMI 22 is set when the BCU fails to communicate over the CAN Data Link for 30 MS.
- FMI 23 is set when the BCU fails to receive HCM data over the CAN Data Link for 2.5 seconds or greater after communication is established.
- FMI 24 is set when the BCU fails to receive Inverter data over the CAN Data Link for 2.5 seconds or greater after communication is established.
- FMI 25 is set when the BCU detects an error on initial check.
- FMI 26 is set when the BCU fails to transmit anything over the data link for 2 seconds.

Fallback

When Fault Code 104 is set the following conditions occur:

- Amber “Check Hybrid” light illuminates.
- Fault is stored in HCM memory.
- Inverter shuts high-voltage system off.
- HCM continues to control the hybrid vehicle in a diesel-only mode.
- Transmission defaults start gear to 1st.

Conditions to Set Fault Code Inactive

Only Inactive faults can be cleared from the TECU or HCM history using ServiceRanger. The TECU automatically clears faults from history after 200 hours. The HCM automatically clears a fault from history after that fault has been Inactive for 200.

Possible Causes

This fault code can be caused by any of the following:

- FMI 26: PEC
- FMI 22, 25
  - PEC
  - CAN Data Link between PEC and Inverter
- FMI 23
  - PEC
  - CAN Data Link between PEC and HCM
- FMI 24
  - PEC
  - Inverter
  - CAN Data Link between PEC and Inverter

Additional Tools

- Basic hand tools
- ASTM Class 0 electrical insulating rubber gloves with leather protectors J48603
- Lockout bracket J48506
- Lockout tags
- Eaton® Test Adapter Kit J43318
- Digital Volt/Ohm Meter J46708
- ServiceRanger

© 2015 Eaton. All rights reserved

https://truckmanualshub.com/

Component Identification

Harness Front View
(HCM - Vehicle Interface Connector)

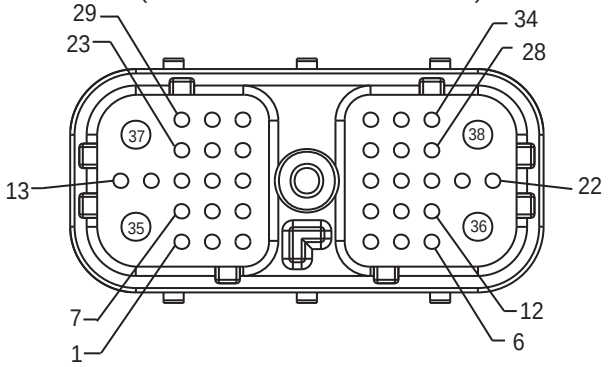

19 - Way Mating Connector View
(PEC - Low Voltage Connector)

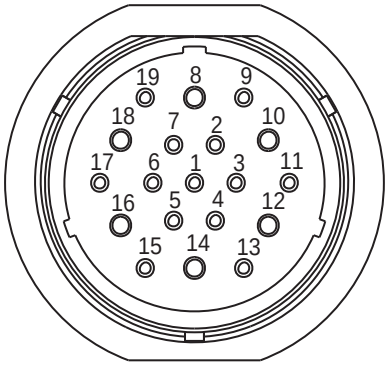

56-Way Mating Connector View
(Inverter - Low Voltage Connector)

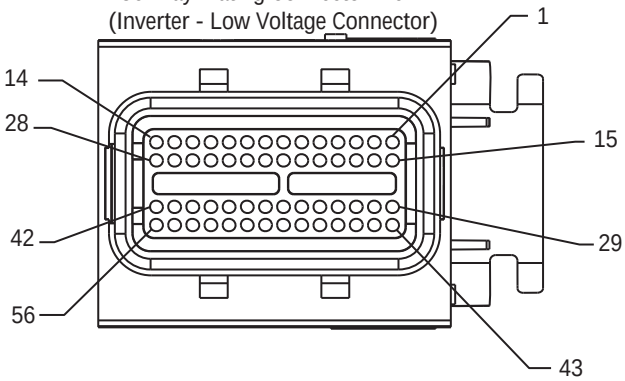

NOTE: Refer to the Eaton Hybrid Component and Connector Location page for Connector Locations

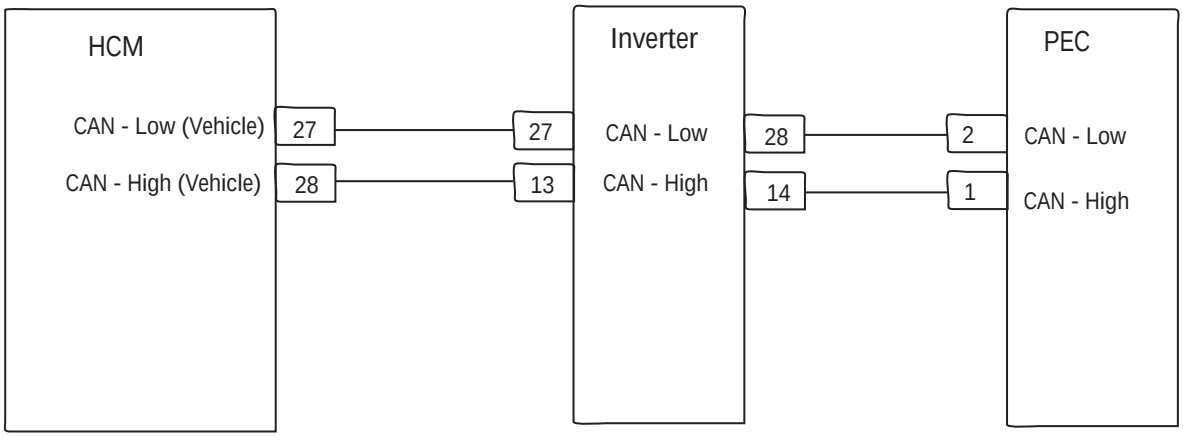

© 2015 Eaton. All rights reserved

Fault Code 104 - High Voltage Battery 2 Control Unit Communication

A ***Purpose:*** *Verify Active or Inactive fault code status and perform Electrical Pretest.*

1. Review and follow the “Warnings & Cautions” on page 1.
2. Key off.
3. Key on.
4. Retrieve Active fault codes and FMIs with ServiceRanger using the 9-Way Diagnostic Connector.
5. Perform the Electrical Pretest (see “Electrical Pretest” on page 25) and Hybrid Electrical Pretest (see “Hybrid Electrical Pretest” on page 29).
   - If no issues are found during either Electrical Test, go to **Step B.**
   - If issue was repaired during either Electrical Test, go to **Step V.**

B ***Purpose:*** *Verify faults and FMIs present.*

1. Key off.

Warning: See “High-Voltage Service Shutdown and Power-Up Procedure” on page 4. Follow the procedures to avoid shock, burn or death from improperly handled high-voltage.

2. Which fault codes are present?
   - If Fault Code 104 FMI 26 is listed, replace **Power Electronics Carrier (PEC)**, then go to **Step V.**
   - If Fault Code 104 FMI 22, 23, 24, or 25 are listed with an Active Fault Code 111, go to procedures for Fault Code 111 and other appropriate FMIs (see “Fault Code 111 - Inverter Communication” on page 347.)
   - If Fault Code 104 FMI 22, 23, 24, or 25 are listed with no Active Fault Code 111, go to **Step C.**
   - If Fault Code 88 is listed, see “Fault Code 88 - CAN Inverter Message (HCM)” on page 273.
   - If Fault Code 89 is listed, see “Fault Code 89 - CAN BCU 1 Message (HCM)” on page 277.

© 2015 Eaton. All rights reserved

https://truckmanualshub.com/

C

Purpose: *Verify resistance on PEC CAN Harness.*

1. Key off.
2. Disconnect the PEC 19-Way Connector.
3. Inspect the connector pins for damage, corrosion, and loose wires.
4. Measure the resistance between the PEC 19-Way Connector at the following pins:
   - Pin 1 and 2
   - Pin 1 and ground
   - Pin 2 and ground
   - If resistance between Pin 1 and Pin 2 is 50–70 ohms and resistance from Pin 1 and Pin 2 to ground are each 10K ohms or greater, replace **Power Electronics Carrier (PEC)**. Go to **Step V.**
   - If resistance is outside of range, repair the CAN data link between the PEC and Inverter, then go to **Step V.**

Connection	Measurement
Pin 1 to Pin 2	
Pin 1 to ground	
Pin 2 to ground	

V

Purpose: *Verify repair.*

1. Key off.
2. Reconnect all connectors and the negative battery cable.
3. Key on.
4. Clear codes, see “Clear Inactive Faults” on page 13.
5. Drive the vehicle and attempt to reset the code.
6. Check for codes, see “View Active and Inactive Faults” on page 13.
   - If no codes, test is complete.
   - If Fault Code 104 appears, find error in testing, go to **Step A.**
   - If a code other than 104 appears, go to “Fault Code Isolation Procedure Index” on page 14.

© 2015 Eaton. All rights reserved

https://truckmanualshub.com/

Fault Code 105 - High Voltage Battery 1 Control Unit

J1939: SA 239 SPN 520240 FMI 22–30

Overview

The high-voltage batteries each contain a cell controller that communicates over a twisted pair data link to the Battery Control Unit (BCU). The Battery Control Unit located in the Relay Box communicates with each battery to determine temperature, Stat of Charge (SOC), and voltage. This information is then sent to the Inverter.

Detection

The following preconditions must be met before the system detects the fault:

- Inverter ignition voltage is greater than 7 volts and less than 16 volts.
- Battery Control Unit ignition voltage is greater than 7 volts and less than 16 volts.

Conditions to Set Fault Code Active

The following conditions must be met to set the fault code Active:

- FMI 22–30 are set for various internal Battery Control Unit failures.

Fallback

When Fault Code 105 is set the following conditions occur:

- Amber “Check Hybrid” light illuminates.
- Fault is stored in HCM memory.
- Inverter shuts high-voltage system off.
- HCM continues to control the hybrid vehicle in a diesel-only mode.
- Transmission defaults start gear to 1st.

Conditions to Set Fault Code Inactive

Only Inactive faults can be cleared from the TECU or HCM history using ServiceRanger. The TECU automatically clears faults from history after 200 hours. The HCM automatically clears a fault from history after that fault has been Inactive for 200 hours.

Possible Causes

This fault code can be caused by any of the following:

- FMI 22–30: PEC

Additional Tools

- Basic hand tools
- ASTM Class 0 electrical insulating rubber gloves with leather protectors J48603
- Lockout bracket J48506
- Lockout tags
- Eaton® Test Adapter Kit J43318
- Digital Volt/Ohm Meter J46708
- ServiceRanger

© 2015 Eaton. All rights reserved

https://truckmanualshub.com/

Component Identification

Note: No schematic for this code.

© 2015 Eaton. All rights reserved

Fault Code 105 - High Voltage Battery 1 Control Unit

A

Purpose: *Verify Active and Inactive fault code status.*

1. Review and follow the “Warnings & Cautions” on page 1.
2. Retrieve Active fault codes and FMIs with ServiceRanger using the 9-Way Diagnostic Connector.
3. Key off.

Warning: See “High-Voltage Service Shutdown and Power-Up Procedure” on page 4. Follow the procedures to avoid shock, burn or death from improperly handled high-voltage.

4. Which FMIs are present?
   - If Fault Code 105, FMI 23–29 is listed, replace the **Power Electronics Carrier (PEC)**, then go to **Step V.**
   - If Fault Code 105, FMI 30 is listed, go to **Step B.**
   - If Fault Code 105, FMI 22 is listed, turn key off and back on. If fault is still present at key on, replace the **Power Electronics Carrier (PEC)**, then go to **Step V.**

B

Purpose: *Verify continuity of AC High-Voltage Cable.*

1. Disconnect the AC High-Voltage Connector at the Motor/Generator.

Warning: See “High-Voltage Service Shutdown and Power-Up Procedure” on page 4. Follow the procedures to avoid shock, burn or death from improperly handled high-voltage.

2. With the AC Cable disconnected at both ends, measure resistance to cable shielding at all 3 terminals:

   Note: Cable should be flexed while measuring.

   - If Open or “OL” on meter, replace the **Power Electronics Carrier (PEC)**.
   - If any resistance/continuity is found, replace the AC High Voltage Cable, then go to **Step V.**

Cable	Measurement
AC High-Voltage Cable	

© 2015 Eaton. All rights reserved

https://truckmanualshub.com/

V ***Purpose:*** *Verify repair.*

1. Key off.
2. Key on.
3. Clear codes, see “Clear Inactive Faults” on page 13.
4. Reconnect all connectors and the negative battery cable.
5. Drive the vehicle and attempt to reset the code.
6. Check for codes, see “View Active and Inactive Faults” on page 13.
   - If no codes, test is complete.
   - If Fault Code 105 appears, find error in testing, go to **Step A.**
   - If a code other than 105 appears, go to “Fault Code Isolation Procedure Index” on page 14.

© 2015 Eaton. All rights reserved

https://truckmanualshub.com/

Fault Code 106 - High Voltage Battery 2 Control Unit

J1939: SA 239 SPN 520267 FMI 22–30

Overview

The High-Voltage Batteries each contain a cell controller that communicates over a twisted pair data link to the Battery Control Unit (BCU). The Battery Control Unit located in the Relay Box communicates with each battery to determine temperature, State Of Charge (SOC), and voltage. This information is then sent to the Inverter.

Detection

The following preconditions must be met before the system detects the fault:

- Inverter ignition voltage is greater than 7 volts and less than 16 volts.
- Battery Control Unit ignition voltage is greater than 7 volts and less than 16 volts.

Conditions to Set Fault Code Active

The following conditions must be met to set the fault code Active:

- FMI 22–30 are set for various internal Battery Control Unit failures.

Fallback

When Fault Code 106 is set the following conditions occur:

- Amber “Check Hybrid” light illuminates.
- Fault is stored in HCM memory.
- Inverter shuts high-voltage system off.
- HCM continues to control the hybrid vehicle in a diesel-only mode.
- Transmission defaults start gear to 1st.

Conditions to Set Fault Code Inactive

Only Inactive faults can be cleared from the TECU or HCM history using ServiceRanger. The TECU automatically clears faults from history after 200 hours. The HCM automatically clears a fault from history after that fault has been Inactive for 200 hours.

Possible Causes

This fault code can be caused by any of the following:

- FMI 22–30: PEC

Additional Tools

- Basic hand tools
- ASTM Class 0 electrical insulating rubber gloves with leather protectors J48603
- Lockout bracket J48506
- Lockout tags
- Eaton® Test Adapter Kit J43318
- Digital Volt/Ohm Meter J46708
- ServiceRanger

© 2015 Eaton. All rights reserved

https://truckmanualshub.com/

Component Identification

Note: No Schematic for this code.

Note: For component location refer to OEM service literature.

© 2015 Eaton. All rights reserved

Fault Code 106 - High Voltage Battery 2 Control Unit

A ***Purpose:*** *Verify Active and Inactive fault code status.*

1. Review and follow the “Warnings & Cautions” on page 1.
2. Retrieve Active fault codes and FMIs with ServiceRanger using the 9-Way Diagnostic Connector.
3. Key off.

Warning: See “High-Voltage Service Shutdown and Power-Up Procedure” on page 4. Follow the procedures to avoid shock, burn or death from improperly handled high-voltage.

4. Which FMIs are present?
   - If Fault Code 106, FMI 23–30 or is listed, replace the **Power Electronics Carrier (PEC)**, then go to **Step V.**
   - If Fault Code 106, FMI 22 is listed, Key off and back on. If fault is still present at key on, replace the **Power Electronics Carrier (PEC)**, then go to **Step V.**

V ***Purpose:*** *Verify repair.*

1. Key off.
2. Key on.
3. Clear codes, see “Clear Inactive Faults” on page 13.
4. Reconnect all connectors and the negative battery cable.
5. Drive the vehicle and attempt to reset the code.
6. Check for codes, see “View Active and Inactive Faults” on page 13.
   - If no codes, test is complete.
   - If Fault Code 106 appears, find error in testing, go to **Step A.**
   - If a code other than 106 appears, go to “Fault Code Isolation Procedure Index” on page 14.

© 2015 Eaton. All rights reserved

Fault Code 107 - High Voltage Battery Leak Detection

J1939: SA 239 SPN 520242 FMI 1

Overview

The Battery Control Unit (BCU) continuously monitors the vehicle to detect a high-voltage leak. The circuit is connected to 3 locations on the DC high-voltage line with the opposite end connected to the chassis through a resistor.

Detection

The following preconditions must be met before the system detect the fault:

- Inverter ignition voltage is greater than 7 volts and less than 16 volts.
- Battery Control Unit ignition voltage is greater than 7 volts and less than 16 volts.

Conditions to Set Fault Code Active

The following conditions must be met to set the fault code Active:

- FMI 1 is set when the BCU detects the resistance between the high-voltage line and the Inverter case is less than 82k ohms.

Fallback

When Fault Code 107 is set the following conditions occur:

- Amber “Check Hybrid” light illuminates.
- Fault is stored in HCM memory.
- Inverter shuts high-voltage system off.
- HCM continues to control the hybrid vehicle in a diesel-only mode.
- Transmission defaults start gear to 1st.

Conditions to Set Fault Code Inactive

Only Inactive faults can be cleared from the TECU or HCM history using ServiceRanger. The TECU automatically clears faults from history after 200 hours. The HCM automatically clears a fault from history after that fault has been Inactive for 200 hours.

Possible Causes

This fault code can be caused by any of the following:

- FMI 1
  - High-voltage cable insulation damage
  - High-voltage component leaking

Additional Tools

- Basic hand tools
- ASTM Class 0 electrical insulating rubber gloves with leather protectors J48603
- Lockout bracket J48506
- Lockout tags
- Eaton® Test Adapter Kit J43318
- Digital Volt/Ohm Meter J46708
- ServiceRanger
- Megatest Meter AMB-45

© 2015 Eaton. All rights reserved

https://truckmanualshub.com/

Component Identification

Note: No schematic for this code.

Note: For component location refer to OEM service literature.

© 2015 Eaton. All rights reserved

https://truckmanualshub.com/

Fault Code 107 - High Voltage Battery Leak Detection

A ***Purpose:*** *Verify Active and Inactive fault code status.*

1. Review and follow the “Warnings & Cautions” on page 1.
2. Key on.
3. Retrieve Active fault codes and FMIs with ServiceRanger using the 9-Way Diagnostic Connector.
   - If Fault Code 107 is Active, go to **Step B.**
   - If Fault Code 107 is Inactive, test is complete. Go to **Step V.**

B ***Purpose:*** *Verify continuity of PEC DC Cable connector terminals and shielding.*

1. Key off.
2. Disconnect the Inverter DC Connector at the PEC.

Warning: See “High-Voltage Service Shutdown and Power-Up Procedure” on page 4. Follow the procedures to avoid shock, burn or death from improperly handled high-voltage.

3. Measure the resistance to ground at the DC Cable Connector on both the positive and negative terminals.
   - If Open or “OL” on meter, go to **Step I.**
   - If any resistance/continuity is found, go to **Step C.**

Cable	Measurement
PEC DC Cable (+) to ground	
PEC DC Cable (-) to ground	

© 2015 Eaton. All rights reserved

C

Purpose: *Verify continuity of Inverter DC Cable connector terminals and shielding.*

1. Disconnect the DC Connector at the Inverter.

Warning: See "High-Voltage Service Shutdown and Power-Up Procedure" on page 4. Follow the procedures to avoid shock, burn or death from improperly handled high-voltage.

2. With the DC Cable disconnected at both ends measure the resistance to cable shielding at both the positive and negative terminals.
   - If Open or "OL" on meter, go to **Step D.**
   - If any resistance/continuity is found, replace DC High-Voltage Cable between the PEC and Inverter, then go to **Step V.**

Cable	Measurement
Inverter DC Cable (+) to Cable shield	
Inverter DC Cable (-) to Cable shield	

D

Purpose: *Verify continuity of Inverter DC connector.*

1. Measure the resistance to ground at the Inverter DC Connector on both positive and negative terminals:

Warning: See "High-Voltage Service Shutdown and Power-Up Procedure" on page 4. Follow the procedures to avoid shock, burn or death from improperly handled high-voltage.

- If Open or "OL" on meter, possible error with testing. Go to **Step V.**
- If any resistance/continuity is found, go to **Step E.**

Connection	Measurement
Inverter DC (+) to ground	
Inverter DC (-) to ground	

© 2015 Eaton. All rights reserved

https://truckmanualshub.com/

E

Purpose: *Verify continuity of Inverter AC Cable.*

1. Disconnect the AC Connector at the Inverter.

Warning: See "High-Voltage Service Shutdown and Power-Up Procedure" on page 4. Follow the procedures to avoid shock, burn or death from improperly handled high-voltage.

2. Measure the resistance to ground on all three terminals at the AC Cable.
   - If Open or "OL" on meter, go to **Step F.**
   - If any resistance/continuity is found, go to **Step G.**

Cable	Measurement
AC Cable Pin A to ground	
AC Cable Pin B to ground	
AC Cable Pin C to ground	

F

Purpose: *Verify continuity of Inverter AC Cable to ground.*

1. Measure the resistance to ground at all 3 terminals at the Inverter AC Connector.

Warning: See "High-Voltage Service Shutdown and Power-Up Procedure" on page 4. Follow the procedures to avoid shock, burn or death from improperly handled high-voltage.

- If Open or "OL" on meter, possible error with testing. Go to **Step V.**
- If any resistance/continuity is found, replace **Inverter**, then go to **Step V.**

Connection	Measurement
Pin A to Pin A	
Pin B to Pin B	
Pin C to Pin C	

© 2015 Eaton. All rights reserved

G

Purpose: *Verify continuity of AC High-Voltage Cable terminals and shielding.*

1. Disconnect the AC High-Voltage Connector at the Motor/Generator.

Warning: See “High-Voltage Service Shutdown and Power-Up Procedure” on page 4. Follow the procedures to avoid shock, burn or death from improperly handled high-voltage.

2. With the AC Cable disconnected at both ends, measure resistance to cable shielding at all 3 terminals.
   - If Open or “OL” on meter, go to **Step H.**
   - If any resistance/continuity is found, replace AC high-voltage cable, then go to **Step V.**

Connection	Measurement
Pin A to AC Cable Shield	
Pin B to AC Cable Shield	
Pin C to AC Cable Shield	

H

Purpose: *Verify continuity of Motor/Generator AC Connector to ground.*

1. Measure the resistance to ground at the Motor/Generator AC Connector.

Warning: See “High-Voltage Service Shutdown and Power-Up Procedure” on page 4. Follow the procedures to avoid shock, burn or death from improperly handled high-voltage.

   - If Open or “OL” on meter, possible error with testing. Go to **Step V.**
   - If any resistance/continuity is found, replace **Motor/Generator**, then go to **Step V.**

Connection	Measurement
Motor/Generator AC Connector to ground	

I

Purpose: *Verify components present.*

1. Is unit supplied with a DC/DC Converter or APG?
   - Yes, go to **Step J.**
   - No, replace **Power Electronics Carrier (PEC)**, then go to **Step V.**

© 2015 Eaton. All rights reserved

https://truckmanualshub.com/

J ***Purpose:*** *Verify continuity of DC cable from PEC to DC/DC Converter.*

1. Disconnect 12-volt positive and negative cables from DC/DC Converter.

Warning: See "High-Voltage Service Shutdown and Power-Up Procedure" on page 4. Follow the procedures to avoid shock, burn or death from improperly handled high-voltage.

2. Disconnect the PEC to DC/DC Converter DC Cable at the PEC.
3. Measure the resistance to ground at the DC Cable connector on both the positive and negative terminals.
   - If Open or "OL" on meter, possible error in testing. If vehicle does not have an APG, go to **Step V.**
   - If vehicle is equipped with APG, go to **Step M.**
   - If any resistance/continuity is found, go to **Step K.**

Connection	Measurement
DC Cable (+) to ground	
DC Cable (-) to ground	

K ***Purpose:*** *Verify continuity of PEC High-Voltage DC Cable terminals to shielding.*

1. Disconnect the high-voltage DC cable at the DC/DC Converter.

Warning: See "High-Voltage Service Shutdown and Power-Up Procedure" on page 4. Follow the procedures to avoid shock, burn or death from improperly handled high-voltage.

2. With the DC cable disconnected at both ends, measure resistance to cable shielding at positive and negative terminals.
   - If Open or "OL" on meter, go to **Step L.**
   - If any resistance/continuity is found, replace the High-Voltage DC Cable, then go to **Step V.**

Cable	Measurement
PEC DC Cable (+) to Cable shield	
PEC DC Cable (-) to Cable shield	

© 2015 Eaton. All rights reserved

L ***Purpose:*** *Verify continuity of DC/DC Converter DC high-voltage cable terminals to ground.*

1. Measure the resistance to ground at the DC/DC Converter High-Voltage DC Connector at both positive and negative terminals.

Warning: See "High-Voltage Service Shutdown and Power-Up Procedure" on page 4. Follow the procedures to avoid shock, burn or death from improperly handled high-voltage.

- If Open or "OL" on meter, possible error with testing. Go to **Step V.**
- If any resistance/continuity is found, replace **DC/DC Converter**, then go to **Step V.**

Cable	Measurement
PEC DC Cable (+) to Cable shield	
PEC DC Cable (-) to Cable shield	

M ***Purpose:*** *Verify continuity of APG DC high-voltage cable terminals to ground.*

1. Disconnect the APG DC High-Voltage Cable at the PEC.

Warning: See "High-Voltage Service Shutdown and Power-Up Procedure" on page 4. Follow the procedures to avoid shock, burn or death from improperly handled high-voltage.

2. Measure the resistance to ground at the DC Cable Connector on both the positive and negative terminals.
   - If Open or "OL" on meter, replace the **Power Electronics Carrier (PEC)**, then go to **Step V.**
   - If any resistance/continuity is found, go to **Step N.**

Connection	Measurement
APG DC Cable Pin 1 (+) to ground	
APG DC Cable Pin 4 (-) to ground	

© 2015 Eaton. All rights reserved

https://truckmanualshub.com/

N ***Purpose:*** *Verify continuity of APG DC high-voltage cable terminals to shielding.*

1. Disconnect the high-voltage DC cable at the APG.

Warning: See "High-Voltage Service Shutdown and Power-Up Procedure" on page 4. Follow the procedures to avoid shock, burn or death from improperly handled high-voltage.

2. With the DC cable disconnected at both ends measure the resistance from positive and negative terminals to cable shielding at PEC Cable end.
   - If Open or "OL" on meter, go to **Step O.**
   - If any resistance/continuity is found, replace DC high-voltage cable, then go to **Step V.**

Connection	Measurement
DC Cable (+) to ground	
DC Cable (-) to ground	

O ***Purpose:*** *Verify continuity of APG high-voltage DC cable pin to ground.*

1. Measure the resistance to ground at APG High-Voltage DC connector Pin 1 (positive +) and Pin 4 (negative -).

Warning: See "High-Voltage Service Shutdown and Power-Up Procedure" on page 4. Follow the procedures to avoid shock, burn or death from improperly handled high-voltage.

   - If Open or "OL" on meter, possible error with testing. Go to **Step V.**
   - If any resistance/continuity is found, replace **Auxiliary Power Generator (APG) Inverter**, then go to **Step V.**

Connection	Measurement
APG DC Cable Pin 1 (+) to ground	
APG DC Cable Pin 4 (-) to ground	

© 2015 Eaton. All rights reserved

V ***Purpose:*** *Verify repair.*

1. Key off.
2. Reconnect all connectors.

Warning: See “High-Voltage Service Shutdown and Power-Up Procedure” on page 4. Follow the procedures to avoid shock, burn or death from improperly handled high-voltage.

3. Key on.
4. Drive the vehicle and attempt to reset the code.
5. Check for codes, see “View Active and Inactive Faults” on page 13.
   - If no codes, test is complete.
   - If Fault Code 107 appears, find error in testing, go to **Step A.**
   - If a code other than 107 appears, go to “Fault Code Isolation Procedure Index” on page 14.

© 2015 Eaton. All rights reserved

https://truckmanualshub.com/

Fault Code 108 - High Voltage Battery 1 Control Unit Power Supply

J1939: SA 239 SPN 520268 FMI 3, 4

Overview

The high-voltage batteries are 172 volts each connected in series to produce 340 volts DC. The Battery Control Unit located in the Relay Box receives 12-volts ignition power and ground from the Inverter.

Detection

The following preconditions must be met before the system detects the fault:

- HCM ignition voltage is greater than 7 volts and less than 16 volts.

Conditions to Set Fault Code Active

The following conditions must be met to set the fault code Active:

- FMI 3 is set when the BCU detects the ignition voltage is greater than 16 volts for 1 second.
- FMI 4 is set when the BCU detects the ignition voltage is less than 7 volts for 1 second.

Fallback

When Fault Code 108 is set the following conditions occur:

- Amber “Check Hybrid” light illuminates.
- Fault is stored in HCM memory.
- Inverter shuts high-voltage system off.
- HCM continues to control the hybrid vehicle in a diesel-only mode.
- Transmission defaults start gear to 1st.

Conditions to Set Fault Code Inactive

Only Inactive faults can be cleared from the TECU or HCM history using ServiceRanger. The TECU automatically clears faults from history after 200 hours. The HCM automatically clears a fault from history after the fault has been Inactive for 200 hours.

Possible Causes

This fault code can be caused by any of the following:

- FMI 3
  - PEC
- FMI 4
  - PEC Low-voltage harness from Inverter to PEC
  - HCM
  - Low-voltage harness from HCM to Inverter
  - Inverter

Additional Tools

- Basic hand tools
- ASTM Class 0 electrical insulating rubber gloves with leather protectors J48603
- Lockout bracket J48506
- Lockout tags
- Eaton® Test Adapter Kit J43318
- Digital Volt/Ohm Meter J46708
- ServiceRanger

© 2015 Eaton. All rights reserved

Component Identification

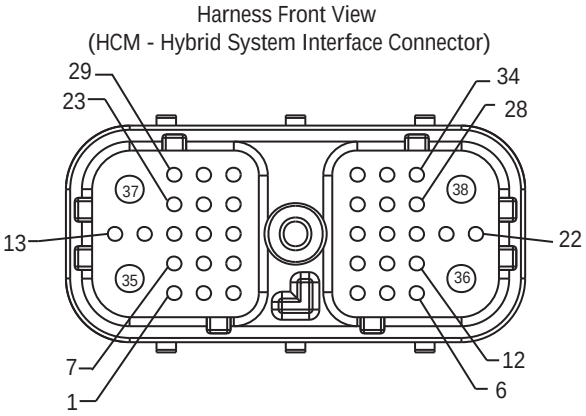

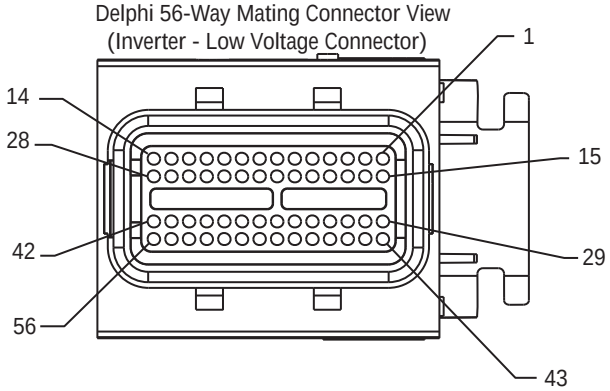

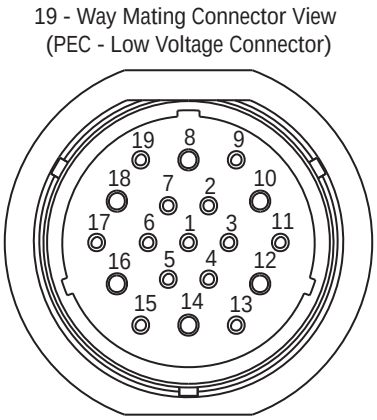

NOTE: Refer to the Eaton Hybrid Component and Connector Location page for Connector Locations

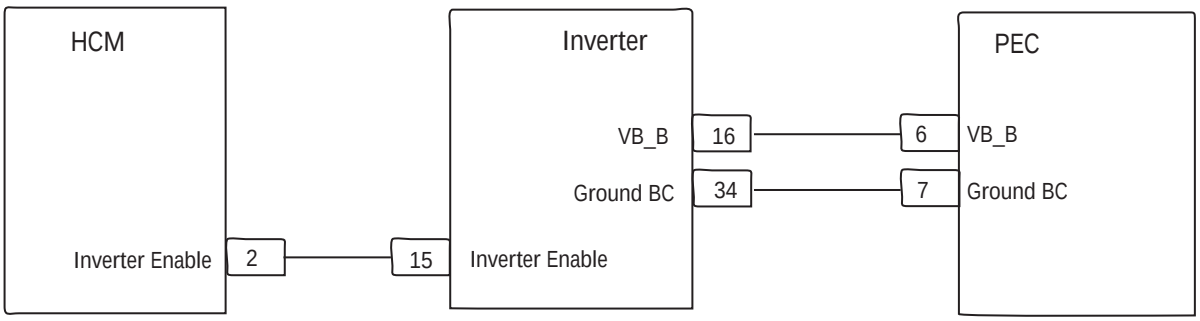

© 2015 Eaton. All rights reserved

https://truckmanualshub.com/

Fault Code 108 - High Voltage Battery 1 Control Unit Power Supply

A

Purpose: *Check for Active or Inactive fault code status.*

1. Review and follow the "Warnings & Cautions" on page 1.
2. Retrieve Active fault codes and FMIs with ServiceRanger using the 9-Way Diagnostic Connector.
3. Key off.

Warning: See "High-Voltage Service Shutdown and Power-Up Procedure" on page 4. Follow the procedures to avoid shock, burn or death from improperly handled high-voltage.

4. Which Faults are present?
   - If Fault Code 108 FMI 3 or 4 are listed with an Active Fault Code 114, go to "Fault Code 114 - Inverter Power Supply" on page 360.
   - If Fault Code 108 FMI 3 or 4 are listed with no Active Fault Code 114, go to **Step B.**

B

Purpose: *Verify voltage at PEC connector.*

1. Disconnect the PEC 19-Way Connector.
2. Connect a multimeter to the PEC 19-Way Connector Pin 6 and Pin 7.
3. Place multimeter where it can be viewed, while standing next to the truck.
4. Key on.
5. Observe multimeter voltage reading:
   - If voltage between Pin 6 and Pin 7 is 11–13 volts, replace the **Power Electronics Carrier (PEC)**, then go to **Step V.**
   - If voltage between Pin 15 and Pin 1 is less than 7 volts, go to **Step C.**

Connection	Measurement
Pin 6 to Pin 7	

© 2015 Eaton. All rights reserved

C

Purpose: *Verify continuity between PEC and Inverter connectors.*

1. Key off.
2. Disconnect the Inverter 56-Way Connector.
3. Measure resistance on the following:
   - Inverter 56-Way Connector Pin 16 to PEC 19-Way Connector Pin 6.
   - Inverter 56-Way Connector Pin 34 to PEC 19-Way Connector Pin 7.

     Note: Gently flex the Inverter 56-Way Connector Harness near the Connector while monitoring the voltage values.

   - If resistance from Pin 16 to Pin 6 is 0–0.3 ohms and resistance from Pin 34 to Pin 7 is 0–0.3 ohms, replace the **Inverter**, then go to **Step V.**
   - If resistance is outside of range, replace the low-voltage harness from the PEC to the Inverter, then go to **Step V.**

Pins	Measurement
56-Way Pin 16 to 19-Way Pin 6	
56-Way Pin 34 to 19-Way Pin 7	

V

Purpose: *Verify repair.*

1. Key off.
2. Reconnect all connectors and the negative battery cable.
3. Key on.
4. Clear codes, see “Clear Inactive Faults” on page 13.
5. Drive the vehicle and attempt to reset the code.
6. Check for codes, see “View Active and Inactive Faults” on page 13.
   - If no codes, test is complete.
   - If Fault Code 108 appears, find error in testing, go to **Step A.**
   - If a code other than 108 appears, go to “Fault Code Isolation Procedure Index” on page 14.

© 2015 Eaton. All rights reserved

https://truckmanualshub.com/

Fault Code 109 - High Voltage Battery 2 Control Unit Power Supply

J1939: SA 239 SPN 520269 FMI 3, 4

Overview

The high-voltage batteries are 172 volts each connected in series to produce 340 volts DC. The Battery Control Unit located in the Relay Box receives 12-volt ignition power and ground from the Inverter.

Detection

The following preconditions must be met before the system detects the fault:

- HCM ignition voltage is greater than 7 volts and less than 16 volts.

Conditions to Set Fault Code Active

The following conditions must be met to set the fault code Active:

- FMI 3 is set when the BCU detects the ignition voltage is greater than 16 volts for 1 second.
- FMI 4 is set when the BCU detects the ignition voltage is less than 7 volts for 1 second.

Fallback

When Fault Code 109 is set the following conditions occur:

- Amber “Check Hybrid” light illuminates.
- Fault is stored in HCM memory.
- Inverter shuts high-voltage system off.
- HCM continues to control the hybrid vehicle in a diesel-only mode.
- Transmission defaults start gear to 1st.

Conditions to Set Fault Code Inactive

Only Inactive faults can be cleared from the TECU or HCM history using ServiceRanger. The TECU automatically clears faults from history after 200 hours. The HCM automatically clears a fault from history after that fault has been Inactive for 200 hours.

Possible Causes

This fault code can be caused by any of the following:

- FMI 3
  - PEC
- FMI 4
  - Charging system PEC Low-voltage harness from Inverter to PEC
  - HCM
  - Low-voltage harness from the HCM to Inverter
  - Inverter

Additional Tools

- Basic hand tools
- ASTM Class 0 electrical insulating rubber gloves with leather protectors J48603
- Lockout bracket J48506
- Lockout tags
- Eaton® Test Adapter Kit J43318
- Digital Volt/Ohm Meter J46708
- ServiceRanger

© 2015 Eaton. All rights reserved

Component Identification

Harness Front View
(HCM - Hybrid System Interface Connector)

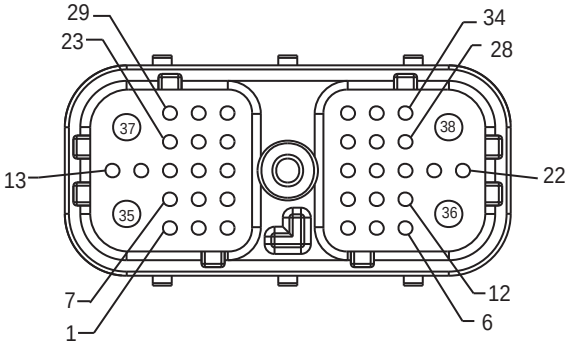

Delphi 56-Way Mating Connector View
(Inverter - Low Voltage Connector)

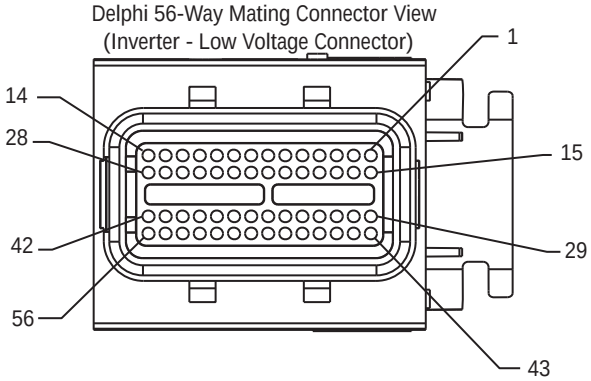

Deutsch 19 - Way Mating Connector View
(PEC - Low Voltage Connector)

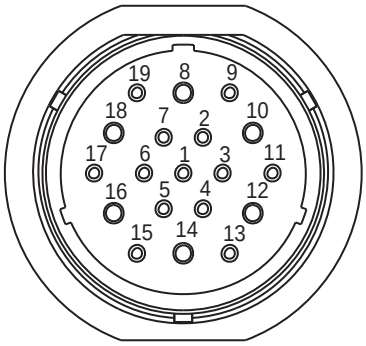

NOTE: Refer to the Eaton Hybrid Component and Connector Location page for Connector Locations

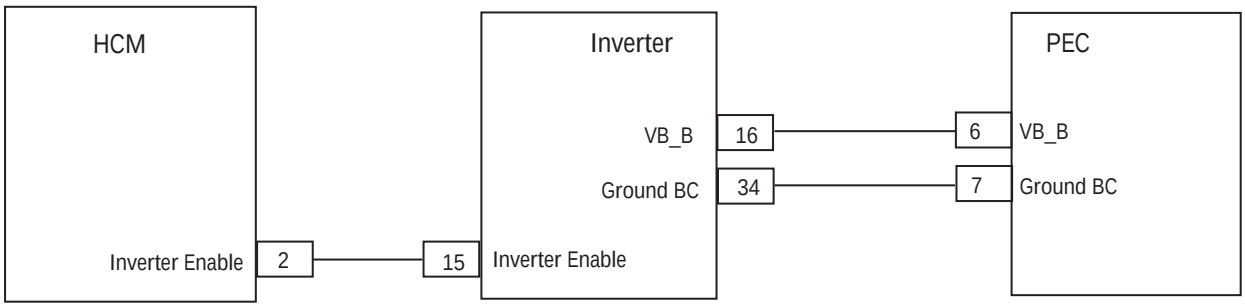

© 2015 Eaton. All rights reserved

https://truckmanualshub.com/

Fault Code 109 - High Voltage Battery 2 Control Unit Power Supply

A ***Purpose:*** *Check for Active or Inactive fault code status.*

1. Review and follow the "Warnings & Cautions" on page 1.
2. Retrieve Active fault codes and FMIs with ServiceRanger using the 9-Way Diagnostic Connector.
3. Key off.

Warning: See "High-Voltage Service Shutdown and Power-Up Procedure" on page 4. Follow the procedures to avoid shock, burn or death from improperly handled high-voltage.

4. Which FMIs are present?
   - If Fault Code 109 FMI 3 or 4 are listed with an Active Fault Code 114, go to "Fault Code 114 - Inverter Power Supply" on page 360.
   - If Fault Code 109 FMI 3 or 4 are listed with no Active Fault Code 114, go to **Step B.**

B ***Purpose:*** *Verify battery voltage at PEC 19-Way Connector.*

1. Disconnect the PEC 19-Way Connector.
2. Connect a multi meter to the PEC 19-Way Connector Pin 6 and Pin 7.
3. Place multimeter where it can be viewed, while standing next to the truck.
4. Key on.
5. Observe multimeter voltage reading:
   - If voltage between Pin 6 and Pin 7 is 11–13 volts, replace the **Power Electronics Carrier (PEC)**, then go to **Step V.**
   - If voltage between Pin 6 and Pin 7 is less than 7 volts, go to **Step C.**

Connection	Measurement
Pin 6 to Pin 7	

© 2015 Eaton. All rights reserved

C

Purpose: *Verify continuity on PEC 19-Way to Inverter 56-Way Low Voltage Harness.*

1. Key off.
2. Disconnect the Inverter 56-Way Connector.
3. Measure resistance on the following:
   - Inverter 56-Way Connector Pin 16 to PEC 19-Way Connector Pin 6
   - Inverter 56-Way Connector Pin 34 to PEC 19-Way Connector Pin 7

   Note: Gently flex the Inverter 56-Way Connector Harness near the connector while monitoring the voltage values.

   - If resistance from Pin 16 to Pin 6 is 0–0.3 ohms and resistance from Pin 34 to Pin 7 is 0–0.3 ohms, replace the **Inverter**, then go to **Step V.**
   - If resistance is outside of range, replace the Low-Voltage Harness from the PEC to the Inverter, then go to **Step V.**

Connection	Measurement
56-Way Pin 16 to 19-Way Pin 6	
56-Way Pin 34 to 19-Way Pin 7	

V

Purpose: *Verify repair.*

1. Key off.
2. Reconnect all connectors and the negative battery cable.
3. Key on.
4. Clear codes, see “Clear Inactive Faults” on page 13.
5. Drive the vehicle and attempt to reset the code.
6. Check for codes, see “View Active and Inactive Faults” on page 13.
   - If no codes, test is complete.
   - If Fault Code 109 appears, find error in testing, go to **Step A.**
   - If a code other than 109 appears, go to “Fault Code Isolation Procedure Index” on page 14.

© 2015 Eaton. All rights reserved

https://truckmanualshub.com/

Fault Code 110 - Inverter

J1939: SA 239 SPN 520220 FMI 22–29

Overview

The Inverter assembly is connected to the High-Voltage DC Cable from the PEC along with the high-voltage AC cable from the Motor/Generator. It inverts the DC to AC voltage to power the motor during electric assist and rectifies the AC back to DC to charge the high-voltage batteries during coasting or regenerative braking. The Inverter is also the main controller for the high-voltage system communicating to the Battery Control Module in the PEC along with communicating to the HCM for overall system operation.

Detection

The following preconditions must be met before the system detects the fault:

- HCM is powered and ignition voltage is greater than 7 volts and less than 16 volts.
- Inverter ignition voltage is greater than 7 volts and less than 16 volts.

Conditions to Set Fault Code Active

The following conditions must be met to set the fault code Active:

- FMI 22–29 are set due to various internal failures of the Inverter.

Fallback

When Fault Code 110 is set the following conditions occur:

- Amber “Check Hybrid” light illuminates.
- Fault is stored in HCM memory.
- Depending on the internal failure the Inverter may continue to operate with the fault logged, or shutdown the high-voltage system.
- HCM continues to control the hybrid vehicle in a diesel-only mode for most failures.
- Transmission defaults start gear to 1st.

Conditions to Set Fault Code Inactive

Only Inactive faults can be cleared from the TECU or HCM history using ServiceRanger. The TECU automatically clears faults from history after 200 hours. The HCM automatically clears faults from history after that fault has been Inactive for 200 hours.

Possible Causes

This fault code can be caused by any of the following:

- FMI 22–29: Inverter

Additional Tools

- Basic hand tools
- ASTM Class 0 electrical insulating rubber gloves with leather protectors J48603
- Lockout bracket J48506
- Lockout tags
- Eaton® Test Adapter Kit J43318
- Digital Volt/Ohm Meter J46708
- ServiceRanger

© 2015 Eaton. All rights reserved

https://truckmanualshub.com/

Component Identification

High-voltage cables and wiring are orange in color and contain a warning label at the connectors, while high-voltage components are marked with a label. ASTM Class 0 electrical insulating rubber gloves with leather protectors must be used when working on any of these components. Failure to follow these instructions may result in severe personal injury or death.

Note: No schematic for this code.

Note: For component location refer to the OEM service literature.

© 2015 Eaton. All rights reserved

https://truckmanualshub.com/

Fault Code 110 - Inverter

A ***Purpose:*** *Verify Active and Inactive fault code status.*

1. Review and follow the “Warnings & Cautions” on page 1.
2. Retrieve Active fault codes and FMIs with ServiceRanger using the 9-Way Diagnostic Connector.
3. Key off.

Warning: See “High-Voltage Service Shutdown and Power-Up Procedure” on page 4. Follow the procedures to avoid shock, burn or death from improperly handled high-voltage.

4. Which FMIs are present?
   - If Fault Code 110 is Active, replace the **Inverter**, then go to **Step V.**
   - If Fault Code 110 is Inactive, test is complete.

V ***Purpose:*** *Verify repair.*

1. Key off.
2. Key on.
3. Clear codes, see “Clear Inactive Faults” on page 13.
4. Reconnect all connectors and the negative battery cable.
5. Drive the vehicle and attempt to reset the code.
6. Check for codes, see “View Active and Inactive Faults” on page 13.
   - If no codes, test is complete.
   - If Fault Code 110 appears, find error in testing, go to **Step A.**
   - If a code other than 110 appears, go to “Fault Code Isolation Procedure Index” on page 14.

© 2015 Eaton. All rights reserved

Fault Code 111 - Inverter Communication

J1939: SA 239 SPN 520260 FMI 22–26

Overview

The Inverter communicates with the Battery Control Unit (BCU) located in the PEC and the Hybrid Control Module (HCM) on the CAN high-speed proprietary data link. The data link is a two wire twisted pair with two 120 ohm resistors located in the link.

Detection

The following preconditions must be met before the system detects the fault:

- HCM is powered and ignition voltage is greater than 7 volts and less than 16 volts.The Inverter ignition voltage is greater than 7 volts and less than 16 volts.

Conditions to Set Fault Code Active

The following conditions must be met to set the fault code Active:

- FMI 22 is set when Inverter detects an internal CAN communication failure at power up.
- FMI 23, 24, or 25 are set when the Inverter fails to transmit, receive or obtain any messages on the CAN data link.
- FMI 26 is set when a specific message sent from the HCM is invalid.

Fallback

When Fault Code 111 is set the following conditions occur:

- Amber “Check Hybrid” light illuminates.
- Fault is stored in HCM memory.
- Electric Motor/Generator Assist and Regeneration are disabled; however, high-voltage relays remain powered.
- HCM continues to control the hybrid vehicle in a diesel-only mode.
- Transmission defaults start gear to 1st.

Conditions to Set Fault Code Inactive

Only Inactive faults can be cleared from the TECU or HCM history using ServiceRanger. The TECU automatically clears faults from history after 200 hours. The HCM automatically clears a fault from history after that fault has been Inactive for 200 hours.

Possible Causes

This fault code can be caused by any of the following:

- FMI 22
  - Inverter
- FMI 23, 24, or 25
  - CAN Data Link
  - Inverter
  - PEC
- FMI 26
  - HCM

Additional Tools

- Basic hand tools
- ASTM Class 0 electrical insulating rubber gloves with leather protectors J48603
- Lockout bracket J48506
- Lockout tags
- Eaton® Test Adapter Kit J43318
- Digital Volt/Ohm Meter J46708
- ServiceRanger

© 2015 Eaton. All rights reserved

https://truckmanualshub.com/

Component Identification

Harness Front View
(HCM - Vehicle Interface Connector)

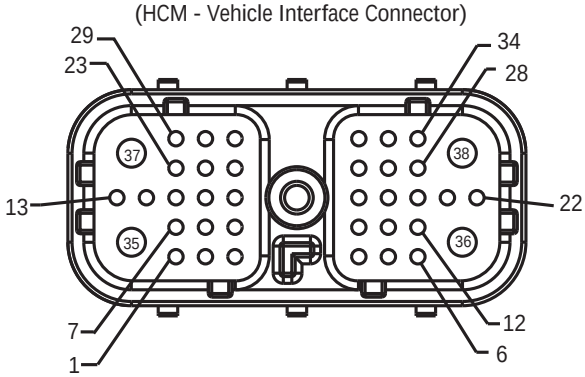

Deutsch 19 - Way Mating Connector View
(PEC - Low-Voltage Connector)

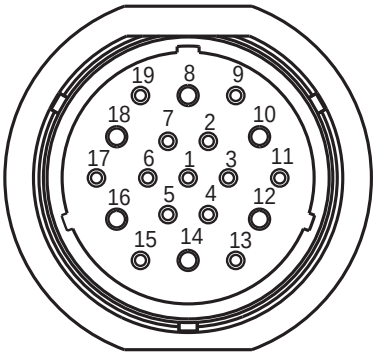

Delphi 56-Way Mating Connector View
(Inverter - Low-Voltage Connector)

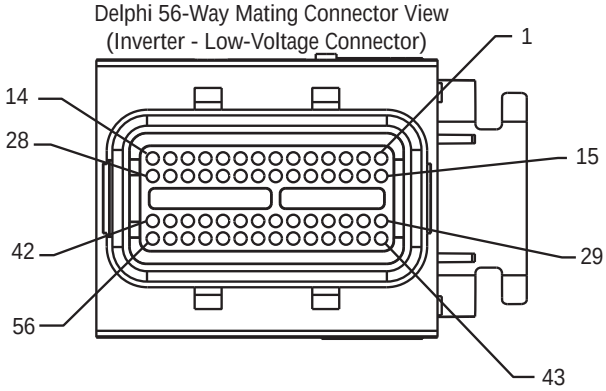

NOTE: Refer to the Eaton Hybrid Component and Connector Location page for Connector Locations

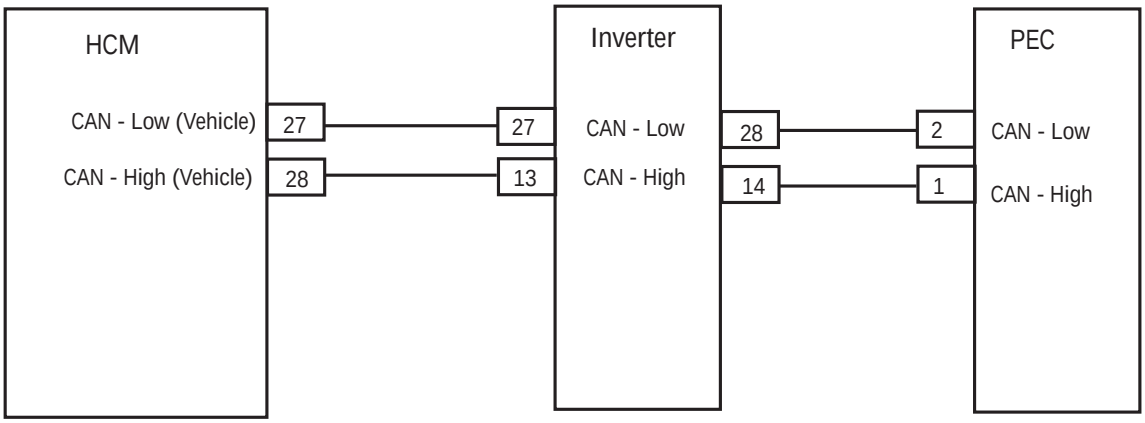

© 2015 Eaton. All rights reserved

Fault Code 111 - Inverter Communication

A ***Purpose:*** *Check for Active or Inactive fault code status and perform Electrical Pretest.*

1. Review and follow the “Warnings & Cautions” on page 1.
2. Key off.
3. Key on.
4. Retrieve Active fault codes and FMIs with ServiceRanger using the 9-Way Diagnostic Connector.
5. Perform the Electrical Pretest (see “Electrical Pretest” on page 25) and Hybrid Electrical Pretest (see “Hybrid Electrical Pretest” on page 29):
   - If no issues are found during either Electrical Test, go to **Step B.**
   - If issue was repaired during either Electrical Test, go to **Step V.**

B ***Purpose:*** *Verify FMIs present.*

1. Key off.

Warning: See “High-Voltage Service Shutdown and Power-Up Procedure” on page 4. Follow the procedures to avoid shock, burn or death from improperly handled high-voltage.

2. Which faults are present?
   - If Fault Code 111 FMI 22 is listed, replace the **Inverter**, then go to **Step V.**
   - If Fault Code 111 FMI 26 is listed, contact Eaton® at 1-800-826-HELP (4357).
   - If Fault Code 111 FMI 23, 24 are listed, go to “Fault Code 88 - CAN Inverter Message (HCM)” on page 273.
   - If Fault Code 111 FMI 25 is listed with an Active code 88, go to “Fault Code 88 - CAN Inverter Message (HCM)” on page 273.
   - If Fault Code 111 FMI 25 is listed with an Active code 89, go to “Fault Code 89 - CAN BCU 1 Message (HCM)” on page 277.

© 2015 Eaton. All rights reserved

https://truckmanualshub.com/

V ***Purpose:*** *Verify repair.*

1. Key off.
2. Reconnect all connectors and the negative battery cable.
3. Key on.
4. Clear codes, see “Clear Inactive Faults” on page 13.
5. Drive the vehicle and attempt to reset the code.
6. Check for codes, see “View Active and Inactive Faults” on page 13.
   - If no codes, test is complete.
   - If Fault Code 111 appears, find error in testing, go to **Step A.**
   - If a code other than 111 appears, go to “Fault Code Isolation Procedure Index” on page 14.

© 2015 Eaton. All rights reserved

https://truckmanualshub.com/

Fault Code 112 - Inverter Voltage

J1939: SA 239 SPN 520221 FMI 3, 4

Overview

The Inverter is connected to the Power Electronics Carrier (PEC) through a high-voltage DC cable, which supplies 340 volts from the batteries. During operation, the Inverter monitors the input voltage to determine an over or under voltage concern.

Detection

The following preconditions must be met before the system detect the fault:

- Inverter ignition voltage is greater than 7 volts and less than 16 volts.

Conditions to Set Fault Code Active

The following conditions must be met to set the fault code Active:

- FMI 4 is set when the Inverter input voltage measured at the capacitor is less than 200 volts for 1 second, while the main relays in the Relay Box are on.
- FMI 3 is set when the Inverter input voltage measured at the capacitor is greater than 435 volts for 0.05 MS.

Fallback

When Fault Code 112 is set the following conditions occur:

- Amber “Check Hybrid” light illuminates.
- Fault is stored in HCM memory.
- Inverter shuts high-voltage system off.
- HCM continues to control the hybrid vehicle in a diesel-only mode.
- Transmission defaults start gear to 1st.

Conditions to Set Fault Code Inactive

Only Inactive faults can be cleared from the TECU or HCM history using ServiceRanger. The TECU automatically clears faults from history after 200 hours. The HCM automatically clears a fault from history after that fault has been Inactive for 200 hours.

Possible Causes

This fault code can be caused by any of the following:

- FMI 3, 4
  - Inverter
  - PEC
  - DC high-voltage cable

Additional Tools

- Basic hand tools
- ASTM Class 0 electrical insulating rubber gloves with leather protectors J48603
- Lockout bracket J48506
- Lockout tags
- Eaton® Test Adapter Kit J43318
- Digital Volt/Ohm Meter J46708
- ServiceRanger

© 2015 Eaton. All rights reserved

https://truckmanualshub.com/

Component Identification

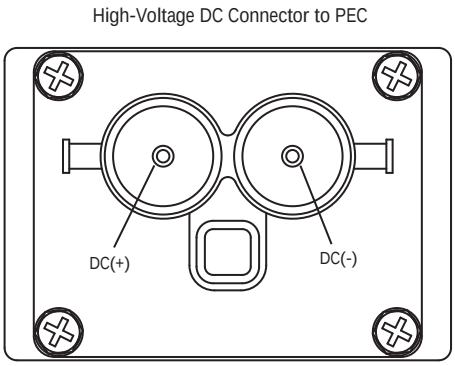

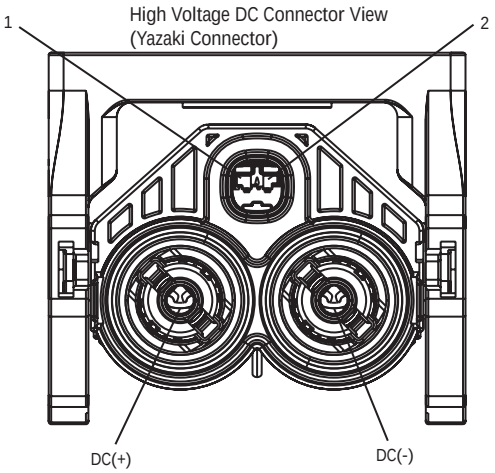

NOTE: Refer to the Eaton Hybrid Component and Connector Location page for Connector Locations

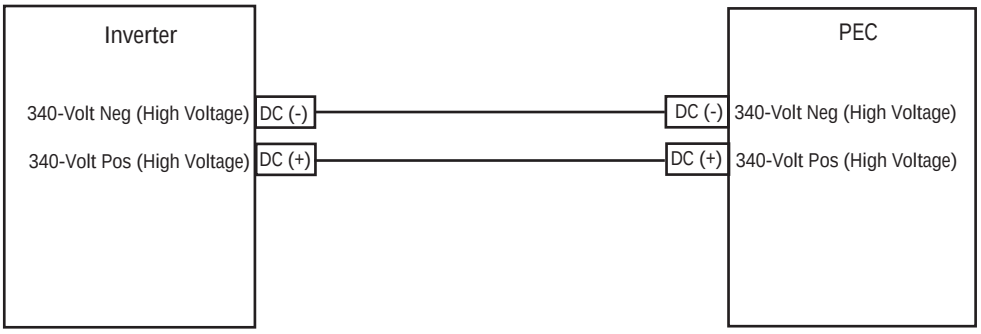

© 2015 Eaton. All rights reserved

Fault Code 112 - Inverter Voltage

A ***Purpose:*** *Check for Active or Inactive fault code status and perform Electrical Pretest.*

1. Review and follow the “Warnings & Cautions” on page 1.
2. Key off.
3. Key on.
4. Retrieve Active fault codes and FMIs with ServiceRanger using the 9-Way Diagnostic Connector.

Warning: See “High-Voltage Service Shutdown and Power-Up Procedure” on page 4. Follow the procedures to avoid shock, burn or death from improperly handled high-voltage.

5. Which faults are present?
   - If Fault Code 112 FMI 3 is listed, contact Eaton at 1-800-826-HELP (4357).
   - If Fault Code 112 FMI 3 is listed with other Active Hybrid Fault Codes beside 112, go to “View Active and Inactive Faults” on page 13.
   - If Fault Code 112 FMI 4 is listed, go to **Step B.**

B ***Purpose:*** *Verify capacitance of Inverter DC High-Voltage Connector.*

1. Key off.
2. Disconnect the DC High-Voltage Connector at the Inverter.
3. Place the multimeter on uF option.

Warning: See “High-Voltage Service Shutdown and Power-Up Procedure” on page 4. Follow the procedures to avoid shock, burn or death from improperly handled high-voltage.

4. Place the leads into the 2 Inverter DC High-Voltage Sockets making sure the probes touch the terminals.
5. Record the measurement after 2 minutes:
   - If the uF reading is 1104 uF–1656 uF at 68 °F (20 °C), go to **Step C.**
   - If the uF reading is outside 1104 uF–1656 uF at 68 °F (20 °C), replace the **Inverter**, then go to **Step V.**

Connection	Measurement
Inverter DC High-Voltage Sockets	

© 2015 Eaton. All rights reserved

https://truckmanualshub.com/

C

Purpose: *Verify continuity of circuits on the DC Cable between PEC and Inverter.*

1. Key off.
2. Disconnect the DC High-Voltage Connector from the PEC.
3. Measure the resistance of each circuit on the DC Cable from the PEC Connector to the Inverter Connector:
   - If the resistance for each circuit is 1 ohm or less, replace the **Inverter**, then go to **Step V.**
   - If resistance is out of range, replace the DC high-voltage cable, then go to **Step V.**

Connection	Measurement
Each circuit on the DC Cable from the PEC Connector to the Inverter Connector	

V

Purpose: *Verify repair.*

1. Key off.
2. Reconnect all connectors and the negative battery cable.
3. Key on.
4. Clear codes, see “Clear Inactive Faults” on page 13.
5. Drive the vehicle and attempt to reset the code.
6. Check for codes, see “View Active and Inactive Faults” on page 13.
   - If no codes, test is complete.
   - If Fault Code 112 appears, find error in testing, go to **Step A.**
   - If a code other than 112 appears, go to “Fault Code Isolation Procedure Index” on page 14.

© 2015 Eaton. All rights reserved

https://truckmanualshub.com/

Fault Code 113 - Inverter Current

J1939: SA 239 SPN 520222 FMI 6

Overview

The Inverter is connected to the Power Electronics Carrier (PEC) through a high-voltage DC cable which supplies 340 volts from the batteries. During operation, the Inverter monitors the output current to the Motor/Generator.

Detection

The following preconditions must be met before the system detect the fault:

- Inverter ignition voltage is greater than 7 volts and less than 16 volts.

Conditions to Set Fault Code Active

The following conditions must be met to set the fault code Active:

- FMI 6 is set when the Inverter IGBT current is greater than 800 amps for 0.05 MS or the motor cable is short.
- FMI 14 is set when motor torque commanded is zero and current is reported by the Inverter.

Fallback

When Fault Code 113 is set the following conditions occur:

- Red “Stop Hybrid” light illuminates.
- Fault is stored in HCM memory.
- Inverter shuts high-voltage system off.
- HCM continues to control the hybrid vehicle in a diesel-only mode.
- Transmission defaults start gear to 1st.

Conditions to Set Fault Code Inactive

Only Inactive faults can be cleared from the TECU or HCM history using ServiceRanger. The TECU automatically clears a fault from history after 200 hours. The HCM automatically clears a fault from history after the fault has been Inactive for 200 hours.

Possible Causes

This fault code can be caused by any of the following:

- FMI 6
  - Inverter
  - Motor/generator
  - AC high-voltage cables

Additional Tools

- Basic hand tools
- ASTM Class 0 electrical insulating rubber gloves with leather protectors J48603
- Lockout bracket J48506
- Lockout tags
- Eaton® Test Adapter Kit J43318
- Digital Volt/Ohm Meter J46708
- ServiceRanger

© 2015 Eaton. All rights reserved

https://truckmanualshub.com/

Component Identification

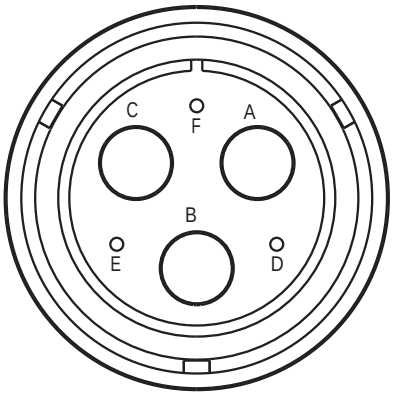

High-Voltage AC Harness Connector View
(Amphenol Connector)

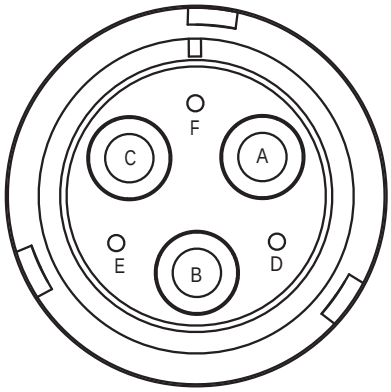

High-Voltage AC Motor/Gen Connector View
(Amphenol Connector)

NOTE: Refer to the Eaton Hybrid Component and Connector Location page for Connector Locations

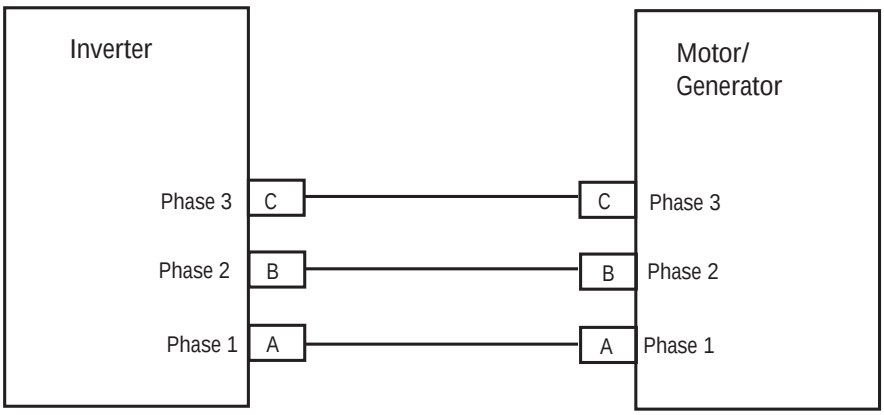

© 2015 Eaton. All rights reserved

Fault Code 113 - Inverter Current

A

Purpose: *Verify FMIs present.*

1. Review and follow the “Warnings & Cautions” on page 1.
2. Retrieve Active fault codes and FMIs with ServiceRanger using the 9-Way Diagnostic Connector.

Warning: See “High-Voltage Service Shutdown and Power-Up Procedure” on page 4. Follow the procedures to avoid shock, burn or death from improperly handled high-voltage.

3. Key off.
4. Which FMIs are present?
   - If Fault Code 113 FMI 6 is listed, go to **Step B.**
   - If Fault Code 113 FMI 14 is listed, go to **Step D.**

B

Purpose: *Verify integrity of AC cable.*

1. Visually inspect the AC cable for signs of abrasion, cuts or exposed wiring.
2. Remove the AC High-Voltage Cable at the Motor/Generator and Inverter.
3. Measure the resistance between the following AC High-Voltage Cable Pins:
   - A-B
   - B-C
   - C-A

   Note: An auto-ranging digital Volt/Ohm Meter must be used.

   - If resistance between each phase is 5M or greater, go to **Step C.**
   - If resistance is outside of range, replace the AC High-Voltage Harness, then go to **Step V.**

Connection	Measurement
Pin A to Pin B	
Pin B to Pin C	
Pin C to Pin A	

© 2015 Eaton. All rights reserved

https://truckmanualshub.com/

C

Purpose: *Verify continuity of AC Cable to ground.*

1. Measure the resistance of each AC High-Voltage Cable Pin to ground.
   - If resistance between each pin and ground is 5M or greater, replace the **Inverter**, then go to **Step V.**
   - If resistance is outside of range, replace the AC high-voltage cable, then go to **Step V.**

Connection	Measurement
Pin A to ground	
Pin B to ground	
Pin C to ground	

D

Purpose: *Verify continuity of Inverter to Motor/Generator connections of the AC Cable.*

1. Remove the AC High-Voltage Cable from the Inverter and Motor/Generator.
2. Measure the resistance of the AC High-Voltage Cable from the Inverter Connector to the Motor/Generator Connector on each of the following pins:
   - A-A
   - B-B
   - C-C

   Note: An auto ranging digital Volt/Ohm Meter must be used.

   - If resistance is less than 1 ohm on each circuit, replace the **Motor/Generator**, then go to **Step V.**
   - If resistance is outside of range, replace the AC High-Voltage Harness, then go to **Step V.**

Connection	Measurement
Pin A to Pin A	
Pin B to Pin B	
Pin C to Pin C	

© 2015 Eaton. All rights reserved

https://truckmanualshub.com/

V ***Purpose:*** *Verify repair.*

1. Key off.
2. Reconnect all connectors and the negative battery cable.
3. Key on.
4. Clear codes, see “Clear Inactive Faults” on page 13.
5. Drive the vehicle and attempt to reset the code.
6. Check for codes, see “View Active and Inactive Faults” on page 13.
   - If no codes, test is complete.
   - If Fault Code 113 appears, find error in testing, go to **Step A.**
   - If a code other than 113 appears, go to “Fault Code Isolation Procedure Index” on page 14.

© 2015 Eaton. All rights reserved

https://truckmanualshub.com/

Fault Code 114 - Inverter Power Supply

J1939: SA 239 SPN 520261 FMI 3, 4

Overview

The Inverter assembly uses a 12-volt supply provided from the HCM to power the internal control board. The HCM provides ignition power after it completes the power-up self check.

Detection

The following preconditions must be met before the system detects the fault:

- HCM ignition voltage is greater than 7 volts and less than 16 volts.

Conditions to Set Fault Code Active

The following conditions must be met to set the fault code Active:

- FMI 3 is set when the Inverter ignition voltage is greater than 16 volts for 0.5 seconds.
- FMI 4 is set when the Inverter ignition voltage is less than 7 volts for 0.1 seconds.

Fallback

When Fault Code 114 is set the following conditions occur:

- Amber “Check Hybrid” light illuminates.
- Fault is stored in HCM memory.
- Electric Motor/Generator Assist and Regeneration are disabled; however, high-voltage relays remain powered.
- HCM continues to control the hybrid vehicle in a diesel-only mode.
- Transmission defaults start gear to 1st.

Conditions to Set Fault Code Inactive

Only Inactive faults can be cleared from the TECU or HCM history using ServiceRanger. The TECU automatically clears faults from history after 200 hours. The HCM automatically clears a fault from history after the fault has been Inactive for 200 hours.

Possible Causes

This fault code can be caused by any of the following:

- FMI 3
  - Inverter
- FMI 4
  - HCM
  - Inverter
  - Power Supply Harness from HCM to Inverter

Additional Tools

- Basic hand tools
- ASTM Class 0 electrical insulating rubber gloves with leather protectors J48603
- Lockout bracket J48506
- Lockout tags
- Eaton® Test Adapter Kit J43318
- Digital Volt/Ohm Meter J46708
- ServiceRanger

© 2015 Eaton. All rights reserved

Component Identification

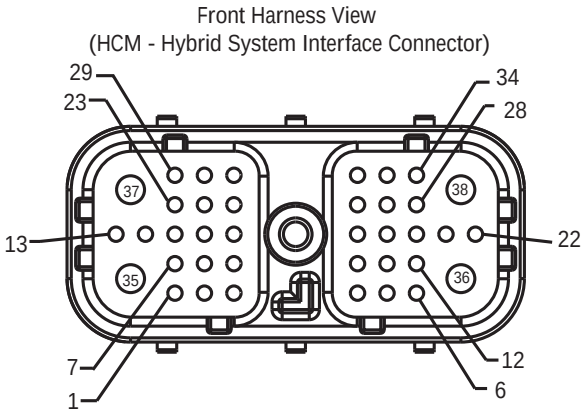

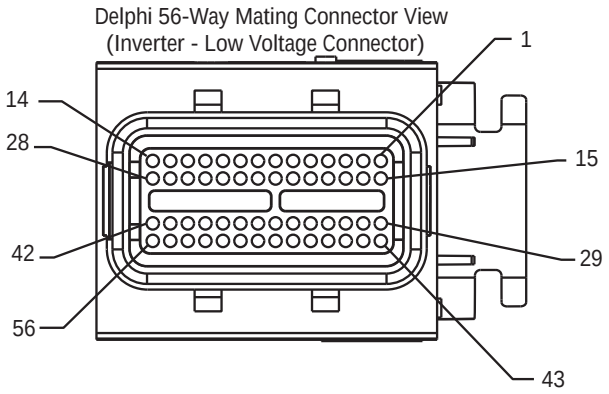

NOTE: Refer to the Eaton Hybrid Component and Connector Location page for Connector Locations

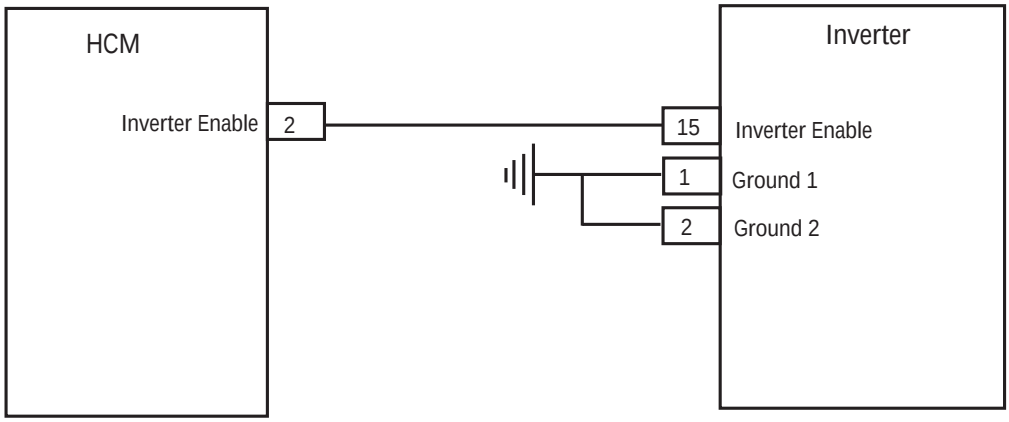

© 2015 Eaton. All rights reserved

https://truckmanualshub.com/

Fault Code 114 - Inverter Power Supply

A

Purpose: *Check for Active or Inactive fault code status and perform Electrical Pretest.*

1. Review and follow the "Warnings & Cautions" on page 1.
2. Retrieve Active fault codes and FMIs with ServiceRanger using the 9-Way Diagnostic Connector.
3. Perform the Electrical Pretest (see "Electrical Pretest" on page 25):
   - If no issues found during the Electrical Pretest, go to **Step B.**
   - If issue was repaired during the Electrical Pretest, test is complete. Go to **Step V.**

B

Purpose: *Verify FMI present.*

1. Retrieve Active fault codes and FMIs with ServiceRanger using the 9-Way Diagnostic Connector.
2. Key off.

Warning: See "High-Voltage Service Shutdown and Power-Up Procedure" on page 4. Follow the procedures to avoid shock, burn or death from improperly handled high-voltage.

3. Which FMIs are present?
   - If Fault Code 114 FMI 3 or 4 is listed, go to **Step C.**
   - If Fault Code 114 is not present, test is complete. Go to **Step V.**

C

Purpose: *Verify voltage present at Inverter.*

1. Key off.
2. Disconnect the Inverter 56-Way Connector.
3. Connect a multimeter to the Inverter 56-Way Connector Pin 15 and Pin 1.
4. Place multi meter where it can be viewed while standing next to the truck.
5. Key on.
6. Observe multimeter voltage reading:

Note: Gently flex the Inverter 56-Way Connector Harness near the connector while monitoring the voltage reading.

- If voltage is 11–13 volts, replace the **Inverter**, then go to **Step V.**
- If voltage is greater than 16 volts, repair the vehicle 12-volt charging system. Refer to the OEM for repair procedure.
- If voltage is outside of range, go to **Step D.**

Connection	Measurement
Pin 15 to Pin 1	

© 2015 Eaton. All rights reserved

D

Purpose: *Verify continuity of circuits between HCM Harness and Inverter.*

1. Key off.
2. Disconnect the negative battery cable.
3. Disconnect the HCM System Harness 38-way connector.
4. Measure resistance from the following:
   - Inverter 56-Way Connector Pin 15 to HCM 38-Way Connector Pin 2.
   - Inverter 56-Way Connector Pin 1 to ground.
     - If resistance from Pin 15 to Pin 2 is 0 to 0.3 ohms and resistance from Pin 1 to ground is 0 to 0.3 ohms, replace the **Hybrid Control Module (HCM)**. Go to **Step V.**
     - If resistance is outside of range, repair the open in the Power or Ground Harness, then go to **Step V.**

Connection	Measurement
56-Way Pin 15 to 38-Way Pin 2	
56-Way Pin 1 to ground	

V

Purpose: *Verify repair.*

1. Key off.
2. Reconnect all connectors and the negative battery cable.
3. Key on.
4. Clear codes, see “Clear Inactive Faults” on page 13.
5. Drive the vehicle and attempt to reset the code.
6. Check for codes, see “View Active and Inactive Faults” on page 13.
   - If no codes, test is complete.
   - If Fault Code 114 appears, find error in testing, go to **Step A.**
   - If a code other than 114 appears, go to “Fault Code Isolation Procedure Index” on page 14.

© 2015 Eaton. All rights reserved

https://truckmanualshub.com/

Fault Code 115 - Inverter Temperature

J1939: SA 239 SPN 520223 FMI 0

Overview

The Inverter Temperature Sensor is a thermistor located inside the Inverter that changes in value based on the temperature. The Inverter supplies a 5-volt reference voltage to the sensor and measures the volt drop in the circuit. When the Inverter temperature is warm the sensor resistance is low and the Inverter detects a low-voltage (0.1 volts equals 260 °F [127 °C]). When the Motor/Generator is cold the sensor resistance is high and the Inverter detects a high-voltage (4.0 volts equal -68 °F [-56 °C]).

Detection

The following preconditions must be met before the system will detect the fault:

- The Inverter ignition voltage is greater than 7 volts and less than 16 volts.

Conditions to Set Fault Code Active

The following conditions must be met to set the fault code Active:

- FMI 0 is set with the Inverter temperature is greater than 206 °F (97 °C) for 100 MS or sensor broken.

Fallback

When Fault Code 115 is set the following conditions occur:

- Amber “Check Hybrid” light illuminates.
- Fault is stored in HCM memory.
- Electric Motor/Generator Assist and Regeneration are disabled; however, high-voltage relays remain powered.
- HCM continues to control the hybrid vehicle in a diesel-only mode.
- Transmission defaults start gear to 1st.

Conditions to Set Fault Code Inactive

Only Inactive faults can be cleared from the TECU or HCM history using ServiceRanger. The TECU automatically clears faults from history after 200 hours. The HCM automatically clears a fault from history after that fault has been Inactive for 200 hours.

Possible Causes

This fault code can be caused by any of the following:

- FMI 0
  - Inverter
  - Liquid cooling system (low coolant, no coolant flow, Coolant Pump, Radiator, Radiator Fan, Reservoir)

Additional Tools

- Basic hand tools
- ASTM Class 0 electrical insulating rubber gloves with leather protectors J48603
- Lockout bracket J48506
- Lockout tags
- Eaton® Test Adapter Kit J43318
- Digital Volt/Ohm Meter J46708
- ServiceRanger

© 2015 Eaton. All rights reserved

https://truckmanualshub.com/

Component Identification

Note: No schematic for this code.

Note: For component location refer to OEM service literature.

© 2015 Eaton. All rights reserved

https://truckmanualshub.com/

Fault Code 115 - Inverter Temperature

A

Purpose: *Verify Inverter temperature.*

1. Review and follow the "Warnings & Cautions" on page 1.
2. Retrieve Active fault codes and FMIs with ServiceRanger using the 9-Way Diagnostic Connector.

Warning: See "High-Voltage Service Shutdown and Power-Up Procedure" on page 4. Follow the procedures to avoid shock, burn or death from improperly handled high-voltage.

3. Key on.
4. Select the Data Monitor option and view PID 120 "Inverter Temperature" in the "Power Electronics" list.
5. Observe PID 120 again after 20 minutes.
   - If PID 120 "Inverter Temperature" lowered from the first to second reading, go to **Step B.**
   - If PID 120 "Inverter Temperature" remained constant, replace the **Inverter**, then go to **Step V.**

Parameter	Reading
PID 120 "Inverter Temperature" initial reading	
PID 120 "Inverter Temperature" after 20 minutes	

B

Purpose: *Verify Hybrid System coolant level.*

1. Key off.
2. Observe the coolant level after the system has cooled to see if it is filled to the proper level:
   - If the coolant is within the recommend limits, go to **Step C.**
   - If the coolant is below the recommended limits, refer to OEM for coolant type and fill procedure, then go to **Step V.**

C

Purpose: *Verify integrity of Hybrid Cooling System components.*

1. Visually inspect the Hybrid Liquid Cooling System Radiator for debris or obstruction to airflow and inspect the coolant lines for sharp bends:
   - If the radiator is free of debris and the coolant lines are not kinked, go to **Step D.**
   - If the radiator is full of debris, the airflow is obstructed or the coolant lines are kinked. Repair the concern, then go to **Step V.**

© 2015 Eaton. All rights reserved

D

Purpose: *Verify hybrid system Coolant Pump operation.*

1. Key on.
2. Connect ServiceRanger to the 9-Way Connector in the cab.
3. Select the Advanced Product Functions option and select the “Cooling Pump” option.
4. Enable the Cooling Pump option:
   - If the Coolant Pump turns on, go to **Step E.**
   - If the Coolant Pump fails to turn on, go to **Step F.**

E

Purpose: *Verify Hybrid System Heat Exchanger Fan operation.*

1. Select the Advanced Product Functions option and select the “Heat Exchanger Fan” option.
2. Enable the Heat Exchanger Fan option.
   - If the Heat Exchanger Fan turns on, the system needs to be purged of air to allow the coolant to flow. Bleed the air by using a coolant system pressurizing tool or a vacuum tool, then go to **Step V.**
   - If the Heat Exchanger Fan fails to turns on, go to **Step G.**

F

Purpose: *Verify voltage at Hybrid System Coolant Pump.*

1. Key on.
2. Disconnect the Coolant Pump 2-Way Connector.
3. Select the Advanced Product Functions option and select the “Cooling Pump” option.
4. Enable the Cooling Pump option.
5. Measure the voltage at the 2-Way Connector from Pin A to Pin B.
   - If voltage between Pins A and B is ±0.2 volts of battery voltage, refer to OEM for Coolant Pump concern.
   - If voltage between Pin A and Pin B is outside of range, refer to OEM for Cooing Pump Power Harness repair procedure.

Connection	Measurement
Pin A to Pin B	

© 2015 Eaton. All rights reserved

https://truckmanualshub.com/

G ***Purpose:*** *Verify voltage at Hybrid System Heat Exchanger Fan.*

1. Key on.
2. Disconnect the Heat Exchanger Fan 2-Way Connector.
3. Select the Advanced Product Functions option and select the “Heat Exchanger Fan” option.
4. Enable the Heat Exchanger Fan option.
5. Measure the voltage at the 2-Way Connector from Pin A to Pin B:
   - If voltage between Pins A and B is ±0.2 volts of battery voltage, refer to OEM for Heat Exchanger Fan concern.
   - If voltage between Pin A and Pin B is outside of range, refer to OEM for Heat Exchanger Fan Power Harness repair procedure.

Connection	Measurement
Pin A to Pin B	

V ***Purpose:*** *Verify repair.*

1. Key off.
2. Reconnect all connectors and negative battery cable.
3. Key on.
4. Clear codes, see “Clear Inactive Faults” on page 13.
5. Drive the vehicle and attempt to reset the code.
6. Check for codes, see “View Active and Inactive Faults” on page 13.
   - If no codes, test is complete.
   - If Fault Code 115 appears, find error in testing, go to **Step A.**
   - If a code other than 115 appears, go to “Fault Code Isolation Procedure Index” on page 14.

© 2015 Eaton. All rights reserved

Fault Code 116 - High Voltage Relays

J1939: SA 239 SPN 520224 FMI 10, 14

Overview

The High-Voltage Relays are located inside the Power Electronics Carrier (PEC) in the Relay Box unit. There is 1 precharge relay on the positive side, an additional relay on the positive, and 1 on the negative for a total of 3. These relays are normally open when the system is off. The relays are controlled through the Inverter.

Detection

The following preconditions must be met before the system detects the fault:

- Inverter ignition voltage is greater than 7 volts and less than 16 volts.

Conditions to Set Fault Code Active

The following conditions must be met to set the fault code Active:

- FMI 10 is set when the Inverter detects the input voltage measured at the capacitor is less than 210 volts within 3 seconds after the sub-relay closed in the Relay Box.
- FMI 14 is set when only the negative relay in the Relay Box is on and capacitor voltage decreases less than 10 volts/5 seconds when initial capacitor voltage was greater than 200 volts and motor speed less than 500 min-1, or there is a detect error in the initial check.

Fallback

When Fault Code 116 is set the following conditions occur:

- Amber “Check Hybrid” light blinks for FMI 10 and remains solid for FMI 14.
- Fault is stored in HCM memory.
- Inverter shuts high-voltage system off.
- HCM continues to control the hybrid vehicle in a diesel-only mode.
- Transmission defaults start gear to 1st.

Conditions to Set Fault Code Inactive

Only Inactive faults can be cleared from the TECU or HCM history using ServiceRanger. The TECU automatically clears faults from history after 200 hours. The HCM automatically clears a fault from history after that fault has been Inactive for 200 hours.

Possible Causes

This fault code can be caused by any of the following:

- FMI 10
  - PEC
  - APG
  - Inverter
  - DC high-voltage cable
  - DC cable interlock loops
  - Inertia Switch
  - Service Switch
- FMI 14
  - Inverter
  - PEC

Additional Tools

- Basic hand tools
- ASTM Class 0 electrical insulating rubber gloves with leather protectors J48603
- Lockout bracket J48506
- Lockout tags
- Eaton® Test Adapter Kit J43318
- Digital Volt/Ohm Meter J46708
- ServiceRanger

© 2015 Eaton. All rights reserved

https://truckmanualshub.com/

Component Identification

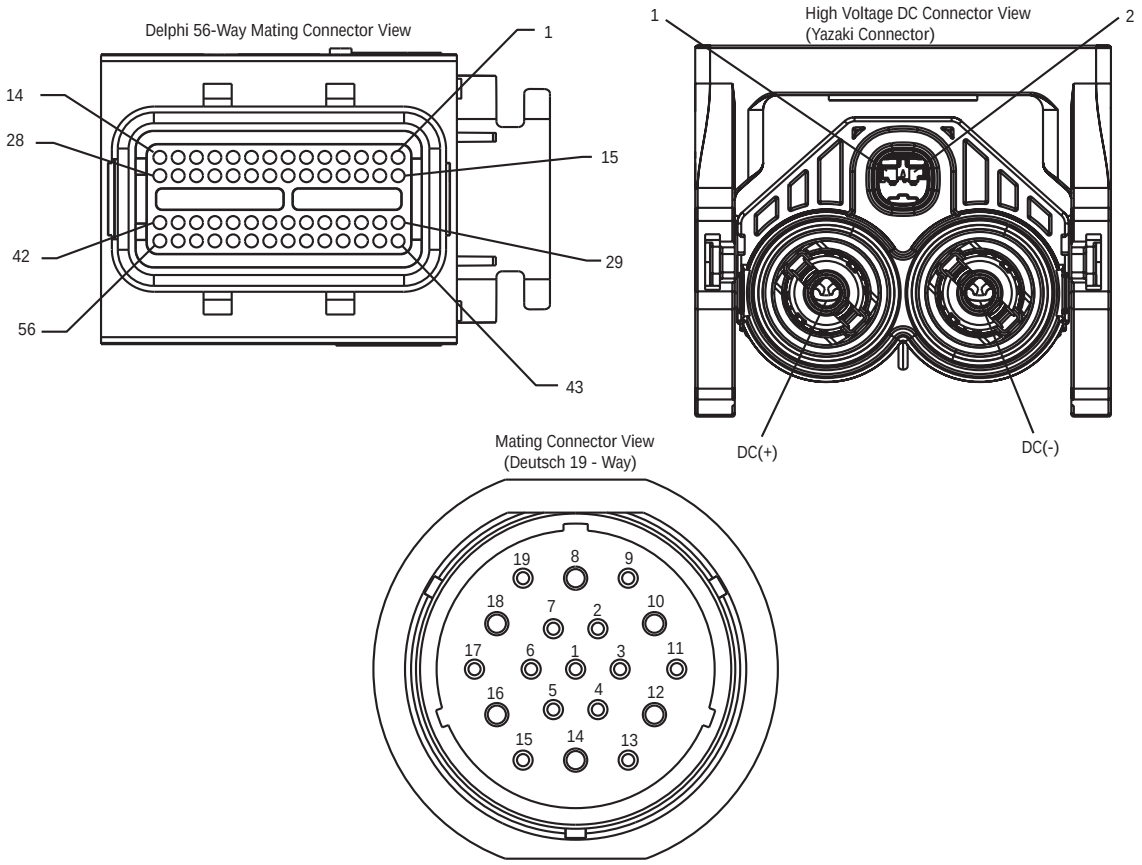

NOTE: Refer to the Eaton Hybrid Component and Connector Location page for Connector Locations

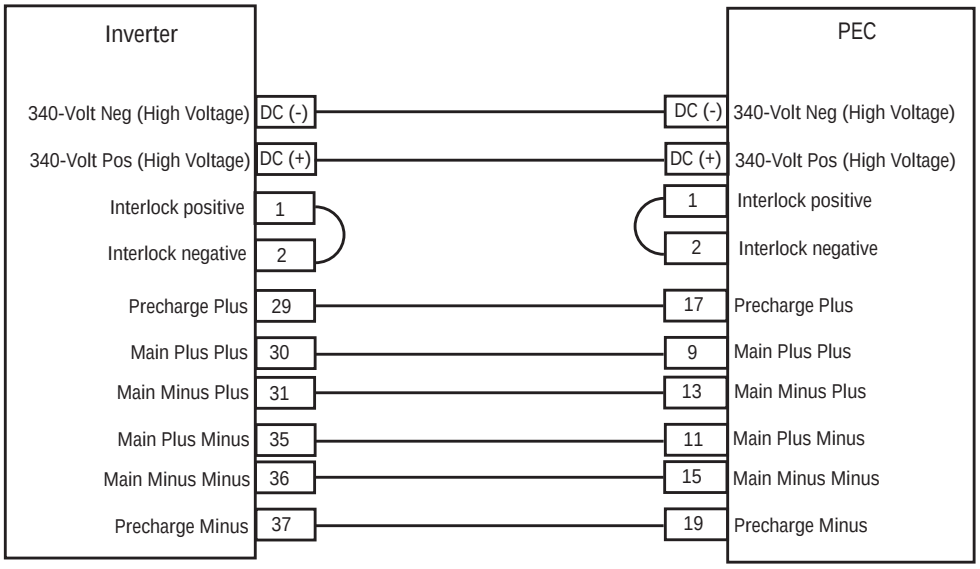

Check to see if the red Service Switch on the front of the PEC is pulled out. If the switch is pushed in pull the switch out and turn the ignition key off. After 2 minutes turn the ignition key on.

© 2015 Eaton. All rights reserved

Fault Code 116 - High Voltage Relays

A

Purpose: *Verify FMIs present.*

1. Review and follow the “Warnings & Cautions” on page 1.
2. Retrieve Active fault codes and FMIs with ServiceRanger using the 9-Way Diagnostic Connector.

Warning: See “High-Voltage Service Shutdown and Power-Up Procedure” on page 4. Follow the procedures to avoid shock, burn or death from improperly handled high-voltage.

3. Which FMIs are present?
   - If Fault Code 116 FMI 14 is listed, go to **Step I.**
   - If Fault Code 116 FMI 10 is listed, go to **Step B.**
   - If no Fault Codes are listed, The Service Switch was pushed in. Go to **Step V.**

B

Purpose: *Verify Data Monitor parameters.*

1. Key on.
2. Connect ServiceRanger to the 9-Way Diagnostic Connector in the cab.
3. Select the “Data Monitor” option.
4. View the Battery Pack Voltage (BCU1) PID 118 in the high- voltage Battery list:
   - If the Battery Pack Voltage (BCU1) PID 118 is greater than 200 volts, go to **Step C.**
   - If the Battery Pack Voltage (BCU1) PID 118 is less than 200 volts, replace the **Power Electronics Carrier (PEC)**, then go to **Step V.**

C

Purpose: *Verify continuity of Inverter connector circuits.*

1. Key off.
2. If the vehicle is not equipped with a DC/DC Converter or APG, skip this step.
3. Using ASTM Class 0 electrical insulating rubber gloves with leather protectors, disconnect the DC cable for the DC/DC Converter and APG at the PEC.
4. With the key off, temporarily remove the Lockout Bracket and pull the Service Switch out.
5. Key on.
6. Is Fault Code 116 FMI 10 still Active in ServiceRanger?
   - If Fault Code 116 FMI 10 is Active with the DC/DC Converter and APG disconnected, go to **Step D.**
   - If Fault Code 116 FMI 10 is no longer Active with the DC/DC Converter and APG disconnected, key off and reinstall the Lockout Bracket on the PEC. Replace the **Power Electronics Carrier (PEC)**, then go to **Step V.**

© 2015 Eaton. All rights reserved

https://truckmanualshub.com/

D

Purpose: *Verify continuity of PEC connector circuits to ground.*

1. Key off.
2. Disconnect the PEC 19-Way Connector.
3. Temporarily remove the Lockout Bracket and pull the Service Switch out.

   Note: Ensure the Key Switch is off.
4. Measure resistance at the PEC 19-Way Connector Terminal at the following pins:
   - Pin 17 to Pin 19
   - Pin 9 to Pin 11
   - Pin 13 to Pin 15
   - If the resistance between Pins 17 and Pin 19 is 112–122 ohms and the resistance from Pin 9 to Pin 11 and Pin 13 to Pin 15 are each 33–37 ohms, go to **Step E.**
   - If resistance is out of range, go to **Step F.**

Connection	Measurement
Pin 17 to Pin 19	
Pin 9 to Pin 11	
Pin 13 to Pin 15	

E

Purpose: *Verify continuity of Inverter connector circuits to ground.*

1. Key off.
2. Reconnect the PEC 19-Way Connector.
3. Disconnect the Inverter 56-Way Connector.
4. Inspect the connector pins for damaged, corroded and/or loose wires.
5. Measure resistance between the Inverter 56-Way Connector at the following pins:
   - Pin 29 to Pin 37
   - Pin 30 to Pin 35
   - Pin 31 to Pin 36

   Note: Gently flex the Inverter 56-Way Connector Harness near the Connector while monitoring the resistance values.
   - If the resistance between Pin 29 and Pin 37 is 112–122 ohms and the resistance from Pin 30 to Pin 35 and Pin 31 to Pin 36 are each 33–37 ohms, push the Service Switch on the PEC and reinstall the Lockout Bracket. Go to **Step H.**
   - If resistance is out of range, repair the Hybrid Harness between the PEC and Inverter, then go to **Step V.**

Connection	Measurement
Pin 29 to Pin 37	
Pin 30 to Pin 35	
Pin 31 to Pin 36	

© 2015 Eaton. All rights reserved

F

Purpose: *Verify continuity of PEC connector circuits.*

1. Key off.
2. Remove the Air Filter Cover and Air Filter from the PEC. Refer to TRSM1000 for procedures.*
3. An Inertia Switch is located at the front of the PEC inside the box and viewable when the Air Filter is removed.
4. Using ASTM Class 0 electrical insulating rubber gloves with leather protectors, press the button on the top of the Inertia Switch until heard or felt a click. This switch must be depressed a set distance to reset the switch.**
5. Measure resistance at the PEC 19-Way Connector Terminal at the following pins:
   - Pin 17 to Pin 19
   - Pin 9 to Pin 11
   - Pin 13 to Pin 15
   - If the resistance between Pin 17 and Pin 19 is 112–122 ohms and the resistance from Pin 9 to Pin 11 and Pin 13 to Pin 15 are each 33–37 ohms, the Inertia Switch was tripped. Test is complete. Go to **Step V.**
   - If resistance is out of range, push in the Service Switch on the PEC and reinstall the Lockout Bracket, then go to **Step G.**

- * See **Air Filter**
- ** See **Resetting PEC Inertia Switch**.

Connection	Measurement
Pin 17 to Pin 19	
Pin 9 to Pin 11	
Pin 13 to Pin 15	

G

Purpose: *Verify continuity of Inverter connector circuits.*

1. Key off.
2. Disconnect the DC High-Voltage Cable at the PEC Bulkhead and at the Inverter Bulkhead.
3. Measure resistance between the Low-Voltage Interlock Pins on the PEC side of the DC High-Voltage Cable:

   Note: The Interlock Pins are the two small spade terminals located in the same opening.

   - If the resistance is 0–0.3 ohms between the Interlock Loop Pins, replace the **Power Electronics Carrier (PEC)**, then go to **Step V.**
   - If resistance is out of range, replace the DC high-voltage cable, then go to **Step V.**

Connection	Measurement
Low-Voltage Interlock Pins on PEC side of cable	

© 2015 Eaton. All rights reserved

https://truckmanualshub.com/

H

Purpose: *Verify continuity of DC Cable from PEC to Inverter Connector circuits.*

1. Key off.
2. Disconnect the DC High-Voltage Cable at the PEC Bulkhead and the Inverter Bulkhead.
3. Measure the resistance of each high-voltage circuit on the cable:
   - If the resistance of each high-voltage circuit in the cable is 1 ohm or less, replace the **Inverter**, then go to **Step V.**
   - If resistance is out of range, replace the DC High-Voltage Cable, then go to **Step V.**

Connection	Measurement
Each high-voltage circuit on the DC Cable from PEC to Inverter	

I

Purpose: *Verify Data Monitor parameters.*

1. Connect ServiceRanger to the 9-Way Diagnostic Connector in the cab.
2. Select the “Data Monitor” option.
3. View the following parameters in the High-Voltage Battery list.
   - Battery Pack Voltage (BCU1) PID 118
   - Battery Voltage PID 116
   - If the voltage readings on PID 116 and PID 118 are within 10 volts of each other, replace the **Power Electronics Carrier (PEC)**, then go to **Step V.**
   - If the voltage readings on PID 116 and PID 118 are greater than 10 volts of each other, replace the **Inverter**, then go to **Step V.**

Parameter	Reading
PID 118 “Battery Pack Voltage”	
PID 116 “Battery Voltage”	

© 2015 Eaton. All rights reserved

https://truckmanualshub.com/

V

Purpose: *Verify repair.*

1. Key off.
2. Reconnect all connectors and the negative battery cable.
3. Key on.
4. Clear codes, see “Clear Inactive Faults” on page 13.
5. Drive the vehicle and attempt to reset the code.
6. Check for codes, see “View Active and Inactive Faults” on page 13.
   - If no codes, test is complete.
   - If Fault Code 116 appears, contact Eaton at 1-800-826-HELP (4357). Repeat this Step (Step V).
   - If a code other than 116 appears, go to “Fault Code Isolation Procedure Index” on page 14.

© 2015 Eaton. All rights reserved

https://truckmanualshub.com/

Fault Code 117 - BCU Relay Cut Request

J1939: SA 239 SPN 520251 FMI 3, 14

Overview

The high-voltage relays are located inside the Power Electronics Carrier (PEC) in the Relay Box unit. These relays are normally open when the system is off. The relays are controlled through the Inverter and monitored through a 5-volt input from the Inverter. If the relays are open the voltage is around 5 volts and when the relays are closed the voltage is around 1 volt.

Detection

The following preconditions must be met before the system detect the fault:

- Inverter ignition voltage is greater than 7 volts and less than 16 volts.

Conditions to Set Fault Code Active

The following conditions must be met to set the fault code Active:

- FMI 3 is set when Battery Control Unit (BCU) Relay Ready CAN Flag is Active and the Relay Off signal is set high for 0.02 seconds.
- FMI 14 is set when the Relay Cut request of the BCU is set over the CAN data link.

Fallback

When Fault Code 117 is set the following conditions occur:

- Amber “Check Hybrid” light illuminates.
- Fault is stored in HCM memory.
- Inverter shuts high-voltage system off.
- HCM continues to control the hybrid vehicle in a diesel-only mode.
- Transmission defaults start gear to 1st.

Conditions to Set Fault Code Inactive

Only Inactive faults can be cleared from the TECU or HCM history using ServiceRanger. The TECU automatically clears faults from history after 200 hours. The HCM automatically clears a fault from history after that fault has been Inactive for 200 hours.

Possible Causes

This fault code can be caused by any of the following:

- FMI 3
  - PEC
  - Inverter
  - Low-voltage wire harness between PEC and Inverter
- FMI 14
  - PEC

Additional Tools

- Basic hand tools
- ASTM Class 0 electrical insulating rubber gloves with leather protectors J48603
- Lockout bracket J48506
- Lockout tags
- Eaton® Test Adapter Kit J43318
- Digital Volt/Ohm Meter J46708
- ServiceRanger

© 2015 Eaton. All rights reserved

Component Identification

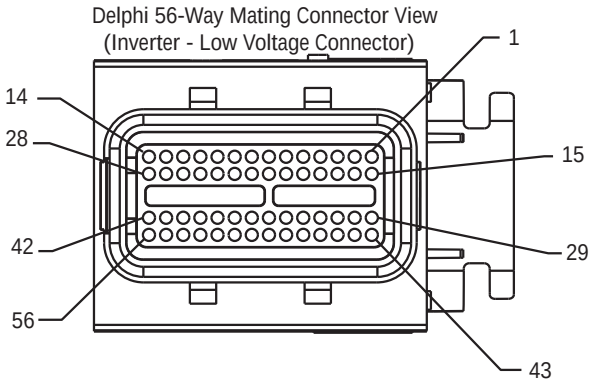

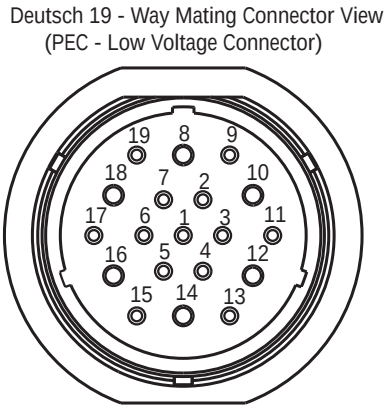

NOTE: Refer to the Eaton Hybrid Component and Connector Location page for Connector Locations

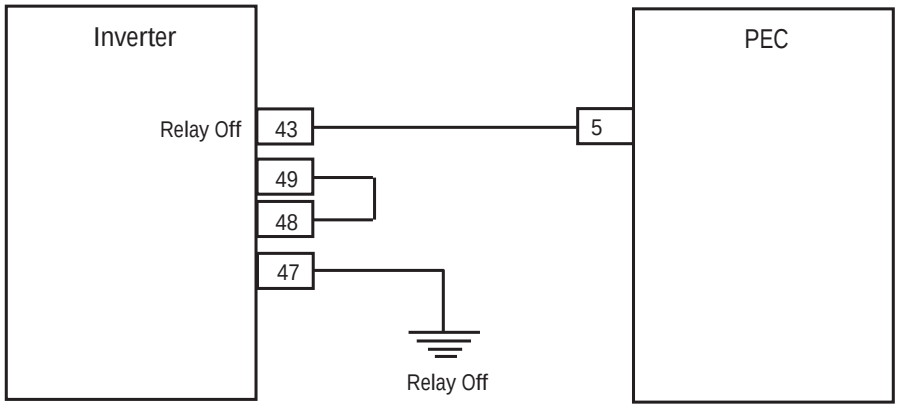

© 2015 Eaton. All rights reserved

https://truckmanualshub.com/

Fault Code 117 - BCU Relay Cut Request

A

Purpose: *Verify FMIs present.*

1. Review and follow the "Warnings & Cautions" on page 1.
2. Retrieve Active fault codes and FMIs with ServiceRanger using the 9-Way Diagnostic Connector.
3. Key off.

Warning: See "High-Voltage Service Shutdown and Power-Up Procedure" on page 4. Follow the procedures to avoid shock, burn or death from improperly handled high-voltage.

4. Which FMIs are present?
   - If Fault Code 117 FMI 14 is listed, test is complete. FMI 14 requires no action or replacement.
   - If Fault Code 117 FMI 3 is listed, go to **Step B.**

B

Purpose: *Verify fault codes present.*

1. View Active faults to see if any of the following are listed: 76, 77, 78, 79, 82, 86, 101, 102, 103, 104, 105, 106, 107, 108, 109:
   - If any of the faults are listed with Fault Code 117 FMI 3, go to test for faults that are Active.
   - If none of the faults are listed with Fault Code 117 FMI 3, go to **Step C.**

C

Purpose: *Verify continuity between PEC Connector and Inverter Connector.*

1. Key off.
2. Disconnect the PEC 19-Way Connector.
3. Disconnect the Inverter 56-Way Connector.
4. Measure the resistance from the PEC 19-Way Connector Pin 5 to the Inverter 56-Way Connector Pin 43.

   Note: Gently flex the Inverter 56-Way Connector Harness near the Connector while monitoring the resistance readings.

   - If the resistance between Pin 5 and Pin 43 is 0–0.3 ohms, go to **Step D.**
   - If resistance is outside of range, replace the HCM Low-Voltage Harness between the PEC and Inverter, then go to **Step V.**

Connection	Measurement
19-Way Pin 5 to 56-Way Pin 43	

© 2015 Eaton. All rights reserved

D

Purpose: *Verify continuity of Vehicle Harness and ground.*

1. Key off.
2. Measure the resistance between the Inverter 56-Pin Connector Pin 48 to Pin 49, and Pin 47 to ground.
   - If resistance between Pin 48 and Pin 49 is 0–0.3 ohms and resistance from Pin 47 to ground is 0–0.5 ohms, go to **Step E.**
   - If resistance is outside of range, replace the HCM Low-Voltage Harness between the PEC and Inverter, then go to **Step V.**

Connection	Measurement
Pin 48 to Pin 49	
Pin 47 to ground	

E

Purpose: *Measure the resistance of the DC Interlock Low-Voltage Loop.*

1. Key off.

Warning: See “High-Voltage Service Shutdown and Power-Up Procedure” on page 4. Follow the procedures to avoid shock, burn or death from improperly handled high-voltage.

2. Disconnect the DC High-Voltage Cable at the Inverter and the PEC.
3. Measure the resistance between the Low-Voltage Interlock Pins in the DC Connector on the Inverter end.
   - If resistance between the low-voltage Interlock Pins is 0–0.3 ohms, replace the **Inverter**, then go to **Step V.**
   - If resistance is outside of range, replace the DC Interlock Low-Voltage Loop, then go to **Step V.**

Connection	Measurement
Low-voltage Interlock circuit	

© 2015 Eaton. All rights reserved

https://truckmanualshub.com/

V ***Purpose:*** *Verify repair.*

1. Key off.
2. Reconnect all connectors and the negative battery cable.
3. Key on.
4. Clear codes, see “Clear Inactive Faults” on page 13.
5. Drive the vehicle and attempt to reset the code.
6. Check for codes, see “View Active and Inactive Faults” on page 13.
   - If no codes, test is complete.
   - If Fault Code 117 appears, find error in testing, go to **Step A.**
   - If a code other than 117 appears, go to “Fault Code Isolation Procedure Index” on page 14.

© 2015 Eaton. All rights reserved

Fault Code 118 - Auxiliary High-Voltage Relay Control Circuit

J1939: SA 239 SPN 520252 FMI 3, 4, 5

Overview

The Auxiliary High-Voltage Relays located in the Power Electronics Carrier (PEC) are controlled by the Hybrid Control Module (HCM). At key on, high-voltage power is supplied from the relay box to the Auxiliary High-Voltage Relays. When the ePTO option is selected on the Push Button Shift Control, the HCM energizes the control circuits for the main positive and main negative relays. The power then flows through the Auxiliary High-Voltage Relays to the DC/DC Converter.

Detection

The following preconditions must be met before the system detects the fault:

- HCM ignition voltage is greater than 7 volts and less than 16 volts.

Conditions to Set Fault Code Active

The following conditions must be met to set the fault code Active:

- FMI 3 is set when the HCM detects a short to battery in the coil circuit of the Auxiliary High-Voltage Relay.
- FMI 4 is set when the HCM detects a short to ground in the coil circuit of the Auxiliary High-Voltage Relay.
- FMI 5 is set when the HCM detects an open in the coil circuit of the Auxiliary High-Voltage Relay.

Note: When troubleshooting an Inactive code refer to the “Product Diagnostic Mode (PDM)” on page 19.

Fallback

When Fault Code 118 is set the following conditions occur:

- Amber “Check Hybrid” light illuminates.
- Fault is stored in HCM memory.
- The DC/DC Converter does not operate because the HCM de-energizes the auxiliary high-voltage relay circuit.

Conditions to Set Fault Code Inactive

Only Inactive faults can be cleared from the TECU or HCM history using ServiceRanger. The TECU automatically clears faults from history after 200 hours. The HCM automatically clears a fault from history after that fault has been Inactive for 200 hours.

Possible Causes

This fault code can be caused by any of the following:

- FMI 3, 4, 5
  - PEC
  - Hybrid System Harness
  - DC Cable High-Voltage Loop
  - DC/DC Converter

Additional Tools

- Basic hand tools
- ASTM Class 0 electrical insulating rubber gloves with leather protectors J48603
- Lockout bracket J48506
- Lockout tags
- Eaton® Test Adapter Kit J43318
- Digital Volt/Ohm Meter J46708
- ServiceRanger

© 2015 Eaton. All rights reserved

https://truckmanualshub.com/

Component Identification

Note: No schematic for this code.

© 2015 Eaton. All rights reserved

Fault Code 118 - Auxiliary High-Voltage Relay Control Circuit

A

Purpose: *Check for Active or Inactive fault code status and FMIs present.*

1. Review and follow the “Warnings & Cautions” on page 1.
2. Retrieve Active fault codes and FMIs with ServiceRanger using the 9-Way Diagnostic Connector.
3. Key off.

Warning: See “High-Voltage Service Shutdown and Power-Up Procedure” on page 4. Follow the procedures to avoid shock, burn or death from improperly handled high-voltage.

4. Which FMIs are present?
   - If FMI 3 is listed, go to **Step B.**
   - If FMI 4 or 5 are listed, go to **Step C.**

B

Purpose: *Measure voltage of HCM Harness to ground.*

1. Key off.
2. Disconnect the negative battery cable.
3. Disconnect the HCM Harness 38-Way Connector.
4. Key on.
5. Measure voltage from Pin 33 to ground.
   - If the voltage from Pin 33 to ground is 0 volts, replace the **Hybrid Control Module (HCM)** (only if Fault Code is Active), then go to **Step V.**
   - If the voltage from Pin 33 to ground is 11–13 volts, repair the Hybrid System Harness for a short to battery, then go to **Step V.**

Connection	Measurement
Pin 33 to ground	

© 2015 Eaton. All rights reserved

https://truckmanualshub.com/

C

Purpose: *Measure resistance of the HCM Harness circuit to ground.*

1. Key off.
2. Measure the resistance from the HCM System Harness 38-Way Connector on the following pins:
   - Pin 33 to Pin 5
   - Pin 33 to ground
   - If the resistance between Pin 33 and Pin 5 is 12–22 ohms and the resistance between Pin 33 and ground is 10K ohms or greater, replace the **Hybrid Control Module (HCM)** (only if Fault Code is Active). Go to **Step V.**
   - If resistance is outside of range, go to **Step D.**

Connection	Measurement
Pin 33 to Pin 5	
Pin 33 to ground	

D

Purpose: *Measure resistance of Bulkhead Terminal to ground.*

1. Key off.
2. Disconnect the PEC 19-Way Connector.
3. Measure the resistance between the PEC 19-Way Bulkhead Terminal at the following pins:
   - Pin 8 to Pin 10
   - Pin 8 to ground
   - If resistance between Pin 8 and Pin 10 is 12–22 ohms and resistance from Pin 8 to ground is 10K ohms or greater, replace the Hybrid Harness between the HCM and the PEC for a short to ground or open.
     Go to **Step V.**
   - If resistance is outside of range, go to **Step E.**

Connection	Measurement
Pin 8 to Pin 10	
Pin 8 to ground	

© 2015 Eaton. All rights reserved

E ***Purpose:*** *Measure resistance from DC/DC Converter to ground.*

1. Key off.
2. Disconnect the DC/DC Converter High-Voltage Connector at the PEC.
3. Measure resistance between the DC/DC Converter Cable 2-Way Connector at the following pins:
   - Pin 1 to Pin 2
   - Pin 1 to ground
   - If resistance between Pin 1 and Pin 2 is 0–0.3 ohms and resistance from Pin 1 to ground is 10K ohms or greater, replace the **Power Electronics Carrier (PEC)**, then go to **Step V.**
   - If resistance is outside of range, go to **Step F.**

Connection	Measurement
Pin 1 to Pin 2	
Pin 1 to ground	

F ***Purpose:*** *Measure resistance from DC/DC Converter to ground.*

1. Key off.
2. Disconnect the DC/DC Converter High-Voltage Connector at the DC/DC Converter.
3. Measure the resistance between the DC/DC Converter Terminal at the following pins:
   - Pin 1 to Pin 2
   - Pin 1 to ground
   - If resistance between Pin 1 and Pin 2 is 0–0.3 ohms and resistance from Pin 1 to ground is 10K ohms or greater, replace the DC/DC Converter High-Voltage Cable, then go to **Step V.**
   - If resistance is outside of range, replace the **DC/DC Converter**, then go to **Step V.**

Connection	Measurement
Pin 1 to Pin 2	
Pin 1 to ground	

© 2015 Eaton. All rights reserved

https://truckmanualshub.com/

V ***Purpose:*** *Verify repair.*

1. Key off.
2. Reconnect all connectors and the negative battery cable.
3. Key on.
4. Clear codes, see “Clear Inactive Faults” on page 13.
5. Drive the vehicle and attempt to reset the code.
6. Check for codes, see “View Active and Inactive Faults” on page 13.
   - If no codes, test is complete.
   - If Fault Code 118 appears, find error in testing, go to **Step A.**
   - If a code other than 118 appears, go to “Fault Code Isolation Procedure Index” on page 14.

© 2015 Eaton. All rights reserved

Fault Code 120 - APG Unit 1 AC Voltage

J1939: SA 239 SPN 520275 FMI 3, 4

Overview

The Auxiliary Power Generator (APG) is a 5kW/5kVA DC/AC Inverter that is connected to the high voltage DC bus of the Eaton hybrid electric vehicle system. It generates 60 Hz single-phase 120 volts AC power for utility applications.

Detection

The following preconditions must be met before the system detects the fault:

- APG Inverter needs to be operating.

Conditions to Set Fault Code Active

The following conditions must be met to set the fault code Active:

- FMI 3 is set when output voltage is detected to be greater than or equal to 145 volts AC power.
- FMI 4 is set when output voltage is detected to be less than or equal to 75 volts AC power.

Fallback

When Fault Code 120 is set the following conditions occur:

- Amber “Check Hybrid” light illuminates.
- APG shuts down.

Conditions to Set Fault Code Inactive

Only Inactive faults can be cleared from the TECU or HCM history using ServiceRanger. The TECU automatically clears faults from history after 100 hours. The HCM automatically clears a fault from history after that fault has been Inactive for 200 hours.

Possible Causes

This fault code can be caused by any of the following:

- FMI 3
  - APG
- FMI 4
  - Short phase to neutral in harness
  - Power Panel
  - APG
  - Potential of output device like motor causing surge

Additional Tools

- Basic hand tools
- ASTM Class 0 electrical insulating rubber gloves with leather protectors J48603
- Lockout bracket J48506
- Lockout tags
- Digital Volt/Ohm Meter J46708
- ServiceRanger

© 2015 Eaton. All rights reserved

https://truckmanualshub.com/

Component Identification

Note: No schematic for this code.

© 2015 Eaton. All rights reserved

Fault Code 120 - APG Unit 1 AC Voltage

A ***Purpose:*** *Check for Active or Inactive fault code status and FMIs present.*

1. Review and follow the “Warnings & Cautions” on page 1.
2. Retrieve Active fault codes and FMIs with ServiceRanger using the 9-Way Diagnostic Connector.
3. Key off.

Warning: See “High-Voltage Service Shutdown and Power-Up Procedure” on page 4. Follow the procedures to avoid shock, burn or death from improperly handled high-voltage.

4. Which FMIs are present?
   - If Fault Code 120 FMI 3 is Active, replace the **Auxiliary Power Generator (APG) Inverter**, then go to **Step V.**
   - If Fault Code 120 FMI 4 is Active, go to **Step B.**

B ***Purpose:*** *Verify integrity of APG.*

1. Key off
2. Remove all loads from the APG.
3. Restart APG.
   - APG restarts, component external to APG is causing fault. Find faulty component, then go to **Step V.**
   - APG does not restart, replace the **Inverter**, then go to **Step V.**

V ***Purpose:*** *Verify repair.*

1. Key off.
2. Reconnect all connectors.

Warning: See “High-Voltage Service Shutdown and Power-Up Procedure” on page 4. Follow the procedures to avoid shock, burn or death from improperly handled high-voltage.

3. Key on.
4. Operate the APG and attempt to reset the code.
5. Check for codes, see “View Active and Inactive Faults” on page 13.
   - If no codes, test is complete.
   - If Fault Code 120 appears, find error in testing, go to **Step A.**
   - If a code other than 120 appears, go to “Fault Code Isolation Procedure Index” on page 14.

© 2015 Eaton. All rights reserved

https://truckmanualshub.com/

Fault Code 122 - APG UNIT 1 Output

J1939: SA 3 SPN 520277 FMI 6, 14, 15

Overview

The Auxiliary Power Generator (APG) is a 5kW/5kVA DC/AC Inverter connected to the high voltage DC bus of the Eaton Hybrid electric vehicle system. It generates 60 Hz single-phase 120V AC power for utility applications.

Detection

The following preconditions must be met before the system detects the fault:

- APG Inverter needs to be operating.

Conditions to Set Fault Code Active

The following conditions must be met to set the fault code Active:

- FMI 6 is set when multiple over current events are detected.
- FMI 14 is set when the UPS has detected abnormally low impedance placed on its output.
- FMI 15 is set when the UPS output current limit (calculated or measure) has been exceeded for the longer than allowed by the internal time limit.

Fallback

When FMI 6, 14, or 15 is set the following conditions occur:

- Amber “Check Hybrid” light illuminates
- Fault is stored in HCM memory.
- APG shuts down.

Conditions to Set Fault Code Inactive

Only Inactive faults can be cleared from the TECU or HCM history using ServiceRanger. The TECU automatically clears faults from history after 200 hours. The HCM automatically clears a fault from history after that fault has been Inactive for 200 hours.

Possible Causes

This fault code can be caused by any of the following:

- FMI 6, 15
  - Short phase to ground in harness
  - Output device causing surge
  - Power Panel
  - APG
- FMI 14
  - Component drawing excessive current

Additional Tools

- Basic hand tools
- ASTM Class 0 electrical insulating rubber gloves with leather protectors J48603
- Lockout bracket J48506
- Lockout tags
- Digital Volt/Ohm Meter J46708
- ServiceRanger

© 2015 Eaton. All rights reserved

Component Identification

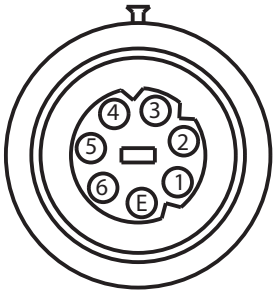

APG 7-way High-Voltage
AC Connector View

APG 6-way Low-Voltage
Connector View

© 2015 Eaton. All rights reserved

https://truckmanualshub.com/

Fault Code 122 - APG UNIT 1 Output

A

Purpose: *Check for Active or Inactive fault code status and FMIs present.*

1. Review and follow the “Warnings & Cautions” on page 1.
2. Retrieve Active fault codes and FMIs with ServiceRanger using the 9-Way Diagnostic Connector.
3. Key off.

Warning: See “High-Voltage Service Shutdown and Power-Up Procedure” on page 4. Follow the procedures to avoid shock, burn or death from improperly handled high-voltage.

4. Which FMIs are present?
   - If Fault Code 122, FMI 6 or 15 are Active, go to **Step B.**
   - If Fault Code 122 FMI 14 is Active, remove output devices, then go to **Step V.**

B

Purpose: *Measure resistance from APG circuit to ground.*

1. Remove the 7-Way Connector at the APG.
2. Measure the resistance from the AC High-Voltage Cable on the following pins.
   - Pin 1 to ground
   - Pin 2 to ground
   - Pin 3 to ground
   - Pin 4 to ground
   - Pin 5 to ground
   - Pin 6 to ground
   - If the resistance is 10K ohms or greater, go to **Step C.**
   - If the resistance is less than 10K ohms, go to **Step D.**

Connection	Measurement
Pin 1 to ground	
Pin 2 to ground	
Pin 3 to ground	
Pin 4 to ground	
Pin 5 to ground	
Pin 6 to ground	

© 2015 Eaton. All rights reserved

C

Purpose: *Measure resistance of APG circuit short to ground.*

1. Remove the 6-Way APG to Power Panel Connector from the APG.
2. Measure the resistance from the APG 6-Way Connector on the following pins:
   - Pin 1 to ground
   - Pin 2 to ground
   - If the resistance is 10K ohms or greater, replace the **Auxiliary Power Generator (APG) Inverter**, then go to **Step V.**
   - If the resistance is less than 10K ohms, go to **Step E.**

Connection	Measurement
Pin 1 to ground	
Pin 2 to ground	

D

Purpose: *Measure resistance of APG circuit short to ground.*

1. Remove the 7-Way Connector at the Power Panel.
2. Measure the resistance from the AC High-Voltage Cable on the following pins:
   - Pin 1 to ground
   - Pin 2 to ground
   - Pin 3 to ground
   - Pin 4 to ground
   - Pin 5 to ground
   - Pin 6 to ground
   - If the resistance is 10K ohms or greater, replace the **APG Power Panel**, then go to **Step V.**
   - If the resistance is less than 10K ohms, replace the AC High-Voltage Harness, then go to **Step V.**

Connection	Measurement
Pin 1 to ground	
Pin 2 to ground	
Pin 3 to ground	
Pin 4 to ground	
Pin 5 to ground	
Pin 6 to ground	

© 2015 Eaton. All rights reserved

https://truckmanualshub.com/

E

Purpose: *Measure resistance of APG circuit short to ground.*

1. Remove the 6-Way APG to Power Panel Connector from the Power Panel.
2. Measure the resistance from the APG 6-Way Connector on the following pins:
   - Pin 1 to ground
   - Pin 2 to ground
   - If the resistance is 10K ohms or greater, replace the **APG Power Panel**, then go to **Step V.**
   - If the resistance is less than 10K ohms, replace the 6-Way Harness, then go to **Step V.**

Connection	Measurement
Pin 1 to ground	
Pin 2 to ground	

V

Purpose: *Verify repair.*

1. Key off.
2. Reconnect all connectors.
3. Key on.
4. Clear Codes, see “Clear Inactive Faults” on page 13.
5. Operate the APG and attempt to reset the code.
6. Check for codes, see “View Active and Inactive Faults” on page 13.
   - If no codes, test is complete.
   - If Fault Code 122 FMI 6 or 15 appears, go to **Step B.**
   - If Fault Code 122 FMI 14 appears, find error in testing, go to **Step A.**
   - If a code other than 122 appears, go to “Fault Code Isolation Procedure Index” on page 14.

© 2015 Eaton. All rights reserved

Fault Code 123 - APG Unit 1 High Voltage Battery

J1939: SA 239 SPN 520278 FMI 3, 4, 14

Overview

The Auxiliary Power Generator (APG) is a 5kW/5kVA DC/AC Inverter connected to the high voltage DC bus of the Eaton hybrid electric vehicle system. It generates 60 Hz single-phase 120-volt AC power for utility applications.

Detection

The following preconditions must be met before the system detects the fault:

- FMI 3, 4: APG Inverter needs to be operating.
- FMI 14: APG Inverter needs to be in pre-charge phase.

Conditions to Set Fault Code Active

The following conditions must be met to set the fault code Active:

- FMI 3 is set when high voltage DC has been detected to surpass an upper limit.
- FMI 4 is set when high voltage DC has been detected to drop below a lower limit.
- FMI 14 is set when the APG cannot stabilize high voltage DC during the pre-charge phase.

Fallback

When Fault Code 123 is set the following conditions occur:

- Amber “Check Hybrid” light illuminates.
- APG shuts down if operating.

Conditions to Set Fault Code Inactive

Only Inactive faults can be cleared from the TECU or HCM history using ServiceRanger. The TECU automatically clears faults from history after 200 hours. The HCM automatically clears a fault from history after that fault has been Inactive for 200 hours.

Possible Causes

This fault code can be caused by any of the following:

- FMI 3
  - APG
- FMI 4, 14
  - APG
  - PEC
  - High-Voltage DC Cable

Additional Tools

- Basic hand tools
- ASTM Class 0 electrical insulating rubber gloves with leather protectors J48603
- Lockout bracket J48506
- Lockout tags
- Digital Volt/Ohm Meter J46708
- ServiceRanger

© 2015 Eaton. All rights reserved

https://truckmanualshub.com/

Component Identification

Note: No schematic for this code.

© 2015 Eaton. All rights reserved

Fault Code 123 - APG Unit 1 High Voltage Battery

A ***Purpose:*** *Check for Active and Inactive fault code status.*

1. Review and follow the “Warnings & Cautions” on page 1.
2. Retrieve Active fault codes and FMIs with ServiceRanger using the 9-Way Diagnostic Connector.
3. Key off.

Warning: See “High-Voltage Service Shutdown and Power-Up Procedure” on page 4. Follow the procedures to avoid shock, burn or death from improperly handled high-voltage.

4. Which FMIs are present?
   - If Fault Code 123 FMI 3, 4, or 14 is Active with an Active hybrid system fault, troubleshoot Active hybrid fault, then go to **Step V.**
   - If Fault Code 123 FMI 3, 4, or 14 is Active without an Active hybrid system fault, replace the **Auxiliary Power Generator (APG) Inverter**, then go to **Step V.**

V ***Purpose:*** *Verify repair.*

1. Key off.
2. Reconnect all connectors.

Warning: See “High-Voltage Service Shutdown and Power-Up Procedure” on page 4. Follow the procedures to avoid shock, burn or death from improperly handled high-voltage.

3. Key on.
4. Operate the APG and attempt to reset the code.
5. Check for codes, see “View Active and Inactive Faults” on page 13.
   - If no codes, test is complete.
   - If Fault Code 123 appears, find error in testing, go to **Step A.**
   - If a code other than 123 appears, go to “Fault Code Isolation Procedure Index” on page 14.

© 2015 Eaton. All rights reserved

https://truckmanualshub.com/

Fault Code 125 - APG Unit 1 Over Temperature

J1939: SA 239 SPN 520280 FMI 0

Overview

The Auxiliary Power Generator (APG) is a 5kW/5kVA DC/AC Inverter that is connected to the high voltage DC bus of the Eaton Hybrid electric vehicle system, and generates 60 Hz single-phase 120-volt AC power for utility applications. The heat sink temperature (IGBT case temperature) exceeds the upper temperature limit for normal operation.

Detection

The following preconditions must be met before the system detects the fault:

- APG Inverter needs to be operating.

Conditions to Set Fault Code Active

The following conditions must be met to set the fault code Active:

- FMI 0 is set when the heat sink temperature at an unspecified module exceeds the upper temperature limit for normal operation.

Fallback

When Fault Code 125 is set the following conditions occur:

- Amber “Check Hybrid” light illuminates.
- Fault is stored in HCM memory.
- APG shuts down if operating.

Conditions to Set Fault Code Inactive

Only Inactive faults can be cleared from the TECU or HCM history using ServiceRanger. The TECU automatically clears faults from history after 200 hours. The HCM automatically clears a fault from history after that fault has been Inactive for 200 hours.

Possible Causes

This fault code can be caused by any of the following:

- FMI 0
  - Cooling system
  - APG Temperature Sensor fault in range

Additional Tools

- Basic hand tools
- ASTM Class 0 electrical insulating rubber gloves with leather protectors J48603
- Lockout bracket J48506
- Lockout tags
- Digital Volt/Ohm Meter J46708
- ServiceRanger

© 2015 Eaton. All rights reserved

Component Identification

Note: No schematic for this code.

© 2015 Eaton. All rights reserved

https://truckmanualshub.com/

Fault Code 125 - APG Unit 1 Over Temperature

A ***Purpose:*** *Check for Active and Inactive fault code status.*

1. Review and follow the "Warnings & Cautions" on page 1.
2. Retrieve Active fault codes and FMIs with ServiceRanger using the 9-Way Diagnostic Connector.
3. Key off.

Warning: See "High-Voltage Service Shutdown and Power-Up Procedure" on page 4. Follow the procedures to avoid shock, burn or death from improperly handled high-voltage.

4. Which FMIs are present?
   - If FMI 0 is Active, go to **Step B.**

B ***Purpose:*** *Verify proper coolant level.*

1. Observe the coolant level after the system has cooled to see if it is filled to the proper level.
   - If the coolant is within the recommended limits, replace the **Auxiliary Power Generator (APG) Inverter**, then go to **Step V.**
   - If the coolant is below the recommended limits, refer to OEM for coolant type and fill procedure. Go to **Step V.**

V ***Purpose:*** *Verify repair.*

1. Key off.
2. Reconnect all connectors.

Warning: See "High-Voltage Service Shutdown and Power-Up Procedure" on page 4. Follow the procedures to avoid shock, burn or death from improperly handled high-voltage.

3. Key on.
4. Operate the APG and attempt to reset the code.
5. Check for codes, see "View Active and Inactive Faults" on page 13.
   - If no codes, test is complete.
   - If Fault Code 125 appears, find error in testing, go to **Step A.**
   - If a code other than 125 appears, go to "Fault Code Isolation Procedure Index" on page 14.

© 2015 Eaton. All rights reserved

Fault Code 126 - APG Unit 1 Configuration

J1939: SA 239 SPN 520281 FMI 22–27

Overview

The Auxiliary Power Generator (APG) is a 5kW/5kVA DC/AC Inverter that is connected to the high-voltage DC bus of the Eaton Hybrid electric vehicle system, and generates 60 Hz single-phase 120V AC power for utility applications.

Detection

The following preconditions must be met before the system detect the fault:

- APG Inverter needs to be operating.

Conditions to Set Fault Code Active

The following conditions must be met to set the fault code Active:

- FMI 22 is set when a control board self test has failed.
- FMI 23 is set when a nonvolatile data checksum failure has occurred.
- FMI 24 is set when software incompatibility has been detected.
- FMI 25 is set when a blown fuse is detected.
- FMI 26 is set when the internal fan speed is detected to be low.
- FMI 27 is set when there is an Inverter fault.

Fallback

When FMI 22–27 is set the following conditions occur:

- Amber “Check Hybrid” light illuminates.
- Fault is stored in HCM memory.
- APG does not start.

Conditions to Set Fault Code Inactive

Only Inactive faults can be cleared from the TECU or HCM history using ServiceRanger. The TECU automatically clears faults from history after 200 hours. The HCM automatically clears a fault from history after that fault has been Inactive for 200 hours.

Possible Causes

This fault code can be caused by any of the following:

- FMI 22–27: APG

Additional Tools

- Basic hand tools
- ASTM Class 0 electrical insulating rubber gloves with leather protectors J48603
- Lockout bracket J48506
- Lockout tags
- Digital Volt/Ohm Meter J46708
- ServiceRanger

© 2015 Eaton. All rights reserved

https://truckmanualshub.com/

Component Identification

Note: No schematic for this code.

© 2015 Eaton. All rights reserved

Fault Code 126 - APG Unit 1 Configuration

A ***Purpose:*** *Check for Active or Inactive fault code status and FMIs present.*

1. Review and follow the “Warnings & Cautions” on page 1.
2. Retrieve Active fault codes and FMIs with ServiceRanger using the 9-Way Diagnostic Connector.
3. Key off.

Warning: See “High-Voltage Service Shutdown and Power-Up Procedure” on page 4. Follow the procedures to avoid shock, burn or death from improperly handled high-voltage.

4. Which FMIs are present?
   - If FMI 22–27 are present, replace the **Auxiliary Power Generator (APG) Inverter**, then go to **Step V.**

V ***Purpose:*** *Verify repair.*

1. Key off.
2. Reconnect all connectors.
3. Key on.
4. Operate the APG and attempt to reset the code.
5. Check for codes, see “View Active and Inactive Faults” on page 13.
   - If no codes, test is complete.
   - If Fault Code 126 appears, find error in testing, go to **Step A.**
   - If a code other than 126 appears, go to “Fault Code Isolation Procedure Index” on page 14.

© 2015 Eaton. All rights reserved

https://truckmanualshub.com/

Fault Code 127 - APG Unit 1 Ambient Air Over Temperature

J1939: SA 239 SPN 520282 FMI 0

Overview

The Auxiliary Power Generator (APG) is a 5kW/5kVA DC/AC Inverter that is connected to the high voltage DC bus of the Eaton Hybrid electric vehicle system, and generates 60 Hz single-phase 120-volt AC power for utility applications. The ambient air temperature is measured with an internal sensor and sets a fault when the temperature reaches 140 °F (60 °C).

Detection

The following preconditions must be met before the system detects the fault:

- HCM is powered and ignition voltage is greater than 7 volts and less than 16 volts.

Conditions to Set Fault Code Active

The following conditions must be met to set the fault code Active:

- FMI 0 is set when the ambient temperature inside of the APG Inverter case reaches 140 °F (60 °C).

Fallback

When FMI 0 is set the following conditions occur:

- Amber “Check Hybrid” light illuminates.
- Fault is stored in HCM memory.
- The APG powers down.

Conditions to Set Fault Code Inactive

Only Inactive faults can be cleared from the TECU or HCM history using ServiceRanger. The TECU automatically clears faults from history after 200 hours. The HCM automatically clears a fault from history after that fault has been Inactive for 200 hours.

Possible Causes

This fault code can be caused by any of the following:

- FMI 0
  - Faulty Sensor
  - Ambient case temperature too high

Additional Tools

- Basic hand tools
- ASTM Class 0 electrical insulating rubber gloves with leather protectors J48603
- Lockout bracket J48506
- Lockout tags
- Digital Volt/Ohm Meter J46708
- ServiceRanger

© 2015 Eaton. All rights reserved

https://truckmanualshub.com/

Component Identification

Note: No schematic for this code.

© 2015 Eaton. All rights reserved

https://truckmanualshub.com/

Fault Code 127 - APG Unit 1 Ambient Air Over Temperature

A

Purpose: *Verify Active and Inactive fault code status.*

1. Review and follow the "Warnings & Cautions" on page 1.
2. Retrieve Active fault codes and FMIs with ServiceRanger using the 9-Way Diagnostic Connector.
3. Key off.

Warning: See "High-Voltage Service Shutdown and Power-Up Procedure" on page 4. Follow the procedures to avoid shock, burn or death from improperly handled high-voltage.

4. Which FMIs are present?
   - If FMI 0 is present, go to **Step B.**

B

Purpose: *Verify proper coolant level.*

1. Ensure that the Inverter cabinet is not exposed to external heat source.
2. Observe the coolant level after the system has cooled to see if it is filled to the proper level.
   - If the coolant is within the recommend limits, replace the **Auxiliary Power Generator (APG) Inverter**, then go to **Step V.**
   - If the coolant is below the recommended limits, refer to OEM for coolant type and fill procedure. Go to **Step V.**

V

Purpose: *Verify repair.*

1. Key off.
2. Reconnect all connectors.

Warning: See "High-Voltage Service Shutdown and Power-Up Procedure" on page 4. Follow the procedures to avoid shock, burn or death from improperly handled high-voltage.

3. Key on.
4. Operate the APG and attempt to reset the code.
5. Check for codes, see "View Active and Inactive Faults" on page 13.
   - If no codes, test is complete.
   - If Fault Code 127 appears, find error in testing, go to **Step A.**
   - If a code other than 127 appears, go to "Fault Code Isolation Procedure Index" on page 14.

© 2015 Eaton. All rights reserved

Fault Code 128 - APG Unit 1 Ambient Air Temperature Sensor

J1939: SA 239 SPN 520322 FMI 3

Overview

The Auxiliary Power Generator (APG) is a 5kW/5kVA DC/AC Inverter that is connected to the high-voltage DC bus of the Eaton Hybrid electric vehicle system, and generates 60 Hz single-phase 120V AC power for utility applications. Fault Code 128 indicates that the Ambient Air Temperature Sensor has been detected as faulty.

Detection

The following preconditions must be met before the system detect the fault:

- HCM is powered and ignition voltage is greater than 7 volts and less than 16 volts.

Conditions to Set Fault Code Active

The following conditions must be met to set the fault code Active:

- FMI 3 is set when the Ambient Air Temperature Sensor has been detected out of range.

Fallback

When Fault Code 128 FMI 3 is set the following conditions occur:

- Amber “Check Hybrid” light illuminates.
- Fault is stored in HCM memory.
- APG shuts down and attempts a restart after 30 seconds.

Conditions to Set Fault Code Inactive

Only Inactive faults can be cleared from the TECU or HCM history using ServiceRanger. The TECU automatically clears faults from history after 200 hours. The HCM automatically clears a fault from history after that fault has been Inactive for 200 hours.

Possible Causes

This fault code can be caused by any of the following:

- FMI 3: Faulty sensor

Additional Tools

- Basic hand tools
- ASTM Class 0 electrical insulating rubber gloves with leather protectors J48603
- Lockout bracket J48506
- Lockout tags
- Digital Volt/Ohm Meter J46708
- ServiceRanger

© 2015 Eaton. All rights reserved

https://truckmanualshub.com/

Component Identification

Note: No schematic for this code.

© 2015 Eaton. All rights reserved

Fault Code 128 - APG Unit 1 Ambient Air Temperature Sensor

A ***Purpose:*** *Verify Active and Inactive fault code status.*

1. Review and follow the “Warnings & Cautions” on page 1.
2. Retrieve Active fault codes and FMIs with ServiceRanger using the 9-Way Diagnostic Connector.
3. Key off.

Warning: See “High-Voltage Service Shutdown and Power-Up Procedure” on page 4. Follow the procedures to avoid shock, burn or death from improperly handled high-voltage.

4. Which FMIs are present?
   - If FMI 3 is present, replace the **Auxiliary Power Generator (APG) Inverter**, then go to **Step V.**

V ***Purpose:*** *Verify repair.*

1. Key off.
2. Reconnect all connectors.
3. Key on.
4. Operate the APG and attempt to reset the code.
5. Check for codes, see “View Active and Inactive Faults” on page 13.
   - If no codes, test is complete.
   - If Fault Code 128 appears, find error in testing, go to **Step A.**
   - If a code other than 128 appears, go to “Fault Code Isolation Procedure Index” on page 14.

© 2015 Eaton. All rights reserved

https://truckmanualshub.com/

Fault Code 129 - APG Unit 1 Communication

J1939: SA 239 SPN 520323 FMI 9

Overview

The Auxiliary Power Generator (APG) is a 5kW/5kVA DC/AC Inverter that is connected to the high voltage DC bus of the Eaton Hybrid electric vehicle system, and generates 60 Hz single-phase 120-volt AC power for utility applications. The Controller Area Network (CAN) is a high-speed twisted pair 500K proprietary data link that connects the HCM to the Electric Clutch Actuator (ECA), Battery Control Module, Inverter and APG. The link contains one 120 ohm resistor at each end. The link is used to transmit information specific to clutch position and power electronics operations.

Detection

The following preconditions must be met before the system detects the fault:

- HCM is powered and ignition voltage is greater than 7 volts and less than 16 volts.

Conditions to Set Fault Code Active

The following conditions must be met to set the fault code Active:

- FMI 9: Communication with the HCM has not occurred for more than 2 seconds.

Fallback

When Fault Code 129 is set the following conditions occur:

- Amber “Check Hybrid” light illuminates.
- If the fault sets during operation the APG shuts off.

Conditions to Set Fault Code Inactive

Only Inactive faults can be cleared from the TECU or HCM history using ServiceRanger. The TECU automatically clears faults from history after 100 hours. The HCM automatically clears a fault from history after 200 hours of the fault staying Inactive.

Possible Causes

This fault code can be caused by any of the following:

- FMI 9
  - APG
  - HCM
  - CAN Data Link

Additional Tools

- Basic hand tools
- ASTM Class 0 electrical insulating rubber gloves with leather protectors J48603
- Lockout bracket J48506
- Lockout tags
- Digital Volt/Ohm Meter J46708
- ServiceRanger

© 2015 Eaton. All rights reserved

Component Identification

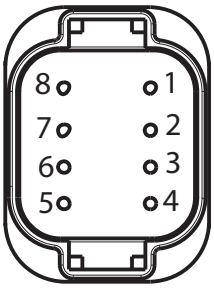

APG 8-way low-voltage connector view

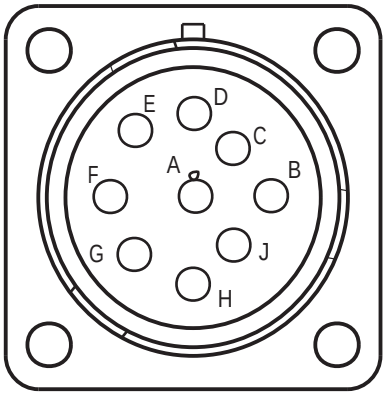

9-way diagnostic connector

© 2015 Eaton. All rights reserved

https://truckmanualshub.com/

Fault Code 129 - APG Unit 1 Communication

A ***Purpose:*** *Verify Active and Inactive fault code status and FMIs present.*

1. Review and follow the "Warnings & Cautions" on page 1.
2. Retrieve Active fault codes and FMIs with ServiceRanger using the 9-Way Diagnostic Connector.
3. Key off.

Warning: See "High-Voltage Service Shutdown and Power-Up Procedure" on page 4. Follow the procedures to avoid shock, burn or death from improperly handled high-voltage.

4. Which FMIs are present?
   - If FMI 9 is present, go to **Step B.**

B ***Purpose:*** *Verify resistance on APG CAN Harness.*

1. Measure the resistance between the following:
   - Diagnostic 9-Way Connector Pin H and Pin J
   - 2-Way Connector Pin 1 and Pin 2
   - 3-Way Connector Pin A and Pin B

Note: The 3-Way and 2-Way Data Link Connectors are located next to the 9-Way Diagnostic Connector.

Note: Make sure the Volt/Ohm Meter is on the proper scale (around 200 ohm scale).

- If the resistance between Pin H and Pin J, Pin A and Pin B, or Pin 1 and Pin 2 is between 50–70 ohms, go to **Step C.**
- If the resistance is more than 70 ohms, one or more of the terminating resistors on the CAN Data Link Harness is either missing or out of range, or there is an open in the link. Repair the OEM CAN Data Link Harness, then go to **Step V.**
- If the resistance is less than 50 ohms, there is an additional terminating resistor present. Repair the CAN Data Link Harness, then go to **Step V.**

Connection	Measurement
9-Way Pin H to 9-Way Pin J	
2-Way Pin 1 to 2-Way Pin 2	
3-Way Pin A to 3-Way Pin B	

© 2015 Eaton. All rights reserved

C

Purpose: *Verify resistance on APG CAN Harness.*

1. Key off.
2. Disconnect the negative battery cable.
3. Disconnect the APG 8-Way Connector at the APG.
4. Measure the resistance between APG 8-Way Connector Pin 4 and Pin 5:

   Note: Make sure the Volt/Ohm Meter is on the proper scale (around 200 ohm scale).

   - If the resistance between Pin 4 and Pin 5 is between 110–130 ohms, replace the **Auxiliary Power Generator (APG) Inverter**, then go to **Step V.**
   - If the resistance is outside the range, repair the CAN Data Link Harness, then go to **Step V.**

Connection	Measurement
Pin 4 to Pin 5	

V

Purpose: *Verify repair.*

1. Key off.
2. Reconnect all connectors.
3. Key on.
4. Operate the APG and attempt to reset the code.
5. Check for codes, see “View Active and Inactive Faults” on page 13.
   - If no codes, test is complete.
   - If Fault Code 129 appears, find error in testing, go to **Step A.**
   - If a code other than 129 appears, go to “Fault Code Isolation Procedure Index” on page 14.

© 2015 Eaton. All rights reserved

https://truckmanualshub.com/

Fault Code 131 - APG Unit 1 Configuration Error

J1939: SA 239 SPN 520320 FMI 13

Overview

The Auxiliary Power Generator (APG) is a 5kW/5kVA DC/AC Inverter that is connected to the high voltage DC bus of the Eaton Hybrid electric vehicle system, and generates 60 Hz single-phase 120V AC power for utility applications. The Hybrid Controller Module (HCM) can be configured for up to two (2) APG units.

Detection

The following preconditions must be met before the system detects the fault:

- HCM is powered and ignition voltage is greater than 7 volts and less than 16 volts.

Conditions to Set Fault Code Active

The following conditions must be met to set the fault code Active:

- FMI 13 is set when the number of APGs responding on the link is different than the number of APGs configured in the HCM.

Fallback

When Fault Code 131 is set the following conditions occur:

- Amber “Check Hybrid” light illuminates.
- Fault is stored in HCM memory.

Conditions to Set Fault Code Inactive

Only Inactive faults can be cleared from the TECU or HCM history using ServiceRanger. The TECU automatically clears faults from history after 200 hours. The HCM automatically clears a fault from history after that fault has been Inactive for 200 hours.

Possible Causes

This fault code can be caused by any of the following:

- FMI 13: HCM configuration

Additional Tools

- ServiceRanger

© 2015 Eaton. All rights reserved

Component Identification

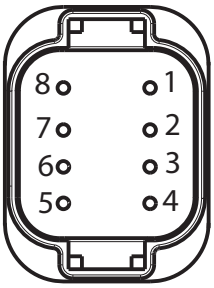

APG 8-way low-voltage connector view

© 2015 Eaton. All rights reserved

https://truckmanualshub.com/

Fault Code 131 - APG Unit 1 Configuration Error

A

Purpose: *Check for Active or Inactive fault code status and FMIs present.*

1. Review and follow the "Warnings & Cautions" on page 1.
2. Retrieve Active fault codes and FMIs with ServiceRanger using the 9-Way Diagnostic Connector.
3. Key off.

Warning: See "High-Voltage Service Shutdown and Power-Up Procedure" on page 4. Follow the procedures to avoid shock, burn or death from improperly handled high-voltage.

4. Which FMIs are present?
   - If Fault Code 131 FMI 13 is Active, go to **Step B.**

B

Purpose: *Verify APG configurations.*

1. Does APG configuration match the number of installed APG units?
   - Yes, go to **Step C.**
   - No, set configuration equal to number of installed APG units, then go to **Step V.**

C

Purpose: *Verify resistance of APG CAN Harness.*

1. Key off.
2. Disconnect negative battery cable.

Warning: Disconnect the APG 8-Way Connector at the APG.

3. Measure the resistance between APG 8-Way Connector Pin 4 and Pin 5:

   Note: Make sure the Volt/Ohm Meter is on the proper scale (around 200 ohm scale).

   - If resistance between Pin 4 and Pin 5 is between 50– 70 ohms, replace the **Auxiliary Power Generator (APG) Inverter**, then go to **Step V.**
   - If resistance is outside of range, repair the CAN Data Link Harness, then go to **Step V.**

Connection	Measurement
Pin 4 to Pin 5	

© 2015 Eaton. All rights reserved

V ***Purpose:*** *Verify repair.*

1. Key off.
2. Reconnect all connectors.

Warning: See “High-Voltage Service Shutdown and Power-Up Procedure” on page 4. Follow the procedures to avoid shock, burn or death from improperly handled high-voltage.

3. Key on.
4. Operate the APG and attempt to reset the code.
5. Check for codes, see “View Active and Inactive Faults” on page 13.
   - If no codes, test is complete.
   - If Fault Code 131 appears, find error in testing, go to **Step A.**
   - If a code other than 131 appears, go to “Fault Code Isolation Procedure Index” on page 14.

© 2015 Eaton. All rights reserved

https://truckmanualshub.com/

Front Box Test

Overview

This symptom-driven test is performed if a dash “-” or flashing gear is displayed on the gear display, and there are no Active or Inactive codes. Turn key on and watch the gear display. If the gear display shows a dash “-” constantly, the Transmission Electronic Control Unit (TECU) was not able to confirm Front Box control. If the transmission displays a flashing gear when a forward or reverse mode is selected, the transmission is not able to engage the gear position.

Note: This symptom-based test should only be performed if directed here from the Diagnostic Procedure and there are no Active fault codes.

Detection

The following symptoms may have been experienced:

- Power up no crank and gear display shows a dash “-”.
- Transmission does not engage a gear from neutral (flashing gear number is gear display).

Fallback

There is no fallback mode for this symptom; however, the vehicle may do either of the following: not crank if the dash “-” is present or not engage a gear if the flashing gear is present when a non-neutral gear is selected.

Possible Causes

This fault code can be caused by any of the following:

- Low power to Gear Select motor
- Electric Shifter
- Gear Select Sensor
- Yoke/Clutch/Main Shaft
- Shift Bar Housing
- Dragging Clutch
- Torque Locked in Gear

Additional Tools

- Basic hand tools
- Eaton® Test Adapter Kit J43318
- Digital Volt/Ohm Meter J46708
- ServiceRanger

© 2015 Eaton. All rights reserved

Component Identification

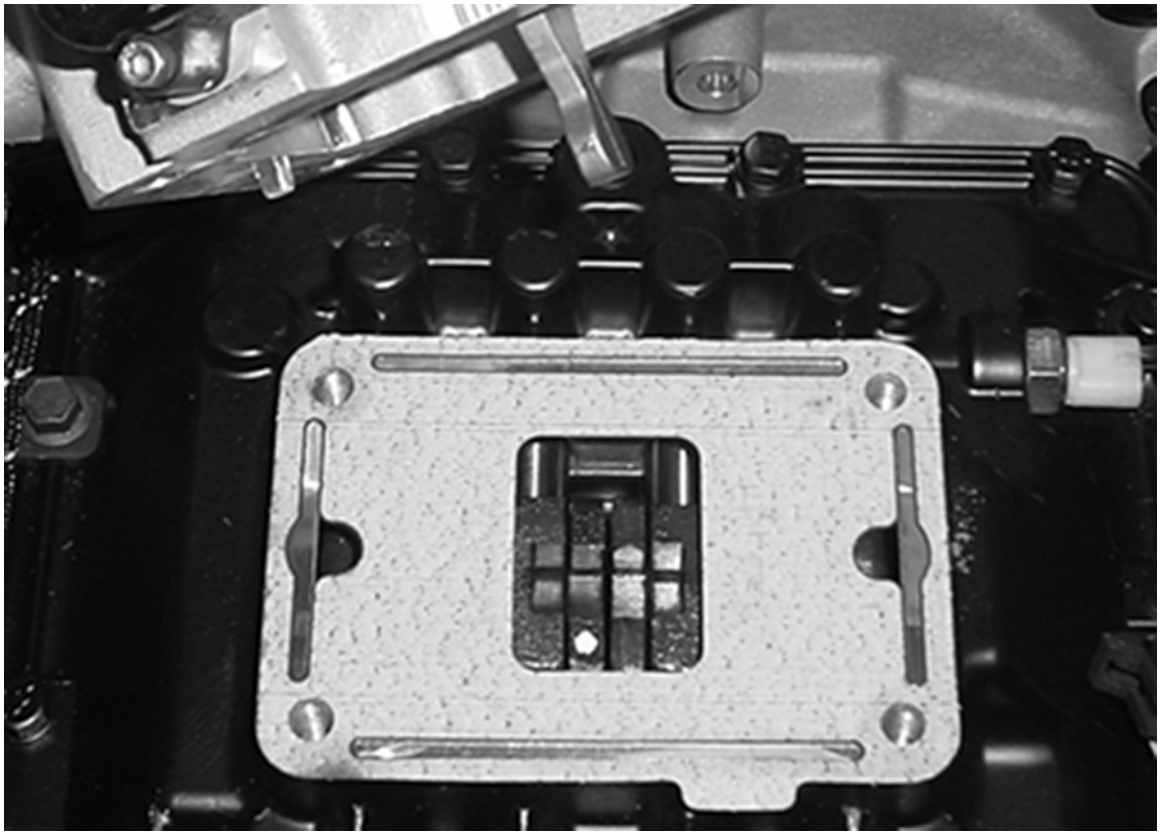

Note: The picture above shows the Shift Forks in neutral position.

© 2015 Eaton. All rights reserved

Front Box Test

A

Purpose: *Visually observe the gear display after power up.*

1. Only perform this symptom test if sent here from the Diagnostic Procedure and there are no Active fault codes.
2. Key on.
3. Press “N” on the Push Button Shift Control.
4. Observe gear display:
   - If gear display shows: “N”, go to **Step B.**
   - If gear display shows: “-”, go to **Step C.**

Parameter	Reading
Gear Display	

B

Purpose: *Visually observe the Gear Display when placing the transmission into Drive.*

1. Press service brake and select D.
2. Observe Gear Display:
   - If Gear Display shows a solid gear, test is complete.
   - If gear display shows a flashing gear with no arrows, go to **Step C.**

Parameter	Reading
Gear Display	

C

Purpose: *Visually observe the gear display when placing the transmission into Drive.*

1. Key off.
2. Attempt to remove any type of torque lock on the drivetrain through one of the following methods:
   - Remove the driveshaft
   - Lift the drive wheels off the ground
   - Roll the vehicle in neutral
3. Key on.
4. Observe Gear Display:
   - If gear display shows a solid “N”, go to **Step B.**
   - If gear display still shows a solid dash “-”, go to **Step D.**

Parameter	Reading
Gear Display	

D

Purpose: *Perform Electrical Pretest.*

1. Perform the Electrical Pretest (see “Electrical Pretest” on page 25):
   - If no issues found during the Electrical Pretest, go to **Step E.**
   - If issue was repaired during the Electrical Pretest, go to **Step A.**

© 2015 Eaton. All rights reserved

E

Purpose: *Verify Electric Shifter performs a calibration sweep.*

1. Key on.
2. Listen for noise from the Electric Shifter calibrating/actuating then turn the key off and listen for the same noise again:
   - If the Electric Shifter can be heard calibrating/actuating, go to **Step F.**
   - If the Electric Shifter can not be heard calibrating, go to **Step F.**

F

Purpose: *Remove Electric Shifter from the Shift Bar Housing and inspect the mechanical transmission.*

1. Key off.
2. Remove Electric Shifter* from Shift Bar Housing.
3. Inspect the following:
   - Shift Blocks are fastened to Shift Rails securely
   - Shift ails move into each gear position
   - Electric Shifter is free from any excessive lube contamination buildup
   - Two gear positions can not be engaged at the same time
   - If no problem found, and the Electric Shifter actuation was not heard in the previous step, replace the **Transmission Electronic Control Unit (TECU)**, then go to **Step V.**
   - If no problem found, and the Electric Shifter actuation was heard in the previous step, replace the **Electric Shifter**, then go to **Step V.**
   - If problem is found, repair as required, then go to **Step V.**

   - * See **Electric Shifter**.

V

Purpose: *Verify repair.*

1. Key off.
2. Reconnect all connectors.
3. Place Shift Control into neutral.
4. Key on.
   - If gear display displays a solid “N”, test is complete.
   - If gear display does not display a solid “N”, find error in testing, go to **Step A.**

Parameter	Reading
Gear Display	

© 2015 Eaton. All rights reserved

https://truckmanualshub.com/

Engine Crank Test

J1939: SA 3 SPN FMI

Overview

This symptom-driven test is performed if a “N” is displayed on the gear display with no Active or Inactive codes and the vehicle does not crank.

The Hybrid Control Module (HCM) receives the input to crank from Pin 20 on the HCM 38-Way Connector, which is wired to the Key Switch. The HCM normally powers the High-Voltage Motor/Generator to start the engine. If the hybrid system is offline, the HCM uses the standard 12-Volt Starter by energizing the 12-Volt Cranking Relay. This relay then provides battery power to Pin 30 of the Start Enable Relay, which then powers the Starter Solenoid.

Note: This symptom-based test should only be performed if directed here from the Diagnostic Procedure and there are no Active fault codes.

Detection

The following symptoms may have been experienced:

- Vehicle does not crank or there is a solid “N” in the Gear Display.

Fallback

No fallback options are associated with this fault.

Possible Causes

This fault code can be caused by any of the following:

- 12-Volt Cranking Relay
- Start Enable Relay
- Vehicle Harness
- Engine Starter
- 12-volt batteries
- Key Switch input to Pin 20 of the HCM

Additional Tools

- Basic hand tools
- Eaton® Test Adapter Kit J43318
- Digital Volt/Ohm Meter J46708
- ServiceRanger

© 2015 Eaton. All rights reserved

Component Identification

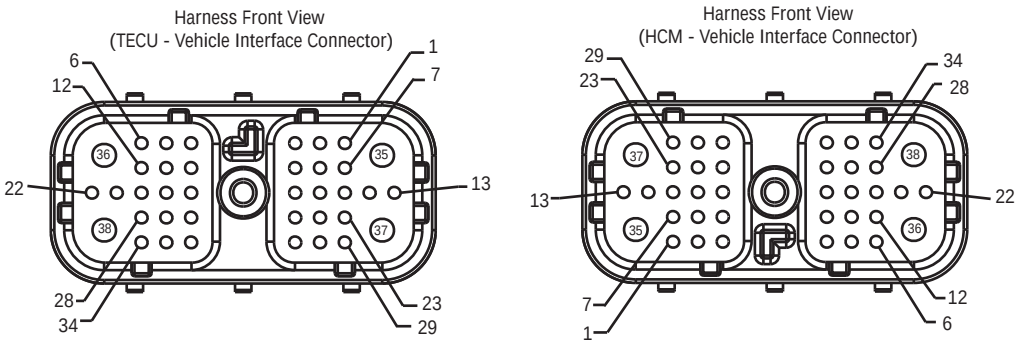

NOTE: Refer to the Eaton Hybrid Component and Connector Location page for Connector Locations

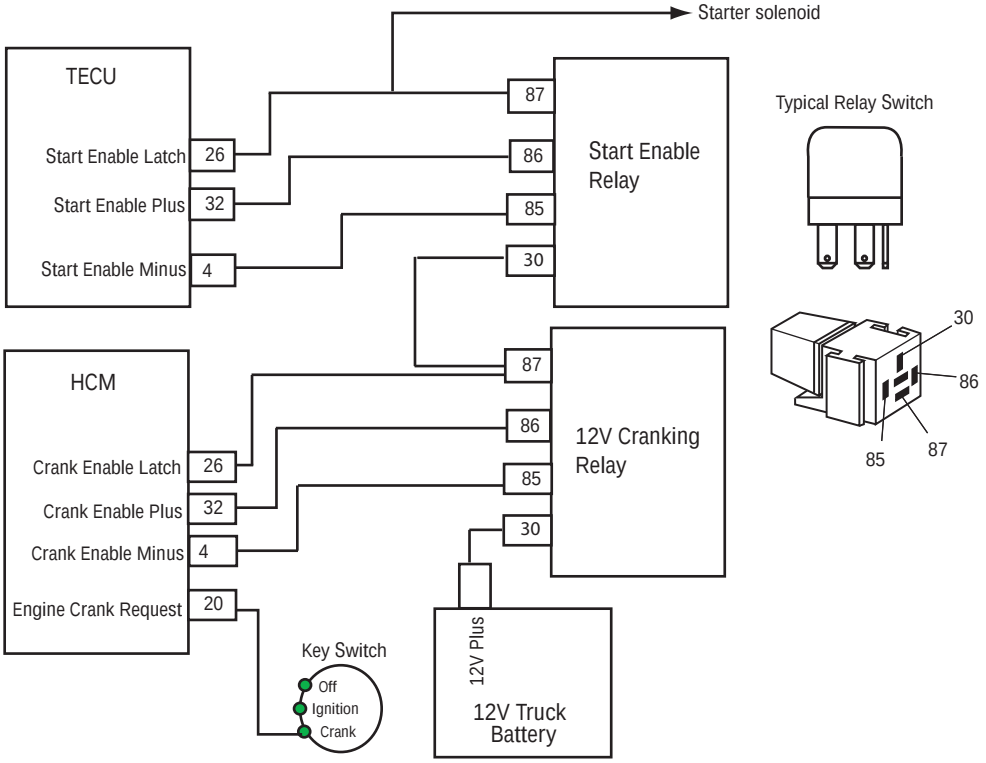

© 2015 Eaton. All rights reserved

Engine Crank Test

A

Purpose: *Visually observe the Gear Display after power up.*

1. Perform this symptom test if only if directed to do so by the Symptom-Driven Diagnostic Index and there are no Active fault codes.
2. Key on.
3. Press N on the Push Button Shift Control:

   Note: The ePTO light must be off when using the Key Switch to start the vehicle.

   - If "N" is present on the gear display, go to **Step B.**
   - If "N" is not present on the gear display, refer to the "Hybrid Diagnostic Procedure" on page 8 for the correct symptom-based test to perform.

Parameter	Reading
Gear Display	

B

Purpose: *Verify Crank Request parameter.*

1. Key on.
2. Connect ServiceRanger to the 9-Way Diagnostic Connector.
3. Select the "Data Monitor" option and view the "Crank Request" parameter:
   - If Crank Request reads 1 (Crank), go to **Step C.**
   - If Crank Request reads 0 (No Crank), go to **Step E.**

Parameter	Reading
"Crank Request"	

C

Purpose: *Verify integrity of the Cranking Relay.*

1. Substitute a different start enable and 12-Volt Cranking Relay.
2. Attempt to crank engine:
   - If engine cranks, pinpoint which of the 2 relays was at fault and replace it. Go to **Step V.**
   - If engine does not crank, go to **Step D.**

© 2015 Eaton. All rights reserved

D

Purpose: *Verify power to the Start Enable Relay.*

1. Key on.
2. Engine may crank.
3. Jumper Pin 87 of the Start Enable Relay Connector to battery power:
   - If engine cranks, repair open circuit between Pin 87 of the Start Enable Relay and battery. Refer to OEM for repair procedures.
   - If engine does not crank, concern is with Starter Solenoid or Power Harness to Solenoid. Refer to OEM for repair procedures.

E

Purpose: *Verify voltage to ground on HCM Harness.*

1. Key off.
2. Disconnect negative battery cable.
3. Disconnect HCM Harness 38-Way Connector.
4. Key in start position.
5. Measure voltage from HCM Harness 38-Way Connector Pin 20 to ground.
   - If voltage is 11–13 volts, replace the **Hybrid Control Module (HCM)**, then go to **Step V.**
   - If voltage is below 11 volts, repair the Vehicle Harness, then go to **Step V.**

Connection	Measurement
Pin 20 to ground	

V

Purpose: *Verify repair.*

1. Key off.
2. Reconnect all connectors.
3. Place Shift Control into neutral.
4. Key on:
   - If engine starts, test is complete.
   - If engine does not start, find error in testing, go to **Step A.**

© 2015 Eaton. All rights reserved

https://truckmanualshub.com/

Hybrid Performance Test

J1939: SA 3 SPN FMI

Overview

The hybrid system uses a combination of diesel engine and electric power to provide varying levels of torque during vehicle operation. If the hybrid system has a fault, or if a hybrid component is above the optimum operating temperature, the vehicle will reduce the amount of available Motor/Generator torque.

Note: This symptom-based test should only be performed when directed by the Symptom-Driven Diagnostics Index and there are no Active fault codes.

Detection

The following symptoms may have been experienced:

- Vehicle acceleration performance is not acceptable.

Fallback

Some faults codes affect the amount of torque available from the Motor/Generator and will be noticeable to the driver.

Possible Causes

This fault code can be caused by any of the following:

- Hybrid liquid cooling system
- PEC air cooling system restriction or poor air flow
- Reduce engine power
- Truckload capacity above the rated amount

Additional Tools

- Basic hand tools
- Eaton® Test Adapter Kit J43318
- Digital Volt/Ohm Meter J46708
- ServiceRanger

© 2015 Eaton. All rights reserved

https://truckmanualshub.com/

Component Identification

Note: No schematic for this test.

© 2015 Eaton. All rights reserved

Hybrid Performance Test

A

Purpose: *Verify engine torque.*

1. Key on.
2. Connect ServiceRanger to the 9-Way Diagnostic Connector in the cab and view the following "Data Monitor" parameters under the hybrid (Engine and Brake) list:
   - SPN 513 Actual Engine Torque
   - SPN 518 Requested Engine Torque
     - If actual torque is equal to requested torque, go to **Step B.**
     - If actual torque is less than requested torque, refer to OEM for engine power concern. Go to **Step V.**

Parameter	Reading
SPN 513 Actual Engine Torque	
SPN 518 Requested Engine Torque	

B

Purpose: *Verify battery temperature.*

1. Select the "Data Monitor" option and view the following parameter:
   - Battery Temperature PID 115
     - If Battery temperature is below 104 °F (40 °C), refer to OEM for engine power concern, then go to **Step V.**
     - If temperature is above 104 °F (40 °C), inspect the battery cooling system for plugged intake or exhaust ports, restricted or plugged Air Filter, and failed Battery Cooling Fan. Refer to OEM for procedures and specifications.
     - After making repairs, go to **Step V.**

Parameter	Reading
PID 115 Battery Temperature	

V

Purpose: *Verify repair.*

1. Key off.
2. Reconnect all connectors.
3. Place Shift Control into neutral.
4. Key on.
   - If vehicle exhibits normal amount of power, test is complete.
   - If vehicle seems to produce lack power, find error in testing, go to **Step A.**

© 2015 Eaton. All rights reserved

ServiceRanger Test

J1939: SA 3 SPN FMI

Overview

The service tool ServiceRanger communicates with both the Hybrid Control Module (HCM) and the Transmission Electronic Control Unit (TECU) for all diagnostic information over the J1587 and J1939 Data Links. The tool connects to the standard 9-Way Diagnostic Connector in the cab.

Note: All Hybrid systems require the new ServiceRanger Midas along with the Nexiq USB Communication Box.

Note: This symptom-based test should only be performed if when directed by the Symptom-Driven Diagnostic Index.

Detection

The following symptoms may have been experienced:

- ServiceRanger does not communicate with vehicle.

Fallback

No fallback condition exists for this symptom.

Possible Causes

This fault code can be caused by any of the following:

- Incorrect ServiceRanger software version
- Incompatible Communication Box
- J1939 or J1587 Data Link
- 9-Way Diagnostic Connector power or ground
- HCM
- TECU

Additional Tools

- Basic hand tools
- Eaton® Test Adapter Kit J43318
- Digital Volt/Ohm Meter J46708
- ServiceRanger

© 2015 Eaton. All rights reserved

https://truckmanualshub.com/

Component Identification

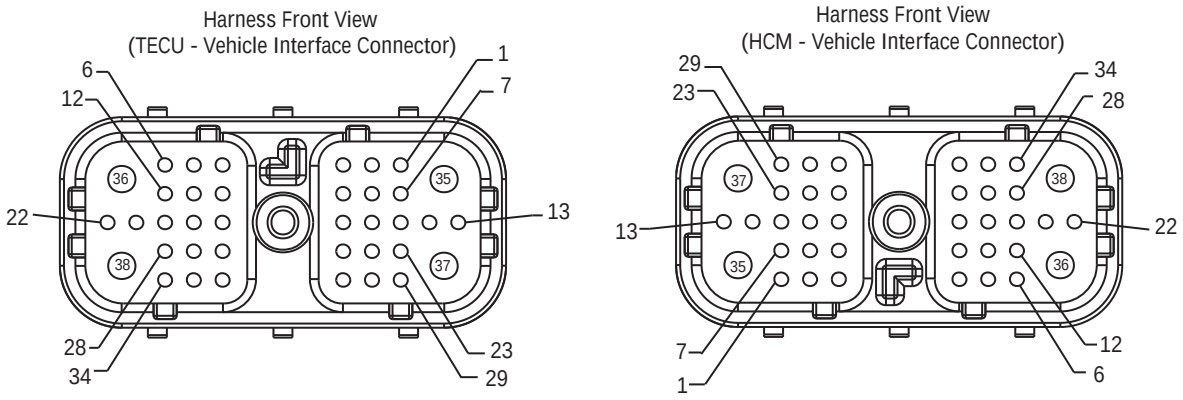

NOTE: Refer to the Eaton Hybrid Component and Connector Location page for Connector Locations

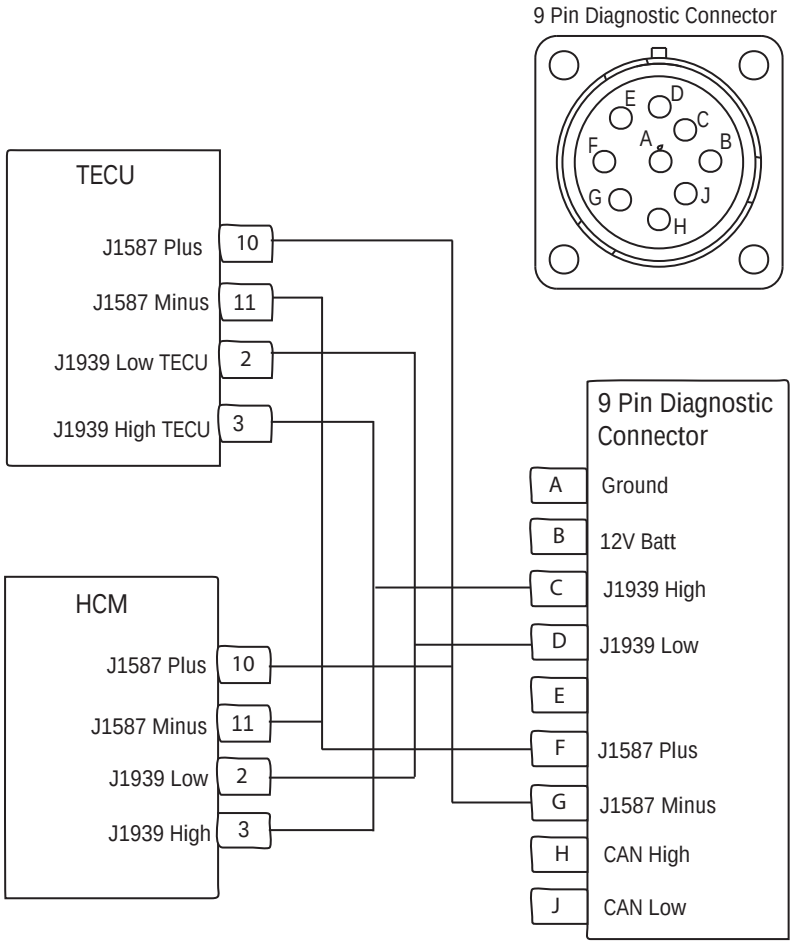

© 2015 Eaton. All rights reserved

ServiceRanger Test

A

Purpose: *Verify ServiceRanger connects.*

1. You should only perform this symptom test when directed by the Symptom-Driven Diagnostic Index.
2. Connect ServiceRanger to the 9-Way Diagnostic Connector in the cab.
3. Select the green “Connect” tab:
   - If the ServiceRanger screen comes up, go to **Step B.**
   - If ServiceRanger shows a “Failed to Connect” error message, go to **Step D.**

B

Purpose: *Verify both J-1587 and J-1939 are available.*

1. View the J1587 and J1939 connection icons at the bottom of the ServiceRanger screen:
   - If both data link lights are highlighted green, go to **Step C.**
   - If either data link light is highlighted red, go to **Step E.**

C

Purpose: *Verify both HCM and TECU available on J-1587 and J-1939.*

1. View the Vehicle Components selection in ServiceRanger and note if the HCM and TECU are both listed on J1587 and J1939:
   - If the TECU and HCM both appear on the list twice, ServiceRanger is communicating with the vehicle and has full functions available to it. Go to **Step V.**
   - If the TECU or HCM are missing from the list but the other modules are listed, go to **Step G.**

D

Purpose: *Verify voltage at 9-Way Diagnostic Connector.*

1. Key on.
2. Disconnect ServiceRanger from the 9-Way Diagnostic Connector.
3. Measure voltage at the 9-Way Diagnostic Connector from Pin A to Pin B:
   - If voltage is 11–13 volts, concern is with the Communication Box or Cable. Try another Communication Box and Cable. Go to **Step V.**
   - If voltage is out of range, repair the Power Supply to the 9-Way connection, then go to **Step A.**

Connection	Measurement
Pin A to Pin B	

© 2015 Eaton. All rights reserved

E

Purpose: *Verify J-1587 continuity at 9-Way Diagnostic Connector.*

1. Key off.
2. Measure resistance between the following pins at the 9-Way Diagnostic Connector:
   - F to G
   - F to ground
   - If resistance from Pin F to Pin G is 1.8K–2.5K ohms and resistance from Pin F to ground is 10k ohms or greater, go to **Step F.**
   - If resistance is outside of range, repair the Vehicle Harness, then go to **Step V.**

Connection	Measurement
Pin F to Pin G	
Pin F to ground	

F

Purpose: *Verify J-1939 continuity at 9-Way Diagnostic Connector.*

1. Key off.
2. Measure resistance between the following pins at the 9-Way Diagnostic Connector:
   - C to D
   - C to ground
   - If resistance from Pin C to Pin D is 50–60 ohms and resistance from Pin C to ground is 10k ohms or greater, concern is with one of the following areas:
     - PC
     - Communication Box
     - Cables
   - Refer to the “Diagnostic Tools” section for list of compatible diagnostic tools. If concern is still present, contact Eaton at 1-800-826-HELP (4357).
   - If resistance is outside of range, repair the OEM Vehicle Harness, then go to **Step V.**

Connection	Measurement
Pin C to Pin D	
Pin C to ground	

© 2015 Eaton. All rights reserved

G

Purpose: *Verify powers and grounds.*

1. Perform the Electric Pretest:
   - If the Electrical Pretest passes, and there is no communication with the HCM, go to **Step H.**
   - If the Electrical Pretest passes, and there is no communication with the TECU, go to **Step I.**
   - If the Electrical Pretest finds an issue, repair the concern and go to **Step A.**

H

Purpose: *Verify J-1939 continuity at HCM 38-Way Connector.*

1. Key off.
2. Disconnect negative battery cable.
3. Disconnect HCM Harness 38-Way Connector.
4. Measure resistance between HCM Harness 38-Way Connector Pin 2 and Pin 3:

   Note: Make sure the Volt/Ohm Meter is on the proper scale (around 200 ohm scale).

   - If resistance between Pin 2 and Pin 3 is between 50–70 ohms, replace the **Hybrid Control Module (HCM)**, then go to **Step V.**
   - If resistance is outside of range, repair J1939 Data Link Harness between HCM and closest connector, then go to **Step V.**

Connection	Measurement
Pin 2 to Pin 3	

I

Purpose: *Verify J-1587 continuity at TECU 38-Way Connector.*

1. Key off.
2. Disconnect negative battery cable.
3. Disconnect TECU Harness 38-Way Connector.
4. Measure resistance between TECU Harness 38-Way Connector Pin 10 and Pin 11.

   Note: Make sure the Volt/Ohm Meter is on the proper scale (around 200 ohm scale).

   - If resistance between Pin 10 and Pin 11 is between 0–0.3 ohms, replace **Transmission Electronic Control Unit (TECU)**, then go to **Step V.**
   - If resistance is outside of range, repair J1939 Data Link Harness between HCM and closest connector, then go to **Step V.**

Connection	Measurement
Pin 10 to Pin 11	

V

Purpose: *Verify repair.*

1. Key off.
2. Reconnect all connectors.
3. Place Shift Control into neutral.
4. Key on:
   - If ServiceRanger communicates with both the HCM and the TECU, test is complete.
   - If ServiceRanger fails to communicate with the HCM and TECU, go to **Step A.** Find error in testing.

© 2015 Eaton. All rights reserved

Gear Engagement Test

J1939: SA 3 SPN FMI

Overview

The Hybrid Control Module (HCM) normally commands the different gears shifts which are carried out through the Transmission Electronic Control Unit (TECU). The HCM also controls the Electric Clutch Actuator (ECA), which changes the position of the clutch.

Note: This symptom-based test should only be performed if directed by the Symptom-Driven Diagnostic Index and there are no Active fault codes.

Detection

The following symptoms may have been experienced:

- Transmission does not engage a gear from neutral and a warning tone sounds (Solid “N” in gear display).
- Transmission does not engage a gear from Neutral (flashing gear in gear display). This symptom is addressed in the Front Box Symptom test.
- Transmission does not move from a stop (solid gear number in gear display).

Fallback

No fallback condition exists for this symptom.

Possible Causes

This fault code can be caused by any of the following:

- Transmission
- Service Brake Switch
- Boom/Outrigger Switch

Additional Tools

- Basic hand tools
- Eaton® Test Adapter Kit J43318
- Digital Volt/Ohm Meter J46708
- ServiceRanger

© 2015 Eaton. All rights reserved

Component Identification

Messages from the Body Controller to the HCM

Parameter	Signal	Value	Meaning	Description
520355	Prohibit Driving	0	Allow Driving	Body Controller is requesting the HCM not allow gear engagement from neutral.
		1	Prohibit Driving	

Messages from the Engine, Chassis, or Body Controller to the TECU

Parameter	Signal	Value	Meaning	Description
597	Brake Switch	0	Not Applied	The ECU is confirming the current state of the Service Brake Switch.
		1	Applied	

© 2015 Eaton. All rights reserved

Gear Engagement Test

A ***Purpose:*** *Visually observe the gear display after power up.*

1. Perform this symptom test only if directed by the Symptom-Driven Diagnostic Index and there are no Active fault codes.
2. Press N on the Push Button Shift Control:
   - If “N” is present on the Gear Display, go to **Step B.**
   - If “N” is not present on the Gear Display, refer to the “Hybrid Diagnostic Procedure” on page 8 for the correct symptom-based test to perform.

B ***Purpose:*** *Visually observe the Gear Display when placing the transmission into Drive.*

1. Key on.
2. Start engine.
3. Press service brake and select D.
   - If gear display shows a “N” and a warning tone sounds, go to **Step D.**
   - If gear display shows a flashing gear with no arrows, go to “Front Box Test” on page 418.
   - If gear display shows a solid gear, but vehicle does not move, go to **Step C.**

C ***Purpose:*** *Confirm the proper parameter configuration to prohibit driving.*

1. Key on.
2. Connect ServiceRanger and view the following Data Monitor parameter PID 154 “Prohibit Driving.”
   - Prohibit Driving reads 0 (Allow Driving), contact Eaton at 1-800-826-HELP [4357].
   - Prohibit Driving reads 1 (Prohibit Driving), ensure boom and outriggers are fully retracted. Contact the OEM for repair procedures.

Parameter	Reading
PID 154 “Prohibit Driving”	

© 2015 Eaton. All rights reserved

D

Purpose: *Verify proper brake status signal.*

1. Key on.
2. View the following “Data Monitor” parameter while depressing the Service Brake:
   - SPN 597 “Service Brake Status”
     - If the Service Brake Switch status is pressed when applying the brakes, contact Eaton at 1-800-826-HELP [4357].
     - If the Service Brake Switch does not change status, repair Service Brake wiring or Switch. Contact the OEM for repair procedures.

Parameter	Reading
SPN 597 “Service Brake Status”	

V

Purpose: *Verify repair.*

1. Key off.
2. Reconnect all connectors.
3. Place Shift Control into neutral.
4. Key on.
   - If the transmission engages a gear and moves from a stop, test is complete.
   - If the transmission neither engages a gear nor moves from a stop, go to **Step A.** Find error in testing.

© 2015 Eaton. All rights reserved

https://truckmanualshub.com/

ePTO Test

J1939: SA 3 SPN FMI

Overview

The ePTO feature allows the diesel engine to remain off for extended periods of time during PTO usage. The DC/DC Converter is energized only in ePTO mode so it can charge the 12-volt battery system. The Hybrid Control Module (HCM) operates the Motor/Generator to power the transmission mounted PTO.

If the high-voltage batteries are low, the HCM will start the engine with the Motor/Generator or the standard 12-volt system. To select the ePTO mode press the Mode button on the Push Button Shift Control.

Some applications use a Chassis or Body Controller to control the PTO and send information to the HCM. Other applications use the HCM to control and confirm engagement of the PTO. The Body Controlled option is referred to as the J1939 option and the HCM controlled is referred to as the Analog option.

Note: To determine which module is controlling the PTO connect ServiceRanger and select “Roadranger Configurations.” Under the “Hybrid Control Module” option is a list for PTO Feedback— Analog Controlled (HCM), or J1939 Controlled (Body Controller).

Note: This symptom-based test should only be performed as directed by a Diagnostic Procedure and there are no Active fault codes.

Detection

The following symptoms may be experienced:

- ePTO light does not illuminate when mode is selected.
- ePTO light flashes and the push button tone sounds.
- ePTO light is illuminated, but the hydraulic lift does not operate when the controls are used.
- ePTO light is illuminated, but the PTO Pump fails to turn off after PTO usage.
- ePTO light is illuminated, but the diesel engine runs frequently or all the time.

Fallback

No fallback condition exists for this symptom.

Possible Causes

This fault code can be caused by any of the following:

- Transmission not in neutral
- HCM system fault
- TECU system fault
- PTO Pump
- HCM
- Body hydraulic pressure and demand switches
- Boom or Outrigger switches
- Hybrid System Harness
- Hood Switch
- PTO Ball Switch
- TECU
- PBSC

Additional Tools

- Basic hand tools
- Eaton® Test Adapter Kit J43318
- Digital Volt/Ohm Meter J46708
- ServiceRanger

© 2015 Eaton. All rights reserved

Component Identification

Messages from the Body Controller to the HCM

Parameter	Signal	Value	Meaning	Description
520354	OK to Crank	0	No OK	Body Controller will allow the Hybrid HCM to automatically start the engine in ePTO if necessary.
		1	OK	
520365	PTO Engaged	0	Disengaged	Body Controller is confirming the PTO is engaged.
		1	Engaged	
520353	Request Engine Run	0	No Request	Body Controller is requesting the HCM to start the engine.
		1	Request	
520352	Hydraulic Demand (PTO)	0	No Demand	Body Controller is requesting the Hybrid to turn the transmission and provide PTO power.
		1	Demand	
520351	PTO Engaged Command	0	False	TECU is sending the request to the HCM
		1	True	
520350	PTO Engaged Feedback	0	False	HCM is confirming it received the message
		1	True	

© 2015 Eaton. All rights reserved

ePTO Test

A

Purpose: *Verify "ePTO" light operates.*

1. Only perform this symptom test if directed by the Symptom-Driven Diagnostic Index and there are no Active fault codes.
2. Key on.
3. Press ePTO on the Push Button Shift Control:
   - If ePTO light is lit on the Push Button Shift Control, go to **Step B.**
   - If ePTO light is not lit on the Push Button Shift Control, replace the Push Button Shift Control (see **Shift Control**). Make sure the following fault codes are not Active 16, 35, 24, 48, or 59. Go to **Step V.**
   - If ePTO light is flashing on the Push Button Shift Control and the tone sounds, go to **Step F.**

B

Purpose: *Verify Hydraulic Lift operation.*

1. Use the controls to operate the Hydraulic Lift.
   - Hydraulic Lift operates, go to **Step C.**
   - Hydraulic Lift does not operate, go to **Step K.**

C

Purpose: *Determine the run time appropriate for application and verify PTO Pump shuts down.*

1. Release the controls on the Hydraulic Lift and let the vehicle set:

   Note: The run time may vary depending on the type of system and size of accumulators that need to be charged.

   - If PTO Pump shuts off, go to **Step D.**
   - If PTO Pump continues to operate, go to **Step L.**

© 2015 Eaton. All rights reserved

D

Purpose: *Verify the State of Charge and verify that diesel engine turns on and shuts down.*

1. Operate the Hydraulic controls until the diesel engine turns on.
2. Connect ServiceRanger and select the Data Monitor option.
3. View the high-voltage battery list and view the PID 133 “Battery State Of Charge (SOC)”:
   - If diesel engine cycles on for some time then shuts back down, test is complete. Go to **Step V.**
   - If diesel engine never cycles on and PID 133 “Battery SOC” is less than 23%, concern with engine. The hybrid system will attempt to start the engine when the SOC goes below 23%. Contact the OEM for repair procedures.
   - If diesel engine never cycles on and PID 133 “Battery SOC” is greater than 23%, battery SOC must be below 23% before the hybrid system will request the engine to start. Continue to operate the hydraulic controls until the engine comes on.
   - If Diesel engine cycles on and never shuts down, and PID 133 “Battery SOC” is less than 68%, go to **Step E.**
   - If diesel engine cycles on and never shuts down, and PID 133 “Battery SOC” is greater than 68%, go to **Step E.**

Parameter	Reading
PID 133 “Battery SOC”	

E

Purpose: *Confirm “Request Engine Run” signal is present at low State Of Charge.*

1. Connect ServiceRanger to the 9-Way Diagnostic Connector.
2. View the Data Monitor parameter PID 152 “Request Engine Run”:
   - If PID 152 “Request Engine Run” reads 0 (No Request) and PID 133 “Battery SOC” is less than 68%, the current power usage is enough to require the engine to remain on so the system can deliver the power demands. If the power demands are reduced the engine should shut down because the SOC will go over 68%.
   - If the PID 152 “Request Engine Run” reads 0 (No Request) and PID 133 “Battery SOC” is greater than 68%, contact Eaton at 1-800-826-HELP (4357).
   - If PID 152 “Request Engine Run” reads 1 (Request), the Body Controller is requesting the engine to remain on. This may be a leak in the air system or a low 12-volt system. Contact the OEM for repair procedure.

Parameter	Reading
PID 152 “Request Engine Run”	
PID 133 “Battery SOC”	

© 2015 Eaton. All rights reserved

F

Purpose: *Visually observe the Gear Display after power up.*

1. Observe the Gear Display:
   - If gear display shows a solid “N” or number, go to **Step G.**
   - If gear display shows a “PD”, the vehicle is in a diagnostic mode. To exit this mode, turn key off for 2 minutes and then turn key back on. Go to **Step F.**

Parameter	Reading
Gear Display	

G

Purpose: *Verify the Neutral light is operational.*

1. Press the N on the Push Button and observe the light:
   - Light is displayed solid, go to **Step H.**
   - Light is flashing, repair the concern with the transmission not achieving neutral. Go to the “Hybrid Diagnostic Procedure” on page 8.

H

Purpose: *Confirm "ePTO Mode Confirmation" signal.*

1. Connect ServiceRanger to the 9-Way Diagnostic Connector.
2. View the Data Monitor parameter PID 164 “ePTO Mode Confirmation”:
   - If PID 164 “ePTO Mode Confirmation” reads 1 (True), go to **Step I.**
   - If PID 164 “ePTO Mode Confirmation” reads 0 (False), go to **Step M.**

Parameter	Reading
PID 164 “ePTO Mode Confirmation”	

I

Purpose: *Confirm "PTO Engaged" signal.*

1. View the Data Monitor parameter PID 149 “PTO Engaged”:
   - If PID 149 “PTO Engaged” reads 1 (Engaged), go to **Step J.**
   - If PID 149 “PTO Engaged” reads 0 (Disengaged), contact Eaton at 1-800-826-HELP (4357).

Parameter	Reading
PID 149 “PTO Engaged”	

© 2015 Eaton. All rights reserved

J

Purpose: *Confirm "ePTO Request" signal.*

1. View the Data Monitor parameter PID 163 "ePTO Request":
   - If PID 163 "ePTO Request" reads 1 (True), contact Eaton at 1-800-826-HELP (4357).
   - If PID 163 "ePTO Request" reads 0 (False), concern is with mechanical problem to the PTO, electrical power to PTO circuit, air pressure, or signal wire from PTO. Contact the OEM for repair procedures.

Parameter	Reading
PID 163 "ePTO Request"	

K

Purpose: *Verify "Hydraulic Demand" and "Battery SOC" status during hydraulic operation.*

1. Operate the Hydraulic Lift while monitoring the Data Monitor parameters:
   - PID 151 "Hydraulic Demand" located in the "ePTO" list
   - PID 133 "Battery SOC" located in the "HV Battery" list
   - If PID 151 "Hydraulic Demand" reads 1 (Demand) and PID 133 "Battery SOC" is greater than 23%, concern is with the PTO Pump. Contact the OEM for repair procedure.
   - If PID 151 "Hydraulic Demand" reads 1 (Demand) and PID 133 "Battery SOC" is less than 23%, concern is engine not starting to recharge the hybrid System. The hybrid system will request the engine to start when the SOC is less than 23%. Contact the OEM for repair procedures.
   - If PID 151 "Hydraulic Demand" reads 0 (No Demand), concern is with lack of hydraulic demand on the HCM from the Body Controller which can be caused by a faulty pressure switch/transducer. Contact the OEM for repair procedure.

Parameter	Reading
PID 151 "Hydraulic Demand"	
PID 133 "Battery SOC"	

© 2015 Eaton. All rights reserved

L

Purpose: *Confirm "Hyrdulic Demand" signal.*

1. Release the hydraulic controls.
2. Connect ServiceRanger and select the Data Monitor option.
3. View PID 151 “Hydraulic Demand” under the ePTO list:
   - If PID 151 “Hydraulic Demand” reads 1 (Demand), concern with the constant Hydraulic demand from the Body Controller. Contact the OEM for repair procedures.
   - If PID 151 “Hydraulic Demand” reads 0 (No Demand), contact Eaton at 1-800-826-HELP (4357).

Parameter	Reading
PID 151 “Hydraulic Demand”	

M

Purpose: *Verify no Active fault codes.*

1. Key on.
2. Connect ServiceRanger to the 9-Way Diagnostic Connector.
3. Ensure there are no TECU or HCM fault codes 66, 87, 18, 97, or 8.
   - If no fault codes present, go to **Step N.**
   - If fault codes are present, go to the “Hybrid Diagnostic Procedure” on page 8.

N

Purpose: *Verify no output speed, transmission. is in neutral and no gear is requested.*

1. View the following Data Monitor parameters from the “Hybrid Transmission” list and make sure they match the required values:
   - PID 191 Output Shaft Speed = 0 RPM
   - SPN 524 Select Gear = 0
   - SPN 523 Current Gear = 0
   - If all the parameters on ServiceRanger match the values shown, go to **Step O.**
   - If the parameters on ServiceRanger do not match the values shown, turn the ignition key off for two minutes then power back up and read the values again. If the values still do not match, contact Eaton at 1-800-826-HELP (4357).

Parameter	Reading
PID 191 “Output Shaft Speed”	
SPN 524 “Select Gear”	
SPN 523 “Current Gear”	

© 2015 Eaton. All rights reserved

O

Purpose: *Confirm "OK to Crank" status.*

1. View the following Data Monitor parameters from the “Hybrid ePTO” list and make sure they match the required values:
   - PID 153 “OK to Crank” = 1
     - If PID 153 “OK to Crank” reads "1", contact Eaton at 1-800-826-HELP (4357).
     - If PID 153 “OK to Crank” reads "0", concern is with the Hood Switch reading an open or the Parking Brake Switch reading not applied. Contact the OEM for repair procedures.

Parameter	Reading
PID 153 “OK to Crank”	

V

Purpose: *Verify repair.*

1. Key off.
2. Reconnect all connectors.
3. Key on.
4. Place Shift Control into ePTO Mode:
   - If PTO system operates, test is complete.
   - If PTO system does not operate, find error in testing, go to **Step A.**

© 2015 Eaton. All rights reserved

Wiring Diagrams

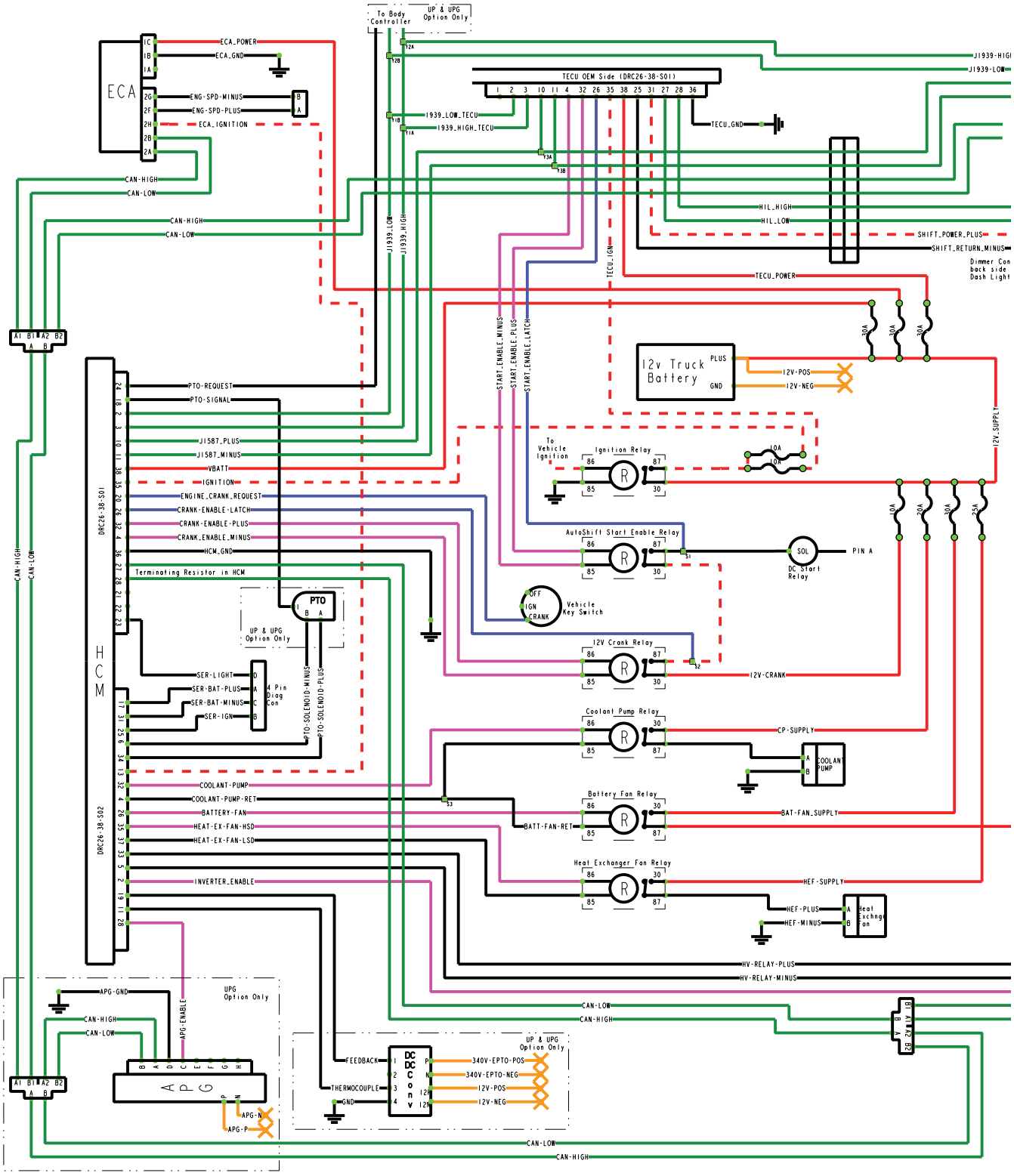

© 2015 Eaton. All rights reserved

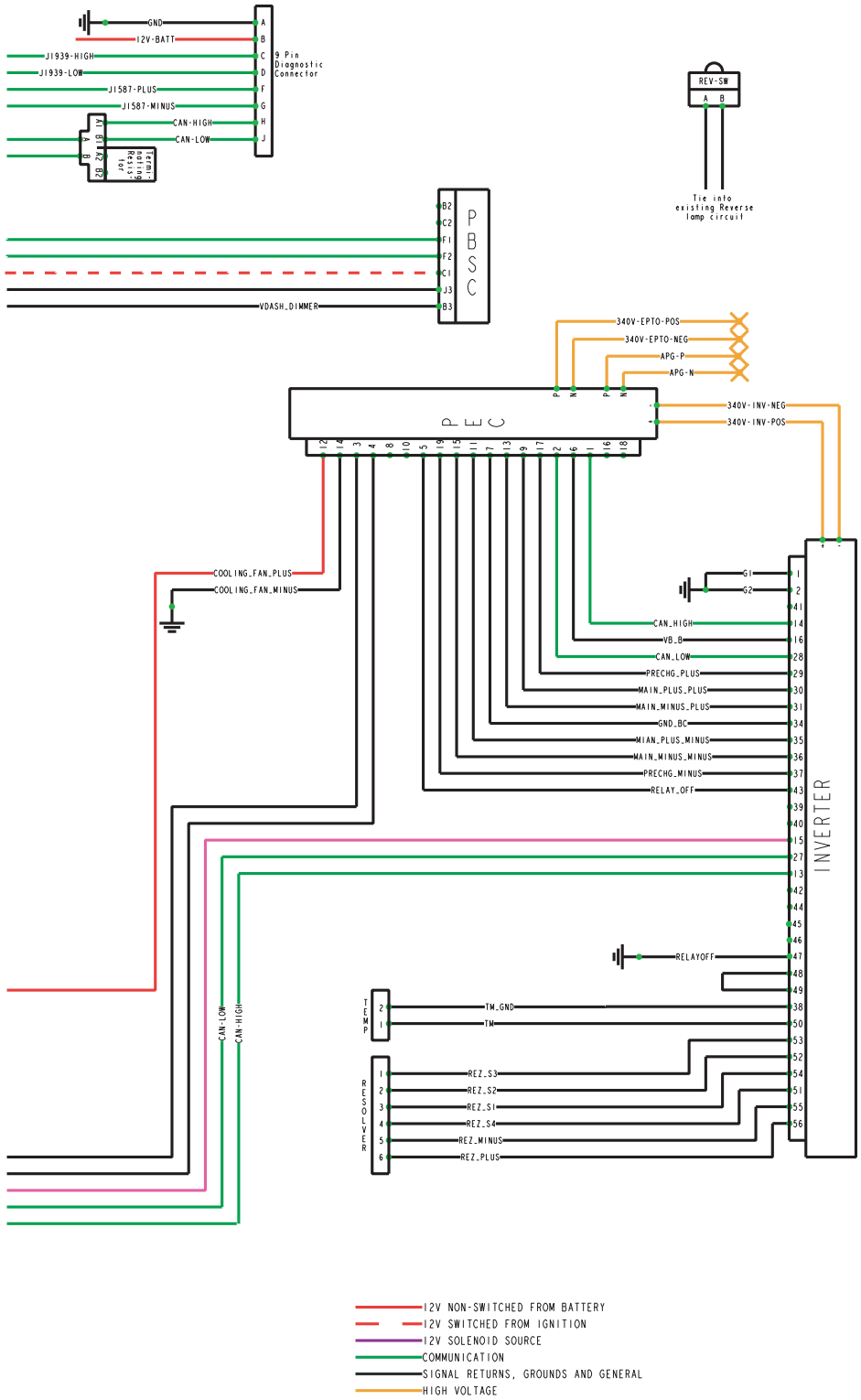

© 2015 Eaton. All rights reserved

Hybrid Transmission ECU System Harness

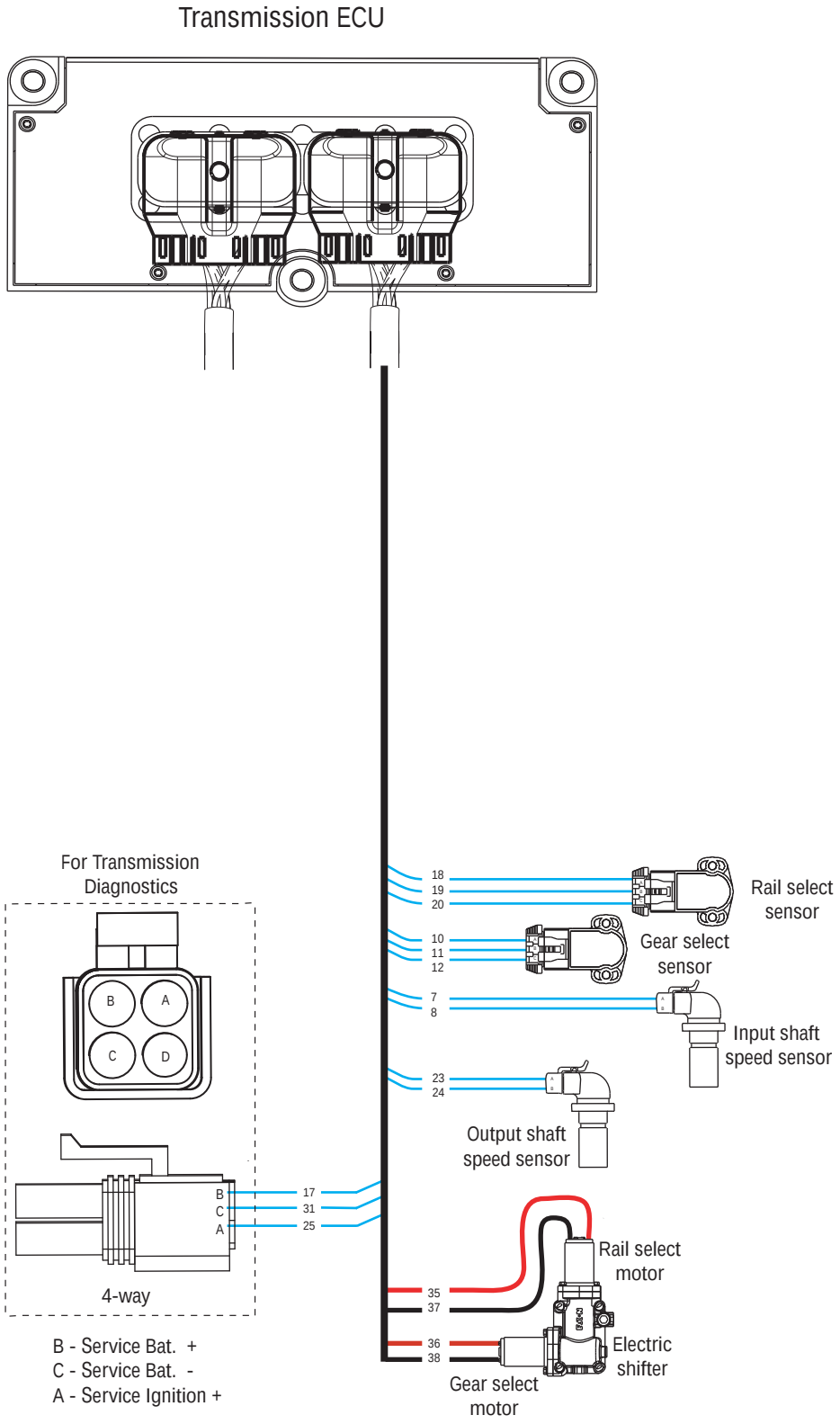

© 2015 Eaton. All rights reserved

Connector Pin Descriptions

Hybrid and Transmission Connector Pins

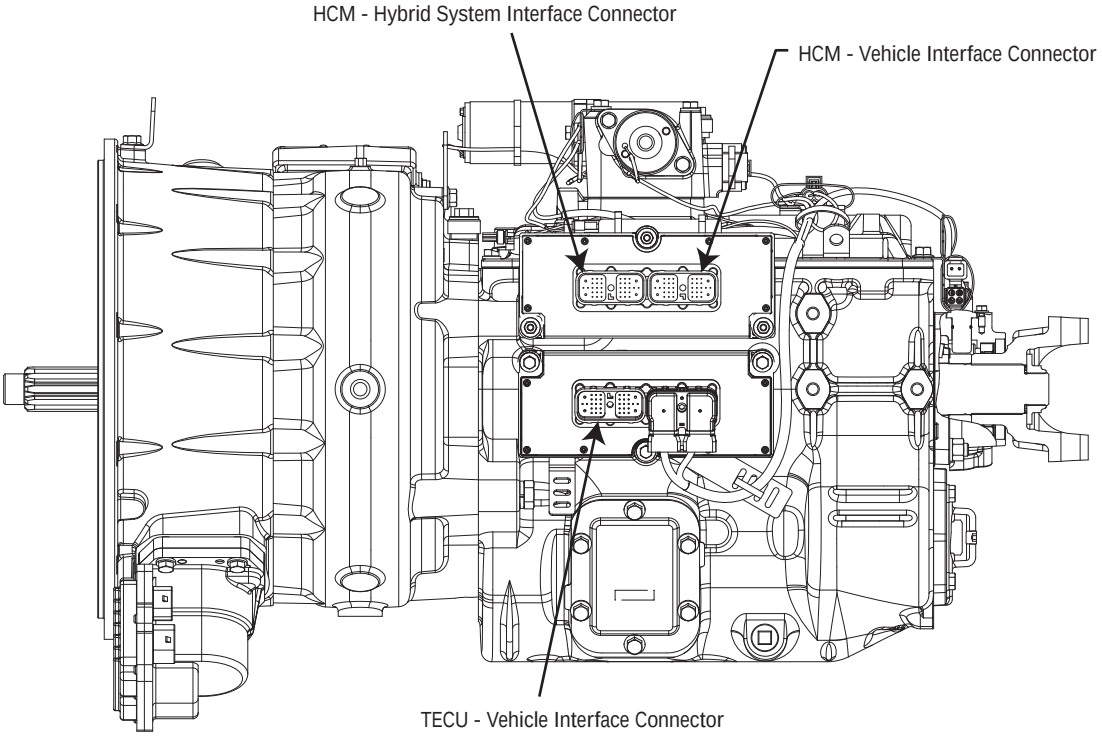

TECU and HCM Connectors

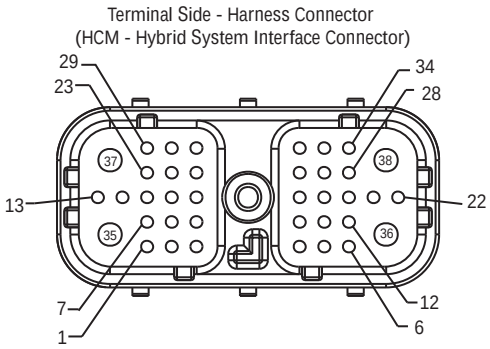

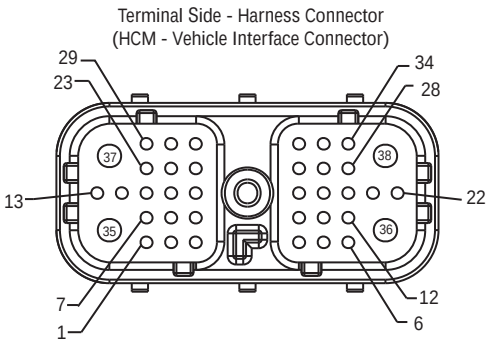

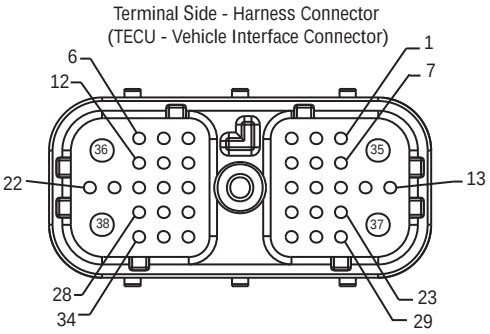

Caution: Please note the location and orientation of the HCM and TECU connectors. The backshell should always face down on the harness connectors.

© 2015 Eaton. All rights reserved

https://truckmanualshub.com/

Transmission Controller 38-Way (Vehicle Interface Connector)

Description	From	Pin#	To	Pin#	AWG
Not Used		1			Plug
J1939 Low (CAN)	TECU	2	1939 Backbone	B	18 TXL
J1939 High (CAN)	TECU	3	1939 Backbone	A	18 TXL
Start Enable Relay Minus	TECU	4	AS Start Enable Relay	85	18 TXL
Not Used		5			Plug
Not Used		6			Plug
Not Used		7			Plug
Not Used		8			Plug
Not Used		9			Plug
J1587 Plus	TECU	10	Splice into 1587	A	18 TXL
J1587 Minus	TECU	11	Splice into 1587	B	18 TXL
Not Used		12			Plug
Not Used		13			Plug
Not Used		14			Plug
Not Used		15			Plug
Not Used		16			Plug
Not Used		17			Plug
Not Used		18			Plug
Not Used		19			Plug
Not Used		20			Plug
Not Used		21			Plug
Not Used		22			Plug
Not Used		23			Plug
Not Used		24			Plug
Shift Control Power Minus	TECU	25	PBSC	J3	18 TXL
Start Enable Latch	TECU	26	AS Start Enable Relay	87	18 TXL
HIL Low (Proprietary CAN)	TECU	27	PBSC	F2	18 TXL
HIL High (Proprietary CAN)	TECU	28	PBSC	F1	18 TXL
Not Used		29			Plug
Not Used		30			Plug
Shift Control Power Plus	TECU	31	PBSC	C1	18 TXL
Start Enable Relay Plus	TECU	32	AS Start Enable Relay	86	18 TXL
Not Used		33			Plug
Not Used		34			Plug
Ignition	TECU	35	10A Fused Switched Power from Ignition Bus		12 GXL or 14SXL
Battery Minus	TECU	36	Ground at Battery or Starter		12 GXL
Not Used		37			Plug
Battery Plus	TECU	38	30A Fused Non-Switched		12 GXL

© 2015 Eaton. All rights reserved

Hybrid Controller 38-Way (Vehicle Interface Connector)

Description	From	Pin#	To	Pin#	AWG
Not Used		1			Plug
J1939 Low (CAN)	HCM	2	1939 Backbone	B	18 TXL
J1939 High (CAN)	HCM	3	1939 Backbone	A	18 TXL
12v Cranking Relay Minus	HCM	4	12v Cranking Relay	85	Plug
Not Used		5			Plug
Not Used		6			Plug
Not Used		7			Plug
Not Used		8			Plug
Not Used		9			Plug
J1587 Plus	HCM	10	Splice into 1587		18 TXL
J1587 Minus	HCM	11	Splice into 1587		18 TXL
Not Used		12			Plug
Not Used		13			Plug
Not Used		14			Plug
Not Used		15			Plug
Not Used		16			Plug
Not Used		17			Plug
PTO Signal	HCM	18	PTO		18 TXL
Not Used		19			Plug
Engine Crank Request	HCM	20	Crank Position on Switch		18 TXL
Not Used		21			Plug
Not Used		22			Plug
Service Light	HCM	23	4-Way Service Connector	D	18 TXL
PTO Request (Non J1939 BCU)	HCM	24	BCU		18 TXL
Not Used		25			Plug
12v Cranking Relay Latch	HCM	26	12v Cranking Relay	87	18 TXL
CAN Low (Proprietary CAN)	HCM	27	HEV Backbone	B	18 TXL
CAN High (Proprietary CAN)	HCM	28	HEV Backbone	A	18 TXL
Not Used		29			Plug
Not Used		30			Plug
Not Used		31			Plug
12v Cranking Relay Plus	HCM	32	12v Cranking Relay	86	18 TXL
Not Used		33			Plug
Not Used		34			Plug
Ignition	HCM	35	Fused 10A to Ignition Relay		12 GXL or 14SXL
Battery Minus	HCM	36	Battery Ground		12 GXL
Not Used		37			Plug
Battery Plus	HCM	38	Fused 30A Battery		12 GXL

© 2015 Eaton. All rights reserved

https://truckmanualshub.com/

Hybrid Controller 38-Way (Hybrid System Interface Connector)

Description	From	Pin#	To	Pin#	AWG
Not Used		1			Plug
Inverter Enable	HCM	2	Fuse 5A	15	18 TXL
Not Used		3			Plug
Coolant Pump & Battery Fan Relay Minus	HCM	4	Coolant Pump Relay & Battery Fan Relay	85	18 TXL
High-Voltage Relay Minus	HCM	5	High-Voltage Relay	4	18 TXL
PTO Power Minus	HCM	6	PTO		18 TXL
Not Used		7			Plug
Not Used		8			Plug
Not Used		9			Plug
Not Used		10			Plug
DC/DC Converter Temperature	HCM	11	DC/DC Converter	3	18 TXL
Not Used		12			Plug
ECA Ignition	HCM	13	ECA	H	18 TXL
Not Used		14			Plug
Not Used		15			Plug
Not Used		16			Plug
Service Battery Plus		17	Service Port	A	18 TXL
Not Used		18			Plug
DC/DC Converter Feedback Voltage	HCM	19	DC/DC Converter	1	18 TXL
Not Used		20			Plug
Not Used		21			Plug
Not Used		22			Plug
Not used		23			Plug
Not Used		24			Plug
Service Ignition	HCM	25	Service Port	C	18 TXL
Battery Cooling Fan Relay Plus	HCM	26	Battery Cooling Fan	86	18 TXL
Not Used		27			Plug
APG Enable	HCM	28	APG	C	18 TXL
Not Used		29			Plug
Not Used		30			Plug
Service Battery Minus	HCM	31	Service Port	B	18 TXL
Coolant Pump Relay Plus	HCM	32	Coolant Pump Relay	86	18 TXL
High-Voltage Relay Plus	HCM	33	High-Voltage Relay	3	18 TXL
PTO Power Plus	HCM	34	PTO		18 TXL
Heat Exchanger Plus	HCM	35	HEF Relay	86	12 GXL or 14SXL
Not Used		36			Plug
Heat Exchanger Minus	HCM	37	HEF Relay	85	18 TXL
Not Used		38			Plug

© 2015 Eaton. All rights reserved

Inverter connectors

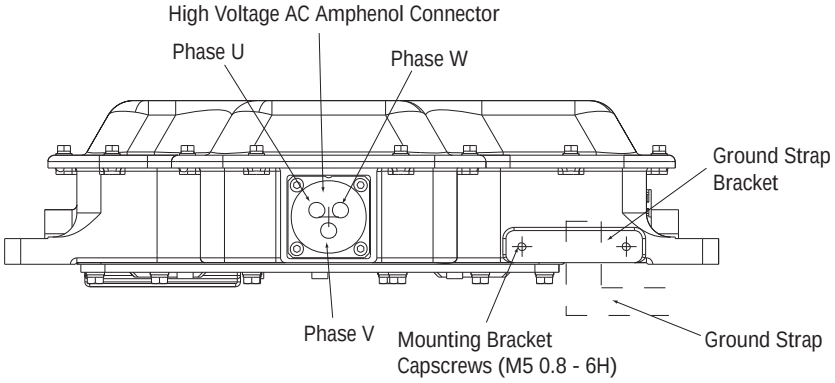

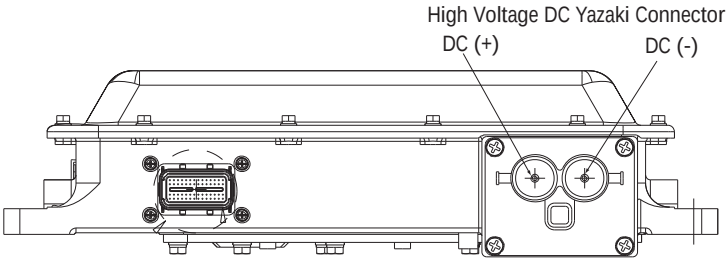

Terminal Side - Harness Connector
Delphi 56-Way Connector View

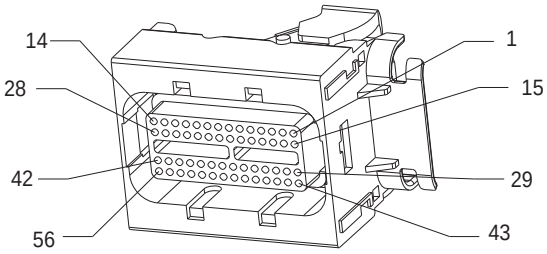

© 2015 Eaton. All rights reserved

https://truckmanualshub.com/

Inverter 56-Way Connector

Description	From	Pin#	To	Pin#	AWG
Gnd 1	Inverter	1	Chassis Ground		18
Gnd 2	Inverter	2	Chassis Ground		18
CAN High 1	Inverter	13	HEV Backbone	A	18
CAN High 2	Inverter	14	PEC	1	18
Inverter Enable	Inverter	15	HCM	2	18
Relay Box Enable	Inverter	16	PEC	6	18
CAN Low 1	Inverter	27	HEV Backbone	B	18
CAN Low 2	Inverter	28	PEC	2	18
PreChg +	Inverter	29	PEC	17	18
Main (+) +	Inverter	30	PEC	9	18
Main (-) +	Inverter	31	PEC	13	18
Gnd B	Inverter	34	PEC	7	18
Main (+) -	Inverter	35	PEC	11	18
Main (-) -	Inverter	36	PEC	15	18
Prechg -	Inverter	37	PEC	19	18
TMGnd	Inverter	38	Temp Sender	2	18
RBSw(+)	Inverter	48	Inverter	49	18
RlyOff (B1)	Inverter	43	PEC	5	18
RlyOff (O)	Inverter	47	Chassis Gnd		18
TM	Inverter	50	Temp Sender	1	18
REZ_S4	Inverter	51	Resolver	4	18
REZ_S2	Inverter	52	Resolver	2	18
REZ_S3	Inverter	53	Resolver	1	18
REZ_S1	Inverter	54	Resolver	3	18
REZ_Minus	Inverter	55	Resolver	5	18
REZ_Plus	Inverter	56	Resolver	6	18

© 2015 Eaton. All rights reserved

Power Electronics Carrier (PEC) Connectors

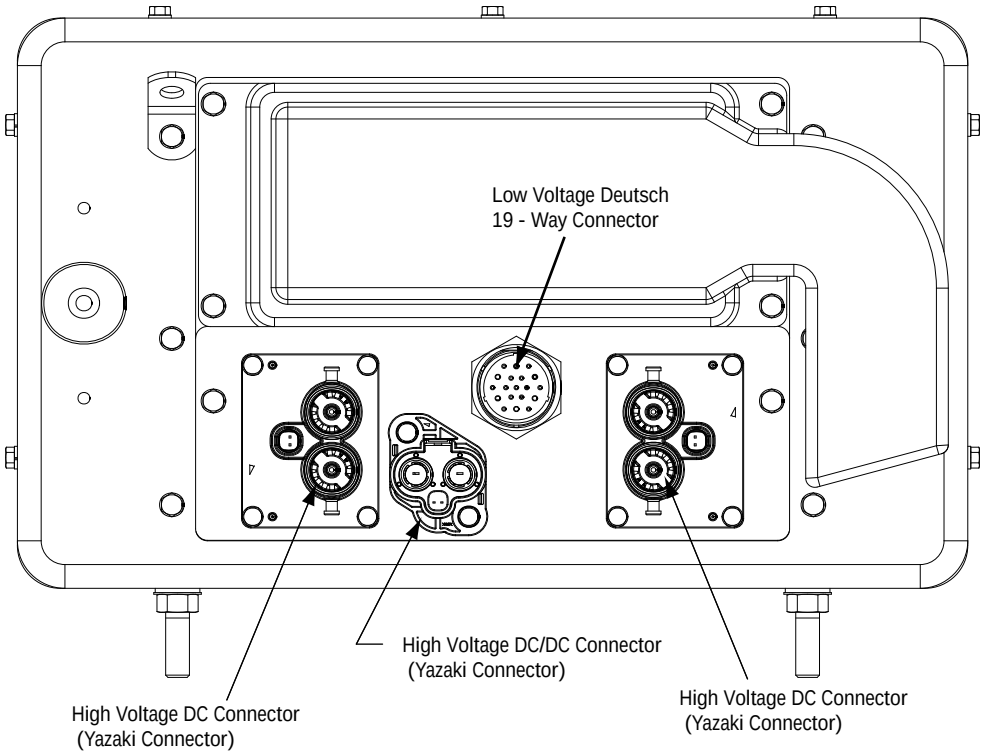

Caution: The PEC 19-way low-voltage connector needs to have the back shell and strain relief such that the unit will not allow water entry from direct spray.

Mating Connector View
(Deutsch 19 - Way)

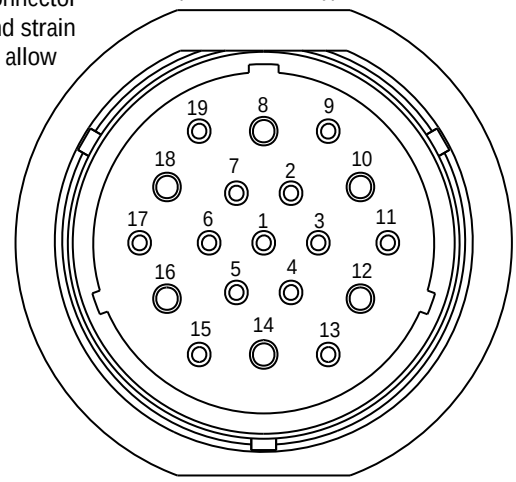

© 2015 Eaton. All rights reserved

https://truckmanualshub.com/

PEC 19-Way Connector

Description	From	Pin#	To	Pin#	AWG
CAN High	PEC	1	Inverter	14	18
CAN Low	PEC	2	Inverter	28	18
HV Relay (+)	PEC	3	HCM	33	18
HV Relay (-)	PEC	4	HCM	5	18
RelayOff	PEC	5	Inverter	43	18
BCU (+)	PEC	6	Inverter	16	18
BCU (-)	PEC	7	Inverter	34	18
Main (+) +	PEC	9	Inverter	30	18
Main (+) -	PEC	11	Inverter	35	18
Main (-) +	PEC	13	Inverter	31	18
Main (-) -	PEC	15	Inverter	36	18
PreChg +	PEC	17	Inverter	29	18
PreChg -	PEC	19	Inverter	37	18
Battery Fan Plus	PEC	12	Battery Fan Cooling Relay	87	12
Battery Fan Minus	PEC	14	Battery Negative	-	12

PEC High-Voltage (DC) Connector to Inverter

Description	From	Pin#	To	Pin#	Wire Diameter
DC +	PEC	A	Inverter	A	15 mm^2
DC -	PEC	B	Inverter	B	15 mm^2
Loose Disconnect	PEC	1	PEC	2	0.8 mm^2 (18 AWG)

PEC High-Voltage (DC) Connector to DC/DC Converter

Description	From	Pin#	To	Pin#	Wire Diameter
DC +	PEC	A	DC/DC Converter	A	14 AWG
DC -	PEC	B	DC/DC Converter	B	14 AWG
Loose Disconnect	PEC	1	DC/DC Converter	1	0.8 mm^2 (18 AWG)
Loose Disconnect	PEC	2	DC/DC Converter	2	0.8 mm^2 (18 AWG)

Inverter High-Voltage (AC) Connector

Description	From	Pin#	To	Pin#	Wire Diameter
Phase 1	Inverter	A	Motor/Gen	A	4 AWG
Phase 2	Inverter	B	Motor/Gen	B	4 AWG
Phase 3	Inverter	C	Motor/Gen	C	4 AWG

Inverter High-Voltage (DC) Connector

Description	From	Pin#	To	Pin#	Wire Diameter
DC +	Inverter	A	PEC	A	15 mm^2
DC -	Inverter	B	PEC	B	15 mm^2
Loose Disconnect	Inverter	1	Inverter	2	0.8 mm^2 (18 AWG)

© 2015 Eaton. All rights reserved

Electric Clutch Actuator (ECA) Connectors

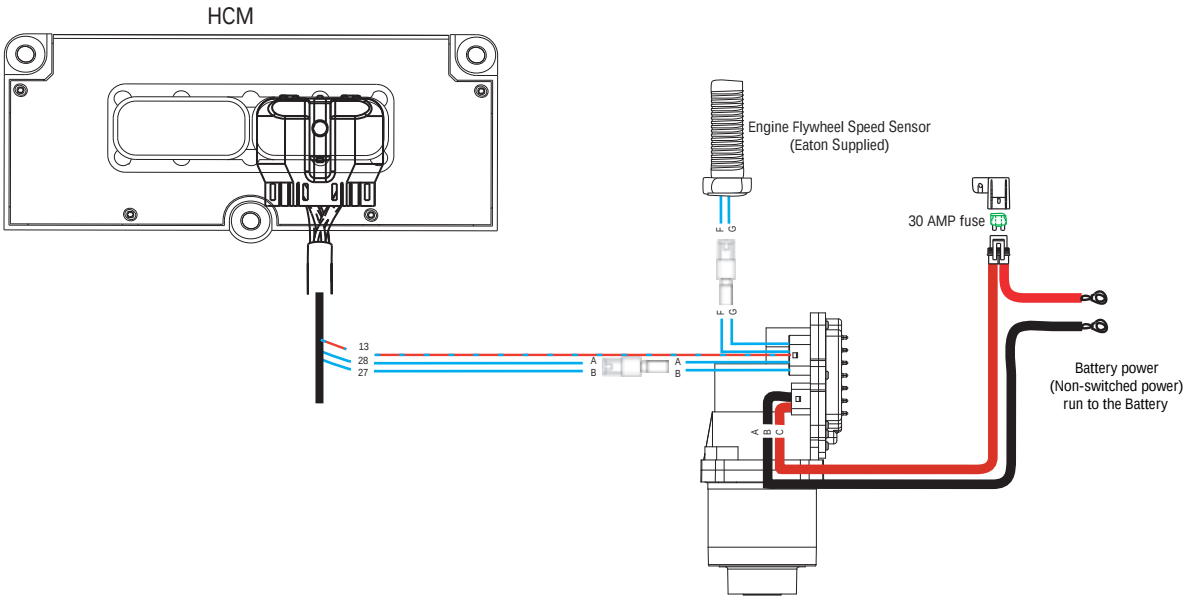

Terminal Side - Harness Connector
Metri-Pack 8-Way Connector

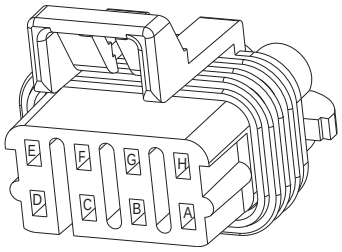

Terminal Side - Harness Connector
Metri-Pack 3-Way Connector

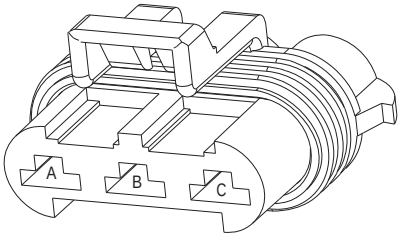

ECA 3-Way Connector

Description	From	Pin#	To	Pin#	AWG
Ignition	ECA	A	Not Used		Plug
Battery Minus	ECA	B	Chassis Ground	Battery -	12
Battery Plus	ECA	C	Fused 30 amp from Vbatt	Battery +	12

ECA 8-Way Connector

Description	From	Pin#	To	Pin#	AWG
CAN High	ECA	A	CAN Backbone	A	18
CAN Low	ECA	B	CAN Backbone	B	18
CAN - Pass	ECA	C	Not Used		Plug
Signal	ECA	D	Not Used		Plug
CAN + Pass	ECA	E	Not Used		Plug
Engine Flywheel Speed Sensor Plus	ECA	F	Speed Sensor +	A	18
Engine Flywheel Speed Sensor Minus	ECA	G	Speed Sensor -	B	18
ECA Ignition	ECA	H	HCM	13	18

© 2015 Eaton. All rights reserved

https://truckmanualshub.com/

Motor/Generator Connectors

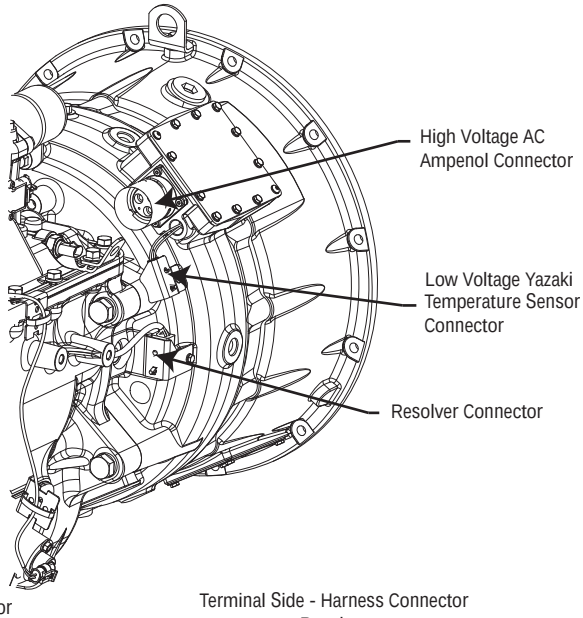

Terminal Side - Harness Connector
Temperature Sensor
(Yazaki 2-pin connector)

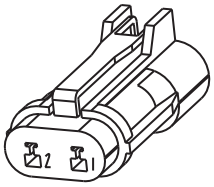

Terminal Side - Harness Connector
Resolver
(Yazaki 6-pin connector)

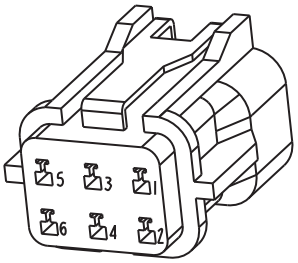

Views looking into connectors with wires exiting the opposite side.

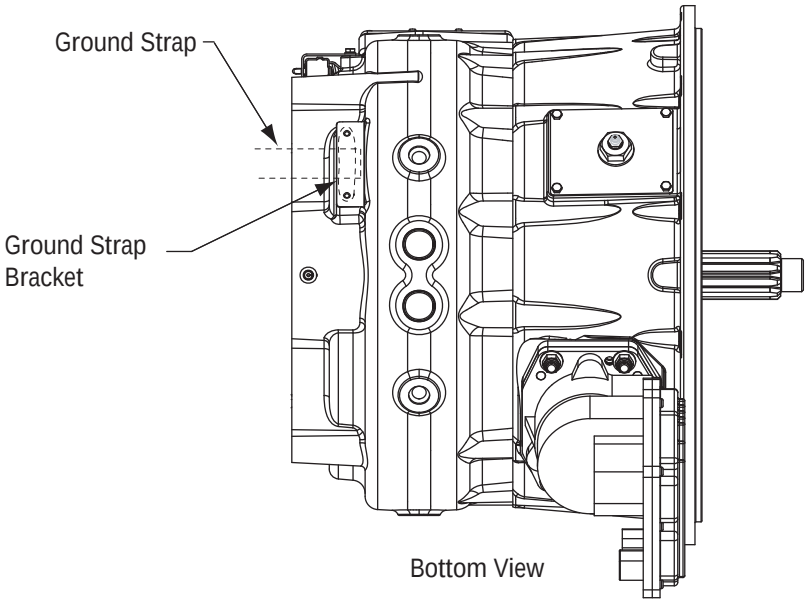

© 2015 Eaton. All rights reserved

Motor/Generator Resolver Connector

Description	From	Pin#	To	Pin#	AWG
Resolver Signal 3	Motor/Gen	1	EPS Inverter	53	18
Resolver Signal 2	Motor/Gen	2	EPS Inverter	52	18
Resolver Signal 1	Motor/Gen	3	EPS Inverter	54	18
Resolver Signal 4	Motor/Gen	4	EPS Inverter	51	18
Resolver -	Motor/Gen	5	EPS Inverter	55	18
Resolver +	Motor/Gen	6	EPS Inverter	56	18

Motor/Generator Temperature Sensor Connector

Description	From	Pin#	To	Pin#	AWG
Motor Temp	Motor/Gen	1	EPS Inverter	50	18
Motor Temp Gnd	Motor/Gen	2	EPS Inverter	38	18

Motor/Generator High-Voltage (AC) Connector

Description	From	Pin#	To	Pin#	Wire Diameter
Phase 1	Motor/Gen	A	Inverter	A	4 AWG
Phase 2	Motor/Gen	B	Inverter	B	4 AWG
Phase 3	Motor/Gen	C	Inverter	C	4 AWG

© 2015 Eaton. All rights reserved

Typical DC/DC Converter Circuit

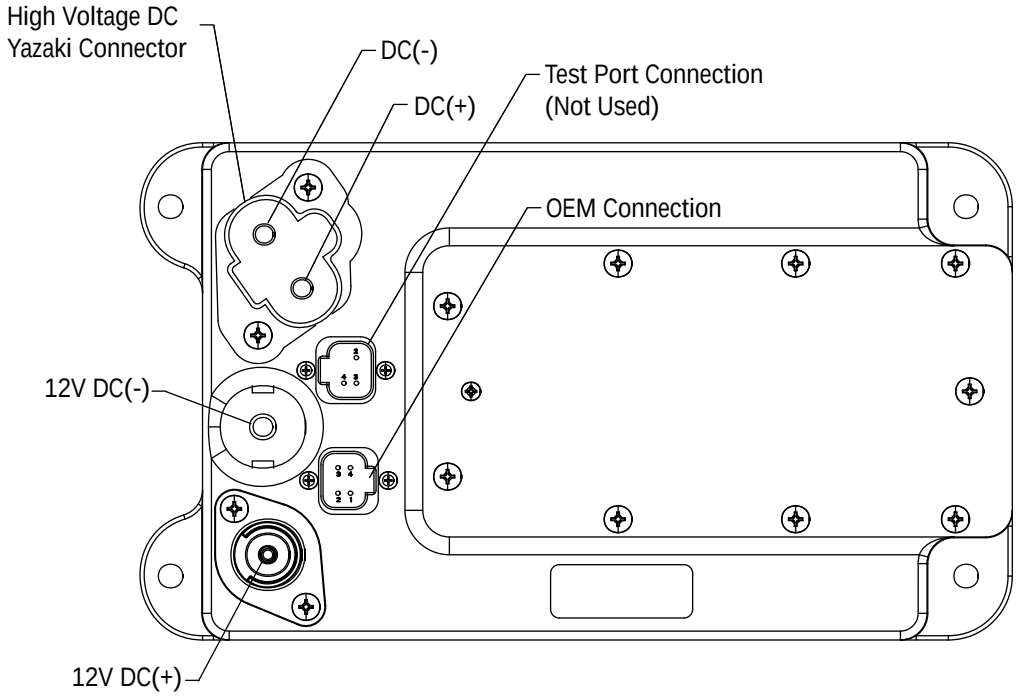

Deutsch 4-Way OEM Connector

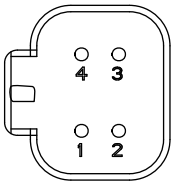

Warning: Remove the 12-volt battery cables prior to working on the DC/DC Converter.

© 2015 Eaton. All rights reserved

DC/DC Converter 4-Way Deutsch OEM Connector

Description	From	Pin#	To	Pin#	AWG
Ground	DC/DC	4	Ground		18
Thermocouple	DC/DC	3	HCM	11	18
Not Used	DC/DC	2	Not Used		Plug
Voltage Feedback	DC/DC	1	HCM	19	18

Converter High-Voltage (DC) Connector

Description	From	Pin#	To	Pin#	AWG
DC +	DC/DC	A	PEC	A	14
DC -	DC/DC	B	PEC	B	14
Loose Disconnect	DC/DC	1	PEC	1	18
Loose Disconnect	DC/DC	2	PEC	2	18

Converter 12-Volt Studs

Description	From	Pin#	To	Pin#	AWG
12volt +	DC/DC	A	Battery Positive Post	A	2
12volt -	DC/DC	B	Battery Negative Post	B	2

© 2015 Eaton. All rights reserved

https://truckmanualshub.com/

Copyright Eaton, 2015.
Eaton hereby grant their customers, vendors, or distributors permission to freely copy, reproduce and/or distribute this document in printed format. It may be copied only in its entirety without any changes or modifications. THIS INFORMATION IS NOT INTENDED FOR SALE OR RESALE, AND THIS NOTICE MUST REMAIN ON ALL COPIES.

Note: Features and specifications listed in this document are subject to change without notice and represent the maximum capabilities of the software and products with all options installed. Although every attempt has been made to ensure the accuracy of information contained within, Eaton makes no representation about the completeness, correctness or accuracy and assumes no responsibility for any errors or omissions. Features and functionality may vary depending on selected options.

For spec'ing or service assistance, call 1-800-826-HELP (4357) or visit www.eaton.com/roadranger.
In Mexico, call 001-800-826-4357.

Roadranger: Eaton and trusted partners providing the best products and services in the industry, ensuring more time on the road.

Eaton
Vehicle Group
P.O. Box 4013
Kalamazoo, MI 49003 USA
800-826-HELP (4357)
www.eaton.com/roadranger

Printed in USA

Powering Business Worldwide

BACKED BY
Roadranger
SUPPORT

An Eaton Green Solution

www.eaton.com/greensolutions